INTRODUCTION

How to Use This Manual

This manual is divided into 14 sections. The first page of each section is marked with a black tab that lines up with its corresponding thumb index tab on this page. You can quickly find the first page of each section without looking through a full table of contents. The symbols printed at the top corner of each page can also be used as a quick reference system.

Each section includes:

1. A table of contents, or an exploded view index showing:
   - Parts disassembly sequence.
   - Bolt torques and thread sizes.
   - Page references to descriptions in text.
2. Disassembly/assembly procedures and tools.
3. Inspection.
4. Testing/troubleshooting.
5. Repair.
6. Adjustments.

Special Information

⚠WARNING Indicates a strong possibility of severe personal injury or loss of life if instructions are not followed.

CAUTION: Indicates a possibility of personal injury or equipment damage if instructions are not followed.

NOTE: Gives helpful information.

CAUTION: Detailed descriptions of *standard workshop* procedures, safety principles and service operations are not included. Please note that this manual contains warnings and cautions against some specific service methods which could cause PERSONAL INJURY, damage a vehicle or make it unsafe. Please understand that these warnings cannot cover all conceivable ways in which service, whether or not recommended by HONDA might be done, or of the possible hazardous consequences of every conceivable way, nor could HONDA investigate all such ways. Anyone using service procedures or tools, whether or not recommended by HONDA, *must satisfy himself thoroughly* that neither personal safety nor vehicle safety will be jeopardized.

All information contained in this manual is based on the latest product information available at the time of printing. We reserve the right to make changes at any time without notice. No part of this publication may be reproduced, stored in retrieval system, or transmitted, in any form by any means, electronic, mechanical, photocopying, recording, or otherwise, without the prior written permission of the publisher. This includes text, figures and tables.

First Edition 2/91 1488 pages
All Rights Reserved

HONDA MOTOR CO., LTD.
Service Publication Office

* General Info (Including SRS)
Special Tools
Specifications
Maintenance
Engine
Cooling
Fuel and Emissions
* Transaxle
* Steering
Suspension
* Brakes (Including ALB)
* Body
* Heater and Air Conditioner
* Electrical (Including SRS)

As sections with * include SRS components, special precautions are required, when servicing.

General Information

Chassis and Paint Codes 1-2
Identification Number Locations 1-3
Label Locations 1-5
Lift and Support Points 1-6
Towing 1-9
Preparation of Work 1-10
Symbol Marks 1-14
Abbreviations 1-15

SRS

Description 1-18
Wiring Location 1-20
Warning/Caution Labels 1-22
Precautions/Procedures 1-29

Chassis and Engine Numbers

Vehicle Identification Number

JHMKA75400C000001

Manufacturer, Make and Type of Vehicle
JHM: HONDA MOTOR CO., LTD. HONDA, Passenger car

Line/Body and Engine Type
KA7: LEGEND 4-Door Sedan/ C32A

Body and Transmission Type
5: 4-Door Sedan/5-speed Manual
6: 4-Door Sedan/4-speed Automatic

Vehicle Grade
4: Without SRS
5: With SRS

Fixed Code

Auxiliary Number

Factory Code
C: Saitama Factory Sayama Plant

Model Year
0: 1991

Serial Number

Engine Number

C32A2-1000001

Engine Type

Serial Number

<KF, KG, KS, KX>
M/T: C32A2-1000001 ∿
A/T: C32A2-1500001 ∿
<KE>
A/T: C32A2-1500001 ∿
<KQ>
A/T:C32A3-1800001 ∿
<KY>
A/T: C32A4-1000001 ∿
<KT>
A/T: C32A5-1000001 ∿

Transmission Number
(Manual Transmission)

K4E6-1000001

Transmission Type

Serial Number

Transmission Number
(Automatic Transmission)

MPYA-1000001

Transmission Type

Serial Number

Identification Number Locations

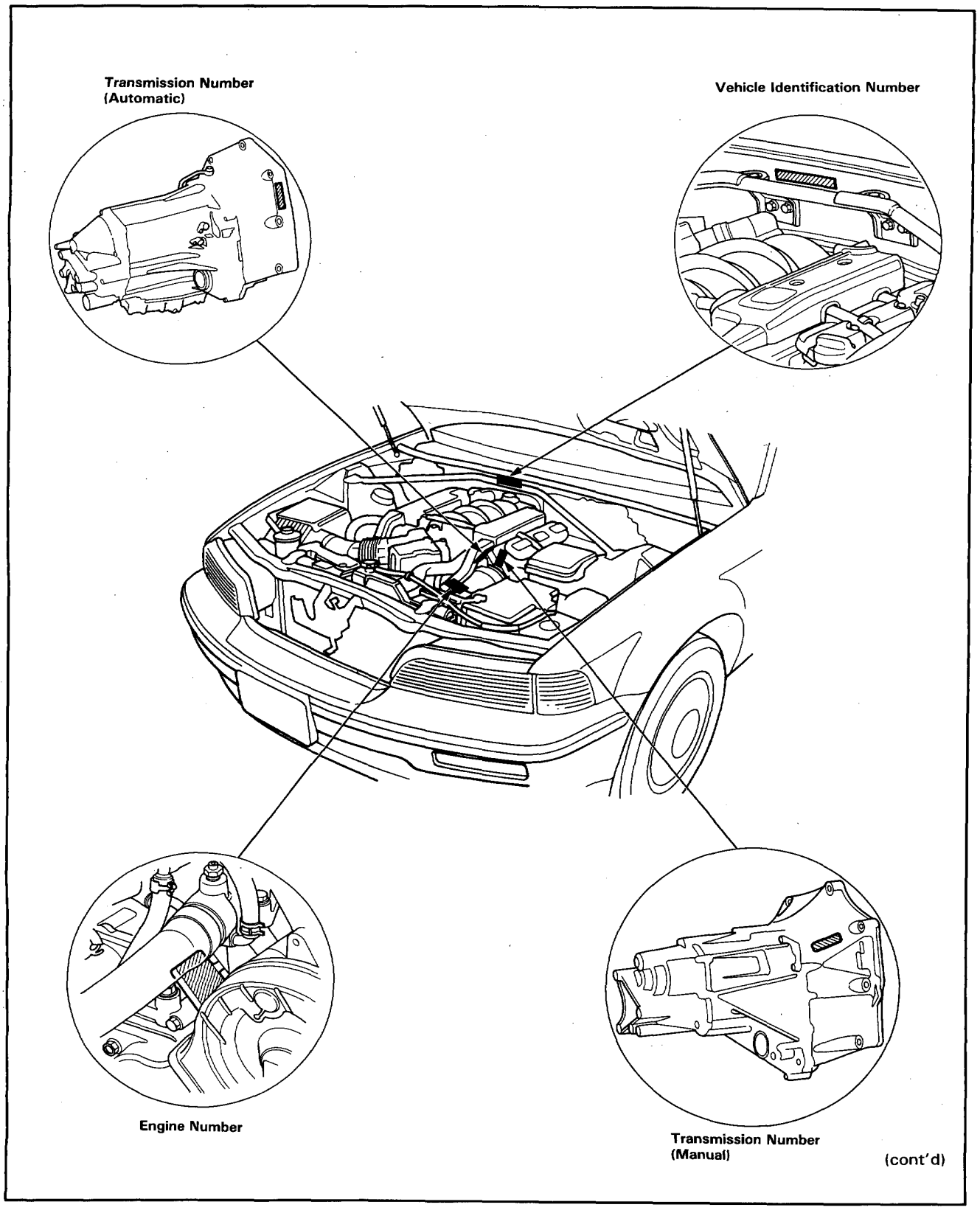

(cont'd)

Identification Number Locations (cont'd)

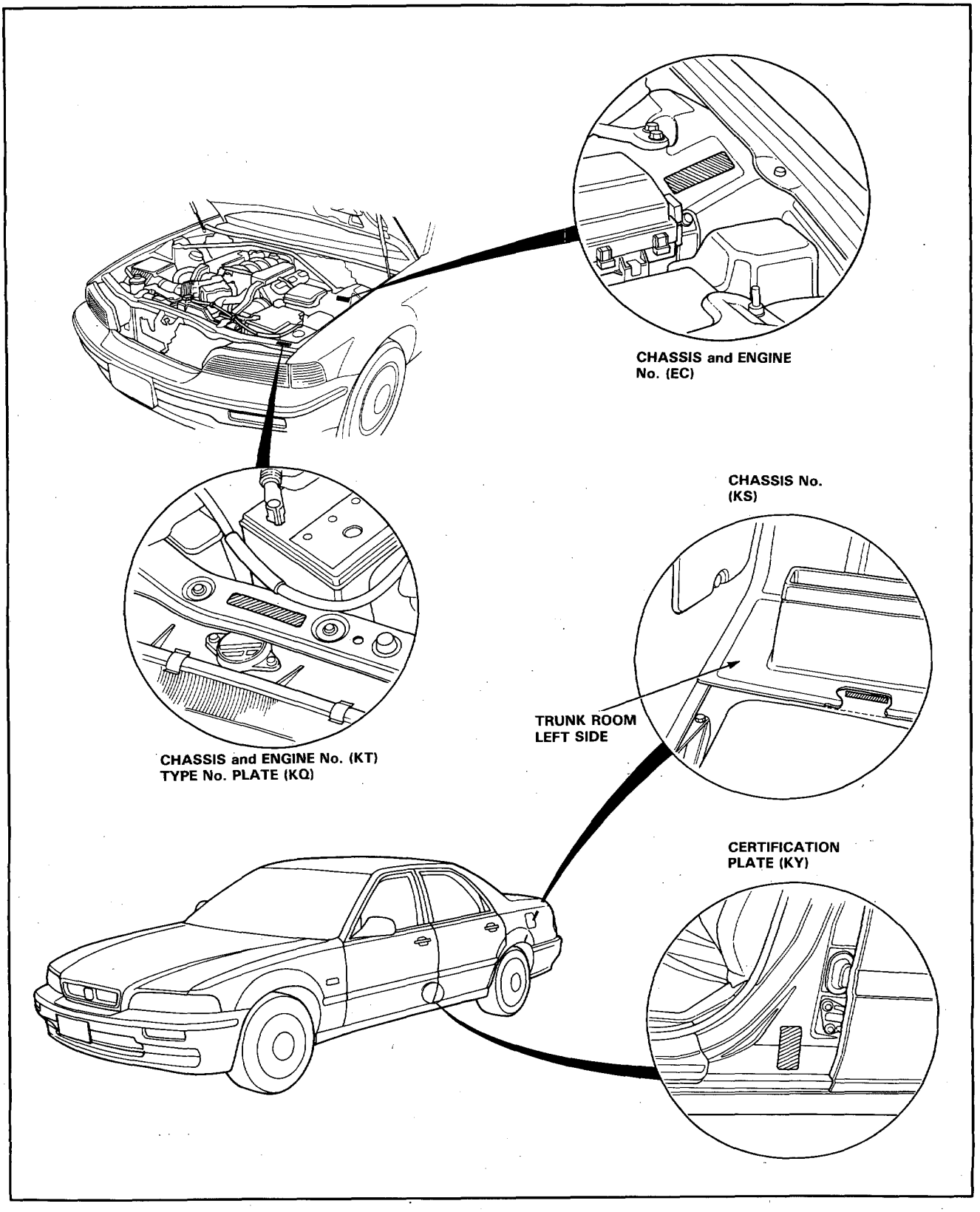

Label Locations

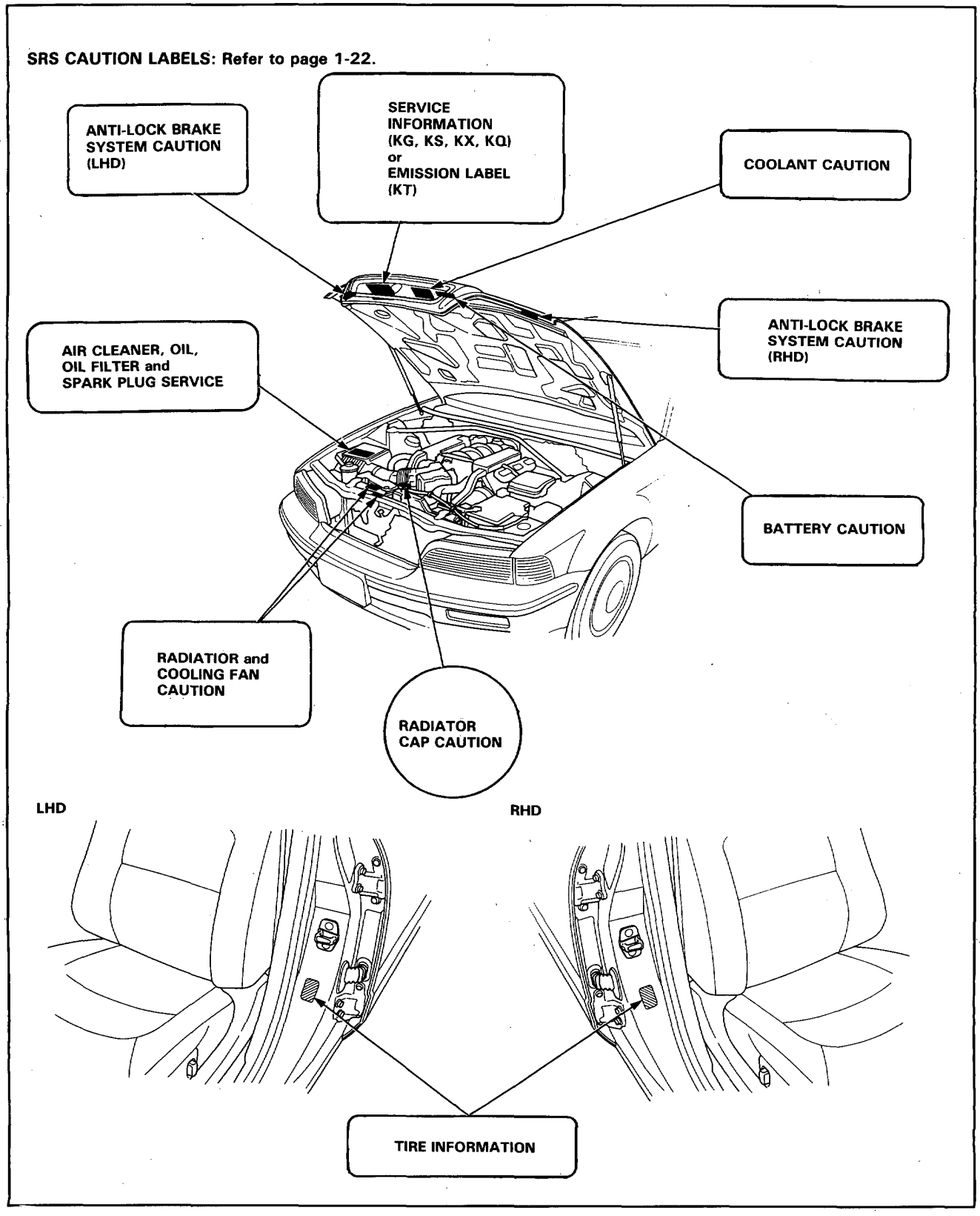

Lift and Support Points

Hoist

1. Place the lift blocks as shown.
2. Raise the hoist a few inches and rock the car to be sure it is firmly supported.
3. Raise the hoist to full height and inspect lift points for solid support.

⚠WARNING When heavy rear components such as suspension, fuel tank, spare tire and trunk lid are to be removed, place additional weight in the trunk before hoisting. When substantial weight is removed from the rear of the car, the center of gravity may change and can cause the car to tip forward on the hoist.

NOTE: Since each tire/wheel assembly weighs approximately 30 lbs (14 kg), placing the front wheels in the trunk can assist with the weight transfer.

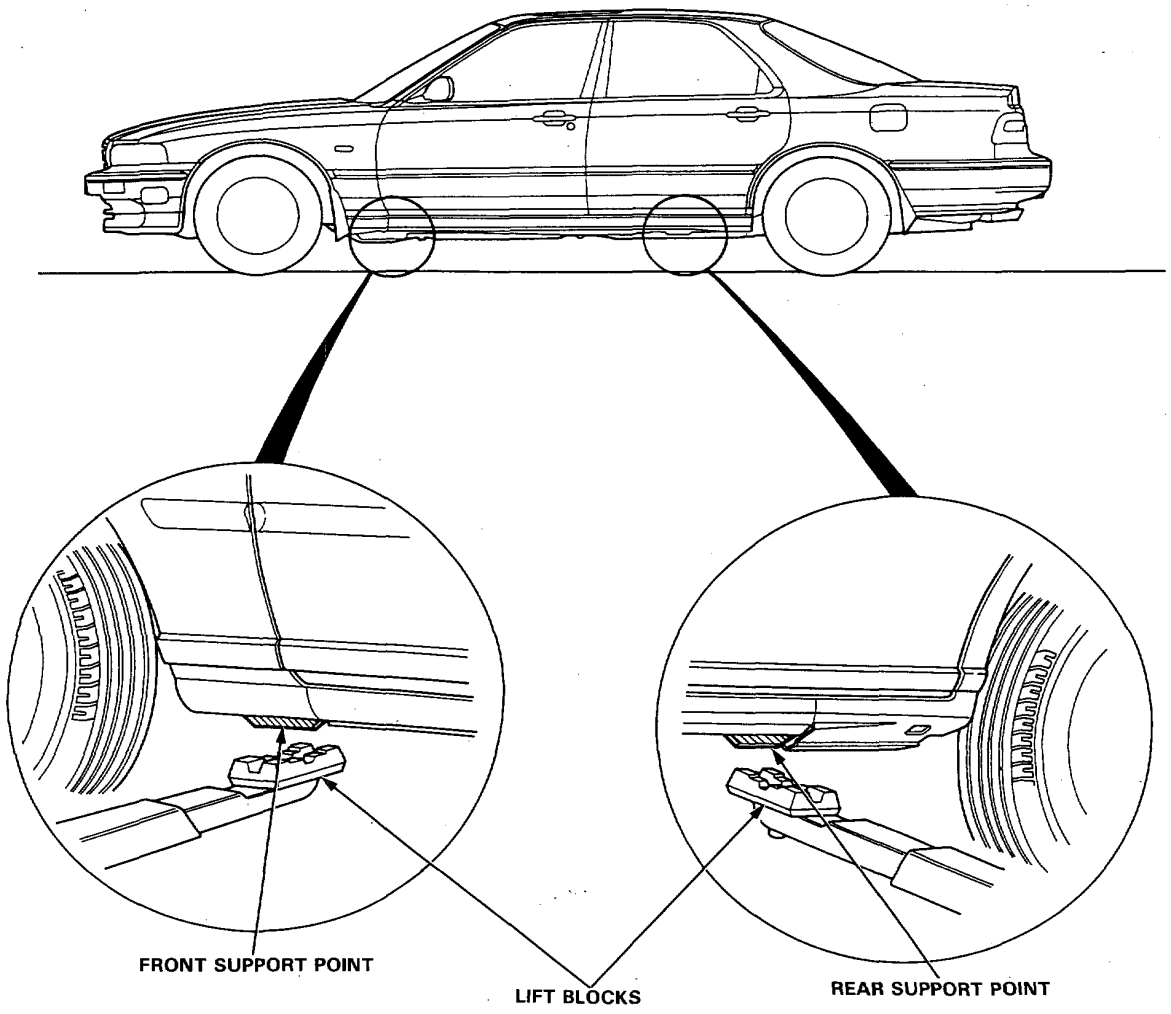

Floor Jack

1. Set the parking brake and block the wheels that are not being lifted.
2. When lifting the rear of the car, put the gearshift lever in reverse (Automatic in PARK).
3. Raise the car high enough to insert the safety stands.
4. Adjust and place the safety stands as shown on page 1-8 so the car will be approximately level, then lower the car onto them.

⚠WARNING

- **Always use safety stands when working on or under any vehicle that is supported by only a jack.**
- **Never attempt to use a bumper jack for lifting or supporting the car.**

Front

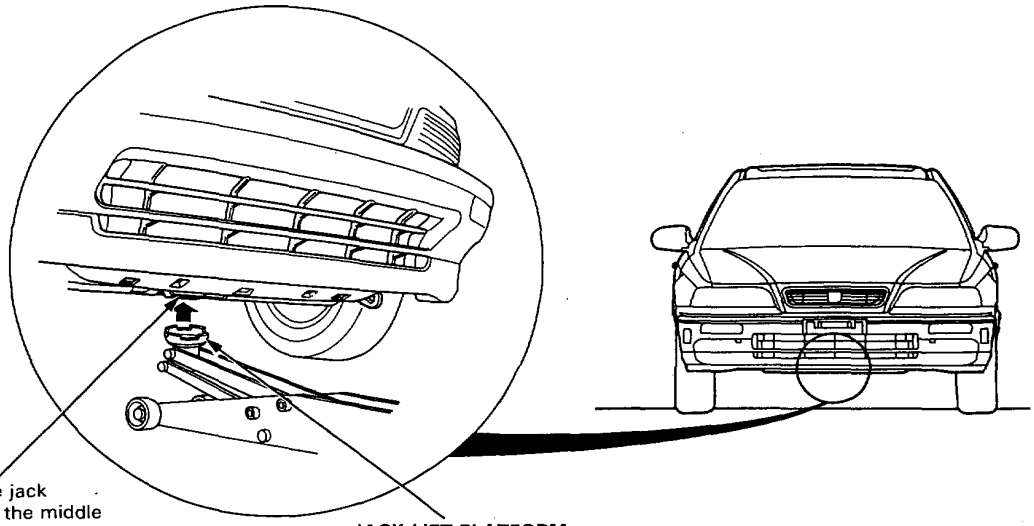

Rear

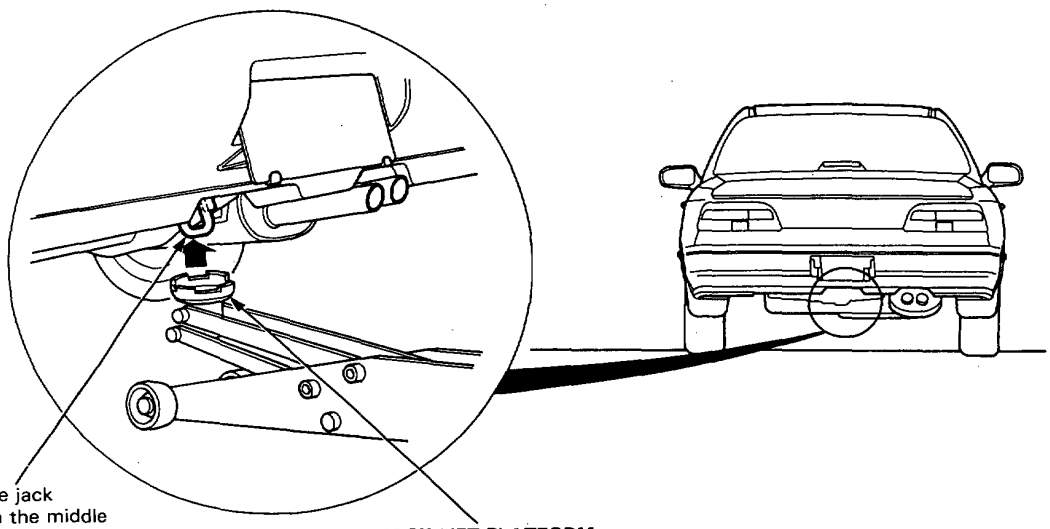

(cont'd)

Lift and Support Point (cont'd)

Safety Stands

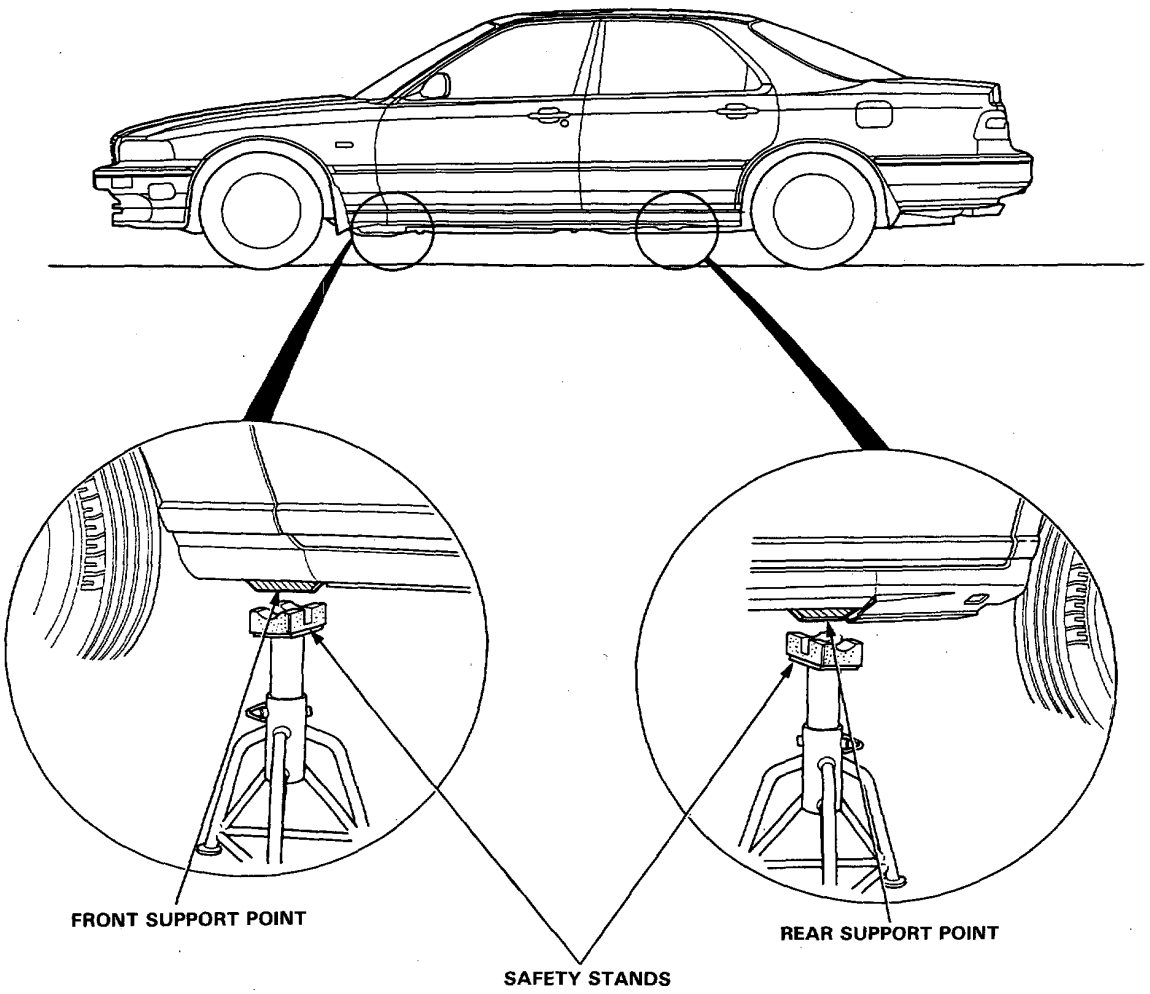

If the car needs to be towed, call a professional towing service. Never tow the car behind another car with just a rope or chain. It is very dangerous.

Emergency Towing
There are three popular methods of towing a car:

Flat-bed Equipment — The operator loads the car on the back of a truck. This is the best way of towing the LEGEND.

Wheel Lift Equipment — The tow truck uses two pivoting arms which go under the tires (front or rear) *and lifts* them off the ground. The other two wheels remain on the ground.

Sling-type Equipment — The tow truck uses metal cables with hooks on the ends. These hooks go around parts of the frame or suspension and the cables lift that end of the car off the ground. The car's suspension and body can be seriously damaged if this method of towing is attempted.

If the LEGEND cannot be transported by flat-bed, it should be towed with the front wheels off the ground. If, due to damage, the car must be towed with the front wheels on the ground, do the following:

- Release the parking brake.
- Shift the 5-speed transmission to Neutral.

  NOTICE: Improper towing preparation will damage the transmission. Follow the above procedure exactly. If you can not shift the transmission, the car must be transported on a flat-bed.

- It is best to tow the car no farther than 80 km (50 miles), and keep the speed below 55 km/h (35 mph).

  NOTICE: Trying to lift or tow the car by the bumpers will cause serious damage. The bumpers are not designed to support the car's weight.

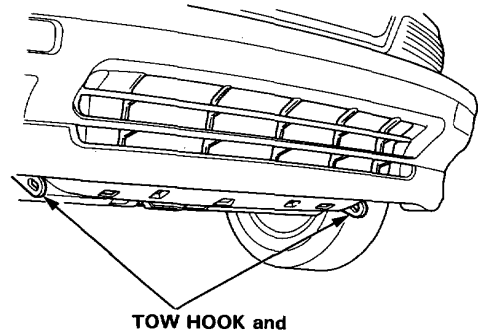

TOW HOOK and TIE DOWN BRACKETS

Handling of Special Nuts and Bolts

Because the front sub frame sections on this car are constructed with aluminum alloys, use only the special "Dacro" type nuts and bolts recommended by Honda.

NOTE:
- Dacro finish can be identified by gray plating.
- Some Dacro finish bolts have a green coating on the thread section of the bolt for easier application. This type of bolt is called a "Torquer" bolt.
- Use of other types of nuts and bolts may cause electrolysis and corrosion, which in turn could cause the bolt to loosen.

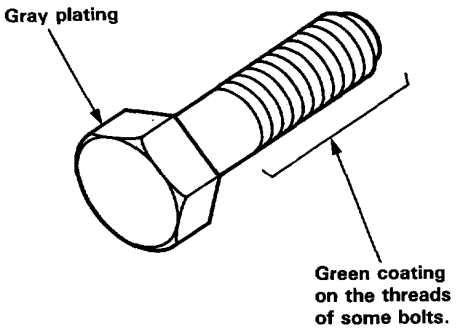

Gray plating: "Dacro" type
Gray plating + Green coating on the threads: "Torquer" type

1. When replacing nuts and bolts, use only the same type.
2. Tighten the nuts and bolts with a torque wrench to the specifications provided in this manual.
3. Clean all thread ridges with a non wire type bristle brush. Foreign matter in the threads may cause the bolt to loosen.
4. Sections on this car requiring the use of Dacro nuts and bolts will be indicated by a (☆) in this manual.

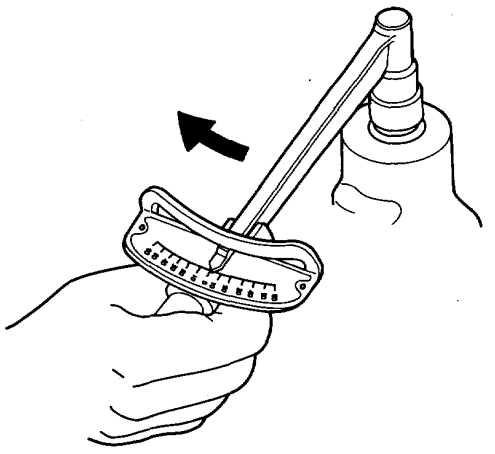

Special Caution Items For This Car

- Anti-lock brake piping system servicing.
  - Disassemble the Anti-lock brake piping system after relieve the high-pressured brake fluid.
  - Otherwise, the high-pressured brake fluid will burst out and it is very dangerous.
  - See section 13 how to relieve the high-pressured brake fluid.

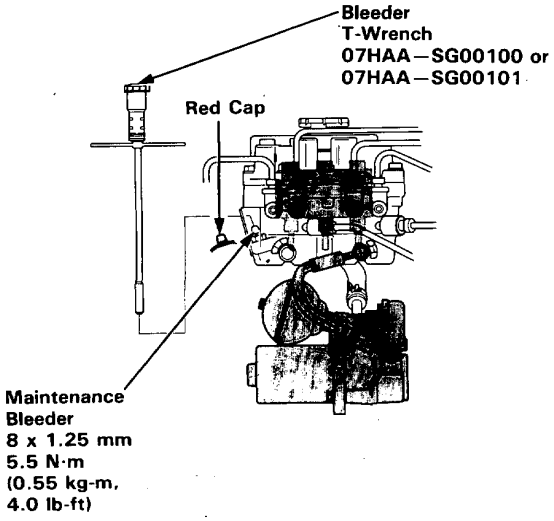

- Fuel Line Servicing.
  - Relieve fuel pressure by loosening the service bolt provided on the top of the fuel filter before disconnecting a fuel hose or a fuel pipe.

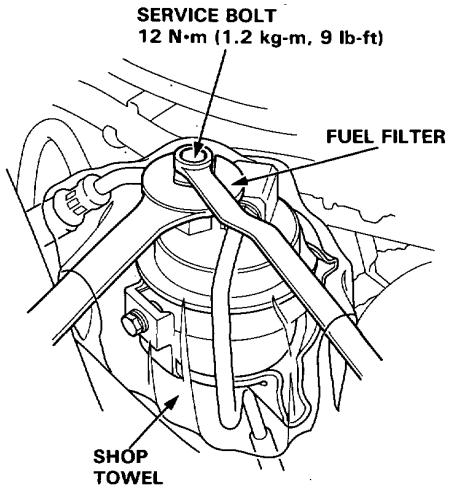

  - Be sure to replace washers, O-rings, and rubber seals with new ones when servicing fuel line parts.
  - Always apply oil to the surfaces of O-rings and seal rings before installation. Never use brake fluid, radiator fluid, vegetable oils or alcohol-based oils.

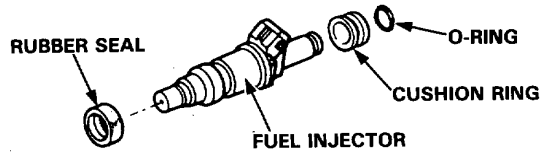

  - When assembling the flare joint of the high-pressure fuel line, clean the joint and coat with new engine oil.
  - When installing an injector, check the angle of the coupler. The center line of the coupler should align with the setting mark on the injector holder.

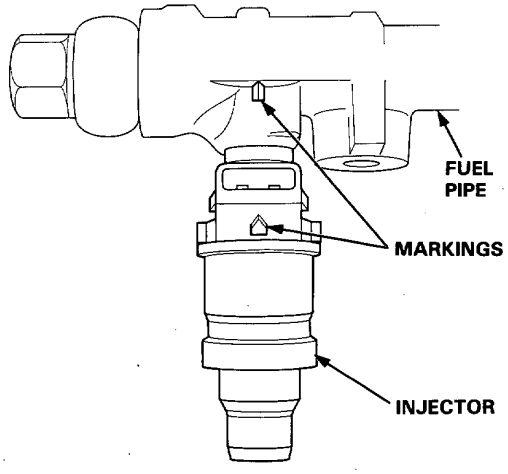

- Inspection for fuel leakage.
  - After assembling fuel line parts, turn ON the ignition switch (do not operate the starter) so that the fuel pump is operated for approximately two seconds and the fuel is pressurized. Repeat this operation two or three times and check whether any fuel leakage has occurred in any of the various points in the fuel line.

(cont'd)

Special Caution Item For This Car (cont'd)

- Installation of an amateur radio for cars equipped with PGM-FI.
  Care has been taken for the Fuel-Injection, A/T, Cruise control and Anti-lock brake system control units and its wiring to prevent erroneous operation from external interference, but erroneous operation of the control units may be caused by entry of extremely strong radio waves. Attention must be paid to the following items to prevent erroneous operation of the control units.
  - The antenna and the body of the radio must be at least 200 mm (7.9 in.) away from the control units.

  The control unit locations:
  - See Section 16 for Relay/Control Unit Locations.
  - Do not lead the antenna feeder and the coaxial cable over a long distance parallel to the car's wiring.
    When crossing the wiring is required, execute crossing at a right angle.
  - Do not install a radio with a large output (max. 10 W).

- Apply liquid gasket to the transmission, oil pump cover, right side cover and water outlet.
  Use HONDA genuine Liquid gasket Part NO. 0Y740–99986.
  - Check that the mating surfaces are clean and dry before applying liquid gasket. Degrease the mating surfaces if necessary.
  - Apply liquid gasket evenly, being careful to cover all the mating surface.
  - To prevent leakage of oil, apply liquid gasket to the inner threads of the bolt holes.
  - Do not apply liquid gasket to the O-ring grooves.
  - Do not install the parts if 20 minutes or more have elapsed since applying liquid gasket. Instead, reapply liquid gasket after removing the old residue.
  - Wait at least 30 minutes before filling with appropriate liquid (engine oil, coolant and similar fluids).

CAUTION: Observe all safety precautions and notes while working.

- Protect all painted surfaces and seats against dirt and scratches with a clean cloth or vinyl cover.

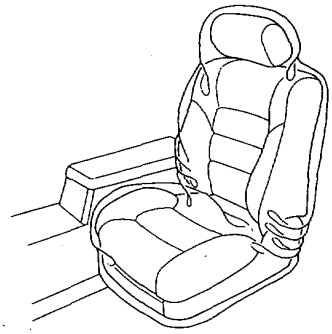

- Work safely and give your work your undivided attention. When either the front or rear wheels are to be raised, block the remaining wheels securely. Communicate as frequently as possible when a work involves two or more workers. Do not run the engine unless the shop or working area is well ventilated.

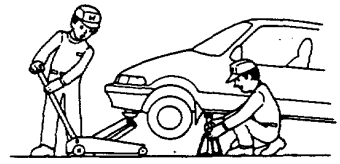

- Prior to removing or disassembling parts, they must be inspected carefully to isolate the cause for which service is necessary. Observe all safety notes and precautions and follow the proper procedures as described in this manual.

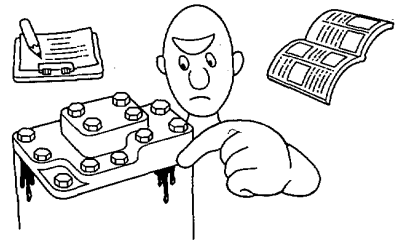

- Mark or place all removed parts in order in a parts rack so they can be reassembled in their original places.

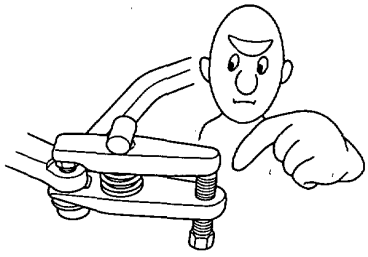

- Use the special tools when use of such is specified.

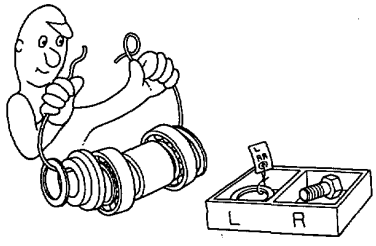

- Parts must be assembled with the proper torque according to the maintenance standards established.
- When tightening a series of bolts or nuts, begin with the center or larger diameter bolts and tighten them in crisscross pattern in two or more steps.

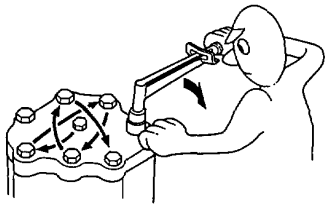

- Use new packings, gaskets, O-rings and cotter pins whenever reassembling.

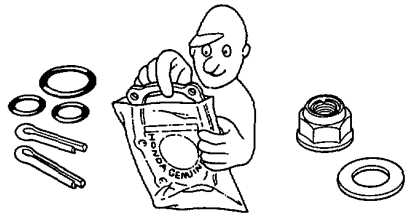

- Use genuine HONDA parts and lubricants or those equivalent. When parts are to be reused, they must be inspected carefully to make sure they are not damaged or deteriorated and are in good usable condition.

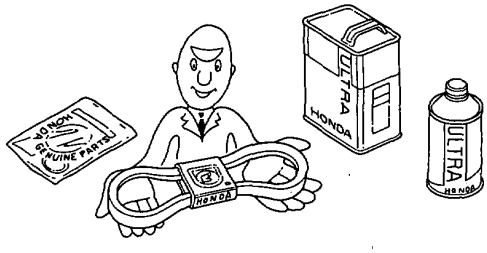

- Coat or fill parts with specified grease as specified (page 4-2). Clean all removed parts with solvent upon disassembly.

Preparation of Work

- Brake fluid and hydraulic components.
  - When replenishing the system, use extreme care to prevent dust and dirt from entering the system.
  - Do not mix different brands of fluid as they may not be compatible.
  - Do not reuse drained brake fluid.
  - Brake fluid can cause damage to painted surfaces.
    Wipe up spilled fluid at once.
  - After disconnecting brake hoses or pipes be sure to plug the openings to prevent loss of brake fluid.
  - Clean all disassembled parts only in clean BRAKE FLUID. Blow open all holes and passages with compressed air.
  - Keep disassembled parts from air-borne dust and abrasives.
  - Check that parts are clean before assembly.

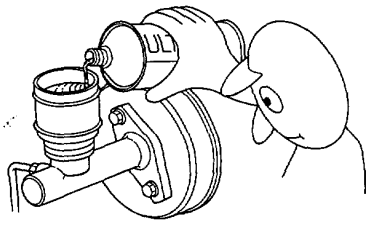

- Avoid oil or grease getting on rubber parts and tubes, unless specified.

- Upon assembling, check every part for proper installation and operation.

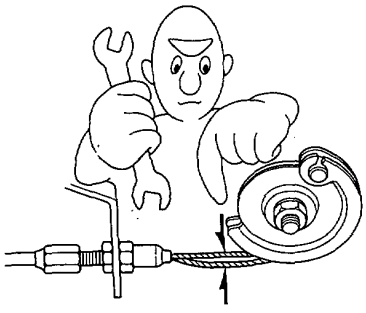

Symbol Marks

The following symbols stand for:

: Apply engine oil.

: Apply brake fluid.

: Apply grease.

: Apply DEXRON® I or DEXRON® II Automatic Transmission Fluid.

: Apply Power Steering Fluid –V.

: Apply or check vacuum.

①, ②, ③, ... ❶, ❷, ❸, ... : Sequence for removal or installation.

Abbreviations

A/C	Air Conditioner
ALB	Anti Lock Brake System
A/T	Automatic Transmission
ATF	Automatic Transmission Fluid
B or BAT	Battery
CATA	Catalytic Converter
EACV	Electronic Air Control Valve
ECU	Electronic Control Unit for Fuel-Injection System and/or Automatic Transmission Control System
EGR	Exhaust Gas Recirculation
EX	Exhaust
GND	Ground
IG	Ignition
IN	Intake
INT	Intermittent
L.	Left
LHD	Left Hand Drive
M/T	Manual Transmission
PCV	Positive Crankcase Ventilation
PGM-FI	Programmed Fuel-Injection
P/S	Power Steering
R.	Right
RHD	Right Hand Drive
SW	Switch
SOL. V	Solenoid Valve
TDC	Top Dead Center

P	Parking
R	Reverse
N	Neutral
D_4	Drive Position (1st—4th)
D_3	Drive Position (1st—3rd)
2	Fixed 2nd speed
1	Fixed 1st speed

General Information—SRS

Description 1-18
Wiring Locations 1-20
Warning/Caution Labels 1-22
Precautions/Procedures 1-29

SUPPLEMENTAL RESTRAINT SYSTEM (SRS)

The Legend includes a driver's side Airbag, located in the steering wheel hub. Information necessary to safely service the SRS is included in this Shop Manual. Items marked * in each section table of contents include, or are located near, SRS components. Servicing, disassembling or replacing these items will require special precautions and tools, and should therefore be done only by an authorized HONDA dealer.

⚠WARNING

- **To avoid rendering the SRS inoperative, which can lead to personal injury or death in the event of a severe frontal collision, all maintenance must be performed by an authorized HONDA dealer.**
- **Improper maintenance, including incorrect removal and installation of the SRS, can lead to personal injury caused by unintentional activation of the Airbag.**
- **All SRS electrical wiring harnesses are covered with yellow outer insulation. Related components are located in the steering column, center armrest and dashboard lower panel. Do not use electrical test equipment on these circuits.**

Description

The SRS is a safety device which, when used in conjunction with the seat belt, is designed to protect the driver by operating only when the car receives a frontal impact exceeding a certain set limit.
The system is composed of left and right dash sensors, the SRS unit (includes cowl sensor), the cable reel and airbag assembly.

[LHD]

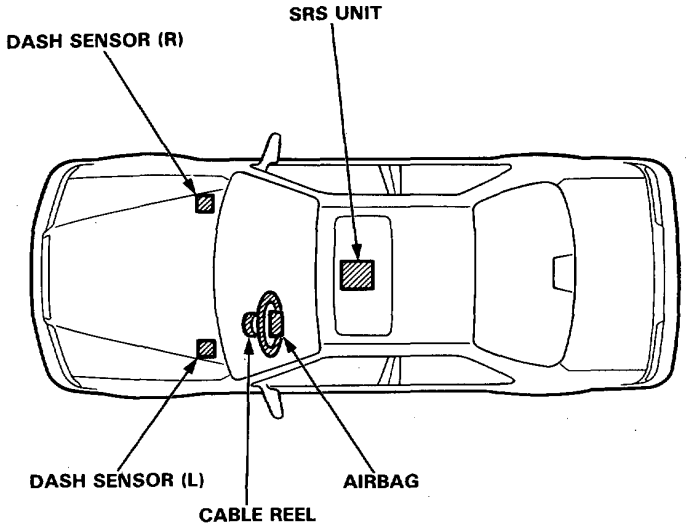

[RHD]

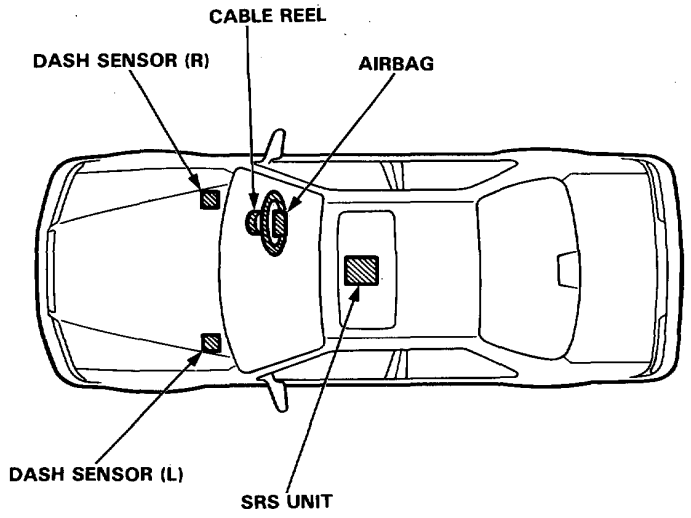

Operation:
As shown in the diagram below, the left and right dash sensors are connected in parallel. The parallel set of sensors are connected in series by the airbag inflator circuit and the car battery. In addition, a backup power unit is connected in parallel with the car battery. The backup power unit and the cowl sensor are located inside the SRS control unit.

The SRS operational sequence is as follows:
(1) The cowl sensor activates, and one or both dash sensors activate.
(2) Electrical energy is supplied to the airbag inflator by the battery, or the backup power unit if the battery voltage is too low.
(3) Airbag deployment.

At least the cowl and one dash sensor must be activated simultaneously for at least 0.015 seconds in order for the airbag to be deployed.

NOTE: The activation time shown is for reference in the case of head-on collision against a fixed wall at 50 km/h (31.3 mph) speed.

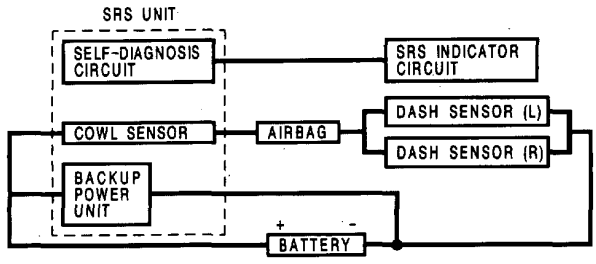

Self-diagnosis system
A self-diagnosis circuit is built into the SRS control unit; when the ignition switch is turned ON, the SRS light comes on and goes out after about 6 seconds if the system is operating normally. If the light does not come on, or does not go out after 6 seconds, or if it comes on while driving, this indicates an abnormality in the system. It must be inspected and repaired as soon as possible.

Wiring Locations

CAUTION:

- **Make sure all SRS ground locations are clean and grounds are securely attached.**
- **All SRS electrical wiring harnesses are covered with yellow outer insulation.**
- **Replace the entire affected SRS harness assembly if there is an open circuit or damage to the wiring.**

LHD:

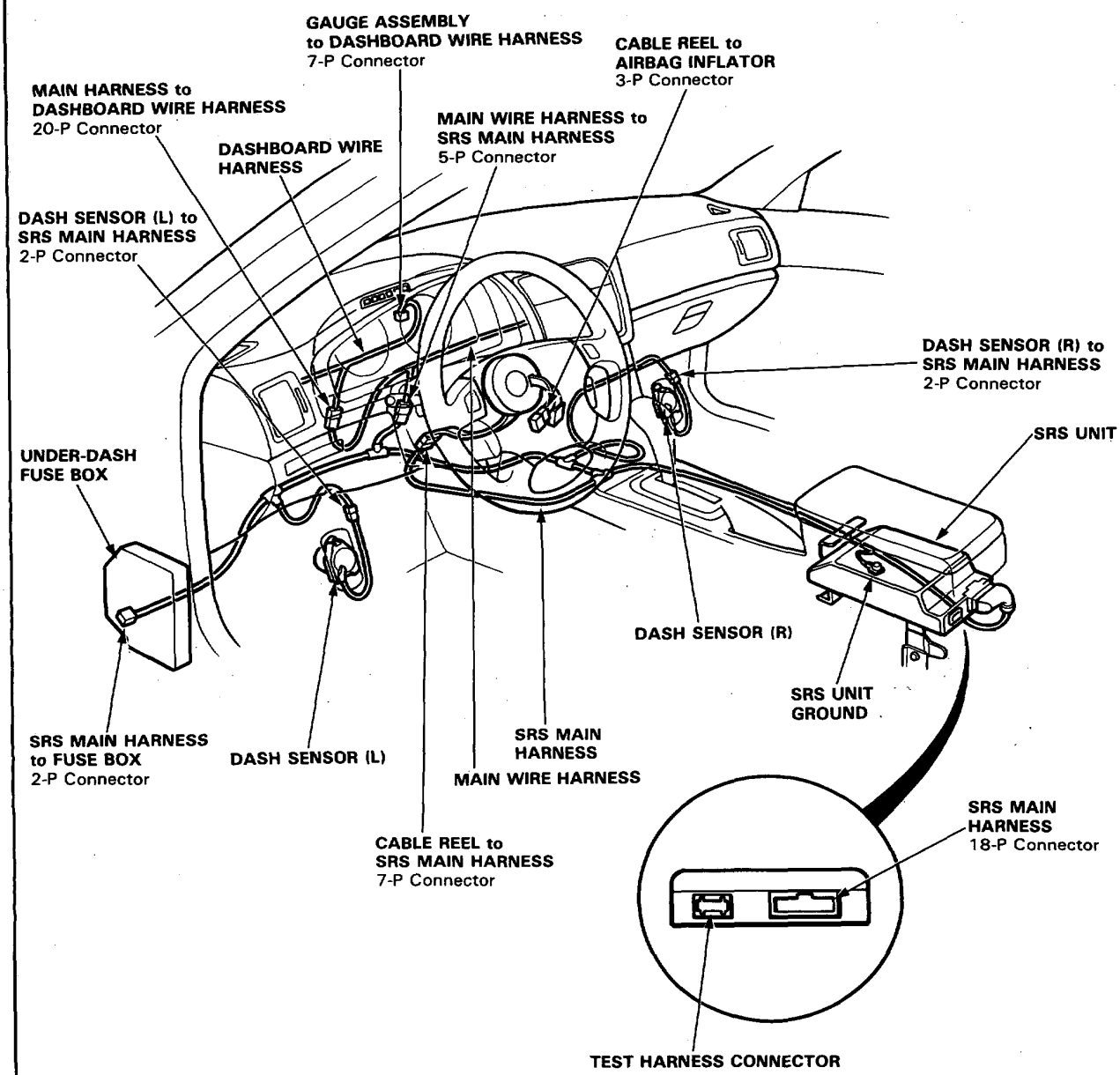

RHD:

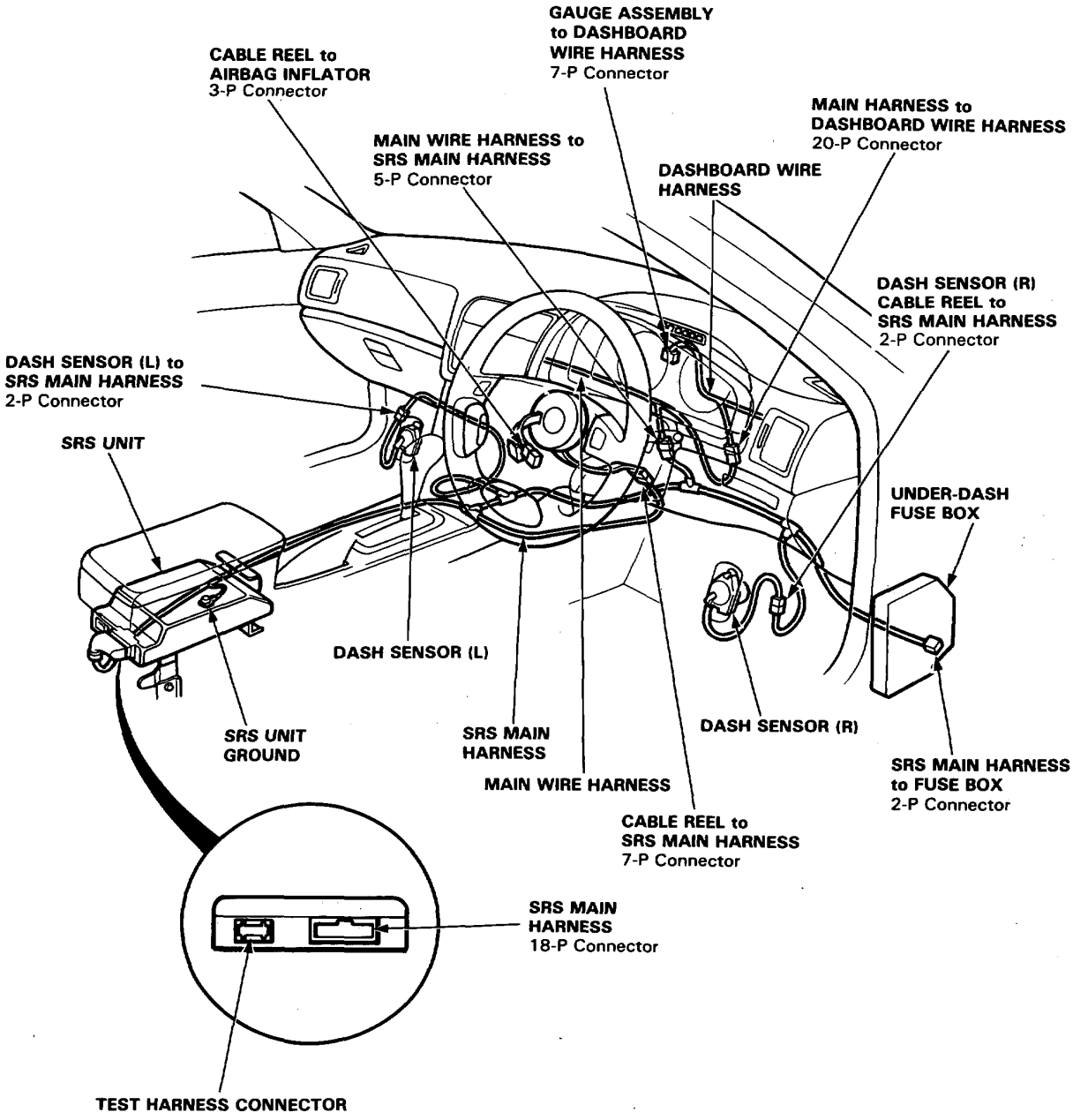
GAUGE ASSEMBLY to DASHBOARD WIRE HARNESS 7-P Connector
CABLE REEL to AIRBAG INFLATOR 3-P Connector
MAIN HARNESS to DASHBOARD WIRE HARNESS 20-P Connector
MAIN WIRE HARNESS to SRS MAIN HARNESS 5-P Connector
DASHBOARD WIRE HARNESS
DASH SENSOR (R) CABLE REEL to SRS MAIN HARNESS 2-P Connector
DASH SENSOR (L) to SRS MAIN HARNESS 2-P Connector
SRS UNIT
UNDER-DASH FUSE BOX
DASH SENSOR (L)
SRS UNIT GROUND
SRS MAIN HARNESS
DASH SENSOR (R)
MAIN WIRE HARNESS
SRS MAIN HARNESS to FUSE BOX 2-P Connector
CABLE REEL to SRS MAIN HARNESS 7-P Connector
SRS MAIN HARNESS 18-P Connector
TEST HARNESS CONNECTOR

Warning/Caution Labels

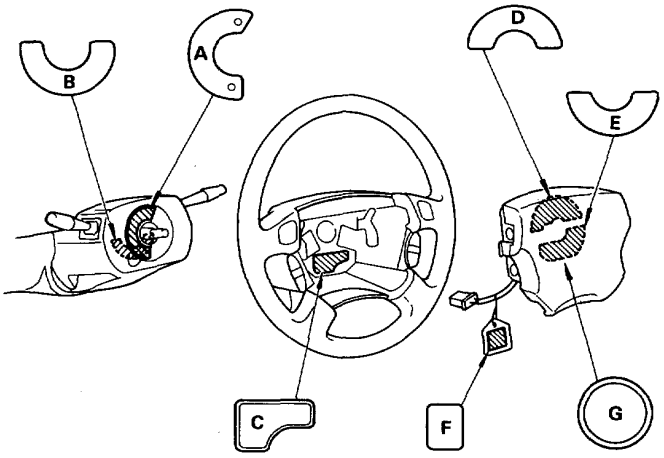

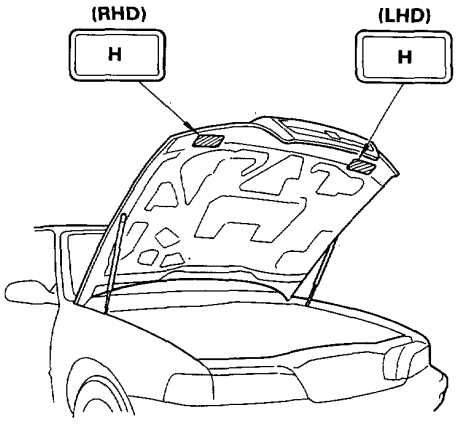

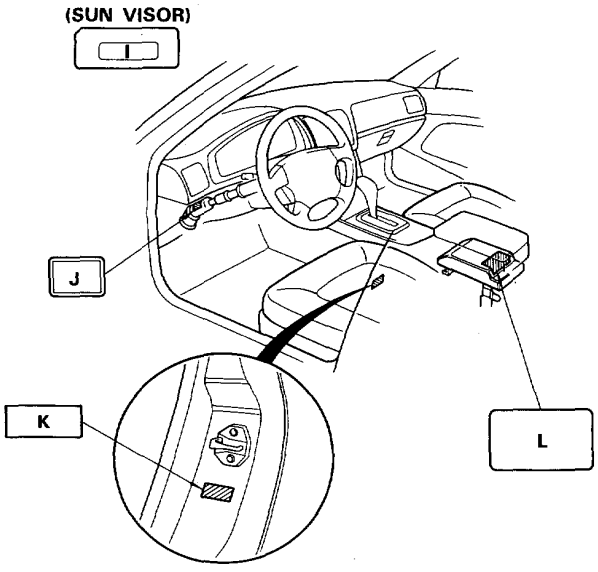

A: CABLE REEL CAUTION A
(Except KS, KY models)

SRS
CAUTION
- REFER TO THE SHOP MANUAL.

ATTENTION
- SE REPORTER AU MANUAL D'ATELIER.

ACHTUNG
- WERKSTATTHANDBUCH LESEN.

WAARSCHUWING
- LEES HET WERKPLAATSHANOBOEK.

(KS, KY models)

SRS
CAUTION
- REFER TO THE SHOP MANUAL.

OBSERVERA
- LÄS IGENOM INSTRUKTIONSBOKEN.

Varoitus
- Lue huoltokirjanen.

تحذير : (S.R.S.)
- اقرأ دليل الخدمة.

B: CABLE REEL CAUTION B
(Except KS, KY models)

SRS
CAUTION
- REFER TO THE SHOP MANUAL.

ATTENTION
- SE REPORTER AU MANUEL D'ATELIER.

ACHTUNG
- WERKSTATTHANDBUCH LESEN.

WAARSCHUWING
- LES HET WERKPLAATSHANOBOEK.

(KS, KY models)

SRS
CAUTION
- NO SERVICEABLE PARTS INSIDE: DO NOT DISASSEMBLE OR TAMPER.

OBSERVERA
- DET FINNS INGA INRE DELAR DU SJÄLV KAN REPARERA. FÖRSÖK INTE ATT TA ISÄR ELLER ÄNDRA.

Varoitus
- Ei huollettavia osia sisällä. Älä pura äläkä tuki.

تحذير : (S.R.S.)
- لا توجد أجزاء بالداخل يمكن صيانتها، لا تحاول الفتح أو العبث.

C: STEERING WHEEL WARNING
(Except KS, KY models)

WARNING SRS
- REFER TO THE SHOP MANUAL.
- SE REPORTER AU MANUEL D'ATELIER.
- WERKSTATTHANDBUCH LESEN.
- LEES HET WERKPLAATSHANDBOEK.

(KS, KY models)

WARING SRS
- REFER TO THE SHOP MANUAL.
- SE VERKSTADSHANDBOKEN.
- KATSO TYÖKÄSIKIRJAA.
- لمزيد من المعلومات نرجو مراجعة كتيب دليل الاستخدام في الورشة.

D: INFLATOR COVER LABEL
(KF, KG, KX models)

- DANGER
  EXPLOSIVE/FLAMMABLE
  POISON
  REFER TO THE SHOP MANUAL.
- DANGER
  EXPLOSIF ET INFLAMMABLE
  POISON
- GEFAHR
  EXPLOSIV/ENTZÜNDBAR
  GIFT
  WERKSTATTHANDBUCH LESEN.
- GEVAAR
  EXPLOSIEGEVAAR/BPANDBAAR
  GIFTIG
  LEES HET WERKPLAATSHANDBOEK.

(KE, KQ models)

DANGER
EXPLOSIVE/FLAMMABLE SRS
CONTACT WITH ACID, WATER, OR HEAVY-METALS SUCH AS COPPER, LEAD, OR MERCURY, MAY PRODUCE HARMFUL AND IRRITATING GASES OR EXPLOSIVE COMPOUNDS. STORAGE TEMPERATURES MUST NOT EXCEED 100°C. FOR PROPER HANDLING, STORAGE, AND DISPOSAL PROCEDURES REFER TO THE HONDA SHOP MANUAL, SRS SUPPLEMENT.
POISON
CONTAINS POISONOUS SODIUM AZIDE AND POTASSIUM NITRATE.
FIRST AID:
IF CONTENTS ARE SWALLOWED, INDUCE VOMITING.
FOR EYE CONTACT, FLUSH EYES WITH WATER FOR 15 MINUTES. IF GASES (FROM ACID OR WATER CONTACT) ARE INHALED, SEEK FRESH AIR. IN EVERY CASE, GET PROMPT MEDICAL ATTENTION.
KEEP OUT OF REACH OF CHILDREN.

(cont'd)

D: INFLATOR COVER LABEL
(KS, KY models)

DANGER
EXPLOSIVE/FLAMMABLE POISON
REFER TO THE SHOP MANUAL.
FARLIGT
EXPLOIVT/LÄTTANTÄNDLIGT GIFTIGT SE VERKSTADSHANDBOKEN.
VAARA
HELPOSTI RÄJÄHTÄVÄ/SYTTYVÄ MYRKKY GIFT KATSO TYÖKÄSIKIRJAA.

مادة خطيرة
مادة متفجرة/قابلة للاشتعال
مادة سامة
لمزيد من المعلومات نرجو مراجعة كتيب دليل الاستخدام في الورشة.

E: MODULE WARNING
(KF, KG, KX models)

WARNING SRS
- REFER TO THE SHOP MANUAL.
- SE REPORTER AU MANUEL D'ATELIER.
- WERKSTATTHANDBUCH LESEN.
- LEES HET WERKPLAATSHANDBOEK.

(KE, KQ models)

WARNING SRS
TO PREVENT ACCIDENTAL DEPLOYMENT AND POSSIBLE INJURY:
ALWAYS INSTALL THE PROTECTIVE SHORT CONNECTOR ON THE INFLATOR CONNECTOR WHEN THE HARNESS IS DISCONNECTED.
UNDER NO CIRCUMSTANCES SHOULD DIAGNOSIS BE PERFORMED USING ELECTRICAL TEST EQUIPMENT OR PROBING DEVICES.
NO SERVICEABLE PARTS INSIDE. DO NOT DISASSEMBLE OR TAMPER.
STORE THE REMOVED AIRBAG ASSEMBLY WITH THE PAD SURFACE UP.
FOR SPECIAL HANDLING OR STORAGE REFER TO THE HONDA SHOP MANUAL.
DISPOSE OF THE ENTIRE UNIT AS DIRECTED.

(KS, KY models)

WARNING SRS
- REFER TO THE SHOP MANUAL.
- SE VERKSTADSHANDBOKEN.
- KATSO TYÖKÄSIKIRJAA.

لمزيد من المعلومات نرجو مراجعة كتيب دليل الاستخدام في الورشة.

F: STEERING WHEEL WARNING
(Except KS, KY models)

WARNING SRS
TO PREVENT ACCIDENTAL DEPLOYMENT AND POSSIBLE INJURY:
ALWAYS INSTALL THE PROTECTIVE SHORT CONNECTOR ON THE INFLATOR CONNECTOR WHEN THE HARNESS IS DISCONNECTED.

POUR EMPECHER UN DEPLOIEMENT ACCIDENT ET NE PAS RISQUER DES BLESSURES: BRANCHEZ TOUJOURS LE CONNECTEUR DE COURT-CIRCUIT AU CONNECTEUR DU GONFLEUR LORSQUE LE FAISCEAU DE FILS EST DEBRANCHE.

(KS model)

VARNING SRS
FÖR ATT FÖRHINDRA OAVSIKTLIG UTLÖSNING OCH TÄNKBARA
SKADOR:
SÄTT ALLTID DET SKYDDANDE KORTSLUTNINGSSTIFTET PA TRYCKPUMPSKONTAKTEN NÄR KABELNÄTET LOSSAS.

Varoitus SRS
Estää vahingollisen käytön ja mahdollisen vahingoittumisen:
Asenna aina suojaava lyhyt liitin pumpun liittimeen silloin kun haarniska on irti.

(KY model)

WARNING SRS
TO PREVENT ACCIDENTAL DEPLOYMENT AND POSSIBLE INJURY:
ALWAYS INSTALL THE PROTECTIVE SHORT CONNECTOR ON THE INFLATOR CONNECTOR WHEN THE HARNESS IS DISCONNECTED.

تنبيه : (S.R.S.)
لكي تمنع حدوث الانتشار العرضي أو الضرر المحتمل.
قم دائما بتركيب الموصل القصير على موصل النافخ عند فصل الأحزمة.

G: INFLATOR LABEL

DANGER CONTAINS SODIUM AZIDE AND POTASSIUM NITRATE.
CONTENTS ARE EXTREMELY FLAMMABLE.
DO NOT DISMANTLE OR INCINERATE.
DO NOT PROBE WITH ELECTRICAL DEVICES.

H: BULKHEAD WARNING
(Except KS, KY models)

WARNING SRS
THIS VEHICLE IS EQUIPPED WITH A AIRBAG SYSTEM AS A SUPPLEMENTAL RESTRAINT SYSTEM. (SRS)
ALL S.R.S. ELECTRICAL WIRING AND CONNECTORS ARE COLORED YELLOW.
DO NOT USE ELECTRICAL TEST EQUIPMENT ON THESE CIRCUITS.
TAMPERING WITH OR DISCONNECTING THE S.R.S. WIRING COULD RESULT IN ACCIDENTAL FIRING OF THE INFLATOR OR MAKE THE SYSTEM INOPERATIVE WHICH MAY RESULT IN SERIOUS INJURY.

ATTENTION SRS
CE VEHICULE EST EQUIPE D'UN COUSSIN D'AIR DU COTE CONDUCTEUR QUI CONSTITUE UN SYSTEME DE RETENUE COMPLEMENTAIRE (S.R.S.).
TOUS LES FILS ET CONNECTEURS ELECTRIQUES DU SYSTEME DE RETENUE COMPLEMENTAIRE (S.R.S.) SONT DE COULEUR JAUNE. N'UTILISEZ PAS UN EQUIPMENT D'ESSAIS ELECTRIQUES SUR CES CIRCUITS. NE TOUCHEZ PAS ET NE DEBRANCHEZ PAS LES FILS DU SYSTEME S.R.S. CAR CECI POURRAIT DE TRADUIRE PAR LE DECLENCHEMENT ACCIDENTEL DU GONFLEUR OU RENDRE LE SYSTEME INOPERANT ET VOUS EXPOSER AINSI A DE GRAVES BLESSURES.

WARNING SRS
DIESES FAHRZEUG IST MIT EINEM FAHRERAIRBAG (SRS) ALS ZUSÄTZLICHEM RÜCKHALTESYSTEM AUSGERÜSTET.
ALLE ELEKTRISCHEN KABEL, SOWIE DIE ZUGEHÖRIGEN STECKVERBINDER DES S.R.S.-SYSTEMS SIND IN GELBER FARBE AUSGEFÜHRT.
KEINE ELEKTRISCHEN PRÜFGERÄTE AN DIE S.R.S.-VERKABELUNG ANSCHLIEBEN.
VERÄNDERN ODER UNTERBRECHEN DER S.R.S.-VERKABELUNG KANN UNKONTROLLIERTES ZÜNDEN DES GASGENERATORS AUSLÖSEN. ODER DAS SYSTEM AUBER FUNKTION SETZEN WAS ZU ERNSTHAFTEN VERLETZUNGEN FÜHREN KANN.

WAARSCHUWING SRS
DIT VOERTUIG IS UITGERUST MET EEN LUCHTKUSSEN AAN DE BESTUURDERSKANT ALS EXTRA BESCHERMING (S.R.S.).
ALLE ELEKTRISCHE LEIDINGEN EN AANSLUITINGEN VAN DE S.R.S. ZIJN GEEL GEKLEURD. GEBRUIK GEEN ELEKTRISCHE TESTAPPARATUUR VOOR DEZE CIRCUITS. KNOEIEN MET OF LOSKOPPELEN VAN DE S.R.S. LEIDINGEN KAN LEIDEN TOT BRAND IN DE VULINRICHTING OF TOT UITSCHAKELEN VAN HET SYSTEEM DIT KAN TOT ERNSTIGE ONGELUKKEN LEIDEN.

H: BULKHEAD WARNING
(KS, KY models)

WARNING SRS
THIS VEHICLE IS EQUIPPED WITH A AIRBAG SYSTEM AS A SUPPLEMENTAL RESTRAINT SYSTEM. (SRS)
ALL S.R.S. ELECTRICAL WIRING AND CONNECTORS ARE COLORED YELLOW.
DO NOT USE ELECTRICAL TEST EQUIPMENT ON THESE CIRCUITS.
TAMPERING WITH OR DISCONNECTING THE S.R.S. WIRING COULD RESULT IN ACCIDENTAL FIRING OF THE INFLATOR OR MAKE THE SYSTEM INOPERATIVE, WHICH MAY RESULT IN SERIOUS INJURY.

VARNING SRS
DETTA FORDON HAR EN LUFTKUDDE FÖR FÖRARSÄTET SOM ETT KOMPLETTERANDE SKYDDSSYSTEM (SRS). SAMTLIGA ELLEDNINGAR OCH KONTAKTER I SRS-SYSTEMET ÄR GULFÄRGADE. ANVÄND INTE ELEKTRISK PROVUTRUSTNING FÖR DESSA KRETSAR. OM DU ÄNDRAR ELLER LOSSAR EN SRS-LEDNING KAN DET RESULTERA I EN OAVSIKTLIG UTLÖSNING AV TRYCKPUMPEN ELLER GÖRA ATT SYSTEMET SLUTAR FUNGERA. DÅ KAN EN ALLVARLIG OLYCKA UPPSTÅ.

VAROITUS SRS
TÄSSÄ AUTOSSA ON YLIMÄÄRÄISENÄ TUKIJÄRJESTELMÄNÄ AJAJAN ILMATYYNY. (SRS)
KAIKKI SRS-SÄHKÖJOHDOT JA -LIITTIMET OVAT KELTAISET.
ÄLÄ KÄYTÄ SÄHKÖKOELAITTEITA NÄISSÄ VIRTAPIIREISAÄ. SRS-JOHTOJEN TUKKEAMINEN TAI IRROTTAMINEN SAATTAA SYTYTTÄÄ VAHINGOSSA PUMPUN TAI TEHDÄ JÄRJESTELMÄN KÄYTTÖKELVOTTOMAKSI.
TÄSTÄ TAAS SAATTAA AIHEUTUA VAKAVIA VAURIOITA.

تنبيه : (S.R.S.)
تم تجهيز هذه السيارة بكيس هوائي لوقاية السائق كنظام كبح اضافي (S.R.S.).
جميع الأسلاك الكهربائية الخاصة بنظام الكبح الاضافي (S.R.S.) والموصلات ملونة باللون الأصفر.
لا تستعمل معدات اختبار الكهرباء على هذه الدوائر. ان العبث أو فصل أسلاك نظام الكبح الاضافي (S.R.S.) يمكن أن يؤدي للحريق العرضي للنافخ أو يتسبب في تعطيل النظام عن العمل مما يؤدي الى حدوث أضرار خطيرة.

(cont'd)

I: DRIVER INFORMATION
(KF, KG, KX models)

SRS ALWAYS WEAR YOUR SEAT BELT
- THIS CAR IS EQUIPPED WITH A DRIVER AIRBAG AS A SUPPLEMENTAL RESTRAINT SYSTEM (SRS)
- IT IS DESIGNED TO SUPPLEMENT THE SEAT BELT.
- IF YOUR SRS INDICATOR LIGHTS WHILE DRIVING SEE YOUR AUTHORIZED HONDA DEALER.

SRS ATTACHEZ TOUJOURS VOTRE CEINTURE
- CE VEHICULE EST EQUIPE D'UN COUSSIN D'AIR DU COTE CONDUCTEUR OUI CONSTITUE UN SYSTEME DE RETENUECOMPLEMENTAIRE (S.R.S.).
- CE COUSSIN D'AIR COMPLETE LA FONCTION DE LA CEINTURE DE SECURITE.
- SI LE TEMOIN SRS S'ALLUME PENDANT LA CONDUITE.
  ADRESSEZ VOUS A VOTRE CONCESSIONNAIRE HONDA OFFICIEL.

SRS SICHERHEITSGURTE BEI JEDER FAHRT ANLEGEN
- DIESES FAHRZEUG BESITZT EINEN FAHRER AIRBAG ALS ZUSATZILICHES RUCKHALE-SYSTEM (S.R.S.).
- ES IST EINE EPGANZUNG ZUM SICHER-HEITSGURT.
- WENN DIE SRS KONTROLLEUCHTE WAHREND DER FAHRT AUFLEUCHTET UMGEHEND FINEN HONDA HANDLER AUFSUCHEN.

SRS DRAAG ALTIJD UW VEILIGHEIDSGORDEL
- DIT VOERTUIG IS UITGERUST MET EEN LUCHT-KUSSEN AAN DE BESTUURDERSKANT ALS EX-TRA BESCHERMING (S.R.S.).
- DIT IS ONTWORPEN ALS EXTRA BESCHERMING BIJ DE VEILIGHEIDSGORDEL.
- ALS HEL SRS-WAARSCHUWINGSLAMPJE GAAT BRANDEN ONDER HET RIJDEN, NEEM DAN KONTAKT OP MET EEN HONDA DEALER.

(KE, KQ models)

SRS ALWAYS WEAR YOUR SEAT BELT
- THIS CAR IS EQUIPPED WITH A DRIVER AIRBAG AS A SUPPLEMENTAL RESTRAINT SYSTEM (SRS).
- IT IS DESIGNED TO SUPPLEMENT THE SEAT BELT.
- IF YOUR SRS INDICATOR LIGHTS WHILE DRIVING SEE YOUR AUTHORIZED HONDA DEALER.

I: DRIVER INFORMATION
(KS, KY models)

SRS ALWAYS WEAR YOUR SEAT BELT
- THIS CAR IS EQUIPPED WITH A DRIVER AIRBAG AS A SUPPLEMENTAL RESTRAINT SYSTEM (SRS)
- IT IS DESIGNED TO SUPPLEMENT THE SEAT BELT.
- IF YOUR SRS INDICATOR LIGHTS WHILE DRIVING SEE YOUR AUTHORIZED HONDA DEALER.

SRS ANVÄND ALLTID BILBÄLTET
- DETTA FORDON HAR EN LUFTKUDDE FÖR FÖRARSÄTET SOM ETT KOMPLETTERANDE SKYDDSSYSTEM (S.R.S).
- DET ÄR ÄMNAT ATT KOMPLEMENTERA BILBÄLTET.
- OM SRS-INDIKATORN TÄNDS UNDER KÖRNING SKALL DU KONTAKTA FN AUKTORISERAD HONDA-ATERFORSÄLJARE.

SRS KÄYTÄ AINA TURVAVÖITÄ
- TÄMÄ AUTO ON VARUSTETTU AJAJAN ILMA-TYYNYLLX JOKA ON YLIMÄÄRÄINEN TUKIJÄRJESTELMÄ (S.R.S.).
- SE ON SUUNNITELTU TÄYDENTÄMÄÄN TURVAVYÖTÄ.
- JOS SRS-MERKKIVALO SYTTYY AJON AIKANA, OTTAKAA YHTEYS VALTUUTETTUUN HONDA-MYYJÄÄN.

(S.R.S.) استعمل دائما حزام المقعد
- تم تجهيز هذه السيارة بكيس هوائي لوقاية السائق كنظام كبح اضافي (S.R.S.).
- تم تصميمه لتكميل حزام المقعد.
- قبل القيادة، اقرأ البطاقة الموجودة بداخل لوحة التحكم.

J: STEERING COLUMN CAUTION
(KF, KG, KX model)

CAUTION SRS
TO AVOID DAMAGING THE S.R.S. CABLE OR REEL, WHICH COULD MAKE THE SYSTEM INOPERATIVE, REMOVE THE STEERING WHEEL BEFORE REMOVING THE STEERING SHAFT CONNECTOR BOLT.

ATTENTION SRS
POUR NE PAS RISQUER D'ENDOMMAGER LE CABLE OU L'ENROULEUR DU S.R.S. ET DE RENDRE AINST LE SYSTEME INOPERANT, RETIREZ LE VOLANT AVANT DE DEVINSSER LE BOULON D'ACCOUPLEMENT D'ARBRE DE DIRECTION.

ACHTUNNG SRS
UM EINE BESCHÄDIGUNG DER SRS-VERKABELUNG, DIE ZUM AUSTALL DES SYSTEMS FÜHREN KANN ZU VERHINDERN, IMMER DAS LENKRAD VOR DEM LENKWELLENVERBINDUNGS-BOLZEN AUSBAUEN.

WAARSCHUWING SRS
OM TE VOORKOMEN DAT DE S.R.S. -KABEL OF -HASPEL BESCHADIGD WORDEN, HETGEEN ERTOE ZOU LEIDEN DAT HET SYSTEEM UITVALT, DIENT U HET STUUR TE VERWIJDEREN VOORDAT U DE STUURSCHACHTCONNECTORBOUT VER-WIJDERT.

J: STEERING COLUMN CAUTION
(KE, KQ models)

CAUTION SRS
TO AVOID DAMAGING THE S.R.S. CABLE OR REEL. WHICH COULD MAKE THE SYSTEM INOPERATIVE. REMOVE THE STEERING WHEEL BEFORE REMOVING THE STEERING SHAFT CONNECTOR BOLT.
ATTENTION SRS
POUR NE PAS RISQUER D'ENDOMMAGER LE CABLE OU L'ENROULEUR DU S.R.S. ET DE RENDRE AINST LE SYSTEME INOPERANT RETIREZ LE VOLANT AVANT DE DEVINSSER LE BOULON D'ACCOUPLEMENT D'ARBRE DE DIRECTION.

(KS model)

OBSERVERA SRS
FÖR ATT UNDVIKA SKADOR PA SRS-SYSTEMETS KABEL ELLER TRUMMA, NAGOT SOM KAN GÖRA ATT SYSTEMET INTE FUNGERAR, SKALL RATTEN TAS BORT INNAN RATTAXELNS BULT TAS BORT.
Varoitus SRS
SRS-kaapelin ja rullan vahingoittumisen estämiseksi, jotta järjestelmä ei menisi käyttökelvottomaksi, irrotetaan ohjauspyörä ennen kuin irrotetaan ohjausvarren liittimen pultti.

(KY model)

CAUTION SRS
TO AVOID DAMAGING THE S.R.S. CABLE OR REEL. WHICH COULD MAKE THE SYSTEM INOPERATIVE. REMOVE THE STEERING WHEEL BEFORE REMOVING THE STEERING SHAFT CONNECTOR BOLT.

تحذير : (S.R.S.)
لكى تتجنب اتلاف كبل نظام الكبح الاضافي (S.R.S.) أو البكرة، الذي يمكن أن يعطل تشغيل النظام، انزع عجلة القيادة قبل نزع برغي موصل جذع المقود.

K: LABEL

AIRBAG

(cont'd)

L: SRS UNIT CAUTION
(Except KS, KY models)

CAUTION SRS
- NO SERVICEABLE PARTS INSIDE.
- DO NOT DISASSEMBLE OR TAMPER.
- DO NOT DROP.
- STORE IN A CLEAN, DRY AREA.

ATTENTION
- AUCUN POINT D'INTERVENTION A L'INTERIEUR.
- NO PAS DEMONTER OU TOUCHER.
- NO PAS FAIRE TOMBER.
- RANGER DANS UN ENDROIT PROPRE ET SEC.

WAARSCHUWING
- BINNENIN BEVINDEN ZICH GEEN OHDER DELEN DIE AAN ONDERHOUD ONDERHEVIG ZIJN.
- DEMONTEER NIETS EN KNCEI NIET AAN DE S.R.S.
- LAAT DE S.R.S. NIET VALLEN.

ACHTUNG
- WARTUNGSFREIES BAUTEIL: NICHT ÖFFNEN, ZERLEGEN, ODER VERÄNDERN!
- NICHT WERFEN!
- TROCKEN UND GESCHOTZT LAGERN!

(KS, KY models)

CAUTION SRS
- NO SERVICEABLE PARTS INSIDE.
- DO NOT DISASSEMBLE OR TAMPER.
- DO NOT DROP.
- STORE IN A CLEAN, DRY AREA.

OBSERVERA SRS
- DET FINNS INGA INRE DELAR DU SJÄLV KAN REPARERA.
- FÖRSÖK INTE TA ISÄR ELLER ÄNDRA.
- TAPPA INTE I GOLVET.
- FÖRVARA PÅ EN REN OCH TORR PLATS.

Varoitus SRS
- Ei huollettavia osia sisällä.
- Älä pura äläkä tuki.
- Älä pudota.
- Varastoi puhtaassa, kuivassa paikassa.

تحذير : (S.R.S.)
- لا توجد أجزاء يمكن صيانتها بالداخل.
- لا تفتح أو تعبث.
- لا تسقطه على الأرض.
- خزنه في مكان نظيف، وجاف.

Precautions/Procedures

General Precautions

- Carefully inspect any SRS part before installing. Do not install any part that shows signs of being dropped or improperly handled, such as dents, cracks or deformation:

  – Airbag assy.
  – Dash sensors.
  – Cable reel.
  – SRS unit.

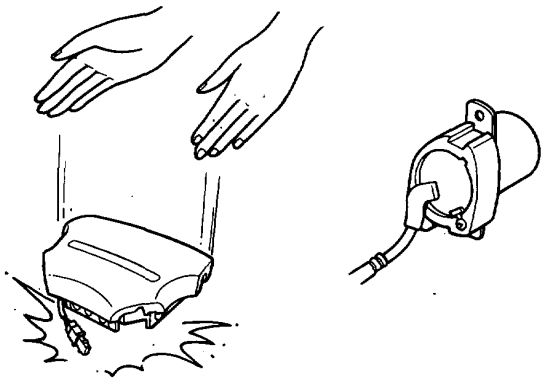

- Use only the digital circuit tester to check the system. If using an analog circuit tester, it may cause an accidental deployment and possible injury.

- Do not install used SRS parts from another car. When repairing, use only new SRS parts.

- Except when performing electrical inspections, always disconnect both the negative cable and positive cable at the battery before beginning work.

- Replacement of the lighting and wiper combination switches and cruise control switch can be done without removing the steering wheel:

  – Lighting and wiper combination switch replacement, see section 23.
  – Cruise control switch replacement, see section 23.

Airbag Assembly

Do not try to disassemble the airbag assembly. There are no separately serviceable parts. Once an airbag has been operated (deployed), it cannot be repaired or reused.

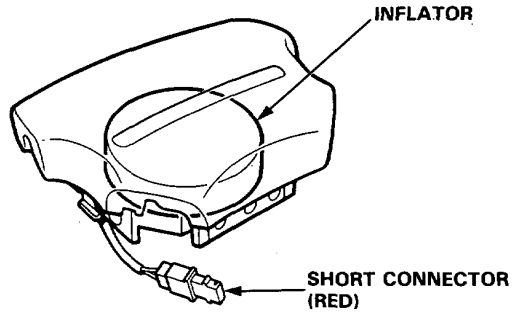

For temporary storage of the airbag assembly during service, please observe the following precautions:

- Store the removed airbag assembly with the pad surface up.

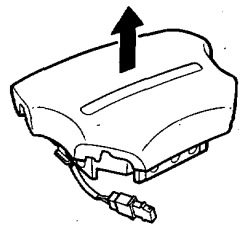

⚠WARNING If the airbag is improperly stored face down, accidental deployment could propel the unit with enough force to cause serious injury.

- Store the removed airbag assembly on a secure flat surface away from any high heat source (exceeding 100°C/212°F) and free of any oil, grease, detergent or water.

  CAUTION: Improper handling or storage can internally damage the airbag assembly, making it inoperative.
  If you suspect the airbag assembly has been damaged, install a new unit and refer to the Deployment/Disposal Procedures for scrapping of the damaged airbag.

Steering

- Steering Wheel and Cable Reel Alignment:

  NOTE: To avoid misalignment of the steering wheel or airbag on reassembly, make sure the wheels are turned straight ahead before removing the steering wheel.

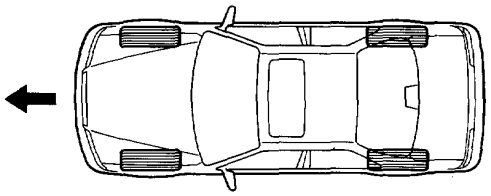

Rotate the cable reel clockwise until it stops. Then rotate it counterclockwise (approximately two turns) until:

- The yellow gear tooth lines up with the mark on the cover.
- The arrow on the cable reel label points straight up.

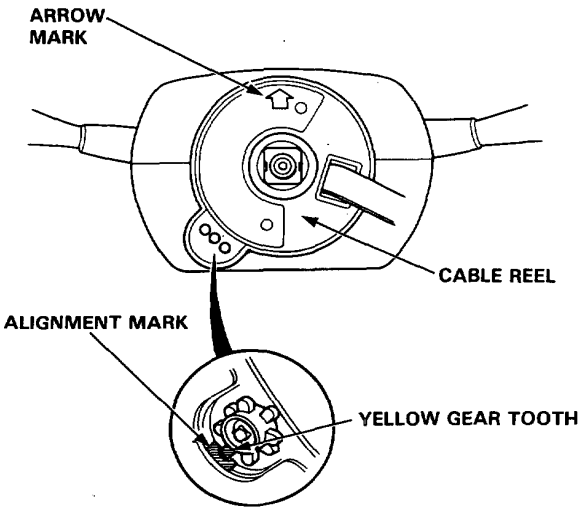

- Steering Column Removal:

  CAUTION:
  - **Before removing the steering column, first disconnect the connector between the cable reel and the SRS main harness.**
  - **If the steering column is going to be removed without dismounting the steering wheel, lock the steering by turning the ignition key to 0-LOCK position or remove the key from the ignition so that the steering wheel will not turn.**

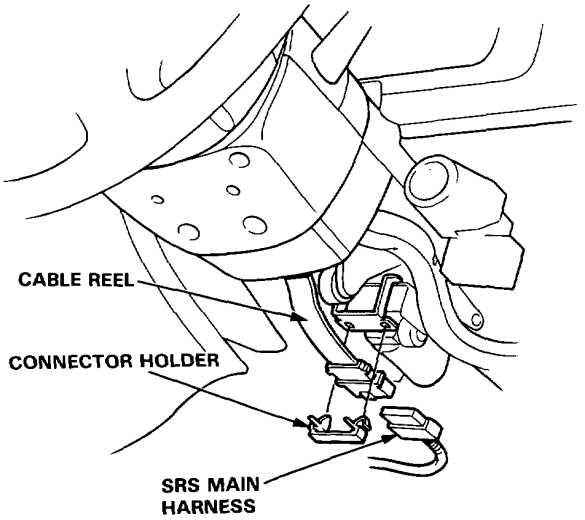

- Steering wheel:
  Do not replace the original steering wheel with any other design, since it will make it impossible to properly install the airbag (Only use genuine HONDA replacement parts).

- After reassembly confirm that the wheels are still straight ahead and that steering wheel spoke angle is correct. If minor spoke angle adjustment is necessary, do so only by adjustment of the tie rods, not by removing and repositioning the steering wheel.

Sensor Inspection

CAUTION: Take extra care when painting or doing body work on any part of the dashboard lower panel. Avoid direct exposure of the sensors or wiring to heat guns, welding or spraying equipment.

⚠WARNING

- **Disconnect both the negative and positive battery cables.**
- ***Install the short connector before performing working around on the dashboard lower panel or the SRS sensors.***

- After any degree of frontal body damage, inspect both dash sensors.
  Replace a sensor if there are any signs of dents, cracks or deformation.

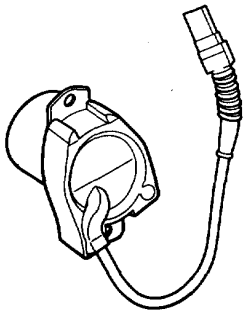

- Be sure the sensors are installed securely.

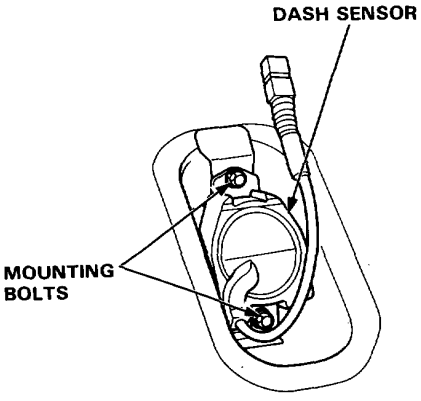

Wiring

- Never attempt to modify, splice or repair SRS wiring.

  NOTE: SRS wiring can be identified by special yellow outer protective covering.

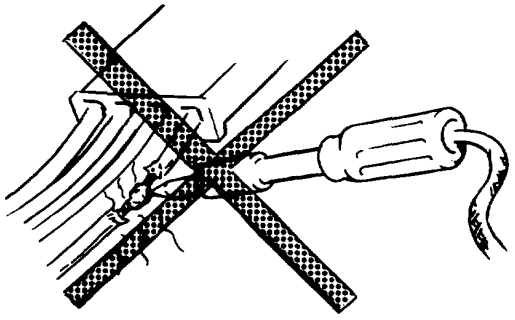

- Be sure to install the harness wires so that they are not pinched or interfering with other car parts.

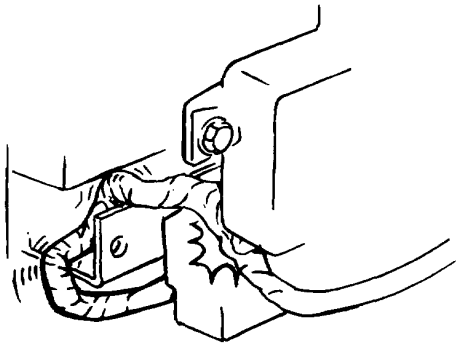

- *Make sure all SRS ground locations are clean and* grounds are securely fastened for optimum metal-to-metal contact. Poor grounding can cause intermittent problems that are difficult to diagnose.

(cont'd)

Wiring (cont'd)

- Installing short connectors:

⚠WARNING To avoid accidental deployment and possible injury always install the protective short connector on the airbag connector when the harness is disconnected.

1. Disconnect the battery negative cable, then the positive cable.
2. Remove the maintenance lid below the airbag, then remove the short connector (RED).
3. Disconnect the connector between the airbag and cable reel.
4. Connect the short connector to the airbag side of the connector.

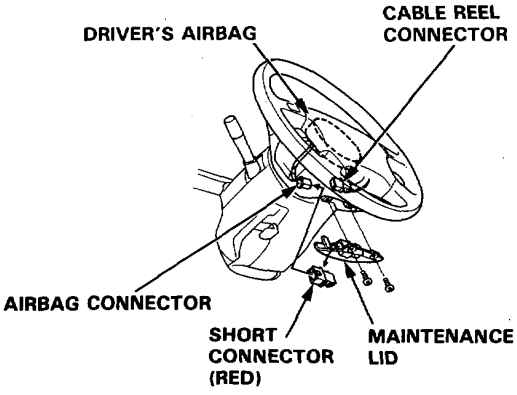

- Removing SRS connectors at the fuse box:

CAUTION: Avoid breaking the double-locked connectors on the fuse box.

The connectors are double-locked; to remove them, first lift the connector lid with a thin screwdriver, then press the connector tab down and pull the connector out.

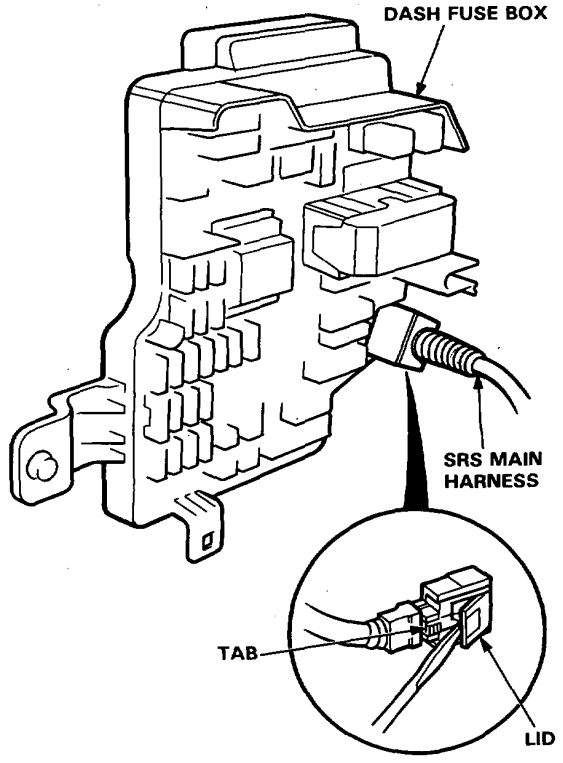

To reinstall a connector, push it into position until it clicks, then close the connector lid.

Special Tools

Individual tool lists are located at the front of each section.

Specifications

Standards and Service Limits 3-2
Design Specifications 3-15
Body Specifications 3-19

Standards and Service Limits

Cylinder Head/Valve Train — Section 6

	MEASUREMENT			STANDARD (NEW)	SERVICE LIMIT
Compression	200 min^{-1} (rpm) wide open throttle	Nominal		1,350kPa (13.5kg/cm^2, 192psi)	
		Minimum		1,000kPa (10.0kg/cm^2, 142psi)	
		Maximum variation		200kPa (2kg/cm^2, 28psi)	
Cylinder head	Warpage			—	0.05 (0.002)
	Height			99.95-100.05 (3.935-3.939)	—
Camshaft	End play			0.05-0.15 (0.002-0.006)	0.15 (0.006)
	Oil clearance			0.050-0.089 (0.002-0.004)	0.10 (0.004)
	Runout			0.015 (0.0006)	0.03 (0.0012)
	Cam lobe height	MT	IN	40.005 (1.5750)	—
			EX	37.766 (1.4868)	—
		AT	IN	40.005 (1.5750)	—
			EX	37.766 (1.4868)	—
Valve	Valve clearance		IN	0	—
			EX	0	—
	Valve stem O.D.		IN	5.48-5.49 (0.2157-0.2161)	5.45 (0.2146)
			EX	5.45-5.46 (0.2146-0.2159)	5.42 (0.2134)
	Stem-to-guide clearance		IN	0.02-0.05 (0.001-0.002)	0.08 (0.003)
			EX	0.05-0.08 (0.002-0.003)	0.11 (0.004)
Valve seat	Width		IN	1.25-1.55 (0.049-0.061)	2.0 (0.079)
			EX	1.25-1.55 (0.049-0.061)	2.0 (0.079)
	Stem installed height		IN	46.935-47.375 (1.8478-1.8671)	47.625 (1.8750)
			EX	47.885-48.375 (1.8852-1.9045)	48.575 (1.9124)
Valve spring	Free length		IN	50.16 (1.9748) *1 50.17 (1.9752) *2	49.20 (1.9476)
			EX	50.36 (1.9827)	49.47 (1.9476)
Valve guide	I.D.	IN and EX		5.51-5.53 (0.2169-0.2177)	5.55 (0.2185)
	Installed height	IN and EX		15.75-16.25 (0.620-0.640)	—
Rocker arm	Arm-to-shaft clearance			0.017-0.050 (0.0007-0.0020)	0.08 (0.003)

*1: NIPPON HATSUJO made, *2: CHUO HATSUJO made.

Unit of length: mm (in)

Engine Block — Section 7

	MEASUREMENT		STANDARD (NEW)	SERVICE LIMIT
Cylinder block	Warpage of deck surface		0.07 (0.003) max.	0.10 (0.004)
	Bore diameter		90.00-90.02 (3.543-3.544)	90.07 (3.546)
	Bore taper		—	0.05 (0.002)
	Reboring limit		—	0.5 (0.02)
Piston	Skirt O.D. at 17mm (0.67in) from bottom of skirt	A	89.98-89.99 (3.5425-3.5429)	89.97 (3.5421)
		B	89.97-89.98 (3.5421-3.5425)	89.96 (3.5417)
	Clearance in cylinder		0.02-0.04 (0.001-0.002)	0.08 (0.003)
	Groove width (for ring)	Top	1.22-1.23 (0.0480-0.0484)	1.25 (0.0492)
		Second	1.22-1.23 (0.0480-0.0484)	1.25 (0.0492)
		Oil	2.805-2.820 (0.1104-0.1110)	2.84 (0.1118)
Piston ring	Ring-to-groove clearance	Top	0.035-0.060 (0.0014-0.0024)	0.13 (0.005)
		Second	0.030-0.055 (0.0012-0.0021)	0.13 (0.005)
	Ring end gap	Top	0.25-0.40 (0.010-0.016)	0.70 (0.027)
		Second	0.40-0.55 (0.016-0.022)	0.85 (0.033)
		Oil	0.20-0.70 (0.008-0.028)	0.80 (0.032)
Piston Pin	O.D.		21.994-22.000 (0.8659-0.8661)	—
	Pin-to-piston clearance		0.012-0.024 (0.0005-0.0009)	—
Connecting rod	Pin-to-rod interference		0.013-0.032 (0.0005-0.0013)	—
	Small end bore diameter		21.968-21.981 (0.8649-0.8654)	—
	Large end bore diameter	Nominal	57.00 (2.244)	—
	End play installed on crankshaft		0.15-0.30 (0.006-0.012)	—
	Small end bore-to-large end bore parallelism		0.12/100 max.	0.15/100
Crankshaft	Main journal diameter		67.976-68.000 (2.6762-2.6772)	—
	Rod journal diameter		53.976-53.000 (2.1250-2.0866)	—
	Taper		0.005 (0.0002) max.	0.01 (0.0004)
	Out-of-round		0.004 (0.0002) max.	0.01 (0.0004)
	End play		0.10-0.29 (0.004-0.011)	0.45 (0.018)
	Runout		0.01 (0.0004) max.	0.015 (0.0006)
Bearings	Main bearing-to-journal oil clearance		0.020-0.044 (0.0008-0.0017)	0.05 (0.002)
	Rod bearing-to-journal oil clearance		0.022-0.046 (0.0009-0.0018)	0.05 (0.002)

Engine Lubrication — Section 8

	MEASUREMENT		STANDARD (NEW)	SERVICE LIMIT
Engine oil	Capacity ℓ (US qt, Imp qt)		5.0 (5.3, 4.4) for engine overhaul 4.7 (5.0, 4.1) for oil change, including filter	
Oil pump	Displacement ℓ (US gal, Imp gal)/min @min^{-1} (rpm)		42.3 (11.2, 9.3) @6,000	
	Inner-to-outer rotor clearance		0.04-0.16 (0.002-0.006)	0.20 (0.008)
	Pump body-to-outer rotor clearance		0.10-0.18 (0.004-0.007)	0.20 (0.008)
	Pump body-to rotor axial clearance		0.02-0.07 (0.001-0.003)	0.12 (0.005)
Relief valve	Pressure setting 80°C (176° F) kPa (kg/cm^2, psi)	at idle	70 (0.7, 10) min.	
		at 3,000rpm	350 (3.5, 50)min.	

Standards and Service Limits

Unit of length: mm (in)

Cooling — Section 10

	MEASUREMENT	STANDARD (NEW)
Radiator	Coolant capacity ℓ (US gal, Imp gal) including engine, heater, cooling line and reservoir reservoir capacity: 0:65ℓ (0.69US qt, 0.57Imp qt)	M/T: 8.7 (2.30, 1.91) for overhaul 7.5 (1.98, 1.65) for coolant change A/T: 8.7 (2.30, 1.91) for overhaul 7.5 (1.98, 1.65) for coolant change
Radiator cap	Opening pressure kPa (kg/cm^2, psi)	95-125 (0.95-1.25, 13.5-17.8)
Thermostat	Start to open °C(° F) Fully open °C(° F) Valve lift at fully open	76-80 (169-176) 90 (194) 10 (0.39) min.
Water pump	Displacement ℓ (US gal, Imp gal)/min @min^{-1} (rpm)	117.6 (31.1, 25.9) @3,840
Cooling fan	Thermoswitch "ON" temperature (LOW) °C(° F) Thermoswitch "OFF" temperature (LOW) °C(° F) Thermoswitch "ON" temperature (HIGH) °C(° F) Thermoswitch "OFF" temperature (HIGH) °C(° F)	82.8-85.2 (181-185) 76.0-80.0 (169-176) 88.7-91.3 (192-196) 82.0-86.0 (180-187)

Fuel and Emission — Section 11

	MEASUREMENT	STANDARD (NEW)
Fuel pump	Displacement cc in 10 seconds Relief valve opening pressure kPa (kg/cm^2, psi)	230 min. 450-600 (4.5-6.0, 64.0-85.3)
Pressure regulator	Pressure with regulator vacuum hose disconnected kPa (kg/cm^2, psi)	270-320 (2.7-3.2, 38.4-45.5)
Fuel tank	Capacity ℓ (US gal, Imp gal)	68 (18.0, 15.0)
Engine	Fast idle rpm at 25°C (77°F)	1,500±200
	Idle speed min^{-1} (rpm) (with headlight and cooling fan off)	M/T 650±50 A/T 600±50 (N or P)
	Idle Co %	0.1 min.

Clutch — Section 12

	MEASUREMENT	STANDARD (NEW)	SERVICE LIMIT
Clutch pedal	Pedal height to floor Stroke Pedal play Disengagement height to floor	199.5 (7.85) 142-148 (5.6-5.8) 1.0-7.0 (0.04-0.28) 90 (3.5) min	– – – –
Flywheel	Clutch surface runout	0.05 (0.002) max.	0.15 (0.006)
Clutch disc	Rivet head depth Surface runout Thickness	1.5 (0.06) 0.6 (0.02) max. 9.6–10.3 (0.38–0.41)	0.5 (0.02) 0.8 (0.03) 6.8 (0.27)
Clutch cover	Pressure plate warpage	0.03 (0.001) max.	0.15 (0.006)

Unit of length mm (in)

Manual Transmission — Section 13

	MEASUREMENT	STANDARD (NEW)	SERVICE LIMIT
Transmission oil	Capacity ℓ (US qt, Imp qt)	2.6 (2.7, 2.3) for overhaul including oil cooler 2.5 (2.6, 2.2) for oil change including oil cooler 2.3 (2.4, 2.0) for oil change excluding oil cooler	
Mainshaft	End play	0.183–0.375 (0.007–0.015)	0.525 (0.021)
	Diameter of bearing contact area		
	Clutch housing side	27.977–27.990 (1.101–1.102)	27.93 (1.100)
	Transmission housing side	30.987–31.000 (1.2200–1.2205)	30.94 (1.218)
	Transmission cover side	27.987–28.000 (1.1018–1.1024)	27.937 (1.100)
	3rd gear (needle bearing)	37.989–38.000 (1.4956–1.4961)	37.935 (1.494)
	Runout	0.02 (0.0008) max.	0.05 (0.002)
Countershaft	End play	0.173–0.340 (0.007–0.013)	0.490 (0.019)
	Diameter of bearing contact area		
	Clutch housing side	33.000–33.015 (1.299–1.300)	32.95 (1.297)
	Transmission housing side	31.975–31.988 (1.2589–1.2594)	31.928 (1.257)
	Transmission cover side	27.987–28.000 (1.1018–1.1024)	27.937 (1.100)
	Runout	0.02 (0.0008) max.	0.05 (0.002)
Reverse idle shaft	Diameter bearing contact area	19.989–20.000 (0.7870–0.7874)	19.93 (0.785)
Reverse drive gear	I.D.	25.007–25.020 (0.9845–0.9850)	25.078 (0.987)
	Thickness	26.45–26.50 (1.041–1.043)	26.38 (1.039)
Mainshaft 3rd gear	I.D.	44.009–44.025 (1.7326–1.7333)	44.080 (1.735)
	Thickness	31.39–31.47 (1.236–1.239)	31.32 (1.233)
	End play (when tightened by specified torque)	0.06–0.19 (0.002–0.007)	0.3 (0.012)
Mainshaft 4th gear	I.D.	44.009–44.025 (1.7326–1.7333)	44.080 (1.735)
	Thickness	29.39-29.47 (1.157–1.160)	29.32 (1.154)
	End play (when tightening by specified torque)	0.06–0.19 (0.002–0.007)	0.3 (0.012)
Mainshaft 5th gear	I.D.	44.009–44.025 (1.7326–1.7333)	44.080 (1.735)
	Thickness	29.39–29.47 (1.157–1.160)	29.32 (1.154)
	End play (when tightening by specified torque)	0.06–0.19 (0.002–0.007)	0.3 (0.012)
Distance collar	I.D.	31.002–31.012 (1.2205–1.2209)	31.060 (1.223)
	Diameter of needle bearing contact area	37.989–38.000 (1.4956–1.4961)	37.940 (1.494)
	Thickness of needle bearing contact area	29.56–29.61 (1.164–1.166)	29.54 (1.163)
Countershaft 1st gear	I.D.	53.010–53.029 (2.087–2.088)	53.081 (2.090)
	Thickness	35.92–36.001 (1.414–1.417)	35.85 (1.411)
	End play (when tightening by specified torque)	0.04–0.10 (0.02–0.04)	Adjust with a shim
Countershaft 2nd gear	I.D.	53.010–53.029 (2.087–2.088)	53.081 (2.090)
	Thickness	35.92–36.00 (1.414–1.417)	35.85 (1.411)
	End play (when tightening by specified torque)	0.04–0.10 (0.02–0.04)	Adjust with a shim

(cont'd)

Standards and Service Limits

Manual Transmission — Section 13

	MEASUREMENT	STANDARD (NEW)	SERVICE LIMIT
Distance collar (countershaft 2nd gear)	I.D. O.D. Thickness A B	37.950–37.960 (1.4941–1.4945) 46.989–47.000 (1.8500–1.8504) 36.03–36.05 (1.4185–1.4193) 36.07–36.09 (1.420–1.421)	38.008 (1.496) 46.940 (1.848) Adjust with a collar
Countershaft reverse gear	O.D. Thickness	46.989–47.000 (1.8500–1.8504) 50.45–50.55 (1.986–1.990)	46.94 (1.848) 50.38 (1.983)
Synchro ring	Ring-to-gear clearance (ring pushed against gear)	0.85–1.10 (0.033–0.043)	0.4 (0.016)
Shift fork 1st/2nd 3rd/4th and 5th	Finger thickness finger-to-synchro sleeve clearance	7.4–7.6 (0.291–0.299) 0.35–0.65 (0.014–0.026)	– 1.00 (0.039)
Reverse shift fork	Finger thickness Finger-to-synchro sleeve clearance Groove width Fork-to-reverse shift arm clearance	6.4–6.6 (0.252–0.260) 0.35–0.65 (0.014–0.026) 13.2–13.3 (0.520–0.524) 0.2–0.5 (0.008–0.020)	– 1.00 (0.039) – 0.8 (0.031)
Shift fork shaft	Shaft-to-shift piece clearance Groove width of the shift piece contact point	0.25–0.55 (0.010–0.022) 12.2–1.24 (0.480–0.488)	0.85 (0.033) –
Shift arm	Diameter (at the contact point with the change piece) Arm-to-change piece clearance Diameter (at the contact point with the shift piece) Arm-to-shift piece clearance	7.9–8.0 (0.311–0.315) 0.1–0.3 (0.004–0.012) 7.9–8.0 (0.311–0.315) 0.1–0.3 (0.004–0.012)	– 0.55 (0.022) – 0.55 (0.022)
Change piece	Groove width of the shift arm contact point	8.1–8.2 (0.319–0.323)	–
Shift piece	Groove width of the shift arm contact point Diameter (at the contact point with the shift fork shaft)	8.1–8.2 (0.319–0.323) 11.85–11.95 (0.467–0.470)	– –
Reverse shift arm	Diameter (at the contact point with the reverse shift fork) Diameter (at the contact point with the 5th shift fork shaft)	12.8–13.0 (0.504–0.512) 12.8–13.0 (0.503–0.512)	– –
Secondary gear	Backlash Preload N·m (kg-cm, lb-in) Diameter of bearing contact area Clutch housing side Transmission housing side Diameter of oil seal contact area Clutch housing side Transmission housing side	0.061–0.721 (0.002–0.005) 1.4–2.6 (14–26, 12.2–22.5) 55.002–55.021 (2.165–2.166) 45.002–45.018 (1.7717–1.7724) 54.894–54.940 (2.161–2.163) 44.911–44.950 (1.768–1.770)	– Adjust with a shim – – – –
Extension shaft	Diameter of oil seal contact area	37.438–37.500 (1.474–1.476)	–
Oil pump	Clutch housing-to-rotor axial clearance Inner-to-outer rotor clearance Clutch housing body-to-outer rotor clearance	0.03–0.13 (0.001–0.005) 0.14 (0.006) 0.10–0.20 (0.004–0.008)	0.18 (0.007) 0.2 (0.008) 0.22 (0.009)

Unit of length: mm (in)

Automatic Transmission —— Section 14

	MEASUREMENT	STANDARD (NEW)	SERVICE LIMIT
Transmission fluid	Capacity ℓ (US qt, Imp qt)	8.7 (9.2, 7.7) for overhaul 3.3 (3.5, 2.9) for oil change	
Hydraulic pressure kPa (kg/cm², psi)	Line pressure at 2,000 min⁻¹ (rpm) N or P	800–860 (8.0–8.6, 114–122)	750 (7.5, 107)
	1st clutch pressure at 2,000 min⁻¹ (rpm) D_4 or D_3		
	2nd clutch pressure at 2,000 min⁻¹ (rpm) D_4	460 (4.6, 65) throttle fully closed | 860 (8.6, 122) throttle more than 1/4 opened	430 (4.3, 61) throttle fully closed | 750 (7.5, 107) throttle more than 1/4 opened
	3rd clutch pressure at 2,000 min⁻¹ (rpm) D_4		
	4th clutch pressure at 2,000 min⁻¹ (rpm) D_4		
	1st hold clutch pressure at 2,000 min⁻¹ (rpm) 1	800–860 (8.0–8.6, 114–122)	750 (7.5, 107)
	2nd clutch pressure at 2,000 min⁻¹ (rpm) 2		
	1st clutch pressure at 2,000 min⁻¹ (rpm) 1		
	Reverse clutch pressure at 2,000 min⁻¹ (rpm) R	1,190–1,270 (11.9–12.7, 169–181)	1,150 (11.5, 164)
	Throttle B pressure — Throttle fully closed	0–15 (0–0.15, 0–2)	–
	Throttle B pressure — Throttle fully open	590–640 (5.9–6.4, 84–91)	–
Stall speed min⁻¹ (rpm)	Check with car on level ground	1,850–2,150	–
Clutch	Clutch initial clearance — 1st-hold	0.7–0.9 (0.028–0.035)	–
	1st	0.65–0.85 (0.026–0.033)	–
	2nd, 3rd	0.6–0.8 (0.024–0.031)	–
	4th	0.5–0.7 (0.020–0.028)	–
	Reverse	0.75–0.95 (0.030–0.037)	–
	Clutch return spring free length		
	1st-hold, 1st, 2nd, 3rd, 4th	33.7 (1.327)	31.7 (1.248)
	Reverse	30.0 (1.181)	28.0 (1.102)
	Clutch disc thickness		
	1st-hold, 1st, 2nd, Reverse	1.88–2.00 (0.074–0.079)	Until grooves worn out.
	3rd, 4th	2.28–2.40 (0.090–0.094)	Until grooves worn out.
	Clutch plate thickness		
	1st-hold, 1st, 2nd, Reverse	1.95–2.05 (0.077–0.081)	Discoloration
	3rd, 4th	2.55–2.65 (0.100–0.104)	↑
	Clutch end plate thickness (1st, 2nd, 3rd, 4th) — Mark 1	2.05–2.10 (0.081–0.083)	
	Mark 2	2.15–2.20 (0.085–0.087)	
	Mark 3	2.25–2.30 (0.089–0.091)	
	Mark 4	2.35–2.40 (0.093–0.094)	
	Mark 5	2.45–2.50 (0.096–0.098)	
	Mark 6	2.55–2.60 (0.100–0.102)	
	Mark 7	2.65–2.70 (0.104–0.106)	
	Mark 8	2.75–2.80 (0.108–0.110)	
	Mark 9	2.85–2.90 (0.112–0.114)	
	Clutch end plate thickness (1st-hold) — Mark L1	2.05–2.10 (0.081–0.083)	
	Mark L2	2.15–2.20 (0.085–0.087)	
	Mark L3	2.25–2.30 (0.089–0.091)	
	Mark L4	2.35–2.40 (0.093–0.094)	
	Mark L5	2.45–2.50 (0.096–0.098)	
	Mark L6	2.55–2.60 (0.100–0.102)	
	Mark L7	2.65–2.70 (0.104–0.106)	
	Mark L8	2.75–2.80 (0.108–0.110)	
	Mark L9	2.85–2.90 (0.112–0.114)	
	Clutch end plate thickness (Reverse) — Mark R1	4.05–4.10 (0.159–0.161)	
	Mark R2	4.15–4.20 (0.163–0.165)	
	Mark R3	4.25–4.30 (0.167–0.169)	
	Mark R4	4.35–4.40 (0.171–0.173)	
	Mark R5	4.45–4.50 (0.175–0.177)	
	Mark R6	4.55–4.60 (0.179–0.181)	
	Mark R7	4.65–4.70 (0.183–0.185)	
	Mark R8	4.75–4.80 (0.187–0.189)	
	Mark R9	4.85–4.90 (0.191–0.193)	Discoloration

(cont'd)

Standards and Service Limits

Automatic Transmission (cont'd) — Section 14

	MEASUREMENT	STANDARD (NEW)	SERVICE LIMIT
Valve body	Stator shaft needle bearing contact I.D. (torque converter side)	28.000–28.021 (1.102–1.103)	Wear or damage
	Stator shaft needle bearing contact I.D. (oil pump side)	31.000–31.013 (1.220–1.221)	–
	Oil pump driven gear I.D.	14.016–14.034 (0.552–0.553)	Wear or damage
	Oil pump shaft O.D.	13.980–13.990 (0.550–0.551)	Wear or damage
	Oil pump gear side clearance	0.03–0.05 (0.001–0.002)	0.07 (0.003)
	Oil pump gear-to-body clearance Drive	0.210–0.265 (0.008–0.010)	–
	Driven	0.070–0.125 (0.003–0.005)	–
Regulator valve body	Sealing ring contact I.D.	37.00–37.025 (1.457–1.458)	37.05 (1.459)
Accumulator body	Sealing ring contact I.D.	42.000–42.030 (1.654–1.655)	42.05 (1.656)
Shifting device and parking brake control	Parking brake cone	–	Wear or other defect
	Parking brake ratchet pawl	–	↕
	Parking brake gear	–	Wear or other defect
Transmission	Mainshaft reverse gear distance collar length	25.95–26.05 (1.022–1.026)	Wear or damage
	2nd clutch thrust washer 29 mm thickness	3.95–4.00 (0.156–0.157)	↕
	Mainshaft 2nd gear collar length A	35.00–35.05 (1.378–1.380)	
	B	31.06–31.09 (1.223–1.224)	
	Countershaft reverse gear thrust washer thickness	3.95–4.05 (0.156–0.157)	
	Countershaft reverse gear collar length	26.95–27.05 (1.061–1.065)	
	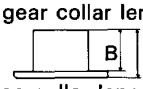 B	23.05–23.09 (0.907–0.909)	
	Reverse clutch distance collar length	35.45–35.55 (1.396–1.400)	Wear or damage
	Countershaft 2nd gear/parking gear thrust washer (48 x 60) thickness	1.27–1.30 (0.050–0.051)	–
		1.32–1.35 (0.052–0.053)	–
		1.37–1.40 (0.054–0.055)	–
		1.42–1.45 (0.056–0.057)	–
		1.47–1.50 (0.058–0.059)	–
		1.52–1.55 (0.060–0.061)	–
		1.57–1.60 (0.062–0.063)	–
		1.62–1.65 (0.064–0.065)	–
		1.67–1.70 (0.066–0.067)	–
		1.72–1.75 (0.068–0.069)	–
		1.77–1.80 (0.070–0.071)	–
		1.82–1.85 (0.072–0.073)	–
		1.87–1.90 (0.074–0.075)	–
	Mainshaft 1st gear thrust washer thickness	3.45–3.55 (0.136–0.140)	Wear or damage
	Mainshaft 1st gear distance collar length	34.05–34.08 (1.341–1.342)	↕
	1st gear collar length A	33.90–33.97 (1.335–1.337)	
	B	30.05–30.10 (1.183–1.185)	Wear or damage
	4th clutch collar		
		9.67–9.70 (0.381–0.382)	–
		9.72–9.75 (0.383–0.384)	–
		9.77–9.80 (0.385–0.386)	–
		9.82–9.85 (0.387–0.388)	–
		9.87–9.90 (0.389–0.390)	–
		9.92–9.95 (0.391–0.392)	–
		9.97–10.00 (0.393–0.394)	–

Unit of length: mm (in)

Automatic Transmission (cont'd) — Section 14

	MEASUREMENT	STANDARD (NEW)	SERVICE LIMIT
Transmission (cont'd)	Countershaft 2nd gear collar length	35.95–36.00 (1.415–1.417)	Wear or damage
	Countershaft 1st gear collar length 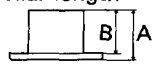 A	27.95–28.05 (1.100–1.104)	↕
	B	23.50–23.55 (0.925–0.927)	Wear or damage
	Thrust washer (38.8 × 47) thickness (1st clutch front side)	2.97–3.00 (0.117–0.118)	–
		3.02–3.05 (0.119–0.120)	–
		3.07–3.10 (0.121–0.122)	–
		3.12–3.15 (0.123–0.124)	–
		3.17–3.20 (0.125–0.126)	–
		3.22–3.25 (0.127–0.128)	–
		3.27–3.30 (0.129–0.130)	–
		3.32–3.35 (0.131–0.132)	–
		3.37–3.40 (0.133–0.134)	–
		3.42–3.45 (0.135–0.136)	–
		3.47–3.50 (0.137–0.138)	–
	1st-hold clutch distance collar length	68.95–69.05 (2.715–2.718)	Wear or damage
	Countershaft 3rd gear collar length 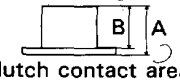 A	28.95–29.05 (1.140–1.144)	↕
	B	24.02–24.05 (0.946–0.947)	
	Diameter of one-way clutch contact area		
	Countershaft 1st gear ID	95.764–95.790 (3.770–3.771)	
	Countershaft 2nd gear ID	86.487–86.513 (3.405–3.406)	
	One-way clutch hub OD	79.107–79.120 (3.114–3.115)	
	Parking gear one-way clutch contact area OD	69.833–69.846 (2.749–2.750)	
	Feed pipe A OD	6.97–6.98 (0.274–0.275)	
	Feed pipe B OD	11.47–11.53 (0.452–0.454)	Wear or damage
	Mainshaft bushing ID	7.018–7.030 (0.276–0.277)	7.045 (0.277)
	Countershaft bushing ID	11.500–11.518 (0.4528–0.4535)	11.53 (0.454)
	Mainshaft sealing ring 37 mm thickness	1.980–1.995 (0.078–0.079)	1.80 (0.071)
	Countershaft sealing ring 42 mm thickness	1.980–1.995 (0.078–0.079)	1.80 (0.071)
	Mainshaft sealing ring groove width	2.025–2.060 (0.080–0.081)	2.08 (0.082)
	Countershaft sealing ring groove width	2.025–2.060 (0.080–0.081)	2.08 (0.082)
	Diameter of needle bearing contact area		
	Mainshaft-stator shaft	24.980–24.993 (0.983–0.984)	Wear or damage
	Mainshaft 3rd gear	53.981–54.000 (2.125–2.126)	↕
	Mainshaft 1st gear collar	34.975–34.991 (1.377–1.378)	
	Mainshaft 1st gear distance collar	34.975–34.991 (1.377–1.378)	
	Mainshaft 2nd gear collar	34.975–34.991 (1.377–1.378)	
	Countershaft-torque converter housing	38.505–38.515 (1.5159–1.5163)	
	Countershaft 3rd gear collar	47.975–47.991 (1.8888–1.8894)	
	Countershaft 1st gear collar	38.975–38.991 (1.534–1.535)	
	Countershaft 2nd gear collar	38.975–38.991 (1.534–1.535)	
	Countershaft reverse gear collar	33.975–33.991 (1.534–1.535)	
	Reverse idler gear shaft	13.99–14.00 (0.5509–0.5512)	Wear or damage

(cont'd)

Standards and Service Limits

Automatic Transmission (cont'd) — Section 14

	MEASUREMENT	STANDARD (NEW)	SERVICE LIMIT
Transmission (cont'd)	ID		
	Mainshaft 4th gear	59.000–59.016 (2.3228–2.3234)	Wear or damage
	Mainshaft 2nd gear	40.000–40.016 (1.5748–1.5754)	↕
	Mainshaft 1st gear	39.000–39.016 (1.535–1.536)	↕
	Countershaft 3rd gear	54.000–54.016 (2.126–2.127)	↕
	Countershaft 2nd gear	44.000–44.016 (1.732–1.733)	↕
	Countershaft 1st gear	44.000–44.016 (1.732–1.733)	↕
	Countershaft reverse gear	39.000–39.016 (1.535–1.536)	↕
	Reverse idler gear	18.007–18.020 (0.7089–0.7094)	Wear or damage
	End play		
	Mainshaft 4th gear	0.03–0.18 (0.001–0.007)	–
	1st/4th clutch	0–0.08 (0–0.03)	Adjust with a washer
	Mainshaft 2nd gear	0.06–0.16 (0.002–0.006)	–
	Mainshaft 1st gear	0.10–0.25 (0.04–0.10)	–
	Countershaft 3rd gear	0.02–0.12 (0.001–0.005)	–
	Countershaft 2nd gear	0.05–0.13 (0.002–0.005)	Adjust with a washer
	Countershaft reverse gear	0.05–0.16 (0.002–0.006)	–
	Reverse idler gear	0.03–0.30 (0.001–0.012)	–
	Secondary gear shaft taper roller bearing preload N·m (kg-cm, lb-in)	3.5–4.5 (35–45, 30.4–39.1)	–
	Thrust washer 90 mm thickness (torque converter housing side)	0.99–1.01 (0.039–0.040)	Wear or damage
	Thrust shim 75 mm thickness	1.56–1.58 (0.061–0.062)	
		1.59–1.61 (0.0626–0.0634)	
		1.62–1.64 (0.064–0.065)	
		1.65–1.67 (0.065–0.066)	
		1.68–1.70 (0.066–0.067)	
		1.71–1.73 (0.067–0.068)	
		1.74–1.76 (0.0685–0.0693)	
		1.77–1.79 (0.0697–0.0705)	
		1.80–1.82 (0.071–0.072)	
		1.83–1.85 (0.072–0.073)	
		1.86–1.88 (0.073–0.074)	
		1.89–1.91 (0.074–0.075)	
		1.92–1.94 (0.0756–0.0764)	
		1.95–1.97 (0.077–0.078)	
		1.98–2.00 (0.078–0.079)	
		2.01–2.03 (0.079–0.080)	
		2.04–2.06 (0.080–0.081)	
		2.07–2.09 (0.081–0.082)	
		2.10–2.12 (0.082–0.083)	
		2.13–2.15 (0.084–0.085)	
		2.16–2.18 (0.085–0.086)	
		2.19–2.21 (0.086–0.087)	
		2.22–2.24 (0.087–0.088)	
		2.25–2.27 (0.0886–0.0894)	
		2.28–2.30 (0.090–0.091)	
		2.31–2.33 (0.091–0.092)	
		2.34–2.36 (0.092–0.093)	
		2.37–2.39 (0.093–0.094)	
		2.40–2.42 (0.094–0.095)	
		2.43–2.45 (0.0957–0.0967)	

Unit of length: mm (in)

Automatic Transmission (cont'd) — Section 14

	MEASUREMENT	STANDARD (NEW)			
		Wire Dia.	O.D.	Free Length	No. of Coils
Springs	One-way ball spring	0.29 (0.011)	4.0 (0.157)	14.0 (0.551)	13.0
	Secondary spring	2.3 (0.091)	20.2 (0.795)	21.099 (0.831)	4.0
	4-3 kick down valve spring	1.1 (0.043)	7.1 (0.280)	51.3 (2.020)	22.5
	Regulator valve spring A	1.8 (0.071)	14.7 (0.579)	86.5 (3.406)	16.5
	Regulator valve spring B	1.7 (0.067)	6.0 (0.236)*	43.0 (1.693)	13.5
	Stator reaction spring	6.5 (0.256)	26.4 (1.039)*	30.3 (1.193)	1.9
	Modulator valve spring A	1.5 (0.059)	9.4 (0.370)	30.6 (1.205)	9.9
	Modulator valve spring A, B	1.4 (0.055)	9.4 (0.370)	33.0 (1.299)	10.5
	Torque converter check valve spring	1.1 (0.043)	8.4 (0.331)	41.8 (1.646)	15.7
	Relief valve spring	0.9 (0.035)	8.4 (0.331)	56.5 (2.224)	22.4
	Cooler relief valve spring	1.1 (0.043)	8.4 (0.331)	46.8 (1.843)	17.0
	3-4 orifice control valve spring	1.0 (0.039)	6.6 (0.260)	52.2 (2.055)	26.0
	Throttle valve spring	1.0 (0.039)	7.6 (0.299)	28.3 (1.114)	12.1
	1-2 shift valve spring	0.9 (0.035)	7.6 (0.299)	55.5 (2.185)	24.0
	2-3, 3-4 shift valve spring	0.8 (0.031)	6.6 (0.260)	42.1 (1.657)	22.0
	Shift timing valve spring	0.8 (0.031)	6.6 (0.260)	54.8 (2.157)	30.0
	1st accumulator spring	3.0 (0.118)	18.0 (0.709)	74.1 (2.917)	9.88/4.72
	4th accumulator spring	2.8 (0.110)	16.5 (0.650)	78.1 (3.075)	13.5
	2nd accumulator spring	3.9 (0.154)	22.0 (0.866)	92.9 (3.657)	12.1
	1st-hold accumulator spring	4.0 (0.157)	25.0 (0.984)	68.4 (2.693)	7.2
	3rd accumulator spring	3.2 (0.126)	19.0 (0.748)	78.6 (3.094)	11.7
	Reverse accumulator spring	3.5 (0.138)	18.6 (0.732)	94.4 (3.717)	15.2
	Lock-up shift valve spring	0.9 (0.035)	7.6 (0.299)	73.7 (2.902)	32.0
	Lock-up shift timing valve spring	0.8 (0.031)	6.6 (0.260)	61.2 (2.409)	38.5
	Lock-up control valve spring A	0.7 (0.028)	6.6 (0.260)	36.3 (1.429)	14.1
	B	0.7 (0.028)	6.6 (0.260)	37.5 (1.476)	24.6
	C	0.7 (0.028)	6.6 (0.260)	38.5 (1.516)	24.6
	CPC valve spring A, B	1.2 (0.047)	8.6 (0.339)	39.1 (1.539)	14.0

*: I.D.

Standards and Service Limits

Differential — Section 15

	MEASUREMENT	STANDARD (NEW)	SERVICE LIMIT
Differential oil	Capacity ℓ (US qt, Imp qt)	1.10 (1.16, 0.97) for overhaul 1.05 (1.11, 0.92) for oil change	
Differential carrier	Pinion shaft contact area ID Carrier-to-pinion shaft clearance Driveshaft contact area ID Carrier-to-driveshaft clearance Carrier-to-half shaft clearance	20.000–20.021 (0.787–0.788) 0.013–0.050 (0.001–0.002) 32.025–32.045 (1.261–1.262) 0.045–0.086 (0.002–0.003) 0.080–0.116 (0.003–0.005)	– 0.1 (0.004) – 0.120 (0.005) 0.120 (0.005)
Differential pinion gear	Backlash ID Pinion gear-to-shaft clearance	0.05–0.15 (0.002–0.006) 20.042–20.066 (0.789–0.790) 0.055–0.095 (0.002–0.004)	0.30 (0.012) – 0.15 (0.006)
Hypoid pinion gear and hypoid ring gear	Backlash at inspection hole at ring gear circumference	0.06–0.14 (0.002–0.006) 0.08–0.18 (0.003–0.007)	Adjust with a shim Adjust with a shim
Hypoid pinion	Preload N·m (kg-cm, lb-in) M/T New bearing Reused bearing A/T New bearing Reused bearing	 0.93–1.57 (9.3–15.7, 8.1–13.6) 0.72–1.21 (7.2–12.1, 6.2–10.5) 1.86–2.54 (18.6–25.4, 16.1–22.0) 1.45–1.95 (14.5–19.5, 1.26–16.9)	Adjust with a shim
Hypoid pinion and differential unit	Total preload N·m (kg-cm, lb-in) M/T ① ② ③ ④ A/T ① ② ③ ④	 Tp+0.55–0.78(5.5–7.8, 4.8–6.8) Tp+0.55–0.78(5.5–7.8, 4.8–6.8) Tp+0.65–0.79(6.5–7.9, 5.6–6.9) Tp+0.65–0.79(6.5–7.9, 5.6–6.9) Tp+1.06–1.28(10.6–12.8, 9.2–11.1) Tp+1.06–1.28(10.6–12.8, 9.2–11.1) Tp+0.96–1.09(9.6–10.9,8.3–9.5) Tp+0.96–1.09(9.6–10.9,8.3–9.5)	Adjust with a shim

①: Pinion and ring gear bearings are new.
②: Ring gear bearing is new.
③: Pinion bearing is new.
④: Pinion and ring gear bearings are reused.
Tp: Actual measurement of pinion preload.

Steering — Section 17

	MEASUREMENT	STANDARD (NEW)
Steering wheel	Play at steering wheel circumference Starting load at steering wheel circumference N (kg, lb) engine stopped engine running	0–10 (0–0.39) 200 (20, 44) max. 30 (3, 6.6) max.
Gear box	Angle of rack-guide-screw loosened from locked position	$20°^{+5}_{0}$
Pump	Pump pressure with valve closed (oil temp./speed: 40°C (104°F) min/idle. Do not run for more than 5 seconds). kPa (kg/cm^2, psi)	8,000–9,000 (80–90, 1,138–1,280)
Power steering fluid	Fluid capacity ℓ (US qt, Imp qt) Reservoir At change	0.53 (0.56, 0.47) 1.7 (1.8, 1.5)
Power steering belt	Deflection with 100 N (10 kg, 22 lb-ft) between pulleys	11.5–13.5 (0.45–0.53) with used belt 7.5–9.5 (0.30–0.37) with new belt

Unit of length: mm (in)

Suspension — Section 18

	MEASUREMENT		STANDARD (NEW)	SERVICE LIMIT
Wheel alignment	Camber	Front	0°00′±1°, 0°15′±1°*	—
		Rear	−0°20′±1°, −0°5′±1°*	—
	Caster	Front	3°45′±1°, 3°30′±1°*	—
	Total toe	Front	Out 1±2 (0.04±0.08)	—
		Rear	In 2±2 (0.08±0.08)	—
	Front wheel turning angle	Inward wheel	44°±2°	—
		Outward wheel	35°	—
	Side slip	Front	Out 1±2 (0.04±0.08)	—
Wheel	Rim runout	Axial	0−0.7 (0−0.028)	—
		Radial	0−0.7 (0−0.028)	—
Wheel bearing	End play	Front	0	0.05 (0.002)
		Rear	0	0.05 (0.002)

*KY type

Brakes — Section 19

	MEASUREMENT		STANDARD (NEW)	SERVICE LIMIT
Parking brake lever (LHD)	Play in stroke at 200 N (20 kg, 44 lb)lever force		To be locked when pulled 8−12 notches	—
Parking brake pedal (RHD)	Play in stroke at 300N (30 kg, 66 lb) padal force		To be locked when pushed 6−8 notches	—
Foot brake pedal	Pedal height (with floor mat removed)		LHD: 213 (8.39), RHD: 200 (7.87)	—
	Free play		1−5 (0.04-0.20)	—
Master cylinder	Piston-to-pushrod clearance		0−0.2 (0−0.008)	—
Disc brake	Disc thickness	Front	23.0 (0.91) 28.0 (1.10)*1	21.0 (0.83) 26.0 (10.2)*1
		Rear	9.0 (0.35)	7.5 (0.30)
	Disc runout	Front	—	0.10 (0.004)
		Rear	—	0.10 (0.004)
	Disc parallelism	Front and rear	—	0.015 (0.0006)
	Pad thickness	Front	11.0 (0.43)	1.6 (0.06)
		rear	9.0 (0.35)	1.6 (0.06)
*2Parking brake drum	I.D.	Rear	170 (6.69)	171 (6.73)
	Lining thickness	Rear	2.5 (0.10)	1.0 (0.04)

			Line pressure kPa (kg/cm², PSi)	
Brake booster	Characteristics at 200 N (20 kg, 44 lb) pedal force.	Vacuum \ Types	LHD	RHD
		0 mm (0 in) Hg	700 (7.0, 100) min.	820 (8.2, 117) min.
		300 mm (11.8 in) Hg	6,230 (62.3, 886) min.	6,190 (61.9, 880) min
		500 mm (19.7 in) Hg	9,920 (99.2, 1,411) min.	9,780 (97.8, 1,391) min.

*1 Dual pot caliper type. *2 Rear disc brake with drum parking brake type.

Standards and Service Limits

Air Conditioner — Section 22

	MEASUREMENT		STANDARD (NEW)
Air conditioner system	Lubricant capacity cc (US oz, Imp oz)	Condenser	30 (1.01, 1.06)
		Evaporator	60 (2.03, 2.11)
		Line or hose	10 (0.34, 0.35)
		Reservoir	10 (0.34, 0.35)
Compressor	Lubricant capacity cc (US oz, Imp oz)		110—140 (3.72—4.73, 3.87—4.93)
	Stator coil resistance at 20°C (68°F) Ω		3.4—3.8
	Pulley-to-pressure plate clearance		0.35—0.65 (0.014—0.026)
Compressor belt	Deflection with 100 N (10 kg, 22 lb) between the pulleys		8-10 (0.31—0.39) with used belt 5.0—6.5 (0.20—0.26) with new belt

Electrical — Section 23

	MEASUREMENT	STANDARD (NEW)	SERVICE LIMIT
Ignition coil	Rated voltage V	12	
	Primary winding resistance Ω at 25°C (77°F)	1.0 ± 10%	
Spark plug	Type	See Section 23	
	Gap	1.0—1.1 (0.039—0.043)	
Ignition timing	At idling ° BTDC	15° ± 2° (Red) BTDC	
Alternator belt	Deflection with 100 N (10 kg, 22 lb-ft) between pulleys	9.5—11.5 (0.37—0.45) with used belt 5.5—7.5 (0.22—0.30) with new belt	
	MEASUREMENT	**STANDARD (NEW)**	**SERVICE LIMIT**
Alternator	Output 13.5 V at hot A @6,000 rpm	110	102
	Coil resistance (rotor) Ω	2.7—3.1	—
	Slip ring O.D.	14.2—14.4	12.8
	Brush length	10.5	3.5
	Brush spring tension g (oz)	300—360 (10.6—12.7)	—
Starting motor (MITSUBISHI)	Type/Output kW	Reduction, Field coil/2.0	—
	Mica depth	0.5—0.8 (0.020—0.031)	0.2 (0.008)
	Commutator runout	0—0.05 (0—0.002)	0.1 (0.004)
	Commutator O.D.	31.9—32.1 (1.256—1.264)	31.5 (1.240)
	Brush length	18.0 (0.709)	11.0 (0.433)
	Brush spring tension N (kg, lb)	29.7—36.3 (2.97—3.63, 6.55—8.00)	—
Starting motor (MITSUBA)	Type/Output kW	Reduction, Parmanent magnet/2.0	—
	Mica depth	0.4—0.5 (0.016—0.020)	0.15 (0.006)
	Commutator runout	0—0.02 (0—0.001)	0.05 (0.002)
	Commutator O.D.	32.0—32.1 (1.260—1.264)	31.5 (1.240)
	Brush length	16.8—17.2 (0.66—0.68)	10.0 (0.39)
	Brush spring tension N (kg, lb)	17—19 (1.7—1.9, 3.75—4.19)	—

Design Specification

	ITEM	METRIC	ENGLISH	NOTES
Dimensions	Overall Length	4,950 mm	194.9 in	
	Overall Width	1,810 mm	71.3 in	
	Overall Height	1,410/1,400* mm	55.5/55.1* in	*KT type
	Wheelbase	2,910 mm	114.6 in	
	Track F/R	1,550/1,540 mm	61.0/60.6 in	
	Ground Clearance	160/150* mm	6.3/5.9* in	*KT type
	Seating Capacity	Five		
Weight	See page 3-17			
ENGINE	Type	Water cooled, 4-stroke SOHC gasoline engine		
	Cylinder Arrangement	90° V6-cylinder		
	Bore and Stroke	90.0 x 84.0 mm	3.54 x 3.31 in	
	Displacement	3,206 cm^3 (cc)	196 cu in	
	Compression Ratio	9.6 : 1, 9.0 : 1*		*Except European type
	Valve Train	Belt driven, SOHC		
	Lubrication System	Forced and wet sump		
	Fuel Required	With catalitic converter (except kQ): Super UNLEADED gasoline 95 R.O. N. or higher With catalitic converter (kQ): UNLEADED gosoline 91 R. O. N. or higher Without catalitic converter: LEADED gasoline 91 R. O. N. or higher		
STARTER	Type/Makes	Gear reduction coil/MITSUBISHI or Gear reduction, permanent magnet/ MITSUBA		
	Normal Output	2.0 kW		
	Nominal Voltage	12 V		
	Hour Rating	30 seconds		
	Direction of Rotation	Clockwise as viewed from gear end		
	Weight	5.2 kg	11.5 lb	
CLUTCH	Cluth Type M/T	Single plate dry, diaphragm spring		
	A/T	Torque converter		
	Clutch Lining Area M/T	251 cm^2	39 sq in	
TRANSMISSION	Transmission M/T	Synchronized 5-speed forward, 1 reverse		
	A/T	Electronically controlled 4-speed automatic, 1 reverse		
	Primary Reduction	Direct 1 : 1		
	Type	Manual	Automatic	
	Gear Ratio 1st	2.973	2.476	
	2nd	1.692	1.451	
	3rd	1.151	0.973	
	4th	0.868	0.630	
	5th	0.682	—	
	Reverse	2.800	1.809	
	Secondary Reduction Gear Type	Single helical gear		
	Gear ratio	1.433	1.394/1.333*	*European type
	Final Reduction Gear type	Spiral bevel gear		
	Gear ratio	3.133	3.133	

Design Specification

	ITEM		METRIC	ENGLISH	NOTES
AIR CONDITIONER	Cooling Capacity		4,900 Kcal/h	19,443 BTU/h	
	– Conditions:				
	Compressor Speed		1,800 min^{-1} (rpm)		
	Outside Air Temperature		27 °C	81 °F	
	Outside Air Humidity		50 %		
	Condenser Air Temperature		35 °C	95 °F	
	Condenser Air Velocity		4.5 m/sec	14.8 ft/sec	
	Blower Capacity		480 m^3/h	16,954 cu ft/h	at 12 V
	Compressor	Type/Make	Swash-plate type/NIPPON DENSO		
		No. of Cylinder	10		
		Capacity	207.4 cc/rev	12.7 cu in/rev	
		Max. Speed	7,600 min^{-1} (rpm)		
		Lubricant Capacity	120 cc	4.06 (4.22) US (Imp) oz	
	Condenser	Type	Corrugated fin type		
	Evaporator	Type	Corrugated fin type		
	Blower	Type	Sirocco fan		
		Motor Input	200 W/12 V		
		Speed Control	Infinite variable		
		Max. Capacity	480 m^3/h	16,954 cu ft/h	at 13.5 V
	Temp. control		Air-mix type		
	Comp. clutch	Type	Dry, single plate, v-belt drive		
		Power Consumption	40 W/12 V		
	Refrigerant	Type	R 12		
		Quantity	750^{+0}_{-50} g	26.5^{+0}_{-1} oz	
STEERING SYSTEM	Type		Power assisted, rack and pinion		
	Overall Ratio		16.7		
	Turns, Lock-to-Lock		3.24		
	Steering Wheel Dia.		390 mm	150.0 in	
SUSPENSION	Type, Front		Independent double wishbone, coil spring with stabilizer		
	Type, Rear		Independent double wishbone, coil spring with stabilizer		
	Shock Absorber, Front and Rear		Telescopic, hydraulic nitrogen gas-filled		
WHEEL ALIGNMENT	Camber	Front	0°00′, 0°15′*		* KY type
		Rear	−0°20′, −0°5′*		
	Caster		3° 45′, 3°30′*		
	Toe	Front	Out 1.0 mm	Out 0.04 in	
		Rear	In 2.0 mm	In 0.08 in	
BRAKE SYSTEM	Type,	Front	Power assisted self-adjusting ventilated disc		
		Rear	Power assisted self-adjusting solid disc with parking brake drum		
	Pad and Lining Surface Area:	Front	58.0 cm^2	8.99 sq in	
		Rear	28.0 (49.0) cm^2	4.34 (7.60) sq in	( ): Parking brake
	Parking Brake Kind and Type		Mechanical expanding drums, rear two wheels		

	ITEM	METRIC	ENGLISH	NOTES
TIRE	Size European type	205/65 ZR 15		
	Australian type	205/60 R 15 91 V		
	Except European type	205/60 R 15 90 V		
	Winter tire	205/60 R R15		
		T135/80 D16 (Spare tire)		
ELECTRICAL	Battery	12 V-61AH/5HR		
	Starter	12V-2.0 kW		
	Alternator	12V-110A		
	Fuses In The Under-Dash Fuse Box	7.5A, 10A, 15A, 20A, 30A		
	In The Under-Hood Relay/Fuse Box	7.5A, 10A, 15A, 20A, 30A, 40A, 50A, 120A		
	Headlights (Low/High)	12V-55/60W, 12V-55W/65W*1		
	Front Turn Signal Lights	12V-21W, 12V-45CP*1		
	Front Position Lights	12V-5W		
	Side Turn Signal Lights	12V-5W*2		
	Rear Turn Signal Lights	12V-21W, 12V-32CP*1		
	Brake/Tail Lights*1	12V-32/2CP		
	Stop Lights*2	12V-21W		
	Tail lights	12V-10W, 12V-4CP*1		
	Side Marker Lights Front	12V-5W		
	Rear	12V-3CP		
	Back-up Lights	12V-21W, 12V-32CP*1		
	Rear Fog Light*3	12V-21W		
	High Mount Brake Light*4	12V-45CP		
	License Plate Lights	12V-8W*1		
	Gauge Lights	12V-3.0W, 1.4W		
	Indicator Lights	12V-1.12W, 1.4W		
	Warning Lights	12V-1.4W		
	Dome Lights and Rear Light	12V-5W		
	Trunk Lights	12V-3.4W		
	Door Courtesy Lights	12V-3.4W		
	Illumination and Pilot Lights	12V-1.4W, 1.12W, 0.84W		
		12V-0.91W, 0.56W, LED		
	Heater Illumination Light (Manual A/C)	12V-1.4W		
	Spot Light (front and rear)	12V-5W		

*1KY type only *2Except KY type *3European type *4Except European type

Design Specification

Weight Specifications

ITEM			METRIC	ENGLISH	NOTES
Weight	Curb Weight	M/T wihtout SRS	1,550 kg	3,417 lb	KG, KS
		A/T without SRS	1,570 Kg	3,461 lb	KG, KS
			1,570 kg	3,461 lb	KY
			1,565 kg	3,450 lb	KT
		M/T with SRS	1,555 kg	3,428 lb	European (except KE)
		A/T with SRS	1,575 kg	3,472 lb	European (except KE)
			1,575 kg	3,472 lb	KE
			1,570 kg	3,461 lb	KQ
			1,575 kg	3,472 lb	KY
			1,570 kg	3,461 lb	KT
	Weight Distribution (FR/RR)	M/T without SRS	935/615 kg	2,061/1,356 lb	KG, KS
		A/T without SRS	950/620 kg	2,094/1,367 lb	KG, KS
			935/635 kg	2,061/1,400 lb	KY
			940/625 kg	2,072/1,378 lb	KT
		M/T with SRS	940/615 kg	2,072/1,356 lb	European (except KE)
		A/T with SRS	955/620 kg	2,105/1,367 lb	European (except KE)
			955/620 kg	2,105/1,367 lb	KE
			945/625 kg	2,083/1,378 lb	KQ
			940/635 kg	2,072/1,400 lb	KY
			945/625 kg	2,083/1,350 lb	KT
	Max. Permissible Weight (for European)		2,150 kg	4,740 lb	
	Max. Loaded Vehicle Weight (ADR)		1,983 kg	4,372 lb	

Body Specifications

Unit: mm (in)

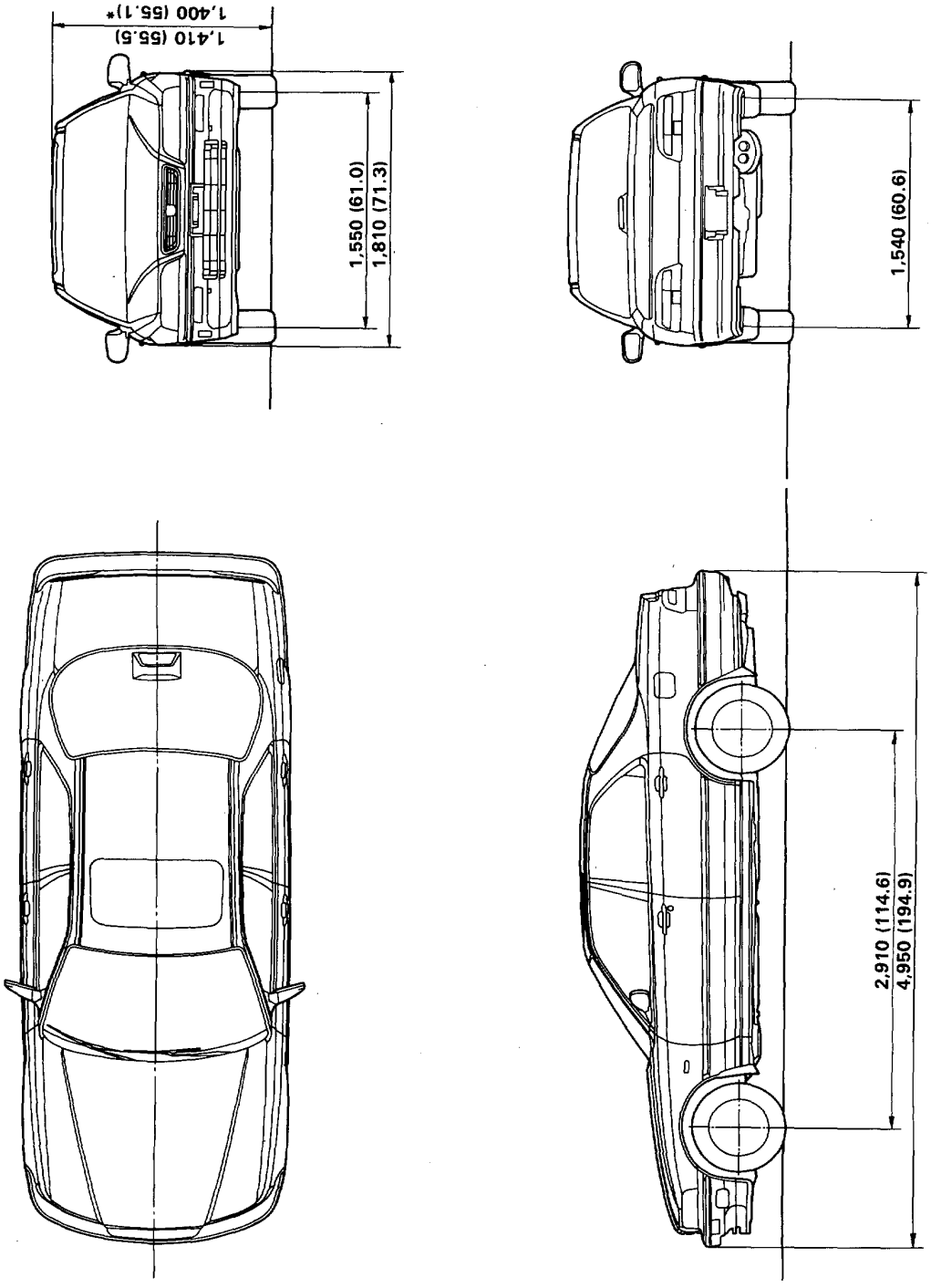

*KT type

Maintenance

Lubrication Points 4-2
Maintenance Schedule 4-4

Lubrication Points

For the details of lubrication points and types of lubricants to be applied, refer to the Illustrated Index and various work procedures (such as Assembly/Reassembly, Replacement, Overhaul, Installation, etc.) contained in each section.

No.	LUBRICATION POINTS	LUBRICANT
1	Engine	API Service Grade: SG or SF Fuel Efficient Oil Viscosity: 10 W—30 recommended See chart below
2	Transmission Manual Automatic	API Service Grade: SF or SG SAE Viscosity: See chart below. DEXRON® I, DEXRON® II type Automatic transmission fluid
3	Brake Line	Brake fluid DOT3 or DOT4
4	Clutch Line	Brake fluid DOT3 or DOT4
5	Power steering gearbox	Steering grease P/N 08733—B070E
6 7	Shift lever pivots (Manual) Release fork (Manual)	Silicone grease with molybdenum disulfide
8 9 10 11 12 13 14 15 16 17 18 19 20 21 22	Steering boots Steering column bushings Steering ball joints Select lever (Automatic) Pedal linkage Intermediate shaft Brake master cylinder pushrod Trunk hinges Door hinges upper and lower Door opening detents Fuel filler lid Engine hood hinges and engine hood latch Clutch master cylinder pushrod Throttle cable end Shift cable end and select cable end	Multi-purpose grease
23	Caliper Piston seal, Dust seal, Caliper pin, Piston	Silicone grease
24	Power steering system	Honda power steering fluid-V
25	Differential	Hypoid gear oil at above −18°C (−0.4°F): SAE 90 at less than −18°C (−0.4°F): SAE 80 or SAE 80W90

Recommended Engine Oil
API Service Grade: SG or SF Fuel Efficient oil

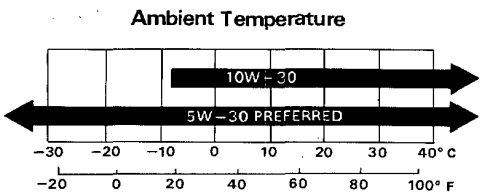

Engine oil viscosity for ambient temperature ranges

Recommended Manual Transmission Oil
API Service Grade: SF or SG

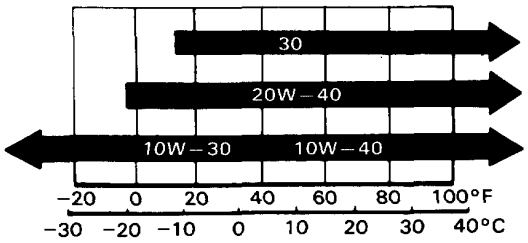

Transmission oil viscosity for ambient temperature ranges

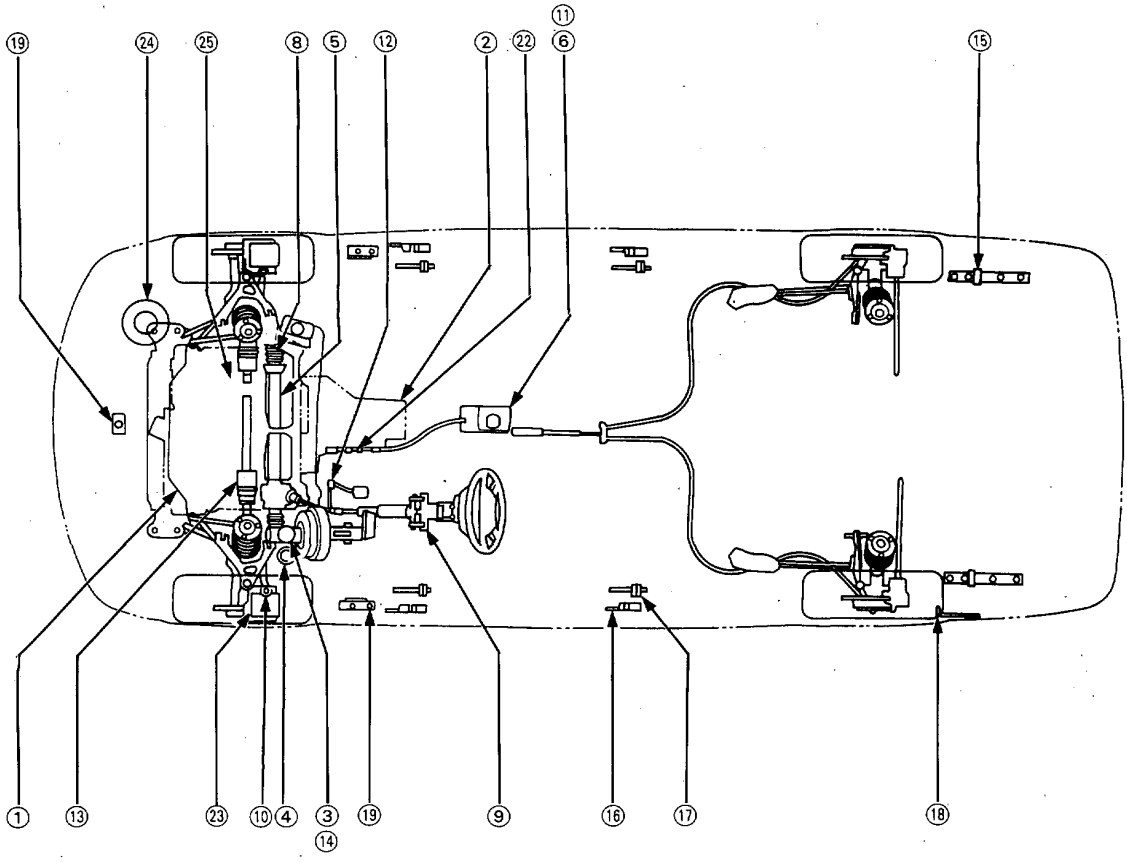
⑲
㉔
㉕
⑧
⑤
⑫
②
㉒
⑪
⑥
⑮
①
⑬
㉓
⑩
④
③
⑭
⑲
⑨
⑯
⑰
⑱

Maintenance Schedule

R—Replace C—Clean I—Inspect After inspection, clean, adjust, repair or replace if necessary.

Service at the interval listed x 1,000 km (or miles) or after that number of months, whichever comes first.			x 1,000 km	10	20	30	40	50	60	70	80	90	100
			x 1,000 miles	6	12	18	24	30	36	42	48	54	60
			months	6	12	18	24	30	36	42	48	54	60
Emission Related													
□	Air cleaner element	For European and KQ types					R				R		
		Except for European and KQ types			R		R		R		R		R
	Idle speed and idle CO	Except for KX, KS types			I		I		I		I		I
		For KX, KS types											I
	E.G.R. system	For cars using unleaded perol											I
		For cars using leaded petrol					I				I		
	E.G.R. filter	For cars using leaded petrol									R		
	Secondary air supply system												I
	Evaporative emission control system												I
	Ignition timing	Except for KX, KS types					I				I		
		For KX, KS types											I
	Positive crankcase ventilation valve	Except for KX, KS types					I				I		
		For KX, KS types											I
	Fuel filter						R				R		
	Tank, fuel line and connections						I				I		
	Spark plugs	For cars using unleaded petrol											R*2
		For cars using leaded petrol			R		R		R		R		R
◙	Engine oil and oil filter			R	R	R	R	R	R	R	R	R	R
	Alternator drive belt						I				I		
	Cooling system hoses and connections						I				I		
•	Radiator coolant										R*1		
◙	Transmission oil						R				R		
□	Front differential oil						R				R		
Engine (Non-Emission Related)													
	Timing Belt												R
	Water pump												I
	Exhaust pipe and muffler				I		I		I		I		I
	Catalytic converter heat shield (For cars with catalytic converter)												I

- • Day to day care (engine oil, ATF and coolant level) should be done practically according to the owner's manual by the customer.
- □ Under severe driving conditions, service these items more often.
- *1 Thereafter, replace every 2 years or 40,000 km (24,000 miles), whichever comes first.
- *2 Replace every 6 years or 100,000 km (60,000 miles), whichever comes first.

R—Replace C—Clean I—Inspect After inspection, clean, adjust, repair or replace if necessary.

Service at the interval listed x 1,000 km (or miles) or after that number of months, whichever comes first.		x 1,000 km	10	20	30	40	50	60	70	80	90	100
		x 1,000 miles	6	12	18	24	30	36	42	48	54	60
		months	6	12	18	24	30	36	42	48	54	60
Brakes (Non-Emission Related)												
	Front brake pad		I	I	I	I	I	I	I	I	I	I
☐	Front brake discs and calipers			I		I		I		I		I
☐	Rear brake discs, calipers and pad					I				I		
	Parking brake drums and linings					I				I		
	Brake hoses and lines (including Anti-lock brake system)			I		I		I		I		I
	Parking brake			I		I				I		
	Brake fluid (including Anti-lock brake system)					R				R		
	Anti-lock brake system high pressure hose									R		
	Anti-lock brake system operation			I		I				I		
Steering and Suspension (Non-Emission Related)												
	Front wheel alignment			I		I		I		I		I
	Steering operation, tie rod ends, steering gear box and boot			I		I				I		
	Suspension mounting bolts			I		I		I		I		I
☐	Power steering system			I		I		I		I		I
	Power steering pump belt					I				I		

☐ Under severe driving conditions, service these items more often.

Severe Driving Conditions
Items with a ☐ in the chart will need service more often, if you drive in some severe conditions.

The conditions are:
A. Repeated short distance driving.
B. Dusty conditions.
C. Severe cold weather.
D. Areas with road salt or other corrosive materials.
E. Rough or muddy roads.
F. Towing a trailer.

The services are:
— Replace engine oil and oil filter every 5,000 km (3,000 miles) or 3 months under condition A, B or F.
— Clean the air cleaner element first at 20,000 km (12,000 miles) or 12 months, and replace every 40,000 km (24,000 miles) or 24 months for European and KQ types under condition B or E.
Clean the air cleaner element first at 10,000 km (6,000 miles) or 6 months, and replace every 20,000 km (12,000 miles) or 12 months for other than European and KQ types under condition B or E.
— Replace transmission oil and front differential oil every 20,000 km (12,000 miles) or 12 months under condition F.
— Inspect front brake discs, calipers and pad every 10,000 km (6,000 miles) or 6 months under condition A, B, D, E, or F.
— Inspect rear brake discs, calipers and pads every 20,000 km (12,000 miles) or 12 months under condition A, B, D, E or F.
— Inspect power steering system every 10,000 km (6,000 miles) or 6 months under condition B, C or E.

Engine

Engine Removal/Installation 5-1
Cylinder Head/Valve Train 6-1
Engine Block 7-1
Engine Lubrication 8-1
Intake Manifold/Exhaust System 9-1
Cooling 10-1

Engine Removal/Installation

Special Tools

Ref. No.	Tool Number	Description	Qty	Page Reference
①	07MAC–SL00100	Ball Joint Remover, 32 mm	1	5-7
②	07KAK–SJ40101	Engine Tilt Hanger Set	1	5-11
③	07MAK–PY30100	Engine Sub Hanger Stay	1	5-11
④	07MAK–PY30200	Sub Hanger Belt	1	5-11

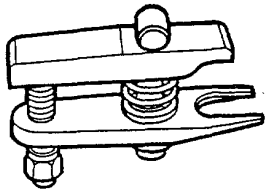

①

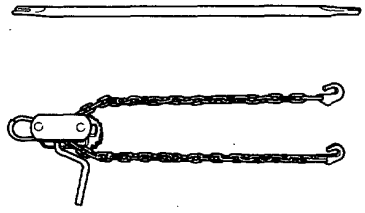

②

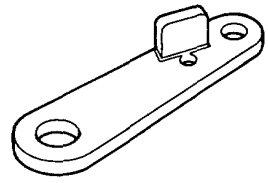

③

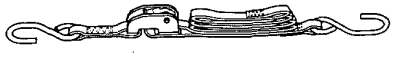

④

⚠WARNING

- **Make sure jacks and safety stands are placed properly and hoist brackets are attached to the correct positions on the engine (See Section 1).**
- **Make sure the car will not roll off stands and fall while you are working under it.**

CAUTION:

- **Use front and rear fender covers to avoid damaging painted surfaces.**
- **Unspecified items are common for the M/T cars, A/T cars.**
- **Unplug the wiring connectors carefully while holding the coupler and the connector portion to avoid damage.**
- **Mark all wiring and hoses to avoid mis-connection. Also, be sure that they do not contact other wiring or hoses or interfere with other parts.**

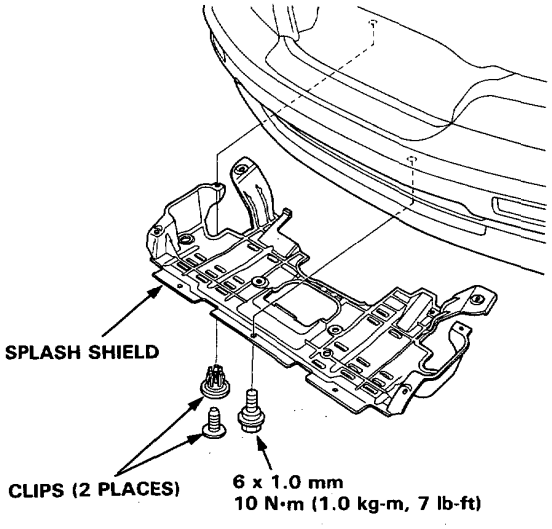

1. Disconnect the battery negative terminal first, then the positive terminal. Remove the battery.
2. Remove the radiator cap.

   ⚠WARNING Use care when removing the radiator cap to avoid scalding by hot coolant or steam.

3. Raise the hoist to full height.
4. Remove the engine splash shield.
5. Drain the coolant (See Section 10).
   - Loosen the drain plug from the radiator lower tank.
6. Drain transmission and differential oil/fluid. Use a 3/8" drive socket wrench to remove the drain plugs. Reinstall the drain plugs using new washers.
7. Drain the engine oil. Reinstall the drain plug using a new washer.
8. Lower the hoist.
9. Remove the open stay bolts, then fix the engine hood to vertical position.
10. Remove the strut bar and bracket.

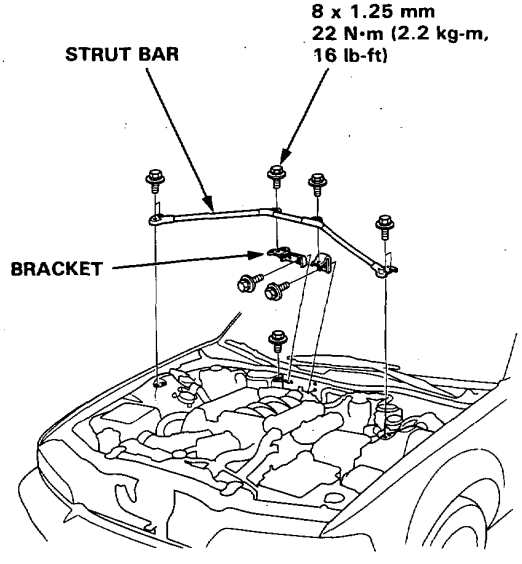

(cont'd)

11. Remove the battery base.

12. Disconnect the engine wire harness connectors, then remove the relay box.
    - Remove the ground cable from cylinder block.
    - Remove the battery cable from starter motor B terminal.

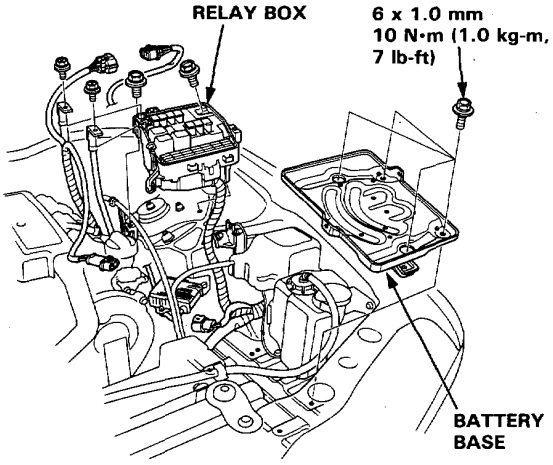

13. Remove the throttle cover.

14. Remove the throttle cable by loosening the locknut, then slip the cable end out of the throttle bracket and accelerator linkage.

    NOTE:
    - Take care not to bend the cable when removing it. Always replace any kinked cable with a new one.
    - Adjust the throttle cable when installing (See Section 11).

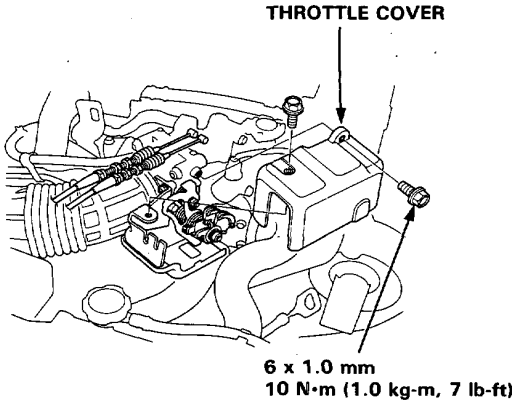

15. Remove air cleaner assembly and air duct.

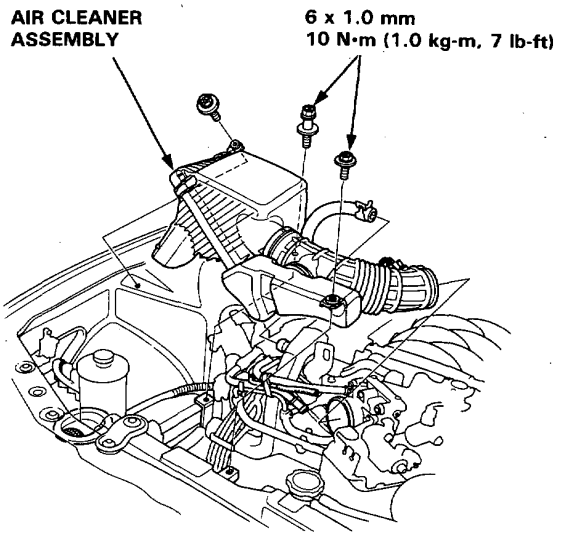

16. Remove the igniter connector, harness clamp and engine ground cable.

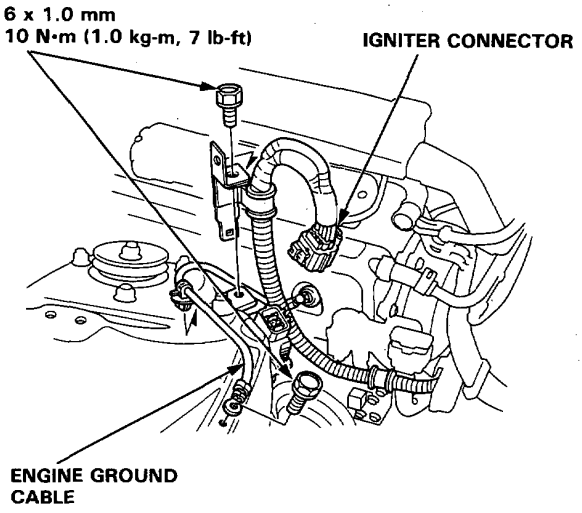

17. Disconnect three connectors, then remove the emission control box.
    - Do not disconnect the vacuum hoses.

LHD:

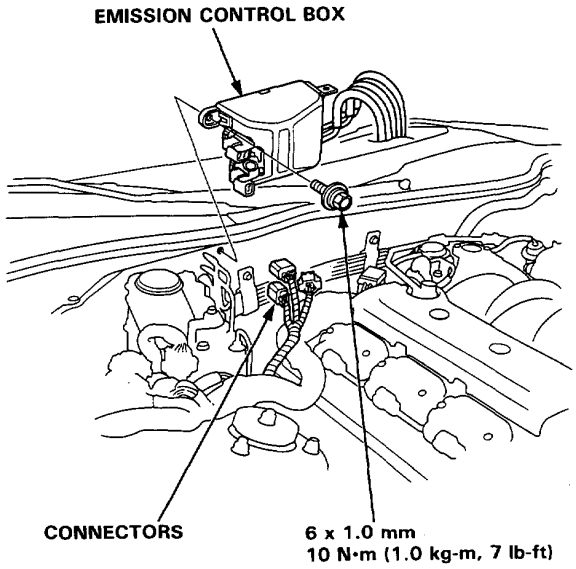

RHD:

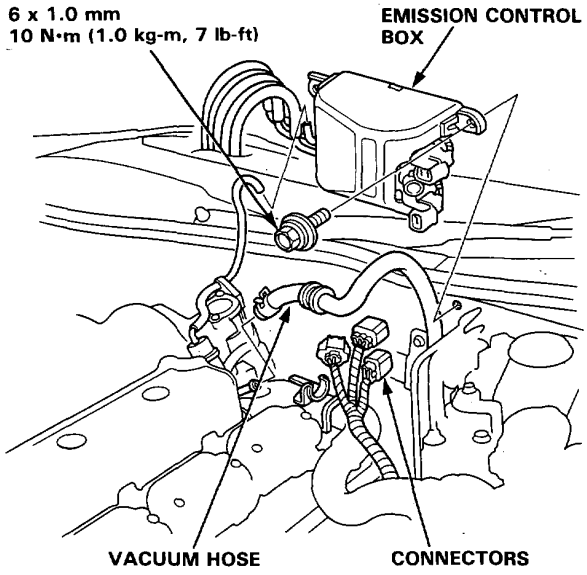

18. Disconnect four engine wire harness connectors and clamp.

LHD:

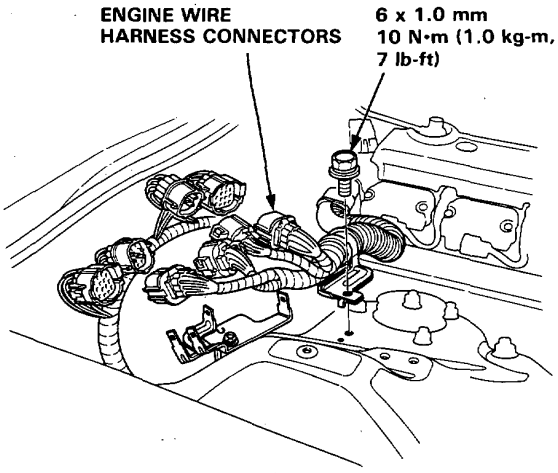

RHD:

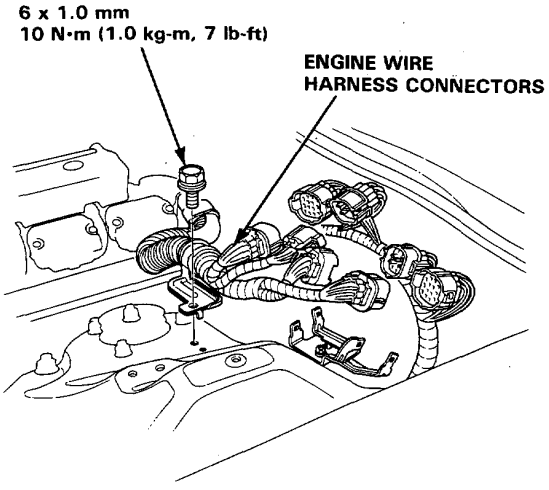

(cont'd)

19. Relieve fuel pressure by slowly loosening the service bolt on the fuel filter about one turn (See Section 11).

⚠WARNING Do not smoke while working on the fuel system. Keep open flame away from work area. Drain fuel only into an approved container.

CAUTION:
- **Before disconnecting any fuel line, the fuel pressure should be relieved as described above.**
- **Place a shop towel over the fuel filter to prevent pressurized fuel from spraying over the engine.**

20. Remove the fuel feed hose and the fuel return hose from the pressure control valve.

LHD:

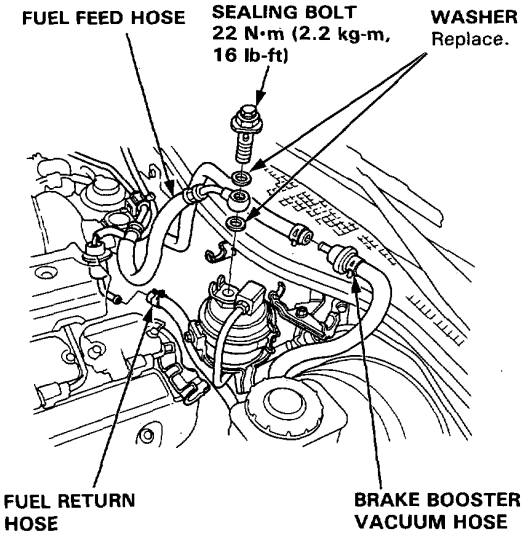

21. Remove the fuel purge hose and the purge cut vacuum hose.

RHD:

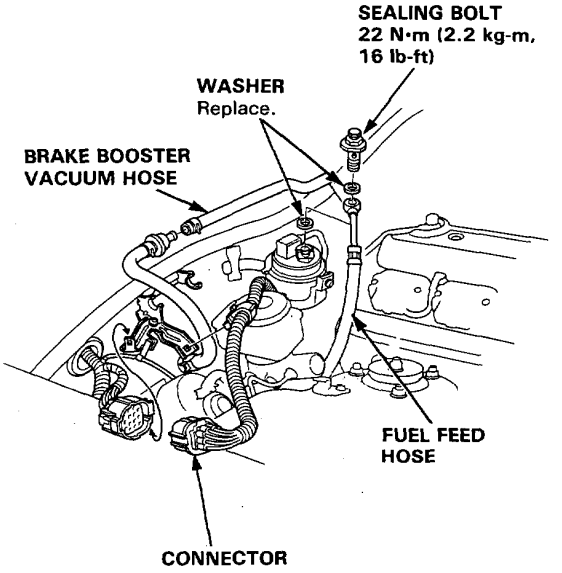

22. Disconnect the brake booster vacuum hose.

23. Disconnect the A/T transmission sub wire harness connector then remove the harness clamp (page 14-44 and 45).

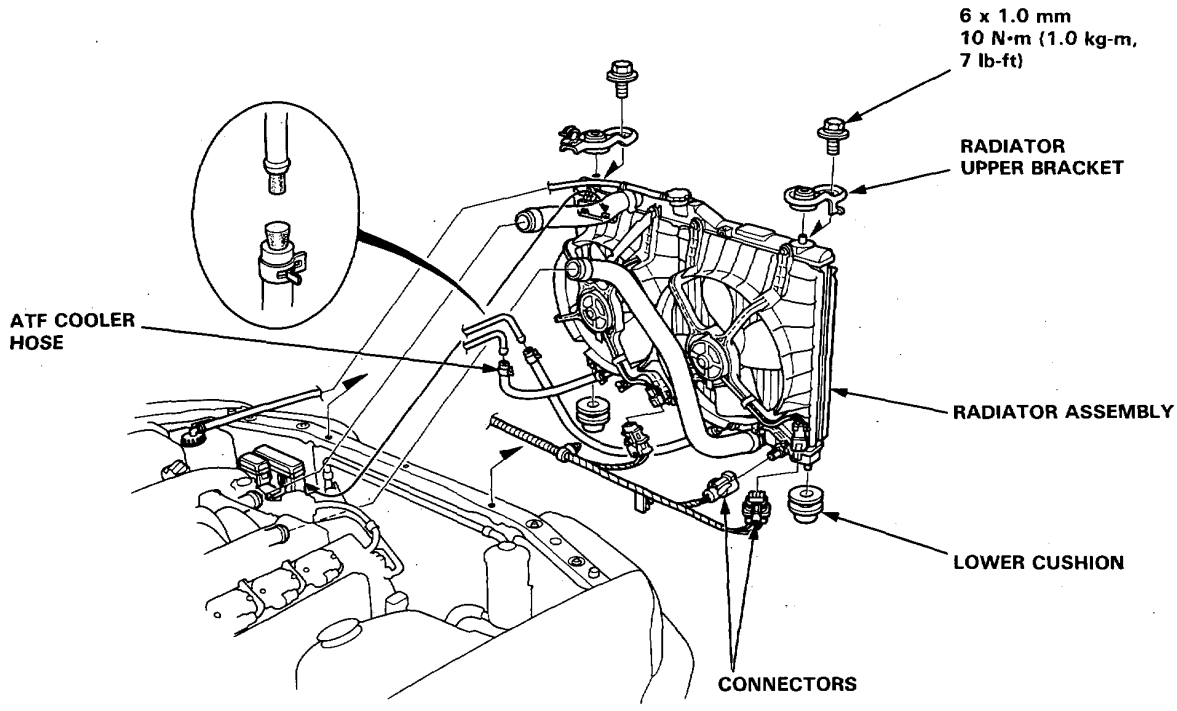

24. Disconnect the radiator hoses, the ATF cooler hoses, the thermosensor connector and the cooling fan motor connectors, then remove the radiator assembly.

25. Remove vacuum pipe, emission device solenoid valve assembly and air tank.
    - Do not disconnect the P/S hoses.

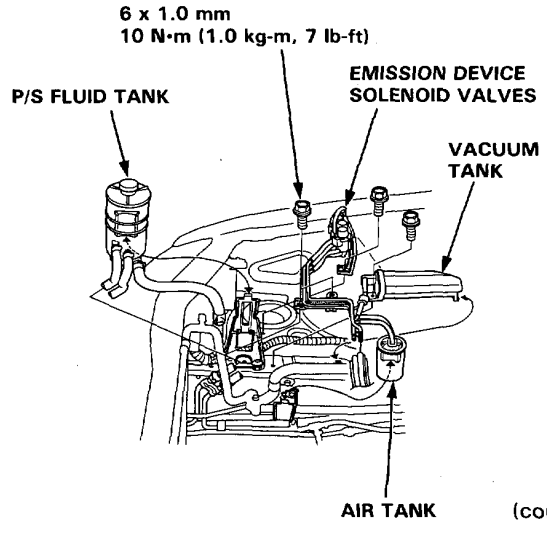

(cont'd)

26. Remove the power steering belt and pump.
    - Do not disconnect P/S hoses.

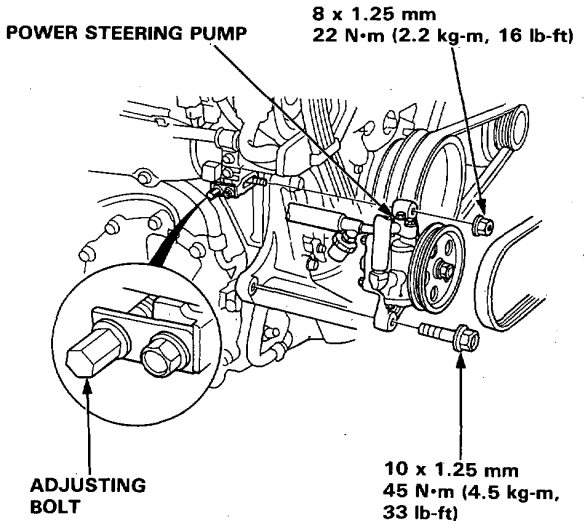

27. Remove the front tires/wheels.

28. Remove the damper forks.

29. Disconnect the suspension lower arm ball joints with the special tool. Refer to Section 18 for the proper procedure.

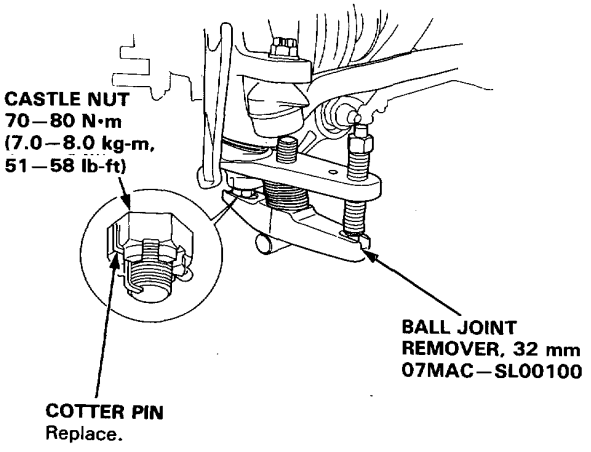

30. Remove the driveshafts. Suspend them with a rope as shown.

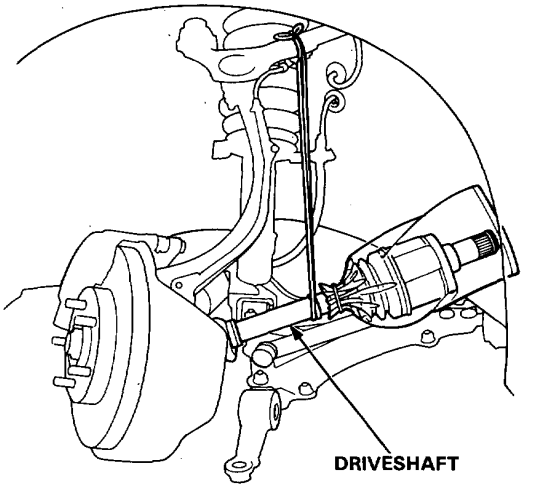

31. Raise the hoist to full height.

32. Remove the lower plate from the rear beam.
- LHD is shown in the illustration. The location of the steering gear box mounting bolts on the RHD are symmetrical.

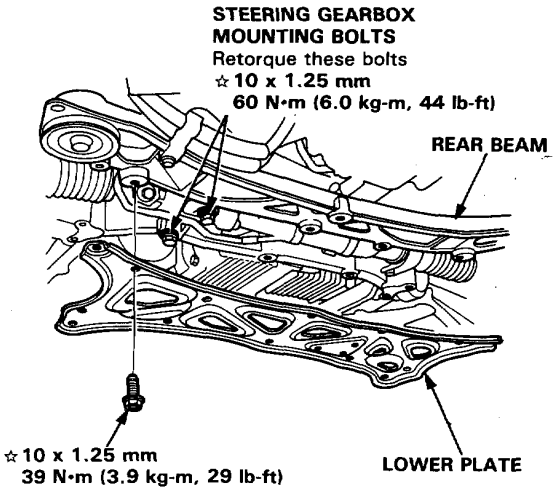

☆: CORROSION RESISTANT BOLT

33. Remove the power steering speed sensor.
- Do not disconnect the hoses.

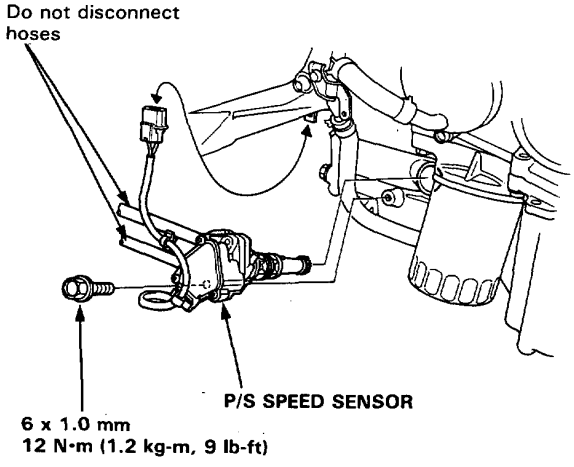

34. Remove the exhaust pipe A and joint pipe assembly.

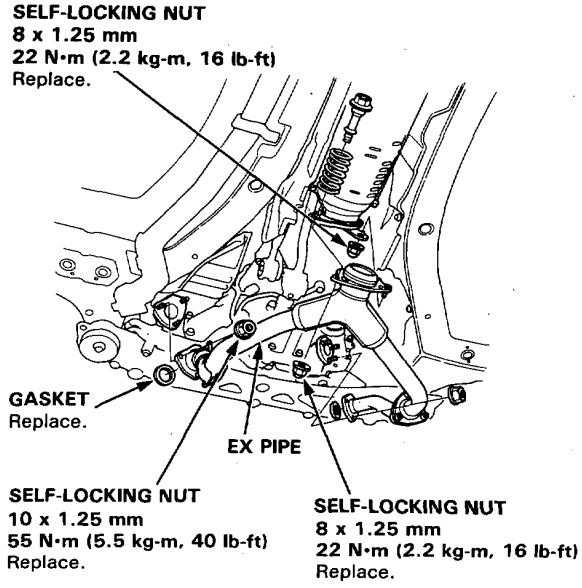

35. Remove the air conditioner compressor and belt.
- Do not disconnect hoses.

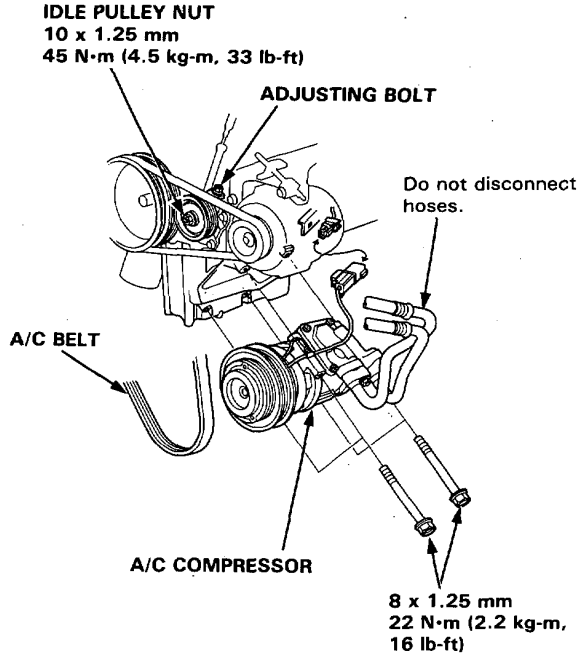

(cont'd)

Manual transmission equipped cars:

36. Remove the slave cylinder from transmission housing.
    - Do not disconnect the clutch hose.

37. Disconnect the shift rod and shift lever torque rod as shown.

M/T

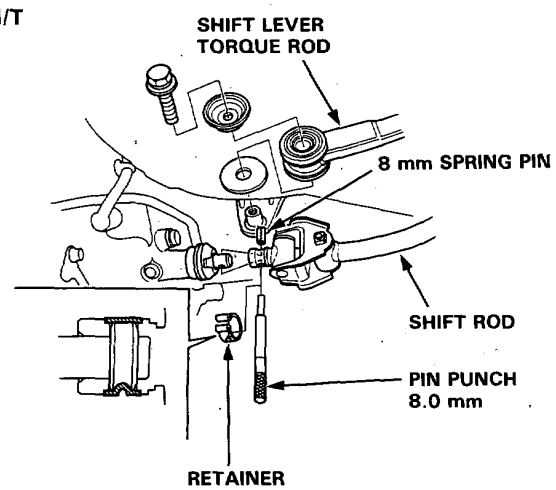

Automatic transmission equipped cars:

38. Disconnect the shift control cable.

A/T

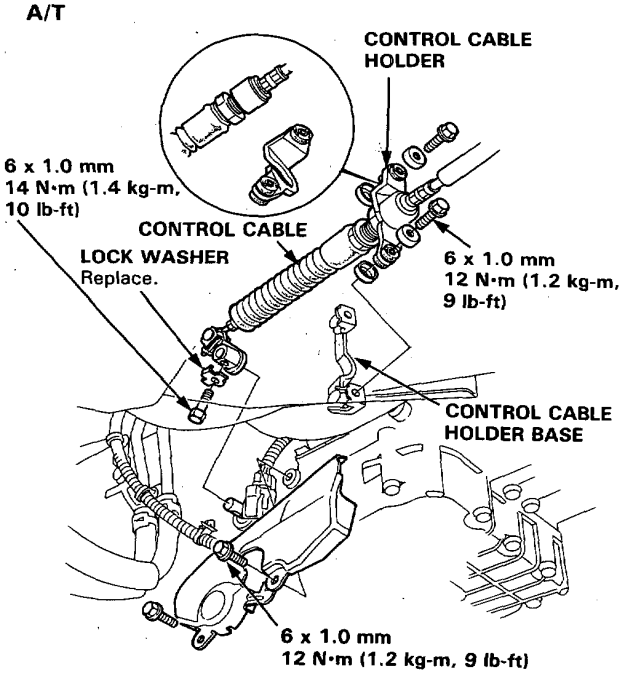

39. Remove the engine mid mounting nuts and bolts.

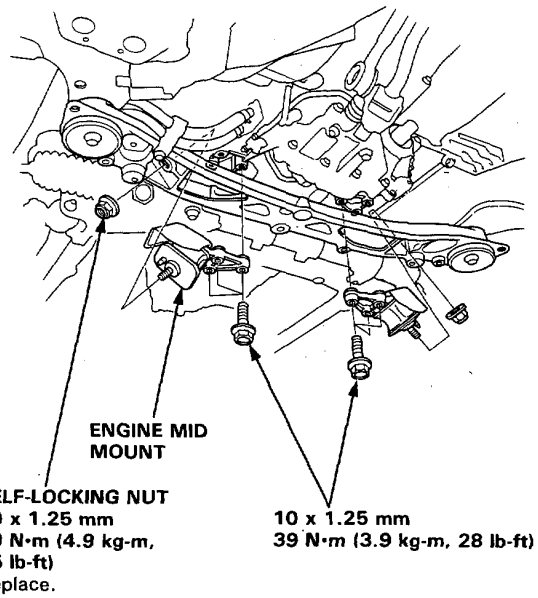

40. Remove rear transmission mounting/bracket.

A/T:

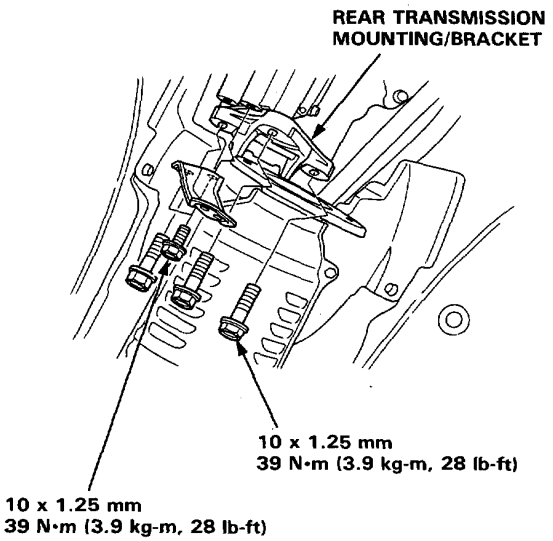

41. Lower the hoist.

42. Remove the front engine mounting nuts.

43. Remove the EGR passage bolt (except KQ), then install a special tool.

44. Attach a chain hoist to the engine. Raise the hoist to remove all slack from the chain.

45. Check that the engine/transaxle is completely free of vacuum hoses, fuel and coolant hoses, and electric wires.

46. Slowly raise the engine approximately 6''. Check once again that all hoses and wires have been disconnected from the engine/transaxle.

47. Raise the engine/transaxle all the way and remove it from the car.

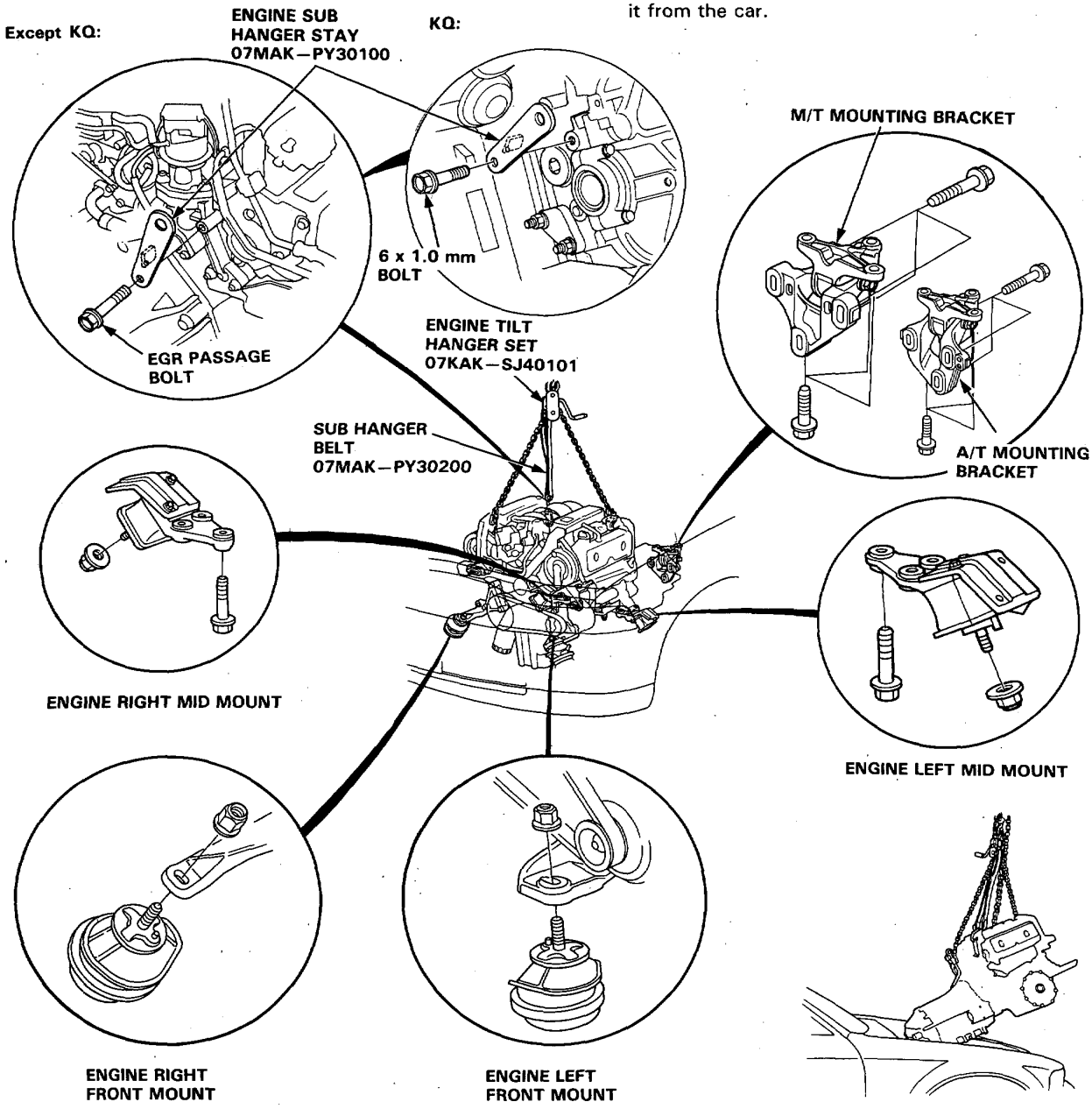

(cont'd)

48. Install the engine in the reverse order of removal. After the engine is in place:
   - Torque the engine mounting bolts in sequence shown below.

   CAUTION: Failure to tighten the bolts in the proper sequence can cause excessive noise and vibration, and reduce bushing life: check that the bushings are not twisted or offset.
   - Check that the spring clip on the end of each driveshaft clicks into place.

   CAUTION: Use new spring clips on installation.
   - Bleed air from the cooling system at the bleed bolt with the heater valve open.
   - Adjust the throttle cable tension.

Engine Mounting Torque Sequence:

CAUTION: After loosening the special bolts, be sure to replace them with new ones.

- Check the clutch pedal free play.
- Check that the transmission shifts into gear smoothly.
- Adjust the tension of the following drive belts
  Alternator belt (See Section 23).
  Power steering belt (See Section 17).
  Air conditioner belt (See Section 22).
- Clean battery posts and cable terminals with sandpaper, assemble, then apply grease to prevent corrosion.
- Inspect for fuel leakage.
  - After assembling fuel line parts, turn on the ignition switch (do not operate the starter) so that the fuel pump is operated for approximately two seconds and the fuel is pressurized. Repeat this operation two or three times and check whether any fuel leakage has occurred at any point in the fuel line.

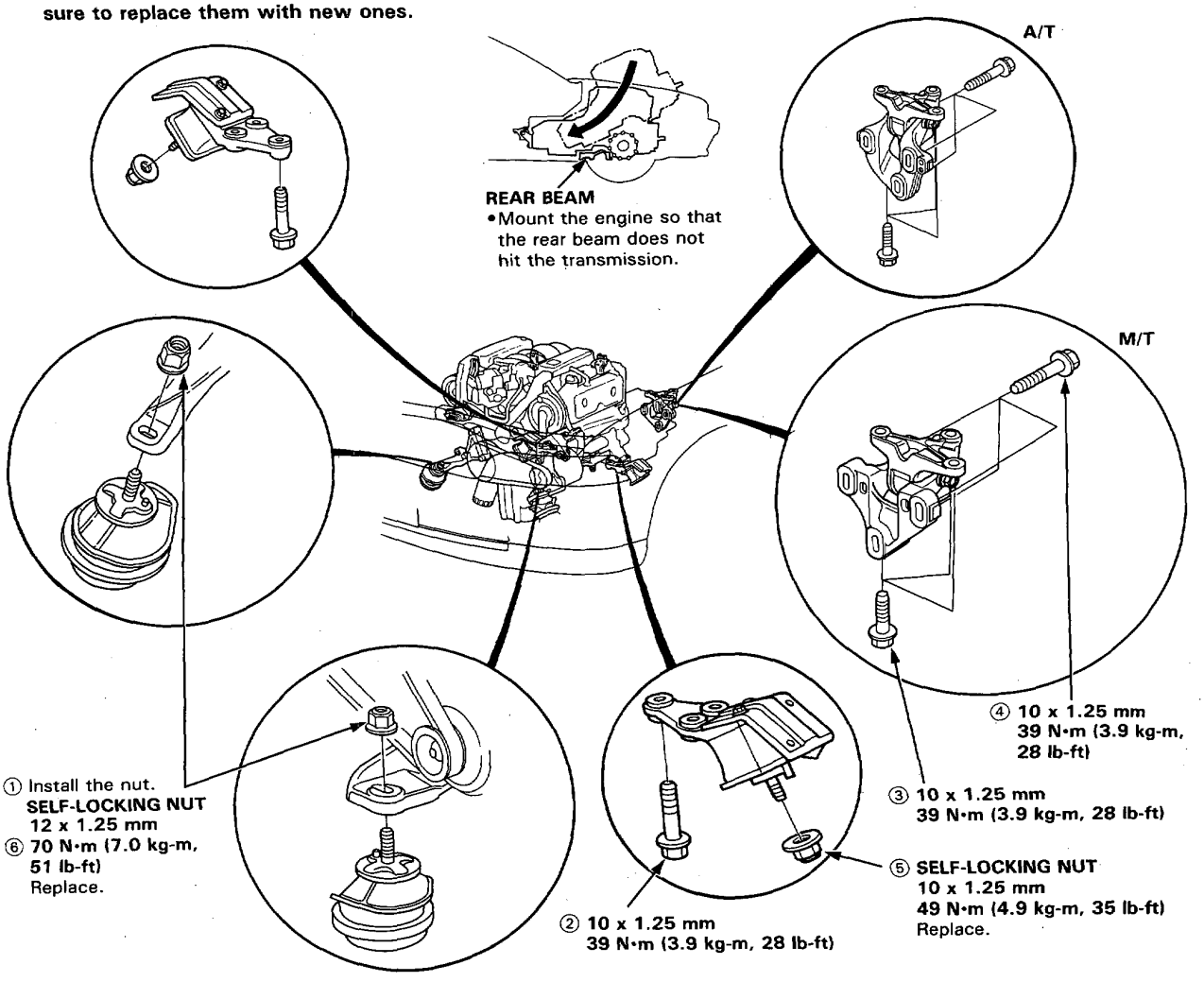

Mount and bracket torque:

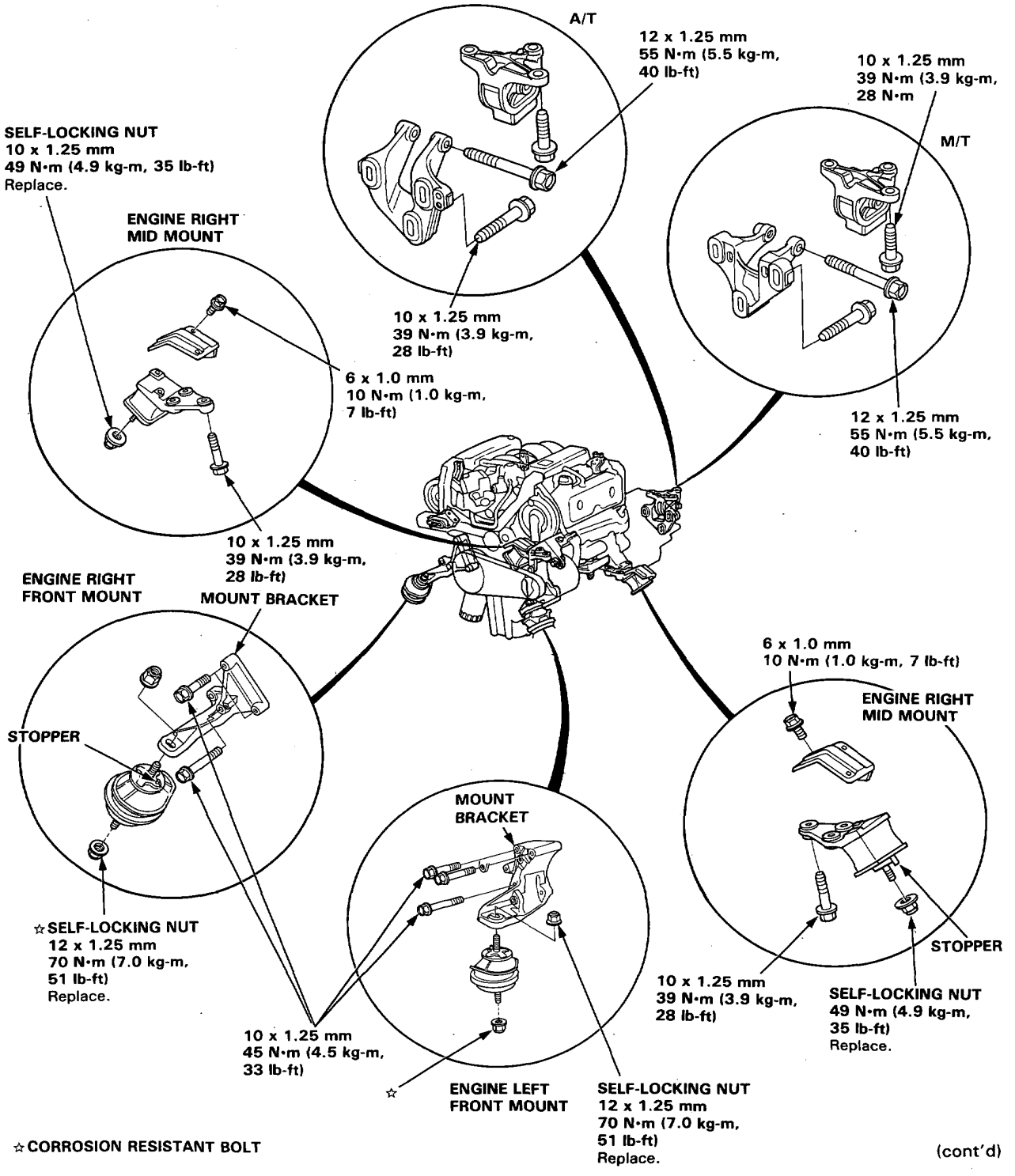

☆CORROSION RESISTANT BOLT

(cont'd)

Additional Torque Value Specifications:

NOTE: For manifold replacement, refer to Section 9.

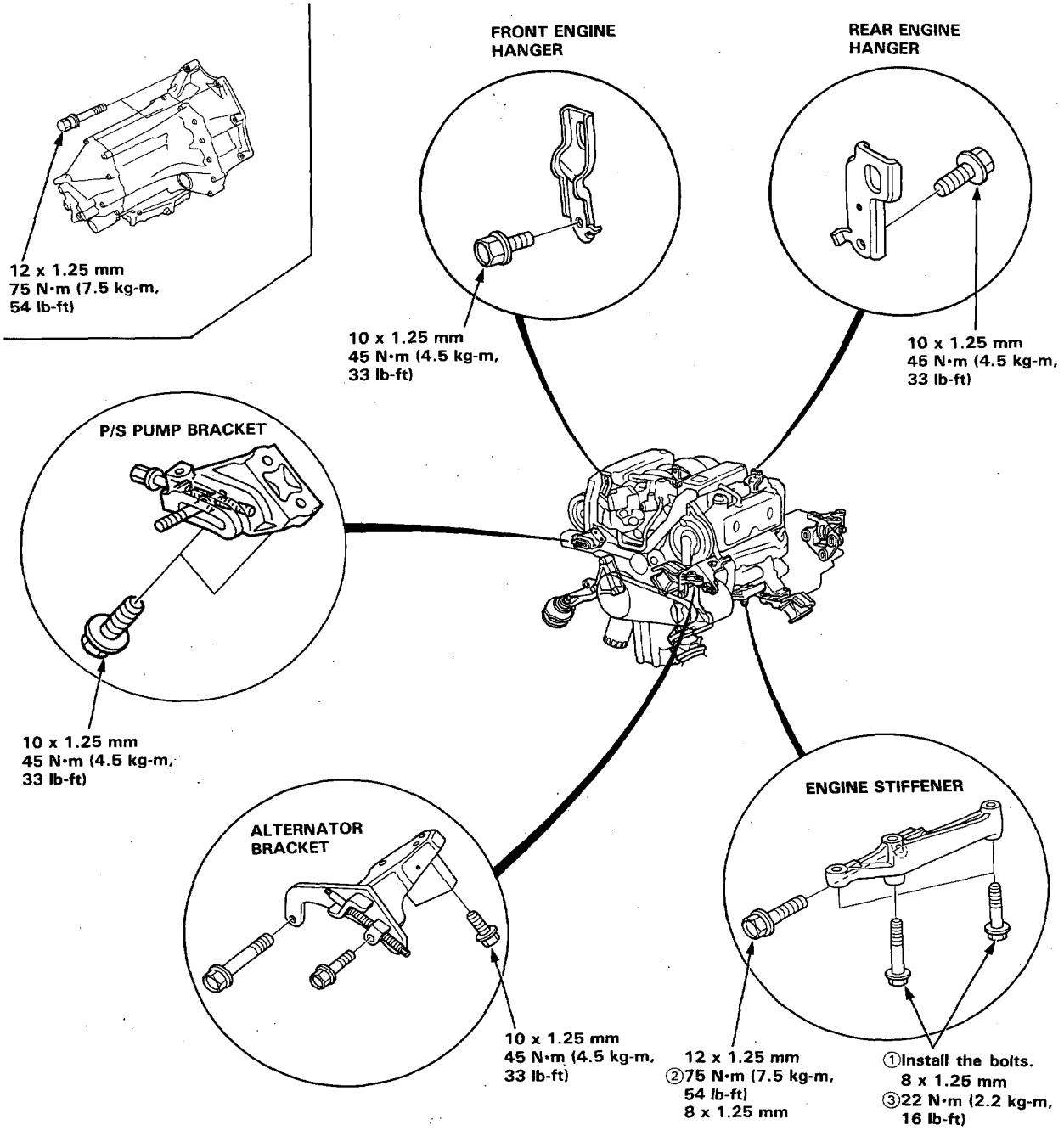

Sub Frame Torque:

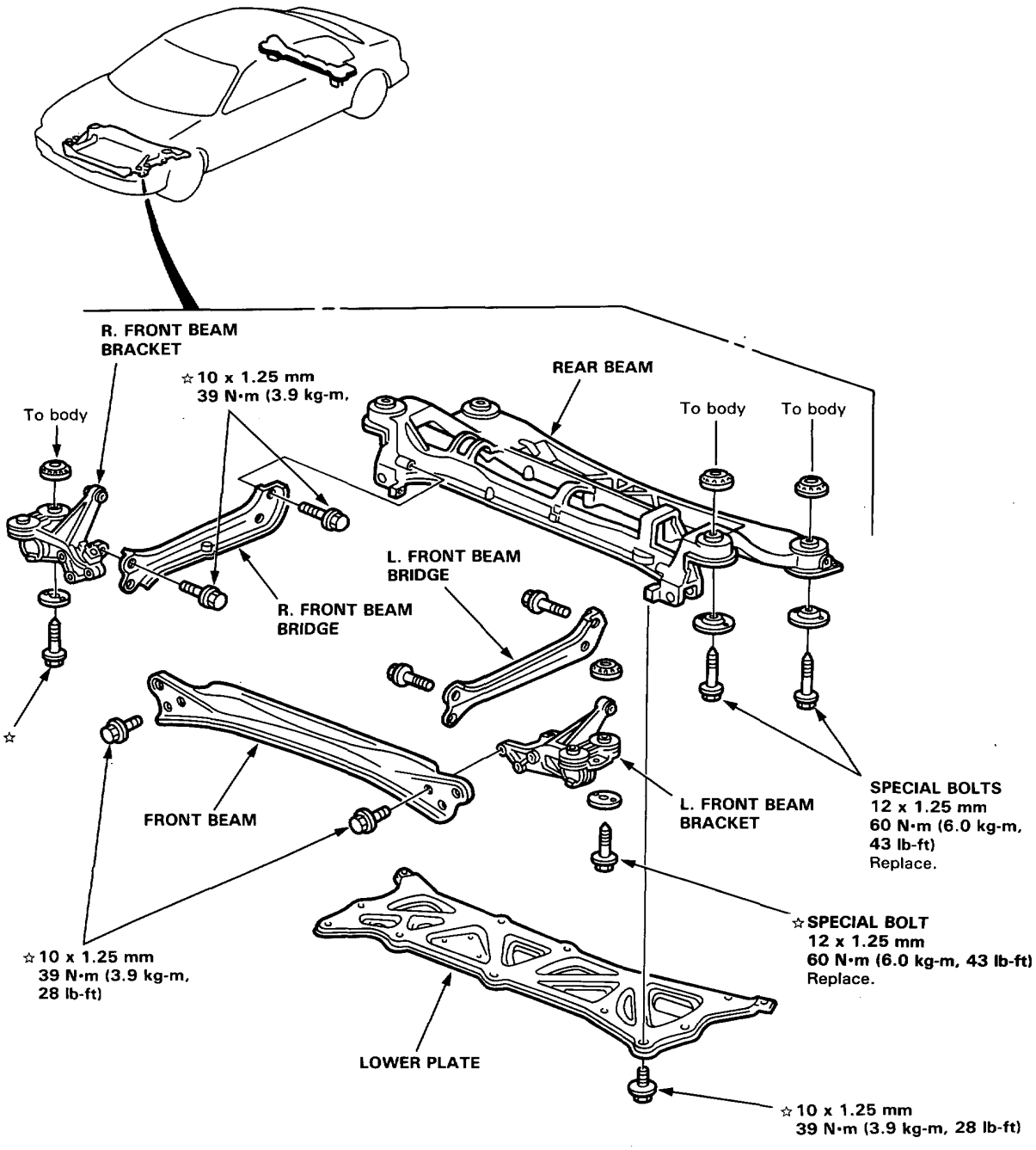

☆CORROSION RESISTANT BOLT

Cylinder Head/Valve Train

Special Tools 6-2
Illustrated Index 6-3
Cylinder Head Removal 6-7
Rocker Arms and Shafts
  Removal 6-13
  Overhaul 6-12
  Clearance 6-15
Camshaft Inspection 6-13
Valve and Valve Seals 6-16
Valves 6-17
Valve Seats 6-18
Valve Guides 6-19
Cylinder Heads 6-20
Valve Spring and Valve Seals 6-21
Hydraulic Tappets 6-22
Camshafts/Rocker Arms
  and Camshaft Seals 6-23
Cylinder Head Installation 6-24
Timing Belt
  Illustrated Index 6-26
  Inspection 6-27
  Tension Adjustment 6-27
  Removal 6-28
  Installation 6-30
CRANK/CYL Sensor 6-32

Special Tools

Ref. No.	Tool Number	Description	Qty	Page Reference
①	07HAD—PJ70200	Valve Guide Seal Installer	1	6-21
②	07HAH—PJ70100	Valve Guide Reamer, 5.5 mm	1	6-20
③	07JAB—0010000	Crank Pulley Holder Set	1	6-26
③-1	07JAA—0010200	Socket Wrench, 19 mm	(1)	6-26
③-2	07JAB—0010200	Handle	(1)	6-26
④	07MAB—PY30100	Pulley Holder Attachment	1	6-26
⑤	07757—0010000	Valve Spring Compressor	1	6-16
⑥	07742—0010100	Valve Guide Remover, 5.5 mm	1	6-19
⑦	07742—8920000	Valve Guide Driver	1	6-19

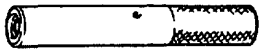

①

②

③-1

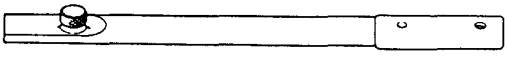

③-2

③

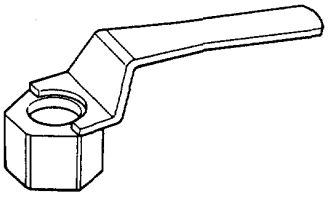

④

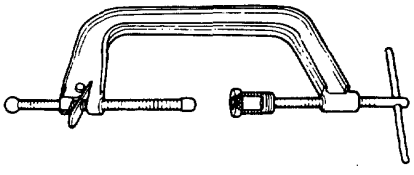

⑤

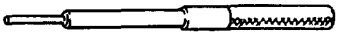

⑥ ⑦

Illustrated Index

CAUTION: To avoid damaging the cylinder head, wait until the coolant temperature drops below 38°C (100°F) before removing it.

NOTE:
- Use new O-rings and gaskets when reassembling.
- Replace rubber seals if damaged or deteriorated.

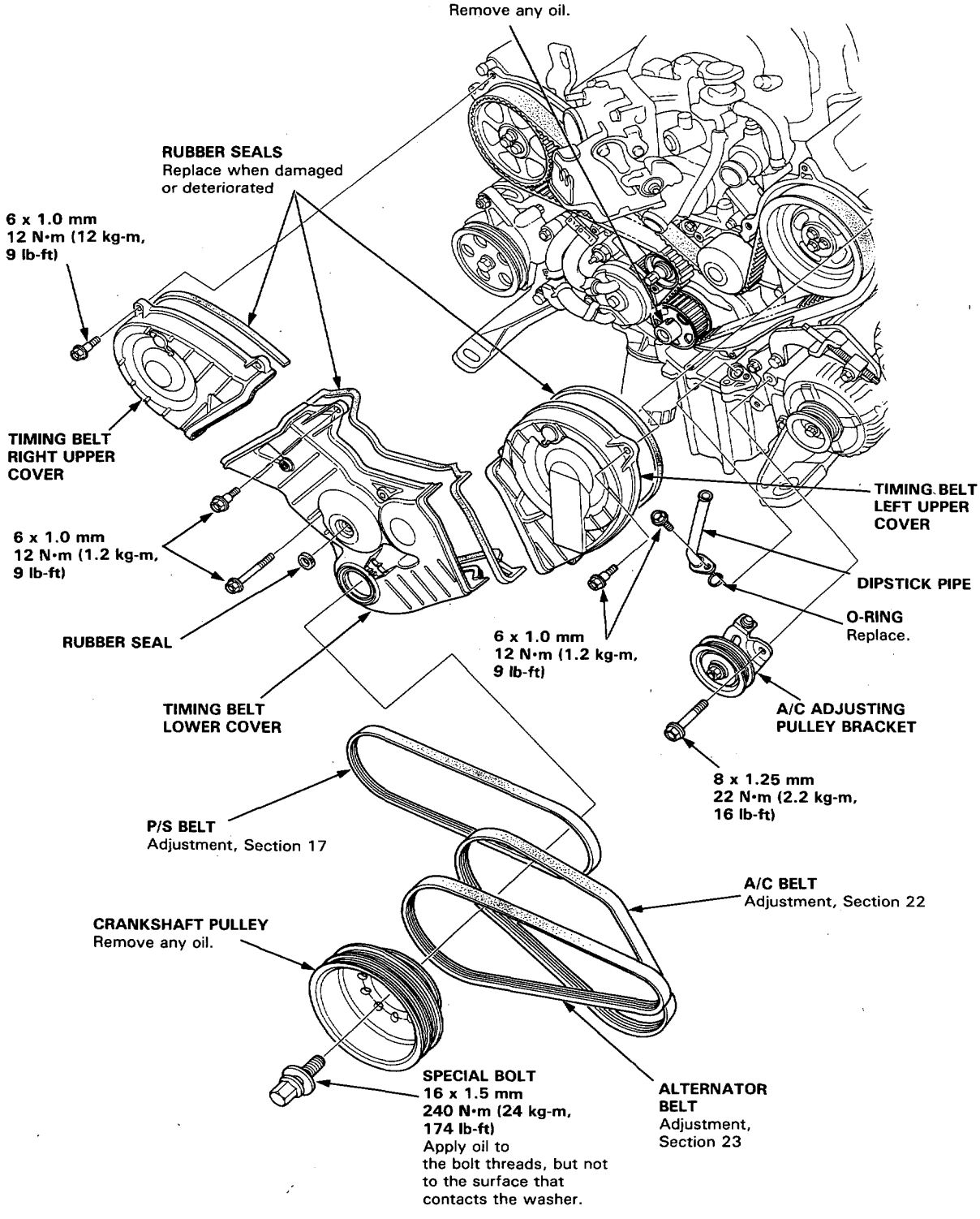

Cylinder Head/Valve Train

Illustrated Index

NOTE:
- Use new O-rings and gaskets when reassembling.
- Replace rubber seals if damaged or deteriorated.

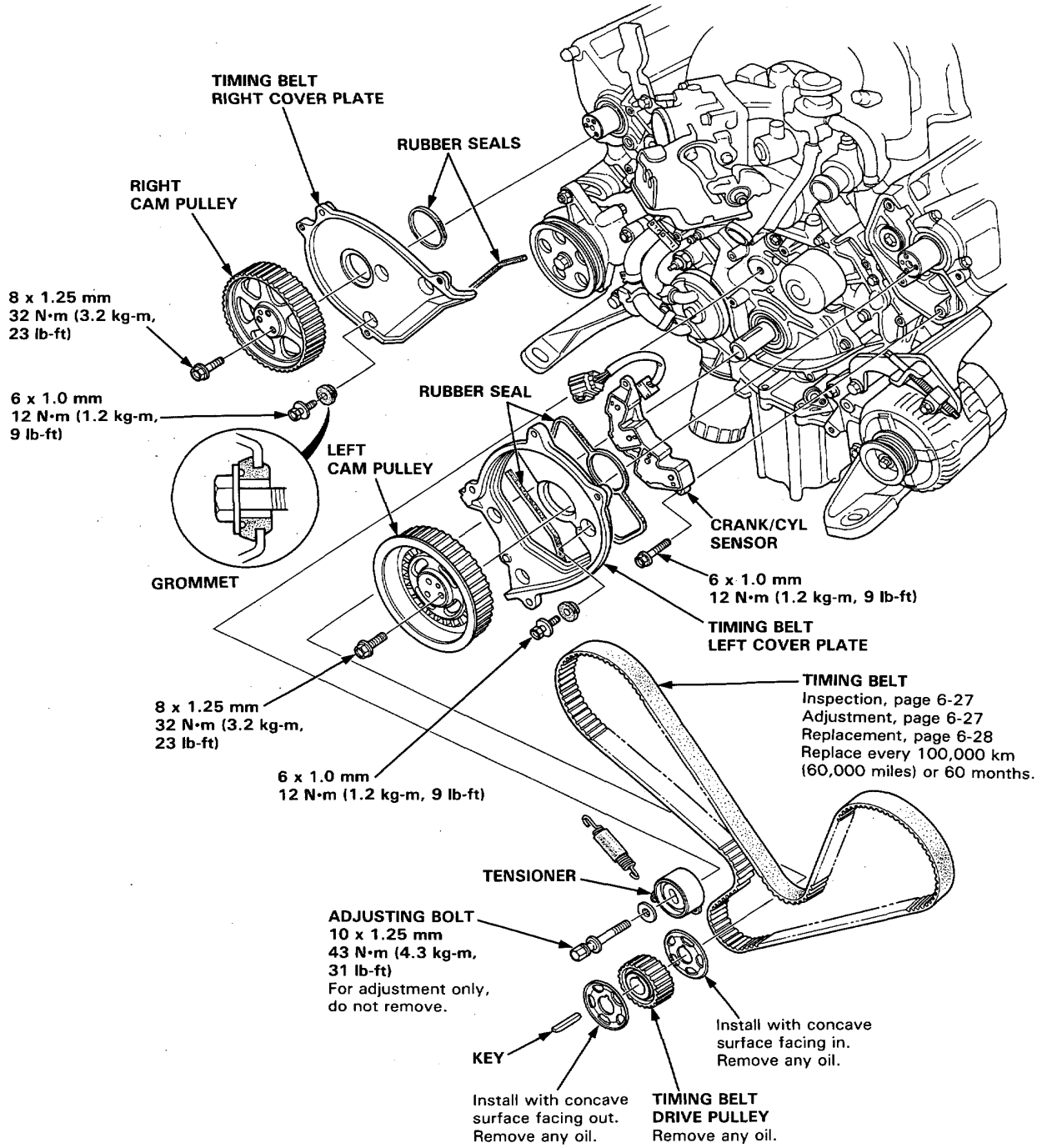

CAUTION:

- **To avoid damaging the cylinder head, wait until the coolant temperature drops below 38°C (100°F) before removing it.**

NOTE:

- Use new O-rings and gaskets when reassembling.
- Use liquid gasket, Part No. 0Y740-99986.

OIL *Prior to reassembling, clean all the parts in solvent, dry them, and apply lubricant to any contact parts.*

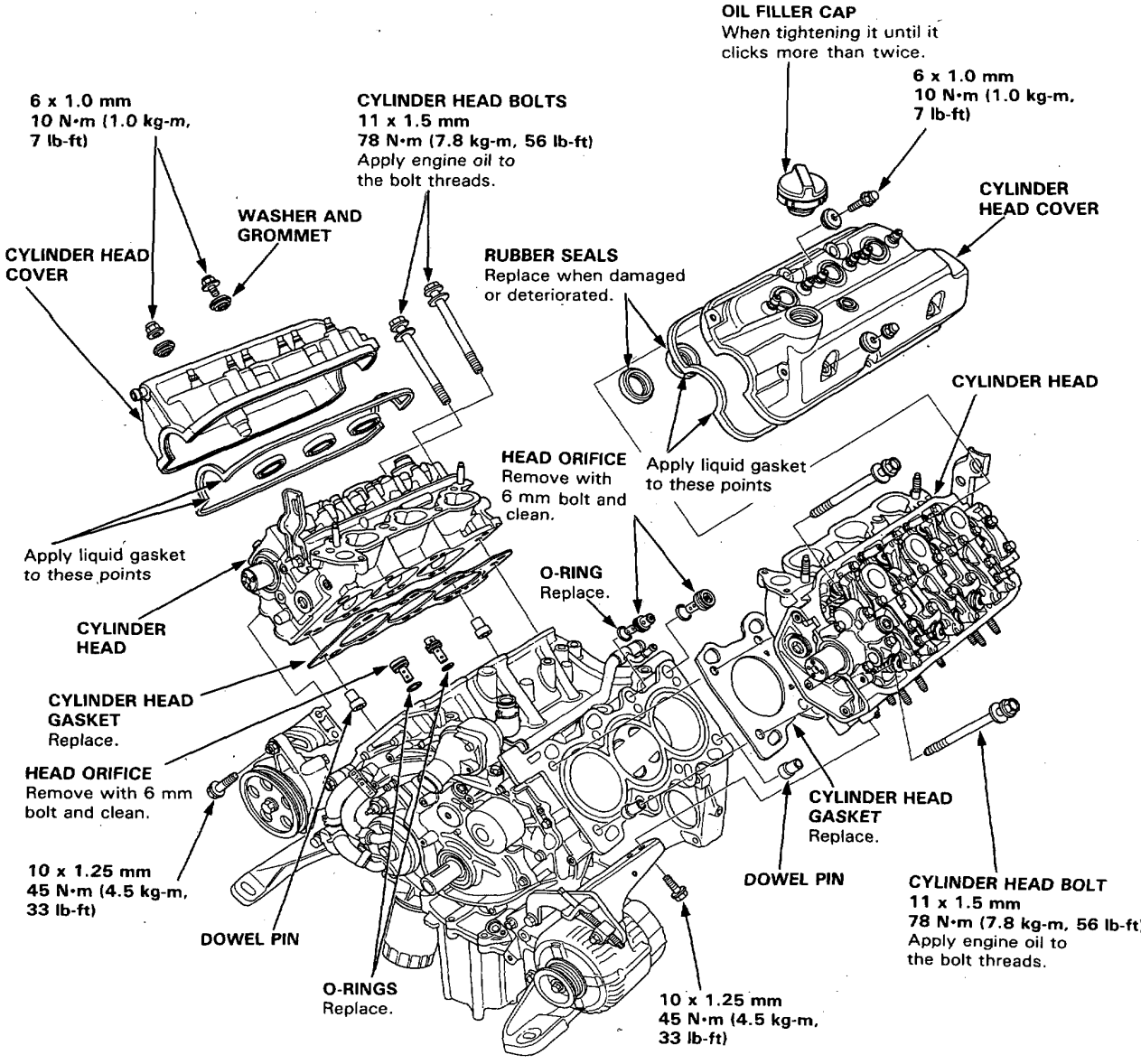

Illustrated Index (cont'd)

NOTE:
- Use new O-rings and gaskets when reassembling.
- Use liquid gasket, Part No. 0Y740-99986

Prior to reassembling, clean all the parts in solvent, dry them, and apply lubricant to any contact parts.

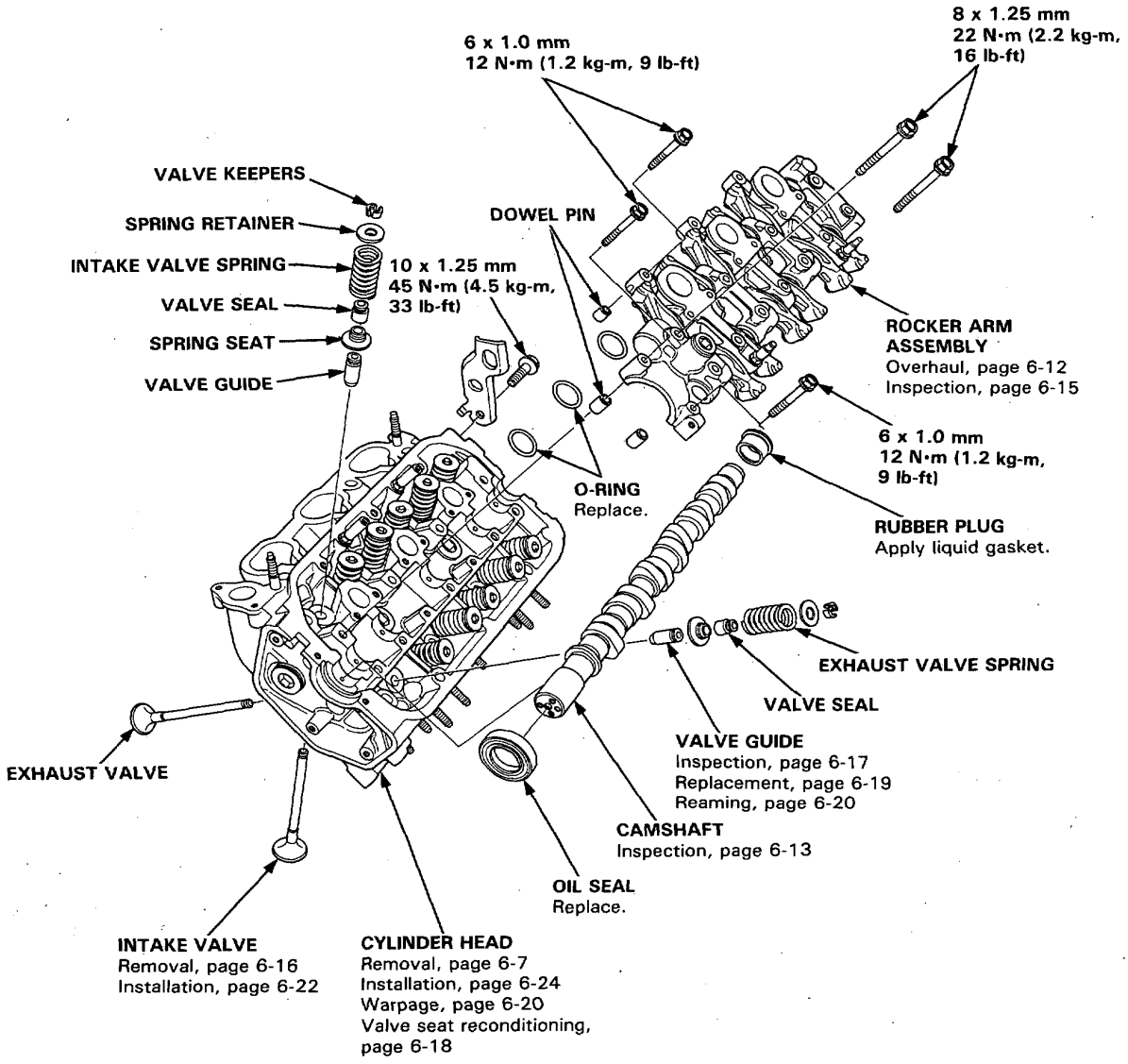

Removal

Engine removal is not required for this procedure.

CAUTION: To avoid damaging the cylinder heads, wait until the coolant temperature drops below 38°C (100°F) before loosening the retaining bolts.

NOTE:
- Inspect the timing belt before removing the cylinder heads.
- Turn the crankshaft so that the No. 1 piston is at top-dead-center (page 6-31).
- Mark all emission hoses before disconnecting them.

1. Disconnect the negative terminal from the battery.
2. Remove the battery and battery base.
3. Remove the air cleaner and air intake hose.
4. Drain the cooling system (page 10-5).
5. Disconnect the brake booster vacuum hose (page 5-5).
6. Remove the engine secondary ground cable from the cylinder head and cylinder block.
7. Relieve fuel pressure.

WARNING Do not smoke while working on fuel system, keep open flame or spark away from work area. Drain fuel only into an approved container.

8. Disconnect the fuel hose and fuel return hose (page 5-6).
9. Disconnect the throttle cable at the throttle body (page 5-4).

   NOTE: Take care not to bend the cable when removing it. Always replace a kinked cable with a new one.
10. Disconnect the charcoal canister hose at the throttle valve.
11. Disconnect the terminal and connectors, then remove the main fuse box.
12. Remove the injector resistor and the connector.
13. Disconnect the connectors, then remove the ignition coils.

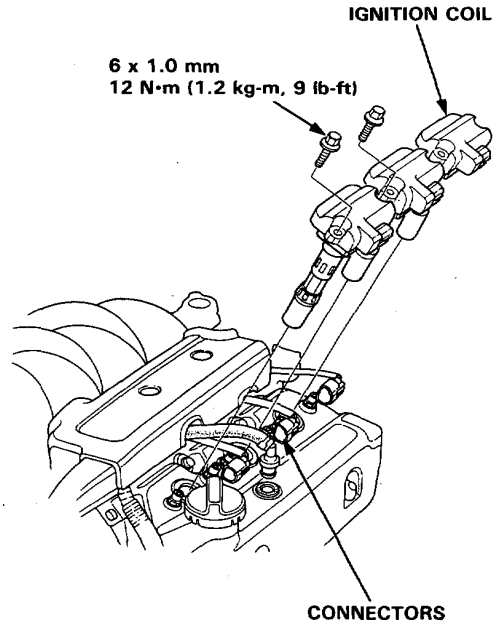

(cont'd)

Removal (cont'd)

14. Remove the engine wire harness covers.

15. Disconnect the engine sub harness connectors and the clamps from the cylinder head and intake manifold.

    Right cylinder head:
    - Three injector connectors (cylinder No. 1, 2, and 3)
    - TW sensor connector
    - EGR sensor connector (except KQ)

    Left cylinder head:
    - Three injector connectors (cylinder No. 4, 5, and 6)
    - CRANK/CYL sensor connector
    - Temperature gauge sender connector
    - TA sensor connector

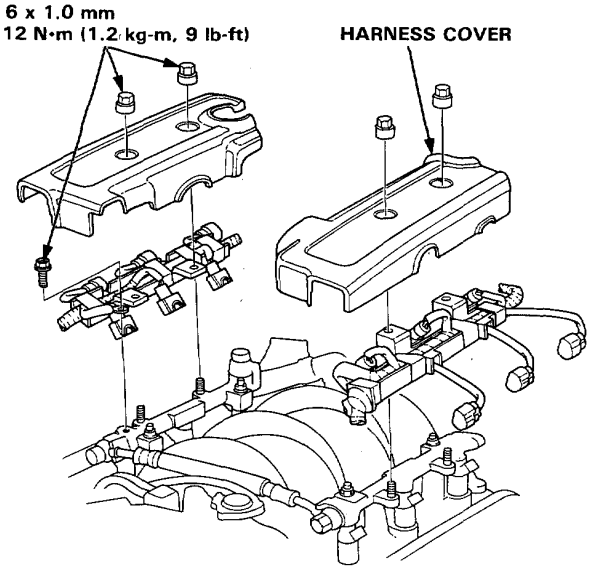

16. Remove the air inlet pipe.

17. Remove the vacuum pipes and hoses.

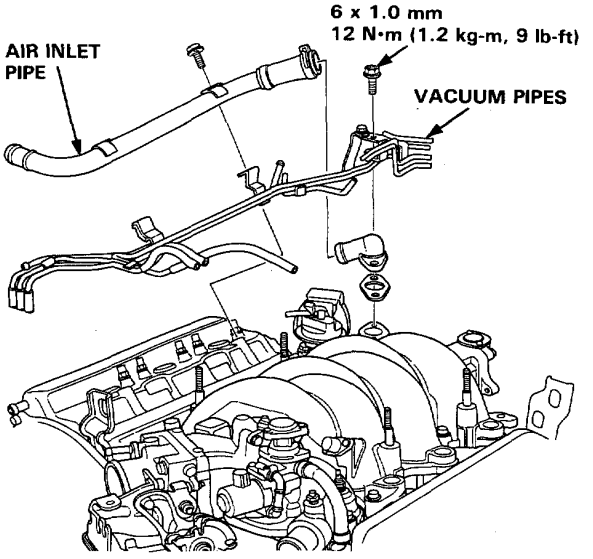

18. Remove the connectors and the clamps, then remove the engine wire harness.
    - Throttle sensor connectors
    - Engine ground terminals
    - Left and right oxygen sensors (except KY, KT)

19. Remove the breather pipe.

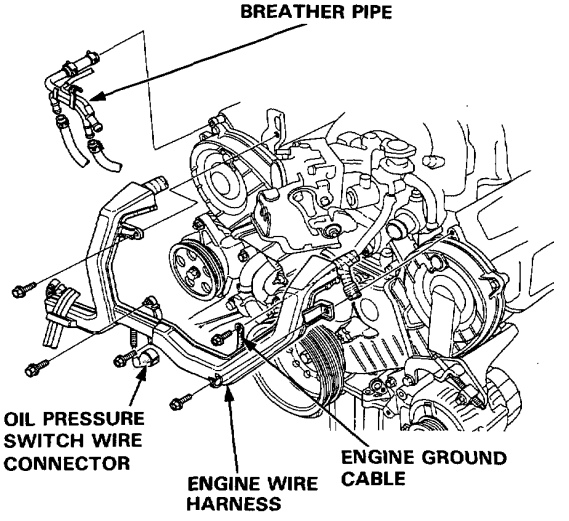

20. Remove the fuel return hose.

21. Remove the air suction pipe (except KQ, KY, KT) and the EGR pipe (except KQ).

22. Remove the water passage along with the intake manifold assembly.

NOTE: Fill the cylinder head intake parts with clean shop towels to prevent foreign materials from getting into the cylinders.

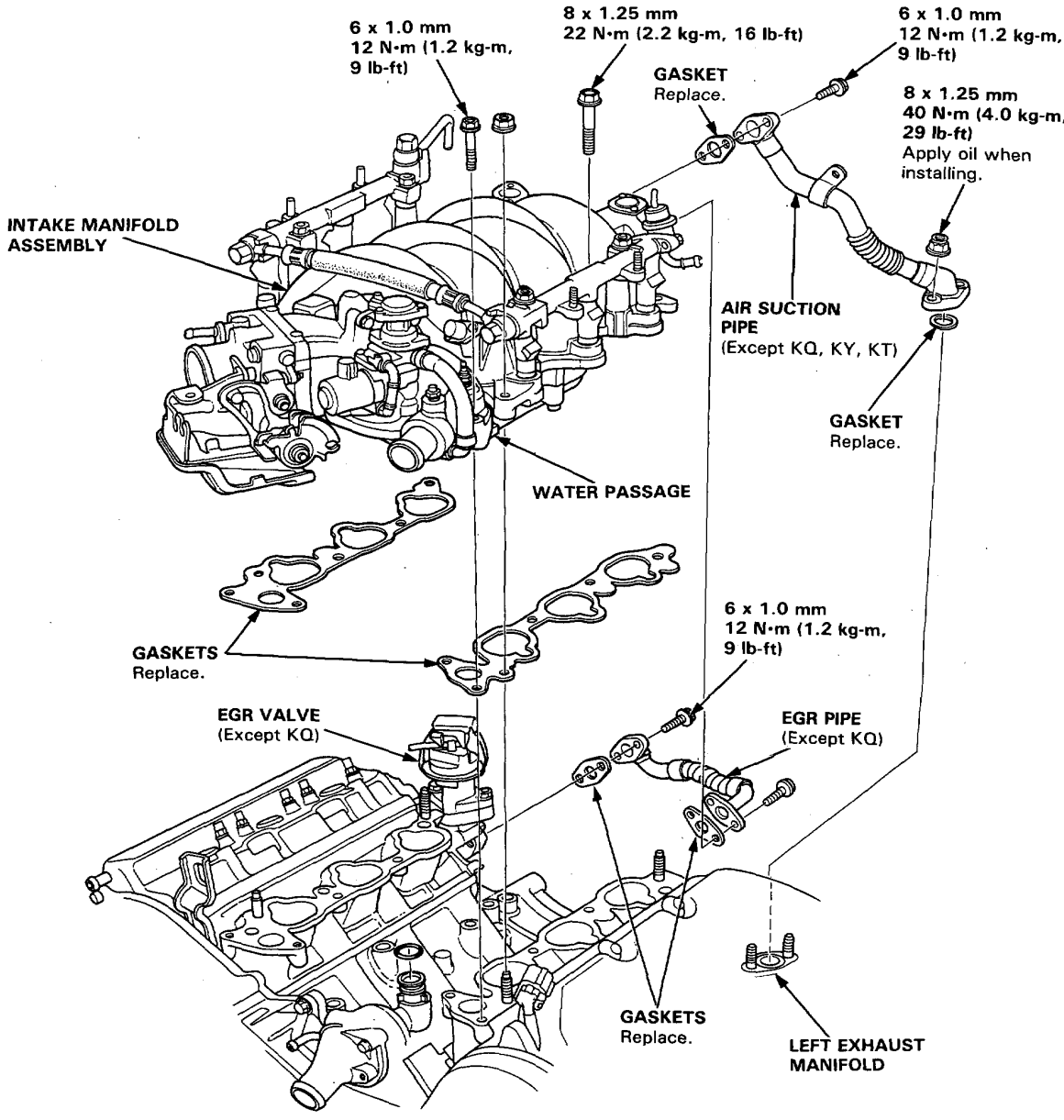

(cont'd)

Removal (cont'd)

23. Remove the timing belt upper covers.

24. Loosen the timing belt adjusting bolt 180° and release the belt tension.

    NOTE: Push on belt by the right cam pulley to release tension, then retighten the adjusting bolt.

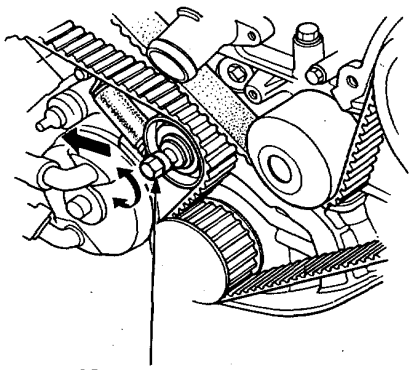

25. Remove the belt from the cam pulleys.

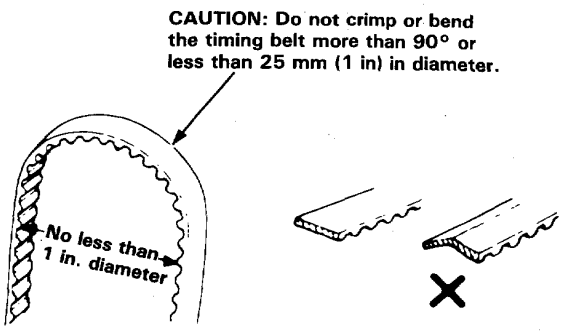

26. Remove the cam pulleys.

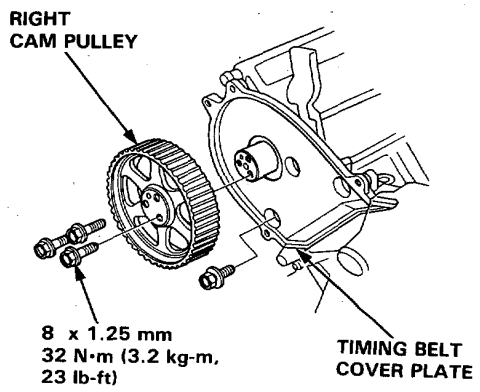

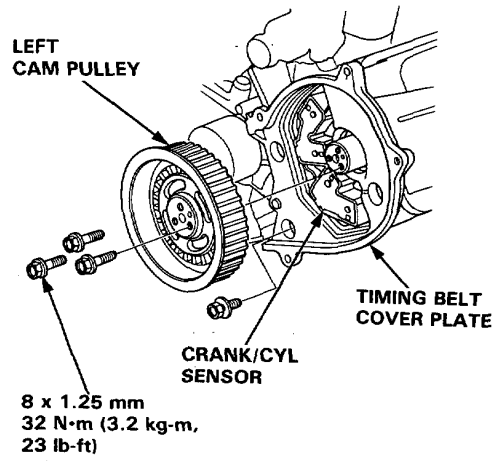

27. Remove the timing belt cover plates.

28. Remove the CRANK/CYL sensor from the left cylinder head.

29. Remove the cylinder head covers.

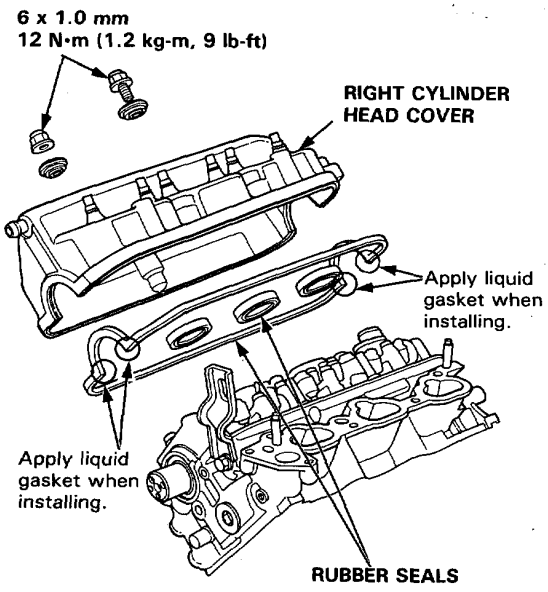

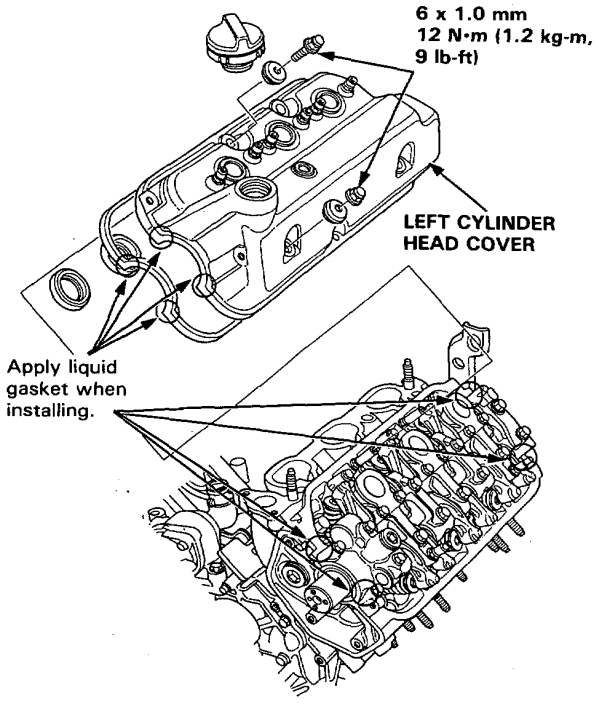

30. Remove three bolts from the alternator bracket, and remove two bolts from the power steering bracket.

31. Remove the self-locking nuts on the exhaust pipes, then disconnect the exhaust pipes from the manifolds.

32. Remove the cylinder head bolts, then remove the cylinder heads.

CAUTION: To prevent warpage, unscrew the bolts in sequence 1/3 turn at a time; repeat until all bolts are loosened.

CYLINDER HEAD BOLT LOOSENING SEQUENCE

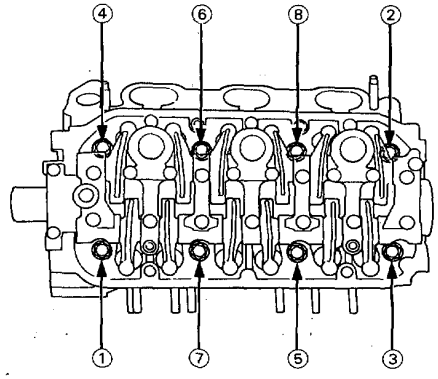

NOTE: Separate the cylinder heads from the block with a flat blade screwdriver as shown.

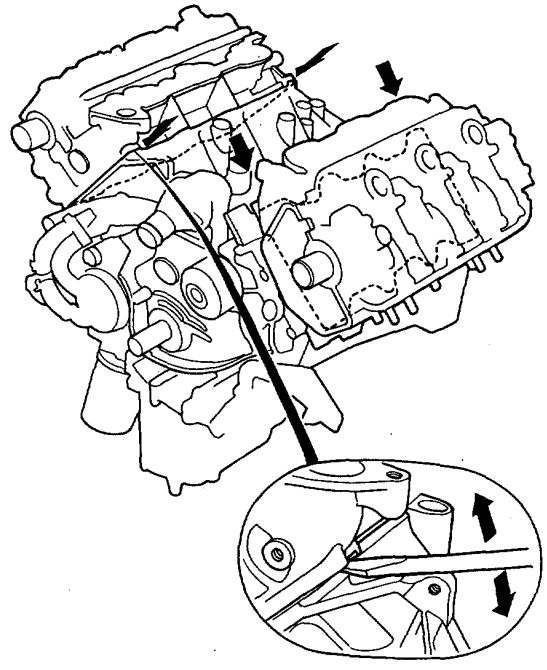

33. Remove the left and right exhaust manifold covers, then remove the left and right exhaust manifolds.

Rocker Arms and Shafts

Overhaul

NOTE:
- Refer to page 6-13 for rocker arm assembly removal.
- Identify parts as they are removed to ensure reinstallation in original locations.
- Inspect rocker shafts and rocker arms (pages 6-15).
- Rocker arms must be installed in the same position if reused.
- When removing or installing rocker arm assembly, do not remove the cam holder bolts. The bolts will keep the holders, springs and rocker arms on the shaft.

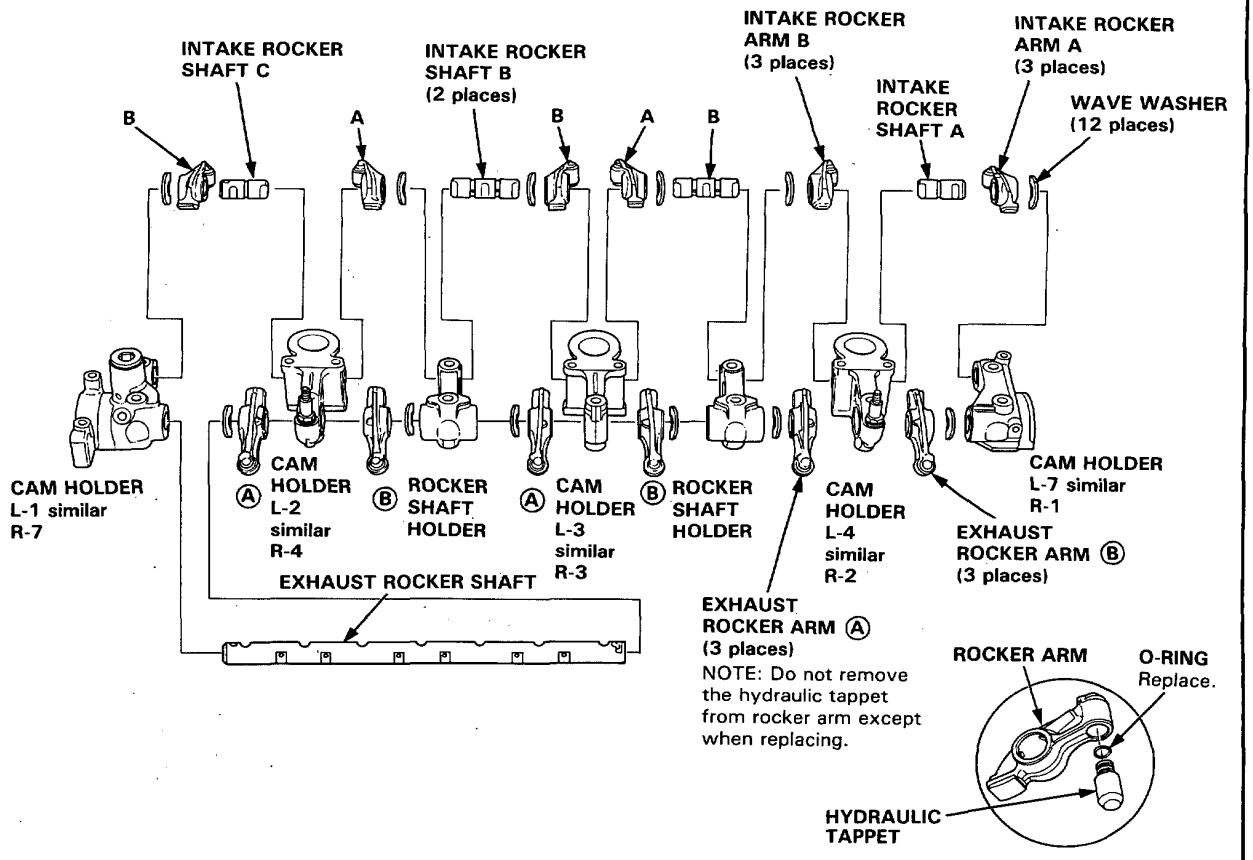

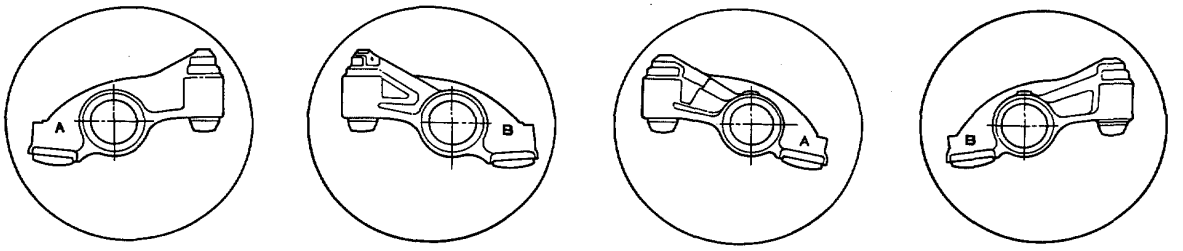

Letter "A" is stamped on rocker arm.

Letter "B" is stamped on rocker arm.

Letter "A" is stamped on rocker arm.

Letter "B" is stamped on rocker arm

Removal

NOTE:
- Unscrew the cam holder bolts, two turns at a time in a criss-cross pattern, to prevent damaging the valves or rocker arm assembly.
- When removing the rocker arm assembly, do not remove the cam holder bolts. The bolts will keep the cam holders, the springs and the rocker arms on the shafts.

CAM HOLDER BOLT LOOSENING SEQUENCE

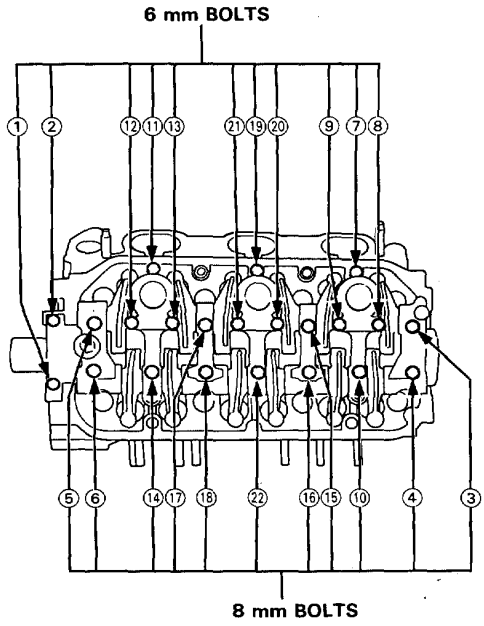

Inspection

NOTE:
- Do not rotate the camshaft during inspection.
- Remove the rocker arms and rocker shafts.

1. Put the camshaft and the cam holders on the cylinder head, then tighten the bolts to the specified torque.

   Specified torque:
   8 mm bolts: 22 N·m (2.2 kg-m, 16 lb-ft)
   6 mm bolts: 12 N·m (1.2 kg-m, 9 lb-ft)

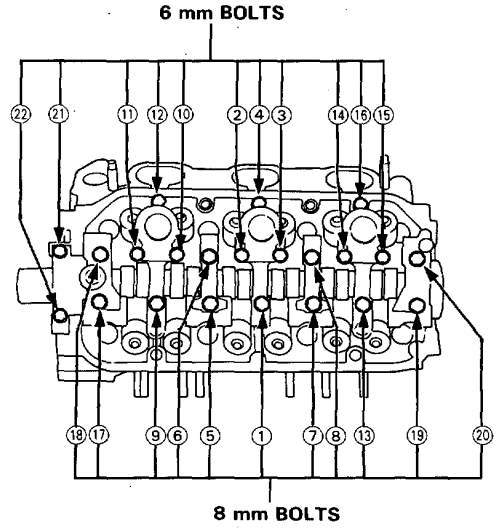

2. Seat the camshaft by pushing it toward rear end of cylinder head.

3. Zero the dial indicator against the rear end. Push the camshaft back and forth, and read the end play.

   Camshaft End Play:
   Standard (New): 0.05–0.15 mm (0.002–0.006 in)
   Service Limit: 0.15 mm (0.006 in)

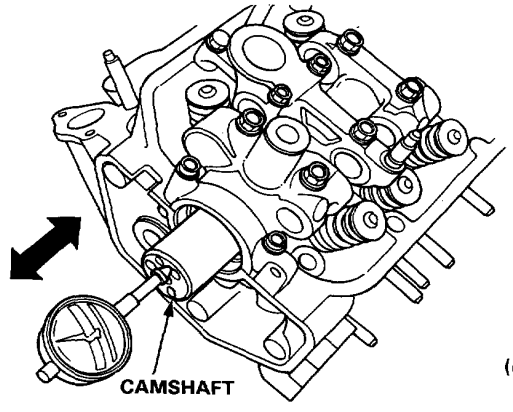

(cont'd)

Inspection (cont'd)

4. Remove the bolts, then remove the cam holders from the cylinder head.
   - Lift camshaft out of cylinder head, wipe clean, then inspect lift ramps. Replace camshaft if lobes are pitted, scored, or excessively worn.
   - Clean the camshaft bearing surfaces in the cylinder head, then set camshaft back in place.
   - Insert plastigage strip across each journal.

5. Install the cam holders and tighten the bolts to the specified torque as shown in the previous page.

6. Measure widest portion of plastigage on each journal.

   Camshaft Bearing Radial Clearance:
   Standard (New): 0.050–0.089 mm (0.002–0.004 in)
   Service Limit: 0.10 mm (0.004 in)

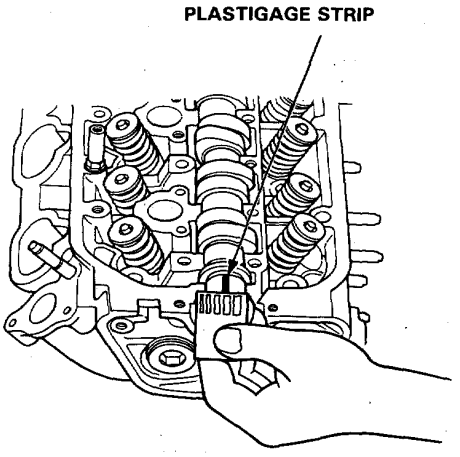

7. If camshaft bearing radial clearance is out of tolerance:
   - And camshaft has already been replaced, you must replace the cylinder head.
   - If camshaft has not been replaced, first check total runout with the camshaft supported on V-blocks.

   Camshaft Total Runout:
   Standard (New): 0.015 mm (0.0006 in)
   Service Limit: 0.030 mm (0.0010 in)

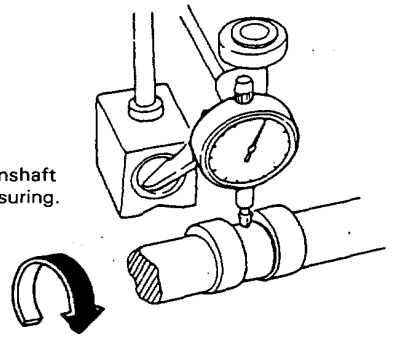

   - If the total runout of the camshaft is within tolerance, replace the cylinder head.
   - If the total runout is out of tolerance, replace the camshaft and recheck. If the bearing clearance is still out of tolerance, replace the cylinder head.

8. Check cam lobe height wear.

   Cam lobe height standard (New):
   INTAKE 40.005 mm (1.5750 in)
   EXHAUST 37.766 mm (1.4868 in)

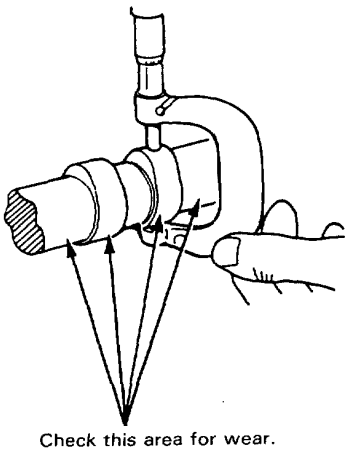

Clearance

Measure both the intake rocker shaft and exhaust rocker shaft.

1. Measure diameter of shaft at first rocker location.

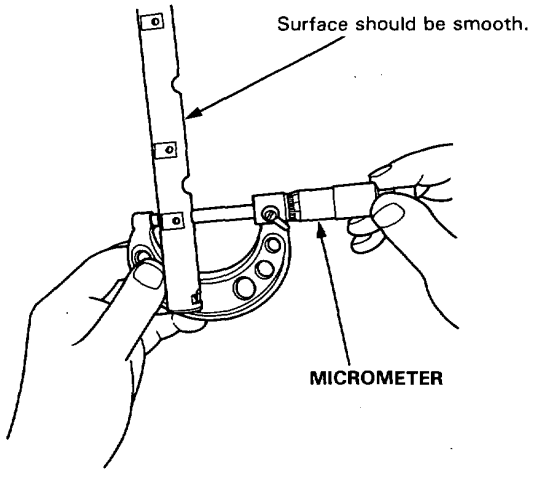

2. Zero gauge to shaft diameter.

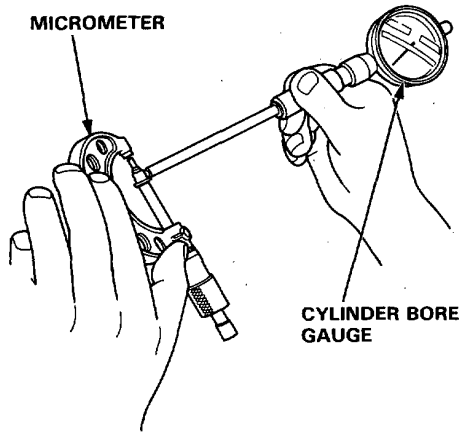

3. Measure inside diameter of rocker arm and check for out-of-round condition.

Rocker Arm Radial Clearance:
Service Limit: 0.08 mm (0.003 in.)

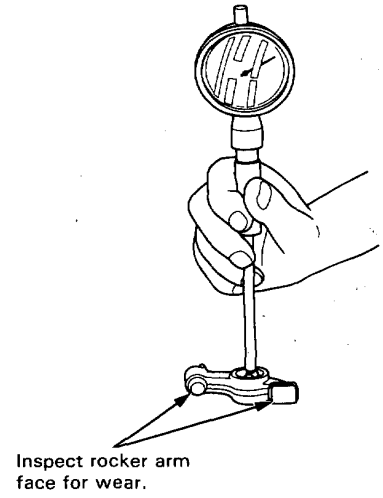

4. Repeat for all rockers.
   — If over limit, replace rocker shaft and all over-tolerance rocker arms.

Replacement

NOTE: Identify valves and valve springs as they are removed so that each item can be reinstalled in its original position.

1. Using an appropriate-sized socket and plastic mallet, lightly tap the valve retainer to loosen the valve keepers before installing the valve spring compressor.

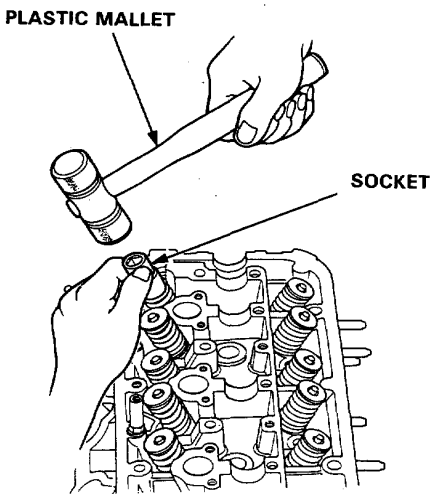

2. Install spring compressor. Compress spring and remove valve keeper.

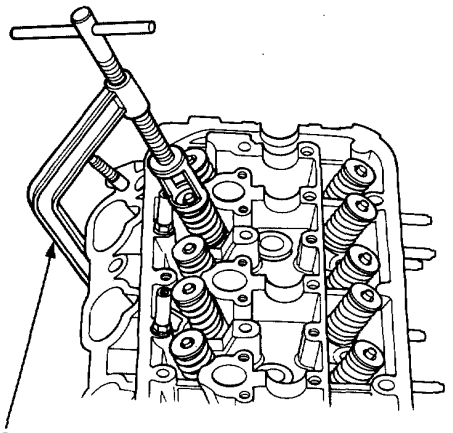

3. Remove the valve guide seal.

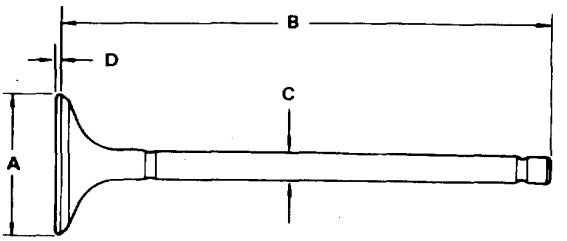

Intake Valve Dimensions

A	Standard (New)	32.9–33.1 mm (1.295–1.303 in)
B	Standard (New):	113.58–113.88 mm (4.472–4.483 in)
C	Standard (New):	5.48–5.49 mm (0.2157–0.2161 in)
C	Service Limit:	5.450 mm (0.2146 in)
D	Standard (New):	0.85–1.15 mm (0.033–0.045 in)
D	Service Limit:	0.65 mm (0.026 in)

Exhaust Valve Dimensions

A	Standard (New):	27.9–28.1 mm (1.098–1.106 in)
B	Standard (New):	116.03–116.33 mm (4.568–4.580 in)
C	Standard (New):	5.45–5.46 mm (0.2146–0.2150 in)
C	Service Limit:	5.42 mm (0.2134 in)
D	Standard (New):	1.35–1.65 mm (0.053–0.065 in)
D	Service Limit:	1.15 mm (0.045 in)

Valve Movement

Measure the guide-to-stem clearance with a dial indicator while rocking the stem in the direction of normal thrust (wobble method).

Intake Valve Stem-to-Guide Clearance:
Standard (New): 0.04—0.10 mm (0.002—0.004 in)
Service Limit: 0.16 mm (0.006 in)

Exhaust Valve Stem-to-Guide Clearance:
Standard (New): 0.10—0.16 mm (0.004—0.006 in)
Service Limit: 0.22 mm (0.009 in)

Valve extended 10 mm out from seat.

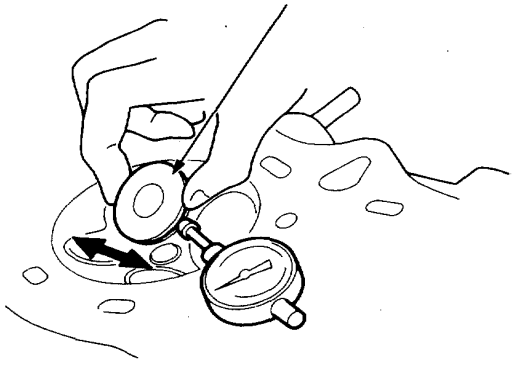

- If measurement exceeds the service limit, recheck using a new valve.
- If measurement is now within the service limit, reassemble using a new valve.
- If measurement still exceeds limit, recheck using alternate method below, then replace valve and guide, if necessary.

NOTE: An alternate method of checking guide to stem clearance is to subtract the O.D. of the valve stem, measured with a micrometer, from the I.D. of the valve guide, measured with an inside micrometer or ball guide. Take the measurements in three places along the valve stem and three places inside the valve guide. The difference between the largest guide measurement and the smallest stem measurement should not exceed the service limit.

Intake Valve Stem-to-Guide Clearance:
Standard (New): 0.02—0.05 mm (0.001—0.002 in)
Service Limit: 0.08 mm (0.003 in)

Exhaust Valve Stem-to-Guide Clearance:
Standard (New): 0.05—0.08 mm (0.002—0.003 in)
Service Limit: 0.11 mm (0.004 in)

Valve Seats

Reconditioning

1. Renew the valve seats in the cylinder head using a valve seat cutter.

   NOTE: If guides are worn (page 6-17), replace them (page 6-19) before cutting the valve seats.

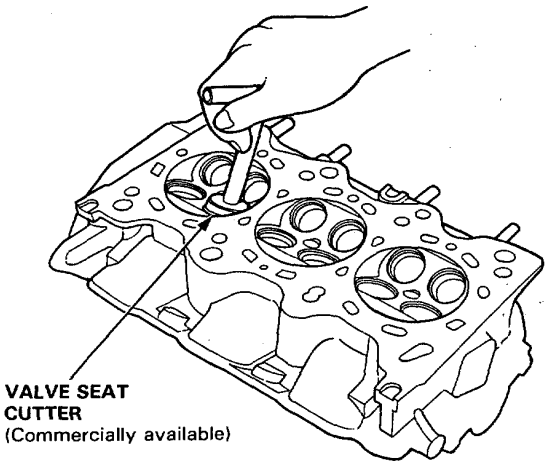

2. Carefully cut a 45° seat, removing only enough material to ensure a smooth and concentric seat.

3. Bevel the upper edge of the seat with the 30° cutter and the lower edge of the seat with the 60° cutter. Check width of seat and adjust accordingly.

4. Make one more very light pass with the 45° cutter to remove any possible burrs caused by the other cutters.

   Valve Seat Width:
   Standard: IN 1.25–1.55 mm (0.049–0.061 in)
   EX 1.25–1.55 mm (0.049–0.061 in)
   Service Limit: IN 2.0 mm (0.079 in)
   EX 2.0 mm (0.079 in)

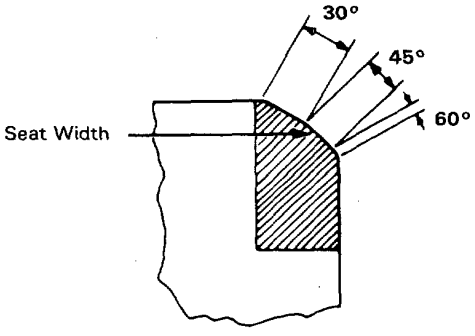

5. After resurfacing the seat, inspect for even valve seating: Apply Prussian Blue compound to the valve face, and insert valve in original location in the head, then lift and snap it closed against the seat several times.

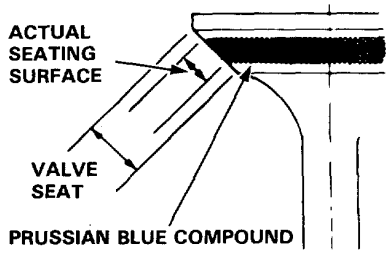

6. The actual valve seating surface, as shown by the blue compound, should be centered on the seat.
   - If it is too high (closer to the valve stem), you must make a second cut with the 60° cutter to move it down, then one more cut with the 45° cutter to restore seat width.
   - If it is too low (closer to the valve edge), you must make a second cut with the 30° cutter to move it up, then one more cut with the 45° cutter to restore seat width.

   NOTE: The final cut should always be made with the 45° cutter.

7. Insert intake and exhaust valves in the head and measure valve stem installed height.

   Valve Stem Installed Height:
   Standard (New): IN 46.935–47.375 mm (1.8478–1.8671 in)
   EX 47.885–48.375 mm (1.8852–1.9045 in)
   Service Limit: IN 47.625 mm (1.8750 in)
   EX 48.575 mm (1.9124 in)

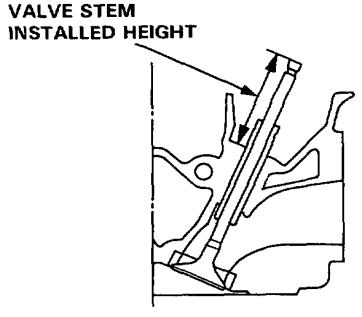

8. If valve stem installed height is over the service limit, replace valve and recheck. If still over the service limit, replace cylinder head; the valve seat in the head is too deep.

Valve Guides

Replacement

NOTE:
- For best results, heat cylinder head to 150°C (300°F) before removing or installing guides.
- It may be necessary to use an air hammer to remove some valve guides.

1. Use a hot plate or oven to evenly heat the cylinder head to 150°C (300°F). Monitor the temperature with a cooking thermometer.

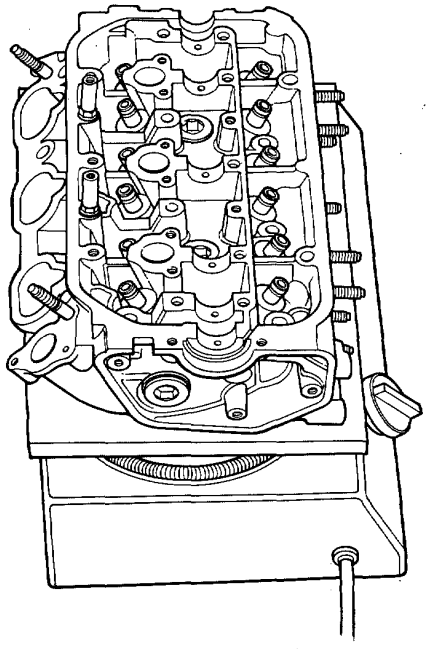

CAUTION:
- **Do not use a torch; it may warp the head.**
- **Do not get the head hotter than 150°C (300°F); excessive heat may loosen the valve seats.**
- **To avoid burns, use heavy gloves when handling the heated cylinder head.**

2. Drive the valve guide out from the bottom of the cylinder head.

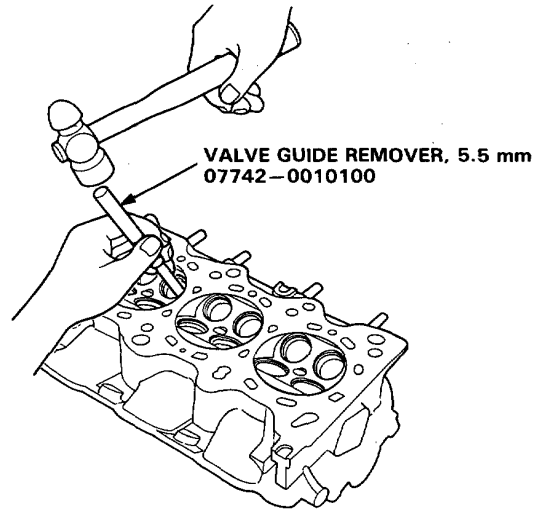

3. Drive in a new valve guide from the camshaft side of the cylinder head.

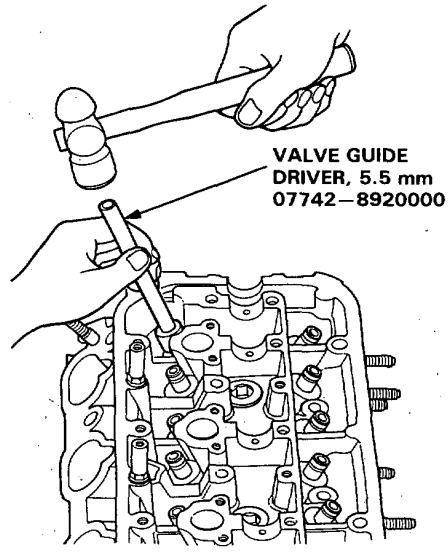

Valve Guide Installed Height:
Intake: 15.75–16.25 mm (0.620–0.640 in)
Exhaust: 15.75–16.25 mm (0.620–0.640 in)

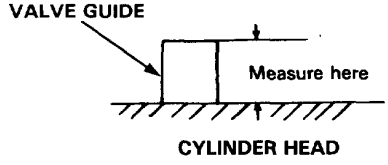

Cylinder Heads

Warpage

NOTE: If camshaft bearing clearances (page 6-14) are not within specification, the head cannot be resurfaced.

If camshaft bearing radial clearances are within specifications, check the head for warpage.

- If warpage is less than 0.05 mm (0.002 in) cylinder head resurfacing is not required.
- If warpage is between 0.05 mm (0.002 in) and 0.2 mm (0.008 in), resurface cylinder head.
- Maximum resurface limit is 0.2 mm (0.008 in) based on a height of 100 mm (3.94 in)

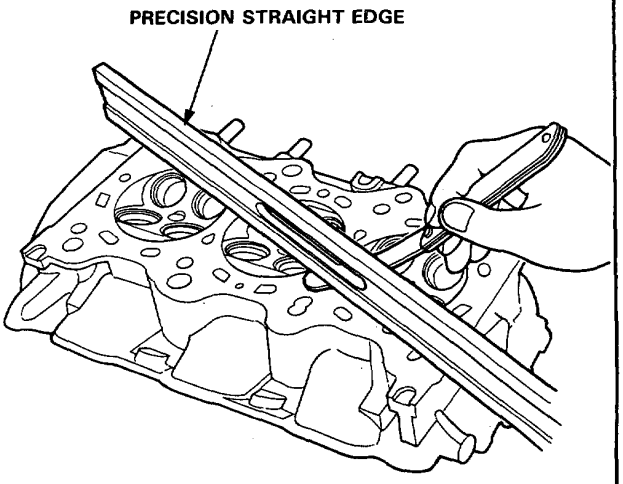

Measure along edges, and 3 ways across center.

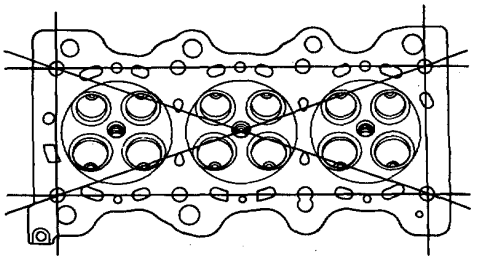

Cylinder Head Height:
Standard (New): 99.95–100.05 mm (3.935–3.939 in)
Service Limit: 0.05 mm (0.002 in)

Valve Guides

Valve Guide Reaming

NOTE: For new valve guides only.

1. Coat both reamer and valve guide with cutting oil.
2. Rotate the reamer clockwise the full length of the valve guide bore.
3. Continue to rotate the reamer clockwise while removing it from the bore.
4. Thoroughly wash the guide in detergent and water to remove any cutting residue.
5. Check clearance with a valve (page 6-17).
   – Verify that the valve slides in the valve guide without exerting pressure.

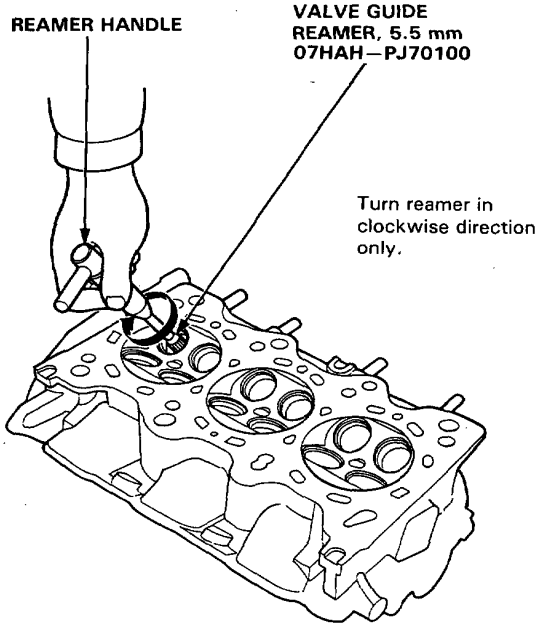

Valve Spring and Valve Seal Installation Sequence

NOTE: Exhaust and intake valve seals are NOT interchangeable.

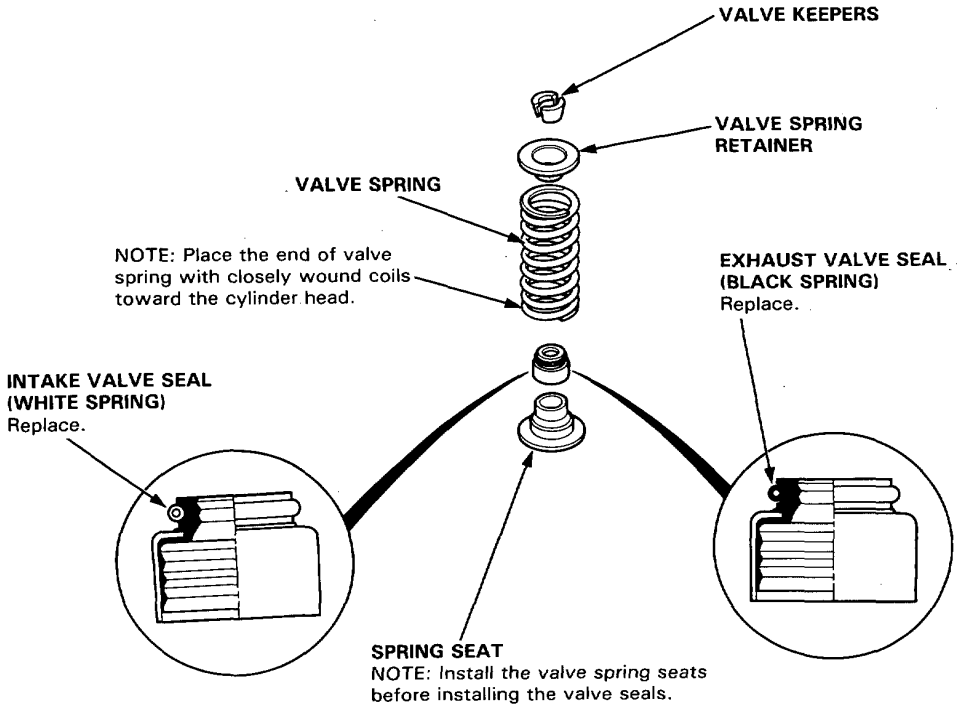

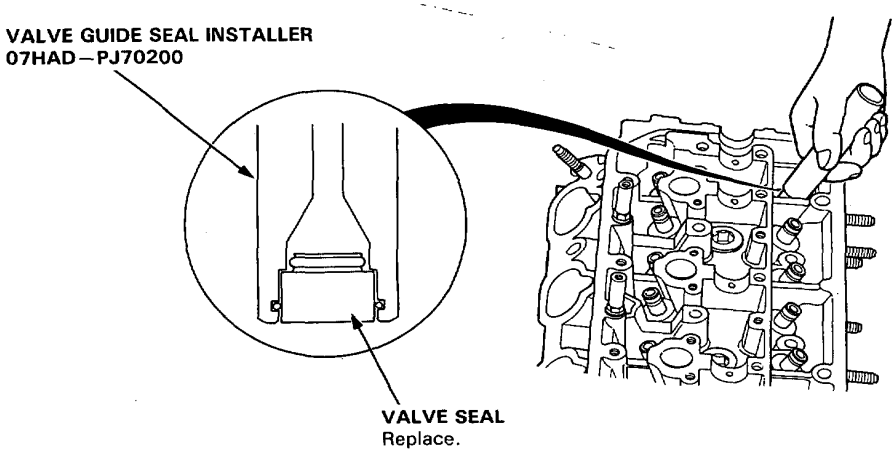

Valve Springs and Valves

Valve Installation

- When installing valves in cylinder head, coat valve stems with oil before inserting into valve guides, and make sure valves move up and down smoothly.
- When valves and springs are in place, lightly tap the end of each valve stem two or three times to ensure proper seating of valve and valve keepers.

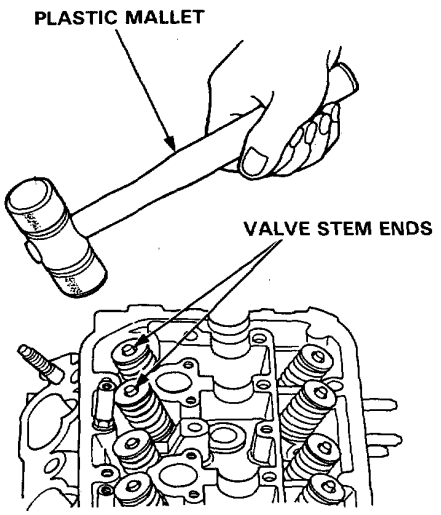

Hydraulic Tappets

Bleeding

1. Fill a container with 10W–30 engine oil and place the hydraulic tappet in it. Press down on the check ball with a thin wire. Bleed the tappet of air by pumping the plunger slowly until no bubbles come out of the hydraulic tappet.

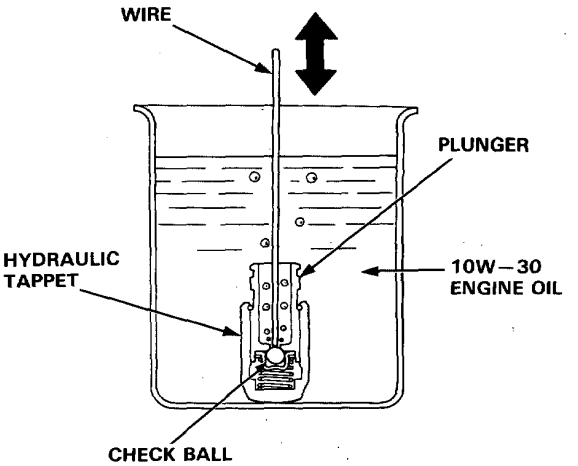

2. Install the hydraulic tappet to the rocker arm.

   NOTE:
   - Use new O-ring when reassembling.
   - Apply oil to O-ring before installation.

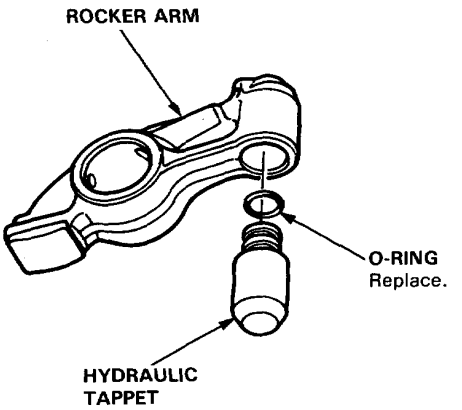

Installation

CAUTION:
- **Make sure that all rockers are in alignment with valves when torquing rocker assembly bolts.**
- **To prevent rocker arm assembly from coming apart, leave the cam holder holding bolts in the holes.**
- **Handle the rocker arms carefully so that the oil does not come out of hydraulic tappets.**

1. After wiping down the cam and journals in cylinder head, lubricate both surfaces and install camshaft.

2. Set the camshaft and camshaft seal as shown below.

3. Install the camshaft seal with the open side (spring) facing in.

OIL Lubricate cam lobes after reassembly.

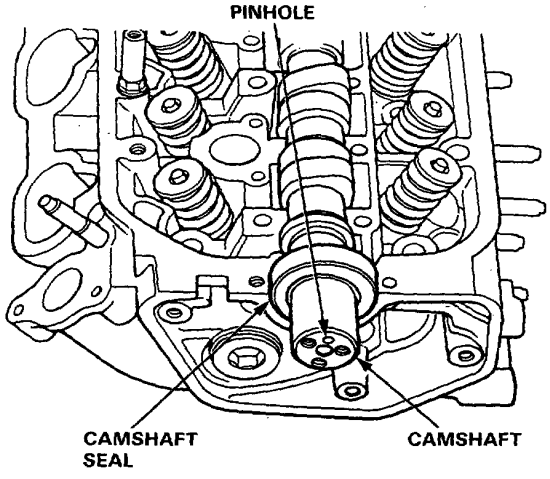

Seal housing surface should be dry. Apply a light coat of oil to camshaft and inner lip of seal.

4. Apply liquid gasket to the head mating surfaces of the No. 1 and the No. 7 cam holders.
   – Apply liquid gasket to the shaded areas.

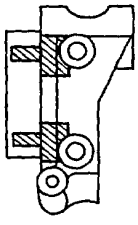

No. 7 (L. HEAD)
Similar
No. 1 (R. HEAD)

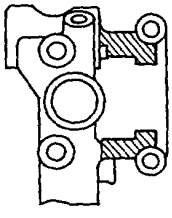

No. 1 (L. HEAD)
Similar
No. 7 (R. HEAD)

5. Set the rocker arm assembly in place and loosely install the bolts.
   – Make sure that the rocker arms are properly positioned on the valve stems.

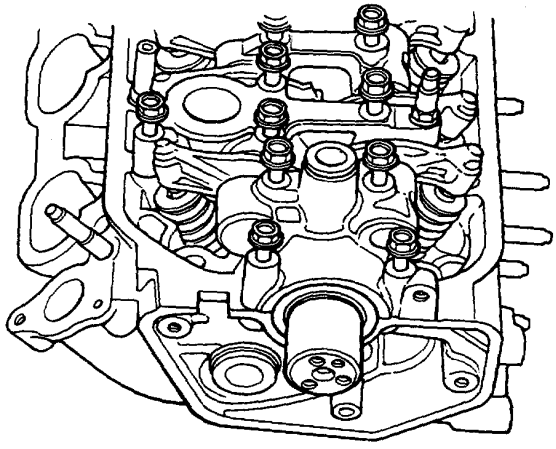

6. Tighten each bolt two turns at a time in the sequence shown below to ensure that the rockers do not bind on the valves.

Specified torque:
8 mm bolts: 22 N·m (2.2 kg-m, 16 lb-ft)
6 mm bolts: 12 N·m (1.2 kg-m, 9 lb-ft)

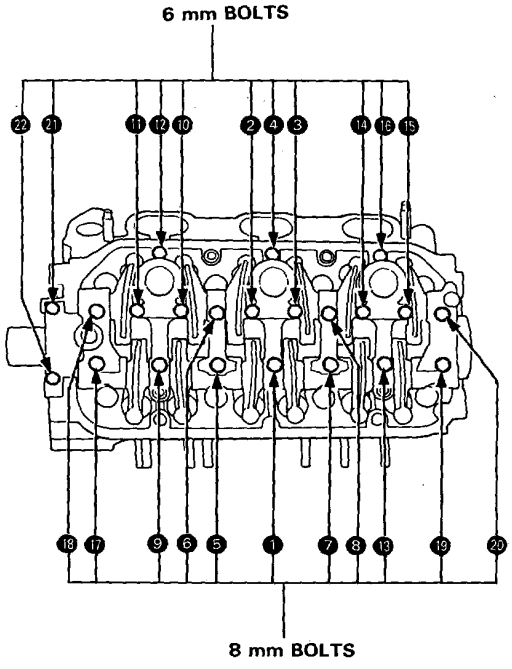

Installation

Install the cylinder heads in the reverse order of removal:

- Always use new head gaskets.
- Cylinder heads and engine block surface must be clean.
- Turn the crankshaft so that No. 1 piston is at TDC (page 6-30).

1. Install the left and right exhaust manifolds to each cylinder head, then tighten the self-locking nuts in a criss-cross pattern in two or three steps, beginning with the inner nut.
   - Apply oil to the self-locking nut threads.
   - Always use new exhaust manifold gaskets.
2. Install the exhaust manifold covers.

LEFT EXHAUST MANIFOLD:

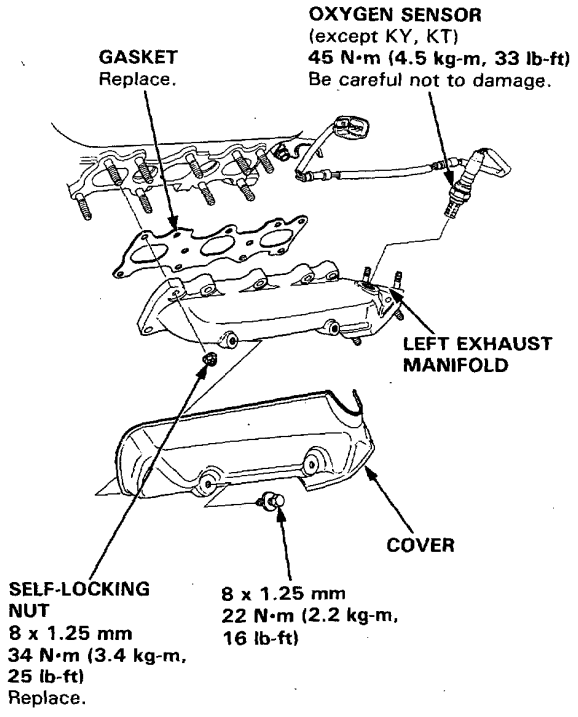

RIGHT EXHAUST MANIFOLD:

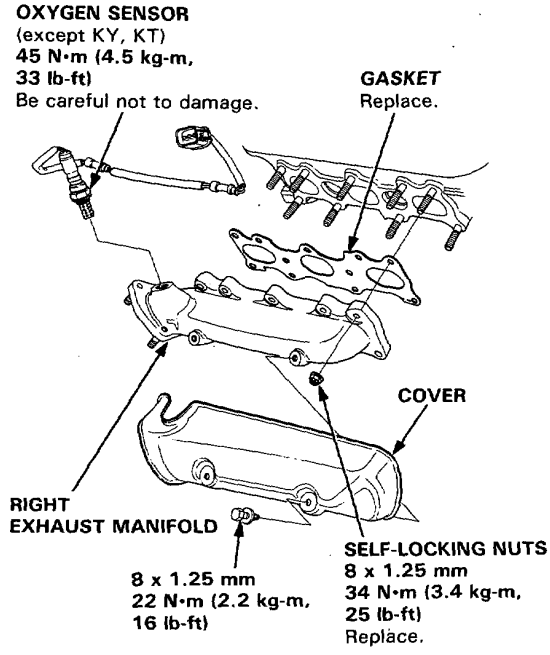

3. Install the cylinder heads on the engine block. The cylinder head dowel pins and the head oil control orifice must be aligned.
   - Always use new cylinder head gaskets.

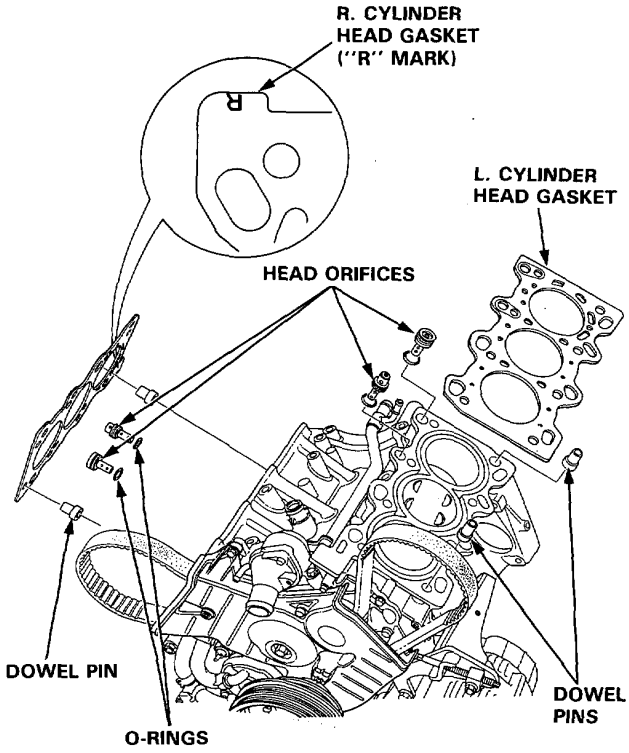

4. Tighten the cylinder head bolts sequentially in two or three steps.
   - Apply clean engine oil to the bolt threads and washer contact surfaces.

Specified Torque
11 x 1.5 mm
78 N·m (7.8 kg-m, 56 lb-ft)

NOTE: We recommend using a beam-type torque wrench. When using a preset-type torque wrench, be sure to tighten slowly and not to over-tighten.

CYLINDER HEAD BOLTS TORQUE SEQUENCE

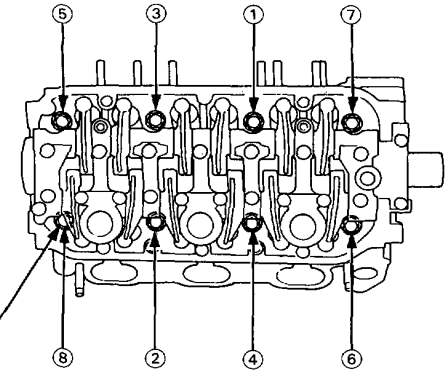

CYLINDER HEAD BOLTS
11 x 1.5 mm
78 N·m (7.8 kg-m, 56 lb-ft)
Apply clean engine oil to the bolt threads and washer contact surfaces.

5. Apply liquid gasket to the head mating surface of the No. 1 and No. 7 cam holder, then install the cylinder head cover.
   — Apply liquid gasket to the shaded areas.

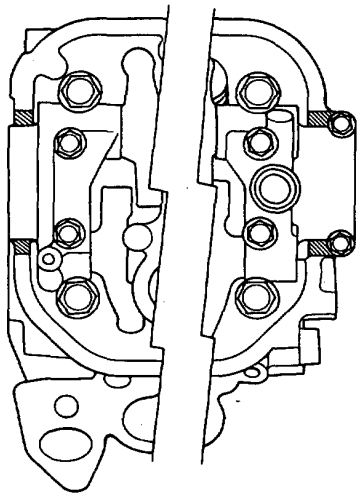

Timing Belt

Illustrated Index

NOTE:
- Turn the crankshaft so that the No. 1 piston is at TDC (page 6-30)
- Replace rubber seals if damaged or deteriorated.

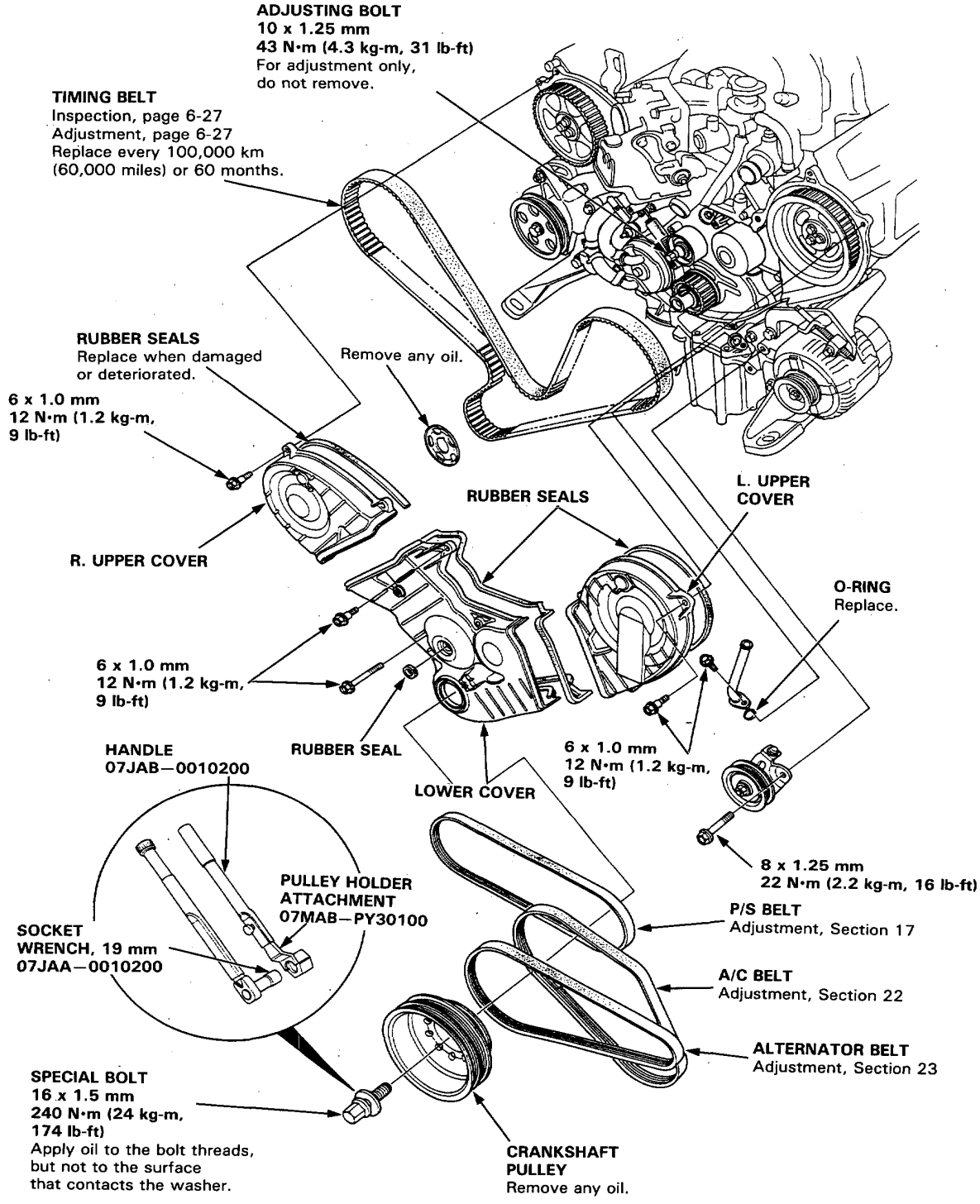

Timing Belt

Inspection

1. Remove the left upper cover.

2. Inspect the timing belt for cracks and oil soaking.

   NOTE:
   - Replace the belt if oil soaked.
   - Remove any oil or solvent that gets on the belt.

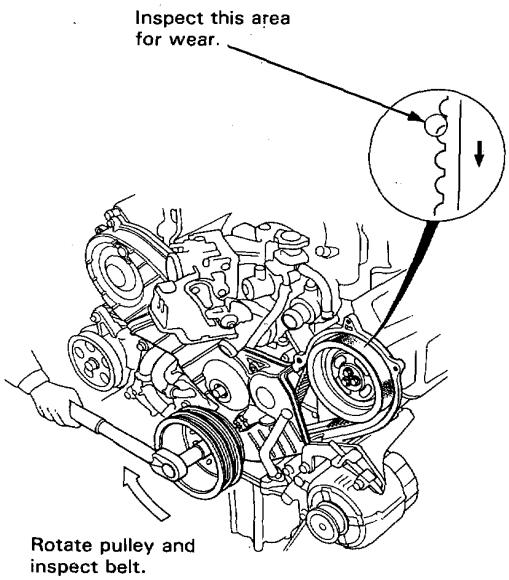

Tension Adjustment

CAUTION:
- **Always adjust timing belt tension with the engine cold.**
- **Do not rotate the crankshaft when adjusting bolt is loose.**

NOTE:
- Tensioner is spring-loaded to apply proper tension to the belt automatically after making the following adjustment.
- Inspect the timing belt before adjusting the belt tension.
- Always rotate the crankshaft clockwise when viewed from the pulley side. Rotating it counterclockwise may result in improper adjustment of the belt tension.

1. Remove the left upper cover.

2. Set the No. 1 piston at TDC (page 6-30).

3. Rotate the crankshaft clockwise 9-teeth on camshaft pulley (The blue mark on crankshaft pulleys should line up with the pointer on lower cover).

4. Loosen the timing belt adjusting bolt 180°.

5. Tighten the adjusting bolt torque to 43 N•m (4.3 kg-m, 31 lb-ft).

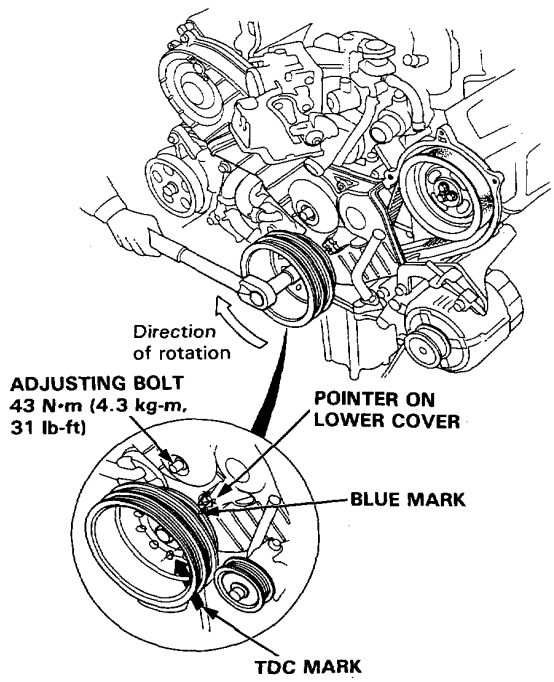

Removal

CAUTION: Inspect the water pump when replacing the timing belt (page 10-9).

NOTE:
- Turn the crankshaft so that the No. 1 piston is at top-dead-center (page 6-30 and 31).
- Before removing the timing belt, mark direction of rotation if it is to be reused.

1. Disconnect the negative terminal from the battery.
2. Remove the engine wire harness covers (page 6-8).
3. Remove the engine wire harness.
4. Remove the breather pipe.
5. Remove the vacuum pipe A bracket.

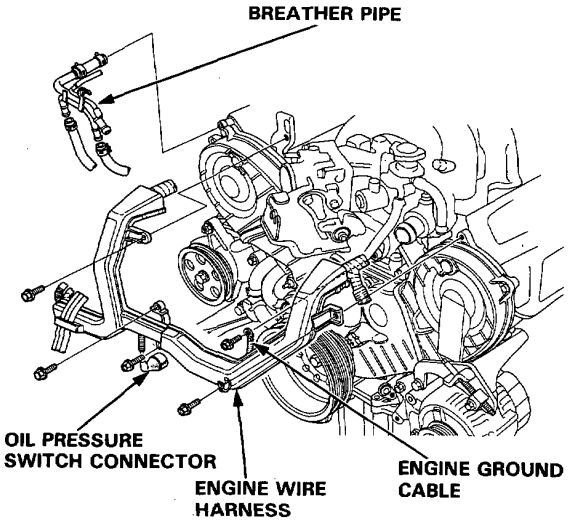

6. Remove the alternator belt.

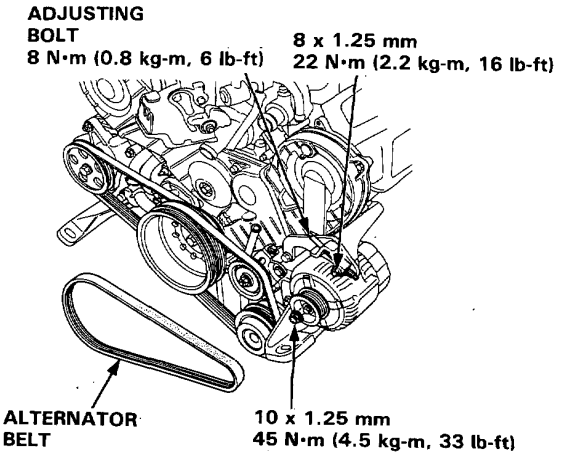

7. Remove the A/C belt.

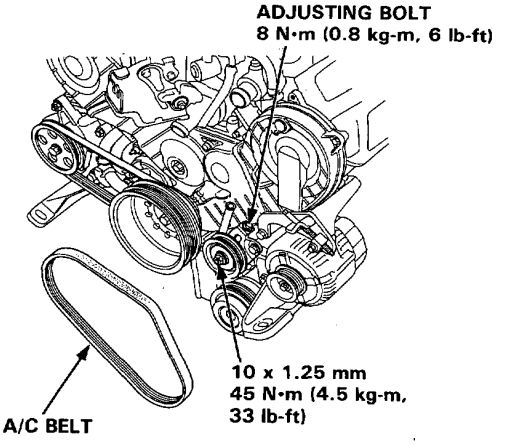

8. Remove the P/S belt.

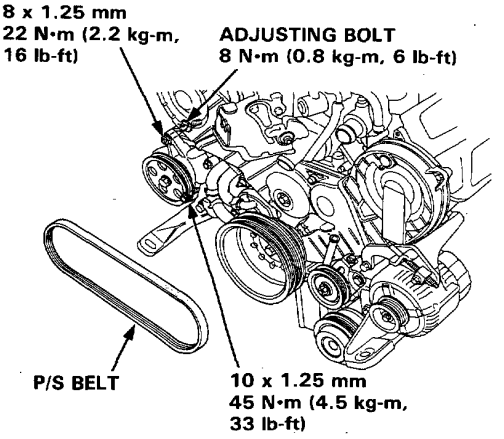

9. Remove the timing belt upper covers.

10. Remove the crankshaft pulley.

11. Remove the A/C adjusting pulley.

12. Remove the dipstick pipe.

13. Remove the timing belt lower cover.

14. Loosen the timing belt adjusting bolt 180° to release the belt tension.

15. Push the tensioner to release tension from the belt, then retighten the adjusting bolt.

16. Remove the timing belt from the pulleys.

CAUTION: Do not crimp or bend the timing belt more than 90° or less than 25 mm (1 in.) in diameter.

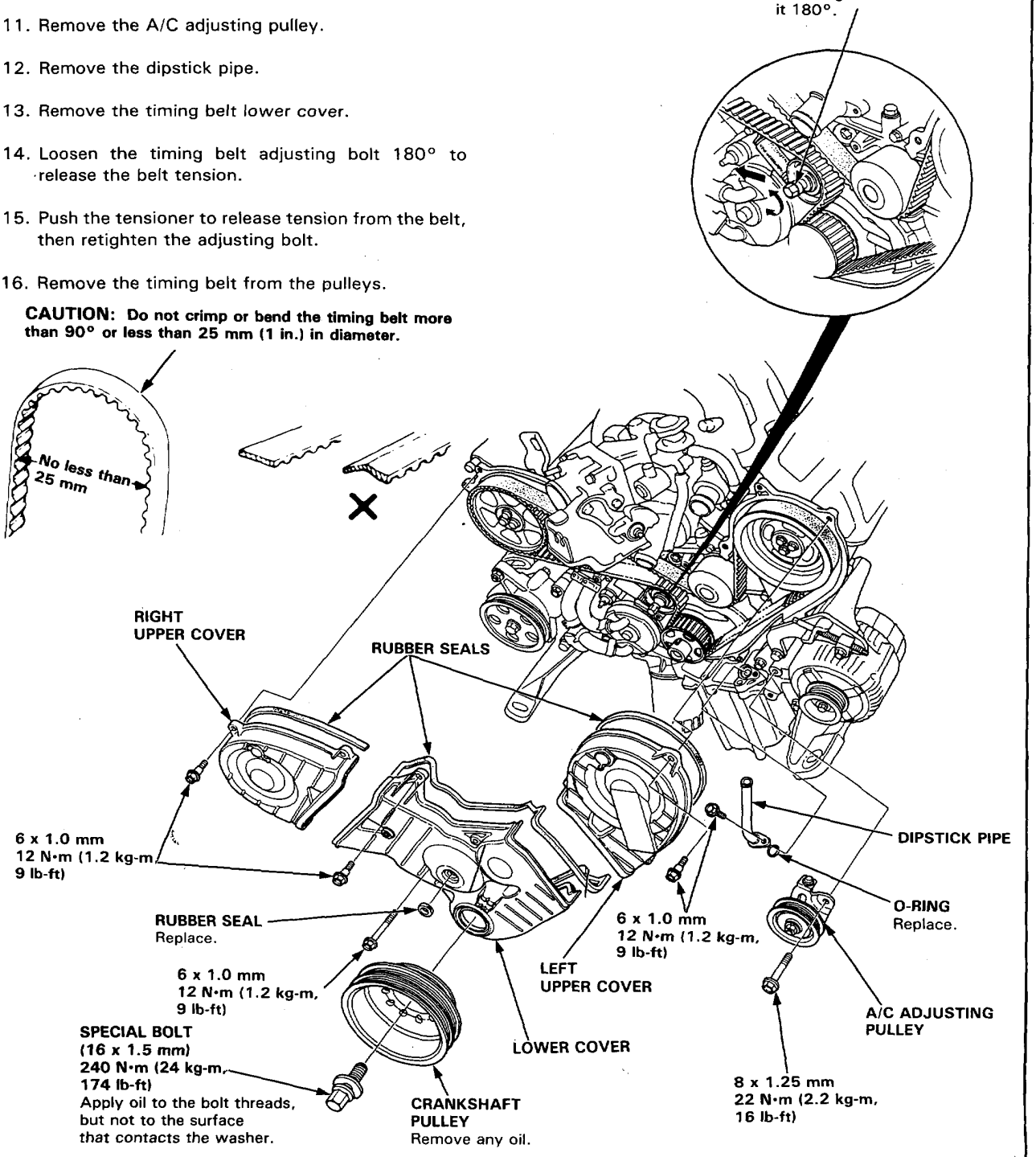

Installation

1. Install the timing belt in the reverse order of removal;
   Only key points are described here.

2. Remove all spark plugs.

3. Position the crankshaft and the cam pulleys as shown before installing the timing belt.

   Ⓐ Set the crankshaft so that the No. 1 piston is at top-dead-center (TDC).

   NOTE: Align the △ mark on the teeth side of the timing belt drive pulley to the pointer on the oil pump.

   Ⓑ Align the TDC mark on the left cam pulley to the pointer on the left cover plate.

   Ⓒ Align the TDC mark on the right cam pulley to the pointer on the right cover plate.

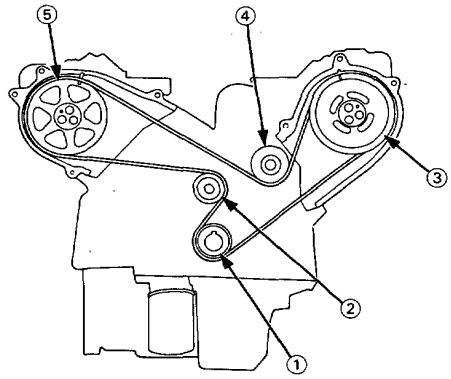

4. Install the timing belt tightly in the sequence shown.
   ①Timing belt drive pulley (crankshaft) → ②Adjusting pulley → ③Left cam pulley → ④ Water pump pulley → ⑤Right cam pulley.
   - For easy installation, advance the right cam pulley by about a half tooth from the TDC position.

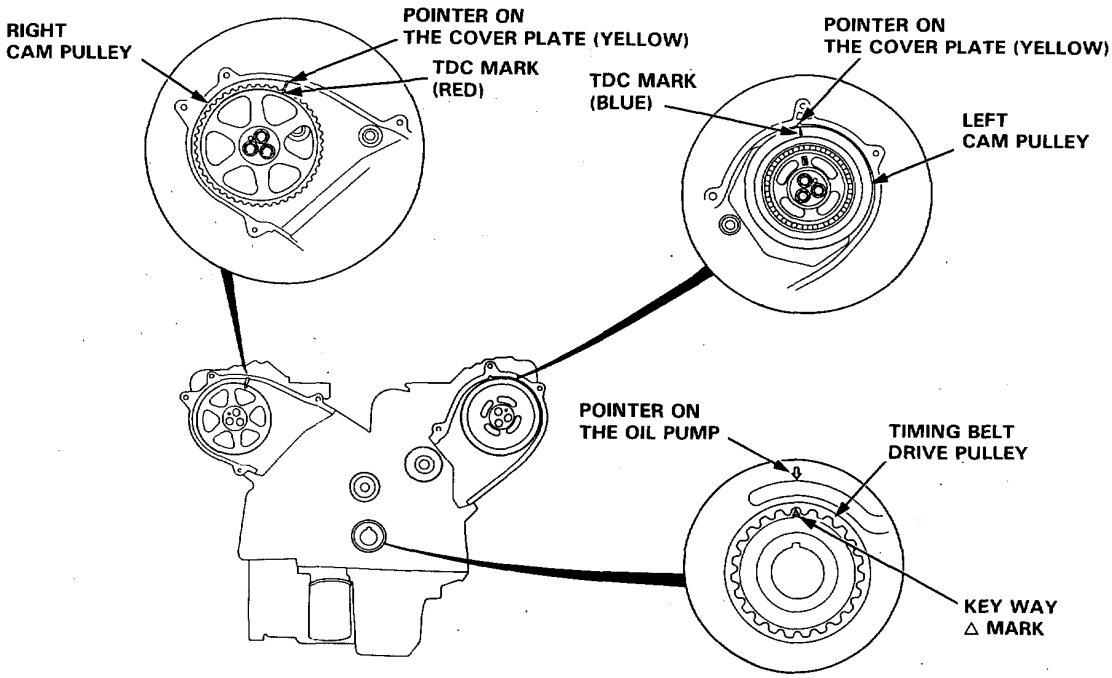

5. Loosen the adjust bolt, and retighten it after tensioning the belt.

6. Rotate the crankshaft about 5 or 6 turns clockwise so that the belt may fit in position on the pulleys.

7. Carry out timing belt tension adjustment (page 6-27).

8. Check the crankshaft pulley and the cam pulleys at TDC.

CRANKSHAFT PULLEY:

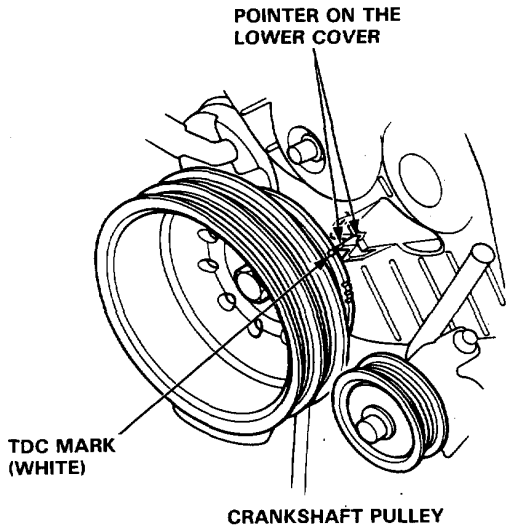

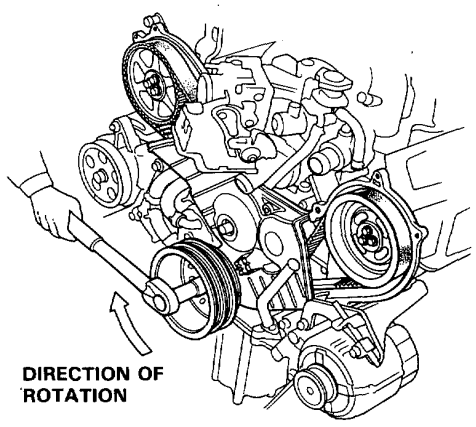

LEFT CAM PULLEY:

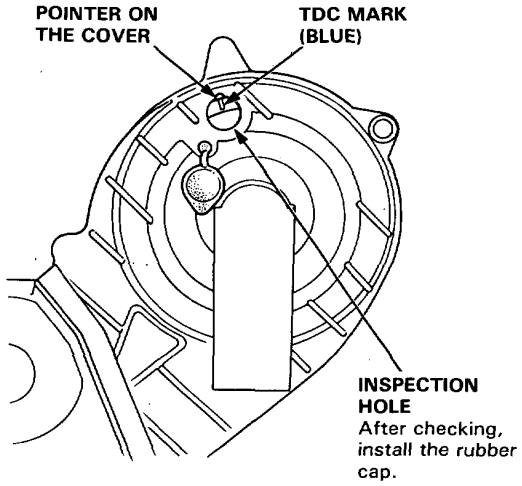

RIGHT CAM PULLEY:

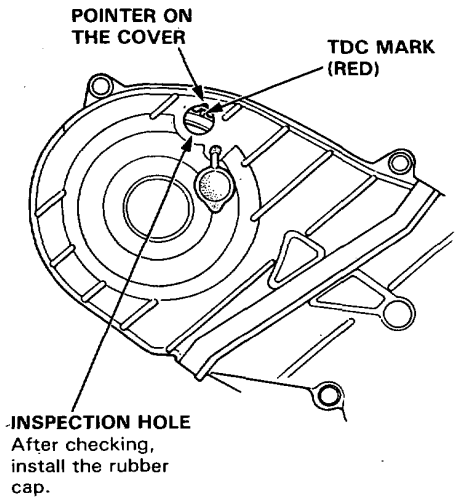

9. If the cam pulleys are not positioned at TDC, remove the timing belt and adjust the positioning following the procedure on page 6-30, then reinstall the timing belt.

   NOTE: Refer to page 6-28 for timing belt removal.

10. After installation, adjust the tension of each belt.
    - See section 23 for alternator belt tension adjustment.
    - See section 17 for power steering belt tension adjustment.
    - See section 22 for air conditioner belt tension adjustment.

CRANK/CYL Sensor

Replacement

NOTE: Turn the crankshaft so that the No. 1 piston is at top-dead-center (page 6-30).

1. Remove the upper covers.
2. Remove the timing belt from the right and left cam pulley (page 6-10).
3. Remove the left cam pulley.
4. Remove the left timing belt cover plate.
5. Remove the CRANK/CYL sensor from the left cylinder head.
6. Install the CRANK/CYL sensor in the reverse order of removal;
   - Refer to page 6-30 and 31 when installing the timing belt.

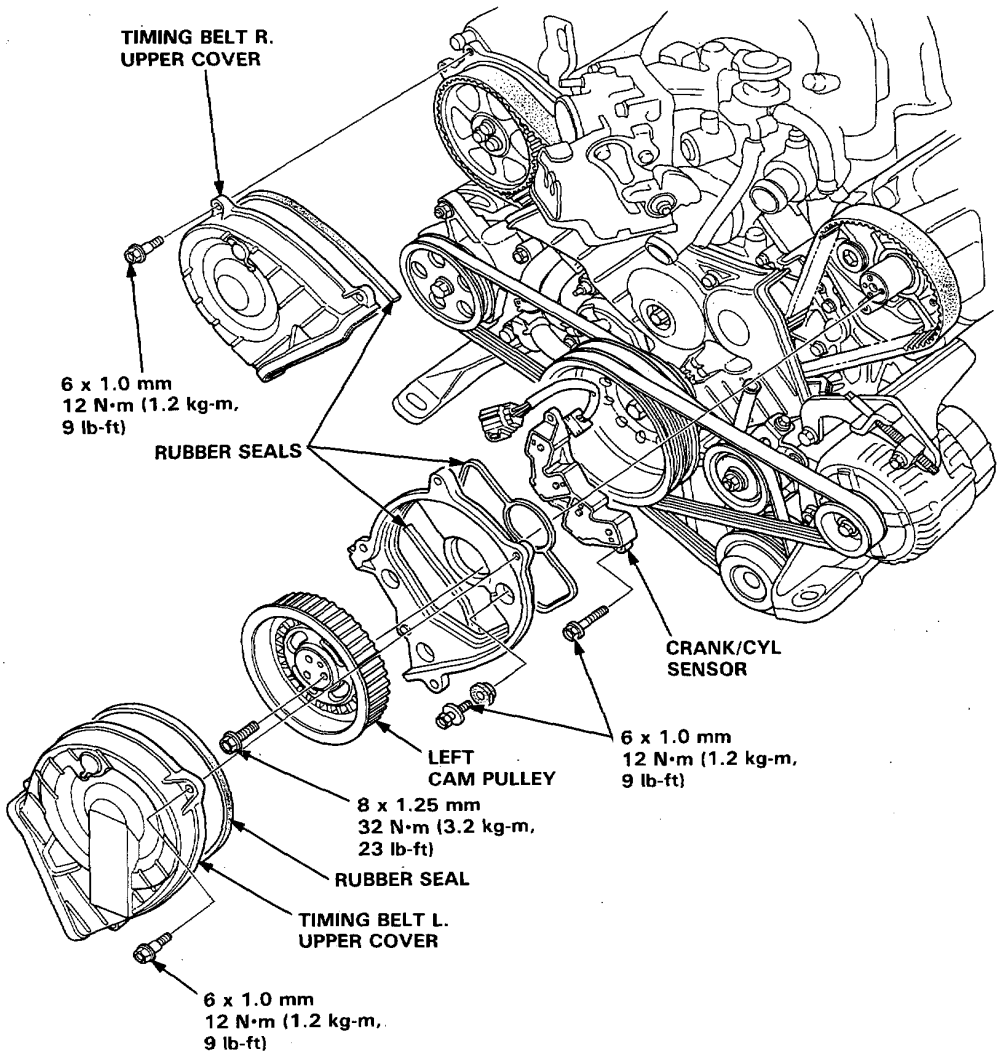

Engine Block

Special Tools 7-2
Illustrated Index 7-3
Flywheel and Drive Plate 7-6
Rod and Main Bearings 7-6
Pistons and Crankshaft Removal 7-9
Crankshaft 7-11
Pistons 7-12
Cylinder Block 7-13
Piston Pins 7-14
Piston Rings 7-17
Oil Seal 7-20
Crankshaft Installation 7-20

Special Tools

Ref. No.	Tool Number	Description	Qty	Page Reference
①	07GAF–PH60300	Piston Pin Base Insert	1	7-14, 7-15
②	07GAF–PH70100	Pilot Collar	1	7-14, 7-15
③	07HAF–PL20102 or 07HAF–PL20101	Piston Base Head	1	7-14, 7-15
④	07749–0010000	Driver	1	7-20
⑤	07924–PD20003 or 07924–PD20002	Ring Gear Holder	1	7-6
⑥	07948–SB00101	Driver Attachment	1	7-20
⑦	07973–PE00310	Piston Pin Driver Shaft	1	7-14, 7-15
⑧	07973–PE00320	Piston Pin Driver Head	1	7-14, 7-15
⑨	07973–6570500	Piston Base	1	7-14, 7-15
⑩	07973–6570600	Piston Base Spring	1	7-14, 7-15

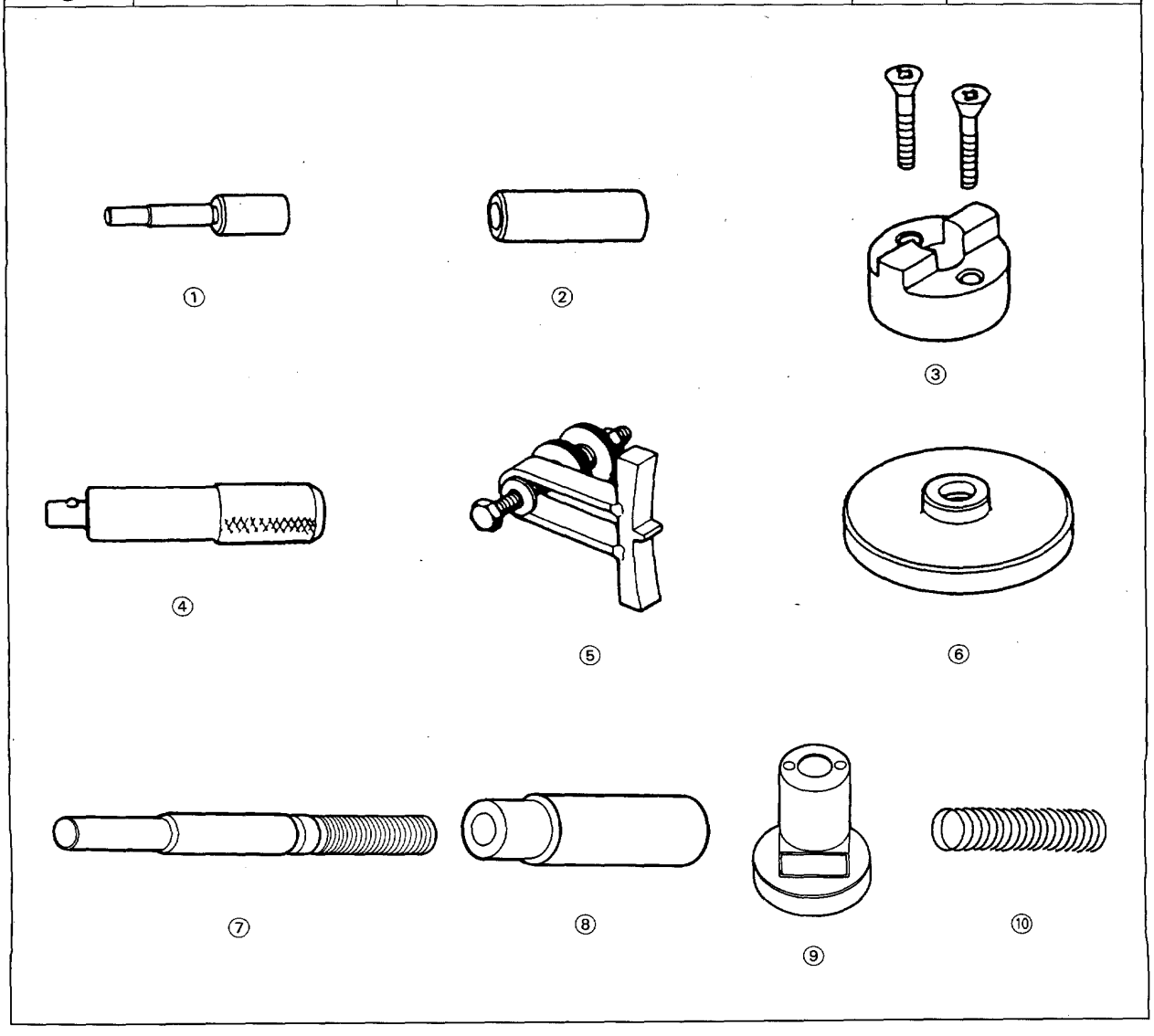

Engine Block

Illustrated Index

Lubricate all internal parts with engine oil during reassembly.

NOTE:
- Apply liquid gasket to the mating surfaces of the rear cover and oil pump case before installing them.
- Use liquid gasket, part No. 0Y740—99986.

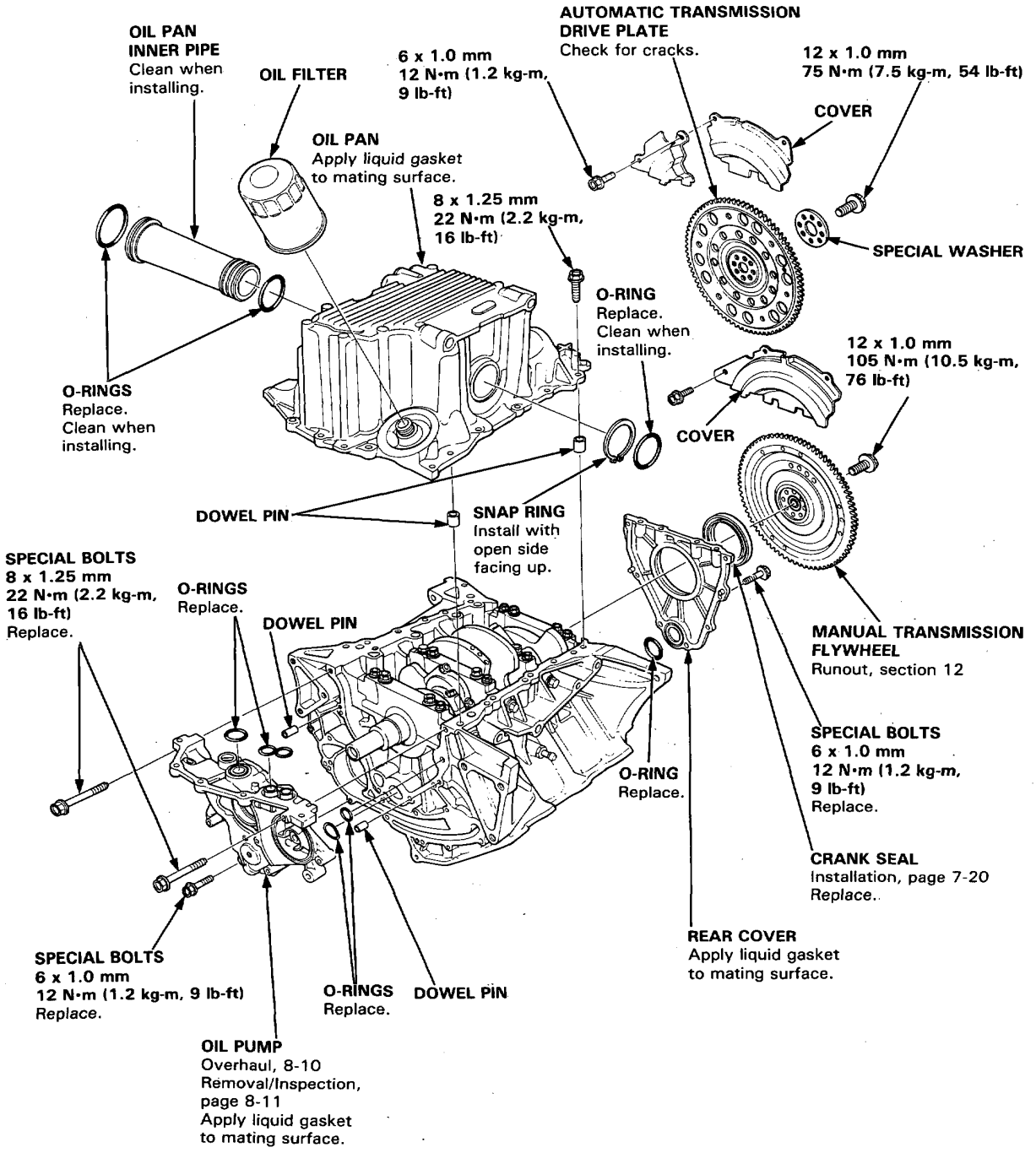

(cont'd)

Engine Block

Illustrated Index (cont'd)

NOTE:
- Lubricate all internal parts with engine oil during reassembly.
- Use liquid gasket, Part No. 0Y740—99986.

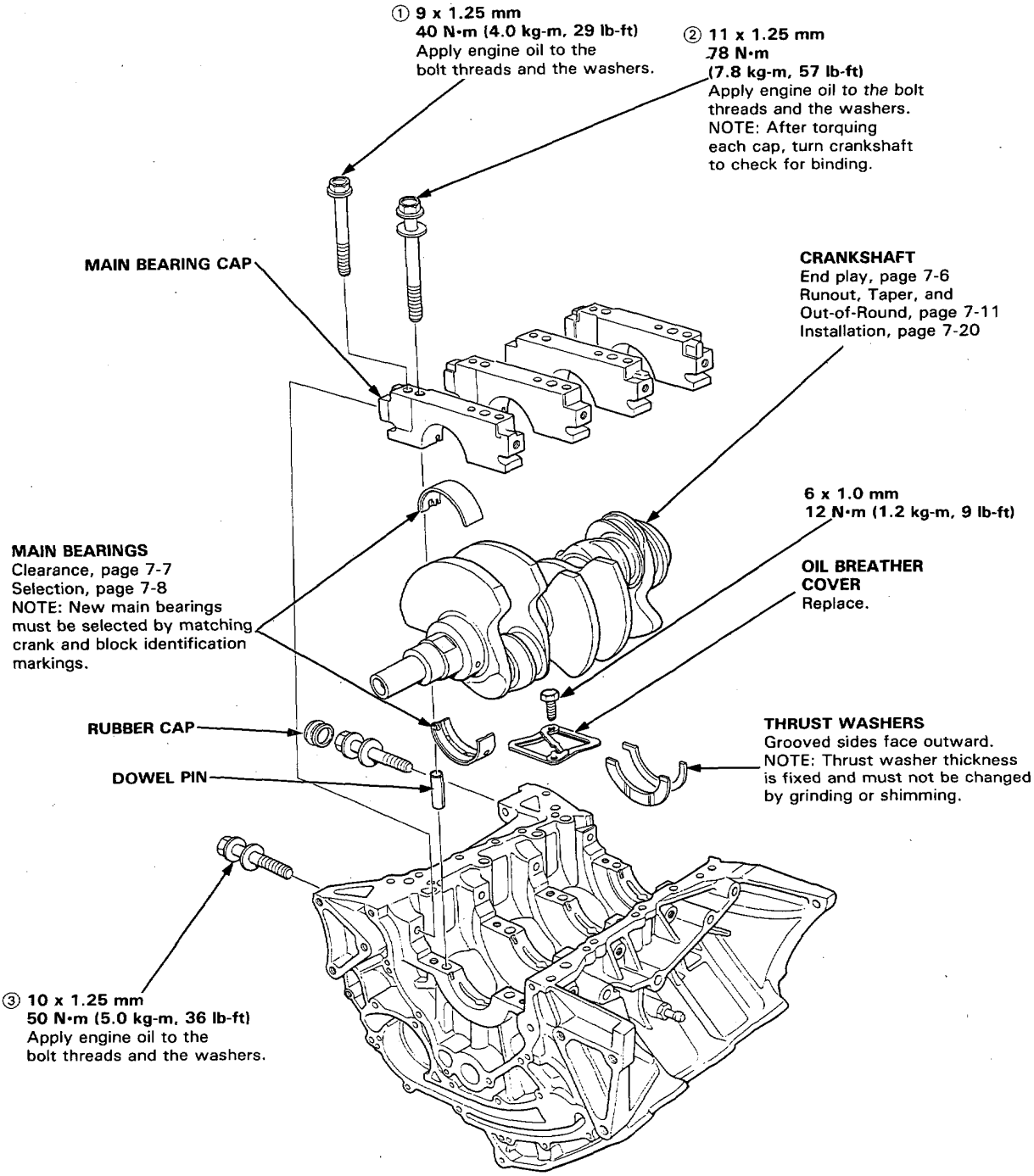

NOTE: New rod bearings must be selected by matching connecting rod assembly and crankshaft identification markings (page 7-8).

Lubricate all internal parts with engine oil during reassembly.

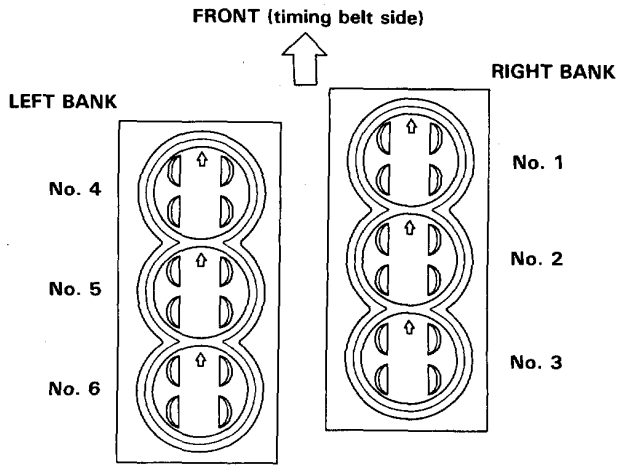

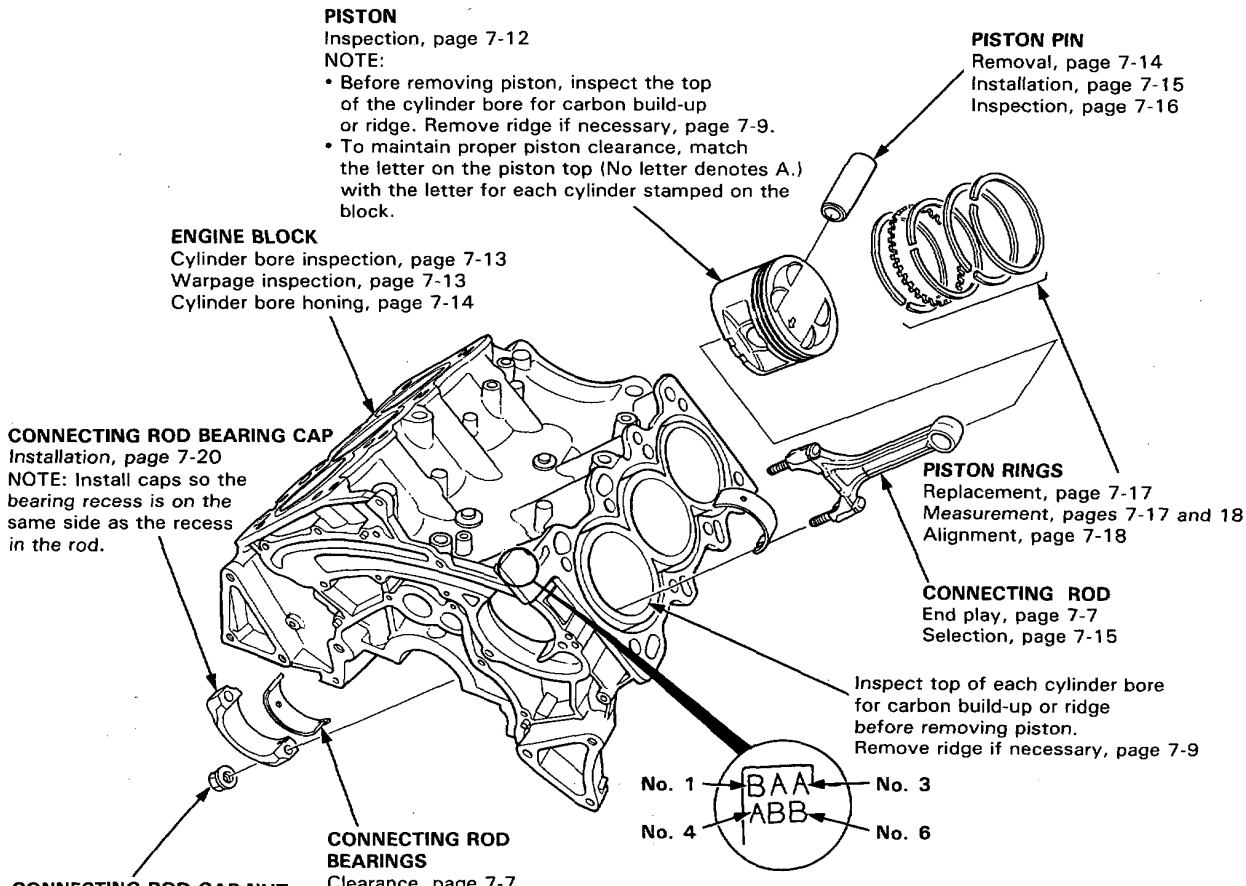

Flywheel and Drive Plate

Replacement

Manual Transmission:
Remove the eight flywheel bolts, then separate the flywheel from the crankshaft flange. After installation, tighten the bolts in the crisscross pattern.

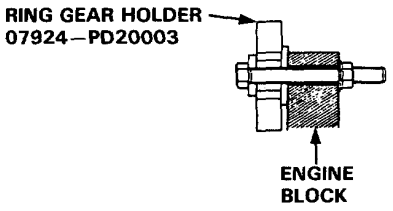

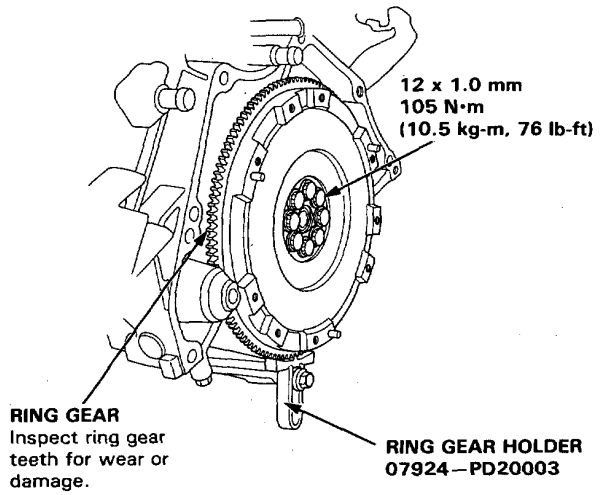

Automatic Transmission:
Remove the eight drive plate bolts, then separate the drive plate from the crankshaft flange. After installation, tighten the bolts in the crisscross pattern.

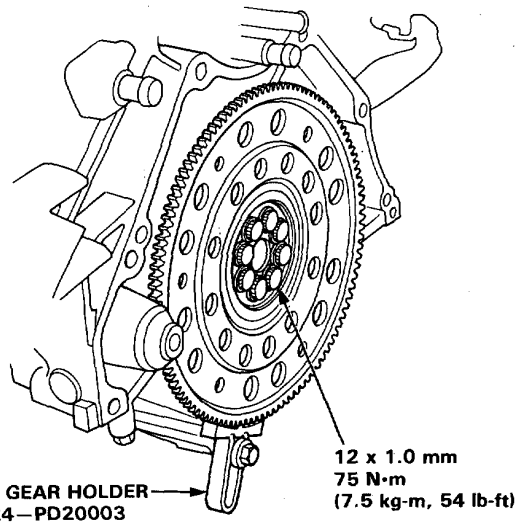

Connecting Rod and Crankshaft

End Play

Connecting Rod End Play:
Standard (New): 0.15—0.30 mm (0.006—0.012 in)

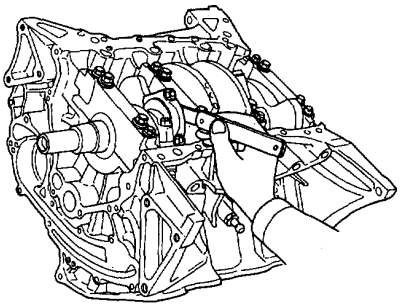

- If out-of-tolerance, install a new connecting rod.
- If still out-of-tolerance, replace the crankshaft (pages 7-9, 10 and 7-20).

Push the crank firmly away from the dial indicator, and zero the dial against the end of the crank. Then pull the crank firmly back toward the indicator; dial reading should not exceed service limit.

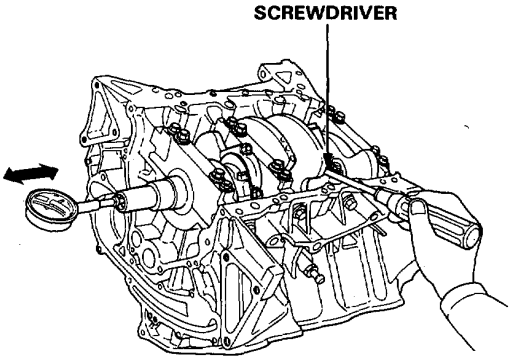

Crankshaft End Play:
Standard (New): 0.10—0.29 mm (0.004—0.011 in)
Service Limit: 0.45 mm (0.018 in)

- If end play is excessive, inspect the thrust washers and thrust surface on the crankshaft. Replace parts as necessary.

NOTE: Thrust washer thickness is fixed and must not be changed either by grinding or shimming. Thrust washers are installed with grooved side facing outward.

Main Bearings

Clearance

1. To check main bearing clearance, remove the main caps and bearing halves.
2. Clean each main journal and bearing half with a clean shop rag.
3. Place one strip of plastigage across each main journal.

   NOTE: If the engine is still in the car when you bolt the main cap down to check clearance, the weight of the crank and flywheel will flatten the plastigage further than just the torque on the cap bolts, and give you an incorrect reading. For an accurate reading, support the crank with a jack under the counterweights and check only one bearing at a time.
4. Reinstall the bearings and caps, then torque the 9 mm cap bolts to 40 N•m (4.0 kg-m, 29 lb-ft). Torque the 11 mm cap bolts to 78 N•m (7.8 kg-m, 57 lb-ft).
5. Torque the side bolts to 50 N•m (5.0 kg-m, 36 lb-ft).
6. Remove the caps and bearings, and measure the widest part of the plastigage.

   Main Bearing Clearance:
   Standard (New): 0.020–0.044 mm (0.0008–0.0017 in)
   Service Limit: 0.05 mm (0.002 in)

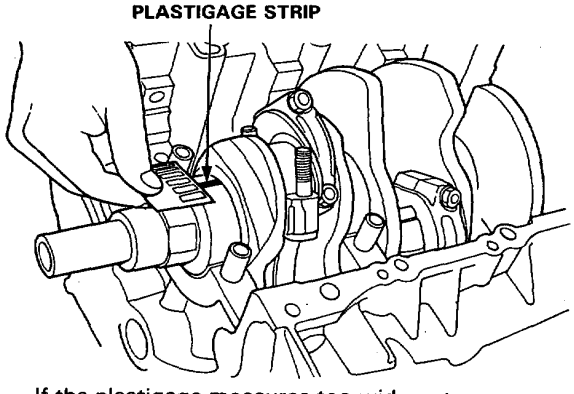

If the plastigage measures too wide or too narrow, (remove the engine if it's still in the car), remove the crank, remove the upper half of the bearing, then install a new, complete bearing with the same color code (select the color as shown on next page), and recheck the clearance.

CAUTION: Do not file, shim, or scrape the bearings or the caps to adjust clearance.

If the plastigage shows the clearance is still incorrect, try the next larger or smaller bearing (the color listed above or below that one), and check again.

NOTE: If the proper clearance cannot be obtained by using the appropriate larger or smaller bearings, replace the crank and start over.

Rod Bearings

Clearance

1. Remove the connecting rod cap and bearing half.
2. Clean the crankshaft rod journal and bearing half with a clean shop rag.
3. Place plastigage across the rod journal.
4. Reinstall the bearing half and cap, and torque the nuts to 45 N•m (4.5 kg-m, 33 lb-ft).

   NOTE: Do not rotate the crank during inspection.
5. Remove the rod cap and bearing half and measure the widest part of the plastigage.

   Connecting Rod Bearing Clearance:
   Standard (New): 0.022–0.046 mm (0.0009–0.0018 in)
   Service Limit: 0.05 mm (0.002 in)

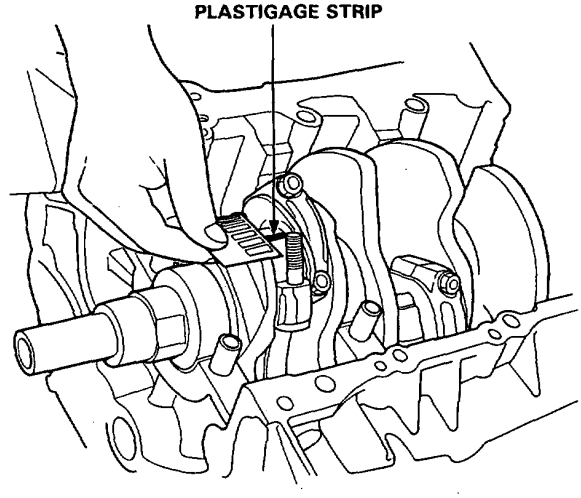

6. If the plastigage measures too wide or too narrow, remove the upper half of the bearing, install a new, complete bearing with the same color code (select color as shown on next page), and recheck the clearance.

   CAUTION: Do not file, shim, or scrape the bearing or the caps to adjust clearance.
7. If the plastigage shows the clearance is still incorrect, try the next larger or smaller bearing (the color listed above or below that one), and check clearance again.

   NOTE: If the proper clearance cannot be obtained by using the appropriate larger or smaller bearings, replace the crank and start over.

Main Bearings

Selection

Crank Bore Code Locations (Letters)
Letters have been stamped on the end of the block as a code for the size of each of the 4 main journal bores. Use them, and the numbers stamped on the crank (codes for main journal size), to choose the correct bearings.

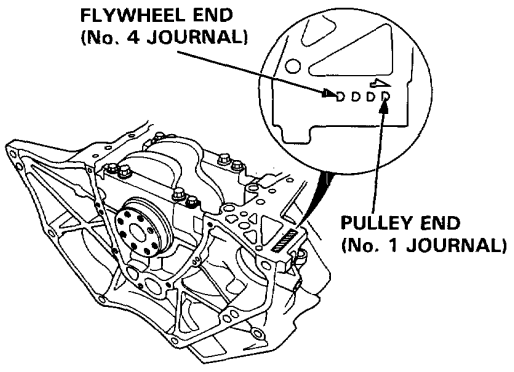

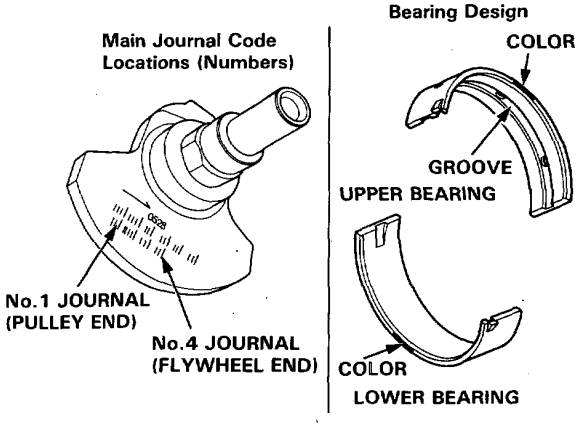

Bearing Identification
Color code is on the edge of the bearing

Larger crank bore → Small bearing (thicker)

Smaller main journal	A or I	B or II	C or III	D or IIII
1 or I	Pink	Pink Yellow	Yellow	Yellow Green
2 or II	Pink Yellow	Yellow	Yellow Green	Green
3 or III	Yellow	Yellow Green	Green	Green Brown
4 or IIII	Yellow Green	Green	Green Brown	Brown
5 or IIIII	Green	Green Brown	Brown	Brown Black
6 or IIIIII	Green Brown	Brown	Brown Black	Black

Smaller bearing (thicker)

On bearing sets with two colors, such as green/brown, it doesn't matter which color is on the top.

Rod Bearings

Selection

Rod Code Location (Numbers)
Numbers have been stamped on the side of each connecting rod as a code for the size of the big end. Use them, and the letters stamped on the crank (codes for rod journal size), to choose the correct bearings.

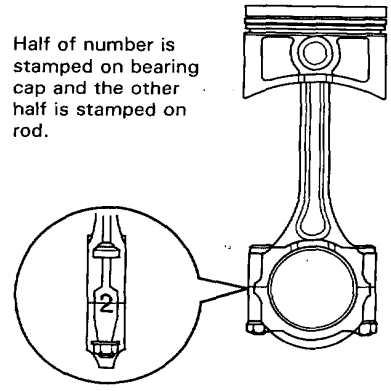

Rod Journal Code Locations (Letters)

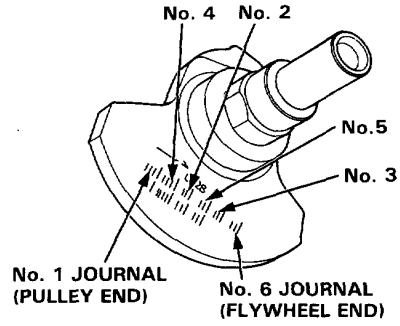

Bearing Identification
Color code is on the edge of the bearing

Larger big end bore → Small bearing (thicker)

Smaller rod journal	1 or I	2 or II	3 or III	4 or IIII
A or I	Pink	Pink Yellow	Yellow	Yellow Green
B or II	Pink Yellow	Yellow	Yellow Green	Green
C or III	Yellow	Yellow Green	Green	Green Brown
D or IIII	Yellow Green	Green	Green Brown	Brown
E or IIIII	Green	Green Brown	Brown	Brown Black
F or IIIIII	Green Brown	Brown	Brown Black	Black

Smaller bearing (thicker)

On bearing sets with two colors, such as green/brown, it doesn't matter which color is on the top.

Removal

1. Remove the oil pan assembly.
2. Remove the rear cover.

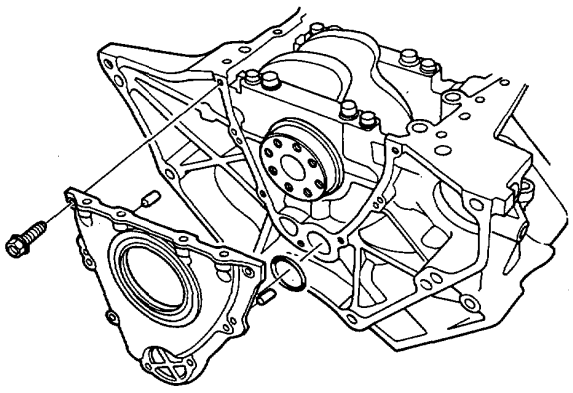

3. Remove the oil pump.

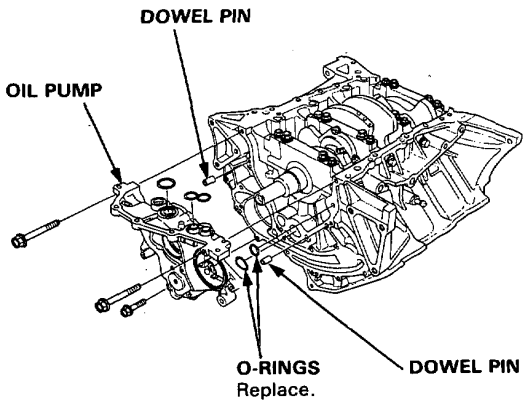

If you can feel a ridge of metal or hard carbon around the top of any cylinder, remove it with a ridge reamer. Follow reamer manufacturer's instructions.

CAUTION: If the ridge is not removed, it may damage the pistons as they are pushed out.

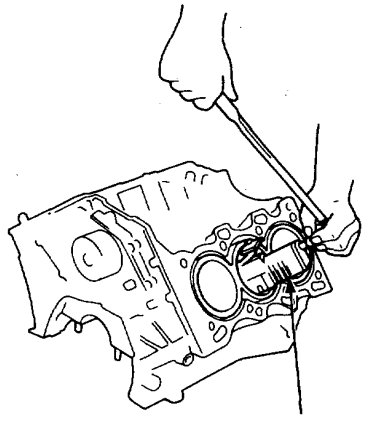

- Remove the connecting rod caps after setting the crank pin at BDC for each cylinder. Remove the piston assembly by pushing on the connecting rod.

CAUTION: Take care not to damage the crank pin or cylinder with the connecting rod.

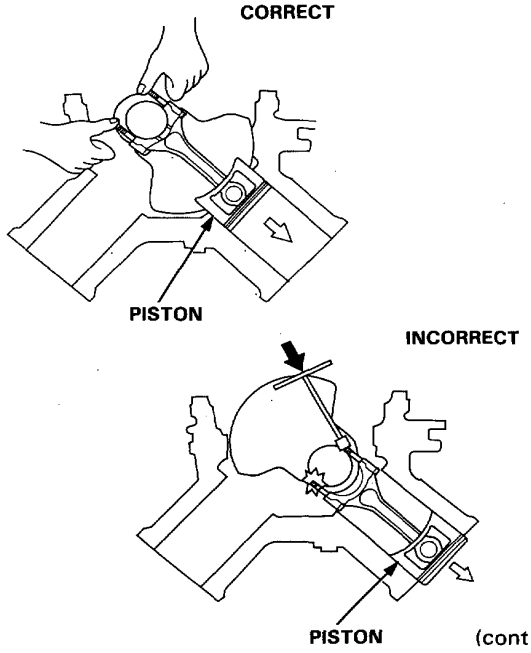

(cont'd)

Removal (cont'd)

- Remove the bearing from the cap. Keep all caps/bearings in order.
- Remove upper bearing halves from connecting rods and set aside with their respective caps.
- Reinstall the cap on the rod after removing each piston/connecting rod assembly.
- Mark piston/connecting rod assemblies with cylinder numbers to avoid mixup on reassembly.

NOTE: The existing number on the connecting rod does not indicate its position in the engine, it indicates the rod bore size.

- Remove the bearing cap bolts and bearing cap side bolts, then remove the bearing caps.

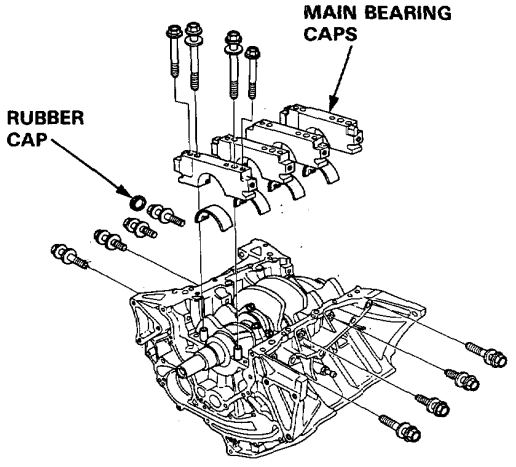

- To help with removal of the caps, install the bearing cap bolts in the outside bolt holes.

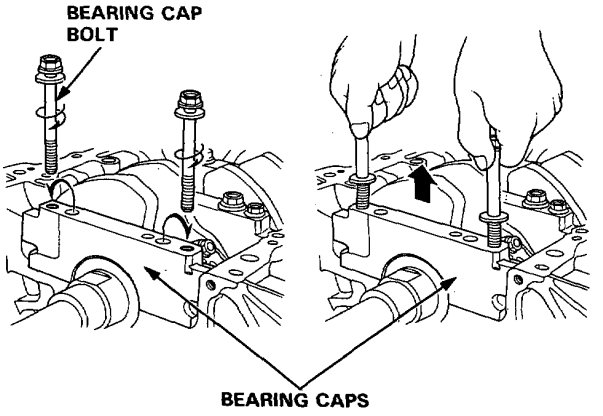

- Lift the crankshaft out of engine, being careful not to damage journals.

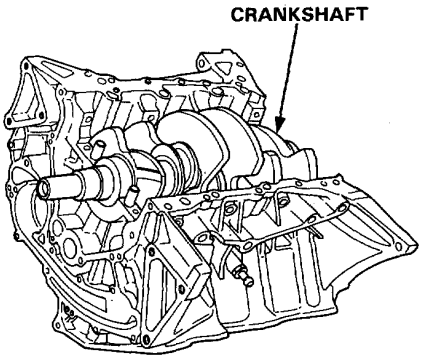

- Reinstall main caps and bearings on engine in proper order.

Inspection

- Clean the crankshaft oil passages with pipe cleaners or a suitable brush.
- Check the keyway and threads.

Alignment

- Measure runout on all main journals to make sure the crank is not bent.
- The difference between measurements on each journal must not be more than the service limit.

Crankshaft Total Indicated Runout:
Standard (New): 0.020 mm (0.0008 in) max.
Service Limit: 0.03 mm (0.0012 in)

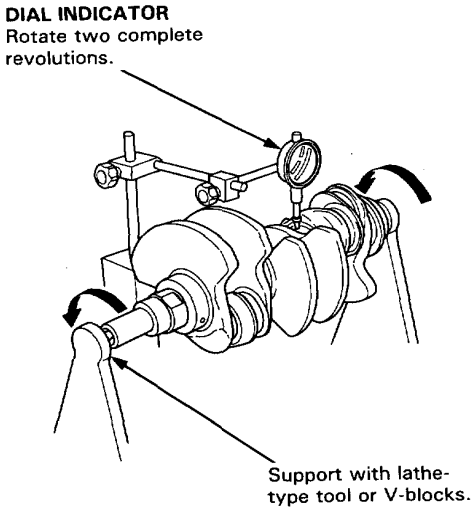

Out-of-Round and Taper

- Measure out-of-round at the middle of each rod and main journal in two places.
- The difference between measurements on each journal must not be more than the service limit.

Journal Out-of-Round:
Standard (New): 0.004 mm (0.0002 in) max.
Service Limit: 0.010 mm (0.0004 in)

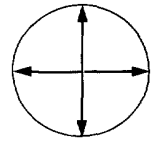

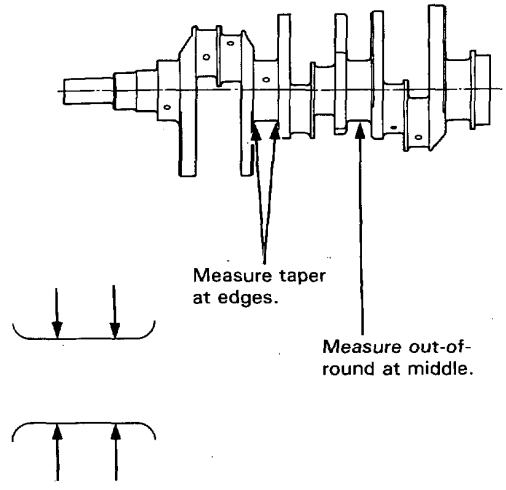

- Measure taper at edges of each rod and main journal.
- The difference between measurements on each journal must not be more than the service limit.

Journal Taper:
Standard (New): 0.005 mm (0.0002 in) max.
Service Limit: 0.010 mm (0.0004 in)

Pistons

Inspection

1. Check the piston for distortion or cracks.

   NOTE: If cylinder is bored, an oversized piston must be used.

2. Measure piston diameter at a point 17 mm (0.67 in.) from bottom of skirt.

   NOTE: There are two standard-size pistons (A or B). The letter is stamped on the top of the piston. These letters are also stamped on the block as cylinder bore sizes.

Piston Diameter

	Standard (NEW)	Service Limit
A	89.98–89.99 mm (3.5425–3.5429 in)	89.97 mm (3.5421 in)
B	89.97–89.98 mm (3.5421–3.5425 in)	89.96 mm (3.5417 in)

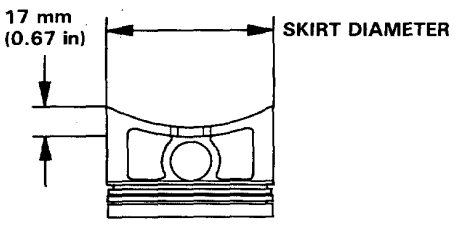

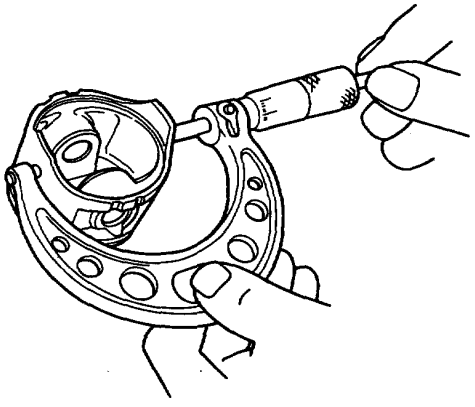

3. Calculate difference between cylinder bore diameter on page 7-13 and piston diameter.

   Piston-to-Block Clearance
   Standard (NEW): 0.02–0.04 mm (0.001–0.002 in)
   Service Limit: 0.08 mm (0.003 in)

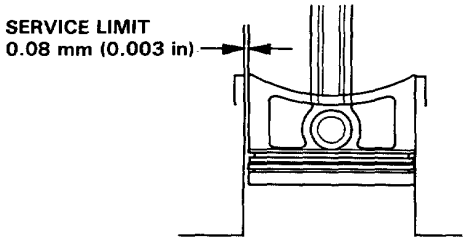

Oversize Piston Diameter
0.25: 90.22–90.23 mm (3.5520–3.5524 in)
0.50: 90.47–90.48 mm (3.5618–3.5622 in)

Inspection

1. Measure wear and taper in directions X and Y at three levels in each cylinder as shown.

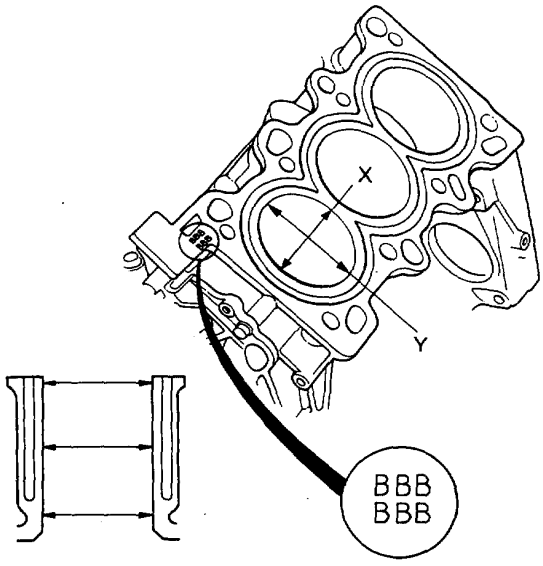

CYLINDER BORE SIZES (A or B)
NOTE: To maintain proper piston clearance, match these letters with the letters on the pistons. The letters on the block read from front to rear, No. 1 through No. 3 cylinders on the first line and No.4 through No.6 cylinders on the second line.

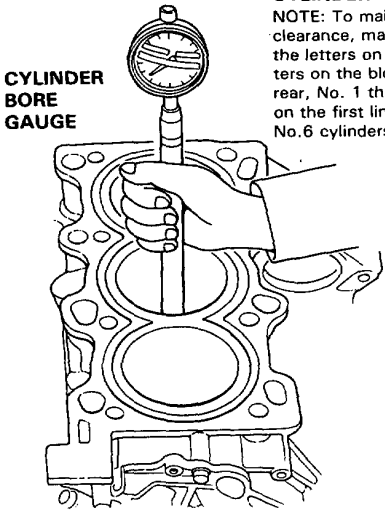

Cylinder Bore Size
Standard (New): 90.00–90.02 mm (3.543–3.544 in)
Service Limit: 90.07 mm (3.546 in)

Oversize
0.25: 90.25–90.27 mm (3.553–3.554 in)
0.50: 90.50–90.52 mm (3.563–3.564 in)

Bore Taper
Limit: (Difference between first and third measurement) 0.05 mm (0.002 in)

- If measurements in any cylinder are beyond Oversize Bore Service Limit, replace the block.
- If block is to be rebored, refer to Piston Clearance Inspection (page 7-12) after reboring.

NOTE: Scored or scratched cylinder bores must be honed.

Reboring Limit: 0.50 mm (0.020 in)

2. Check the top of the block for warpage. Measure along the edges and across the center as shown.

SURFACES TO BE MEASURED

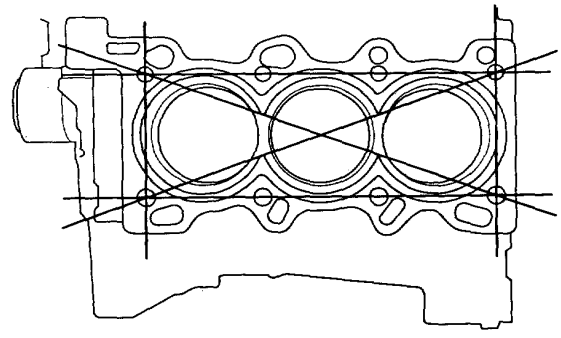

Engine Block Warpage:
Standard (New): 0.07 mm (0.003 in) max.
Service Limit: 0.10 mm (0.004 in)

PRECISION STRAIGHT EDGE

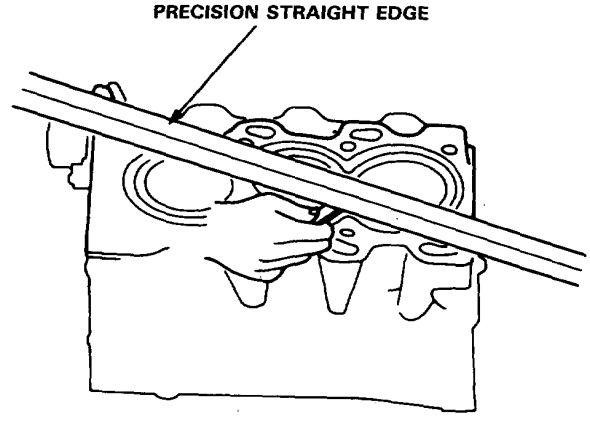

Cylinder Block

Bore Honing

1. Measure cylinder bores as shown on page 7-13. If the block is to be re-used, hone the cylinders and remeasure the bores.

2. Hone cylinder bores with honing oil and a fine (400 grit) stone in a 60 degree cross-hatch pattern.

   NOTE:
   - Use only a rigid hone with 400 grit or finer stone.
   - Do not use stones that are worn or broken.

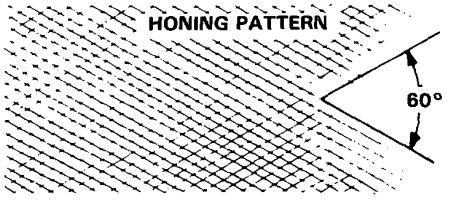

3. When honing is complete, thoroughly clean the engine block of all metal particles. Wash the cylinder bores with hot soapy water, then dry and oil immediately to prevent rusting.

   NOTE: Never use solvent, it will only redistribute the grit on the cylinder walls.

4. If scoring or scratches are still present in cylinder bores after honing to service limit, rebore the engine block.

   NOTE: Some light vertical scoring and scratching is acceptable if it is not deep enough to catch your fingernail and does not run the full length of the bore.

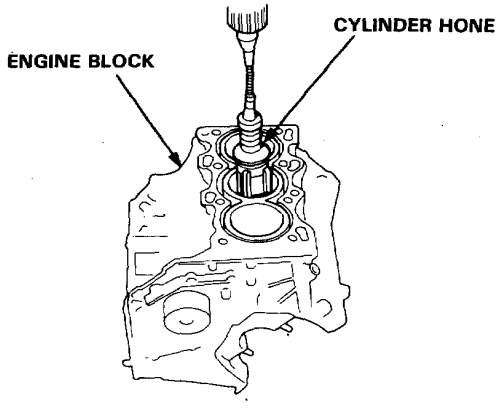

NOTE:
- After honing, clean the cylinder thoroughly with soapy water.
- Only scored or scratched cylinder bores must be honed.

Piston Pins

Removal

1. Assemble the special tool as shown.

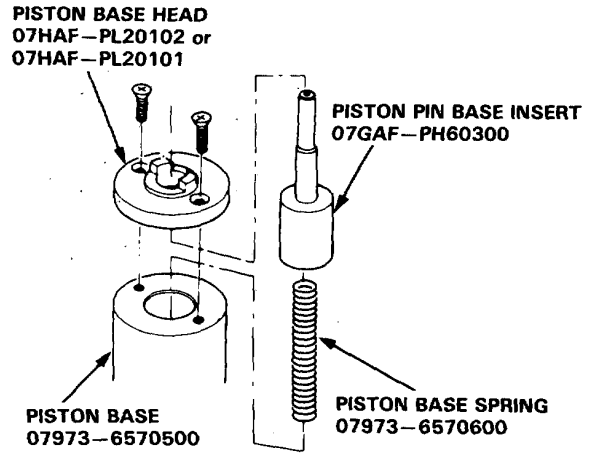

2. Adjust the length of piston pin driver to 52.5 mm (2.07 in) as shown.

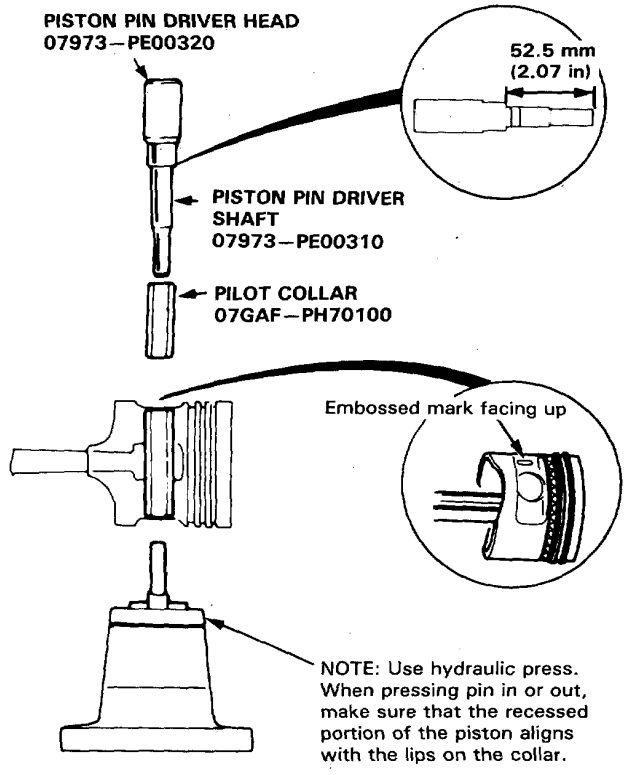

3. Place the piston on the special tool and press the pin out with a hydraulic press.

Connecting Rods

Selection

Each rod is sorted into one of four tolerance ranges (from 0 to 0.024 mm, in 0.006 mm increments) depending on the size of its big end bore. It's then stamped with a number (1, 2, 3 or 4) indicating that tolerance. You may find any combination of 1, 2, 3 or 4 in any engine.

Normal Bore Size: 57 mm (2.244 in)

NOTE:
- Reference numbers are for big end bore size and do NOT indicate the position of rod in engine.
- Inspect connecting rod for cracks and heat damage.

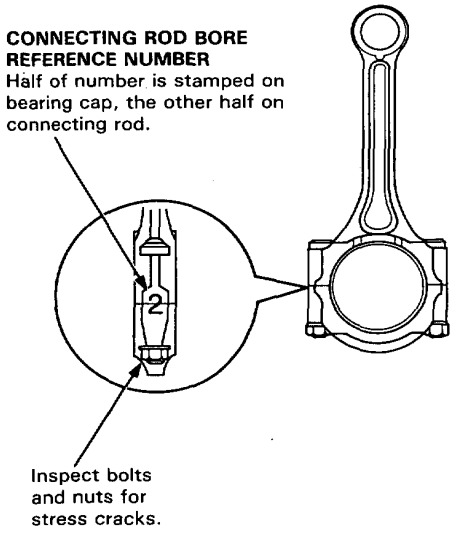

Piston Pins

Installation

1. Use a hydraulic press for installation.
   - When pressing pin in or out, be sure you position the recessed flat on the piston against the lugs on the base attachment.

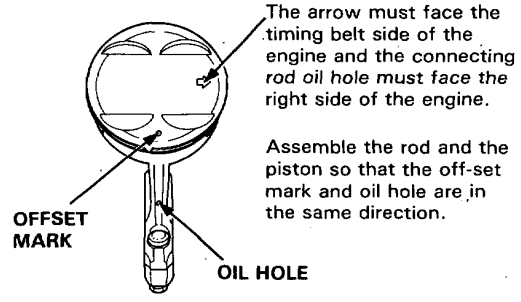

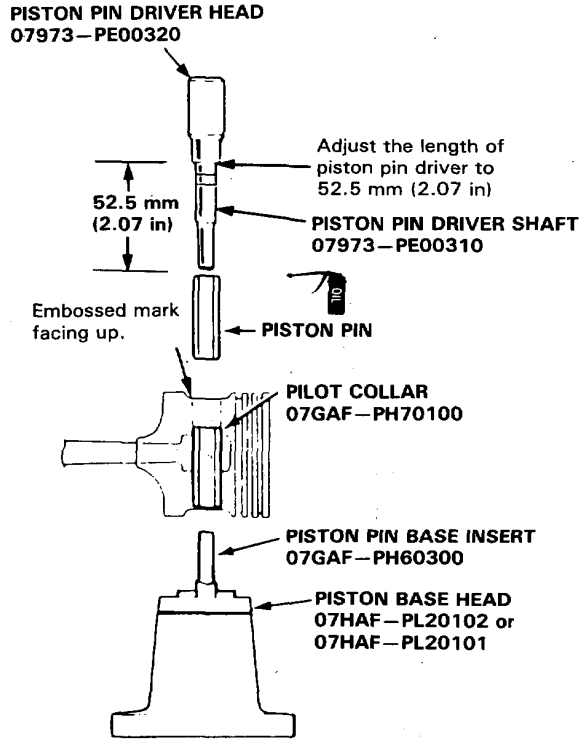

NOTE: Install the assembled piston and rod with the oil hole facing the rear of the engine.

Piston Pins

Inspection

1. Measure the diameter of the piston pin.

   Piston Pin Diameter:
   Standard (New): 21.994–22.000 mm (0.8659–0.8661 in)
   Oversize: 21.997–22.003 mm (0.8660–0.8663 in)

   NOTE: All replacement piston pins are oversize.

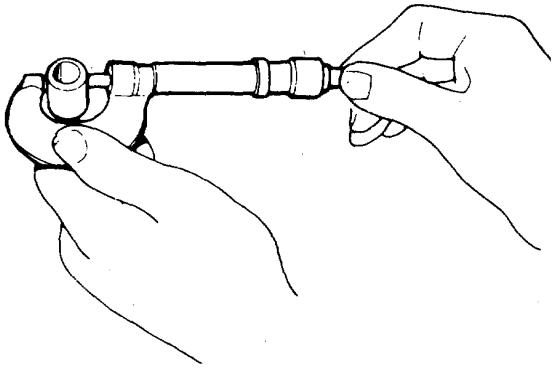

2. Zero the dial indicator to the piston pin diameter.

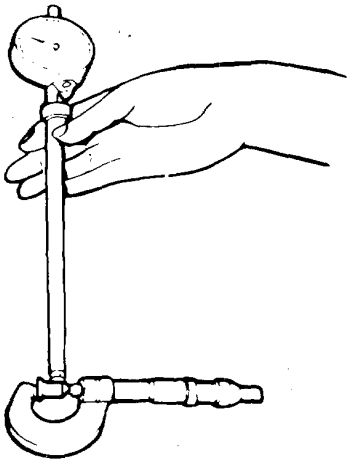

3. Measure the piston pin-to-piston clearance.

   NOTE: Check the piston for distortion or cracks.

   If the piston pin clearance is greater than 0.024 mm (0.0009 in), re-measure using an oversize piston pin.

   Piston Pin-to-Piston Clearance:
   Service Limit: 0.012–0.024 mm (0.0005–0.0009 in)

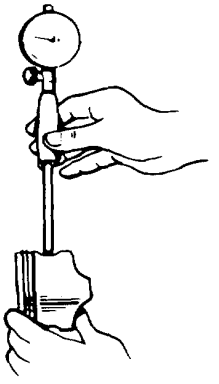

4. Check the difference between piston pin diameter and connecting rod small end diameter.

   Piston Pin-to-Connecting Rod Interference:
   Standard (New): 0.013–0.032 mm (0.0005–0.0013 in)

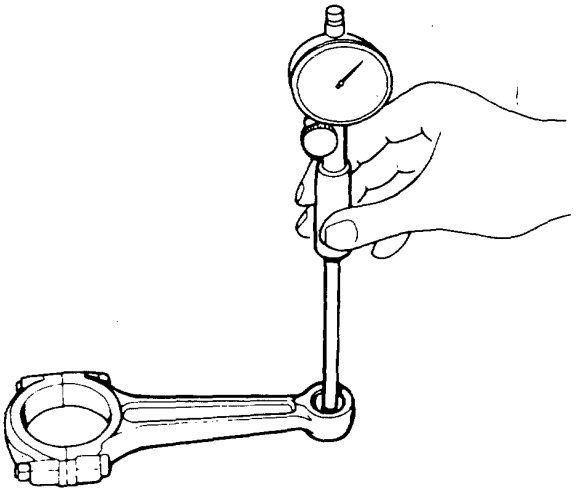

Piston Rings

End Gap

1. Using a piston, push a new ring into the cylinder bore 15—20 mm (0.6—0.8 in.) from the bottom.

2. Measure the piston ring end-gap with a feeler gauge:

   - If the gap is too small, check to see if you have the proper rings for your engine.

   - If the gap is too large, recheck the cylinder bore diameter against the wear limits on page 7-13. If the bore is over limit, the engine block must be rebored.

Piston Ring End-Gap:

Top Ring
Standard (New): 0.25—0.40 mm (0.010—0.016 in)
Service Limit: 0.70 mm (0.027 in)

Second Ring
Standard (New): 0.40—0.55 mm (0.016—0.022 in)
Service Limit 0.85 mm (0.033 in)

Oil Ring
Standard (New): 0.2—0.7 mm (0.008—0.028 in)
Service Limit: 0.80 mm (0.032 in)

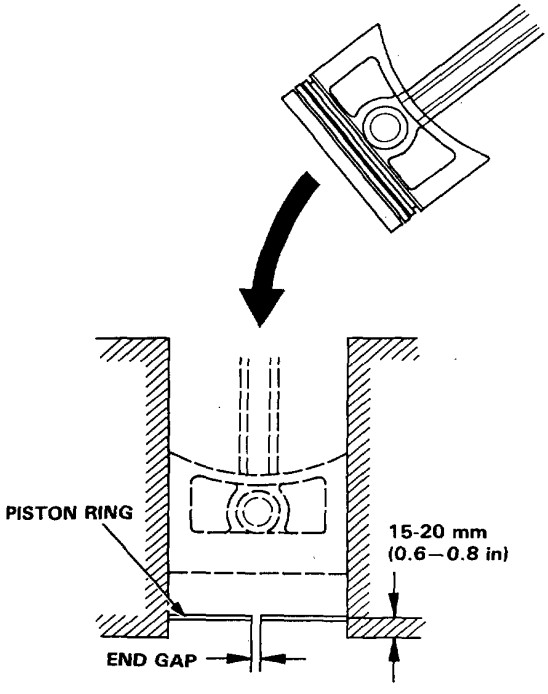

Replacement

1. Using ring expander, remove old piston rings.

2. Clean all ring grooves thoroughly.

   NOTE:
   - Use a squared-off broken ring or ring groove cleaner with blade to fit piston grooves.
   - Compression ring grooves are 1.2 mm wide and oil ring groove is 2.8 mm wide.
   - File down blade if necessary.

   CAUTION: *Do not use a wire brush to clean ring lands, or cut ring lands deeper with cleaning tool.*

   NOTE: If piston is to be separated from connecting rod, do not install new rings yet.

3. Install new rings in proper sequence and position (page 7-18).

   NOTE: Do not reuse old piston rings.

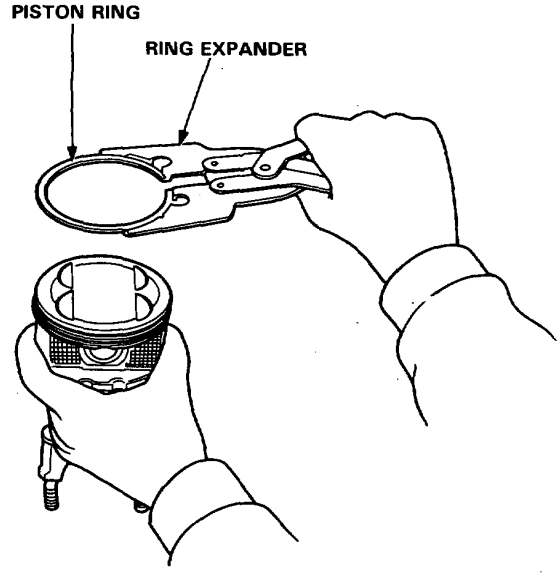

Piston Rings

Land Clearances

After installing a new set of rings, measure ring-to-land clearances:

Top Ring Clearance
Standard (New): 0.035–0.060 mm (0.001–0.002 in)
Service Limit: 0.13 mm (0.005 in)

Second Ring Clearance
Standard (New): 0.030–0.055 mm (0.001–0.002 in)
Service Limit: 0.13 mm (0.005 in)

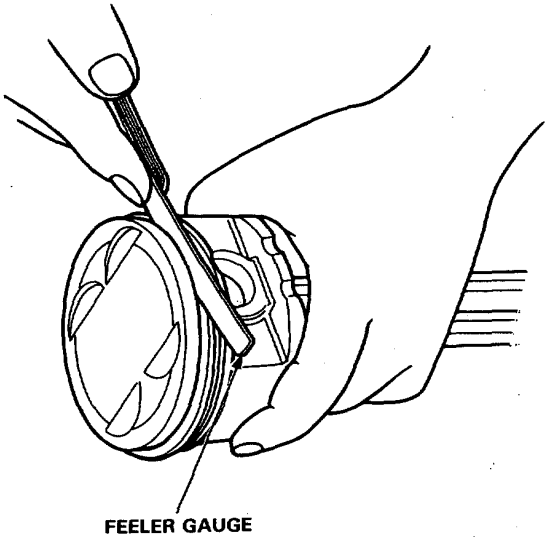

Alignment

1. Install the rings as shown on page 7-17.

   Identify top and second rings by the chamfer on the edge, and make sure they are in proper grooves on piston.

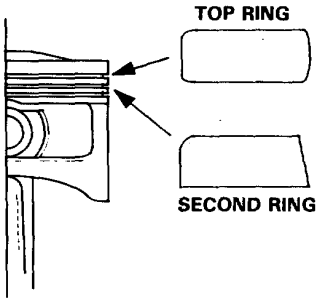

2. Rotate the rings in grooves to make sure they do not bind.

3. The manufacturing marks must be facing upward.

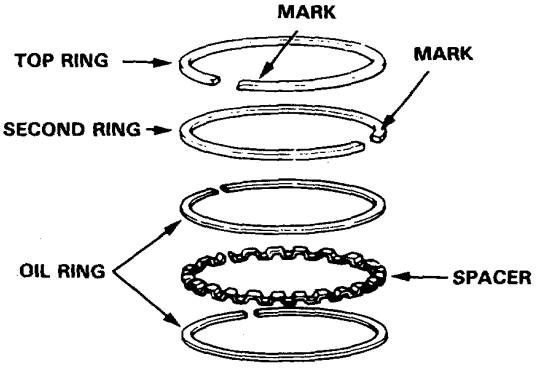

4. Position the ring end gaps as shown:

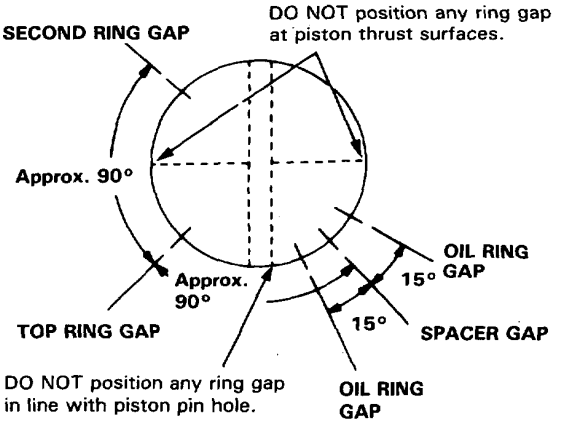

Installation

Before installing the piston, apply a coat of engine oil to the ring grooves and cylinder bores.

NOTE:
- Guide the piston carefully to prevent damage.
- Fit long rubber hoses (about 30 cm long) to connecting rod bolts to protect the crankshaft.
- Install the pistons after setting the crankshaft to BDC for each cylinder.

INCORRECT

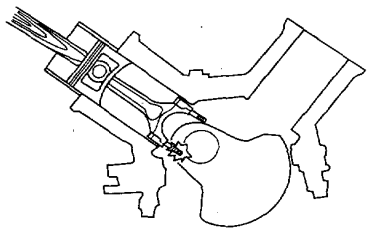

CORRECT

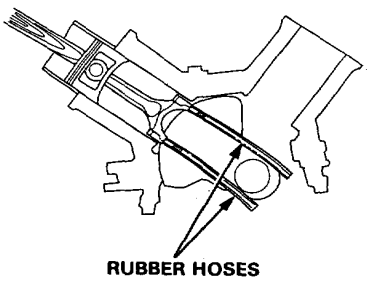

1. If the crankshaft is already installed:
   - Install the piston assemblies in No. 1 and No. 4 cylinders, No. 2 and No. 5 cylinders, and No. 3 and No. 6 cylinders.
   - Remove the connecting rod caps, then slip short sections of rubber hose over the threaded ends of the connecting rod bolts.
   - Install the ring compressor, check that the bearing is securely in place; then position the piston in the cylinder and drive it in using the wooden handle of a hammer.
   - Stop after the ring compressor pops free and check the connecting rod-to-crank journal alignment before driving rod into place.
   - Install the rod caps with bearings, and torque the nuts to 45 N·m (4.5 kg-m, 33 lb-ft).

2. If the crankshaft is not installed:
   - Remove the rod caps and bearings, install the ring compressor, then position the piston in the cylinder and drive it in using the wooden handle of a hammer.

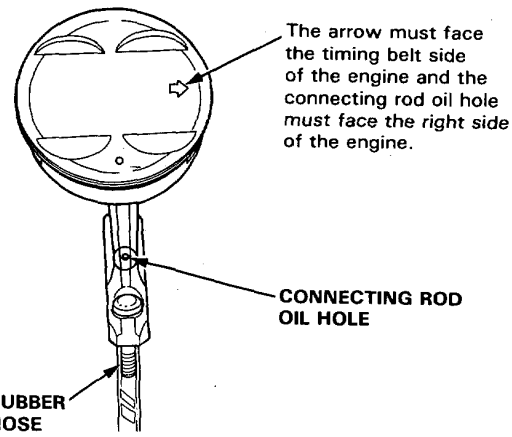

NOTE: Maintain downward force on ring compressor to prevent rings from expanding before entering the cylinder bore.

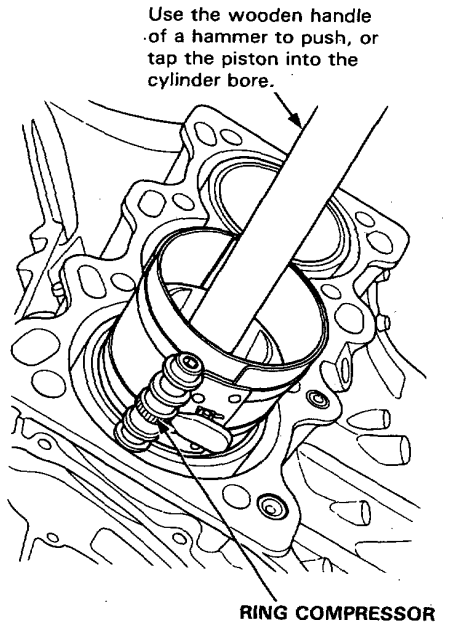

Oil Seal

Installation

The seal surface on the block should be dry. Apply a light coat of oil to the crankshaft and to the lip of seal.

1. Drive flywheel-end seal into the rear cover.

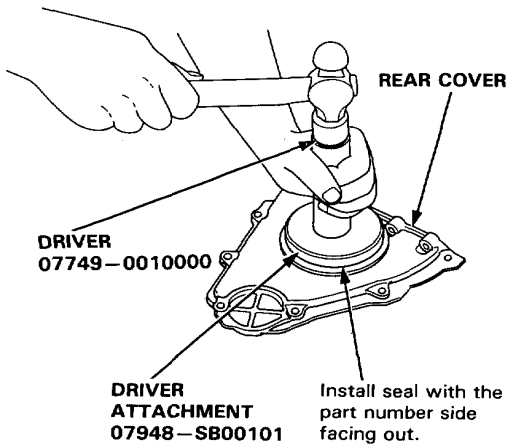

2. Confirm clearance is equal all the way around with a feeler gauge.

   Clearance: 0.2–0.5 mm (0.008–0.02 in)

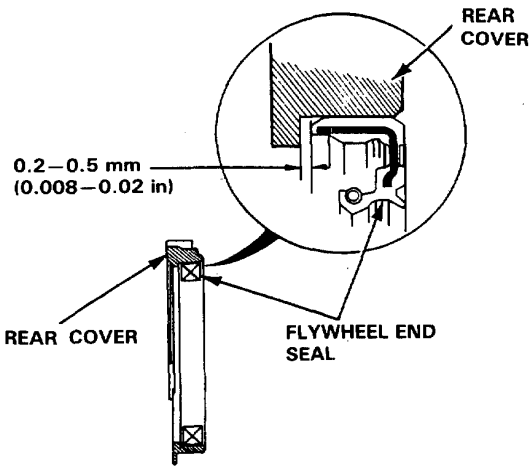

NOTE: Refer to page 8-12 for installation of the oil pump side oil seal.

Crankshaft

Installation

Before installing the crankshaft, apply a coat of engine oil to the main bearings and rod bearings.

1. Insert bearing halves in the engine block and connecting rods.
2. Lower the crankshaft into the block.

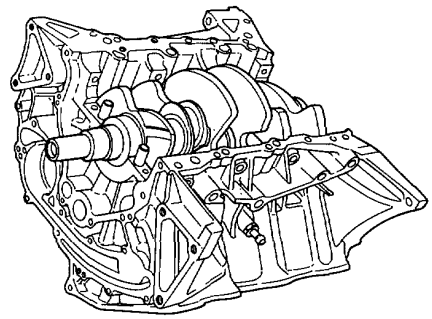

3. Install the thrust washers on the No. 4 journal. Oil thrust washer surfaces.

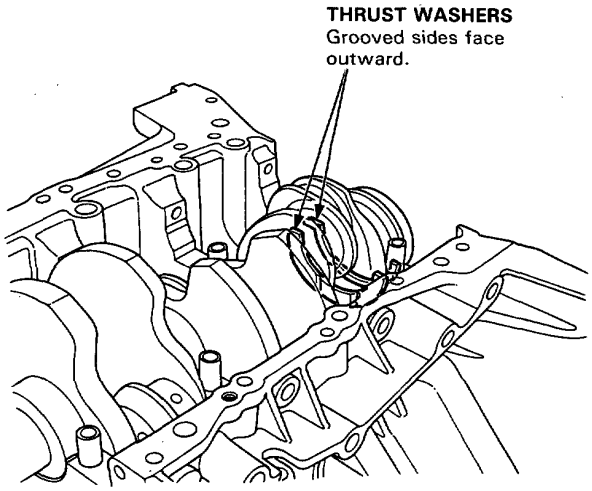

4. Install the bearings and caps. Torque the cap bolts.

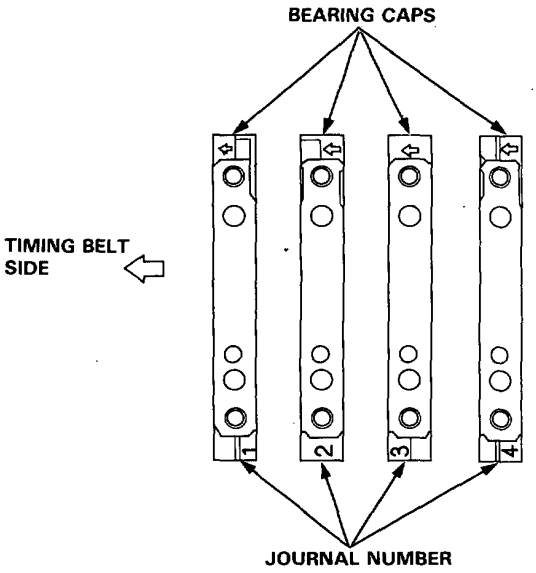

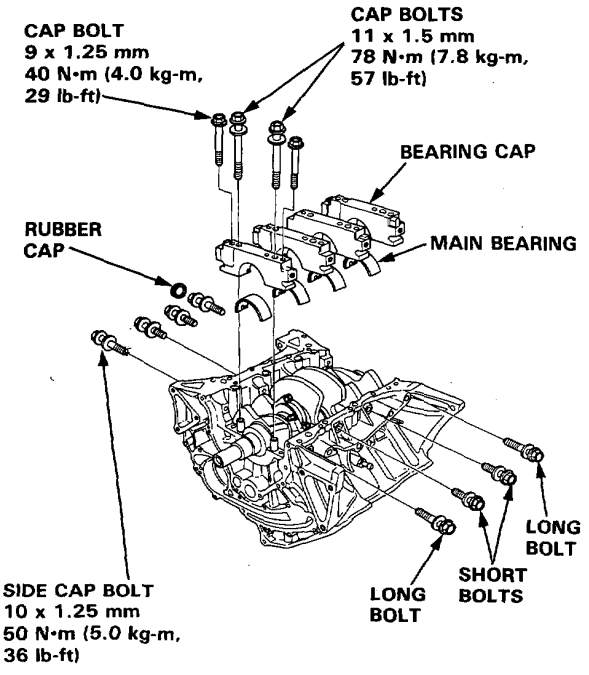

NOTE:
- Guide the piston carefully to prevent damage.
- Fit long rubber hoses (about 30 cm long) to connecting rod bolts to protect the crankshaft.
- Install the pistons after setting the crankshaft to BDC for each cylinder.

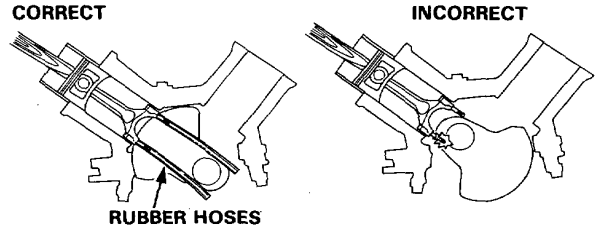

5. Check the rod bearing clearance with plastigage (page 7-7), then torque the connecting rod cap nuts.

NOTE: Reference numbers on connecting rods are for big-end bore tolerance and do NOT indicate the position of piston in engine.

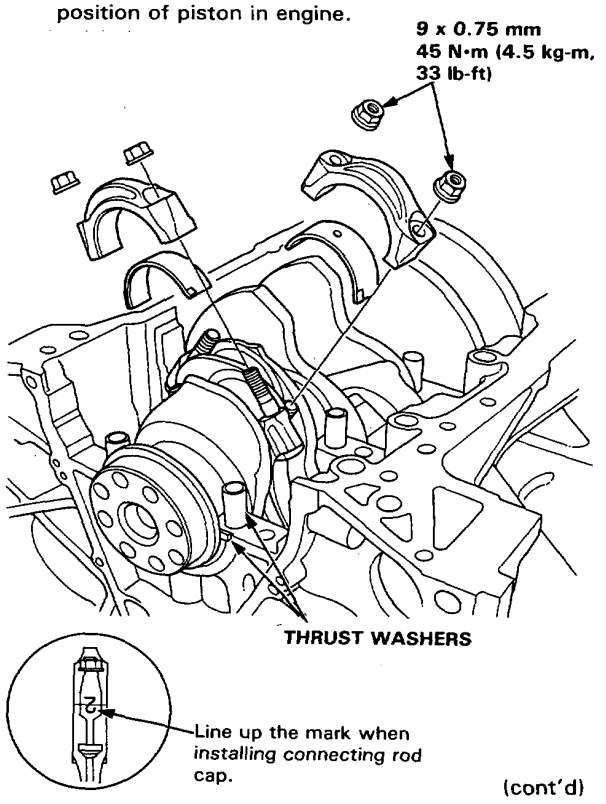

(cont'd)

Installation (cont'd)

6. Tighten 9 x 1.25 mm cap bolts to specified torque.

   Torque: 40 N·m (4.0 kg-m, 29 lb-ft)

7. Tighten 11 x 1.5 mm cap bolts to specified torque.

   Torque: 78 N·m (7.8 kg-m, 57 lb-ft)

8. Tighten 10 x 1.25 mm cap side bolts to specified torque.

   Torque: 50 N·m (5.0 kg-m, 36 lb-ft)

   - Coat the bolt thread and seat surface with engine oil.

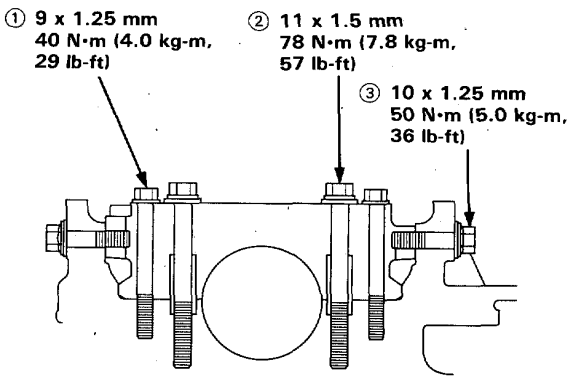

BEARING CAP BOLTS TORQUE SEQUENCE

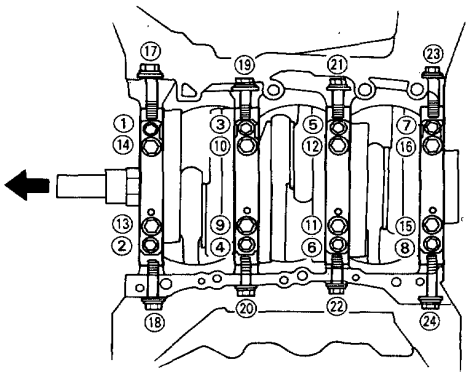

9. Apply liquid gasket to the block mating surface of the rear cover, then install it on the engine block.

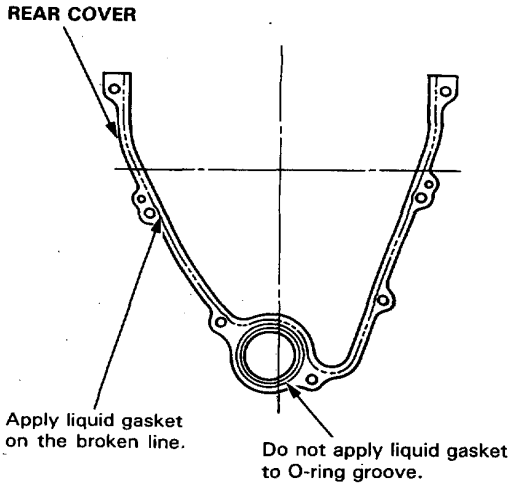

NOTE:
- Use liquid gasket, Part No. 0Y740–99986.
- Check that the mating surfaces are clean and dry before applying liquid gasket.
- Apply liquid gasket by starting with an even band, centered between edges of the mating surface.
- To prevent leakage of oil, apply liquid gasket to the inner threads of the bolt holes.
- Do not apply liquid gasket to O-ring grooves.
- Do not install the parts if 20 minutes or more have elapsed since applying liquid gasket. Instead, reapply liquid gasket after removing old residue.
- After assembly, wait at least 30 minutes before filling the engine with oil.

NOTE:
- Apply a light coat of oil to the crankshaft and to the lip of seal.
- Use a new O-ring and apply oil when installing it.
- Use new special bolts when installing the rear cover.

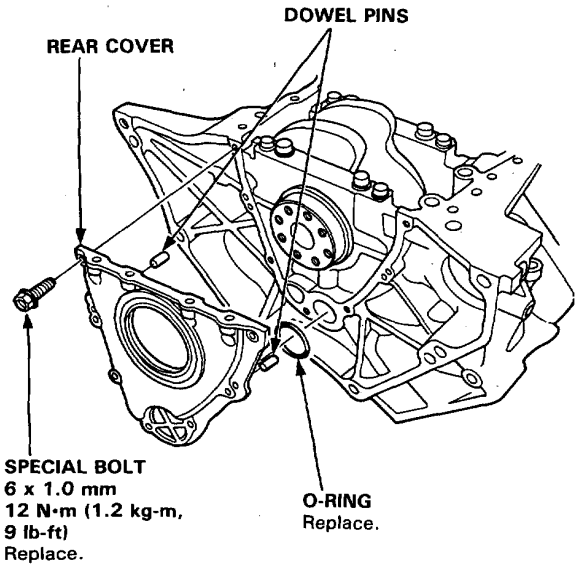

10. Apply liquid gasket to the block mating surface of the oil pump, then install it on the engine block.

    NOTE: Do not apply liquid gasket to O-ring grooves.

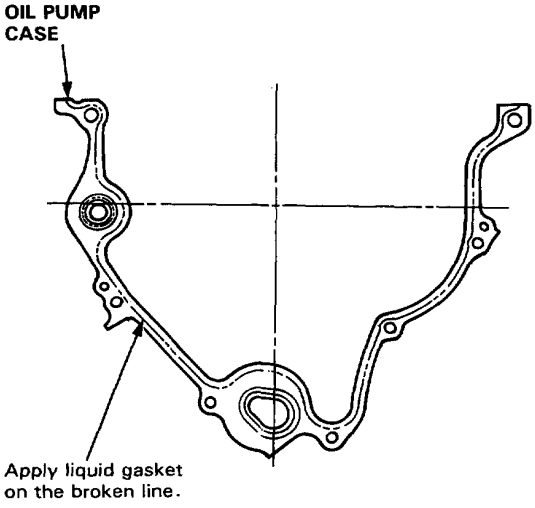

NOTE:
- Apply a light coat of oil to the crankshaft and to the lip of seal.
- Use new O-rings and apply oil when installing them.
- Use new special bolts when installing the oil pump case.

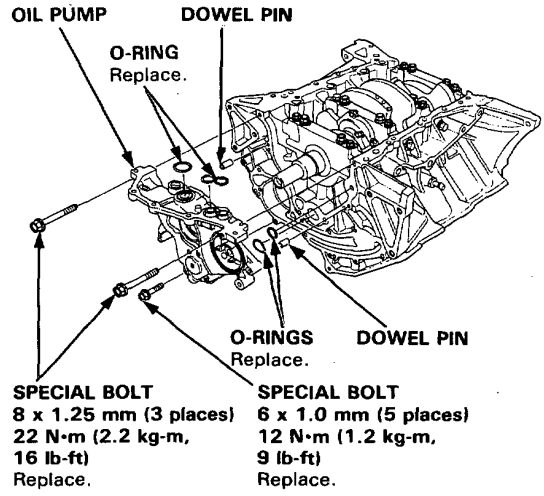

(cont'd)

Installation (cont'd)

11. Apply liquid gasket to the block mating surface of oil pan, then install it on the engine block.

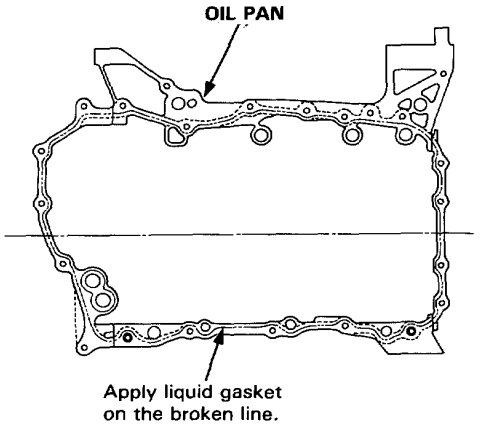

NOTE:
- Do not apply liquid gasket to O-ring grooves.
- Use new O-rings and apply oil when installing them.

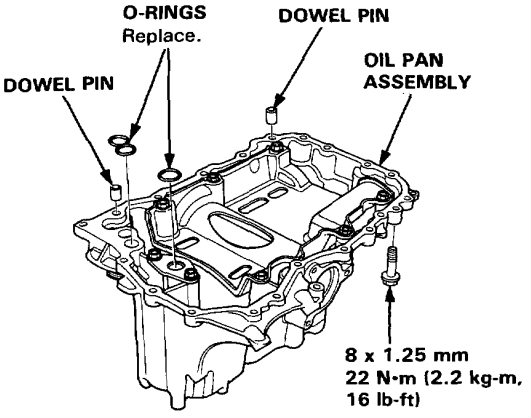

12. Tighten the oil pan bolts as shown.

OIL PAN BOLT TORQUE SEQUENCE

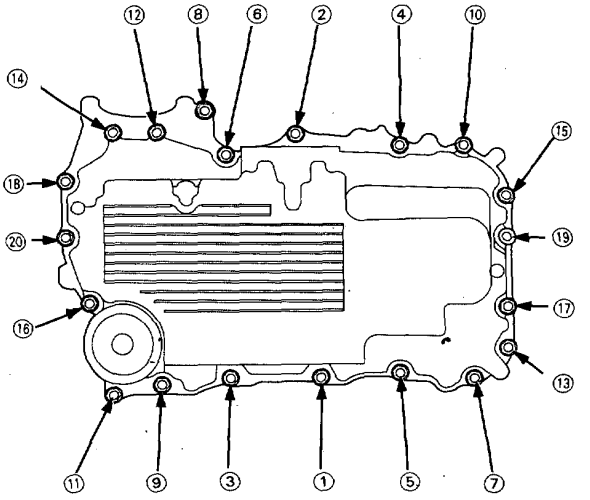

Engine Lubrication

Special Tools 8-2
Illustrated Index 8-3
Oil Level Inspection 8-4
Oil Replacement 8-4
Oil Filter Replacement 8-5
Oil Pressure Test 8-5
Oil Pan Removal/Installation 8-6
Oil Pump Illustrated Index 8-10
Oil Pump Removal/Inspection 8-11

Special Tools

Ref. No.	Tool Number	Description	Qty	Page Reference
①	07LAC–PW50100	Extension Shaft Puller	1	8-7
②	07MAC–SL00100	Ball Joint Remover, 32 mm	1	8-6
③	07MAF–PY40100	Extension Shaft Installer	1	8-9
④	07406–0030000	Oil Pressure Gauge Adapter	1	8-5
⑤	07746–0010500	Driver Attachment, 62 x 68 mm	1	8-12
⑥	07749–0010000	Driver	1	8-12
⑦	07912–6110001	Oil Filter Socket	1	8-5

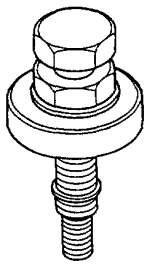

①

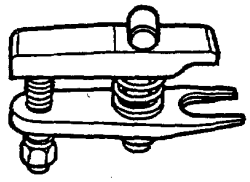

②

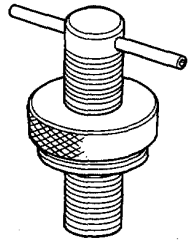

③

④

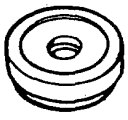

⑤

⑥

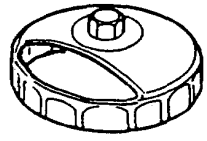

⑦

Engine Lubrication

Illustrated Index

NOTE:
- Use new O-rings when reassembling.
- Apply oil to O-rings before installation.
- Use liquid gasket, Part No. 0Y740—99986

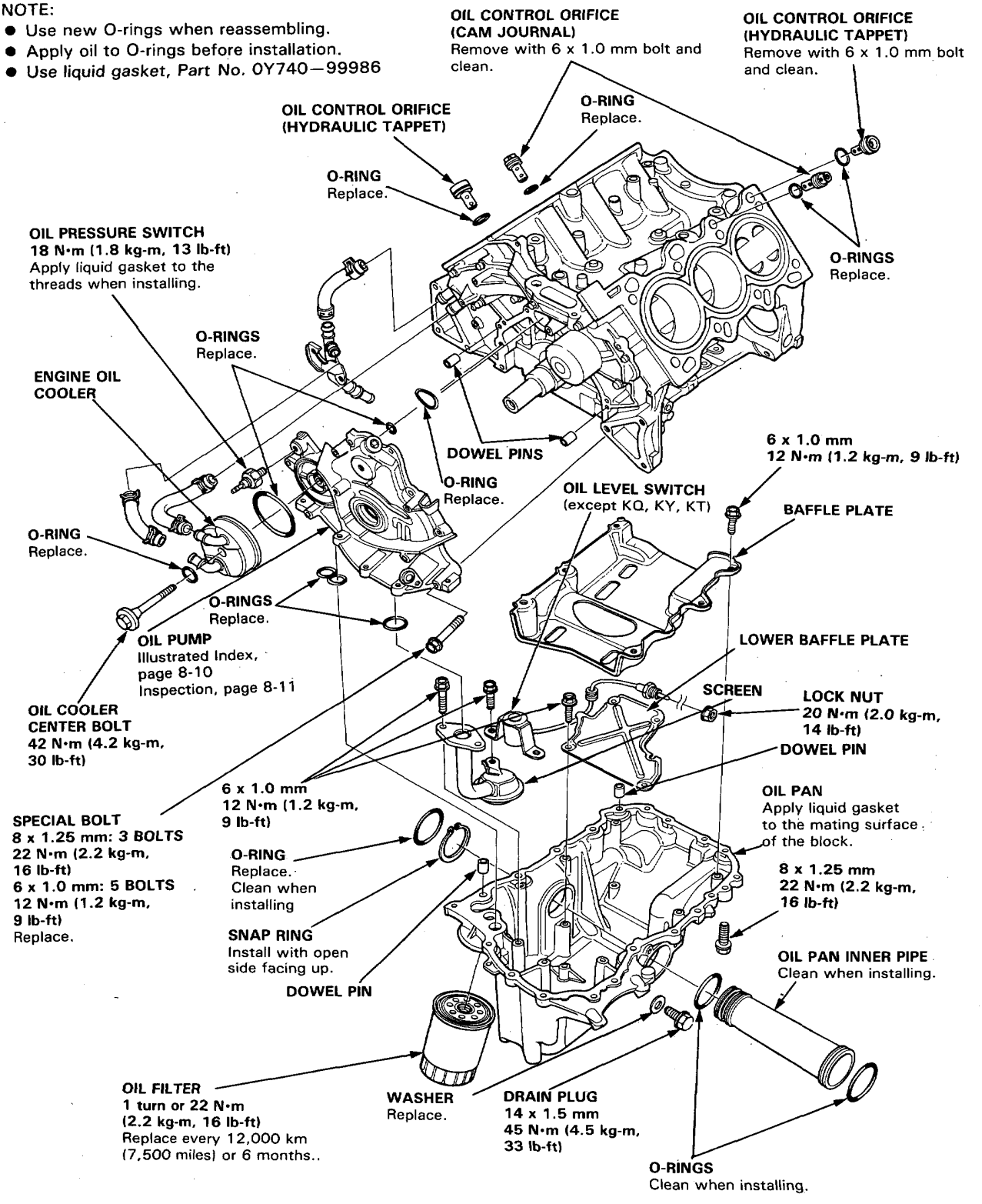

Oil Level

Inspection

1. Check engine oil with the engine off and the car parked on level ground.
2. Make certain that the oil level indicated on the dipstick is between the upper and lower marks.
3. If the level has dropped close to the lower mark, add oil until it reaches the upper mark.

   CAUTION: Insert the dipstick carefully to avoid bending it.

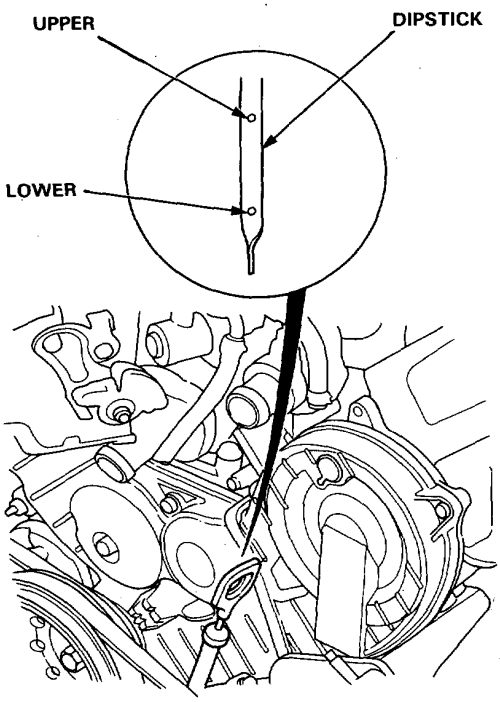

Engine Oil

Replacement

1. Warm up the engine.
2. Drain the engine oil.

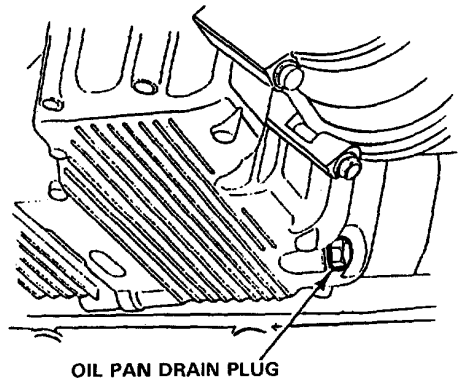

OIL PAN DRAIN PLUG
45 N•m (4.5 kg-m, 33 lb-ft)

3. Reinstall the drain plug with a new washer, and refill with the recommended oil.

Requirement	API Service Grade: SG or SF Fuel Efficient Oil Viscosity: 10 W–30 recommended see chart below.
Capacity	4.7 ℓ (4.9 US qt, 4.1 Imp qt) at change, including filter. 5.0 ℓ (5.3 US qt, 4.4 Imp qt) after engine overhaul.
Change	Every 10,000 km (6,000 miles) or 6 months whichever comes first.

Engine Oil Viscosity for Outside Temperature Ranges.

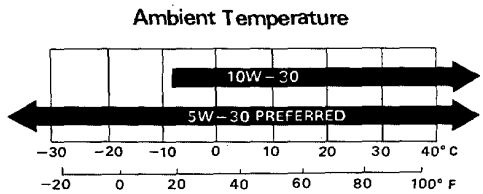

NOTE:
- Oil filter should be replaced at each oil change.

4. After refilling the engine oil replace the oil filler cap and tighten it until it clicks twice.

Oil Filter

Replacement

CAUTION: Loosen the oil filter carefully while the engine is hot, the hot oil may cause scalding.

1. Remove the oil filter with the special tool as shown.

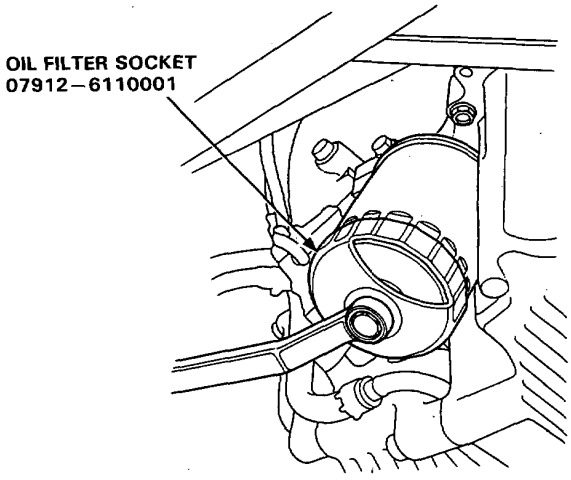

2. Inspect the threads and rubber seal on the new filter. Wipe off seat on oil filter base, then apply a light coat of oil to the rubber seal, and install filter.

3. After rubber seal is seated, tighten the oil filter by turning approximately one turn.

   Torque: One turn (22 N·m (2.2 kg-m, 16 lb-ft)).

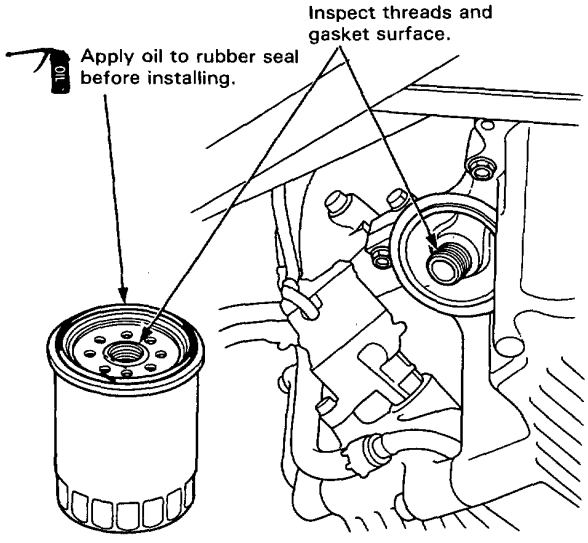

4. Start the engine and check the filter for oil leakage.

Oil Pressure

Test

If the oil pressure warning light stays on with the engine running, check the engine oil level. If the oil level is correct:

1. Remove the oil pressure sender and install an oil pressure gauge.

2. Start the engine and allow to reach operating temperature (fan comes on at least twice).

3. Pressure should be:

   Engine Oil Pressure:
   At Idle: 70 kPa (0.7 kg/cm², 10 psi) minimum
   At 3,000 rpm: 350 kPa (3.5 kg/cm², 50 psi) minimum

   - If oil pressure is within specifications, replace oil pressure sender and recheck.
   - If oil pressure is NOT within specifications, inspect oil pump (page 8-11).

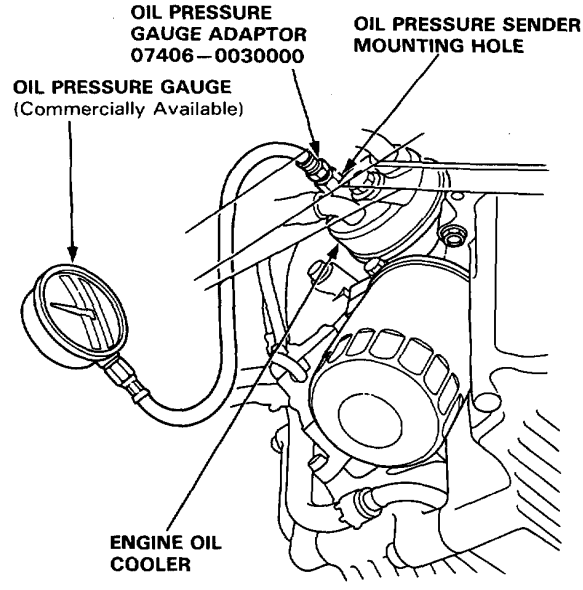

Oil Pan

Removal

Engine removal is not required in this procedure.

⚠WARNING

- **Make sure jacks and safety stands are placed properly and hoist brackets are attached to the correct positions on the engine (page 1-6).**
- **Apply parking brake and block rear wheels so the car will not roll off stands while you are working under it.**

CAUTION:

- **Use fender covers to avoid damaging painted surfaces.**
- **Disconnect wiring connectors carefully to avoid damage.**
- **Mark the wiring and hoses to avoid misconnection.**
  Be sure they do not contact other wiring or hoses or interfere with other parts.

1. Disconnect the battery negative terminal first then the positive terminal. Remove the battery.

2. Remove the radiator cap.

   ⚠WARNING Use care when removing the radiator cap to avoid scalding by hot coolant or steam.

3. Remove the front wheels.

4. Remove the damper forks.

5. Disconnect the suspension lower arm balljoints with the special tool. Refer to section 18 for the proper procedure.

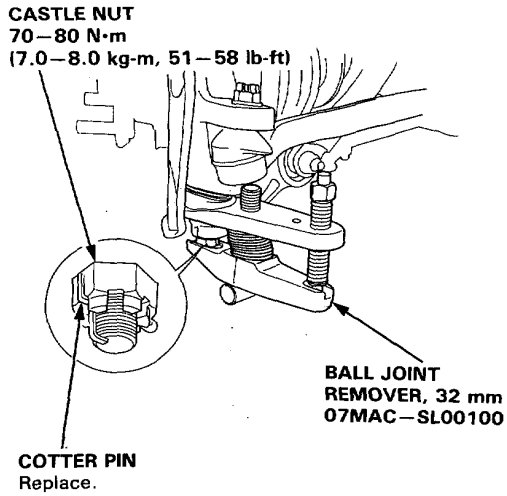

6. Remove the driveshafts. Suspend them with a rope as shown.

   NOTE: Coat all precision finished surfaces with clean engine oil or grease. Tie plastic bags over the driveshaft ends.

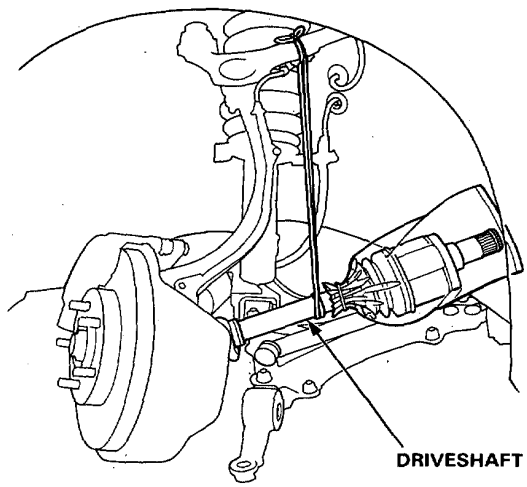

7. Raise the hoist to full height.

8. Remove the engine splash shield and the lower plate under the rear beam.

9. Drain the engine oil. Reinstall the drain plug using a new washer.

10. Loosen the radiator drain plug and drain the coolant.

11. Drain the differential oil. Use a 3/8" drive socket wrench to remove the drain plug. Reinstall the drain plug using a new washer.

LHD is shown (RHD) is symmetrical):

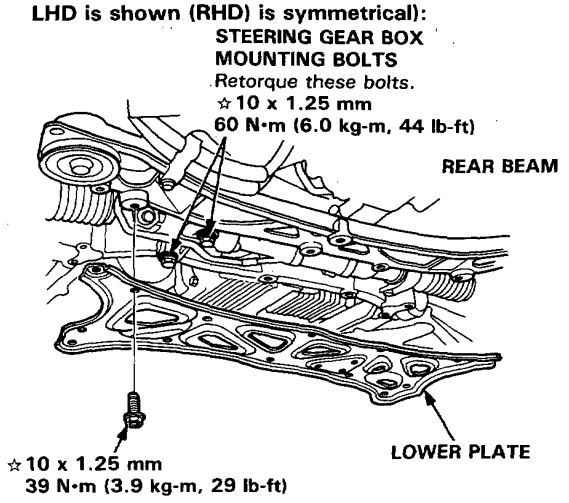

12. Remove the power steering speed sensor.
    - Do not disconnect the oil hoses.

13. Disconnect the differential oil cooler hoses.

14. Remove the secondary cover and 36 mm sealing bolt.

    NOTE: Shift to low gear or [P] position to lock the secondary shaft.

15. Disconnect the extension shaft from the differential with the special tool.

16. Remove the mounting bolts and 26 mm shim, then remove the differential assembly.

17. Loosen the adjusting nut, then remove the air conditioner belt and the compressor.

18. Remove the intermediate shaft.

19. Remove the engine stiffener.

20. Remove the flywheel cover or the drive plate cover.

21. Remove the oil pan.

☆: CORROSION RESISTANT BOLT

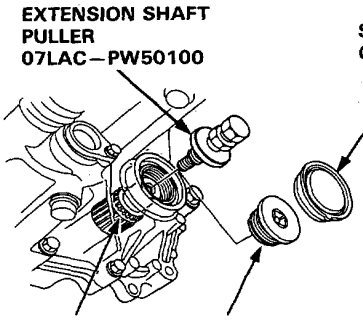

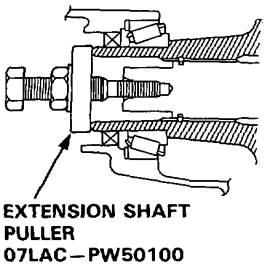

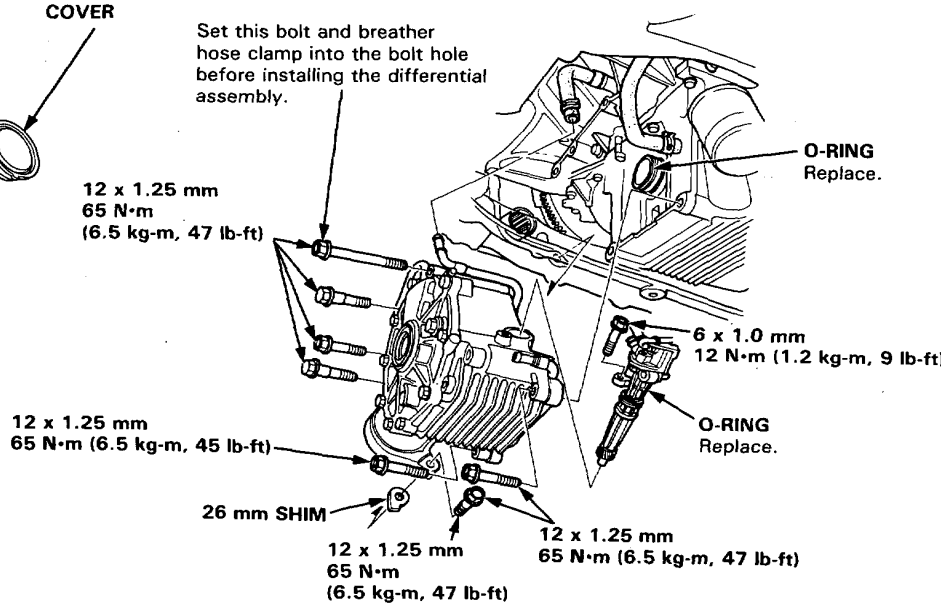

Oil Pan

Installation

Install the oil pan in the reverse order of removal:
- Always use new O-rings.
- Oil pan and engine block mating surface must be clean.

1. Apply liquid gasket to the block mating surface, then install the oil pan.

   NOTE:
   - Use liquid gasket, Part No. 0Y740–99986.
   - Check that the mating surfaces are clean and dry before applying liquid gasket.
   - Apply liquid gasket evenly, in a narrow bead centered on the mating surface.
   - Do not apply liquid gasket to O-ring grooves.
   - To prevent leakage of oil, apply liquid gasket to the inner threads of the bolt holes.
   - Do not install the parts if 20 minutes or more have elapsed since applying liquid gasket. Instead, reapply liquid gasket after removing old residue.
   - After assembly, wait at least 30 minutes before filling the engine with oil.

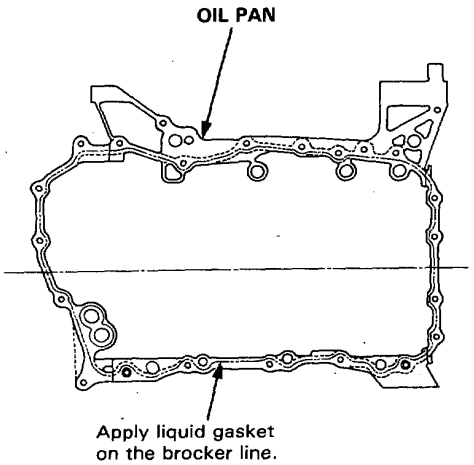

NOTE: Use new O-rings. Apply oil to O-rings before installation.

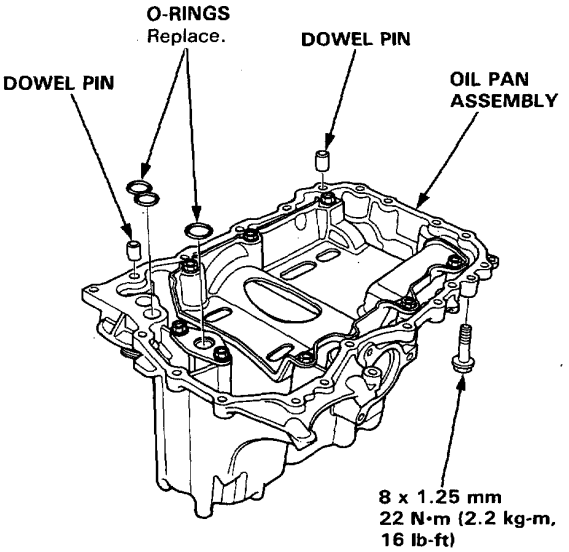

2. Tighten the oil pan bolts as shown.

OIL PAN BOLT TORQUE SEQUENCE

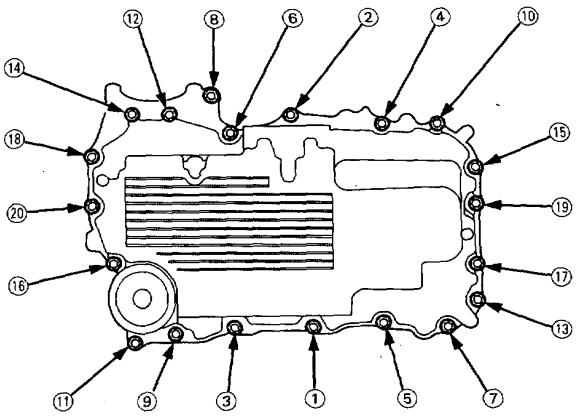

3. Install the differential assembly.
   - Select the appropriate 26 mm shim whenever the oil pan or the cylinder block is replaced. Refer to section 15 for selection of the correct 26 mm shim.
4. Apply grease to the spline of the extension shaft, then install the new set ring.

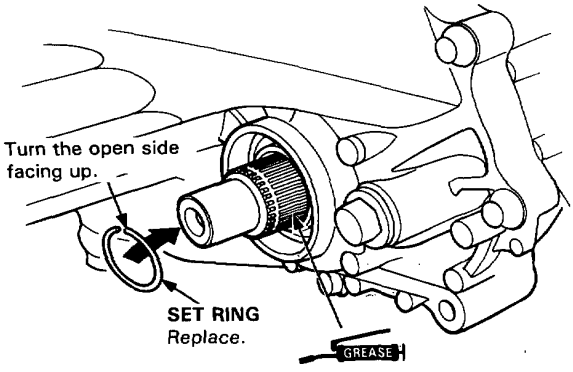

5. Install the extension shaft with the special tool.

   NOTE: Make sure the extension shaft locks in place.

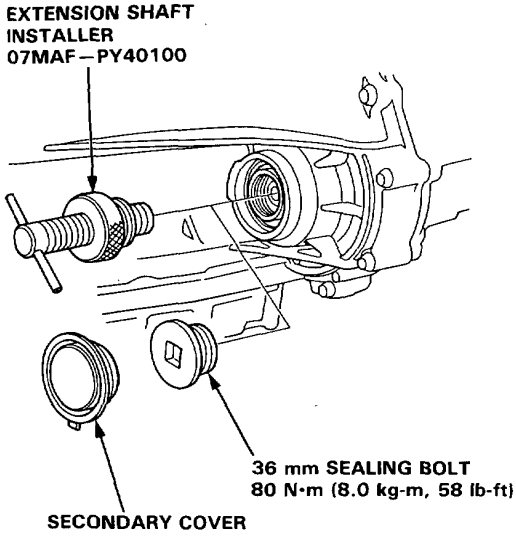

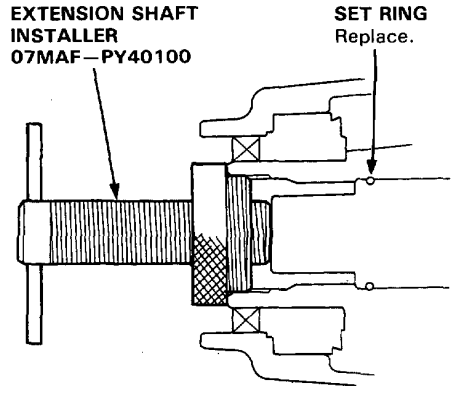

6. Fill the cavity with Honda genuine UM264 grease.

7. Reinstall the 36 mm sealing bolt and the secondary cover.
   - Apply liquid gasket (P/N 0Y740—99986) to the sealing bolt threads.

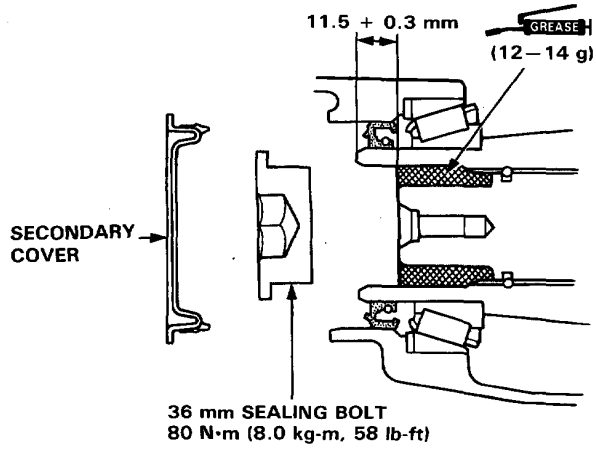

8. Check the following items after reassembly.
   - Refill hypoid gear oil in the differential.
   - Refill engine oil.
   - Refill coolant in the cooling system.
   - The set rings on the driveshafts are completely inserted into the groove of the differential or intermediate shaft.
   - Adjust the A/C belt tension.

Oil Pump

Illustrated Index

NOTE:
- Use new O-rings when reassembling.
- Apply oil to O-rings before installation.

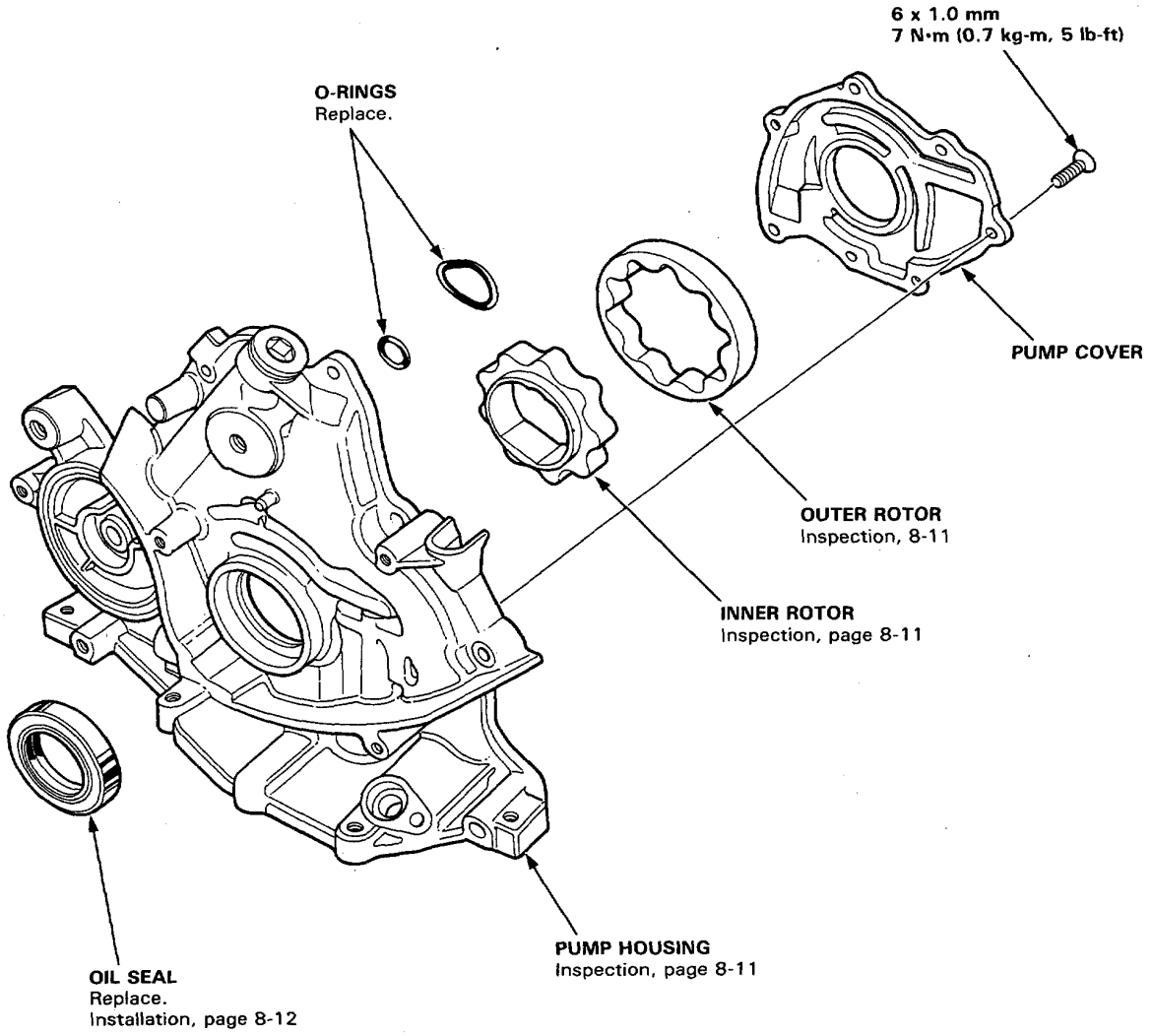

Removal/Inspection

1. Drain the engine oil and the differential oil.
2. Turn the crankshaft to TDC.
3. Remove the timing belt (page 6-28).
4. Remove the oil pan (page 8-6).
5. Remove the special bolts, then remove the oil pump assembly.

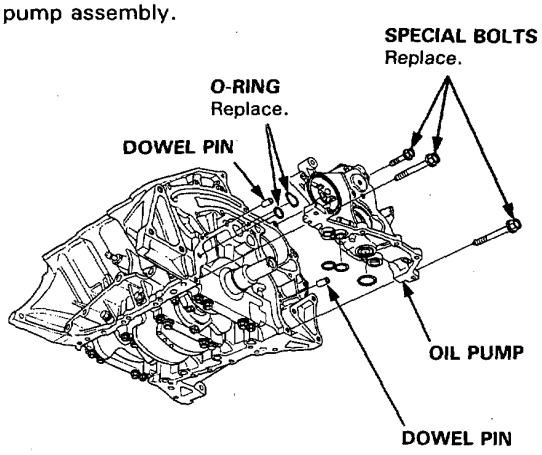

6. Remove the seven screws from the pump housing, then separate the housing and cover.
7. Check the radial clearance on the pump rotor.

Inner-to-Outer Rotor Clearance
Standard (New): 0.04–0.16 mm (0.002–0.006 in)
Service Limit: 0.20 mm (0.008 in)

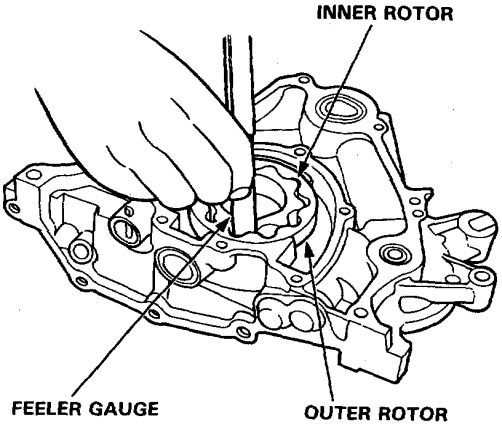

8. Check the axial clearance on the outer pump rotor.

Housing-to-Rotor Axially Clearance
Standard (New): 0.02–0.07 mm (0.001–0.003 in)
Service Limit: 0.12 mm (0.005 in)

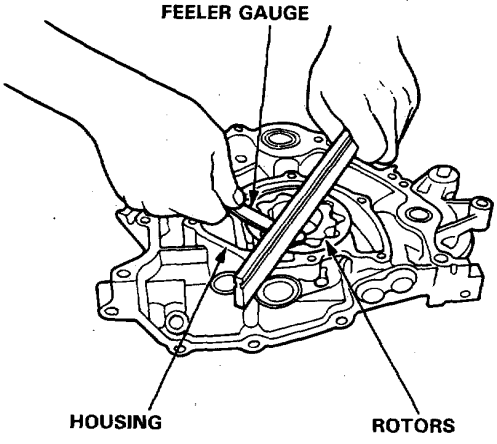

(cont'd)

Removal/Inspection (cont'd)

9. Check the radial clearance between the housing and the outer rotor.

Housing-to-Outer Rotor Clearance
Standard (New): 0.10—0.18 mm (0.004—0.007 in)
Service Limit: 0.20 mm (0.008 in)

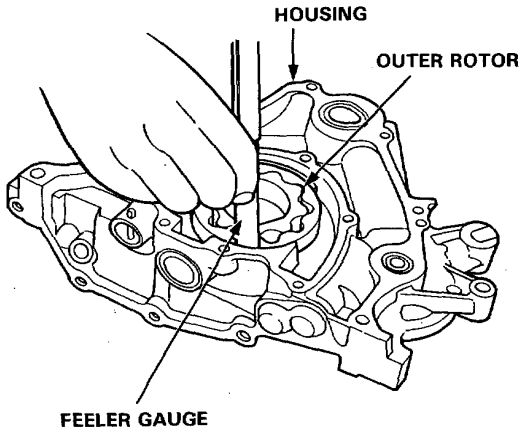

10. Inspect both rotors and pump housing for scoring or other damage. Replace parts if necessary.

11. Remove the old oil seal from the oil pump.

12. Gently tap in the new oil seal until the tool bottoms on the pump using the special tools.

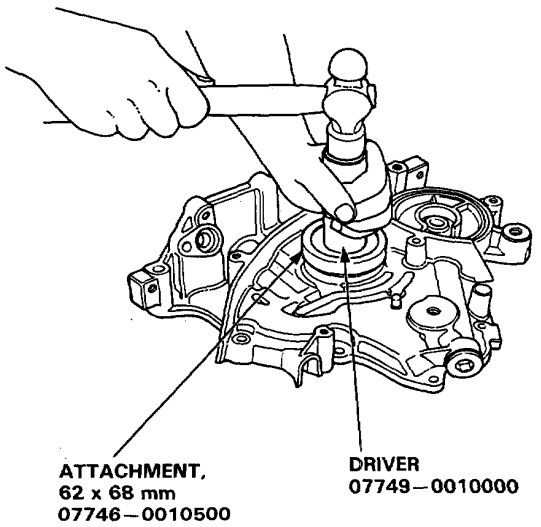

13. Reassemble the oil pump, applying liquid gasket to the pump housing screws.

14. Check that the oil pump turns freely.

15. Apply a light coat of oil to the seal lip.

16. Install the two dowel pins and new O-ring on the cylinder block.

17. Apply liquid gasket to the cylinder block mating surface of the oil pump.

NOTE:
- Use liquid gasket, Part No. 0Y740—99986.
- Check that the mating surfaces are clean and dry before applying liquid gasket.
- Apply liquid gasket evenly, in a narrow bead centered on the mating surface.
- Do not apply liquid gasket to the O-ring grooves.
- To prevent leakage of oil, apply liquid gasket to the inner threads of the bolt holes.

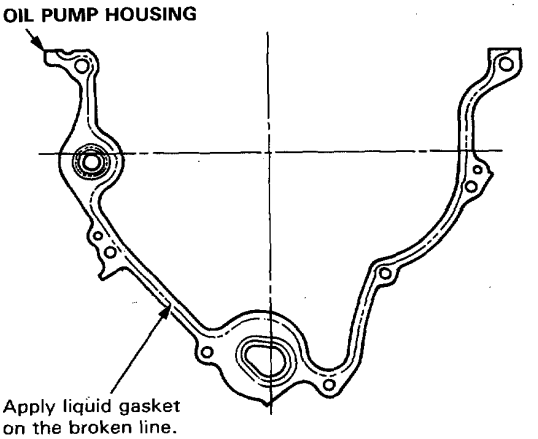

- Do not install the parts if 20 minutes or more have elapsed since applying liquid gasket. Instead, reapply liquid gasket after removing old residue.
- After assembly, wait at least 30 minutes before filling the engine with oil.

18. Install the oil pump assembly to the engine block.

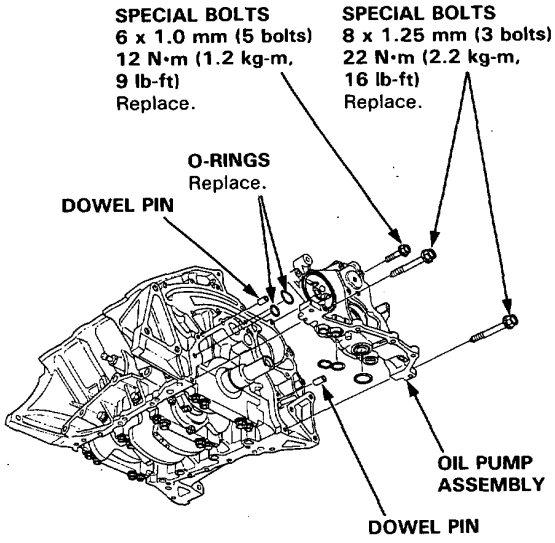

19. Install the oil pan (page 8-8).

20. Install the timing belt.

Intake Manifold/Exhaust System

Intake Manifold 9-2
Exhaust Manifold 9-3
Exhaust Pipe and Muffler 9-4

Intake Manifold

Replacement

NOTE: Use new gaskets and O-rings when reassembling.

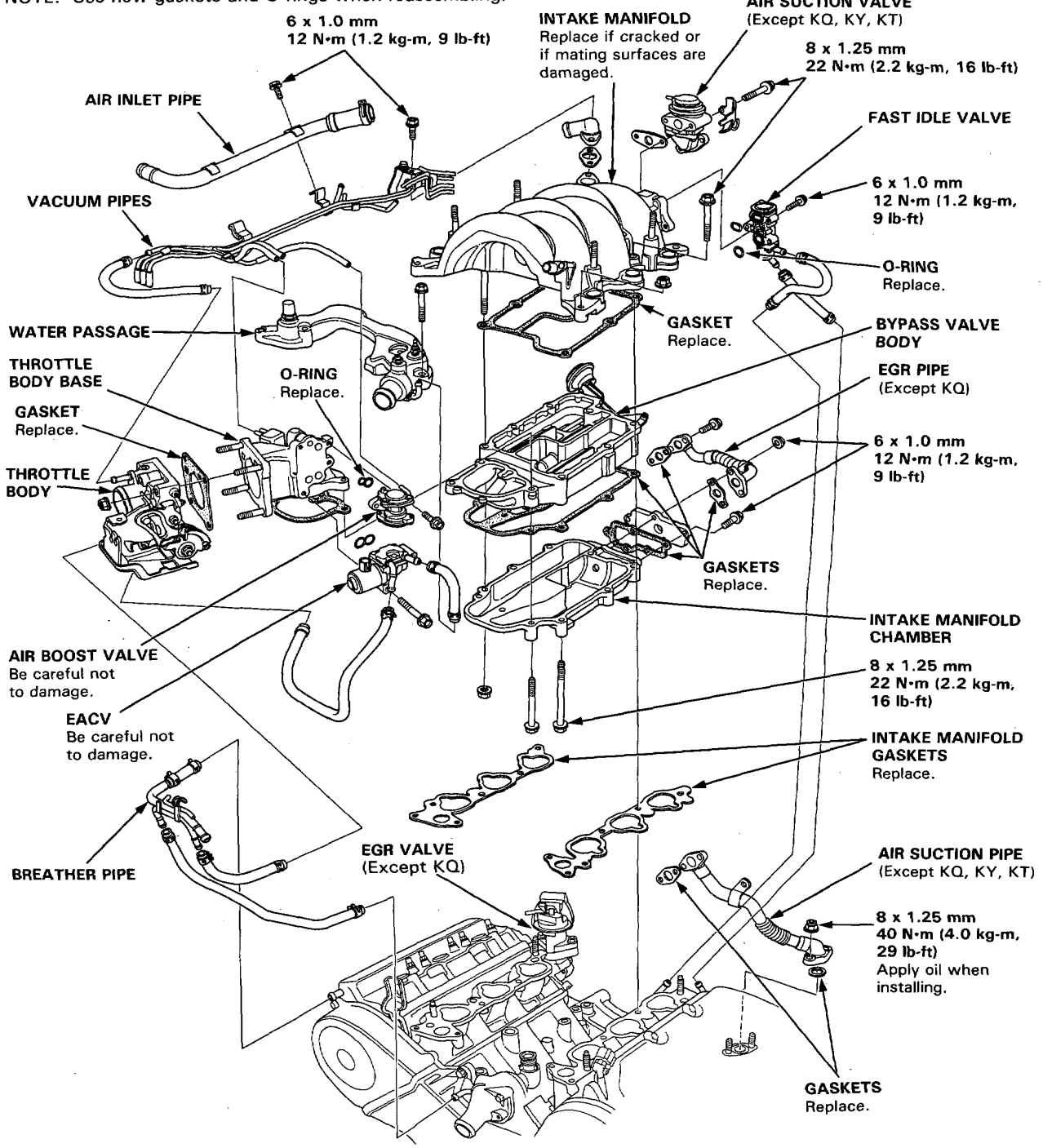

Exhaust Manifold

Replacement

NOTE: Use new gaskets and new self-locking nuts when assembling.

LEFT:

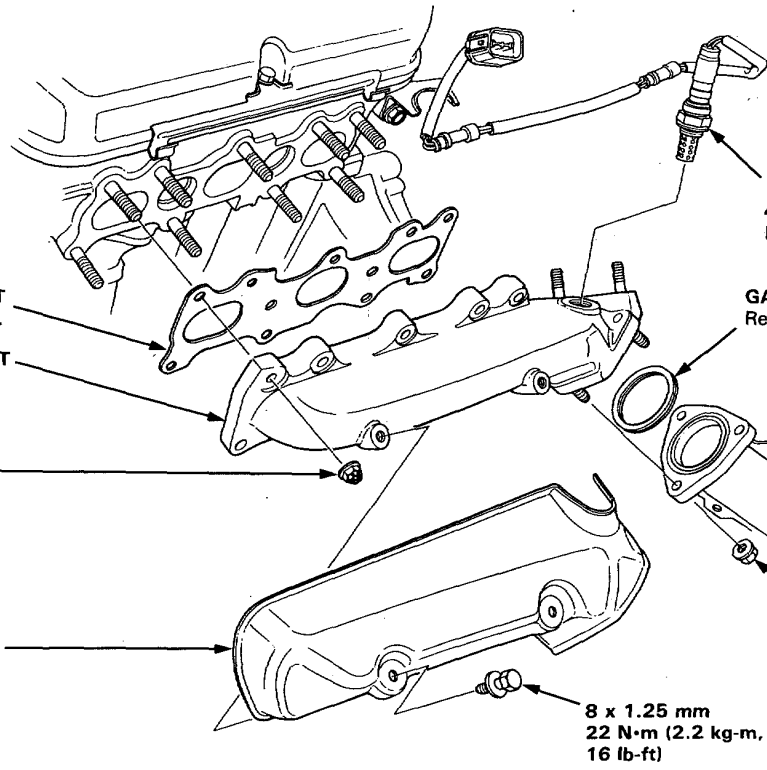

RIGHT:

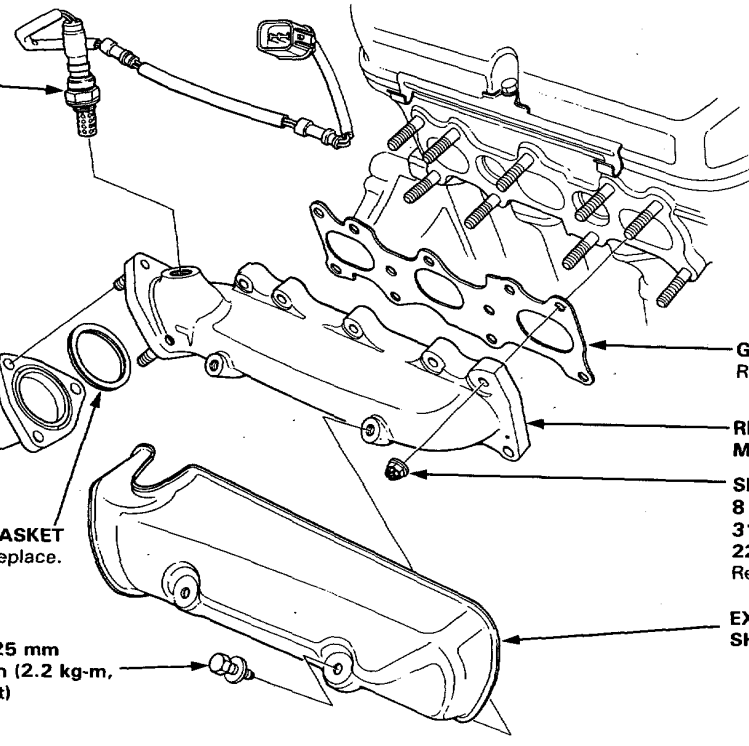

Exhaust Pipe and Muffler

Replacement

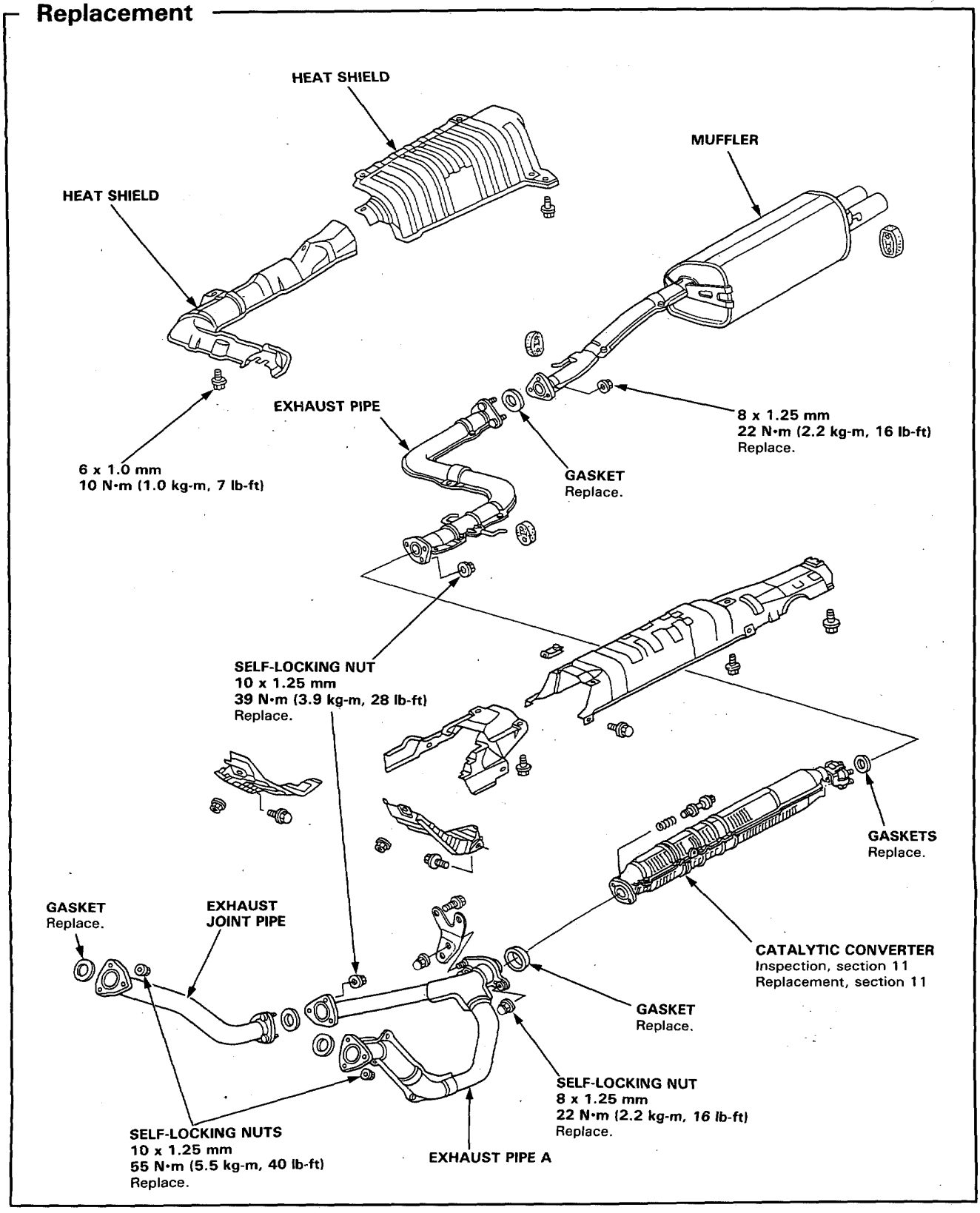

Cooling

Illustrated Index 10-2
Radiator
  Replacement 10-4
  Refilling and Bleeding 10-5
  Cap Testing 10-6
  Pressure Testing 10-6
Thermostat
  Replacement 10-7
  Testing 10-7
Water Pump
  Illustrated Index 10-8
  Inspection 10-9
  Replacement 10-9

Cooling

Illustrated Index

⚠WARNING System is under high pressure when engine is hot. To avoid danger of releasing scalding coolant, remove cap only when engine is cool.

Total Cooling System Capacity (Including heater and reservoir):
Manual: 8.7 ℓ (2.30 US gal, 1.91 Imp gal)
Automatic: 8.7 ℓ (2.30 US gal, 1.91 Imp gal)

NOTE:
- Check all cooling system hoses for damage, leaks or deterioration and replace if necessary.
- Check all hose clamps and retighten if necessary.
- Use new O-rings when reassembling.

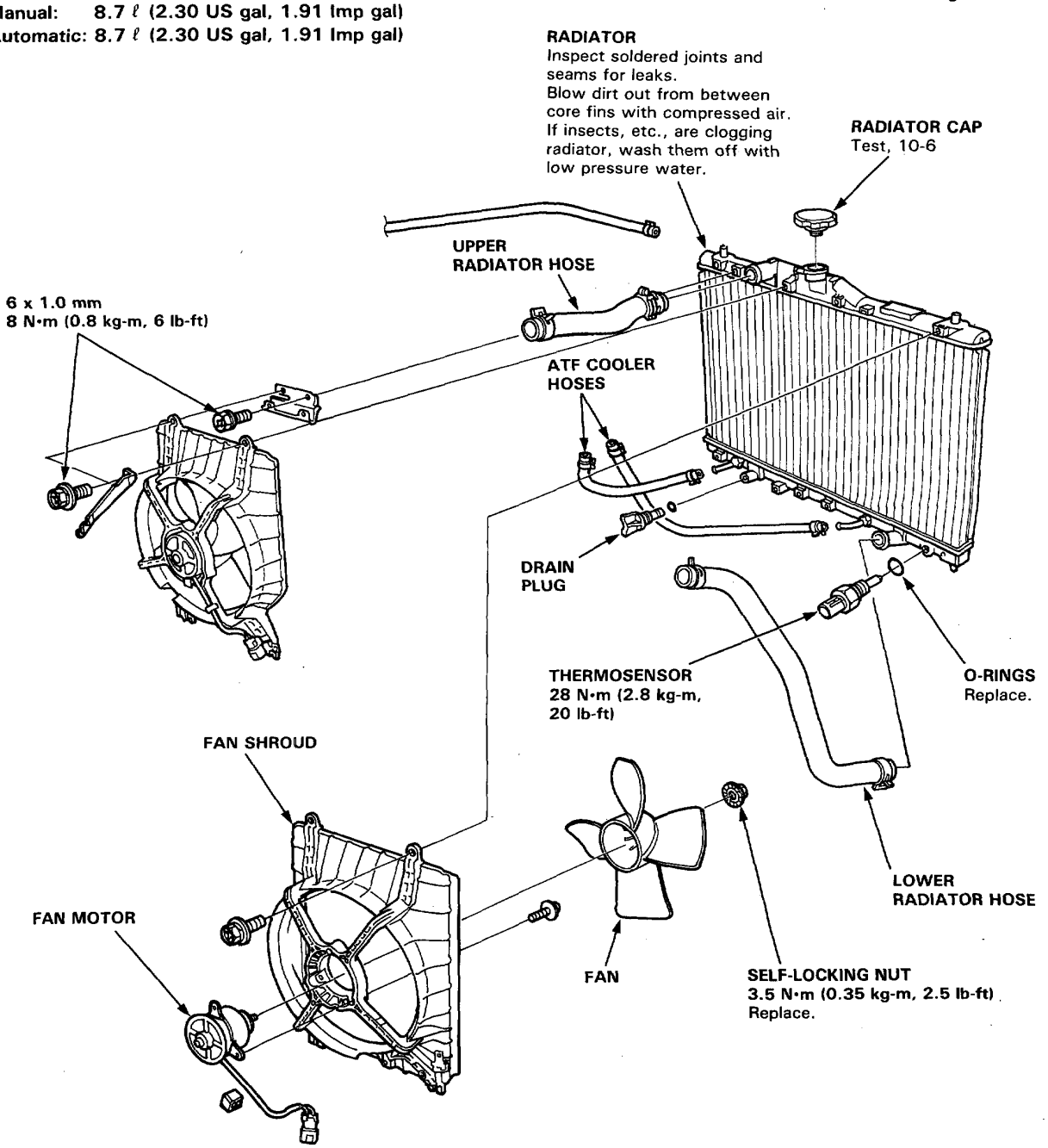

ENGINE CONNECTIONS

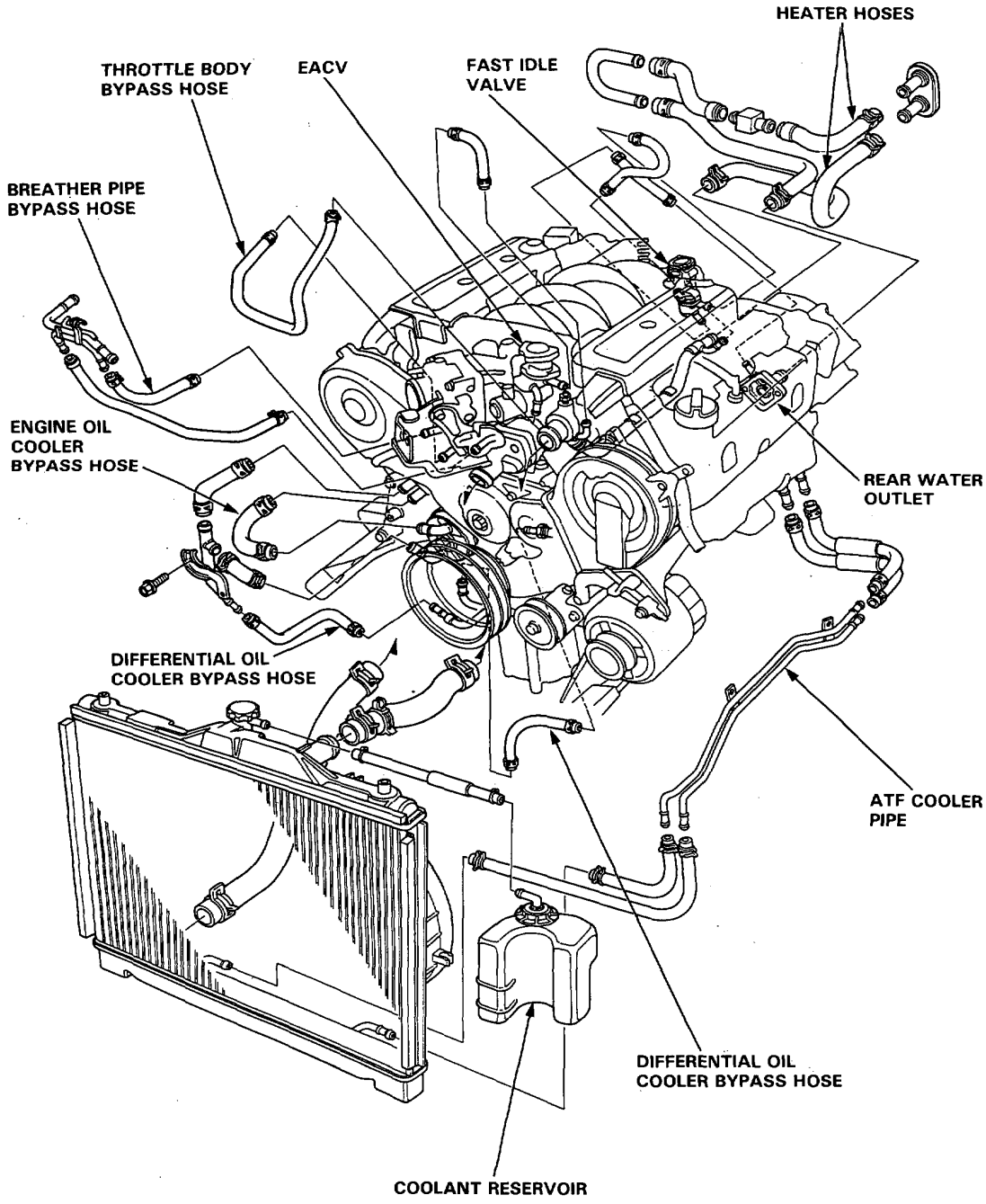

Radiator

Replacement

1. Drain the radiator coolant.
2. Remove the upper and lower radiator hoses, and ATF cooler hoses.
3. Disconnect the fan motor connectors and the thermosensor connector.
4. Remove the radiator upper brackets, then pull up the radiator.
5. Remove the fan shroud assemblies and other parts from radiator.

Install the radiator in the reverse order of removal:

NOTE:
- Set the upper and lower cushions securely.
- Fill the radiator and bleed the air.

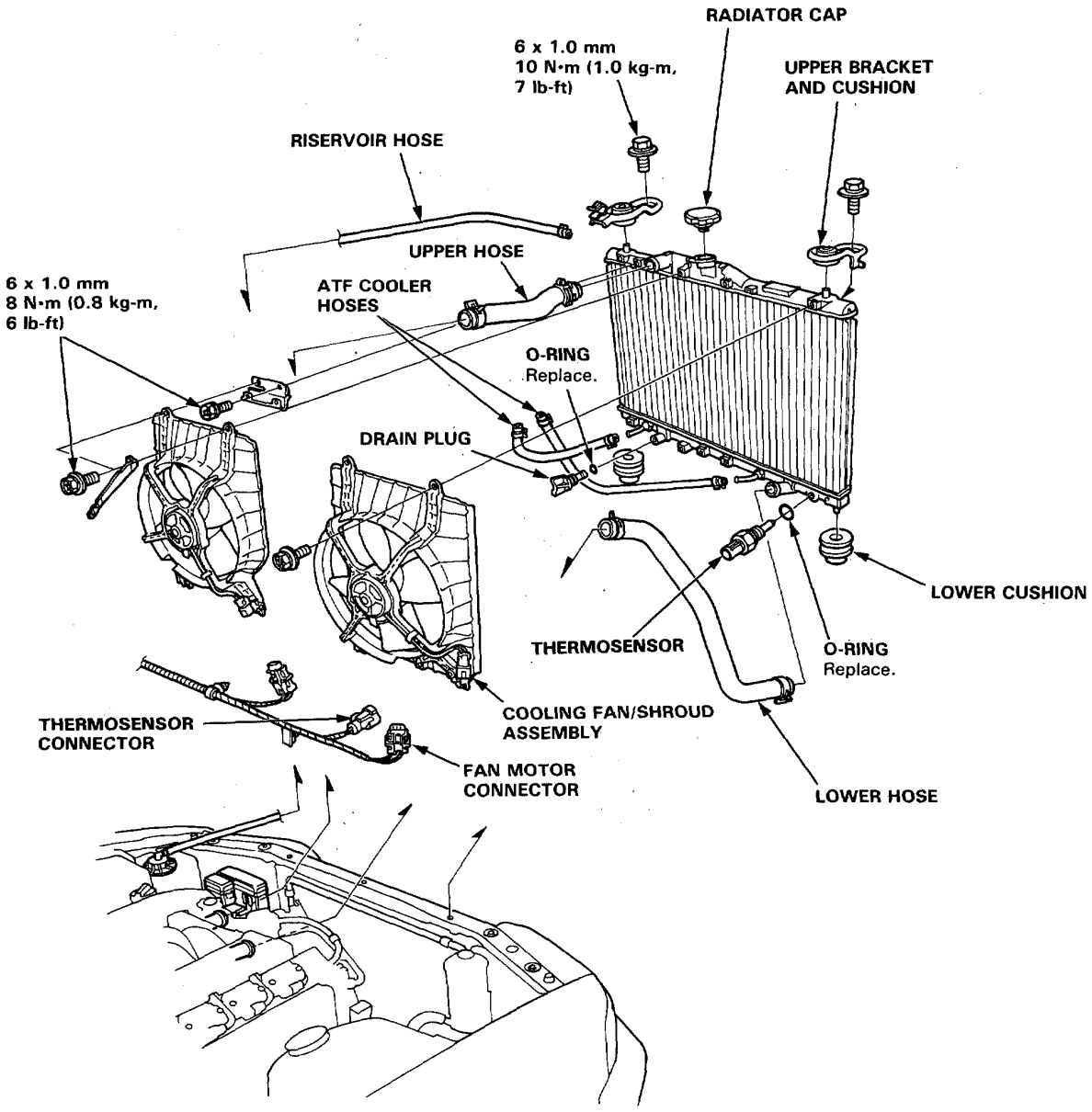

Refilling and Bleeding

⚠WARNING Removing the radiator cap while the engine is hot can cause the coolant to spray out, seriously scalding you. Always let the engine and radiator cool down before removing the radiator cap.

CAUTION: When pouring coolant, be sure to shut the relay box lid and not let coolant spill on the electrical parts or the paint. If any coolant spills, rinse it off immediately.

NOTE:
- Perform this when the engine is cool.
- Before replacing the coolant, turn the ignition ON, slowly turn the climate control temperature knob to 90° and turn off the ignition. This will allow the coolant in the heater to drain out with the rest of the system.

1. When the radiator is cool, remove the radiator cap.
2. Loosen the drain plug, and drain the radiator coolant.
3. Retighten the drain plug securely.
4. Remove, drain and reinstall the reservoir. Fill the reservoir halfway to the MAX mark with water, then up to the MAX mark with coolant.
5. Mix the recommended anti-freeze/coolant with an equal amount of water in a clean container.

   NOTE:
   - Use only HONDA-RECOMMENDED anti-freeze/coolant.
   - For best corrosion protection, the coolant concentrations must be maintained year-round at 50% MINIMUM. Coolant concentrations less than 50% may not provide sufficient protection against corrosion or freezing.
   - Coolant concentrations greater than 60% will impair cooling efficiency and are not recommended.

   CAUTION:
   - Do not mix different brands of anti-freeze/coolant.
   - Do not use additional rust inhibitors or anti-rust products; they may not be compatible with the recommended coolant.

   Radiator Coolant Refill Capacity: Including reservoir 0.65 ℓ (0.69 US gal, 0.57 Imp gal)
   Manual: 7.5 ℓ (1.98 US gal, 1.65 Imp gal)
   Automatic: 7.5 ℓ (1.98 US gal, 1.65 Imp gal)

6. Loosen the air bleed bolt in the water outlet, then fill the radiator to the bottom of the filler neck with the coolant mixture. Tighten the bleed bolt as soon as coolant starts to run out in a steady stream without bubbles.

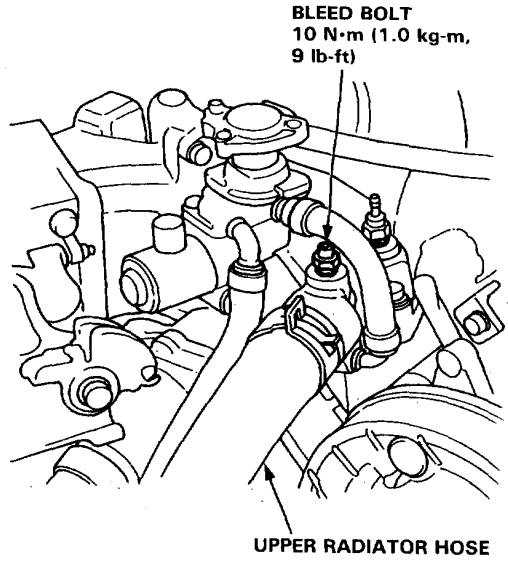

7. With the radiator cap off, start the engine and let it run until warmed up (fan goes on at least twice). Then, if necessary, add more coolant mix to bring the level back up to the bottom of the filler neck.
8. Put the radiator cap on, then run the engine again and check for leaks.

Cap Testing

1. Remove the radiator cap, wet its seal with coolant, then install it on the pressure tester.
2. Apply a pressure of 95—125 kPa (0.95—1.25 kg/cm², 14—18 psi).
3. Check for a drop in pressure.

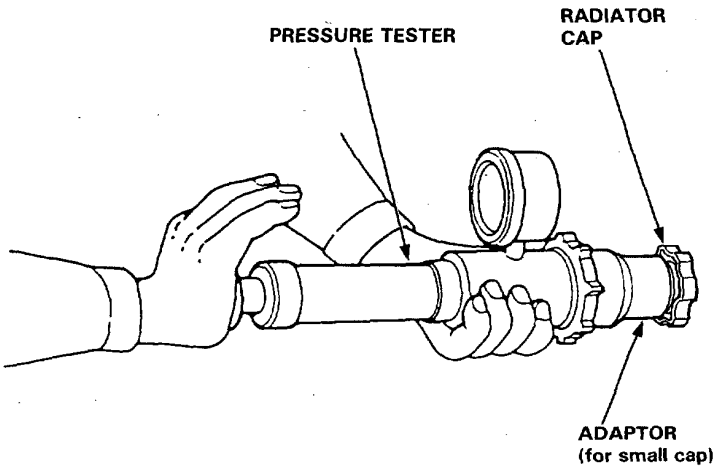

Pressure Testing

1. Wait until the engine is cool, then carefully remove the radiator cap and fill the radiator with coolant to the top of the filler neck.
2. Attach the pressure tester to the radiator and apply a pressure of 95—125 kPa (0.95—1.25 kg/cm², 14—18 psi).
3. Inspect for coolant leaks and a drop in pressure.
4. Remove the tester and reinstall the radiator cap.

   NOTE: Check for engine oil in coolant and/or coolant in engine oil.

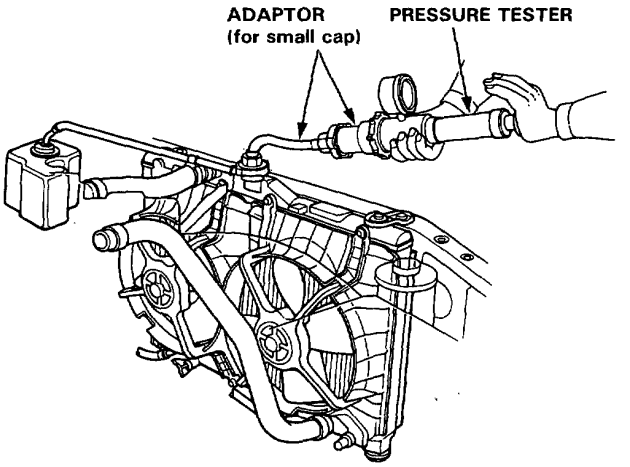

Thermostat

Replacement

NOTE: Use new gaskets and O-rings when reassembling.

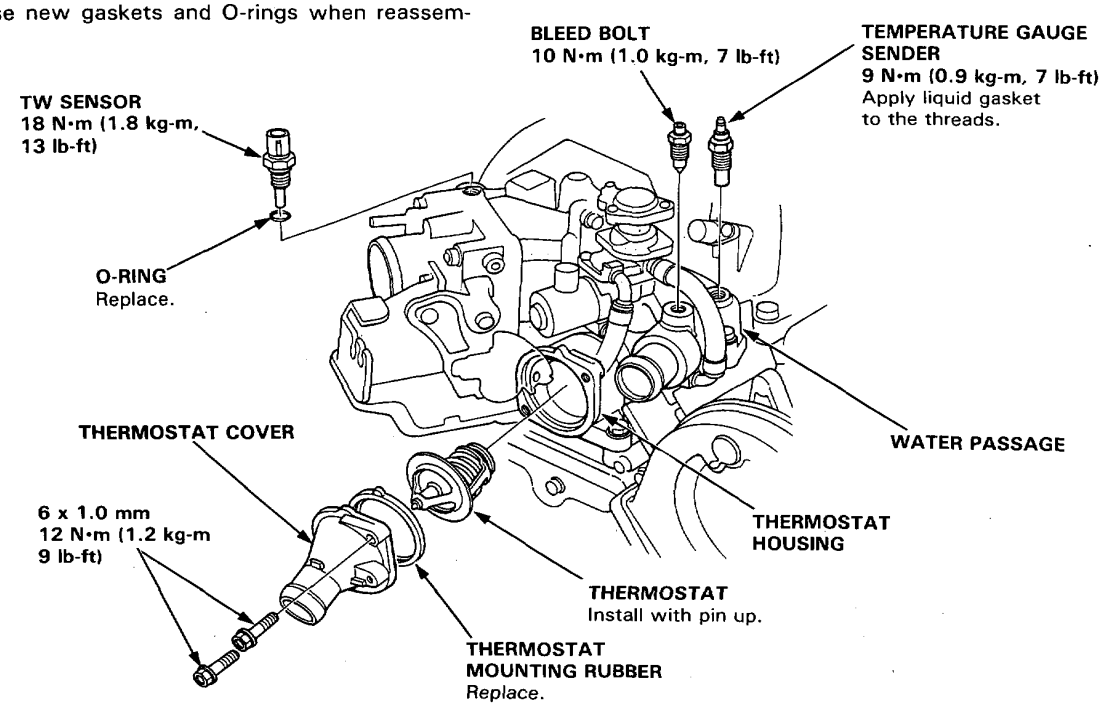

Testing

Replace thermostat if it is open at room temperature.

To test a closed thermostat:

1. Suspend the thermostat in a container of water as shown.
2. Heat the water and check the temperature with a thermometer. Check the temperature at which the thermostat first opens and at full lift.

   CAUTION: Do not let thermometer touch bottom of hot container.

3. *Measure lift height of thermostat when fully open.*

   STANDARD THERMOSTAT
   Lift height: above 10 mm (0.39 in)
   Starts opening: 78°C ± 2°C (172°F ± 3°F)
   Fully open: 90°C (194°F)

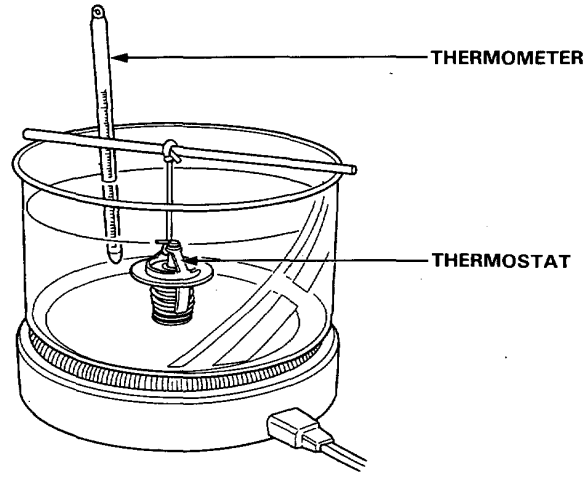

Water Pump

Illustrated Index

NOTE:
- Use new O-rings and new special bolts when reassembling.
- Use liquid gasket, Part No. 0Y740—99986.

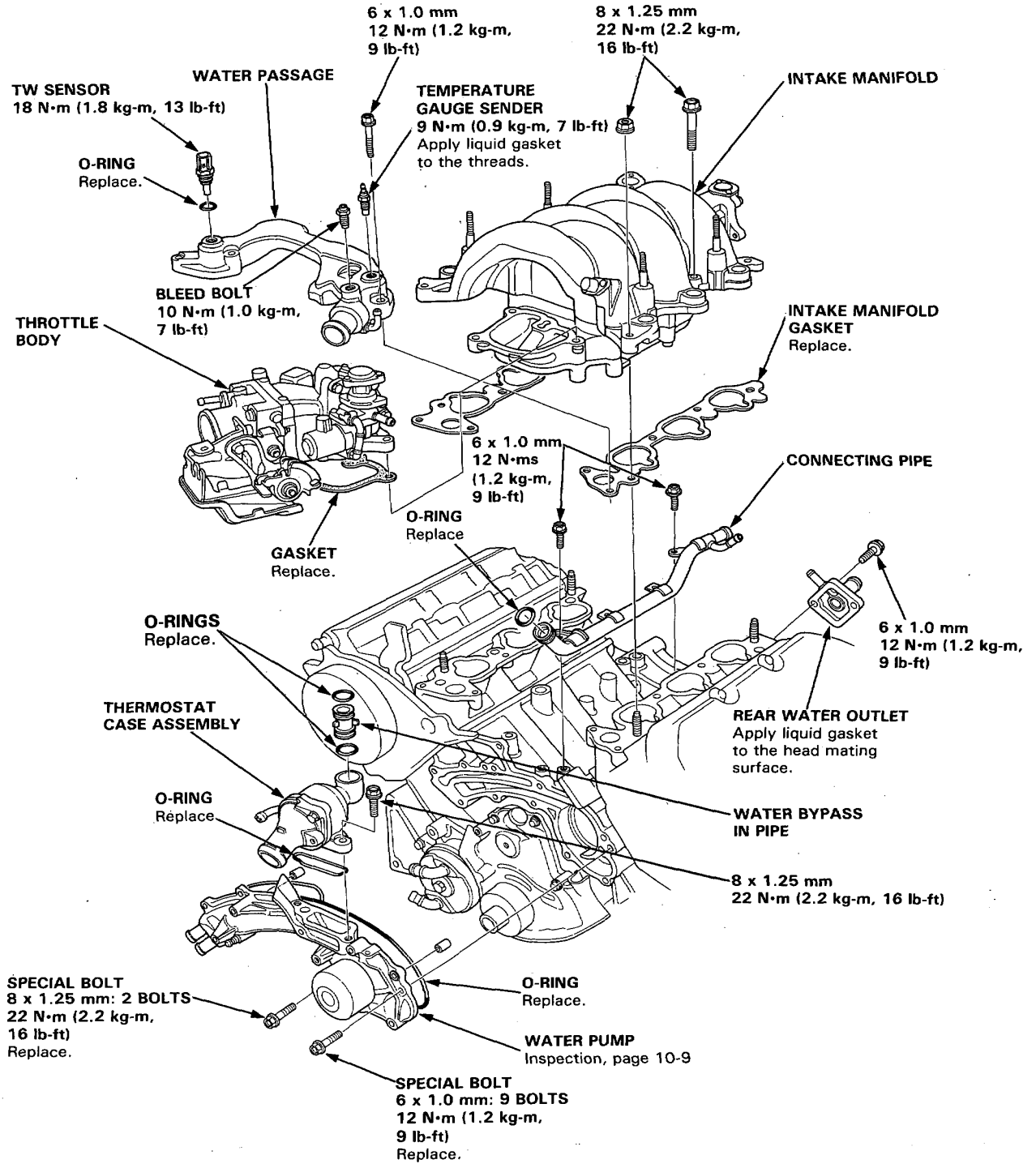

Inspection

1. Remove the timing belt (page 6-28).
2. Check the water pump pulley turns freely.
3. Check for signs of seal leakage.

   NOTE: Small amount of "weeping" from the bleed hole is normal.

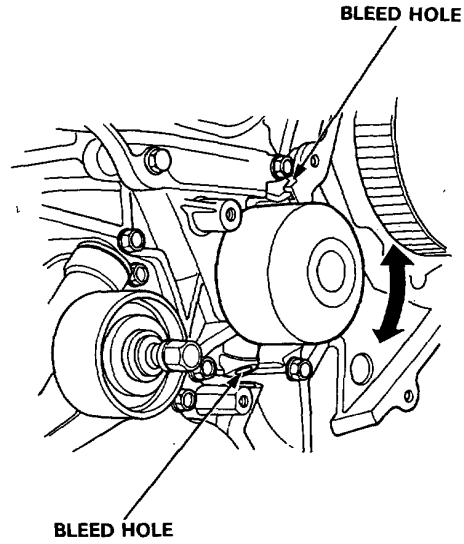

Replacement

NOTE: Use new O-rings and new special bolts when reassembling.

1. Drain the radiator coolant (page 10-5).
2. Remove the timing belt (page 6-28).
3. Remove the L. timing belt cover plate (page 6-10).
4. Remove two mounting bolts from the thermostat case.
5. Remove special bolts, then remove the water pump.
6. Install the water pump in the reverse order of removal.

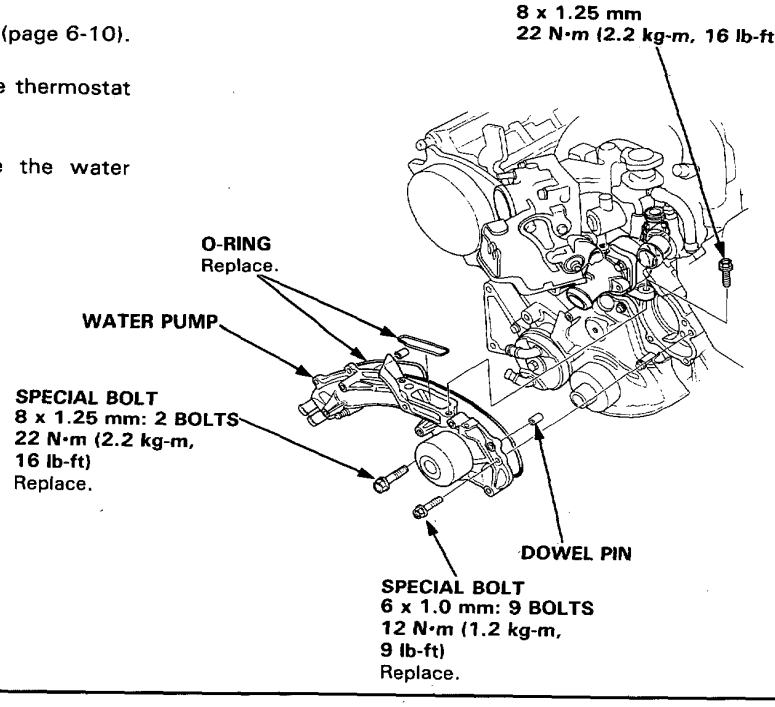

Fuel and Emission

Special Tools 11-2
Component Locations
Index 11-3
System Description
Vacuum Connections 11-7
Electrical Connections 11-18
Troubleshooting
Troubleshooting Guide 11-20
Self-diagnostic Procedures 11-24
How to Read Flowcharts 11-31

PGM-FI Control System

Troubleshooting Flowcharts
System Description 11-32
PGM-FI/AT Electronic Control Unit 11-34
Oxygen Sensors 11-38
Oxygen Sensor Heater 11-40
Fuel Supply System 11-44
Manifold Absolute Pressure Sensor 11-46
CRANK/CYL Sensor 11-52
Coolant Temperature Sensor 11-54
Throttle Angle Sensor 11-56
Intake Air Temperature Sensor 11-58
IMA Sensor 11-60
Atmospheric Pressure Sensor 11-62
Ignition Output Signal 11-64
Vehicle Speed Sensor 11-66
Ignition Timing Adjuster 11-68

Idle Control System

System Troubleshooting Guide 11-70
System Description 11-71
Troubleshooting Flowcharts
Electronic Air Control Valve 11-74
Air Conditioning Signal 11-76
Alternator FR Signal 11-78
A/T Shift Position Signal 11-80
M/T Neutral Switch Signal 11-82
Clutch Switch Signal 11-84
Starter Switch Signal 11-86
Brake Switch Signal 11-88
P/S Oil Pressure Switch Signal 11-90
Fast Idle Valve 11-91
Air Boost Valve 11-92
Idle Speed Setting 11-93

Fuel Supply System

System Troubleshooting Guide 11-95
System Description 11-96
Fuel Pressure 11-96
Fuel Injectors 11-98
Injector Resistor 11-101
Pressure Regulator 11-102
Fuel Filter 11-106
Fuel Pump 11-107
Main Relay 11-109
Fuel Tank 11-112

Air Intake System

System Troubleshooting Guide 11-113
System Description 11-114
Air Cleaner 11-115
Throttle Cable 11-116
Throttle Body 11-117
Chamber Volume Control System 11-120

Emission Control System

System Troubleshooting Guide 11-127
System Description 11-128
Tailpipe Emission 11-128
Catalytic Converter 11-129
Exhaust Gas Recirculation System 11-131
Air Injection System 11-138
Positive Crankcase Ventilation System 11-141
Evaporative Emission Controls 11-142

Special Tools

Ref. No.	Tool Number	Description	Qty	Remarks
①	07LAA–PT50100	O_2 Sensor Socket Wrench	1	
②	07LAJ–PT30100	Test Harness	1	
③	07411–0020000	Digital Circuit Tester	1	
④	07LAJ–PT30200	Test Harness	1	
⑤	07406–0040001	Fuel Pressure Gauge Set	1	
⑤-1	07406–0040100	Pressure Gauge	(1)	Component Tools
⑤-2	07406–0040201	Hose Assy	(1)	Component Tools

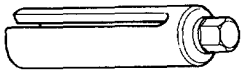

①

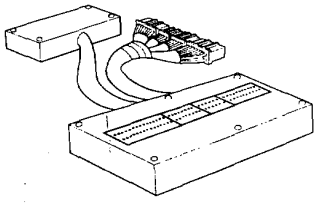

②

③

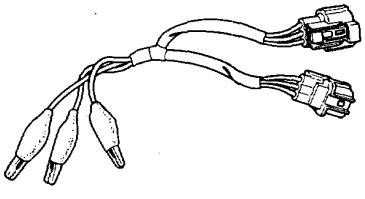

④

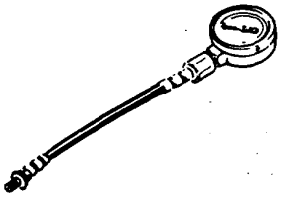

⑤

⑤-1

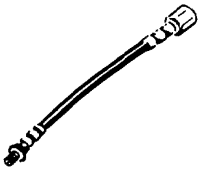

⑤-2

Component Locations

Index

[LHD]

EGR VALVE
Troubleshooting, page 11-131
(with CATA): Clean and inspect every 5 years or 100,000 km (60,000 miles), whichever comes first.
(without CATA): Clean and inspect every 2 years or 40,000 km (24,000 miles), whichever comes first.
EGR VALVE FILTER (without CATA)
Replacement, page 11-137
Replace EGR valve filter every 4 years or 80,000 km (48,000 miles), whichever comes first.

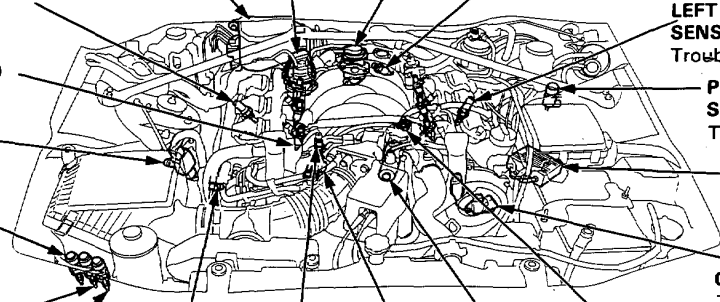

CONTROL BOX
page 11-12

AIR SUCTION VALVE (Except KY)
Troubleshooting, page 11-139

M/T NEUTRAL SWITCH (M/T ONLY)
Troubleshooting, page 11-82

RIGHT HEATED OXYGEN (O_2) SENSOR (Except KY)
Troubleshooting, page 11-38

FUEL INJECTORS
Testing, page 11-98
Replacement, page 11-99

IGNITER UNIT
Troubleshooting, page 11-64

AIR SUCTION CONTROL SOLENOID VALVE (Except KY)
Troubleshooting, page 11-139

BYPASS LOW CONTROL SOLENOID VALVE
Troubleshooting, page 11-121

BYPASS HIGH CONTROL SOLENOID VALVE
Troubleshooting, page 11-121

P/S OIL PRESSURE SWITCH
Troubleshooting, page 11-90

COOLANT TEMPERATURE (TW) SENSOR
Troubleshooting, page 11-54

THROTTLE ANGLE SENSOR
Troubleshooting, page 11-56

EACV
Troubleshooting, page 11-74

LEFT HEATED OXYGEN (O_2) SENSOR (Except KY)
Troubleshooting, page 11-38

PURGE CONTROL SOLENOID VALVE
Troubleshooting, page 11-144

INJECTOR RESISTOR
Testing, page 11-101

CRANK/CYL SENSOR
Troubleshooting, page 11-52

INTAKE AIR TEMPERATURE (TA) SENSOR
Troubleshooting, page 11-58

[LHD]

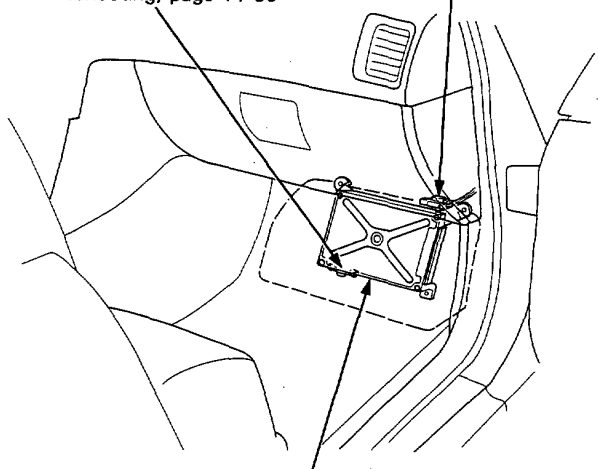

SERVICE CHECK CONNECTOR
Self-diagnostic Procedures, page 11-24

IMA SENSOR (KY)
Troubleshooting, page 11-60

PGM-FI/AT ELECTRONIC CONTROL UNIT (ECU)
Self-diagnostic Procedures, page 11-24
Troubleshooting, page 11-34

[LHD]

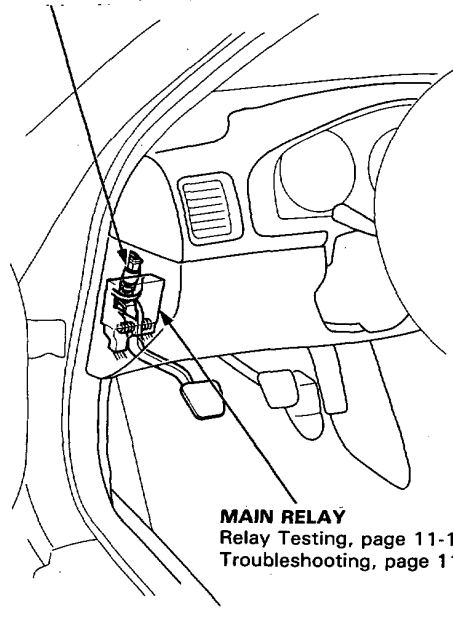

CLUTCH SWITCH
Troubleshooting, page 11-84

MAIN RELAY
Relay Testing, page 11-109
Troubleshooting, page 11-110

Component Locations

Index

[LHD]

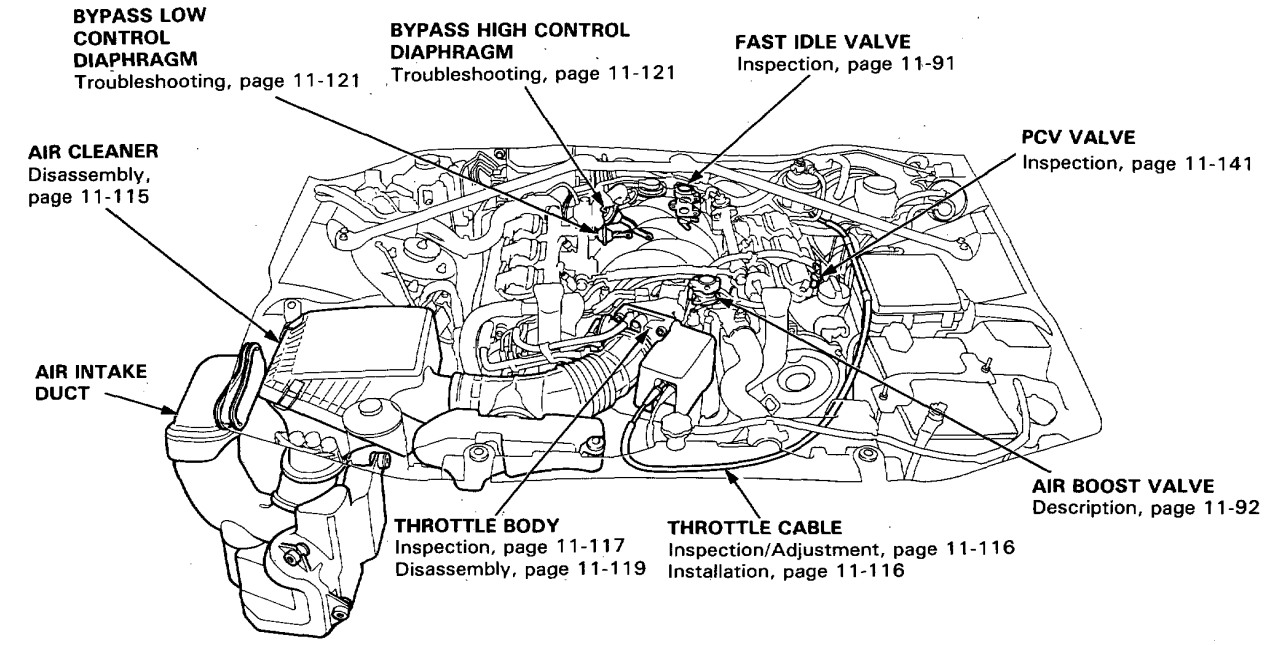

[LHD]

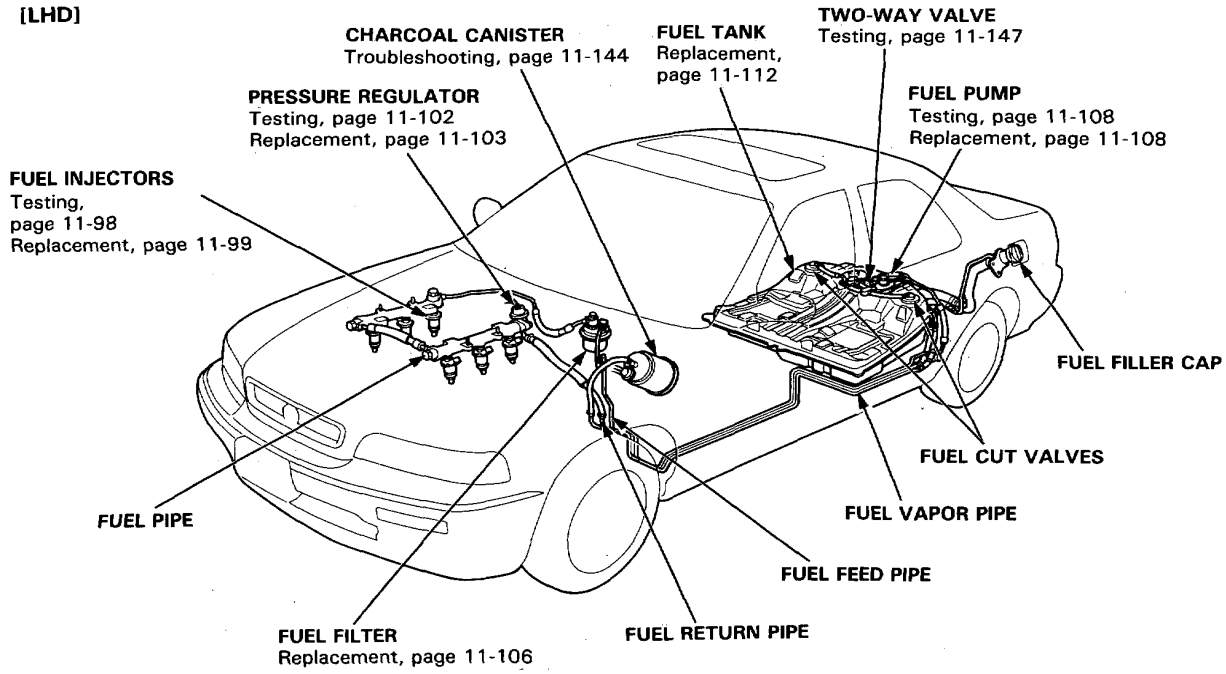

[RHD]

EGR VALVE
Troubleshooting, page 11-131
(with CATA): Clean and inspect every 5 years or 100,000 km (60,000 miles), whichever comes first.
(without CATA): Clean and inspect every 2 years or 40,000 km (24,000 miles), whichever comes first.
EGR VALVE FILTER (with CATA)
Replacement, page 11-137
Replace EGR valve filter every 4 years or 80,000 km (48,000 miles), whichever comes first.

FUEL INJECTORS
Testing, page 11-98
Replacement, page 11-99

AIR SUCTION VALVE (KE)
Troubleshooting, page 11-139

CONTROL BOX
page 11-13

RIGHT HEATED OXYGEN (O_2) SENSOR (Except KT)
Troubleshooting, page 11-38

LEFT HEATED OXYGEN (O_2) SENSOR (Except KT)
Troubleshooting, page 11-38

PURGE CONTROL SOLENOID VALVE (Except KT)
Troubleshooting, page 11-144

INJECTOR RESISTOR
Testing, page 11-101

IGNITER UNIT
Troubleshooting, page 11-64

AIR SUCTION CONTROL SOLENOID VALVE (KE)
Troubleshooting, page 11-139

BYPASS LOW CONTROL SOLENOID VALVE
Troubleshooting, page 11-121

BYPASS HIGH CONTROL SOLENOID VALVE
Troubleshooting, page 11-121

P/S OIL PRESSURE SWITCH
Troubleshooting, page 11-90

THROTTLE ANGLE SENSOR
Troubleshooting, page 11-56

CRANK/CYL SENSOR
Troubleshooting, page 11-52

INTAKE AIR TEMPERATURE (TA) SENSOR
Troubleshooting, page 11-58

COOLANT TEMPERATURE (TW) SENSOR
Troubleshooting, page 11-54

EACV
Troubleshooting, page 11-74

[RHD]

SERVICE CHECK CONNECTOR
Self-diagnostic Procedures, page 11-24

IMA SENSOR (KT)
Troubleshooting, page 11-60

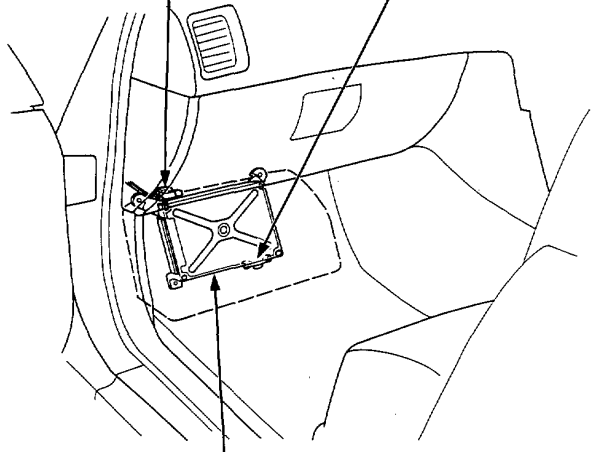

PGM-FI/AT ELECTRONIC CONTROL UNIT (ECU)
Self-diagnostic Procedures, page 11-24
Troubleshooting, page 11-34

[RHD]

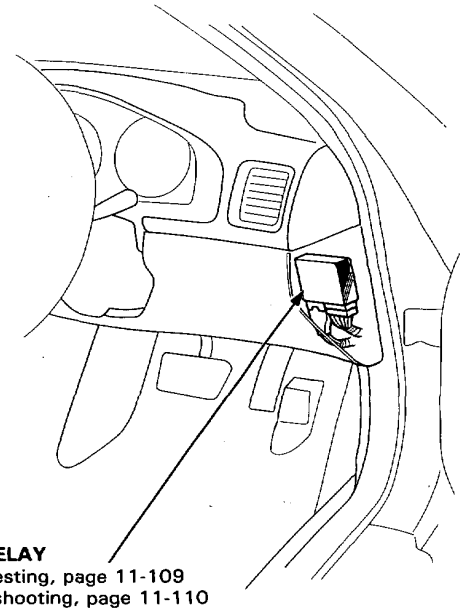

MAIN RELAY
Relay Testing, page 11-109
Troubleshooting, page 11-110

Component Locations

Index

[RHD]

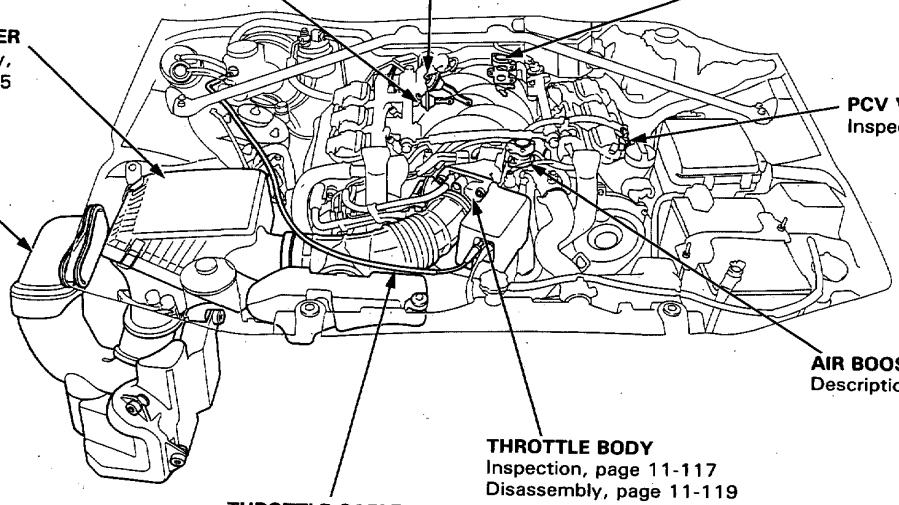

[RHD]

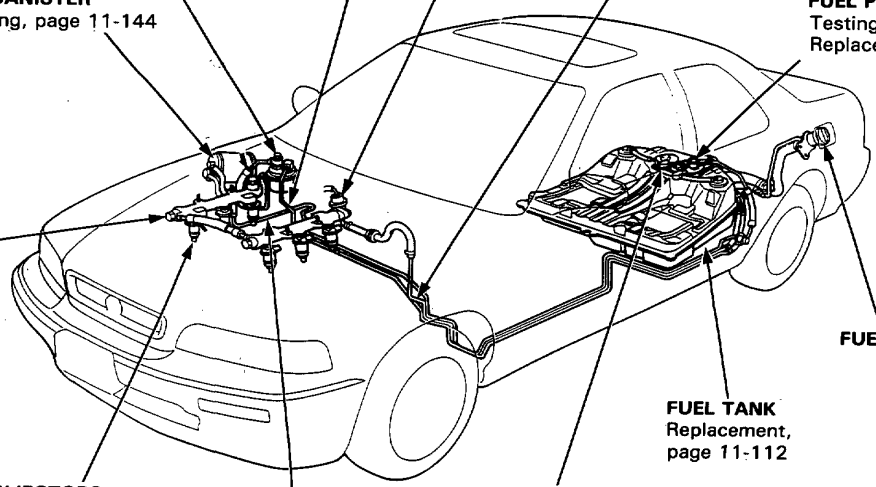

System Description

Vacuum Connections

[KF, KG, KS, KX]

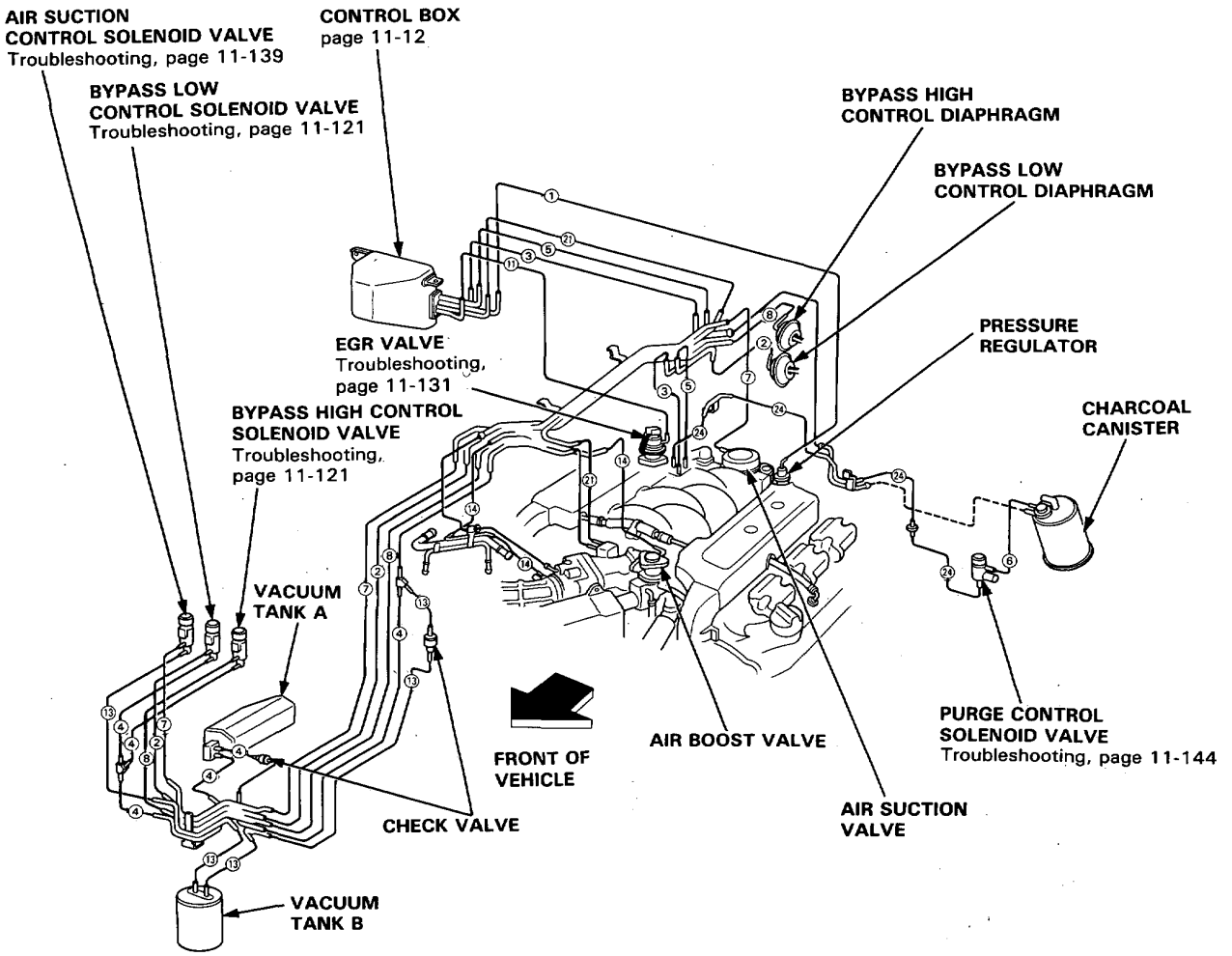

[KY]

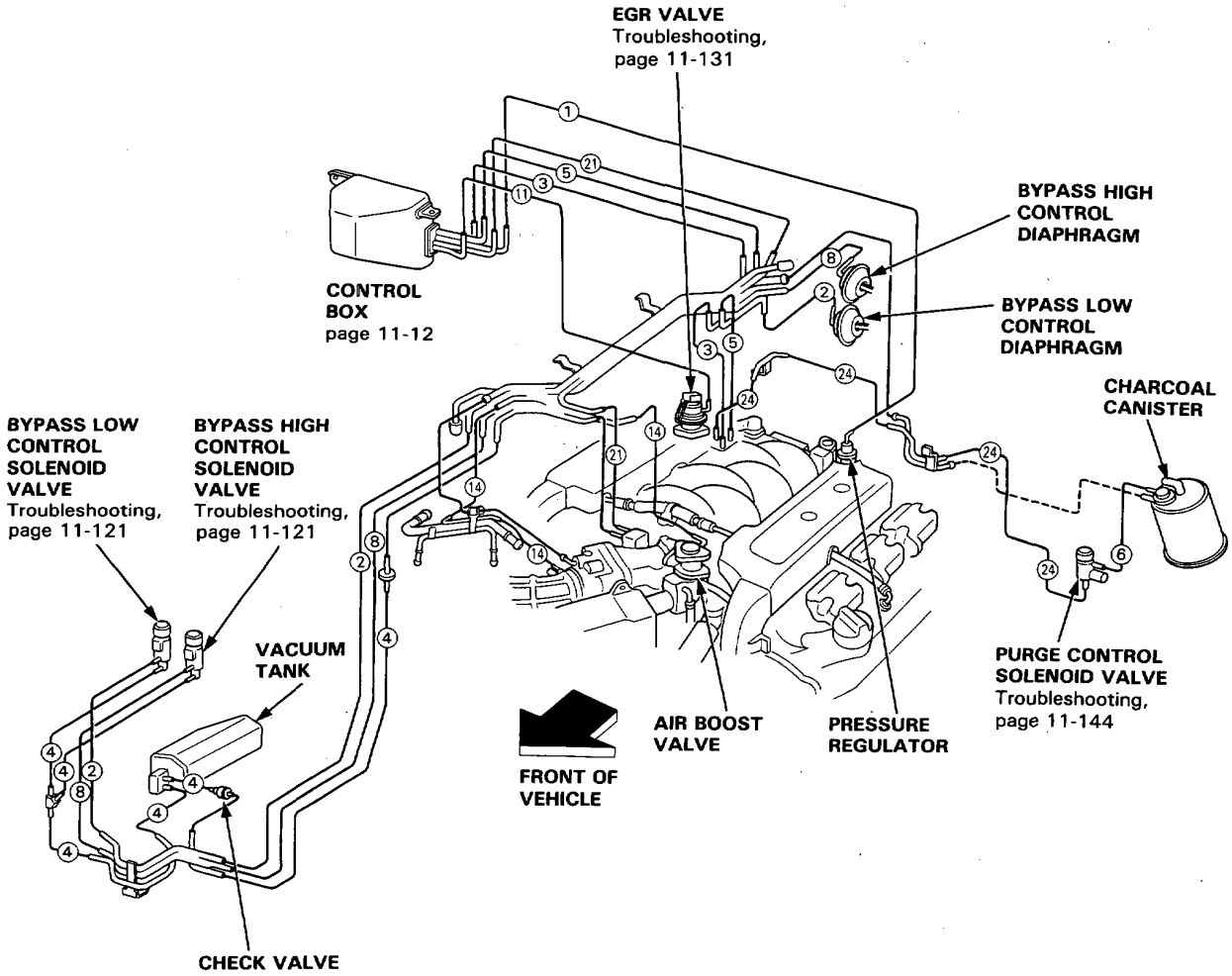
EGR VALVE
Troubleshooting, page 11-131
CONTROL BOX
page 11-12
BYPASS HIGH CONTROL DIAPHRAGM
BYPASS LOW CONTROL DIAPHRAGM
CHARCOAL CANISTER
BYPASS LOW CONTROL SOLENOID VALVE
Troubleshooting, page 11-121
BYPASS HIGH CONTROL SOLENOID VALVE
Troubleshooting, page 11-121
VACUUM TANK
PURGE CONTROL SOLENOID VALVE
Troubleshooting, page 11-144
AIR BOOST VALVE
PRESSURE REGULATOR
FRONT OF VEHICLE
CHECK VALVE

[KE]

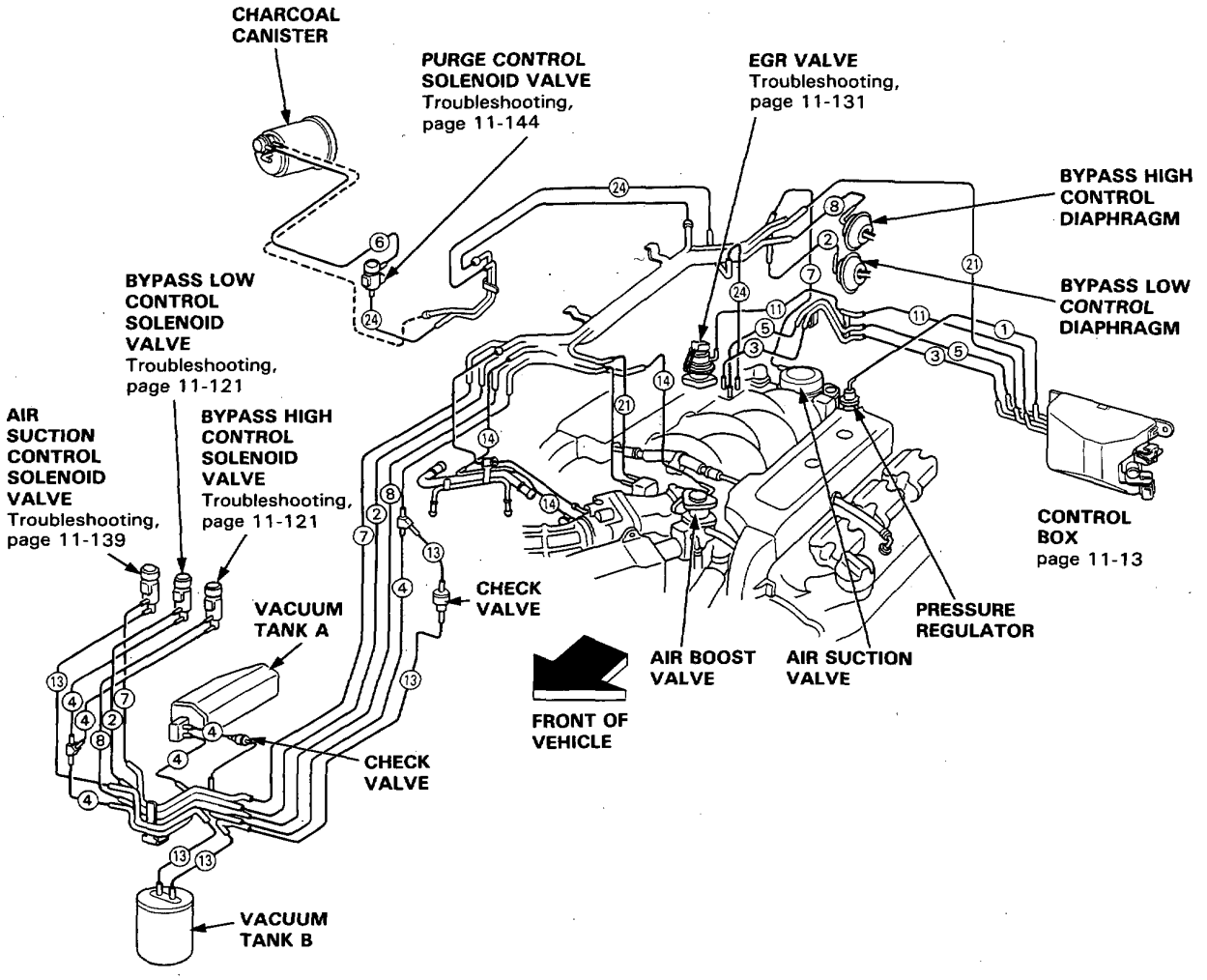
CHARCOAL CANISTER
PURGE CONTROL SOLENOID VALVE
Troubleshooting, page 11-144
EGR VALVE
Troubleshooting, page 11-131
BYPASS HIGH CONTROL DIAPHRAGM
BYPASS LOW CONTROL DIAPHRAGM
BYPASS LOW CONTROL SOLENOID VALVE
Troubleshooting, page 11-121
AIR SUCTION CONTROL SOLENOID VALVE
Troubleshooting, page 11-139
BYPASS HIGH CONTROL SOLENOID VALVE
Troubleshooting, page 11-121
CONTROL BOX
page 11-13
CHECK VALVE
VACUUM TANK A
PRESSURE REGULATOR
AIR BOOST VALVE
AIR SUCTION VALVE
FRONT OF VEHICLE
CHECK VALVE
VACUUM TANK B

(cont'd)

System Description

Vacuum Connections (cont'd)

[KQ]

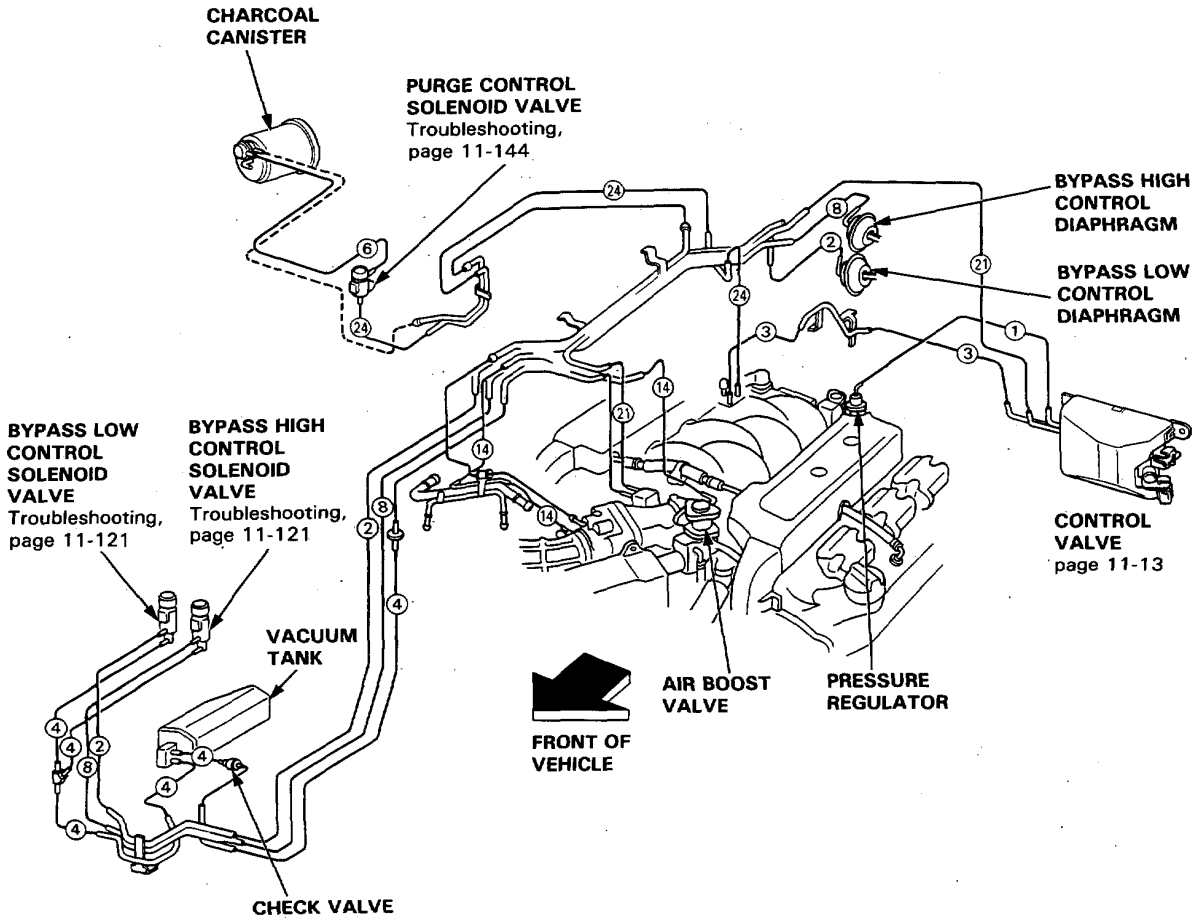

[KT]

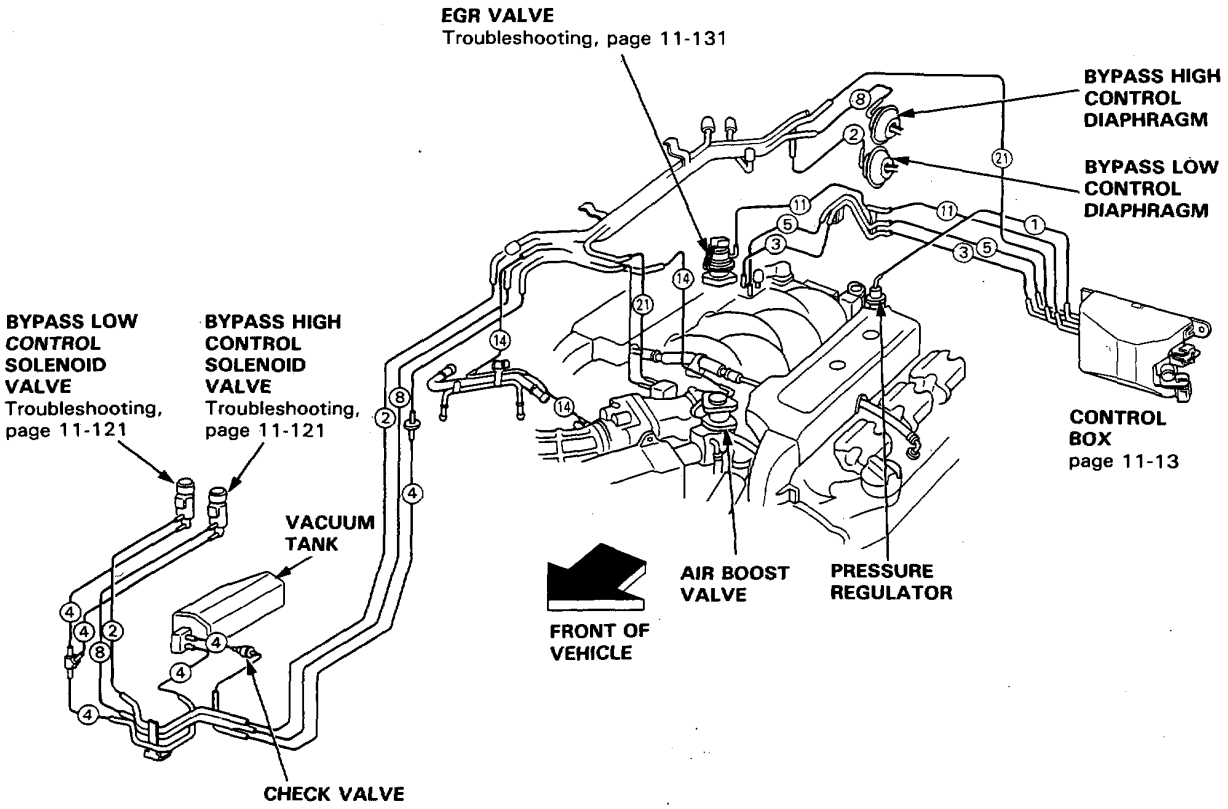
EGR VALVE
Troubleshooting, page 11-131
BYPASS HIGH CONTROL DIAPHRAGM
BYPASS LOW CONTROL DIAPHRAGM
BYPASS LOW CONTROL SOLENOID VALVE
Troubleshooting, page 11-121
BYPASS HIGH CONTROL SOLENOID VALVE
Troubleshooting, page 11-121
VACUUM TANK
CONTROL BOX
page 11-13
AIR BOOST VALVE
PRESSURE REGULATOR
FRONT OF VEHICLE
CHECK VALVE

(cont'd)

System Description

Vacuum Connections (cont'd)

Control Box
[KF, KG, KS, KX, KY]

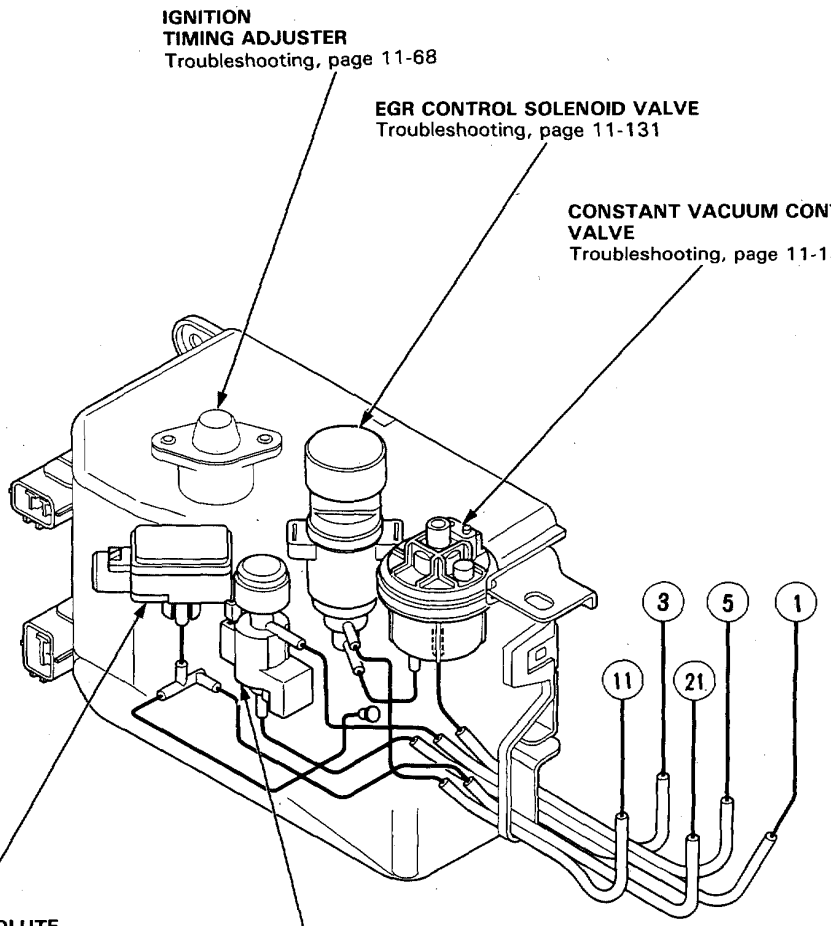

IGNITION TIMING ADJUSTER
Troubleshooting, page 11-68

EGR CONTROL SOLENOID VALVE
Troubleshooting, page 11-131

CONSTANT VACUUM CONTROL (CVC) VALVE
Troubleshooting, page 11-131

MANIFOLD ABSOLUTE PRESSURE (MAP) SENSOR
Troubleshooting, page 11-46

PRESSURE REGULATOR CONTROL SOLENOID VALVE
Troubleshooting, page 11-104

Control Box
[KE,KT]

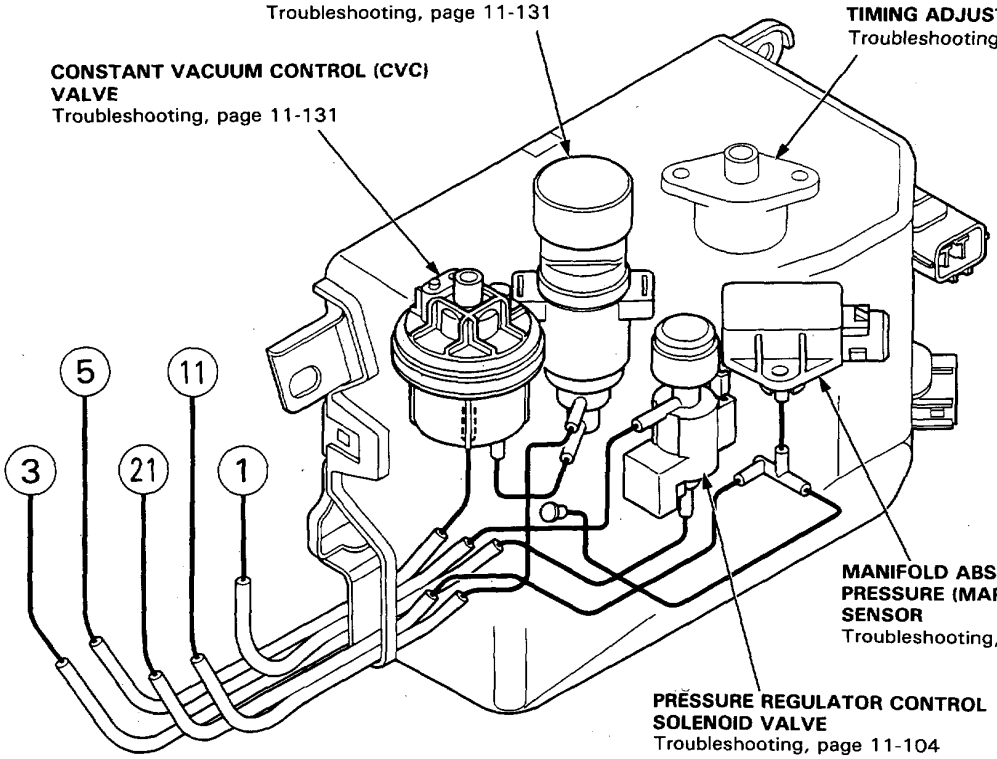

[KQ]

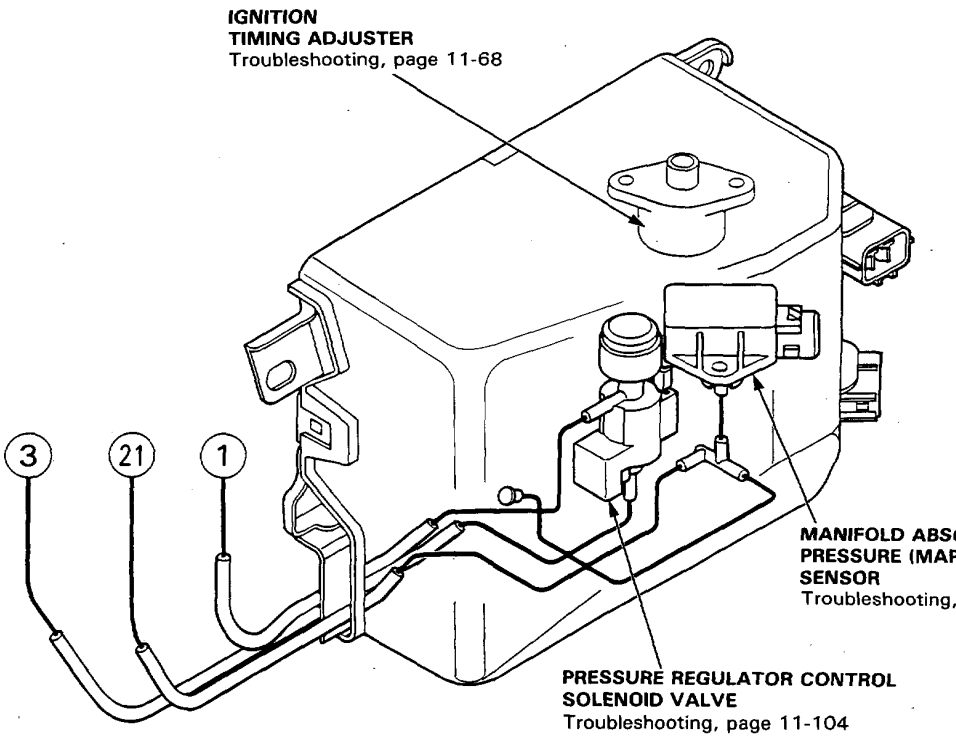

(cont'd)

System Description

Vacuum Connections (cont'd)

[KF, KG, KS, KX, KE]

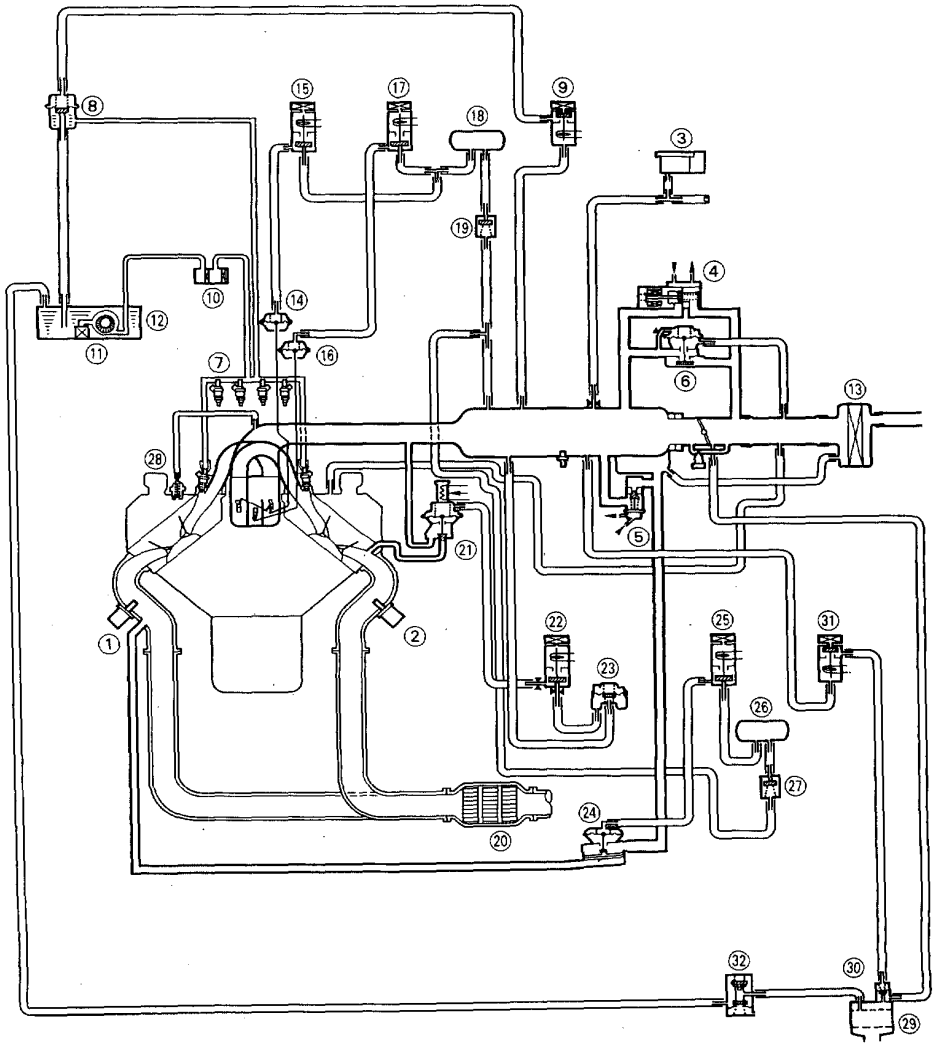

① LEFT OXYGEN (O_2) SENSOR
② RIGHT OXYGEN (O_2) SENSOR
③ MANIFOLD ABSOLUTE PRESSURE (MAP) SENSOR
④ ELECTRONIC AIR CONTROL VALVE (EACV)
⑤ FAST IDLE VALVE
⑥ AIR BOOST VALVE
⑦ FUEL INJECTOR
⑧ PRESSURE REGULATOR
⑨ PRESSURE REGULATOR CONTROL SOLENOID VALVE
⑩ FUEL FILTER
⑪ FUEL PUMP
⑫ FUEL TANK
⑬ AIR CLEANER
⑭ BYPASS LOW CONTROL DIAPHRAGM
⑮ BYPASS LOW CONTROL SOLENOID VALVE
⑯ BYPASS HIGH CONTROL DIAPHRAGM
⑰ BYPASS HIGH CONTROL SOLENOID VALVE
⑱ VACUUM TANK A
⑲ CHECK VALVE
⑳ CATALYTIC CONVERTER
㉑ EGR VALVE
㉒ EGR CONTROL SOLENOID VALVE
㉓ CONSTANT VACUUM CONTROL (CVC) VALVE
㉔ AIR SUCTION VALVE
㉕ AIR SUCTION CONTROL SOLENOID VALVE
㉖ VACUUM TANK B
㉗ CHECK VALVE
㉘ PCV VALVE
㉙ CHARCOAL CANISTER
㉚ PURGE CONTROL DIAPHRAGM VALVE
㉛ PURGE CONTROL SOLENOID VALVE
㉜ TWO-WAY VALVE

[KY]

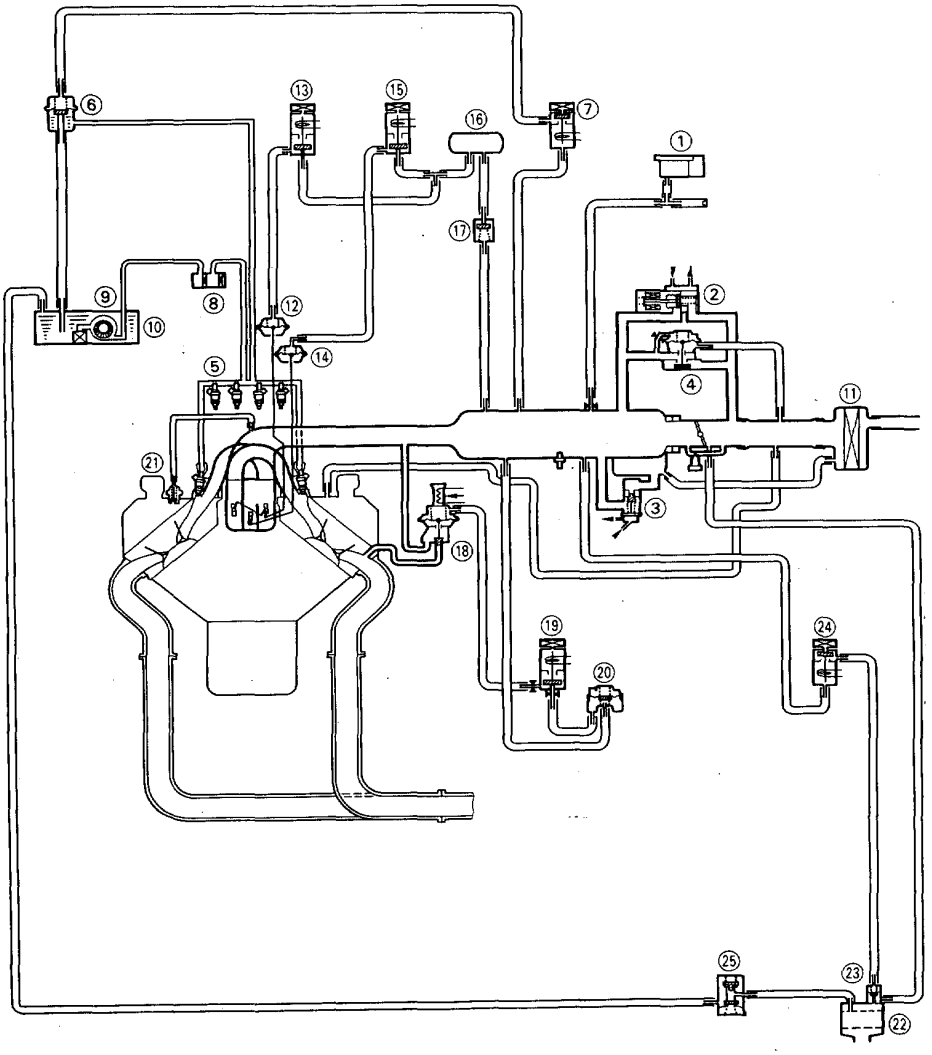

① MANIFOLD ABSOLUTE PRESSURE (MAP) SENSOR
② ELECTRONIC AIR CONTROL VALVE (EACV)
③ FAST IDLE VALVE
④ AIR BOOST VALVE
⑤ FUEL INJECTOR
⑥ PRESSURE REGULATOR
⑦ PRESSURE REGULATOR CONTROL SOLENOID VALVE
⑧ FUEL FILTER
⑨ FUEL PUMP
⑩ FUEL TANK
⑪ AIR CLEANER
⑫ BYPASS LOW CONTROL DIAPHRAGM
⑬ BYPASS LOW CONTROL SOLENOID VALVE
⑭ BYPASS HIGH CONTROL DIAPHRAGM
⑮ BYPASS HIGH CONTROL SOLENOID VALVE
⑯ VACUUM TANK A
⑰ CHECK VALVE
⑱ EGR VALVE
⑲ EGR CONTROL SOLENOID VALVE
⑳ CONSTANT VACUUM CONTROL (CVC) VALVE
㉑ PCV VALVE
㉒ CHARCOAL CANISTER
㉓ PURGE CONTROL DIAPHRAGM VALVE
㉔ PURGE CONTROL SOLENOID VALVE
㉕ TWO-WAY VALVE

(cont'd)

System Description

Vacuum Connections (cont'd)

[KQ]

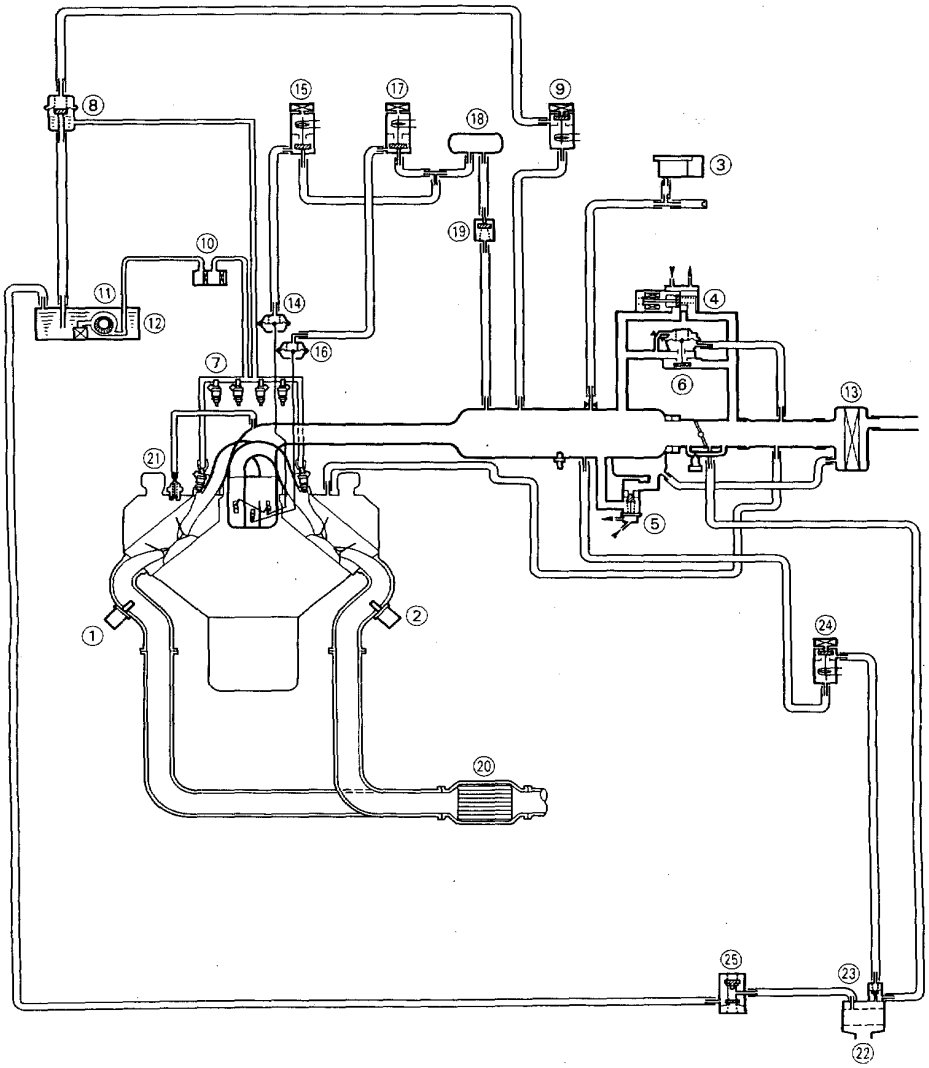

① LEFT OXYGEN (O_2) SENSOR
② RIGHT OXYGEN (O_2) SENSOR
③ MANIFOLD ABSOLUTE PRESSURE (MAP) SENSOR
④ ELECTRONIC AIR CONTROL VALVE (EACV)
⑤ FAST IDLE VALVE
⑥ AIR BOOST VALVE
⑦ FUEL INJECTOR
⑧ PRESSURE REGULATOR
⑨ PRESSURE REGULATOR CONTROL SOLENOID VALVE
⑩ FUEL FILTER
⑪ FUEL PUMP
⑫ FUEL TANK
⑬ AIR CLEANER
⑭ BYPASS LOW CONTROL DIAPHRAGM
⑮ BYPASS LOW CONTROL SOLENOID VALVE
⑯ BYPASS HIGH CONTROL DIAPHRAGM
⑰ BYPASS HIGH CONTROL SOLENOID VALVE
⑱ VACUUM TANK A
⑲ CHECK VALVE
⑳ CATALYTIC CONVERTER
㉑ PCV VALVE
㉒ CHARCOAL CANISTER
㉓ PURGE CONTROL DIAPHRAGM VALVE
㉔ PURGE CONTROL SOLENOID VALVE
㉕ TWO-WAY VALVE

[KT]

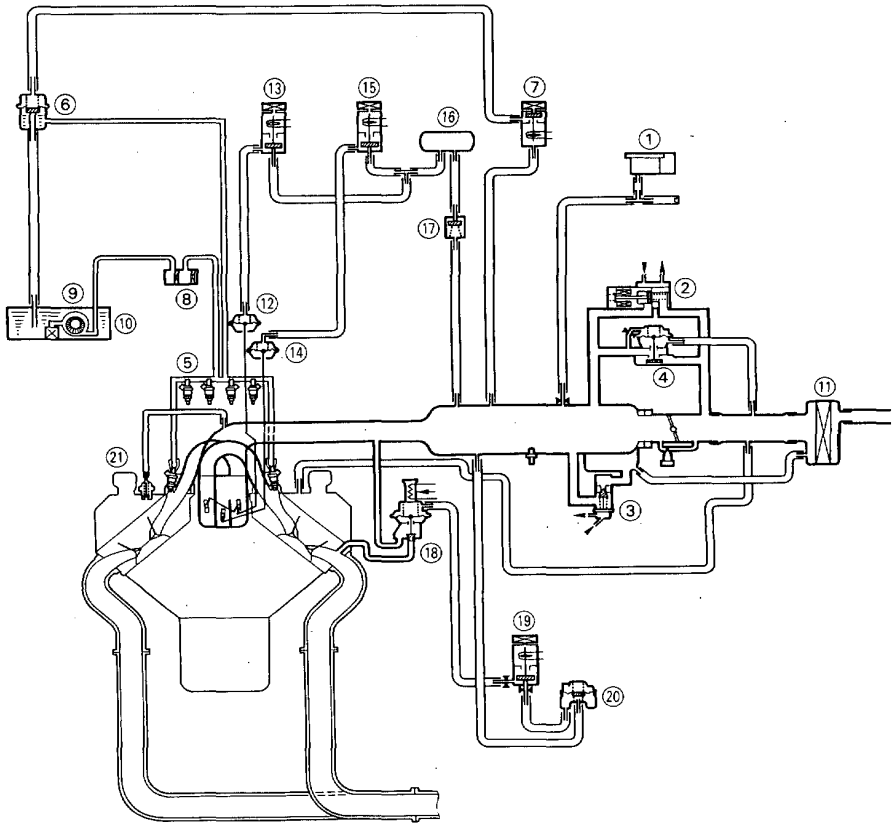

① MANIFOLD ABSOLUTE PRESSURE (MAP) SENSOR
② ELECTRONIC AIR CONTROL VALVE (EACV)
③ FAST IDLE VALVE
④ AIR BOOST VALVE
⑤ FUEL INJECTOR
⑥ PRESSURE REGULATOR
⑦ PRESSURE REGULATOR CONTROL SOLENOID VALVE
⑧ FUEL FILTER
⑨ FUEL PUMP
⑩ FUEL TANK
⑪ AIR CLEANER
⑫ BYPASS LOW CONTROL DIAPHRAGM
⑬ BYPASS LOW CONTROL SOLENOID VALVE
⑭ BYPASS HIGH CONTROL DIAPHRAGM
⑮ BYPASS HIGH CONTROL SOLENOID VALVE
⑯ VACUUM TANK A
⑰ CHECK VALVE
⑱ EGR VALVE
⑲ EGR CONTROL SOLENOID VALVE
⑳ CONSTANT VACUUM CONTROL (CVC) VALVE
㉑ PCV VALVE

Electrical Connections

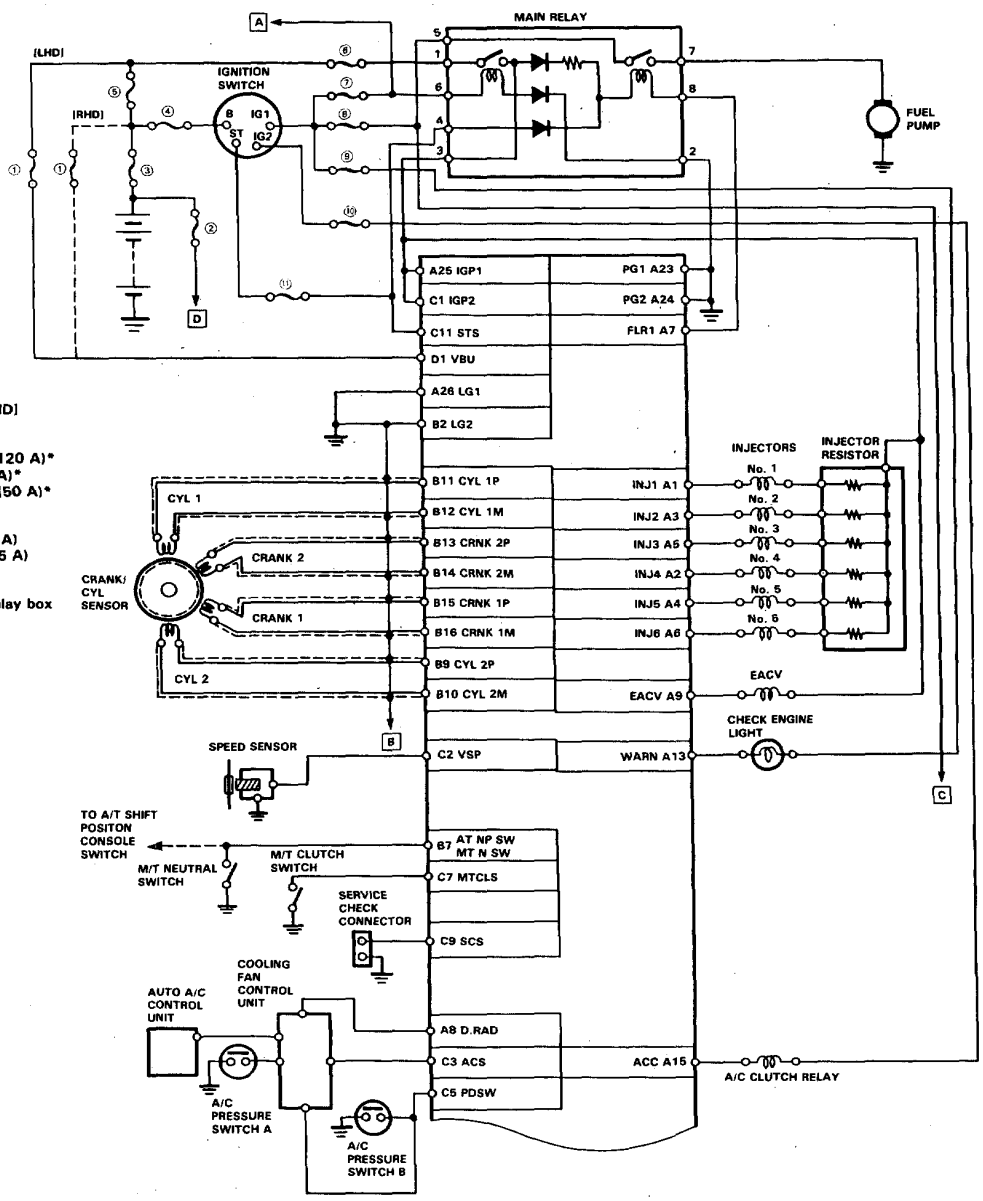

FUSES
①No. 15 (ACG) (7.5 A) [LHD]
①BACK UP (7.5A)*[RHD]
②STOP & HORN (20 A)*
③MAIN FUSE (BATTERY) (120 A)*
④MAIN FUSE (IG SW) (50 A)*
⑤MAIN FUSE (FUSE BOX) (50 A)*
⑥No. 5 (20 A)
⑦No. 25 (IG COIL) (30 A)
⑧No. 22 (FUEL PUMP) (20 A)
⑨No. 13 (BACK UP LT) (7.5 A)
⑩No. 3 (RR DEF) (15 A)
⑪No. 14 (EFI STS) (7.5 A)
*: In the under-hood fuse/relay box

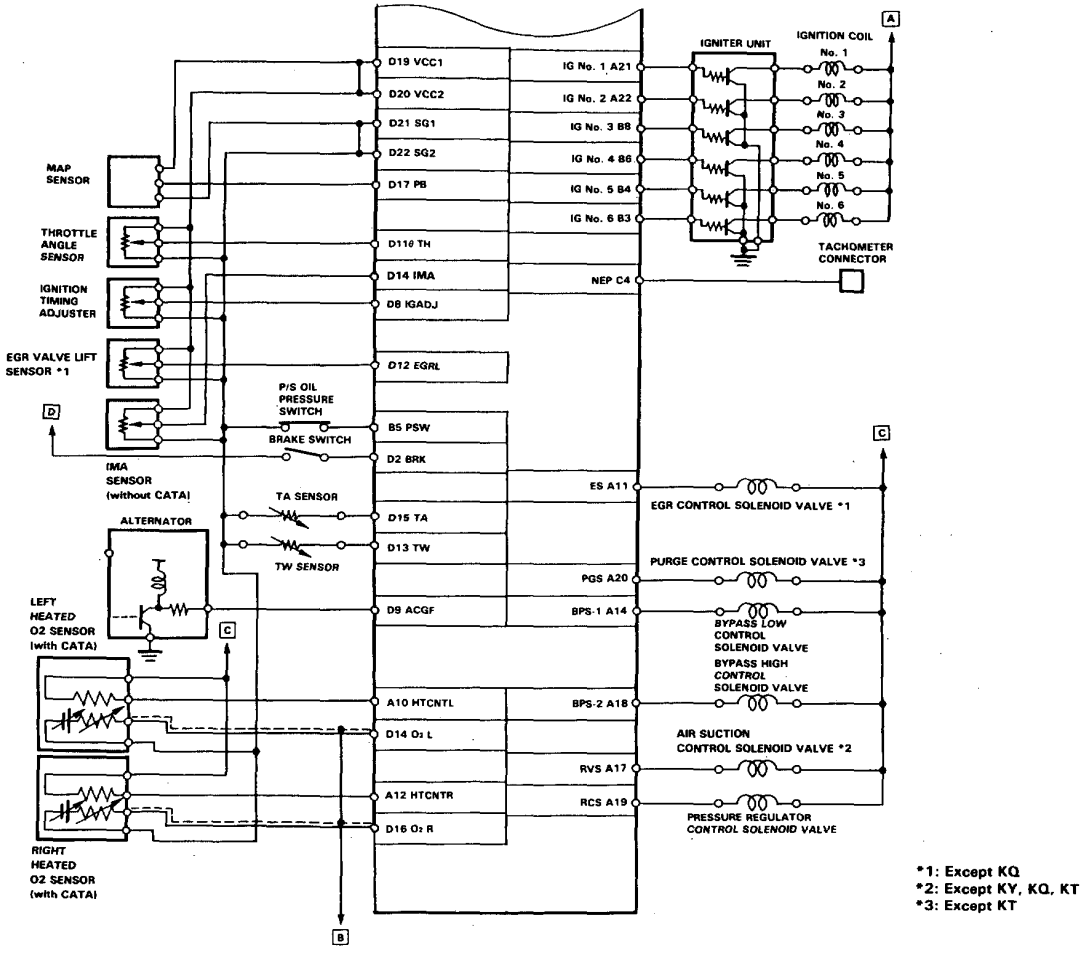

*1: Except KQ
*2: Except KY, KQ, KT
*3: Except KT

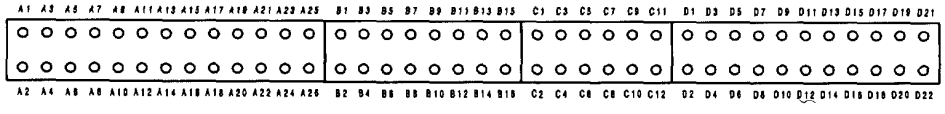

Troubleshooting

Troubleshooting Guide [with CATA]

NOTE: Across each row in the chart, the systems that could be sources of a symptom are ranked in the order they should be inspected starting with ①. Find the symptom in the left column, read across to the most likely source, then refer to the page listed at the top of that column. If inspection shows the system is OK, try the next most likely system ②, etc.

PAGE / SYSTEM		PGM-FI								
		ECU	OXYGEN SENSOR	MANIFOLD ABSOLUTE PRESSURE SENSOR	CRANK/CYL SENSOR	COOLANT TEMPERATURE SENSOR	THROTTLE ANGLE SENSOR	INTAKE AIR TEMPERATURE SENSOR	ATMOSPHERIC PRESSURE SENSOR	IGNITION OUTPUT SIGNAL
SYMPTOM		26	30, 32, 36	46, 50	52	54	56	58	62	64
CHECK ENGINE LIGHT TURNS ON		or								
CHECK ENGINE LIGHT BLINKS		0 or *	1 or 2 / 41 or 42	3 or 5	4 or 54 / 9 or 59	6	7	10	13	15
ENGINE WON'T START		①				③				③
DIFFICULT TO START ENGINE WHEN COLD		BU		③	③	①			③	
IRREGULAR IDLING	WHEN COLD FAST IDLE OUT OF SPEC	BU				②				
	ROUGH IDLE	BU		③						
	WHEN WARM ENGINE SPEED TOO HIGH	BU				②				
	WHEN WARM ENGINE SPEED TOO LOW	BU								
FREQUENT STALLING	WHILE WARMING UP	BU				③				
	AFTER WARMING UP	BU							③	
POOR PERFORMANCE	MISFIRE OR ROUGH RUNNING	BU		②	③					
	FAILS EMISSION TEST	BU	③	②						
	LOSS OF POWER	BU		③			②			

* If codes other than those listed above are indicated, count the number of blinks again. If the indicator is in fact blinking these codes, substitute a known-good ECU and recheck. If the indication goes away, replace the original ECU.

BU : When the Check Engine light and the self-diagnosis indicator are on, the back-up system is in operation. Substitute a known-good ECU and recheck. If the indication goes away, replace the original ECU.

PGM-FI		IDLE CONTROL		FUEL SUPPLY				EMISSION CONTROL	
VEHICLE SPEED SENSOR	IGNITION TIMING ADJUSTER	ELEC-TRONIC AIR CONTROL VALVE	OTHER IDLE CONTROLS	FUEL INJECTOR	FUEL SUPPLY	OTHER FUEL SUPPLY	AIR INTAKE	EGR CONTROL SYSTEM (Except KQ)	OTHER EMISSION CONTROLS
66	68	74	70	98	44	95	113	131	127
17	18	14			43 or 44			12	
				2		3			
			1			2			
			1						
			1	2					
			1						
			1	2					
			1			2			
			1			2		3	
		3		1				3	
				2	3	3			1
				3		1	3		3

Troubleshooting

Troubleshooting Guide [without CATA]

NOTE: Across each row in the chart, the systems that could be sources of a symptom are ranked in the order they should be inspected starting with ①. Find the symptom in the left column, read across to the most likely source, then refer to the page listed at the top of that column. If inspection shows the system is OK, try the next most likely system ②, etc.

PAGE / SYSTEM		PGM-FI								
		ECU	MANIFOLD ABSOLUTE PRESSURE SENSOR	CRANK/CYL SENSOR	COOLANT TEMPERA-TURE SENSOR	THROTTLE ANGLE SENSOR	INTAKE AIR TEMPERA-TURE SENSOR	IMA SENSOR	ATMOS-PHERIC PRESSURE SENSOR	IGNITION OUTPUT SIGNAL
SYMPTOM		34	46, 50	52	54	56	58	60	62	64
CHECK ENGINE LIGHT TURNS ON		▭ or ✳	☐	☐	☐	☐	☐	☐	☐	☐
CHECK ENGINE LIGHT BLINKS		0 or *	3 or 5	4 or 54 / 9 or 59	6	7	10	11	13	15
ENGINE WON'T START		①			③					③
DIFFICULT TO START ENGINE WHEN COLD		(BU)	③	③	①				③	
IRREGULAR IDLING	WHEN COLD FAST IDLE OUT OF SPEC	(BU)			②					
	ROUGH IDLE	(BU)	③							
	WHEN WARM ENGINE SPEED TOO HIGH	(BU)			②					
	WHEN WARM ENGINE SPEED TOO LOW	(BU)								
FREQUENT STALLING	WHILE WARMING UP	(BU)			③					
	AFTER WARMING UP	(BU)							③	
POOR PERFORM-ANCE	MISFIRE OR ROUGH RUNNING	(BU)	②	③						
	FAILS EMISSION TEST	(BU)	②							
	LOSS OF POWER	(BU)	③			②				

* If codes other than those listed above are indicated, count the number of blinks again. If the indicator is in fact blinking these codes, substitute a known-good ECU and recheck. If the indication goes away, replace the original ECU.

(BU) : When the Check Engine light and the self-diagnosis indicator are on, the back-up system is in operation. Substitute a known-good ECU and recheck. If the indication goes away, replace the original ECU.

PGM-FI		IDLE CONTROL		FUEL SUPPLY			EMISSION CONTROL	
VEHICLE SPEED SENSOR	IGNITION TIMING ADJUSTER	ELEC-TRONIC AIR CONTROL VALVE	OTHER IDLE CONTROLS	FUEL INJECTOR	OTHER FUEL SUPPLY	AIR INTAKE	EGR CONTROL SYSTEM	OTHER EMISSION CONTROLS
66	68	74	70	98	95	113	131	127
17	18	14					12	
				2	3			
			1		2			
			1					
			1	2				
			1					
			1	2				
			1		2			
			1		2		3	
		3		1			3	
				2	3			1
				3	1	3		3

Self-diagnostic Procedures

1. When the Check Engine light has been reported on, do the following:

   1. Connect the Service Check Connector terminals with a jumper wire as shown (the Service Check Connector is located under the dash on the passenger side of the car). Turn the ignition switch on.

[LHD]

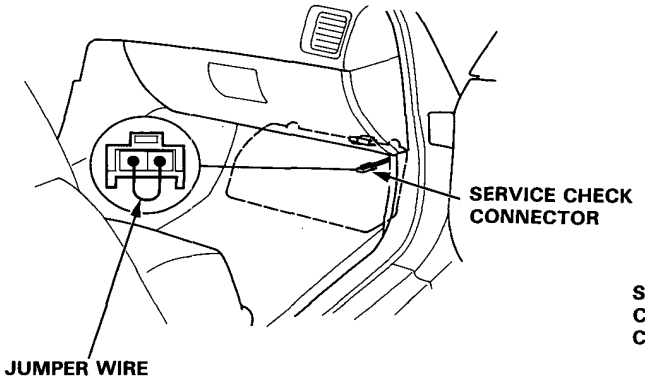

[RHD]

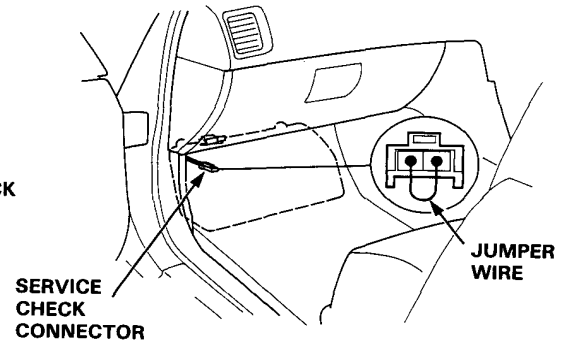

2. Note the CODE: the Check Engine light indicates a failure code by blinking frequency. The Check Engine light can indicate simultaneous component problems by blinking separate codes, one after another. Problem codes 1 through 9 are indicated by individual short blinks. Problem codes 10 through 59 are indicated by a series of long and short blinks. The number of long blinks equals the first digit, the number of short blinks equals the second digit.

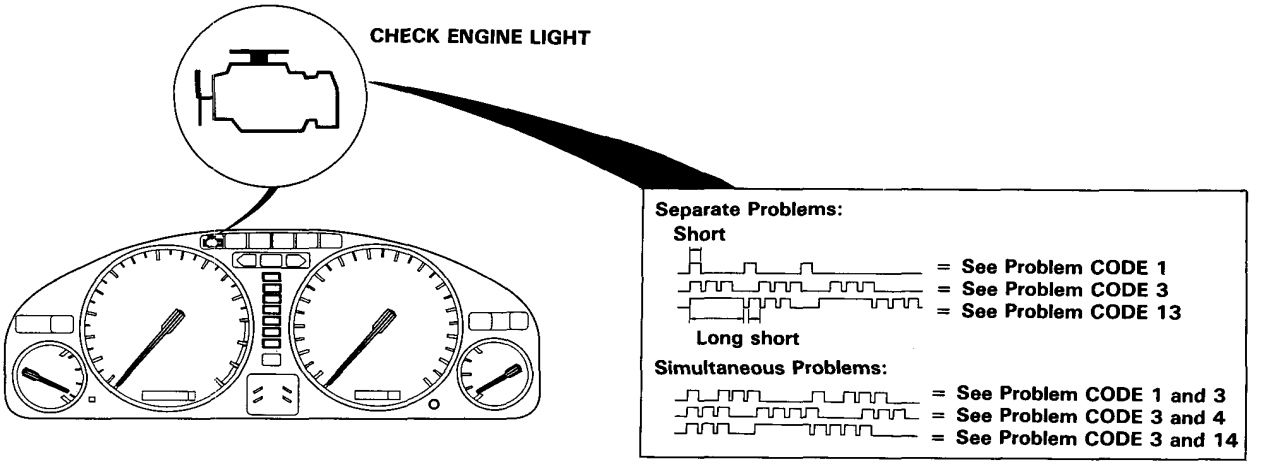

II. ECU Reset Procedure

1. Turn the ignition switch off.

2. LHD:
   Remove the No. 15 (ACG) fuse (7.5 A) from the under-dash fuse box for 10 seconds to reset the ECU.

   NOTE: Disconnecting the No. 15 fuse also cancels the power seat setting.

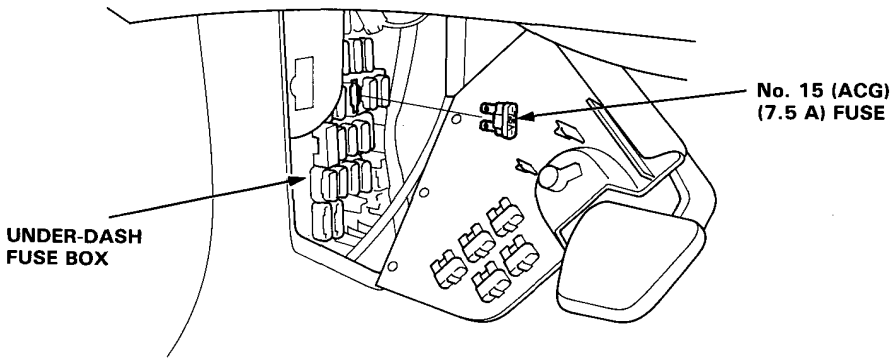

RHD:
Remove the BACK UP fuse (7.5 A) from the under-hood fuse/relay box for 10 seconds to reset ECU.

NOTE: Disconnecting the BACK UP fuse also cancels the radio preset stations and the clock setting. Make note of the radio presets before removing the fuse so you can reset them.

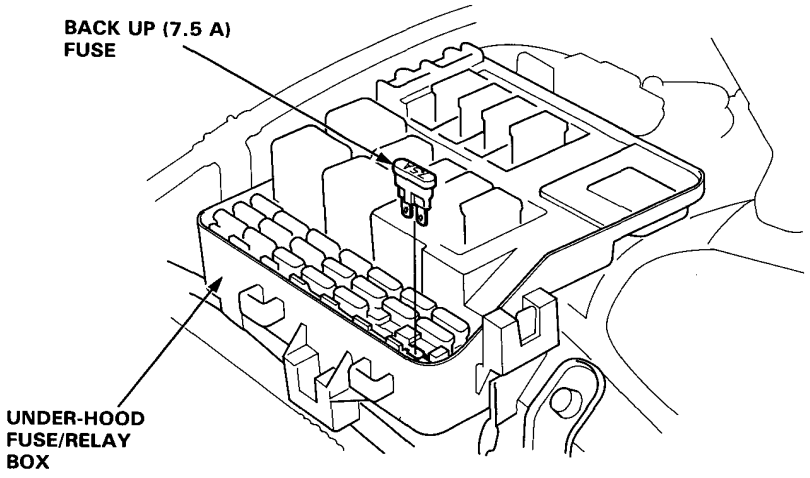

(cont'd)

Self-diagnostic Procedures (cont'd)

III. Final Procedure (this procedure must be done after any troubleshooting)

1. Remove the Jumper Wire.

   NOTE: If the Service Check Connector is jumpered, the Check Engine light will stay on.

2. Do the ECU Reset Procedure.

3. Set the radio preset stations and clock setting [RHD].

SELF-DIAGNOSIS INDICATOR BLINKS	SYSTEM INDICATED	PAGE
0	ECU	11-34
1	LEFT OXYGEN SENSOR (with CATA)	11-38
2	RIGHT OXYGEN SENSOR (with CATA)	11-38
3	MANIFOLD ABSOLUTE PRESSURE (MAP SENSOR)	11-46
5		
4	CRANK ANGLE 1	11-52
6	COOLANT TEMPERATURE (TW SENSOR)	11-54
7	THROTTLE ANGLE	11-56
9	No. 1 CYLINDER POSITION 1 (CYL SENSOR)	11-52
10	INTAKE AIR TEMPERATURE (TA SENSOR)	11-58
11	IDLE MIXTURE ADJUSTMENT (IMA SENSOR) (without CATA)	11-60
12	EXHAUST GAS RECIRCULATION SYSTEM (EGR) (Except KQ)	11-131
13	ATMOSPHERIC PRESSURE (PA SENSOR)	11-62
14	ELECTRONIC AIR CONTROL (EACV)	11-74
15	IGNITION OUTPUT SIGNAL	11-64
17	VEHICLE SPEED SENSOR	11-66
18	IGNITION TIMING ADJUSTMENT	11-68
41	LEFT OXYGEN SENSOR HEATER (with CATA)	11-40
42	RIGHT OXYGEN SENSOR HEATER (with CATA)	11-40
43	LEFT FUEL SUPPLY SYSTEM (with CATA)	11-44
44	RIGHT FUEL SUPPLY SYSTEM (with CATA)	11-44
54	CRANK ANGLE 2	11-52
59	No. 1 CYLINDER POSITION 2 (CYL SENSOR)	11-52

- If codes other than those listed above are indicated, verify the code. If the code indicated is not listed above, replace the ECU.
- The Check Engine light may come on, indicating a system problem when, in fact, there is a poor or intermittent electrical connection. First, check the electrical connections, clean or repair connections if necessary.
- The Check Engine light and D4 indicator light may come on simultaneously when the self-diagnosis indicator blinks 6, 7 or 17. Check the PGM-FI system according to the PGM-FI control system troubleshooting, then recheck the D4 indicator light. If it comes on, see page 14-52, 53.

(cont'd)

Self-diagnostic Procedures (cont'd)

If the inspection for a particular failure code requires the test harness, remove the right door sill molding and the small cover on the right kick panel and pull the carpet back to expose the ECU. Unbolt the ECU bracket. Then disconnect the connector from the cooling fan control unit and connect the test harness. Then check the system according to the procedure described for the appropriate code(s) listed on the following pages.

[LHD]

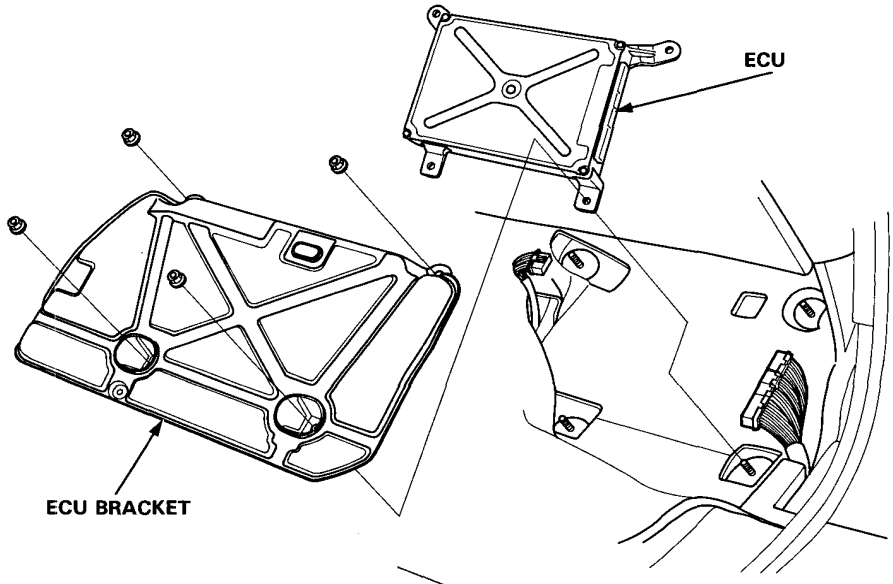

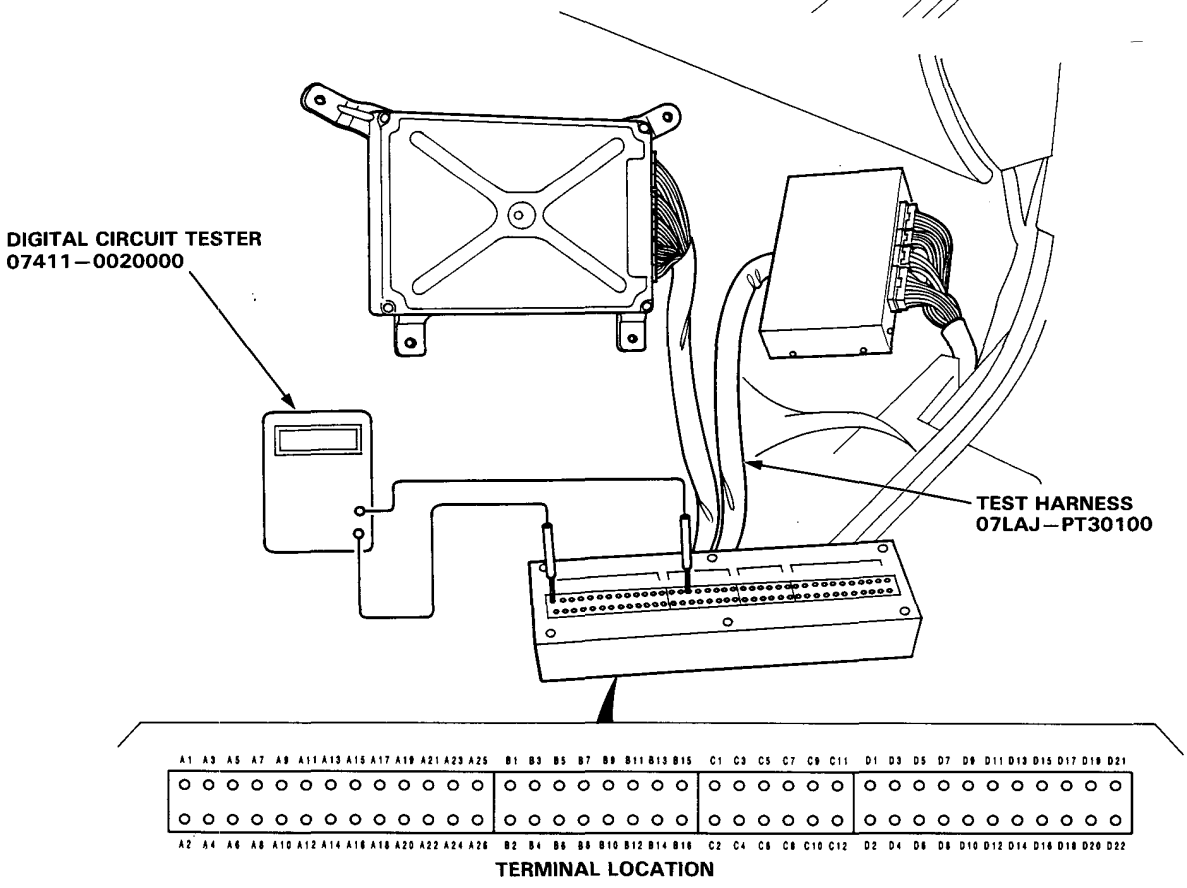

TERMINAL LOCATION

[RHD]

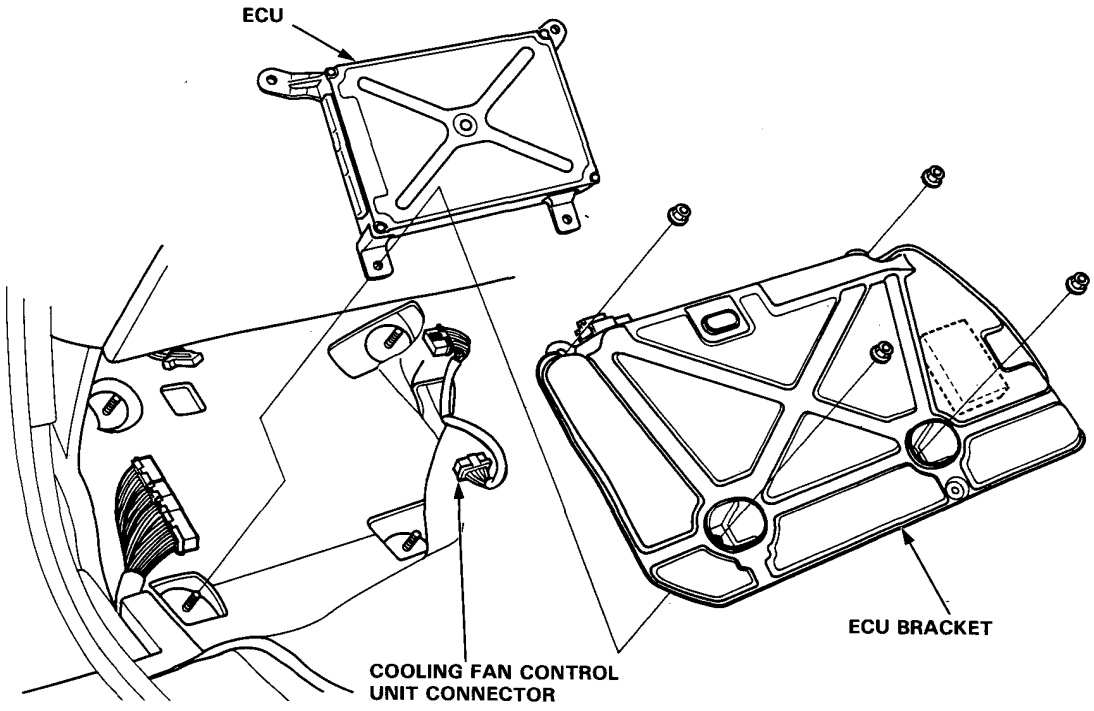

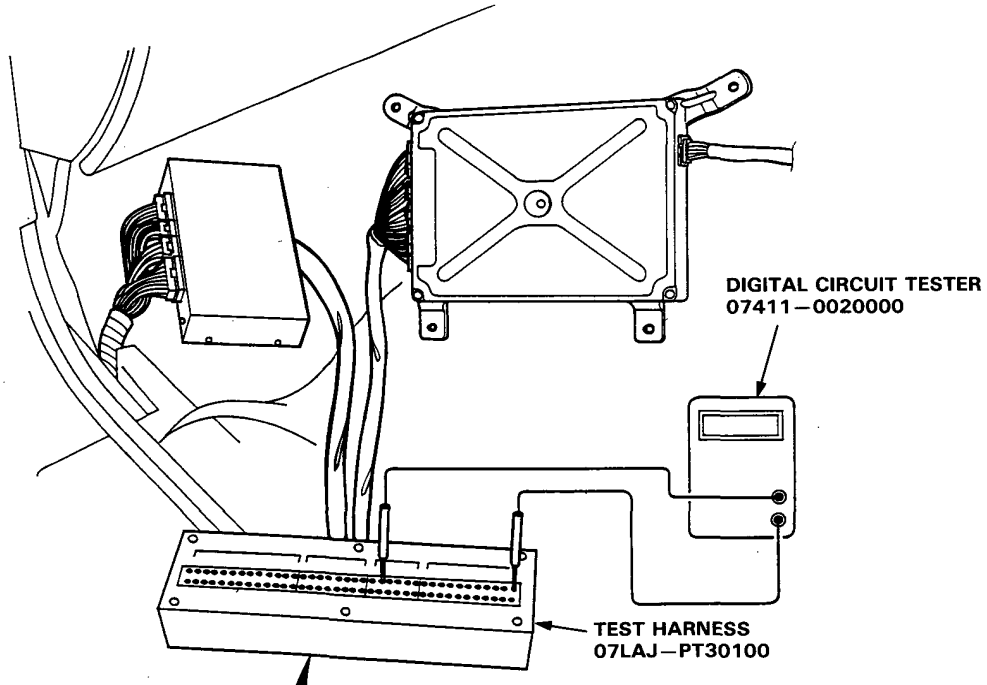

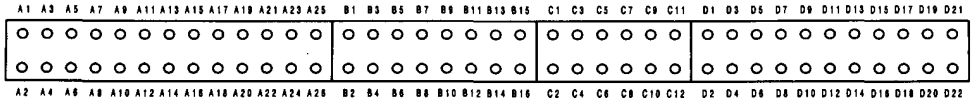

TERMINAL LOCATION

(cont'd)

Self-diagnostic Procedures (cont'd)

CAUTION:
- Puncturing the insulation on a wire can cause poor or intermittent electrical connections.
- For testing at connectors other than the test harness, bring the tester probe into contact with the terminal from the connector side of wire harness connectors in the engine compartment. For female connectors, just touch lightly with the tester probe and do not insert the probe.

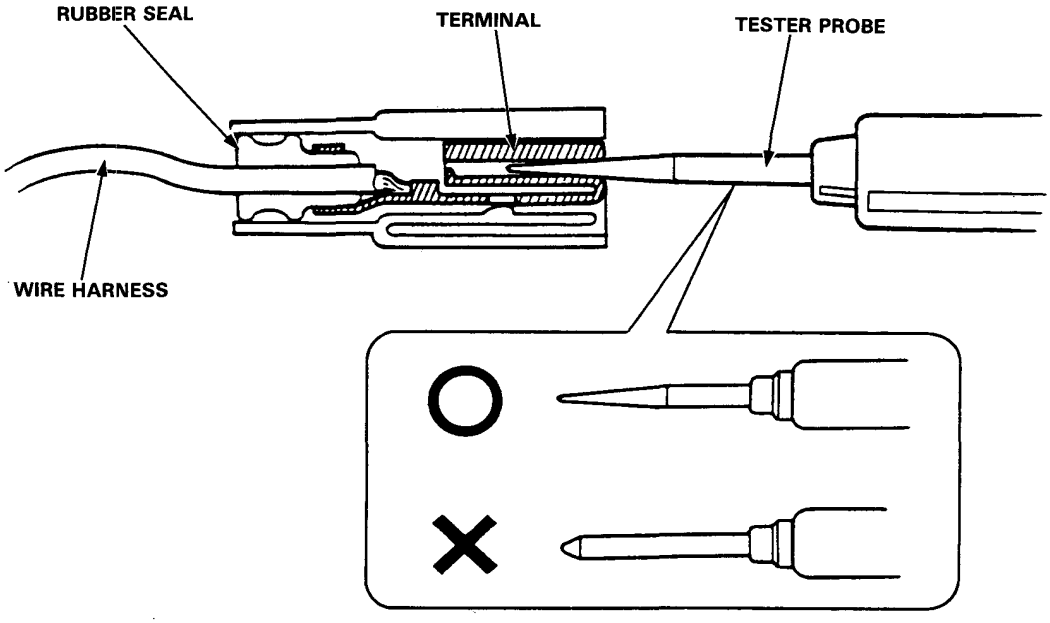

How to Read Flowcharts

A flowchart is designed to be used from start to final repair. It's like a map showing you the shortest distance. But beware: if you go off the "map" anywhere but a "stop" symbol, you can easily get lost.

START (bold type)	Describes the conditions or situation to start a troubleshooting flowchart.
ACTION	Asks you to do something; perform a test, set up a condition etc.
DECISION	Asks you about the result of an action, then sends you in the appropriate troubleshooting direction.
STOP (bold type)	The end of a series of actions and decisions, describes a final repair action and sometimes directs you to an earlier part of the flowchart to confirm your repair.

NOTE:

- The term "Intermittent Failure" is used in these charts. It simply means a system may have had a failure, but it checks out OK through all your tests. You may need to road test the car to reproduce the failure or if the problem was a loose connection, you may have unknowingly solved it while doing the tests. In any event, if the Check Engine light on the dash does not come on, check for poor connections or loose wires at all connectors related to the circuit that you are troubleshooting.
- Most of the troubleshooting flowcharts have you reset the ECU and try to duplicate the problem code. If the problem is intermittent and you can't duplicate the code, do not continue through the flowchart. To do so will only result in confusion and, possibly a needlessly replaced ECU.
- "Open" and "Short" are common electrical terms. An open is a break in a wire or at a connection. A short is an accidental connection of a wire to ground or to another wire. In simple electronics, this usually means something won't work at all. In complex electronics (like ECU's), this can sometimes mean something works, but not the way it's supposed to.
- If the electrical readings are not as specified when using the test harness, check the test harness connections before proceeding.

System Description

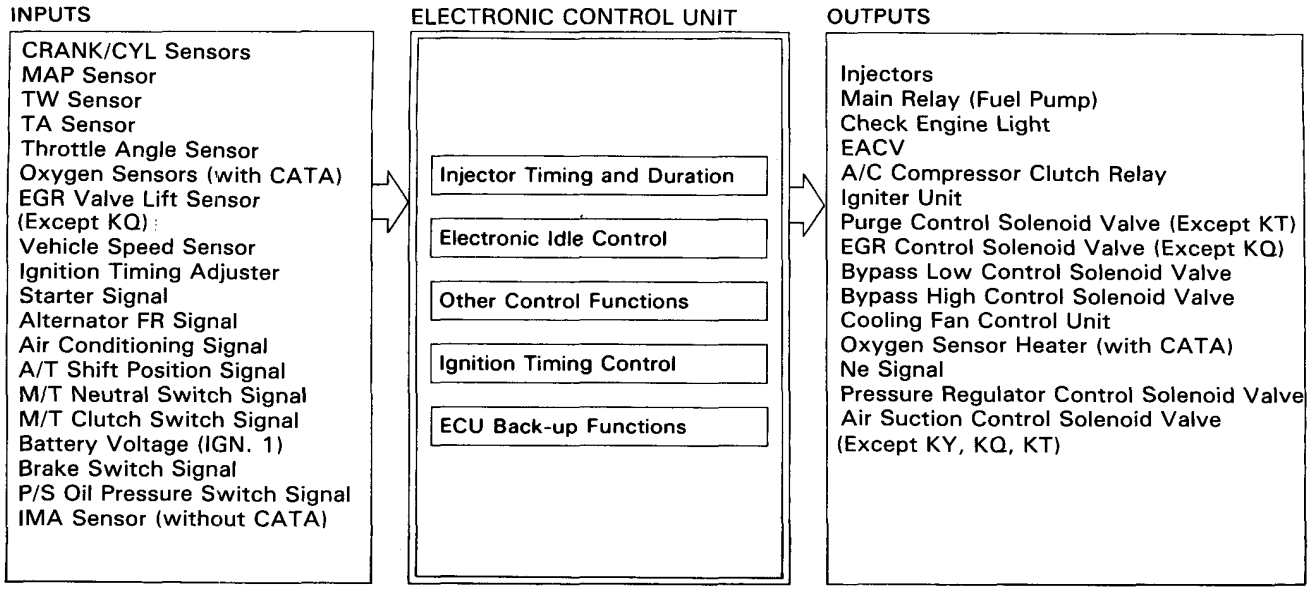

Injector Timing and Duration

The ECU contains memories for the basic discharge durations at various engine speeds and manifold pressures. The basic discharge duration, after being read out from the memory, is further modified by signals sent from various sensors to obtain the final discharge duration.

Electronic Air Control

Electronic Air Control Valve (EACV)

When the engine is cold, the A/C compressor is on, the transmission is in gear (A/T only) or the alternator is charging, the ECU controls current to the EACV to maintain correct idle speed.

Ignition Timing Control

- The ECU contains memories for basic ignition timing at various engine speeds and manifold pressures. Ignition timing is also adjusted for coolant temperature.

Other Control Functions

1. Starting Control
   When the engine is started, the ECU provides a rich mixture.
2. Fuel Pump Control
   - When the ignition switch is initially turned on, the ECU supplies ground to the main relay that supplies current to the fuel pump for two seconds to pressurize the fuel system.
   - When the engine is running, the ECU supplies ground to the main relay that supplies current to the fuel pump.
   - When the engine is not running and the ignition is on, the ECU cuts ground to the main relay which cuts current to the fuel pump.
3. Fuel Cut-off Control
   - During deceleration with the throttle valve closed, current to the injectors is cut off to improve fuel economy at speeds over 1,050 min^{-1} (rpm) (M/T) or 1,000 min^{-1} (rpm) (A/T).
   - Fuel cut-off action also takes place when engine speed exceeds, 6,500 min^{-1} (rpm) regardless of the position of the throttle valve to protect the engine from over-revving.

4. A/C Compressor Clutch Relay
When the ECU receives a demand for cooling from the air conditioning system (compressor control unit), it delays the compressor from being energized, and enriches the mixture to assure smooth transition to the A/C mode.

5. Purge Control Solenoid Valve (Except KT)
When the coolant temperature is below 70°C (158°F), the ECU supplies a ground to the purge control solenoid valve which cuts vacuum to the purge control valve.

6. Bypass Low Control Solenoid Valve (BLCSV), Bypass High Control Solenoid Valve (BHCSV)
When engine speed is below 3,100 min^{-1} (rpm), BHCSV and BLCSV are activated by a signal from the ECU. Intake air flows through a long chamber path, increasing torque at low engine speed.
When engine speed is 3,200—3,800 min^{-1} (rpm), BLCSV is deactivated by the ECU. Intake air flows through a short chamber path, increasing mid-range torque.
When the engine speed is above 3,900 min^{-1} (rpm), BLCSV and BHCSV are deactivated by the ECU. This creates a very short intake path and increases high-speed torque.

7. EGR Control Solenoid Valve (EGR CSV) (Except KQ)
When the EGR is required for control of oxides of nitrogen (NOx) emissions, the ECU supplies ground to the EGRCSV which supplies regulated vacuum to the EGR valve.

8. Pressure Regulator Control Solenoid Valve (PRCSV)
At engine start if the coolant temperature is above 105°C (221°F) or the intake air temperature is above 89°C (192.2°F), the PRCSV is energized, cutting manifold vacuum to the fuel pressure regulator for about 80 seconds.

9. Air Suction Control Solenoid Valve (ASCSV) (Except KY, KQ, KT)
During deceleration with the throttle valve closed, the ECU energizes the ASCSV which supplies vacuum to the air suction valve.

ECU Back-up Functions

1. Fail-Safe-Function
When an abnormality occurs in a signal from a sensor, the ECU ignores that signal and assumes a pre-programmed value that allows the engine to continue to run.

2. Back-up Function
When an abnormality occurs in the ECU itself, the injectors are controlled by a back-up circuit independent of the system in order to permit minimal driving.

3. Self-diagnosis Function (Check Engine light)
When an abnormality occurs in a signal from a sensor, the ECU lights the Check Engine light and stores the failure code in erasable memory. When the ignition is initially turned on, the ECU supplies ground for the Check Engine light for two seconds.

Troubleshooting Flowchart — ECU

Check Engine light never comes on (even for two seconds) after ignition is turned on.

Is the oil pressure light on?

NO → Inspect No. 13 fuse.

Is No. 13 fuse OK?

NO → **Replace fuse.**

YES → **Repair open in YEL between No. 13 fuse and gauge assembly.**

YES

Turn the ignition switch OFF.

Connect the test harness between the ECU and connector (page 11-28).

Connect A13 terminal to body ground.

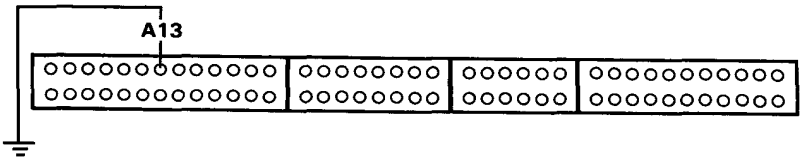

Turn the ignition switch ON.

Is Check Engine light on?

NO →
- **Replace the light bulb.**
- **Repair open in BLU wire between ECU (A13) and gauge assembly.**

YES

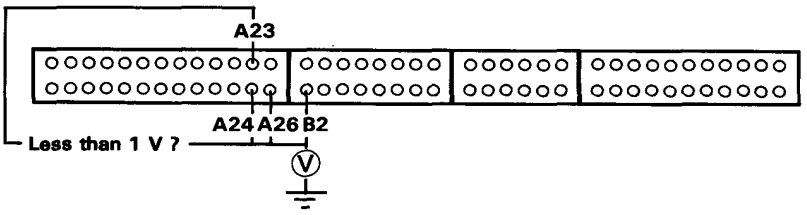

Measure voltage between body ground and the following terminals individually: •A23, •A24, •A26, •B2.

Is there less than 1V?

NO → **Repair open in wire between ECU and intake manifold (G101) that had more than 1V.**

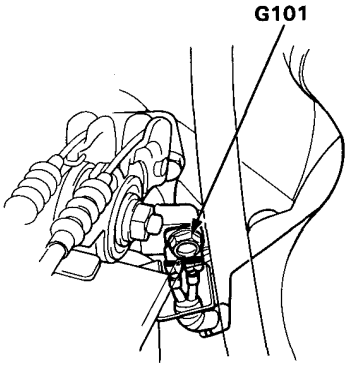

YES

Substitute a known-good ECU and recheck. If symptom/ indication goes away, replace the original ECU.

NOTE: If the service check connector is jumped the Check Engine light will stay on.

Check Engine light stays on or comes on after two seconds.

Turn the ignition switch ON.

Connect the service check connector with a jumper wire.

Does Check Engine light indicate any CODE?

YES → **Go to self-diagnostic procedures (page 11-27).**

NO

Remove the jumper wire from the service check connector.

Try to start the engine.

Did the engine start?

YES → Turn the ignition switch OFF.

NO

Remove and inspect the No. 5 (20 A) fuse in the dash fuse box.

Is the fuse OK?

NO → **Replace the fuse.**

YES

(To page 11-36)

Connect the test harness between the ECU and connector (page 11-28).

Turn the ignition switch ON.

Measure voltage between C9 (+) terminal and A26 (−) terminal.

Is there approx. 5V?

YES → Connect the service check connector with a jumper wire.

NO

Repair short to body ground in WHT wire between the ECU (C9) and service check connector.

Measure voltage between C9 (+) terminal and A26 (−) terminal.

Is there approx. 5V?

YES → * **— Repair open in WHT wire between ECU (C9) and service check connector.**
— Repair open in BLK wire between service check connector and G403 (RHD: 404).

NO

Remove the jumper wire from the service check connector.

(To page 11-36)

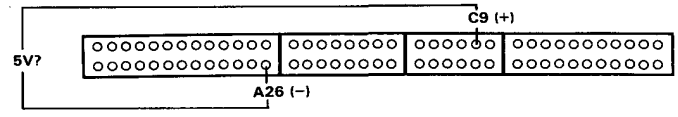

* NOTE: After repair, reconnect the service check connector with a jumper wire, turn the ignition switch on, and recheck the Check Engine light for a code.

(cont'd)

Troubleshooting Flowchart — ECU (cont'd)

(From page 11-35)

Inspect the IG COIL (30 A) fuse in the dash fuse box.

Is the fuse OK?

NO → **Replace the fuse.**

YES

Turn the ignition switch ON.

Disconnect the 3P connector of each sensor one at a time:
- MAP sensor
- EGR valve lift sensor (Except KQ)
- IMA sensor (without CATA)

Does Check Engine light remain ON?

NO → **Replace the sensor that caused the light to go out.**

YES

Connect the service check connector with a jumper wire.

Disconnect the 3P connector of each sensor one at a time:
- Throttle angle sensor
- Ignition timing adjuster

Does Check Engine light indicate CODE 7 or 18?

YES → **Replace the throttle angle sensor (code 7) or ignition timing adjuster (code 18).**

NO

Turn the ignition switch OFF.

Remove the jumper wire from the service check connector.

Connect the test harness. Disconnect the "D" connector from the ECU only, not the main wire harness (page 11-28).

Check for continuity between body ground terminals D19, D20.

(To page 11-37)

(From page 11-35)

Turn the ignition switch OFF.

Disconnect "A" connector from the ECU.

Turn the ignition switch ON.

Is the Check Engine light ON?

NO → **Substitute a known-good ECU and recheck. If symptom/indication goes away, replace the original ECU.**

YES

Repair short to body ground in BLU wire between the ECU (A13) and Check Engine light.

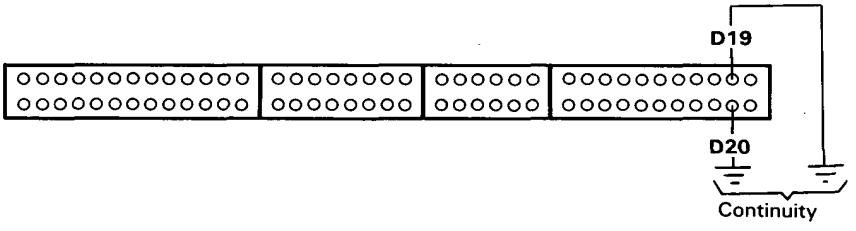

(From page 11-36)

Does continuity exist?

YES → **Repair short to body ground in YEL/WHT wire between ECU (D19, D20) and throttle angle sensor, EGR valve lift sensor (Except KQ), MAP sensor, IMA sensor (without CATA) and Ignition timing adjuster.**

NO ↓

Reconnect all the sensor connectors.
Reconnect the "D" connector to the ECU.

Turn the ignition switch ON.

Measure voltage between A26 (−) and the following: C1 (+) and A25 (+).

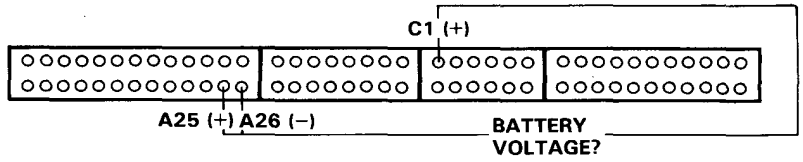

Is there battery voltage?

NO → **— Repair open in YEL/BLK wire between ECU (A25, C1) and main relay.**
— Check main relay and wiring connectors at main relay.

YES ↓

Substitute a known-good ECU and recheck. If symptom/indication goes away, replace the original ECU.

Troubleshooting Flowchart —— Oxygen Sensors [with CATA]

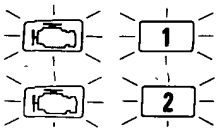

Self-diagnosis Check Engine light indicates code 1: A problem in the Left Oxygen (O_2) Sensor circuit.

Self-diagnosis Check Engine light indicates code 2: A problem in the Right Oxygen (O_2) Sensor circuit.

The oxygen sensors detect the oxygen content in the exhaust gas and signal the ECU. In operation, the ECU receives the signals from the sensors and varies the duration during which fuel is injected. The oxygen sensors have internal heaters. The heaters stabilize the sensors' output. The oxygen sensors are installed in the exhaust manifolds.

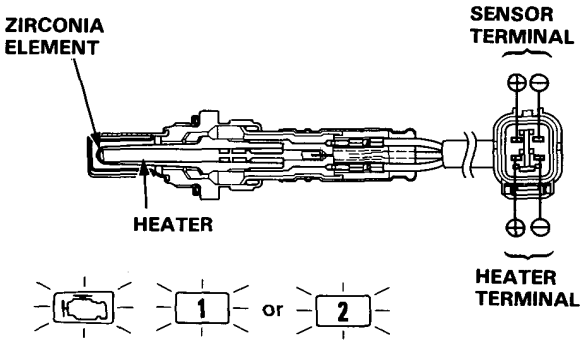

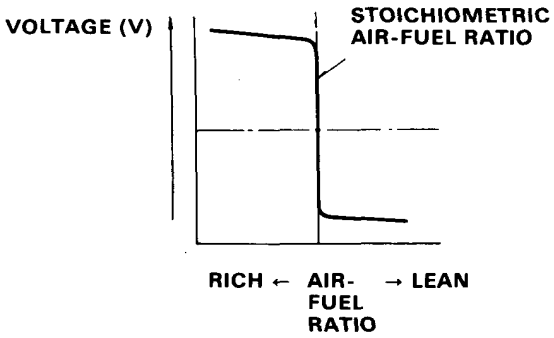

— Check Engine light has been reported on.
— With service check connector jumped (page 11-24), CODE 1 (Left O_2 sensor) and/or 2 (Right O_2 sensor) are indicated.

Do the ECU Reset Procedures (page 11-25).

Warm up engine to normal operating temperature (cooling fan comes on).

Run engine for 60 seconds.

Road test with the transmission in 2nd gear (M/T: 4th gear). Starting at 1200 min^{-1} (rpm) accelerate using wide open throttle for at least 5 seconds. Then decelerate for at least 5 seconds with the throttle completely closed.

Is Check Engine light on and does it indicate CODE 1 or CODE 2?

NO → **Intermittent failure, system is OK at this time. Check for poor connections or loose wires at the O_2 sensors and ECU.**

YES

Go to page 11-44 and perform test for CODE 43 or CODE 44.

Troubleshooting Flowchart — Oxygen Sensor Heater [with CATA]

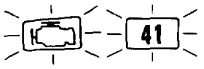

Self-diagnosis Check Engine light indicates code 41: A problem in the Left Oxygen (O_2) Sensor Heater circuit.

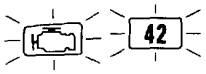

Self-diagnosis Check Engine light indicates code 42: A problem in the Right Oxygen (O_2) Sensor Heater circuit.

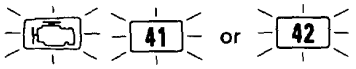

- **Engine is running.**
- **Check Engine light has been reported on. With service check connector jumped (page 11-24), CODE 41 and/or 42 are indicated.**

Do the ECU Reset Procedures (page 11-25).

Start the engine.

Is Check Engine light on and does it indicate CODE 41 or 42 ?

NO → **Intermittent failure, system is OK at this time (test drive may be necessary). Check for poor connections or loose wires at O_2 sensors and ECU.**

YES

Stop the engine

Disconnect the 4P connector from the O_2 sensor.

Measure resistance between terminals C and D on the O_2 sensor.

Is there 10–20 Ω?

NO → **Replace O_2 sensor.**

YES

(To Page 11-41)

LEFT:

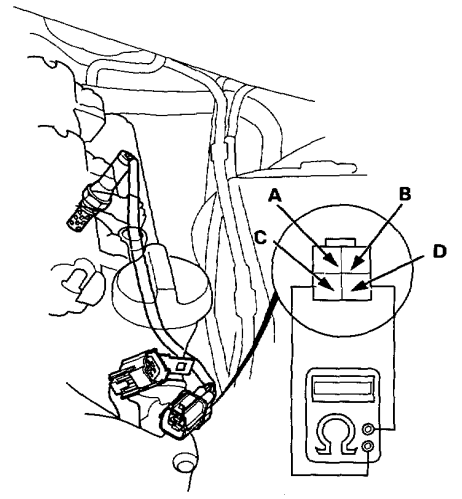

10–20 Ω
DIGITAL CIRCUIT TESTER
07411–0020000

RIGHT:

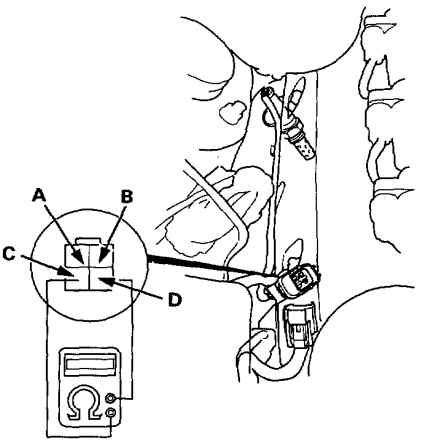

10–20 Ω
DIGITAL
CIRCUIT TESTER
07411–0020000

(From page 11-40)

Check for continuity to body ground on each terminal on the O2 sensor.

Does continuity exist?
- YES → **Replace O2 sensor.**
- NO ↓

Check for continuity between terminal A and terminals C and D individually.

Does continuity exist?
- YES → **Replace O2 sensor.**
- NO ↓

Turn the ignition switch ON.

At O2 sensor harness measure voltage between BLK/YEL (+) terminal and GRN/BLU (−) or GRN/RED (−)* terminal.

*: RIGHT SENSOR

Is there battery voltage?
- YES → Disconnect the "A" connector from the ECU.
- NO ↓

Measure voltage between BLK/YEL (+) terminal and body ground.

Is there battery voltage?
- NO → **− Repair open in BLK/YEL wire between O2 sensors and No. 22 fuse.**
  − Replace blown No. 22 fuse (20 A) in the under-dash fuse/relay box.
- YES ↓

Turn the ignition switch OFF.

(To page 11-42)

At O2 sensor harness measure voltage between BLK/YEL (+) terminal and GRN/BLU (−) or GRN/RED (−)* terminal.

*: RIGHT SENSOR

Is there battery voltage?
- YES → **Repair short in GRN/BLU or GRN/RED* wire between ECU (A10 or A12*) and O2 sensor.**
- NO ↓

Substitute a known-good ECU and recheck. If symptom/indication goes away, replace the original ECU.

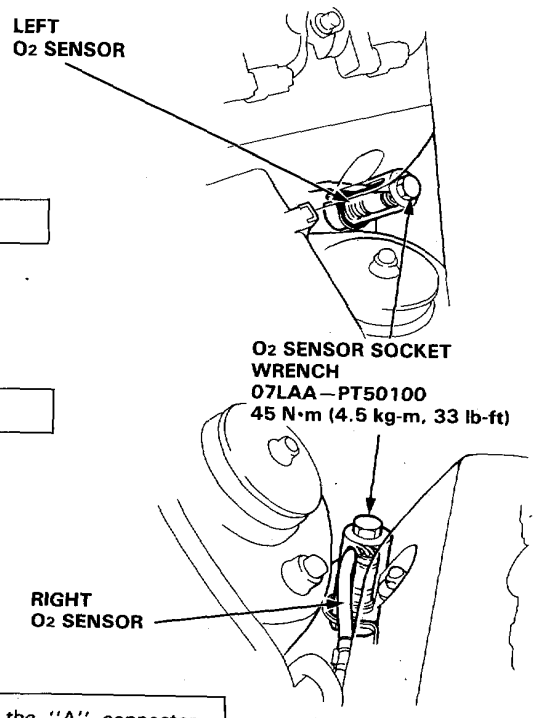

(cont'd)

Troubleshooting Flowchart — Oxygen Sensor Heater (cont'd)

(From page 11-41)

Reconnect the 4P connector to O2 sensor.

Connect the test harness "A" connector to the main wire harness only, not the ECU (page 11-28).

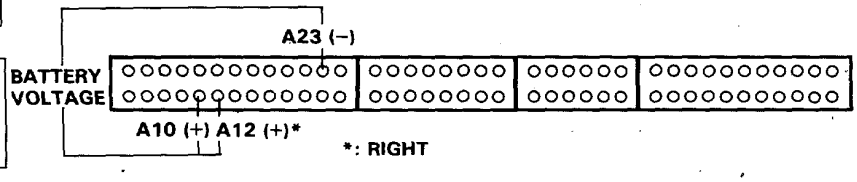

Turn the ignition switch ON.

Measure voltage between A10 (+) or A12 (+)* terminal and A23 (–) terminal.

*: RIGHT SENSOR

Is there battery voltage?

NO → Repair open in GRN/BLU or GRN/RED* wire between ECU (A10 or A12*) and O2 sensor.

YES → Substitute a known-good ECU and recheck. If symptom/indication goes away, replace the original ECU.

Troubleshooting Flowchart — Fuel Supply System [with CATA]

43 — Self-diagnosis Check Engine light indicates code 43: Most likely a problem in the Left Oxygen (O_2) Sensor circuit or a problem in the Left Fuel Supply System.

44 — Self-diagnosis Check Engine light indicates code 44: Most likely a problem in the Right Oxygen (O_2) Sensor circuit or a problem in the Right Fuel Supply System.

NOTE: If 43 or 44 code is accompanied by the Check Engine light and poor driveability, go to page 11-95 Fuel Supply System.

43 or 44

- **Check Engine light has been reported on.**
- **With service check connector jumped (page 11-24), CODE 43 and/or 44 are indicated.**
- **or continued from code 1 or 2.**

Do the ECU Reset Procedures (page 11-25).

Warm up engine to normal operating temperature (cooling fan comes on).

Hold engine at 3,000 min^{-1} (rpm) for 2 minutes.
(A/T: Transmission in N or P.)

Is the Check Engine light on and does it indicate CODE 43 or 44?

NO → **Intermittent failure, system is OK at this time (test drive may be necessary).**
Check for poor connections or loose wires at O_2 sensors and ECU.

YES

Turn the ignition switch OFF.

Connect the test harness between the ECU and connector (page 11-28).

With the ignition switch OFF, wait for at least two minutes.

Install a jumper wire on the test harness between A10 and A26 (left): or A12 and A26 (right).

Turn the ignition switch ON.

Measure voltage between D14 (+) (left) or D16 (+) (right) terminal and A26 (−) terminal as soon as the ignition switch is turned on.

(To page 11-45)

NOTE:
- Use DIGITAL CIRCUIT TESTER (07411−0020000) or equivalent.
- Use 2 Volt range.

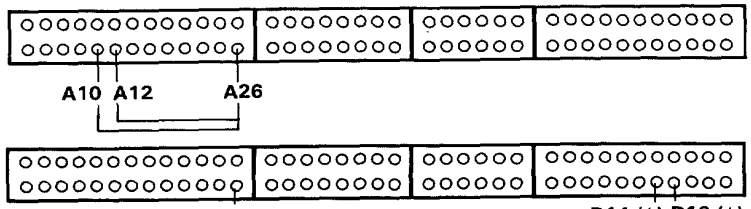

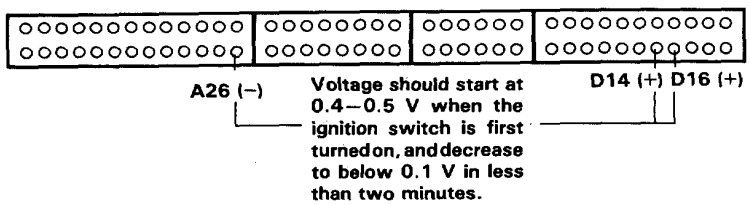

Voltage should start at 0.4−0.5 V when the ignition switch is first turned on, and decrease to below 0.1 V in less than two minutes.

(From page 11-44)

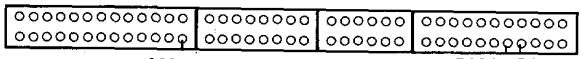

Voltage should start at 0.4–0.5 V when the ignition switch is first turned on, and decrease to below 0.1 V in less than two minutes.

Is there 0.1 V or less when the ignition switch is first turned on?

YES → Disconnect the 4P connector from the O_2 sensor.

Measure voltage between D14 (+) (left) or D16 (+) (right) terminal and A26 (−) terminal.

Is there more than 0.1 V?

YES → **Replace O_2 sensor.**

NO → *Disconnect the "D" connector from the main wire harness.*

Measure voltage between D14 (+) (left) or D16 (+) (right) terminal and A26 (−) terminal.

Is there more than 0.1 V?

YES → **Repair short in WHT (left) or RED/BLU (right) wire between ECU (D14 or D16) and O_2 sensor.**

NO → **Substitute a known-good ECU and recheck. If symptom/indication goes away, replace the original ECU.**

NO → Disconnect the 4P connector from the O_2 sensor.

Measure voltage at the engine wire harness side of the O_2 sensor connector between A (+) and B (−).

Is there more than 0.1 V?

YES → **Replace O_2 sensor.**

NO → **Repair open in WHT (left) or RED/BLU (right) wire between ECU (D14 or D16) and O_2 sensor.**

RIGHT:

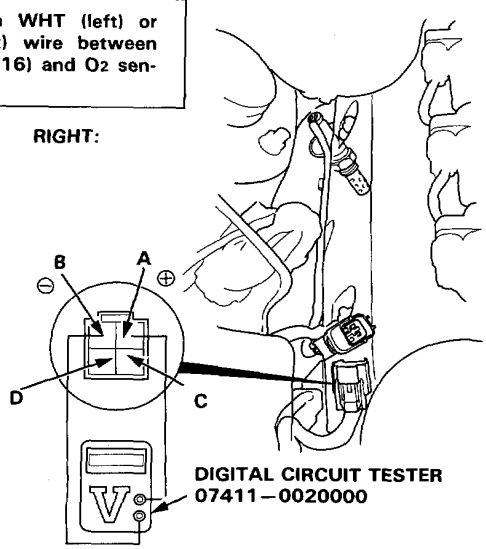

DIGITAL CIRCUIT TESTER 07411–0020000

LEFT:

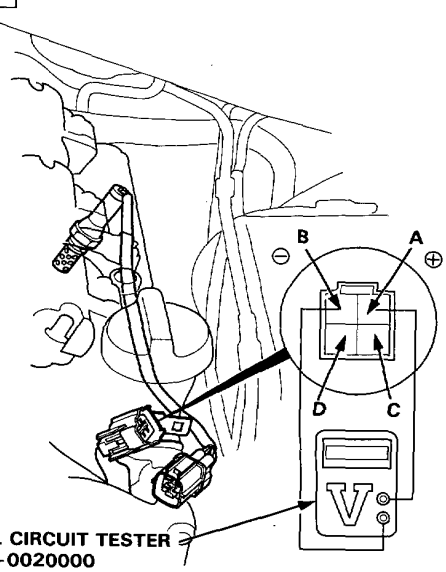

DIGITAL CIRCUIT TESTER 07411–0020000

Troubleshooting Flowchart —— MAP Sensor

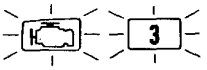

Self-diagnosis Check Engine light indicates code 3: An electrical problem in the Manifold Absolute Pressure (MAP) Sensor system.

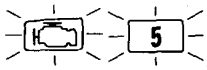

Self-diagnosis Check Engine light indicates code 5: Most likely mechanical problem (broken hose) in the Manifold Absolute Pressure (MAP) Sensor System.

The MAP sensor converts manifold absolute pressure into electrical signals and inputs the ECU.

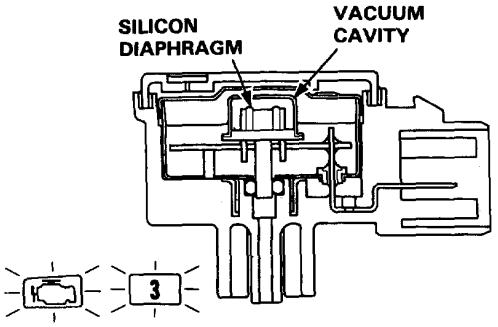

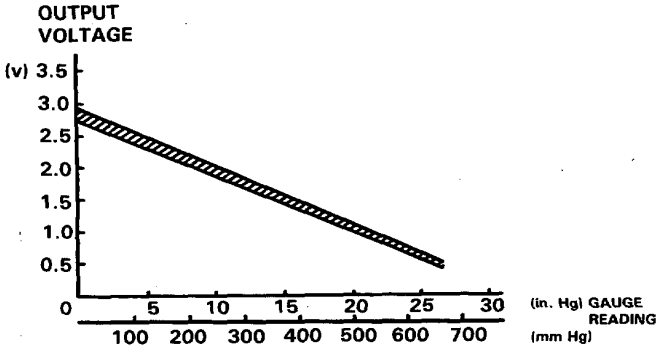

- Engine is warm and running.
- Check Engine light has been reported on.
- With service check connector jumped (page 11-24), CODE 3 is indicated.

Do the ECU Reset Procedures (page 11-25).

Start the engine and allow it to idle.

Is Check Engine light on and does it indicate CODE 3?

NO → Intermittent failure, system is OK at this time (test drive may be necessary). Check for poor connection or loose wires at MAP sensor and ECU.

YES

Turn the ignition switch OFF.

Disconnect the 3P connector from the MAP sensor.

Turn the ignition switch ON.

(To page 11-47)

[LHD]

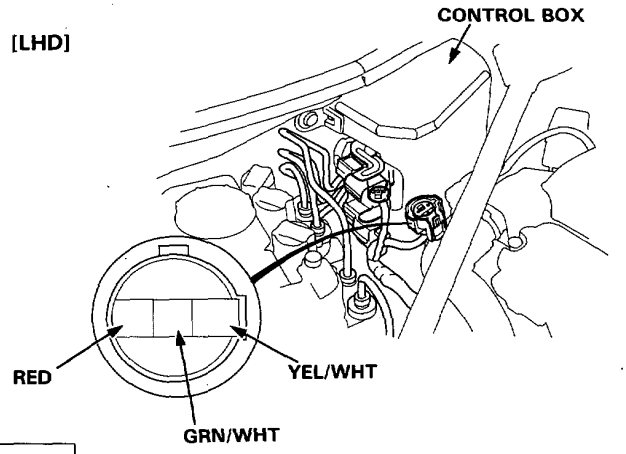

[RHD]

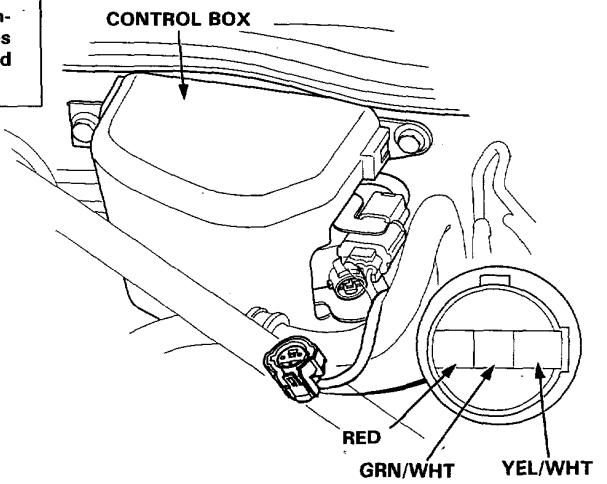

(From page 11-46)

Measure voltage between YEL/WHT (+) terminal and body ground.

Is there approx. 5V?

YES → Measure voltage between YEL/WHT (+) terminal and GRN/WHT (−) terminal.

NO → Connect the test harness D connector to the ECU only, not to the main wire harness (page 11-28).

Measure voltage between D19 (+) terminal and D21 (−) terminal.

Is there approx. 5 V?

YES → Repair open in YEL/WHT wire between ECU (D19) and MAP sensor.

NO → Substitute a known-good ECU and recheck. If symptom/indication goes away, replace the original ECU.

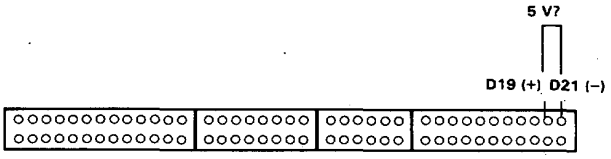

Is there approx. 5V?

NO → Repair open in GRN/WHT wire between ECU (D21) and MAP sensor.

YES → Measure voltage between RED (+) terminal and GRN/WHT (−) terminal.

Is there approx. 5V?

NO → Repair open or short in RED wire between ECU (D17) and MAP sensor.
If wire is OK, substitute a known-good ECU and recheck. If prescribed voltage is now available, replace the original ECU.

YES → Turn the ignition switch OFF.

Reconnect the 3P connector to the MAP sensor.

Connect the test harness between the ECU and connector (page 11-28).

Turn the ignition switch ON.

(To page 11-48)

(cont'd)

Troubleshooting Flowchart — MAP Sensor (cont'd)

(From page 11-47)

Measure voltage between D17 (+) terminal and D21 (−) terminal.

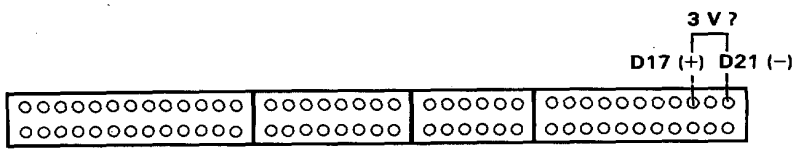

Is there approx. 3 V ?

NO → **Replace MAP sensor.**

YES → **Substitute a known-good ECU and recheck. If symptom/indication goes away, replace the original ECU.**

(cont'd)

Troubleshooting Flowchart — MAP Sensor (cont'd)

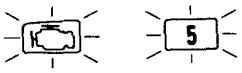

- Check Engine light has been reported on.
- With service check connector jumped (page 11-24), CODE 5 is indicated.

Do the ECU Reset Procedures (page 11-25).

Start the engine and keep engine rpm at idle.

Is Check Engine light on and does it indicate CODE 5?

NO →
- Intermittent failure, system is OK at this time (test drive may be necessary).
- Check vacuum hoses, pipes and connections.
- Make sure all connectors are secure.

YES ↓

Stop the engine.

Disconnect #21 hose from the throttle body base, connect vacuum pump to the hose and apply vacuum.

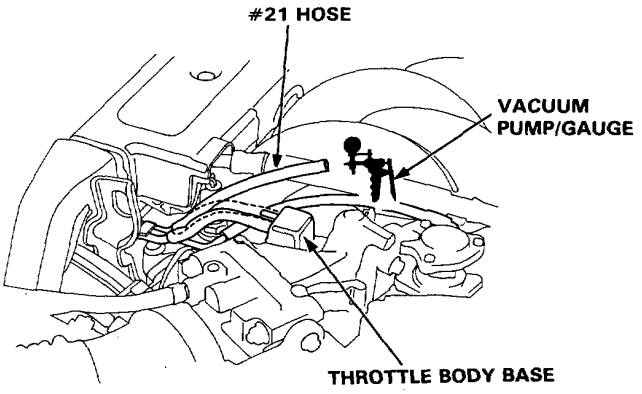

Does it hold vacuum?

NO → Connect a vacuum pump to the MAP sensor and apply vacuum.

Does it hold vacuum?

NO → **Replace MAP sensor.**

YES → **Repair vacuum leak in hose routing between MAP sensor and intake manifold.**

YES ↓

Connect a T-fitting from a vacuum gauge between the throttle body base and #21 hose.

(To page 11-51)

(From page 11-50)

Start the engine.

Is there manifold vacuum?

NO → **Remove restriction from throttle body base.**

YES

Stop the engine.

Connect the test harness between the ECU and connector (page 11-28).

Turn the ignition switch ON.

Measure voltage between D17 (+) terminal and D21 (–) terminal.

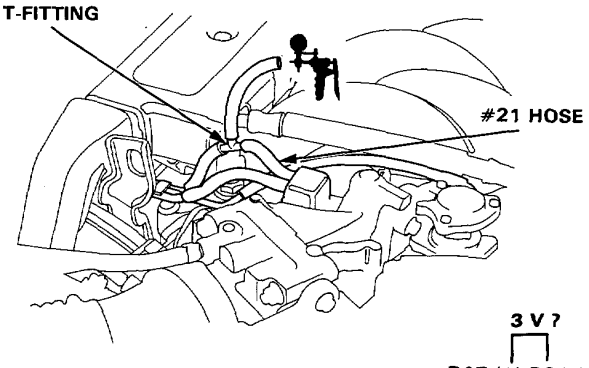

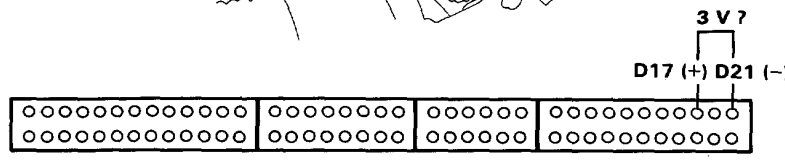

Is there approx. 3 V ?

NO → **Replace MAP sensor.**

YES

Start the engine and allow it to idle.

Is there approx. 1 V?

NO → **Replace MAP sensor.**

YES

Substitute a known-good ECU and recheck. If symptom/indication goes away, replace the original ECU.

Troubleshooting Flowchart —— CRANK/CYL Sensor

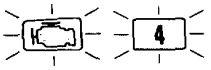

Self-diagnosis Check Engine light indicates code 4: A problem in the circuit of the CRANK 1 Sensor.

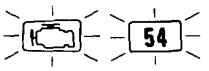

Self-diagnosis Check Engine light indicates code 54: A problem in the circuit of the CRANK 2 Sensor.

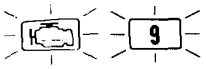

Self-diagnosis Check Engine light indicates code 9: A problem in the circuit of the CYL 1 Sensor.

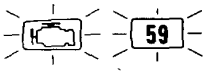

Self-diagnosis Check Engine light indicates code 59: A problem in the circuit of the CYL 2 Sensor.

The CRANK sensor determines timing for fuel injection and ignition of each cylinder and also detects engine speed. The CYL sensor detects the position of No. 1 cylinder for sequential fuel injection to each cylinder and ignition timing.

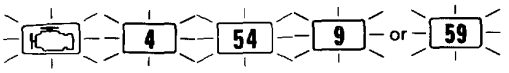

- **Check Engine light has been reported on.**
- **With service check connector jumped (page 11-24), CODE 4, 54, 9 and/or 59 are indicated.**

Do the ECU Reset Procedures (page 11-25).

Start the engine.

Is Check Engine light on and does it indicate CODE 4, 54, 9 or 59?

NO → **Intermittent failure, system is OK at this time (test drive may be necessary). Check for poor connections or loose wires at CRANK/CYL sensor and ECU.**

YES

Stop the engine.

Remove the engine harness cover.

Disconnect the 8P connector from the CRANK/CYL sensor.

(To page 11-53)

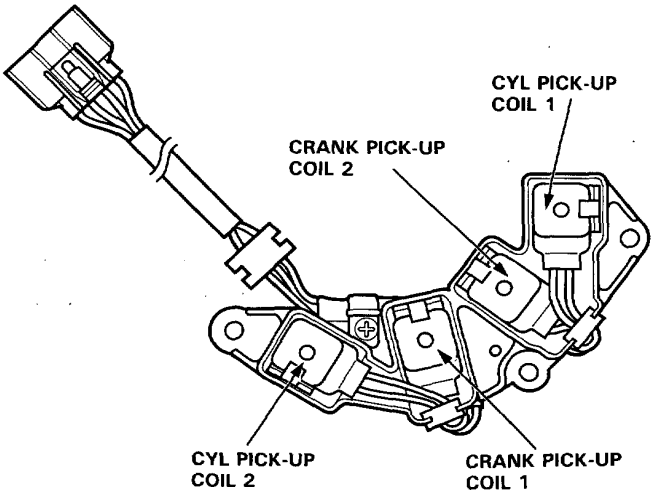

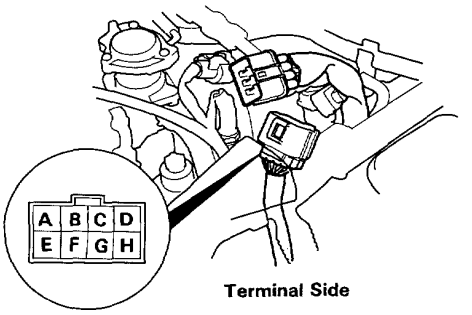

(From page 11-52)

Measure resistance between terminals of the indicated sensor.
*see table

Is there 650–900 Ω?

NO → **Replace the CRANK/CYL sensor (page 6-32).**

YES ↓

Check for continuity to body ground on all terminals individually.

Does continuity exist?

YES → **Replace the CRANK/CYL sensor (page 6-32).**

NO ↓

Reconnect the connector.

Connect the test harness to the main wire harness only, not to the ECU (page 11-28).

Measure resistance between terminals of the indicated sensor on test harness.
*see table

Is there 650–900 Ω?

NO → **Repair open in the indicated sensor wires.**
***see table**

YES ↓

Check for continuity to body ground on B15, B13, B11 or B9 terminals.

Does continuity exist?

YES → **Repair short in the indicated sensor wires.**
***see table**

NO ↓

Substitute a known-good ECU and recheck. If symptom/indication goes away, replace the original ECU.

*:

SENSOR	CODE	SENSOR TERMINAL	ECU TERMINAL	WIRE COLOR
CRANK 1	4	A	B15	PNK
		B	B16	GRY
CRANK 2	54	C	B14	GRN/WHT
		D	B13	BLK/WHT
CYL 1	9	G	B12	BLU/YEL
		H	B11	YEL/GRN
CYL 2	59	E	B9	ORN
		F	B10	WHT

CRANK:

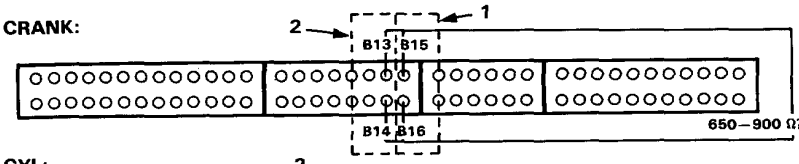

CYL:

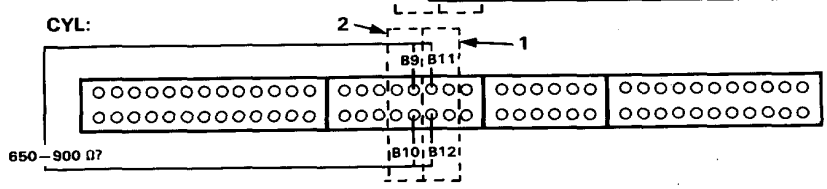

Troubleshooting Flowchart — TW Sensor

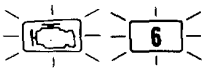

Self-diagnosis Check Engine light indicates code 6: A problem in the Coolant Temperature (TW) Sensor circuit.

The TW sensor is a temperature dependant resistor (thermistor). The resistance of the thermistor decreases as the coolant temperature increases as shown below.

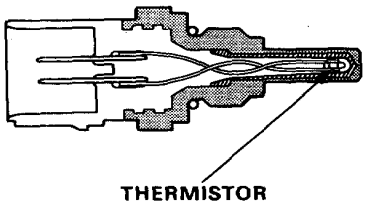

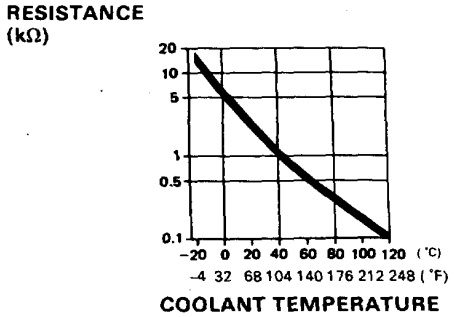

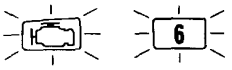

- **Check Engine light has been reported on.**
- **With service check connector jumped (page 11-24), CODE 6 is indicated.**

Do the ECU Reset Procedures (page 11-25).

Turn the ignition switch ON.

Is Check Engine light on and does it indicate CODE 6?

NO → **Intermittent failure, system is OK at this time (test drive may be necessary). Check for poor connections or loose wires at TW sensor and ECU.**

YES

Warm up engine to normal operating temperature (cooling fan comes on).

Turn the ignition switch OFF.

Remove the engine harness cover.

Disconnect the 2P connector from the TW sensor.

Measure resistance between the 2 terminals on the TW sensor.

Is there 200—400 Ω ?

NO → **Replace TW sensor.**

YES

(To page 11-55)

(From page 11-54)

Turn the ignition switch ON.

Measure voltage between RED/WHT and body ground.

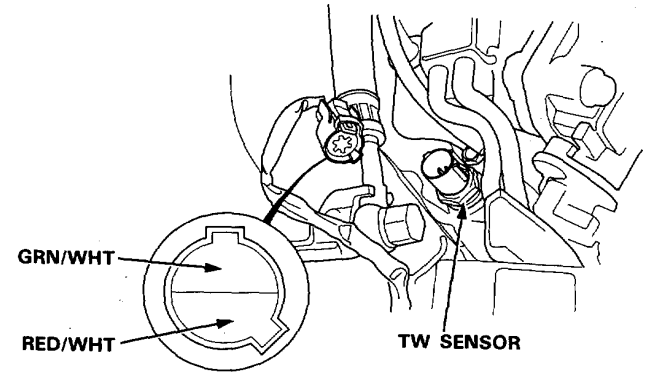

Is there approx. 5V ?

YES → Measure voltage between RED/WHT (+) terminal and GRN/WHT (−) terminal.

Is there approx. 5V ?

NO → **Repair open in GRN/WHT wire between ECU (D22) and TW sensor.**

YES → **Substitute a known-good ECU and recheck. If symptom/indication goes away, replace the original ECU.**

NO → Connect the test harness D connector to the ECU only, not to the main wire harness (page 11-28).

Measure voltage between D13 (+) terminal and D22 (−) terminal.

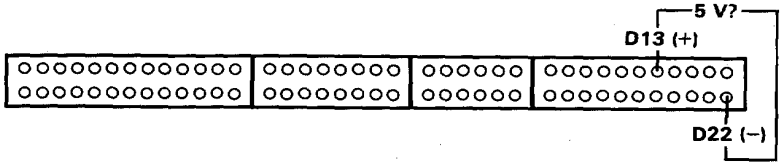

Is there approx. 5V?

YES → **Repair open or short in RED/WHT wire between ECU (D13) and sensor.**

NO → **Substitute a known-good ECU and recheck. If symptom/indication goes away, replace the original ECU.**

Troubleshooting Flowchart — Throttle Angle Sensor

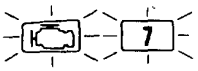

Self-diagnosis Check Engine light indicates code 7: A problem in the Throttle Angle Sensor circuit.

The throttle angle sensor is a potentiometer. It is connected to the throttle valve shaft. As the throttle angle changes, the throttle angle sensor varies the voltage signal to the ECU.

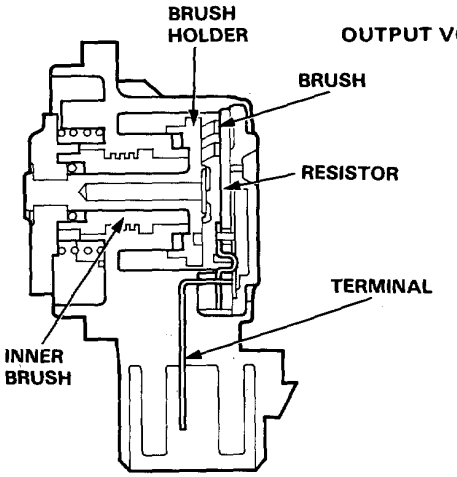

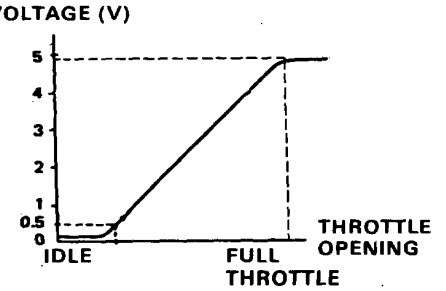

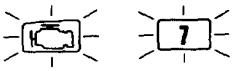

- Engine is running.
- Check Engine light has been reported on.
- With service check connector jumped (page 11-24), CODE 7 is indicated.

Do the ECU Reset Procedures (page 11-25).

Turn the ignition switch ON.

Is Check Engine light on and does it indicate CODE 7?

NO → Intermittent failure, system is OK at this time (test drive may be necessary). Check for poor connections or loose wires at throttle angle sensor and ECU.

YES

Turn the ignition switch OFF.

Disconnect the 3P connector from the throttle angle sensor.

Turn the ignition switch ON.

Measure voltage between YEL/WHT (+) terminal and GRN/WHT (−) terminal.

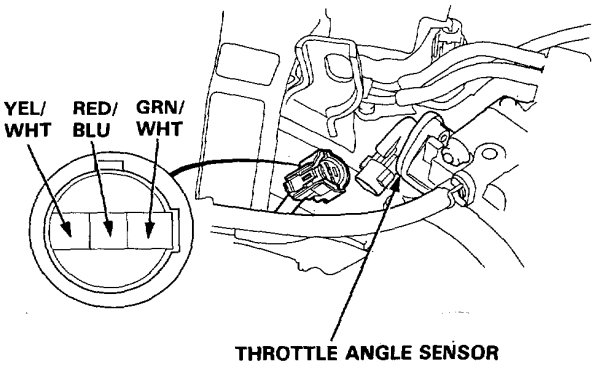

Is there approx. 5V ?

NO → Measure voltage between YEL/WHT (+) terminal and body ground.

(To page 11-57)

YES

(To page 11-57)

(From page 11-56)

Turn the ignition switch OFF.

Reconnect the 3P connector.

Connect the test harness between the ECU and connector (page 11-28).

Turn the ignition switch ON.

Measure voltage between D11 (+) terminal and D22 (−) terminal.

Is voltage 0.5 V at full close throttle, and approx. 4.5 V at full open throttle?
NOTE: There should be a smooth transition from 0.5 V to approx. 4.5 V as the throttle is depressed.

NO

- **Replace throttle angle sensor.**
- **Repair open or short in RED/BLU wire between ECU (D11) and throttle angle sensor.**

YES

Substitute a known-good ECU and recheck. If symptom/indication goes away, replace the original ECU.

(From page 11-56)

Is there approx. 5V ?

YES

Repair open in GRN/WHT wire between ECU (D22) and throttle angle sensor.

NO

Turn the ignition switch OFF.

Connect the test harness between the ECU and connector (page 11-28).

Turn the ignition switch ON.

Measure voltage between D20 (+) terinal and D22 (−) terminal.

Is there approx. 5V ?

YES

Repair open in YEL/WHT wire between ECU (D20) and throttle angle sensor.

NO

Substitute a known-good ECU and recheck. If prescribed voltage is now available, replace the original ECU.

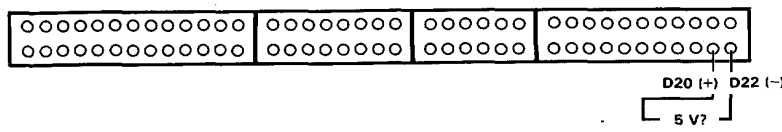

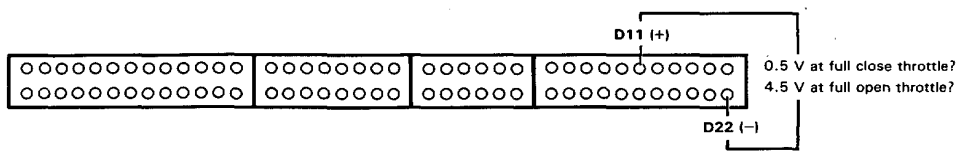

Troubleshooting Flowchart —— TA Sensor

10 Self-diagnosis Check Engine light indicates code 10: A problem in the Intake Air Temperature (TA) Sensor circuit.

The TA sensor is a temperature dependant resistor (thermistor). The resistance of the thermistor decreases as the intake air temperature increases as shown below.

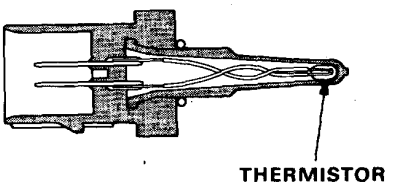

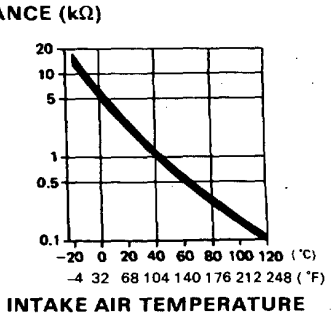

10

- Check Engine light has been reported on.
- With service check connector jumped (page 11-24), CODE 10 is indicated.

Do the ECU Reset Procedures (page 11-25).

Turn the ignition switch ON.

Is Check Engine light on and does it indicate CODE 10?

NO → **Intermittent failure, system is OK at this time (test drive may be necessary). Check for poor connections or loose wires at TA sensor and ECU.**

YES

Turn the ignition switch OFF.

Disconnect the 2P connector from the TA sensor.

Measure resistance between the 2 terminals on the TA sensor.

Is there 0.4—4.0 kΩ?

NO → **Replace TA sensor.**

YES

(To page 11-59)

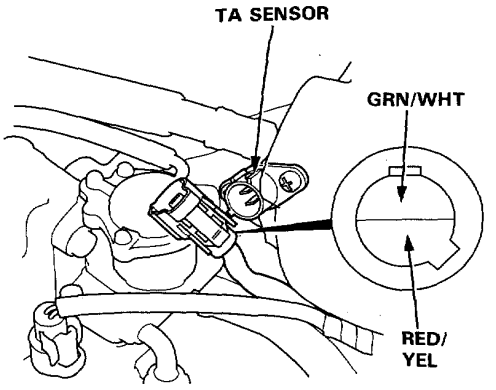

(From page 11-58)

Turn the ignition switch ON.

Measure voltage between RED/YEL (+) terminal and body ground.

Is there approx. 5 V ?

YES → Measure voltage between RED/YEL (+) terminal and GRN/WHT (−) terminal.

Is there approx. 5 V ?

NO → **Repair open in GRN/WHT wire between ECU (D22) and TA sensor.**

YES → **Substitute a known-good ECU and recheck. If symptom/indication goes away, replace the original ECU.**

NO → Connect the test harness D connector to the ECU only, not to the main wire harness (page 11-28).

Measure voltage between D15 (+) terminal and D22 (−) terminal.

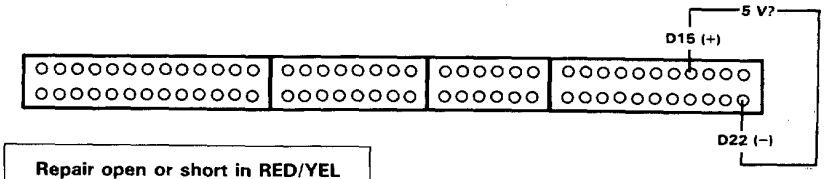

Is there approx. 5V?

YES → **Repair open or short in RED/YEL wire between ECU (D15) and TA sensor.**

NO → **Substitute a known-good ECU and recheck. If symptom/indication goes away, replace the original ECU.**

Troubleshooting Flow Chart —— IMA Sensor [Without CATA]

11 Self-diagnosis Check Engine light indicates code 11: Most likely a problem in the IMA Sensor circuit.

The IMA sensor is selected resistance device used to control idle mixture.

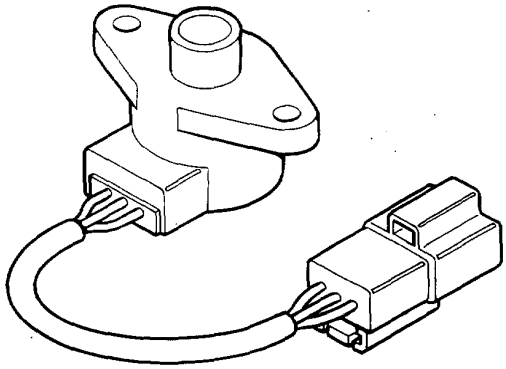

11

- **Check Engine light has been reported on.**
- **With service check connector jumped (page 11-24), CODE 11 is indicated.**

Do the ECU Reset Procedures (page 11-25).

Start the engine.

Is Check Engine light on and does it indicate CODE 11?

NO → **Intermittent failure, system is OK at this time (test drive may be necessary). Check for poor connections or loose wires at IMA sensor and ECU.**

YES

Turn the ignition switch OFF.

Disconnect the 3P connector from the IMA sensor.

Measure resistance between A terminal and C terminal on IMA sensor harness.

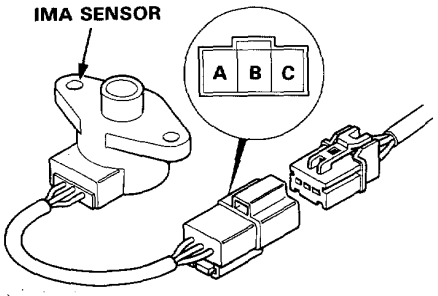

Is there 3.5—6.5 kΩ?

NO → **Replace IMA sensor.**

YES

(To page 11-61)

(From page 11-60)

Measure resistance between A and B terminals and between C and B terminals.

Does the sum of the two resistance checks equal 3.5–6.5 kΩ?

NO → **Replace IMA sensor.**

YES

Turn the ignition switch ON.

Measure voltage between YEL/WHT (+) terminal and GRN/WHT (–) terminal on the wire harness.

Is there approx. 5 V?

NO → Measure voltage between YEL/WHT (+) terminal and body ground.

Is there approx. 5 V?

YES → **Repair open in GRN/WHT wire between ECU (D22) and IMA sensor.**

NO

Turn the ignition switch OFF.

Connect the test harness between the ECU and connector (page 11-28).

Turn the ignition switch ON.

Measure voltage between D20 (+) terminal and D22 (–) terminal.

Is there approx. 5 V?

YES → **Repair open in YEL/WHT wire between ECU (D20) and IMA sensor.**

NO

***Substitute a known-good* ECU and recheck. If prescribed voltage is now available, replace the original ECU.**

YES

Turn the ignition switch OFF.

Connect the test harness between the ECU and connector (page 11-28)

Turn the ignition switch ON.

Measure voltage between D14 (+) terminal and D22 (–) terminal.

Is voltage 0.5–4.5 V?

NO → **Repair open or short in PNK wire between ECU (D14) and IMA sensor.**

YES

Substitute a known-good ECU and recheck. If symptom/indication goes away, replace the original ECU.

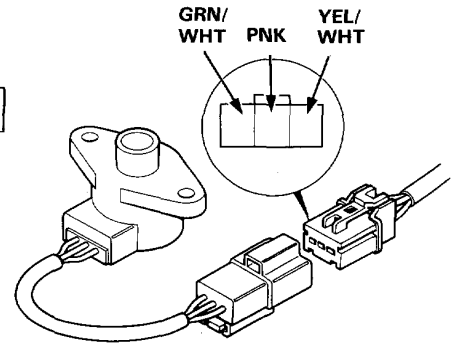

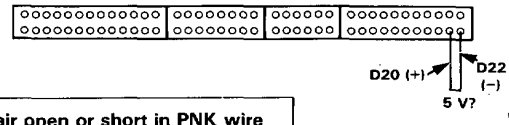

Troubleshooting Flowchart — PA Sensor

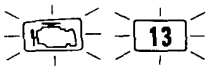

Self-diagnosis Check Engine light indicates code 13: A problem in the Atmospheric Pressure (PA) Sensor.

The PA sensor is built into the ECU.

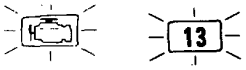

— Check Engine light has been reported on.
— With service check connector jumped (page 11-24), CODE 13 is indicated.

Do the ECU Reset Procedures (page 11-25).

Turn the ignition switch ON.

Is Check Engine light on and does it indicate CODE 13?

NO → **Intermittent failure, system is OK at this time (test drive may be necessary).**

YES → **Substitute a known-good ECU and recheck. If symptom/indication goes away, replace the original ECU.**

Troubleshooting Flowchart — Ignition Output Signal

15 Self-diagnosis Check Engine light indicates code 15: A problem in the Ignition Output Signal circuit.

- **Check Engine light has been reported on.**
- **With service check connector jumped (see page 11-24), CODE 15 is indicated.**

Do the ECU Reset Procedures (page 11-25).

Turn the ignition switch ON.

Is Check Engine light on and does it indicate CODE 15?

NO → **Intermittent failure, system is OK at this time. Check for poor connections or loose wires at igniter unit, ECU and G102.**

YES

Turn the ignition switch OFF.

Disconnect the 8P connector from the igniter unit.

Check for continuity to body ground on C and F terminals individually.

Does continuity exist?

NO → **Repair open in BLK wire between 8P connector and G102.**

YES

Disconnect the 6P connector from the igniter unit.

Connect the test harness between the ECU and connector (page 11-28).

(To page 11-65)

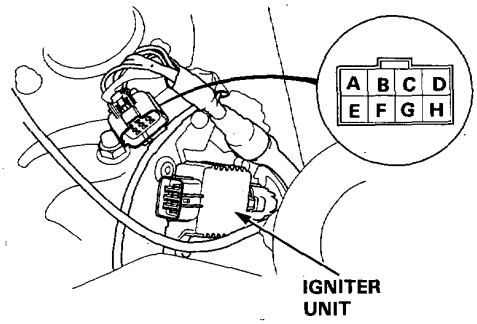

*1:

IGNITER UNIT SECONDARY TERMINAL (8P)	IGNITION COIL (2P)	WIRE COLOR
A	No. 1	WHT
B	No. 2	WHT/GRN
C	GROUND	BLK
D	No. 3	WHT/BLK
E	No. 4	WHT/BLU
F	GROUND	BLK
G	No. 5	WHT/YEL
H	No. 6	WHT/RED

NOTE:
Inspection of igniter unit secondary circuit (Section 23).

(From page 11-64)

Check for continuity between body ground and the following terminals: A21, A22, B8, B6, B4, B3.

Does continuity exist?

YES → **Repair short in each terminal wire.**

NO

Check for continuity between terminals of 6P connector and ECU individually. *See table 2.

Does continuity exist?

NO → **Repair open in each terminal wire.**

YES

Substitute a known-good igniter unit and recheck.

Does Check Engine light indicate CODE 15?

NO → **Replace the original igniter unit.**

YES

Substitute a known-good ECU and recheck. If symptom/indication goes away, replace the original ECU.

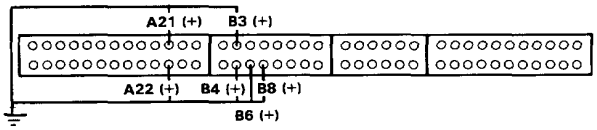

*2:

IGNITER UNIT PRIMARY TERMINAL (6P)	ECU TERMINAL	WIRE COLOR
A	B8 (No. 3)	BLU
B	A22 (No. 2)	BRN
C	A21 (No. 1)	PNK
D	B3 (No. 6)	RED
E	B4 (No. 5)	GRY
F	B6 (No. 4)	GRN

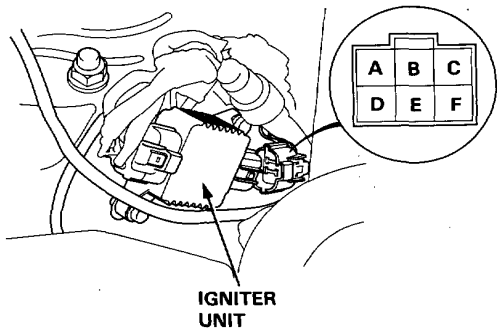

Troubleshooting Flowchart — Vehicle Speed Sensor

17 — Self-diagnosis Check Engine light indicates code 17: A problem in the Vehicle Speed Sensor circuit.

The signal generated by the speed sensor, produces pulses when the front wheels turn.

- **Check Engine light has been reported on.**
- **With service check connector jumped (page 11-24), CODE 17 is indicated.**

Do the ECU Reset Procedures (page 11-25).

Road test necessary.
In 2nd gear accelerate to 4,000 min^{-1} (rpm), then decelerate to 1,500 min^{-1} (rpm) with throttle fully closed.

Is Check Engine light on and does it indicate CODE 17?

NO → **Intermittent failure, system is OK at this time.**
Check for poor connections or loose wires at speed sensor and ECU.

YES

Block rear wheels and set the parking brake. Jack up the front of the car and support with safety stands.

WARNING **Block rear wheels before jacking up front of car.**

Connect the test harness between the ECU and connector (page 11-28).

Turn the ignition switch ON.

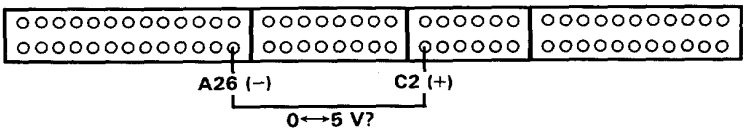

Slowly rotate left front wheel and measure voltage between C2 (+) terminal and A26 (−) terminal.

Does voltage pulse 0 V and 5 V?

NO →
- **Repair open or short in YEL/RED wire between ECU (C2) and the speed sensor.**
- **Faulty speed sensor.**
- **Substitute a known-good ECU and recheck. If symptom/indication goes away, replace the original ECU.**

YES

Substitute a known-good ECU and recheck. If symptom/indication goes away, replace the original ECU.

Troubleshooting Flowchart — Ignition Timing Adjuster

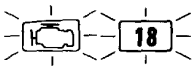

Self-diagnosis Check Engine light indicates code 18: A problem in the Ignition Timing Adjuster circuit.

The ignition timing adjuster allows the electronic ignition advance to be set to 15° BTDC at idle.

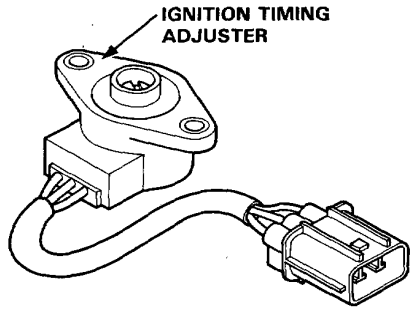

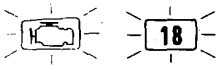

- **Check Engine light has been reported on.**
- **With service check connector jumped (page 11-24), CODE 18 is indicated.**

Do the ECU Reset Procedures (page 11-25).

Turn the ignition switch ON.

Is Check Engine light on and does it indicate CODE 18?

NO → **Intermittent failure system is OK at this time (Test drive may be necessary). Check for poor connections or loose wires at ignition timing adjuster and ECU.**

YES

Turn the ignition switch OFF.

Disconnect the 3P connector from the control box.

Measure resistance between A terminal and C terminal on Ignition timing adjuster.

Is there 3.5—6.5 kΩ?

NO → **Replace Ignition timing adjuster (Section 23).**

YES

(To page 11-69)

[LHD]

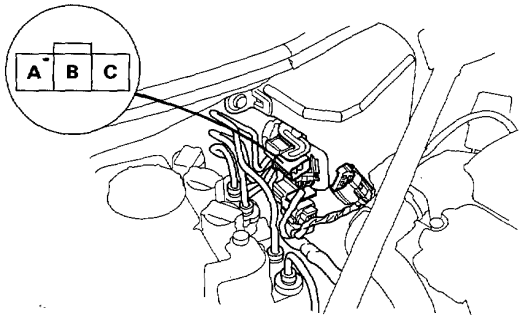

[RHD]

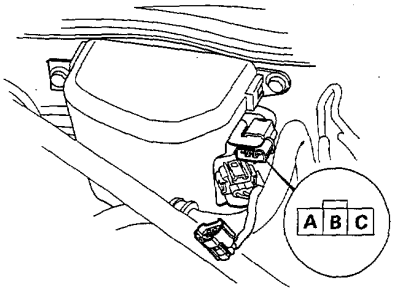

(From page 11-68)

Measure resistance between A and B terminals and between C and B terminals.

Does the sum of the two resistance checks equal 3.5–6.5 kΩ?

NO → **Replace Ignition timing adjuster (Section 23).**

YES

Turn the ignition switch ON.

Measure voltage between YEL/WHT (+) terminal and GRN/WHT (–) terminal on the main wire harness.

Is there approx. 5 V?

NO → Measure voltage between YEL/WHT (+) terminal and body ground.

YES

Turn the ignition switch OFF.

Reconnect 3P connector.

Connect the test harness between the ECU and connector (page 11-28).

Turn the ignition switch ON.

Measure voltage between D8 (+) terminal and D22 (–) terminal.

Is there 0.5–4.5 V?

NO → **Repair open or short in BLU/YEL (RHD: BRN) wire between ECU (D8) and Ignition timing adjuster.**

YES

Substitute a known-good ECU and recheck. If symptom/indication goes away, replace the original ECU.

[LHD]

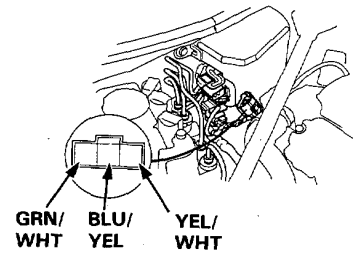

[RHD]

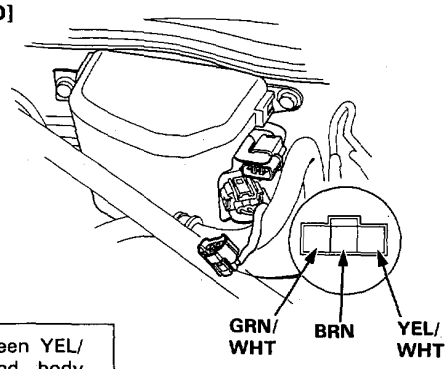

Is there approx. 5 V?

YES → **Repair open in GRN/WHT wire between ECU (D22) and Ignition timing adjuster.**

NO

Turn the ignition switch OFF.

Connect the test harness between the ECU and connector (page 11-28).

Turn the ignition switch ON.

Measure voltage between D20 (+) terminal and D22 (–) terminal.

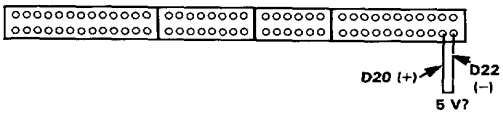

Is there approx. 5 V?

YES → **Repair open in YEL/WHT wire between ECU (D20) and Ignition timing adjuster.**

NO

Substitute a known-good ECU and recheck. If prescribed voltage is now available, replace the original ECU.

Idle Control System

System Troubleshooting Guide

NOTE:

- Across each row in the chart, the sub systems that could be sources of a symptom are ranked in the order they should be inspected, starting with ①. Find the symptom in the left column, read across to the most likely source, then refer to the page listed at the top of that column. If inspection shows the system is OK, try the next system ②, etc.
- If the idle speed is out of specification and the Check Engine light does not blink CODE 14, go to inspection described on page 11-73.

PAGE / SUB SYSTEM / SYMPTOM		IDLE ADJUSTING SCREW	EACV	AIR CONDITIONING SIGNAL	ALTERNATOR FR SIGNAL	A/T SHIFT POSITION SIGNAL	M/T NEUTRAL SWITCH SIGNAL	M/T CLUTCH SWITCH SIGNAL	STARTER SWITCH SIGNAL	BRAKE SWITCH SIGNAL	P/S OIL PRESSURE SWITCH SIGNAL	FAST IDLE VALVE	AIR BOOST VALVE	HOSES AND CONNECTIONS
		93	74	76	78	80	82	84	86	88	90	91	92	*
DIFFICULT TO START ENGINE WHEN COLD												①	②	
WHEN COLD FAST IDLE OUT OF SPEC (1,000–2,000 min^{-1}, rpm)		③	②									①		
ROUGH IDLE			②											①
WHEN WARM ENGINE SPEED TOO HIGH		③	①								③	②		③
WHEN WARM ENGINE SPEED TOO LOW	Idle speed is below specified engine speed (no load)	②	①											
	Idle speed does not increase after initial start up.		①											
	On models with automatic transmission, the idle speed drops in gear		②			①								
	Idle speeds drops when air conditioner in ON		②	①										
	Idle speed drops when steering wheel is turning		②								①			
	Idle speed fluctuates with electrical load		②		③									①
FREQUENT STALLING	WHILE WARMING UP	②	①											
	AFTER WARMING UP	①	②											
FAILS EMISSION TEST														①

System Description

The idle speed of the engine is controlled by the Electronic Air Control Valve (EACV).
The valve changes the amount of air bypassing into the intake manifold in response to electric current sent from the ECU.
When the EACV is activated, the valve opens to maintain the proper idle speed.

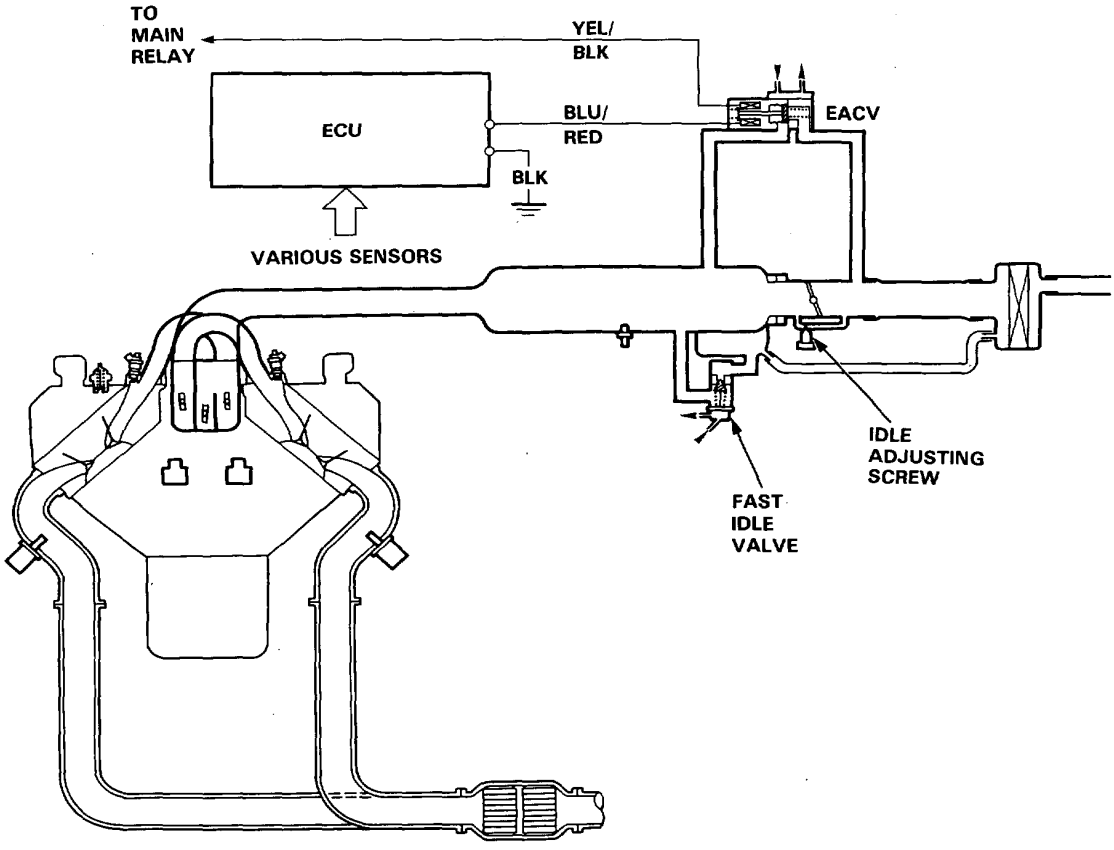

(cont'd)

System Description (cont'd)

1. After the engine starts, the EACV opens for a certain time. The amount of air is increased to raise the idle speed about 150 −30 min^{-1} (rpm).
2. When the coolant temperature is low, the EACV is opened to obtain the proper fast idle speed. The amount of bypassed air is thus controlled in relation to the coolant temperature.

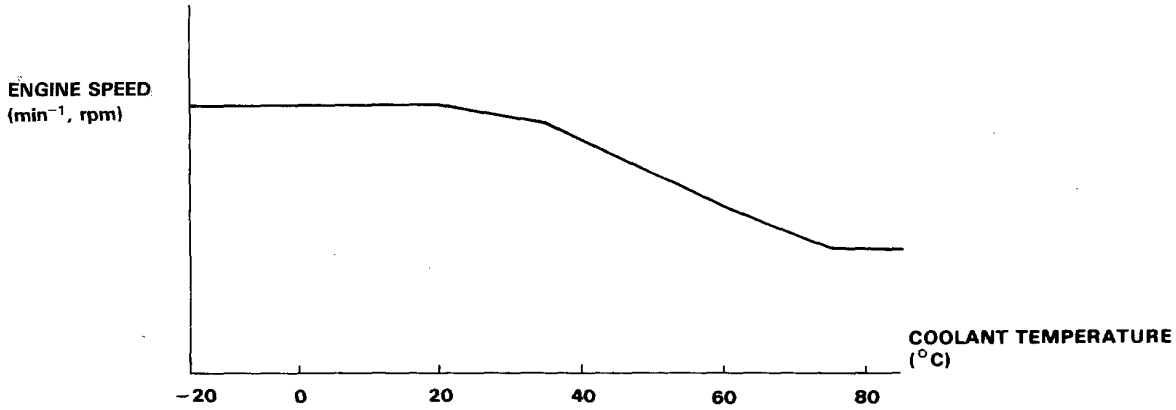

1. When the idle speed is out of specification and the Check Engine light does not blink CODE 14, check the following items:
   - Adjust the idle speed (page 11-93)
   - Air conditioning signal (page 11-76)
   - Alternator FR signal (page 11-78)
   - A/T shift position signal (page 11-80)
   - M/T neutral switch signal (page 11-82)
   - M/T clutch switch signal (page 11-84)
   - Starter switch signal (page 11-86)
   - Brake switch signal (page 11-88)
   - P/S oil pressure switch signal (page 11-90)
   - Fast idle valve (page 11-91)
   - Air boost valve (page 11-92)
   - Hoses and connections
   - EACV and its mounting O-rings

2. If the above items are normal, substitute a known-good EACV and readjust the idle speed (page 11-93).

   - If the idle speed still cannot be adjusted to specification (and the Check Engine light does not blink CODE 14) after EACV replacement, substitute a known-good ECU and recheck. If symptom goes away, replace the original ECU.

Idle Control System

Troubleshooting Flowchart — EACV

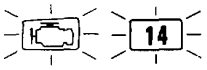

Self-diagnosis Check Engine light indicates code 14: A problem in the Electronic Air Control Valve (EACV) circuit.

The EACV changes the amount of air bypassing the throttle body in response to a current signal from the ECU in order to maintain the proper idle speed.

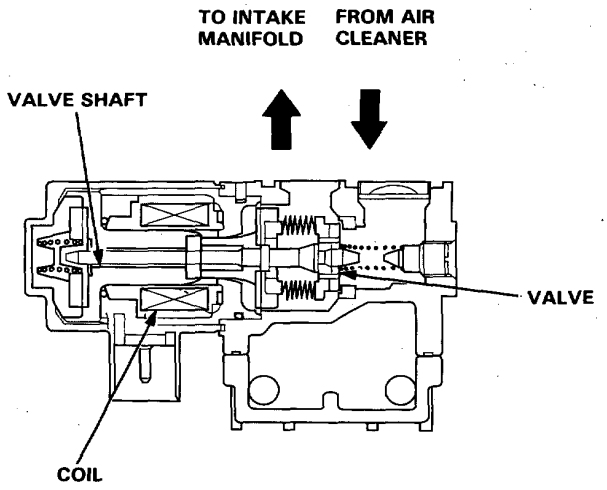

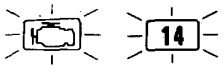

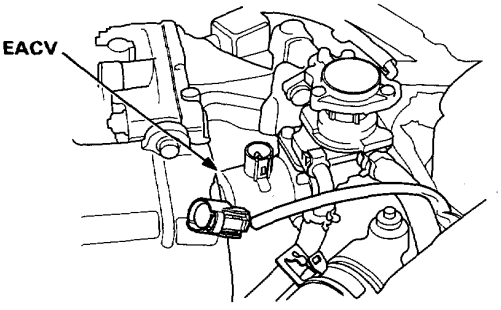

- **Check Engine light has been reported on.**
- **With service check connector jumped (page 11-24), CODE 14 is indicated.**

Do the ECU Reset Procedures (page 11-25).

Start the engine.

Is Check Engine light on and does it indicate CODE 14?

NO → With the engine running and the accelerator pedal released disconnect the 2P connector on the EACV.

Is there a reduction in engine speed?

YES → **Intermittent failure, system is OK at this time (test driving may be necessary). Check for poor connection or loose wires at EACV and ECU.**

NO → **Substitute a known-good EACV and retest.**

YES → Remove the 2P connector from the EACV.

(To page 11-75)

(From page 11-74)

Measure voltage between the YEL/BLK wire and body ground.

Is there battery voltage?

NO → **Repair open in YEL/BLK wire between EACV and main relay.**

YES

Turn the ignition switch off and reconnect the 2P connector the EACV.

Connect the test harness "A" connector to the main wire harness only, not the ECU (page 11-28).

Turn the ignition switch ON.

Momentarily connect A9 terminal to A26 terminal several times.

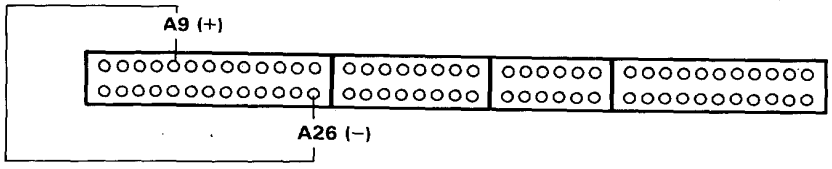

Does the EACV click?

YES → **Substitute a known-good ECU and retest. If symptom/indication goes away, replace the original ECU.**

NO

Repair open or short in BLU/RED wire between EACV and ECU. If the wire is OK, replace the EACV.

Troubleshooting Flowchart — Air Conditioning Signal

This signals the ECU when there is a demand for cooling from the air conditioning system.

Inspection of Air Conditioning Signal.

Connect the test harness between the ECU and connector. Disconnect "C" connector from the main wire harness only, not the ECU (page 11-28).

Turn the ignition switch ON.

Measure voltage between C3 (+) terminal and A26 (−) terminal.

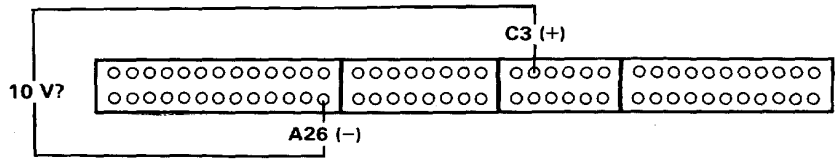

Is there approx. 10 V?

NO → **Substitute a known-good ECU and recheck. If prescribed voltage is now available, replace the original ECU.**

YES

Reconnect "C" connector to the main wire harness.

Momentarily connect A15 terminal to A26 terminal several times.

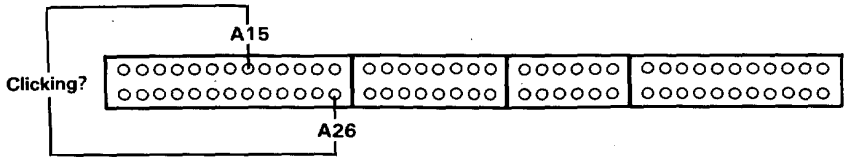

Is there a clicking noise from the A/C compressor clutch?

NO → Connect the RED/BLU terminal of the 4P connector on the A/C clutch relay to body ground.

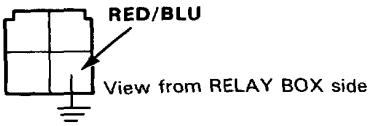

Is there a clicking noise from the A/C compressor clutch?

NO → **See Air conditioner inspection (section 22).**

YES → **Repair open in RED/BLU wire between ECU (A15) and A/C clutch relay.**

YES

Start the engine.

Blower switch ON.

(To page 11-77)

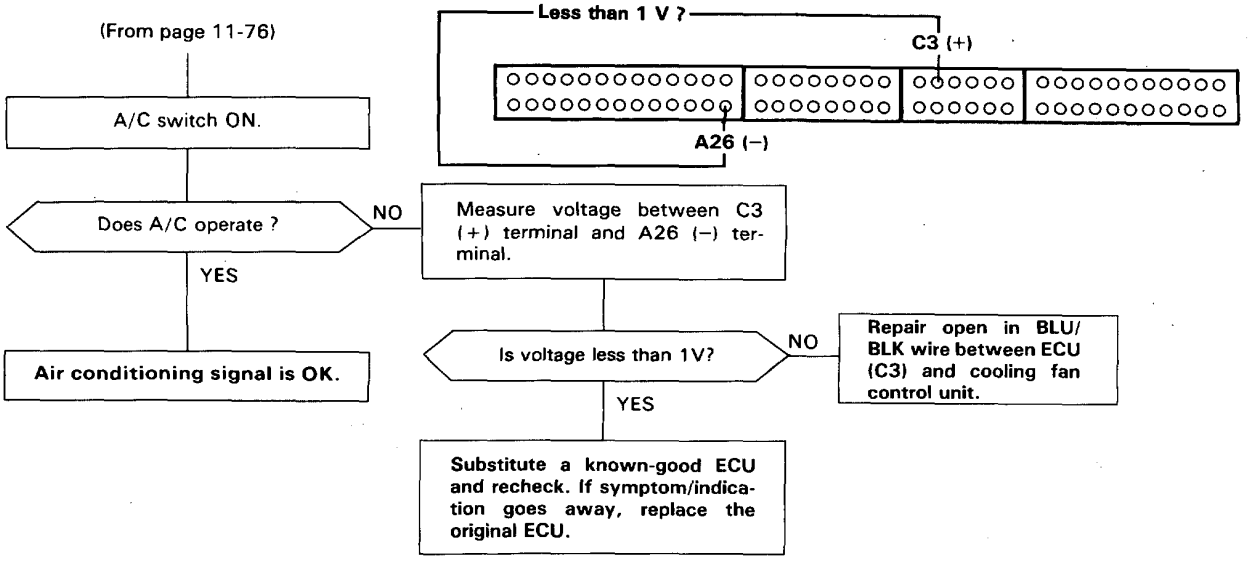
(From page 11-76)
A/C switch ON.
Does A/C operate ?
NO
YES
Air conditioning signal is OK.
Less than 1 V ?
C3 (+)
A26 (–)
Measure voltage between C3 (+) terminal and A26 (–) terminal.
Is voltage less than 1V?
NO
YES
Repair open in BLU/BLK wire between ECU (C3) and cooling fan control unit.
Substitute a known-good ECU and recheck. If symptom/indication goes away, replace the original ECU.

Troubleshooting Flowchart — Alternator FR Signal

This signals the ECU when the alternator is charging.

Inspection of Alternator FR signal.

Connect the test harness between the ECU and connector. Disconnect "D" connector from the main wire harness only, not the ECU (page 11-28).

Turn the ignition switch ON.

Measure voltage between D9 (+) terminal and A26 (−) terminal.

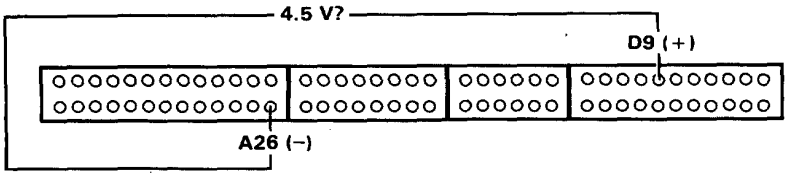

Is there approx. 4.5 V?

NO → **Substitute a known-good ECU and recheck. If prescribed voltage is now available, replace the original ECU.**

YES

Turn the ignition switch OFF.

Reconnect "D" connector to the main wire harness.

Warm up engine to normal operating temperature (cooling fan comes on).

Measure voltage between D9 (+) terminal and A26 (−) terminal.

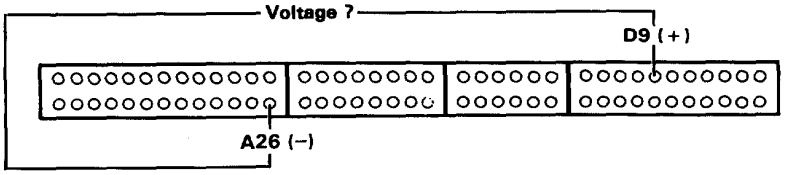

Does the voltage decrease when headlights and rear defogger are turned on ?

NO → Stop the engine.

YES

Do the ECU Reset Procedures (page 11-25).

Alternator FR signal is OK.

(To page 11-79)

(From page 11-78)

Disconnect "D" connector from ECU only, not the main wire harness.

Disconnect the negative battery cable from the battery.

Check for continuity between D9 terminal and body ground.

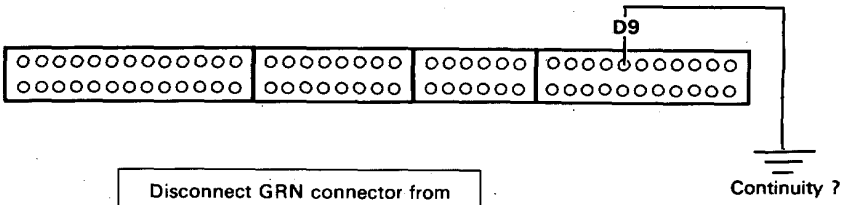

Does continuity exist ?

YES → Disconnect GRN connector from the alternator.

NO → Disconnect GRN connector from the alternator.

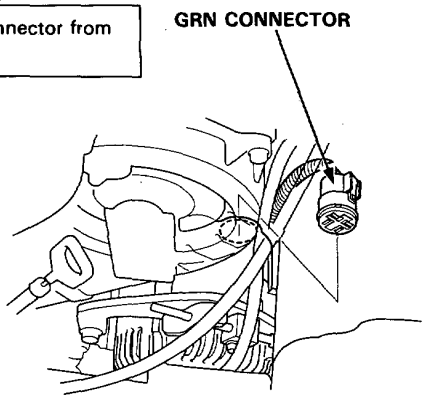

Connect WHT/RED wire to body ground.

Check for continuity between D9 terminal and body ground.

Does continuity exist ?

YES → Repair short in WHT/RED wire between ECU (D9) and alternator.

NO → See Alternator Inspection (section 23).

Check for continuity between D9 terminal and body ground.

Does continuity exist ?

YES → See Alternator Inspection (section 23).

NO → Repair open in WHT/RED wire between ECU (D9) and alternator.

Troubleshooting Flowchart — A/T Shift Position Signal

This signals the ECU when the transmission is in Neutral or Park.

Inspection of A/T Shift Position Signal.

Turn the ignition switch ON.

Observe the A/T shift indicator and select each position separately.

Does the indicator light properly?

NO → **See A/T Shift Position Indicator Inspection (section 14).**

YES

Turn the ignition switch OFF.

Connect the test harness between the ECU and connector. Disconnect "B" connector from the main wire harness only, not the ECU (page 11-28).

Turn the ignition switch ON.

Measure voltage between B7 (+) terminal and A26 (−) terminal.

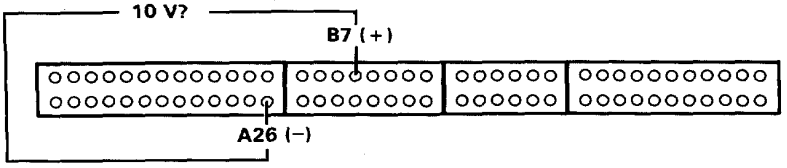

Is there approx. 10 V?

NO → **Substitute a known-good ECU and recheck. If prescribed voltage is now available, replace the original ECU.**

YES

Turn the ignition switch OFF.

Reconnect "B" connector to the main wire harness.

Turn the ignition switch ON.

(To page 11-81)

(From page 11-80)

Measure voltage between B7 (+) terminal and A26 (−) terminal with the transmission in N.

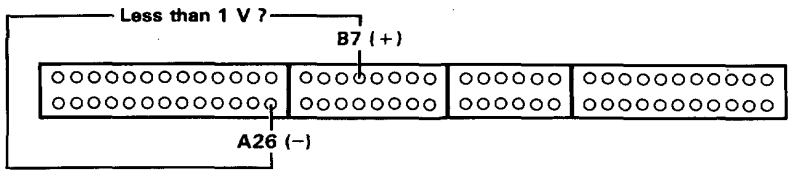

Is there less than 1 V?

NO

- Repair open in LT GRN wire between ECU (B7) and gauge assembly.
- Repair open in GRN wire between the gauge assembly and shift position console switch.

YES

Measure voltage between B7 (+) terminal and A26 (−) terminal with the transmission in P.

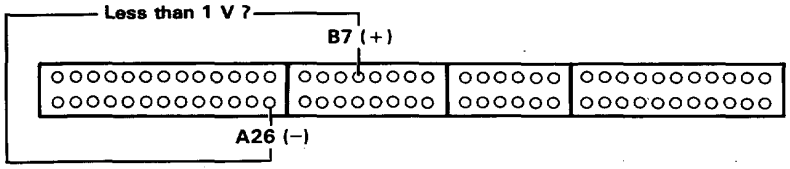

Is there less than 1 V?

NO

Repair open in GRN/WHT wire between gauge assembly and shift position console switch.

YES

Measure voltage between B7 (+) terminal and A26 (−) terminal with the transmission in gear.

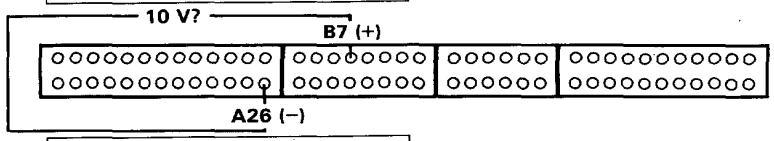

Is there approx. 10 V?

NO

Repair short in LT GRN wire between ECU (B7) and gauge assembly.

YES

A/T shift position signal is OK.

Troubleshooting Flowchart — M/T Neutral Switch Signal

This signals the ECU when the transmission is in Neutral.

Inspection of M/T neutral Switch Signal

Connect the test harness between the ECU and connector (page 11-28).

Turn the ignition switch ON.

Measure voltage between B7 (+) terminal and A26 (−) terminal in Neutral position.

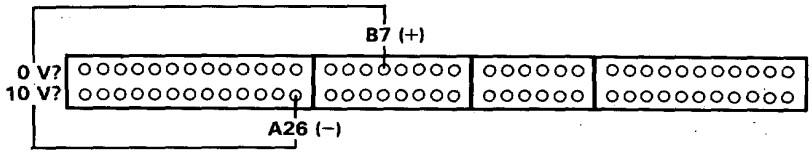

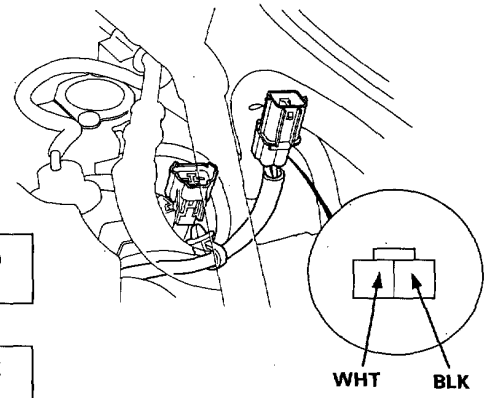

Is there voltage?

- YES → Disconnect the 2P connector on the M/T neutral switch.
  - Connect WHT terminal to BLK terminal.
  - Is there voltage?
    - NO → **Replace M/T neutral switch.**
    - YES → **Repair open in WHT wire between ECU (B7) and M/T neutral switch or BLK wire between M/T neutral switch and G101.**
- NO → Shift transmission in gear.

Is there approx. 10 V?

- NO → Disconnect "B" connector from main wire harness only, not the ECU.
  - Is there approx. 10 V?
    - NO → **Substitute a known-good ECU and re-check. If prescribed voltage is now available, replace the original ECU.**
    - YES → Reconnect "B" connector to main wire harness and disconnect 2P connector on the M/T neutral switch.
      - Is there approx. 10 V?
        - NO → **Repair short in WHT wire between ECU (B7) and the M/T neutral switch.**
        - YES → **Replace M/T neutral switch.**
- YES → **M/T neutral switch signal is OK.**

Troubleshooting Flowchart — Clutch Switch Signal

This signals the ECU when the clutch is engaged.

Inspection of clutch switch signal.

Connect the test harness between the ECU and connector (page 11-28).

Turn the ignition switch ON.

Measure voltage between C7 (+) terminal and A26 (−) terminal.

Is voltage less than 1 V?

NO → Turn the ignition switch OFF.

Disconnect the 2P connector from the clutch switch.

Check for continuity between the A terminal and B terminal on the clutch switch.

Does continuity exist?

NO → **Replace the clutch switch.**

YES → Turn the ignition switch ON.

Measure voltage between PNK (+) terminal and body ground.

Is there approx. 10 V?

NO → **Repair open in PNK wire between ECU (C7) and the clutch switch.**

YES → **Repair open in BLK wire between the clutch switch and G301.**

YES → Depress the clutch pedal.

Measure voltage between C7 (+) terminal and A26 (−) terminal.

(To page 11-85)

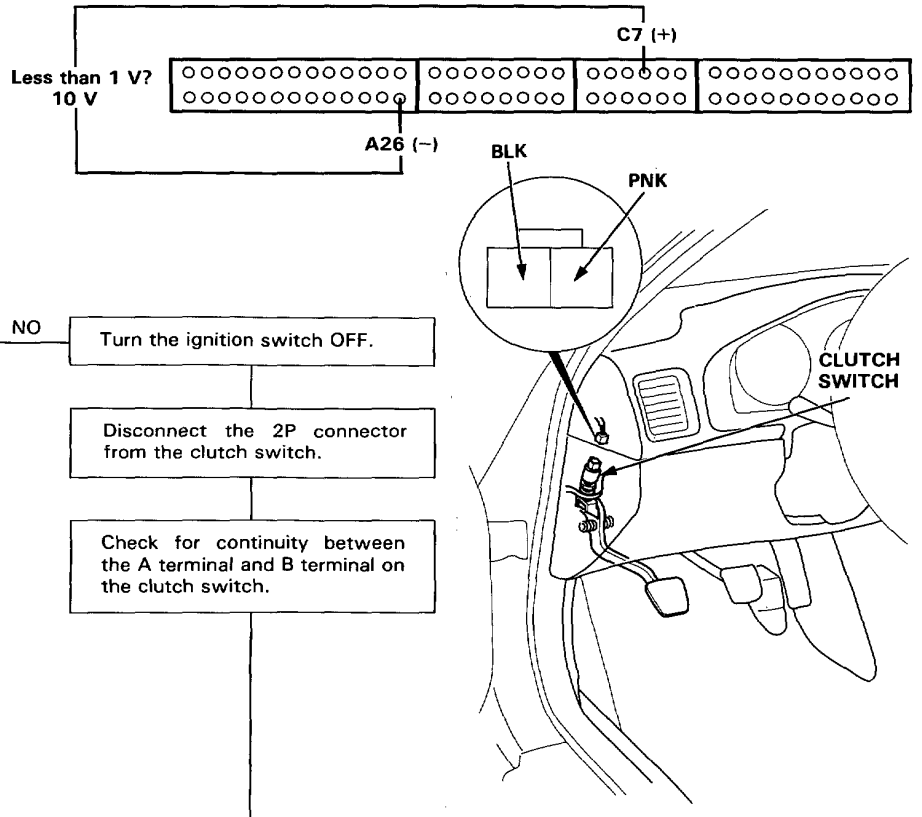

(From page 11-84)

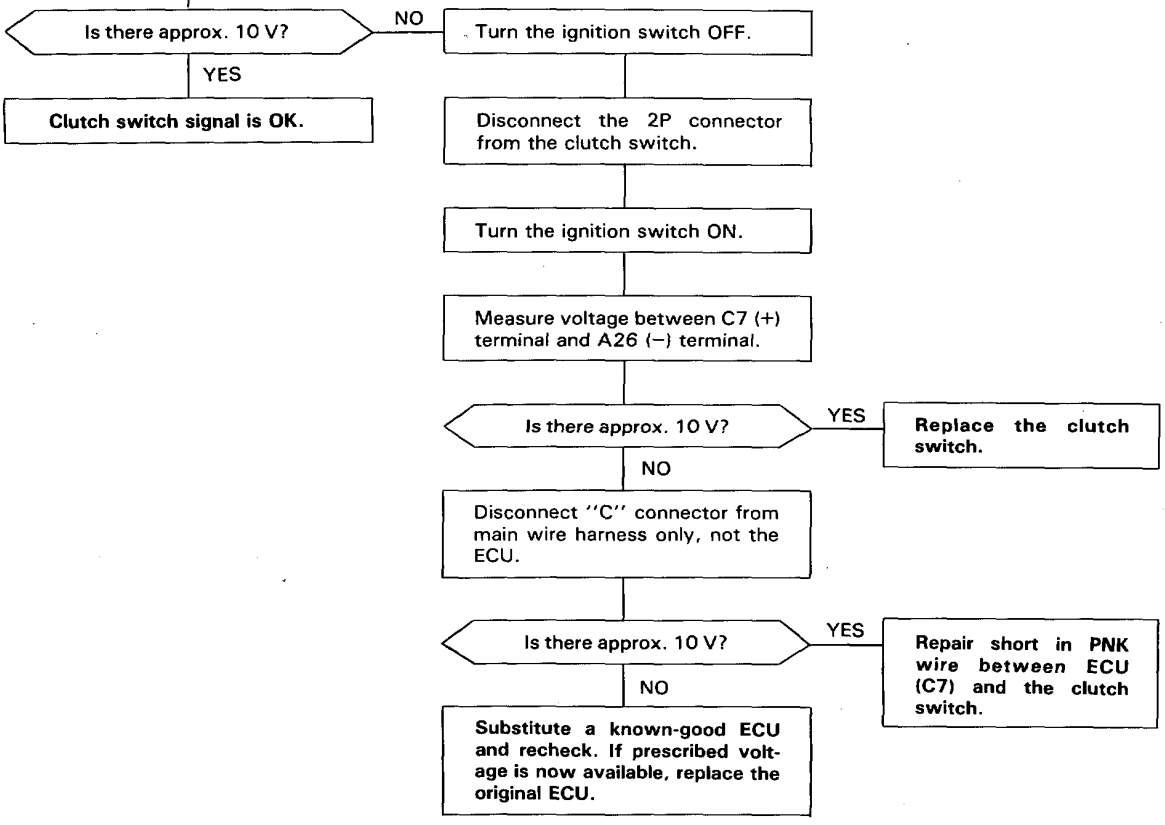

Troubleshooting Flowchart — Starter Switch Signal

This signals the ECU when the engine is cranking.

Inspection of Starter Switch Signal.

Connect the test harness between the ECU and connector (page 11-28).

Measure voltage between C11 (+) terminal and A26 (−) terminal when the ignition switch in the start position.

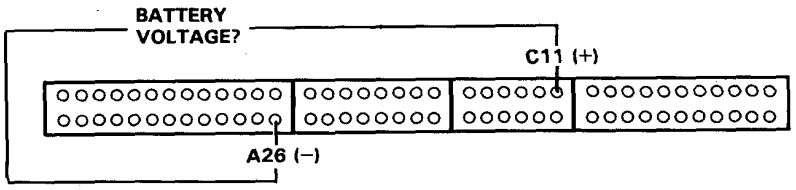

NOTE:
- M/T: Clutch pedal must be depressed.
- A/T: Transmission in N or P.

Is there battery voltage ?

NO → Inspect No. 14 fuse.

Is No. 14 fuse OK?

NO → **Replace fuse.**

YES → **Repair open in BLK/WHT wire between ECU (C11) and No. 14 fuse.**

YES → **Starter switch signal is OK.**

Troubleshooting Flowchart — Brake Switch Signal

This signals the ECU when the brake pedal is depressed.

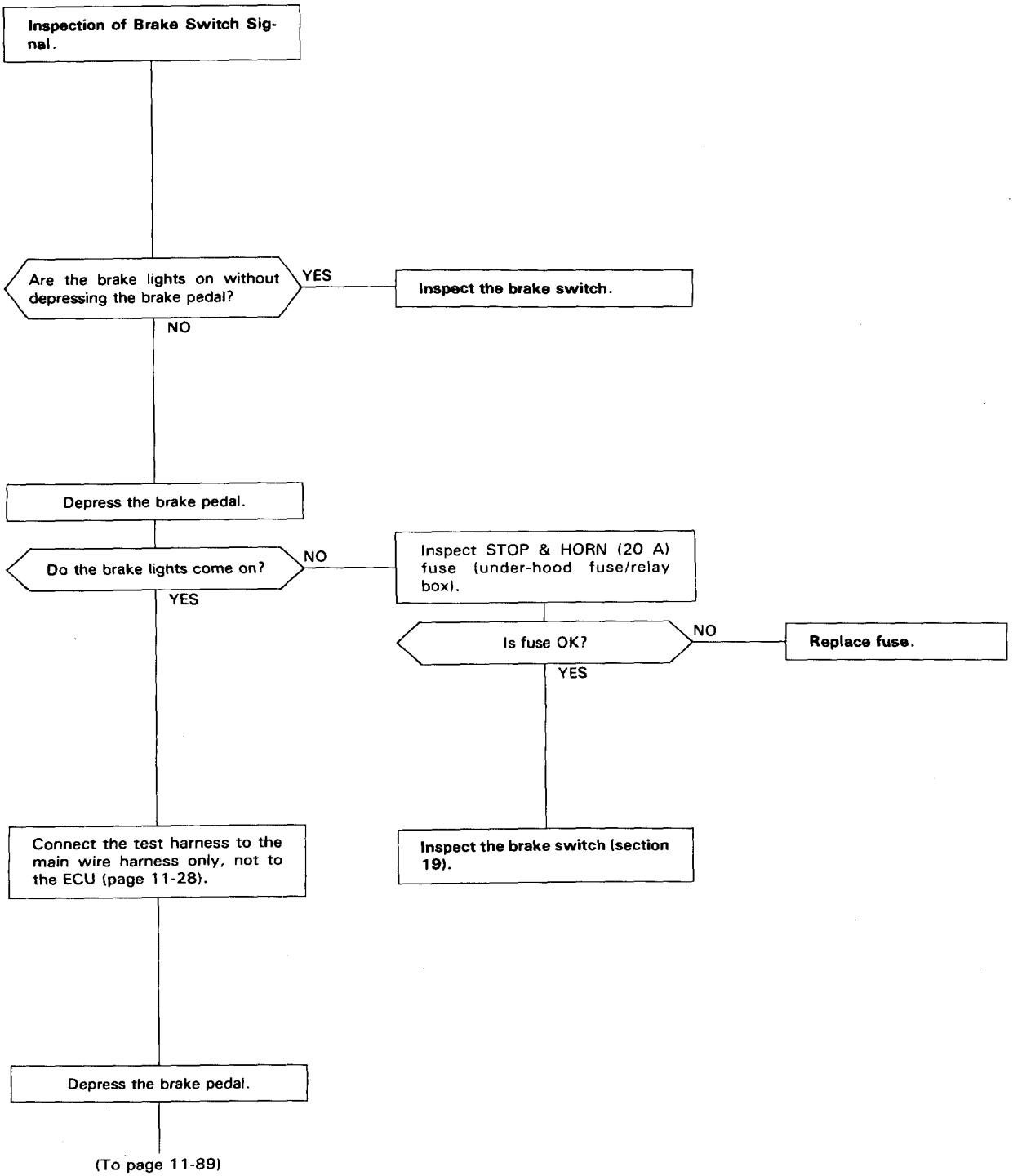

(From page 11-88)

Measure voltage between D2 (+) terminal and A26 (−) terminal with the brake pedal depressed.

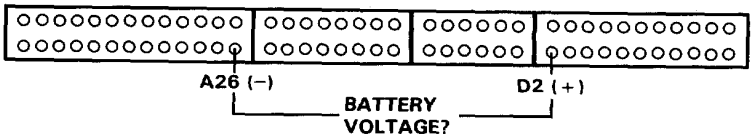

Is there battery voltage?

NO → **Repair open in GRN/WHT wire between the brake switch and ECU (D2).**

YES → ***Brake switch signal is OK.***

Troubleshooting Flowchart — P/S Oil Pressure Signal

This signals the ECU when the power steering load is high.

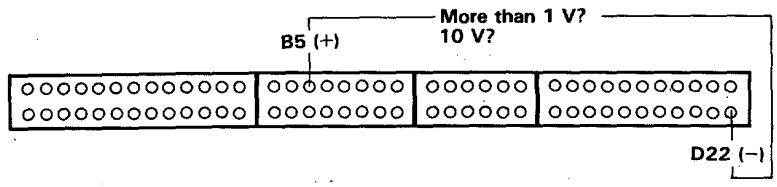

Inspection of P/S Oil Pressure Signal

Connect the test harness between the ECU and connector (page 11-28).

Turn the ignition switch ON.

Measure voltage between B5 (+) terminal and D22 (−) terminal.

Is there more than 1V?

- YES → Disconnect the 2P connector on the P/S oil pressure switch.
  - Connect GRN terminal to GRN/WHT terminal.
  - Is there more than 1V?
    - NO → **Replace P/S oil pressure switch.**
    - YES → **Repair open in GRN wire between ECU (B5) and P/S oil pressure switch or GRN/WHT wire between P/S oil pressure switch and ECU (D22).**
- NO → Start the engine.

Turn steering wheel slowly.

Measure voltage between B5 (+) terminal and D22 (−) terminal while steering wheel is turning.

Is there approx. 10V?

- NO → Turn the ignition switch OFF.
  - Disconnect "B" connector from main wire harness only, not the ECU.
  - Turn the ignition switch ON.
  - Is there approx. 10V?
    - NO → **Substitute a known-good ECU and recheck. If prescribed voltage is now available, replace the original ECU.**
    - YES → Reconnect "B" connector to main wire harness and disconnect 2P connector on the P/S oil pressure switch.
    - Is there approx. 10V?
      - YES → **Replace P/S oil pressure switch.**
      - NO → **Repair short in GRN wire between ECU (B5) and the P/S oil pressure switch.**
- YES → **P/S oil pressure signal is OK.**

Fast Idle Valve

Description

To prevent erratic running when the engine is warming up, it is necessary to raise the idle speed. The fast idle air bypass valve is controlled by a thermowax plunger. When the engine is cold, the engine coolant surrounding the thermowax contracts the plunger, allowing additional air to be bypassed into the intake manifold so that the engine idles faster. When the engine reaches operating temperature, the valve closes, reducing the amount of air bypassing into the manifold.

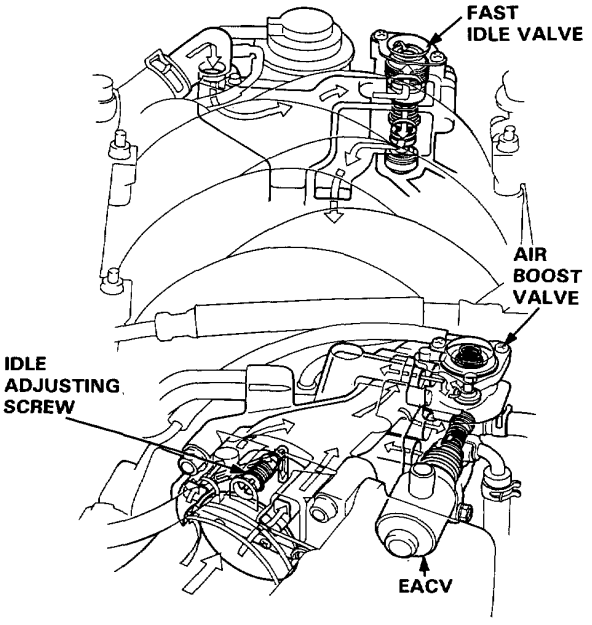

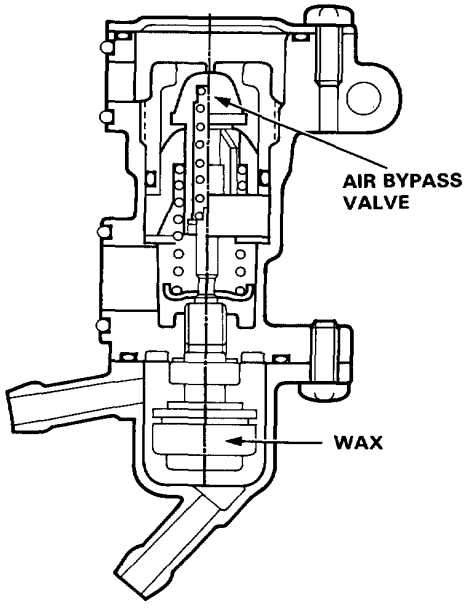

Inspection

NOTE: The fast idle valve is factory adjusted; it should not be disassembled.

1. Start the engine.
2. Remove the hose from pipe. Put your finger over the pipe and check for air flow (vacuum) with the engine cold (coolant temperature below 30°C, 86°F) and idling.

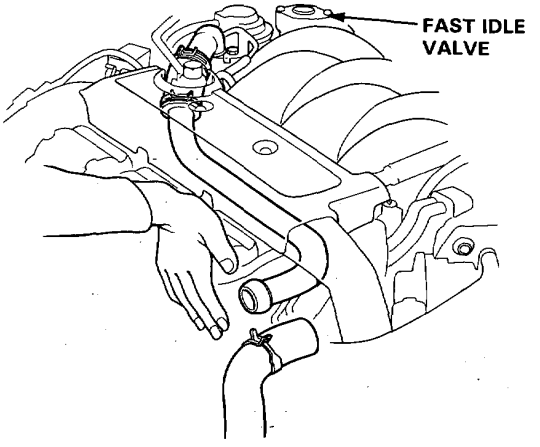

- If no vacuum is felt, replace the fast idle valve and retest.

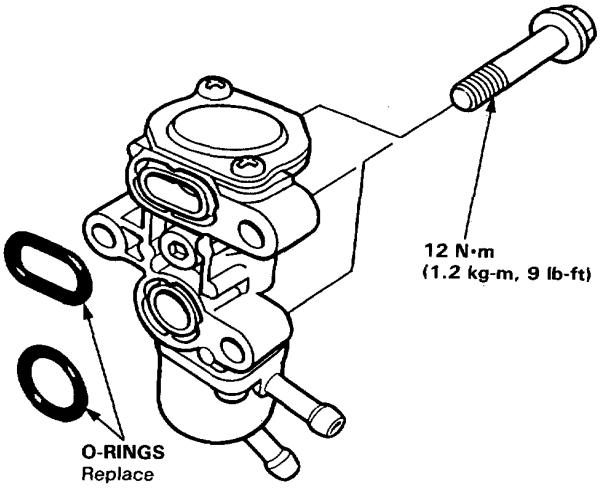

4. Warm up the engine (cooling fan comes on).
5. Check that the valve is completely closed. If not, air suction can be felt in the valve pipe.
   - If any suction is felt, the valve is leaking. Replace the fast idle valve and recheck.

Idle Control System

Air Boost Valve

Description

When cranking the engine, the air boost valve supplies additional air to the intake manifold to ease engine starting.

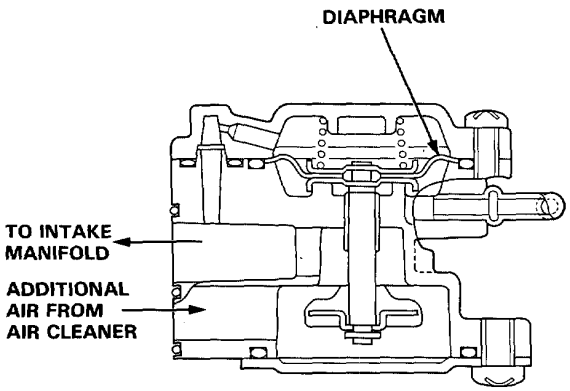

Idle Speed Setting

Inspection/Adjustment

1. Start the engine and warm it up to normal operating temperature (the cooling fan comes on).

2. Connect a tachometer.

   - Connect a tachometer to loop of igniter unit.

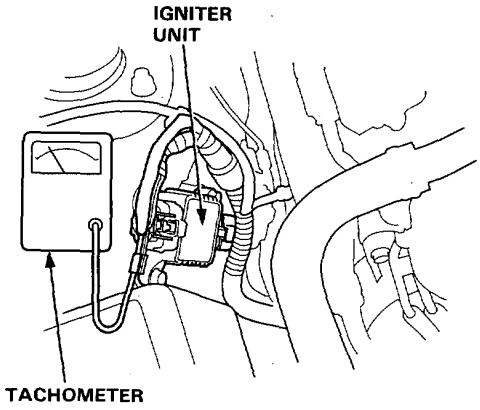

   - Remove the rubber cap from the tachometer connector and connect a tachometer.

[LHD]

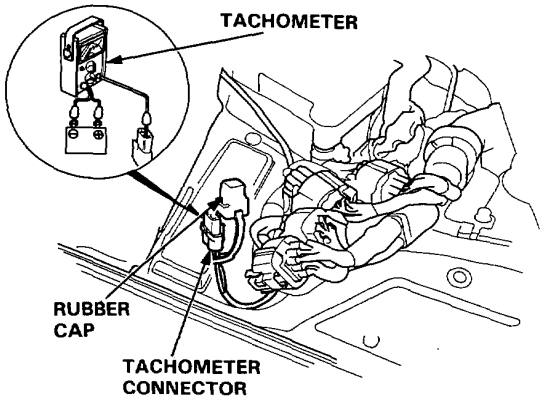

[RHD]

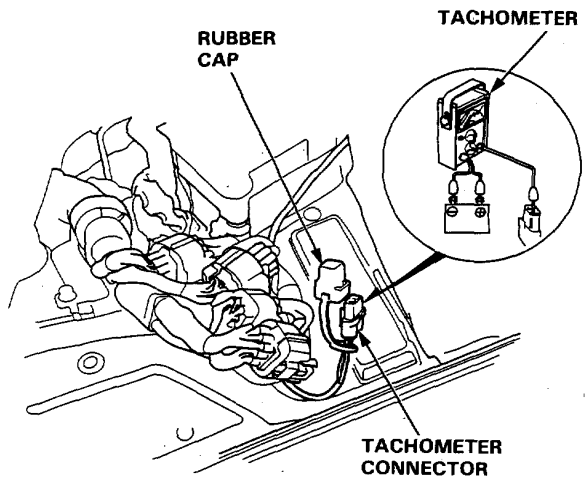

3. Disconnect the 2P connector from the EACV.

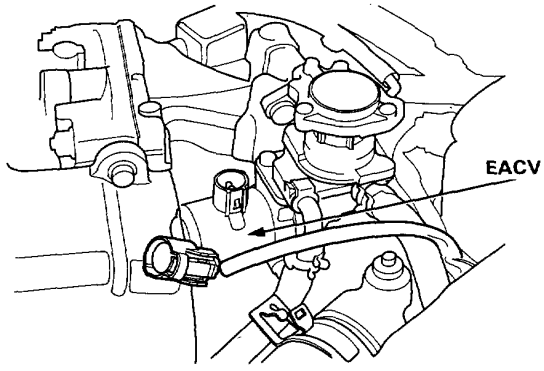

4. Start the engine with the accelerator pedal slightly depressed. Stabilize the engine speed at 1000, then slowly release the pedal until the engine idles.

(cont'd)

Idle Speed Setting (cont'd)

5. Check idling in no-load conditions: headlights, blower fan, rear defogger, cooling fan, and air conditioner are not operating.

   Idle speed should be:

Manual	450 ± 50 min^{-1} (rpm)
Automatic	480 ± 50 min^{-1} (rpm) (in N or P)

   Adjust the idle speed, if necessary, by turning the idle adjusting screw.

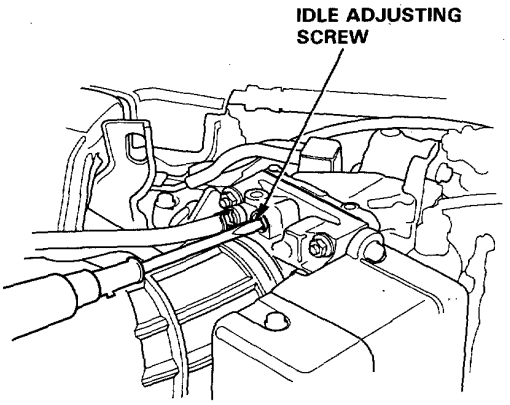

6. Turn the ignition switch OFF.

7. **[LHD]**
   Reconnect the 2P connector on the EACV, then remove No. 15 fuse in the under-dash fuse box for 10 seconds to reset the ECU.

   NOTE: Disconnecting the No. 15 fuse also cancels the power seat settings.

   [RHD]
   Reconnect the 2P connector on the EACV, then remove BACK UP fuse in the under-hood fuse/relay box for 10 seconds to reset the ECU.

8. Restart and idle the engine with no-load conditions for one minute, then check the idle speed.

   NOTE: (KS) Remove No. 12 (RUNNING LIGHT, 7.5 A) fuse in the under-dash fuse box, then check that the headlights and side marker lights are off.

Manual	650 ± 50 min^{-1} (rpm)
Automatic	600 ± 50 min^{-1} (rpm) (in N or P)

System Troubleshooting Guide

NOTE: Across each row in the chart, the systems that could be sources of a symptom are ranked in the order they should be inspected starting with ①. Find the symptom in the left column, read across to the most likely source, then refer to the page listed at the top of that column. If inspection shows the system is OK, try the next most likely system ②, etc.

PAGE / SUB SYSTEM / SYMPTOM		FUEL INJECTOR	INJECTOR RESISTOR	PRESSURE REGULATOR	FUEL FILTER	FUEL PUMP	MAIN RELAY	CONTAMI-NATED FUEL
		98	101	102	106	107	109	*
ENGINE WON'T START		③	③		③	①	②	③
DIFFICULT TO START ENGINE WHEN COLD OR HOT								①
ROUGH IDLE		①	②					③
POOR PERFORMANCE	MISFIRE OR ROUGH RUNNING	①	②	③		③		③
	FAILS EMISSION TEST	②	③	①				
	LOSS OF POWER	③	③		①	③		②
FREQUENT STALLING	WHILE WARMING UP			①				
	AFTER WARMING UP			①				

Fuel Supply System

System Description

The fuel supply system consists of a fuel tank, in-tank high pressure fuel pump, main relay, fuel filter, pressure regulator, injectors and injector resistor.
This system delivers pressure-regulated fuel to the injectors and cuts the fuel delivery when the engine is not running.

Fuel Pressure

Relieving

⚠ WARNING

- **Do not smoke while working on the fuel system. Keep open flames or sparks away from the work area.**
- **Be sure to relieve fuel pressure while the engine is off.**

NOTE: Before disconnecting fuel pipes or hoses, release pressure from the system by loosening the 6 mm service bolt on top of the fuel filter.

1. Disconnect the battery negative cable from the battery negative terminal.
2. Remove fuel filler cap.
3. Use a box end wrench on the 6 mm service bolt at the fuel filter, while holding the special banjo bolt with another wrench.
4. Place a rag or shop towel over the 6 mm service bolt.
5. Slowly loosen the 6 mm service bolt one complete turn.

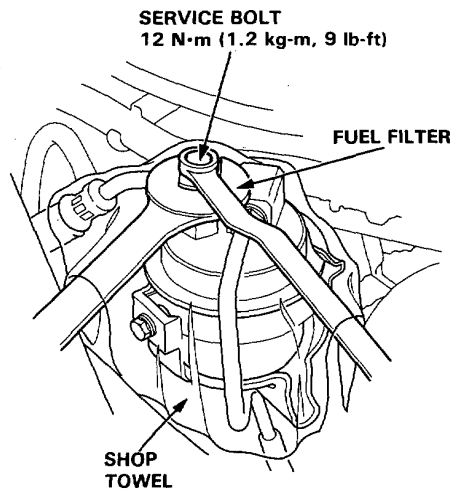

NOTE:
- A fuel pressure gauge can be attached at the 6 mm service bolt hole.
- Always replace the washer between the service bolt and the special banjo bolt, whenever the service bolt is loosened to relieve fuel pressure.
- Replace all washers whenever the bolts are removed to disassemble parts.

Inspection

1. Relieve fuel pressure (page 11-96).

2. Remove the service bolt on the fuel filter while holding the banjo bolt with another wrench. Attach the fuel pressure gauge.

3. Start the engine. *Measure the fuel pressure with the engine idling and vacuum hose of the pressure regulator disconnected.

*: If the engine will not start turn the ignition switch on, wait for two seconds, turn it off then back on again and read the fuel pressure.

Pressure should be:
265–314 kPa (2.7–3.2 kg/cm², 38–46 psi)

4. Reconnect vacuum hose to the pressure regulator.

Pressure should be:
206–255 kPa (2.1–2.6 kg/cm², 31–37 psi)

[LHD]

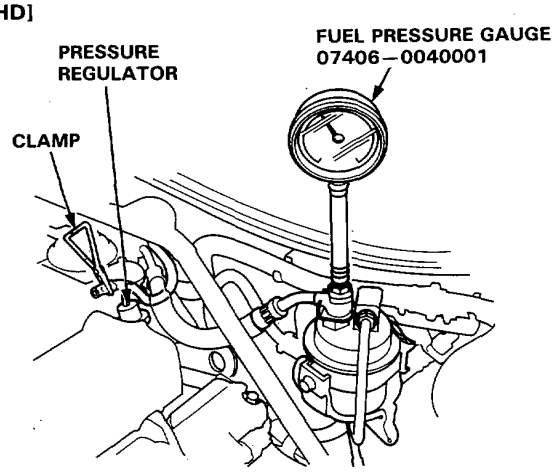

[RHD]

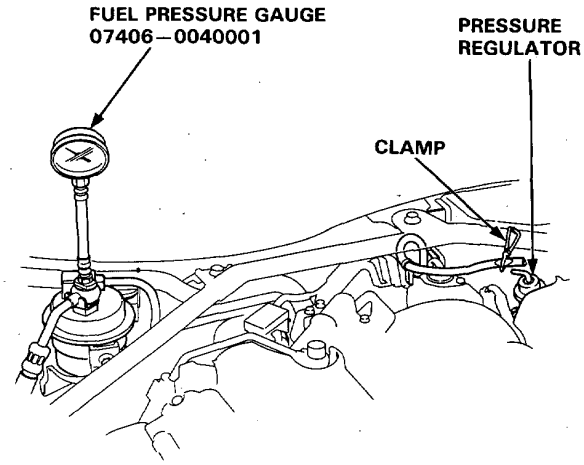

- If the fuel pressure is not as specified, first check the fuel pump (page 11-108). If the pump is OK, check the following:

— If the pressure is higher than specified, inspect for:
  - Pinched or clogged fuel return hose or piping.
  - Faulty pressure regulator (page 11-102).

— If the pressure is lower than specified, inspect for:
  - Clogged fuel filter.
  - Faulty pressure regulator (page 11-102).
  - Leakage in the fuel line.

Fuel Injectors

Description

The injectors are a solenoid-actuated constant-stroke pintle type consisting of a solenoid, plunger needle valve and housing. When current is applied to the solenoid coil, the valve lifts up and pressurized fuel is injected. Because the needle valve lift and the fuel pressure are constant, the injection quantity is determined by the length of time that the valve is open (i.e., the duration the current is supplied to the solenoid coil). The injector is sealed by an O-ring and seal ring at the top and bottom. These seals also reduce operating noise.

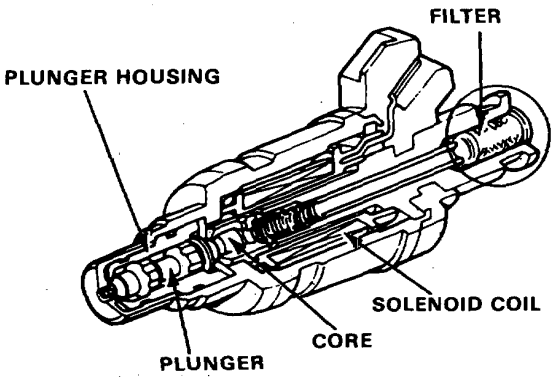

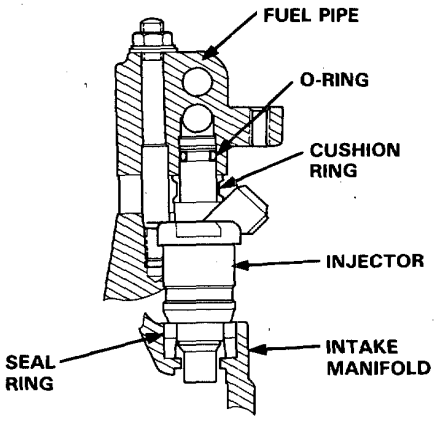

Testing

NOTE: Check the following items before testing idle speed, ignition timing and idle CO %.

If the engine will run:

1. With the engine idling, disconnect each injector connector individually and inspect the change in the idling speed.
   - If the idle speed drop is almost the same for each cylinder, the injectors are normal.
   - If the idle speed or quality remains the same when you disconnect a particular injector, replace the injector and re-test.
2. Check the clicking sound of each injector by means of a stethoscope when the engine is idling.

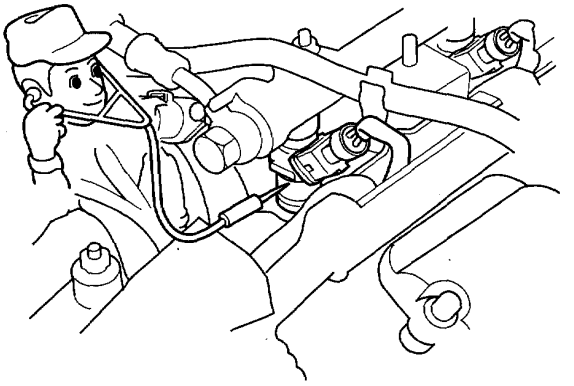

- If any injector fails to make the typical clicking sound, check the sound again after replacing the injector.

— If clicking sound is still absent, check the following:
  - Whether there is any short-circuiting, wire breakage or poor connection in the YEL/BLK wire between the main relay and the resistor.
  - Whether the resistor is open or corroded (page 11-101).
  - Whether there is any short-circuiting, wire breakage or poor connection in the RED/BLK wire between the resister and the injector.
  - Whether there is any short-circuiting, wire breakage or poor connection in the wire between the injector and the ECU.

If all is OK, check the ECU (page 11-20, 22).

If the engine cannot be started:

1. Remove the connector of the injector and measure the resistance between the 2 terminals of the injector.

   Resistance should be: 1.5—2.5 Ω

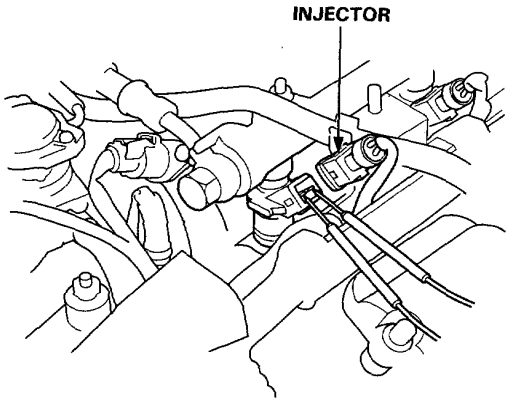

- If the resistance is not as specified, replace the injector.

- If the resistance is as specified, check the fuel pressure (page 11-97).

— If the fuel pressure is as specified, check the following:
  - Whether there is any short-circuiting, wire breakage or poor connection in the YEL/BLK wire between the main relay and the resistor.
  - Whether the resistor is open or corroded (page 11-101).
  - Whether there is any short-circuiting, wire breakage, or poor connection in the RED/BLK wire between the resistor and the injector.
  - Whether there is any short-circuiting, wire breakage or poor connection in the wire between the injector and the ECU.

  If all is OK, check the ECU (page 11-20, 22).

Replacement

WARNING Do not smoke when working on the fuel system.
Keep open flames away from your work area.

1. Relieve fuel pressure (page 11-96).
2. Remove the engine harness covers.
3. Disconnect the connectors from the injectors.
4. Disconnect the vacuum hose and fuel return hose from the pressure regulator.

   NOTE: *Place a rag or shop towel over the hoses before disconnecting them.*

5. Disconnect the fuel hose from the fuel pipe.
6. Loosen the retainer nuts on the fuel pipe and harness holder.
7. Disconnect the fuel pipe.
8. Remove the injectors from the intake manifold.

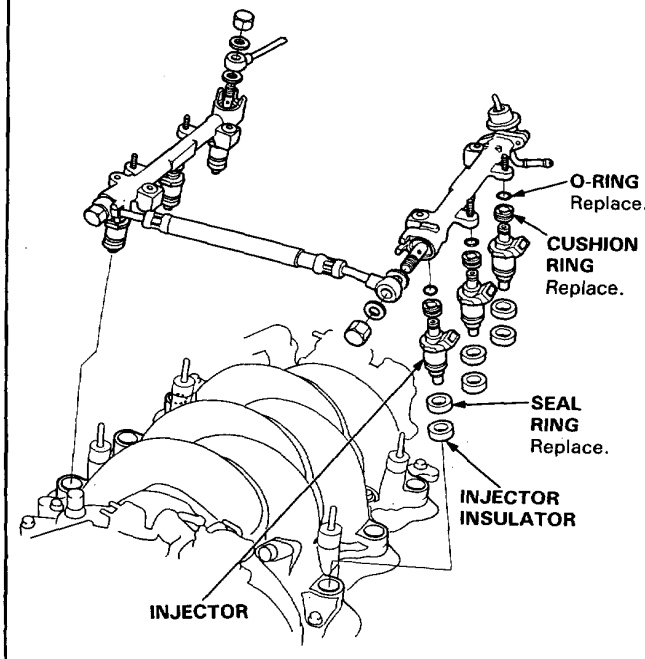

9. Slide new cushion rings onto the injectors.
10. Coat new O-rings with clean engine oil and put them on the injectors.
11. Insert the injectors into the fuel pipe first.
12. Coat new seal rings with clean engine oil and press them into the intake manifold.

Fuel Injectors (cont'd)

13. Install the injectors and fuel pipe assembly in the manifold.

CAUTION: To prevent damage to the O-ring, install the injectors in the fuel pipe first, then install them in the intake manifold.

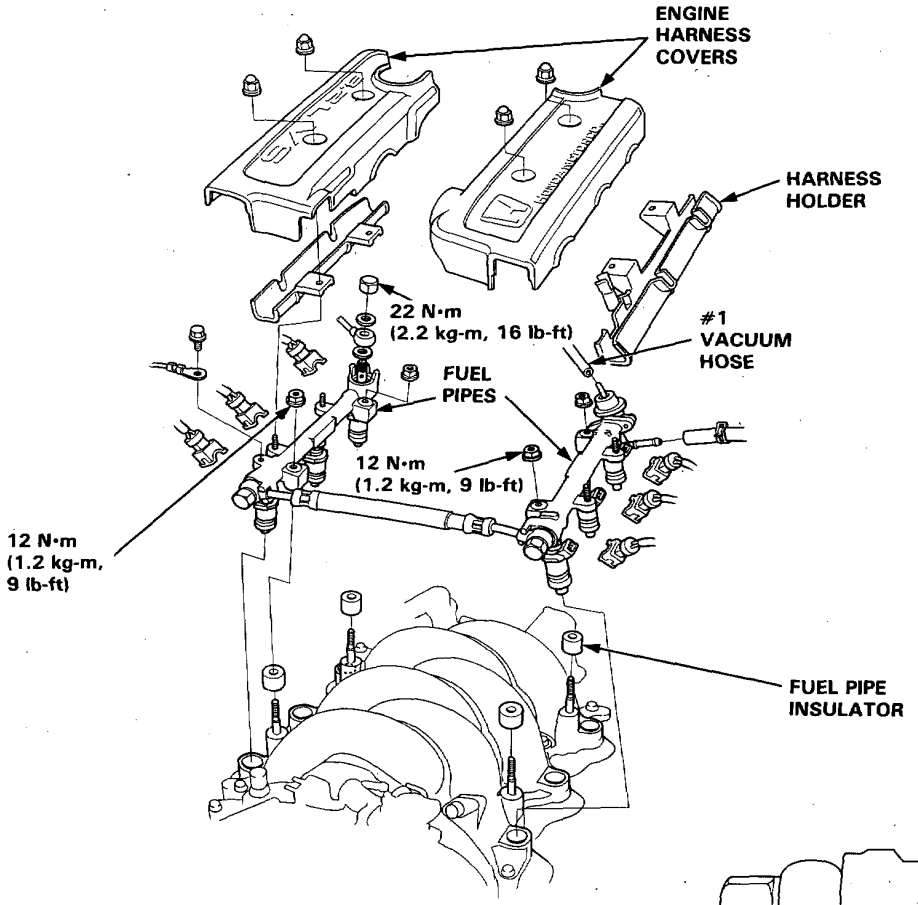

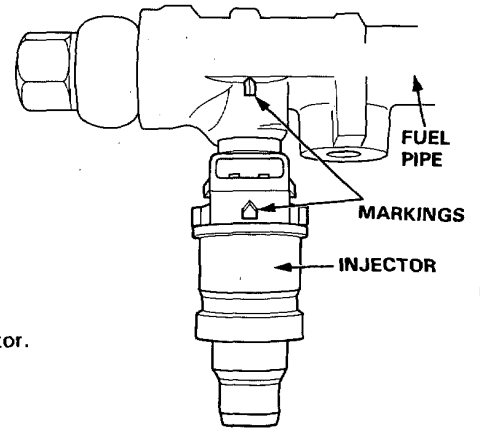

14. Align the center line on the connector with the mark on the fuel pipe.
15. Install and tighten the retainer nuts.
16. Connect the fuel hose to the fuel pipe.
17. Connect the vacuum hose and fuel return hose to the pressure regulator.
18. Install the connectors on the injectors.
19. Install the engine harness covers.
20. Turn the ignition switch ON but do not operate the starter. After the fuel pump runs for approximately two seconds, the fuel pressure in the fuel line rises. Repeat this two or three times, then check whether there is any fuel leakage.

Injector Resistor

Description

The resistor lowers the current supplied to the injectors to prevent damage to the injector coils. This allows a faster response time of the injectors.

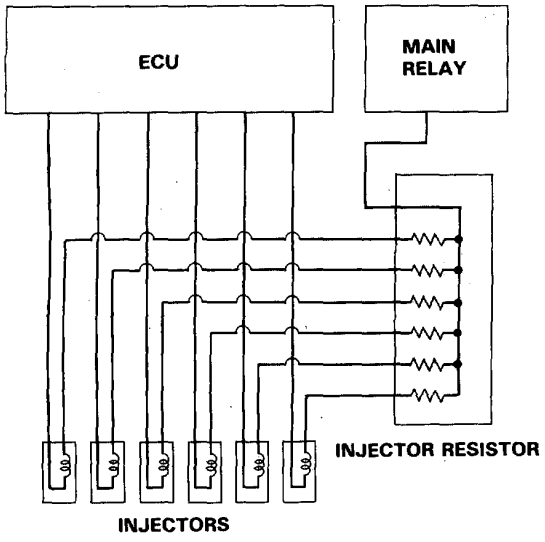

Testing

1. Disconnect the resistor connector.
2. Check for resistance between each of the resistor terminals (A, B, C, D, G and H) and the power terminal (E).

   Resistance should be: 5—7 Ω

   ***: NOT USED**

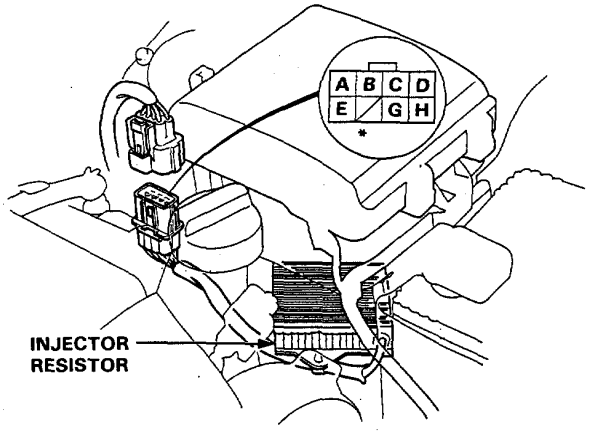

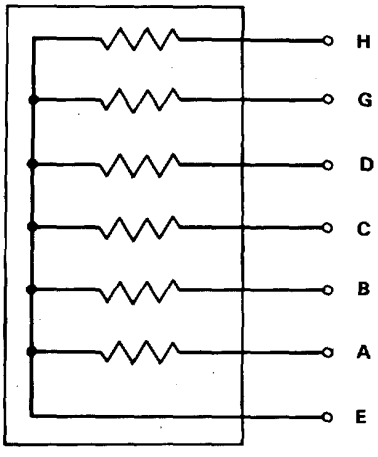

- Replace the resistor with a new one if any of the resistances are outside of the specification.

Pressure Regulator

Description

The fuel pressure regulator maintains a constant fuel pressure to the injectors. When the difference between the fuel pressure and manifold pressure exceeds 2.55 kg/cm² (36 psi), the diaphragm is pushed upward, and the excess fuel is fed back into the fuel tank through the return line.

CLOSE

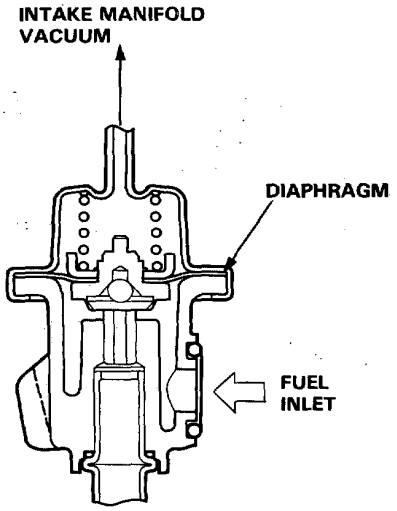

OPEN

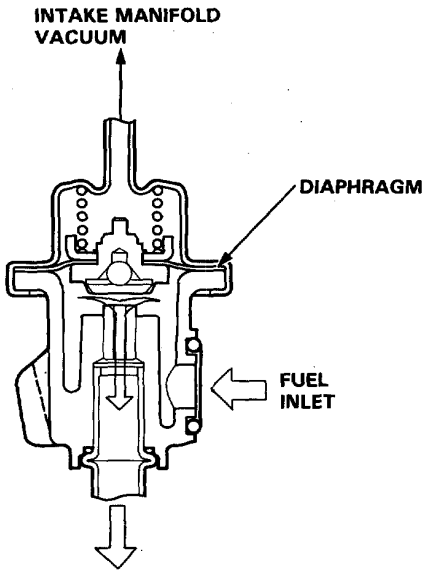

Testing

⚠WARNING Do not smoke during the test. Keep open flames away from your work area.

1. Attach a pressure gauge to the service port of the fuel filter (page 11-97).

   Pressure should be:
   265–314 kPa (2.7–3.2 kg/cm², 38–46 psi)
   (with the regulator vacuum hose disconnected)

[LHD]

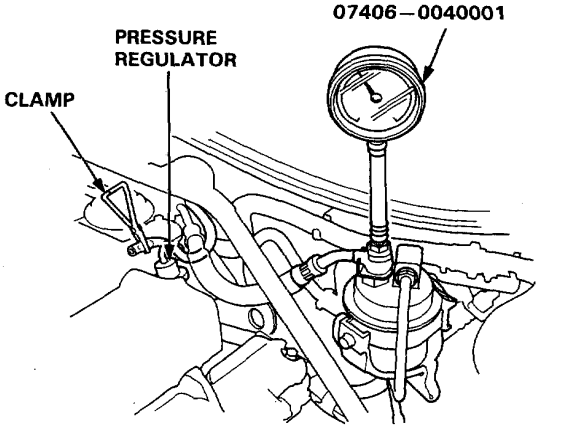

[RHD]

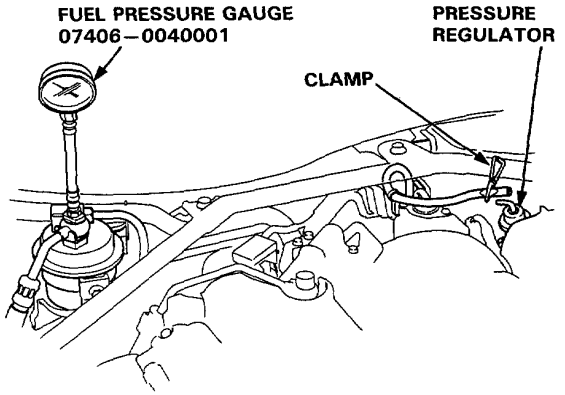

2. Reconnect the vacuum hose to the pressure regulator.

3. Check that the fuel pressure rises when the vacuum hose from the regulator is disconnected again.

- If the fuel pressure did not rise, check to see if it rises with the fuel return hose lightly pinched.
- If the fuel pressure still does not rise, replace the pressure regulator.

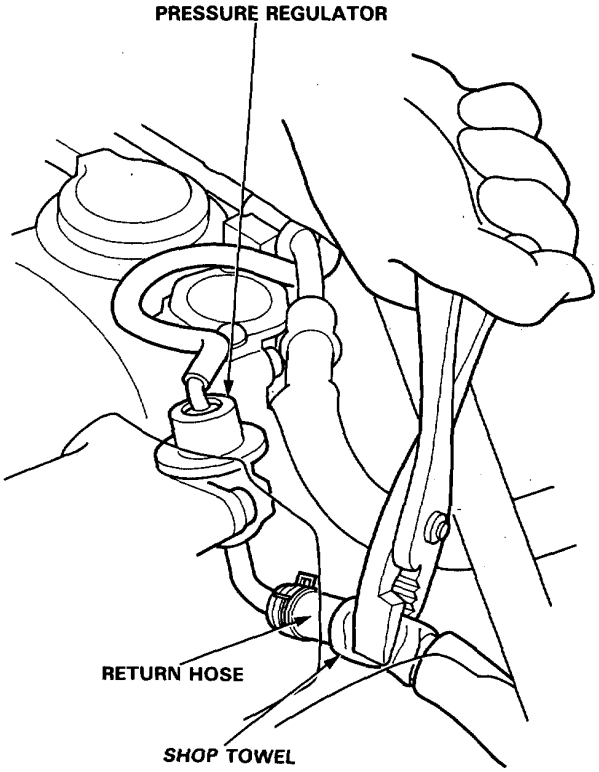

Replacement

WARNING **Do not smoke while working on fuel system. Keep open flame away from work area.**

1. Place a shop towel under pressure regulator, then relieve fuel pressure (page 11-96).
2. Disconnect the vacuum hose and fuel return hose.
3. Remove the two 6 mm retainer bolts.

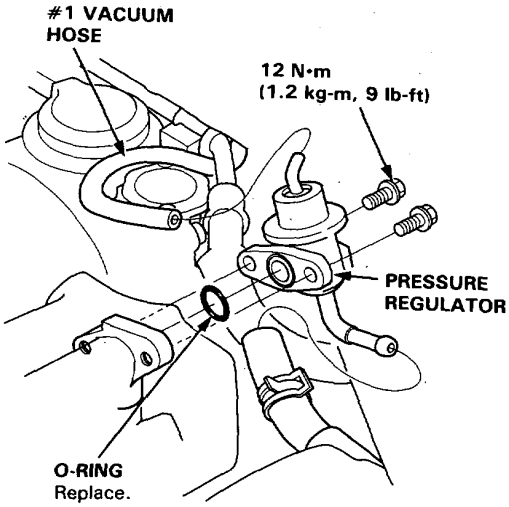

NOTE:
- Replace the O-ring.
- When assembling the regulator, apply clean engine oil to the O-ring and assemble it into its proper position, taking care not to damage the O-ring.

(cont'd)

Pressure Regulator (cont'd)

Pressure Regulator Control Solenoid Valve Troubleshooting Flowchart

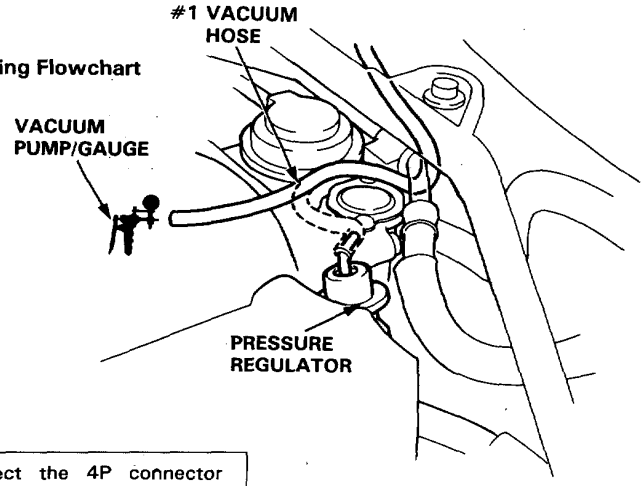

Inspection of Pressure Regulator Control Solenoid Valve.

Start the engine and warm up to normal operating temperature (the cooling fan comes on).

Disconnect the #1 vacuum hose from the pressure regulator and connect a vacuum gauge to the hose.

Is there manifold vacuum ?

- NO → Disconnect the 4P connector from the control box.
  - Is there vacuum ?
    - NO → **Check the #1 and #3 vacuum hose. If hoses are OK, replace the solenoid valve.**
    - YES → **Repair short to ground in LT GRN wire between ECU (A19) and 4P connector. If wire is OK, substitute a known-good ECU and recheck. If symptom goes away, replace the original ECU.**
- YES ↓

Turn the ignition switch OFF.

Disconnect the 4P connector from the control box

Connect battery positive to terminal D (KQ: B) and battery negative to terminal C (KQ: A) of the solenoid valve.

Start the engine and allow it to idle.

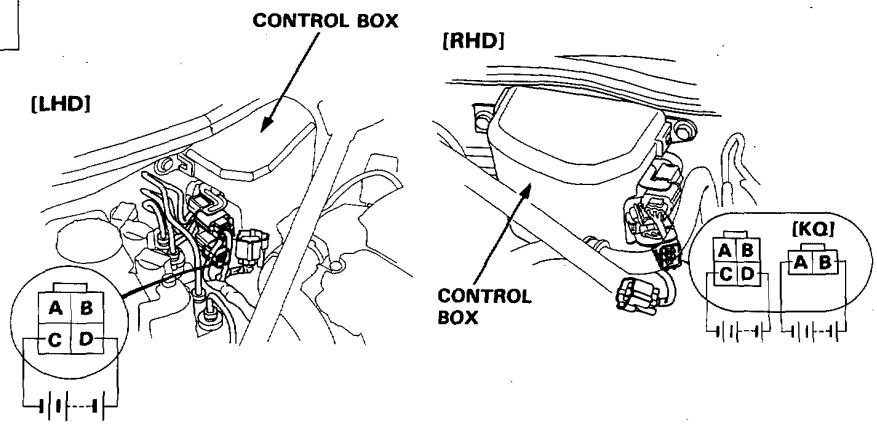

(To page 11-105)

(From page 11-104)

Is there manifold vacuum ?

YES → **Replace the solenoid valve.**

NO

Measure voltage between BLK/YEL (+) terminal and body ground.

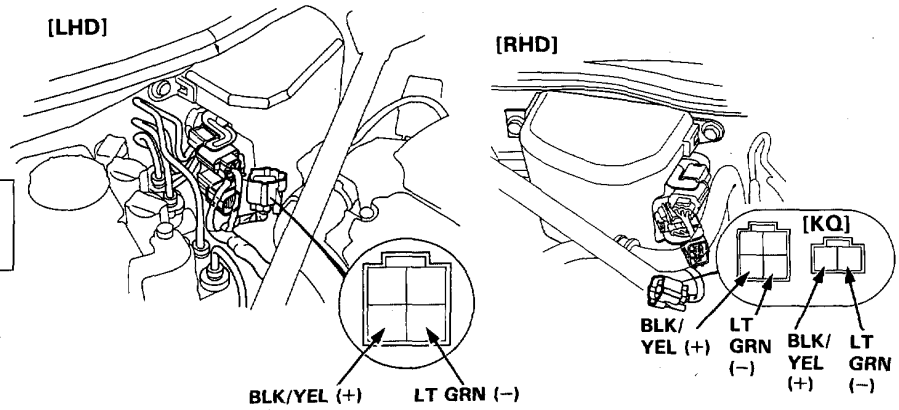

Is there battery voltage ?

NO → **Repair open in BLK/YEL wire between No. 22 fuse and 4P connector.**

YES

Turn the ignition switch OFF.

Reconnect the 4P connector to the control box.

Connect the test harness between the ECU and connector (page 11-28).

Start the engine and allow it to idle.

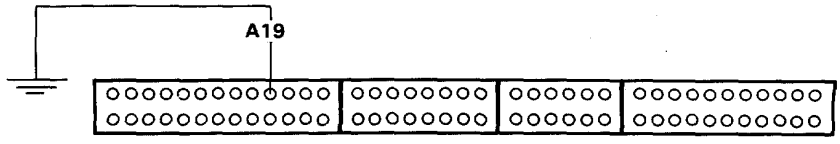

Connect A19 terminal to body ground with a jumper wire.

Is there manifold vacuum ?

YES → **Repair open in LT GRN wire between ECU (A19) and the 4P connector.**

NO

Pressure Regulator Control Solenoid Valve is OK.

Fuel Filter

Replacement

WARNING Do not smoke while working on fuel system. Keep open flame away from work area.

The filter should be replaced every 2 years or 40,000 km (24,000 miles), whichever comes first or whenever the fuel pressure drops below the specified value (265–314 kPa, 2.7–3.2 kg/cm², 38–46 psi with the pressure regulator vacuum hose disconnected) after making sure that the fuel pump and the pressure regulator are OK.

1. Place a shop towel under and around the fuel filter.
2. Relieve fuel pressure (page 11-96).
3. Remove the 12 mm banjo bolt and the fuel feed pipe from the filter.
4. Remove the fuel filter clamp and fuel filter.
5. When assembling, use new washers, as shown.

[LHD]

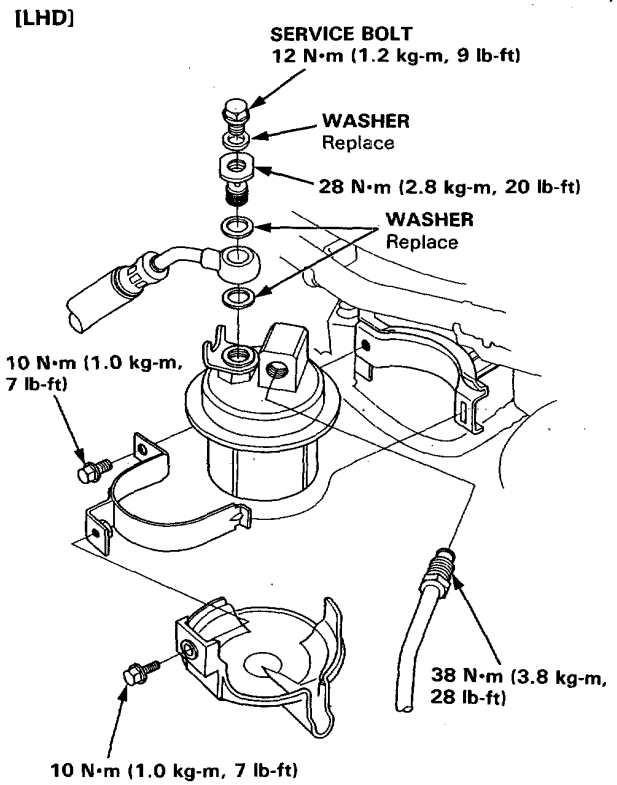

[RHD]

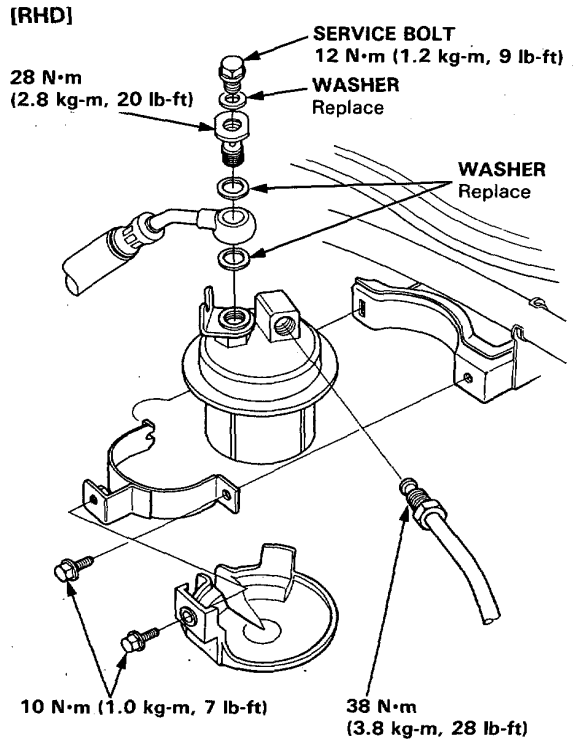

NOTE: Clean the flared joint of high pressure hoses thoroughly before reconnecting them.

Fuel Pump

Description
Because of its compact impeller design, the fuel pump is installed inside the fuel tank, thereby saving space and simplifying the fuel line system.

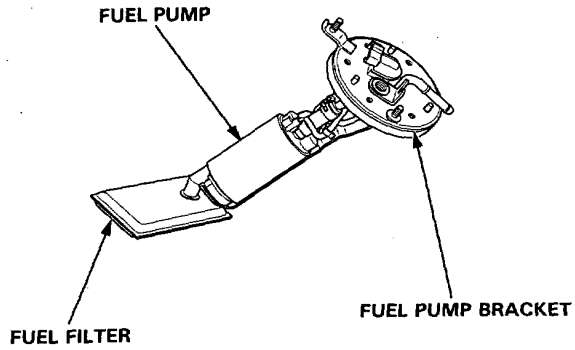

FUEL PUMP CROSS SECTION (Side view)

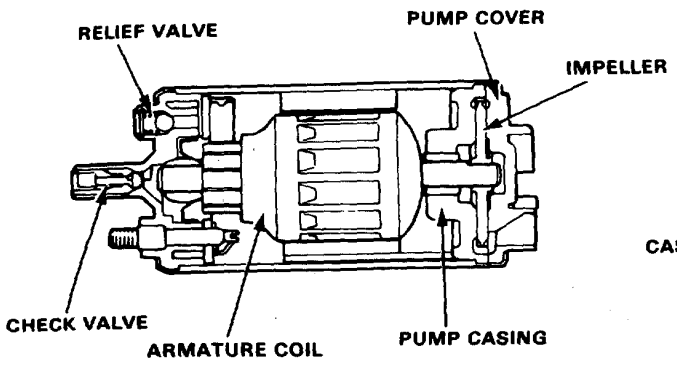

PUMP ASSEMBLY CROSS SECTION (Top view)

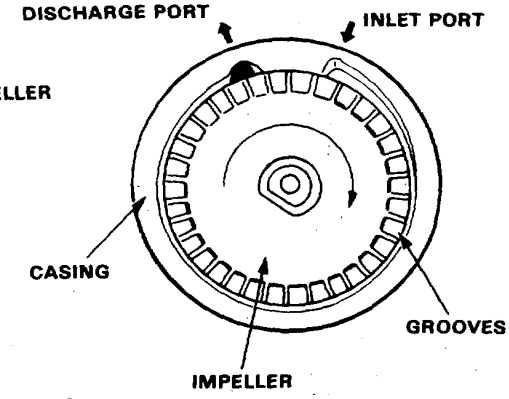

The fuel pump is comprised of a DC motor, a circumference flow pump, a relief valve for protecting the fuel line systems, a check valve for retaining residual pressure, an inlet port, and a discharge port. The pump assembly consists of the impeller (driven by the motor), the pump casing (which forms the pumping chamber), and the pump cover.

OPERATION

(1) When the engine is started, the main relay actuates the pump, and the motor turns the impeller. Differential pressure is generated by the numerous grooves around the impeller.

(2) Fuel entering the inlet port flows inside the motor from the pumping chamber and is forced through the discharge port via the check valve. If fuel flow is obstructed at the discharge side of the fuel line, the relief valve will open to bypass the fuel to the inlet port and prevent excessive fuel pressure.

(3) When the engine stops, the pump stops automatically. However, a check valve closes by spring action to retain the residual pressure in the line, helping the engine to restart more easily.

(cont'd)

Fuel Pump (cont'd)

Testing

⚠WARNING Do not smoke during the test. Keep open flame away from your work area.

If you suspect a problem with the fuel pump, check that the fuel pump actually runs; When it is ON, you will hear some noise if you hold your ear to the fuel filler port with the fuel filler cap removed. The fuel pump should run for two seconds when the ignition switch is first turned on. If the pump does not make noise, check as follows:

1. Remove the rear seats (section 20).
2. Remove the maintenance access cover.
3. Disconnect the 2P connector from the fuel pump.

CAUTION: Be sure to turn the ignition switch OFF before disconnecting the wires.

4. Disconnect the main relay connector and connect the BLK/YEL ⑤ wire and BLK/YEL ⑦ wire with a jumper wire.

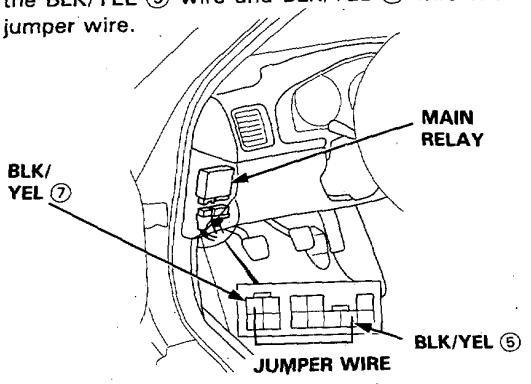

5. Check that battery voltage is available at the fuel pump connector when the ignition switch is turned ON (positive probe to the BLK/YEL wire, negative probe to the BLK wire).

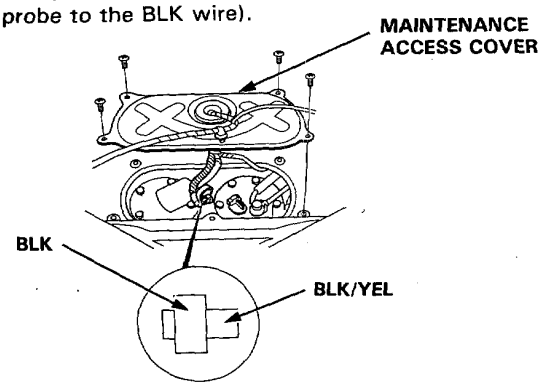

- If battery voltage is available, replace the fuel pump.
- If there is no voltage, check the fuel pump ground and wire harness (page 11-109).

Replacement

⚠WARNING Do not smoke while working on fuel system. Keep open flames away from your work area.

1. Remove the rear seats (section 20).
2. Remove the maintenance access cover.
3. Disconnect the connector from the fuel pump.
4. Remove the fuel pump mounting nuts.
5. Remove the fuel pump from the fuel tank.

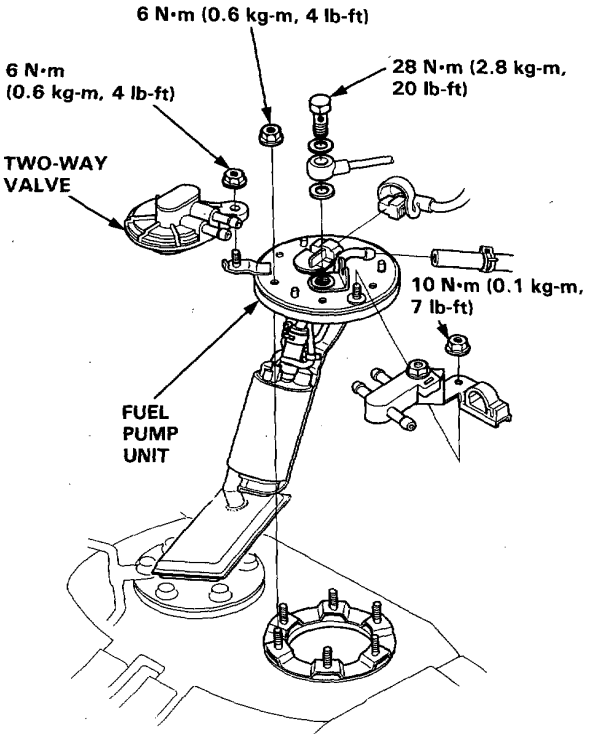

Main Relay

Description

This relay is installed at the left side of the cowl.
The main relay actually contains two individual relays. One relay is energized whenever the ignition is on. It supplies battery voltage to the ECU, power to the injectors, and power for the second relay.
The second relay is energized for 2 seconds when the ignition is switched on, and when the engine is running. It supplies power to the fuel pump.

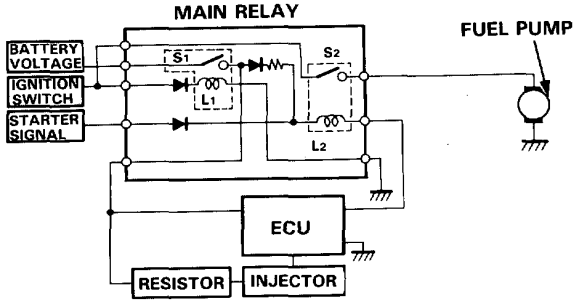

Relay Testing

NOTE: If the car starts and continues to run, the main relay is OK.

1. *Remove the main relay.*

2. Attach the battery positive to the No. 4 terminal and the battery negative to the No. 8 terminal of the main relay. Then check for continuity between the No. 5 terminal and No. 7 terminal of the main relay.
   - If there is continuity, go on to step 3.
   - If there is no continuity, replace the relay and retest.

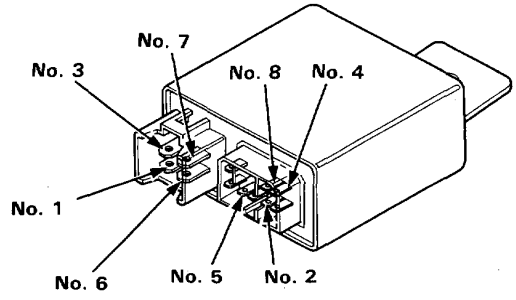

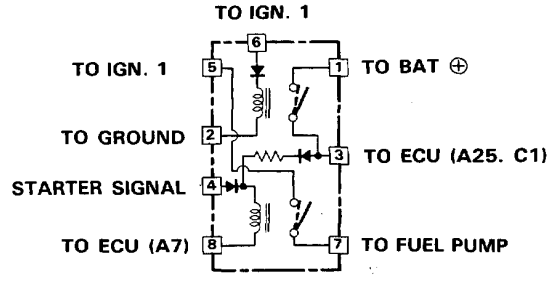

3. Attach the battery positive terminal to the No. 6 terminal and the battery negative terminal to the No. 2 terminal of the main relay. Then check that there is continuity between the No. 1 terminal and No. 3 terminal of the main relay.
   - If there is continuity, go on to step 4.
   - If there is no continuity, replace the relay and retest.

4. Attach the battery positive terminal to the No. 3 terminal and battery negative terminal to the No. 8 terminal of the main relay. Then check that there is continuity of the main relay. Then check that there is continuity between the No. 5 terminal and No. 7 terminal of the main relay.
   - If there is continuity, the relay is OK.
     If the fuel pump still does not work, go to Harness Testing in the next column.
   - If there is no continuity, replace the relay and retest.

(cont'd)

Main Relay (cont'd)

Troubleshooting Flowchart

— Engine will not start.
— Inspection of main relay.

Disconnect the main relay connectors.

Check for continuity between BLK terminal ② and body ground.

Does continuity exist?
- NO → **Repair open in BLK wire between main relay and G101.**
- YES ↓

Measure the voltage between YEL/BLK terminal ① and body ground.

Is there battery voltage?
- NO → **— Replace No. 5 fuse. — Repair open in the YEL/BLK wire between the main relay and the No. 5 fuse.**
- YES ↓

Turn the ignition switch ON.

Measure the voltage between BLK/YEL terminal ⑤ and body ground.

Is there battery voltage?
- NO → **— Replace No. 22 fuse. — Repair open in the BLK/YEL wire between the main relay and the No. 22 fuse.**
- YES ↓

Measure the voltage between BLK/YEL terminal ⑥ and body ground.

Is there battery voltage?
- NO → **— Replace No. 25 fuse. — Repair open in the BLK/YEL wire between the main relay and the No. 25 fuse.**
- YES ↓

Turn the ignition switch to the START position.

Measure the voltage between BLK/WHT terminal ④ and body ground.

Is there battery voltage?
- NO → **— Replace No. 14 fuse. — Repair open in the BLK/WHT wire between the main relay and the No. 14 fuse.**
- YES ↓

(To page 11-111)

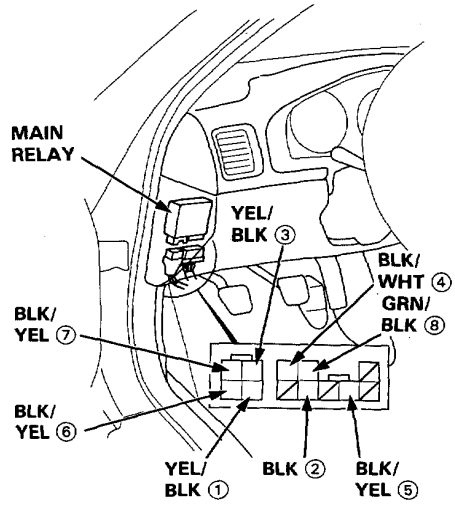

(From page 11-110)

Turn the ignition switch off.

Connect the test harness between the ECU and connector. Disconnect "A" connector from the main wire harness only, not the ECU (page 11-28).

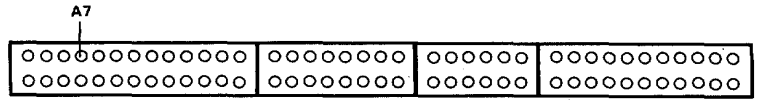

Check for continuity between GRN/BLK terminal ⑧ and A7 terminal.

Does continuity exist?

NO → **Repair open in GRN/BLK wire between ECU (A7) and main relay.**

YES

Reconnect "A" connector to the main wire harness.

Connect the main relay connectors.

Turn the ignition switch ON.

Measure the voltage between A25 (+) terminal and A23 (−) terminal.

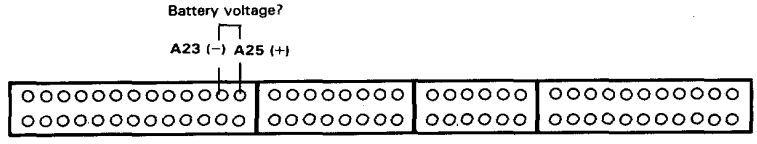

Is there battery voltage?

NO → **— Replace main relay.**
— Repair open in the YEL/BLK wire between the ECU (A25) and the main relay.

YES

Measure the voltage between A7 (+) terminal and A23 (−) terminal.

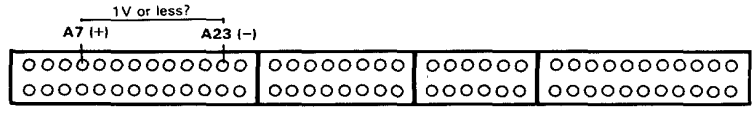

Is there 1V or less? (for 2 seconds)

NO → **Substitute a known-good ECU and recheck. If prescribed voltage is now available, replace the original ECU.**

YES

Check the main relay (page 11-109).

Fuel Tank

Replacement

⚠ WARNING

- **Do not smoke while working on fuel system. Keep open flame away from work area.**

1. Raise the car.
2. Remove the drain bolt and drain the fuel into an approved container.
3. Disconnect the connectors from the fuel gauge sending unit and the fuel pump.
4. Disconnect the hoses.
   CAUTION:
   - **When disconnecting the hoses, slide back the clamps, then twist hoses as you pull to avoid damaging them.**
5. Place a jack, or other support, under the tank.
6. Remove the strap bolts and nuts, and let the straps fall free.
7. Remove the fuel tank.
   NOTE: The tank may stick on the undercoat applied to its mount. To remove, carefully pry it off the mount.
8. Install a new washer on the drain bolt, then install parts in the reverse order of removal.

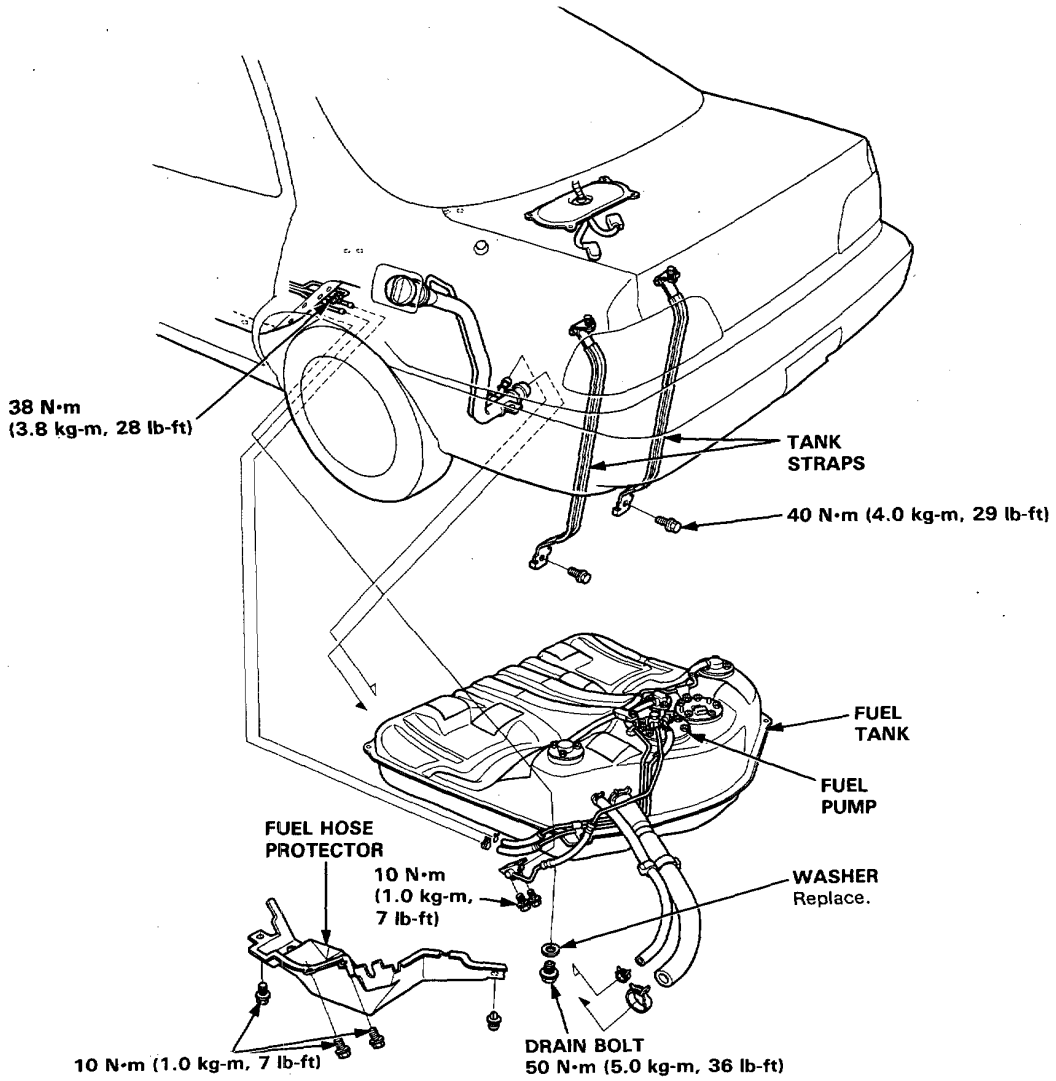

System Troubleshooting Guide

NOTE: Across each row in the chart, the sub systems that could be sources of a symptom are ranked in the order they should be inspected starting with ①. Find the symptom in the left column, read across to the most likely source, then refer to the page listed at the top of that column. If inspection shows the system is OK, try the next system ②, etc.

PAGE / SUB SYSTEM / SYMPTOM	THROTTLE CABLE	THROTTLE BODY	CHAMBER VOLUME CONTROL SYSTEM
	116	117	120
WHEN COLD FAST IDLE OUT OF SPEC	③	②	①
WHEN WARM ENGINE SPEED TOO HIGH	②	①	
LOSS OF POWER		①	②

Air Intake System

System Description

The system supplies air for all engine needs. It consists of the air cleaner, air intake pipe, throttle body, EACV, fast idle mechanism, and intake manifold. A resonator in the air intake pipe provides additional silencing as air is drawn into the system.

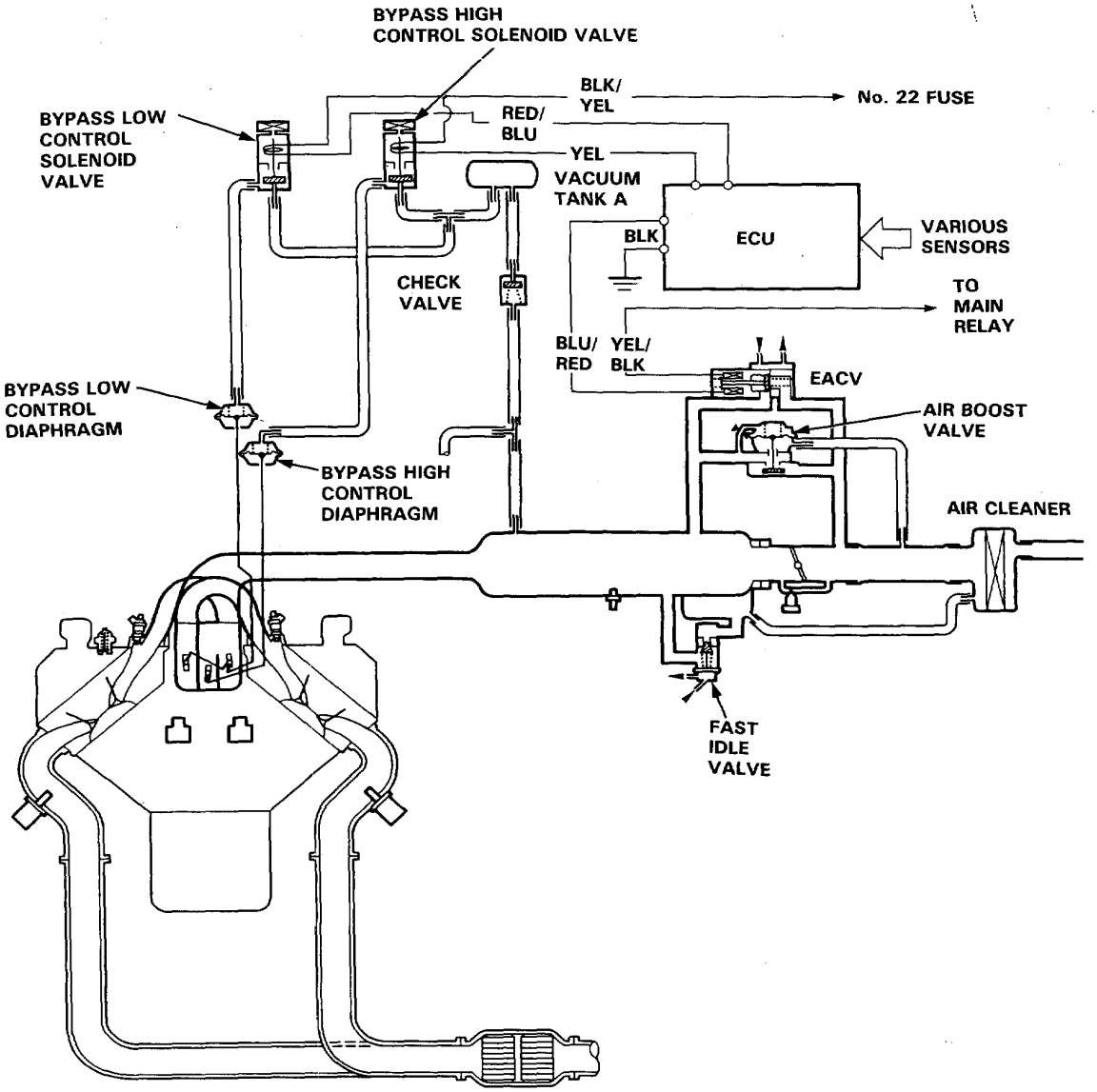

Air Cleaner

Air Cleaner Element Replacement

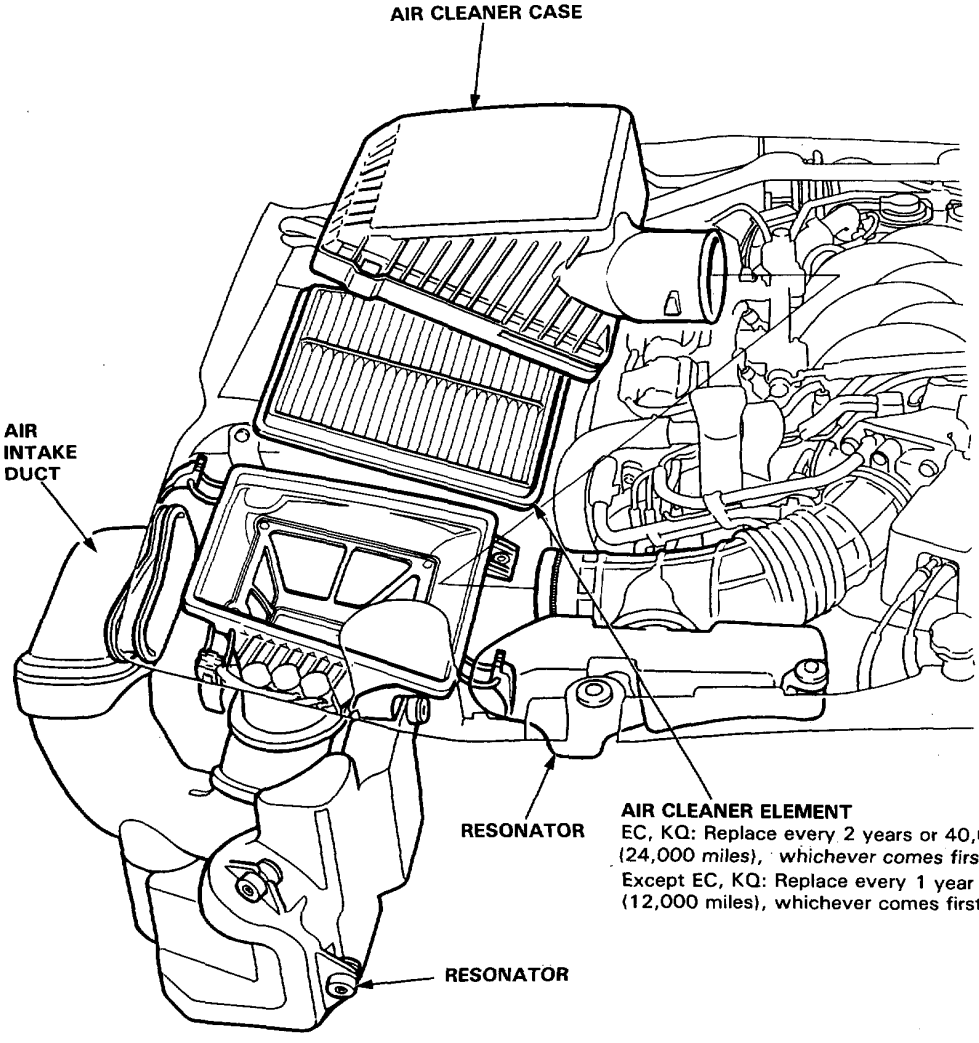

AIR CLEANER ELEMENT
EC, KQ: Replace every 2 years or 40,000 km (24,000 miles), whichever comes first.
Except EC, KQ: Replace every 1 year or 20,000 km (12,000 miles), whichever comes first.

Throttle Cable

Inspection/Adjustment

1. Warm up the engine to normal operating temperature (cooling fan comes on).
2. Check that the throttle cable operates smoothly with no binding or sticking. Repair as necessary.
3. Check cable free play at the throttle linkage. Cable deflection should be 10—12 mm (0.39—0.47 in.)

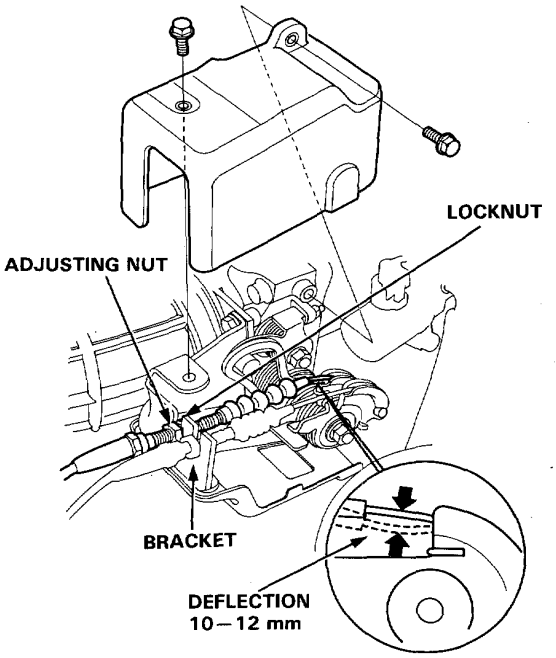

4. If deflection is not within specs, loosen the locknut and turn the adjusting nut until the deflection is as specified.
5. With the cable properly adjusted, check the throttle valve to be sure it opens fully when you push the accelerator pedal to the floor. Also check the throttle valve to be sure it returns to the idle position whenever you release the accelerator.

Installation

1. Fully open the throttle valve, then install the throttle cable in the throttle linkage and install the cable housing in the cable bracket.
2. Warm up the engine to normal operating temperature (the cooling fan comes on).

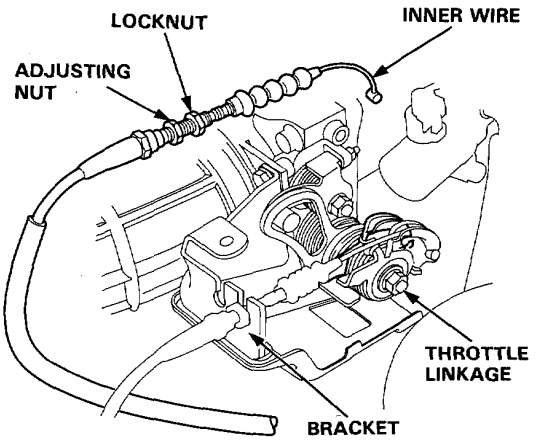

3. Hold the cable sheath, removing all slack from the cable.
4. Turn the adjusting nut until it is 3 mm away from the cable bracket.
5. Tighten the locknut. The cable deflection should now be 10—12 mm. If not, see Inspection/Adjustment.

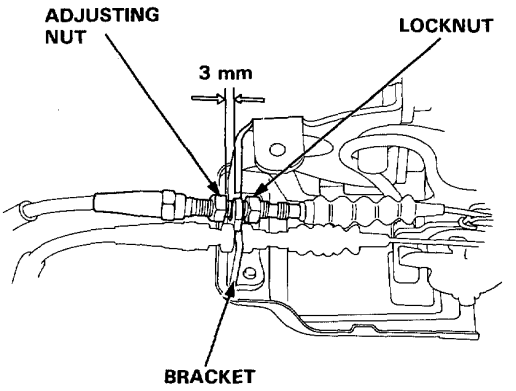

Throttle Body

Description

The throttle body is of the single-barrel side-draft type. The lower portion of the throttle valve is heated by engine coolant which is fed from the cylinder head. The idle adjusting screw which increases/decreases bypass air and the canister/purge port are located on the top of the throttle body.

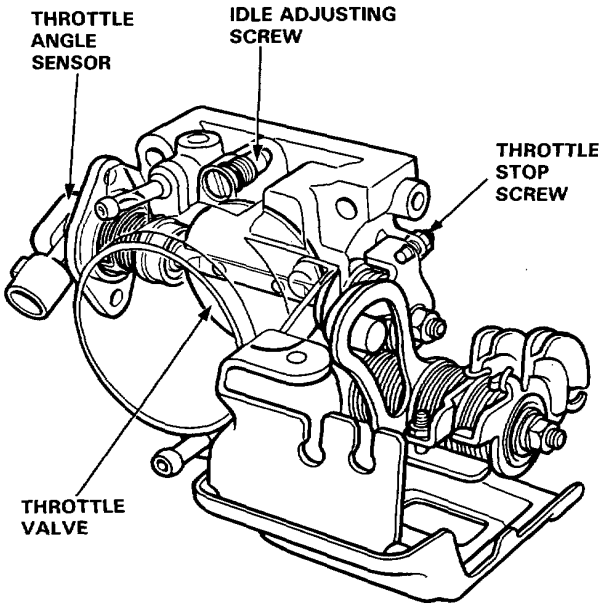

Inspection

CAUTION: Do not adjust the throttle stop screw. It is preset at the factory.

1. Start the engine and allow it to reach normal operating temperature (cooling fan comes on).

2. Disconnect the vacuum hose (to the canister) from the top of the throttle body; connect a vacuum gauge to the throttle body.

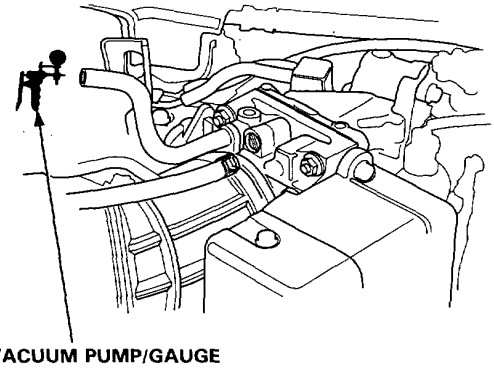

3. Allow the engine to idle and check that the gauge indicates no vacuum.
   - If there is vacuum, check the throttle cable (page 11-116).

4. Check that vacuum is indicated on the gauge when the throttle is opened slightly from idle.
   - If the gauge indicates no vacuum, check the throttle body port. If the throttle body port is clogged, clean it with carburetor cleaner.

5. Stop the engine and check that the throttle cable operates smoothly without binding or sticking.
   - If there are any abnormalities in the above steps, check for:

     – Excessive wear or play in the throttle valve shaft.
     – Sticky or binding throttle lever at full close position.
     – Clearance between throttle stop screw and throttle lever at full close position.

(cont'd)

Throttle Body (cont'd)

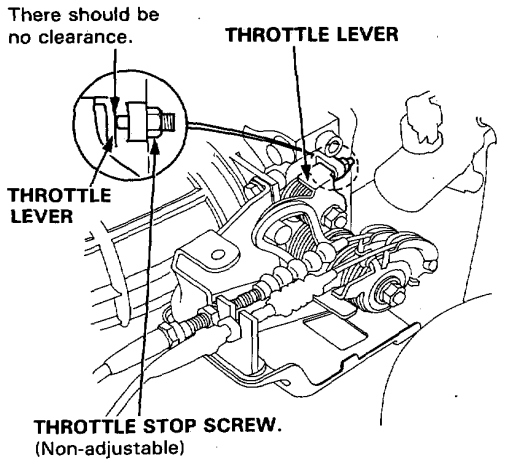

Replace the throttle body if there is excessive play in the throttle valve shaft or if the shaft is binding or sticking.

Throttle Body (cont'd)

Disassembly

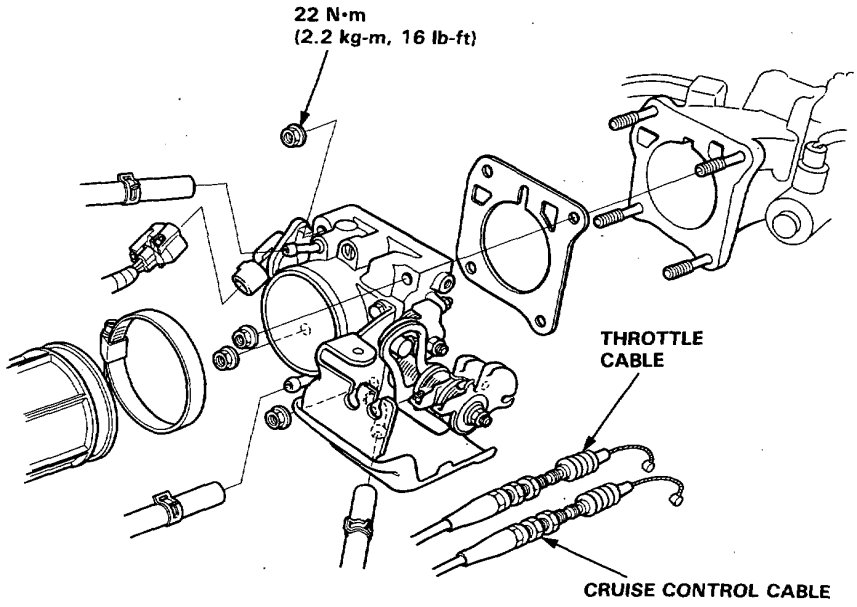

CAUTION:

- **The throttle stop screw in non-adjustable.**
- **After reassembly, adjust the throttle cable (page 11-116) and the cruise control cable (section 23).**

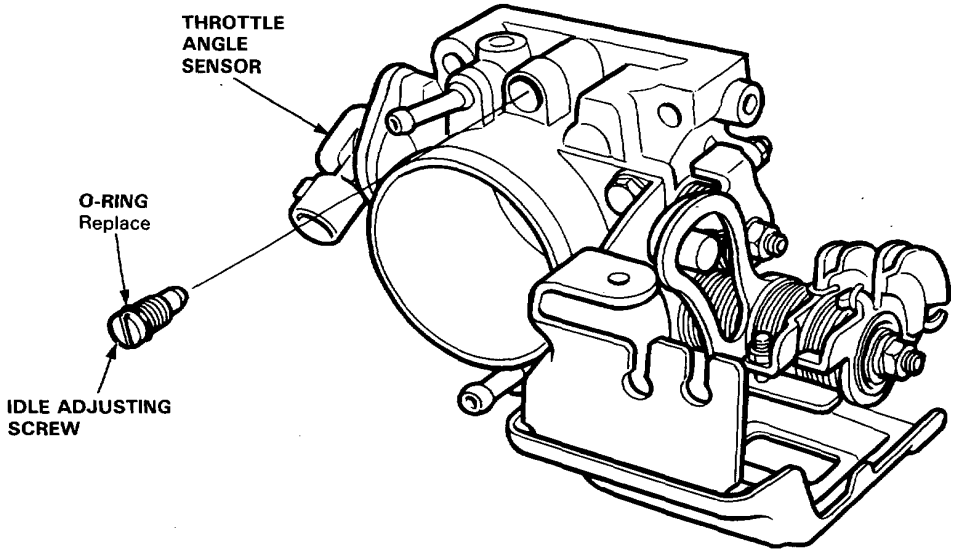

Chamber Volume Control System

Description

Satisfactory power performance is achieved by closing and opening the bypass control valves. High torque at low engine speed is achieved when the valves are closed, whereas high power at high engine speed is achieved by when the valves are opened.

BYPASS LOW CONTROL SOLENOID VALVE OFF

↑

ENGINE SPEED IS ABOVE 3,300 min^{-1} (rpm)

BYPASS HIGH CONTROL SOLENOID VALVE OFF

↑

ENGINE SPEED IS ABOVE 4,000 min^{-1} (rpm)

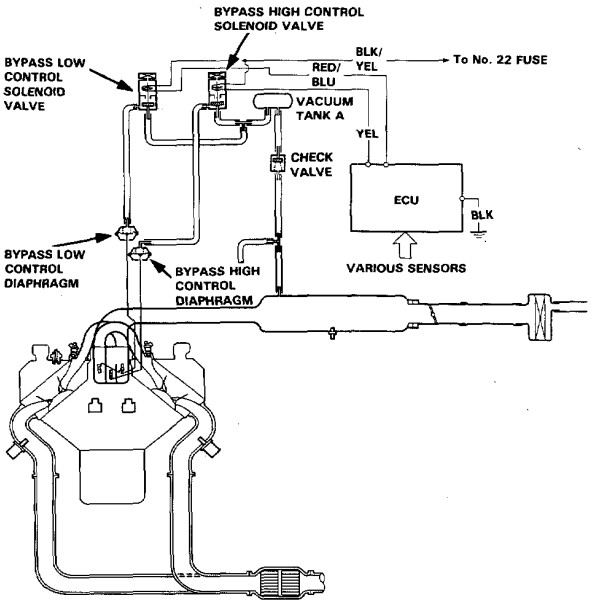

LOW VALVE : CLOSED
HIGH VALVE : CLOSED

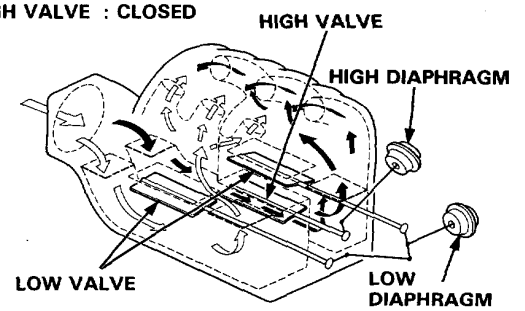

LOW VALVE : OPEN
HIGH VALVE : CLOSED

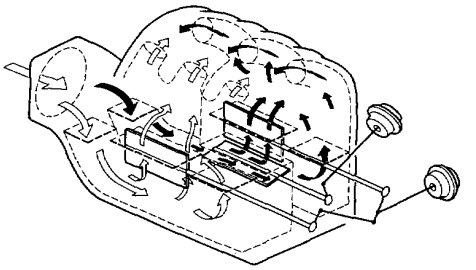

LOW VALVE: OPEN
HIGH VALVE: OPEN

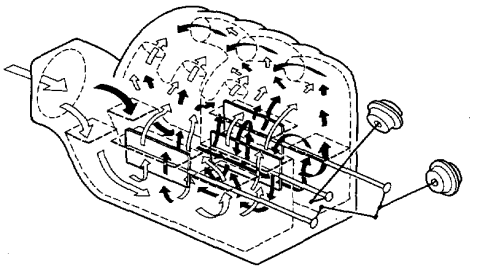

Troubleshooting Flowchart

Inspection of Chamber Volume Control System.

Start engine and allow it to idle.

Remove # 2 vacuum hose from the bypass low control diaphragm and connect vacuum gauge to the hose.

Is there vacuum?

NO

Disconnect the #4 hose on bypass low control solenoid valve and connect a vacuum gauge to the hose.

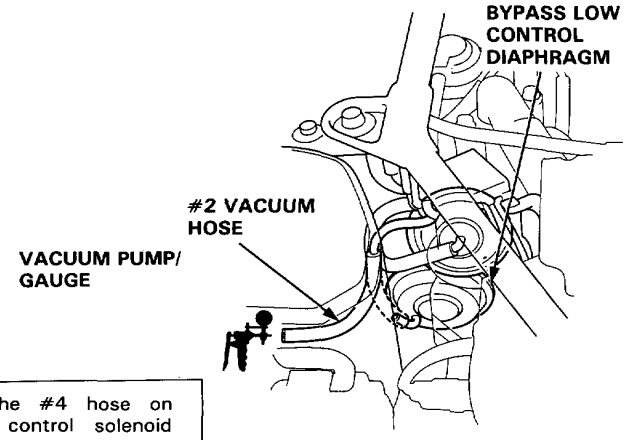

Is there vacuum?

NO

Repair the blockage or vacuum leak between the vacuum tank and the intake manifold.

YES

Disconnect the 6P connector.

Measure voltage between BLK/YEL (+) terminal and RED/BLU (−) terminal.

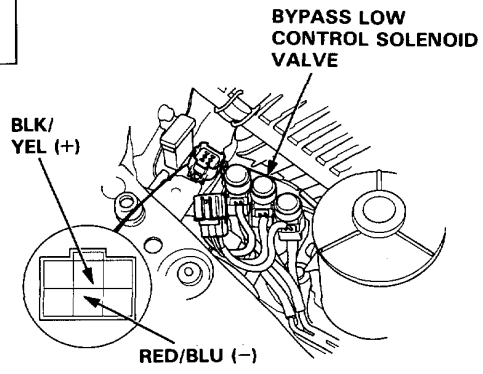

Is there battery voltage?

YES

Replace the bypass low control solenoid valve.

NO

Measure voltage between BLK/YEL (+) terminal and body ground.

YES

(To page 11-122)

NO

(To page 11-122)

(cont'd)

Chamber Volume Control System (cont'd)

(From page 11-121)

(From page 11-121)

Is there battery voltage?

NO → **Repair open in BLK/YEL wire between the 6P connector and No. 22 fuse.**

YES

Turn the ignition switch OFF.

Connect the test harness between the ECU and connector (page 11-28).

Check for continuity of RED/BLU wire between ECU (A14) and the 6P connector.

Does continuity exist?

NO → **Repair open in RED/BLU wire between ECU (A14) and the 6P connector.**

YES

Substitute a known-good ECU and recheck. If symptom goes away, replace the original ECU.

Remove #8 vacuum hose from the bypass high control diaphragm and connect vacuum gauge to the hose.

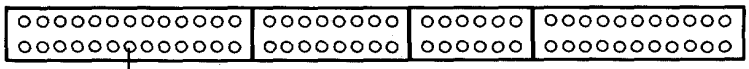

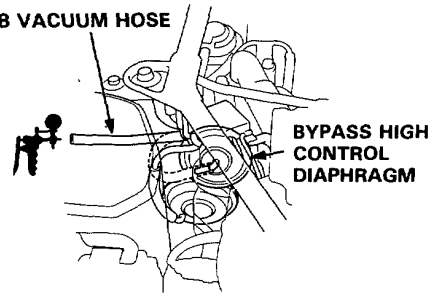

Is there vacuum?

NO → Disconnect the #4 hose on bypass high control solenoid valve and connect a vacuum gauge to the hose.

YES

Is there vacuum?

NO → **Repair the blockage or vacuum leak between the vacuum tank and the intake manifold.**

YES

Disconnect the 6P connector.

Measure voltage between BLK/YEL (+) terminal and YEL (−) terminal.

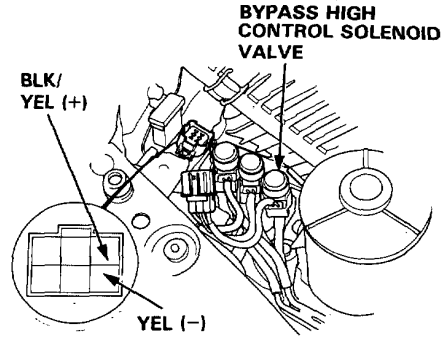

(To page 11-123)

(To page 11-123)

(From page 11-122)

Raise engine speed to 3,300 min^{-1} (rpm).

Check for vacuum at #2 vacuum hose.

Is there vacuum?

- YES → Disconnect the 6P connector.
- NO → (To page 11-124)

(From page 11-122)

Is there battery voltage?

- YES → **Replace the bypass high control solenoid valve.**
- NO → Measure voltage between BLK/YEL (+) terminal and body ground.

Is there battery voltage?

- NO → **Repair open in BLK/YEL wire between the 6P connector and No. 22 fuse.**
- YES → Turn the ignition switch OFF.

Connect the test harness between the ECU and connector (page 11-28).

Check for continuity of YEL wire between ECU (A18) and the 6P connector.

Does continuity exist?

- NO → **Repair open in YEL wire between ECU (A18) and the 6P connector.**
- YES → ***Substitute a known-good ECU and recheck. If symptom goes away, replace the original ECU.***

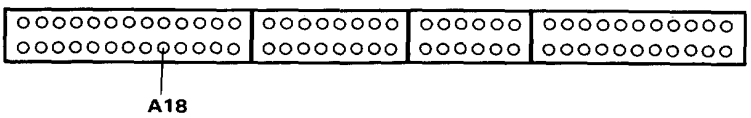

Is there vacuum?

- YES → **Replace the bypass low control solenoid valve.**
- NO → (To page 11-124)

(cont'd)

Chamber Volume Control System (cont'd)

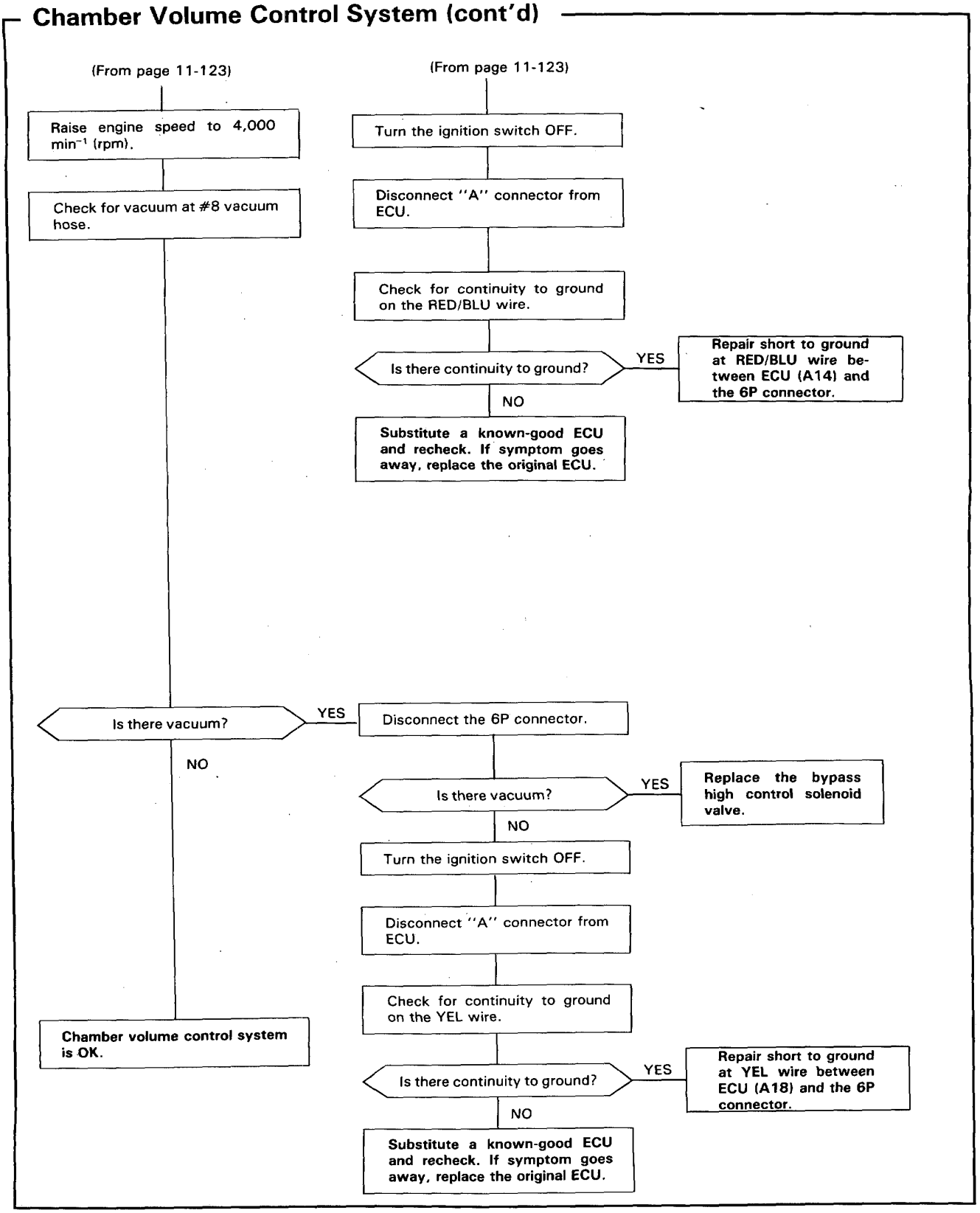

Bypass Control Valve Test

Bypass Low Control Valve

1. Disconnect the #2 hose from the vacuum hose manifold and attach a vacuum pump to the vacuum hose manifold.

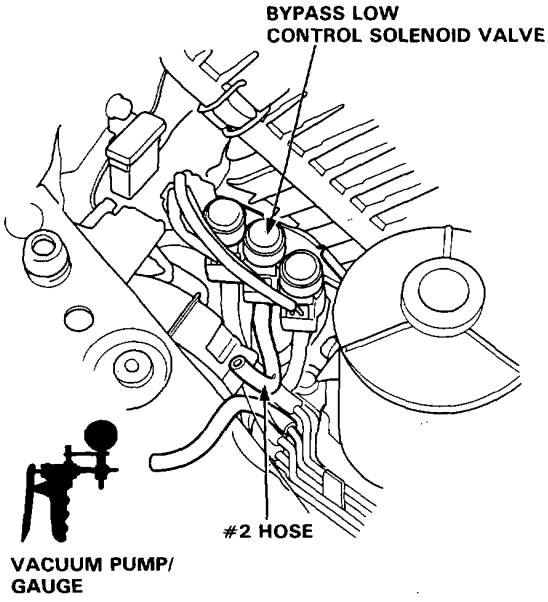

2. Apply vacuum and verify that the diaphragm holds vacuum and that as the vacuum is applied and released the diaphragm rod moves in and out.

   - If the diaphragm does not hold vacuum or the diaphragm rod does not move in and out, replace the Bypass Control Valve and retest.

Bypass High Control Valve

1. Disconnect the #8 hose from the vacuum hose manifold and attach a vacuum pump to the vacuum hose manifold.

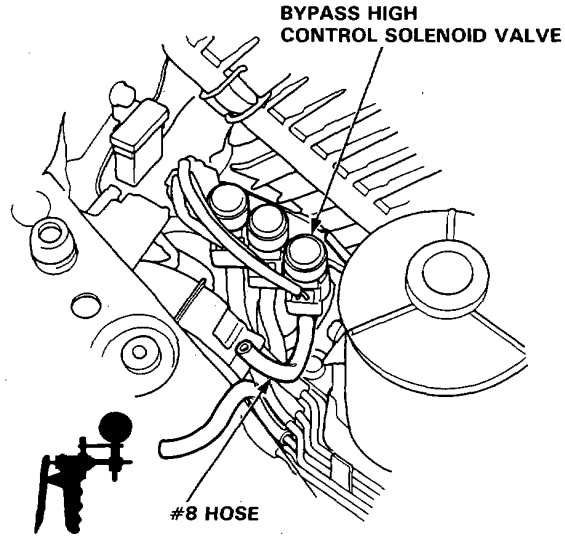

2. Apply vacuum and verify that the diaphragm holds vacuum and that as the vacuum is applied and released the diaphragm rod moves in and out.

   - If the diaphragm does not hold vacuum or the diaphragm rod does not move in and out, replace the Bypass Control Valve and retest.

Chamber Volume Control System

Disassembly

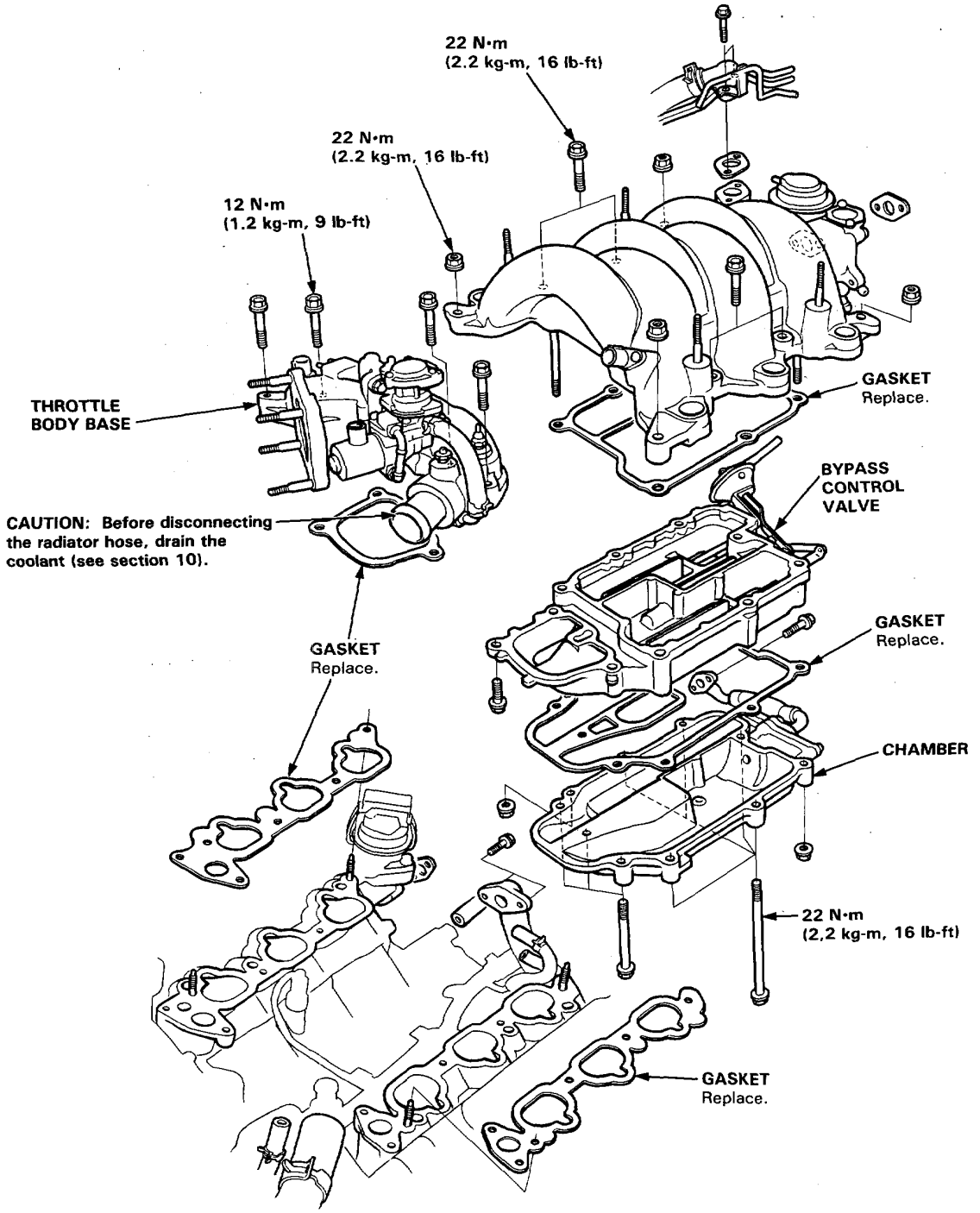

System Troubleshooting Guide

NOTE: Across each row in the chart, the systems that could be sources of a symptom are ranked in the order they should be inspected starting with ①. Find the symptom in the left column, read across to the most likely source, then refer to the page listed at the top of that column. If inspection shows the system is OK, try the next most likely system ②, etc.

PAGE / SUB SYSTEM / SYMPTOM		CATALYTIC CONVERTER (Except KY, KT)	EGR SYSTEM (Except KQ)	AIR INJECTION SYSTEM (Except KY, KQ, KT)	POSITIVE CRANKCASE VENTILATION SYSTEM	EVAPORATIVE EMISSION CONTROLS (Except KT)
		129	131	138	141	142
ROUGH IDLE			①		②	
FREQUENT STALLING	AFTER WARMING UP		①			
POOR PERFORMANCE	MISFIRE OR ROUGH RUNNING		①			
	FAILS EMISSION TEST	①	③			②
	LOSS OF POWER	①	②	③		

Emission Control System

System Description

The emission control system includes a three-way catalytic converter, exhaust gas recirculation (EGR) system, crankcase ventilation system, air injection system and evaporative control system. The emission control system is designed to meet federal and state emission standards.

Tailpipe Emission

Inspection

⚠WARNING Do not smoke during this procedure. Keep any open flame away from your work area.

1. Start the engine and warm up to normal operating temperature (cooling fan comes on).
2. Connect a tachometer.
3. Check and adjust the idle speed, if necessary (page 11-93).
4. Warm up and calibrate the CO meter according to the meter manufacturer's instructions.
5. Check idle CO with the headlights, heater blower, rear window defogger, cooling fan, and air conditioner off.

   CO meter should indicate 0.1 % maximum.

Catalytic Converter

Description

The 3-way catalytic converter is used to convert hydrocarbons (HC), carbon monoxide (CO), and oxides of nitrogen (NOx) in the exhaust gas to carbon dioxide (CO_2), dinitrogen (N_2) and water vapor.

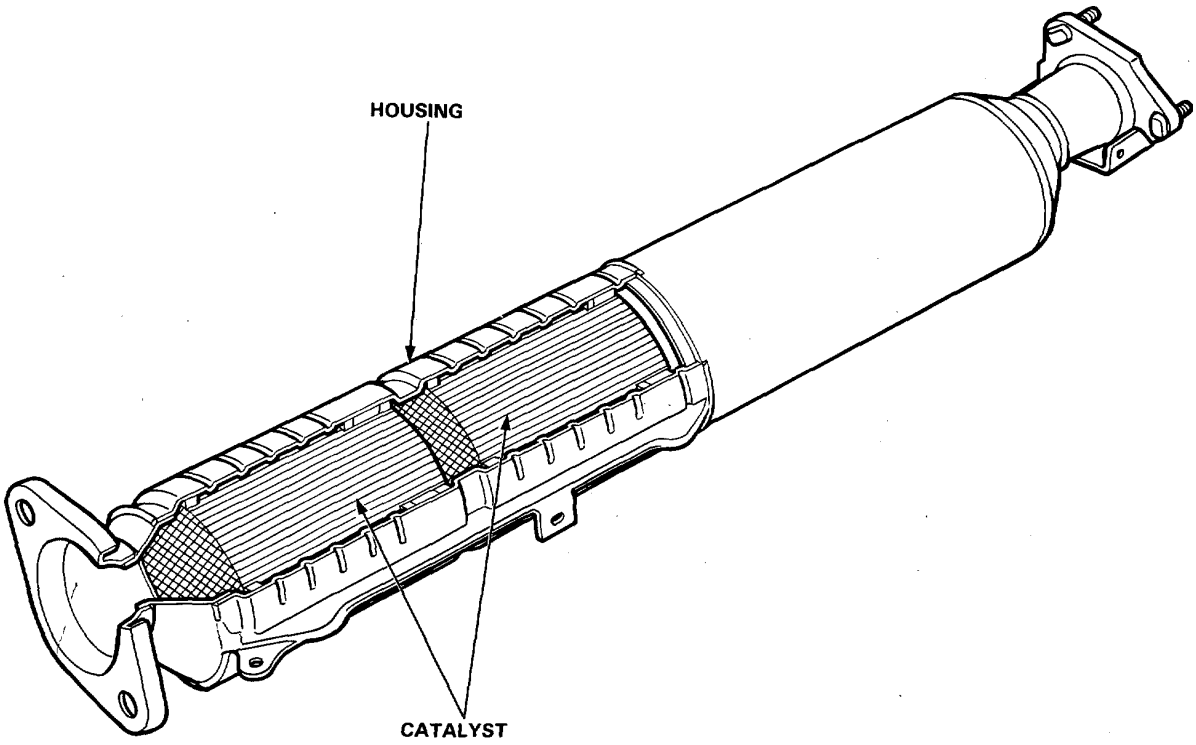

(cont'd)

Catalytic Converter (cont'd)

Inspection

If excessive exhaust system back-pressure is suspected, remove the catalytic converter from the car and make a visual check for plugging, melting or cracking of the catalyst. Replace the catalytic converter if any of the visible area is damaged or plugged.

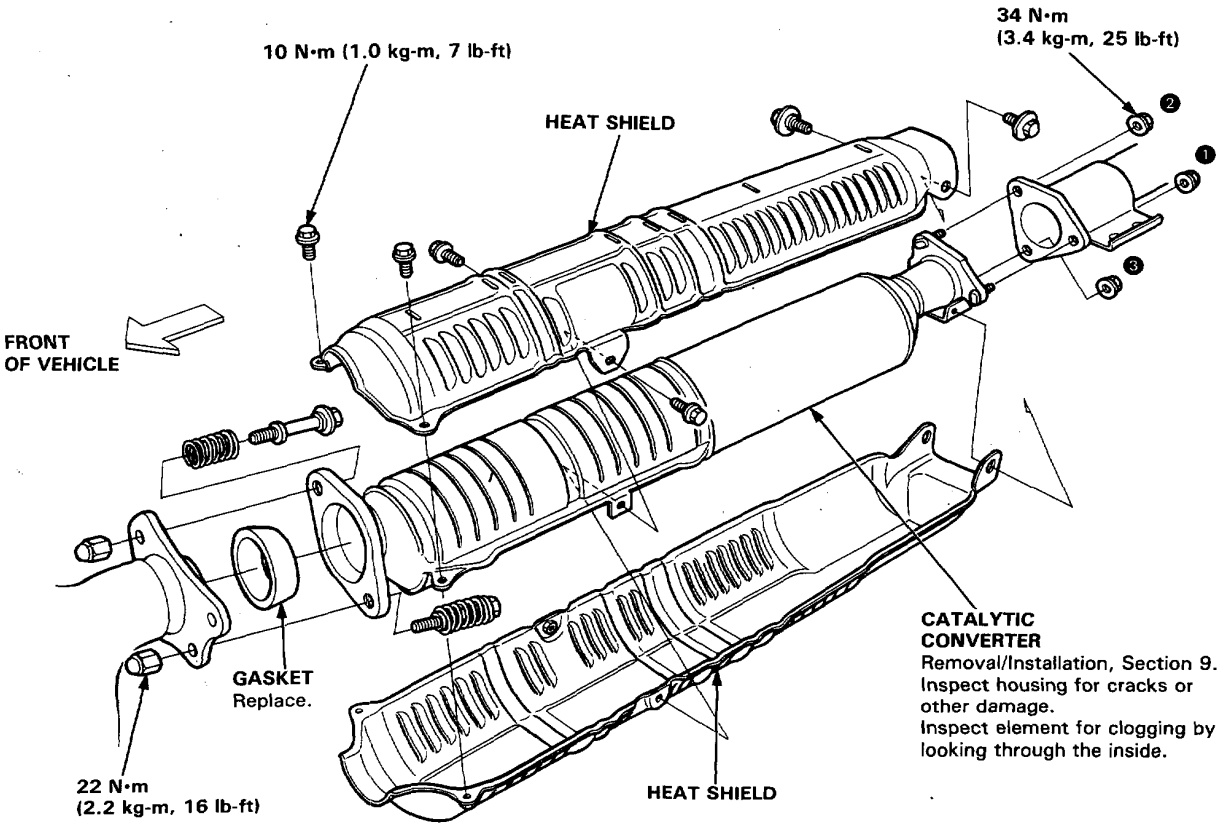

Exhaust Gas Recirculation System

Troubleshooting Flowchart

12 Self diagnosis Check Engine light indicates code 12: Most likely a problem in the Exhaust Gas Recirculation (EGR) system.

The EGR System is designed to reduce oxides of nitrogen emissions (NOx) by recirculating exhaust gas through the EGR valve and the intake manifold into the combustion chambers. It is composed of the EGR valve, CVC valve, EGR control solenoid valve, ECU and various sensors.

The ECU memory contains ideal EGR valve lifts for varying operating conditions. The EGR valve lift sensor detects the amount of EGR valve lift and sends the information to the ECU. The ECU then compares it with the ideal EGR valve lift which is determined by signals sent from the other sensors. If there is any difference between the two, the ECU cuts current to the EGR control solenoid valve to reduce vacuum applied to the EGR valve.

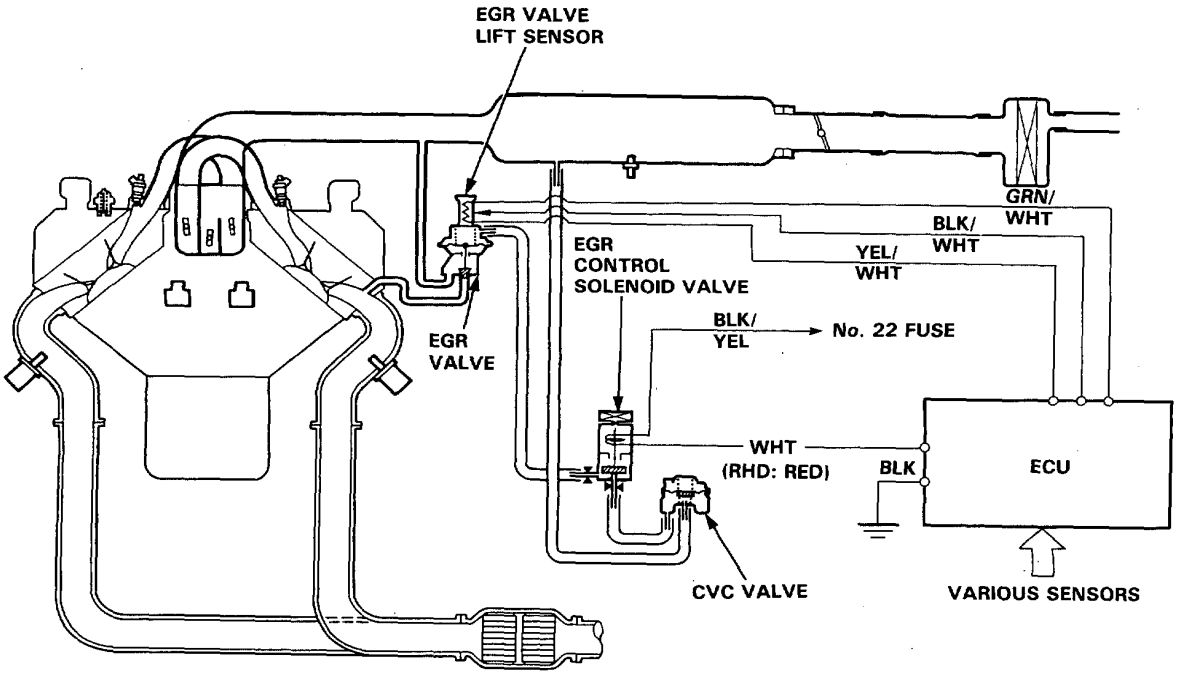

(cont'd)

Exhaust Gas Recirculation System (cont'd)

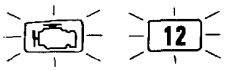

- Check Engine light has been reported on.
- With service check connector jumped (page 11-24), CODE 12 is indicated.

Do the ECU Reset Procedures (page 11-25).

Road test necessary: Warm up the engine to normal operating temperature (cooling fan comes on). Drive the car on the road for approx. 10 minutes. Keep the engine speed in the 1700—2500 range.

Is Check Engine light on and does it indicate CODE 12?

NO → Intermittent failure, system is OK at this time. Check for poor connections or loose wires at EGR valve, control box and ECU.

YES

With the engine at idle, disconnect the #11 hose from the EGR valve and connect a vacuum pump/gauge to the hose.

Is there any vacuum?

YES → Disconnect 4P connector from the control box and check the #11 hose for vacuum again.

NO

Move the vacuum pump/gauge to the EGR valve.

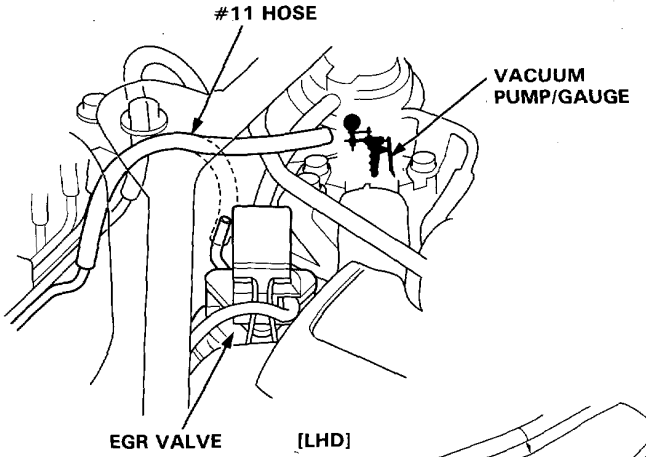

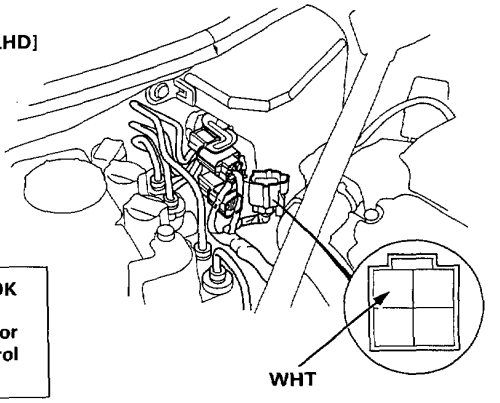

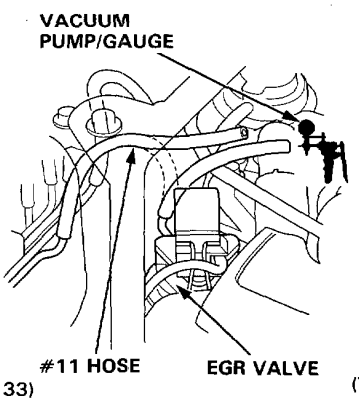

[RHD]

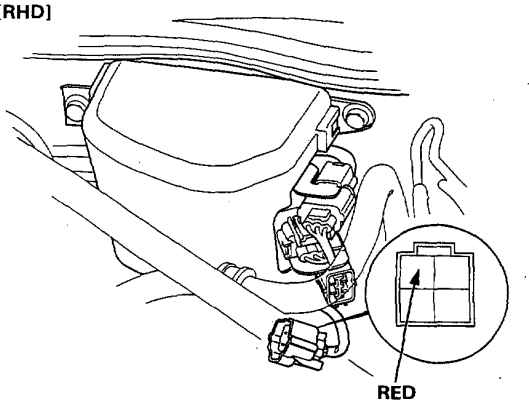

(To page 11-133)

(To page 11-133)

(From page 11-132)

With the engine at idle, apply 203 mmHg (8") of vacuum to the EGR valve.

Does the engine stall and does the EGR valve hold vacuum ?

NO → **Replace EGR valve.**

YES

Disconnect the 4P connector from the control box.

Measure voltage between BLK/YEL (+) terminal on the main wire harness and body ground.

Is there battery voltage ?

NO → **Repair open in BLK/YEL wire between the solenoid valve and No. 22 fuse.**

YES

Reconnect the vacuum pump/gauge to the #11 hose.

Start the engine and allow it to idle.

(To page 11-134)

(From page 11-132)

Is there any vacuum ?

YES → **Check vacuum hose routing of the entire EGR system. If hose routing is OK, replace EGR control solenoid valve.**

NO

Check for continuity to ground on WHT (RHD: RED) wire of 4P connector.

Does continuity exist?

YES → **Repair short in WHT (RHD: RED) wire between EGR control solenoid valve and ECU (A11).**

NO

Substitute a known-good ECU and retest. If symptom/indication goes away, replace the original ECU.

[LHD]

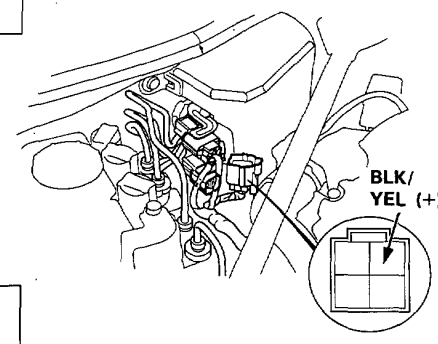

[RHD]

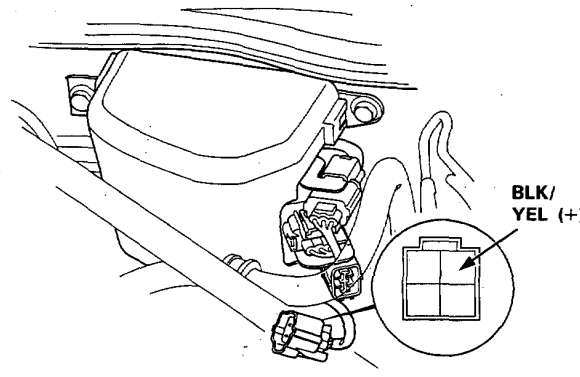

(cont'd)

Exhaust Gas Recirculation System (cont'd)

(From page 11-133)

Connect the battery positive terminal to the A terminal of the 4P connector. While watching the vacuum gauge, connect the battery negative terminal to the B terminal.

Is there approx. 203mmHg (8") within 1 second?

NO → Turn the ignition switch OFF and inspect the #11 and #5 hoses for leaks, restrictions, or misrouting.

YES

Turn the ignition switch OFF and reconnect the 4P connector.

[LHD]

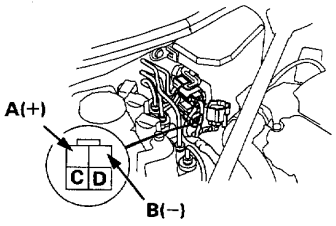

[RHD]

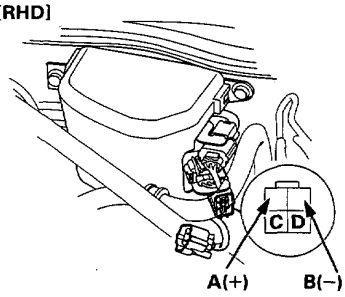

Are the hoses OK?

NO → **Connect as necessary.**

YES

Disconnect the lower hose on EGR control solenoid valve and connect a vacuum gauge to the hose.

Start the engine and allow it to idle.

Is there 152−254 mmHg (6"−10") of vacuum?

NO → **Replace CVC valve.**

YES

Replace the EGR control solenoid valve.

TEST HARNESS 07LAJ−PT30200

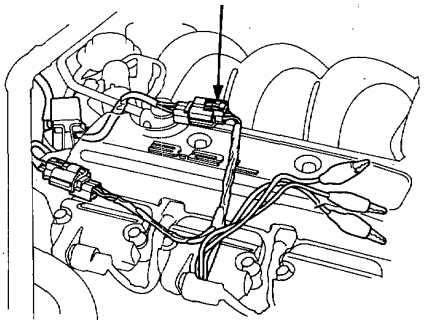

[LHD]

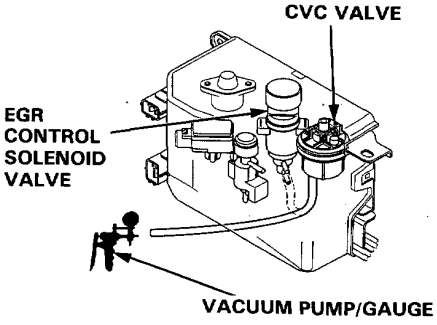

[RHD]

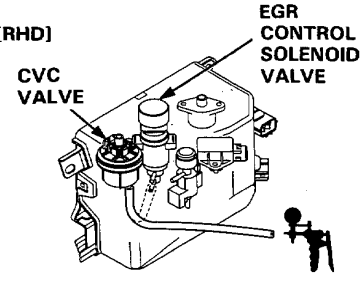

Connect the test harness between the EGR valve lift sensor and engine wire harness.

Turn the ignition switch ON.

Measure voltage between RED (+) terminal and GRN (−) terminal.

Is there approx. 5 V ?

NO →
- **Repair open in YEL/WHT wire between EGR valve and ECU (D20).**
- **Repair open in GRN/WHT wire between EGR valve and ECU (D22).**

YES

(To page 11-135)

(From page 11-134)

Measure voltage between WHT (+) terminal and GRN (−) terminal.

Is there approx 1.2 V ?

NO →
- Replace EGR valve.
- Repair short in BLK/WHT wire between ECU (D12) and EGR valve lift sensor.
- *Substitute a known-good* ECU and recheck. If prescribed voltage is now available, replace the original ECU.

YES ↓

While watching the volmeter, slowly apply a continuous 203 mm Hg (8") of vacuum to the EGR valve. Repeat several times, completely releasing vacuum between.

Is the maximum voltage approx. 4 V ?

NO → **Replace EGR valve.**

YES ↓

Does the voltage consistently increase/decrease as the vacuum increases/decreases ?

NO → **Replace EGR valve.**

YES ↓

Reconnect the #11 hose to the EGR valve.

Turn the ignition switch OFF.

Connect the test harness between the ECU and connector (page 11-28).

Start the engine and allow it to idle.

(To page 11-136)

(cont'd)

Exhaust Gas Recirculation System (cont'd)

(From page 11-135)

Measure voltage between D12 (+) terminal and D22 (−) terminal.

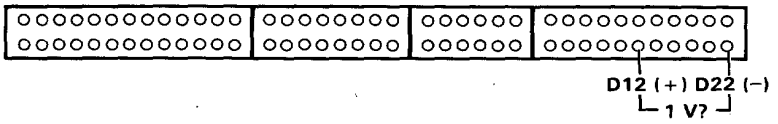

Is there approx. 1.2 V ?

NO → **Repair open in BLK/WHT wire between ECU (D12) and the sensor.**

YES ↓

Connect A11 terminal to A26 terminal with a jumper wire.

Did the engine stall ?

NO → **Repair open in WHT wire between ECU (A11) and EGR control solenoid valve.**

YES ↓

Substitute a known-good ECU and recheck. If symptom/indication goes away, replace the original ECU.

EGR Valve Filter Replacement [without CATA]

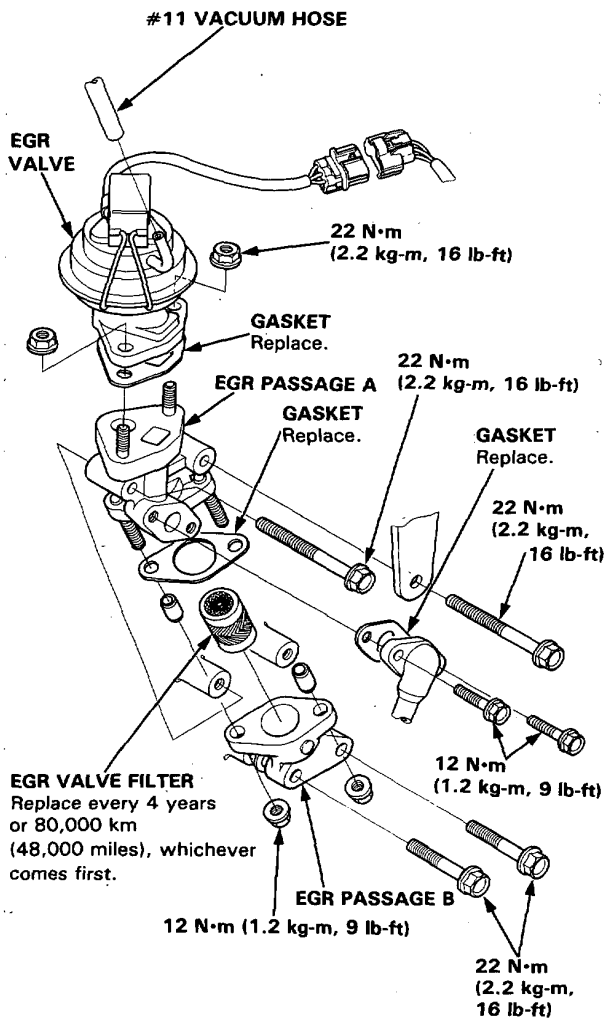

EGR Valve Inspection [without CATA]

NOTE: Clean and inspect every 2 years or 40,000 km (24,000 miles), whichever comes first.

1. Remove the EGR valve.
2. Remove the carbon from the valve seat, body and main nozzle in the EGR valve with a wire brush or driver.

   NOTE: When the valve clean, the valve should be seat.

3. Blow out the EGR valve with compressed air.
4. Install the EGR valve.
5. Start the engine and warm it up to normal operating temperature (the cooling fan comes on).
   - If the engine stall, replace the EGR valve.

Air Injection System

Description

This system is designed to improve emissions performance by supplying fresh air from the air cleaner into the exhaust manifold through the air suction valve.

When the air suction control solenoid valve is activated, manifold vacuum raises the diaphragm valve of the air suction valve. Fresh air from the air cleaner is introduced into the exhaust manifold through the reed valve of the air suction valve by the pulsation of the exhaust gas.

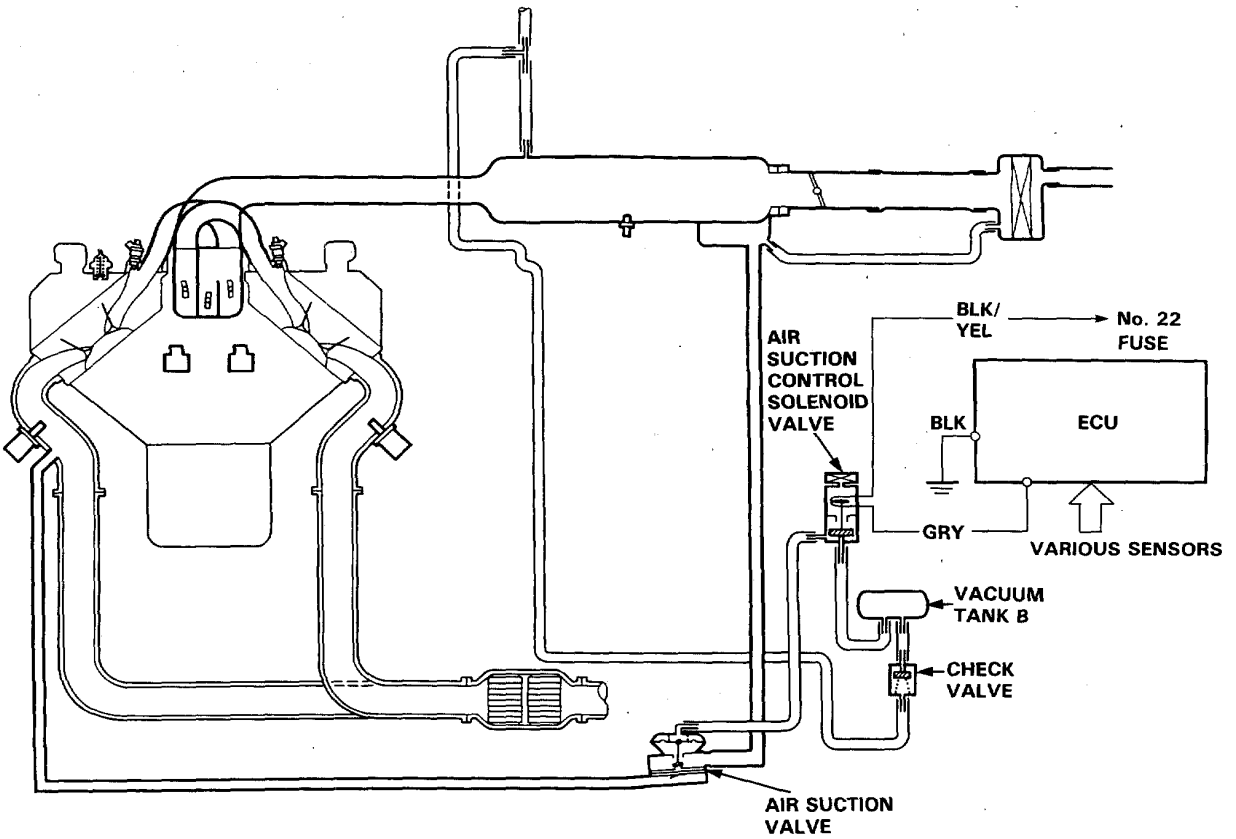

Troubleshooting Flowchart

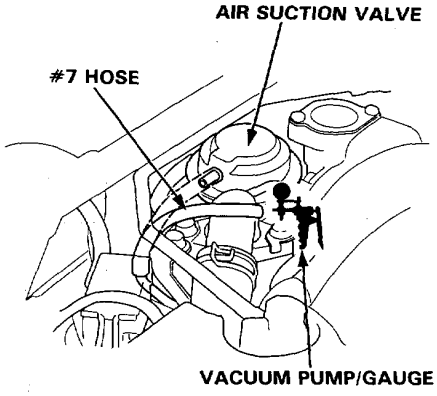

Inspection of Air Injection System.

Start the engine and warm up to normal operating temperature (the cooling fan comes on).

Disconnect the #7 vacuum hose from the air suction valve and connect a vacuum gauge to the hose.

Is there vacuum?

YES → Disconnect the 6P connector.

Is there vacuum?

YES → **Check vacuum hose routing of entire air injection system. If hose routing is OK, replace air suction control solenoid valve.**

NO → **Inspect GRY wire for a short to body around between ECU (A17) and the 6P connector. If wire is OK, substitute a known-good ECU and recheck. If symptom goes away, replace the original ECU.**

NO →

Block rear wheels and set the parking brake. Jack up the front of the car and support with safety stands.

WARNING **Block rear wheels before jacking up front of car.**

Place the transmission in second or "2."

Check for vacuum during deceleration above 15 km/h (9 mph) and 1,500 min^{-1} (rpm).

(To page 11-140)

(cont'd)

Air Injection System (cont'd)

(To page 11-139)

Is there vacuum?

NO → Turn the ignition switch OFF.

Disconnect the 6P connector.

Restart the engine.

Measure voltage between BLK/YEL (+) terminal and GRY (−) terminal during deceleration above 15 km/h (9 mph) and 1,500 min^{-1} (rpm).

Is there battery voltage?

YES → **Inspect vacuum hose routing. If OK, replace the air suction control solenoid value.**

NO → Measure voltage between BLK/YEL (+) terminal and body ground.

Is there battery voltage?

NO → **Repair open in BLK/YEL wire between No. 22 fuse and the 6P connector.**

YES → **Inspect for an open in GRY wire between ECU (A17) and the 6P connector. If wire is OK, substitute a known-good ECU and recheck. If symptom goes away, replace the original ECU.**

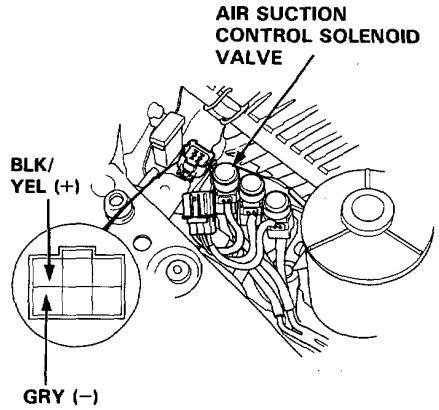

YES → Reconnect the #7 hose.

Check for air suction noise (bubbling noise) from the air suction valve during operation above 15 km/h (9 mph) and 1,500 min^{-1} (rpm).

Can air suction noise be heard?

NO → **Replace the air suction valve.**

YES → **Air Injection System is OK.**

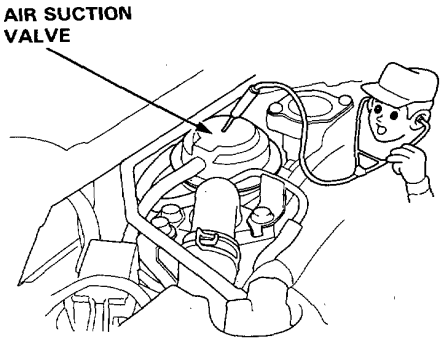

Positive Crankcase Ventilation System

Description

The Positive Crankcase Ventilation (PCV) system is designed to prevent blow-by gas from escaping to the atmosphere. The PCV valve contains a spring-loaded plunger. When the engine starts, the plunger in the PCV valve is lifted in proportion to intake manifold vacuum and the blow-by gas is drawn directly into the intake manifold.

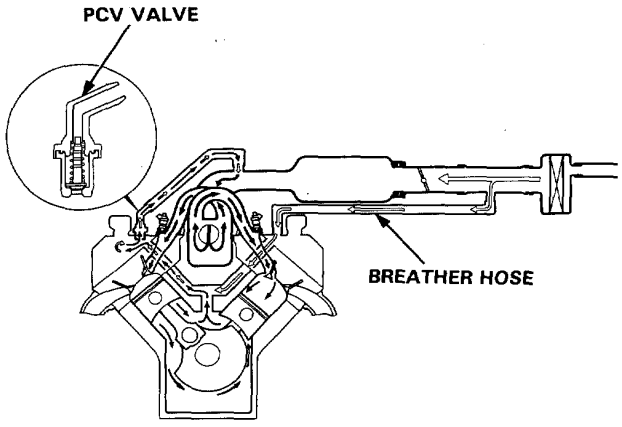

⬅ : BLOW-BY VAPOR
⇦ : FRESH AIR

Inspection

1. Check the crankcase ventilation hoses and connections for leaks and clogging.

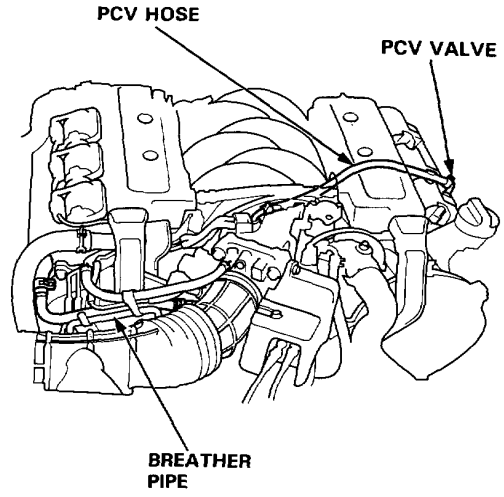

2. At idle, make sure there is a clicking sound from the PCV valve when the hose between PCV valve and intake manifold in lightly pinched with your fingers or pliers.

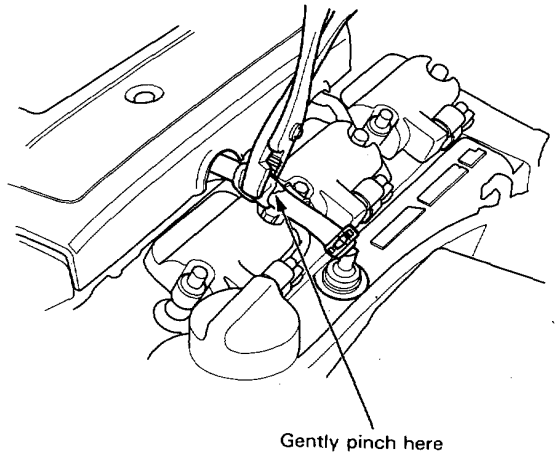

- If there is no clicking sound, check the PCV valve grommet for cracks or damage. If the grommet is OK, replace the PCV valve and recheck.

Evaporative Emission Controls

Description

The evaporative controls are designed to minimize the amount of fuel vapor escaping to the atmosphere. The system consists of the following components:

A. Charcoal Canister
A canister for the temporary storage of fuel vapor until the fuel vapor can be purged from the canister into the engine and burned.

B. Vapor Purge Control System
Canister purging is accomplished by drawing fresh air through the canister and into a port on the throttle body. The purging vacuum is controlled by the purge control diaphragm valve and the purge control solenoid valve.

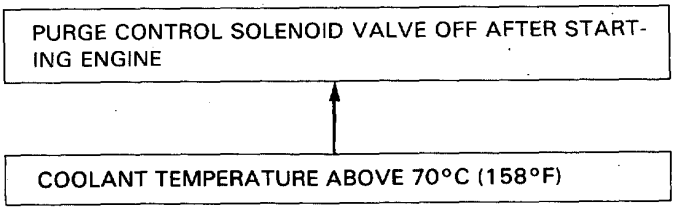

C. Fuel Tank Vapor Control System
When fuel vapor pressure in the fuel tank is higher than the set value of the two-way valve, the valve opens and regulates the flow of fuel vapor to the canister.

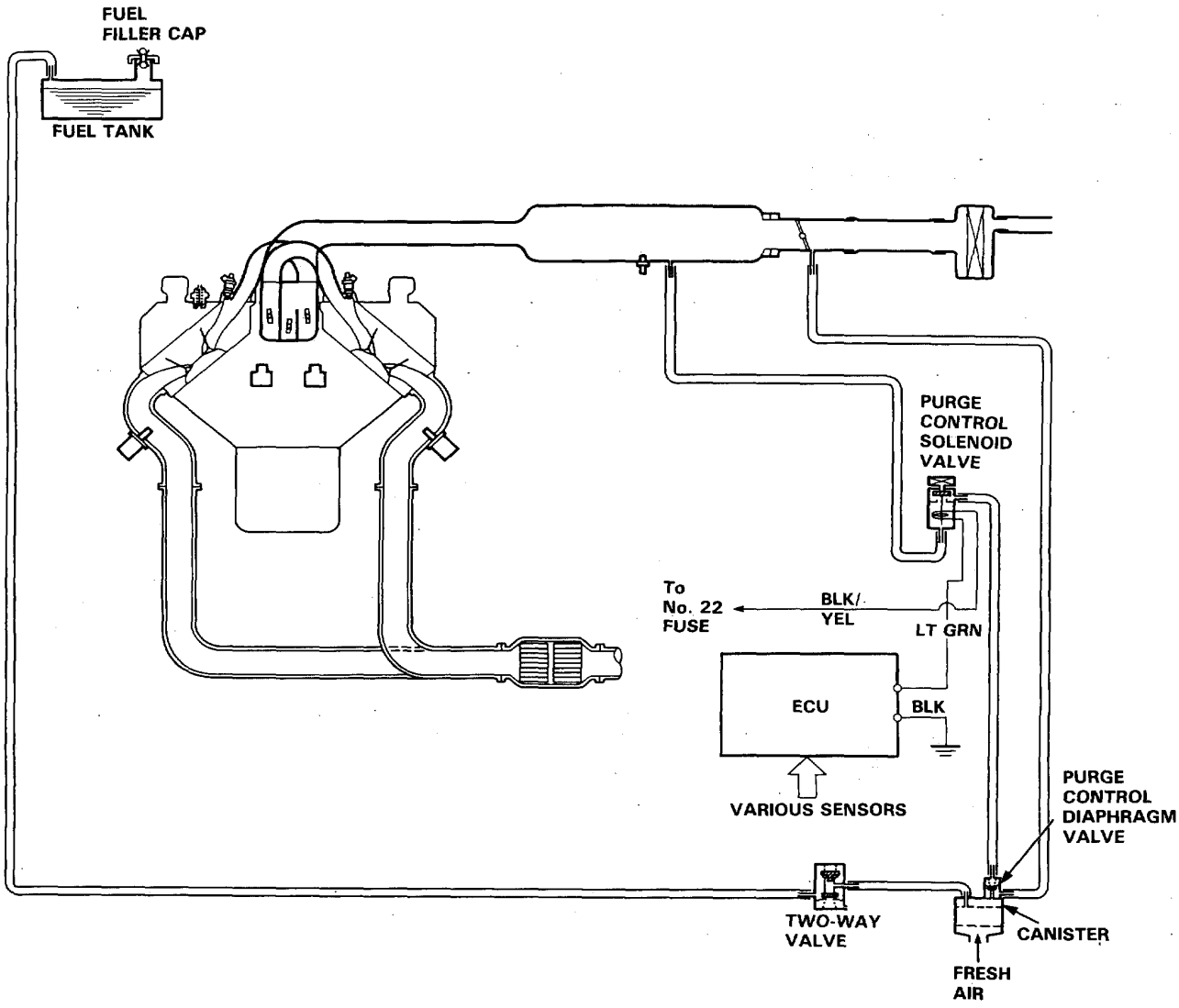
FUEL
FILLER CAP
FUEL TANK
PURGE
CONTROL
SOLENOID
VALVE
To
No. 22
FUSE
BLK/
YEL
LT GRN
ECU
BLK
VARIOUS SENSORS
PURGE
CONTROL
DIAPHRAGM
VALVE
TWO-WAY
VALVE
CANISTER
FRESH
AIR

(cont'd)

Evaporative Emission Controls (cont'd)

Troubleshooting Flowchart

Inspection of Evaporative Emission Controls

Disconnect vacuum hose from the purge control diaphragm valve (on the charcoal canister) and connect a vacuum gauge to the hose.

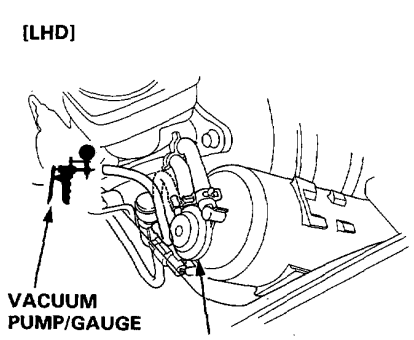

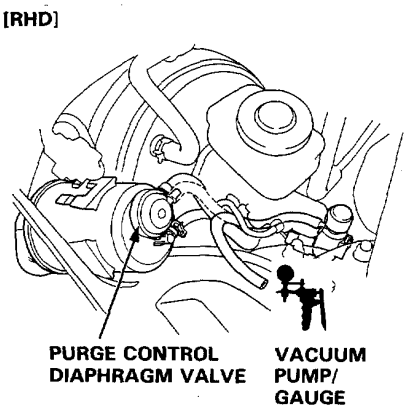

Start the engine and allow it to idle.
NOTE: Engine coolant temperature must be below 70°C (158°F).

Is there vacuum ?

YES → Disconnect the 2P connector.

NO

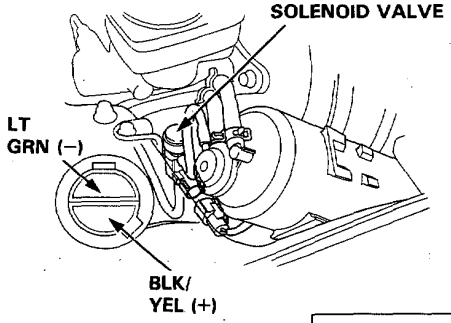

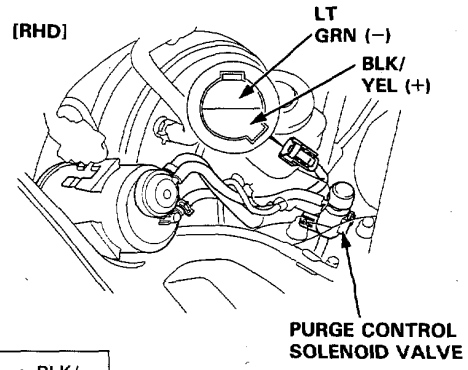

Measure voltage between BLK/ YEL (+) terminal and LT GRN (–) terminal.

Is there battery voltage ?

YES → **Inspect vacuum hose routing. If OK, replace purge control solenoid valve.**

NO

Measure voltage between BLK/ YEL (+) terminal and body ground.

(To page 11-145)

(To page 11-145)

(From page 11-144)

Warm up the engine to normal operating temperature (cooling fan comes on).

Hold engine at 2,000 min^{-1} (rpm).

Check for vacuum at #6 vacuum hose after starting the engine.

Is there manifold vacuum?

NO → Disconnect the 2P connector.

YES

Reconnect the hose.

Remove fuel filler cap.

(To page 11-146)

(From page 11-144)

Is there battery voltage ?

NO → **Repair open in BLK/YEL wire between No. 22 fuse and the 2P connector.**

YES → **Inspect LT GRN wire for an open to body ground between ECU (A20) and the connector.**
If wire is OK, substitute a known-good ECU and recheck. If symptom goes away, replace the original ECU.

Is there manifold vacuum?

NO → **Inspect vacuum hose routing.**
If OK, replace purge control solenoid valve.

YES → **Inspect for a short in LT GRN wire between ECU (A20) and the connector.**
If wire is OK, substitute a known-good ECU and recheck. If symptom goes away, replace the original ECU.

Evaporative Emission Controls (cont'd)

(From page 11-145)

Connect a vacuum gauge to canister purge air hose.

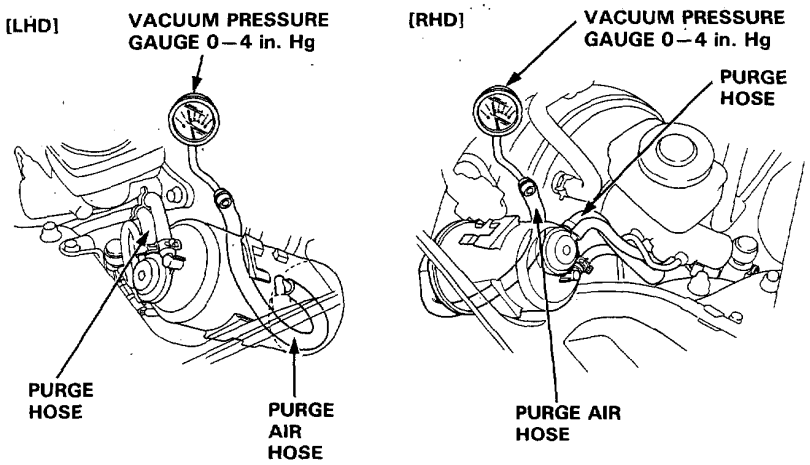

Start the engine and raise speed to 3,500 min^{-1} (rpm).

Does vacuum appear on gauge within 1 minute ?

NO → Connect a vacuum gauge to the canister purge hose and raise the engine speed to 3,500 min^{-1} (rpm).

YES → **See two-way valve test to complete. Evaporative emission controls are OK.**

Does vacuum appear on the gauge?

NO → **Inspect the purge hose and throttle body port for pinch or blockage.**

YES → **Replace the canister.**

Two-way Valve Test

1. Remove the fuel filler cap.

2. Remove vapor line from the fuel tank and connect to T-fitting from vacuum gauge and vacuum pump as shown.

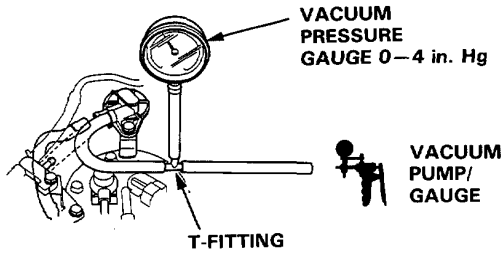

3. Apply vacuum slowly and continuously while watching the gauge.

   Vacuum should stabilize momentarily at 5 to 15 mmHg (0.2 to 0.6 in. Hg).
   - If vacuum stabilizes (valve opens) below 5 mmHg (0.2 in. Hg) or above 15 mmHg (0.6 in. Hg), install new valve and retest.

4. Move vacuum pump hose from vacuum to pressure fitting, and move vacuum gauge hose from vacuum to pressure side as shown.

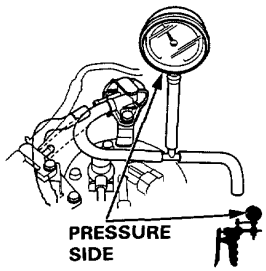

5. Slowly pressurize the vapor line while watching the gauge.

   Pressure should stabilize at 10 to 35 mmHg (0.4 to 1.4 in. Hg).
   - If pressure momentarily stabilizes (valve opens) at 10 to 35 mmHg (0.4 to 1.4 in. Hg), the valve is OK.
   - If pressure stabilizes below 10 mmHg (0.4 in. Hg) or above 35 mmHg (1.4 in. Hg), install a new valve and retest.

Transaxle

Clutch 12-1
Manual Transmission 13-1
Automatic Transmission 14-1
Differential 15-1
Driveshafts 16-1

Clutch

Special Tools 12-2
Illustrated Index 12-3
Pedal Free Play 12-4
Clutch Master Cylinder
  Removal 12-5
  Installation 12-5
Slave Cylinder
  Removal 12-6
  Installation 12-6
Pressure Plate, Clutch Disc
  Removal 12-7
Pressure Plate
  Inspection 12-7
Clutch Disc
  Inspection 12-8
Release Bearing
  Inspection 12-9
Flywheel, Flywheel Bearing
  Inspection 12-9
  Replacement 12-10
Pressure Plate, Clutch Disc
  Installation 12-11

Special Tools

Ref.No.	Tool Number	Description	Q'ty	Remarks
①	07924–PD20003	Ring Gear Holder	1	
②	07749–0010000	Outer Handle A	1	
③	07746–0010200	Outer Driver, 37 x 40 mm	1	
④	07936–3710100	Handle	1	
⑤	07MAF–PR80100	Clutch Alignment Shaft	1	

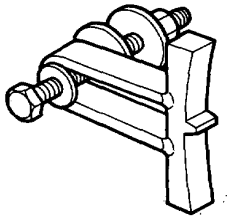

①

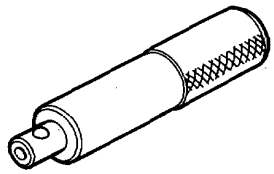

②

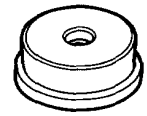

③

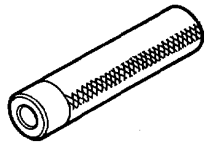

④

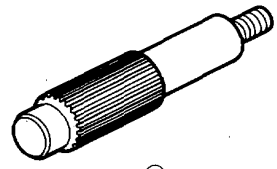

⑤

Illustrated Index

NOTE:
- Whenever the transmission is removed, clean and grease the release bearing sliding surface.
- If the parts marked * are removed, the clutch hydraulic system must be bled.

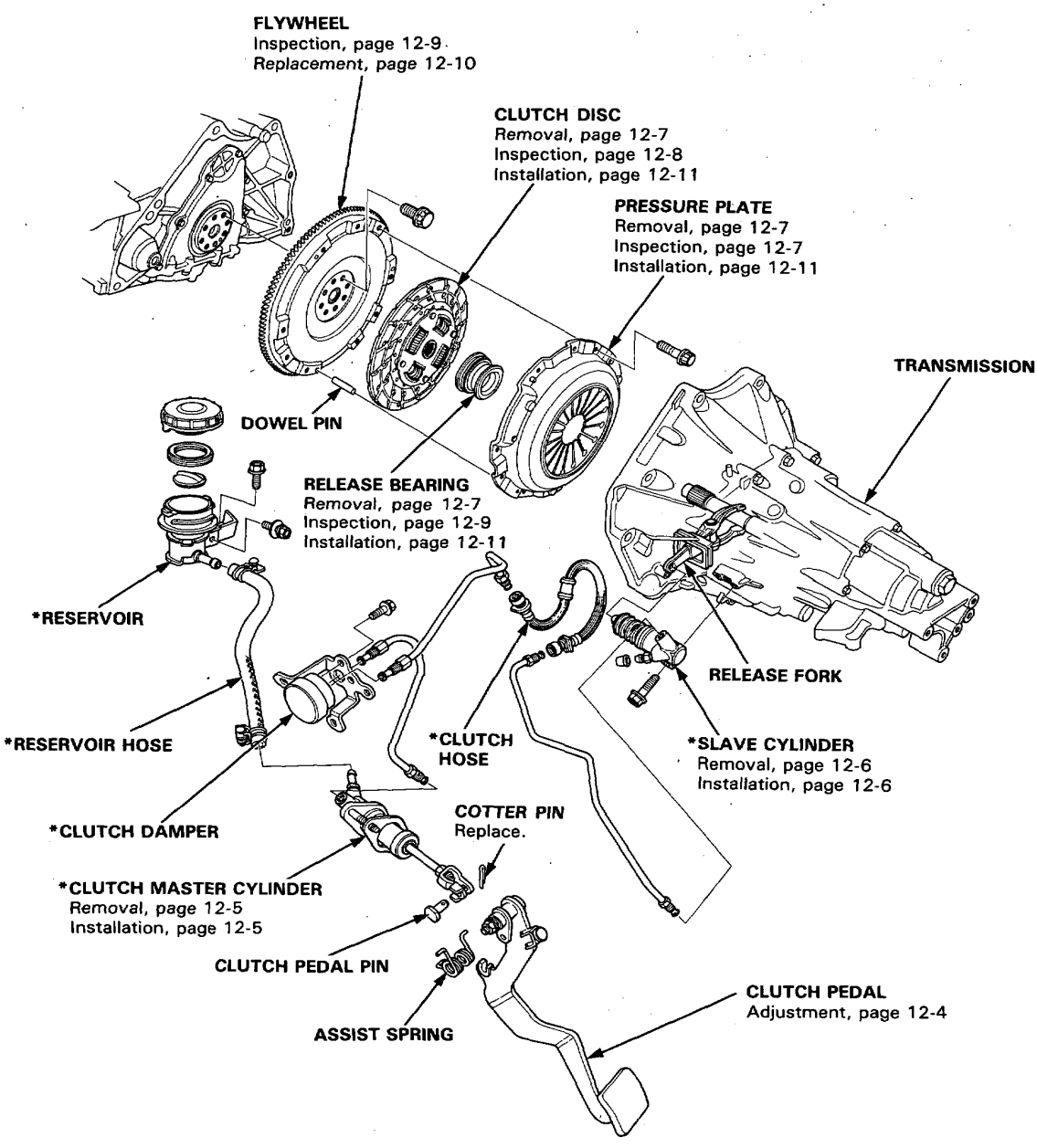

Pedal Free Play

NOTE:
- The clutch is self-adjusting to compensate for wear.
- Total clutch pedal free play is 9–15 mm (0.35–0.59 in).

CAUTION: If there is no clearance between the master cylinder piston and push rod, the release bearing is held against the diaphragm spring, which can result in clutch slippage or other clutch problems.

1. Loosen locknut A, and back off the pedal switch until it no longer touches the clutch pedal.
2. Loosen locknut C, and turn the push rod in or out to get the specified stroke and height at the clutch pedal.
3. Tighten locknut C.
4. Thread in the clutch pedal switch A in until it contacts the clutch pedal.
5. Turn the switch in 1/4–1/2 turn further.
6. Tighten locknut A.
7. Loosen locknut B and pedal switch B.
8. Measure the clearance between the floor board and clutch pedal with the clutch pedal fully depressed.
9. Release the clutch pedal 15–20 mm from the fully depressed position and hold it there.
   Adjust the position of pedal switch B so that the engine will start with the clutch pedal in this position.
10. Thread in pedal switch B 1/4–1/2 turn further.
11. Tighten locknut B.

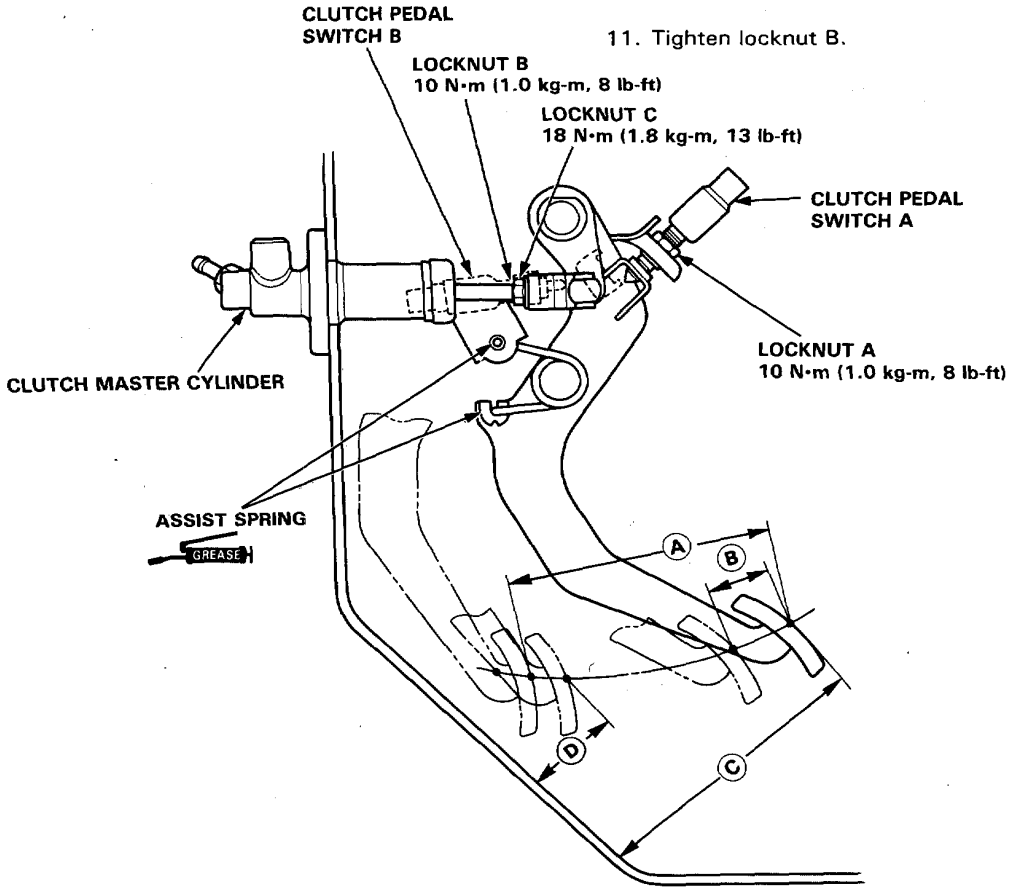

Ⓐ STROKE AT PEDAL: 142–148 mm (5.59–5.82 in)
Ⓑ PEDAL PLAY: 1.0–7.0 mm (0.04–0.28 in)
Ⓒ CLUTCH PEDAL HEIGHT: 199.5 mm (7.85 in)
Ⓓ CLUTCH PEDAL DISENGAGEMENT HEIGHT: 90 mm (3.54 in) minimum to the floor.

Clutch Master Cylinder

Removal

1. Pry out the cotter pin, and pull the pedal pin out of the yoke.

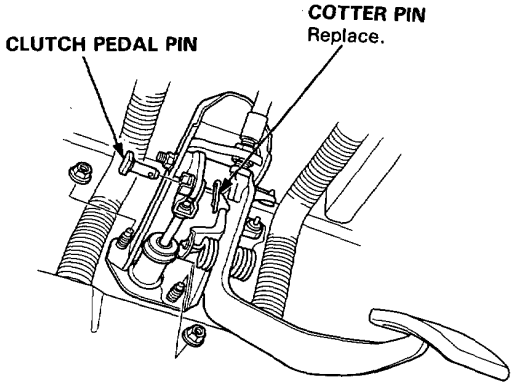

2. Remove the nuts and bolts attaching the master cylinder and remove the cylinder from the engine compartment.

3. Remove the clutch pipe and reservoir hose from the master cylinder.

CAUTION:
- **Avoid spilling brake fluid on painted surface as it may damage the finish.**
- **Plug the end of the clutch pipe and reservoir hose with a shop towel to prevent fluid from flowing out of the clutch pipe and reservoir hose after disconnecting.**

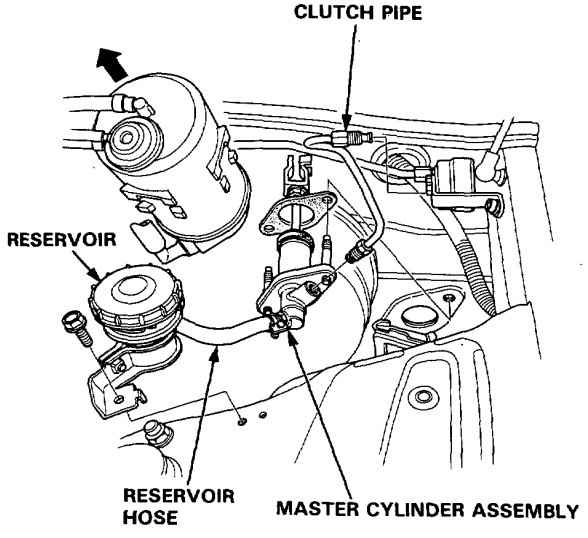

Installation

1. Install the clutch master cylinder in the reverse order of removal.

   NOTE: Bleed the clutch hydraulic system (page 12-6).

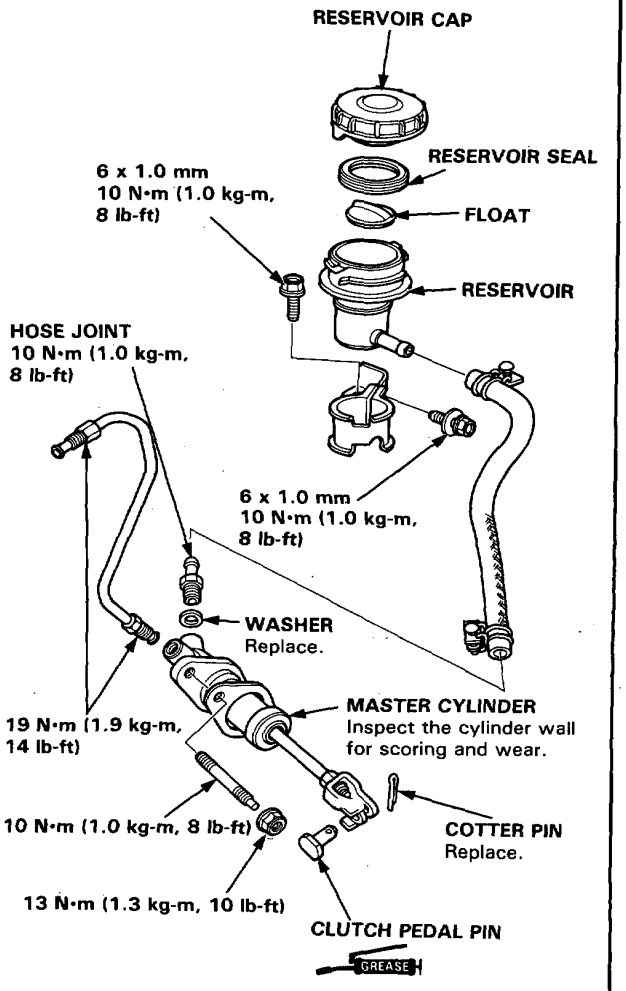

Slave Cylinder

Removal

1. Remove the release fork cover.
2. Disconnect the clutch pipe from the slave cylinder.

   CAUTION:
   - **Avoid spilling brake fluid on the painted surfaces, as it may damage the finish.**
   - **Plug the end of the clutch pipe with a shop towel to prevent brake fluid from coming out.**

3. Remove the slave cylinder from the clutch housing.

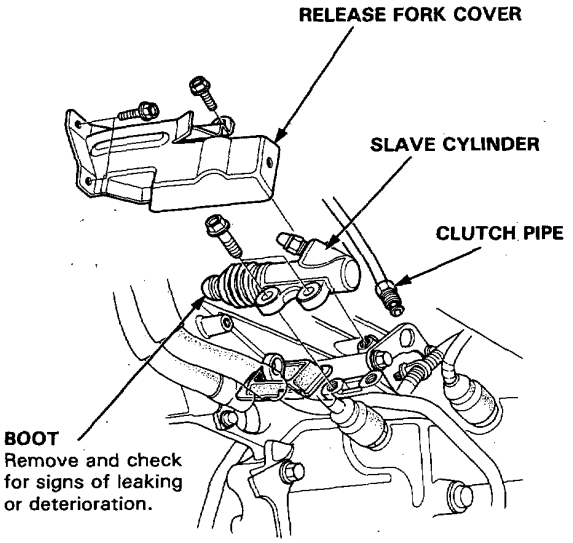

Installation

1. Install the slave cylinder assembly on the clutch housing.

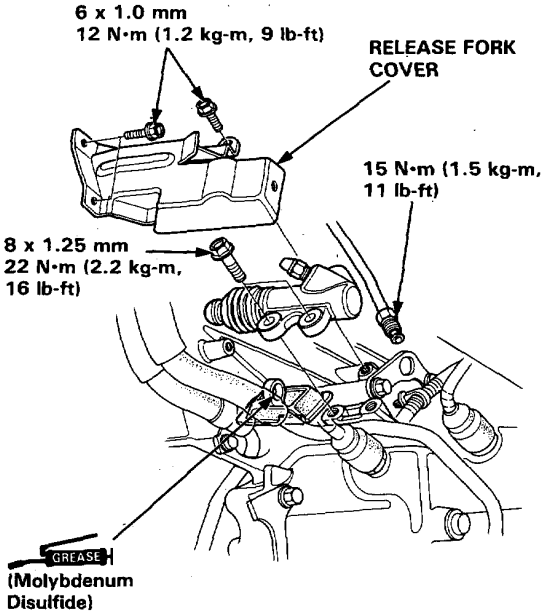

2. Install the release fork cover.
3. Bleed the clutch hydraulic system:
   - Attach a hose to the bleeder screw and suspend the hose in a container of brake fluid.
   - Make sure there is an adequate supply of fluid at the master cylinder, then slowly pump the clutch pedal until no more bubbles appear at the bleeder hose.
   - Re-fill the master cylinder fluid when done.
   - Use only DOT 3 or 4 brake fluid.

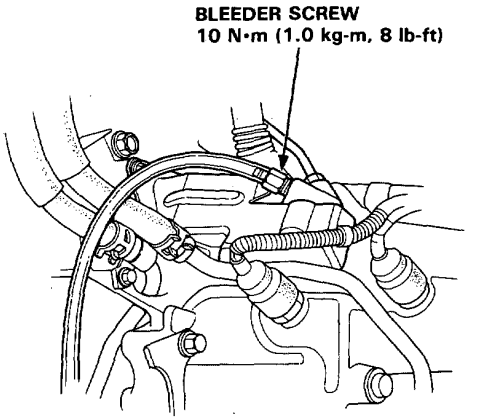

Pressure Plate, Clutch Disc

Removal

1. Install the Ring Gear Holder as shown.

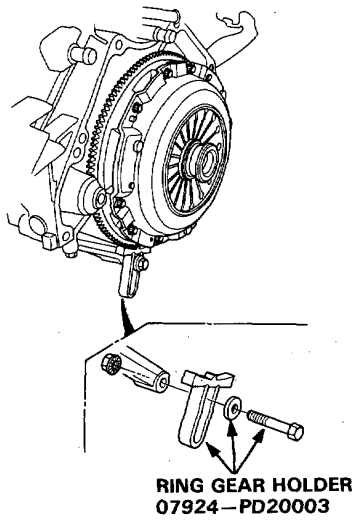

2. To prevent warping, unscrew the pressure plate mounting bolts two turns at a time in a crisscross pattern, then remove the pressure plate and the clutch disc.

3. Remove the release bearing from the pressure plate.

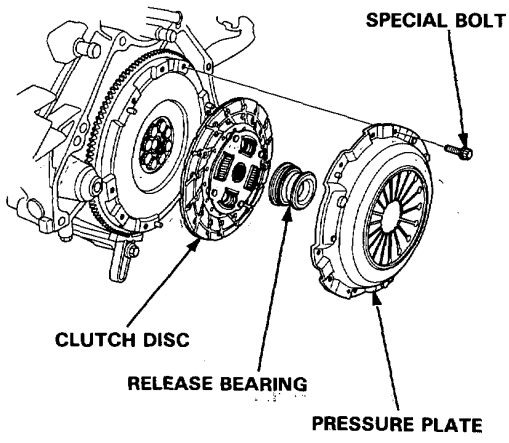

Pressure Plate

Inspection

1. Inspect the pressure plate surface for wear, cracks, or burning.

2. Inspect the fingers of the diaphragm spring for wear at the release bearing contact area.

3. Inspect for warpage using a straight edge and feeler gauge. Measure across the pressure plate.

   Standard (New): 0.03 mm (0.0012 in) min.
   Service Limit: 0.15 mm (0.0059 in)

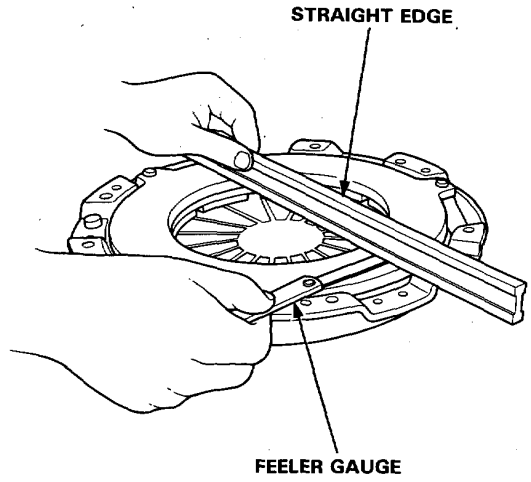

Clutch Disc

Inspection

1. Inspect the lining of the clutch disc for signs of slipping or oil. Replace it if it is burned black or oil soaked.

2. Measure the clutch disc thickness.

   Clutch Disc Thickness:
   Standard (New): 9.6–10.3 mm (0.38–0.41 in)
   Service Limit: 6.8 mm (0.26 in)

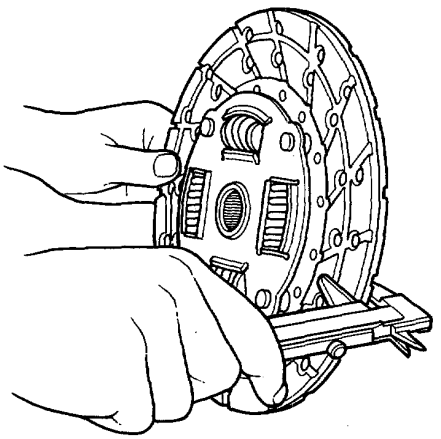

3. Measure the depth from the lining surface to the rivets, on both sides.

   Rivet Depth:
   Standard (New): 1.5 mm (0.059 in) min.
   Service Limit: 0.5 mm (0.019 in)

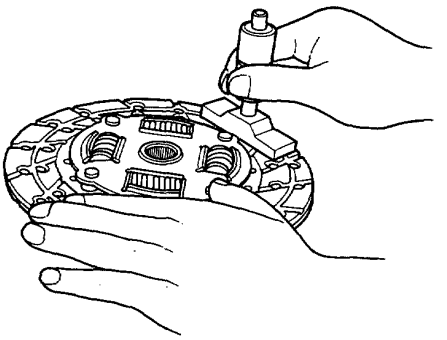

Release Bearing

Inspection

1. Check the release bearing for excessive play by spinning it by hand.

   CAUTION: Do not wash it in solvent.

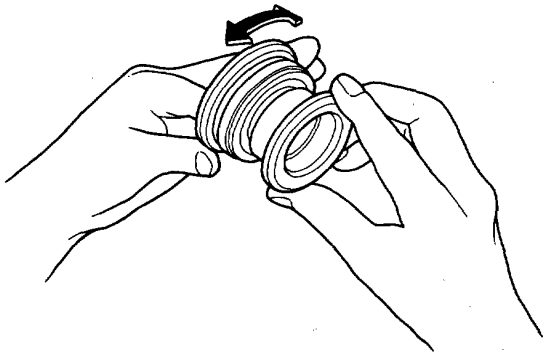

2. Replace the release bearing with a new one if there is excessive play.

Flywheel, Flywheel Bearing

Inspection

1. Inspect the ring gear teeth for wear or damage.

2. Inspect the clutch disc mating surface on the flywheel for wear, cracks or burning.

3. Measure the flywheel runout using a dial indicator through at least two full turns. Push against the flywheel each time you turn it to take up the crankshaft thrust washer clearance.

   NOTE: The runout can be measured with engine installed.

   Standard (New): 0.05 mm (0.0020 in) max.
   Service Limit: 0.15 mm (0.0059 in)

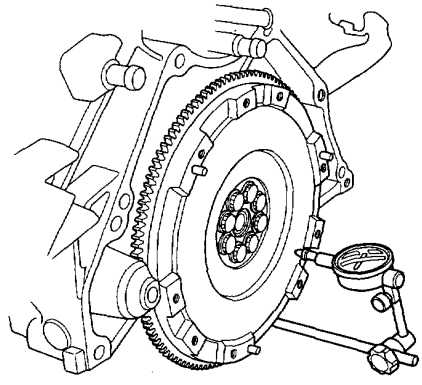

4. Turn the inner race of the flywheel bearing with your finger. The bearing should turn smoothly and quietly. Check that the bearing outer race fits tightly in the flywheel. Replace the bearing if the race does not turn smoothly, quietly, or fit tight in the flywheel.

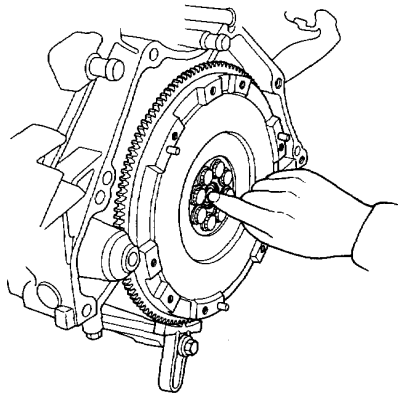

Flywheel, Flywheel Bearing

Replacement

1. Remove the flywheel mounting bolts and the flywheel.

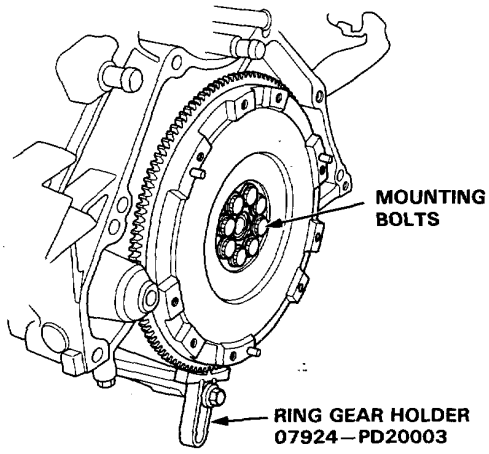

2. Remove the bearing from the flywheel.

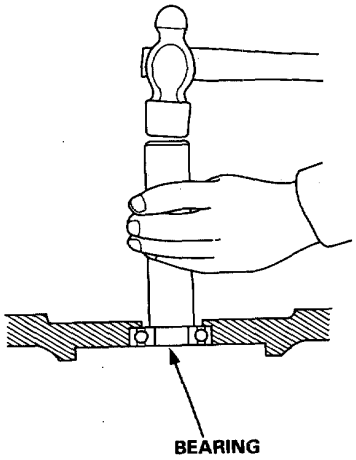

3. Drive in the new bearing into the flywheel using the special tools.

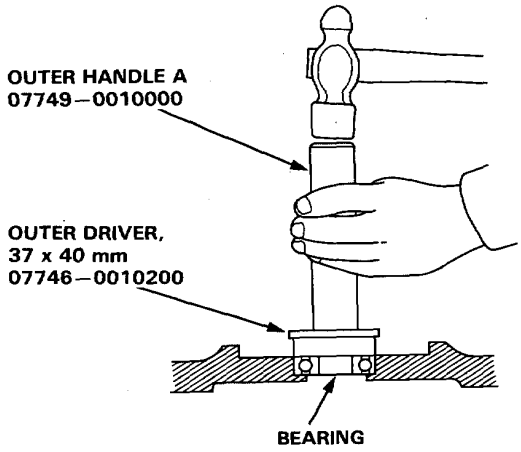

4. Align the hole in the flywheel with the crankshaft dowel pin and install the flywheel. Install the bolts finger tight.

5. Install the special tool, then torque the flywheel bolts in a crisscross pattern, as shown.

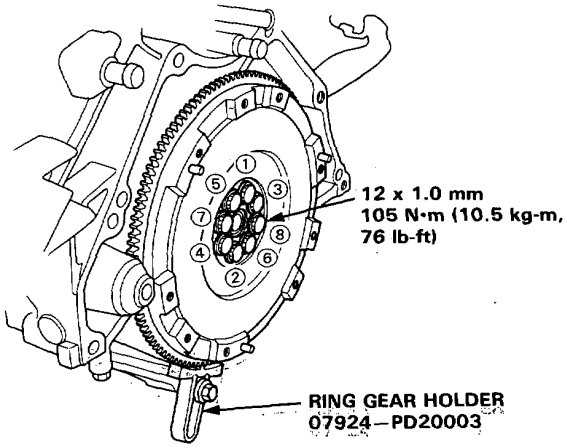

Installation

1. Install the ring gear holder.
2. Install the clutch disc.
3. Install the clutch alignment shaft.

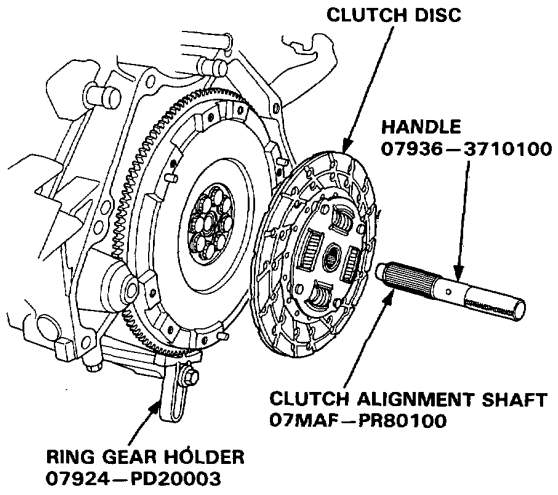

4. Install the release bearing on the pressure plate.
5. Install the pressure plate.

   NOTE: After installed, make sure the release bearing does not come off.

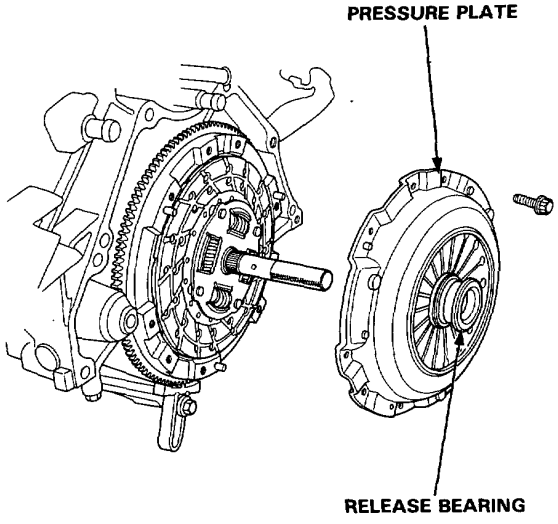

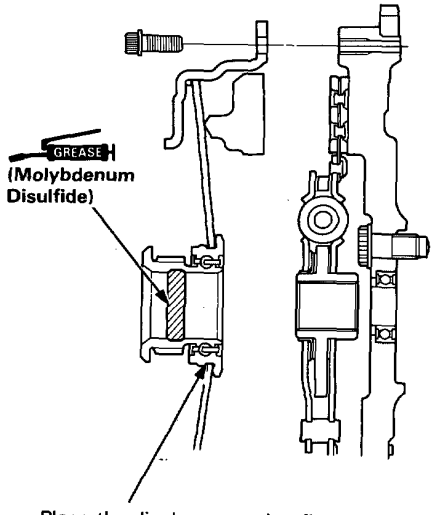

Place the diaphragm spring fingers in the groove of the release bearing.

6. Torque the bolts in a crisscross pattern as shown. Tighten them two turns at a time to prevent warping the diaphragm spring.

   NOTE: After installed, make sure the release bearing does not come off.

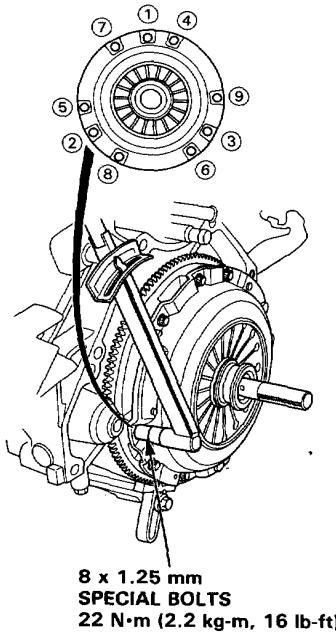

7. Remove the alignment tool and ring gear holder.

Manual Transmission

Special Tools 13-2
Maintenance 13-3
Back-up Light Switch, Neutral Switch
  Replacement 13-3
Transmission Assembly
  Removal 13-4
Illustrated Index 13-8
Transmission Cover
  Removal 13-10
5th Gear
  Removal 13-11
Transmission Housing
  Removal 13-12
  Bearing Removal 13-13
Mainshaft, Countershaft, Reverse Gear Shaft
  Disassembly 13-14
Mainshaft, Countershaft
  Inspection 13-15
Reverse Shift Holder, Shift Fork
  Clearance Inspection 13-16
Change Holder, Shift Fork
  Clearance Inspection 13-17
Synchro Sleeve, Synchro Hub
  Inspection 13-18
Synchro Ring, Gear
  Inspection 13-19
Oil Pump
  Clearance Inspection 13-20
Mainshaft Bearing (Clutch Housing)
  Replacement 13-21
Countershaft Bearing (Clutch Housing)
  Replacement 13-22
Mainshaft Oil Seal (Clutch Housing)
  Replacement 13-23
Mainshaft/Countershaft
  Reassembly 13-24
  Clearance Inspection 13-25
Secondary Gear Assembly
  Index 13-28
Extension Shaft
  Removal/Inspection 13-29
Oil Seal (Secondary Gear)
  Replacement 13-29
Oil Seal
  Removal 13-30
Tapered Roller Bearing
  Replacement 13-31
Bearing Preload
  Adjustment 13-32
Oil Seal
  Installation 13-34
Mainshaft, Countershaft, Reverse Gear Shaft
  Installation 13-35
Transmission Housing
  Reassembly 13-36
  Bearing Installation 13-37
5th Gear
  Installation 13-38
Transmission Cover
  Installation 13-39
Transmission Assembly
  Installation 13-40
Gearshift Mechanism
  Overhaul 13-43

Special Tools

Ref. No.	Tool Number	Description	Qty	Remarks
①	07LAC–PW50100	Extension Shaft Remover	1	
②	07LAB–PW50101	Mainshaft Holder	1	
③	07744–0010400	Pin Driver, 5.0 mm	1	
④	07749–0010000	Outer Handle A	1	
⑤	07GAD–PG40100	Oil Seal Driver	1	
⑥	07746–0010600	Outer Driver, 72 x 75 mm	1	
⑦	07JAC–PH80000	Adjustable Bearing Remover Set	1	
⑦-1	07JAC–PH80100	Bearing Remover Attachment	(1)	Component Tool
⑦-2	07JAC–PH80200	Remover Handle Assembly	(1)	Component Tool
⑦-3	07741–0010201	Remover Weight	(1)	Component Tool
⑧	07746–0010400	Outer Driver, 52 x 55 mm	1	
⑨	07746–0010500	Outer Driver, 62 x 68 mm	1	
⑩	07746–0010300	Outer Driver, 42 x 47 mm	1	
⑪	07KAF–PS30200	Bearing Race Remover	1	
⑫	07MAD–PR90100	Attachment, 45 x 55 mm	1	
⑬	07LAD–SM40100	Oil Seal Driver	1	
⑭	07GAD–SD40101	Attachment, 78 x 90 mm	1	
⑮	07MAF–PY40100	Extension Shaft Installer	1	

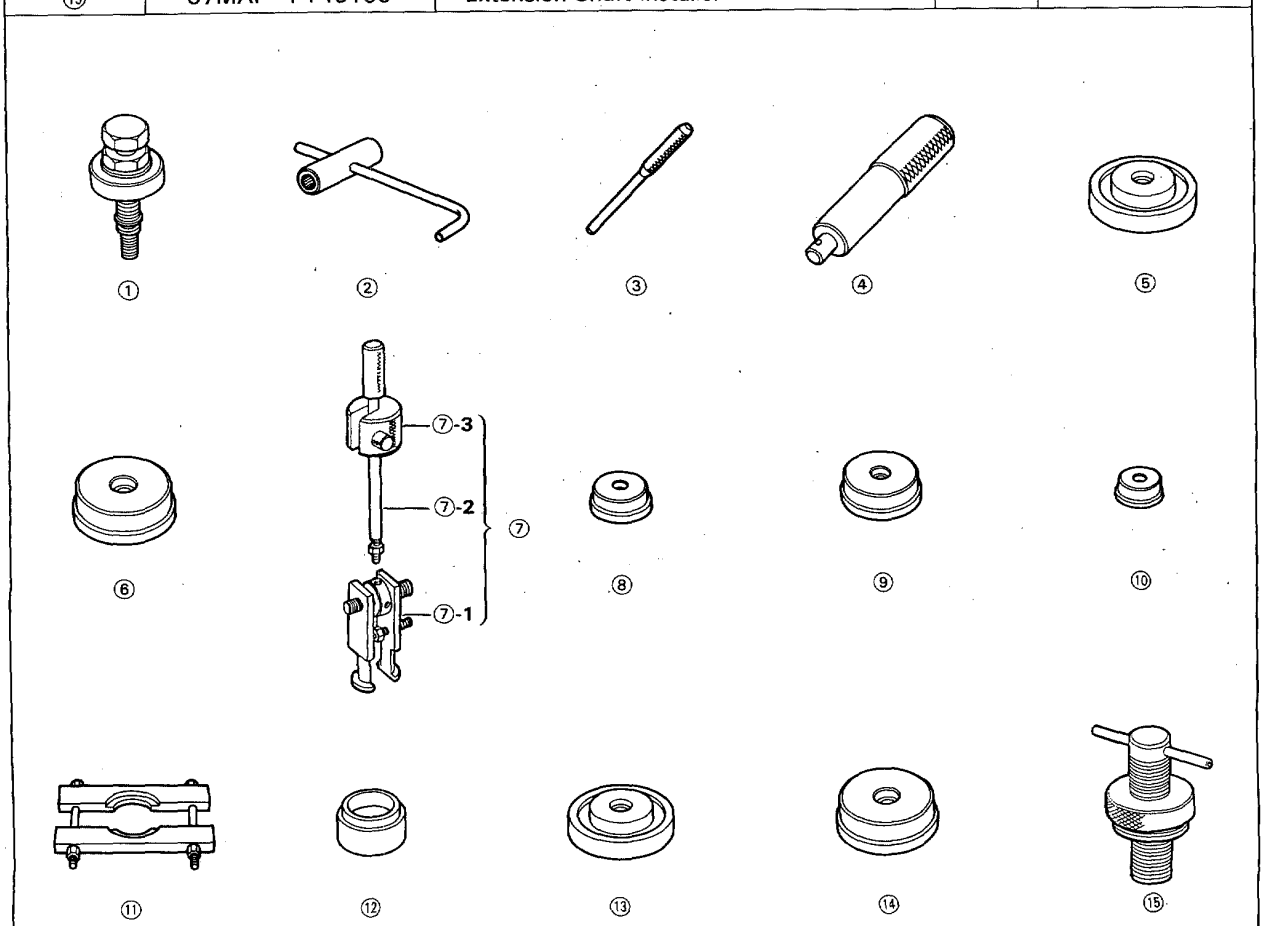

Transmission Oil

NOTE: Check the oil at operating temperature, engine OFF, and the car on level ground.

1. Remove the oil filler plug, then check the level and condition of the oil.

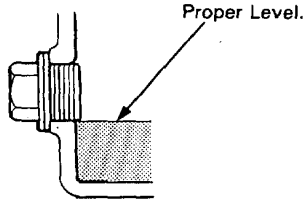

2. The oil level must be up to the fill hole. If it is below the hole, add oil until it runs out, then reinstall the oil filler plug.

3. If the oil is dirty, remove drain plug and drain transmission.

4. Reinstall the drain plug with a new washer, and refill to proper level.

   NOTE: The drain plug washer should be replaced at every oil change.

5. Reinstall the oil filler plug with a new washer.

   Oil Capacity
   2.3 ℓ (2.4 U.S. qt.) after drain.
   2.6 ℓ (2.7 U.S. qt.) after overhaul.

   Use only SAE10W—30 or 10W—40, SF or SG grade.

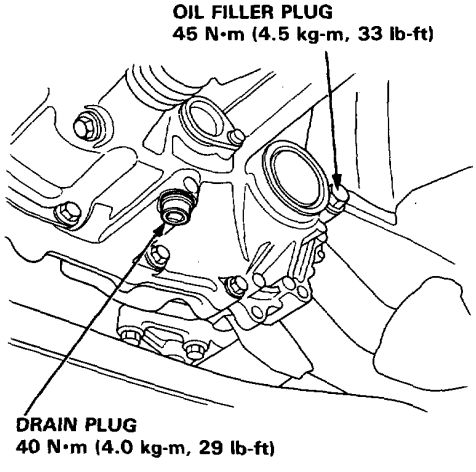

Back-up Light Switch, Neutral Switch

Replacement

NOTE: To check the switch, see section 23.

1. Disconnect the connector, then remove the switch connector from the connector clamp.

2. Remove the switch.

3. Apply liquid gasket (P/N08718—0001) to the switch threads, then install the switch.

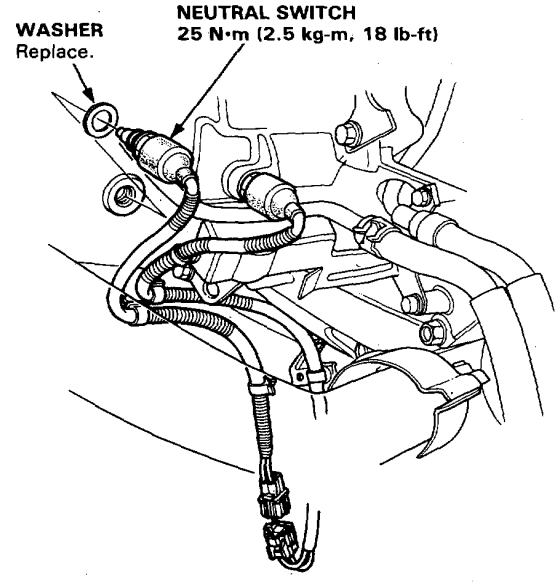

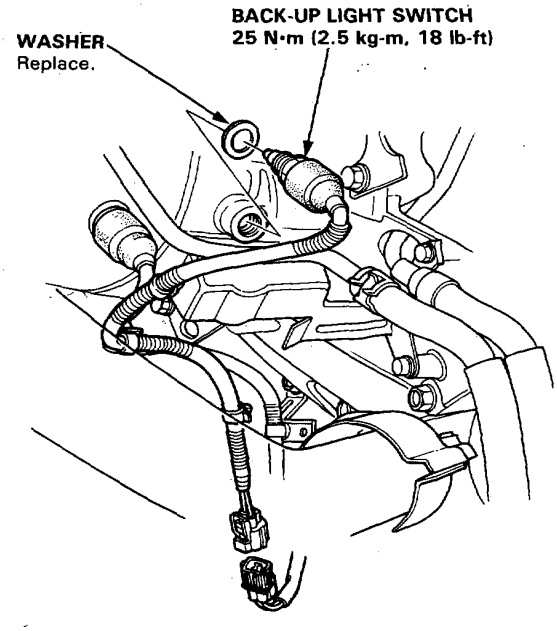

Transmission Assembly

Removal

⚠WARNING

- **Make sure jacks and safety stands are placed properly, and hoist brackets are attached to correct positions on the engine.**
- **Apply parking brake and block rear wheels, so car will not roll off stands and fall on you while working under it.**

CAUTION: Use fender covers to avoid damaging painted surfaces.

NOTE: The L and LS model radios have a coded theft protection circuit. If servicing to the car requires any of the following, be sure you get the costomer's code number before you begin work:
— disconnecting the battery.
— removal of No. 56 fuse.
— removal of the radio.
After service, reconnect power to the radio and turn it on.
The word "CODE" will be displayed. Enter the customer's 5-digit code to restore radio operation.

1. Disconnect the battery negative (−) and positive (+) cables from the battery.
2. Remove the strut bar.
3. Drain the transmission oil.
   Reinstall the drain plug with a new washer.
4. Remove the control box.

   CAUTION: Do not remove the vacuum tubes from the control box.
5. Disconnect the switch connectors.
6. Remove the transmission housing bolts.
7. Remove the clutch hose bracket from the rear engine hanger.

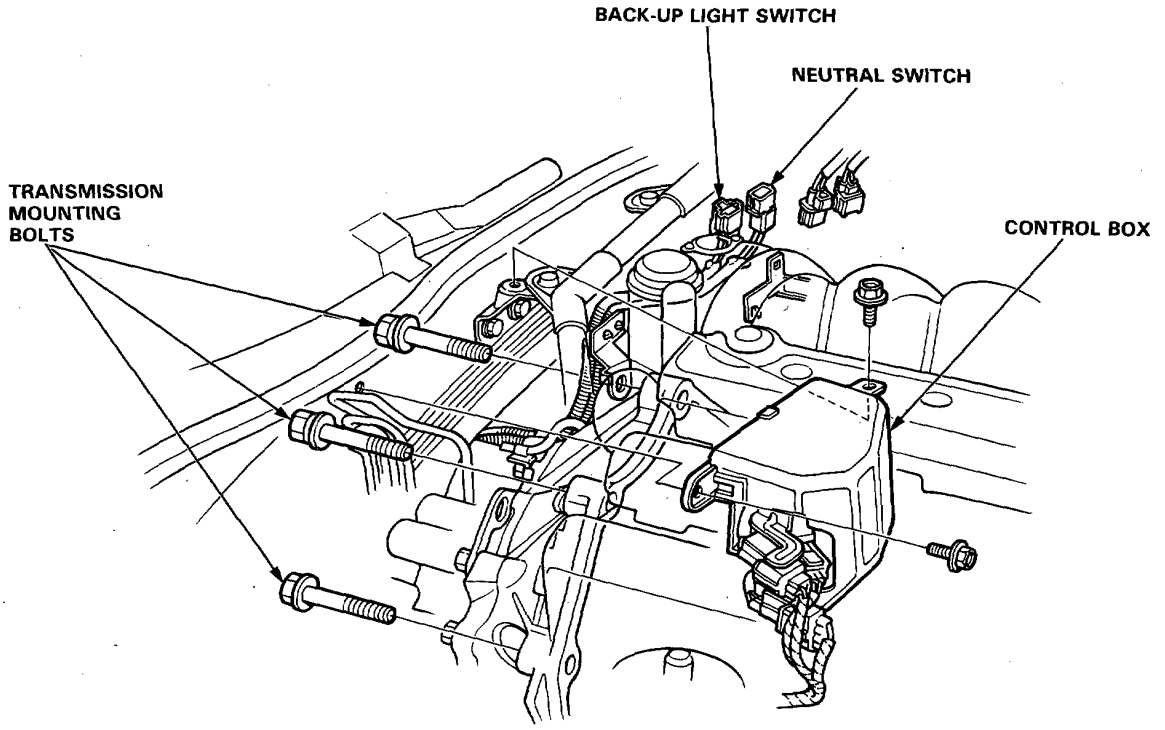

8. Remove the exhaust pipe B and A.

9. Remove the heat shield and bracket.

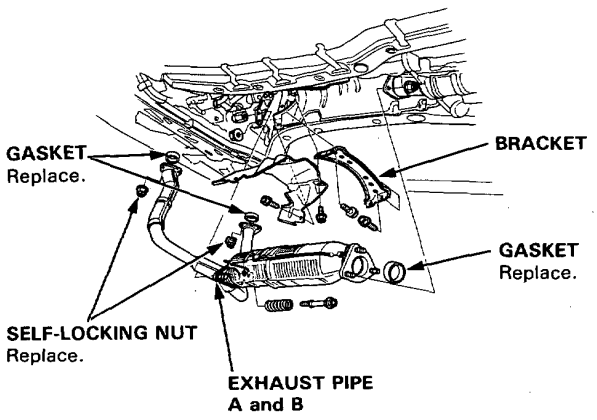

10. Remove the shift rod and torque rod.

11. Disconnect the cooler hoses from the oil pump pipes.

    NOTE: Check for any signs of leakage at the oil pump pipes.

12. Remove the release fork cover and slave cylinder.

    NOTE:
    - Do not operate the clutch pedal once the slave cylinder has been removed.
    - Take care not to bend the pipe.

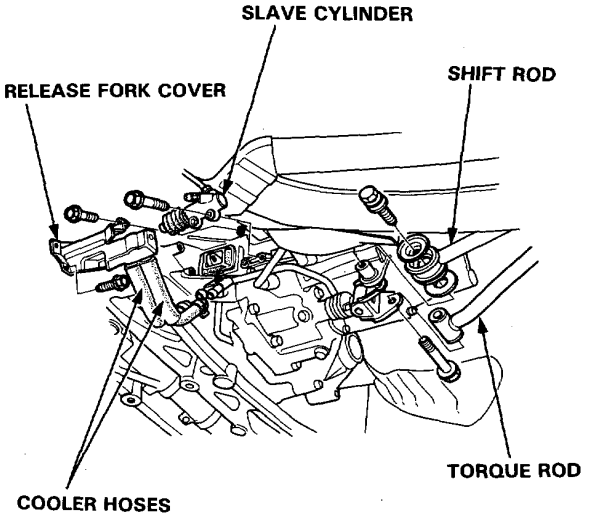

(cont'd)

Removal (cont'd)

13. Remove the lower plate.

    NOTE: Reinstall the steering gearbox mounting bolts.

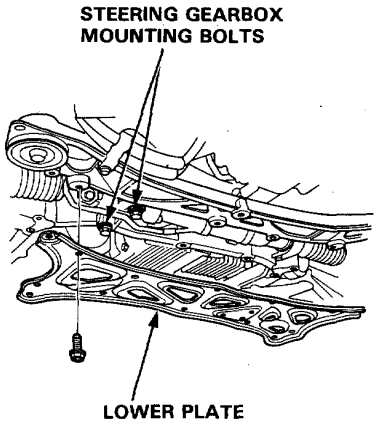

14. Remove the exhaust pipe stay.

15. Remove the transmission bracket and transmission mount.

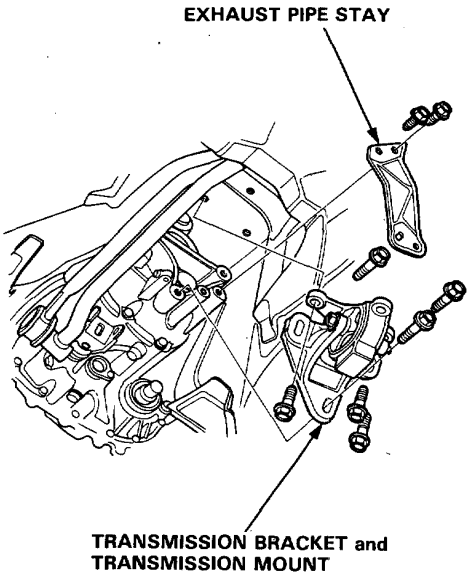

16. Remove the secondary cover and 36 mm sealing bolt.

    NOTE: Shift the transmission to low gear to lock the secondary gear.

17. Place a jack under the transmission.

18. Remove the transmission mounts.

19. Remove the release fork from the clutch release hanger, then hang the release fork on the clutch housing.

20. Remove the transmission housing mounting bolts.

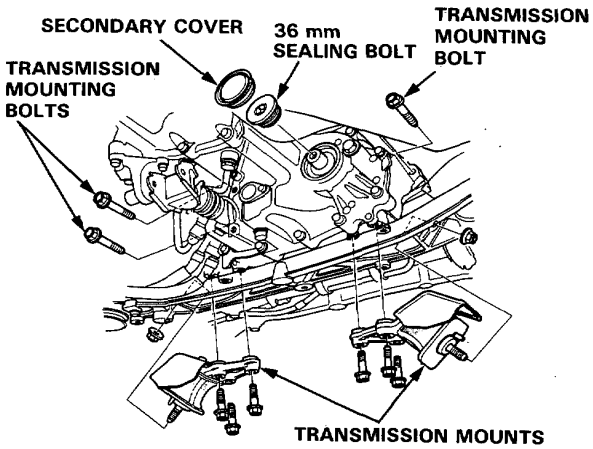

21. Disconnect the extension shaft from the differential using the special tool.

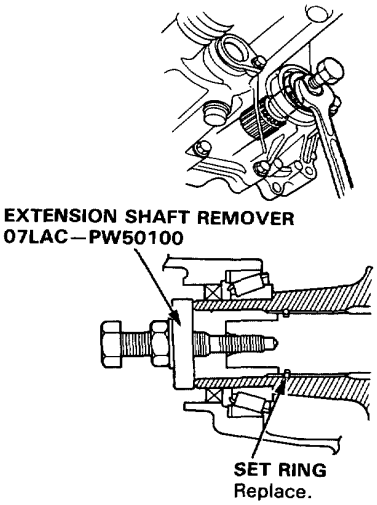

23. Remove the engine stiffener.

24. Remove the clutch cover.

25. Remove the transmission mounting bolts and 26 mm shim.

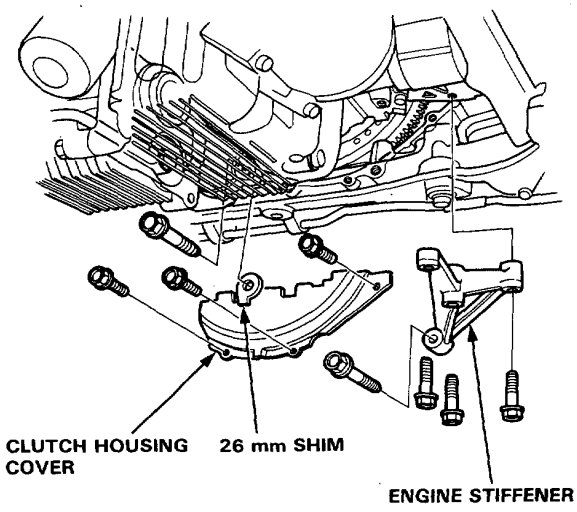

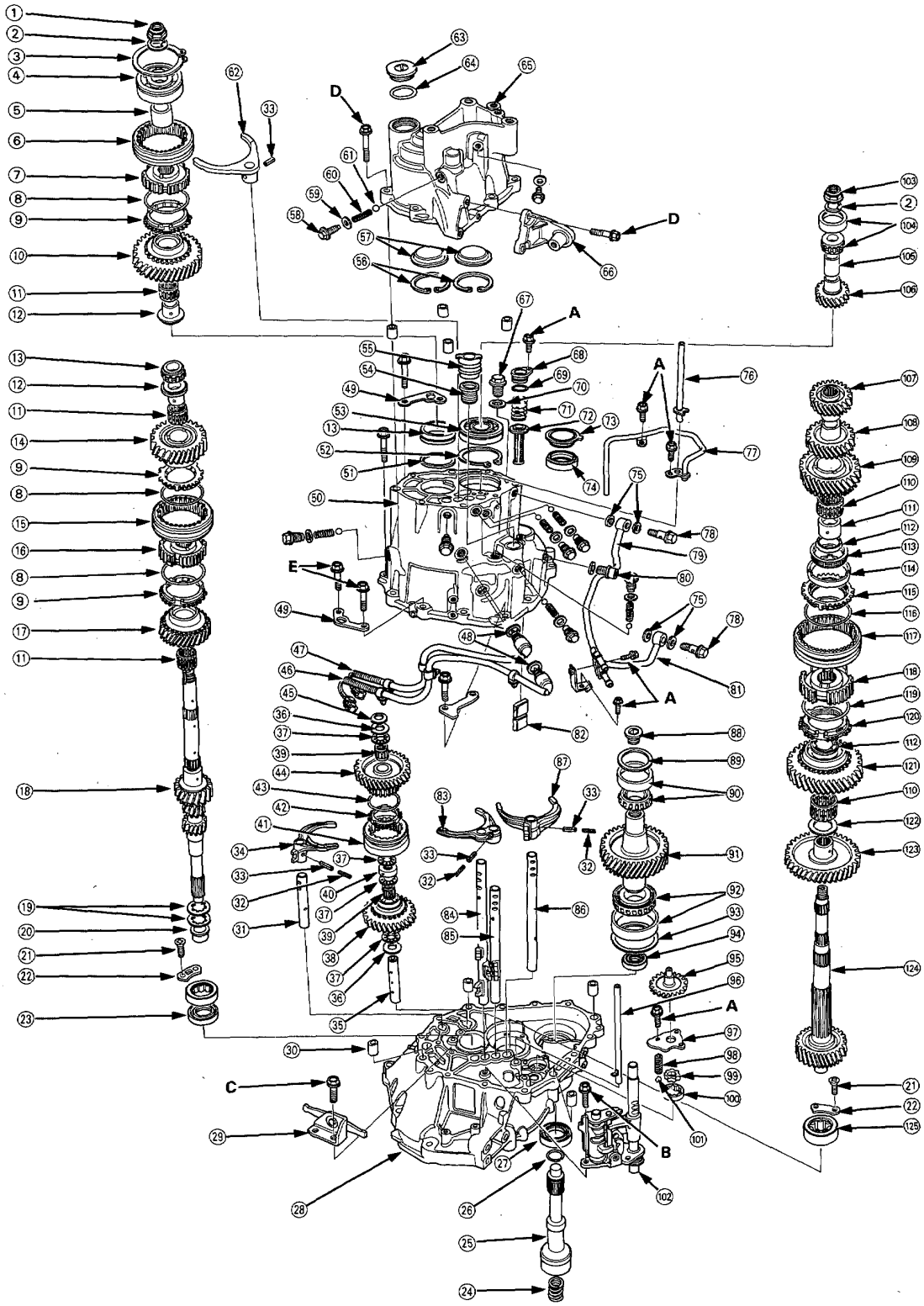
A
B
C
D
E

NOTE: Always clean the magnet ⑫ whenever the transmission housing is disassembled.

Torque Value	Bolt Size
A—12 N•m (1.2 kg-m, 9 lb-ft)	6 x 1.0 mm
B—15 N•m (1.5 kg-m, 11 lb-ft)	6 x 1.0 mm
C—26 N•m (2.6 kg-m, 19 lb-ft)	8 x 1.25 mm
D—28 N•m (2.8 kg-m, 21 lb-ft)	8 x 1.25 mm
E—45 N•m (4.5 kg-m, 33 lb-ft)	10 x 1.25 mm

① LOCKNUT Replace.
160 → 0 → 160 N•m
(16 → 0 → 16 kg-m,
116 → 0 → 116 lb-ft)
② SPRING WASHER
③ SNAP RING
④ BALL BEARING
⑤ 28 x 37 x 34 mm DISTANCE COLLAR
⑥ 5TH SYNCHRO SLEEVE
⑦ 5TH SYNCHRO HUB
⑧ SYNCHRO SPRING
⑨ SYNCHRO RING
⑩ 5TH GEAR
⑪ 38 x 44 x 29.5 mm NEEDLE BEARING
⑫ 31 x 38 x 34 mm DISTANCE COLLAR
⑬ NEEDLE BEARING
⑭ 4TH GEAR
⑮ 3RD/4TH SYNCHRO SLEEVE
⑯ 3RD/4TH SYNCHRO HUB
⑰ 3RD GEAR
⑱ MAINSHAFT
⑲ MAINSHAFT WASHER
⑳ 28 x 53 x 19 mm NEEDLE BEARING
㉑ FLAT SCREW Replace.
㉒ NEEDLE SET PLATE
㉓ 28 x 43 x 7 mm OIL SEAL Replace.
㉔ SECONDARY SPRING
㉕ EXTENSION SHAFT
㉖ SET RING Replace.
㉗ 55 x 75 x 11 mm OIL SEAL Replace.
㉘ CLUTCH HOUSING
㉙ REVERSE SHIFT HOLDER
㉚ 14 x 20 mm DOWEL PIN
㉛ REVERSE SHIFT FORK SHAFT
㉜ SPRING PIN 3 x 22 mm Replace.
㉝ SPRING PIN 5 X 22 mm Replace.
㉞ REVERSE SHIFT FORK
㉟ REVERSE GEAR SHAFT
㊱ 20 x 36 x 2 mm THRUST WASHER
㊲ 20 x 37 x 2.5 mm NEEDLE BEARING
㊳ REVERSE DRIVE GEAR
㊴ 20 x 25 x 26.5 mm NEEDLE BEARING
㊵ 20 x 36 x 9.5 mm DISTANCE COLLAR
㊶ REVERSE SYNCHRO SLEEVE
㊷ SYNCHRO RING
㊸ SYNCHRO SPRING
㊹ REVERSE SYNCHRO HUB
㊺ SPRING WASHER
㊻ BACK-UP LIGHT SWITCH
25 N•m (2.5 kg-m, 18 lb-ft)
㊼ NEUTRAL SWITCH
25 N•m (2.5 kg-m, 18 lb-ft)
㊽ WASHER Replace.
㊾ TRANSMISSION HANGER
㊿ TRANSMISSION HOUSING
(51) 62 mm SNAP RING
(52) 78 mm SNAP RING
(53) 32 x 78 x 20 mm BALL BEARING
(54) 16 x 27 x 16 mm OIL SEAL Replace.
(55) SHIFT ROD BOOT
(56) SNAP RING
(57) OIL GUIDE PLATE
(58) SEALING BOLT
(59) WASHER Replace.
(60) SPRING
(61) STEEL BALL
(62) 5TH SHIFT FORK
(63) SEALING BOLT
25 N•m (2.5 kg-m, 18 lb-ft)
(64) 35.5 x 3 mm O-RING Replace.
(65) TRANSMISSION COVER
(66) EXTENSION STAY
(67) OIL FILLER PLUG
45 N•m (4.5 kg-m, 33 lb-ft)
(68) STRAINER COVER
(69) 29.7 X 2.4 mm O-RING Replace.
(70) WASHER Replace.
(71) STRAINER SET SPRING
(72) OIL PUMP STRAINER
(73) SECONDARY COVER
(74) 45 x 61 x 8 mm OIL SEAL Replace.
(75) WASHER Replace.
(76) OIL GUIDE PIPE
(77) REVERSE PIPE
(78) JOINT BOLT
29 N•m (2.9 kg-m, 21 lb-ft)
(79) OIL PUMP PIPE B
(80) DRAIN PLUG
40 N•m (4.0 kg-m, 29 lb-ft)
(81) OIL PUMP PIPE A
(82) MAGNET
(83) 3RD/4TH SHIFT FORK
(84) 5TH/REVERSE SHIFT FORK SHAFT
(85) 3RD/4TH SHIFT FORK SHAFT
(86) 1ST/2ND SHIFT FORK SHAFT
(87) 1ST/2ND SHIFT FORK
(88) 36 mm SEALING BOLT
80 N•m (8.0 kg-m, 58 lb-ft)
(89) 75 mm THRUST SHIM
Selection, page 13-32
(90) TAPERED ROLLER BEARING
(91) SECONDARY GEAR
(92) TAPERED ROLLER BEARING
(93) 90 mm THRUST WASHER
(94) 37.5 x 47 x 7 mm OIL SEAL Replace.
(95) OIL PUMP SHAFT
(96) OIL GUIDE PIPE C
(97) OIL PUMP PLATE
(98) RELIEF VALVE SPRING
(99) OIL PUMP INNER
(100) OIL PUMP OUTER
(101) STEEL BALL
(102) CHANGE HOLDER
(103) LOCKNUT Replace.
160 → 0 → 160 N•m
(16 → 0 → 16 kg-m,
116 → 0 → 116 lb-ft)
(104) 28 x 62 x 16 mm NEEDLE BEARING
(105) 31 x 38 x 43 mm DISTANCE COLLAR
(106) 5TH GEAR
(107) 4TH GEAR
(108) 3RD GEAR
(109) 2ND GEAR
(110) 47 x 53 x 31 mm NEEDLE BEARING
(111) SPACER COLLAR
Selection, page 13-27
(112) FRICTION DAMPER
(113) INNER SYNCHRO RING
(114) SYNCHRO CONE
(115) OUTER SYNCHRO RING
(116) SYNCHRO SPRING
(117) 1ST/2ND SYNCHRO SLEEVE
(118) 1ST/2ND SYNCHRO HUB
(119) SYNCHRO SPRING
(120) SYNCHRO RING
(121) LOW GEAR
(122) 60 mm THRUST SHIM
Selection, page 13-27
(123) REVERSE GEAR
(124) COUNTERSHAFT
(125) 33 x 62 x 22 mm NEEDLE BEARING

Transmission Cover

Removal

1. Remove the transmission cover following the numbered sequence.

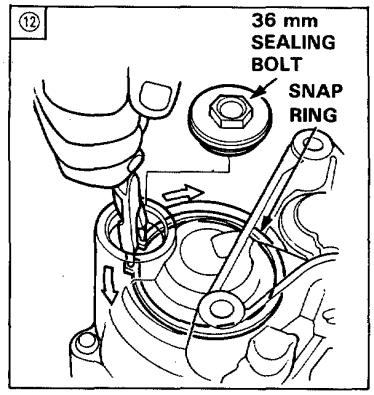

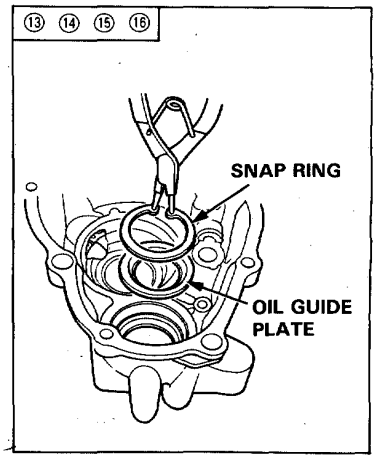

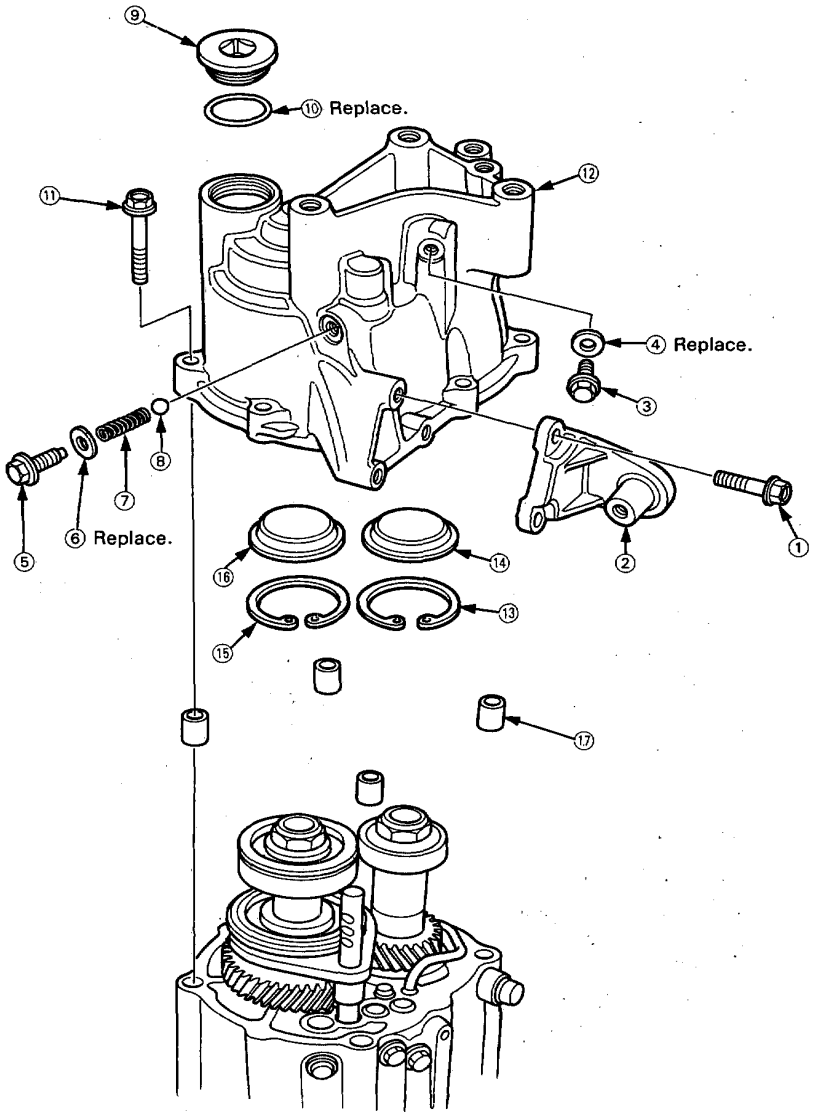

5th Gear

Removal

1. Remove 5th gear following the numbered sequence.

   NOTE: Countershaft locknut has left-hand threads.

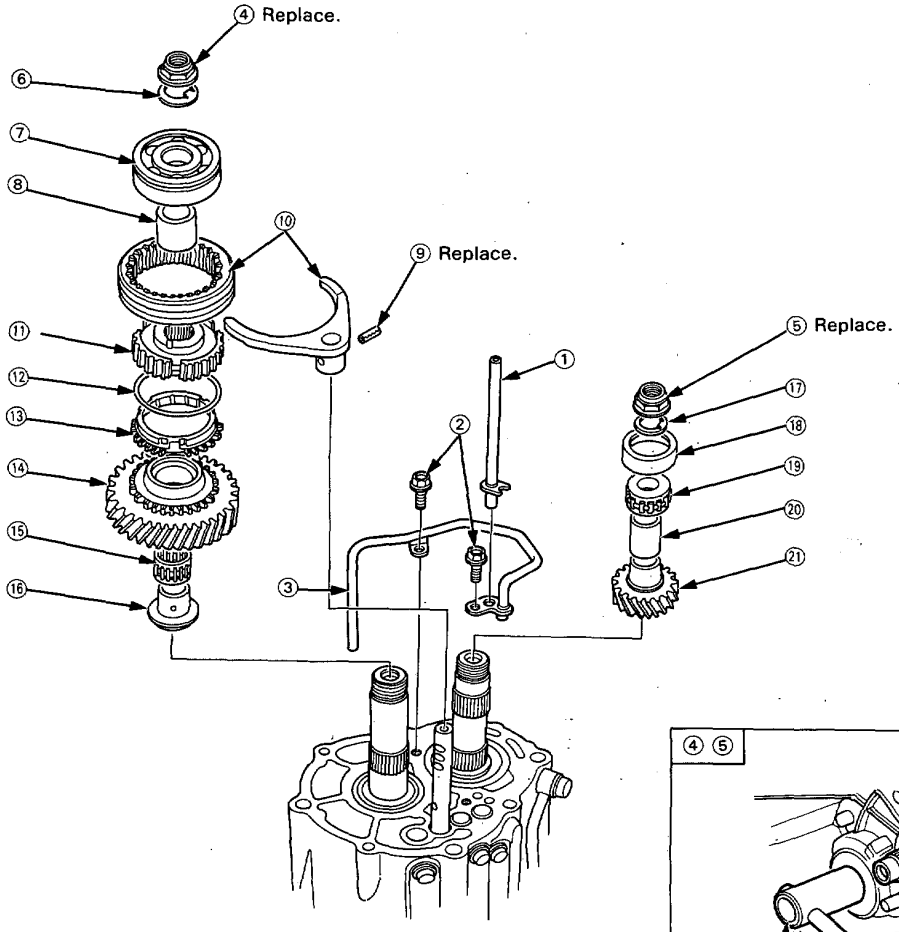

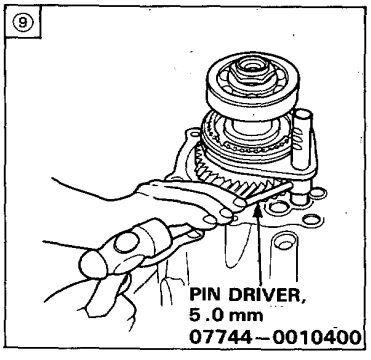

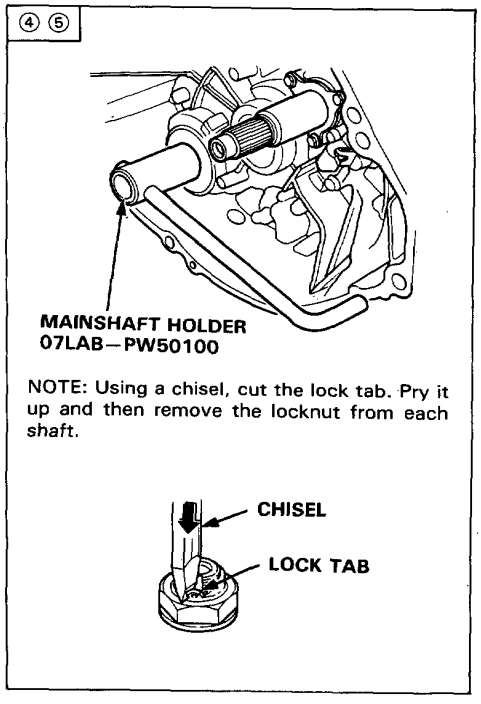

Transmission Housing

Removal

NOTE:
- Replace all sealing washers, O-rings and oil seals.
- Always clean the magnet ㉗.

1. Remove the transmission housing following the numbered sequence.

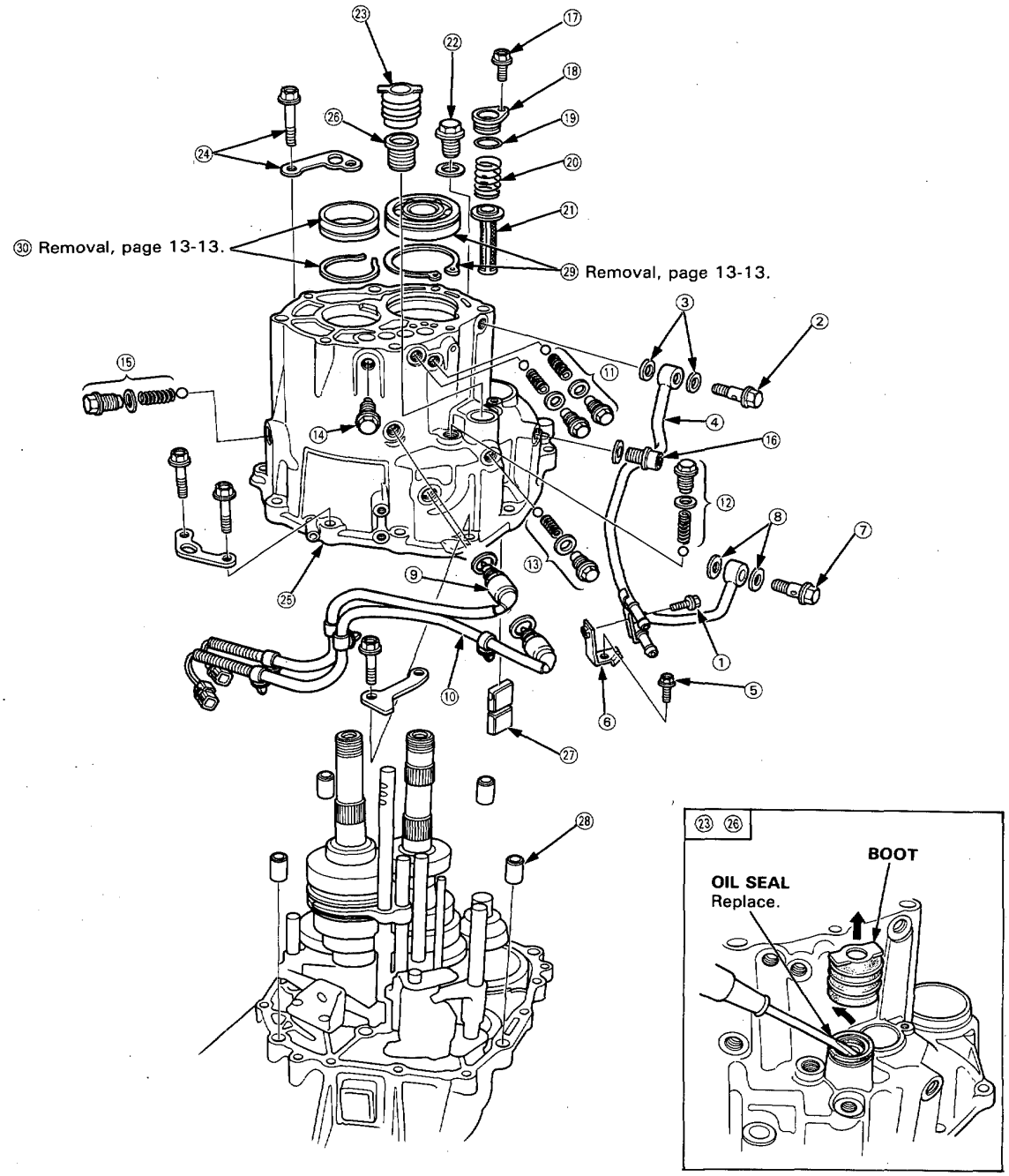

Bearing Removal

Mainshaft Side:

1. Remove the mainshaft ball bearing while expanding the snap ring, using the special tools.

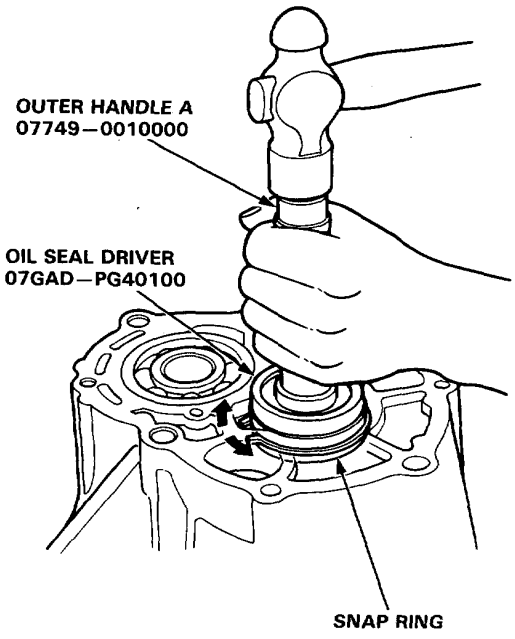

Countershaft Side:

1. Remove the countershaft bearing outer race while expanding the snap ring, using the special tools.

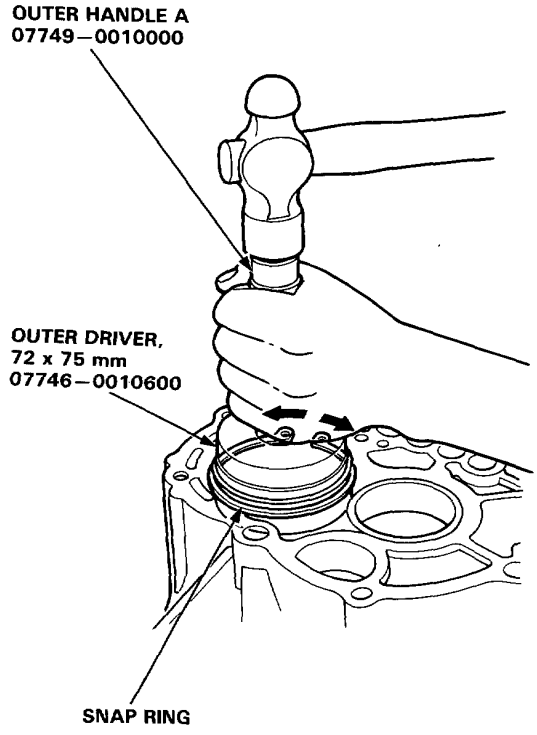

Mainshaft, Countershaft, Reverse Gear Shaft

Disassembly

1. Disassemble the mainshaft, countershaft and the reverse gear shaft assemblies following the numbered sequence.

   NOTE: Always replace the spring pins when removed.

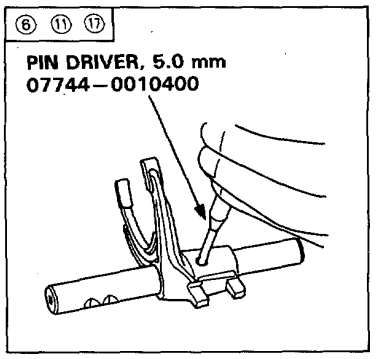

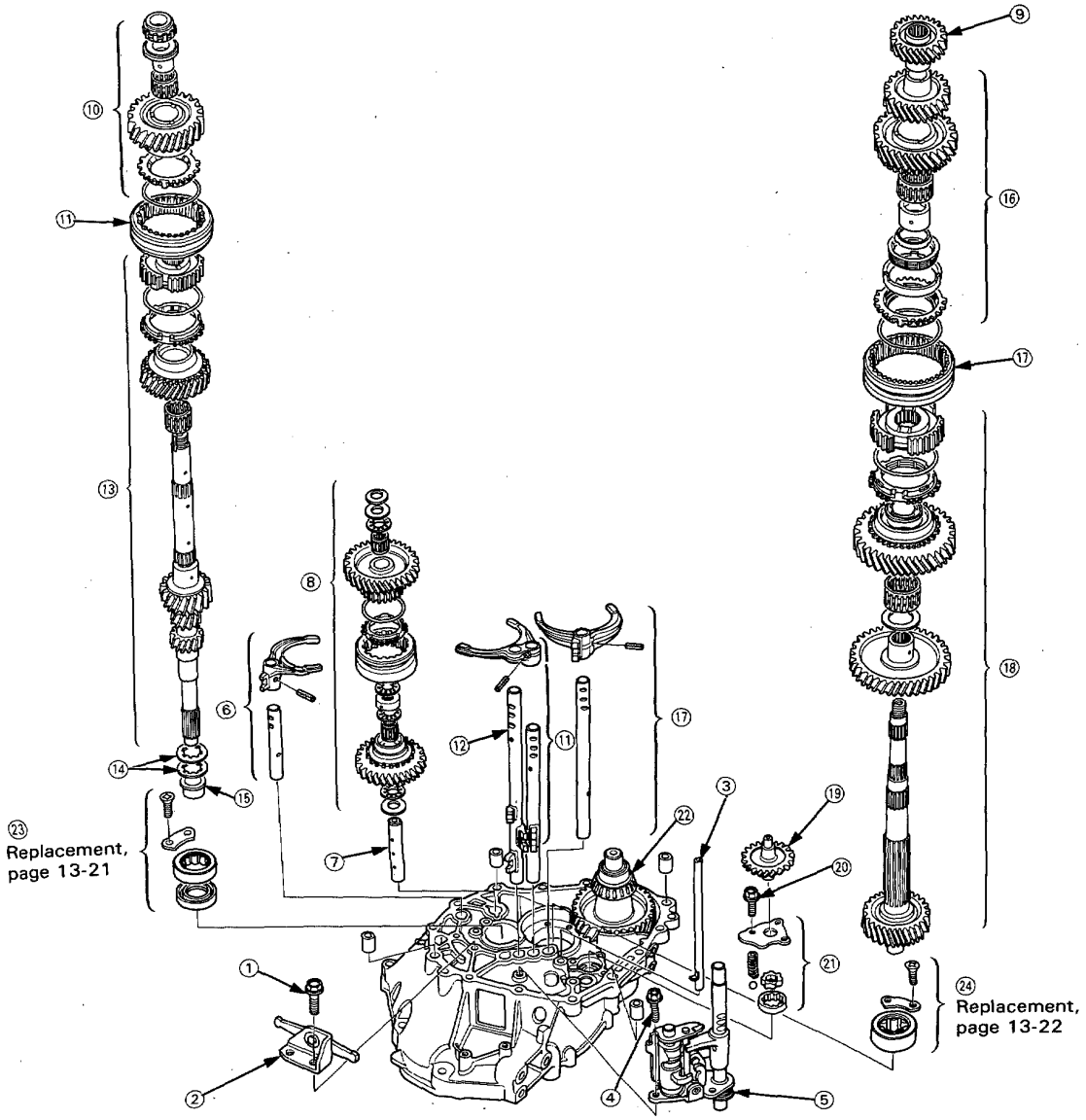

Inspection

1. Inspect the mainshaft surface for wear or damage, then measure the mainshaft at points A, B, C and D.

Standard: A (Needle bearing surface): 27.977–27.990 mm (1.1015–1.1020 in)
B (Needle bearing surface): 37.989–38.000 mm (1.4956–1.4961 in)
C (Needle bearing surface): 30.987–31.000 mm (1.2200–1.2205 in)
D (Ball bearing surface): 27.987–28.000 mm (1.1018–1.1024 in)
Service Limit: A: 27.93 mm (1.0996 in)
B: 37.935 mm (1.4935 in)
C: 30.94 mm (1.2181 in)
D: 27.937 mm (1.0999 in)

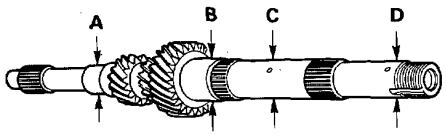

Replace the mainshaft if any part of it is less than the service limit.

2. Inspect for runout.

Standard: 0.02 mm (0.0008 in)
Service Limit: 0.05 mm (0.0020 in)

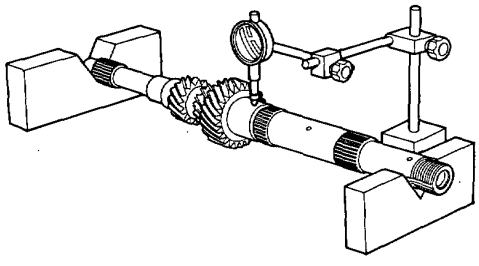

Replace the mainshaft if the runout exceeds the service limit.

3. Inspect the countershaft surface for wear or damage, then measure the countershaft at points A, B and C.

Standard: A (Needle bearing surface): 33.000–33.015 mm (1.2992–1.2998 in)
B (Ball bearing surface): 31.975–31.988 mm (1.2589–1.2594 in)
C (Needle bearing surface): 27.987–28.000 mm (1.1018–1.1024 in)
Service Limit: A: 32.95 mm (1.2972 in)
B: 31.928 mm (1.2570 in)
C: 27.937 mm (1.0999 in)

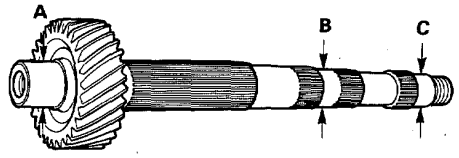

Replace the countershaft if any part of it is less than the service limit.

4. Inspect for runout.

Standard: 0.02 mm (0.0008 in)
Service Limit: 0.05 mm (0.0020 in)

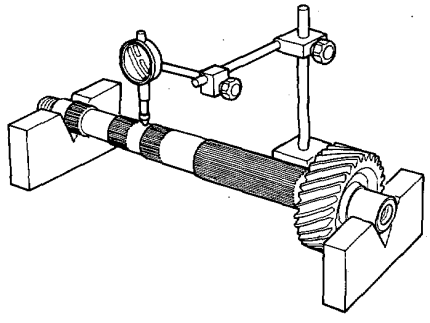

Replace the countershaft if the runout exceeds the service limit.

Reverse Shift Holder, Shift Fork

Clearance Inspection

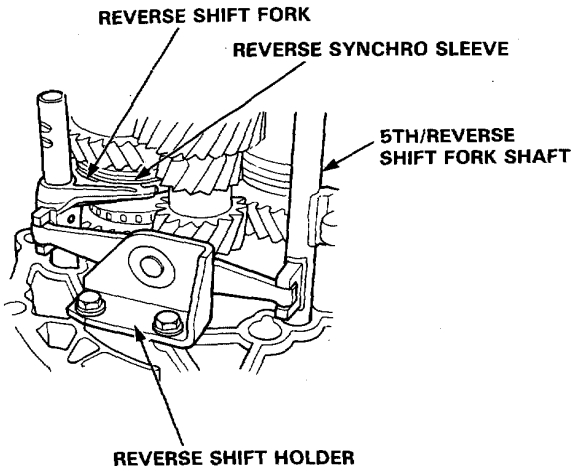

1. Measure the clearance between the reverse shift holder and 5th/reverse shift fork shaft.

   Standard: 0.20–0.50 mm (0.0079–0.0197 in)
   Service Limit: 0.8 mm (0.0315 in)

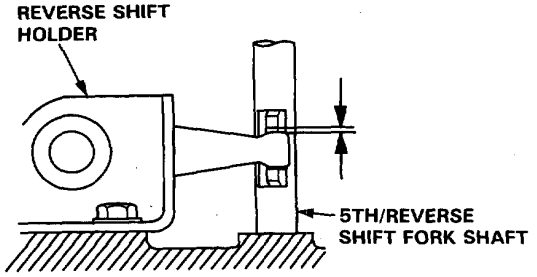

2. If the clearance exceeds the service limit, measure the width of the reverse shift holder.

   Standard: 12.80–13.00 mm (0.504–0.512 in)

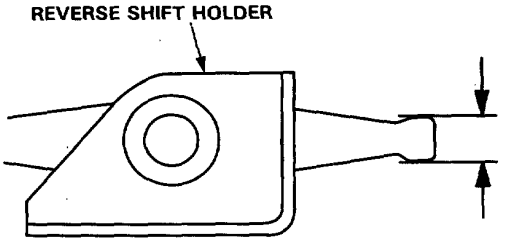

If the width is less than the standard, replace the reverse shift holder.

3. Measure the clearance between the reverse shift holder and reverse shift fork.

   Standard: 0.20–0.50 mm (0.0079–0.0197 in)
   Service Limit: 0.8 mm (0.0315 in)

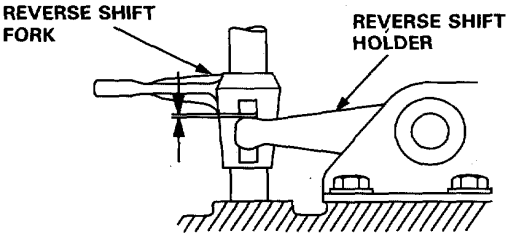

4. If the clearance exceeds the service limit, measure the width of the reverse shift holder.

   Standard: 12.80–13.00 mm (0.504–0.512 in)

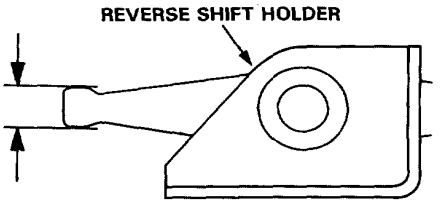

If the width is less than the standard, replace the reverse shift holder.

5. Measure the clearance between the reverse shift fork and reverse synchro sleeve.

   Standard: 0.35–0.65 mm (0.014–0.026 in)
   Service Limit: 1.00 mm (0.039 in)

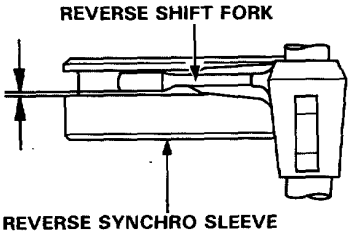

6. If the clearance exceeds the service limit, measure the width of the reverse shift fork fingers.

   Standard: 6.4–6.6 mm (0.252–0.260 in)

If the width is less than the standard, replace the reverse shift fork.

Clearance Inspection

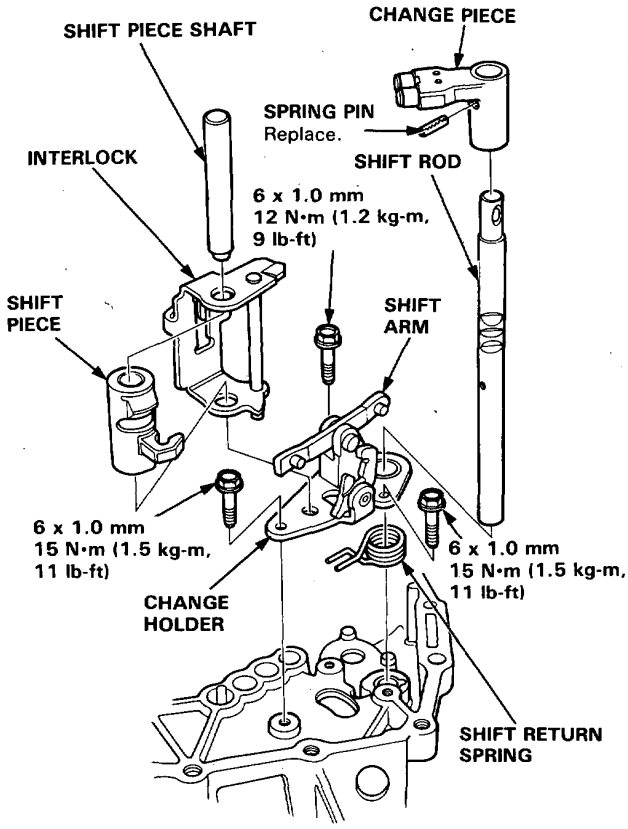

1. Measure the clearance between the shift fork shafts, the shift fork and shift piece.

   Standard: 0.25–0.55 mm (0.0098–0.0217 in)
   Service Limit: 0.85 mm (0.0335 in)

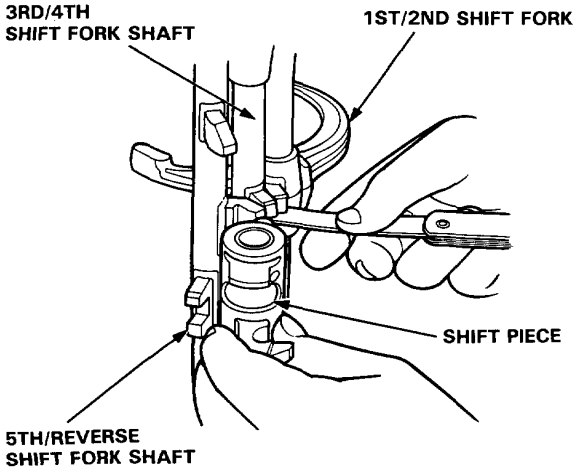

2. If the clearance exceeds the service limit, measure the width of shift piece.

   Standard: 11.850–11.950 mm (0.4665–0.4705 in)

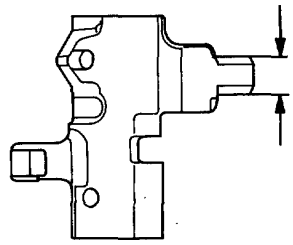

   If the width is less than the standard, replace the shift piece.

3. Measure the clearance between the shift forks and synchro sleeves.

   Standard: 0.35–0.65 mm (0.0138–0.0256 in)
   Service Limit: 1.00 mm (0.3937 in)

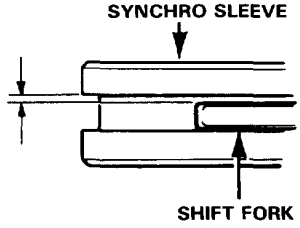

4. If the clearance exceeds the service limit, measure the width of the shift fork.

   Standard: 7.4–7.6 mm (0.2913–0.2992 in)

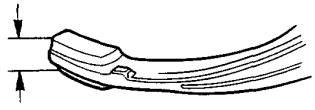

   If the width is less than the standard, replace the shift fork.

Synchro Sleeve, Synchro Hub

Inspection

1. Inspect gear teeth on all synchro hubs and sleeves for rounded off corners, which indicates wear.

2. Install each hub in its mating sleeve and check for freedom of movement.

   NOTE: If replacement is required, always replace the synchro sleeve and hub as a set.

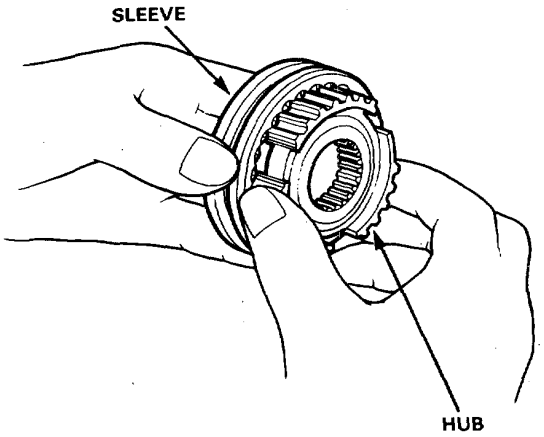

Installation

Each synchro sleeve has three sets of longer teeth (120 degrees apart) that must be matched with the three sets of deeper grooves in the hub when assembled.

NOTE: Installing the synchro sleeve with its longer teeth in the 1st/2nd synchro hub slots will damage the spring ring.

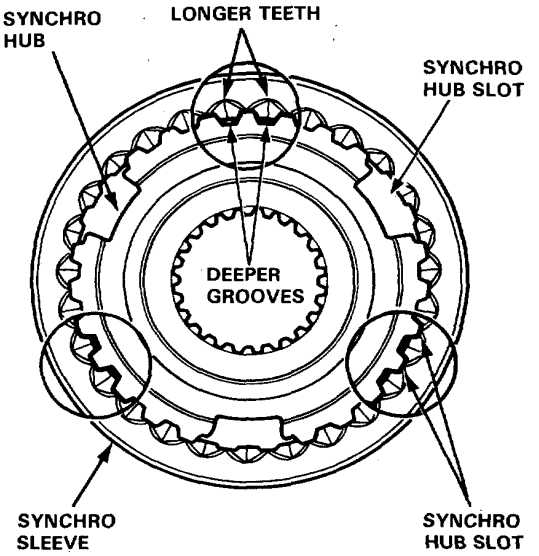

Synchro Ring, Gear

Inspection

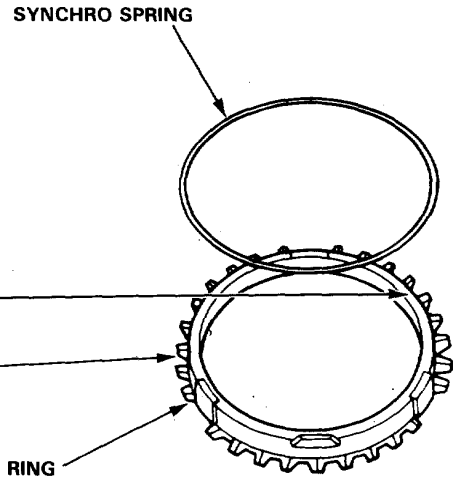

1. Inspect the inside of the synchro ring for wear.
2. Inspect the synchro sleeve teeth and matching teeth on the synchro ring for wear (rounded off).

3. Inspect the synchro sleeve teeth and matching teeth on the gear for wear (rounded off).

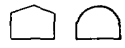

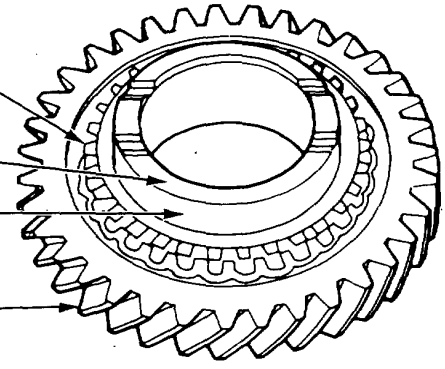

4. Inspect the gear hub thrust surface for wear.
5. Inspect the cone surface for wear or roughness.
6. Inspect the teeth on all gears for uneven wear, scoring, galling, cracks.
7. Coat the cone surface of the gear with oil and place the synchro ring on the matching gear. Rotate the ring, making sure that it does not slip.

   Measure the clearance between the ring and gear all the way around.

   NOTE: Hold the ring against the gear evenly while measuring the clearance.

   Ring-to-Gear Clearance
   Standard: **0.85–1.1 mm (0.0335–0.0433 in)**
   Service Limit: 0.4 mm (0.0157 in)

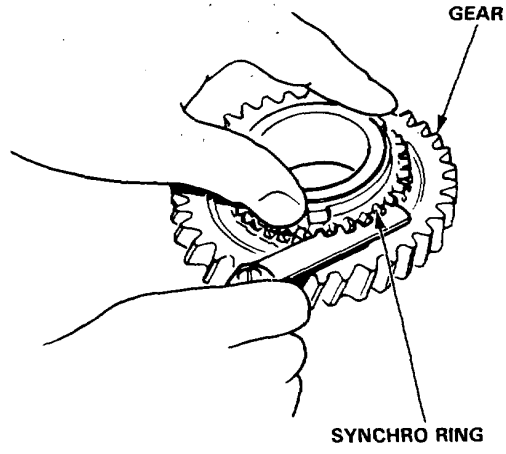

8. Separate the synchro ring and gear, then coat them with oil.
9. Install the synchro spring on the synchro ring, then set it aside for later reassembly.

Clearance Inspection

1. Check the clearance on the pump rotor.

   Clutch Housing-to-Outer Rotor Clearance
   Standard: 0.03–0.13 mm (0.0012–0.0051 in)
   Service Limit: 0.18 mm (0.0071 in)

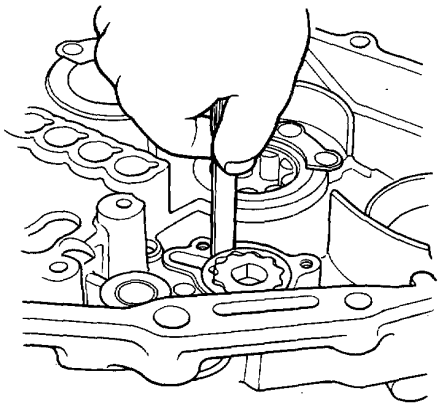

2. Check the clearance on the pump rotor.

   Inner Rotor-to-Outer Rotor Clearance
   Standard: 0.14 mm (0.0055 in)
   Service Limit: 0.2 mm (0.008 in)

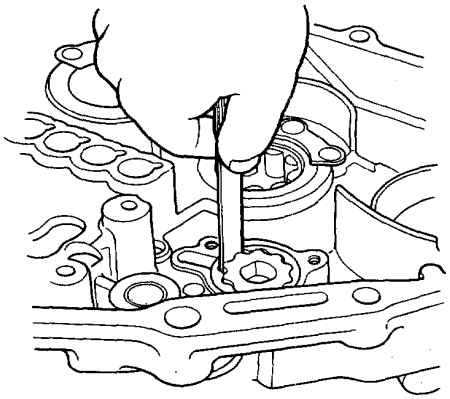

3. Check the clearance between the clutch housing and the rotor.

   Clutch Housing-to-Rotor Clearance
   Standard: 0.1–0.2 mm (0.0039–0.0079 in)
   Service Limit: 0.22 mm (0.0087 in)

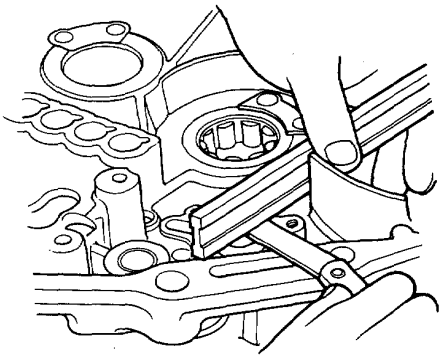

Mainshaft Bearing (Clutch Housing)

Replacement

NOTE: If replacement is required, always replace the bearing and inner race as an assembly.

1. Remove the bearing retaining plate.

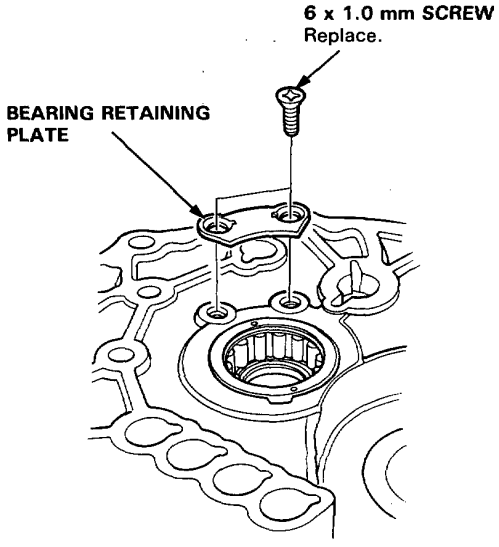

2. Remove the needle bearing with the special tool.

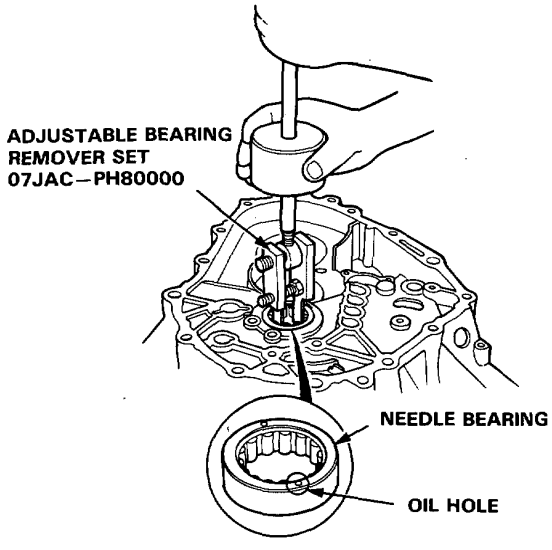

3. Position the new needle bearing in the bore of the clutch housing.

   NOTE: Position the needle bearing with the oil hole facing up.

4. Drive the needle bearing in using the special tools.

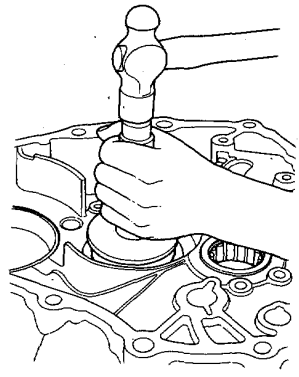

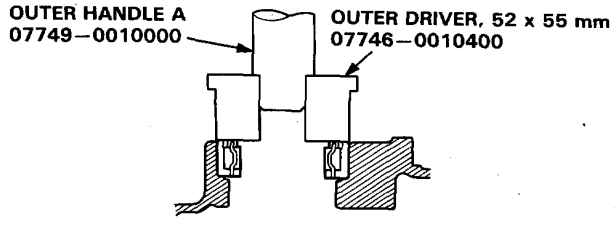

5. Install the bearing retaining plate and stake the screw heads in the groove in the bearing retaining plate.

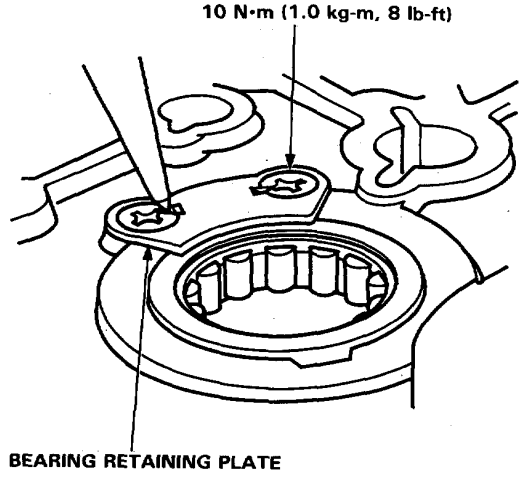

Countershaft Bearing (Clutch Housing)

Replacement

1. Remove the bearing retaining plate.

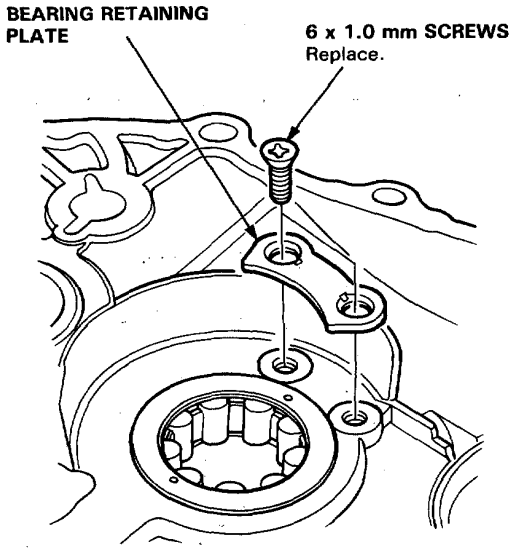

2. Remove the needle bearing with the special tool.

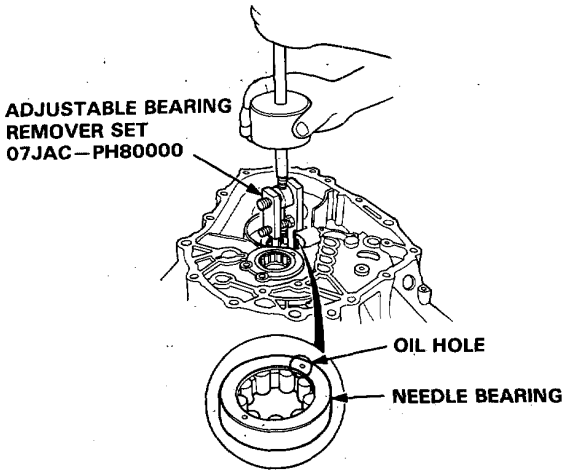

3. Position the new needle bearing in the bore of the clutch housing.

   NOTE: Position the needle bearing with the oil hole facing up.

4. Drive the needle bearing in using the special tools.

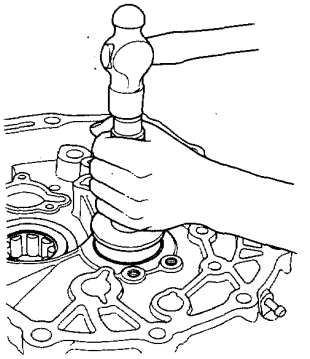

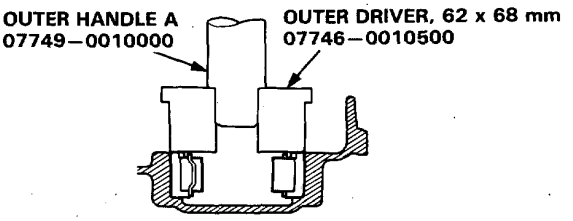

5. Install the bearing retaining plate and stake the screw heads in the groove in the bearing retaining plate.

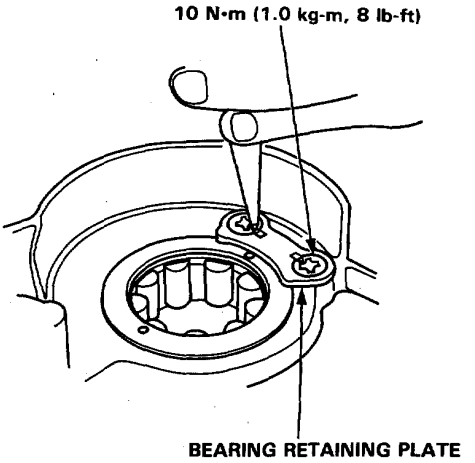

Mainshaft Oil Seal (Clutch Housing)

Replacement

1. Remove the release bearing guide.

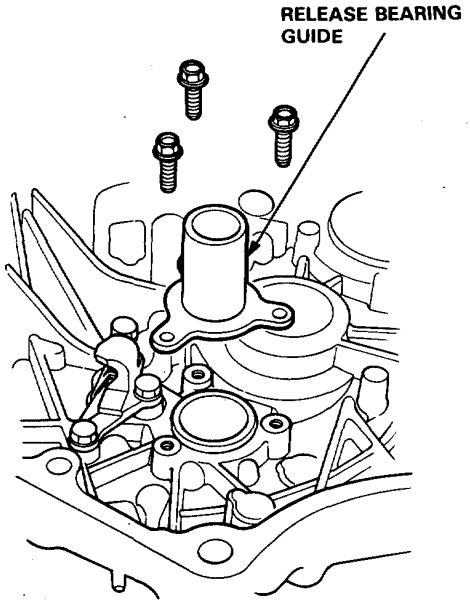

2. Remove the oil seal.

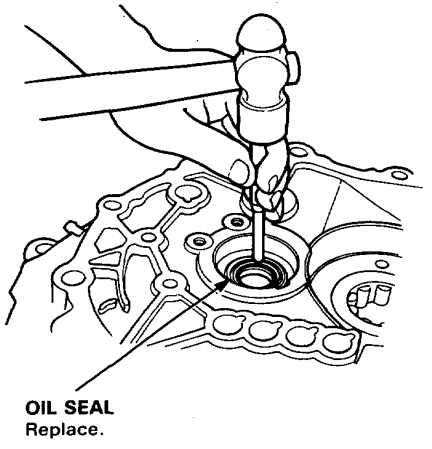

3. Drive in a new oil seal from the transmission side using the special tools.

   NOTE: After installation, measure the clearance between the transmission housing surface end and the oil seal.

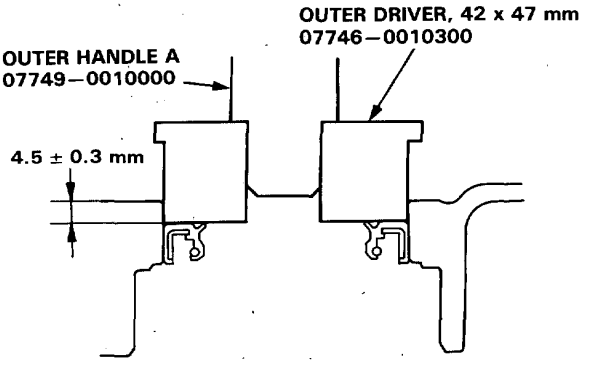

4. Install the release bearing guide.

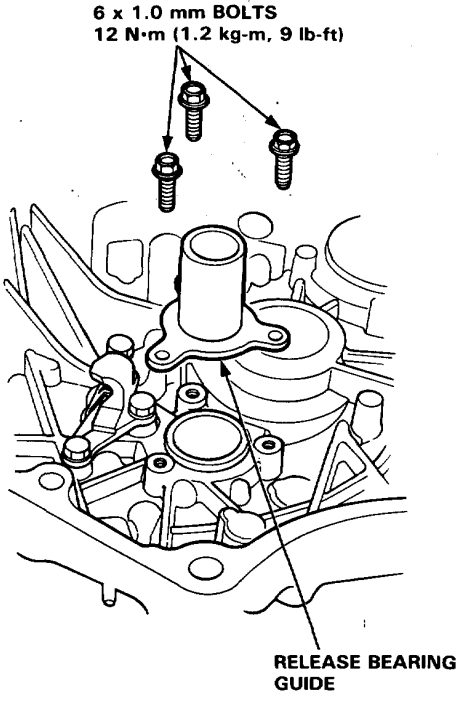

Reassembly, Clearance Inspection

1. Reassemble the mainshaft and countershaft as shown.

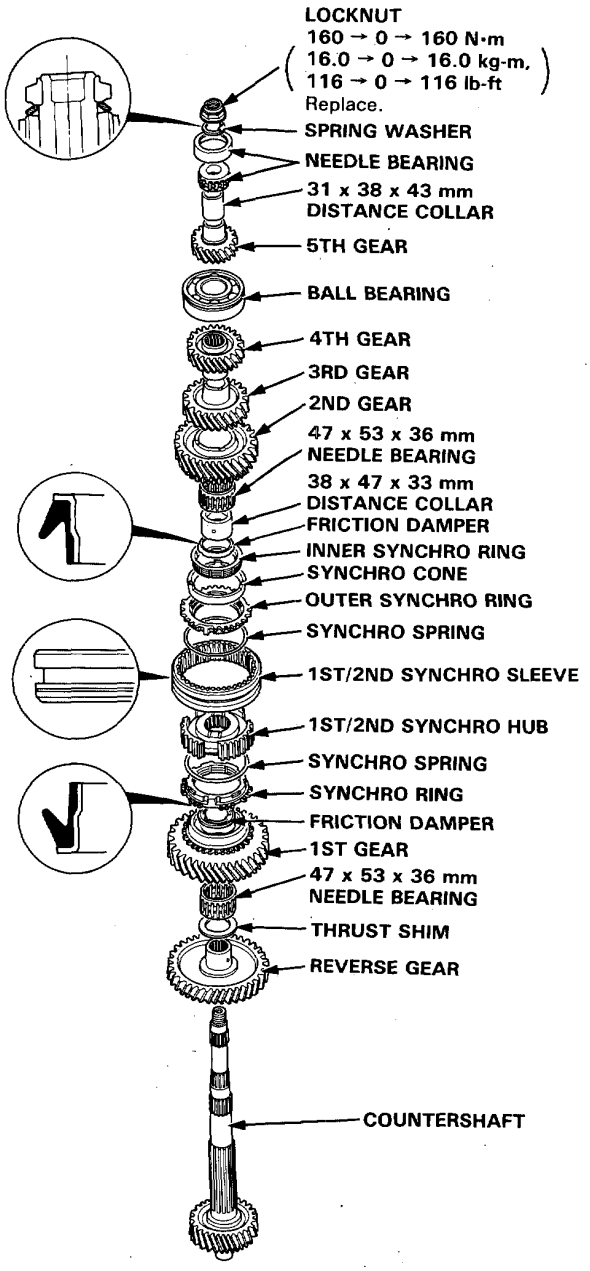

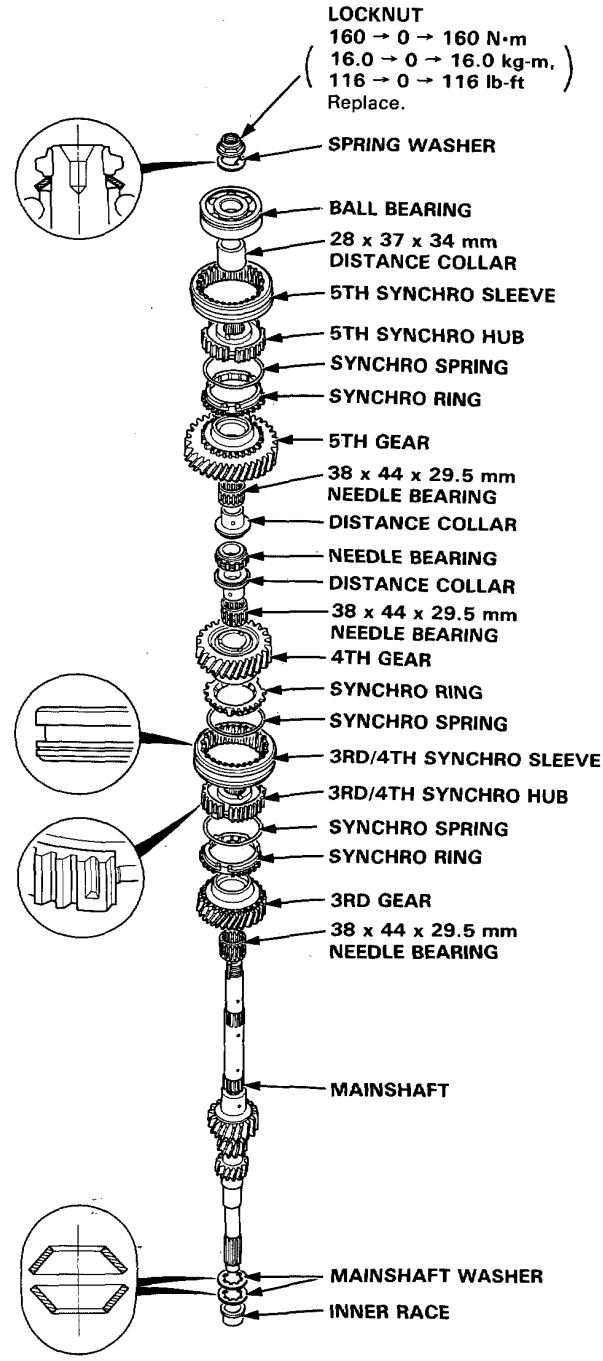

2. Install the mainshaft and countershaft on the clutch housing.

3. Install the special tool, then shift the 1st/2nd synchro sleeve to the 1st gear side.

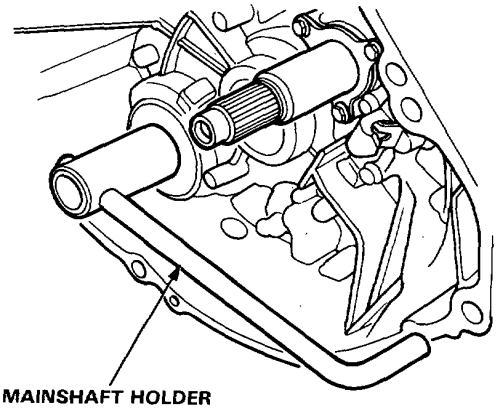

4. Tighten the locknut.

NOTE: Countershaft locknut has left-hand threads.

LOCKNUT
160 → 0 → 160 N·m
(16 → 0 → 16 kg-m, 116 lb-ft → 0 → 116 lb-ft)

5. Measure the clearance using a feeler gauge.

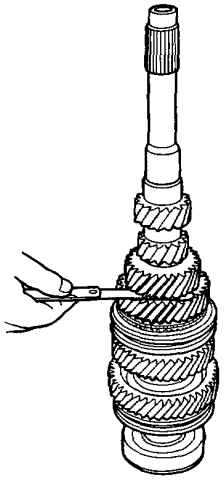

Mainshaft:

1. Measure the clearance between the 3rd gear and mainshaft.

Standard: 0.06—0.19 mm (0.0024—0.0075 in)
Service Limit: 0.3 mm (0.0118 in)

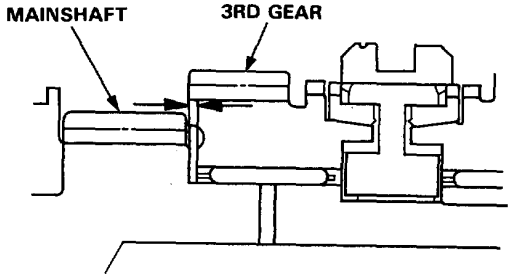

2. If the clearance exceeds the service limit, measure the thickness of 3rd gear.

Standard: 31.39—31.47 mm (1.2358—1.2390 in)
Service Limit: 31.32 mm (1.2331 in)

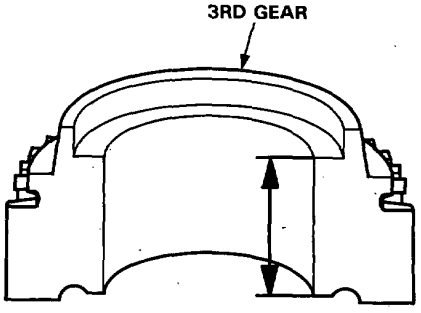

If the thickness is less than the service limit, replace 3rd gear.

(cont'd)

Reassembly, Clearance Inspection (cont'd)

3. Measure the clearance between the 4th gear and distance collar.

Standard: 0.06–0.19 mm (0.0024–0.0075 in)
Service Limit: 0.3 mm (0.0118 in)

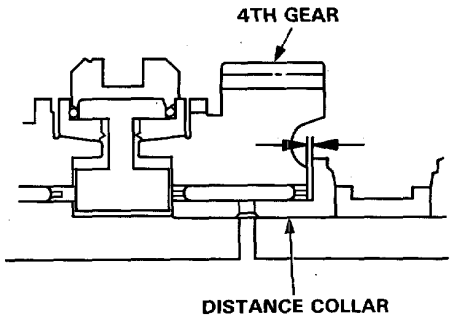

4. If the clearance exceeds the service limit, measure the thickness of 4th gear.

Standard: 29.39–29.47 mm (1.1571–1.1602 in)
Service Limit: 29.32 mm (1.1543 in)

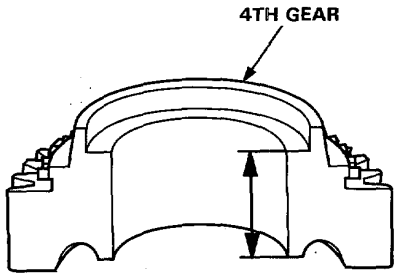

If the thickness is less than the service limit, replace 4th gear.

5. Measure the clearance between the 5th gear and distance collar.

Standard: 0.06–0.19 mm (0.0024–0.0075 in)
Service Limit: 0.3 mm (0.0118 in)

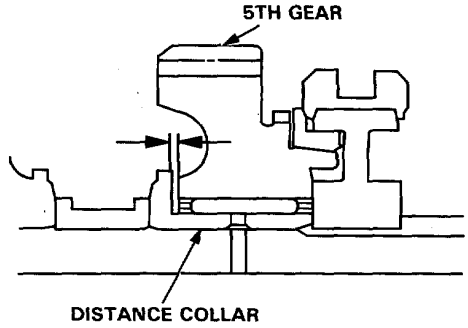

6. If the clearance exceeds the service limit, measure the thickness of 5th gear.

Standard: 29.39–29.47 mm (1.1571–1.1602 in)
Service Limit: 29.32 (1.1543 in)

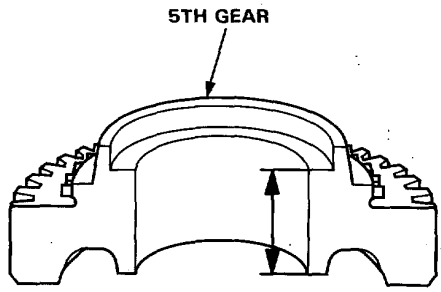

If the thickness is less than the service limit, replace 5th gear.

Countershaft:

1. Measure the clearance between the 1st gear and 60 mm thrust shim.

   Standard: 0.04–0.10 mm (0.0016–0.0047 in)

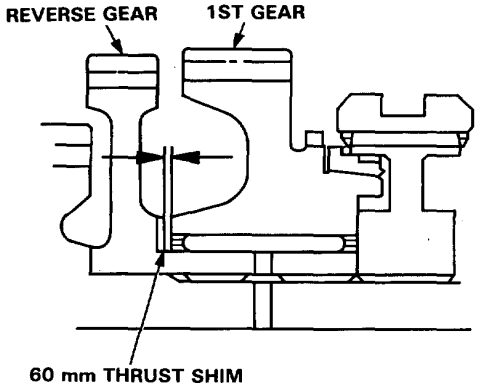

2. If the clearance exceeds the service limit, select the appropriate 60 mm thrust shim for the correct clearance from the chart below.

60 mm THRUST SHIM

	Part Number	Thickness
A	23971–PY5–000	1.42 mm (0.0559 in)
B	23972–PY5–000	1.46 mm (0.0575 in)
C	23973–PY5–000	1.50 mm (0.0591 in)
D	23974–PY5–000	1.54 mm (0.0606 in)

3. Measure the clearance between the 2nd gear and 3rd gear.

   Standard: 0.04–0.10 mm (0.0016–0.0047 in)

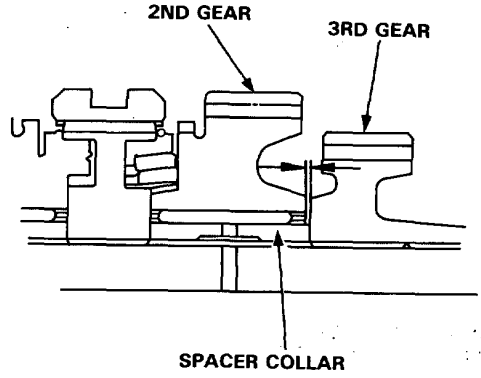

4. If the clearance exceeds the service limit, select the appropriate spacer collar for the correct clearance.

SPACER COLLAR

	Part Number	Thickness
A	23911–PY5–000	33.007–33.009 mm (1.2995–1.2996 in)
B	23912–PY5–000	33.003–33.005 mm (1.2993–1.2994 in)

Secondary Gear Assembly

Index

NOTE: If the parts marked * are replaced, the bearing preload must be adjusted (page 13-32).

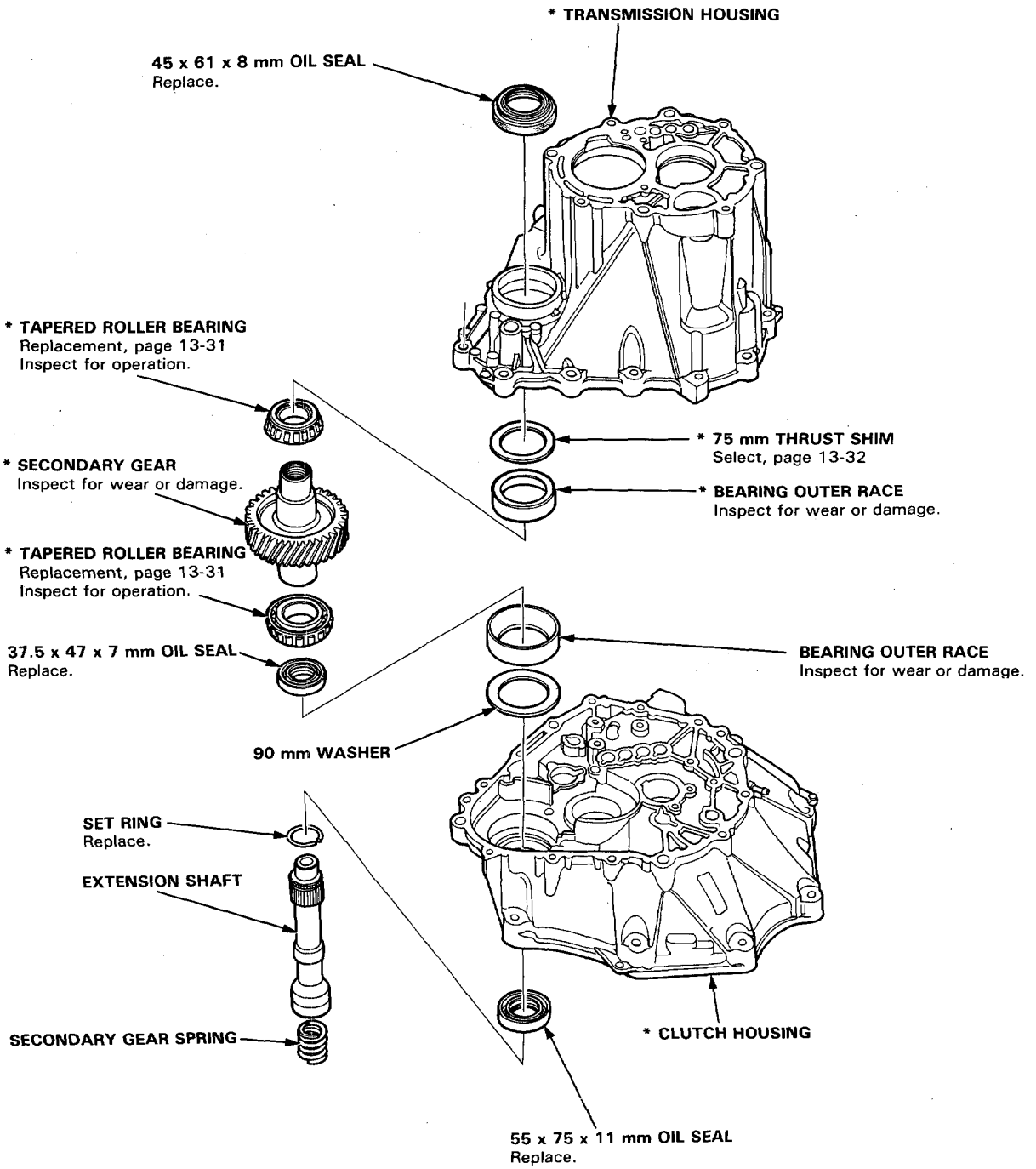

Extension Shaft

Removal

1. Remove the set ring, then remove the extension shaft from the secondary gear.

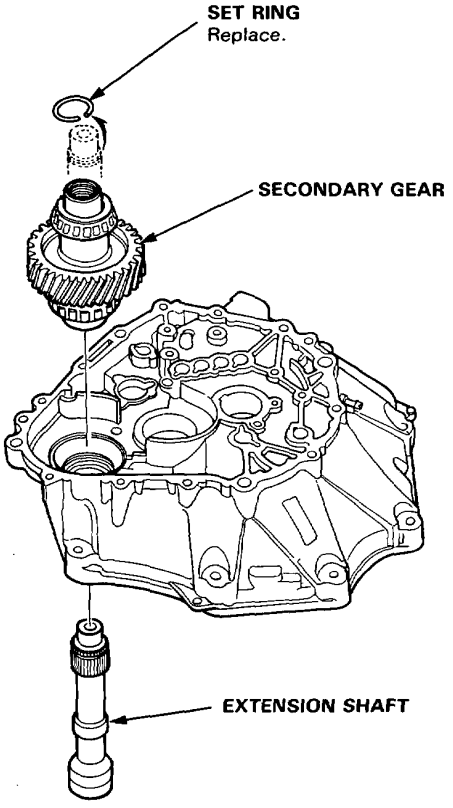

Oil Seal (Secondary Gear)

Replacement

1. Remove the oil seal.

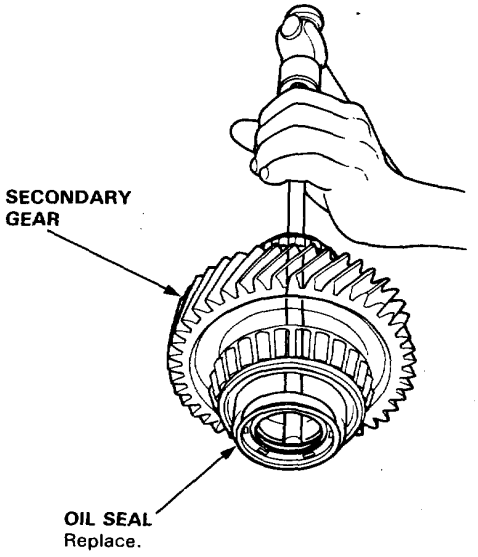

2. Install the oil seal in the secondary gear using the special tools.

   NOTE: After installation, measure the clearance between the secondary gear end and the oil seal.

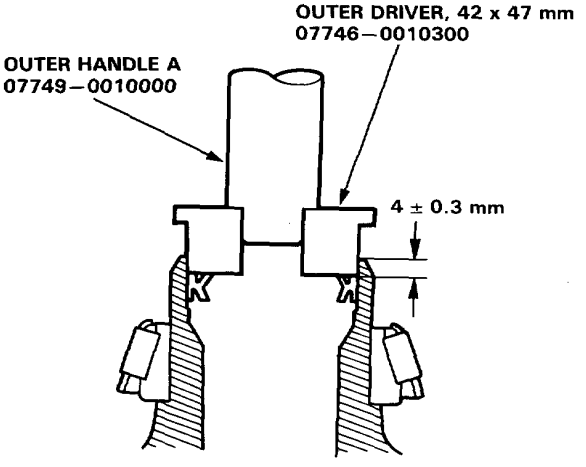

Oil Seal

Removal

1. Remove the differential assembly.
2. Remove the oil seal from the transmission housing.

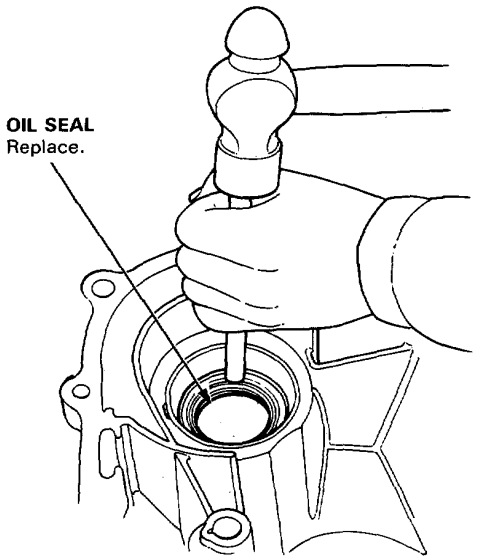

3. Remove the oil seal from the clutch housing.

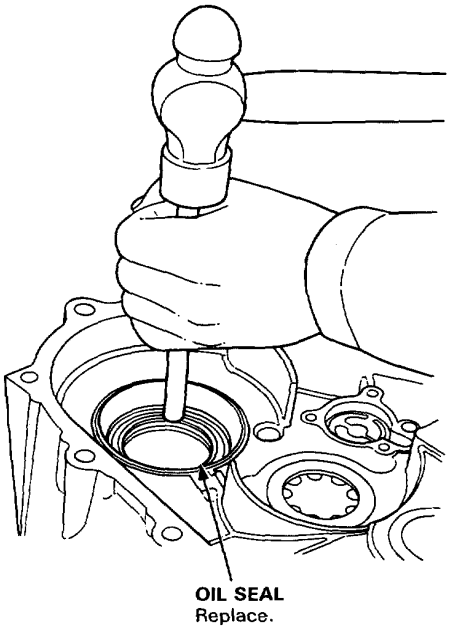

Tapered Roller Bearing

Replacement

NOTE:
- The tapered roller bearing and outer race should be replaced as a set.
- Inspect and adjust the bearing preload whenever the bearing is replaced.

1. Remove the bearings using a press and steel blocks as shown.

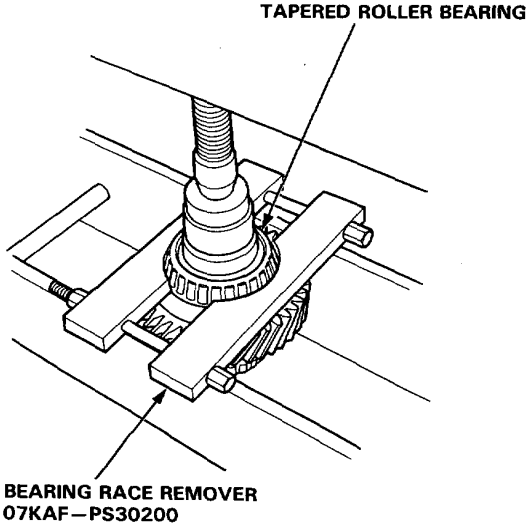

2. Install the bearings using a press as shown.

   NOTE: Press the bearings squarely until they bottom against the case.

Transmission Housing Side:

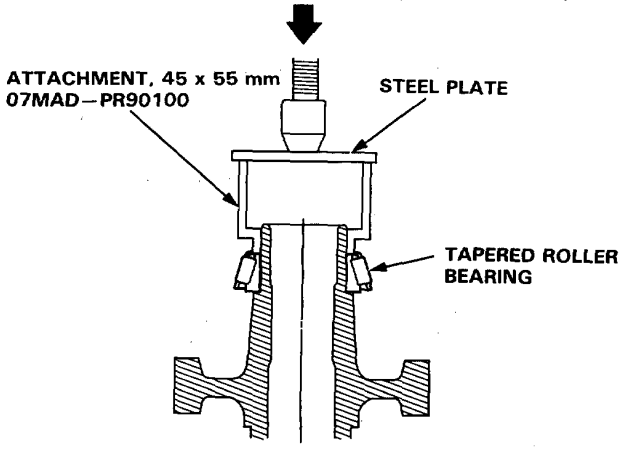

Clutch Housing Side:

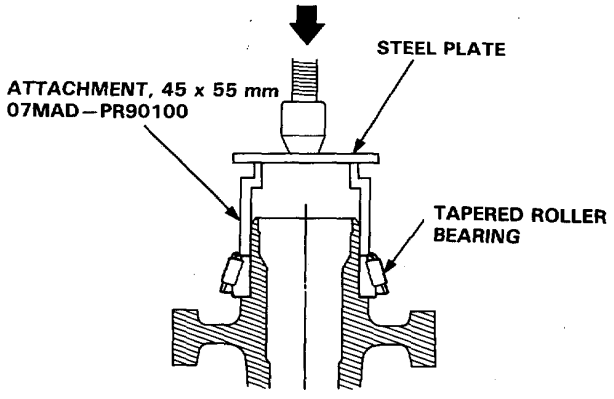

Bearing Preload

Adjustment

NOTE: If any of the items listed below are replaced, the bearing preload must be adjusted.

- TRANSMISSION HOUSING
- CLUTCH HOUSING
- SECONDARY GEAR
- TAPERED ROLLER BEARING and OUTER RACE
- 75 mm THRUST SHIM
- 90 mm WASHER

1. Remove the bearing outer race and 75 mm thrust shim from the transmission housing by prying up on the bearing outer race or by heating the housing to about 100°C (212°F).

   CAUTION: Do not reuse the thrust shim if the outer race was pried out.

   NOTE:
   - Let the transmission cool to room temperature if the outer race was removed by heating the case before adjusting the bearing preload.
   - Do not heat the transmission housing in excess of 100°C (212°F).
   - Replace the bearing with a new one whenever the outer race is replaced.
   - Repeat on the clutch side.
   - There is no shim on the clutch side.

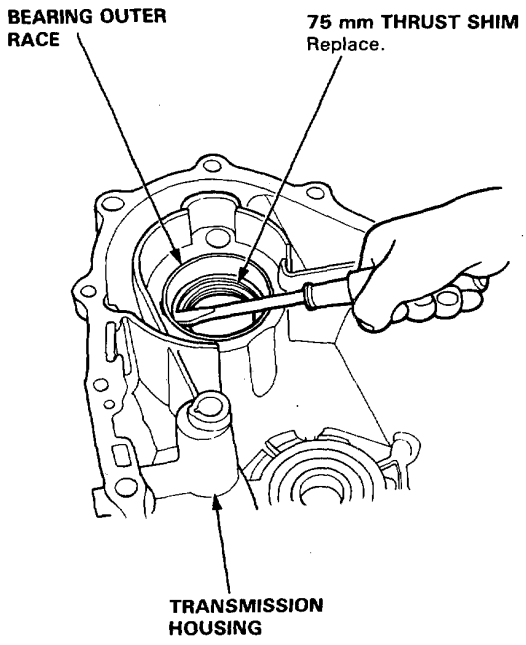

2. First try the thrust shim that was removed.

   CAUTION: Do not use more than one shim to adjust the bearing preload.

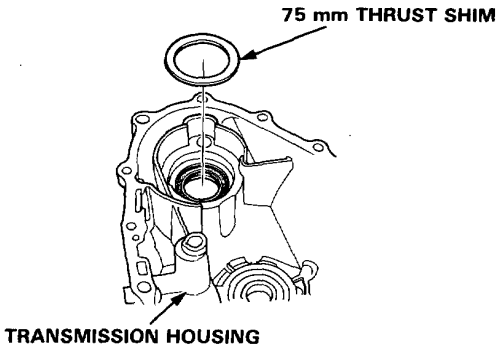

3. Select shim from the following table.

75 mm THRUST SHIM

	Part Number	Thickness
A	23941–PY5–000	1.56 mm (0.0614 in)
B	23942–PY5–000	1.59 mm (0.0626 in)
C	23943–PY5–000	1.62 mm (0.0638 in)
D	23944–PY5–000	1.65 mm (0.0650 in)
E	23945–PY5–000	1.68 mm (0.0661 in)
F	23946–PY5–000	1.71 mm (0.0673 in)
G	23947–PY5–000	1.74 mm (0.0685 in)
H	23948–PY5–000	1.77 mm (0.0697 in)
I	23949–PY5–000	1.80 mm (0.0709 in)
J	23950–PY5–000	1.83 mm (0.0720 in)
K	23951–PY5–000	1.86 mm (0.0732 in)
L	23952–PY5–000	1.89 mm (0.0744 in)
M	23953–PY5–000	1.92 mm (0.0756 in)
N	23954–PY5–000	1.95 mm (0.0768 in)
O	23955–PY5–000	1.98 mm (0.0780 in)
P	23956–PY5–000	2.01 mm (0.0791 in)
Q	23957–PY5–000	2.04 mm (0.0803 in)
R	23958–PY5–000	2.07 mm (0.0815 in)
S	23959–PY5–000	2.10 mm (0.0827 in)
T	23960–PY5–000	2.13 mm (0.0839 in)
U	23961–PY5–000	2.16 mm (0.0850 in)
V	23962–PY5–000	2.19 mm (0.0862 in)
W	23963–PY5–000	2.22 mm (0.0874 in)
X	23964–PY5–000	2.25 mm (0.0886 in)
Y	23965–PY5–000	2.28 mm (0.0898 in)
Z	23966–PY5–000	2.31 mm (0.0909 in)
AA	23967–PY5–000	2.34 mm (0.0921 in)
AB	23968–PY5–000	2.37 mm (0.0933 in)
AC	23969–PY5–000	2.40 mm (0.0945 in)
AD	23970–PY5–000	2.43 mm (0.0957 in)

4. After installing the shim, install the outer race in the transmission housing.

   NOTE:
   - Install the outer race squarely.
   - Check that there is no clearance between the outer race, shim and transmission housing.

5. Install the 36 mm sealing bolt on the secondary gear assembly.

6. Install the secondary gear assembly in the clutch housing, then install the transmission housing.

   NOTE: Do not install the mainshaft, countershaft and reverse idle gear shaft assembly.

   Torque: 50 N·m (5.0 kg-m, 36 lb-ft)

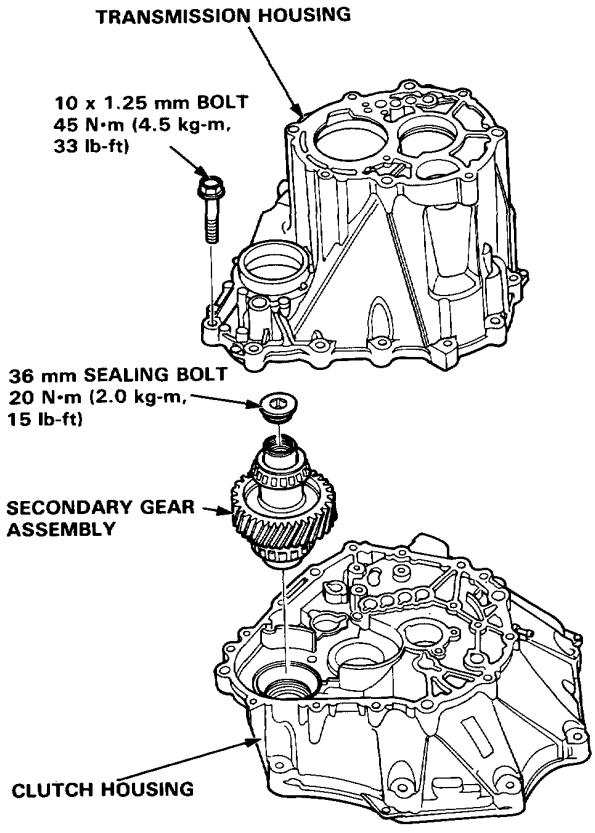

7. Rotate the secondary gear assembly in both directions to seat the bearings.

8. Measure the starting torque of the secondary gear assembly with a torque wrench.

   NOTE: Measure the bearing preload at normal room temperature in both directions.

   Standard: 1.4—2.6 N·m
   (14—26 kg-cm, 12—23 lb-in)

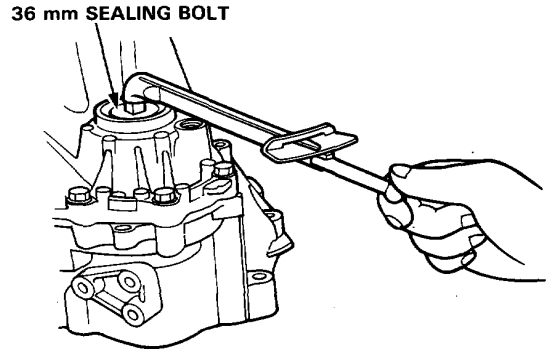

9. If the bearing preload is beyond the standard, select the shim that will give you the correct preload and recheck.

   NOTE: Changing one of the shims to the next size will increase or decrease preload about 3—4 kg-cm (2.60—3.47 lb-in).

Oil Seal

Installation

Transmission Housing Side:

1. Install the oil seal using the special tools as shown.

   NOTE: After installation, measure the clearance between the transmission housing end and the oil seal.

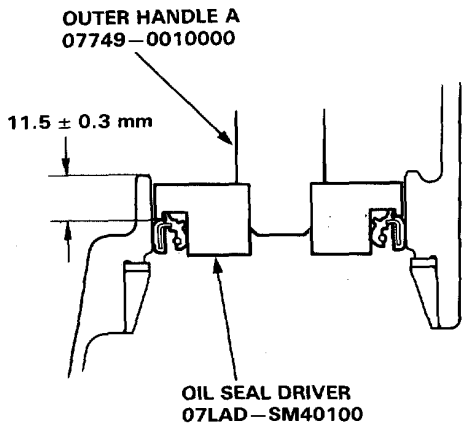

Clutch Housing Side:

1. Install the oil seal using the special tools as shown.

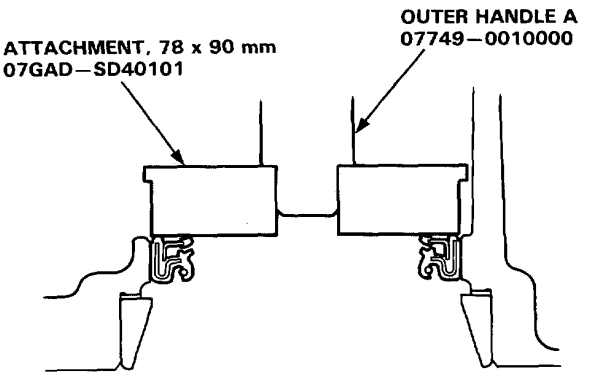

Installation

NOTE: Replace the spring pins and friction dampers.

1. Reassemble the parts following the numbered sequence.

	Bolt	Torque
④	6 x 1.0 mm	12 N•m (1.2 kg-m, 9 lb-ft)
㉒	8 x 1.25 mm	26 N•m (2.6 kg-m, 19 lb-ft)

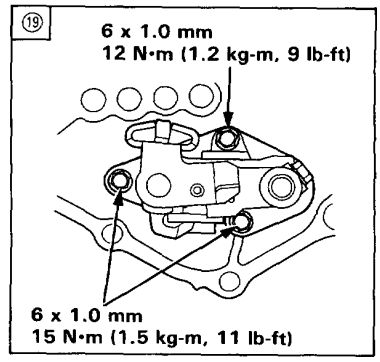

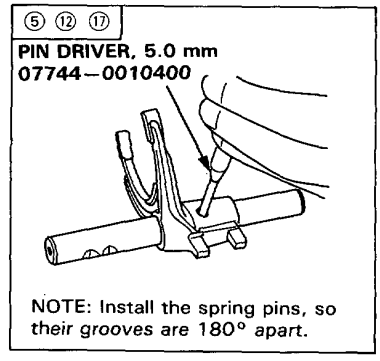

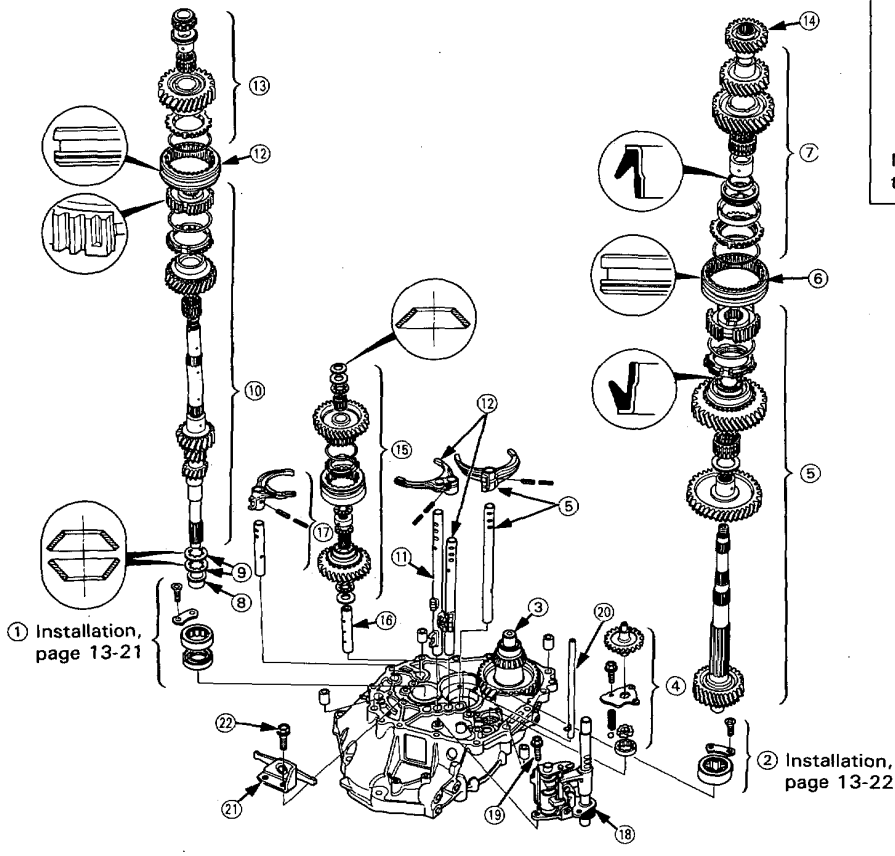

Transmission Housing

Reassembly

NOTE:
- Replace all sealing washers, oil seals and O-rings.
- Apply liquid gasket (P/N 08718–0001) to the threads of the sealing bolts, back-up light and neutral switches.

1. Reassemble the parts following the numbered sequence.

	Bolt Size	Torque Value	Sequence Number
A	10 x 1.25 mm	45 N•m (4.5 kg-m, 33 lb-ft)	⑦
B	6 x 1.0 mm	12 N•m (1.2 kg-m, 9 lb-ft)	⑨ ㉒ ㉙
C	DRAIN PLUG	45 N•m (4.5 kg-m, 33 lb-ft)	⑪
D	FILLER PLUG	40 N•m (4.0 kg-m, 29 lb-ft)	⑫
E	12 mm SEALING BOLT (L = 19.6 mm)	22 N•m (2.2 kg-m, 16 lb-ft)	⑬ ⑯ ⑱
F	12 mm SEALING BOLT (L = 24.6 mm)	22 N•m (2.2 kg-m, 16 lb-ft)	⑭
G	14 mm SEALING BOLT	33 N•m (3.3 kg-m, 24 lb-ft)	⑮
H	SWITCH	25 N•m (2.5 kg-m, 18 lb-ft)	⑲ ⑳
I	JOINT BOLT	29 N•m (2.9 kg-m, 21 lb-ft)	㉕ ㉘

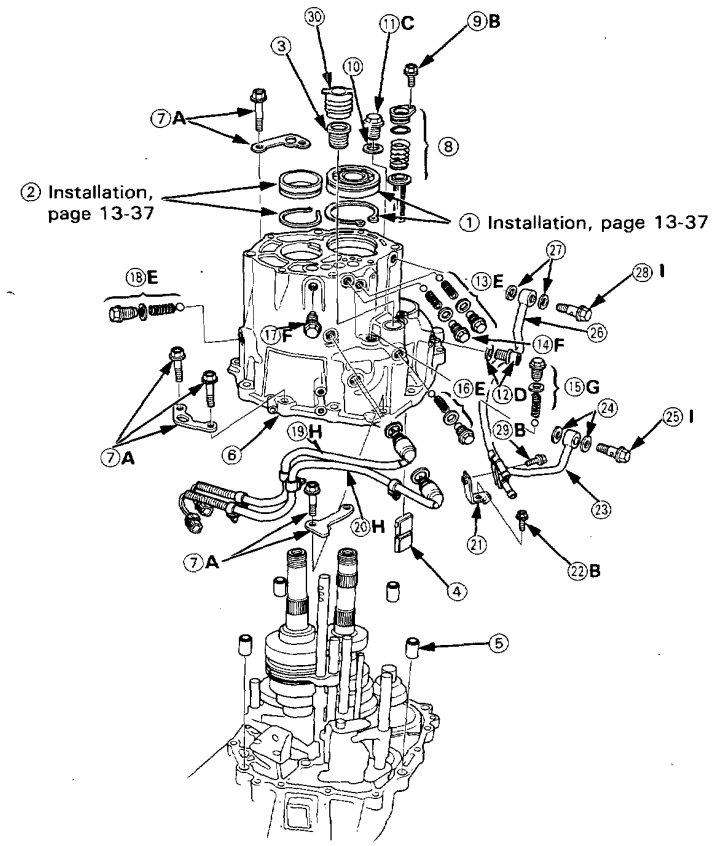

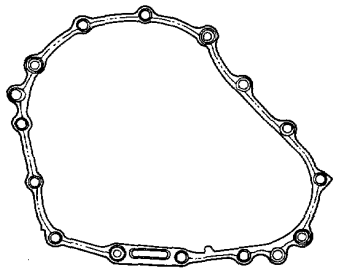

NOTE: This transmission uses no gasket between the major housings; use liquid gasket (P/N 08718–0001). Assemble the housing within 20 minutes after applying the liquid gasket and allow it to cure at least 30 minutes after assembly before filling it with oil.

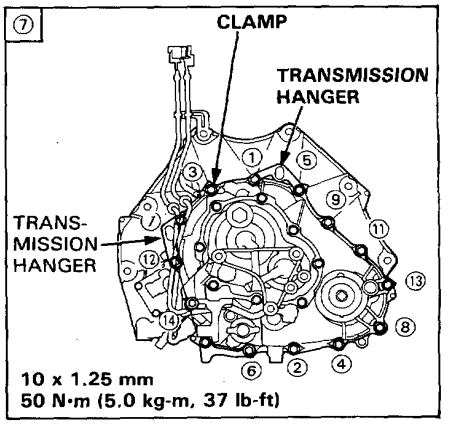

Bearing Installation

Mainshaft Side:

1. Expand the snap ring, then drive in the bearing using the special tools.

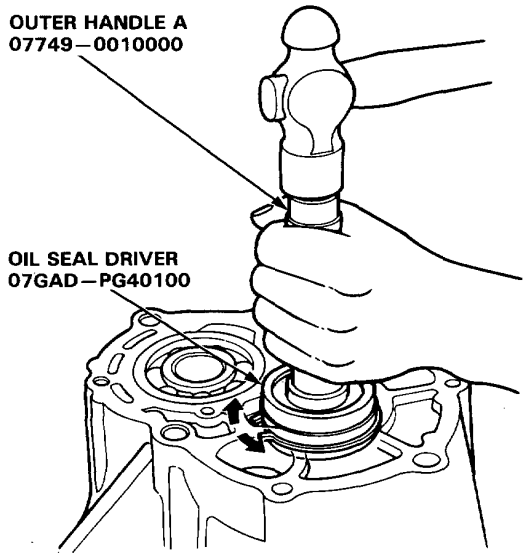

2. Check that the snap ring is securely seated in the groove of the mainshaft bearing.

   Dimension A as installed: 2.03–4.67 mm (0.0799–0.1839 in)

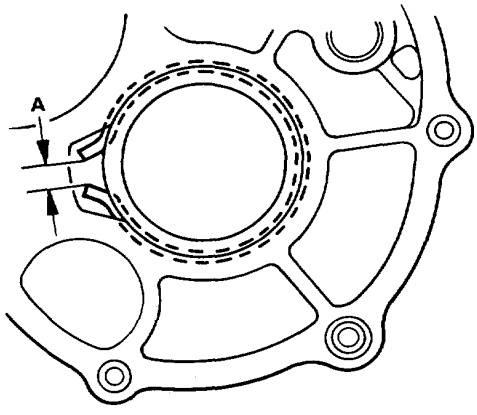

Countershaft Side:

1. Expand the snap ring, then drive in the oil seal.

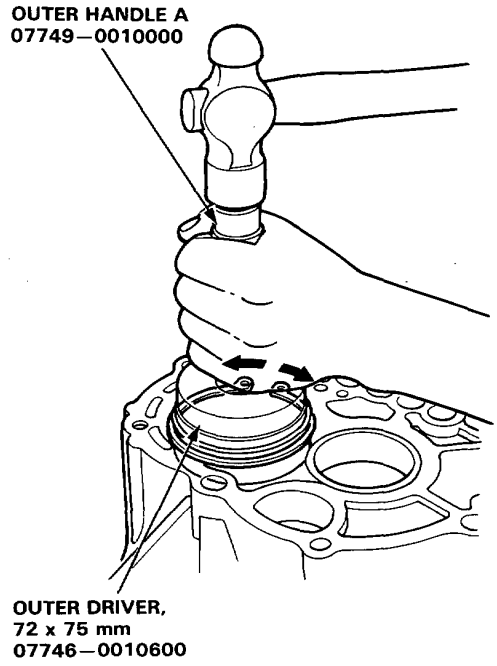

2. Check that the snap ring is securely seated in the groove of the countershaft bearing.

   Dimension B as installed: 3.43–8.4 mm (0.1350–0.3307 in)

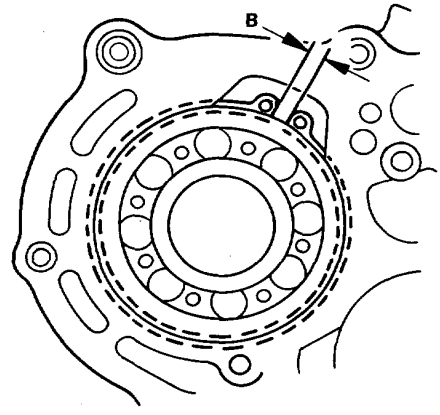

5th Gear

Installation

NOTE: Replace all locknuts and spring pins.

1. Reassemble the parts following the numbered sequence.

	Bolt Size	Torque Value	
A	6 x 1.0 mm	12 N·m (1.2 kg-m, 9 lb-ft)	⑳

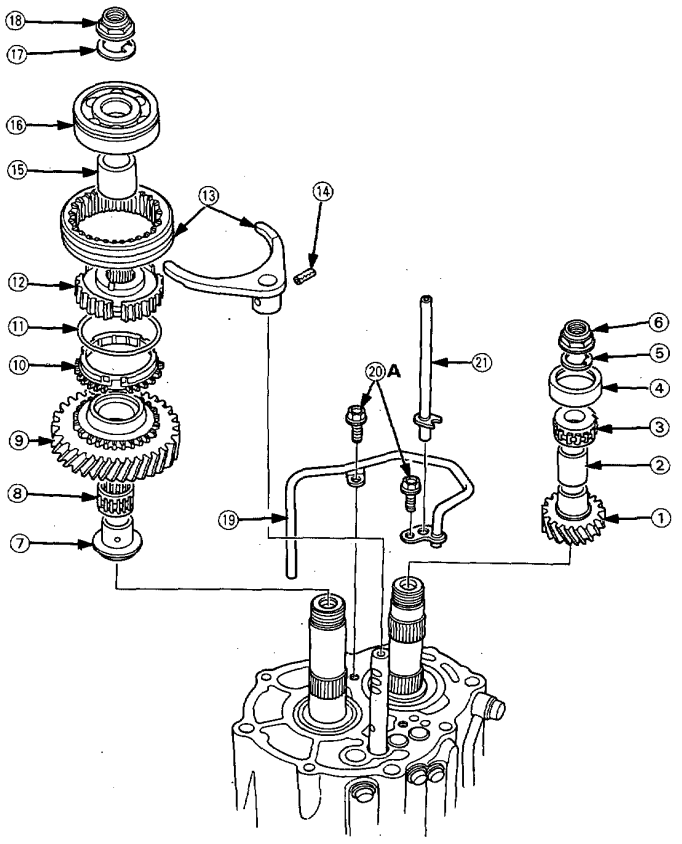

⑥ ⑱

—1. Install the mainshaft holder.

MAINSHAFT HOLDER
07LAB—PW50100

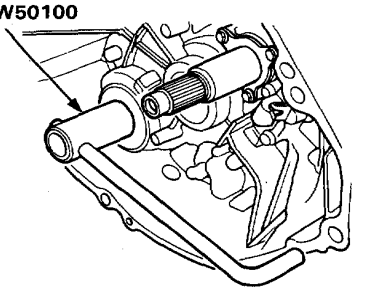

—2. Tighten the locknut, then stake the locknut tab into the groove.
NOTE: Countershaft locknut has left-hand threads.

LOCKNUT
160 → 0 → 160 N·m
(16 → 0 → 16 kg-m, 116 → 0 → 16 lb-ft)

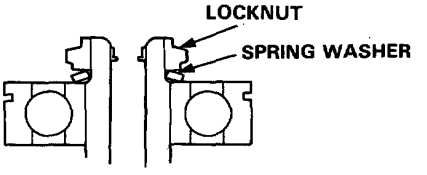

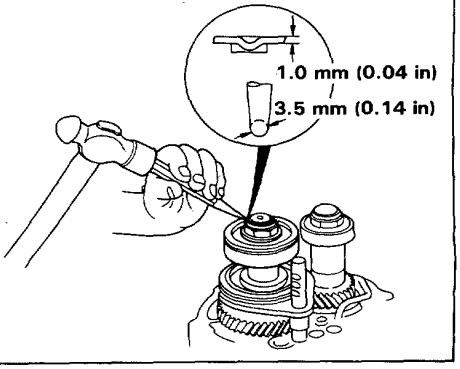

⑭

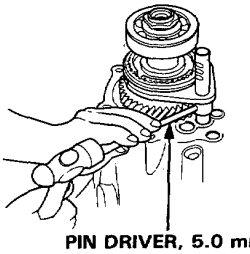

PIN DRIVER, 5.0 mm
07744—0010400

Transmission Cover

Installation

NOTE: Replace all O-rings and washers.

1. Reassemble the parts following the numbered sequence.

	Bolt Size	Torque Value	Sequence Number
A	8 x 1.25 mm	28 N•m (2.8 kg-m, 21 lb-ft)	⑦ ⑬
B	36 mm SEALING BOLT	25 N•m (2.5 kg-m, 18 lb-ft)	⑨
C	12 mm SEALING BOLT	22 N•m (2.2 kg-m, 16 lb-ft)	⑩
D	8 mm SEALING BOLT	18 N•m (1.8 kg-m, 13 lb-ft)	⑪

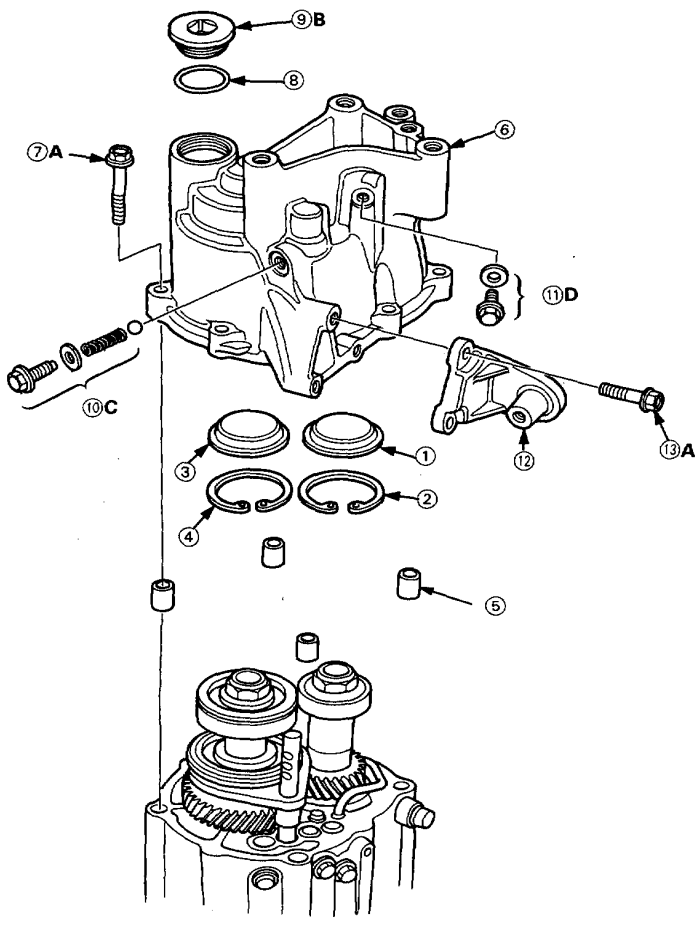

⑧ ⑨

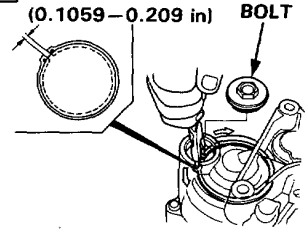

NOTE: Apply liquid gasket (P/N 08718–0001) to the threads.

① ② ③ ④

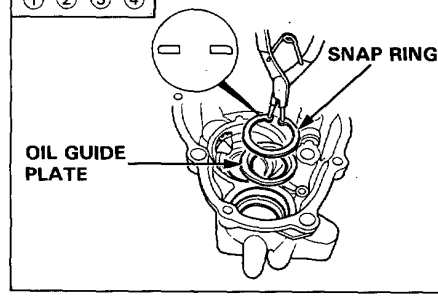

⑥

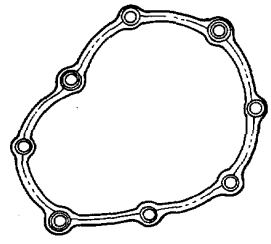

NOTE: This transmission uses no gasket between the major housings; use liquid gasket (P/N 08718–0001). Assemble the housing within 20 minutes after applying the liquid gasket and allow it to cure at least 30 minutes after assembly before filling it with oil.

⑨

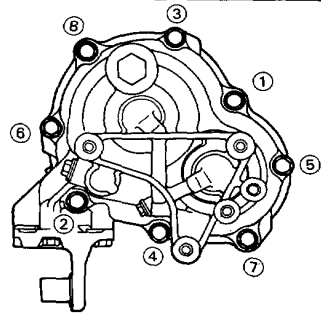

Installation

NOTE: Check that the two dowel pins are installed in the clutch housing.

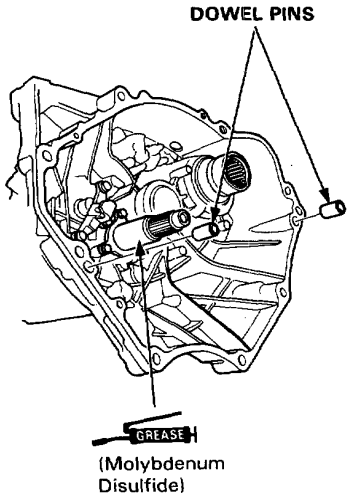

1. Set the release fork in the clutch housing.

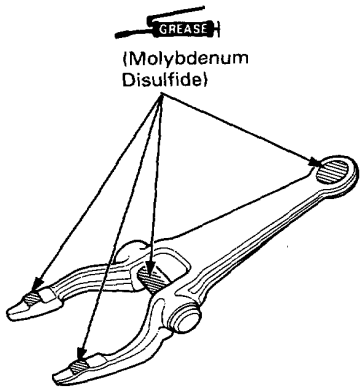

2. Set the extension shaft to the transmission, then install the set ring.

   NOTE: Apply Honda Genuine grease UM264 (P/N 41211—PY5—305) to the extension shaft spline.

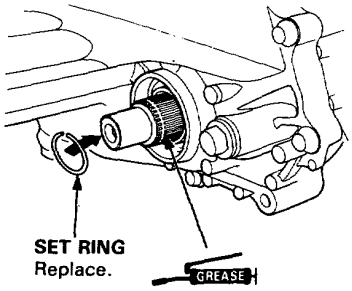

3. Place the transmission on the transmission jack, and raise it to the engine level.
4. Install the clutch cover.
5. Install the engine stiffener.
6. Install the transmission mounting bolts and 26 mm shim.

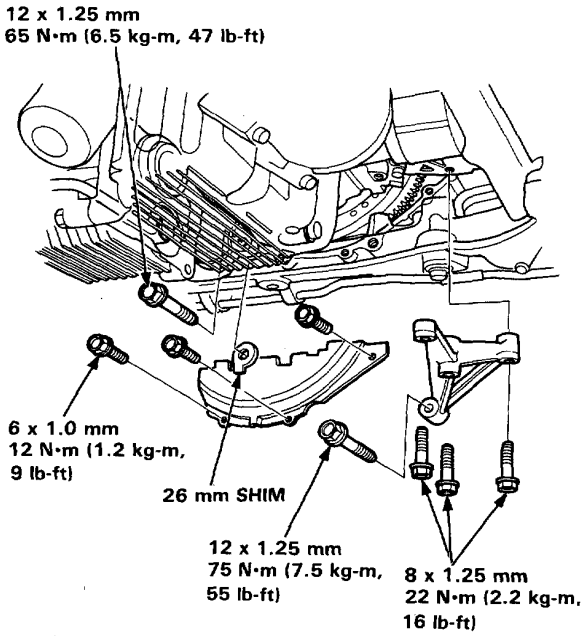

7. Install the transmission mounting bolts.

8. Install the transmission mounts.

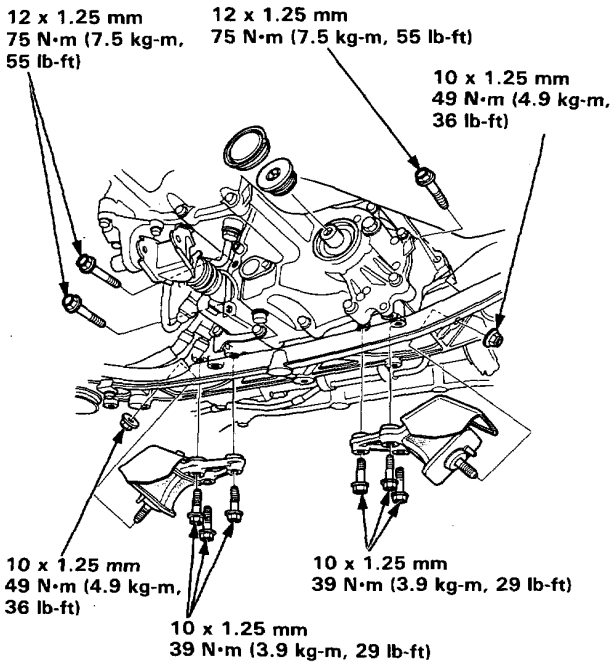

9. Install the extension shaft using the special tool as shown.

NOTE:
- Shift the transmission to low gear to lock the secondary gear.
- Make sure the extension shaft locks in the secondary gear groove.

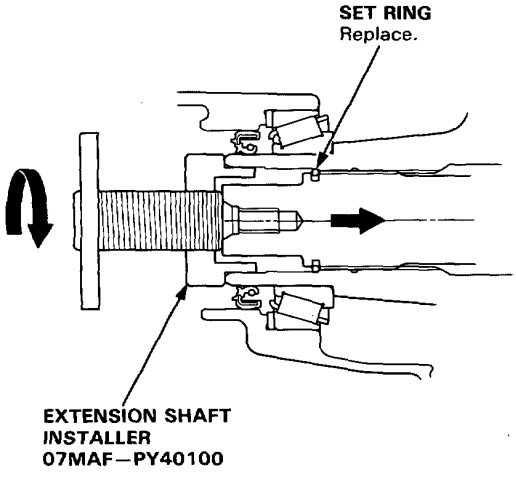

10. Install the 36 mm sealing bolt and secondary cover.

NOTE:
- Shift the transmission to low gear to lock the secondary gear.
- Apply liquid gasket (P/N 08718—0001) to the threads.
- Fill Honda Genuine grease UM264 (P/N 41211—PY5—305) in the secondary gear.

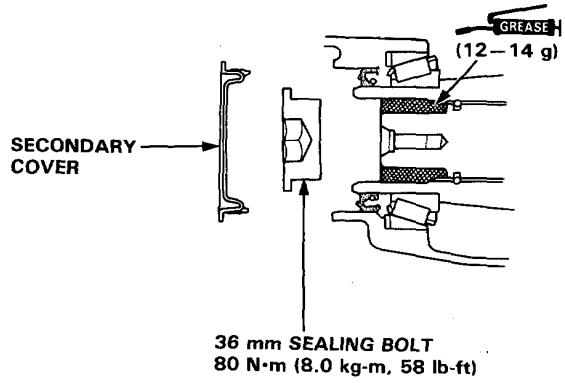

11. Install the transmission bracket and transmission mount.

12. Install the exhaust pipe stay.

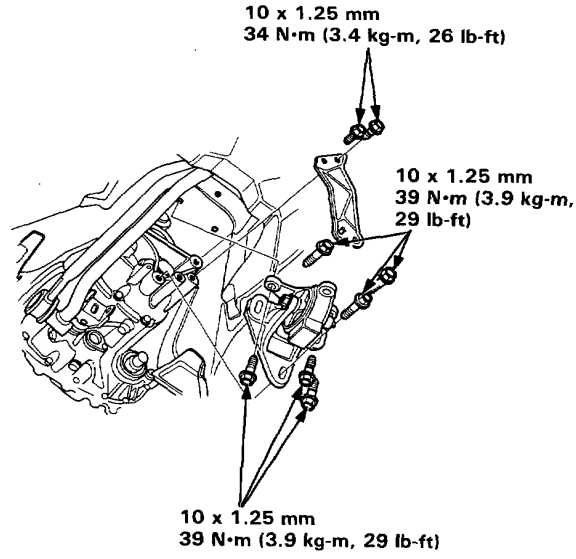

(cont'd)

Installation (cont'd)

13. Remove the steering gear box mounting bolts, then install the lower plate.

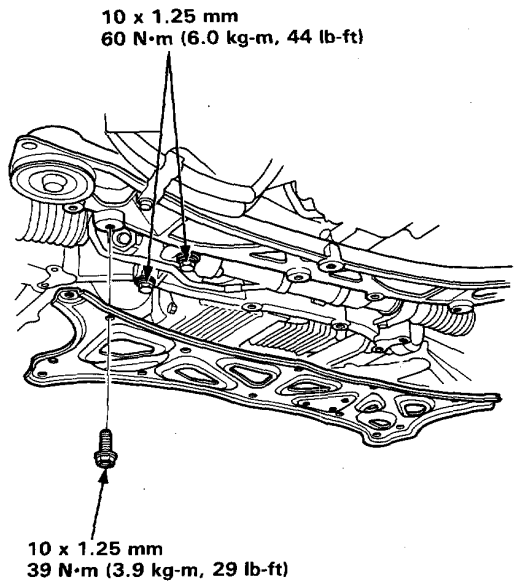

14. Install the release fork and boot.

15. Install the slave cylinder and release fork cover.

16. Connect the cooler hoses.

17. Install the shift rod and torque rod.

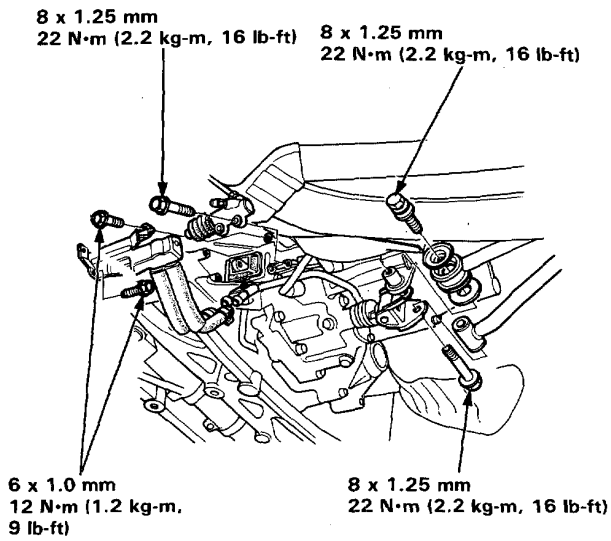

18. Install the bracket and heat shield.

19. Install the exhaust pipe.

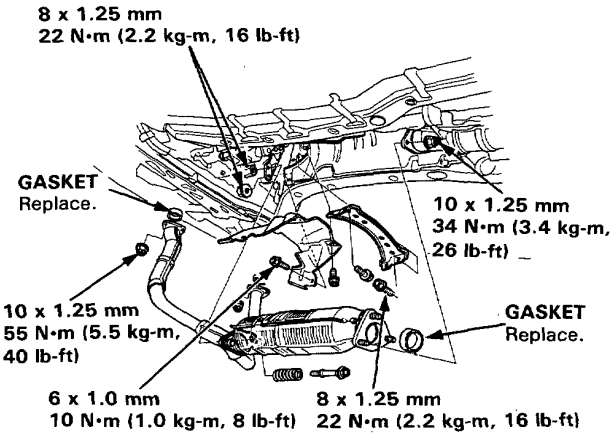

20. Install the clutch hose bracket.

21. Install the transmission mounting bolts.

22. Install the control box.

23. Install the strut bar.

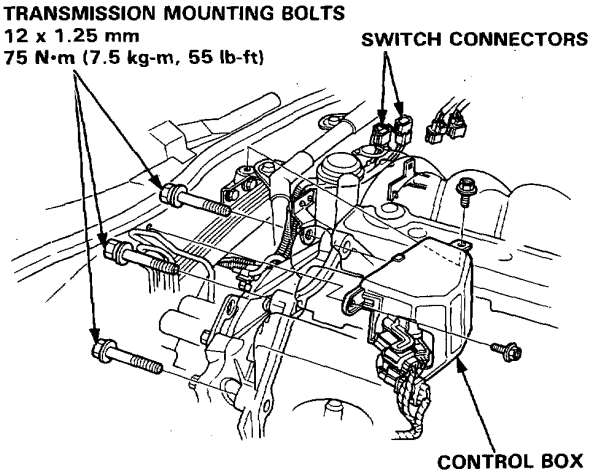

24. Refill the transmission with oil.

25. Refill the radiator coolant. (See Section 10)

26. Connect the battery positive (+) and negative (−) cables to the battery.

27. Check the clutch operation.

28. Shift the transmission and check for smooth operation.

Overhaul

NOTE: Inspect rubber parts for wear or damage when disassembling.

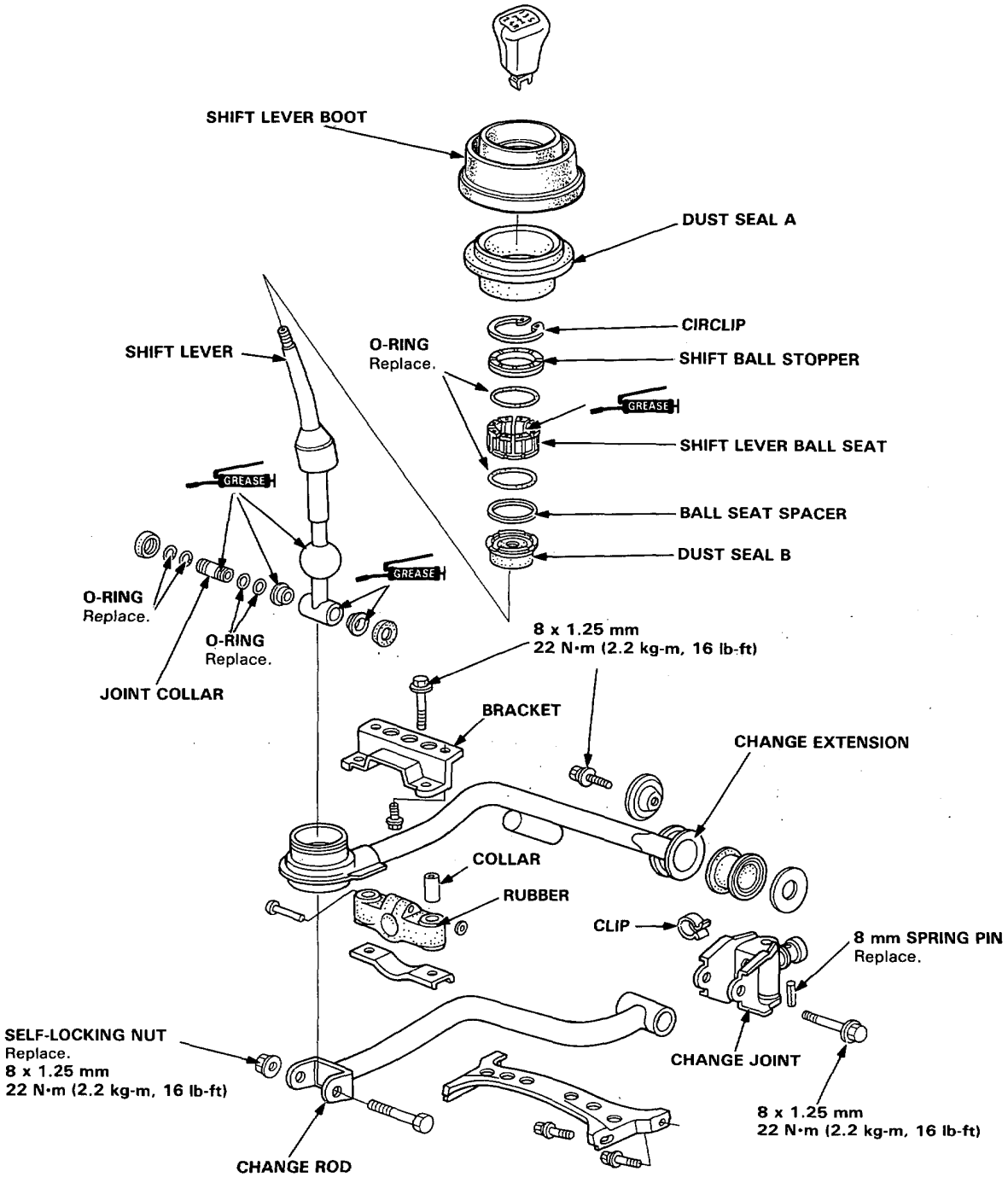

SUPPLEMENTAL RESTRAINT SYSTEM (SRS) (If automatic transmission maintenance is required)

The Legend includes a driver's side Airbag, located in the steering wheel hub. Information necessary to safely service the SRS is included in this Shop Manual. Items marked * in each section table of contents include, or are located near, SRS components. Servicing, disassembling or replacing these items will require special precautions and tools, and should therefore be done only by an authorized HONDA dealer.

⚠WARNING

- **To avoid rendering the SRS inoperative, which can lead to personal injury or death in the event of a severe frontal collision, all maintenance must be performed by an authorized HONDA dealer.**
- **Improper maintenance, including incorrect removal and installation of the SRS, can lead to personal injury caused by unintentional activation of the Airbag.**
- **All SRS electrical wiring harnesses are covered with yellow outer insulation. Related components are located in the steering column, center armrest and dashboard lower panel. Do not use electrical test equipment on these circuits.**

Automatic Transmission

Special Tools 14-2
Description 14-3

Electrical System

Component Location 14-44
Circuit Diagram 14-46
Troubleshooting Procedures 14-50
Electrical Troubleshooting
  Symptom-to-Component Chart 14-52
  Troubleshooting Flowchart 14-54
Kick-down Switch 14-77
Lock-up Control Solenoid Valve A/B 14-78
A/T Speed Sensors 14-79
Shift Control Solenoid Valve 14-80
Linear Solenoid 14-81

Hydraulic System

Hydraulic System
  Symptom-to-Component Chart 14-82
Fluid Level 14-86
Stall Speed 14-87
Road Test 14-88
Pressure Testing 14-91
Lower Valve Body Assembly
  Removal/Installation 14-95
  Disassembly/Reassembly 14-96
Throttle Valve Body/Linear Solenoid 14-97
Shift Control Solenoid Valve 14-98

Transmission

Transmission
  Removal 14-99
Illustrated Index
  Rear Cover 14-102
  Transmission Housing/Lower Valve Body . 14-104
  Transmission Housing 14-106
  Torque Converter Housing/Valve Body . . 14-108
Lower Valve Body
  Removal 14-110
Rear Cover
  Removal 14-111
Transmission Housing
  Removal 14-112
Torque Converter Housing/Valve Body
  Removal 14-113
Valve
  Repair 14-114
  Assembly 14-115
Valve Caps 14-116
Secondary Valve Body 14-117
Main Valve Body 14-118
Regulator Valve Body 14-120
Accumulator Body 14-121
Oil Pump Body 14-122
Oil Pump 14-123
Reverse Accumulator/
1st-hold Accumulator 14-124
Rear Cover 14-126
Reverse Idler Gear 14-127
Mainshaft 14-128
Countershaft 14-132
2nd Gear One-way Clutch/Parking Gear . . . 14-135
1st Gear One-way Clutch/
Countershaft 1st, 2nd Gear 14-136
Countershaft 2nd Gear/One-way Clutch Hub/
Ball Bearing 14-137
Extension Shaft 14-138
Secondary Gear Shaft Oil Seal 14-138
Tapered Roller Bearing 14-139
Oil Seal
  Removal 14-140
Bearing Outer Race 14-140
Tapered Roller Bearing Preload 14-142
Oil Seal
  Installation 14-143
Clutch
  Illustrated Index 14-144
  Disassembly 14-147
  Reassembly 14-149
Torque Converter Housing Bearings
  Mainshaft Bearing Replacement 14-153
  Countershaft Bearing Replacement 14-154
Transmission Housing Bearing 14-154
Parking Brake Mechanism 14-155
Transmission
  Reassembly 14-156
Torque Converter 14-161
Transmission
  Installation 14-162
*Shift Cable
  Removal/Installation 14-166
  Adjustment 14-168
*Gearshift Selector
  Disassembly/Reassembly 14-169
  Inspection/Adjustment 14-170
*Shift Indicator Panel 14-171

Special Tools

Ref. No.	Tool Number	Description	Qty	Page Reference
①	07GAD–SD40101	Attachment, 78 x 90 mm	1	14-137, 141
②	07HAC–PK40100	Housing Puller	1	14-112
③	07JAC–PH80000	Adjustable Bearing Remover Set	1	14-154
③-1	07JAC–PH80100	Bearing Remover Attachment	(1)	14-154
③-2	07JAC–PH80200	Remover Handle	(1)	14-154
③-3	07741–0010201	Remover Weight	(1)	14-154
④	07KAF–PS30200	Bearing Race Remover	1	14-139
⑤	07LAC–PW50100	Extension Shaft Puller	1	14-100
⑥	07LAD–SM40100	Oil Seal Driver Attachment	1	14-143
⑦	07LAE–PX40000	Clutch Spring Compressor Set	1	14-147, 150
⑦-1	07GAE–PG40200	Clutch Spring Compressor Bolt	(1)	14-147, 150
⑦-2	07HAE–PL50100	Clutch Spring Compressor Attachment	(1)	14-147, 150
⑦-3	07LAE–PX40100	Clutch Spring Compressor Attachment	(1)	14-147, 150
⑧	07LAJ–PT30100	Test Harness	1	14-51, 90
⑨	07LGC–0010100	Snap Ring Pliers	1	14-110, 148, 151, 154
⑩	07MAC–PY40100	Housing Puller Setting Bolt	1	14-112
⑪	07MAD–PR90100	Attachment, 45 x 55 mm	1	14-129, 130, 139
⑫	07MAF–PY40100	Extension Shaft Installer	1	14-163
⑬	07MAJ–PY40100	A/T Oil Pressure Gauge Hose Set	1	14-91
⑬-1	07MAJ–PY40110	A/T Oil Pressure Gauge Hose	(1)	14-91
⑬-2	07MAJ–PY40120	A/T Oil Pressure Gauge Joint	(1)	14-91
⑭	07MAZ–PY40100	A/T Test Harness Adapter	1	14-51
⑮	07406–0020003	A/T Oil Pressure Gauge Set	1	14-91
⑯	07406–0070000	A/T Low Pressure Gauge	1	14-91
⑰	07746–0010400	Attachment, 52 x 55 mm	1	14-137, 138
⑱	07746–0010500	Attachment, 62 x 68 mm	1	14-153, 154
⑲	07746–0010600	Attachment, 72 x 75 mm	1	14-141, 143, 153
⑳	07746–0030100	Driver I.D. 40 mm	1	14-158
㉑	07749–0010000	Driver	1	14-138, 141, 143, 153, 154
㉒	07924–PJ40000	Mainshaft Holder	1	14-110, 159
㉓	07947–6340500	Attachment	1	14-153

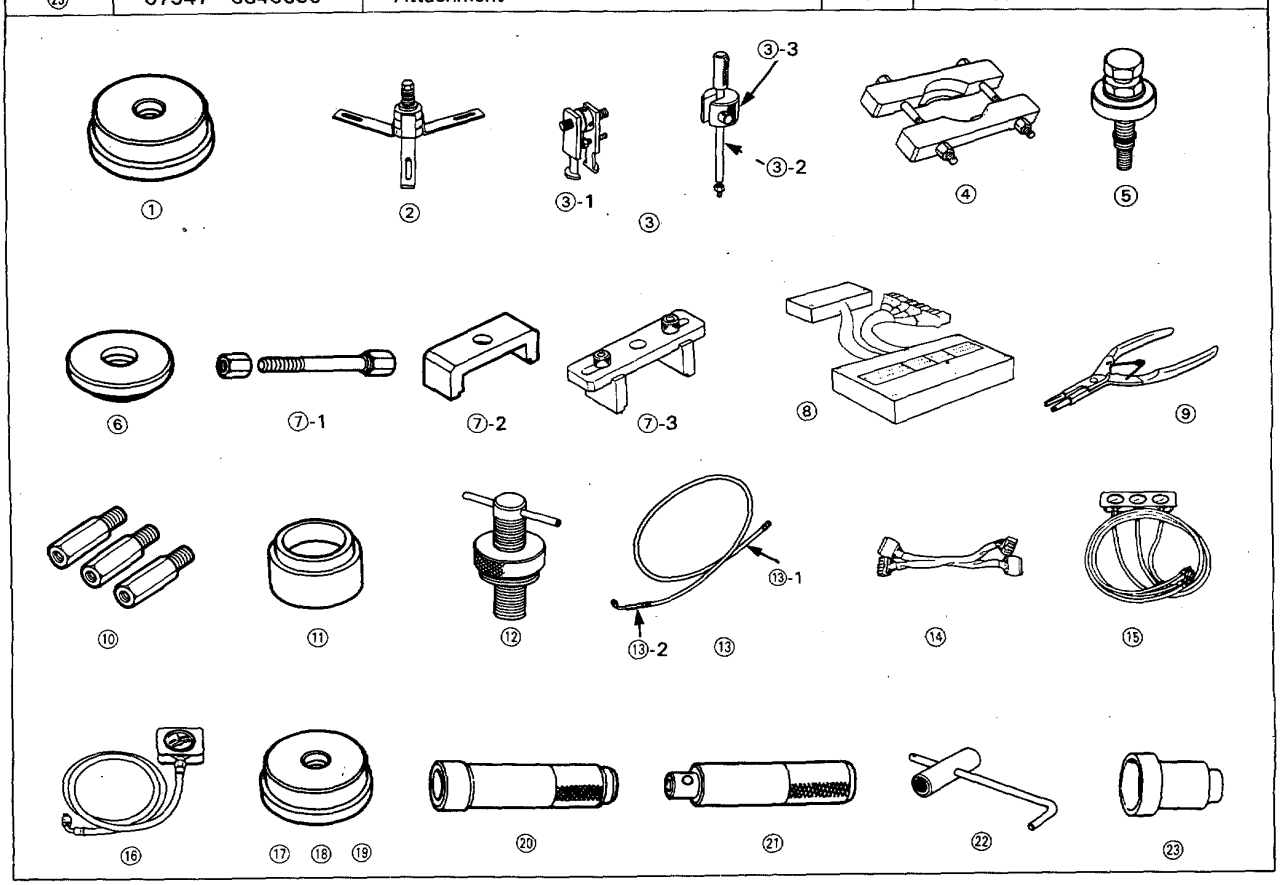

Description

The automatic transmission is a combination of a 3-element torque converter and a dual-shaft electronically controlled automatic transmission which provides 4 speeds forward and 1 reverse. The entire unit is positioned in line with the engine.

Torque Converter, Gears and Clutches

The torque converter consists of a pump, turbine and stator, assembled in a single unit.
They are connected to the engine crankshaft so they turn together as a unit as the engine turns.
Around the outside of the drive plate is a ring gear which meshes with the starter pinion when the engine is being started.
The entire torque converter assembly serves as a flywheel while transmitting power to the transmission mainshaft.
The transmission has two parallel shafts, the mainshaft and the countershaft. The mainshaft is in line with the engine crankshaft.
The mainshaft includes the clutches for 1st, 4th and 2nd, and gears for 4th, 1st, 2nd and reverse (3rd gear is integral with the mainshaft).
The countershaft includes the clutches for 3rd, 1st-hold and reverse, and gears for 3rd, 4th, 1st, 2nd and reverse. The secondary drive gear is integrated with the countershaft.
The gears on the mainshaft are in constant mesh with those on the countershaft.
When certain combinations of gears in the transmission are engaged by clutches, power is transmitted from the mainshaft to the countershaft to provide [1], [2], [D_3], and [D_4].

Electronic Control

The electronic control system consists of PGM-FI/AT Electronic Control Unit (ECU), sensors, a linear solenoid and 4 solenoid valves. Shifting and lock-up are electronically controlled for comfortable driving under all conditions.
The ECU is located below the dashboard, under the front lower panel on the passenger's side.

Hydraulic Control

The lower valve body assembly includes the main valve body, secondary valve body, throttle valve body, linear solenoid, shift control solenoid valves and the oil pass body. They are bolted on the lower part of the transmission housing.
Other valve bodies, the regulator valve body, oil pump body and the accumulator body, are bolted to the torque converter housing.
The main valve body contains the manual valve, 1-2 shift valve, 2-3 shift valve, 3-4 shift valve, 4-3 kick-down valve and Clutch Pressure Control(CPC) valve.
The secondary valve body contains the 3-4 orifice control valve, shift timing valve, modulator valve and accumulator pistons.
The throttle valve body includes the throttle valve which is bolted onto the secondary valve body.
The linear solenoid is joined to the throttle valve body.
The regulator valve body contains the regulator valve, lock-up shift valve and cooler relief valve.
Fluid from the regulator passes through the manual valve to the various control valves.
The oil pump body contains the lock-up timing valve, lock-up control valve and relief valve. The torque converter check valve is located in the torque converter housing under the oil pump body.
The accumulator body contains the accumulator pistons. The reverse accumulator and 1st-hold accumulator pistons are assembled in the rear cover.
The 1st, 1st-hold and reverse clutches receive oil from their respective feed pipes.

Shift Control Mechanism

Input from various sensors located throughout the car determines which shift control solenoid valve the ECU will activate. Activating a shift control solenoid valve changes modulator pressure, causing a shift valve to move. This pressurizes a line to one of the clutches, engaging that clutch and its corresponding gear.

Lock-up Mechanism

In [D_4] position, in 2nd, 3rd and 4th, pressurized fluid is drained from the back of the torque converter through an oil passage, causing the lock-up piston to be held against the torque converter cover. As this takes place, the mainshaft rotates at the same speed as the engine crankshaft. Together with hydraulic control, the ECU optimizes the timing of the lock-up mechanism. The lock-up valves control the range of lock-up according to lock-up control solenoid valves A and B, and throttle valve. When lock-up control solenoid valves A and B activate, modulator pressure changes. The lock-up control solenoid valves A and B are mounted on the torque converter housing, and are controlled by the ECU.

(cont'd)

Gear Selection
The selector lever has seven positions; [P] PARK, [R] REVERSE, [N] NEUTRAL, [D4] 1st through 4th positions, [D3] 1st through 3rd positions, [2] 2nd gear and [1] 1st gear.

Position	Description
[P] PARK	Front wheels locked; parking pawl engaged with parking gear on countershaft. All clutches released.
[R] REVERSE	Reverse; reverse clutch engaged.
[N] NEUTRAL	All clutches released.
[D4] DRIVE (1 through 4)	General driving; starts off in 1st, shifts automatically to 2nd, 3rd, then 4th, depending on vehicle speed and throttle position. Downshifts through 3rd, 2nd and 1st on deceleration to stop. The lock-up mechanism comes into operation in 2nd, 3rd and 4th when the transmission in D4.
[D3] DRIVE (1 through 3)	For rapid acceleration at highway speeds and general driving; starts off in 1st, shifts automatically to 2nd then 3rd, depending on vehicle speed and throttle position. Downshifts through lower gears on deceleration to stop.
[2] SECOND	Driving in 2nd gear; stays in 2nd gear, does not shift up and down. For engine braking or better traction starting off on loose or slippery surface.
[1] FIRST	Driving in 1st gear; stays in 1st gear, does not shift up and down. For engine braking.

Starting is possible only in [P] and [N] position through use of a slide-type, neutral-safety switch.

Position Indicator
A position indicator in the instrument panel shows what gear has been selected without having look down at the console.

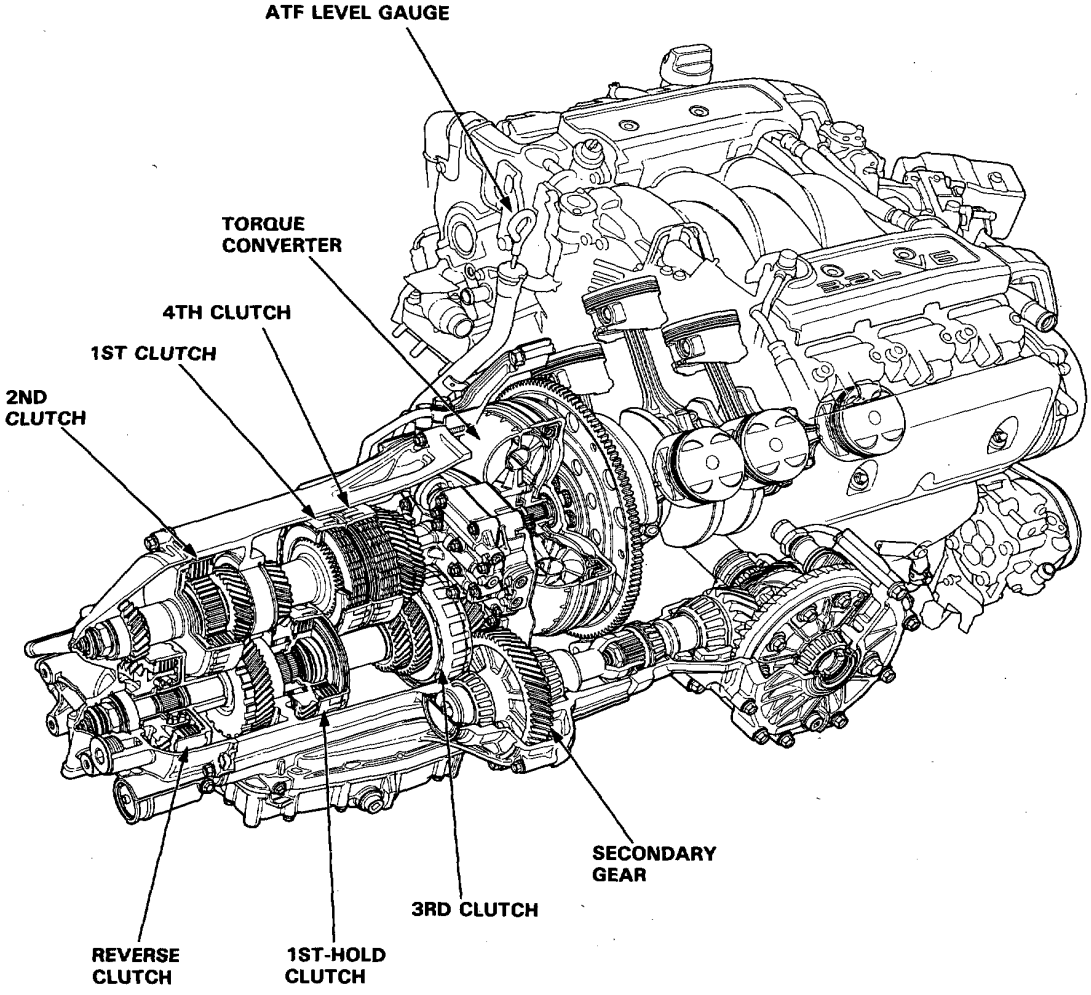
ATF LEVEL GAUGE
TORQUE CONVERTER
4TH CLUTCH
1ST CLUTCH
2ND CLUTCH
SECONDARY GEAR
3RD CLUTCH
REVERSE CLUTCH
1ST-HOLD CLUTCH

(cont'd)

Clutches (cont'd)

The four speed automatic transmission uses hydraulically actuated clutches to engage or disengage the transmission gears. When clutch pressure is introduced into the clutch drum, the clutch piston is applied. This presses the friction discs and steel plates together, locking them so they don't slip. Power is then transmitted through the engaged clutch pack to its hub-mounted gear.

Likewise, when clutch pressure is bled from the clutch pack, the piston releases the friction discs and steel plates, and they are free to slide past each other while disengaged. This allows the gear to spin independently of its shaft, transmitting no power.

[1st Clutch]
The first clutch engages/disengages first gear, and is located at the right of center on the mainshaft. The first clutch is joined back-to-back to the fourth clutch. The first clutch is supplied clutch pressure by its oil feed pipe within the mainshaft.

[1st-hold Clutch]
The first hold clutch engages/disengages first hold, 1 position or 2 position, and is located at the center of the countershaft. The first hold clutch is supplied clutch pressure by its oil feed pipe within the countershaft.

[2nd Clutch]
The second clutch engages/disengages second gear, and is located at the right of the mainshaft. The second clutch is supplied clutch pressure by its oil feed pipe within the mainshaft.

[3rd Clutch]
The third clutch engages/disengages third gear, and is located at the end of the countershaft, opposite the rear cover. The third clutch is supplied clutch pressure by its oil feed pipe within the countershaft.

[4th Clutch]
The fourth clutch engages/disengages fourth gear, and is located at the left of center on the mainshaft. The fourth clutch is joined back-to-back to the first clutch. The fourth clutch is supplied clutch pressure by its oil feed pipe within the mainshaft.

[Reverse Clutch]
The reverse clutch engages/disengages reverse gear, and is located at the right of the countershaft. The reverse clutch is supplied clutch pressure by its oil feed pipe within the countershaft.

[One-way Clutch]
This transmission has two one-way clutches, the first gear one-way clutch and the second gear one-way clutch. The first gear one-way clutch is positioned between the first gear and the one-way clutch hub, with the one-way clutch hub splined to second gear. The first gear provides the outer race surface. The second gear one-way clutch is positioned between the second gear and the parking gear, with the parking gear splined to the countershaft. The second gear provides the outer race surface, and the parking gear provides the inner race surface. The one-way clutches lock up when power is transmitted from the mainshaft first gear to the countershaft first gear. The second gear one-way clutch locks up when power is transmitted from the mainshaft second gear to the countershaft second gear.
The first clutch and gears remain engaged in the 1st, 2nd, 3rd, and 4th gear ranges in the D_3 or D_4 position. However, the first gear one-way clutch disengages when the 2nd, 3rd, or 4th clutches/gears are applied in the D_3 or D_4 position. This is because the increased rotational speed of the gears on the countershaft over-ride the locking "speed range" of the one-way clutch. Thereafter, the one-way clutch freewheels with the first clutch still engaged.

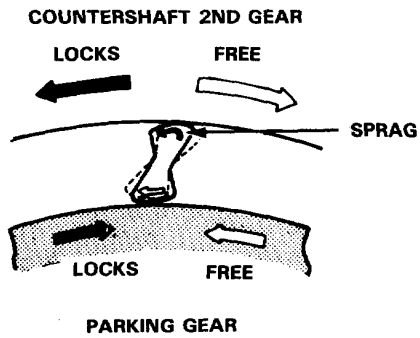

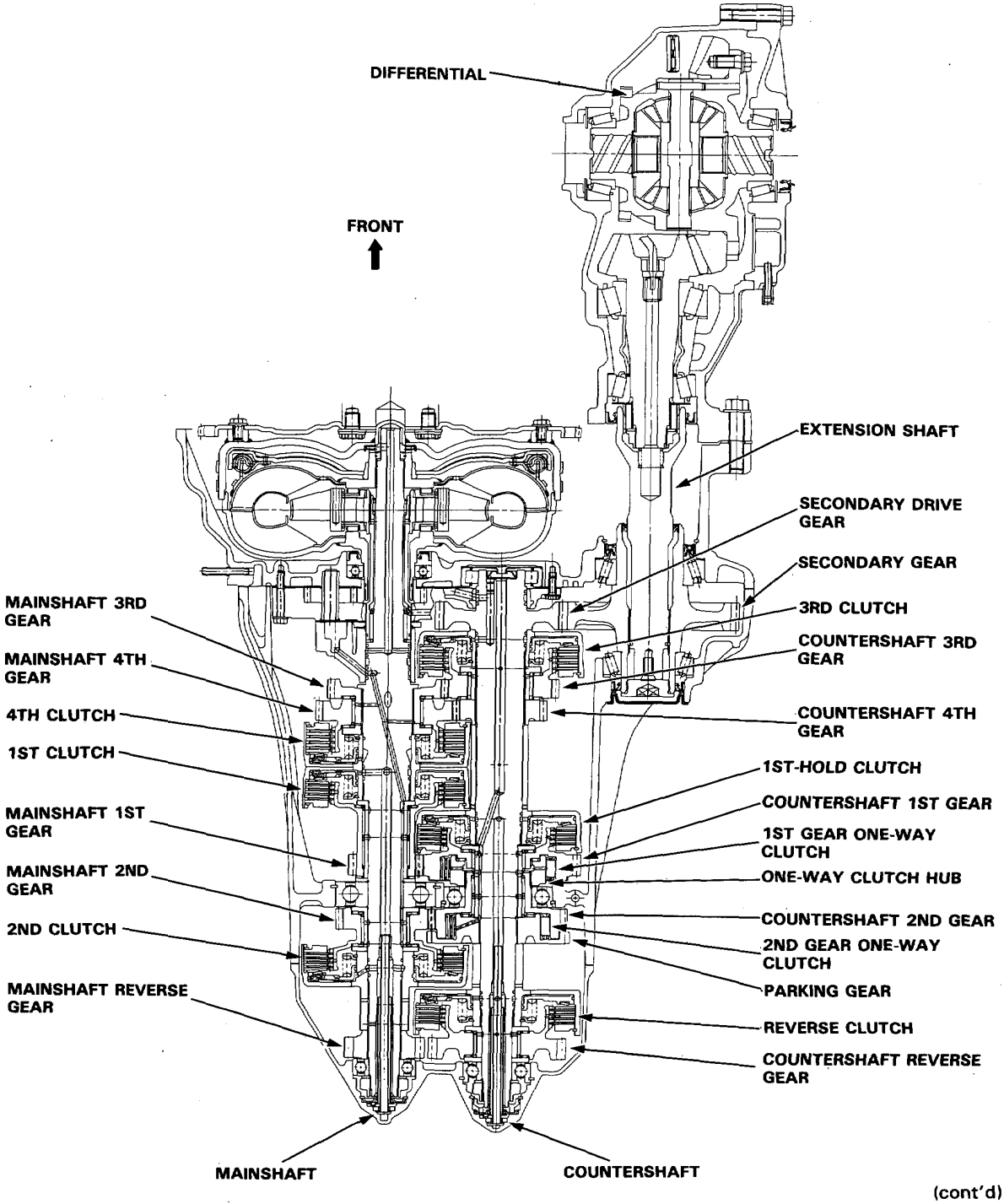
DIFFERENTIAL
FRONT
EXTENSION SHAFT
SECONDARY DRIVE GEAR
SECONDARY GEAR
3RD CLUTCH
COUNTERSHAFT 3RD GEAR
COUNTERSHAFT 4TH GEAR
1ST-HOLD CLUTCH
COUNTERSHAFT 1ST GEAR
1ST GEAR ONE-WAY CLUTCH
ONE-WAY CLUTCH HUB
COUNTERSHAFT 2ND GEAR
2ND GEAR ONE-WAY CLUTCH
PARKING GEAR
REVERSE CLUTCH
COUNTERSHAFT REVERSE GEAR
MAINSHAFT 3RD GEAR
MAINSHAFT 4TH GEAR
4TH CLUTCH
1ST CLUTCH
MAINSHAFT 1ST GEAR
MAINSHAFT 2ND GEAR
2ND CLUTCH
MAINSHAFT REVERSE GEAR
MAINSHAFT
COUNTERSHAFT

(cont'd)

Clutches (cont'd)

Lock-up Clutch

1. Operation (clutch on)

With the lock-up clutch on, the oil in the chamber between the torque converter cover and lock-up piston is discharged, and the converter oil exerts pressure through the piston against the converter cover. As a result, the converter turbine is locked on the converter cover firmly. The effect is to bypass the converter, thereby placing the car in direct drive.

Power flow

The power flows by way of:

Engine
↓
Drive plate
↓
Torque converter cover
↓
Lock-up piston
↓
Damper spring
↓
Turbine
↓
Mainshaft

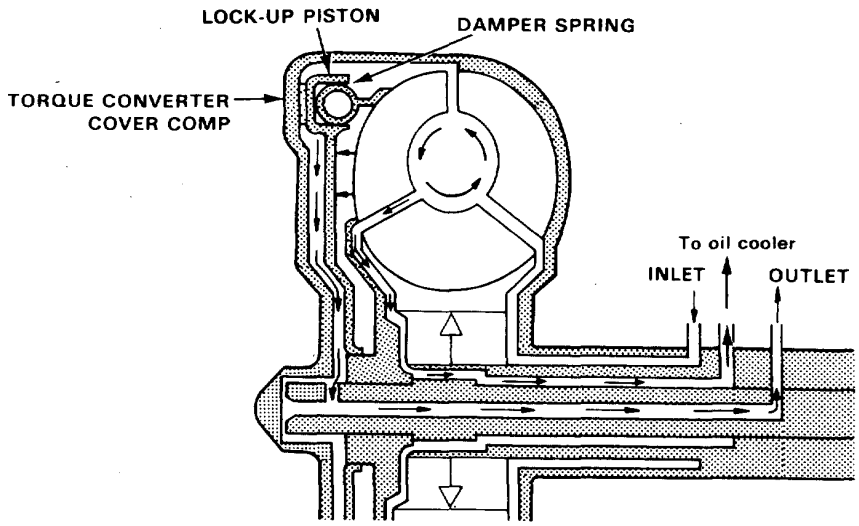

2. Operation (clutch off)

With the lock-up clutch off, the oil flows in the reverse of CLUTCH ON. As a result, the lock-up piston is moved away from the converter cover; that is, the torque converter lock-up is released.

Power flow

Engine
↓
Drive plate
↓
Torque converter cover
↓
Pump
↓
Turbine
↓
Mainshaft

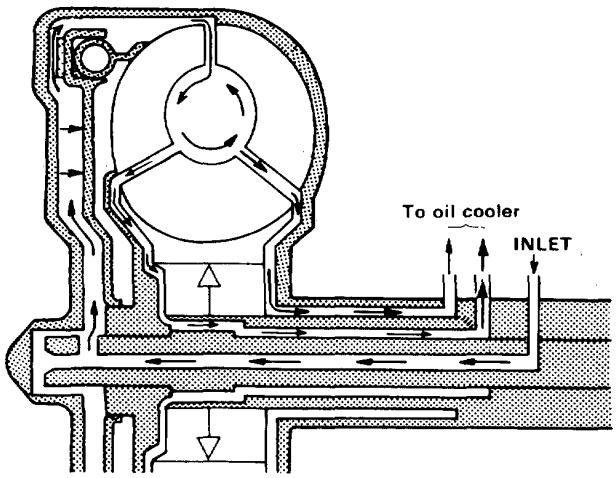

Power Flow

RANGE \ PART		TORQUE CONVERTER	1ST HOLD CLUTCH	1ST GEAR 1ST CLUTCH	2ND GEAR 2ND CLUTCH	3RD GEAR 3RD CLUTCH	4TH GEAR 4TH CLUTCH	RVS. GEAR REVERSE CLUTCH	PARKING GEAR
P		○	×	×	×	×	×	×	○
R		○	×	×	×	×	×	○	×
N		○	×	×	×	×	×	×	×
D4	1ST	○	×	○	×	×	×	×	×
	2ND	○	×	○*	○	×	×	×	×
	3RD	○	×	○*	○*	○	×	×	×
	4TH	○	×	○*	○*	×	○	×	×
D3	1ST	○	×	○	×	×	×	×	×
	2ND	○	×	○*	○	×	×	×	×
	3RD	○	×	○*	○*	○	×	×	×
2		○	○	×	○	×	×	×	×
1		○	○	○	×	×	×	×	×

○: Operates, × : Doesn't, *: Although the 1st clutch engages, driving power is not transmitted because the one-way clutch slips.

N Position
Hydraulic pressure is not applied to the clutches. Power is not transmitted to the countershaft.

P Position
Hydraulic pressure is not applied to the clutches. Power is not transmitted to the countershaft.
The countershaft is locked by the parking pawl interlocking the parking gear.

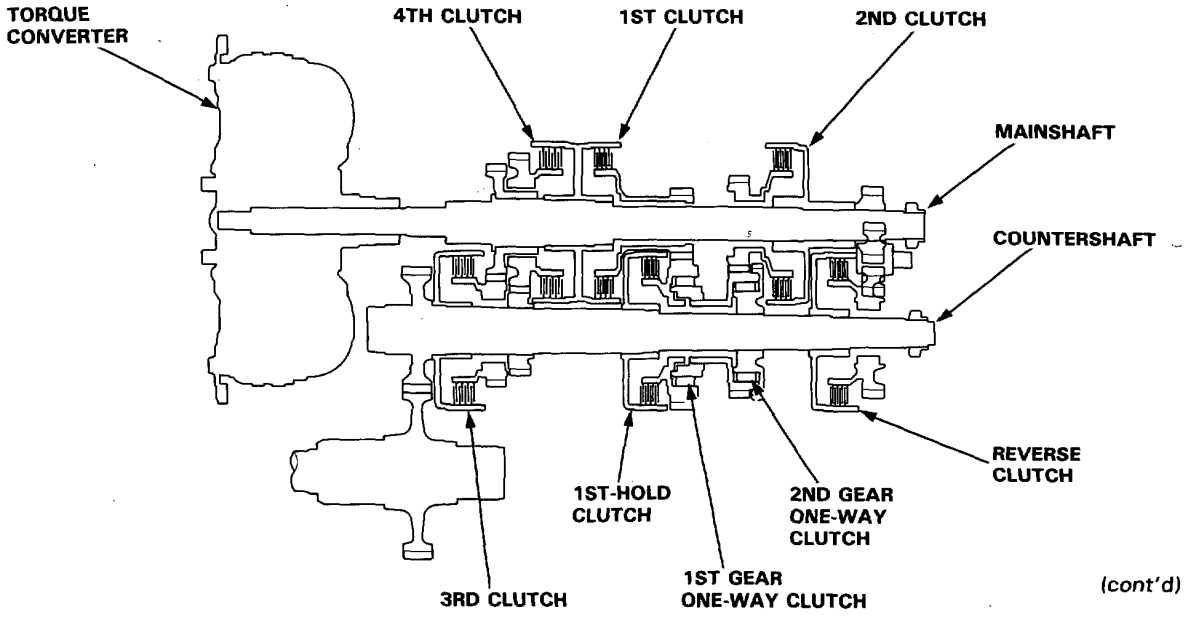

(cont'd)

Power Flow (cont'd)

[1] Position

At [1] position, hydraulic pressure is applied to the 1st clutch and 1st-hold clutch.

The power flow when accelerating is as follows;

1. Hydraulic pressure is applied to the 1st clutch on the mainshaft and power is transmitted via the 1st clutch to the mainshaft 1st gear.
2. Hydraulic pressure is also applied to the 1st-hold clutch on the countershaft. Power *transmitted* to the mainshaft 1st gear is conveyed via the countershaft 1st gear to the 1st gear one-way clutch and 2nd gear one-way clutch, and the 1st-hold clutch. The one-way clutches are used to drive the countershaft, and the 1st-hold clutch drives the countershaft.
3. Power is transmitted to the secondary drive gear and drives the secondary gear.

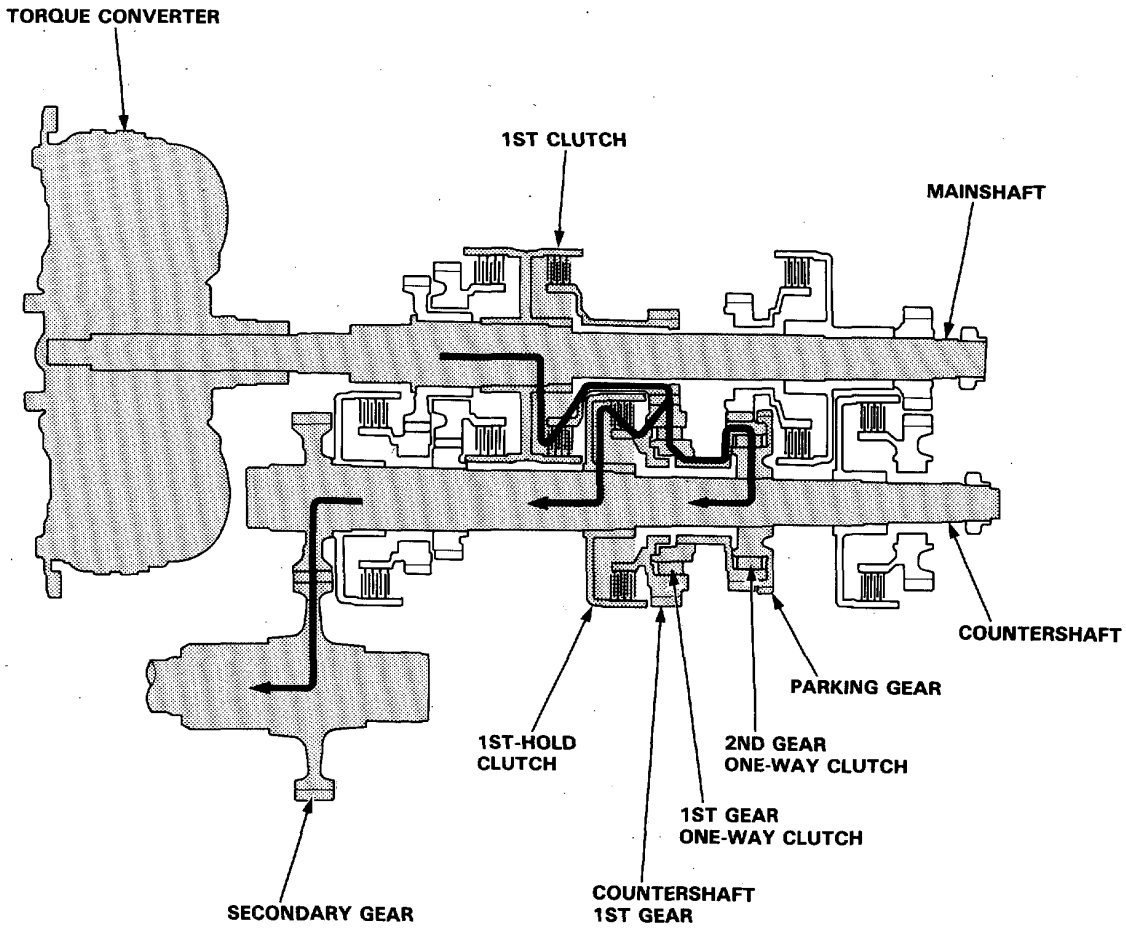

1 Position

The power flow when decelerating is as follows;

1. Rolling resistance from the road surface goes through the front wheels to the secondary drive gear, then to the countershaft 1st gear via the 1st-hold clutch which is applied during deceleration.

2. The 1st gear one-way clutch becomes free at this time because the countershaft torque reverses.

3. The counterforce conveyed to the countershaft 1st gear turns the mainshaft 1st gear. At this time, since hydraulic pressure is also applied to the 1st clutch, counterforce is also transmitted to the mainshaft. As a result, engine braking can be obtained with 1st gear.

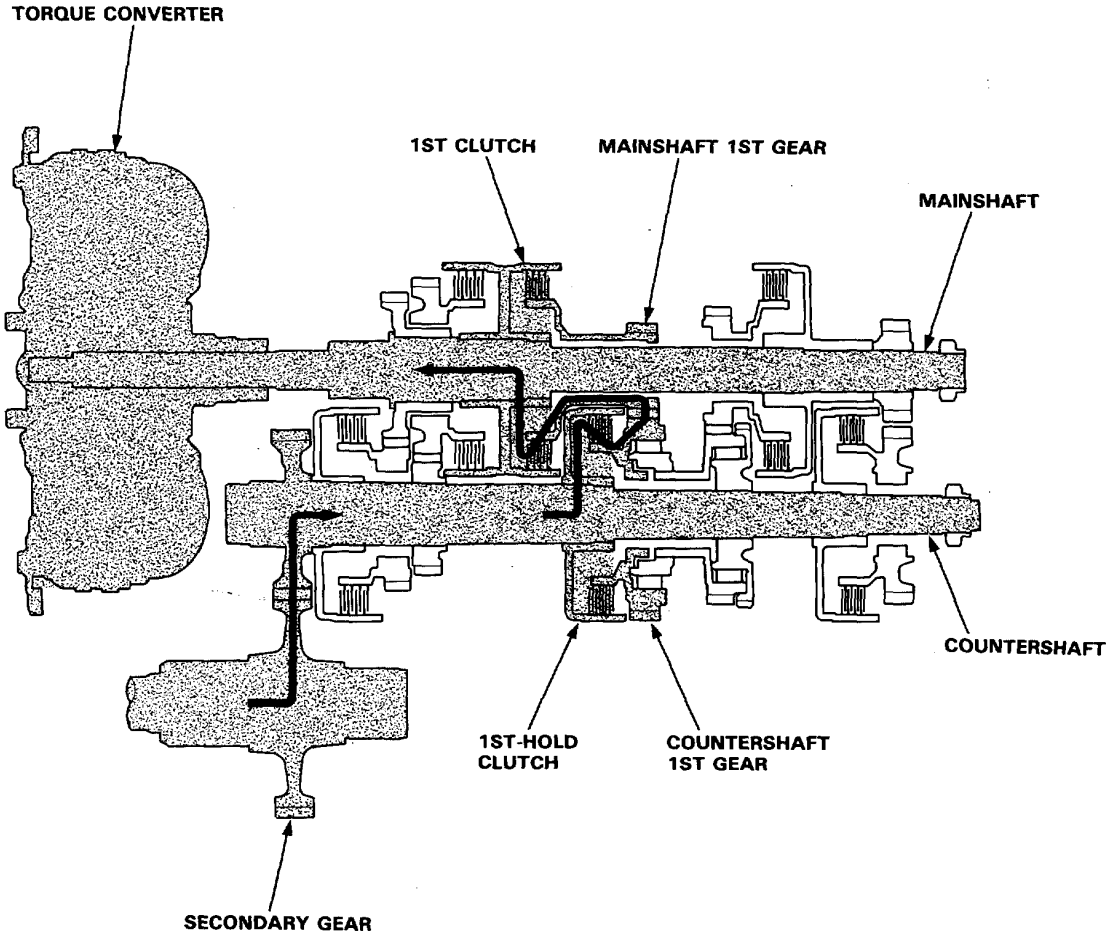

(cont'd)

Power Flow (cont'd)

[2] Position is provided to drive only 2nd speed.
At [2] position, hydraulic pressure is applied to the 2nd clutch and to the 1st-hold clutch.

The power flow when accelerating is as follows;

1. Hydraulic pressure is applied to the 2nd clutch on the mainshaft and power is transmitted via the 2nd clutch to the mainshaft 2nd gear.
2. Power transmitted to the mainshaft 2nd gear is conveyed via the countershaft 2nd gear to the 2nd gear one-way clutch on the inside of the countershaft 2nd gear. The 2nd gear one-way clutch is used to drive the countershaft.
3. Power is transmitted to the secondary drive gear and drives the secondary gear.
   Hydraulic pressure is applied to the 1st-hold clutch but the countershaft is rotated by the 1st gear one-way clutch.

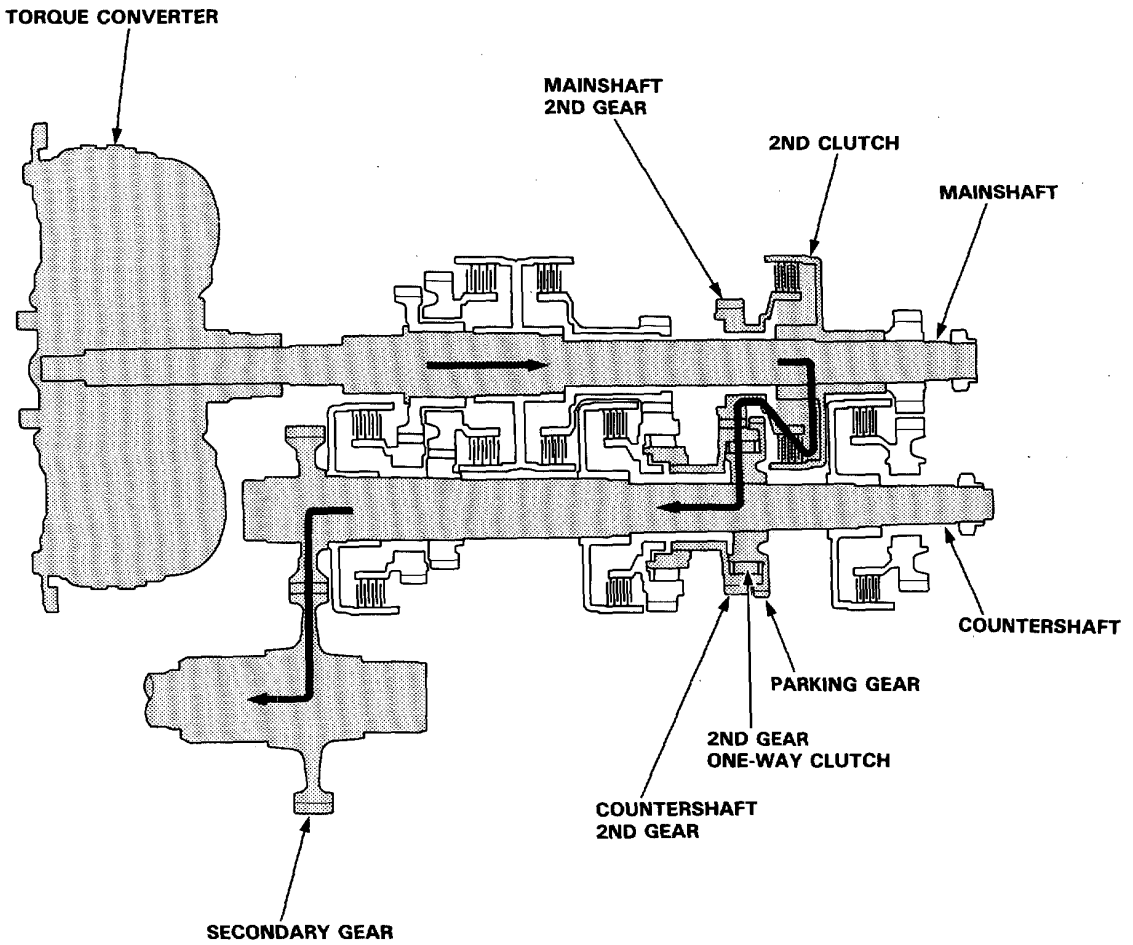

2 Position

The power flow when decelerating is as follows;

1. Rolling resistance from the road surface goes through the front wheels to the secondary drive gear, then to the countershaft 1st gear via the 1st-hold clutch which is applied during deceleration.

2. Power transmitted to the countershaft 1st gear is conveyed via the 1st gear one-way clutch on the inside of the countershaft 1st gear to the countershaft 2nd gear. The 1st gear one-way clutch is used to drive the countershaft 2nd gear.

3. The 2nd gear one-way clutch becomes free at this time because the countershaft torque reverses.

4. The counterforce conveyed to the countershaft 1st gear turns the mainshaft 2nd gear. At this time, since hydraulic pressure is applied to the 2nd clutch, counterforce is transmitted to the mainshaft. As a result, engine braking can be obtained with 2nd gear.

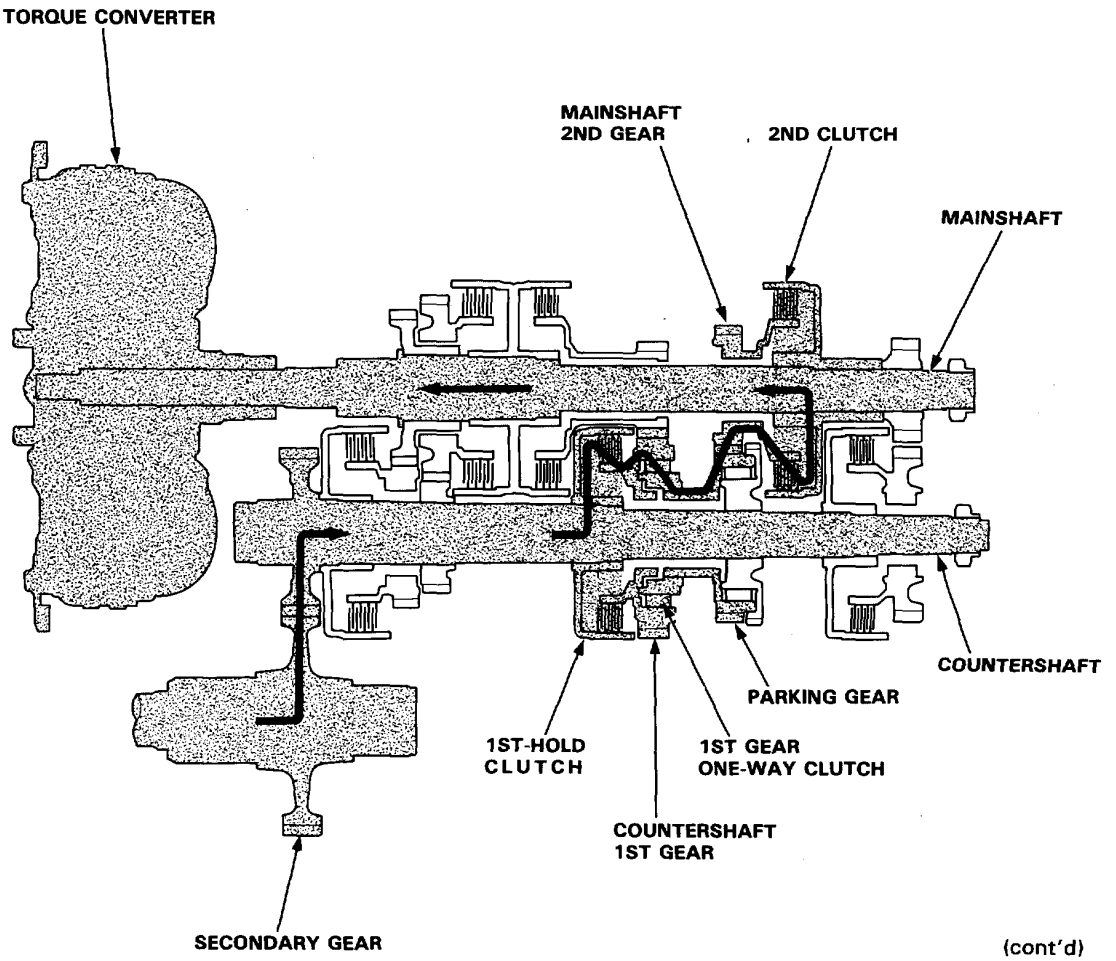

(cont'd)

Power Flow (cont'd)

In [D4] or [D3] position, the optimum gear is automatically selected from 1st, 2nd, 3rd and 4th speeds, according to conditions such as the balance between throttle opening (engine load) and vehicle speed.

[D4] or [D3] Position, 1st speed

1. Hydraulic pressure is applied to the 1st clutch, which rotates together with the mainshaft, and the mainshaft 1st gear rotates.
2. Power is transmitted to the countershaft 1st gear, and drives the countershaft via the one-way clutches.
3. Power is transmitted to the secondary drive gear and drives the secondary gear.

   NOTE: In [D4] or [D3] position, hydraulic pressure is not applied to the 1st-hold clutch.

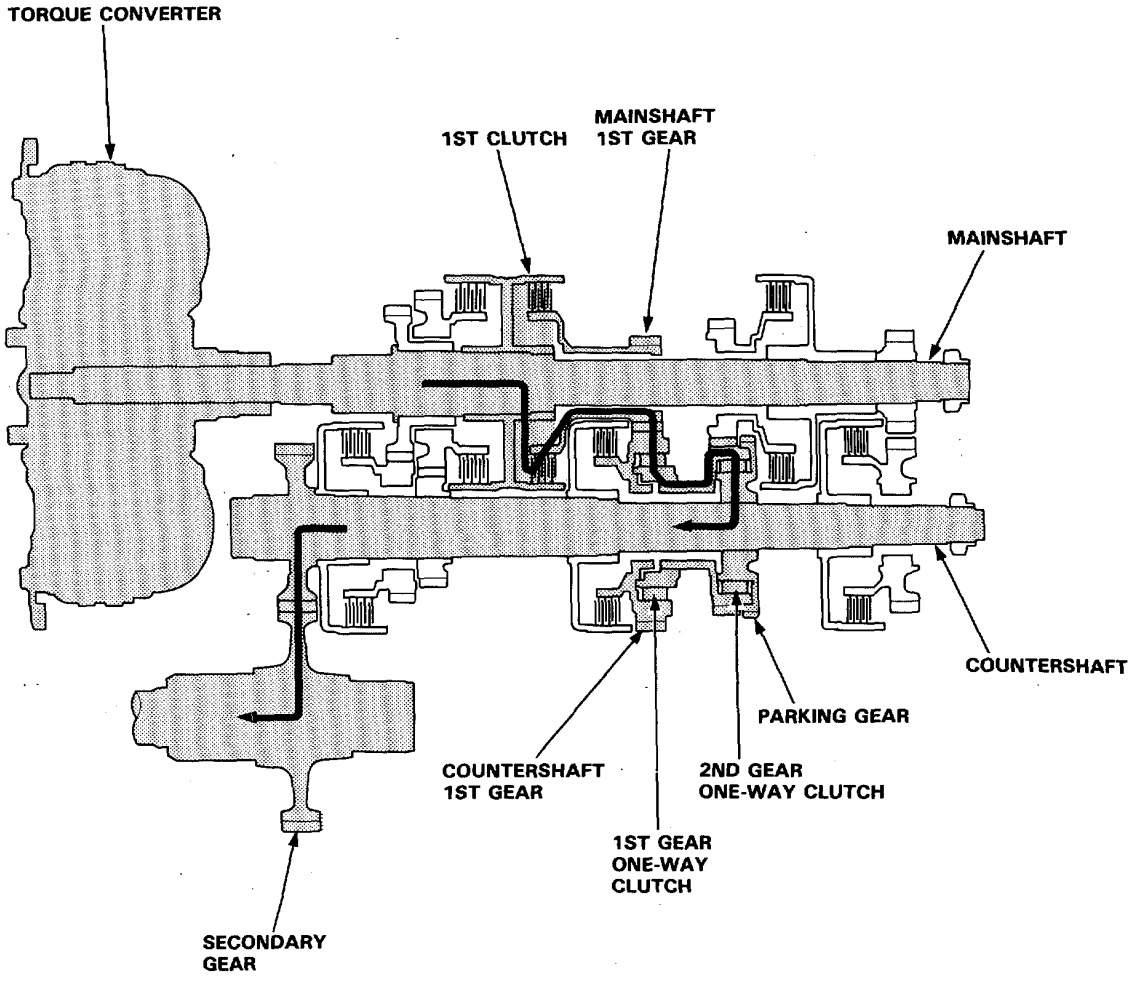

D4 or D3 Position, 2nd speed

1. Hydraulic pressure is applied to the 2nd clutch, which rotates together with the mainshaft, and the mainshaft 2nd gear rotates.

2. Power is transmitted to the countershaft 2nd gear, and drives the countershaft via the 2nd gear one-way clutch.

3. Power is transmitted to the secondary drive gear and drives the secondary gear.

   NOTE: In D4 or D3 position, 2nd speed, hydraulic pressure is also applied to the 1st clutch, but since the rotation speed of 2nd gear exceeds that of 1st gear, power from 1st gear is cut off at the 1st gear one-way clutch.

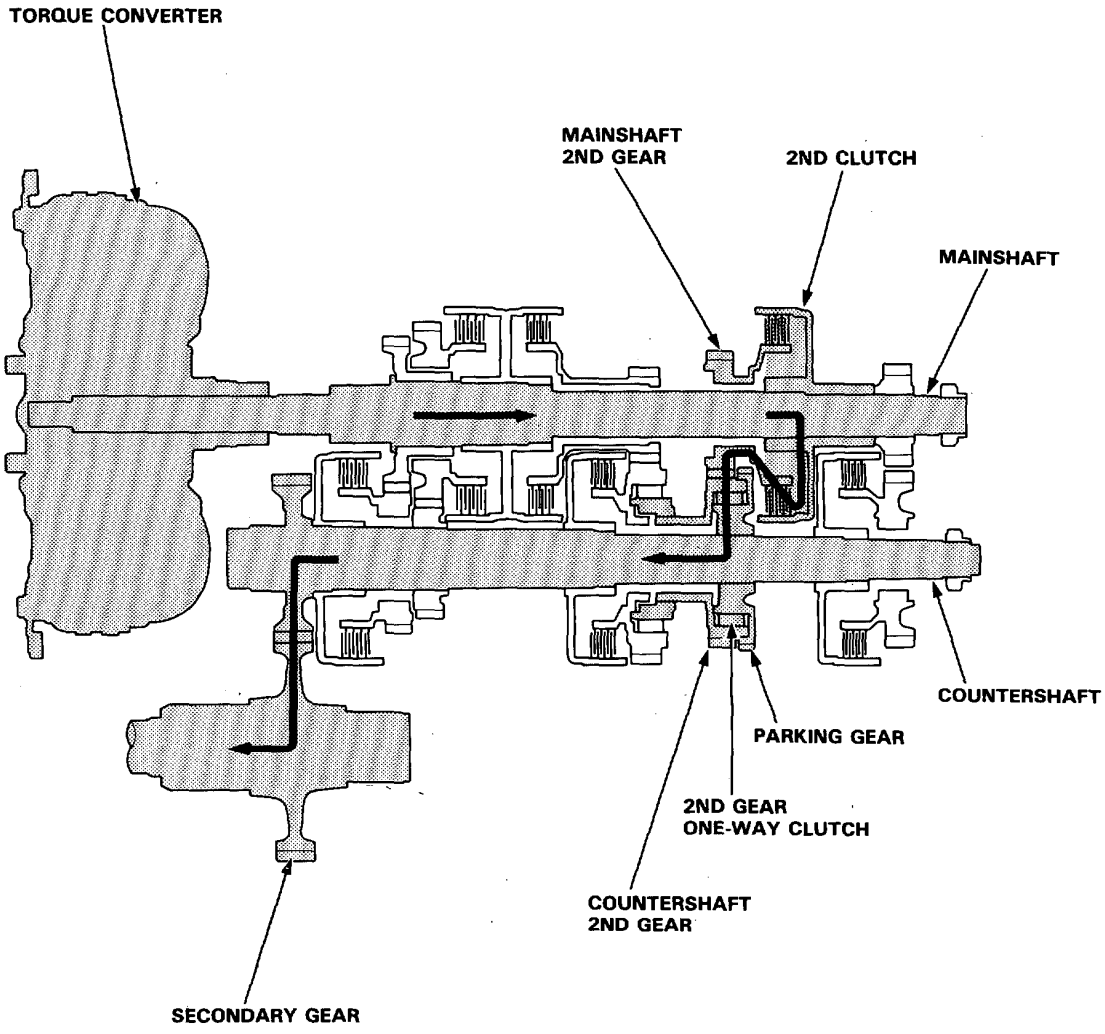

(cont'd)

Description

Power Flow (cont'd)

D_4 or D_3 Position, 3rd speed

1. Hydraulic pressure is applied to the 3rd clutch. Power from the mainshaft 3rd gear is transmitted to the countershaft 3rd gear.

2. Power is transmitted to the secondary drive gear and drives the secondary gear.

   NOTE: In D_4 or D_3 position, 3rd speed, hydraulic pressure is also applied to the 1st clutch and to the 2nd clutch, but since the rotation speed of 3rd gear exceeds that of 2nd gear, power from 2nd gear is cut off at the 2nd gear one-way clutch.

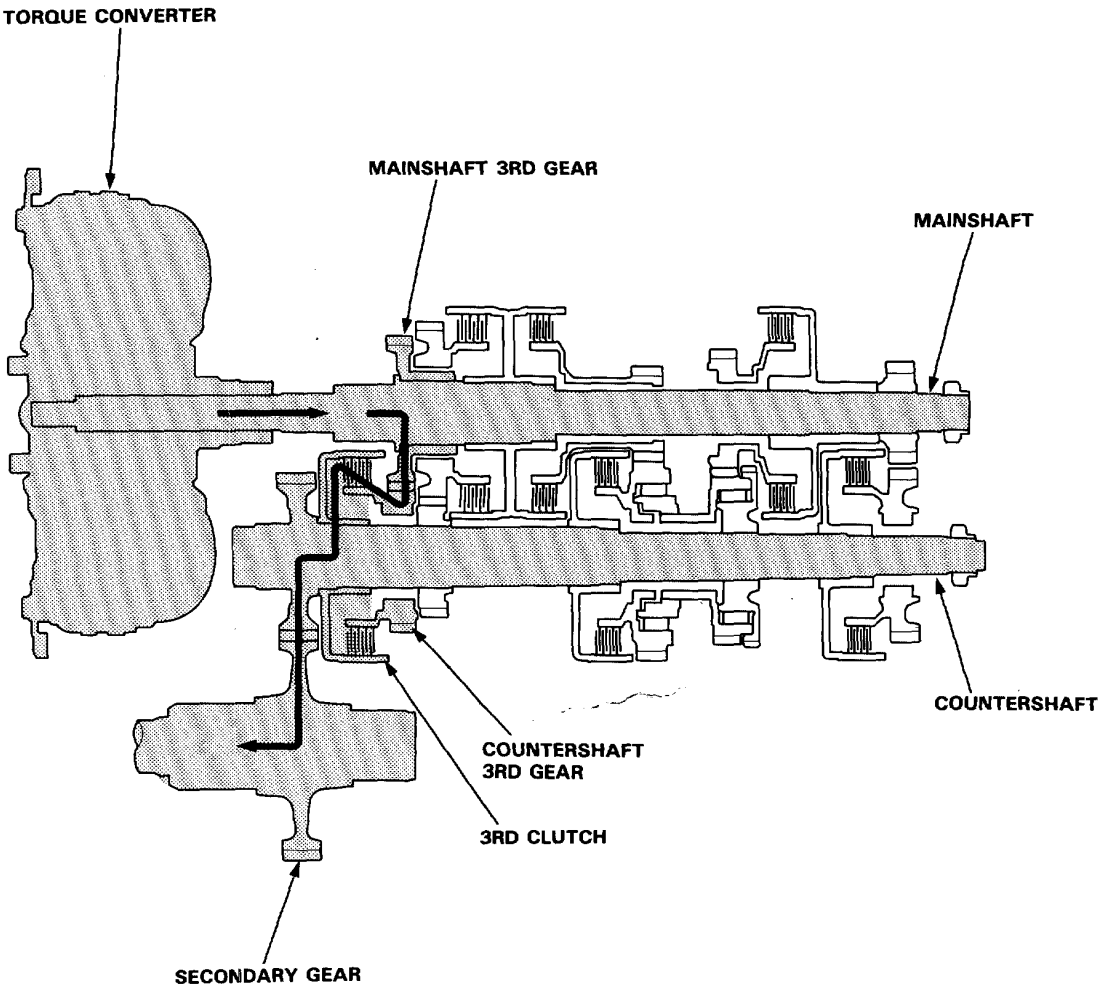

D4 Position, 4th speed

1. Hydraulic pressure is applied to the 4th clutch, which rotates together with the mainshaft, and the mainshaft 4th gear rotates.

2. Power is transmitted to the countershaft 4th gear, and drives the countershaft.

3. Power is transmitted to the secondary drive gear and drives the secondary gear.

   NOTE: In D4 position, 4th speed, hydraulic pressure is also applied to the 1st clutch and to the 2nd clutch, but since the rotation speed of 4th gear exceeds that of 2nd gear, power from 2nd gear is cut off at the 2nd gear one-way clutch.

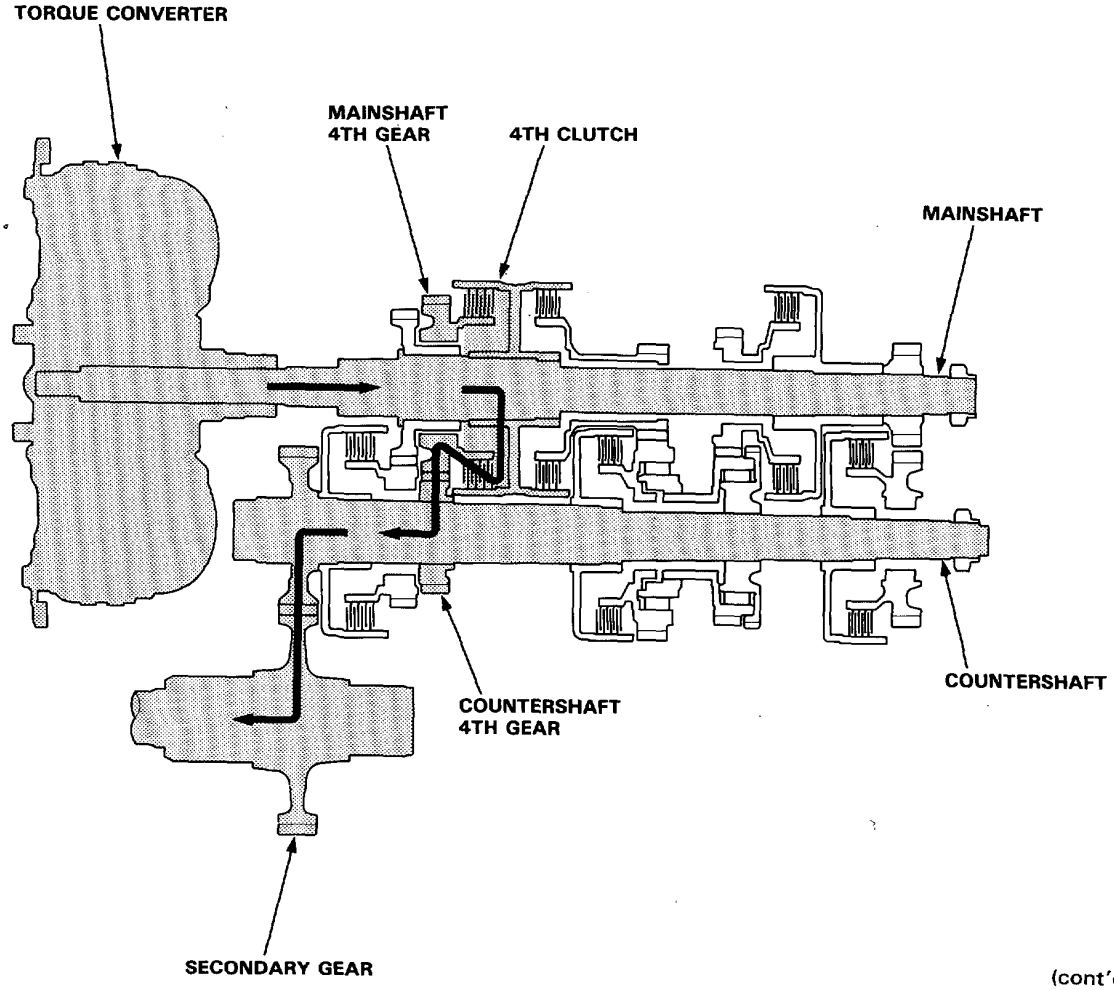

(cont'd)

Description

Power Flow (cont'd)

R Position

1. Hydraulic pressure is applied to the reverse clutch. Power is transmitted from the mainshaft reverse gear via the reverse idler gear to the countershaft reverse gear.
2. Rotation direction of the countershaft reverse gear is changed via the reverse idler gear in the rear cover.
3. Power is transmitted to the secondary drive gear and drives the secondary gear.

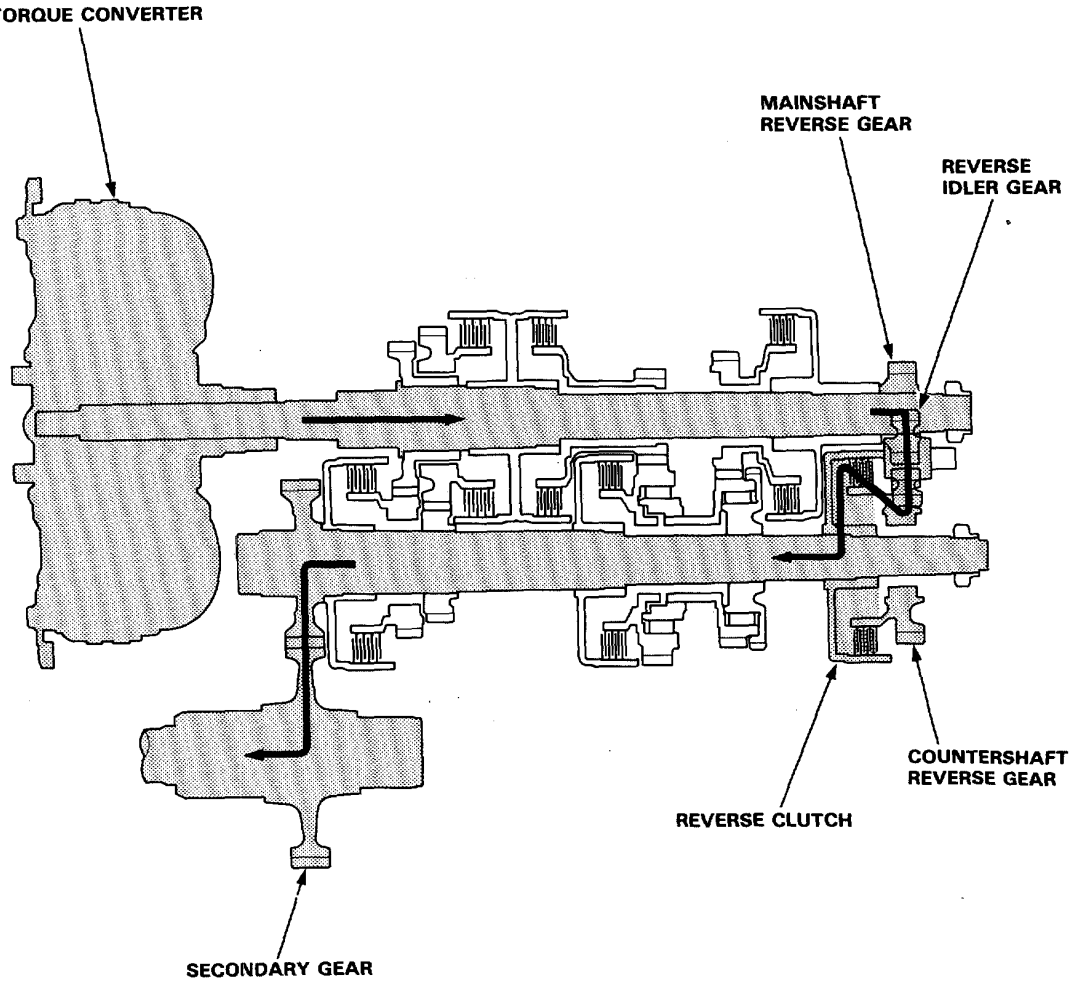

Electronic Control System

Electronic Control System

The electronic control system consists of the PGM-FI/AT Electronic Control Unit (ECU), sensors, a linear solenoid and 4 solenoid valves. Shifting and lock-up are electronically controlled for comfortable driving under all conditions.
The ECU is located below the dashboard, under the front lower panel on the passenger's side.

Shift control

Shifting is related to engine torque through the linear solenoid used to operate throttle valve B which is controlled by the ECU. Getting a signal from each sensor, the ECU determines the appropriate shift point and activates shift control solenoid valves A and/or B.
The combination of driving signals to shift control solenoid valves A and B is shown in the table below.

Shift control sol. valve / Range (gear)	A	B
1, D4 D3 (1ST)	OFF	ON
2, D4 D3 (2ND)	ON	ON
D4 D3 (3RD)	ON	OFF
D4 (4TH)	OFF	OFF

Lock-up control

From sensor input signals, the ECU determines whether to turn the lock-up ON or OFF and activates lock-up control solenoid valve A and/or B accordingly.
The combination of driving signals to lock-up control solenoid valves A and B is shown in the table below.

Solenoid valve / Lock-up condition	A	B
Lock-up OFF	OFF	OFF
Lock-up, slight	ON	OFF
Lock-up, half	ON	ON
Lock-up, full	ON	ON
Lock-up during deceleration	ON	Duty operation OFF⟷ON

(cont'd)

Electronic Control System (cont'd)

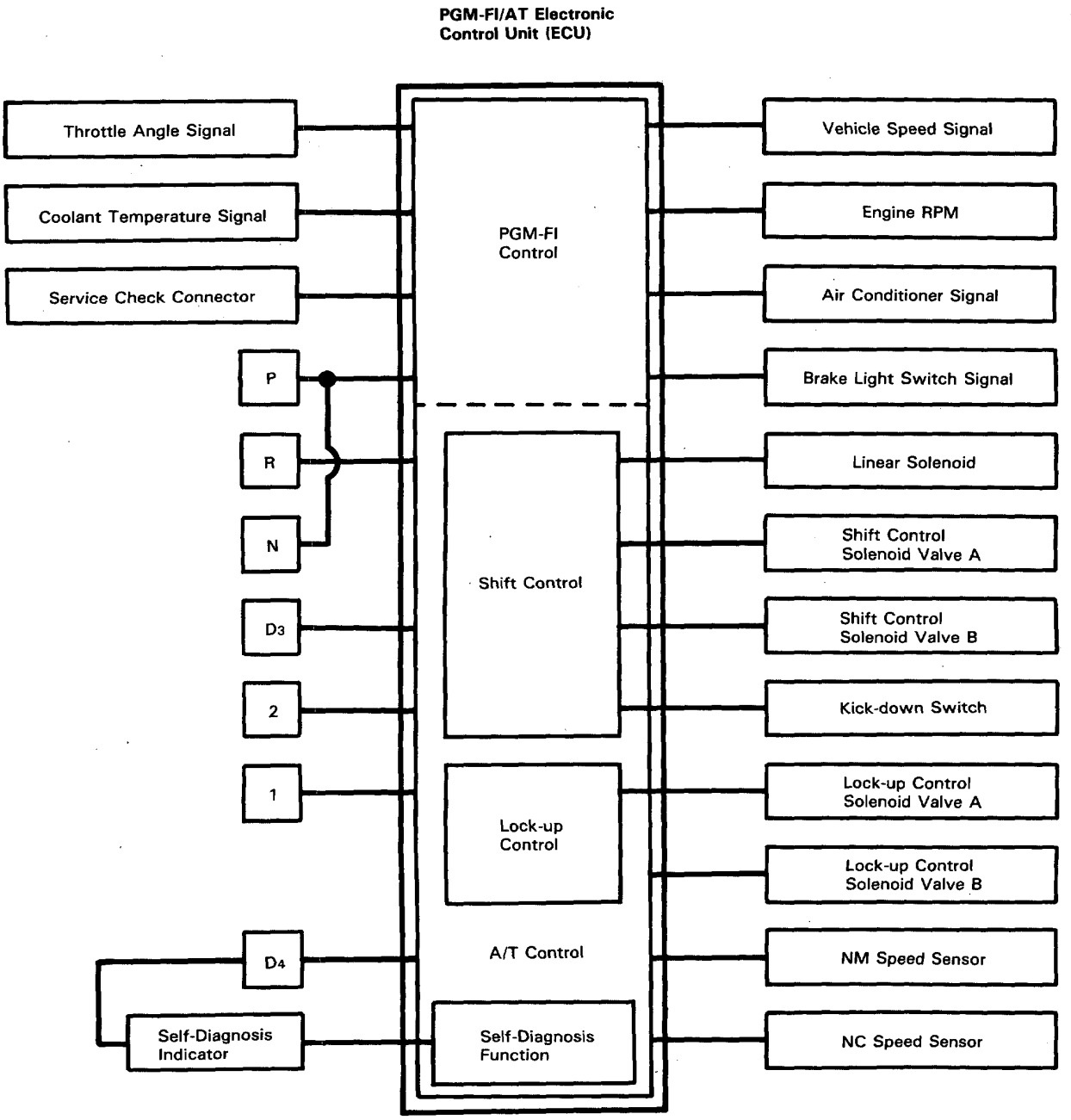

Circuit Diagram

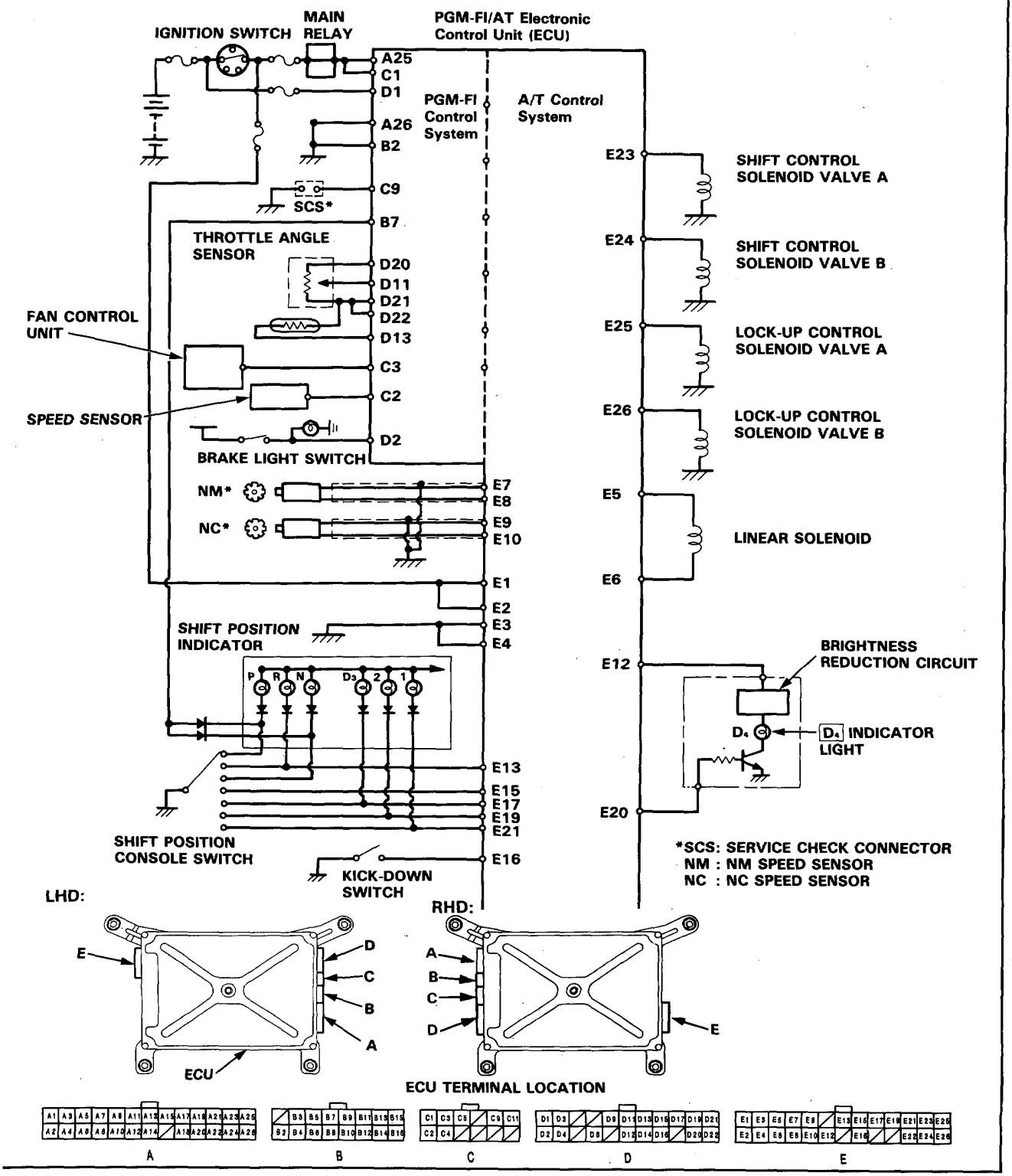

Description

Hydraulic Control

The valve bodies include the main valve body, secondary valve body, throttle valve body, oil pump body, regulator valve body, and accumulator body.
The oil pump is driven by splines behind the torque converter which is attached to the engine. Oil flows through the regulator valve to maintain specified pressure through the main valve body to the manual valve, directing pressure to each of the clutches.

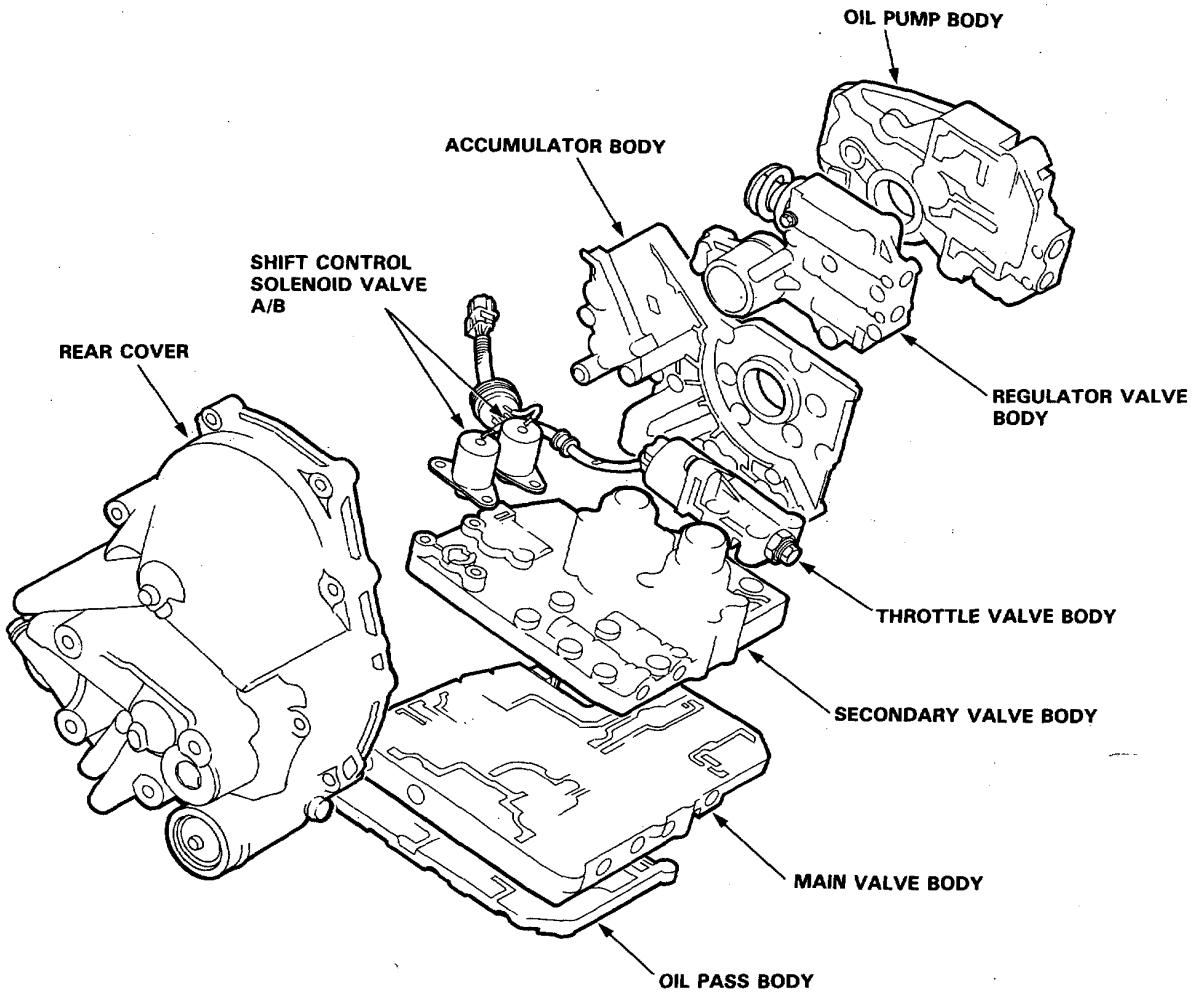

Lower Valve Body Assembly
The lower valve body assembly is located on the bottom of the transmission. The lower valve body assembly consists of main valve body, secondary valve body and oil pass body.

Main Valve Body
The manual valve, 1-2, 2-3, 3-4 shift valves, 4-3 kick-down valve and CPC valve are all built into the main valve body. The primary function of this valve body is switching oil passages on and off and controlling the hydraulic pressure going to the hydraulic control system.

Secondary Valve Body
The secondary valve body is located on the main valve body with the modulator valve, 3-4 orifice control valve, shift timing valve, 1st and 2nd accumulator built in.

***Throttle* Valve Body**
The throttle valve body is located on the secondary valve body with the throttle valve operated by the linear solenoid.

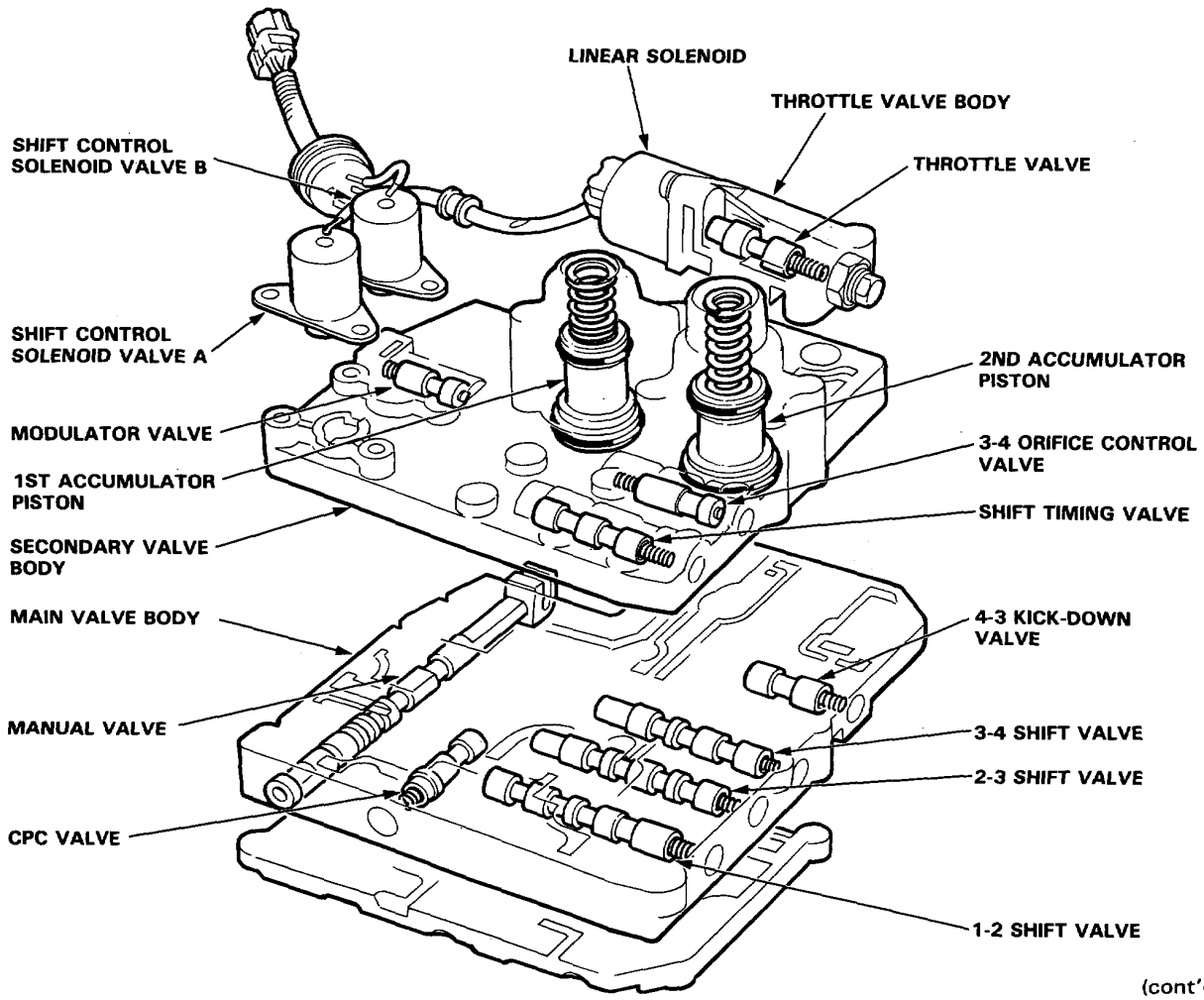

(cont'd)

Hydraulic Control (cont'd)

Oil Pump Body
The oil pump body consists of the oil pump gears, lock-up timing valve, lock-up control valve and relief valve. The torque converter check valve is located under the oil pump body.

Accumulator Body
The accumulator body consists of the 3rd and 4th accumulators.

Regulator Valve Body
The regulator valve body is located on the oil pump body with the regulator valve, lock-up shift valve and cooler relief valve built in.

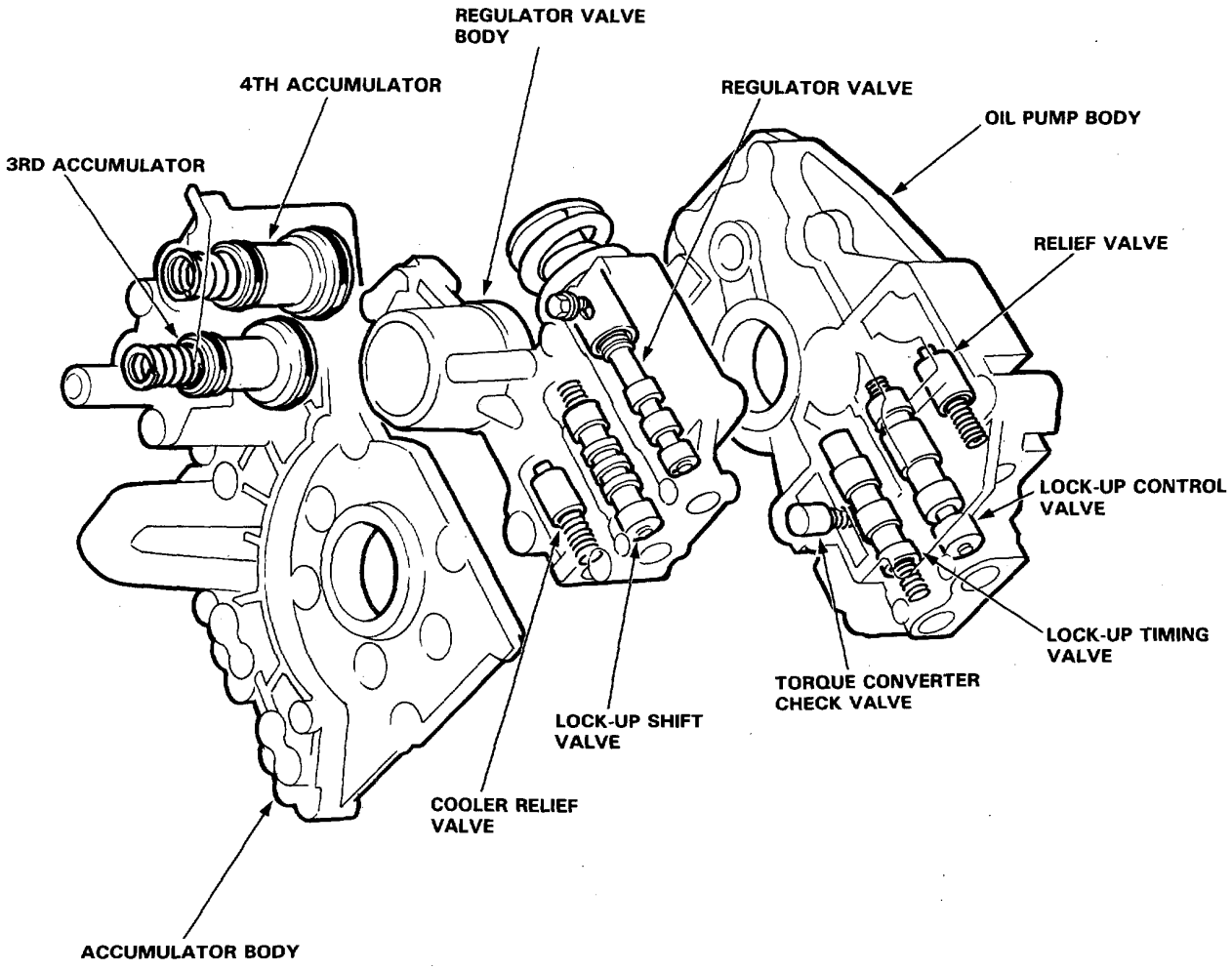

Regulator Valve

The regulator valve maintains a constant hydraulic pressure from the oil pump to the hydraulic control system, while also furnishing oil to the lubricating system and torque converter.
Oil flows through B and B'. The oil which enters through B flows through the valve orifice to A, pushing the regulator valve to the right. According to the level of hydraulic pressure through B, the position of the valve changes, and the amount of the oil through B' from D thus changes. This operation is continued, thus maintaining the line pressure.

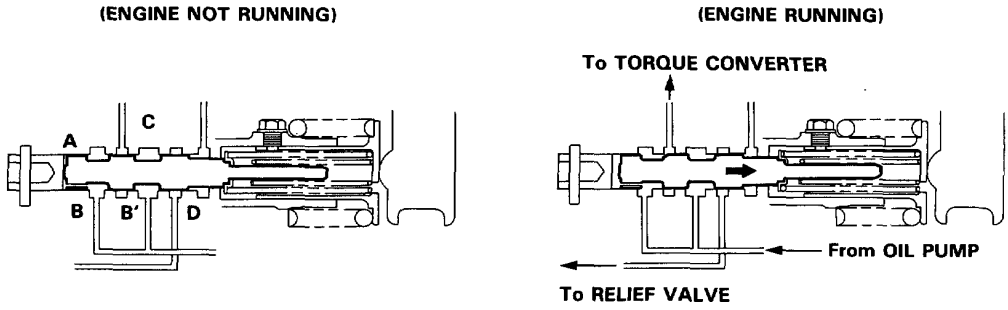

Stator Reaction Hydraulic Pressure Control

Hydraulic pressure increase according to torque is performed by the regulator valve using stator torque reaction. The stator shaft is splined to the stator and its arm end contacts the regulator spring cap. When the car is accelerating or climbing (Torque Converter Range), stator torque reaction acts on the stator shaft and the stator arm pushes the regulator spring cap in this ➡ direction in proportion to the reaction. The spring compresses and the valve moves to increase the regulated control pressure or line pressure. Line pressure is maximum when the stator reaction is maximum.

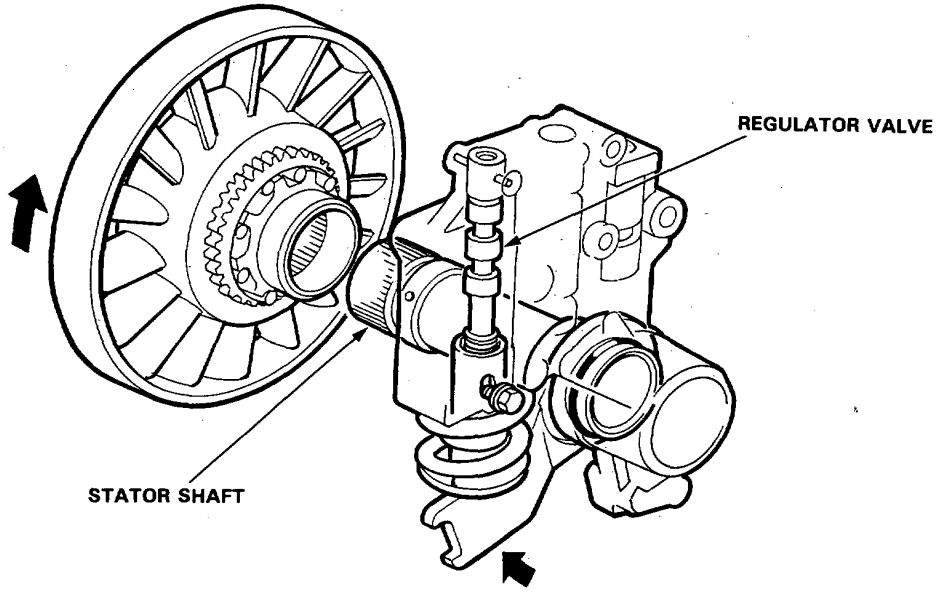

Description

Hydraulic Flow

General Chart of Hydraulic Pressure

Oil Pump → Regulator Valve → { Line Pressure / Torque Converter Pressure / Lubrication Pressure }

Distribution of Hydraulic Pressure

- Manual Valve → To Select Line Pressure
- Throttle Valve B → Throttle B Pressure
- 1-2 Shift Valve
- 2-3 Shift Valve
- 3-4 Shift Valve

  } → Clutch Pressure
- Line Pressure → Throttle Valve

NO.	DESCRIPTION OF PRESSURE	NO.	DESCRIPTION OF PRESSURE	NO.	DESCRIPTION OF PRESSURE
1	LINE	10	1ST CLUTCH	71	1ST-HOLD CLUTCH
2	LINE	10′	1ST CLUTCH	72	1ST-HOLD CLUTCH
4	LINE	11	1ST CLUTCH	90	TORQUE CONVERTER
4′	LINE	20	2ND CLUTCH	91	TORQUE CONVERTER
4″	LINE	25	LINE	92	TORQUE CONVERTER
5	LINE	30	3RD CLUTCH	93	OIL COOLER
6	MODULATOR	40	4TH CLUTCH	94	TORQUE CONVERTER
6A	MODULATOR (SHIFT SOL A)	50	REVERSE CLUTCH	95	LUBRICATION
6B	MODULATOR (SHIFT SOL B)	55	THROTTLE B	96	TORQUE CONVERTER
6C	MODULATOR (L/C SOL A)	56	THROTTLE B	99	SUCTION
6D	MODULATOR (L/C SOL B)	57	THROTTLE B	X	BLEED
7	LINE	70	1ST-HOLD CLUTCH		

N position

As the engine turns, the oil pump also starts to operate. Automatic transmission fluid is drawn from (99) and discharged into (1). Then, ATF pressure is controlled by the regulator valve and becomes line pressure (1). The torque converter inlet pressure (92) enters (94) of torque converter through the orifice and discharges into (90).
The torque converter check valve prevents the torque converter pressure from falling.
Under this condition, the hydraulic pressure is not applied to the clutches.

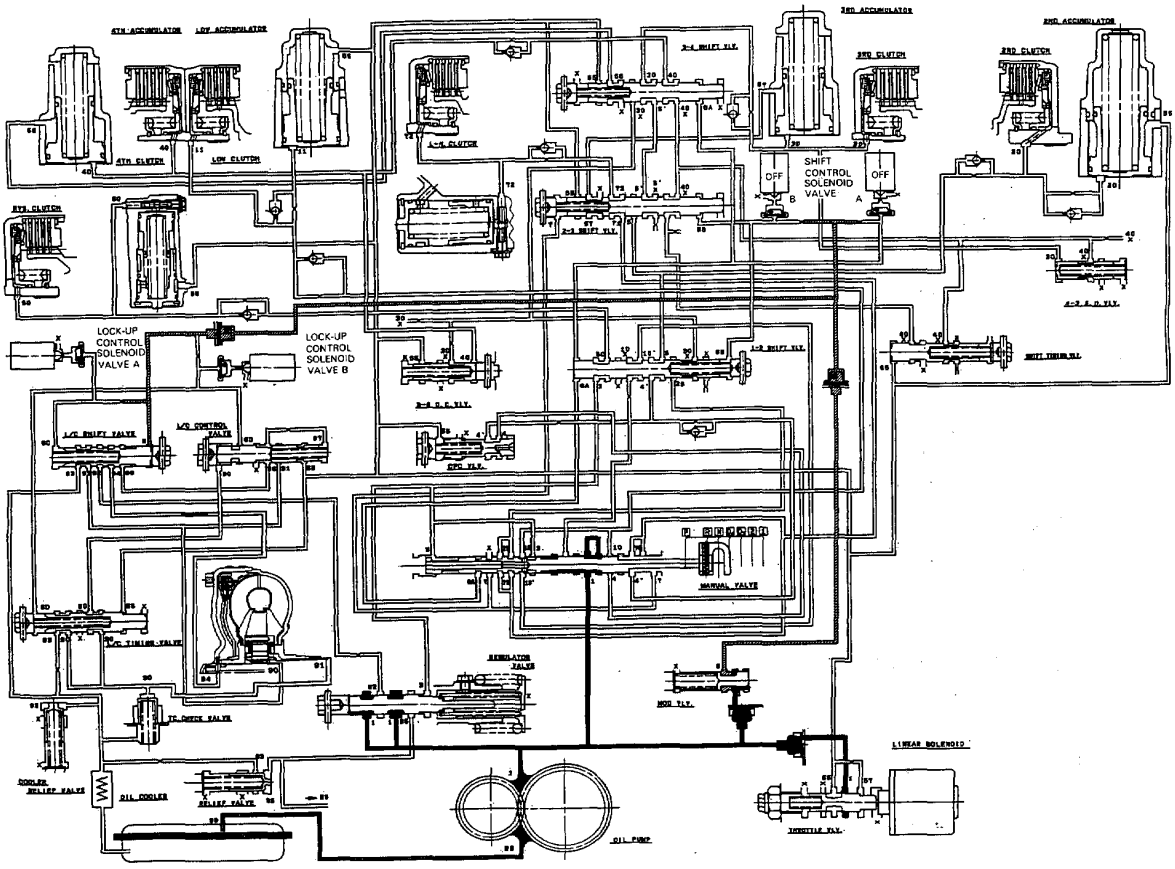

(cont'd)

Description

Hydraulic Flow (cont'd)

1 Position

The line pressure (1) becomes the line pressure (4), (4'), (70) as it passes through the manual valve. Also, the line pressure (1) goes to the modulator valve through the filter and becomes the modulator pressure (6). The modulator pressure (6) is supplied to the 1-2 shift valve and 3-4 shift valve. The 1-2 shift valve is moved to the right side and the 3-4 shift valve is moved to the left side because the shift control solenoid valve A is turned OFF and B turned is ON by the ECU. The line pressure (4') becomes the 1st clutch pressure (10) via the 1-2 shift valve. The 1st clutch pressure (10) passed through the manual valve to the 1st clutch, then the 1st clutch is engaged. The 1st-hold clutch pressure (70) goes to the 1st-hold clutch via the 2-3 shift valve, then the 1st-hold clutch is engaged.

NOTE: When used, "left" or "right" indicates direction on the flow chart.

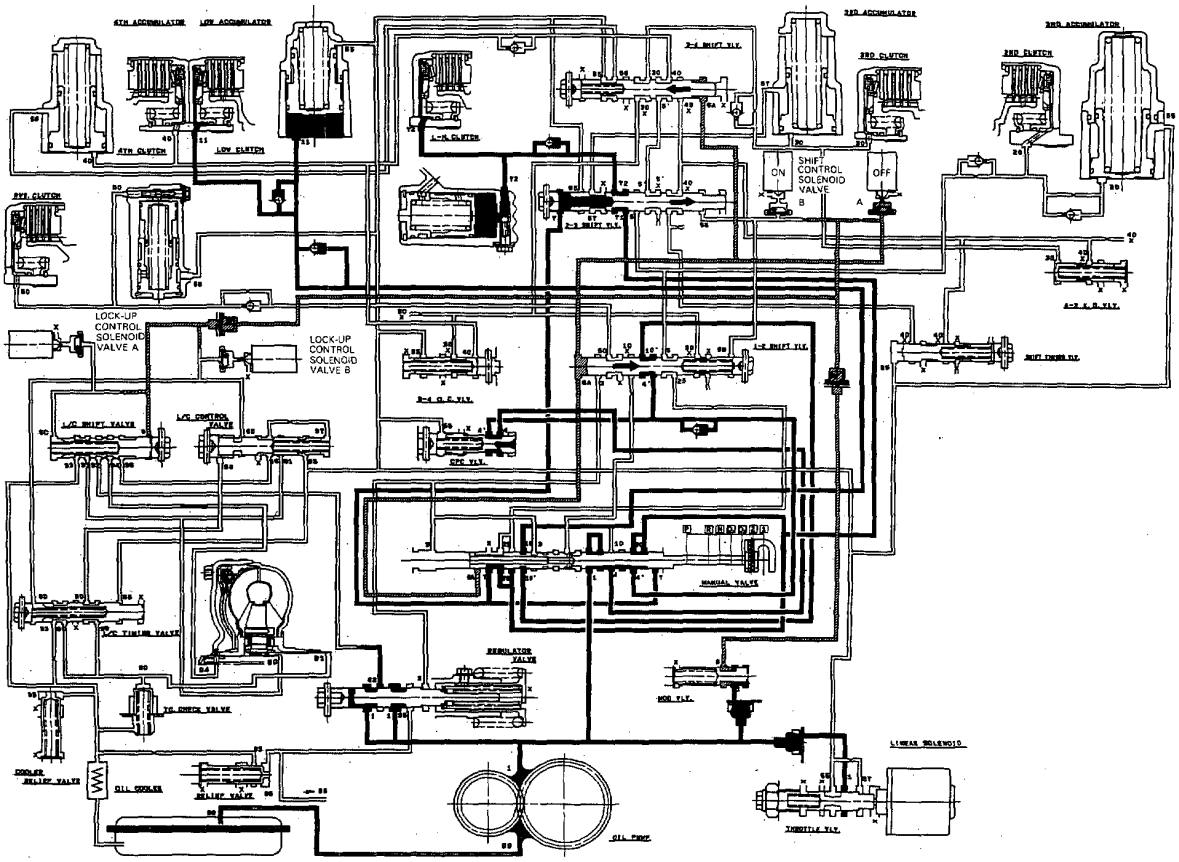

2 Position

The line pressure (1) becomes line pressure (4), (4'), (70) as it passes through the manual valve.
The line pressure (1) goes to the modulator valve and becomes the modulator pressure (6). The modulator pressure (6) is not supplied to the shift valve. The 1-2 shift valve is moved to the left side and the 2-3 and 3-4 shift valves are moved to the right side because the shift control solenoid valves A and B are turned ON by the ECU.
The line pressure (4') becomes the line pressure (5) via the 1-2 shift valve. The line pressure (5) passed through the orifice becomes the 2nd clutch pressure (20). The 2nd clutch pressure (20) goes to the 2nd clutch, then the 2nd clutch is engaged.
The 1st-hold clutch pressure (70) goes to the 1st-hold clutch via the 2-3 shift valve, then the 1st-hold clutch is engaged.

NOTE: When used, "left" or "right" indicates direction on the flow chart.

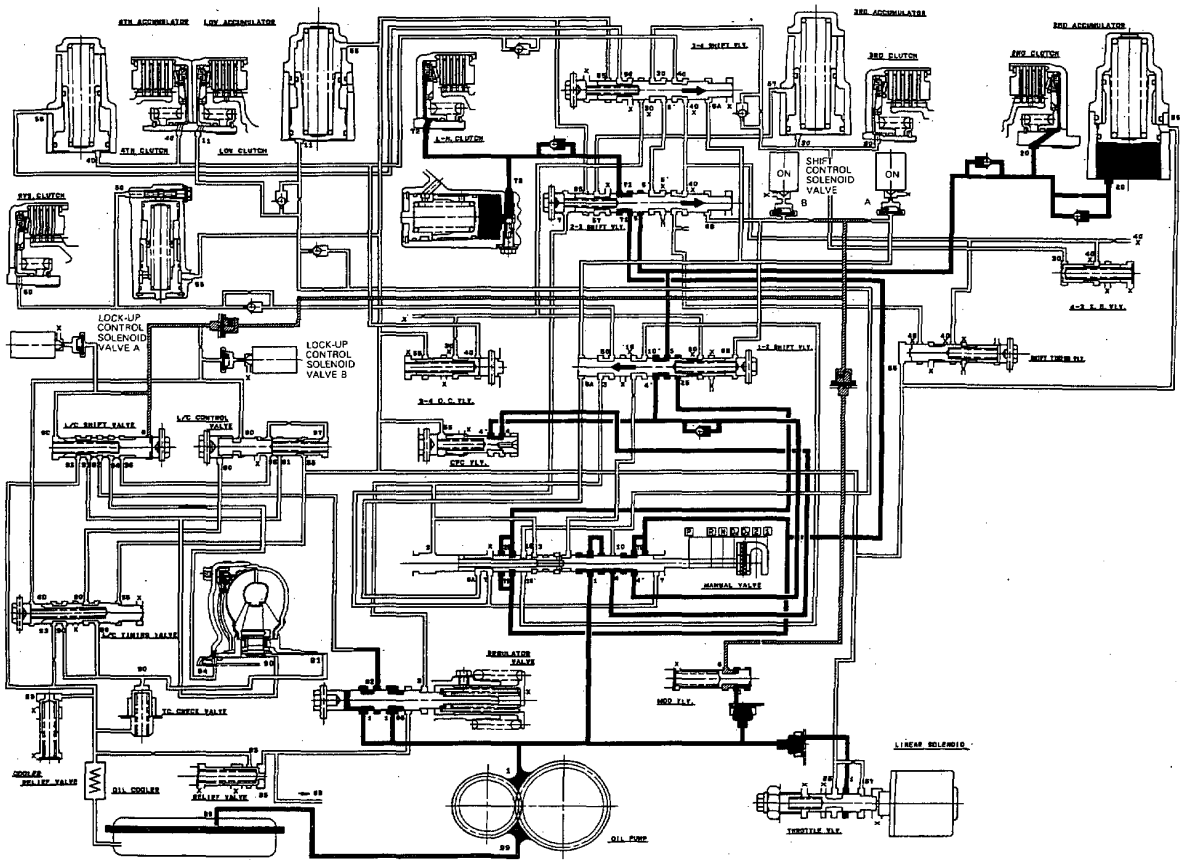

(cont'd)

Hydraulic Flow (cont'd)

D4 or D3 Position

1. 1st speed

The flow of fluid through the torque converter is the same as in N position.
The line pressure (1) becomes the 1st clutch pressure (10), as it passes through the manual valve. The 1st clutch pressure is applied to the 1st clutch and the 1st clutch accumulator, consequently the vehicle will move as the engine power is transmitted.
The line pressure (1) becomes the modulator pressure (6) by the modulator valve and travels to each shift valve. The 1-2 shift valve is moved to the right side and the 3-4 shift valve is moved to the left side because the shift control solenoid valve A is turned OFF and valve B is turned ON by the ECU.
The line pressure (1) also flows to the throttle valve.

NOTE: When used, "left" or "right" indicates direction on the flow chart.

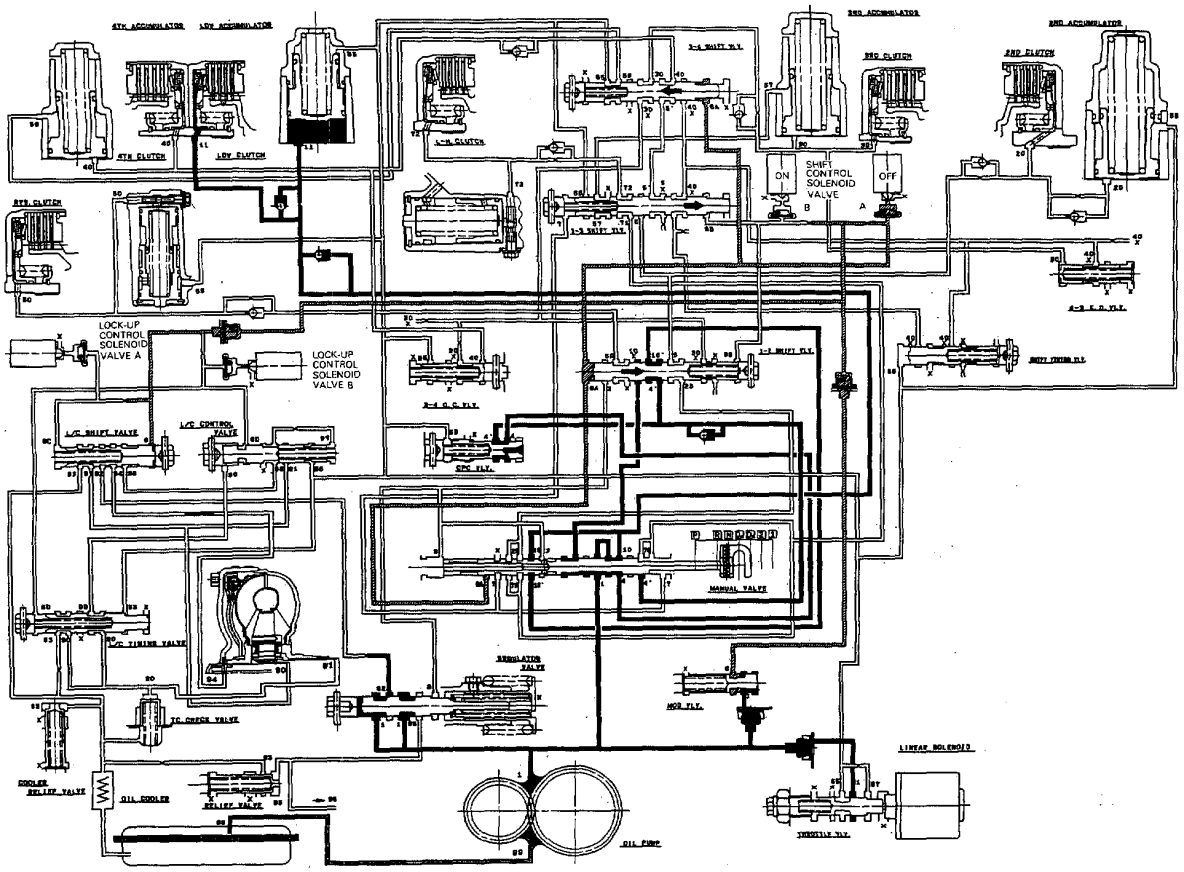

2. 2nd speed

The flow of fluid up to the 1-2 and 2-3 shift valves is the same as in the 1st speed range. As the speed of the car reaches the prescribed value, the shift control solenoid valves A and B are turned ON by means of the ECU. As a result, the 1-2 shift valve is moved to the left side and uncovers the port leading to the 2nd clutch; the 2nd clutch is engaged.

Fluid flows by way of:

- Line Pressure (4) → CPC valve – Line Pressure (4') → 1-2 Shift Valve – Line Pressure (5) → Orifice – 2nd Clutch Pressure (20)→ 2nd Clutch

The hydraulic pressure also flows to the 1st clutch. However no power is transmitted by means of the one-way clutch.

NOTE: When used, "left" or "right" indicates direction on the flow chart.

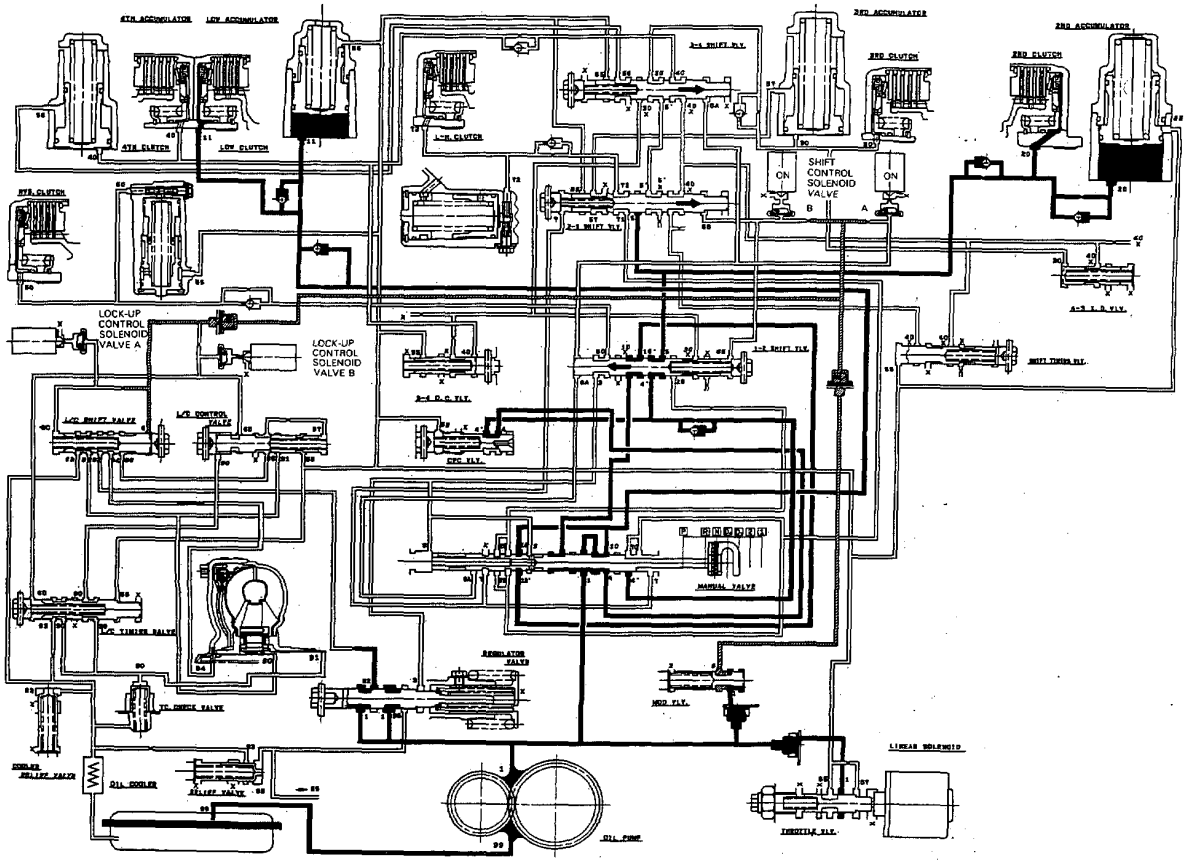

(cont'd)

Hydraulic Flow (cont'd)

3. 3rd Speed

The flow of fluid up to the 1-2, 2-3 and 3-4 shift valves is the same as in the 2nd speed range.
As the speed of the car reaches the prescribed value, the shift control solenoid valve B is turned OFF (Shift control solenoid valve A remains ON). The 2-3 shift valve is then moved to the left side, uncovering the oil port leading to the 3rd clutch. Since the 3-4 shift valve is moved to the right side to cover the oil port to the 4th clutch, the 3rd clutch is engaged.
Fluid flows by way of:

— Line Pressure (4)→ CPC Valve — Line Pressure (4') → 1-2 Shift Valve — Line Pressure (5) → 2-3 Shift Valve
— Line Pressure (5') → 3-4 Shift Valve — 3rd clutch Pressure (30) → Orifice → 3rd Clutch

The hydraulic pressure also flows to the 1st clutch and to the 2nd clutch. However no power is transmitted by means of the one-way clutch.

NOTE: When used, "left" or "right" indicates direction on the flow chart.

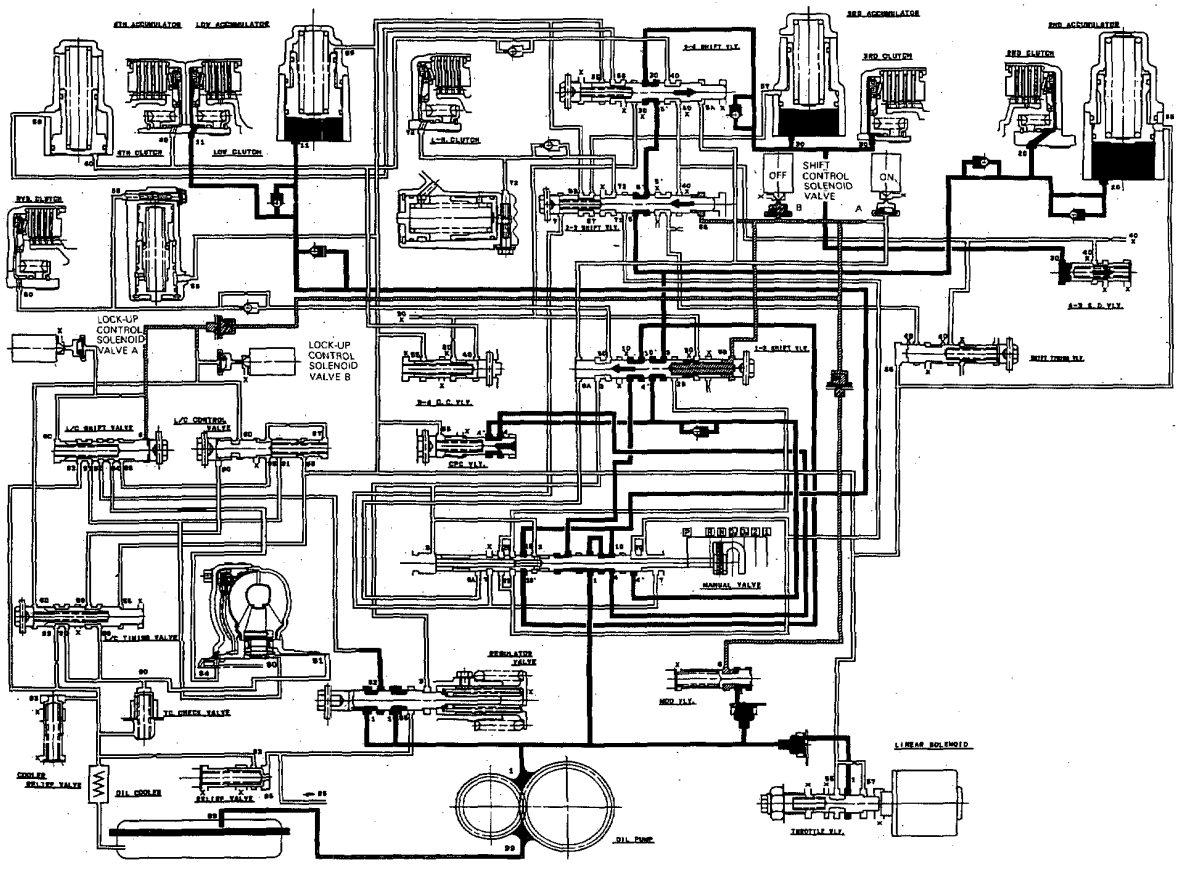

4. 4th Speed

The flow of fluid up to the 1-2, 2-3 and 3-4 shift valves is the same as in the 3rd speed range. As the speed of the car reaches the prescribed value, the shift control solenoid valve A is turned OFF (Shift control solenoid valve B remains OFF). As this takes place, the 3-4 shift valve is moved to the left side and uncovers the oil port leading to the 4th clutch. Since the 1-2 and 2-3 shift valves are kept on the left side, the fluid flows through the 4th clutch; the power is transmitted through the 4th clutch.

Fluid flows by way of:

— Line Pressure (4) →CPC Valve — Line Pressure (4')→ 1-2 Shift Valve — Line Pressure (5) → 2-3 Shift Valve

— Line Pressure (5) → 3-4 Shift Valve — 4th Clutch Pressure (40) → Orifice → 4th Clutch

The hydraulic pressure also flows to the 1st clutch and to the 2nd clutch. However no power is transmitted by means of the one-way clutch as in 3rd speed.

NOTE: When used, "left" or "right" indicates direction on the flow chart.

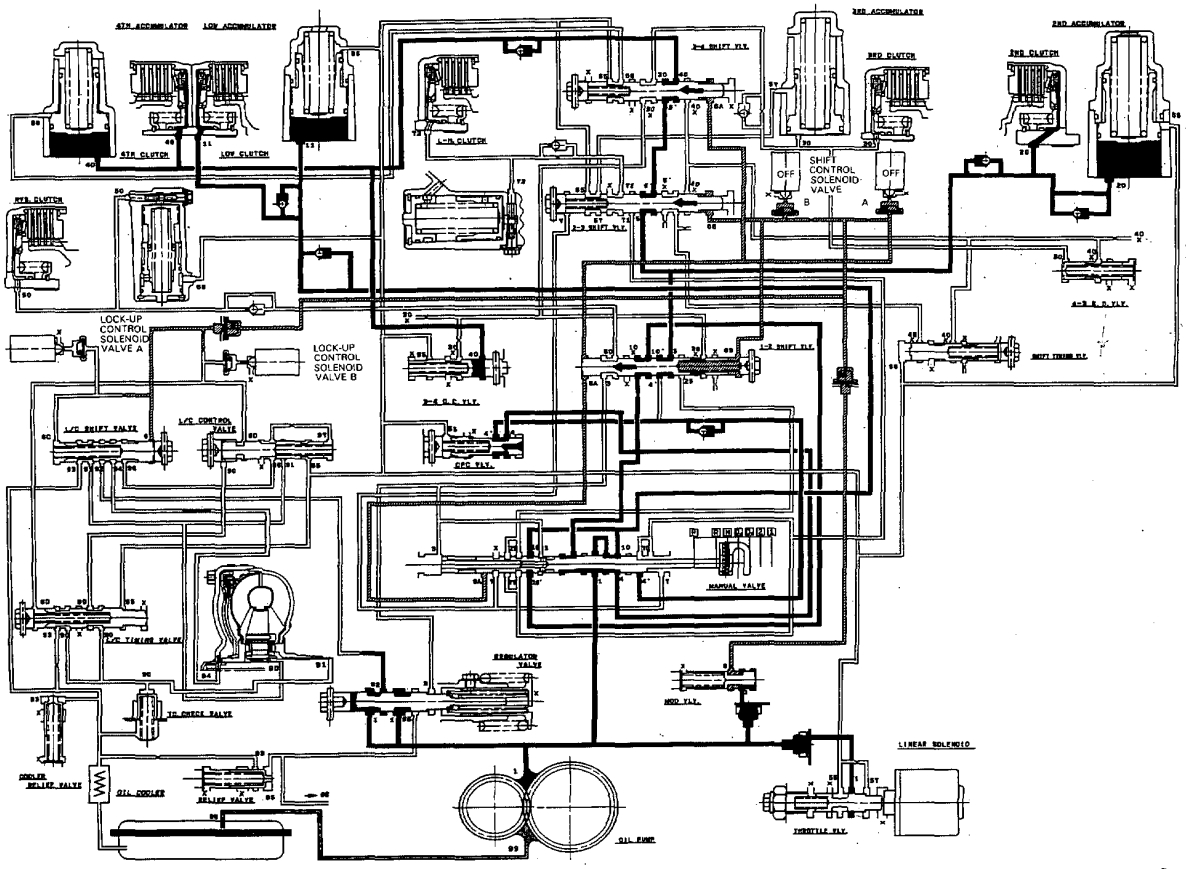

(cont'd)

Hydraulic Flow (cont'd)

R Position

The line pressure (1) becomes the line pressure (3) as it passes through the manual valve. Also, the line pressure (1) goes to the modulator valve through the filter and becomes the modulator pressure (6). The modulator pressure (6) is supplied to the 1-2 shift valve and 2-3 shift valve.
The 1-2 and 2-3 shift valves are moved to the left side because the shift control solenoid valve A is turned ON and B is turned OFF by the ECU.
The line pressure (3) becomes the reverse clutch pressure (50) via the 1-2 shift valve. The reverse clutch pressure goes to the reverse clutch, then the reverse clutch is engaged.

Reverse Inhibitor Control

When the R position is selected while the vehicle is moving forward at more than a certain speed, the ECU outputs 1st signal (Shift control solenoid valve A: ON, B: OFF), and the 1-2 shift valve is moved to the right side. The line pressure (3) is intercepted by the 1-2 shift valve; consequently the power is not transmitted, since the reverse clutch is not operated.

NOTE: When used, "left" or "right" indicates direction on the flow chart.

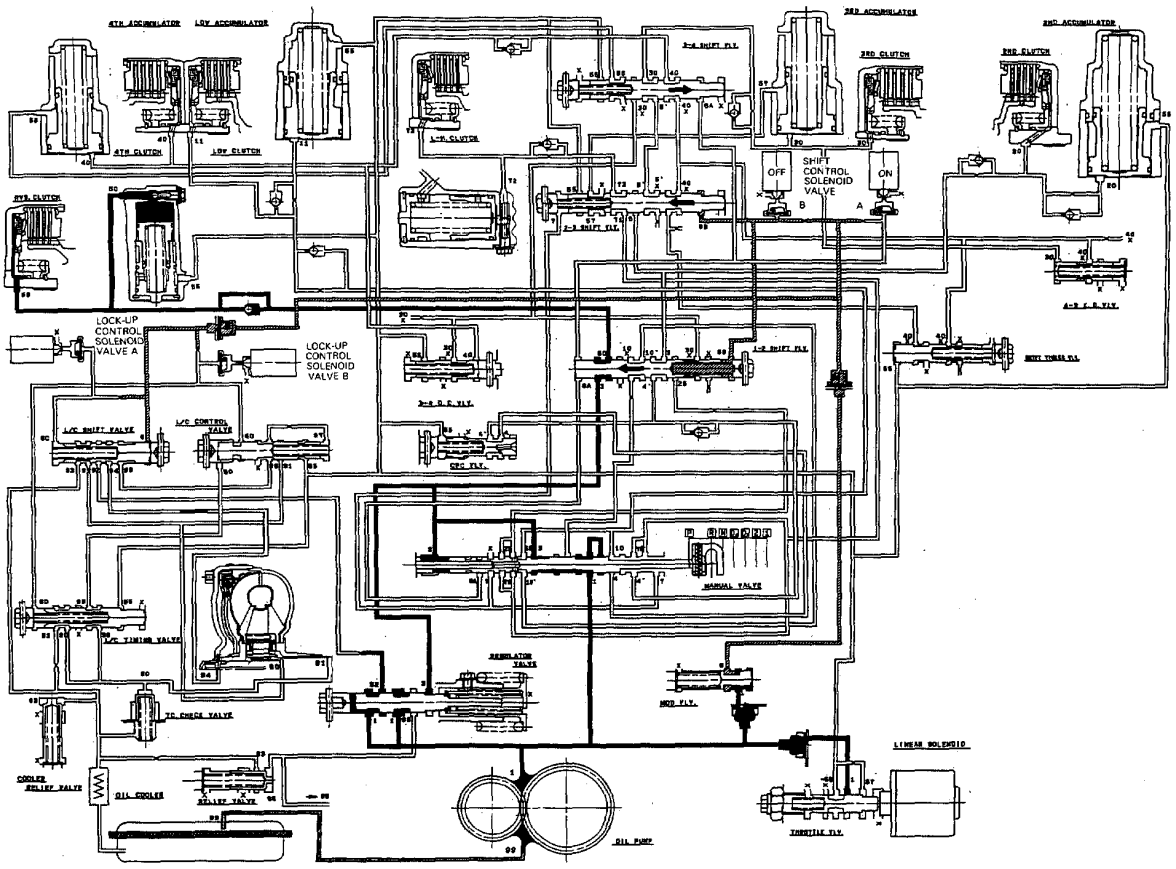

P position

The flow of fluid through the torque converter is the same in N position.

The line pressure (1) is intercepted by the manual valve and is not supplied to the clutches. The power is not transmitted.

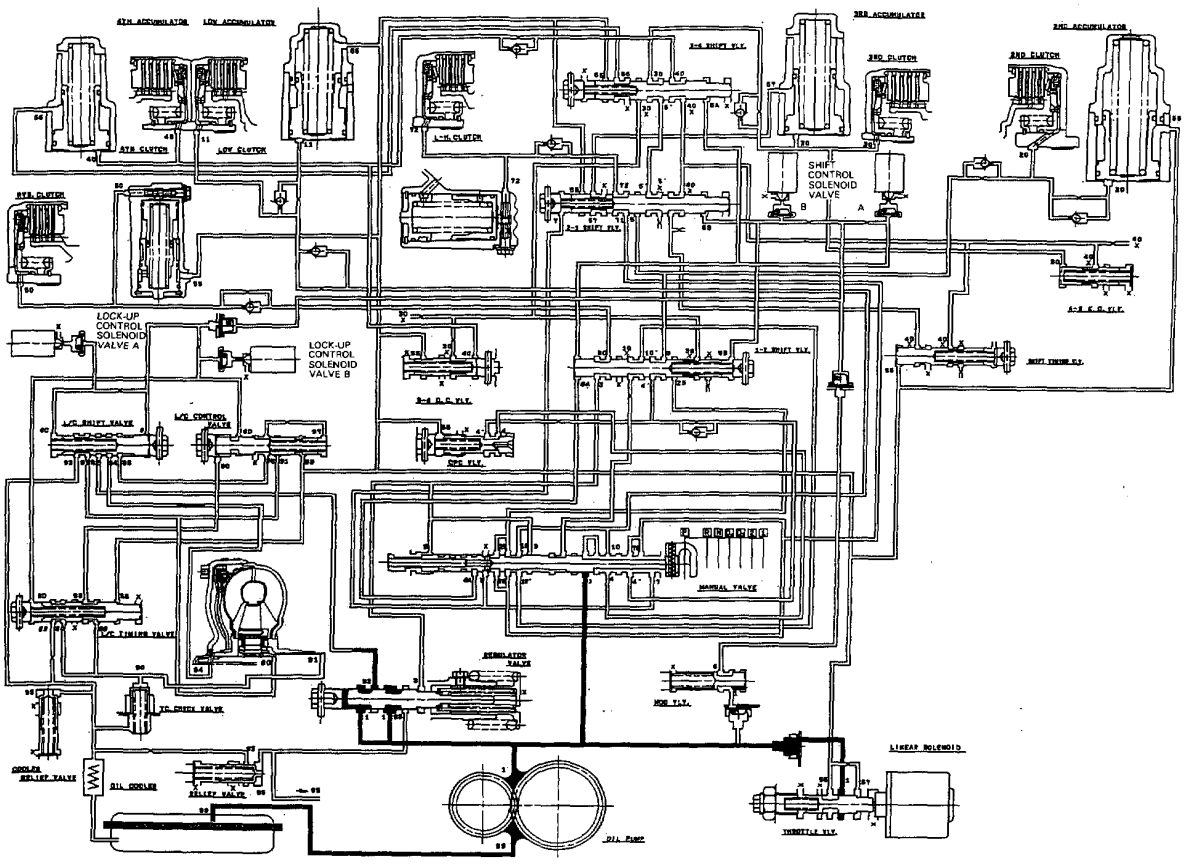

Description

Lock-up System

In $\boxed{D_4}$ in 2nd, 3rd and 4th, pressurized fluid is drained from the back of the torque converter *through* an oil passage, causing the lock-up piston to be held against the torque converter cover. As this takes place, the mainshaft rotates at the same speed as the engine crankshaft. Together with hydraulic control; the ECU optimizes the timing of the lock-up system. Under certain conditions, the lock-up operation is applied during deceleration, in 3rd and 4th speed.

The lock-up shift valve controls the range of lock-up according to lock-up control solenoid valves A and B, and throttle valve B. When lock-up control solenoid valves A and B activate, modulator pressure changes. Lock-up control solenoid valves A and B are mounted on the torque converter housing and are controlled by the ECU.

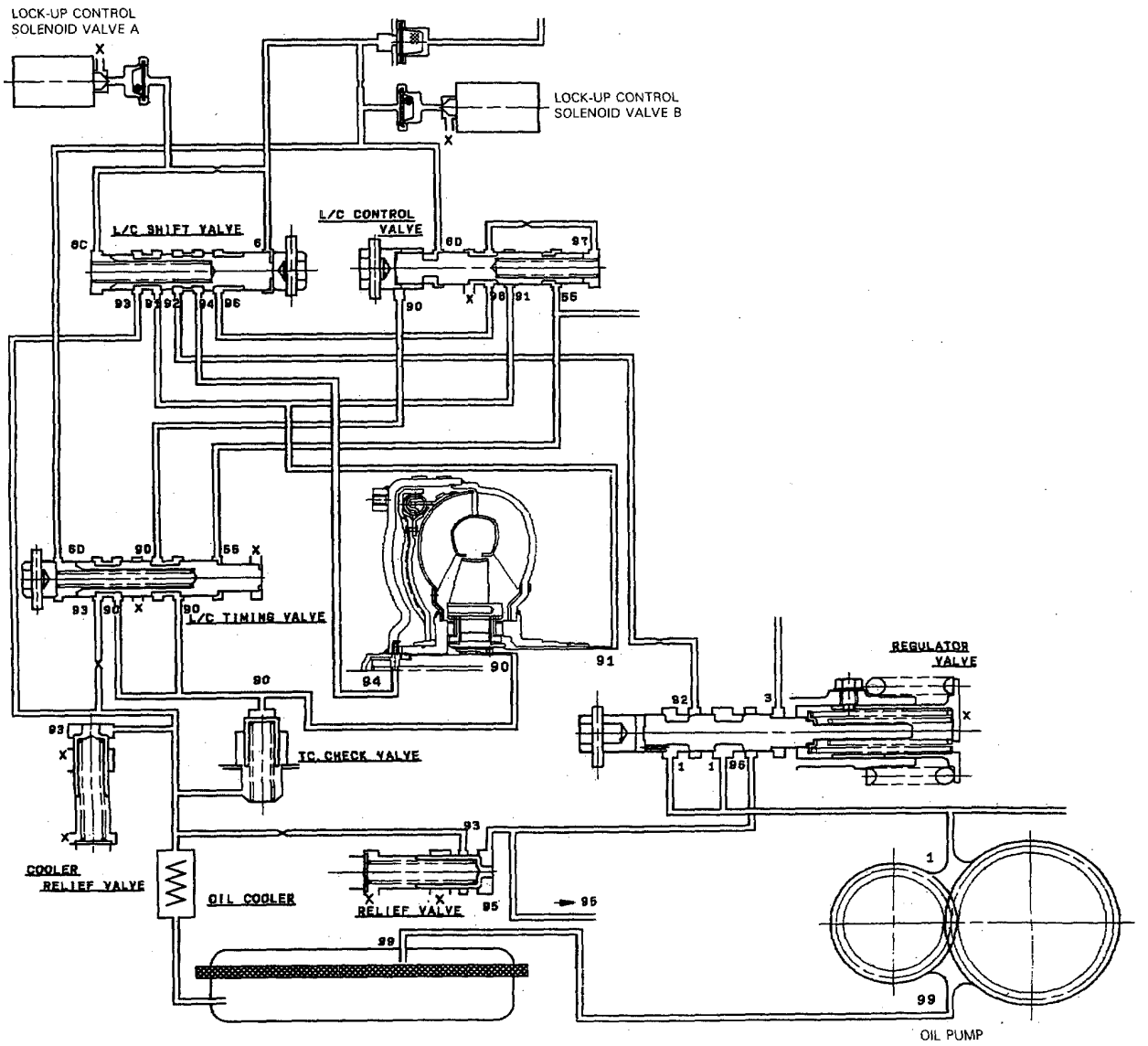

No Lock-up

Pressured fluid regulated by the modulator works on both ends of the lock-up shift valve and on the left side of the lock-up control valve. Under this condition, the pressure on both ends of the lock-up shift valve are equal, and the shift valve is moved to the right side by the tension of the valve spring alone. The fluid from the oil pump will flow through the left side of the lock-up clutch to the torque converter; i.e., the lock up clutch is in OFF condition.

NOTE: When used, "left" or "right" indicates direction on the flow chart.

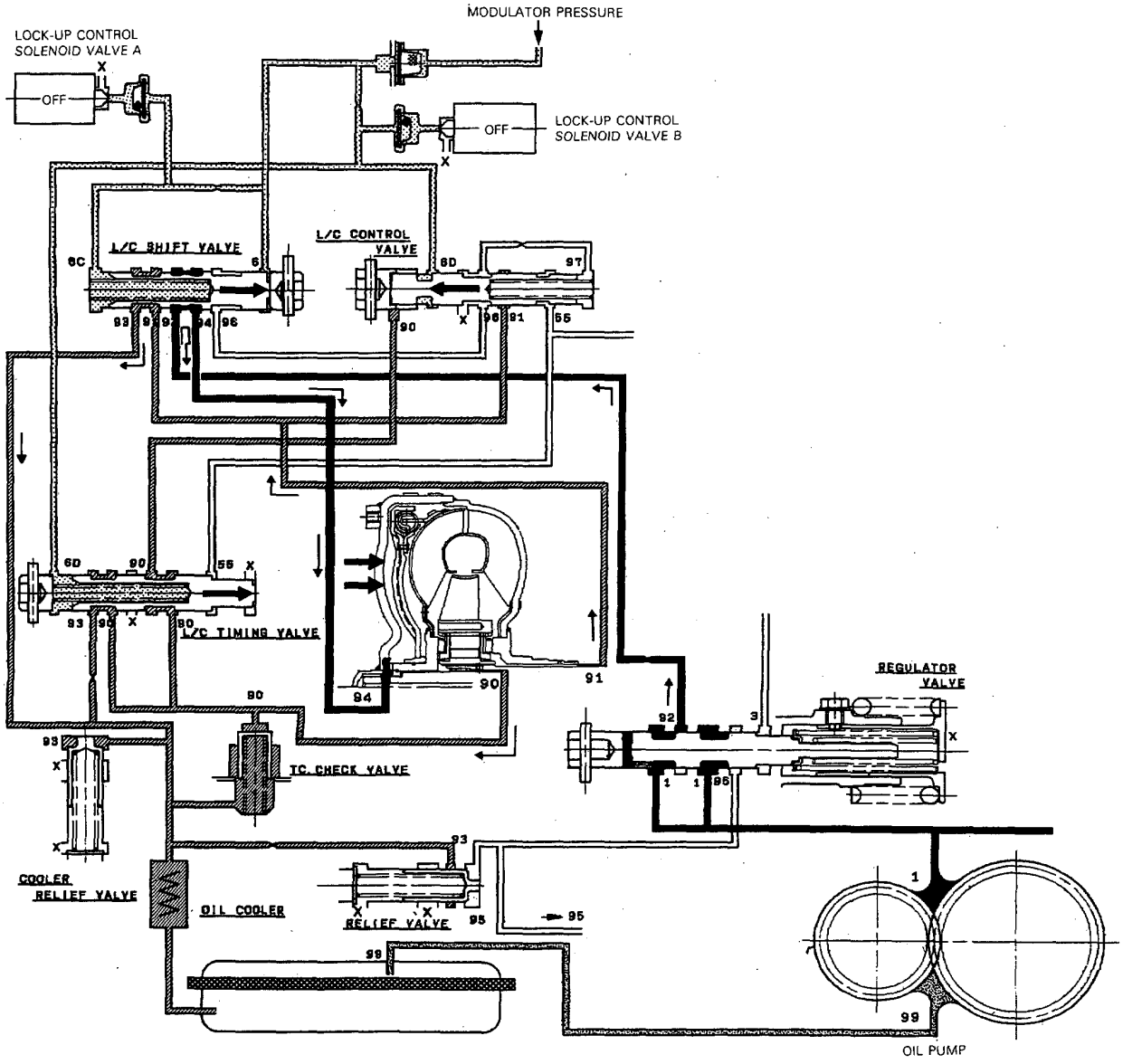

(cont'd)

Lock-up System (cont'd)

Partial Lock-up

Lock-up Control Solenoid Valve A: ON Lock-up Control Solenoid Valve B: OFF

The ECU switches the solenoid valve A to ON to release the modulator pressure in the left cavity of the lock-up shift valve. The modulator pressure in the right cavity of the lock-up shift valve overcomes the spring force, thus the lock-up shift valve is moved to the left side.

The torque converter pressure is separated into two passages:

Torque Converter Inner Pressure: entered into right side—to engage lock-up clutch

Torque Converter Back Pressure: entered into left side—to disengage lock-up clutch

The back pressure (F2) is regulated by the lock-up control valve whereas the position of the lock-up timing valve B is determined by the throttle B pressure, tension of the valve spring and pressure regulated by the modulator. Also the position of the lock-up control valve is determined by the throttle valve B pressure, back pressure of the lock-up control valve and torque converter pressure regulated by the check valve. In low speed range, the throttle B pressure working on the right side of the lock-up control valve is low, causing the valve to be moved to the right side. With the lock-up control solenoid valve B kept OFF, the modulator pressure is maintained in the left end of the lock-up control valve; in other words, the lock-up control valve is moved slightly to the left side. This slight movement of the lock-up control valve causes the back pressure to be lowered slightly, resulting in partial lock-up.

NOTE: When used, "left" or "right" indicates direction on the flow chart.

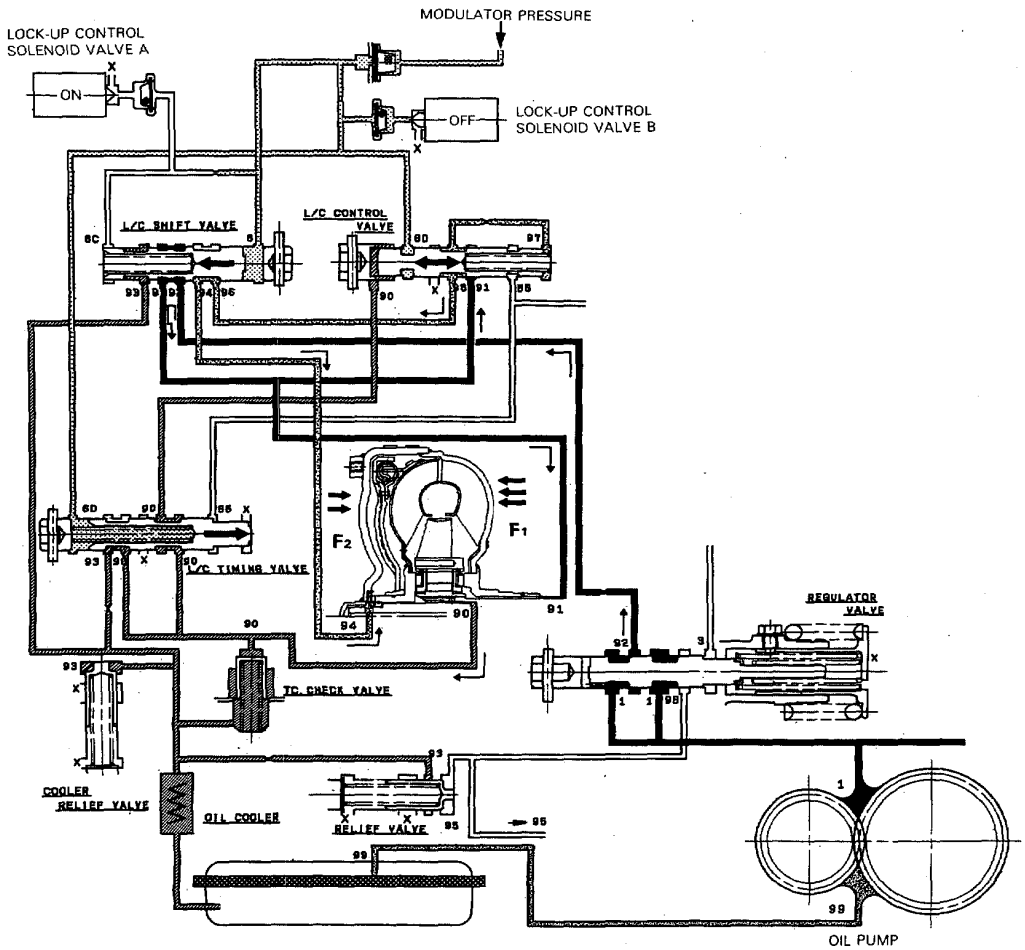

Half Lock-up

Lock-up Control Solenoid Valve A: ON Lock-up Control Solenoid Valve B: ON

The modulator pressure is released by the solenoid valve B, causing the modulator pressure in the left cavity of the lock-up control valve to lower.

Also the modulator pressure in the left cavity of the lock-up timing valve B is low.. However the throttle B pressure is still low at this time, consequently the lock-up timing valve B is kept on the right side by the spring force.

With the lock-up control solenoid valve B turned ON, the lock-up control valve is moved somewhat to the right side, causing the back pressure (F2) to lower. This allows a greater amount of the fluid (F1) to work on the lock-up clutch so as to engage the clutch. The back pressure (F2) which still exists prevents the clutch from engaging fully.

NOTE: When used, "left" or "right" indicates direction on the flow chart.

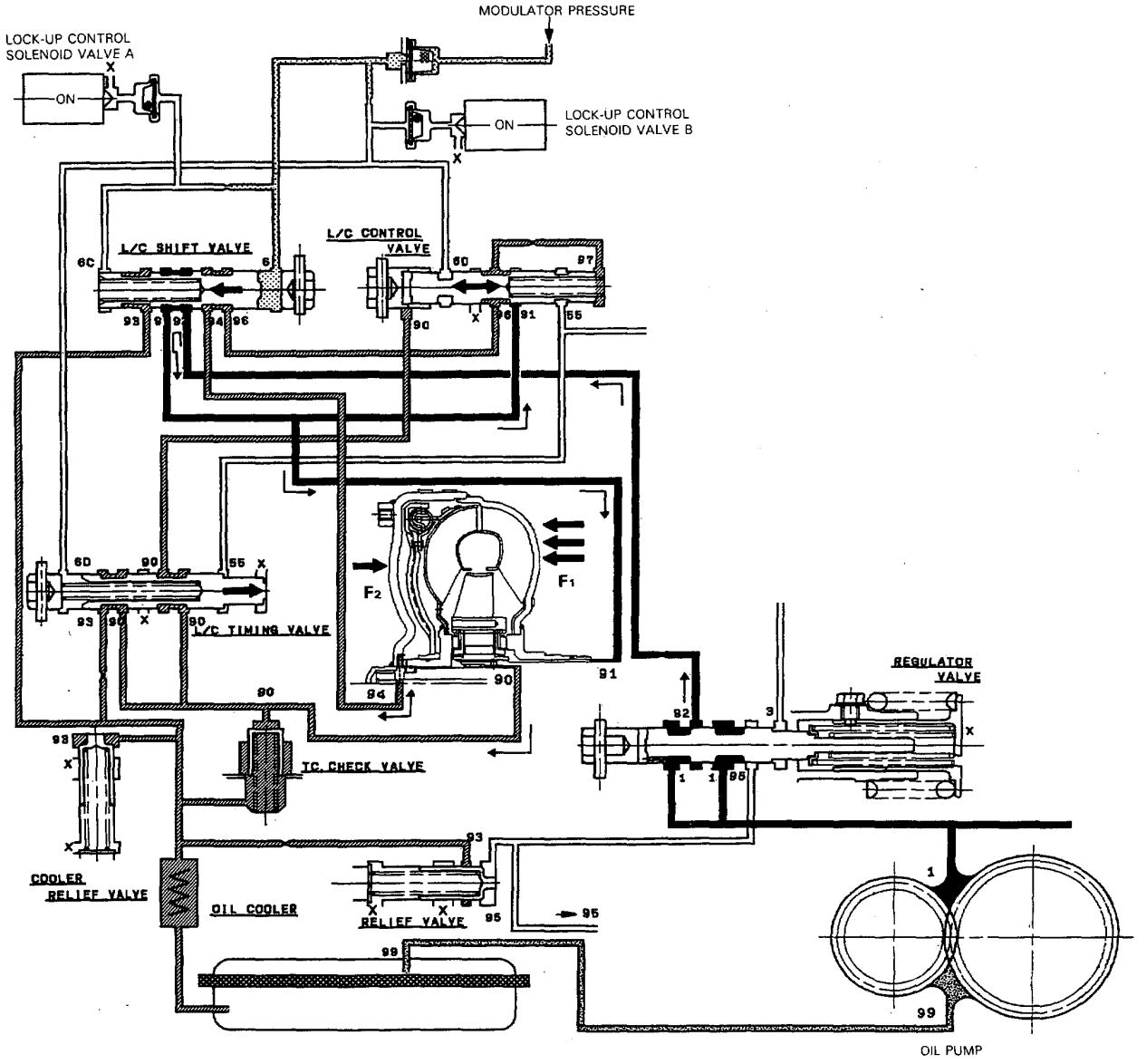

(cont'd)

Lock-up System (cont'd)

Full Lock-up

Lock-up Control Solenoid Valve A: ON Lock-up Control Solenoid Valve B: ON

When the vehicle speed further increases, the throttle valve B pressure is increased in accordance with the throttle opening. The lock-up timing valve B overcomes the spring force and moves to the left side. Also this valve closes the oil port leading to the torque converter check valve.

Under this condition, the throttle B pressure working on the right end of the lock-up control valve becomes greater than that on the left end (modulator pressure in the left end has already been released by the solenoid valve B); i. e., the lock-up control valve is moved to the left side. As this happens, the torque converter back pressure is released fully, causing the lock-up clutch to be engaged fully.

NOTE: When used, "left" or "right" indicates direction on the flow chart.

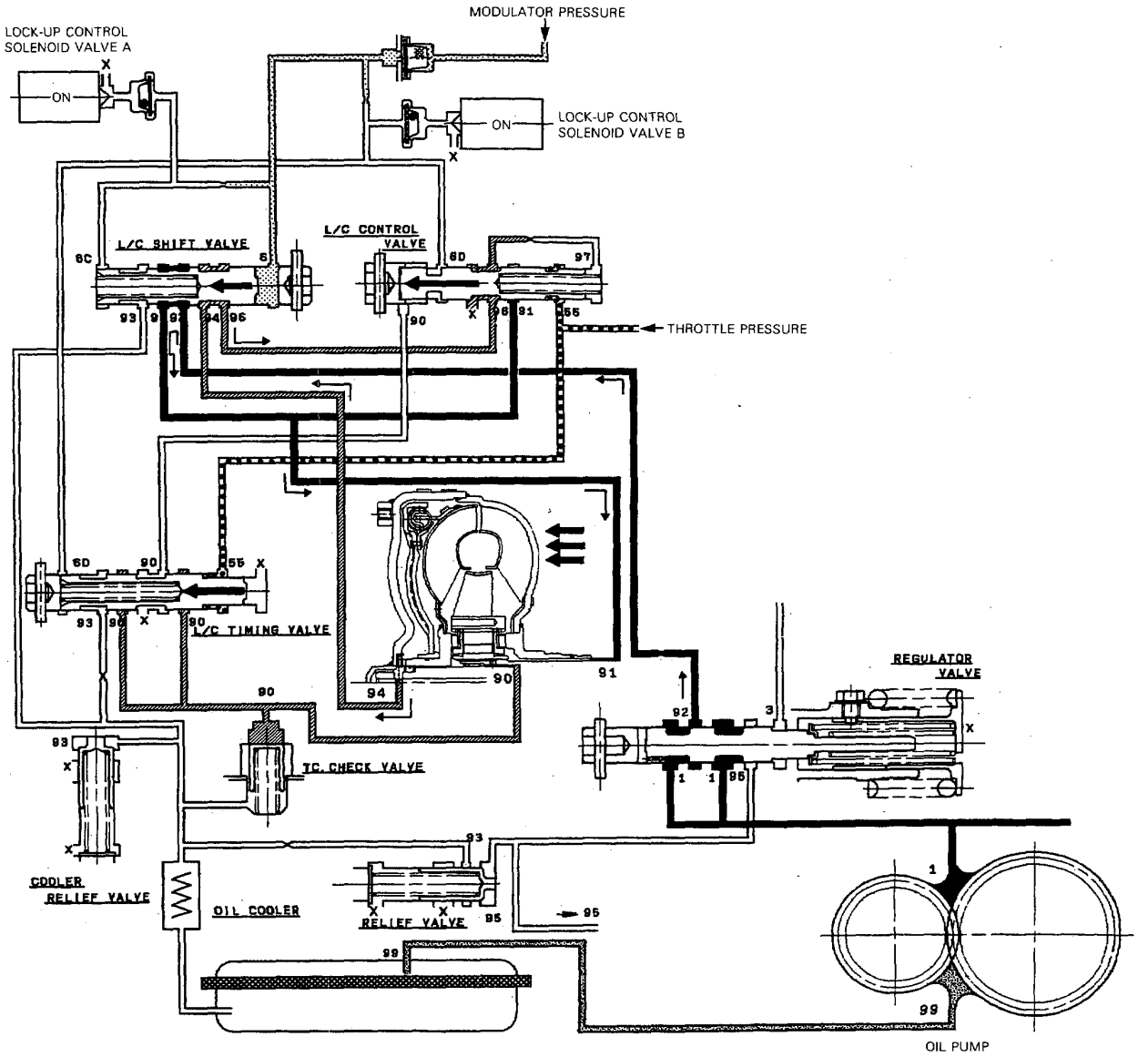

Deceleration Lock-up

Lock-up Control Solenoid Valve A: ON Lock-up Control Solenoid Valve B: Duty Operation (ON ↔ OFF)

The ECU switches the solenoid valve B to ON and OFF alternately at high speeds under certain conditions. The slight lock-up and half lock-up regions are maintained so as to lock the torque converter properly.

NOTE: When used, "left" or "right" indicates direction on the flow chart.

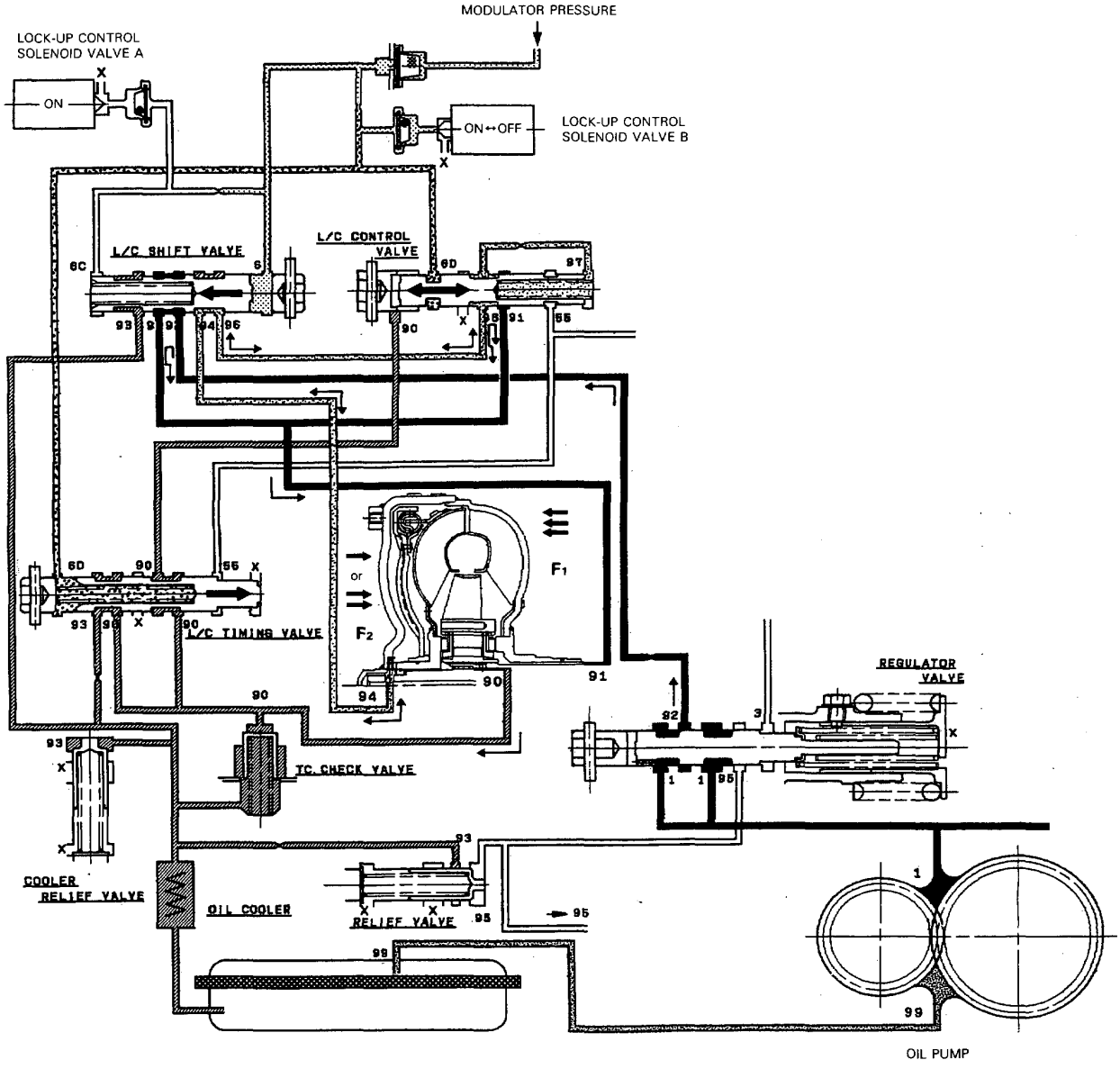

Description

Parking Brake Mechanism

The parking brake mechanism locks the transmission by engaging the parking brake pawl into the parking gear which is splined to the countershaft.
Setting the select lever to [P] position causes the parking brake cone (installed at the end of the parking brake rod) to press the parking brake pawl onto the parking gear. Even if the end of the parking brake pawl rides on top of the parking gear teeth, slight movement of the countershaft will cause the parking brake pawl and the parking gear to mesh with each other completely, because the parking brake cone receives tension from the parking brake rod spring. The parking brake pawl receives the tension (which acts to separate the parking brake pawl from the parking gear) from the parking pawl spring.

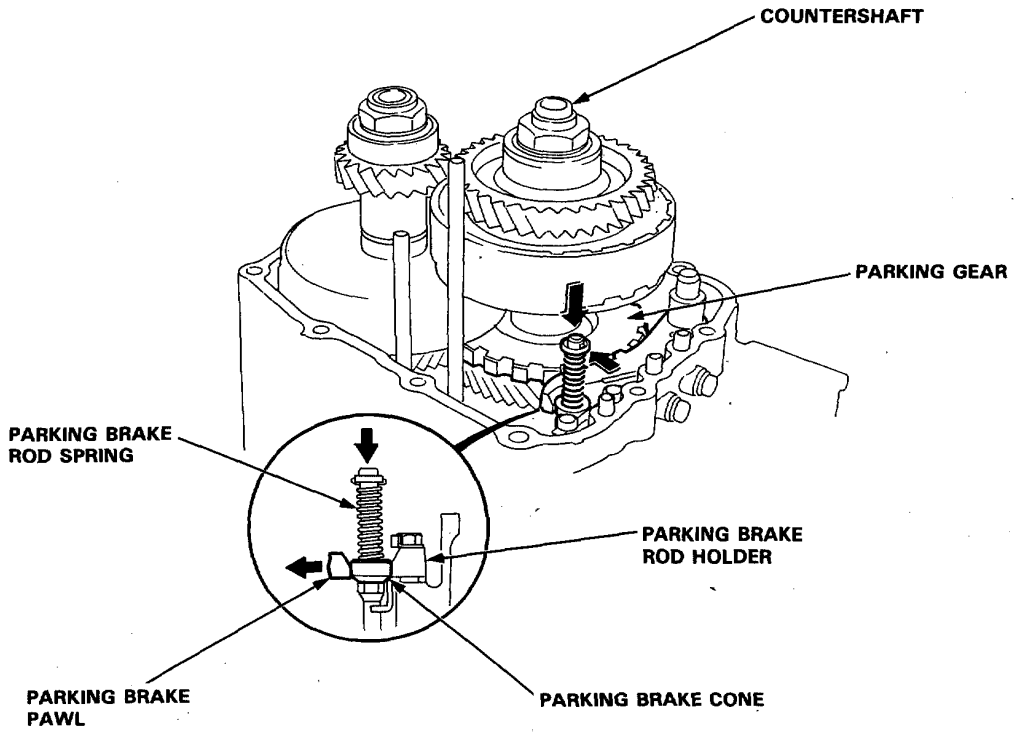

Component Location

LHD:

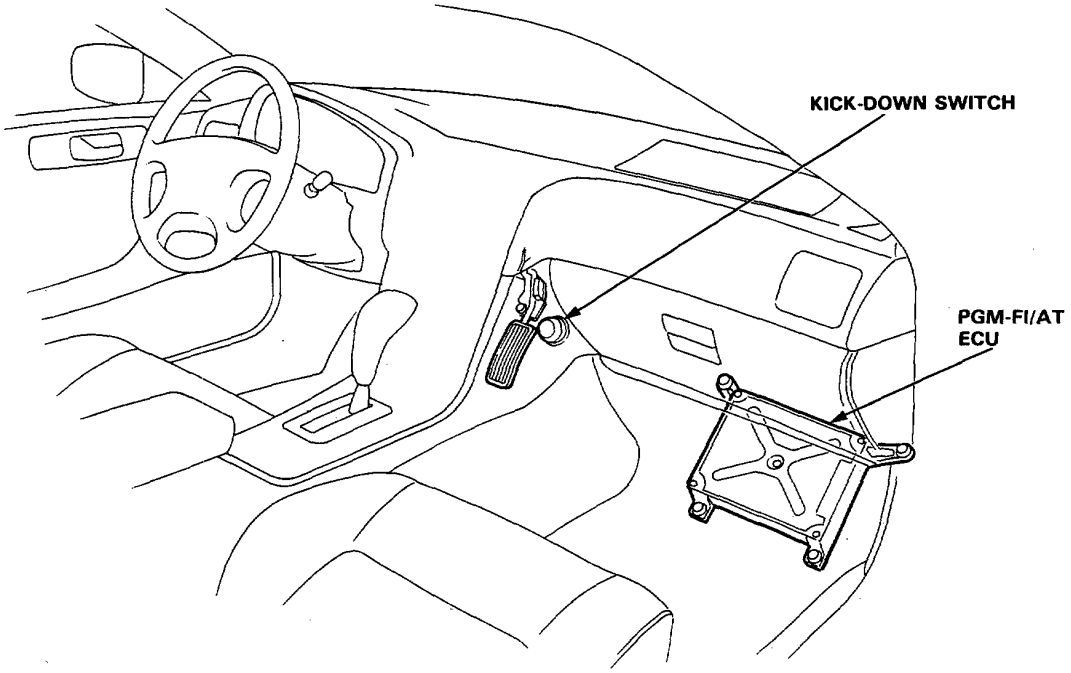

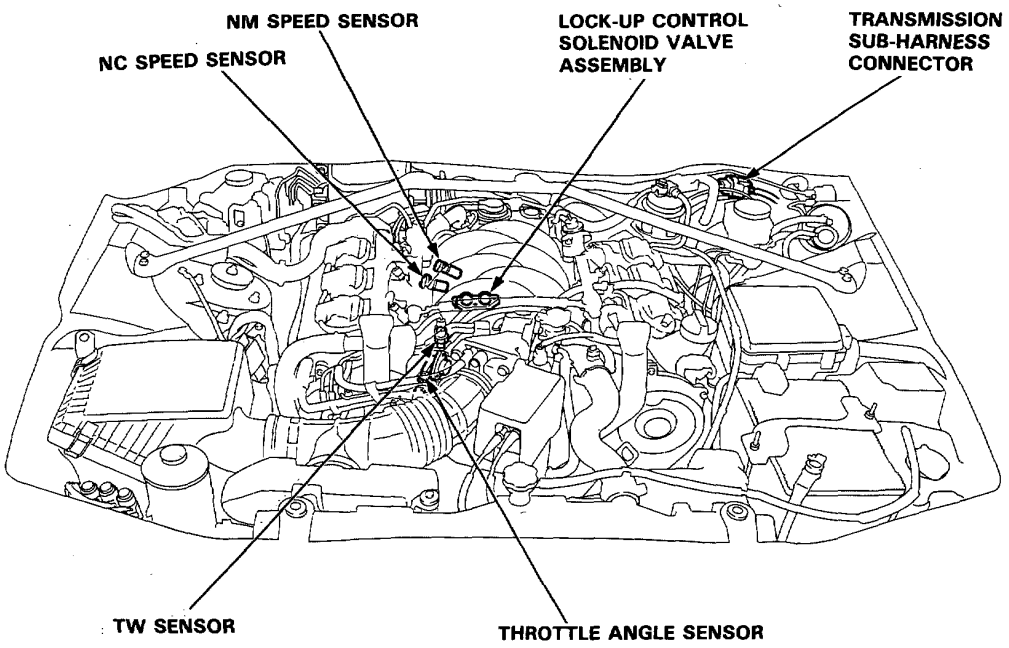

RHD:

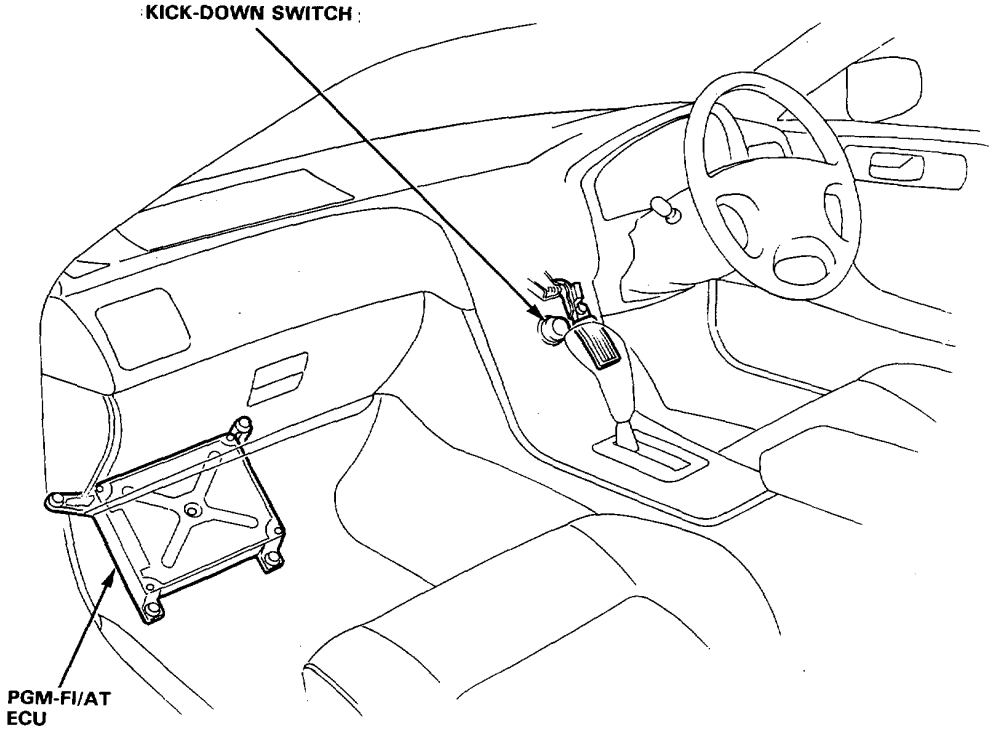
KICK-DOWN SWITCH
PGM-FI/AT
ECU

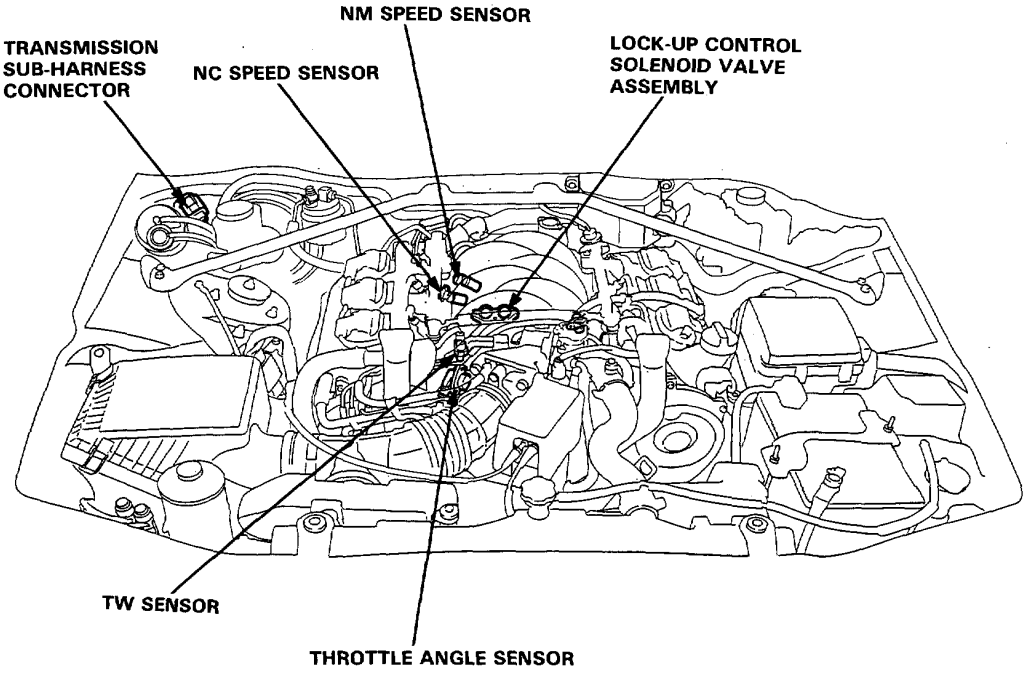
NM SPEED SENSOR
TRANSMISSION
SUB-HARNESS
CONNECTOR
NC SPEED SENSOR
LOCK-UP CONTROL
SOLENOID VALVE
ASSEMBLY
TW SENSOR
THROTTLE ANGLE SENSOR

Circuit Diagram

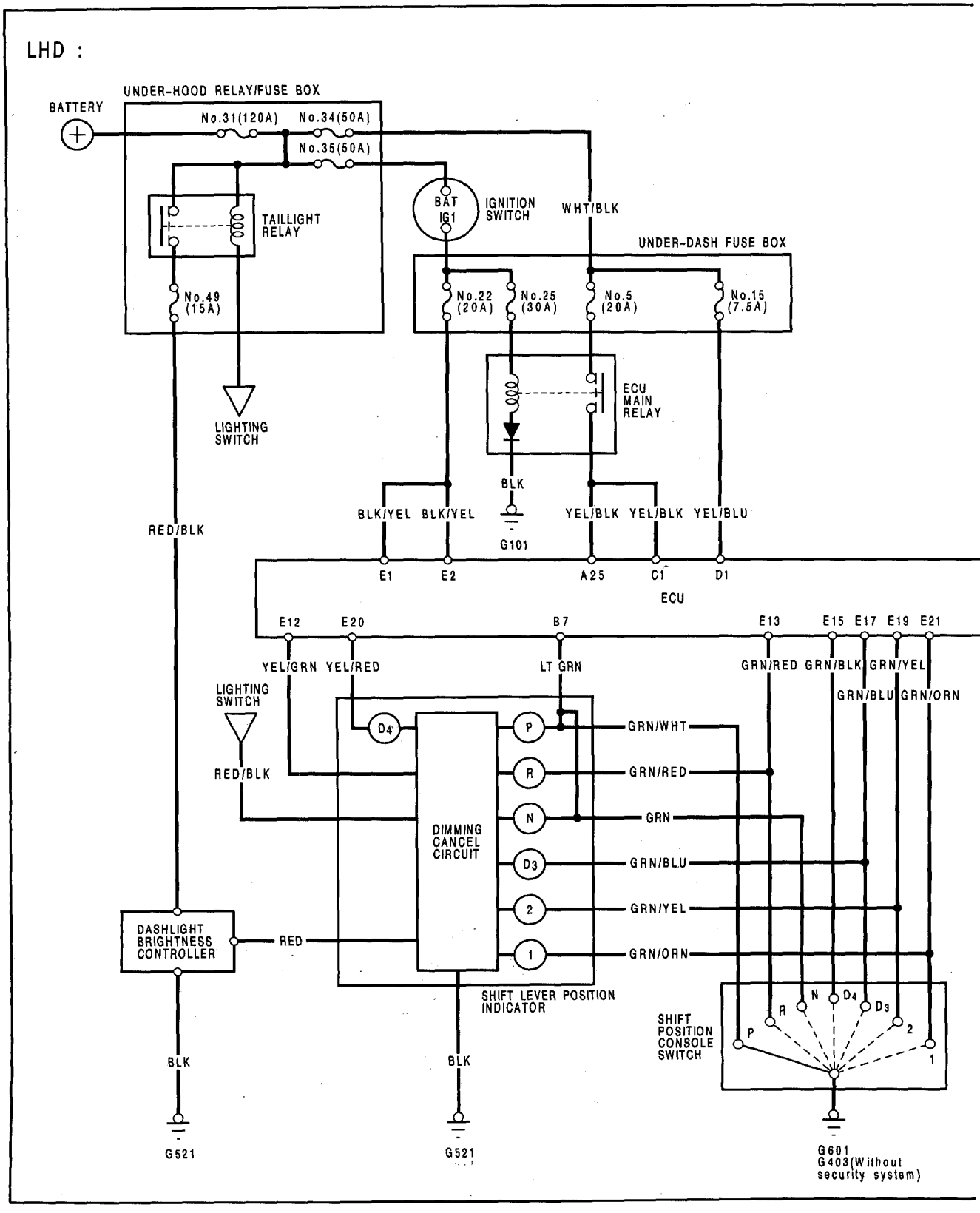

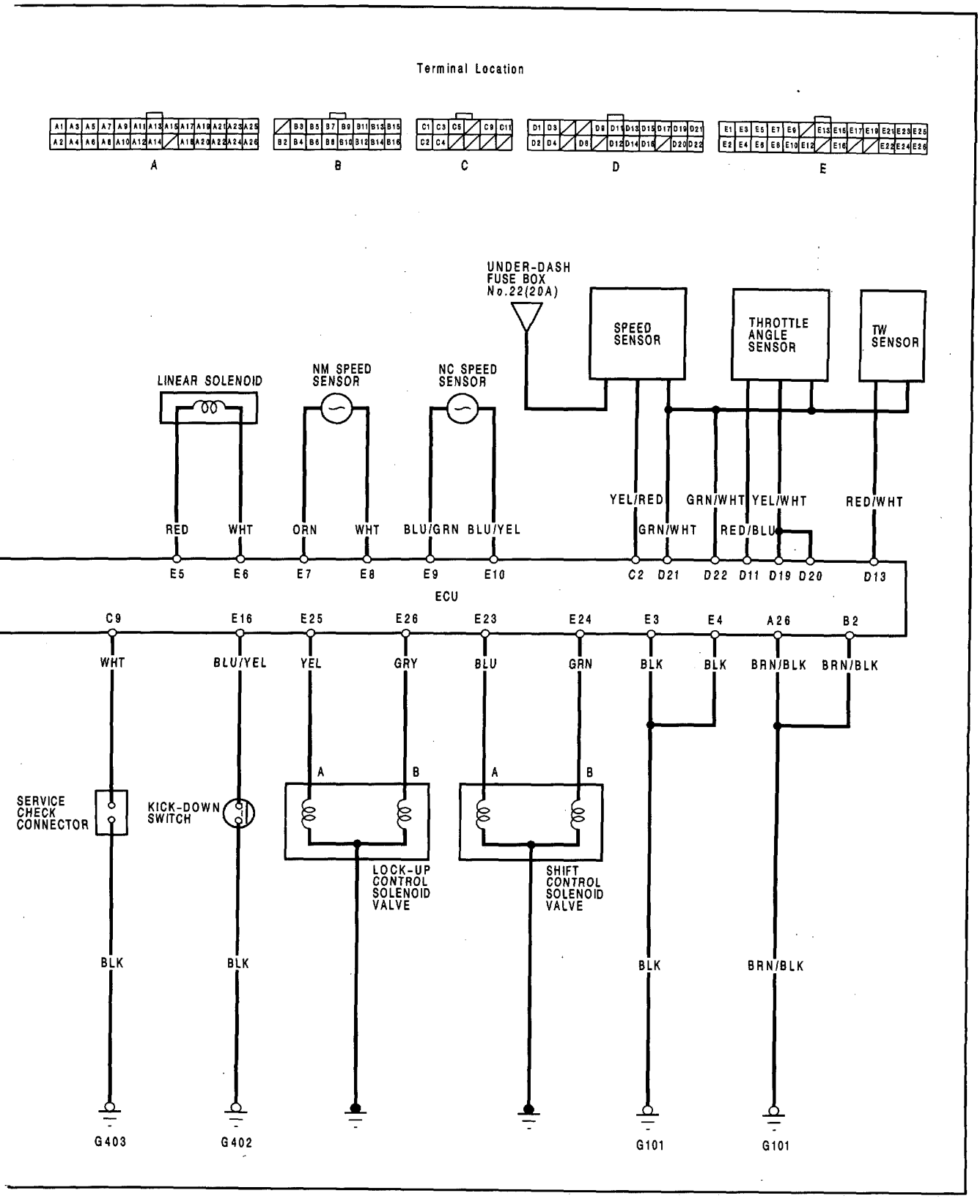
Terminal Location
A
B
C
D
E
UNDER-DASH FUSE BOX No.22(20A)
SPEED SENSOR
THROTTLE ANGLE SENSOR
TW SENSOR
LINEAR SOLENOID
NM SPEED SENSOR
NC SPEED SENSOR
RED
WHT
ORN
WHT
BLU/GRN
BLU/YEL
YEL/RED
GRN/WHT
GRN/WHT
YEL/WHT
RED/BLU
RED/WHT
E5
E6
E7
E8
E9
E10
C2
D21
D22
D11
D19
D20
D13
ECU
C9
E16
E25
E26
E23
E24
E3
E4
A26
B2
WHT
BLU/YEL
YEL
GRY
BLU
GRN
BLK
BLK
BRN/BLK
BRN/BLK
A
B
A
B
SERVICE CHECK CONNECTOR
KICK-DOWN SWITCH
LOCK-UP CONTROL SOLENOID VALVE
SHIFT CONTROL SOLENOID VALVE
BLK
BLK
BLK
BRN/BLK
G403
G402
G101
G101

Circuit Diagram

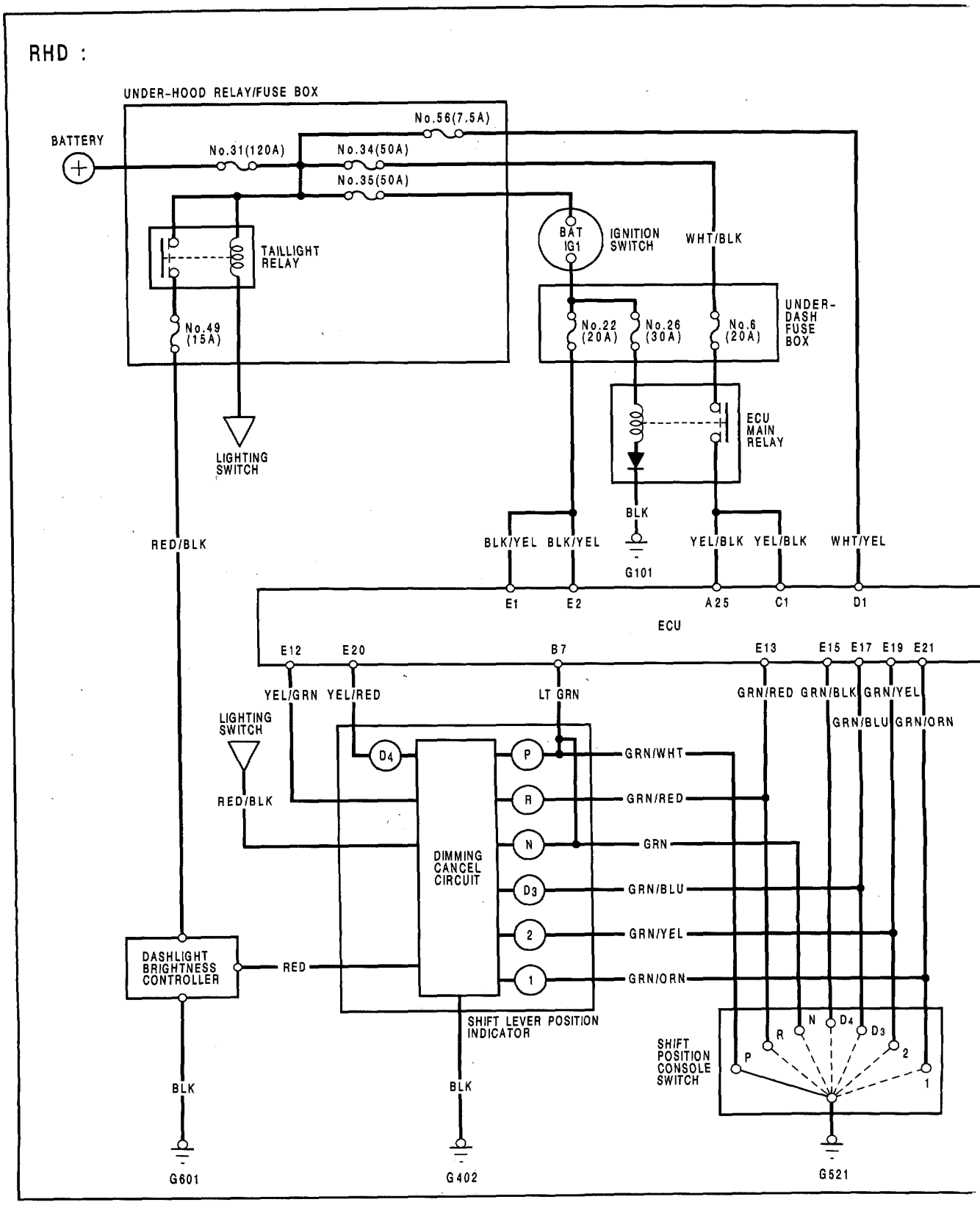

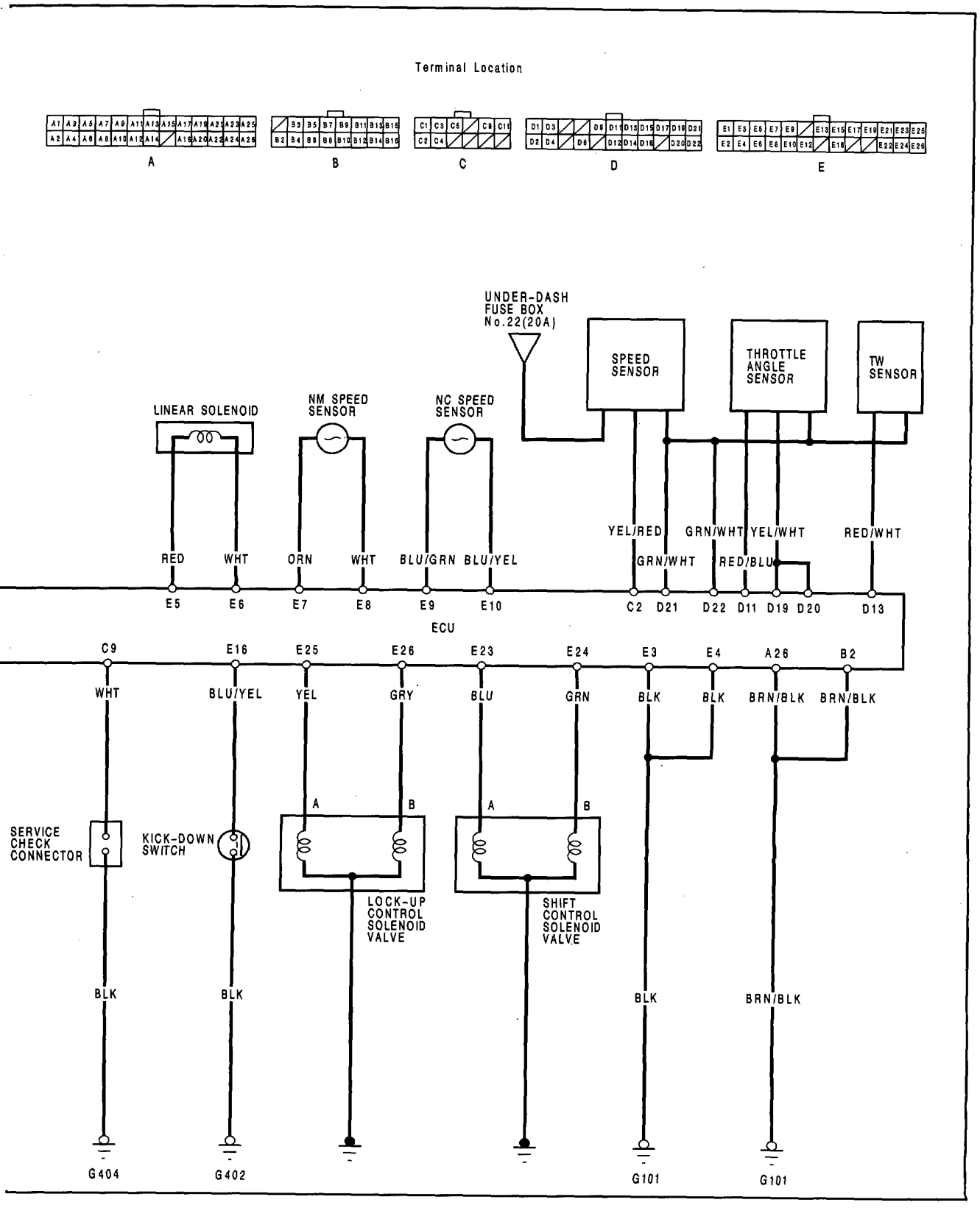
Terminal Location
A
B
C
D
E
UNDER-DASH FUSE BOX No.22(20A)
SPEED SENSOR
THROTTLE ANGLE SENSOR
TW SENSOR
LINEAR SOLENOID
NM SPEED SENSOR
NC SPEED SENSOR
RED
WHT
ORN
WHT
BLU/GRN
BLU/YEL
YEL/RED
GRN/WHT
GRN/WHT
YEL/WHT
RED/BLU
RED/WHT
E5
E6
E7
E8
E9
E10
C2
D21
D22
D11
D19
D20
D13
ECU
C9
E16
E25
E26
E23
E24
E3
E4
A26
B2
WHT
BLU/YEL
YEL
GRY
BLU
GRN
BLK
BLK
BRN/BLK
BRN/BLK
SERVICE CHECK CONNECTOR
KICK-DOWN SWITCH
A
B
A
B
LOCK-UP CONTROL SOLENOID VALVE
SHIFT CONTROL SOLENOID VALVE
BLK
BLK
BLK
BRN/BLK
G404
G402
G101
G101

Troubleshooting Procedures

When the PGM-FI/AT Electronic Control Unit (ECU) senses an abnormality in the input or output systems, the D4 indicator light in the gauge assembly will blink. However, when the Service Check Connector (located on the ECU cover) is connected with a jumper wire, the D4 indicator light will blink the problem code when the ignition switch is turned on.

When the D4 indicator light has been reported on, connect the two terminals of the Service Check Connector together. Then turn on the ignition switch and observe the D4 indicator light.

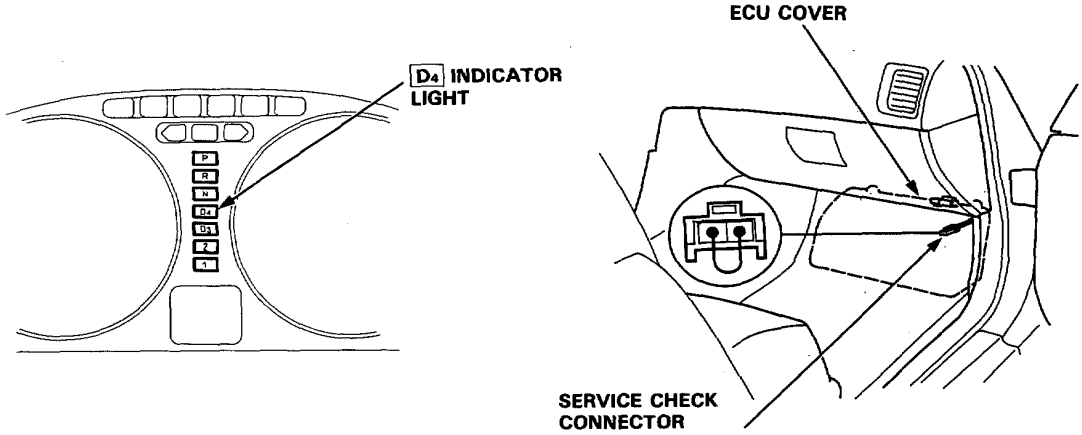

NOTE: LHD is shown; RHD is symmetrical.

Problem codes 1 through 9 are indicated by individual short blinks, Problem codes 10 through 17 are indicated by a series of long and short blinks. One long blink equals 10 short blinks. Add the long and short blinks together to determine the problem code. After determining the problem code, refer to the electrical system Symptom-to-Component Chart on page 14-52.

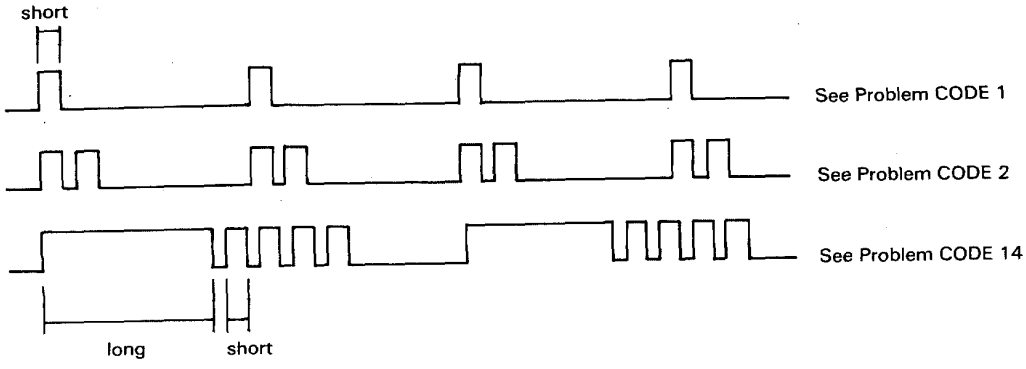

Some PGM-FI problems will also make the D4 indicator light come on. After repairing the PGM-FI system, disconnect the following fuse for more than 10 seconds to reset the ECU memory.

- LHD: No. 15 ACG (S) fuse (7.5 A) in the under dash fuse box
- RHD: BACK UP fuse (7.5 A) in the under-hood relay/fuse box

NOTE:

- Disconnecting the No. 15 ACG (S) fuse (7.5 A) also cancels the power seat setting.
- Disconnecting the BACK UP fuse (7.5 A) also cancels the radio preset stations and the clock setting. Make note of the radio presets before removing the fuse so you can reset them.

If the inspection for a particular code requires the Test Harness connecting the A/T test harness adapter.

1. Connect the A/T test harness adapter to the ECU test harness.

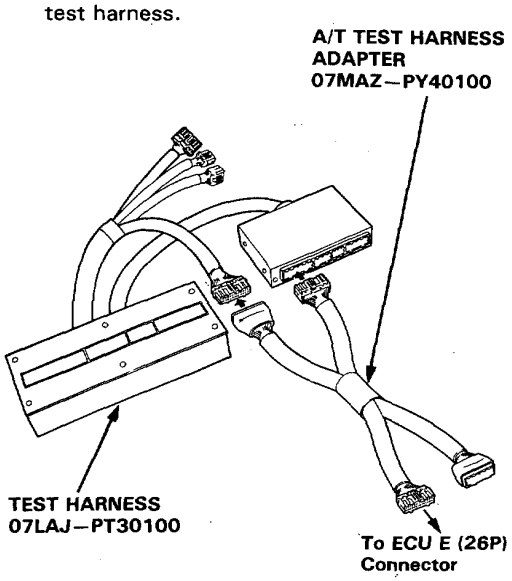

2. Remove the passenger's side door sill molding and small cover on the passenger's side kick panel, and pull the carpet back to expose the ECU.

3. Disconnect the connector from the cooling fan control unit.

NOTE: RHD is shown; LHD is similar.

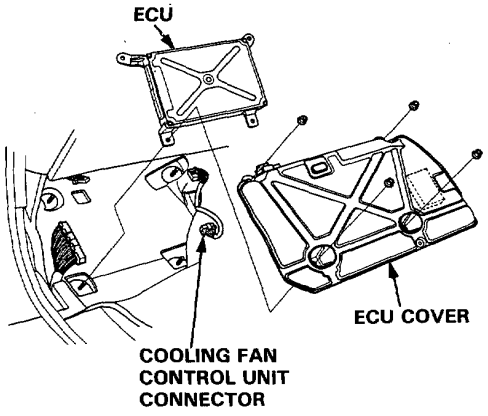

4. Disconnect the appropriate Connector (E: 26P, B: 16P or C: 12P) and connect it to the Test Harness.

LHD:

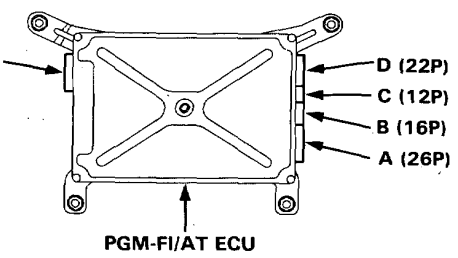

RHD:

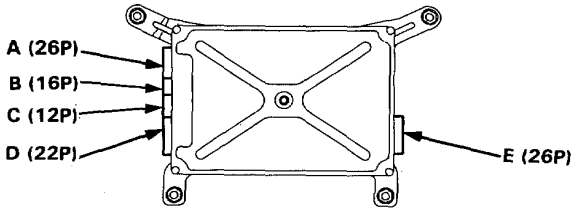

NOTE: RHD is shown; LHD is similar.

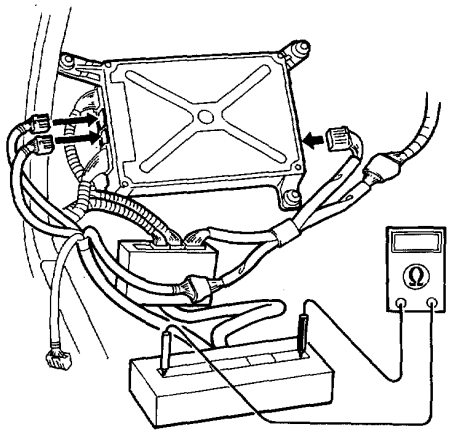

NOTE:
- The A section of the Test Harness corresponds to the E (26P) connector, while connecting to test the A/T Test Harness Adapter.
- Unless otherwise noted, use only the Digital Multimeter for testing.

Symptom-to-Component Chart

Number of D4 indicator light blinks while Service Check Connector is jumped.	D4 indicator light	Possible Cause	Symptom	Refer to page
1	Blinks	• Disconnected lock-up control solenoid valve A connector • Short or open in lock-up control solenoid valve A wire • Faulty lock-up control solenoid valve A	• Lock-up clutch does not engage. • Lock-up clutch does not disengage. • Unstable idle speed.	14-54
2	Blinks	• Disconnected lock-up control solenoid valve B connector • Short or open in lock-up control solenoid valve B wire • Faulty lock-up control solenoid valve B	• Lock-up clutch does not engage.	14-55
3	Blinks or OFF	• Disconnected throttle angle sensor connector • Short or open in throttle angle sensor wire • Faulty throttle angle sensor	• Lock-up clutch does not engage.	14-56
4	Blinks	• Disconnected speed sensor connector • Short or open in speed sensor wire • Faulty speed sensor	• Lock-up clutch does not engage.	14-57
5	Blinks	• Short in shift position console switch wire • Faulty shift position console switch	• Fails to shift other than 2nd ↔ 4th gears. • Lock-up clutch does not engage.	14-58
6	OFF	• Disconnected shift position console switch connector • Open in shift position console switch wire • Faulty shift position console switch	• Fails to shift other than 2nd ↔ 4th gears. • Lock-up clutch does not engage. • Lock-up clutch engages and disengages alternately.	14-60
7	Blinks	• Disconnected shift control solenoid valve A connector • Short or open in shift control solenoid valve A wire • Faulty shift control solenoid valve A	• Fails to shift (between 1st ↔ 4th, 2nd ↔ 4th or 2nd ↔ 3rd gears only). • Fails to shift (stuck in 4th gear).	14-62
8	Blinks	• Disconnected shift control solenoid valve B connector • Short or open in shift control solenoid valve B wire • Faulty shift control solenoid valve B	• Fails to shift (stuck in 1st or 4th gears).	14-63
9	Blinks	• Disconnected NC speed sensor connector • Short or open in the NC speed sensor wire • Faulty NC speed sensor	• Lock-up clutch does not engage.	14-64

Number of D4 indicator light blinks while Service Check Connector is jumped.	D4 indicator light	Possible Cause	Symptom	Refer to page
10	Blinks	• Disconnected water temperature sensor connector • Short or open in the water temperature sensor wire • Faulty water temperature sensor	• Lock-up clutch does not engage.	14-66
11	OFF	• Trouble in ECU	• Lock-up clutch does not engage.	14-67
14	OFF	• Trouble in ECU	• Transmission jerks hard when shifting.	14-68
15	OFF	• Disconnected NM speed sensor connector • Short or open in NM speed sensor wire • Faulty NM speed sensor	• Transmission jerks hard when shifting.	14-69
16	Blinks	• Disconnected linear solenoid connector • Short or open in linear solenoid wire • Faulty linear solenoid	• Transmission jerks hard when shifting. • Lock-up clutch does not engage.	14-72
17	OFF	• Short in kick-down switch wire • Faulty kick-down switch	• 4th → 2nd kick-down speed is low.	14-73

If the self-diagnosis [D4] indicator light does not blink, perform an inspection according to the table listed below.

Symptom	Probable Cause	Ref. page
D4 indicator light does not come on for 2 seconds after ignition is first turned on.	—	14-74
D4 indicator light is on steady, not blinking whenever the ignition is on.	—	14-76
Transmission does not kick-down when the kick-down switch is on.	Check kick-down switch signal.	14-73

- If a customer describes the symptoms for codes 3, 6, 11 or 17, yet the [D4] indicator light is not blinking, it will be necessary to reccreate the symptom by test driving, and then checking the [D4] indicator light with the ignition still ON.

- If the [D4] indicator light displays codes 1, 2, 3, 7, 8, or 16, check first the No. 31, 25, 6 and 22 fuse before electrical troubleshooting. If any of the fuses have blown, repair them and then recheck. (Fuse No.; See Section 23.)

- If the [D4] indicator light displays codes other than those listed above or stays lit continuously, the ECU is faulty.

- Sometimes the [D4] indicator light and the Check Engine light may come on simultaneously. If so, check the PGM-FI system according to the number of blinks on the PGM-FI self-diagnosing indicator, then reset the memory by removing the following fuse for more than 10 seconds. Drive the vehicle for several minutes at speeds over 30 mph (50 km/h), then recheck the lights.
  - LHD: No. 15 ACG (S) fuse (7.5 A) in the under dash fuse box
  - RHD: BACK UP fuse (7.5 A) in the under-hood relay/fuse box

  NOTE:
  - Disconnecting the No. 15 ACG (S) fuse (7.5 A) also cancels the power seat setting.
  - Disconnecting the BACK UP fuse (7.5 A) also cancels the radio preset stations and clock setting. Make note of the radio presets before removing the fuse so you can reset them.

Troubleshooting Flowchart

NOTE: The section A of the Test Harness with the A/T Test Harness Adapter corresponds to the E (26P) connector of the ECU.

Self-diagnosis D4 indicator light blinks once.

Disconnect the E (26P) connector from the ECU.
Connect the Test Harness "A" connector to the wire harness only, not to the ECU. (14-51)

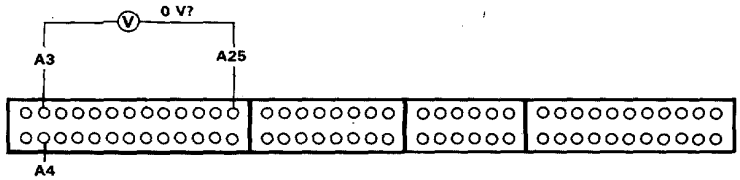

Turn the ignition switch ON.

Measure the voltage between the A25 and A3/A4 terminals.

Is there voltage?

YES → **Repair short to power source in YEL wire between the E25 terminal and the lock-up control solenoid valve A.**

NO

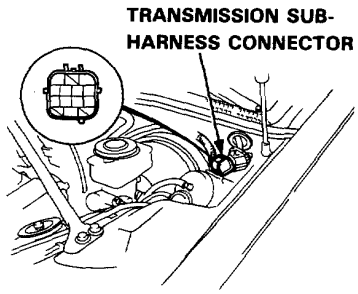

NOTE: LHD is shown; RHD is similar.

Turn the ignition switch OFF.

Disconnect the transmission sub-harness connector.

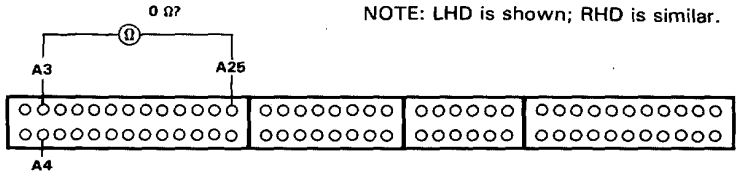

Check for continuity between the A25 and A3/A4 terminals.

Is there continuity?

YES → **Repair short to ground in YEL wire between the E25 terminal and the lock-up control solenoid valve A.**

NO

Connect the transmission sub-harness connector.

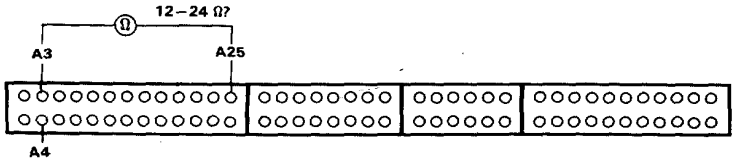

Measure the resistance between the A25 and A3/A4 terminals.

Is the resistance 12–24 Ω?

NO → **Check for open in YEL wire between the E25 terminal and the lock-up control solenoid valve A. If wire is OK, check the lock-up control solenoid valve A. (See page 14-78.)**

YES

Check for loose ECU connectors. If necessary, substitute a known-good ECU and recheck.

Self-diagnosis D4 indicator light blinks twice.

Disconnect the E (26P) connector from the ECU.
Connect the Test Harness "A" connector to the wire harness only, not to the ECU. (14-51)

Turn the ignition switch ON.

Measure the voltage between the A26 and A3/A4 terminals.

Is there voltage?

YES → **Repair short to power source in GRY wire between the E26 terminal and the lock-up control solenoid valve B.**

NO

Turn the ignition switch OFF.

Disconnect the transmission sub-harness connector.

Check for continuity between the A26 and A3/A4 terminals.

Is there continuity?

YES → **Repair short to ground in GRY wire between the E26 terminal and the lock-up control solenoid valve B.**

NO

Connect the transmission sub-harness connector.

Measure the resistance between the A26 and A3/A4 terminals.

Is the resistance 12–24 Ω?

NO → **Check for open in GRY wire between the E26 terminal and the lock-up control solenoid valve B. If wire is OK, check the lock-up control solenoid valve B. (See page 14-78.)**

YES

Check for loose ECU connectors. If necessary, substitute a known-good ECU and recheck.

NOTE: The section A of the Test Harness with the A/T Test Harness Adapter corresponds to the E (26P) connector of the ECU.

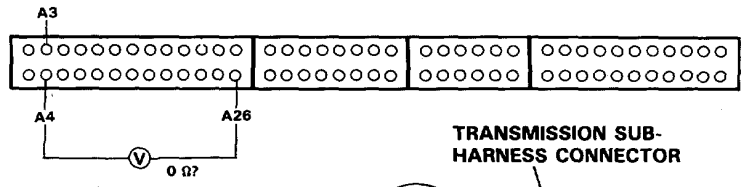

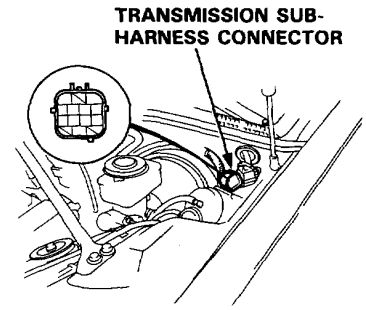

NOTE: LHD is shown; RHD is similar.

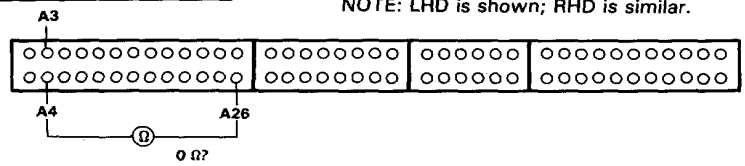

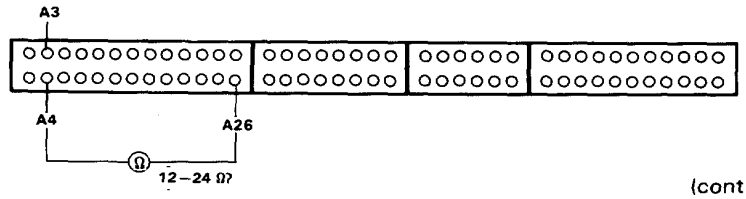

(cont'd)

Troubleshooting Flowchart (cont'd)

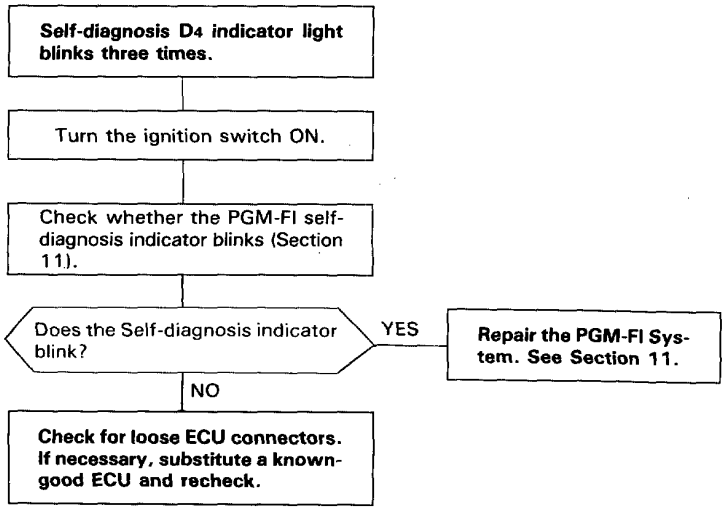

Self-diagnosis D4 indicator light blinks four times.

Raise the car.

Shift transmission to [N].

Disconnect the E (26P) and C (12P) connectors from the ECU. Connect the Test Harness "A" and "C" connectors to the wire harness only, not to the ECU. (14-51)

Turn the ignition switch ON.

Rotate the front wheel and check for voltage between the C2 and A3/A4 terminals. Block the other wheel so it does not turn.

Does the voltage 0–5 V appear alternately?

NO → **Check for short or open in YEL/RED wire between the C2 terminal and the speed sensor. If wire is OK, check the speed sensor. See Section 23.**

YES → **Check for loose ECU connectors. If necessary, substitute a known-good ECU and recheck.**

WARNING **Make sure lifts, jacks and safety stands are placed properly. (See page 1-6.)**

NOTE: *The section A of the Test Harness with the A/T Test Harness Adapter corresponds to the E (26P) connector of the ECU.*

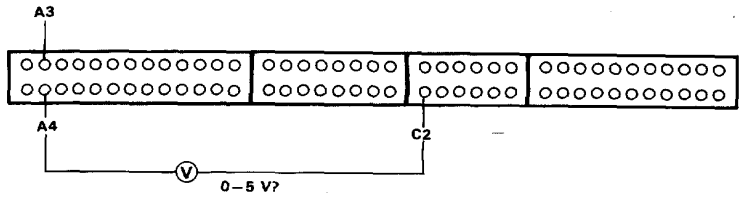

(cont'd)

Troubleshooting Flowchart (cont'd)

Self-diagnosis D4 indicator light blinks five times.

Turn the ignition switch ON.

Observe the A/T shift indicator and select each position separately.

Does the indicator light properly?

NO → **See A/T shift position indicator inspection (Section 23).**

YES

Turn the ignition switch OFF.

Connect the Test Harness between the ECU and connectors.

NOTE: The section A of the Test Harness with the A/T Test Harness Adapter corresponds to the E (26P) connector of the ECU.

Turn the ignition switch ON.

Shift to other than [R] position.

Measure the voltage between the A13 and A3/A4 terminals.

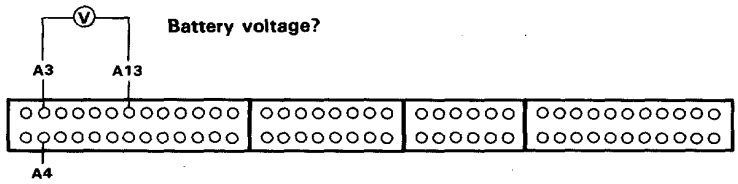

Is there battery voltage?

NO → **Check for short in GRN/RED wire between the E13 terminal and the shift position console switch or shift position indicator. If wire is OK, check for loose ECU connectors. If necessary, substitute a known-good ECU and recheck.**

YES

Shift to other than [N] and [P] position.

Measure the voltage between the B7 and A3/A4 terminals.

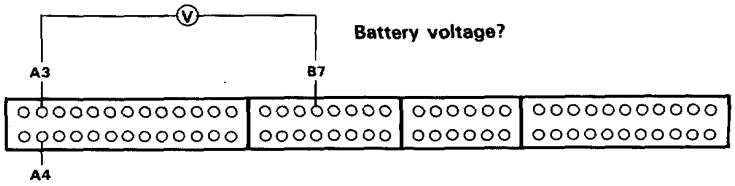

Is there battery voltage?

NO → **Check for short in LT GRN wire between the B7 terminal and the shift position console switch. If wire is OK, check for loose ECU connectors. If necessary, substitute a known-good ECU and recheck.**

YES

To page 14-59

From page 14-58

NOTE: The section A of the Test Harness with the A/T Test Harness Adapter corresponds to the E (26P) connector of the ECU.

Shift to other than [D4] position.

Measure the voltage between the A15 and A3/A4 terminals.

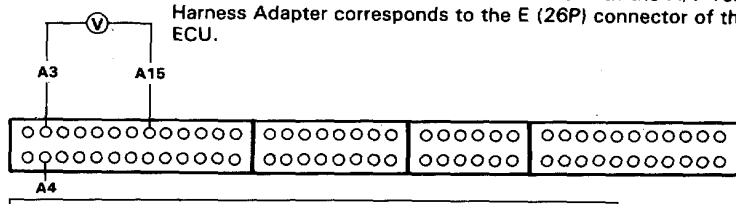

Is there battery voltage?

NO → **Check for short in GRN/BLK wire between the E15 terminal and the shift position console switch. If wire is OK, check for loose ECU connectors. If necessary, substitute a known-good ECU and recheck.**

YES

Shift to other than [D3] position.

Measure the voltage between the A17 and A3/A4 terminals.

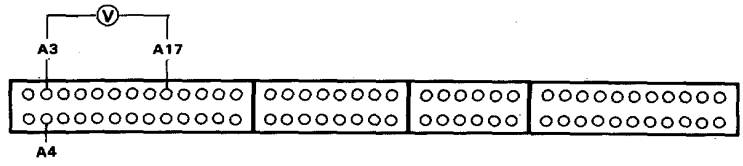

Is there battery voltage?

NO → **Check for short in GRN/BLU wire between the E17 terminal and the shift position console switch or shift position indicator. If wire is OK, check for loose ECU connectors. If necessary, substitute a known-good ECU and recheck.**

YES

Shift to other than [2] position.

Measure the voltage between the A19 and A3/A4 terminals.

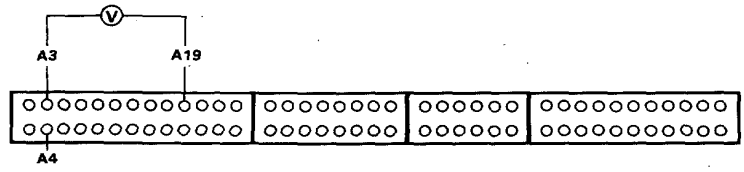

Is there battery voltage?

NO → **Check for short in GRN/YEL wire between the E19 terminal and the shift position console switch or shift position indicotor. If wire is OK, check for loose ECU connectors. If necessary, substitute a known-good ECU and recheck.**

YES

Shift to other than [1] position.

Measure the voltage between the A21 and A3/A4 terminals.

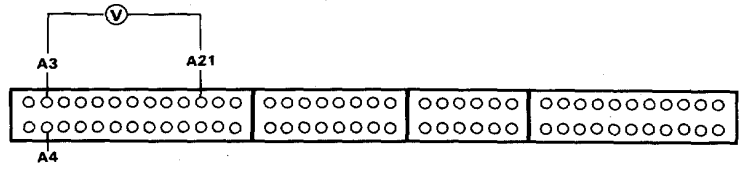

Is there battery voltage?

NO → **Check for short in GRN/ORN wire between the E21 terminal and the shift position console switch or shift position indicator. If wire is OK, check for loose ECU connectors. If necessary, substitute a known-good ECU and recheck.**

YES

Check for loose ECU connectors. If necessary, substitute a known-good ECU and recheck.

(cont'd)

Troubleshooting Flowchart (cont'd)

Self-diagnosis D4 indicator light blinks six times.

Turn the ignition switch ON.

Observe the A/T shift indicator and select each position separately.

Does the indicator light properly?

NO → **See A/T shift position indicator inspection. (Section 23)**

YES

Turn the ignition switch OFF.

Connect the Test Harness between the ECU and connectors.

NOTE: The section A of the Test Harness with the A/T Test Harness Adapter corresponds to the E (26P) connector of the ECU.

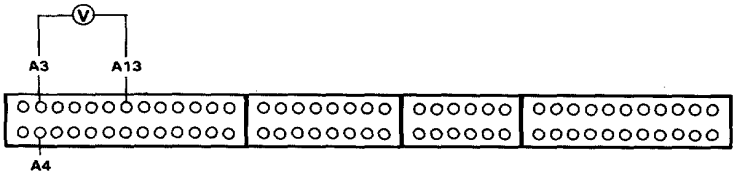

Turn the ignition switch ON.

Shift to [R] position.

Measure the voltage between the A13 and A3/A4 terminals.

Is there voltage?

YES → **Repair open in GRN/RED wire between the E13 terminal and the shift position console switch.**

NO

Shift to [N] or [P] position.

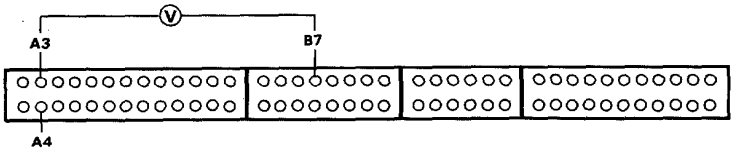

Measure the voltage between the B7 and A3/A4 terminals.

Is there voltage?

YES → **Repair open in LT GRN wire between the B7 terminal and the shift position console switch.**

NO

To page 14-61

From page 14-60

NOTE: The section A of the Test Harness with the A/T Test Harness Adapter corresponds to the E (26P) connector of the ECU.

Shift to [D4] position.

Measure the voltage between the A15 and A3/A4 terminals.

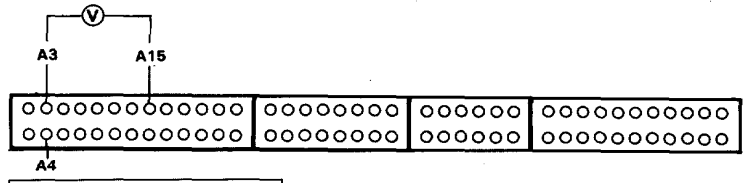

Is there voltage?

YES → **Repair open in GRN/BLK wire between the E15 terminal and the shift position console switch.**

NO

Shift to [D3] position.

Measure the voltage between the A17 and A3/A4 terminals.

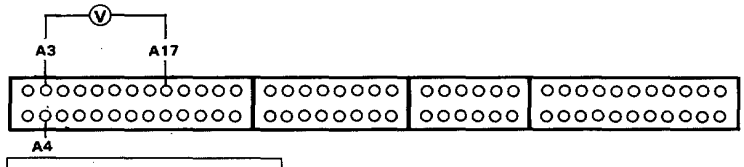

Is there voltage?

YES → **Repair open in BRN/BLU wire between the E17 terminal and the shift position console switch.**

NO

Shift to [2] position.

Measure the voltage between the A19 and A3/A4 terminals.

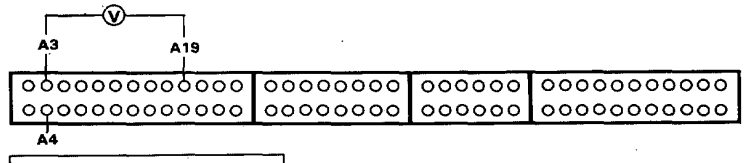

Is there voltage?

YES → **Repair open in GRN/YEL wire between the E19 terminal and the shift position console switch.**

NO

Shift to [1] position.

Measure the voltage between the A21 and A3/A4 terminals.

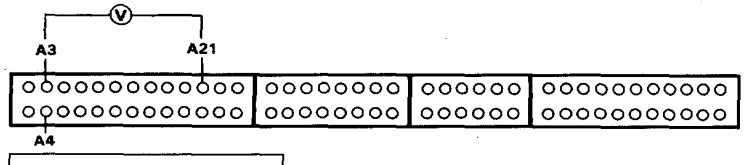

Is there voltage?

YES → **Repair open in GRN/ORN wire between the E21 terminal and the shift position console switch.**

NO

Check for loose ECU connectors. If necessary, substitute a known-good ECU and recheck.

(cont'd)

Troubleshooting Flowchart (cont'd)

NOTE: The section A of the Test Harness with the A/T Test Harness Adapter corresponds to the E (26P) connector of the ECU.

Self-diagnosis D4 indicator light blinks seven times.

Disconnect the E (26P) connector from the ECU.
Connect the Test Harness "A" connector to the wire harness only, not to the ECU. (14-51)

Turn the ignition switch ON.

Measure the voltage between the A23 and A3/A4 terminals.

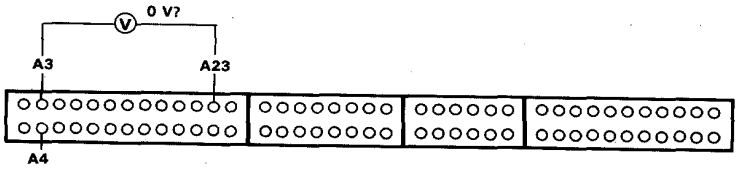

Is there voltage?

YES → **Repair short to power source in BLU wire between the E23 terminal and the shift control solenoid valve A.**

NO

Turn the ignition switch OFF.

Measure the resistance between the A23 and A3/A4 terminals.

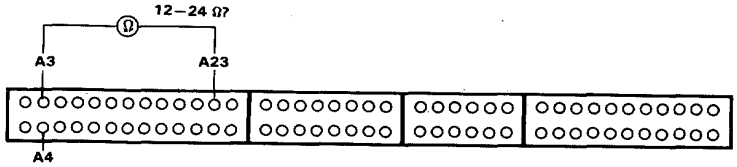

Is the resistance 12–24 Ω?

NO → **Check for open in BLU wire between the E23 terminal and the shift control solenoid valve A. If wire is OK, check the shift control solenoid valve A. (See page 14-80.)**

YES

Disconnect the transmission sub-harness connector.

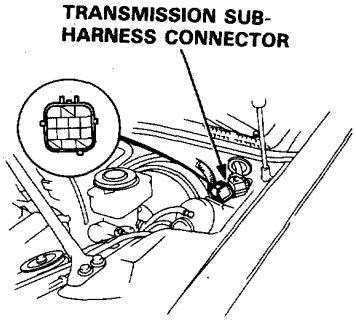

NOTE: LHD is shown; RHD is similar.

Check for continuity between the A23 and A3/A4 terminals.

Is there continuity?

YES → **Repair short to ground in BLU wire between the E23 terminal and the shift control solenoid valve A.**

NO

Connect the transmission sub-harness connector to.

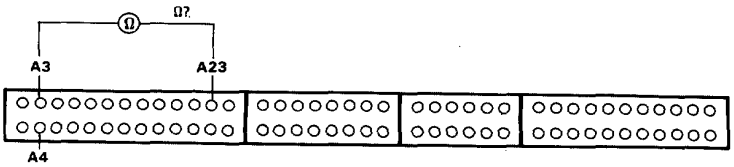

Check for loose ECU connectors. If necessary, substitute a known-good ECU and recheck.

Self-diagnosis D4 indicator light *blinks* eight times.

Disconnect the E (26P) connector from the ECU.
Connect the Test Harness "A" connector to the wire harness only, not to the ECU. (14-51)

Turn the ignition switch ON.

Measure the voltage between the A24 and A3/A4 terminals.

Is there voltage?

YES → **Repair short to power source in GRN wire between the E24 terminal and shift control solenoid valve B.**

NO

Turn the ignition switch OFF.

Measure the resistance between the A24 and A3/A4 terminals.

Is the resistance 12-24 Ω?

NO → **Check for open in GRN wire between the E24 terminal and the shift control solenoid valve B. If wire is OK, check the shift control solenoid valve B. (See page 14-80.)**

YES

Disconnect the transmission subharness connector.

Check for continuity between the A24 and A3/A4 terminals.

Is there continuity?

YES → **Repair short to ground in GRN wire between the E24 terminal and the shift control solenoid valve B.**

NO

Connect the transmission subharness connector.

Check for loose ECU connectors. If necessary, substitute a known-good ECU and recheck.

NOTE: The section A of the Test Harness with the A/T Test Harness Adapter corresponds to the E (26P) connector of the ECU.

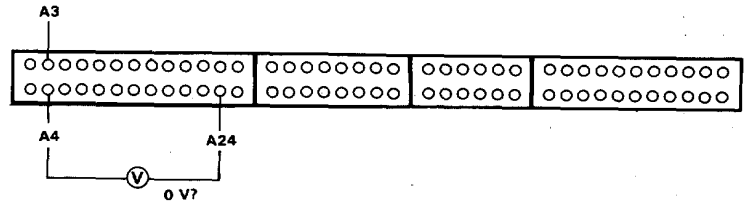

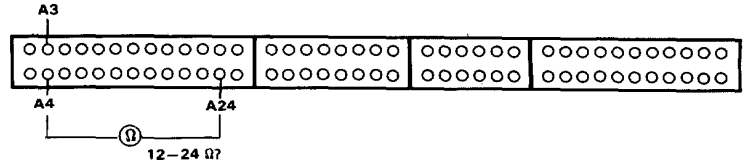

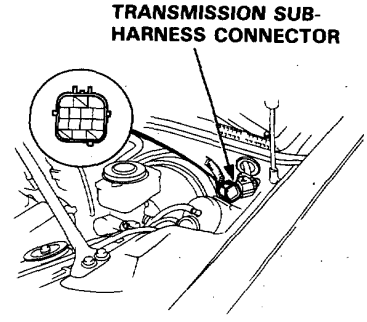

NOTE: LHD is shown; RHD is similar.

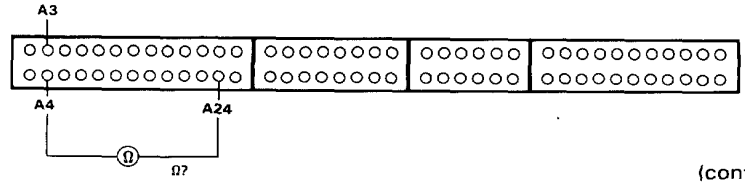

(cont'd)

Troubleshooting Flowchart (cont'd)

Self-diagnosis D4 indicator light blinks nine times.

Check the state of installation of the NC speed sensor.

OK? — NO → **Reinstall and recheck.**

YES

Disconnect the transmission sub-harness connector.

Measure the resistance between the No.9 and No.10 terminals for the NC speed sensor.

NOTE: LHD is shown; RHD is similar.

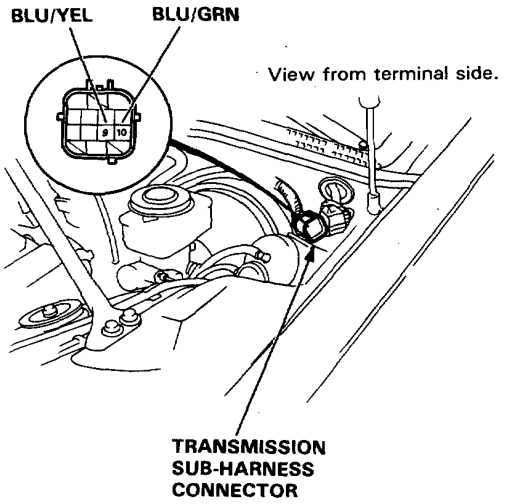

Is the resistance 400–600 ohms? (70°F, 20°C) — NO → Disconnect the NC speed sensor from the sub-harness at the transmission. Measure the resistance between the BLU/YEL and BLU/GRN on the NC speed sensor.

YES

Reconnect the transmission sub-harness connector.

Disconnect the E(26P) connector from the ECU. Connect the Test Harness "A" connector to the wire harness only, not to the ECU. (14-51)

Is the resistance 400–600 ohms? (70°F, 20°C) — NO → **Replace the NC speed sensor.**

YES

Replace the transmission sub-harness.

To page 14-65

NOTE: The section A of the Test Harness with the A/T Test Harness Adapter corresponds to the E (26P) connector of the ECU.

From page 14-64

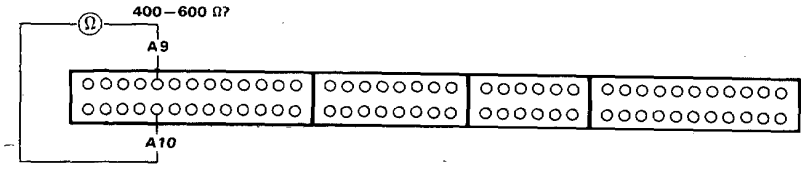

Measure the resistance between A9 and A10.

Is the resistance 400–600 ohms? (70°F, 20°C)

NO → **Repair open in BLU/YEL or BLU/GRN wires between E(26P) connector and the transmission sub-harness.**

YES

Check for continuity between A9 terminal and body ground.
Check for continuity between A10 terminal and body ground.

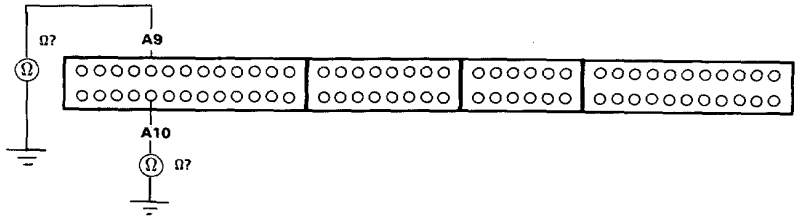

Is there continuity?

YES → **Repair short in BLU/GRN or BLU/YEL wires between the NC speed sensor and body ground.**

NO

Check for loose ECU connectors. If necessary, substitute a known good ECU and recheck.

(cont'd)

Troubleshooting Flowchart (cont'd)

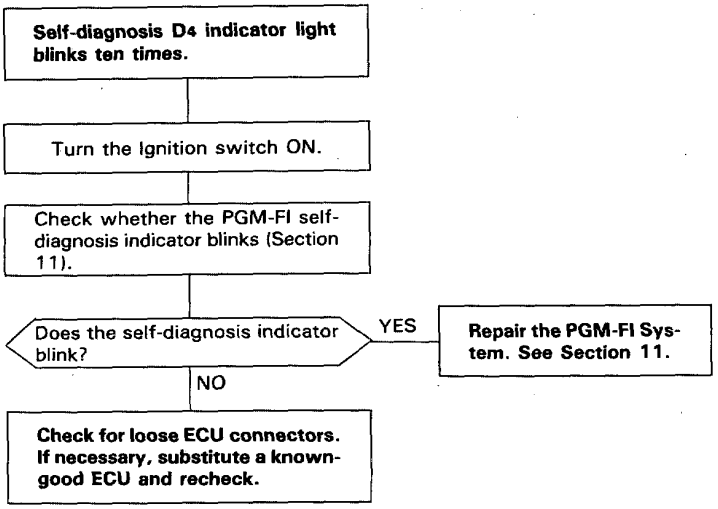

Self-diagnosis D4 indicator light blinks eleven times.

LHD

Disconnect No. 15: ACG(s) fuse in the under dash fuse box for 10 seconds to reset the ECU.

RHD

Disconnect the BACK UP fuse (7.5 A) in the under-hood relay/fuse box for 10 seconds to reset the ECU.

Drive the car for several miles so that the transmission upshifts and down-shifts several times.

Does self-diagnosis D4 indicator light blink eleven times?

NO → **Intermittent failure, system is OK at this time.**

YES → **Replace the ECU.**

LHD:

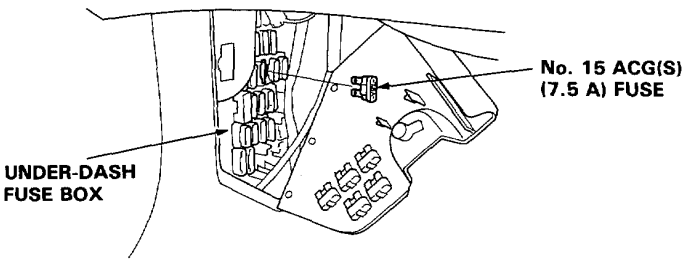

RHD:

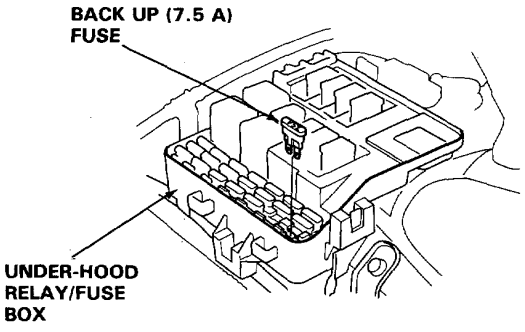

(cont'd)

Troubleshooting Flowchart (cont'd)

Self-diagnosis D4 indicator light blinks fourteen times.

LHD

Disconnect No. 15: ACG(s) fuse in the under dash fuse box for 10 seconds to reset the ECU.

RHD

Disconnect the BACK UP fuse (7.5 A) in the under-hood relay/fuse box for 10 seconds to reset the ECU.

Drive the car for several miles so that the transmission upshifts and down-shifts several times.

Does self-diagnosis D4 indicator light blink fourteen times?

NO → **Intermittent failure, system is OK at this time.**

YES → **Replace the ECU.**

LHD:

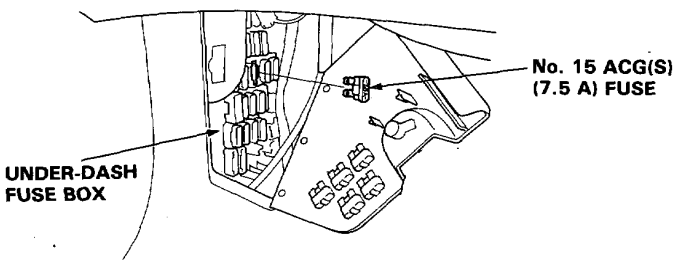

RHD:

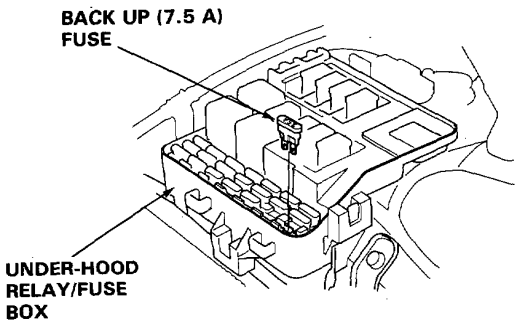

Self-diagnosis D4 indicator light blinks fifteen times.

Check the state of installation of NM (NC) speed sensor.

OK? — NO → **Reinstall and recheck.**

YES

Disconnect the transmission sub-harness connector.

Measure the resistance between the No.5 terminal and No.6 for the NM speed sensor.

Is the resistance 400–600 ohms? — NO → **Replace the NM speed sensor.**

YES

Reconnect the transmission sub-harness connector.

Disconnect the E (26P) connector from the ECU.
Connect the Test Harness "A" connector to the wire harness only, not to the ECU. (14-51)

Measure the resistance between A8 and A7 terminals.

Is the resistance 400–600 ohms? (20°C) — NO → Check for continuity between A7 terminal and body ground.

YES

Disconnect the transmission sub-harness connector.

Measure the resistance between the No.9 terminal of the transmission sub-harness connecter and No.10 for the NC speed sensor.

To page 14-70

Is there continuity? — YES → **Repair short in ORN wire between E7 terminal and the NM speed sensor.**

NO

Check for continuity between A7 terminal and the NM speed sensor.

To page 14-70

NOTE: LHD is shown; RHD is similar.

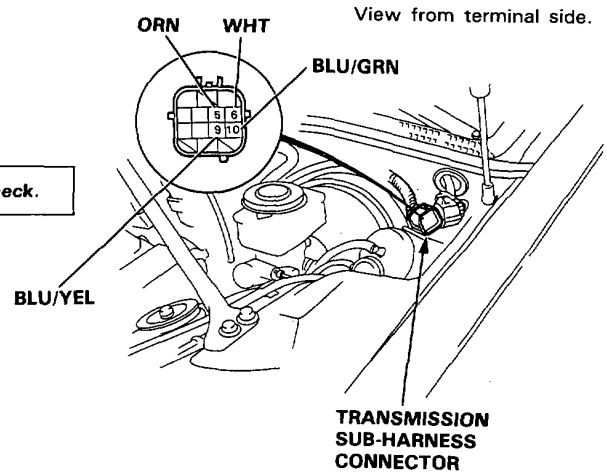

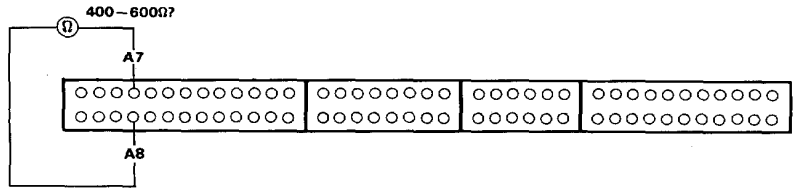

NOTE: The section A of the Test Harness with the A/T Test Harness Adapter corresponds to the E (26P) connector of the ECU.

(cont'd)

Troubleshooting Flowchart (cont'd)

From page 14-69

From page 14-69

Is there continuity?

NO → **Repair open in ORN wire between E7 terminal and the NM speed sensor.**

YES → Check for continuity between A8 terminal and body ground.

Is there continuity?

YES → **Repair short in WHT wire between E8 terminal and NM speed sensor.**

NO → Check for continuity between A8 terminal and the NM speed sensor.

Is there continuity?

NO → **Repair open in WHT wire between E8 terminal and the NM speed sensor.**

YES → **Check for loose ECU connectors. If necessary, substitute a known-good ECU and recheck.**

Is the resistance 400–600 ohms? (20°C)

NO → **Replace the NC speed sensor.**

YES → Reconnect the transmission sub-harness connector.

Measure the resistance between A9 and A10 terminals.

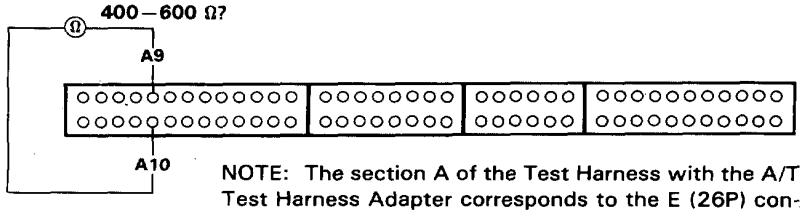

NOTE: The section A of the Test Harness with the A/T Test Harness Adapter corresponds to the E (26P) connector of the ECU.

Is the resistance 400–600 ohms? (20°C)

YES → **Check for loose ECU connectors. If necessary, substitute a known-good ECU and recheck.**

NO

To page 14-71

From page 14-70

NOTE: The section A of the Test Harness with the A/T Test Harness Adapter corresponds to the E (26P) connector of the ECU.

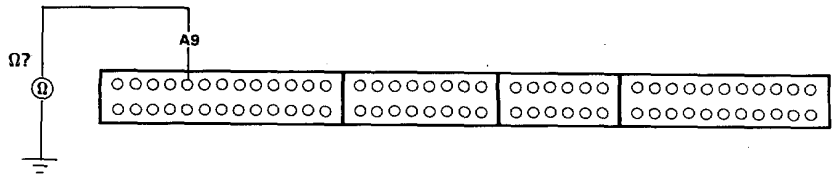

Check for continuity between A9 terminal and body ground.

Is there continuity?

YES → **Repair short in BLU/GRN wire between E9 terminal and the NC speed sensor.**

NO

Check for continuity between A9 terminal and the NC speed sensor.

Is there continuity?

NO → **Repair open in BLU/GRN wire between E9 terminal and the NC speed sensor.**

YES

Check for continuity between A10 terminal and body ground.

Is there continuity?

YES → **Repair short in BLU/YEL wire between E10 terminal and the NC speed sensor.**

NO

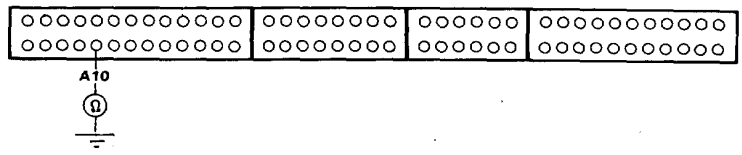

Check for continuity between A10 terminal and the NC speed sensor.

Is there continuity?

NO → **Repair open in BLU/YEL wire between E10 terminal and the NC speed sensor.**

YES

Check for loose ECU connectors. If necessary, substitute a known-good ECU and recheck.

(cont'd)

Troubleshooting Flowchart (cont'd)

NOTE: The section A of the Test Harness with the A/T Test Harness Adapter corresponds to the E (26P) connector of the ECU.

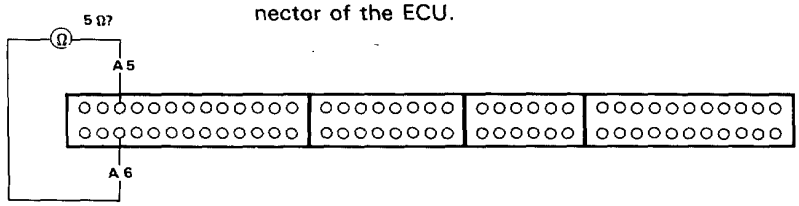

Self-diagnosis D4 indicator light blinks sixteen times.

Disconnect the E (26P) connector from the ECU.
Connect the Test Harness "A" connector to the wire harness only, not to the ECU. (14-51)

Measure the resistance between the A5 and the A6 terminals.

Is the resistance approximately 5 Ω?

- YES → **Check for loose ECU connectors. If necessary, substitute a known-good ECU and recheck.**
- NO ↓

Disconnect the transmission sub-harness connector.

Measure the resistance between the No.7 (RED) and the No.8 (WHT) terminals of the transmission sub-harness connector for the linear solenoid.

Is the resistance approximately 5 Ω?

- NO → **Check the Linear Solenoid. See pages 14-81 and 97.**
- YES ↓

Check the continuity between A5 terminal and the No.18 (RED) terminal of the engine room harness connector.

Is there continuity?

- NO → **Repair open in RED wire between E5 terminal and the No.18 of the engine room harness connector.**
- YES ↓

Check the continuity between A6 terminal and the No.19 (WHT) terminal of the engine room harness connector.

Is there continuity?

- NO → **Repair open in WHT wire between E6 terminal and the No.19 terminal of the engine room harness connector.**
- YES ↓

Reconnect the transmission sub-harness connectors.

Check for loose ECU connectors. If necessary, substitute a known-good ECU and recheck.

NOTE: LHD is shown; RHD is similar.

View from terminal side.

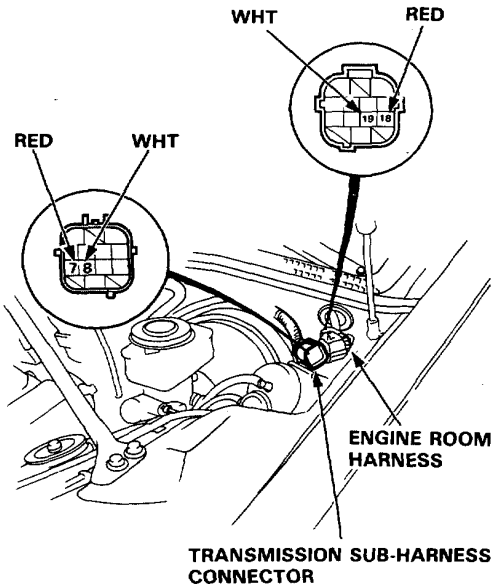

NOTE: The section A of the Test Harness with the A/T Test Harness Adapter corresponds to the E (26P) connector of the ECU.

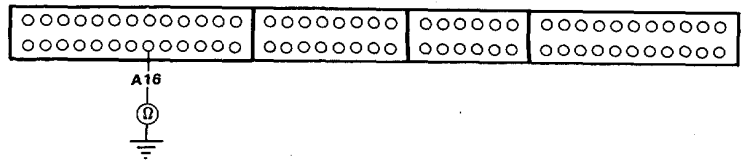

Self-diagnosis D4 indicator light blinks seventeen times.

Disconnect the E (26P) connector from the ECU.
Connect the Test Harness "A" connector to the wire harness only, not to the ECU. (14-51)

Check for continuity between the A16 and body ground.

Is there continuity?

YES → **Repair short in BLU/YEL wire between E16 terminal and the kick-down switch. If wire is OK, replace the kick-down switch.**

NO

Check for continuity between the A16 and body ground with the kick-down switch pushed.

Is there continuity?

NO → **Repair open in BLU/YEL wire between E16 terminal and the kick-down switch. If wire is OK, check for loose kick-down switch connector. Check the BLK wire and ground connection. Check the kick-down switch.**

YES

Check for loose ECU and kick-down switch connectors. If necessary, substitute a known-good ECU and recheck.

(cont'd)

Troubleshooting Flowchart (cont'd)

D4 indicator light does not come on with the ignition switch ON. (It should come on for about 2 seconds.)

Is the service check connector jumped?

YES → **Disconnect the jumper wire and recheck.**

NO

Shift to D4 position.

Does the D4 indicator light come on?

YES → **Check for loose ECU connectors. If necessary, substitute a known-good ECU and recheck.**

NO

Turn the ignition switch OFF.

Disconnect the E (26P) connector from the ECU.
Connect the Test Harness "A" connector to the wire harness only, not to the ECU. (14-51)

NOTE: The section A of the Test Harness with the A/T Test Harness Adapter corresponds to the E (26P) connector of the ECU.

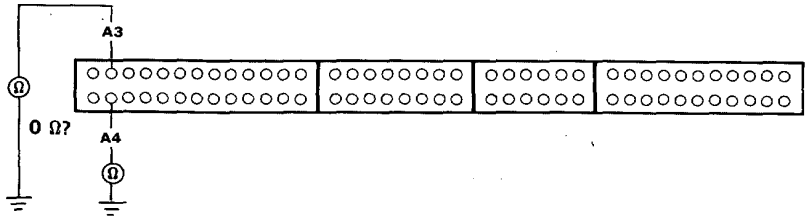

Check for continuity between the A3 terminal and body ground and A4 and body ground.

Is there continuity?

NO → **Repair open BLK wire between E3 and E4 terminal and G101.**

YES

Turn the ignition switch ON.

Measure voltage between the A1 or A2 and A3 or A4 terminals.

Battery voltage?

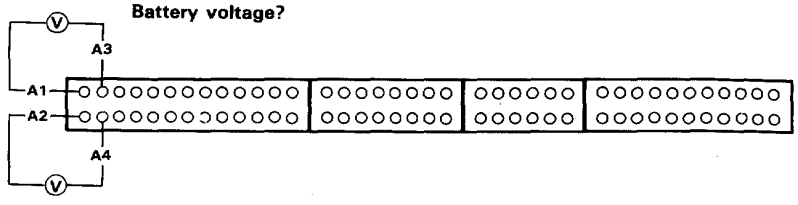

To page 14-75

From page 14-74

Is there battery voltage?

NO → **Repair open or short BLK/YEL wire between the E1 and/or E2 terminals and dash fuse box.**

YES

Turn the ignition switch OFF.

Connect the Test Harness "A" connector to the ECU.

NOTE: The section A of the Test Harness with the A/T Test Harness Adapter corresponds to the E (26P) connector of the ECU.

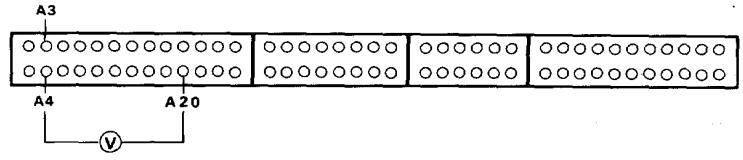

Turn the ignition switch ON. Be sure that voltage is available for 2 seconds between the A20 terminal and A3/A4 terminal.

Is there voltage?

YES → **Check for open or short in YEL/RED wire between the E20 terminal and the gauge assembly.**

NO

Turn the ignition switch OFF.

Disconnect the Test Harness "A" connector from the ECU.

Check for continuity between the A20 terminal and the YEL/RED wire at the gauge assembly.

Is there continuity?

NO → **Repair open in YEL/RED wire between the E20 terminal and the gauge assembly.**

YES

Check for loose ECU connectors. Check the shift position console switch. If necessary, substitute a known-good ECU and recheck.

(cont'd)

Troubleshooting Flowchart (cont'd)

D4 indicator light is on steady, not blinking whenever the ignition switch is turned ON.

Check the shift position console switch.

Is the shift position console switch OK?

NO → **Replace the shift position console switch.**

YES

Shift to [P] position.

Disconnect the E (26P) connector from the ECU.
Connect the Test Harness "A" connector to the wire harness only, not to the ECU. (14-51)

NOTE: The section A of the Test Harness with the A/T Test Harness Adapter corresponds to the E (26P) connector of the ECU.

Turn the ignition switch ON.

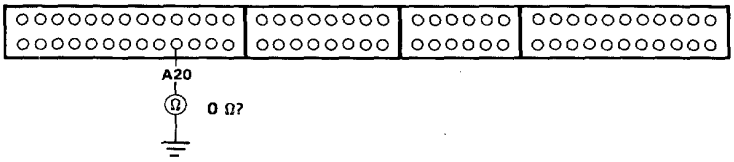

Measure voltage between the A20 terminal and body ground.

Is there voltage?

YES → **Replace the ECU.**

NO

Connect the Test Harness "A" connector to the ECU.

Measure voltage between the YEL/RED wire at the gauge assembly and body ground.

Is there voltage?

NO → **Replace faulty shift position indicator.**

YES

Repair short to power source on YEL/RED wire between the E20 terminal and gauge assembly.

Kick-down Switch

Replacement

1. Remove the 6 mm bolts.
2. Disconnect the connector.
3. Replace the kick-down switch.

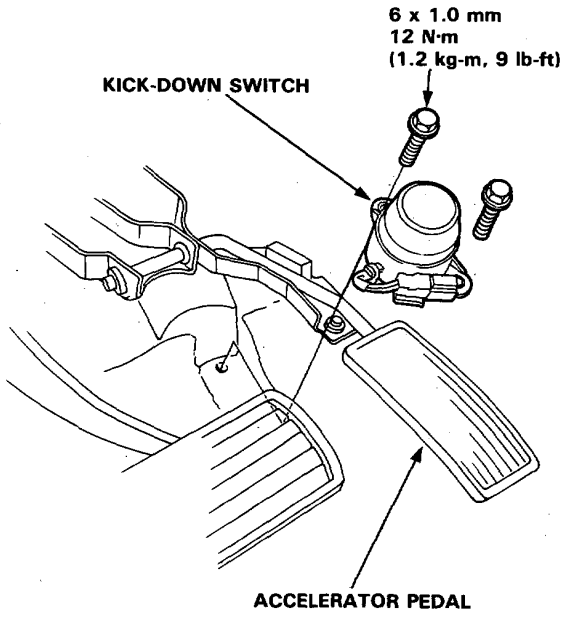

Adjustment

NOTE: LHD is shown; RHD is similar.

1. Loosen the locknut.

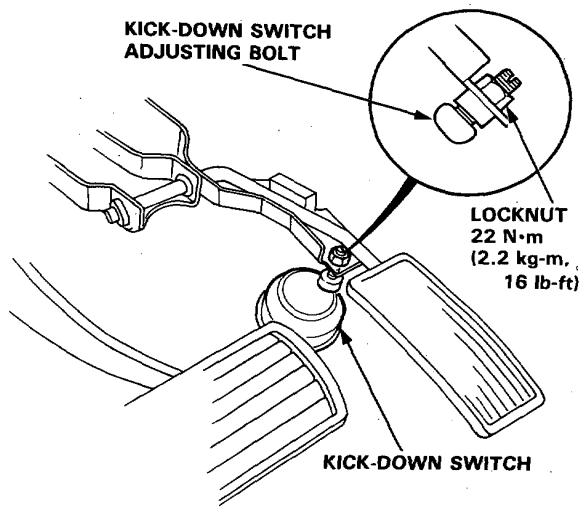

2. Adjust the length of the kick-down switch adjusting bolt so that the accelerator pedal travelling distance between the point where the bolt first contacts with the kick-down switch and the point where the accelerator pedal hits the stopper becomes the specified value.

STANDARD: 11—17 mm (0.43—0.70 in)

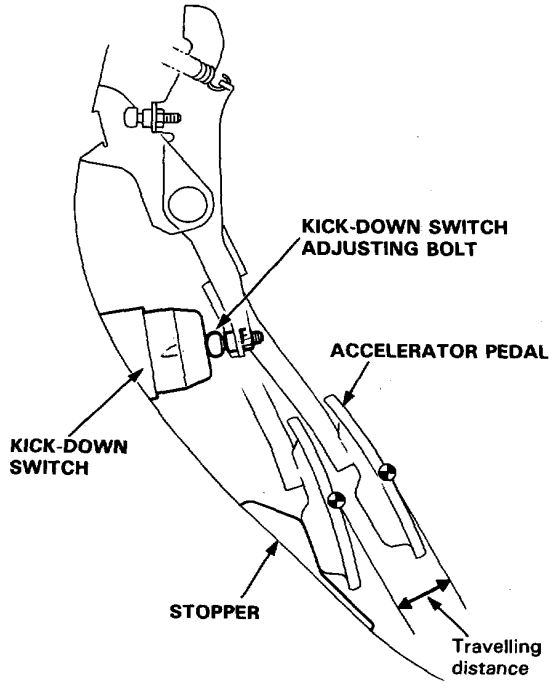

3. Tighten the locknut.

Lock-up Control Solenoid Valve A/B

Test

NOTE: Lock-up control solenoid valves A and B must be removed/replaced as an assembly.

1. Disconnect the transmission sub harness connector.

2. Measure the resistance between the No.1 terminal (SOL. V A) of the transmission sub-harness connector and body ground and between the No.2 terminal (SOL.V B) and body ground.

   STANDARD: 12–24 Ω

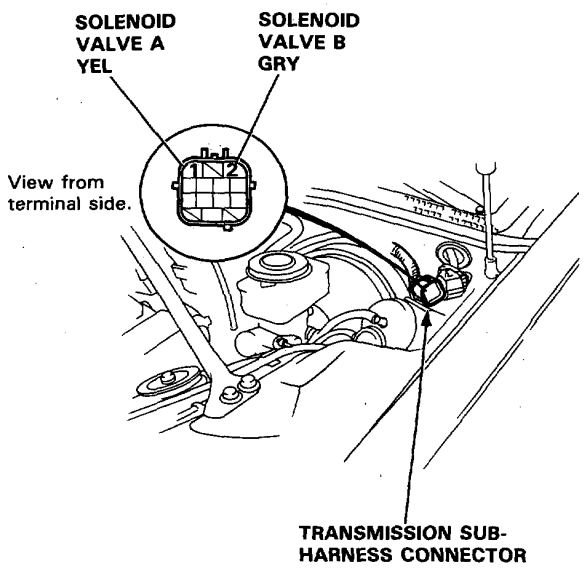

NOTE: LHD is shown; RHD is similar.

3. If the resistance is out of specification, disconnect the connector from the lock-up control solenoid valve A/B.

4. Measure the resistance between the No.1 terminal (SOL. V A) of the lock-up control solenoid valve connector and body ground and between the No.2 terminal (SOL. VB) and body ground.

   STANDARD: 12–24 Ω

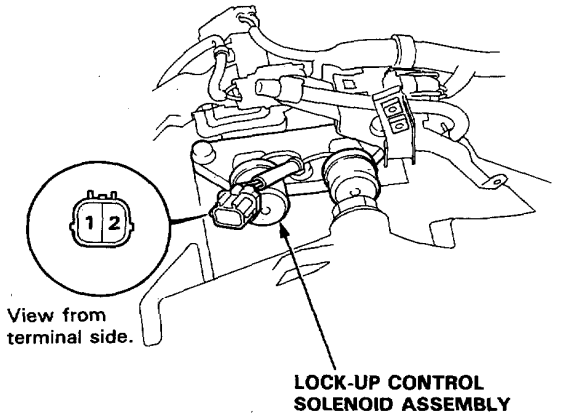

5. If the resistance is OK, replace the transmission sub-harness.

6. Replace the lock-up control solenoid valve assembly if the resistance is out of specification.

7. Connect the No.1 terminal of the lock-up control solenoid valve connector to the battery positive terminal. A clicking sound should be heard. Connect the No.2 terminal to the battery positive terminal. A clicking sound should be heard.

8. If not, check for continuity between the ECU E25 or E26 harness and body ground (page 14-54, 55).

9. Replace the lock-up control solenoid valve assembly if there is continuity between the ECU E25 or E26 harness and body ground (page 14-54, 55).

Replacement

1. Remove the mounting bolts and lock-up control solenoid valve assembly.

   NOTE: Be sure to remove or replace the lock-up control solenoid valves A and B as an assembly.

2. Check the lock-up control solenoid valve oil passages for dust or dirt and replace as an assembly, if necessary.

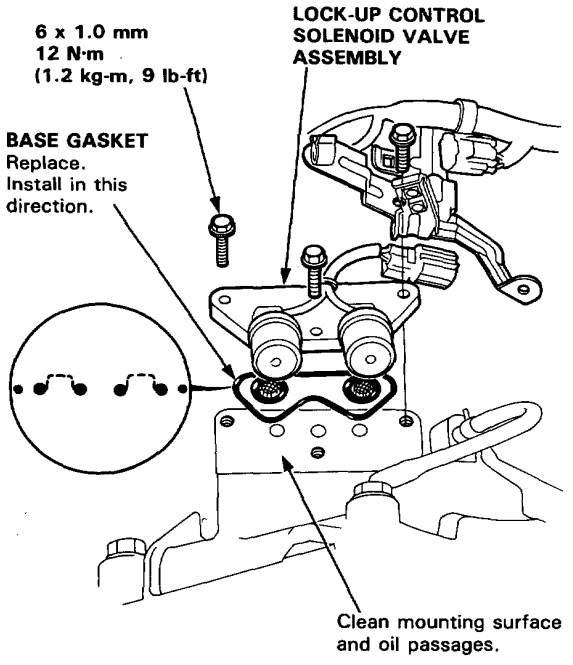

3. Clean the mounting surface and oil passages of the lock-up control solenoid valve assembly and install a new base gasket.

   NOTE: Install the base gasket in the direction shown.

4. Check connector for rust, dirt or oil and reconnect it securely.

A/T Speed Sensors

Replacement

1. Remove the 6 mm bolt from the transmission housing and remove the A/T speed sensor.

2. Replace the O-ring with a new one before reassembling the A/T speed sensor.

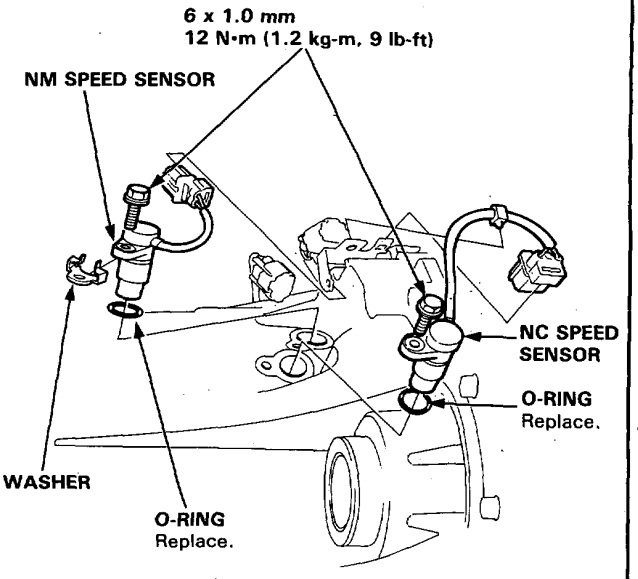

NOTE: Install the washer to the NM speed sensor before reassembling the NM speed sensor.

Shift Control Solenoid Valve

Test

Note: Shift control solenoid valves A and B must be removed/replaced as an assembly.

1. Disconnect the transmission sub-harness connector.

2. Measure the resistance between the No.3 terminal of the transmission sub-harness and body ground and between the No.4 terminal and body ground.

   STANDARD : 12 - 24 Ω

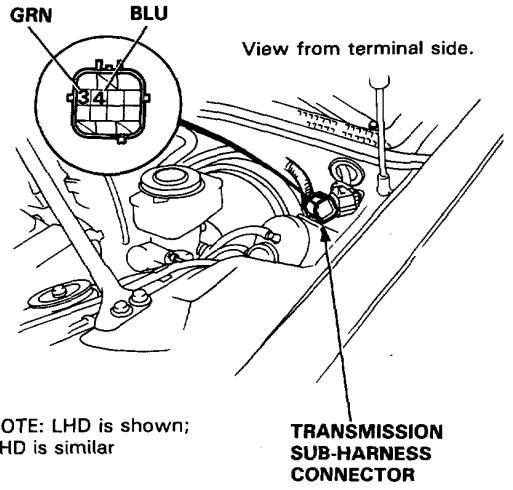

3. If the resistance is out of specification, disconnect the transmission sub-harness from the shift control solenoid valve/linear solenoid harness.

4. Measure the resistance between the A terminal of the shift control solenoid valve/linear solenoid harness and body ground and between the B terminal and body ground.

   STANDARD: 12–24 Ω

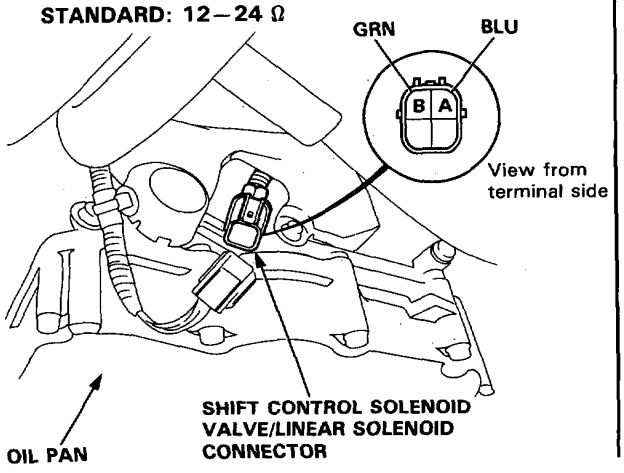

5. Replace the transmission sub-harness if the resistance is within specification.

6. Replace the shift control solenoid valve assembly if the resistance is out of specification.

7. Connect the A terminal of the shift control solenoid valve/linear solenoid connector to the battery positive terminal. A clicking sound should be heard. Connect the B terminal to the battery positive terminal. A clicking sound should be heard.

8. If not, check for continuity between the ECU E23 or E24 terminal harness and body ground (page 14-62, 63).

9. Replace the shift control solenoid valve assembly if there is continuity between the ECU E23 or E24 harness and body ground.

   NOTE: See Shift Control Solenoid Valve Replacement, page 14-98.

Linear Solenoid

Test

1. Disconnect the transmission sub-harness connector.

2. Measure the resistance between the No.7 and No.8 terminals of the transmission sub-harness.

   STANDARD: 5.0–5.6 Ω (at 70°F, 20°C)

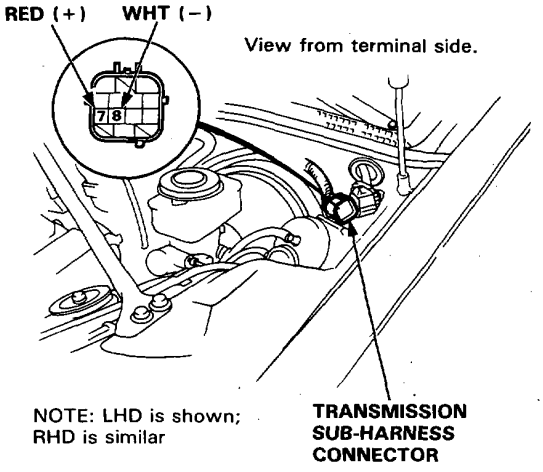

3. If the resistance is out of specificaion, disconnect the transmission sub-harness from the shift control solenoid valve/linear solenoid harness.

4. Measure the resistance between the C and D terminals of the shift control solenoid valve/linear solenoid harness.

   STANDARD: 5.0–5.6 Ω (at 70°F, 20°C)

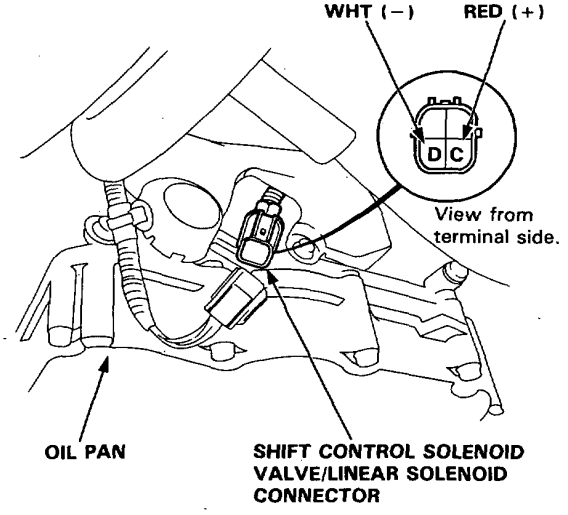

5. Replace the transmission sub-harness if the resistance is within specification.

6. Replace the linear solenoid if the resistance is out of specification.

7. Connect the C terminal of the shift control solenoid valve/linear solenoid connector to the battery positive terminal and connect the D terminal to the battery negative terminal. A clicking sound should be heard.

8. If not, replace the linear solenoid.

NOTE: See Throttle Valve Body/Linear Solenoid Replacement, page 14-97 and 98.

Symptom-to-Component Chart

SYMPTOM	Check these items on the PROBABLE CAUSE LIST	Check these items on the NOTES CHART
Engine runs, but car does not move in any gear.	1, 6, 7, 16, 42, 43	K, L, R, S
Car moves in [2] but not in [D4] or [D3].	1, 8, 23, 29, 44, 48	C, M, O
Car moves in [D4], [D3], [1], [R] but not in [2].	1, 9, 30, 48, 49	C, L
Car moves in [D4], [D3], [2], [1] but not in [R].	1, 39, 40	C, L, Q
Car moves in [N].	1, 8, 9, 10, 11, 46, 47	C, D
Excessive idle vibration.	5, 6, 17, 36	B, K, L
Slips in all gears.	6, 7, 16	C, L, U
No engine braking in [1] position.	8, 12	C, D, L
No engine braking in [2] position.	9, 12, 48	C, D, L
Slips in 1st gear.	8, 29, 44, 48	C, N, O, U
Slips in 2nd gear.	9, 20, 23, 30, 48, 49	C, L, U
Slips in 3rd gear.	10, 21, 23, 31, 44	C, L, U
Slips in 4th gear.	11, 23, 32	C, L, U
Slips in reverse gear.	34, 39, 40	C
Flares on 1—2 upshift.	2, 3, 15, 19, 30, 48	E, L, V
Flares on 2—3 upshift.	2, 3, 15, 20, 31, 44, 48	E, L, V
Flares on 3—4 upshift.	2, 3, 15, 21, 25, 32, 44	E, L, V
No upshift, trans stays in 1st gear.	14, 19, 23	G, L
No downshift to 1st gear.	12, 19	G, L
Late upshift.	14	L, V
Erratic shifting.	14, 26	V
Harsh shift (up and down shifting).	2, 3, 4, 15, 23, 26, 27, 47	E, H, I, L, V
Harsh shift (1—2).	2, 9	C, D, V
Harsh shift (2—3).	2, 10, 23, 26	C, D, H, L, V
Harsh shift (3—4).	2, 11, 23, 25	C, D, I, L, V
Harsh kick-down shifts.	2, 3, 23, 26, 27	L, V, Q
Harsh kick-down shift (2—1).	8, 25, 48	O
Harsh downshift at closed throttle.	15	E, T
Harsh shift when manually shifting to [1].	33	L
Axle(s) slips out of trans on turns.	43, 50	L, P, Q
Axle(s) stuck in trans.	43	L, Q
Ratcheting noise when shifting into [R].	6, 7, 39, 40	K, L, Q
Loud popping noise when taking off in [R].	39, 40	L, Q
Ratcheting noise when shifting from [R] to [P] or from [R] to [N].	39, 40	L, Q
Noise from trans in all selector lever positions.	6, 17	K, L, Q
Noise from trans only when wheels are rolling.	39, 42	L, Q
Gear whine, rpm related (pitch changes with shifts).	8, 41	K, L, Q
Gear whine, speed related (pitch changes with speed).	42	L, Q
Trans will not shift into 4th gear in [D4].	1, 21, 25, 32	L
Lock-up clutch does not lock up smoothly.	17, 36, 37	L
Lock-up clutch does not operate properly.	2, 3, 15, 18, 35, 36, 37	E, L, V
Transmission has multitude of problems shifting. At disassembly, large particles of metal are found on magnet.	43	L, Q

	PROBABLE CAUSE
1.	Shift cable broken/out of adjustment.
2.	Throttle valve body/throttle valve misadjusted.
3.	Linear solenoid defective/damaged.
4.	Wrong type ATF.
5.	Idle rpm too low/high.
6.	Oil pump worn or binding.
7.	Pressure regulator stuck.
8.	1st clutch defective.
9.	2nd clutch defective.
10.	3rd clutch defective.
11.	4th clutch defective.
12.	1st hold clutch defective.
14.	Modulator valve stuck.
15.	Throttle valve B stuck.
16.	ATF strainer clogged.
17.	Torque converter defective.
18.	Torque converter check valve stuck.
19.	1—2 shift valve stuck.
20.	2—3 shift valve stuck.
21.	3—4 shift valve stuck.
22.	EAT D inhibitor valve stuck.
23.	Clutch pressure control valve stuck.
24.	2nd orifice control valve stuck.
25.	3—4 orifice control valve stuck.
26.	Shift timing valve stuck.
27.	4—3 kick-down valve stuck.
28.	4th exhaust valve stuck.
29.	1st accumulator defective.
30.	2nd clutch accumulator defective.
31.	3rd clutch accumulator defective.
32.	4th accumulator defective.
33.	1st hold clutch accumulator defective.
34.	Reverse clutch accumulator defective.
35.	Lock-up clutch timing valve stuck.
36.	Lock-up clutch shift valve stuck.
37.	Lock-up clutch control valve stuck.
38.	Shift fork bent.
39.	Reverse gears worn/damaged (3 gears).
40.	Reverse clutch worn.
41.	3rd gears worn/damaged (2 gears)
42.	Final gears worn/damaged (2 gears)
43.	Extension shaft worn.
44.	Feedpipe O-ring broken.
45.	4th gears worn/damaged (2 gears).
46.	Gear clearance incorrect.
47.	Clutch clearance incorrect.
48.	Sprag clutch defective.
49.	Sealing rings/guide worn.
50.	Axle-inboard joint clip missing.

(cont'd)

Symptom-to-Component Chart (cont'd)

The following symptoms can be caused by improper repair or assembly.	Check these items on the PROBABLE CAUSE DUE TO IMPROPER REPAIR	Items on the NOTES CHART
Car creeps in [N].	R1, R2	
Car does not move in [D4] or [D3].	R4	
Trans locks up in [R].	R3	
Excessive drag in trans.	R6	R, K
Excessive vibration, rpm related.	R7	
Noise with wheels moving only.	R1	
Main seal pops out.	R8	S
Various shifting problems.	R9, R10	
Harsh upshifts.	R11	

PROBABLE CAUSE DUE TO IMPROPER REPAIR	
R1.	Improper clutch clearance.
R2.	Improper gear clearance.
R3.	Parking brake lever installed upside down.
R4.	Sprag clutch installed upside down.
R5.	Reverse hub installed upside down.
R6.	Oil pump binding.
R7.	Torque converter not fully seated in oil pump.
R8.	Main seal improperly installed.
R9.	Springs improperly installed.
R10.	Valves improperly installed.
R11.	Ball check valves not installed.
R12.	Shift fork bolt not installed.

NOTES	
B.	Set idle rpm in gear to specified idle speed. If still no good, adjust motor mounts as outlined in engine section of service manual.
C.	If the large clutch piston O-ring is broken, inspect the piston groove for rough machining.
D.	If the clutch pack is seized or is excessively worn, inspect the other clutches for wear and check the orifice control valves and throttle valves for free movement.
E.	If throttle valve B is stuck, inspect the clutches for wear.
G.	If the 1—2 valve is stuck closed, the transmission will not upshift. If stuck open the transmission has no 1st gear.
H.	If the shift timing valve is stuck, inspect the 2nd and 3rd clutch packs for wear.
I.	If the 3—4 orifice control valve is stuck, inspect the 3rd and 4th clutch packs for wear.
J.	If the clutch pressure control valve is stuck closed, the transmission will not shift out of 1st gear.
K.	Improper alignment of oil pump body and torque converter case may cause oil pump seizure. The symptoms are mostly an rpm-related ticking noise or a high pitched squeak.

NOTES	
L.	If the oil screen is clogged with particles of steel or aluminum, inspect the oil pump. If OK and no cause for the contamination is found, replace the torque converter.
M.	If the 1st clutch feedpipe guide in the rear cover is scored by the mainshaft, inspect the ball bearing for excessive movement in the transmission housing. If OK, replace the rear cover as it is dented. The O-ring under the guide is probably worn.
N.	Replace the mainshaft if the bushings for the 1st and 2nd feedpipe are loose or damaged. If the 1st feedpipe is damaged or out of round, replace it. If the 2nd feedpipe is damaged or out of round, replace the rear cover.
O.	A worn or damaged sprag clutch is mostly a result of shifting the trans in D_3 or D_4 while the wheels rotate in reverse, such as rocking the car in snow.
P.	Inspect the frame for collision damage.
Q.	Inspect the reverse clutch for damage or wear. Inspect bottom of 3rd clutch for swirl marks. Replace reverse clutch if worn or damaged. If trans makes clicking, grinding or whirring noise, also replace mainshaft reverse gear, reverse idler gear, and countershaft reverse gear. If bottom of 3rd clutch is swirled and trans makes gear noise, replace the countershaft.
R.	Be very careful not to damage the torque converter housing when replacing the main ball bearing. You may also damage the oil pump when you torque down the oil pump body. This will result in oil pump seizure if not detected. Use proper tools.
S.	Install the main seal flush with the torque converter housing. If you push it into the torque converter housing until it bottoms out, it will block the oil return passage and result in damage.
T.	Harsh downshifts when coasting to a stop with zero throttle may be caused by the linear solenoid not working.
U.	Check if servo valve stopper cap is installed. If it was not installed, the check valve may have been pushed out by hydraulic pressure causing a leak (internal), affecting all forward gears.
V.	Adjusting the throttle valve body, throttle valve, and linear solenoid is essential for proper operation of the transmission. Not only does it affect the shift quality if misadjusted, but also the lock-up clutch operation.

Fluid Level

Checking/Changing

Checking

With the car on level ground, pull the transmission dipstick and check the level of fluid immediately after the engine is shut off (within one minute).

The fluid level should be between the upper and lower marks. Push the dipstick all the way in to check the fluid level. If the level is at, or below, the lower mark, add DEXRON or DEXRON-II type automatic transmission fluid.

Changing

1. Bring the transmission up to operating temperature by driving the car. Park the car on level ground, turn the engine off, then remove drain plug.

2. Reinstall the drain plug with a new washer, then refill the transmission to the upper mark on the dipstick.

Automatic Transmission Fluid Capacity:
3.3 ℓ (3.5 US qt., 2.9 Imp. qt.) at change
8.7 ℓ (9.2 US qt., 7.7 Imp. qt.) after overhaul
7.2 ℓ (7.6 US qt., 6.3 Imp. qt.) after overhaul with new torque converter

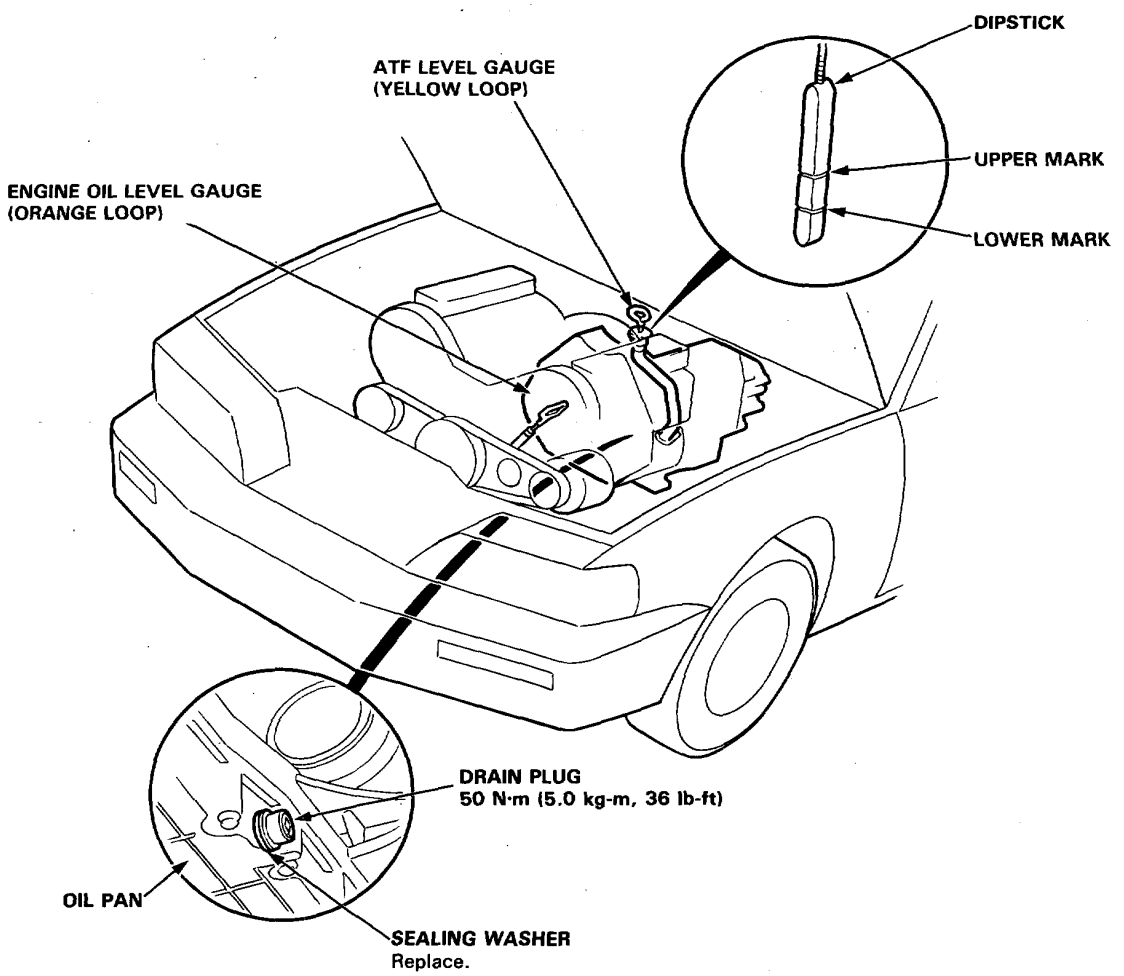

Stall Speed

Test

CAUTION:
- **To prevent transmission damage, do not test stall speed for more than 10 seconds at a time.**
- **Do not shift the lever while raising the engine speed.**
- **Be sure to remove the pressure gauge before testing stall speed.**

1. Engage the parking brake and block all four wheels.
2. Connect the tachometer, and start the engine.
3. After the engine has warmed up to normal operating temperature, shift into [2] position.
4. Fully depress the brake pedal and accelerator for 6 to 8 seconds, and note engine speed.
5. Allow 2 minutes for cooling, then repeat same test in [1], [D4] and [R] position.

NOTE:
- Stall speed test must be made only for checking the cause of trouble.
- Stall speed in [D4], [2], [1] and [R] must be same, and must also be within limits.

Stall Speed RPM: 1,850—2,150 min^{-1} (rpm)

TROUBLE	PROBABLE CAUSE
Stall rpm high in [D4], [2], [1] and [R] position	• Low fluid level or oil pump output • Clogged oil strainer • Pressure regulator valve stuck closed • Slipping clutch
Stall rpm high in [1] position	• Slippage of 1st clutch, 1st-hold clutch or 1st gear one-way clutch
Stall rpm high in [2] position	• Slippage of 2nd clutch, 1st-hold clutch or 2nd gear one-way clutch
Stall rpm high in [D4] position	• Slippage of 1st clutch, 2nd clutch, 1st gear one-way clutch or 2nd gear one-way clutch
Stall rpm high in [R] position	• Slippage of reverse clutch
Stall rpm low in [D4], [2], [1] and [R] position	• Engine output low • Torque converter one-way clutch slipping

NOTE: Warm up the engine to operating temperature.

1. Apply parking brake and block the wheels. Start the engine, then move the selector lever to [D4] position while depressing the brake pedal. Depress the accelerator pedal, and release it suddenly. Engine should not stall.
2. Repeat same test in [D3] position.
3. Shift the selector lever to [D4] position and check that the shift points occur at approximate speeds shown. Also check for abnormal noise and clutch slippage.

   NOTE: Throttle angle sensor voltage represents the throttle opening.

   –1. Connect the Test Harness between the ECU and connector (See pages 11-28 and 29).
   –2. Set the digital circuit tester to check voltage between D11 (+) terminal and D22 (–) terminal for the throttle angle sensor.

Throttle Angle Sensor Voltage	Throttle Opening
0.822–0.878 V	0.5/8 Throttle
2.175–2.325 V	3.5/8 Throttle

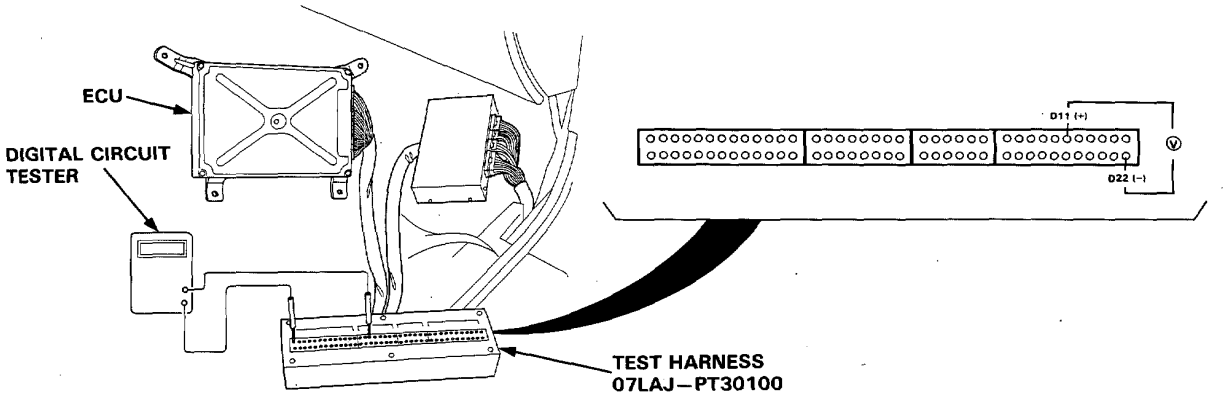

NOTE: LHD is shown; RHD is similar.

KE, KG, KF, KS, KX models: [D4] range

- **Upshift**

		1st–2nd	2nd–3rd	3rd–4th	Lock up Clutch ON
Throttle angle sensor voltage: 0.822–0.878 V (0.5/8 throttle) Coasting down-hill from a stop	km/h	15–19	30–35	42–49	32–37
	mph	9–12	19–22	26–30	20–23
Throttle angle sensor voltage: 2.175–2.325 V (3.5/8 throttle) Acceleration from a stop	km/h	36–40	61–69	92.5–101.5	120–129
	mph	22–25	38–43	57–63	75–80
Full-throttle Acceleration from a stop	km/h	62–70	111–124	174–191	169–186
	mph	39–43	69–77	108–119	105–116

- **Downshift**

		Lock up Clutch OFF	4th–3rd	3rd–2nd	2nd–1st
Throttle angle sensor voltage: 0.822–0.878 V (0.5/8 throttle) Coasting or braking to a stop	km/h	31–36	28–33	——	12–17
	mph	19–22	17–21	——	7–11
Throttle angle sensor voltage: 2.175–2.325 V (3.5/8 throttle) When car is slowed by increased grade, wind, etc.	km/h	96–105	——	——	——
	mph	60–65	——	——	——
Full-throttle When car is slowed by increased grade, wind, etc.	km/h	162–178	152–168	92–103	43–51
	mph	101–111	94–104	57–64	27–32

Austria model: D4 range

• Upshift

		1st–2nd	2nd–3rd	3rd–4th	Lock up Clutch ON
Throttle angle sensor voltage: 0.822–0.878 V (0.5/8 throttle) Coasting down-hill from a stop	km/h	15–19	30–35	42–49	32–37
	mph	9–12	19–22	26–30	20–23
Throttle angle sensor voltage: 2.175–2.325 V (3.5/8 throttle) Acceleration from a stop	km/h	34–40	61–69	92.5–101.5	120–129
	mph	21–25	38–43	57–63	75–80
Full-throttle Acceleration from a stop	km/h	62–70	111–124	174–191	169–186
	mph	39–43	69–77	108–119	105–116

• Downshift

		Lock up Clutch OFF	4th–3rd	3rd–2nd	2nd–1st
Throttle angle sensor voltage: 0.822–0.878 V (0.5/8 throttle) Coasting or braking to a stop	km/h	31–36	28–33	——	12–17
	mph	19–22	17–21	——	7–11
Throttle angle sensor voltage: 2.175–2.325 V (3.5/8 throttle) When car is slowed by increased grade, wind, etc.	km/h	96–105	——	——	——
	mph	60–65	——	——	——
Full-throttle When car is slowed by increased grade, wind, etc.	km/h	162–178	152–168	92–103	43–51
	mph	101–111	94–104	57–64	27–32

KY model: D4 range

• Upshift

		1st–2nd	2nd–3rd	3rd–4th	Lock up Clutch ON
Throttle angle sensor voltage: 0.822–0.878 V (0.5/8 throttle) Coasting down-hill from a stop	km/h	15–19	25–30	37–44	27–32
	mph	9–12	15.5–19	23–27.5	16.5–20
Throttle angle sensor voltage: 2.175–2.325 V (3.5/8 throttle) Acceleration from a stop	km/h	40–47	58–67	82–92	115–124
	mph	25–29	36–41.5	51–57	71.5–77
Full-throttle Acceleration from a stop	km/h	60–68	105–118	159–177	163–180
	mph	37–42.5	65–73.5	99–110	101–112

• Downshift

		Lock up Clutch OFF	4th–3rd	3rd–2nd	2nd–1st
Throttle angle sensor voltage: 0.822–0.878 V (0.5/8 throttle) Coasting or braking to a stop	km/h	25–30	28–34	——	12–18
	mph	15.5–19	17.5–21	——	7.5–11
Throttle angle sensor voltage: 2.175–2.325 V (3.5/8 throttle) When car is slowed by increased grade, wind, etc.	km/h	94–103	——	——	——
	mph	58.5–64	——	——	——
Full-throttle When car is slowed by increased grade, wind, etc.	km/h	154–171	138–154	87–98	40–49
	mph	96–106.5	85–95.5	54–61	25–30.5

(cont'd)

(cont'd)

KQ, KT models: [D4] range

- **Upshift**

		1st–2nd	2nd–3rd	3rd–4th	Lock up Clutch ON
Throttle angle sensor voltage: 0.822–0.878 V (0.5/8 throttle) Coasting down-hill from a stop	km/h	15–19	28–33	41–48	29–34
	mph	9–12	17–21	25–30	18–21
Throttle angle sensor voltage: 2.175–2.325 V (3.5/8 throttle) Acceleration from a stop	km/h	32.5–38.5	58.5–66.5	83.5–92.5	116–125
	mph	20–24	36–41	52–57	72–78
Full-throttle Acceleration from a stop	km/h	59–67	107–120	162–179	166–183
	mph	37–42	66–75	101–111	103–114

- **Downshift**

		Lock up Clutch OFF	4th–3rd	3rd–2nd	2nd–1st
Throttle angle sensor voltage: 0.822–0.878 V (0.5/8 throttle) Coasting or braking to a stop	km/h	28–33	28–33	——	12–17
	mph	17–21	17–21	——	7–11
Throttle angle sensor voltage: 2.175–2.325 V (3.5/8 throttle) When car is slowed by increased grade, wind, etc.	km/h	96–115	——	——	——
	mph	60–71	——	——	——
Full-throttle When car is slowed by increased grade, wind, etc.	km/h	158–174	137–153	87–98	40–48
	mph	98–108	85–95	54–61	25–30

4. Accelerate to about 35 mph (57 km/h) so the transmission is in 4th, then shift [D4] to [2]. The car should immediately begin slowing down from engine braking.

   CAUTION: Do not shift from [D4] or [D3] to [2] or [1] at speeds over 62.5 mph (100 km/h); you may damage the transmission.

5. Check for abnormal noise and clutch slippage in the following position.

   [1] (1st Gear) Position
   –1. Accelerate from a stop at full throttle. Check that there is no abnormal noise or clutch slippage.
   –2. Upshifts and downshifts should not occur with the selector in this position.

   [2] (2nd Gear) Position
   –1. Accelerate from a stop at full throttle. Check that there is no abnormal noise or clutch slippage.
   –2. Upshifts and downshifts should not occur with the selector in this position.

   [R] (Reverse) Position
   Accelerate from a stop at full throttle, and check for abnormal noise and clutch slippage.

6. Test in [P] (Parking) Position
   Park car on slope (approx. 16°), apply the parking brake, and shift into Park. Release the brake; the car should not move.

Pressure Testing

⚠ WARNING

- **While testing, be careful of the rotating front wheels.**
- **Make sure lifts, jacks, and safety stands are placed properly.**

CAUTION:

- **Before testing, be sure the transmission fluid is filled to the proper level.**
- **Warm up the engine before testing.**

1. Raise the car. (See page 1-6.)

2. Warm up the engine, then stop the engine and connect a tachometer.

3. Connect the oil pressure gauge to each inspection hole(s).

   18 N·m (1.8 kg-m, 12 lb-ft)

   CAUTION: Connect the oil pressure gauge securely, be sure not to allow dust and other foreign particles to enter the inspection hole.

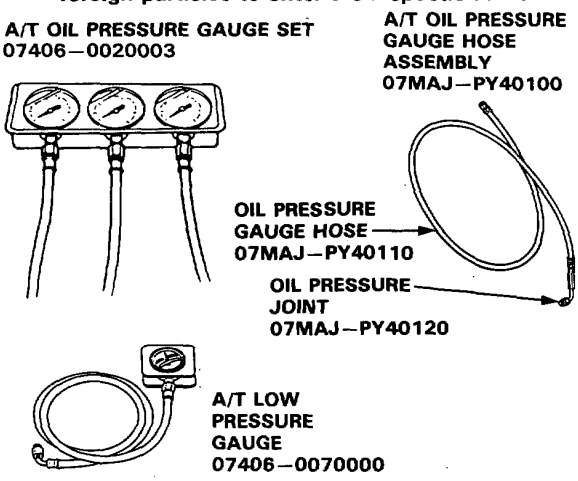

NOTE: Use the A/T Oil Pressure Gauge Set or A/T Low Pressure Gauge replacing the oil pressure gauge hose assembly.

4. Start the engine and measure the respective pressure as follows.
   - Line Pressure
   - Clutch Pressure
   - Clutch Low/High Pressure
   - Throttle B Pressure

5. Install a new washer and the sealing bolt in the inspection hole and tighten to the specified torque. 18 N·m (1.8 kg-m, 12 lb-ft)

   NOTE: Do not reuse old aluminum washers.

   - Line Pressure

   -1. Set the parking brake and block both wheels securely.

   -2. Run the engine at 2,000 min^{-1} (rpm).

   -3. Shift the select lever to [N] or [P].

   -4. Measure line pressure.

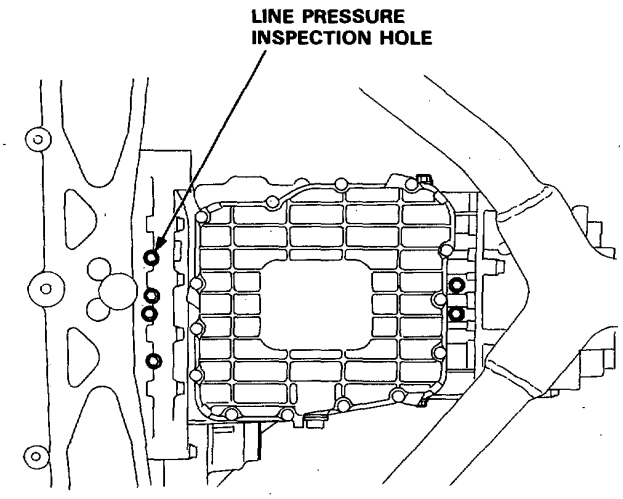

PRESSURE	SELECTOR POSITION	SYMPTOM	PROBABLE CAUSE	FLUID PRESSURE	
				Standard	Service Limit
Line	[N] or [P]	No (or low) line pressure	Torque converter, oil pump pressure regulator, torque converter check valve, oil pump.	800–860 kPa (8.0–8.6 kg/cm², 114–122 psi)	750 kPa (7.5 kg/cm², 107 psi)

NOTE: Higher pressures may be indicated if measurements are made in selector positions other than [N] or [P].

(cont'd)

- **Clutch Pressure Measurement**

⚠ WARNING While testing, be careful of the rotating front wheels.

-1. Set the parking brake and block both rear wheels securely.
-2. Raise the front of the car and support with safety stands.
-3. Allow the front wheels to rotate freely.
-4. Run the engine at 2,000 min^{-1} (rpm).
-5. Measure each clutch pressure.

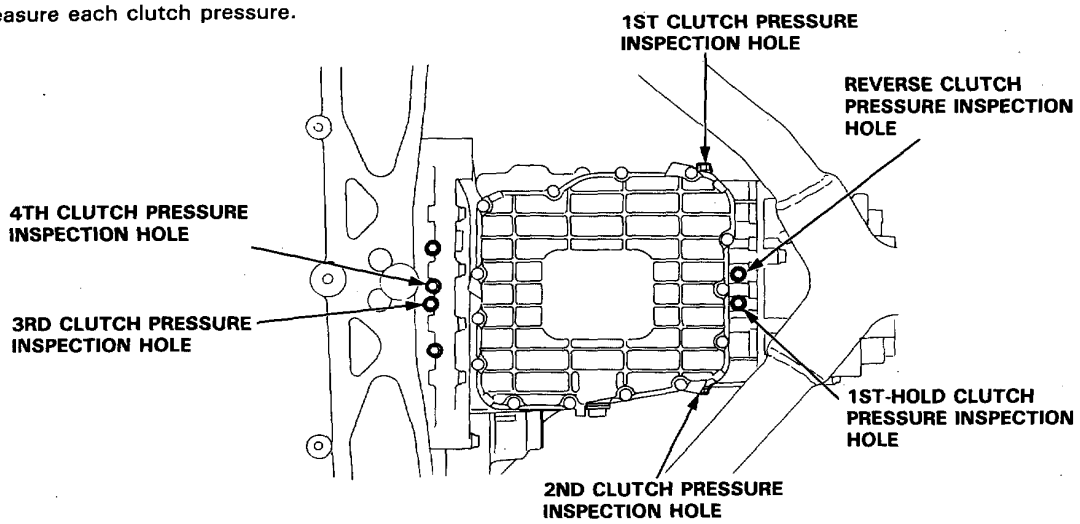

PRESSURE	SELECTOR POSITION	SYMPTOM	PROBABLE CAUSE	FLUID PRESSURE	
				Standard	Service Limit
1st Clutch	D4 or D3	No or low 1st pressure	1st Clutch	800–860 kPa (8.0–8.6 kg/cm², 113–123 psi)	750 kPa (7.5 kg/cm², 107 psi)
2nd Clutch	D4	No or low 2nd pressure	2nd Cluth	460 kPa (4.6 kg/cm², 65 psi) (throttle fully closed) 860 kPa (8.6 kg/cm², 123 psi) (throttle more than 2/8 opened)	430 kPa (4.3 kg/cm², 61 psi) (throttle fully closed) 750 kPa (7.5 kg/cm², 107 psi) (throttle more than 2/8 opened)
3rd Clutch		No or low 3rd pressure	3rd Clutch		
4th Clutch		No or low 4th pressure	4th Clutch		
1st Clutch	2 or 1	No or low 1st pressure	1st Clutch	800–860 kPa (8.0–8.6 kg/cm², 113–123 psi)	750 kPa (7.5 kg/cm², 107 psi)
2nd Clutch		No or low 2nd pressure	2nd Clutch		
1st-Hold Clutch		No or low 1st-hold pressure	1st-Hold Clutch		
Reverse Clutch	R	No or low Reverse pressure	Reverse Clutch	1,190–1,270 kPa (11.9–12.7 kg/cm², 169–181 psi)	1,150 kPa (11.5 kg/cm², 163 psi)

- **Clutch Low/High Pressure Measurement**

⚠ WARNING While testing, be careful of the rotating front wheels.

-1. Allow the front wheels to rotate freely.

-2. Start the engine and let it idle.

-3. Shift the select lever to [D4] position.

-4. Slowly press down the accelerator pedal to increase engine rpm until pressure is indicated on the oil pressure gauge. Then release the accelerator pedal, allowing the engine return to an idle, and measure the pressure reading.

-5. Repeat step -4 for each clutch pressure being inspected.

-6. With the engine idling, press down the accelerator pedal approximately 1/2 of its possible travel and increase the engine rpm until pressure is indicated on the gauge, then measure the highest pressure reading obtained.

-7. Repeat step -6 for each clutch pressure being inspected.

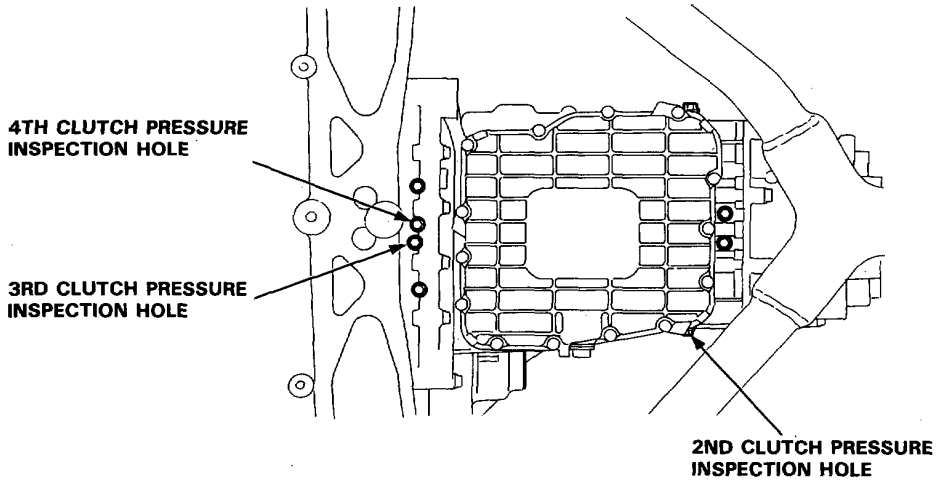

PRESSURE	SELECTOR POSITION	SYMPTOM	PROBABLE CAUSE	FLUID PRESSURE	
				Standard	Service Limit
2nd Clutch	[D4]	No or low 2nd pressure	2nd Clutch	460–860 kPa (4.6–8.6 kg/cm², 65–123 psi) varies with throttle opening	430 kPa (4.3 kg/cm², 61 psi) with accelerator pedal released 750 kPa (7.5 kg/cm², 107 psi) with accelerator pedal more than 2/8 opened
3rd Clutch		No or low 3rd pressure	3rd Clutch		
4th Clutch		No or low 4th pressure	4th Clutch		

(cont'd)

- **Throttle B Pressure Measurement**

⚠ WARNING While testing, be careful of the rotating front wheels.

-1. Allow the front wheels to rotate freely.

-2. Disconnect the transmission sub-harness connector.

-3. Shift the select lever to [D4] position.

-4. Run the engine at 1,000 min^{-1} (rpm).

-5. Measure full open throttle B pressure.

-6. Connect battery voltage to the linear solenoid terminals of the transmission sub-harness connector.

-7. Measure full closed throttle B pressure.

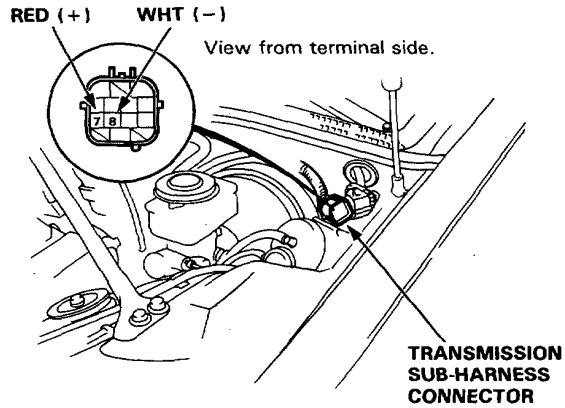

NOTE: LHD is shown; RHD is similar.

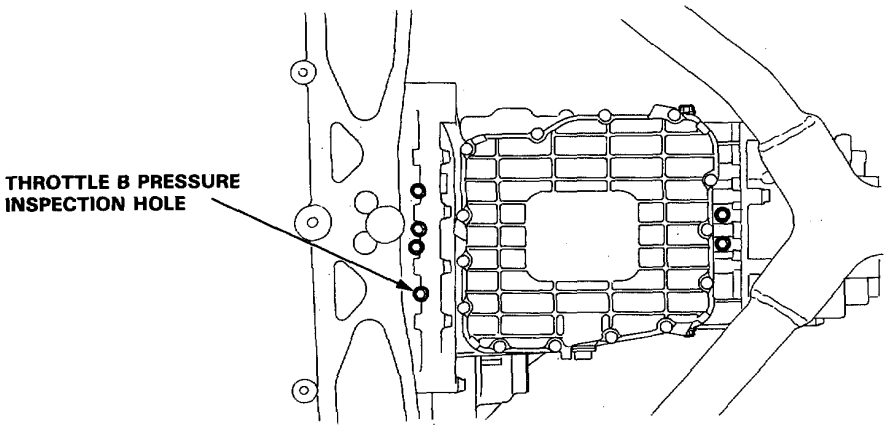

PRESSURE	SELECTOR POSITION	SYMPTOM	PROBABLE CAUSE	FLUID PRESSURE	
				Standard	Service Limit
Throttle B	[D4]	Pressure too high	Throttle Valve Body Assembly	0−15 kPa (0−0.15 kg/cm², 0−2 psi) throttle full closed	——
		No or low pressure		590−640 kPa (5.9−6.4 kg/cm², 84−91 psi) throttle full opened	550 kPa (5.5 kg/cm², 78 psi) throttle full opened

Lower Valve Body Assembly

Removal/Installation

1. Remove the drain plug, and drain automatic transmission fluid (ATF). Reinstall the drain plug with a new washer.
2. Remove the shift cable cover and remove the control lever from the control shaft.
3. Remove the shift control solenoid valve/linear solenoid harness connector stopper.
4. Disconnect the shift control solenoid valve/linear solenoid connector from the transmission sub-harness connector.
5. Remove the oil pan and oil pan gasket.
6. Remove 3 bolts and the ATF strainer.
7. Remove 6 bolts and the lower valve body assembly.
8. Install the lower valve body assembly in the reverse order of removal.

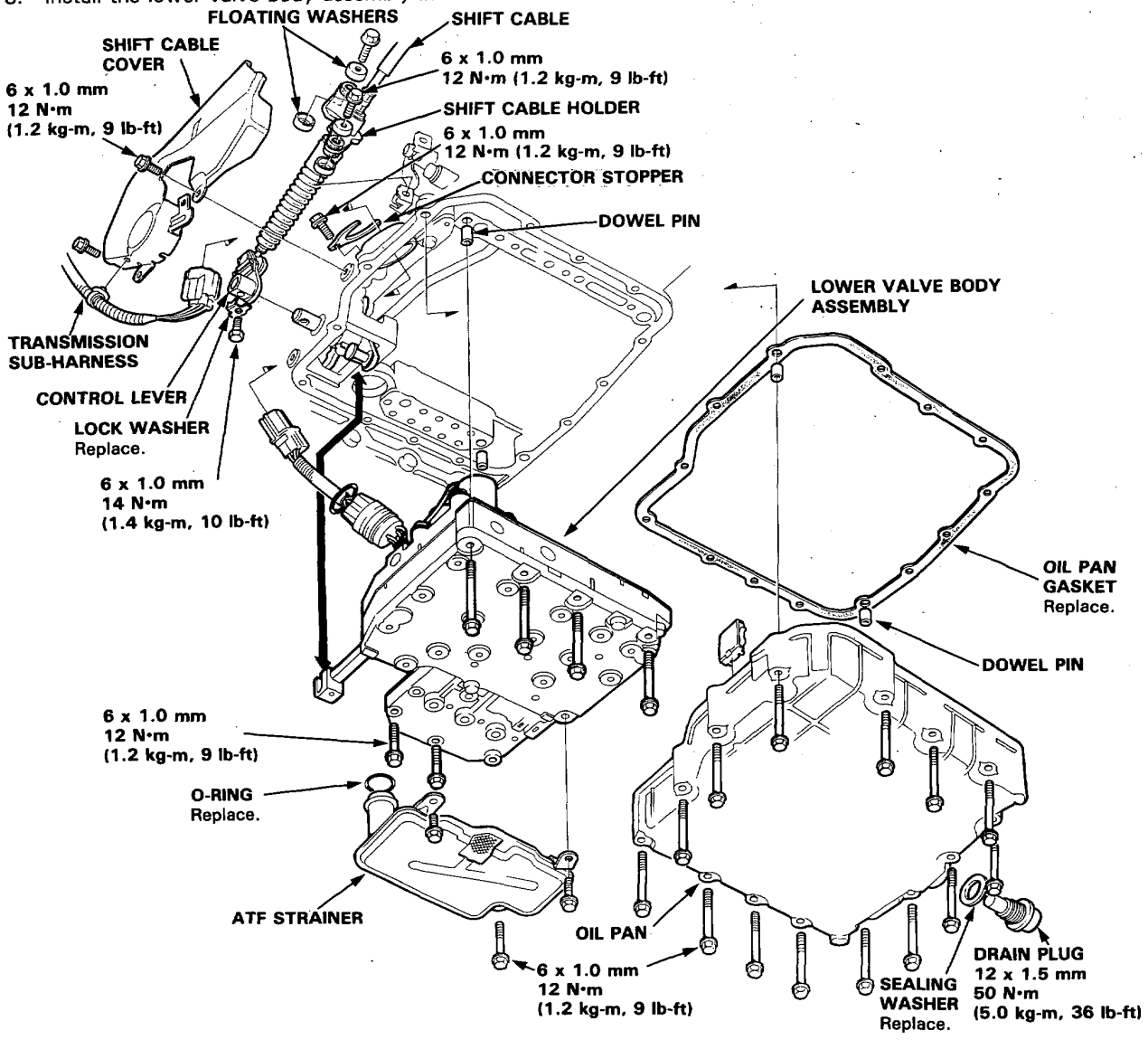

Lower Valve Body Assembly

Disassembly/Reassembly

NOTE:
- Clean all parts thoroughly in solvent or carburetor cleaner, and dry with compressed air.
- Blow out all passages.
- Coat all parts with ATF before reassembly.
- Replace the O-rings and filters.
- Install the filters in the direction shown.

CAUTION: Do not use a magnet to remove the check balls; it may magnetize the balls.

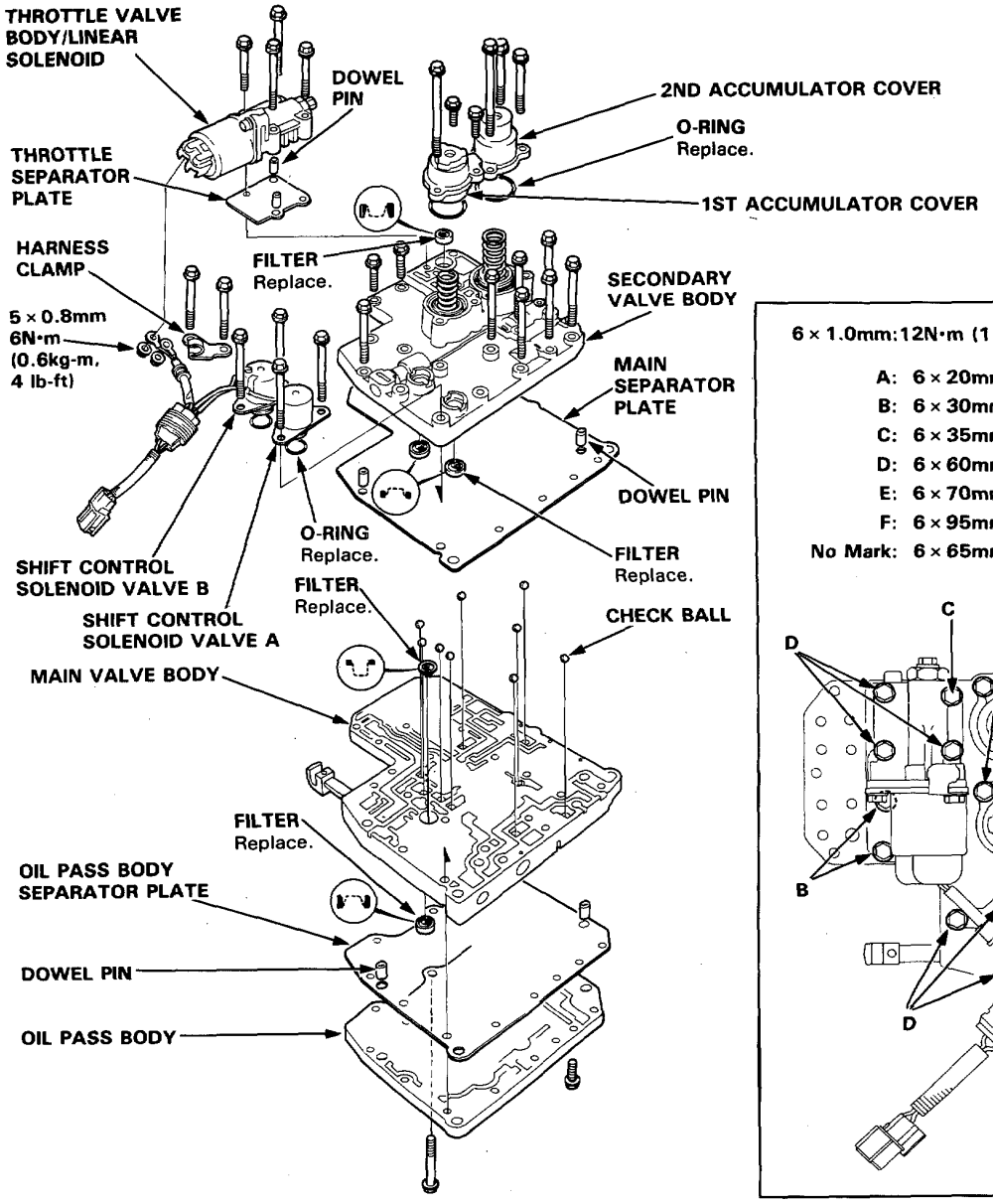

6 x 1.0mm:12N·m (1.2 kg-m, 9 lb-ft)

A:	6 x 20mm 2 Bolts
B:	6 x 30mm 2 Bolts
C:	6 x 35mm 1 Bolt
D:	6 x 60mm 6 Bolts
E:	6 x 70mm 4 Bolts
F:	6 x 95mm 2 Bolts
No Mark:	6 x 65mm 8 Bolts

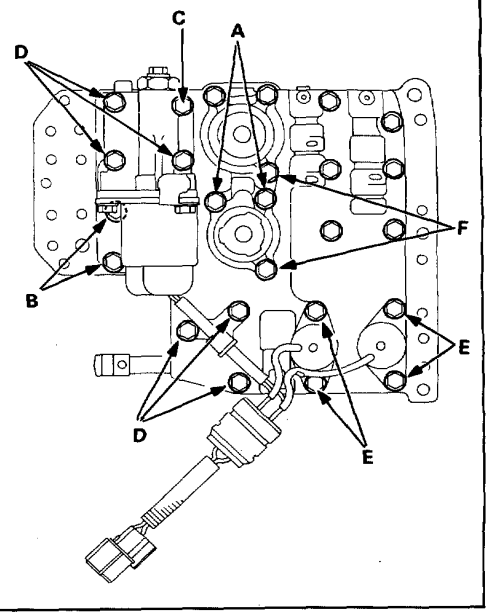

Throttle Valve Body/Linear Solenoid

Test

1. Connect the A (RED:+) terminal of the shift control solenoid valve/linear solenoid to the positive battery terminal and the B (WHT:−) terminal to the negative battery terminal. Check that the throttle valve moves.

2. Disconnect the battery terminals and check that the throttle valve is released.

3. Repeat the above steps 1-2.

   NOTE: You can see the movement of the throttle valve through the oil passage in the attaching surface of the throttle valve body.

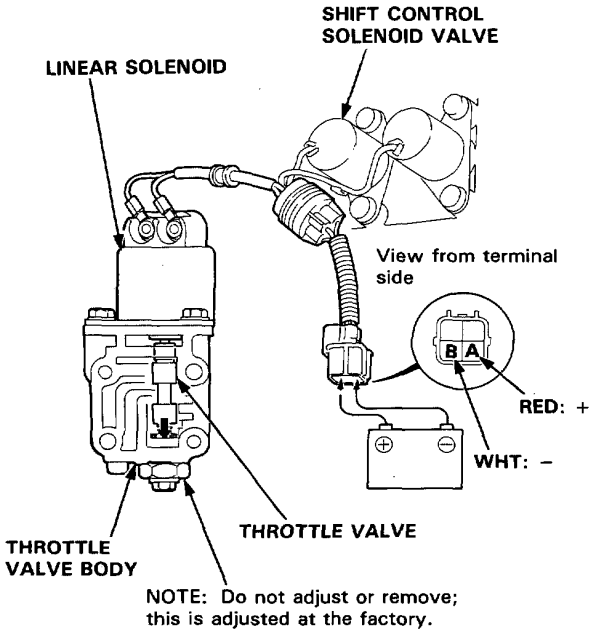

4. If the throttle valve binds, or moves but sluggishly, or the linear solenoid does not operate, replace the throttle valve body/linear solenoid as an assembly.

5. If the linear solenoid does not operate, disconnect the linear solenoid harness from the linear solenoid assembly. Connect the battery terminals directly to the linear solenoid.

6. If the linear solenoid operates after connecting the battery, and the throttle valve movement is OK, replace the shift control solenoid valve assembly.

Replacement

NOTE: Throttle valve body/linear solenoid must be replaced as an assembly.

1. Check the throttle valve body passages for dust or dirt and replace as an assembly, if necessary.

2. Clean the mounting surface and oil passages of the throttle valve body.

3. Assemble the throttle valve body/linear solenoid to the secondary valve body.

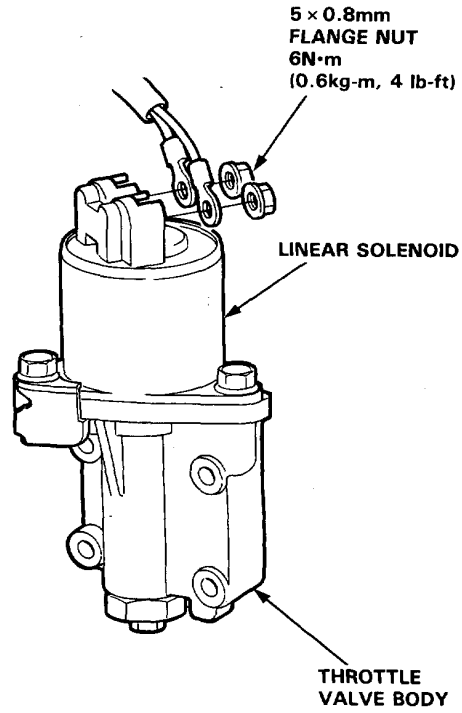

Shift Control Solenoid Valve

Test

1. Measure the resistance between the A terminal (BLU; SOL.V.A) of the shift control solenoid valve/ linear solenoid connector and body ground and between the B terminal (GRN; SOL.V.B) and body ground.

   STANDARD : 12–24 Ω

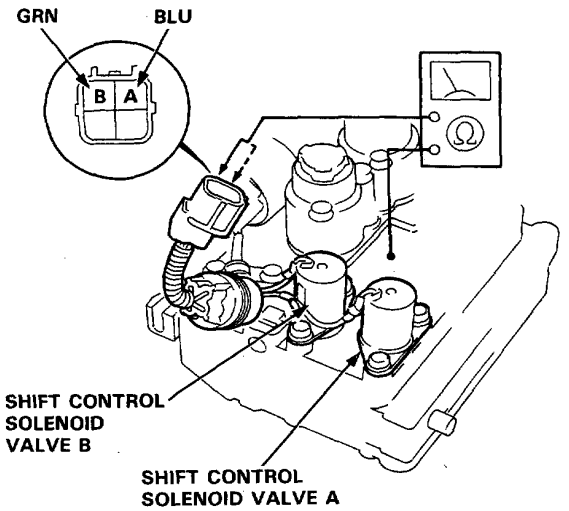

2. Replace the shift control solenoid valve assembly if the resistance is out of specification.

3. Connect the A terminal of the shift control solenoid valve/linear solenoid connector to the battery positive terminal and the negative terminal to body ground. A clicking sound should be heard. Connect the B terminal to the battery positive terminal. A clicking sound should be heard.

4. If a clicking sound is not heard, replace the shift control solenoid valve assembly.

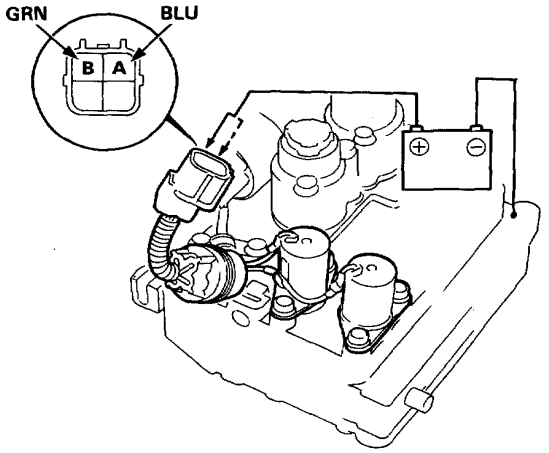

Replacement

NOTE: Shift control solenoid valve A and B must be replaced as an assembly.

1. Remove the shift control solenoid valve A, B and linear solenoid/throttle valve body from the lower valve body assembly.

2. Disconnect the linear solenoid terminals.

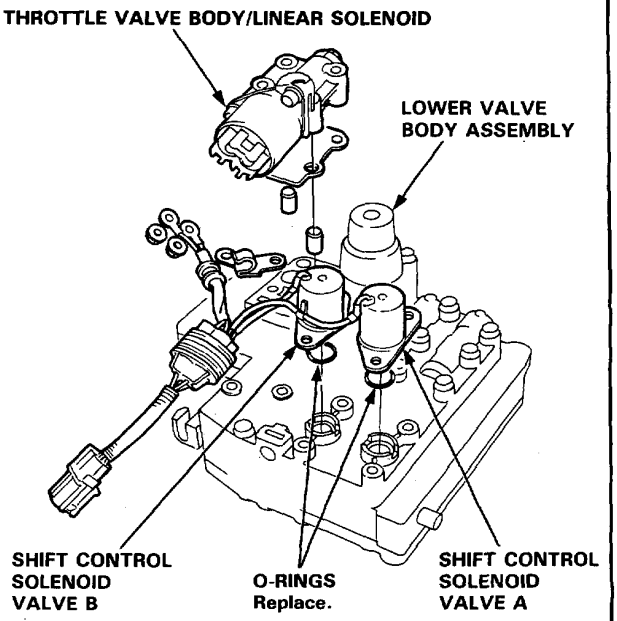

3. Clean the mounting surfaces and oil passages.

4. Connect the linear solenoid terminal then install the shift control solenoid valve A, B and linear solenoid/throttle valve body on the lower valve body.

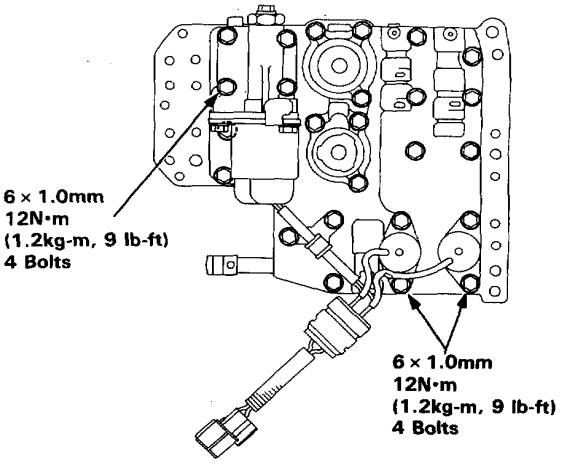

Removal

⚠ WARNING Make sure lifts, jacks and safety stands are placed properly, and hoist brackets are attached to the correct position on the engine (See page 1-6).

1. Disconnect the battery negative (−) and positive (+) cables from the battery.
2. Remove the strut bar.
3. Remove the control box. (LHD only)

   CAUTION: *Do not remove the vacuum tubes from the control box.*

4. Disconnect the transmission sub-harness connector and remove the transmission sub-harness clamp.
5. Remove the ATF level gauge pipe.
6. Remove the transmission housing mounting bolts.
7. Drain automatic transmission fluid (ATF). Reinstall the drain plug with a new sealing washer.

LHD:

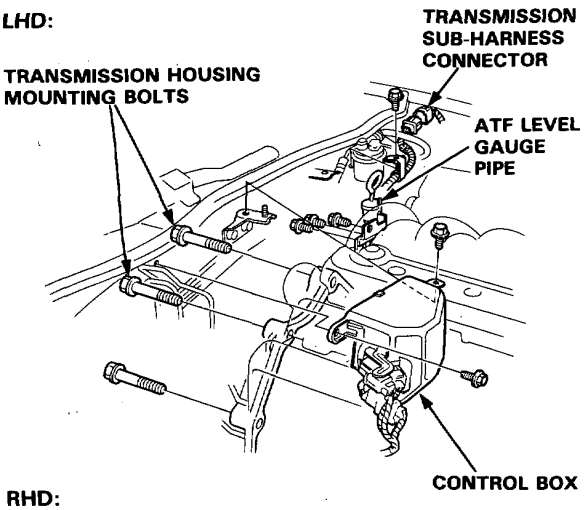

RHD:

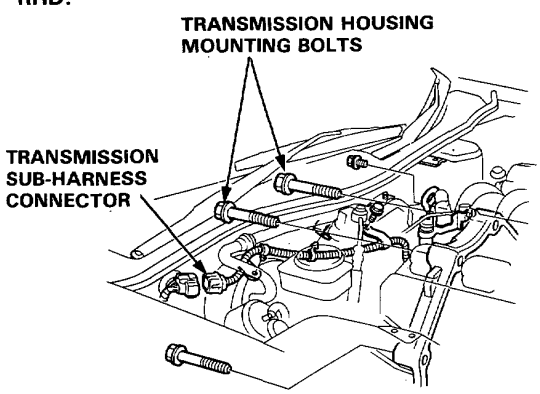

8. Remove the exhaust pipe A assembly and catalytic converter.
9. Remove the exhaust pipe heat shield and bracket.

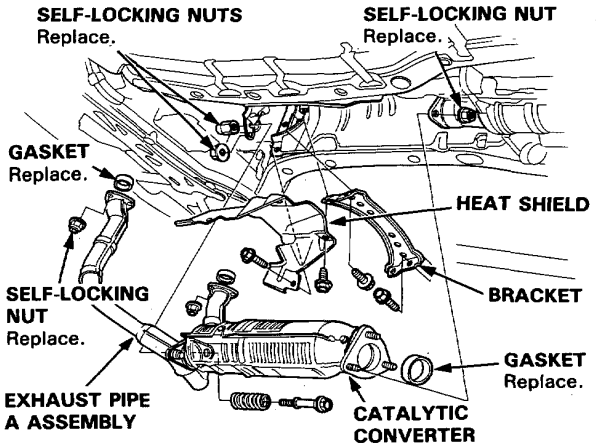

10. Remove the cooler hoses at the joint pipes. Turn the ends up to prevent ATF flowing out.

NOTE: *Check for any signs of leakage at hose joints.*

11. Remove the transmission sub-harness connector from the shift cable cover and remove the shift cable cover.
12. Remove the shift cable holder from the shift cable holder base.
13. Remove the control lever from the control shaft.

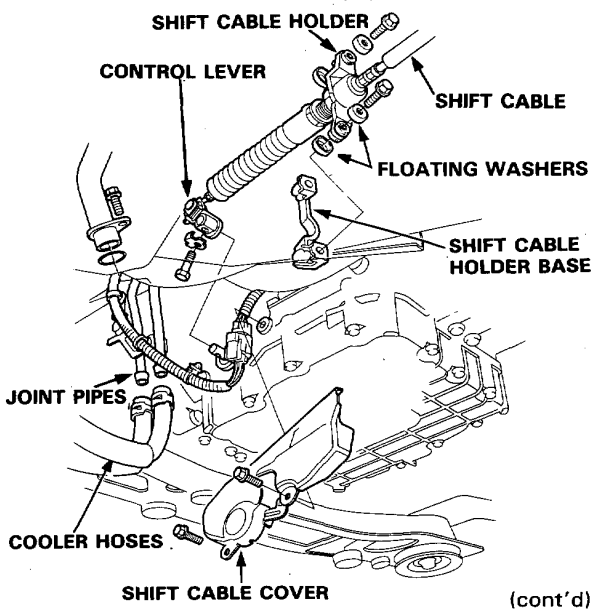

(cont'd)

Removal (cont'd)

14. Remove the lower plate and reinstall the steering gearbox mounting bolts.

    NOTE: LHD is shown. The locations of the steering gearbox mounting bolts on the RHD are symmetrical.

    ☆: **Corrosion resistant bolt**

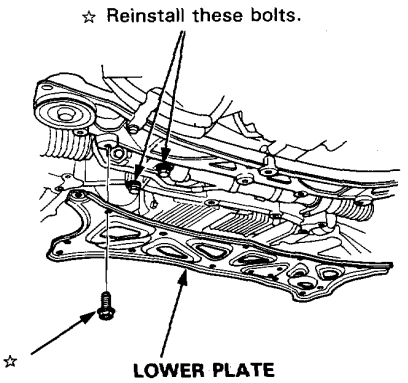

15. Remove the shift cable guide.

    CAUTION: Take care not to bend the shift cable.

16. Remove the rear transmission mount bracket/mount and exhaust pipe stay.

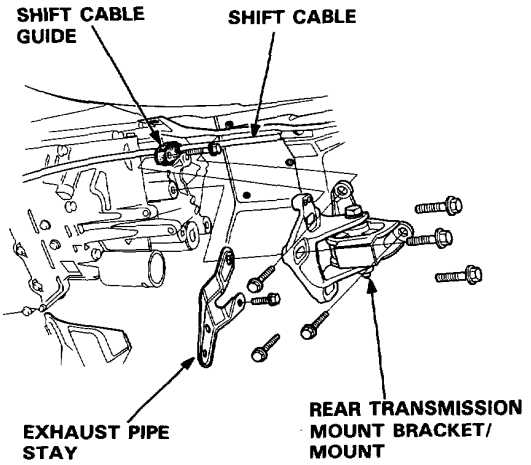

17. Shift to [P] position rotating the control shaft.

18. Remove the secondary cover and 36 mm sealing bolts.

19. Remove the extension shaft from the differential using the special tool as shown.

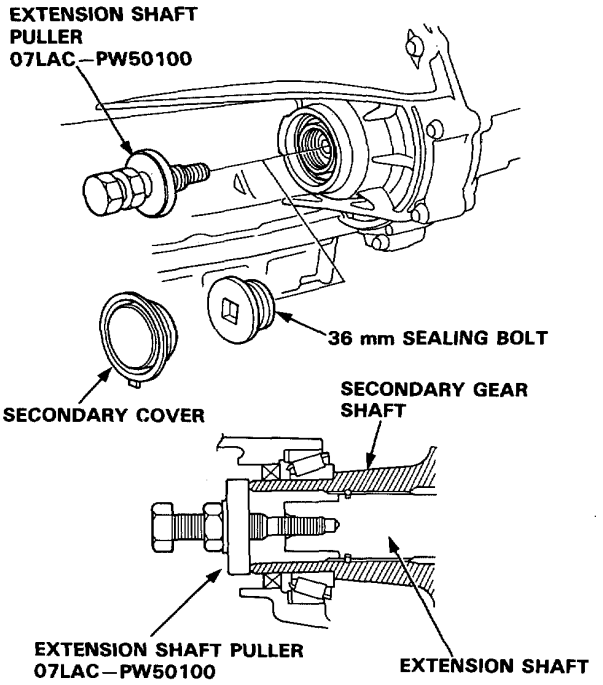

20. Place a jack under the transmission and raise the transmission just enough to take weight off of the mounts, then remove the mid mounts.

21. Remove the transmission mounting bolts.

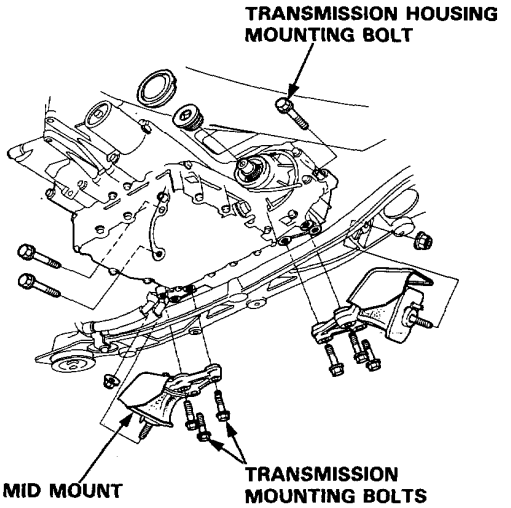

22. Remove the engine stiffener.

23. Remove the torque converter covers.

24. Remove the plug, then remove the drive plate bolts one at a time while rotating the crankshaft pulley.

25. Remove the transmission housing mounting bolts.

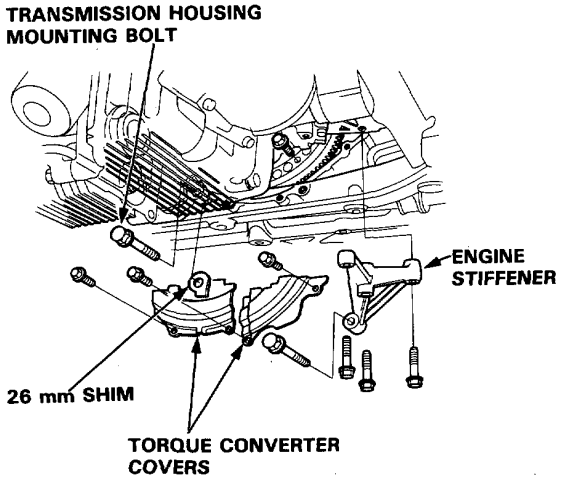

26. Pull the transmission away from the engine until it clears the dowel pin, then lower it on the transmission jack.

Rear Cover

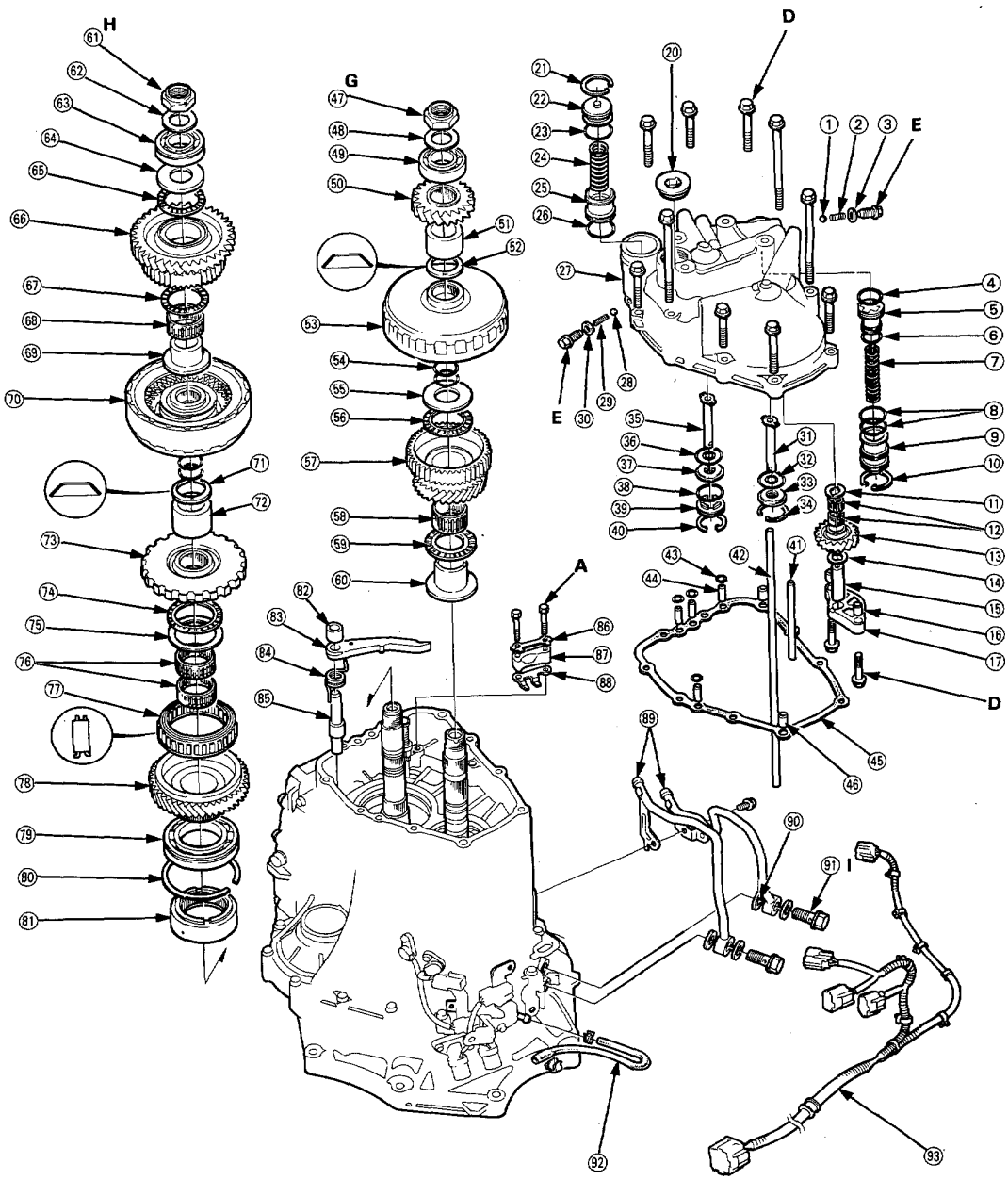

① STEEL BALL
② ONE-WAY BALL SPRING
③ SEALING WASHER Replace.
④ O-RING Replace.
⑤ REVERSE ACCUMULATOR PISTON
⑥ O-RING Replace.
⑦ REVERSE ACCUMULATOR SPRING
⑧ O-RING Replace.
⑨ REVERSE ACCUMULATOR SLEEVE
⑩ SNAP RING
⑪ THRUST SHIM 14 x 30 mm
⑫ NEEDLE BEARINGS
⑬ REVERSE IDLER GEAR
⑭ THRUST SHIM 14 x 25 mm
⑮ REVERSE IDLER GEAR SHAFT
⑯ DOWEL PIN
⑰ REVERSE IDLER GEAR SHAFT HOLDER
⑳ SEALING BOLT 34 x 1.25 mm
㉑ SNAP RING
㉒ 1ST-HOLD ACCUMULATOR SLEEVE
㉓ O-RING Replace.
㉔ 1ST-HOLD ACCUMULATOR SPRING
㉕ 1ST-HOLD ACCUMULATOR PISTON
㉖ O-RING Replace.
㉗ REAR COVER
㉘ STEEL BALL
㉙ ONE-WAY BALL SPRING
㉚ SEALING WASHER Replace.
㉛ 2ND CLUTCH FEED PIPE
㉜ O-RING Replace.
㉝ FEED PIPE GUIDE
㉞ SNAP RING
㉟ REVERSE CLUTCH FEED PIPE
㊱ O-RING Replace.
㊲ FEED PIPE GUIDE
㊳ O-RING Replace.
㊴ OIL FEED GUIDE
㊵ SNAP RING
㊶ FEED PIPE
㊷ FEED PIPE
㊸ O-RING Replace.
㊹ OIL PIPE
㊺ REAR COVER GASKET Replace.
㊻ DOWEL PIN
㊼ MAINSHAFT LOCKNUT 24 x 1.25 mm Replace.
㊽ WASHER 24 mm
㊾ BALL BEARING
㊿ MAINSHAFT REVERSE GEAR
(51) MAINSHAFT REVERSE GEAR DISTANCE COLLAR
(52) MAINSHAFT DISC SPRING 28 mm Replace.
(53) 2ND CLUTCH ASSEMBLY
(54) O-RING Replace.
(55) THRUST SHIM 29 mm
(56) THRUST NEEDLE BEARING
(57) MAINSHAFT 2ND GEAR
(58) NEEDLE BEARING
(59) THRUST NEEDLE BEARING
(60) MAINSHAFT 2ND GEAR COLLAR
(61) COUNTERSHAFT LOCKNUT 24 x 1.25 mm Replace.
(62) WASHER 24 mm
(63) BALL BEARING
(64) THRUST SHIM 25 mm
(65) THRUST NEEDLE BEARING
(66) COUNTERSHAFT REVERSE GEAR
(67) THRUST NEEDLE BEARING
(68) NEEDLE BEARING
(69) COUNTERSHAFT REVERSE GEAR COLLAR
(70) REVERSE CLUTCH ASSEMBLY
(71) COUNTERSHAFT DISC SPRING 29 mm Replace.
(72) REVERSE CLUTCH DISTANCE COLLAR
(73) PARKING GEAR
(74) THRUST NEEDLE BEARING
(75) THRUST SHIM 48 x 60 mm Selective part
(76) NEEDLE BEARINGS
(77) 2ND GEAR ONE-WAY CLUTCH
(78) COUNTERSHAFT 2ND GEAR
(79) BALL BEARING
(80) SNAP RING
(81) ONE-WAY CLUTCH HUB
(82) PARKING BRAKE PAWL SHAFT SLEEVE
(83) PARKING BRAKE PAWL
(84) PARKING BRAKE PAWL SPRING
(85) PARKING BRAKE PAWL SHAFT
(86) LOCK PLATE Replace.
(87) PARKING BRAKE ROD HOLDER
(88) PARKING BRAKE ROD GUIDE
(89) ATF COOLER PIPES
(90) SEALING WASHER Replace.
(91) JOINT BOLT
(92) BREATHER PIPE
(93) TRANSMISSION SUB-HARNESS

TORQUE SPECIFICATIONS

No.	Torque Value	Bolt Size	Remarks
A	12 N·m (1.2 kg-m, 9 lb-ft)	6 x 1.0 mm	
D	27 N·m (2.7 kg-m, 20 lb-ft)	8 x 1.25 mm	
E	18 N·m (1.8 kg-m, 13 lb-ft)	8 x 1.25 mm	Sealing Bolt
G	170 N·m (17.0 kg-m, 123 lb-ft)	24 x 1.25 mm	Mainshaft Locknut
H	170 N·m (17.0 kg-m, 123 lb-ft)	24 x 1.25 mm	Countershaft Locknut (Left-hand threads)
I	40 N·m (4.0 kg-m, 29 lb-ft)	14 x 1.5 mm	Joint Bolt

Transmission Housing/Lower Valve Body

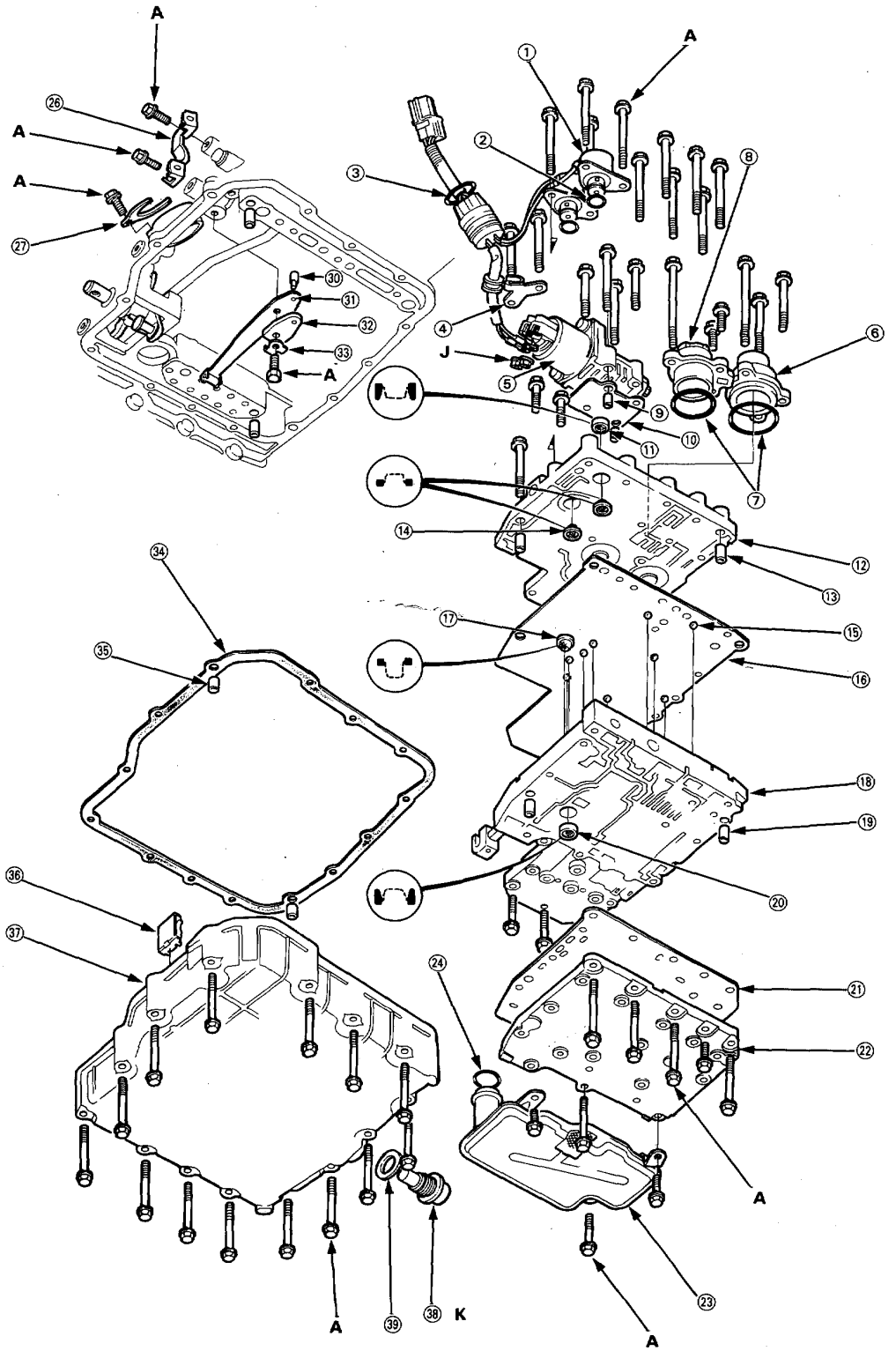

① **SHIFT CONTROL SOLENOID VALVE A/B**
② **O-RING** Replace.
③ **O-RING** Repalce.
④ **HARNESS CLAMP**
⑤ **LINEAR SOLENOID/THROTTLE VALVE BODY**
⑥ **2ND ACCUMULATOR COVER**
⑦ **O-RINGS** Replace.
⑧ **1ST ACCUMULATOR COVER**
⑨ **DOWEL PIN**
⑩ **THROTTLE SEPARATOR PLATE**
⑪ **FILTER** Replace.
⑫ **SECONDARY VALVE BODY**
⑬ **DOWEL PIN**
⑭ **FILTER** Replace.
⑮ **CHECK BALLS**
⑯ **MAIN SEPARATOR PLATE**
⑰ **FILTER** Replace.
⑱ **MAIN VALVE BODY**
⑲ **DOWEL PIN**
⑳ **FILTER** Replace.
㉑ **OIL PASS BODY SEPARATOR PLATE**
㉒ **OIL PASS BODY**
㉓ **ATF STRAINER**
㉔ **O-RING** Replace.
㉖ **SHIFT CABLE HOLDER BASE**
㉗ **CONNECTOR STOPPER**
㉚ **DETENT SPRING FIX PIN**
㉛ **DETENT SPRING**
㉜ **DETENT SPRING PLATE**
㉝ **LOCK WASHER** Replace.
㉞ **OIL PAN GASKET** Replace.
㉟ **DOWEL PIN**
㊱ **ATF MAGNET**
㊲ **OIL PAN**
㊳ **DRAIN PLUG**
㊴ **SEALING WASHER** Replace.

TORQUE SPECIFICATIONS

No.	Torque Value	Bolt Size	Remarks
A	12 N·m (1.2 kg-m, 9 lb-ft)	6 x 1.0 mm	
J	6 N·m (0.6 kg-m, 4 lb-ft)	5 x 0.8 mm	Flange Nut
K	50 N·m (5.0 kg-m, 36 lb-ft)	18 x 1.5 mm	Drain Plug

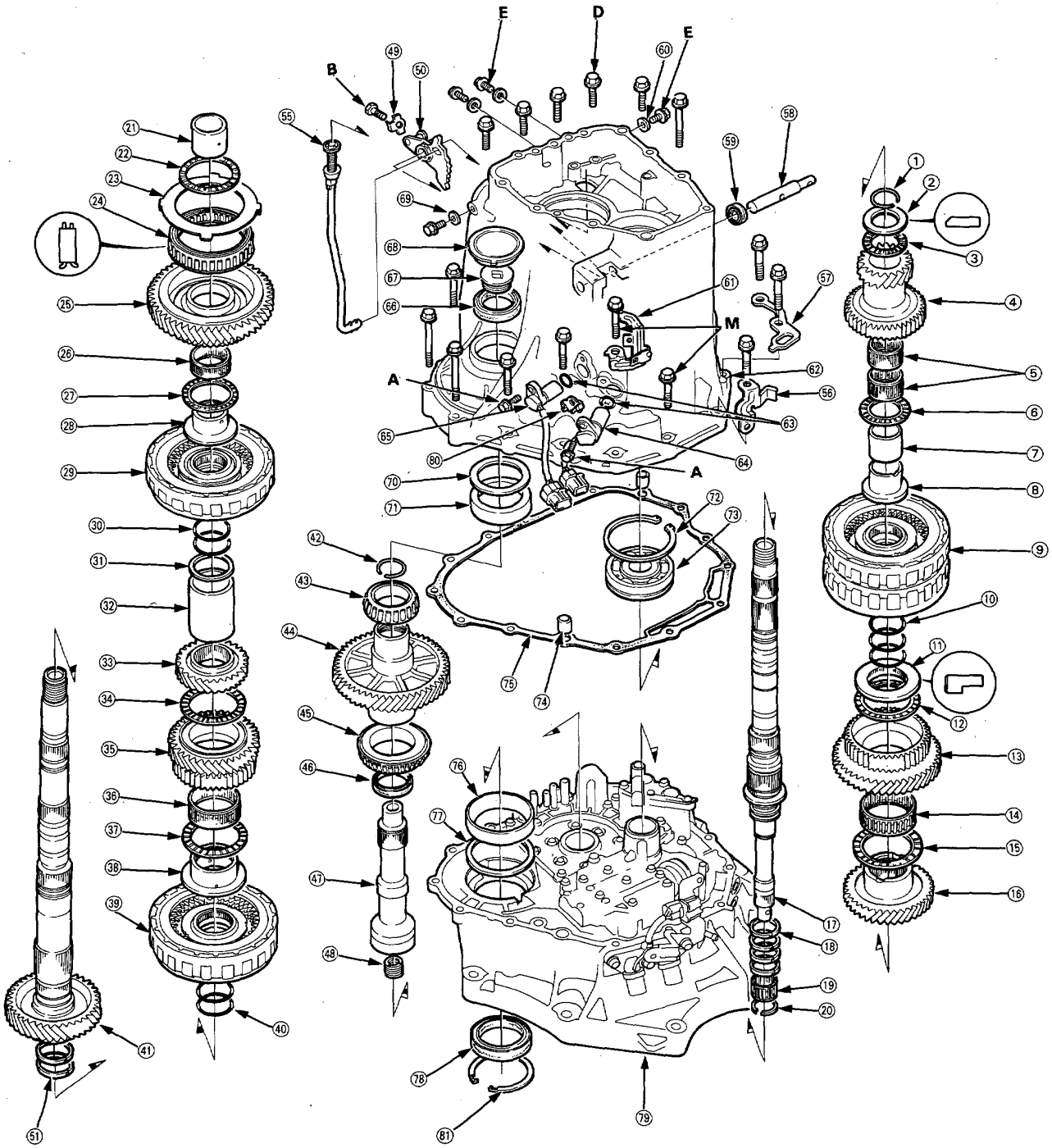
E
D
E
B
A
A
M

① SNAP RING
② THRUST WASHER
③ THRUST NEEDLE BEARING
④ MAINSHAFT 1ST GEAR
⑤ NEEDLE BEARINGS
⑥ THRUST NEEDLE BEARING
⑦ MAINSHAFT 1ST GEAR DISTANCE COLLAR
⑧ MAINSHAFT 1ST GEAR COLLAR
⑨ 1ST/4TH CLUTCH ASSEMBLY
⑩ O-RING Replace.
⑪ 4TH CLUTCH COLLAR Selective part
⑫ THRUST NEEDLE BEARING
⑬ MAINSHAFT 4TH GEAR
⑭ NEEDLE BEARING
⑮ THRUST NEEDLE BEARING
⑯ MAINSHAFT 3RD GEAR
⑰ MAINSHAFT
⑱ SEALING RING 37 mm
⑲ NEEDLE BEARING
⑳ SET RING
㉑ COUNTERSHAFT 2ND GEAR COLLAR
㉒ THRUST NEEDLE BEARING
㉓ SET PLATE
㉔ 1ST GEAR ONE-WAY CLUTCH
㉕ COUNTERSHAFT 1ST GEAR
㉖ NEEDLE BEARING
㉗ THRUST NEEDLE BEARING
㉘ COUNTERSHAFT 1ST GEAR COLLAR
㉙ 1ST-HOLD CLUTCH ASSEMBLY
㉚ O-RING Replace.
㉛ THRUST SHIM 38.8 x 47 mm Selective part
㉜ 1ST-HOLD CLUTCH DISTANCE COLLAR
㉝ COUNTERSHAFT 4TH GEAR
㉞ THRUST NEEDLE BEARING
㉟ COUNTERSHAFT 3RD GEAR
㊱ NEEDLE BEARING
㊲ THRUST NEEDLE BEARING
㊳ COUNTERSHAFT 3RD GEAR COLLAR
㊴ 3RD CLUTCH ASSEMBLY
㊵ O-RING Replace.
㊶ COUNTERSHAFT
㊷ SET RING Replace.
㊸ TAPERED ROLLER BEARING
㊹ SECONDARY GEAR SHAFT
㊺ TAPERED ROLLER BEARING
㊻ SECONDARY GEAR SHAFT OIL SEAL Replace.
㊼ EXTENSION SHAFT
㊽ SECONDARY SPRING
㊾ LOCK WASHER Replace.
㊿ DETENT LEVER
(51) SEALING RING 42 mm
(55) PARKING BRAKE ROD
(56) HARNESS STAY
(57) TRANSMISSION HANGER
(58) CONTROL SHAFT
(59) OIL SEAL Replace.
(60) SEALING WASHER Replace.
(61) SPEED SENSOR CONNECTOR STAY
(62) TRANSMISSION HOUSING
(63) O-RINGS Replace.
(64) NM SPEED SENSOR
(65) NC SPEED SENSOR
(66) TRANSMISSION HOUSING OIL SEAL Replace.
(67) SEALING BOLT
(68) SECONDARY COVER
(69) SEALING WASHER Replace.
(70) THRUST SHIM 75 mm Selective part
(71) BEARING OUTER RACE
(72) SNAP RING
(73) TRANSMISSION HOUSING MAINSHAFT BEARING
(74) DOWEL PIN
(75) TRANSMISSION HOUSING GASKET Replace.
(76) BEARING OUTER RACE
(77) WASHER
(78) TORQUE CONVERTER HOUSING OIL SEAL Replace.
(79) TORQUE CONVERTER HOUSING
(80) NM SPEED SENSOR WASHER
(81) SNAP RING

TORQUE SPECIFICATIONS

No.	Torque Value	Bolt Size	Remarks
A	12 N·m (1.2 kg-m, 9 lb-ft)	6 x 1.0 mm	
B	14 N·m (1.4 kg-m, 10 lb-ft)	6 x 1.0 mm	Special Bolt
D	34 N·m (3.4 kg-m, 26 lb-ft)	8 x 1.25 mm	14 Bolts
E	18 N·m (1.8 kg-m, 13 lb-ft)	8 x 1.25 mm	Oil Pressure Check Bolt
M	27 N·m (2.7 kg-m, 20 lb-ft)	8 x 1.25 mm	2 Bolts (with connector stay)

Torque Converter Housing/Valve Body

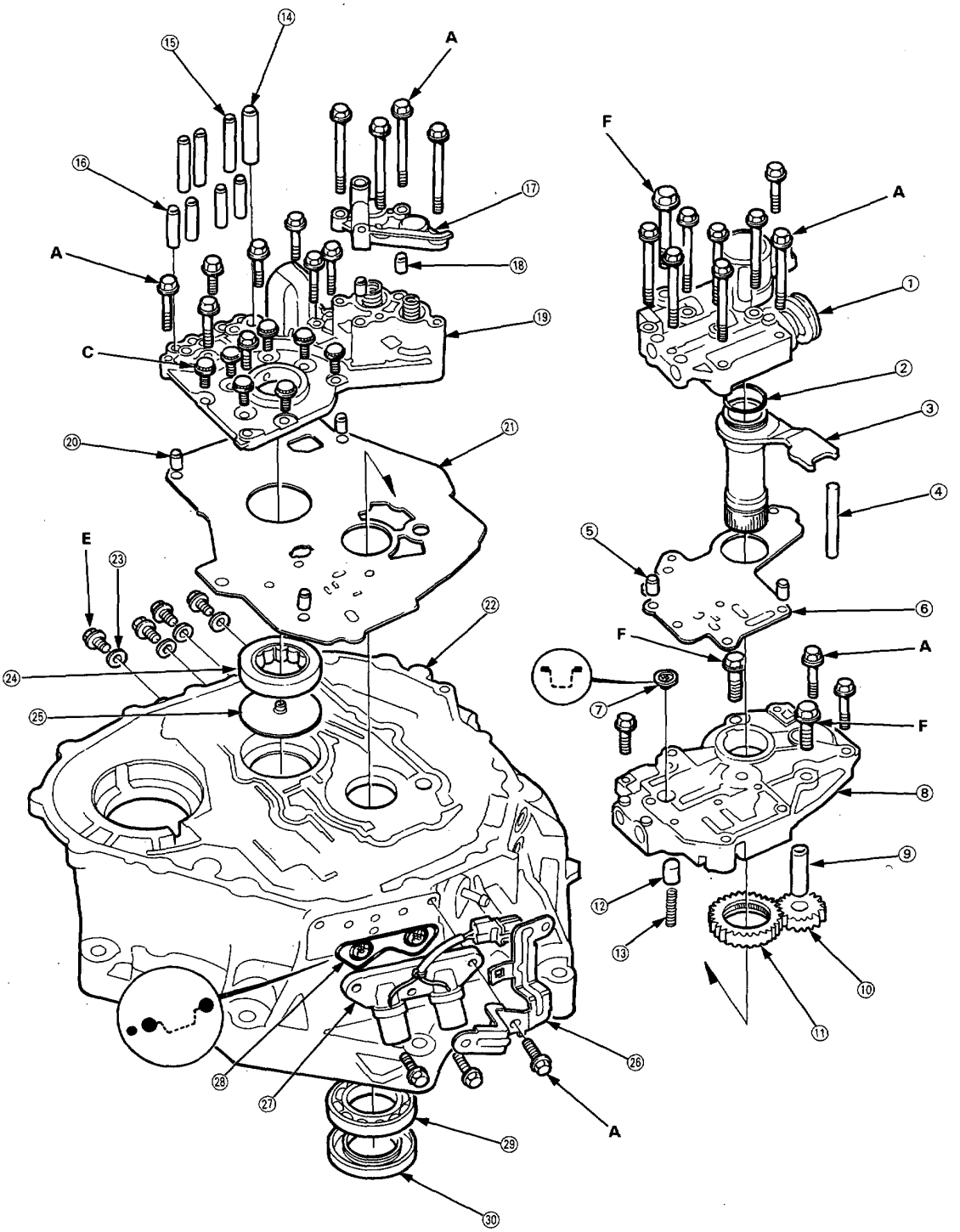

① **REGULATOR VALVE BODY**
② **O-RING** Replace.
③ **STATOR SHAFT**
④ **STOPPER PIN**
⑤ **DOWEL PIN**
⑥ **REGULATOR SEPARATOR PLATE**
⑦ **OIL PUMP BODY FILTER** Replace.
⑧ **OIL PUMP BODY**
⑨ **OIL PUMP DRIVEN GEAR SHAFT**
⑩ **OIL PUMP DRIVEN GEAR**
⑪ **OIL PUMP DRIVE GEAR**
⑫ **TORQUE CONVERTER CHECK VALVE**
⑬ **TORQUE CONVERTER CHECK VALVE SPRING**
⑭ **OIL PIPE 10 x 60 mm**
⑮ **OIL PIPE 8 x 57.5 mm**
⑯ **OIL PIPE 8 x 40 mm**
⑰ **ACCUMULATOR COVER**
⑱ **DOWEL PIN**
⑲ **ACCUMULATOR BODY**
⑳ **DOWEL PIN**
㉑ **ACCUMULATOR BODY SEPARATOR PLATE**
㉒ **TORQUE CONVERTER HOUSING**
㉓ **SEALING WASHER** Replace.
㉔ **TORQUE CONVERTER HOUSING COUNTERSHAFT BEARING** Replace.
㉕ **OIL GUIDE PLATE** Replace.
㉖ **LOCK-UP CONTROL SOLENOID VALVE CONNECTOR STAY**
㉗ **LOCK-UP CONTROL SOLENOID VALVE ASSEMBLY**
㉘ **LOCK-UP CONTROL SOLENOID FILTER/GASKET** Replace.
㉙ **TORQUE CONVERTER HOUSING MAINSHAFT BEARING** Replace.
㉚ **MAINSHAFT OIL SEAL** Repalce.

TORQUE SPECIFICATIONS

No.	Torque Value	Bolt Size	Remarks
A	12 N·m (1.2 kg-m, 9 lb-ft)	6 x 1.0 mm	
C	12 N·m (1.2 kg-m, 9 lb-ft)	6 x 1.0 mm	Special Bolt
E	18 N·m (1.8 kg-m, 13 lb-ft)	8 x 1.25 mm	Oil Pressure Check Bolt
F	18 N·m (1.8 kg-m, 13 lb-ft)	8 x 1.25 mm	

Lower Valve Body

Removal

NOTE:
- Clean all parts thoroughly in solvent or carburetor cleaner and dry with compressed air.
- Blow out all passages.

1. Remove the lower valve body following the numbered sequence.

CAUTION: Do not turn over the transmission before removing the oil pan.

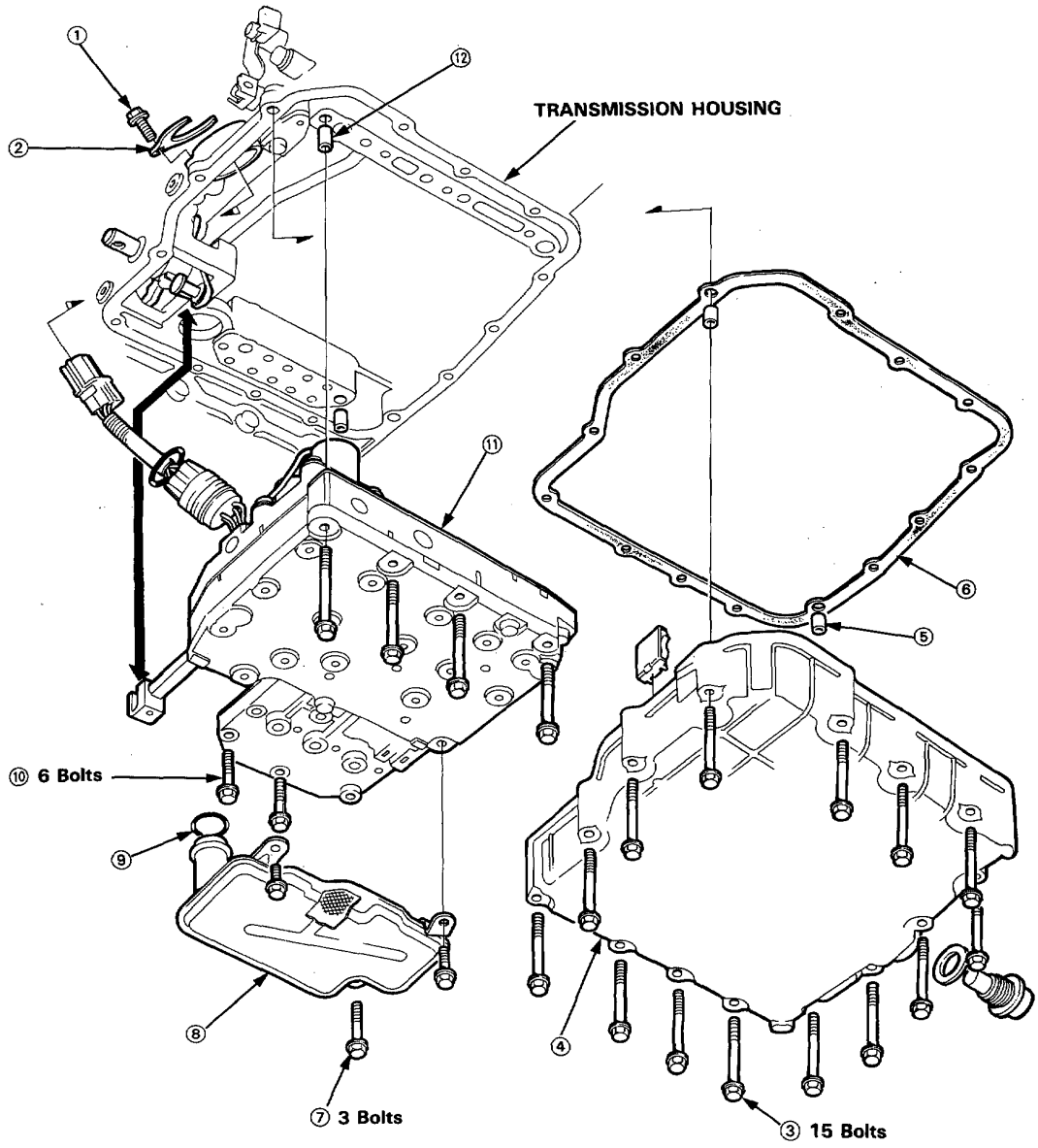

Rear Cover

Removal

NOTE:
- Clean all parts thoroughly in solvent or carburetor cleaner and dry with compressed air.
- Blow out all passages.
- Cut the lock tab and raise it, then remove the locknut on each shaft.
- Countershaft locknut has left-hand threads.

1. Disconnect the transmission sub-harness connector from the shift control solenoid valve/linear solenoid connector.

2. Remove the transmission rear cover following the numbered sequence.

   NOTE: Remove the special tool from the mainshaft after removing the locknuts.

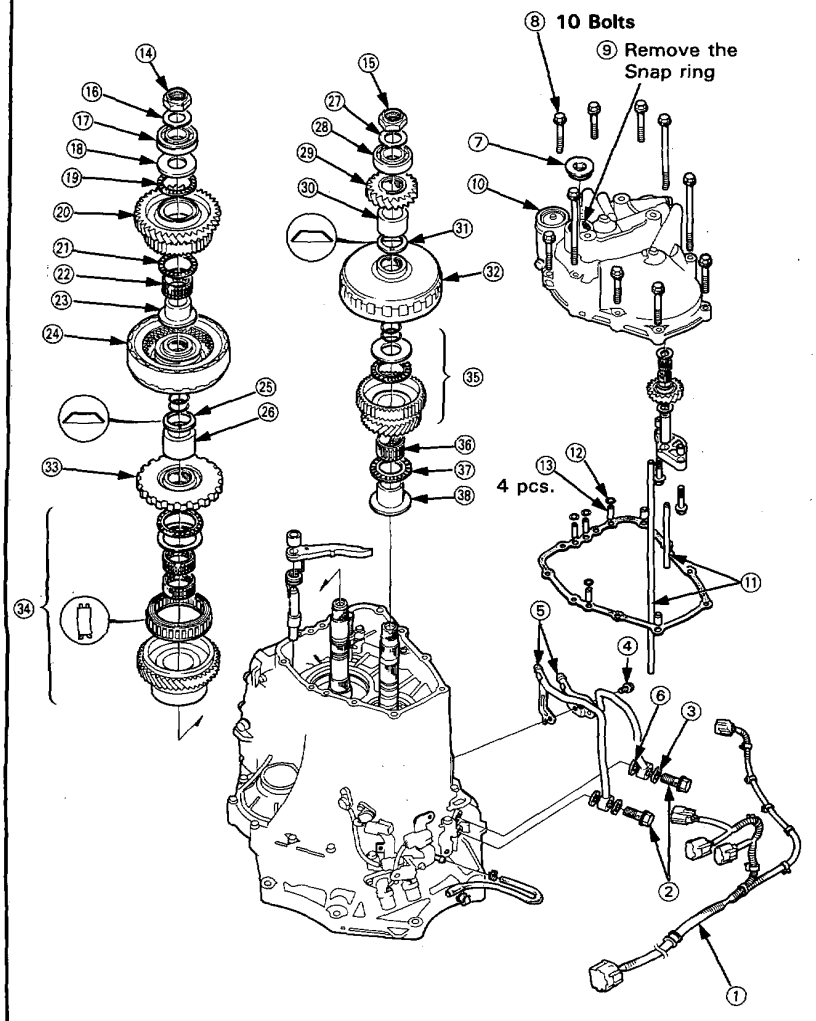

⑨ Using snap ring pliers, expand the snap ring on the countershaft ball bearing and remove it.

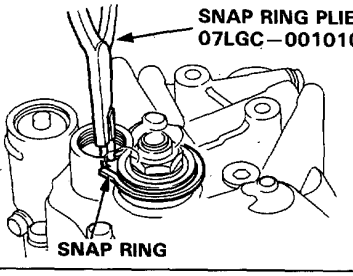

Slip the special tool onto the mainshaft and engage the parking brake pawl with the parking gear.

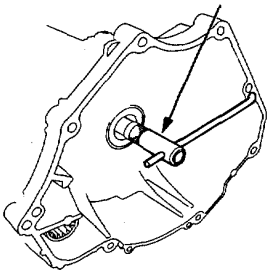

⑭ ⑮

NOTE: Using a chisel, cut the lock tab. Pry it up and then remove the locknut from each shaft.
CAUTION: Keep all of the chiseled particles out of the transmission.

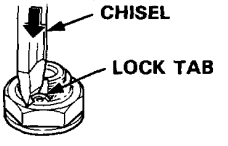

Transmission Housing

Removal

NOTE:
- Clean all parts thoroughly in solvent or carburetor cleaner and dry with compressed air.
- Blow out all passages.

1. Remove the transmission housing following the numbered sequence.

   NOTE: Install the special tools as shown to remove the transmission housing.

CAUTION: Make sure that the NM and NC speed sensors are removed from the transmission housing before removing the transmission housing from the torque converter housing.

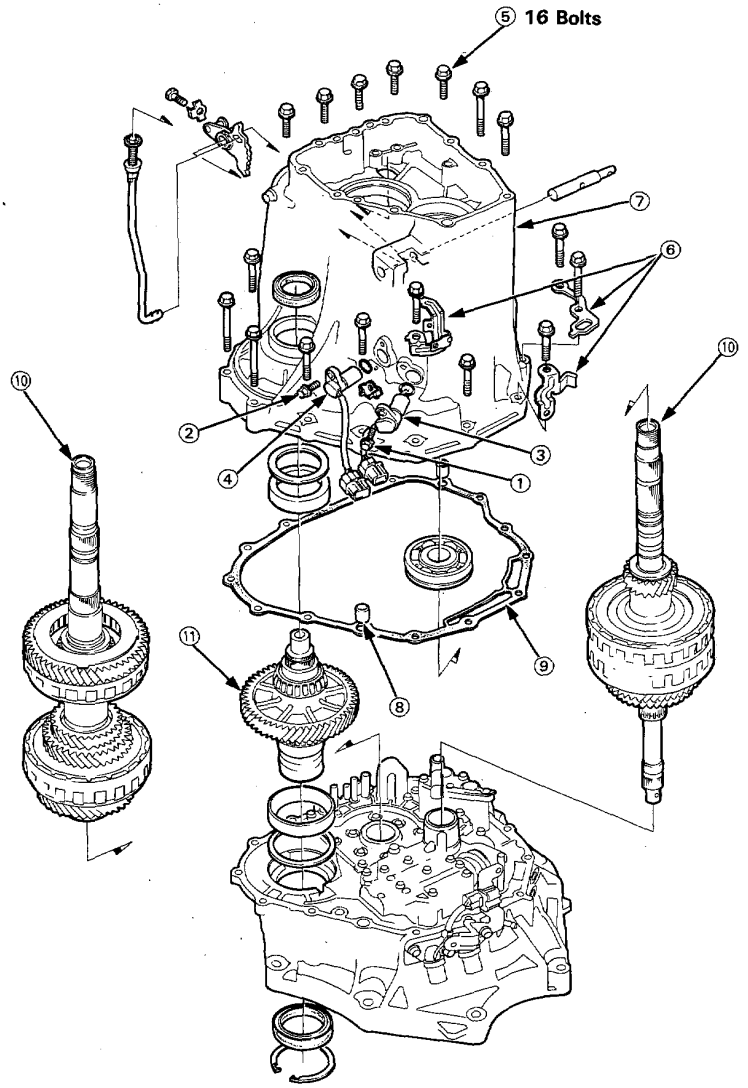

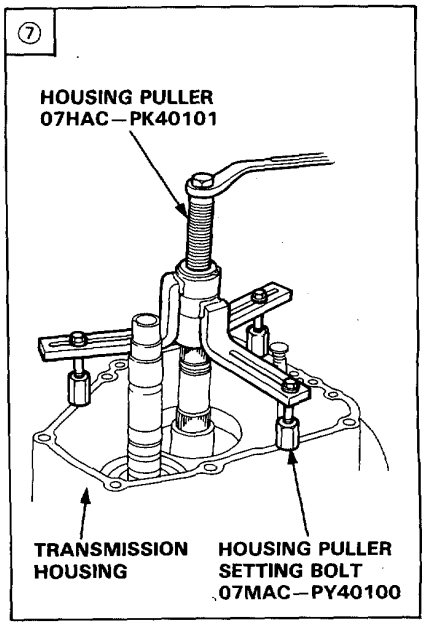

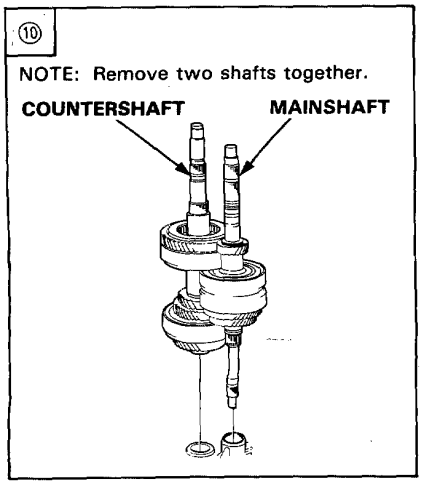

Torque Converter Housing/Valve Body

Removal

NOTE:
- Clean all parts thoroughly in solvent or carburetor cleaner and dry with compressed air.
- Blow out all passages.
- Accumulator cover is spring loaded; to prevent stripping the threads in the torque converter housing, press down on the accumulator cover while unscrewing the bolts in a crisscross pattern.

1. Remove the valve body following the numbered sequence.

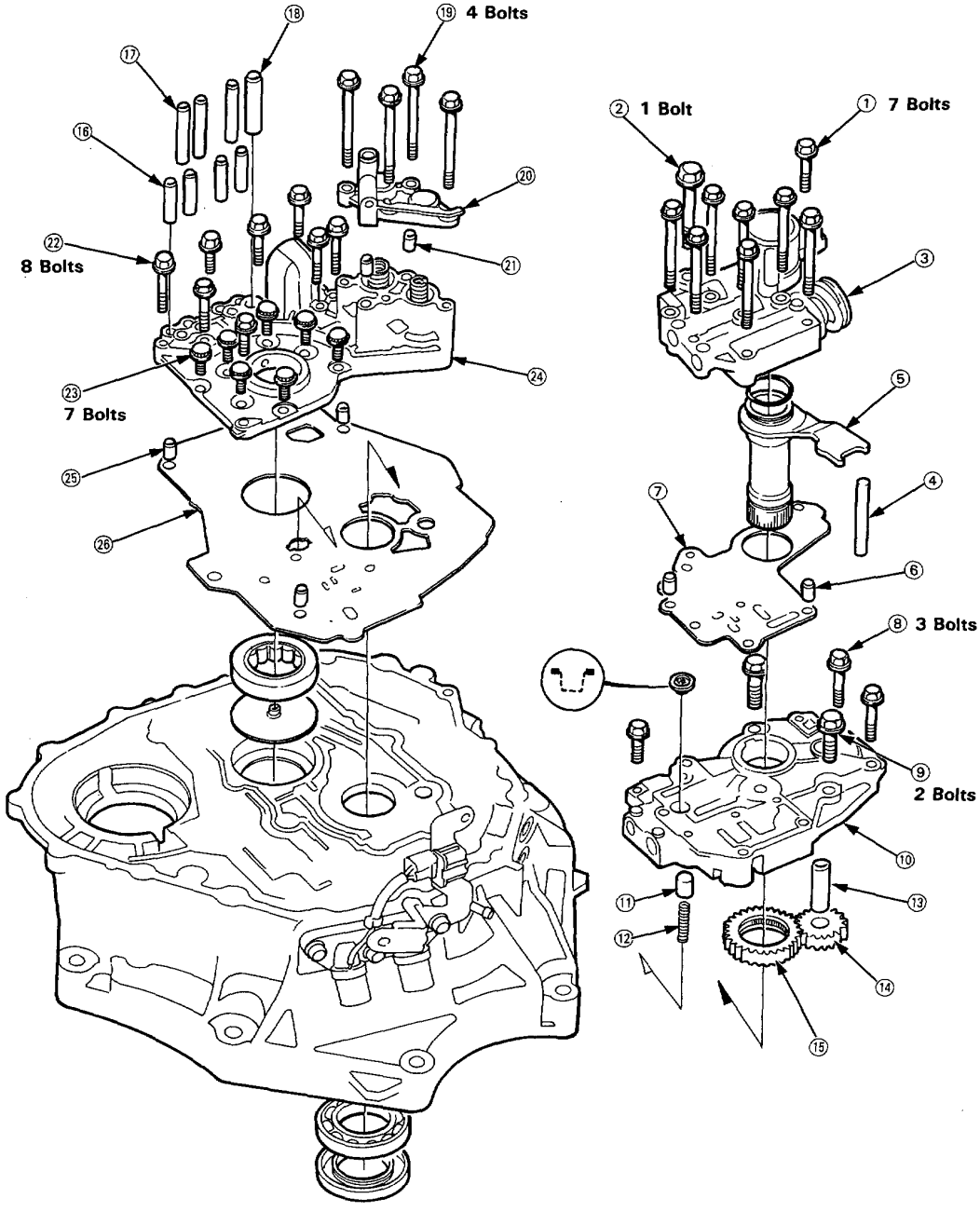

Repair

NOTE: This repair is only necessary if one or more of the valves in a valve body do not slide smoothly in their bores. You may use this procedure to free the valves in the valve bodies.

1. Soak a sheet of #600 abrasive paper in ATF for about 30 minutes.

2. Carefully tap the valve body so the sticking valve drops out of its bore.

   CAUTION: It may be necessary to use a small screwdriver to pry the valve free. Be careful not to scratch the bore with the screwdriver.

3. Inspect the valve for any scuff marks. Use the ATF-soaked #600 paper to polish off any burrs that are on the valve, then wash the valve in solvent and dry it with compressed air.

4. Roll up half a sheet of ATF-soaked paper and insert it in the valve bore of the sticking valve.
   Twist the paper slightly, so that it unrolls and fits the bore tightly, then polish the bore by twisting the paper as you push it in and out.

   CAUTION: The valve body is aluminum and doesn't require much polishing to remove any burrs.

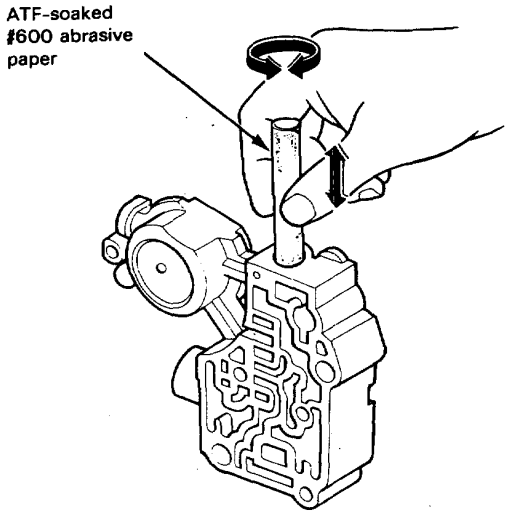

5. Remove the #600 paper and thoroughly wash the entire valve body in solvent, then dry with compressed air.

6. Coat the valve with ATF then drop it into its bore. It should drop to the bottom of the bore under its own weight. If not, repeat step 4, then retest.

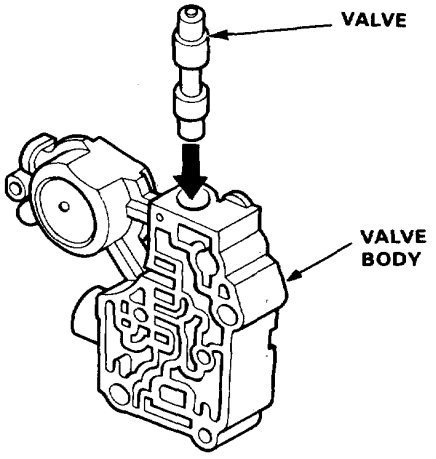

7. Remove the valve and thoroughly clean it and the valve body with solvent. Dry all parts with compressed air, then reassemble using ATF as a lubricant.

Assembly

NOTE: Coat all parts with ATF before assembly.

1. Install the valve, valve spring and cap in the valve body and secure with the roller.

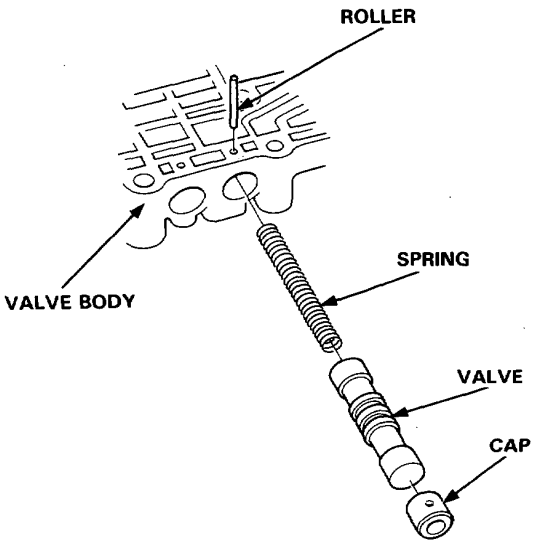

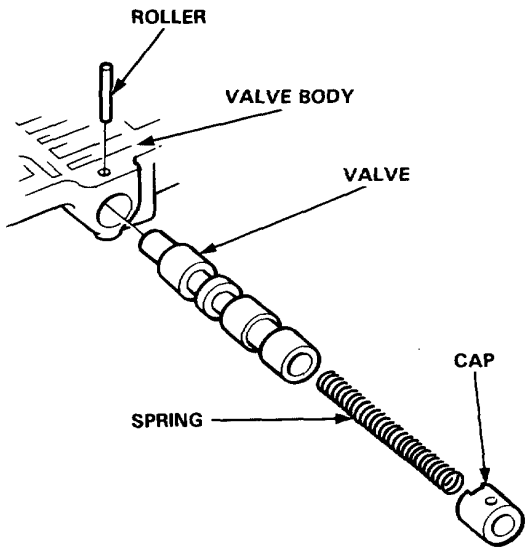

2. Set the spring in the valve and install it in the valve body. Push the spring in with a screwdriver then install the spring seat.

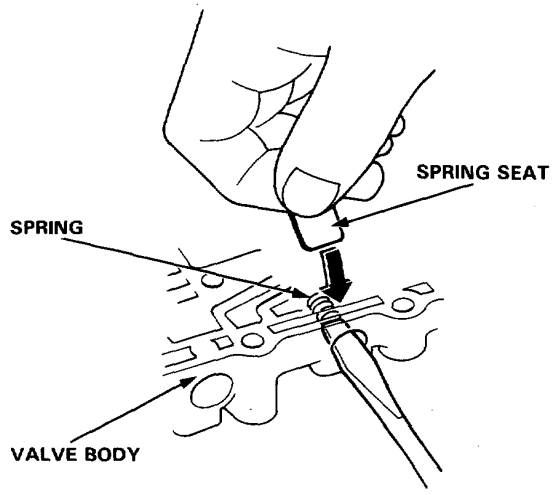

Valve Caps

Description

- Caps with one projected tip and one flat end are installed with the flat end toward the spring.
- Caps with a projected tip on each end are installed with the smaller tip toward the spring. The small tip is a spring guide.

Toward outside of valve body.

Toward spring.

- Caps with one projected tip and hollow end are installed with the tip toward the spring. The tip is a spring guide.

Toward outside of valve body.

Toward spring.

- Caps with hollow ends are installed with the hollow end away from the spring.
- Caps with notched ends are installed with the notch toward the spring.
- Caps with flat ends and a hole through the center are installed with the smaller hole toward the spring.

Toward outside of valve body.

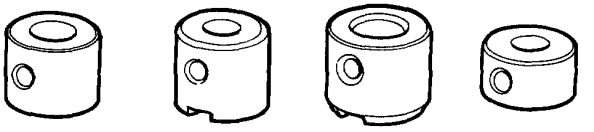

Toward spring.

Secondary Valve Body

Disassembly/Inspection/Reassembly

NOTE:
- Clean all parts thoroughly in solvent or carburetor cleaner, and dry with compressed air.
- Blow out all passages.
- Check all valves for free movement. If any fail to slide freely, see Valve Body Repair on page 14-114.
- Coat all parts with ATF before reassembly.

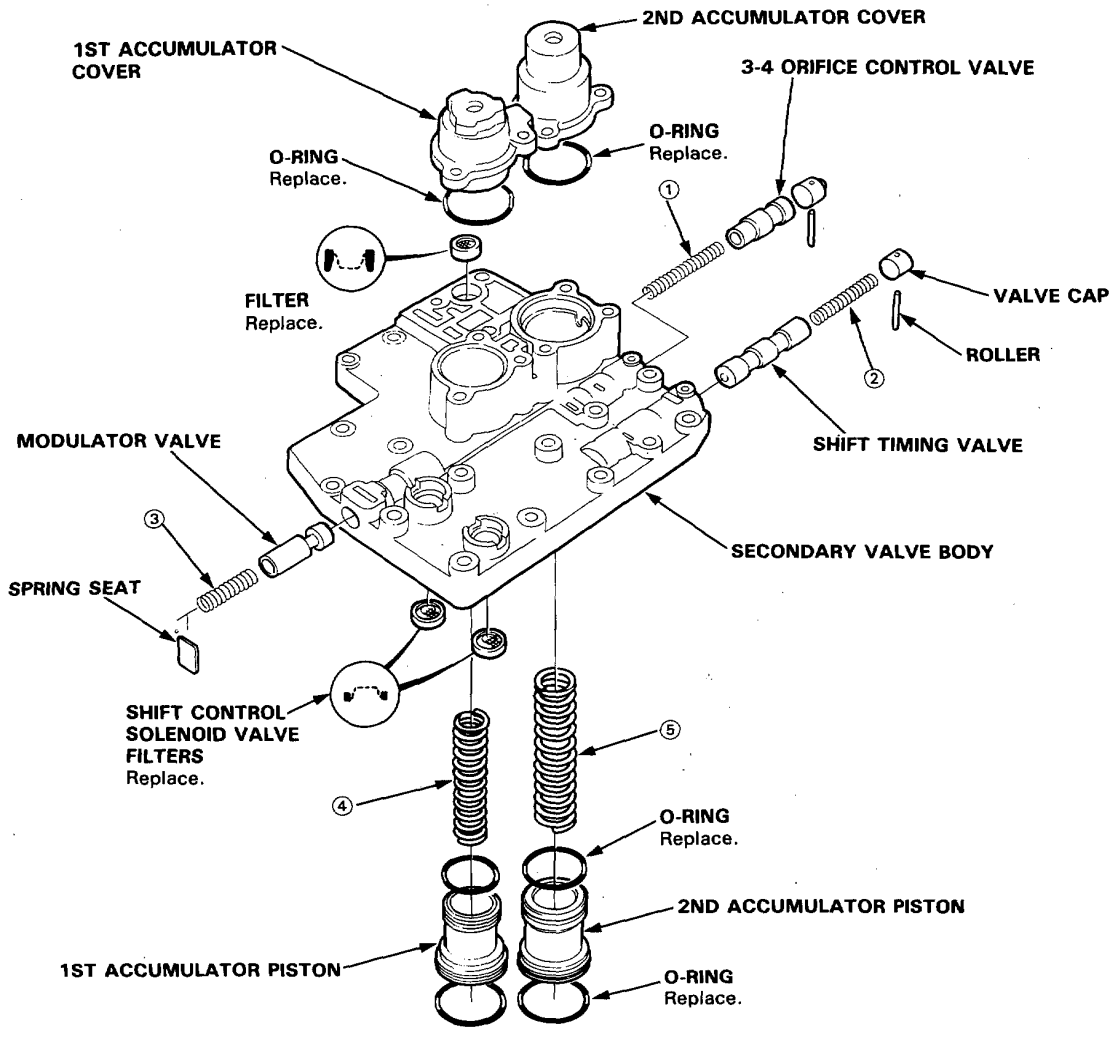

SPRING SPECIFICATIONS

Unit of length: mm (in)

No.	Spring	Standard (New)			
		Wire Dia.	O.D.	Free Length	No. of Coils
①	3—4 orifice control valve spring	1.0 (0.039)	6.6 (0.260)	52.2 (2.055)	26.0
②	Shift timing valve spring	0.8 (0.031)	6.6 (0.260)	54.8 (2.157)	30.0
③	Modulator valve spring A	1.5 (0.059)	9.4 (0.370)	30.6 (1.205)	9.9
	Modulator valve spring A, B	1.4 (0.055)	9.4 (0.370)	33.0 (1.299)	10.5
④	1st accumulator spring	3.1 (0.122)	18.0 (0.709)	74.0 (2.913)	11.3
⑤	2nd accumulator spring	3.9 (0.154)	22.0 (0.866)	92.9 (3.657)	12.1

Main Valve Body

Disassembly/Inspection/Reassembly

NOTE:
- Clean all parts thoroughly in solvent or carburetor cleaner, and dry with compressed air.
- Blow out all passages.
- Replace valve body as an assembly if any parts are worn or damaged.
- Check all valves for free movement. If any fail to slide freely, see Valve Body Repair on page 14-114.
- Coat all parts with ATF before reassembly.

CAUTION: Do not use a magnet to remove the check balls; it may magnetize the balls.

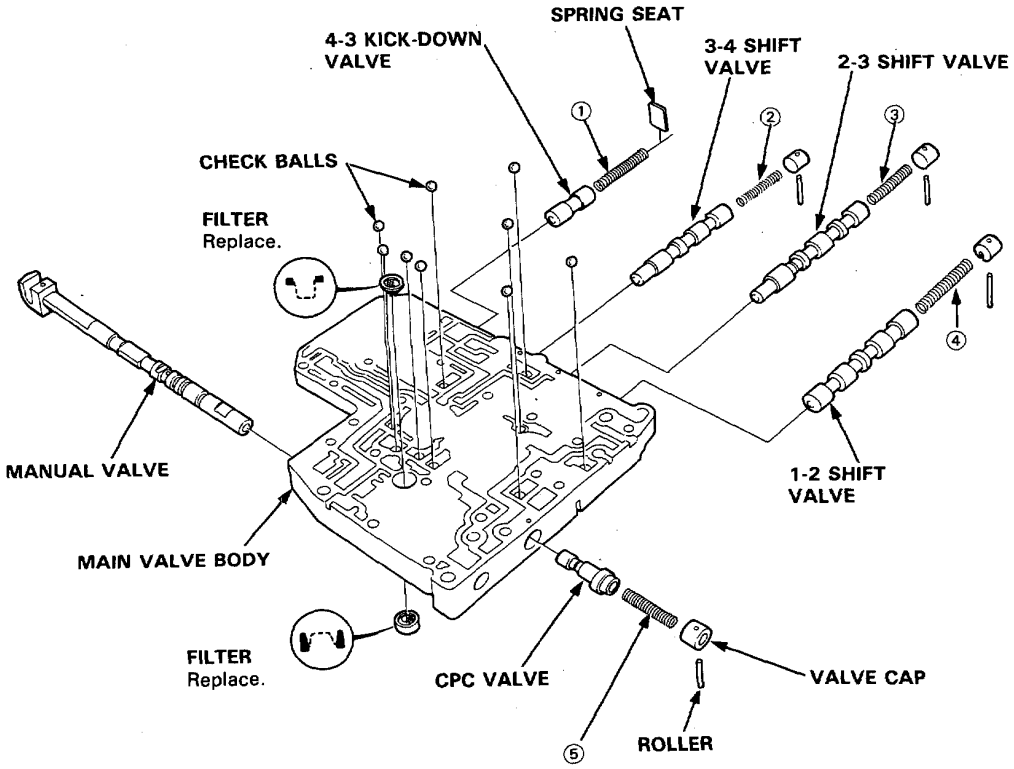

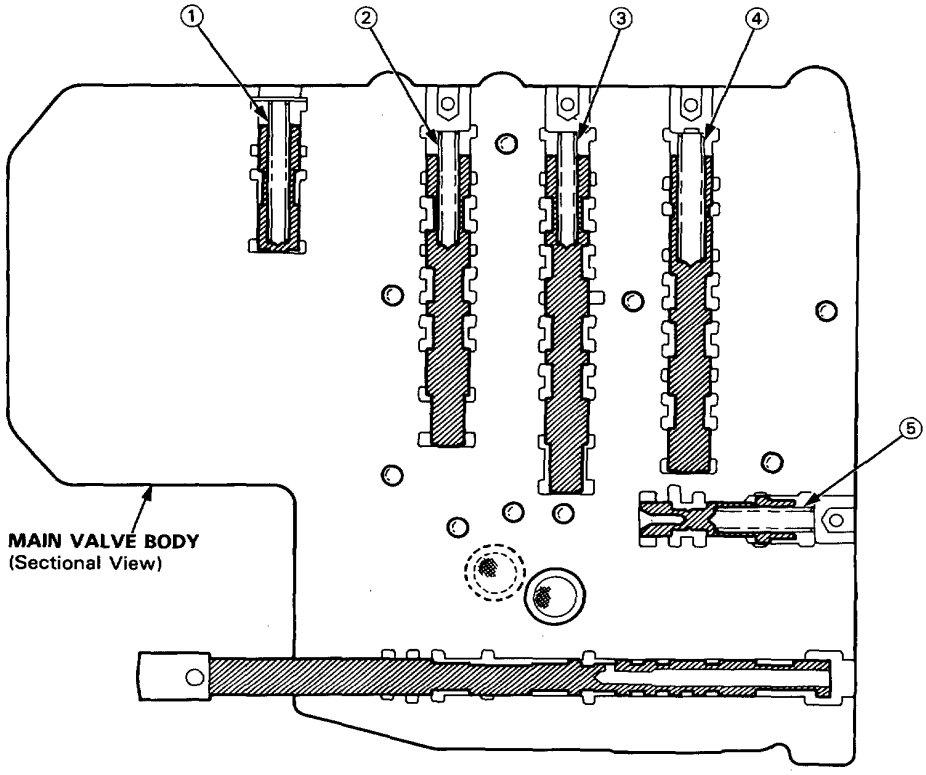

SPRING SPECIFICATIONS

Unit of length: mm (in)

No.	Spring	Standard (New)			
		Wire Dia.	O.D.	Free Length	No. of Coils
①	4—3 kick-down valve spring	1.1 (0.043)	7.1 (0.280)	51.3 (2.020)	22.5
②	3—4 shift valve spring	0.8 (0.031)	6.6 (0.260)	42.1 (1.657)	22.0
③	2—3 shift valve spring	0.8 (0.031)	6.6 (0.260)	42.1 (1.657)	22.0
④	1—2 shift valve spring	0.9 (0.035)	7.6 (0.299)	55.5 (2.185)	24.0
⑤	CPC valve spring	1.2 (0.047)	8.6 (0.339)	39.1 (1.539)	14.0

Regulator Valve Body

Disassembly/Inspection/Reassembly

NOTE:
- Clean all parts thoroughly in solvent or carburetor cleaner, and dry with compressed air.
- Blow out all passages.
- Replace valve body as an assembly if any parts are worn or damaged.
- Check all valves for free movement. If any fail to slide freely, see Valve Body Repair on page 14-114.

1. Hold the regulator spring cap in place while removing the lock bolt. Once the bolt is removed, release the spring cap slowly.

   CAUTION: The regulator spring cap can pop out when the lock bolt is removed.

2. Reassembly is in the reverse order of disassembly.

   NOTE:
   - Coat all parts with ATF.
   - Align the hole in the regulator cap with the hole in the valve body, press the spring cap into the body and tighten the lock bolt.

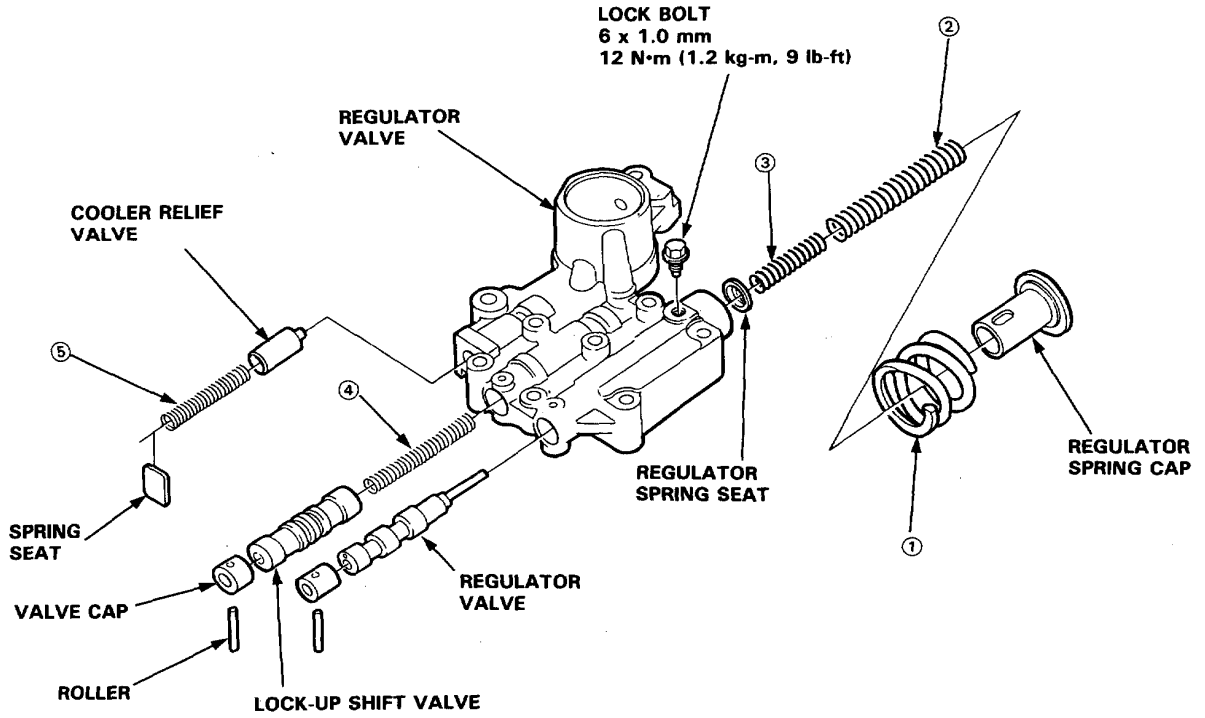

SPRING SPECIFICATIONS

Unit of length: mm (in)

No.	Spring	Standard (New)			
		Wire Dia.	O.D.	Free Length	No. of Coils
①	Stator reaction spring	6.5 (0.256)	26.4 (1.039)*	30.3 (1.193)	1.9
②	Regulator valve spring A	1.8 (0.071)	14.7 (0.579)	86.5 (3.406)	16.5
③	Regulator valve spring B	1.7 (0.067)	6.0 (0.236)*	43.0 (1.693)	13.5
④	Lock-up shift valve spring	0.9 (0.035)	7.6 (0.299)	73.7 (2.902)	32.0
⑤	Cooler relief valve spring	1.1 (0.043)	8.4 (0.331)	46.8 (1.843)	17.0

*: Inside Diameter

Accumulator Body

Disassembly/Inspection/Reassembly

NOTE:
- Clean all parts thoroughly in solvent or carburetor cleaner, and dry with compressed air.
- Blow out all passages.
- Check all valves for free movement. If any fail to slide freely, see Valve Body Repair on page 14-114.
- Coat all parts with ATF before reassembly.

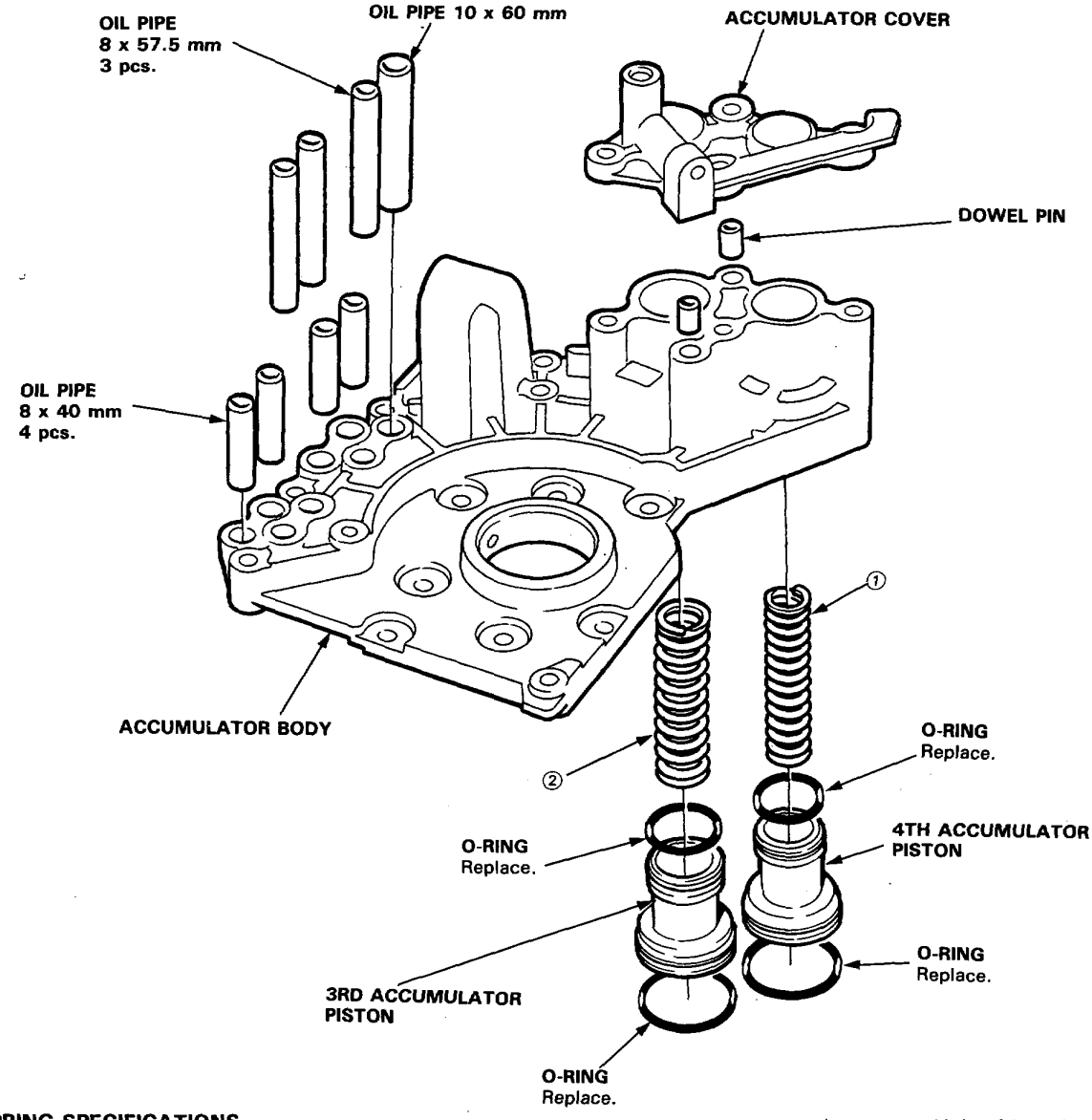

SPRING SPECIFICATIONS

Unit of length: mm (in)

No.	Spring	Standard (New)			
		Wire Dia.	O.D.	Free Length	No. of Coils
①	4th accumulator spring	2.8 (0.110)	16.5 (0.650)	78.1 (3.075)	13.5
②	3rd accumulator spring	3.2 (0.126)	19.0 (0.748)	78.6 (3.094)	11.7

Oil Pump Body

Disassembly/Inspection/Reassembly

NOTE:
- Clean all parts thoroughly in solvent or carburetor cleaner, and dry with compressed air.
- Blow out all passages.
- Replace valve body as an assembly if any parts are worn or damaged.
- Check all valves for free movement. If any fail to slide freely, see Valve Body Repair on page 14-114.
- Coat all parts with ATF before reassembly.

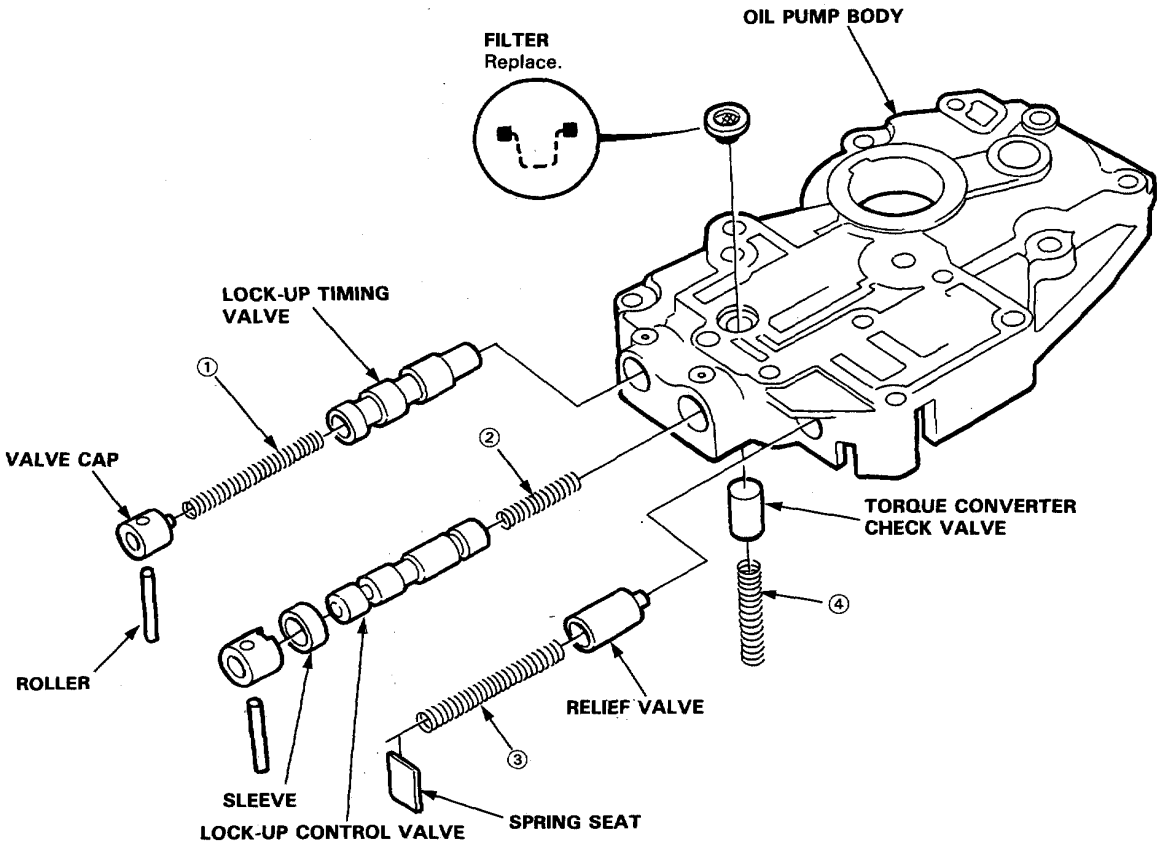

SPRING SPECIFICATIONS

Unit of length: mm (in)

No.	Spring	Standard (New)			
		Wire Dia.	O.D.	Free Length	No. of Coils
①	Lock-up timing valve spring	0.8 (0.031) 0.7 (0.026)	6.6 (0.260) 6.6 (0.260)	61.2 (2.409) 36.3 (1.429)	38.5 14.1
②	Lock-up control valve spring	0.7 (0.026) 0.7 (0.026)	6.6 (0.260) 6.6 (0.260)	37.5 (1.476) 38.5 (1.516)	24.6 24.6
③	Relief valve spring	0.9 (0.035)	8.4 (0.331)	56.5 (2.224)	22.4
④	Torque converter check valve spring	1.1 (0.043)	8.4 (0.331)	41.8 (1.646)	15.7

Inspection

1. Install the pump gears and shaft in the oil pump body.

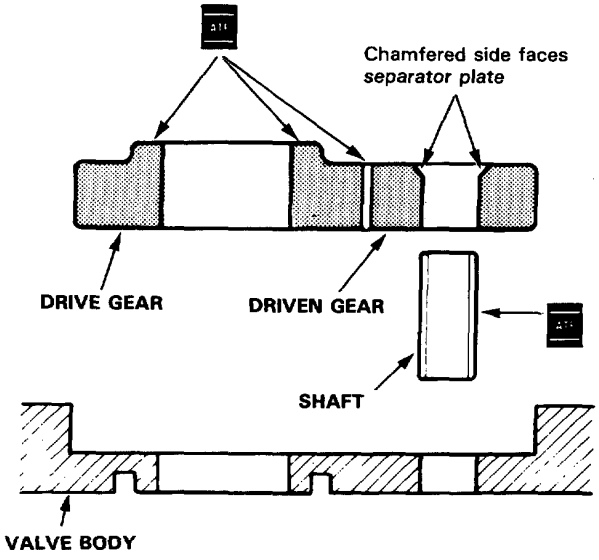

2. Install the oil pump shaft and measure the side clearance of the drive and driven gears.

Pump Gears Side (Radial) Clearance:
Standard (New): Drive gear
0.210–0.265 mm
(0.0083–0.0104 in)
Driven gear
0.07–0.125 mm
(0.0028–0.0049 in)

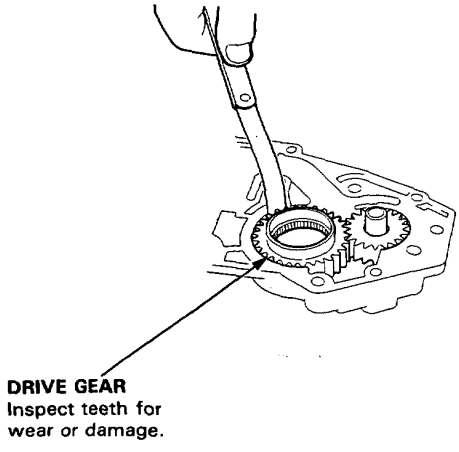

3. Measure the thrust clearance of the driven gear-to-oil pump body.

Drive/Driven Gear thrust (Axial) Clearance:
Standard (New): 0.03–0.05 mm
(0.001–0.002 in)
Service Limit: 0.07 mm (0.0028 in)

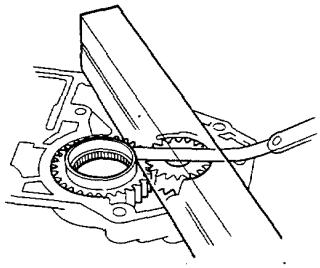

Reverse Accumulator/1st-hold Accumulator

Disassembly/Inspection/Reassembly

NOTE:
- Clean all parts thoroughly in solvent or carburetor cleaner, and dry with compressed air.
- Blow out all passages.
- Replace the O-rings.
- Check all valves for free movement. If any fail to slide freely, see Valve Body Repair on page 14-114.
- Coat all parts with ATF before reassembly.

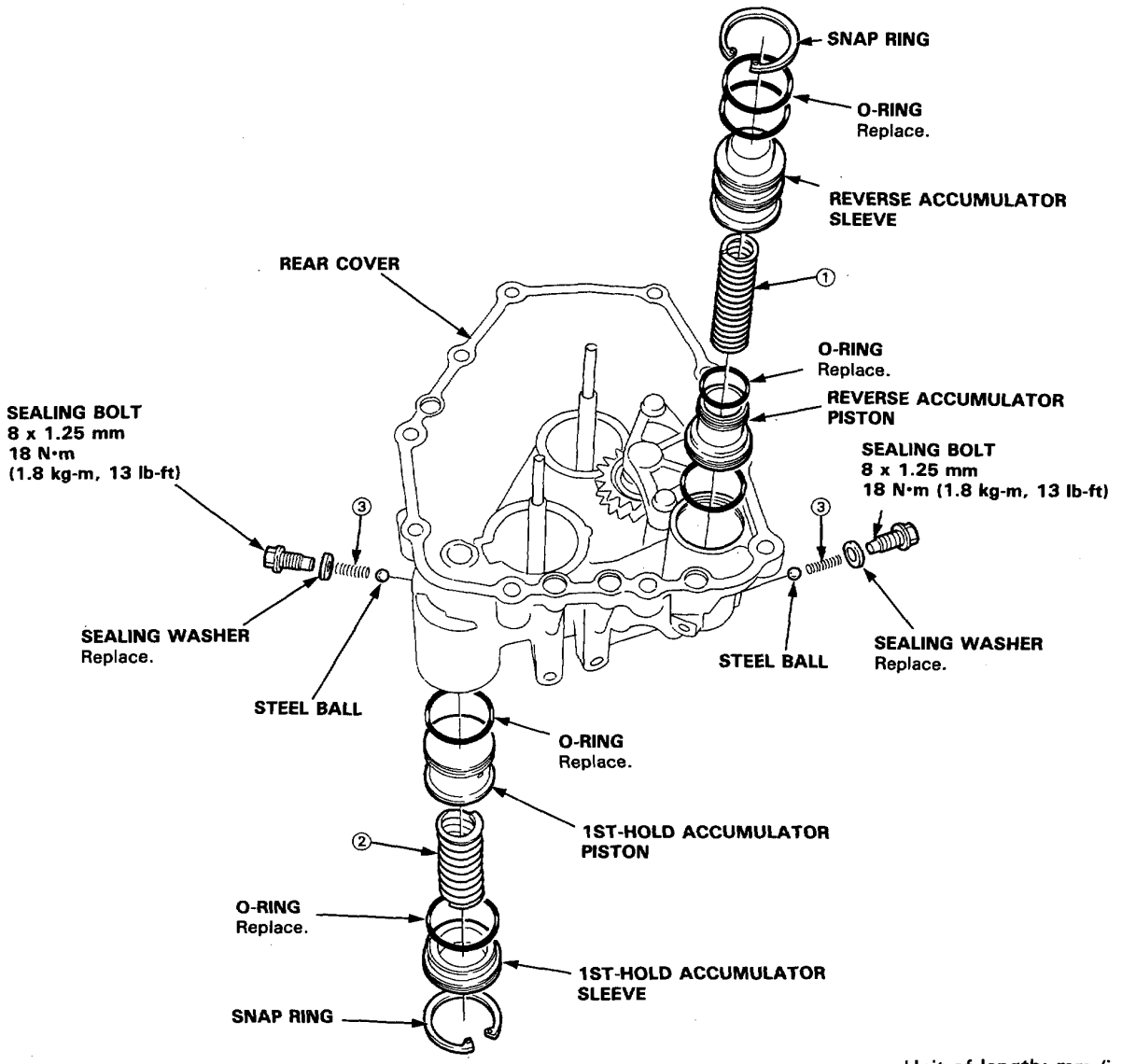

SPRING SPECIFICATIONS

Unit of length: mm (in)

No.	Spring	Standard (New)			
		Wire Dia.	O.D.	Free Length	No. of Coils
①	Reverse accumulator spring	3.5 (0.138)	18.6 (0.732)	94.4 (3.717)	15.2
②	1st-hold accumulator spring	4.0 (0.157)	25.0 (0.984)	68.4 (2.693)	7.2
③	One-way ball spring	0.29 (0.011)	4.0 (0.157)	14.0 (0.551)	13.0

Disassembly

1. Remove the snap ring.
2. Remove the piston sleeve and spring.
3. Remove the one-way ball spring.

   NOTE: Do not remove the steel ball.

4. Wrap a shop towel around the accumulator piston and apply air pressure to the oil passage to remove the piston.

⚠ WARNING

- **Do not place your fingers in front of piston.**
- **Do not use high air pressure.**

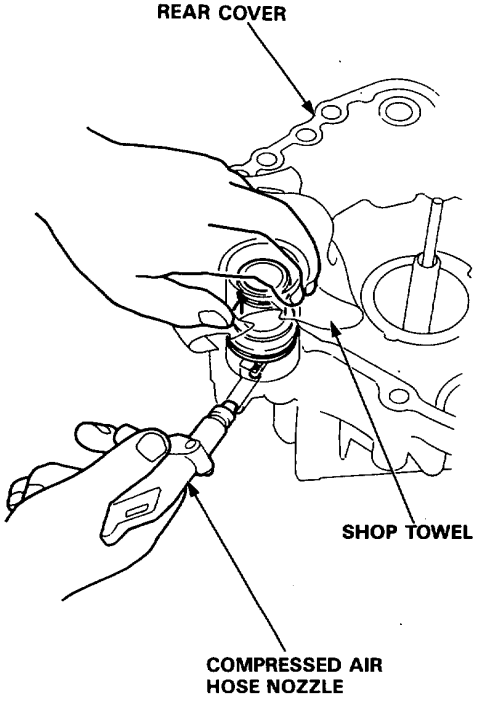

Rear Cover

Disassembly/Inspection/Reassembly

NOTE:
- Clean all parts thoroughly in solvent or carburetor cleaner, and dry with compressed air.
- Blow out all passages.
- Replace the O-rings.
- Coat all parts with ATF before reassembly.

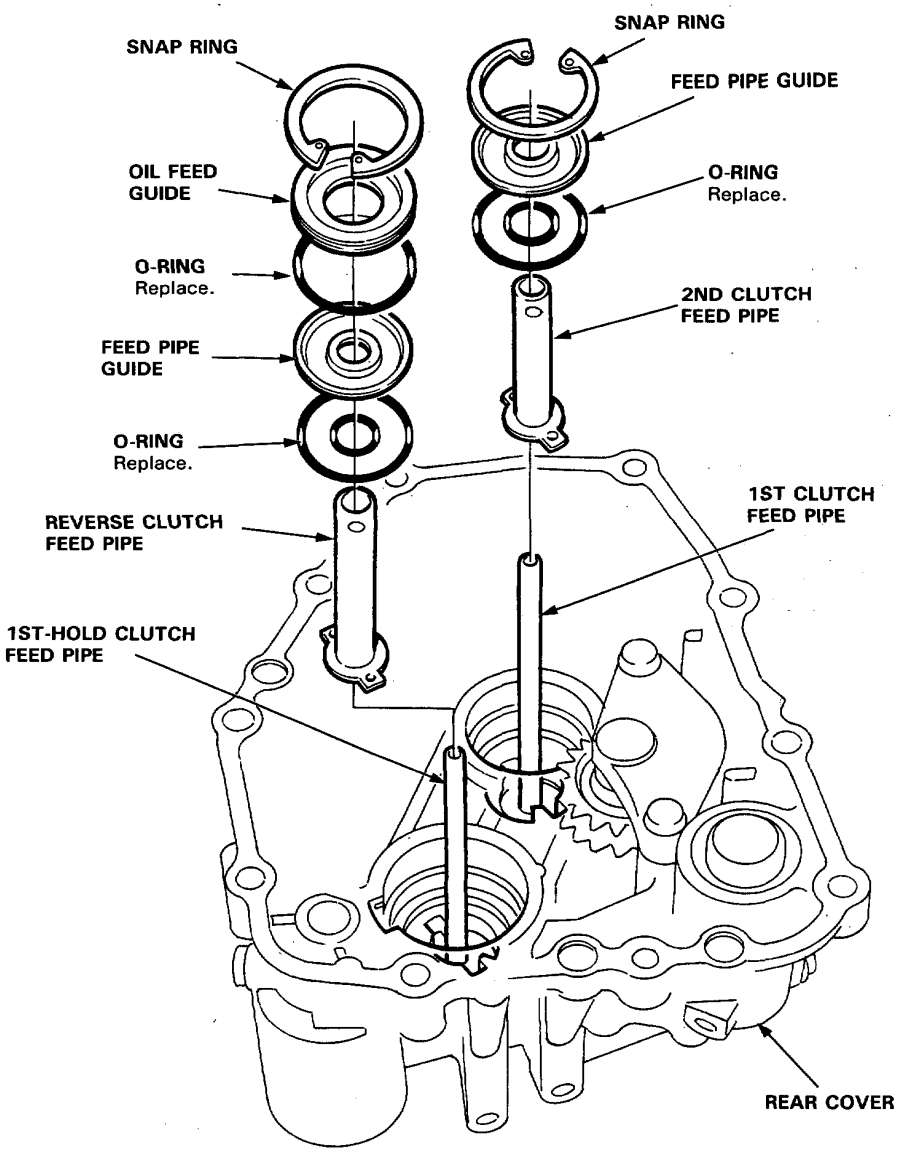

Reverse Idler Gear

Disassembly/Inspection/Reassembly

NOTE:
- Inspect the needle bearings for galling and rough movement.
- Coat all parts with ATF before reassembly.

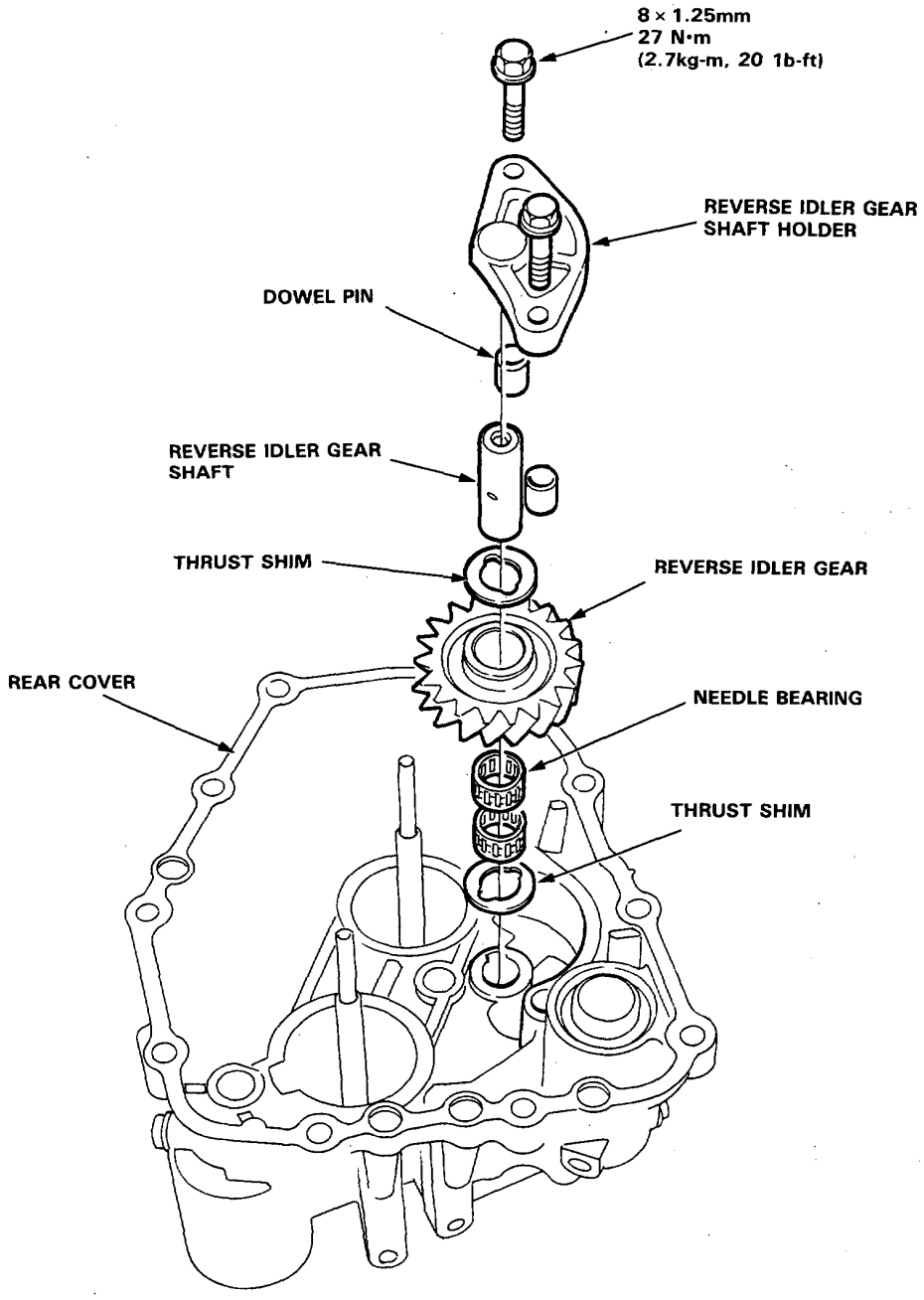

Mainshaft

Disassembly/Inspection/Reassembly

NOTE:
- Lubricate all parts with ATF during reassembly.
- Install thrust needle bearings with unrolled edge of bearing retainer facing washer.
- Inspect thrust needle and needle bearings for galling and rough movement.
- Before installing the O-rings, wrap the shaft splines with tape to prevent damage to the O-rings.

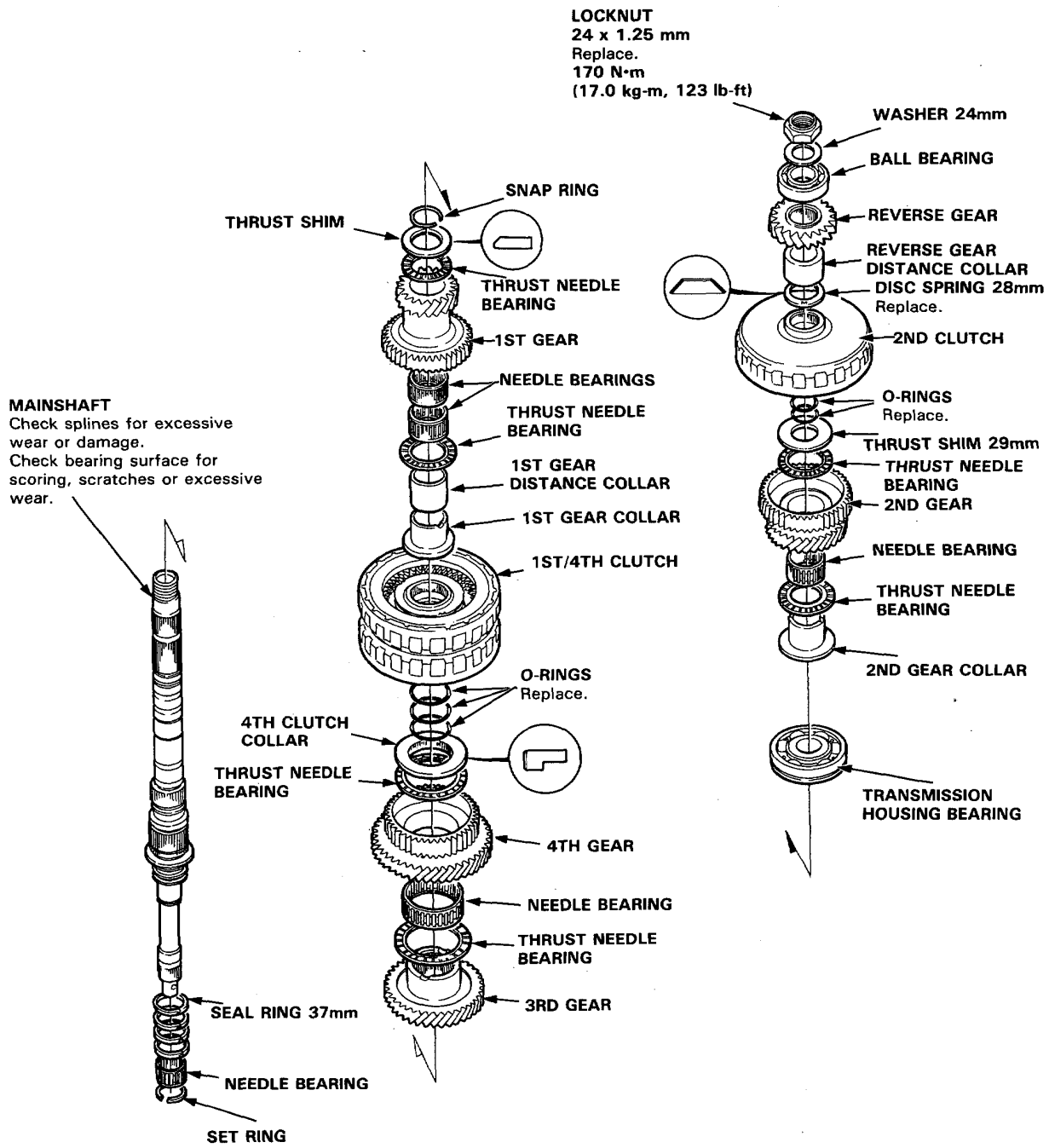

Disassembly

1. Remove the mainshaft 3rd gear, 4th gear and 4th clutch collar from the mainshaft using the special tool and a press as shown.

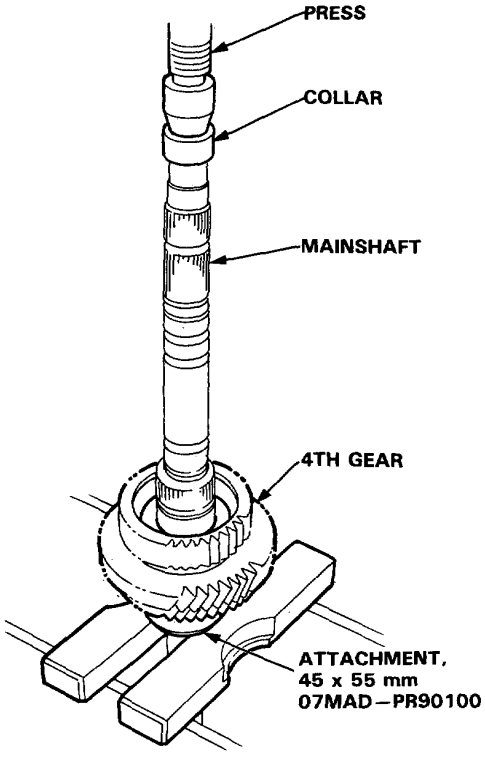

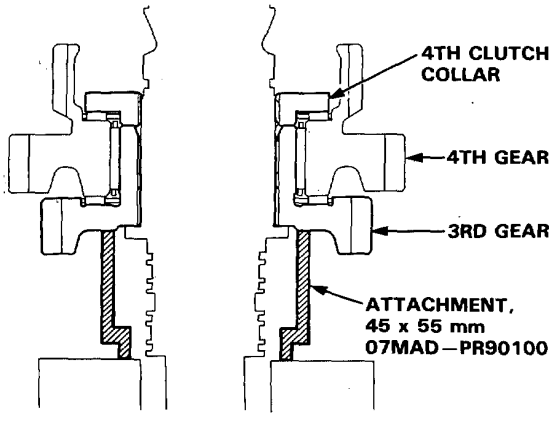

Inspection

NOTE:
- Inspect and adjust the 4th clutch collar when disassembling the mainshaft assembly or replacing the mainshaft 3rd gear and/or 1st/4th clutch assembly.
- Lubricate all parts with ATF during assembly.

1. Install the mainshaft 3rd gear on the mainshaft using the special tool and a press as shown.

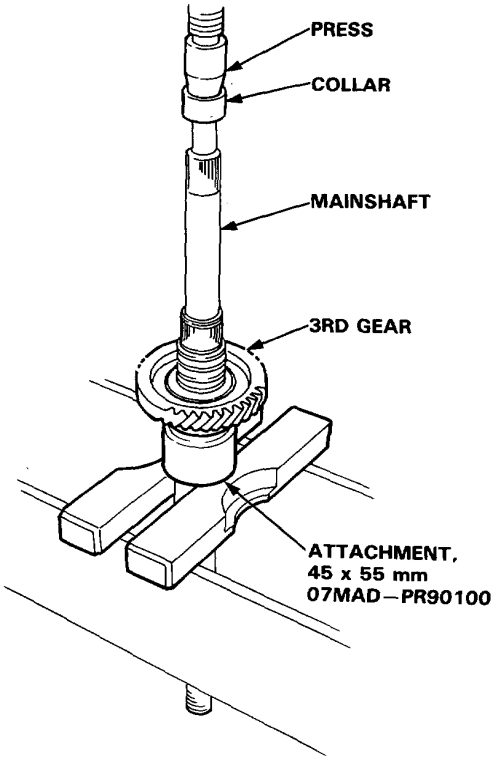

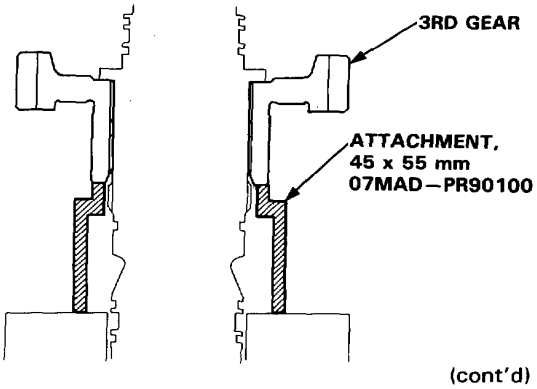

(cont'd)

Inspection (cont'd)

2. Assemble the thrust needle bearing, needle bearing and 4th gear, and install the 4th clutch collar using the special tool and a press as shown.

   NOTE: Replace the 4th clutch collar, if it can be installed by pressing with your hand.

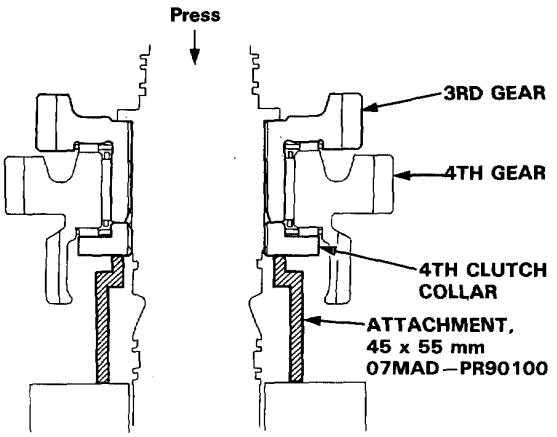

3. Spin the mainshaft 4th gear by hand to check for clearance. The clearance is considered normal if it turns freely without binding.

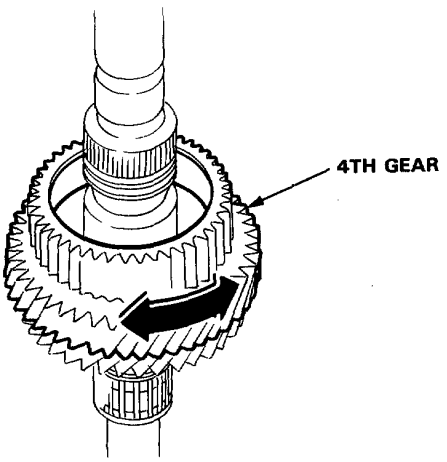

4. Remove the mainshaft bearing from the transmission housing (See page 14-154).

5. Assemble the parts below on the mainshaft.
   NOTE: Do not assemble the O-rings and mainshaft 1st gear.

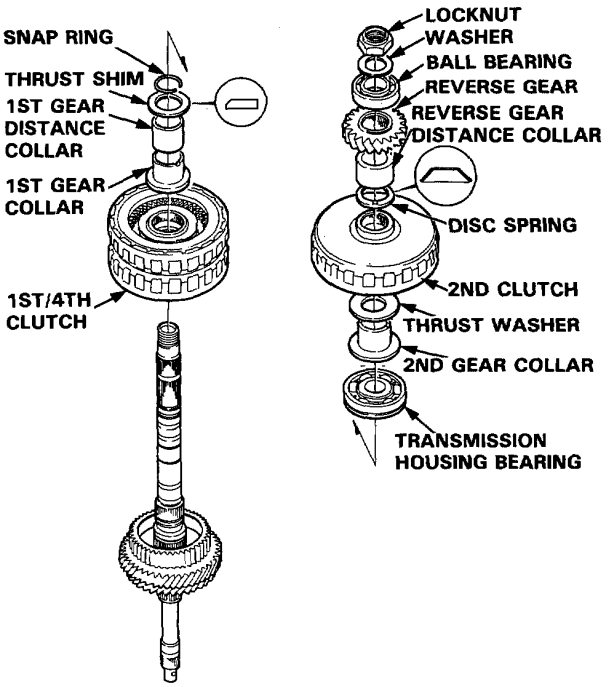

6. Torque the mainshaft locknut to 30 N·m (3.0 kg-m, 22 lb-ft).

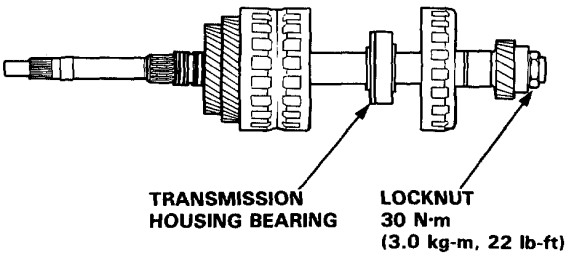

7. Move the 1st/4th clutch assembly to check the axial clearances.

8. Measure the clearance between the 1st/4th clutch guide and 1st gear collar with a feeler gauge.

STANDARD: 0–0.08 mm (0–0.003 in)

NOTE:
- Take measurements in at least three places and take the average as the actual clearance.
- If the 0.08 mm (0.003 in) feeler gauge can be inserted, replace the 4th clutch collar.

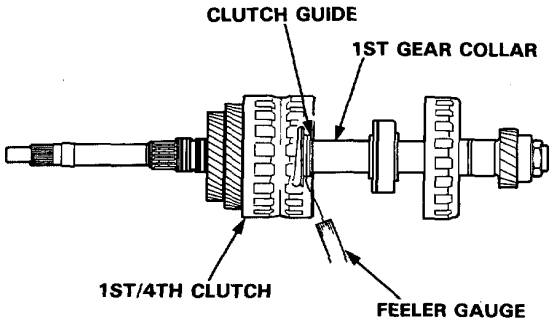

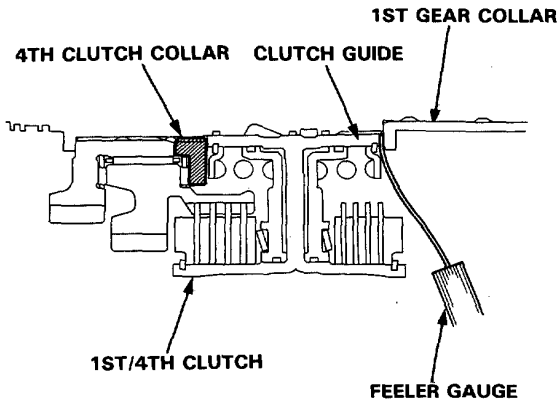

9. If the clearance is out of specification, remove the 4th clutch collar and measure the thickness.

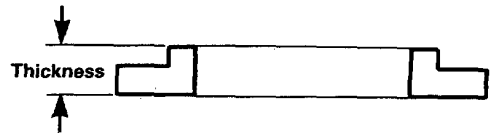

10. Select and install a new 4th clutch collar then recheck.

4TH CLUTCH COLLAR

No.	Part Number	Thickness mm (in)
1	90431-PY4-010	9.67–9.70 (0.381–0.382)
2	90432-PY4-010	9.72–9.75 (0.383–0.384)
3	90433-PY4-010	9.77–9.80 (0.385–0.386)
4	90434-PY4-010	9.82–9.85 (0.387–0.388)
5	90435-PY4-010	9.87–9.90 (0.389–0.390)
6	90436-PY4-010	9.92–9.95 (0.391–0.392)
7	90437-PY4-010	9.97–10.00 (0.393–0.394)

Countershaft

Disassembly/Inspection/Reassembly

NOTE:
- Lubricate all parts with ATF during reassembly.
- Install thrust needle bearings with unrolled edge of bearing retainer facing washer.
- Inspect thrust needle and needle bearings for galling and rough movement.
- Before installing the O-rings, wrap the shaft splines with tape to prevent damage to the O-rings.
- Locknut has left-hand threads.

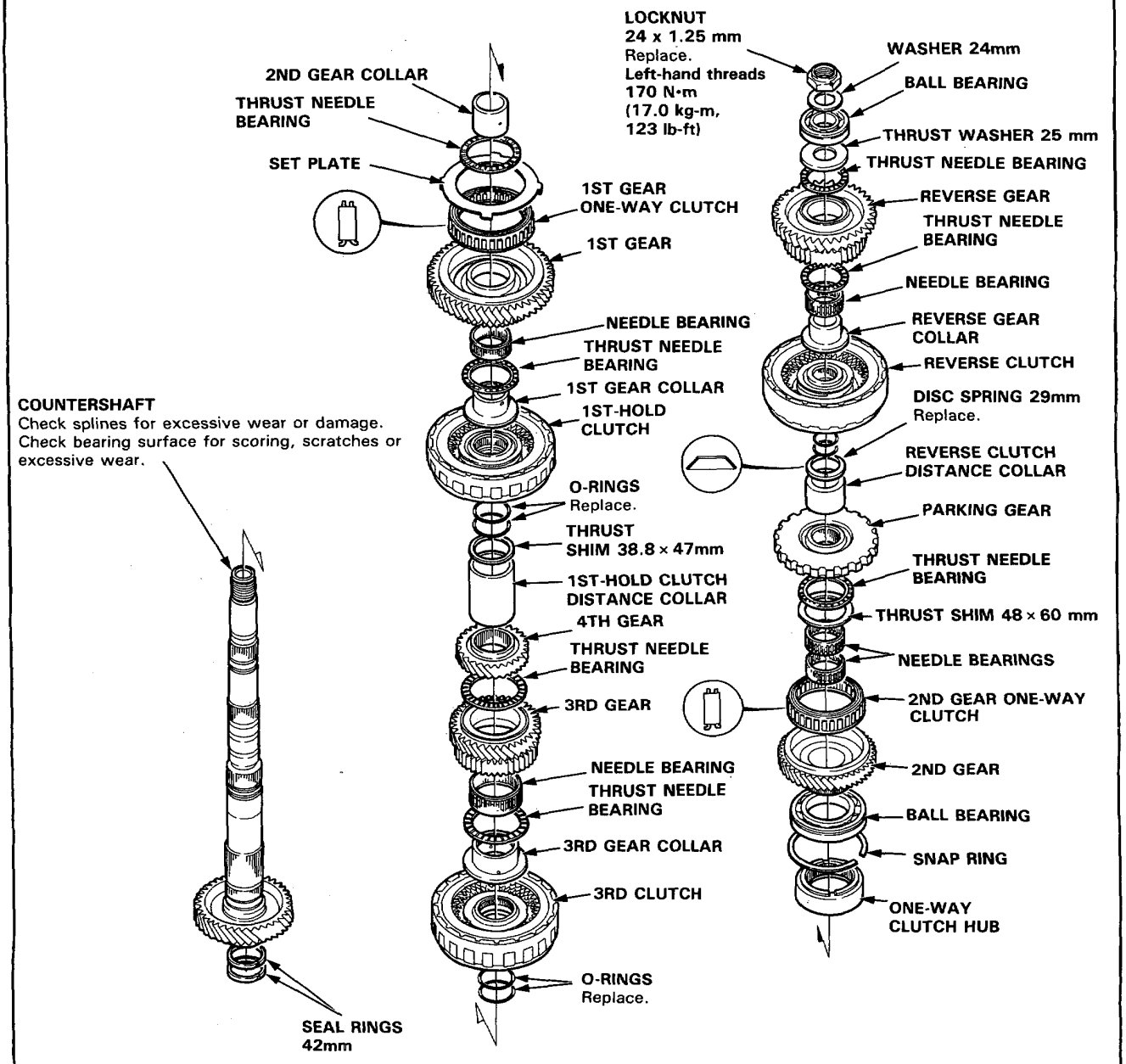

Inspection

- **Clearance Measurements**

NOTE:
- Lubricate all parts with ATF during assembly.
- Before installing the O-rings, wrap the shaft splines with tape to prevent damage to the O-rings.

1. Assemble all parts on the countershaft.

2. Torque the countershaft locknut to 30 N·m (3.0 kg-m, 22 lb-ft).

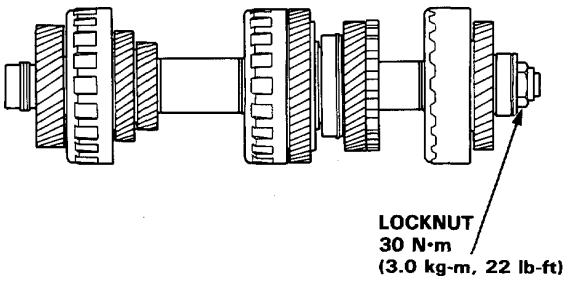

3. Hold the 1st-hold clutch assembly against the reverse clutch. Measure the clearance between the thrust shim 38.8 x 47 mm and the 1st-hold clutch distance collar with a feeler gauge.

   NOTE: Take measurements in at least three places and take the average as the actual clearance.

   STANDARD: 0–0.08 mm (0–0.003 in)

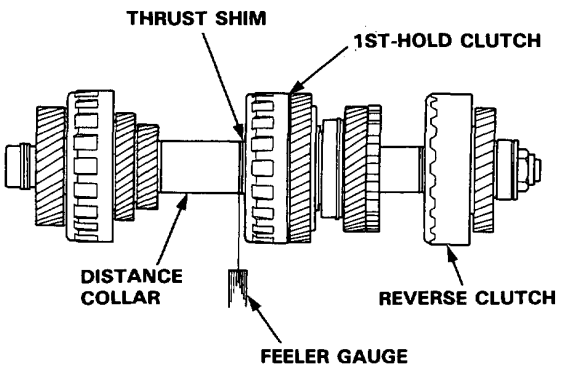

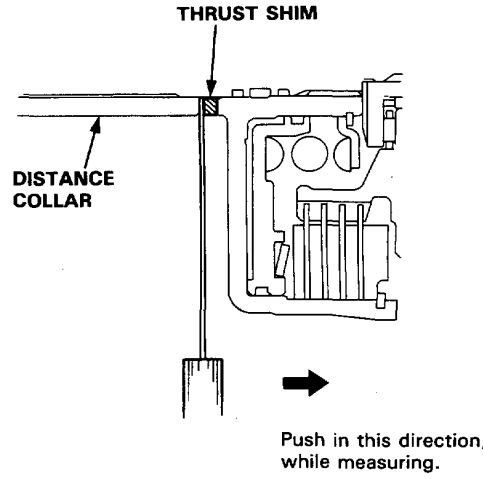

4. If the clearance is out of tolerance, select and install a new thrust shim.

THRUST SHIM 38.3 x 47 mm

No.	Part Number	Thickness mm (in)
1	90451-PY4-000	2.97–3.00 (0.117–0.118)
2	90452-PY4-000	3.02–3.05 (0.119–0.120)
3	90453-PY4-000	3.07–3.10 (0.121–0.122)
4	90454-PY4-000	3.12–3.15 (0.123–0.124)
5	90455-PY4-000	3.17–3.20 (0.125–0.126)
6	90456-PY4-000	3.22–3.25 (0.127–0.128)
7	90457-PY4-000	3.27–3.30 (0.129–0.130)
8	90458-PY4-000	3.32–3.35 (0.131–0.132)
9	90459-PY4-000	3.37–3.40 (0.133–0.134)
10	90460-PY4-000	3.42–3.45 (0.135–0.136)
11	90461-PY4-000	3.47–3.50 (0.137–0.138)

(cont'd)

Inspection (cont'd)

5. Attach the dial-indicator to the countershaft 2nd gear.

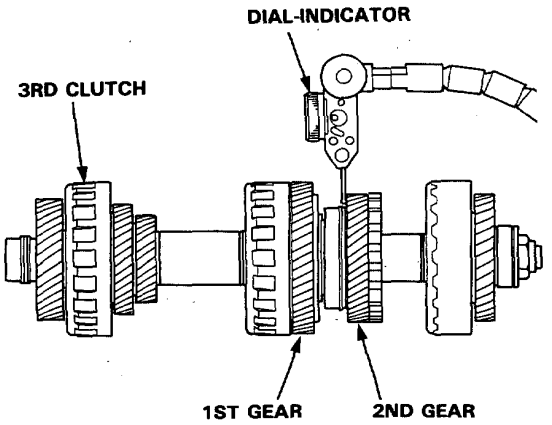

6. Measure the 2nd gear axial clearance while pushing 1st gear towards the 1st-hold clutch assembly.

   NOTE: Take measurements in at least three places and take average as the actual clearance.

   STANDARD: 0.05–0.13 mm (0.002–0.005 in)

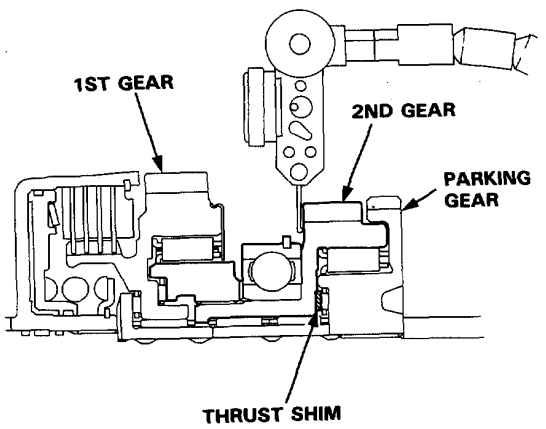

7. If the clearance is out of tolerance, select and install a new thrust shim.

THRUST SHIM 48 x 60 mm

No.	Part Number	Thickness mm (in)
1	90411-PY4-000	1.27–1.30 (0.050–0.051)
2	90412-PY4-000	1.32–1.35 (0.052–0.053)
3	90413-PY4-000	1.37–1.40 (0.054–0.055)
4	90414-PY4-000	1.42–1.45 (0.056–0.057)
5	90415-PY4-000	1.47–1.50 (0.058–0.059)
6	90416-PY4-000	1.52–1.55 (0.060–0.061)
7	90417-PY4-000	1.57–1.60 (0.062–0.063)
8	90418-PY4-000	1.62–1.65 (0.064–0.065)
9	90419-PY4-000	1.67–1.70 (0.066–0.067)
10	90420-PY4-000	1.72–1.75 (0.068–0.069)
11	90421-PY4-000	1.77–1.80 (0.070–0.071)
12	90422-PY4-000	1.82–1.85 (0.072–0.073)
13	90423-PY4-000	1.87–1.90 (0.074–0.075)

Note: After replacing the thrust shim, make sure that the clearance is within tolerance.

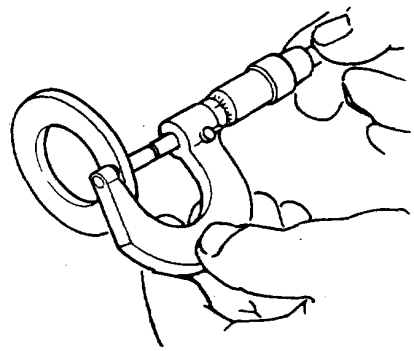

2nd Gear One-way Clutch/Parking Gear

Disassembly

1. Separate the countershaft 2nd gear from the parking gear by turning the parking gear in the direction shown.

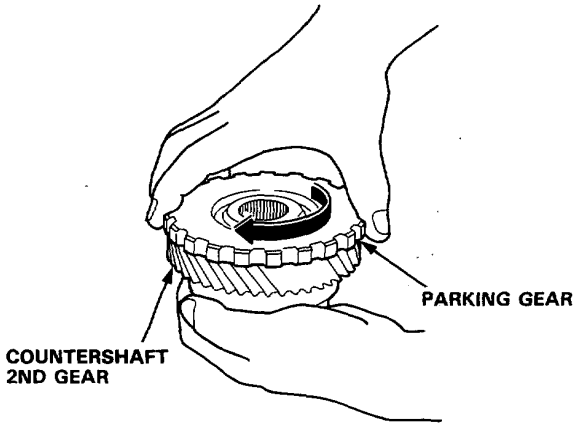

2. Remove the one-way clutch by prying it up with the end of a screwdriver.

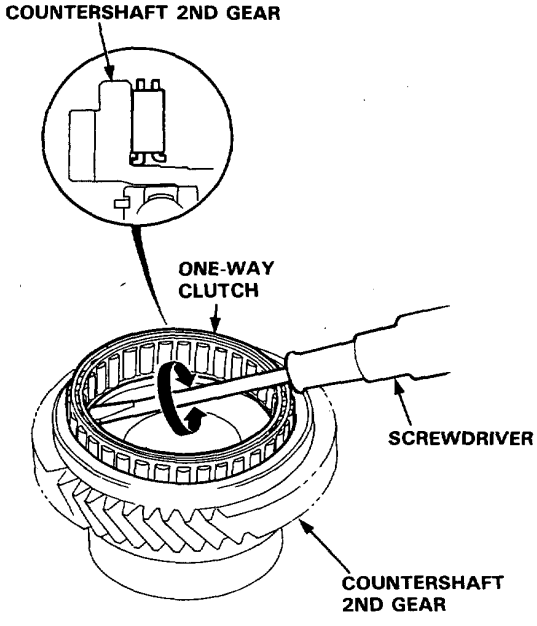

Inspection

Inspect the parts as follows:

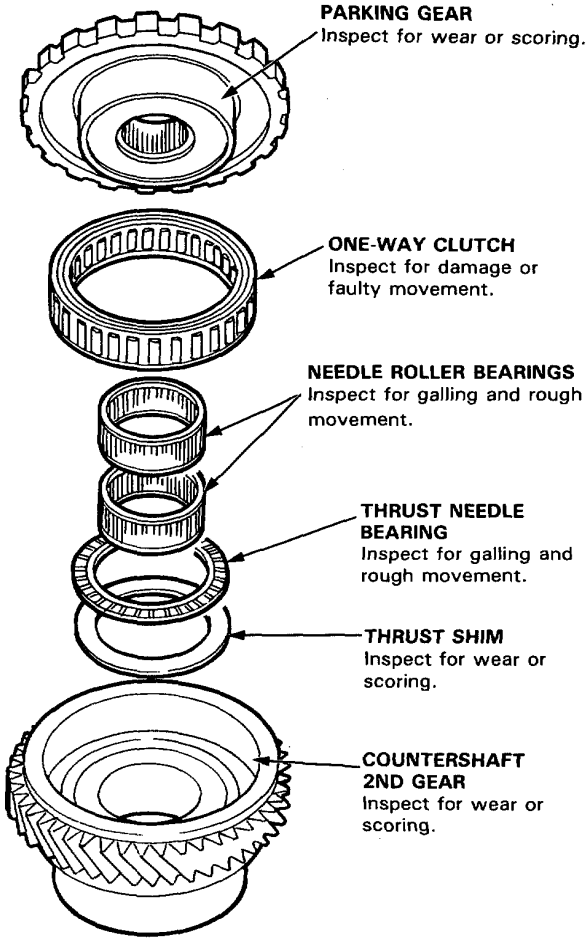

1st Gear One-way Clutch/Countershaft 1st, 2nd Gear

Disassembly/Inspection/Reassembly

1. Remove the set plate from the countershaft 1st gear.
2. Remove the one-way clutch by prying it up with the end of a screwdriver.

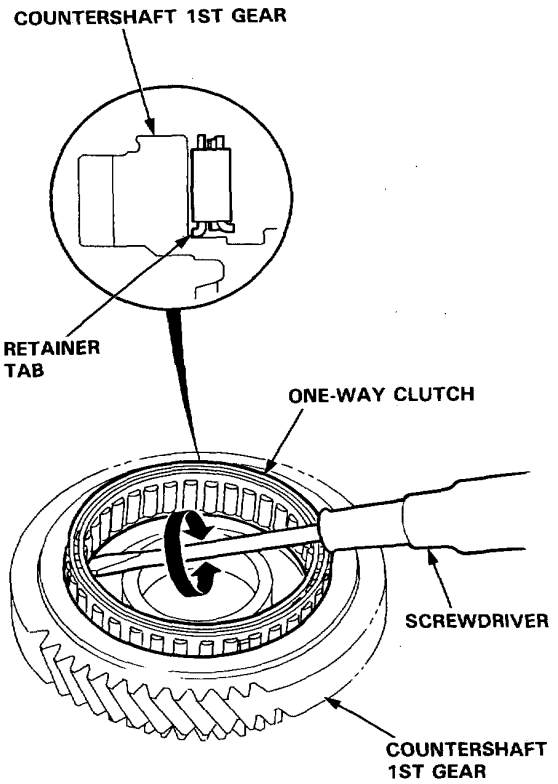

3. Inspect the following parts.

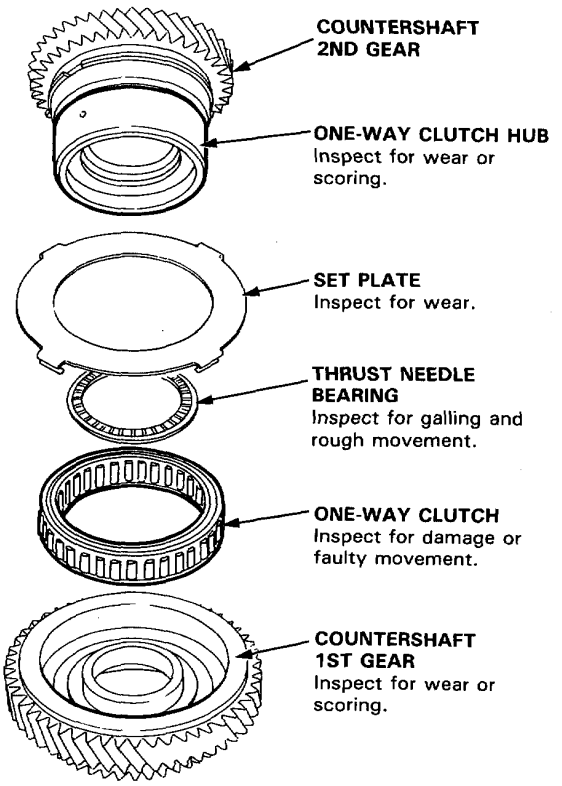

4. Assemble the one-way clutch, thrust needle bearing and set plate.
5. Hold the countershaft 1st gear and turn the countershaft 2nd gear assembly in direction shown to be sure it turns freely.

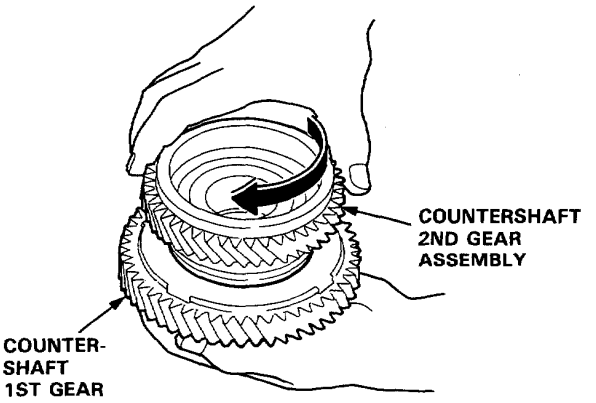

Countershaft 2nd Gear/One-way Clutch Hub/Ball Bearing

Disassembly

1. Remove the one-way clutch hub and ball bearing from the countershaft 2nd gear using the special tool and a press.

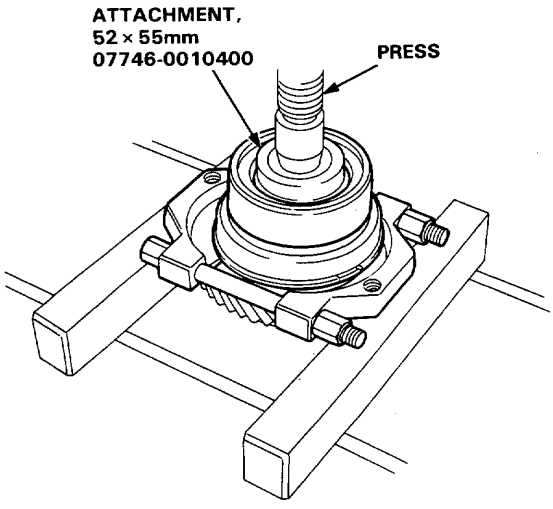

Reassembly

1. Install the ball bearing and one-way clutch hub to the countershaft 2nd gear using the special tool and a press.

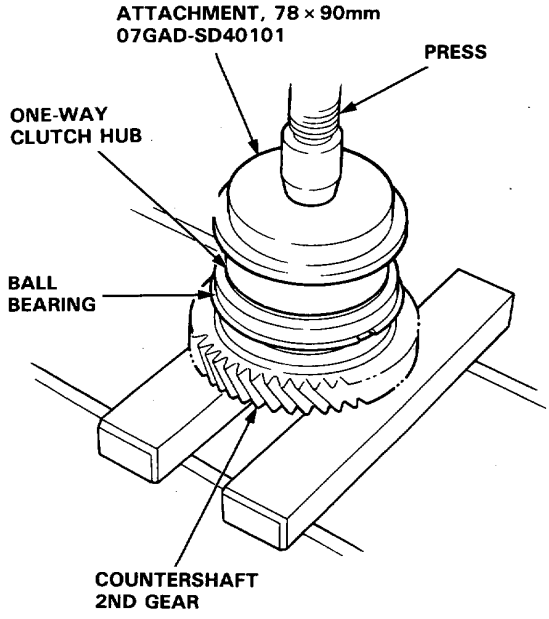

Extension Shaft

Disassembly

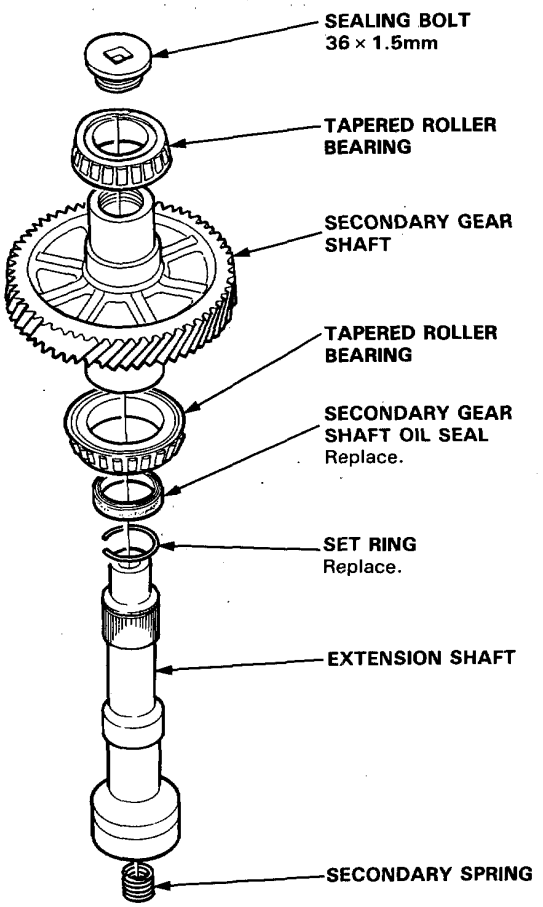

1. Remove the set ring.
2. Remove the extension shaft from the secondary gear shaft.

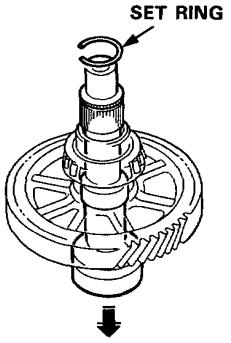

Secondary Gear Shaft Oil Seal

Replacement

1. Remove the oil seal from the secondary gear shaft.

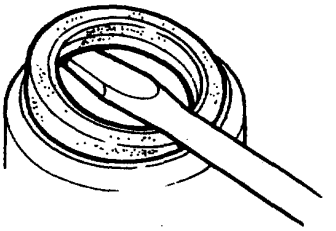

2. Drive the oil seal into the secondary gear shaft, using the special tools as shown.

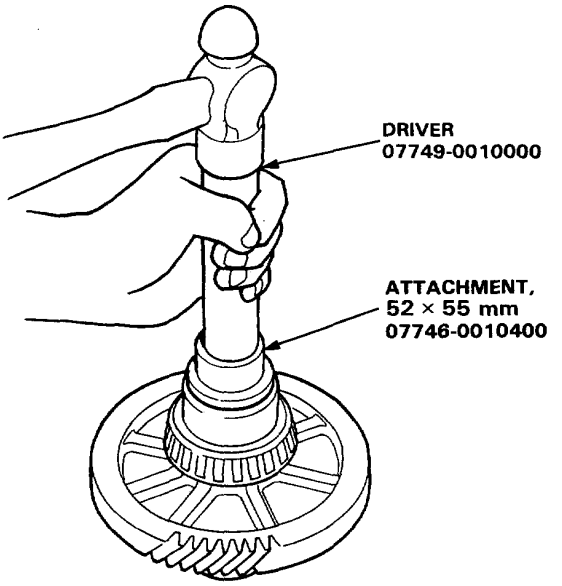

Replacement

NOTE:
- The bearing and outer race should be replaced as a set.
- If the bearing is replaced, inspect and adjust the bearing preload (page 14-142).

1. Remove the tapered roller bearings from the secondary gear shaft, using the special tool and a press as shown.

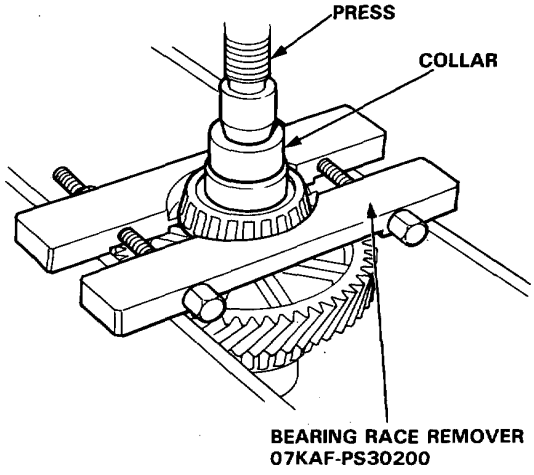

2. Install the bearings using the special tool and a press as shown.

   NOTE: Press the bearings in squarely until they bottom.

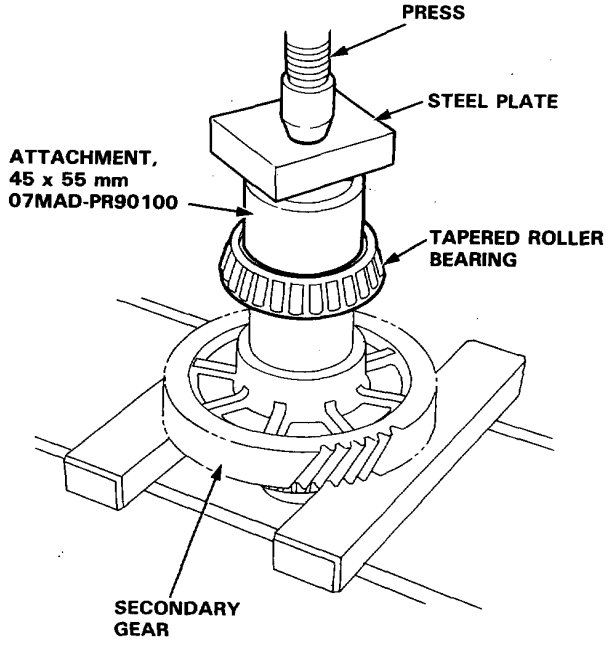

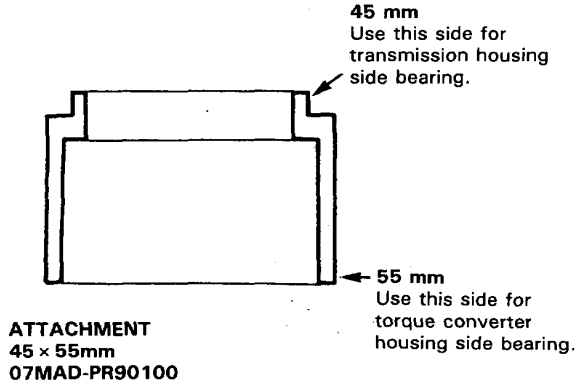

Oil Seal

Removal

1. Remove the oil seal from the transmission housing.

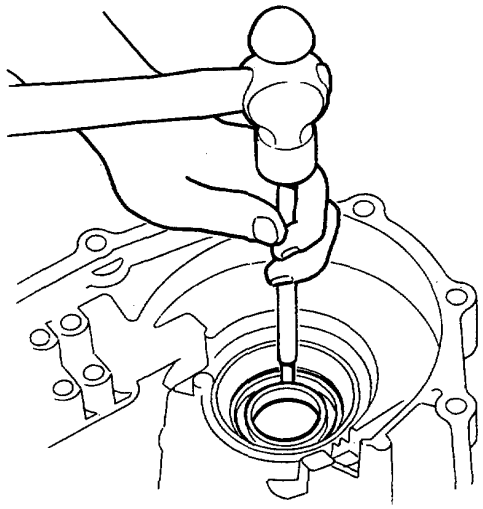

2. Remove the oil seal from the torque converter housing.

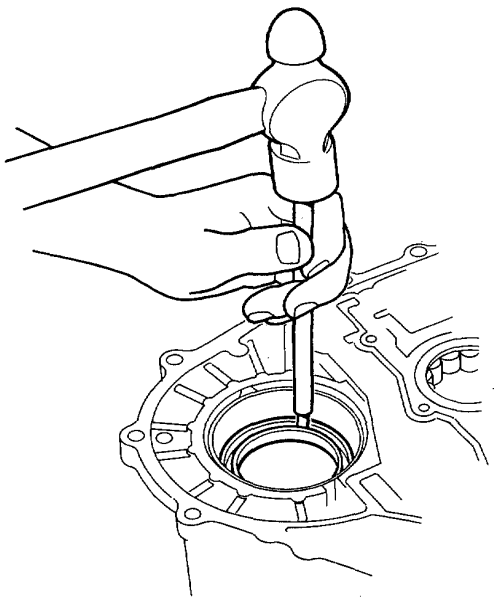

Bearing Outer Race

Replacement

NOTE:
- The bearing and outer race should be replaced as a set.
- If the bearings, thrust shim and/or washer are replaced, inspect and adjust the bearing preload (page 14-142).

1. Remove the bearing outer race by heating the housings to 100°C (212°F) with a heat gun, then tap the housing until the bearing outer race falls out.

   CAUTION: Do not heat the housings in excess of 100°C (212°F).

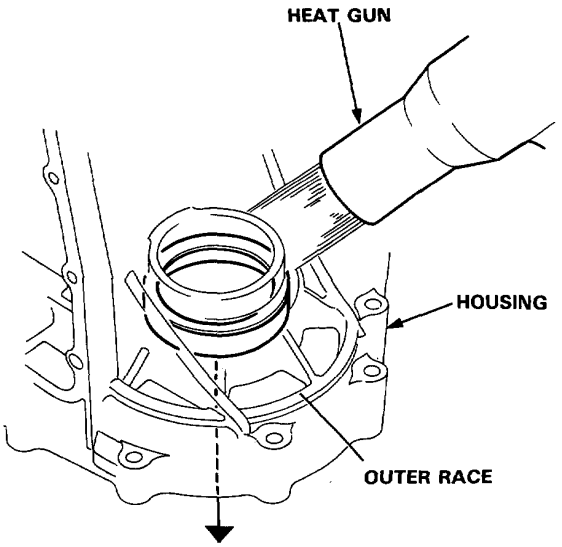

2. Install the thrust shim and bearing outer race.

3. Drive the outer race into the transmission housing, using the special tools as shown.

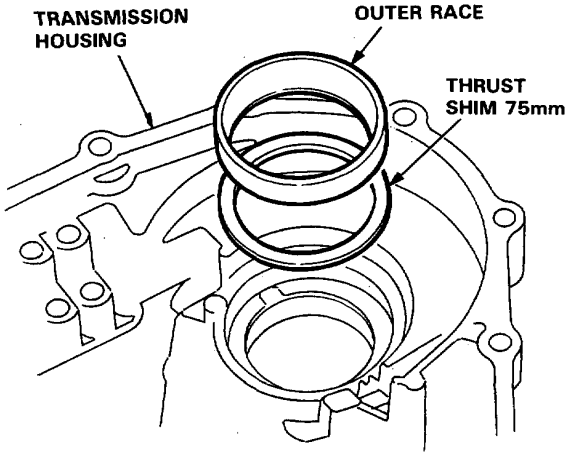

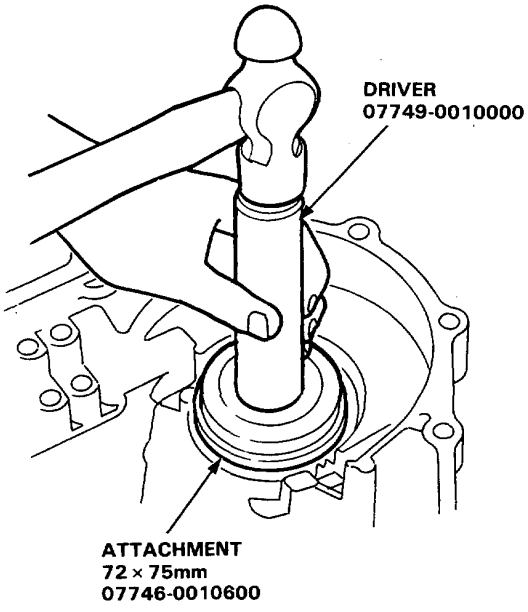

4. Install the washer and bearing outer race.

5. Drive the outer race into the torque converter housing, using the special tools as shown.

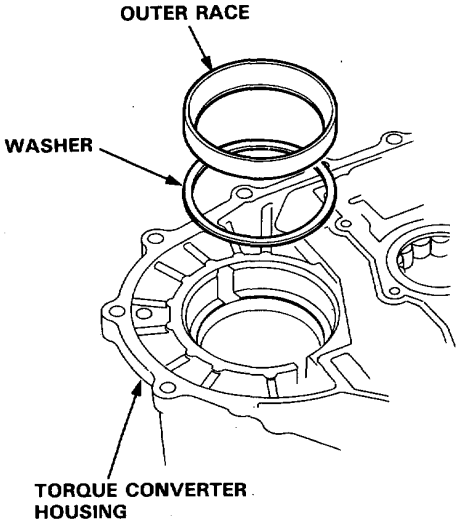

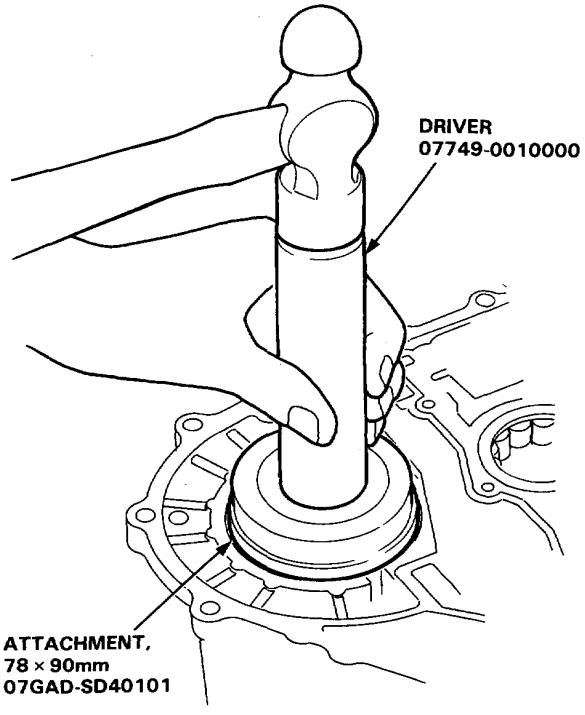

Tapered Roller Bearing Preload

Adjustment

NOTE:
- If any of the listed parts were replaced, the bearing preload must be adjusted:
  - Transmission Housing
  - Torque Converter Housing
  - Tapered Roller Bearing/Bearing Outer Race
  - 75 mm Thrust Shim
  - 90 mm Washer

CAUTION: If the outer race was removed using heat, let the transmission cool down to room temperature before adjusting the bearing preload.

1. Remove the oil seals from both housings.

2. Install the sealing bolt to the secondary gear shaft and torque to 20 N·m (2.0 kg-m, 14 lb-ft).

3. Install the secondary gear in the torque converter housing, then install the transmission housing.

   NOTE: Do not install the mainshaft and countershaft.

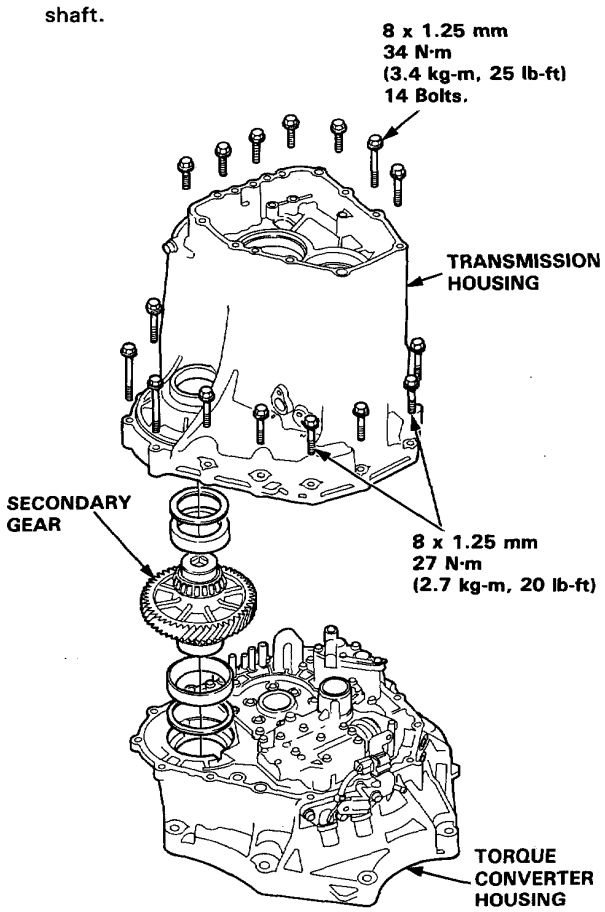

4. Rotate the secondary gear in both directions to seat the bearings.

5. Measure the starting torque of the secondary gear with a torque wrench.

   STANDARD: 3.5–4.5 N·m (35–45 kg-cm, 30–39 lb-in)

   NOTE:
   - Measure the preload at room temperature in both directions.
   - Do not use more than one thrust shim to adjust the bearing preload.

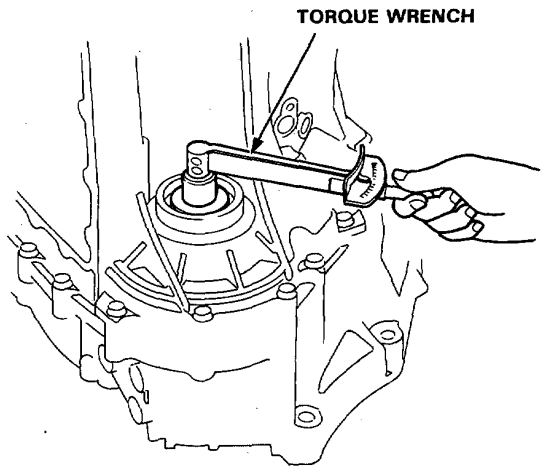

6. If the bearing preload is out of tolerance, select and install a new thrust shim then recheck.

THRUST SHIM 75 mm

No.	Part Number	Thickness mm (in)
A	23941-PY5-000	1.56 (0.061)
B	23942-PY5-000	1.59 (0.063)
C	23943-PY5-000	1.62 (0.064)
D	23944-PY5-000	1.65 (0.065)
E	23945-PY5-000	1.68 (0.066)
F	23946-PY5-000	1.71 (0.067)
G	23947-PY5-000	1.74 (0.069)
H	23948-PY5-000	1.77 (0.070)
I	23949-PY5-000	1.80 (0.071)
J	23950-PY5-000	1.83 (0.072)
K	23951-PY5-000	1.86 (0.073)
L	23952-PY5-000	1.89 (0.074)
M	23953-PY5-000	1.92 (0.076)
N	23954-PY5-000	1.95 (0.077)
O	23955-PY5-000	1.98 (0.078)
P	23956-PY5-000	2.01 (0.079)
Q	23957-PY5-000	2.04 (0.080)
R	23958-PY5-000	2.07 (0.081)
S	23959-PY5-000	2.10 (0.083)
T	23960-PY5-000	2.13 (0.084)
U	23961-PY5-000	2.16 (0.085)
V	23962-PY5-000	2.19 (0.086)
W	23963-PY5-000	2.22 (0.087)
X	23964-PY5-000	2.25 (0.089)
Y	23965-PY5-000	2.28 (0.090)
Z	23966-PY5-000	2.31 (0.091)
AA	23967-PY5-000	2.34 (0.092)
AB	23968-PY5-000	2.37 (0.093)
AC	23969-PY5-000	2.40 (0.094)
AD	23970-PY5-000	2.43 (0.096)

Installation

1. Install the oil seal in the transmission housing, using the special tools.

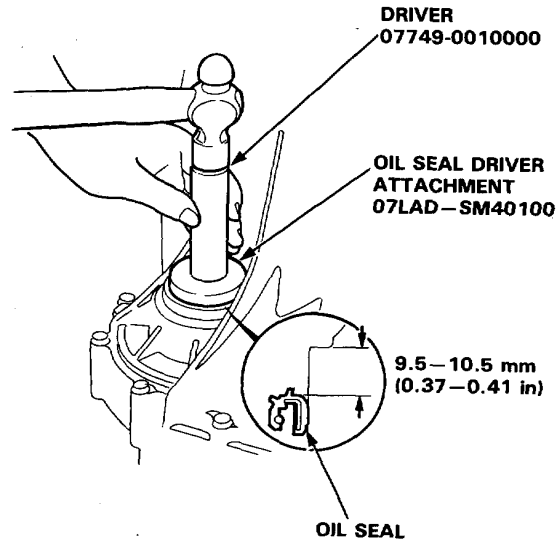

2. Install the oil seal in the torque converter housing, using the special tools as shown.

3. Install the snap ring in the torque converter housing.

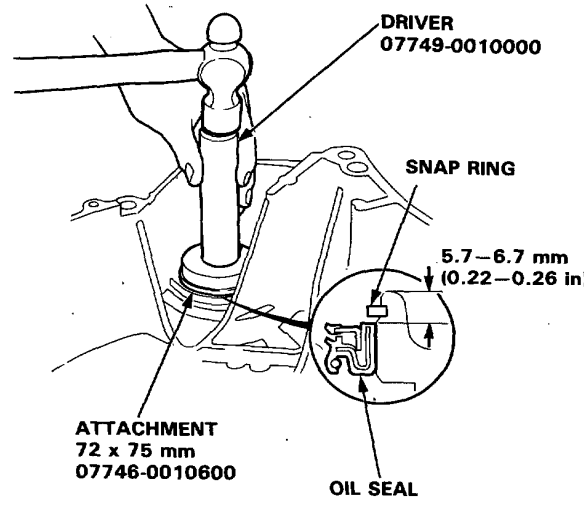

1ST/4TH CLUTCH

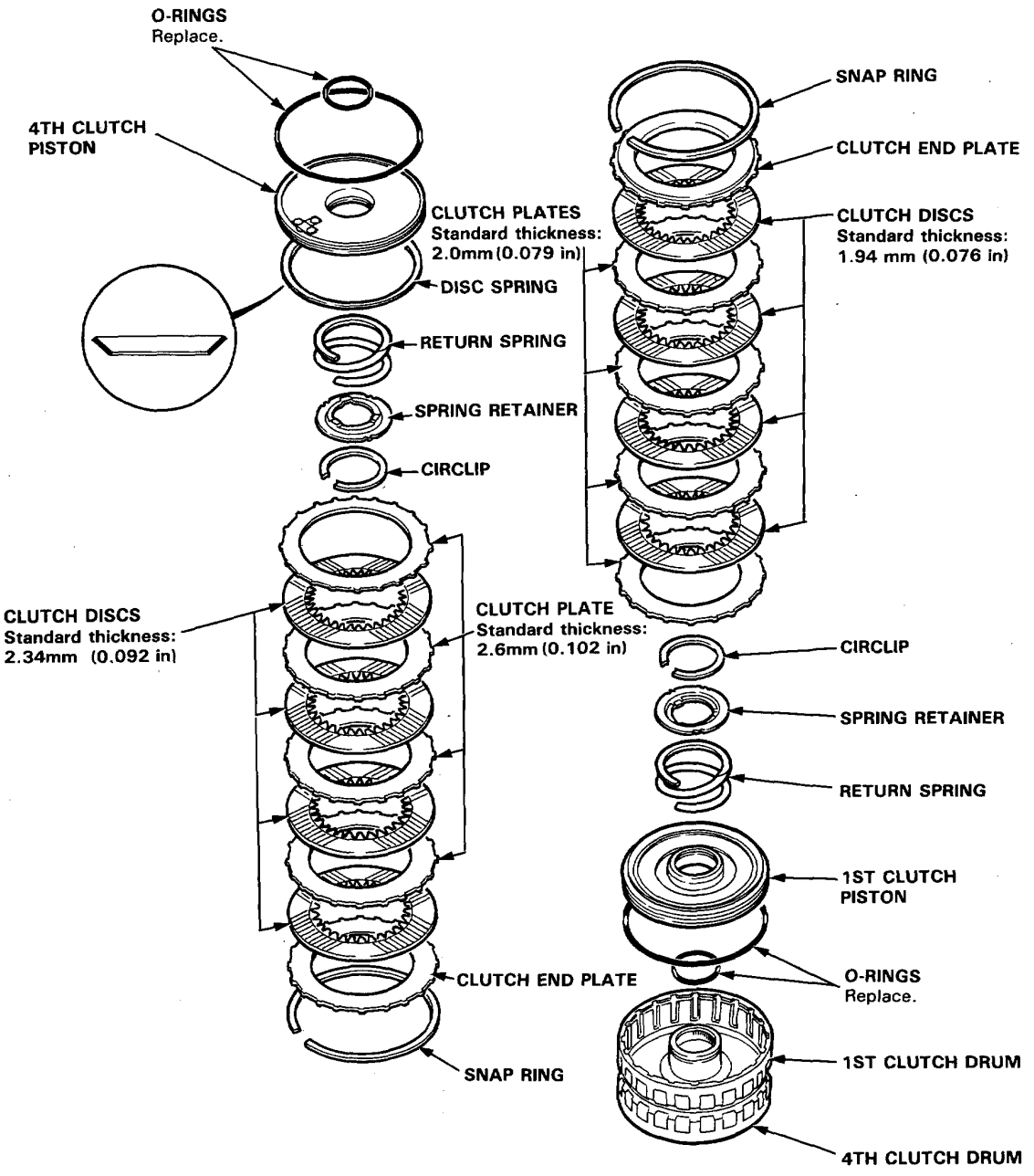

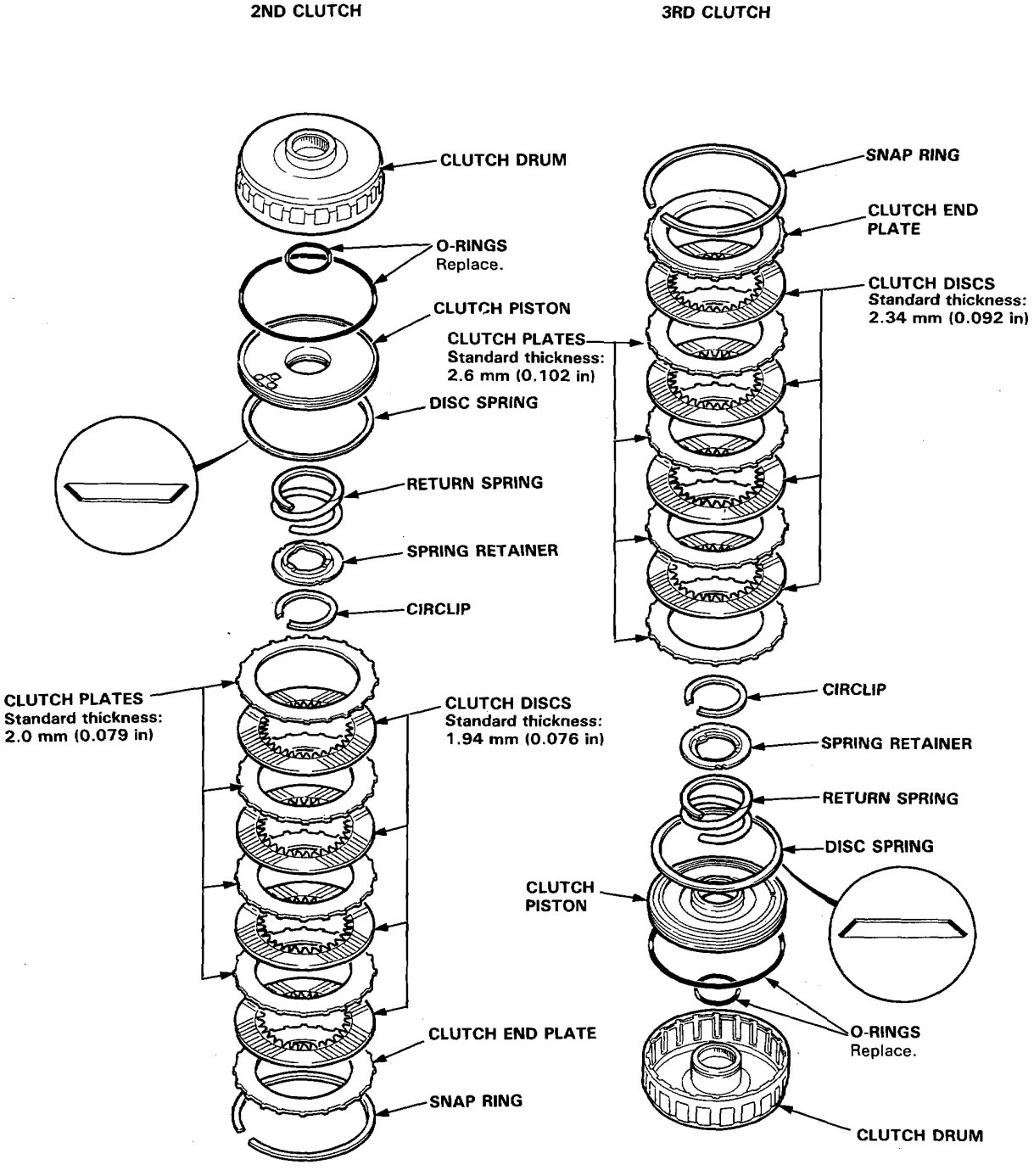
2ND CLUTCH
3RD CLUTCH
CLUTCH DRUM
O-RINGS
Replace.
CLUTCH PISTON
CLUTCH PLATES
Standard thickness:
2.6 mm (0.102 in)
DISC SPRING
RETURN SPRING
SPRING RETAINER
CIRCLIP
CLUTCH PLATES
Standard thickness:
2.0 mm (0.079 in)
CLUTCH DISCS
Standard thickness:
1.94 mm (0.076 in)
CLUTCH END PLATE
SNAP RING
SNAP RING
CLUTCH END
PLATE
CLUTCH DISCS
Standard thickness:
2.34 mm (0.092 in)
CIRCLIP
SPRING RETAINER
RETURN SPRING
DISC SPRING
CLUTCH
PISTON
O-RINGS
Replace.
CLUTCH DRUM

(cont'd)

Illustrated Index (cont'd)

REVERSE CLUTCH

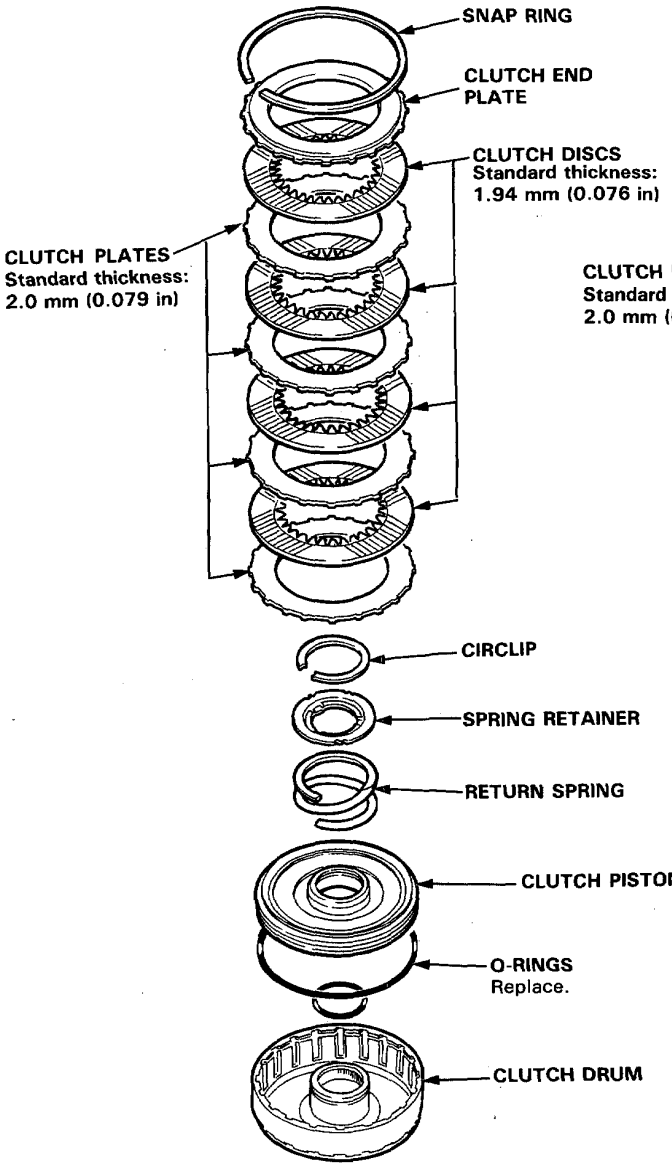

1ST-HOLD CLUTCH

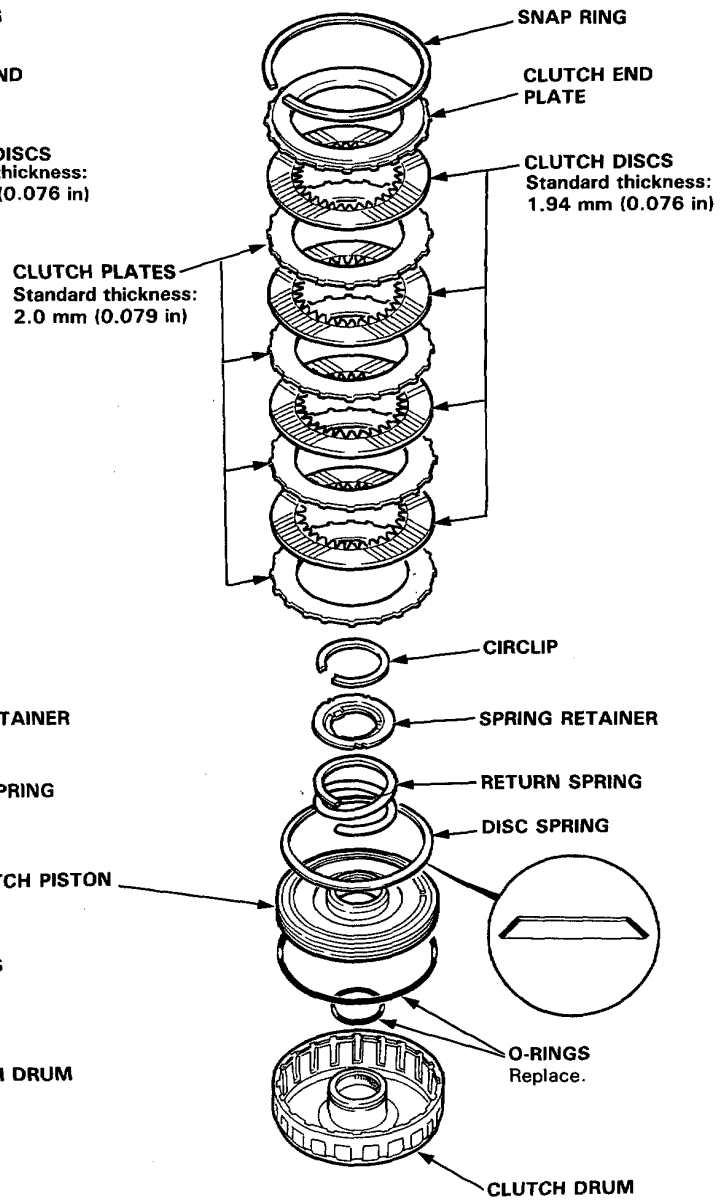

Disassembly

1. Remove the snap rings, then remove the clutch end plate, clutch discs and plates.

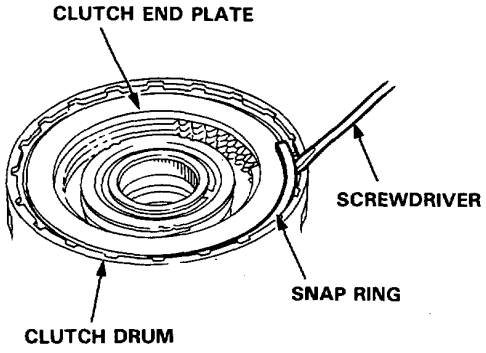

2. Remove the disc spring.

NOTE: For 2nd, 3rd, 4th and 1st-hold clutches

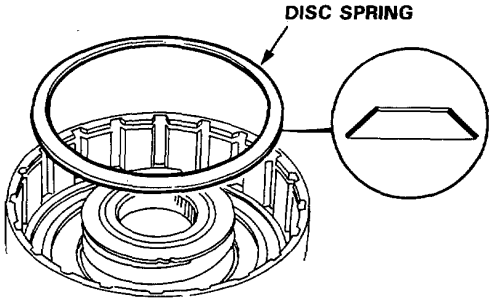

3. Install the special tools as shown.

CLUTCH SPRING COMPRESSOR SET:
07LAE—PX40000

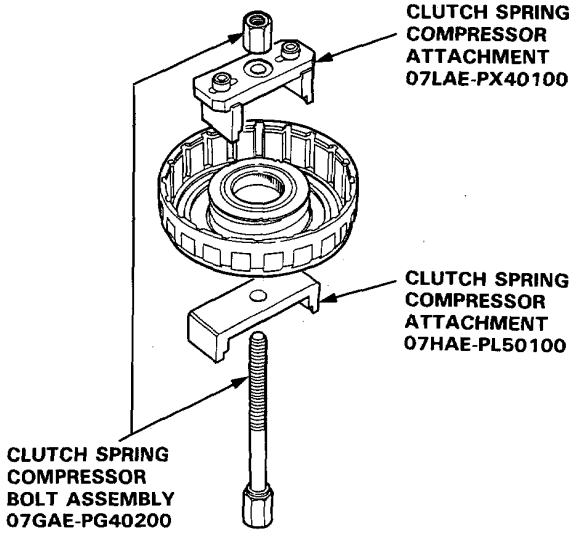

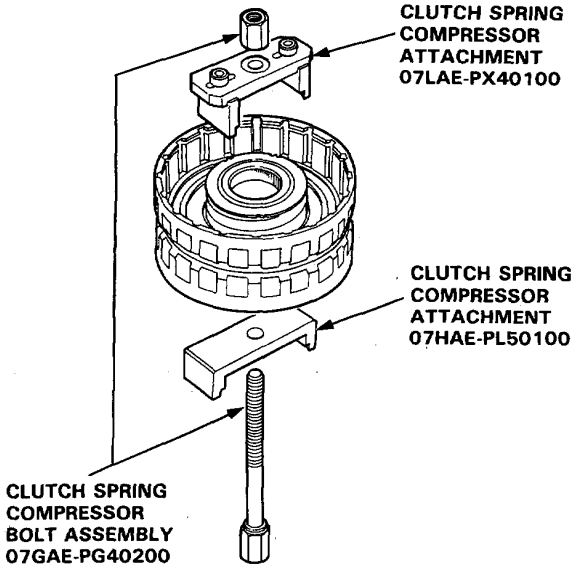

(cont'd)

Disassembly (cont'd)

CAUTION: If either end of the compressor attachment is set over an area of the spring retainer which is unsupported by the return spring, the retainer may be damaged.

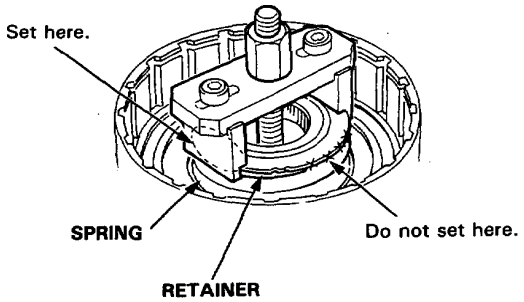

4. Compress the clutch return spring.

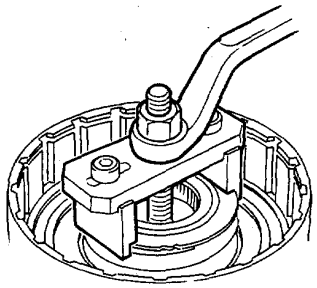

5. Remove the circlip. Then remove the special tools, spring retainer and return spring.

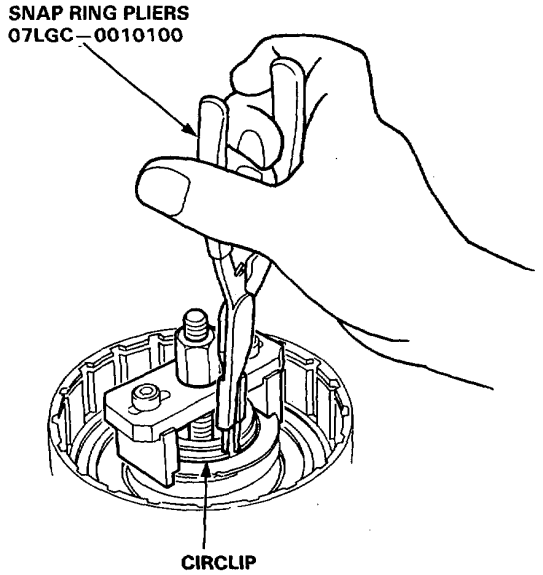

6. Wrap a shop towel around the clutch drum and apply air pressure to the oil passage to remove the piston. Place a finger tip on the other end while applying air pressure.

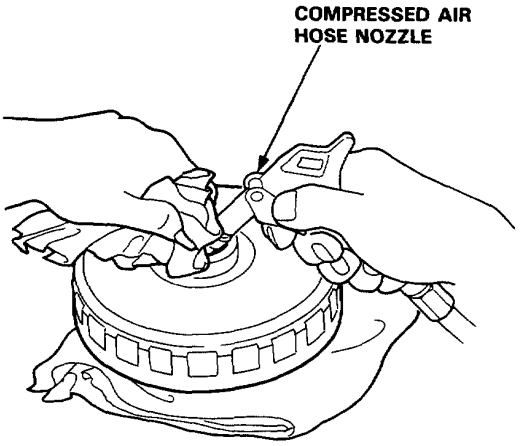

Reassembly

NOTE:
- Clean all parts thoroughly in solvent or carburetor cleaner, and dry with compressed air.
- Blow out all passages.
- Lubricate all parts with ATF before reassembly.

1. Inspect for a loose check valve.

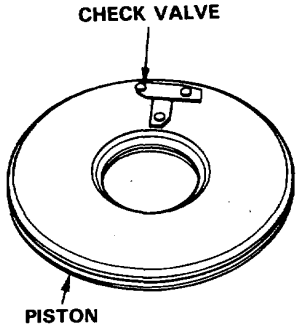

2. Install a new O-ring on the clutch piston.

3. Be sure that the disc spring is securely staked.
   NOTE: For 1st and reverse clutches.

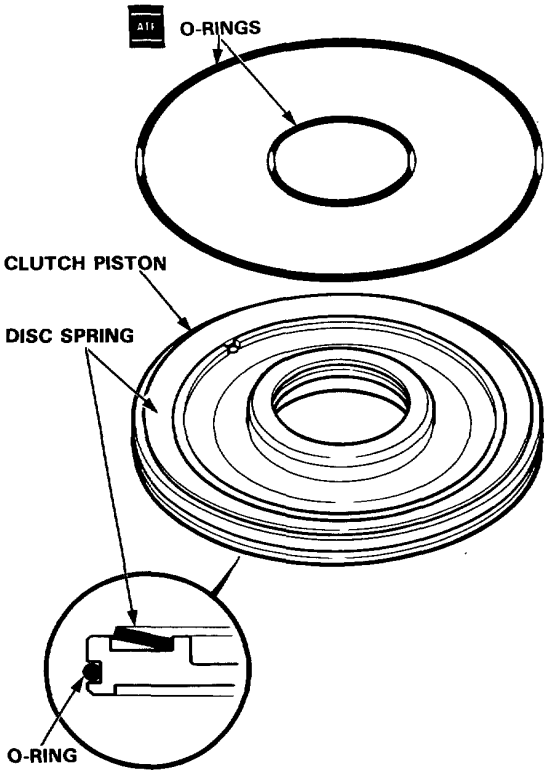

4. Install the piston in the clutch drum. Apply pressure and rotate to ensure proper seating.

   NOTE: Lubricate the piston O-ring with ATF before installing.

   CAUTION: Do not pinch O-ring by installing the piston with force.

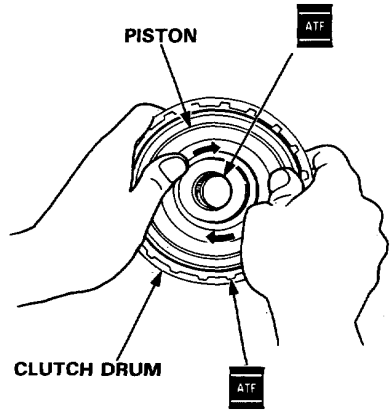

5. Install the return spring and spring retainer and position the circlip on the retainer.

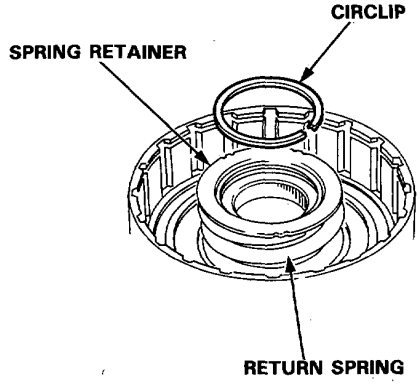

(cont'd)

Reassembly (cont'd)

6. Install the special tools as shown.

   CLUTCH SPRING COMPRESSOR SET:
   07LAE–PX40000

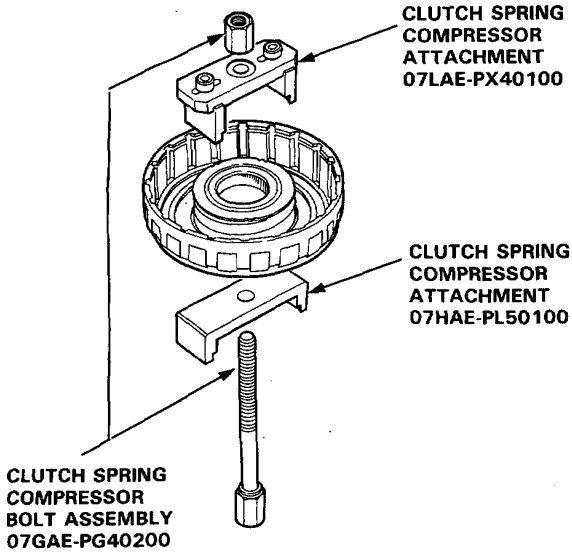

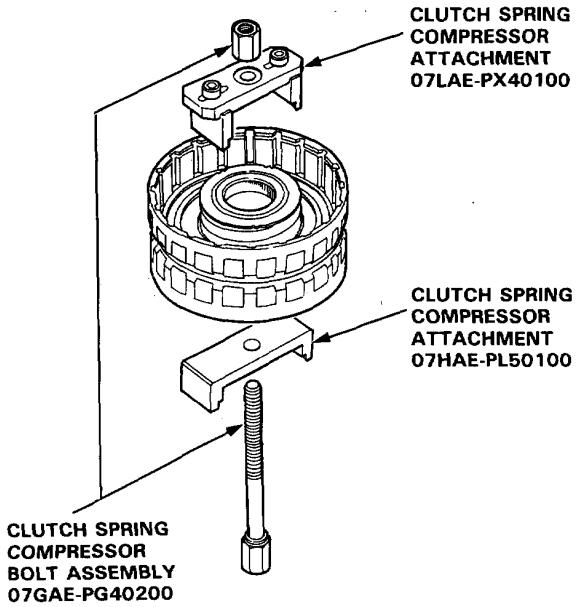

CAUTION: If either end of the compressor attachment is set over an area of the spring retainer which is unsupported by the retainer spring, the retainer may be damaged.

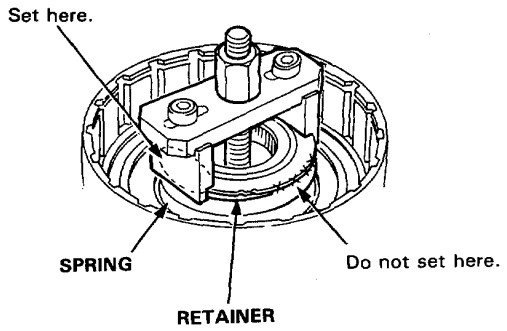

7. Compress the clutch return spring.

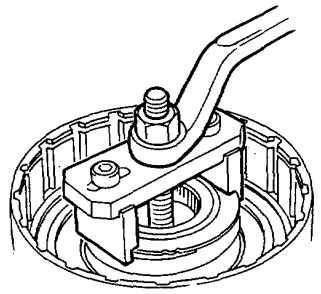

8. Install the circlip, then remove the special tools.

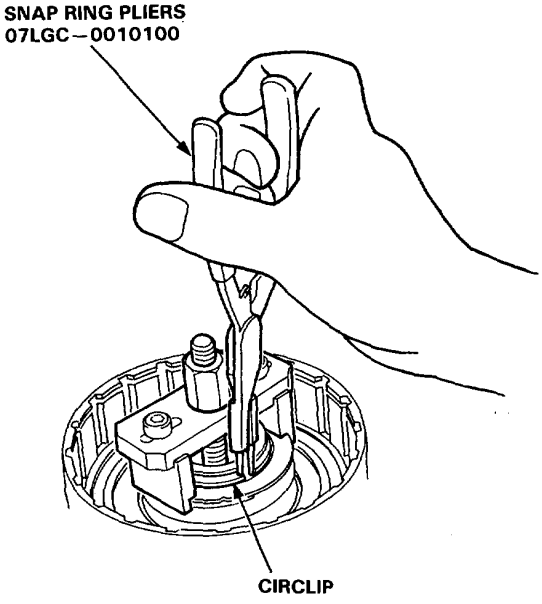

9. Install the disc spring.

NOTE:
- For 2nd, 3rd, 4th and 1st-hold clutches
- Install the disc spring in the direction shown.

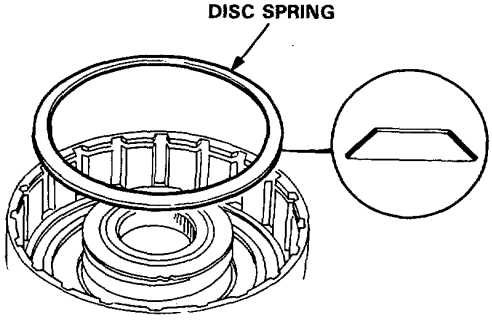

10. Soak the clutch discs thoroughly in ATF for a minimum of 30 minutes.

11. Starting with a clutch plate, alternately install the clutch plates and discs. Install the clutch end plate with flat side toward the disc.

NOTE: Before installing the plates and discs, make sure the inside of the clutch drum is free of dirt or other foreign matter.

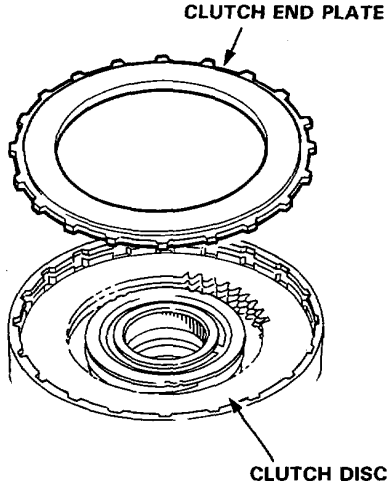

12. Install the snap ring.

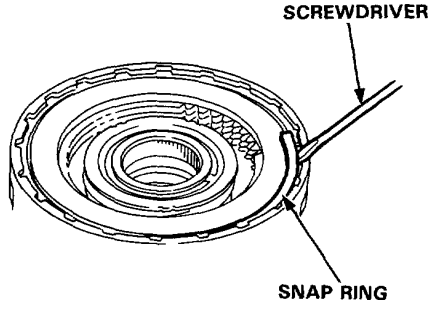

(cont'd)

Reassembly (cont'd)

13. Check the clutch engagement by blowing air into the oil passage in the clutch drum hub. Remove the air pressure and check that the clutch releases.

14. Measure the clearance between the clutch end plate and top disc with a dial indicator. Zero the dial indicator with the clutch end plate lowered and lift it up to the snap ring. The distance that the clutch end plate moves is the clearance between the clutch end plate and top disc.

    NOTE: Measure at three locations.

End Plate-to-Top Disc Clearance:

Clutch	Service Limit
1st	0.65–0.85 mm (0.026–0.033 in)
2nd	0.60–0.80 mm (0.024–0.031 in)
3rd	0.60–0.80 mm (0.024–0.031 in)
4th	0.50–0.70 mm (0.020–0.028 in)
1st-Hold	0.70–0.90 mm (0.028–0.035 in)
Reverse	0.75–0.95 mm (0.030–0.037 in)

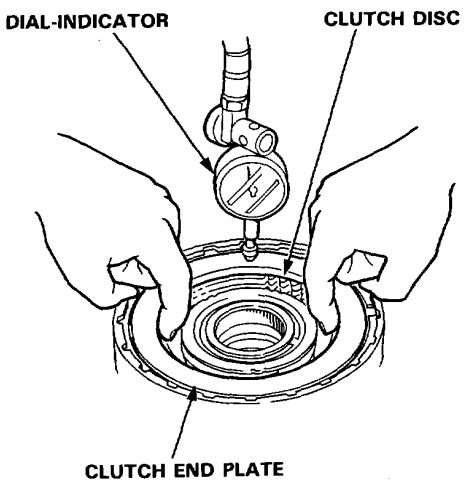

15. If the clearance is not within the service limits, select a new clutch end plate from the appropriate table.

    NOTE: If the thickest clutch end plate is installed but the clearance is still over the standard, replace the clutch discs and clutch plates.

1ST, 2ND, 3RD and 4TH CLUTCH

Part Number	Plate No.	Thickness mm (in)
22551–PY4–003	1	2.1 (0.083)
22552–PY4–003	2	2.2 (0.087)
22553–PY4–003	3	2.3 (0.091)
22554–PY4–003	4	2.4 (0.094)
22555–PY4–003	5	2.5 (0.098)
22556–PY4–003	6	2.6 (0.102)
22557–PY4–003	7	2.7 (0.106)
22558–PY4–003	8	2.8 (0.110)
22559–PY4–003	9	2.9 (0.114)

1ST-HOLD CLUTCH

Part Number	Plate No.	Thickness mm (in)
22351–PY4–003	L1	2.1 (0.083)
22352–PY4–003	L2	2.2 (0.087)
22353–PY4–003	L3	2.3 (0.091)
22354–PY4–003	L4	2.4 (0.094)
22355–PY4–003	L5	2.5 (0.098)
22356–PY4–003	L6	2.6 (0.102)
22357–PY4–003	L7	2.7 (0.106)
22358–PY4–003	L8	2.8 (0.110)
22359–PY4–003	L9	2.9 (0.114)

REVERSE CLUTCH

Part Number	Plate No.	Thickness mm (in)
22451–PY4–003	R1	4.1 (0.161)
22452–PY4–003	R2	4.2 (0.165)
22453–PY4–003	R3	4.3 (0.169)
22454–PY4–003	R4	4.4 (0.173)
22455–PY4–003	R5	4.5 (0.177)
22456–PY4–003	R6	4.6 (0.181)
22457–PY4–003	R7	4.7 (0.185)
22458–PY4–003	R8	4.8 (0.189)
22459–PY4–003	R9	4.9 (0.193)

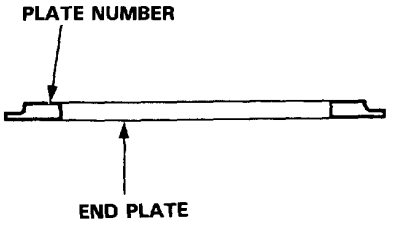

Mainshaft Bearing Replacement

1. Drive out the mainshaft bearing and oil seal using the special tools.

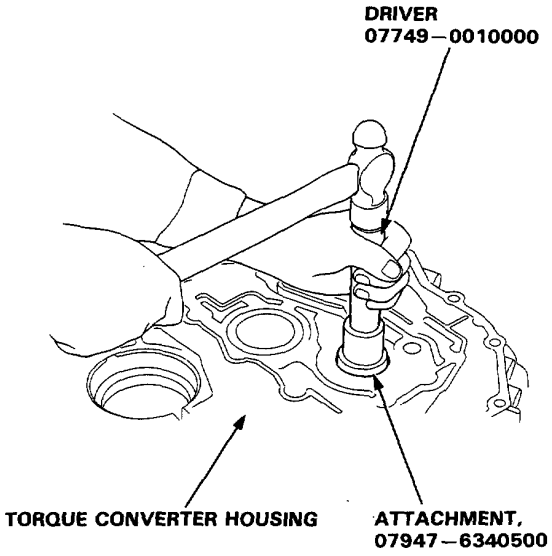

2. Drive in the new mainshaft bearing until it bottoms in the housing, using the special tools.

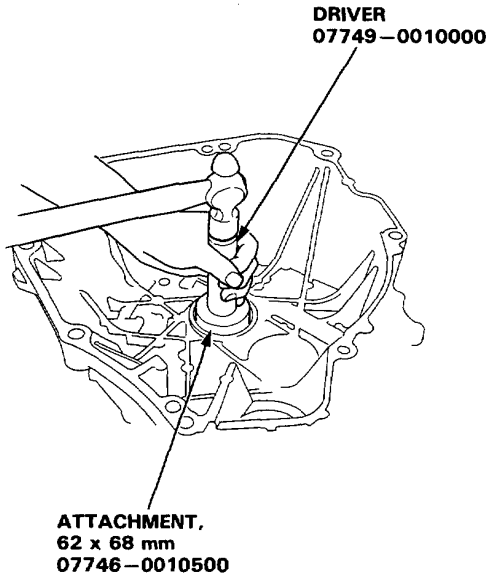

3. Install the new oil seal flush with the housing using the special tools.

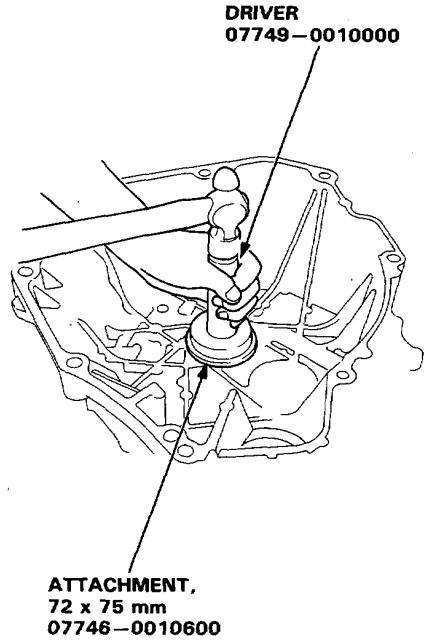

Torque Converter Housing Bearings

Countershaft Bearing Replacement

1. Remove the countershaft bearing using the special tool.

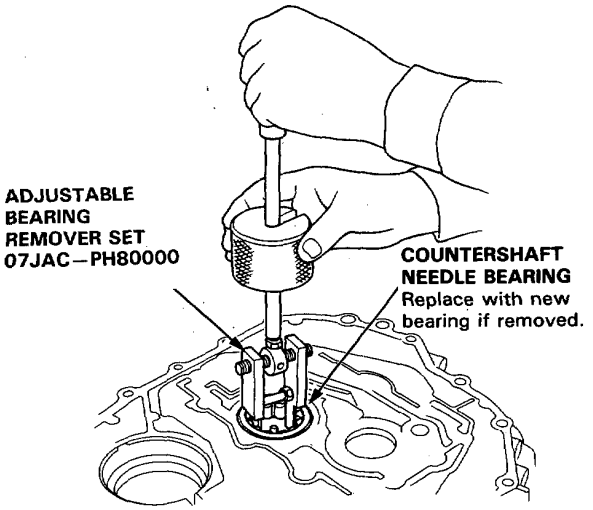

2. Replace the oil guide plate.

3. Drive the new bearing into the housing using the special tools.

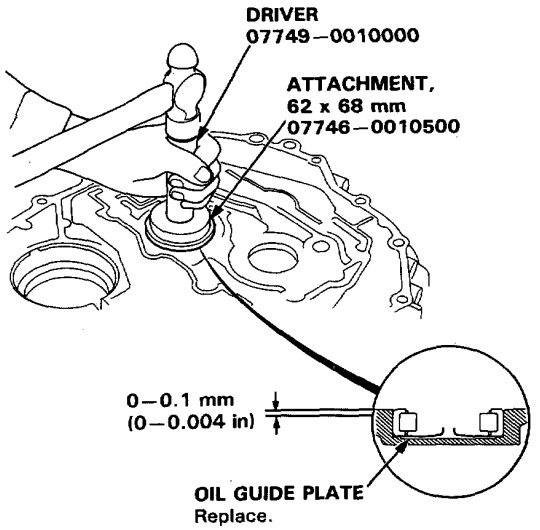

Transmission Housing Bearing

Replacement

1. To remove the mainshaft bearing from the transmission housing, expand each snap ring with the snap ring pliers, then push the bearing out.

   NOTE: Do not remove the snap rings unless it's necessary to clean the grooves in the housing.

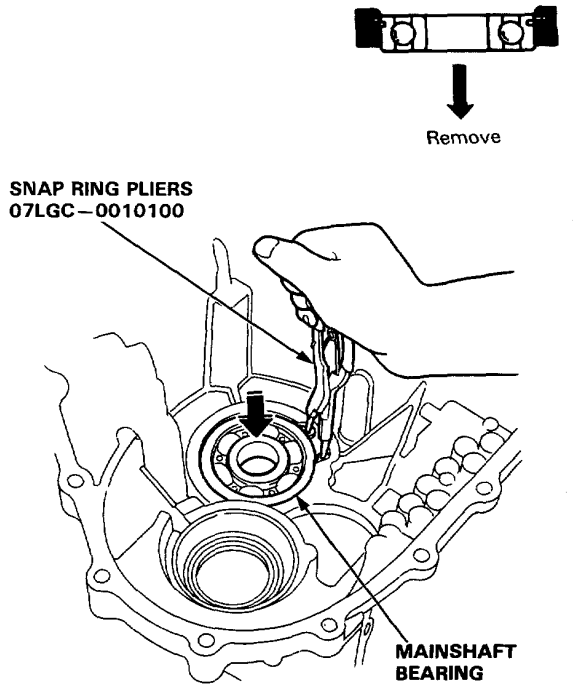

2. Expand each snap ring with the snap ring pliers, insert the new bearing part-way into it, then release the pliers. Push the bearing down into the transmission until the ring snaps in place around it.

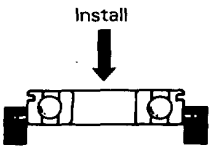

Parking Brake Mechanism

Disassembly/Inspection/Reassembly

1. Remove the parking brake pawl shaft sleeve, parking brake pawl and parking brake pawl spring.
2. Remove the control shaft.
3. Remove the detent lever and parking brake rod from the transmission housing.
4. Assemble the parking brake mechanism in the reverse order of disassembly.

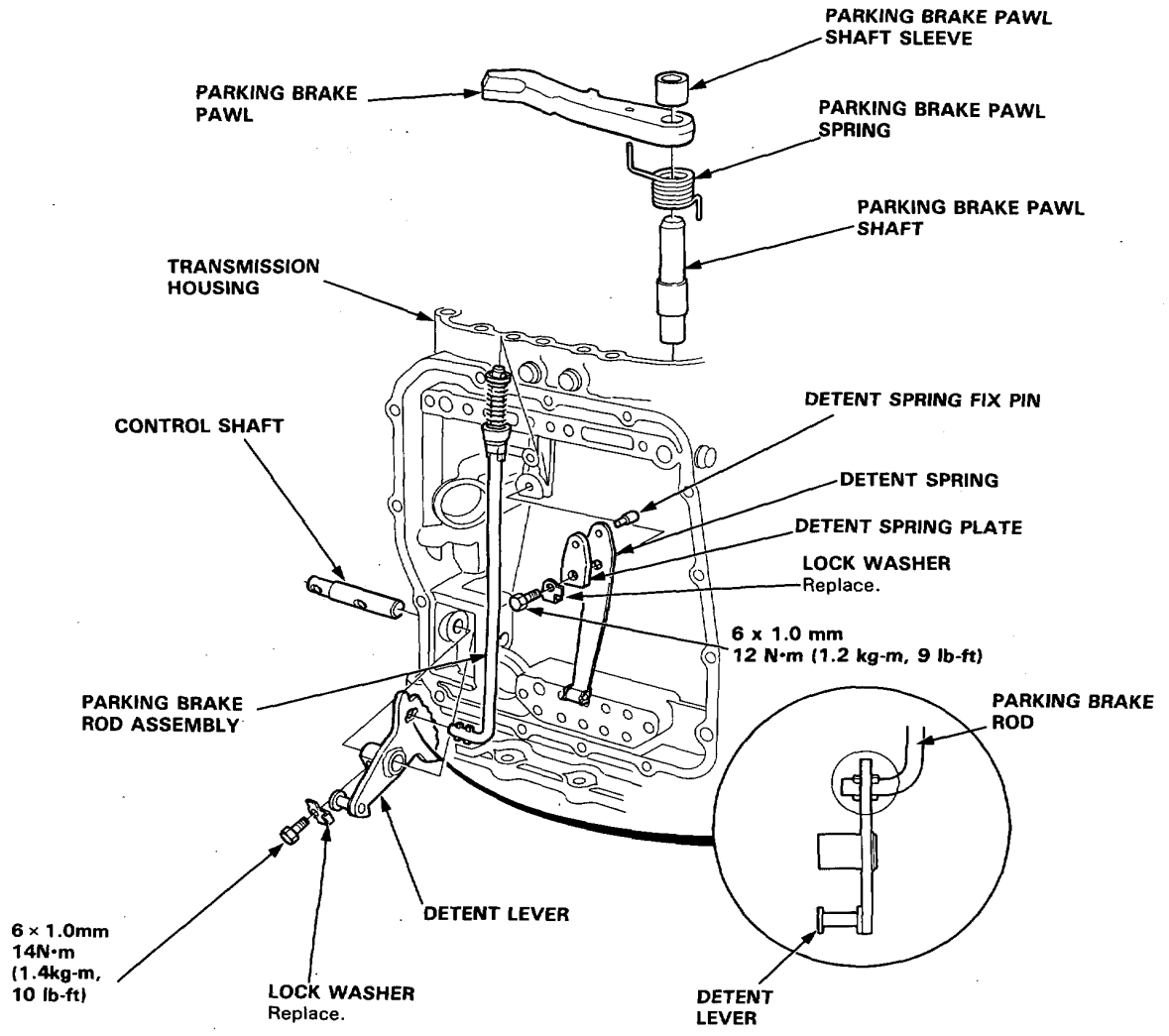

Reassembly

NOTE: Coat all parts with ATF.

1. Assemble the valve bodies following the numbered sequence.

CAUTION: To prevent stripping the threads, press down on the accumulator cover while installing the bolts.

TORQUE SPECIFICATIONS

No.	Torque Value	Bolt Size	Number
A	12 N·m (1.2 kg-m, 9 lb-ft)	6 x 1.0 mm	⑤ ⑧ ⑳ ㉑ ㉒ ㉙
B	12 N·m (1.2 kg-m, 9 lb-ft)	6 x 1.0 mm	④
C	18 N·m (1.8 kg-m, 13 lb-ft)	8 x 1.25 mm	⑱ ⑲ ㉘

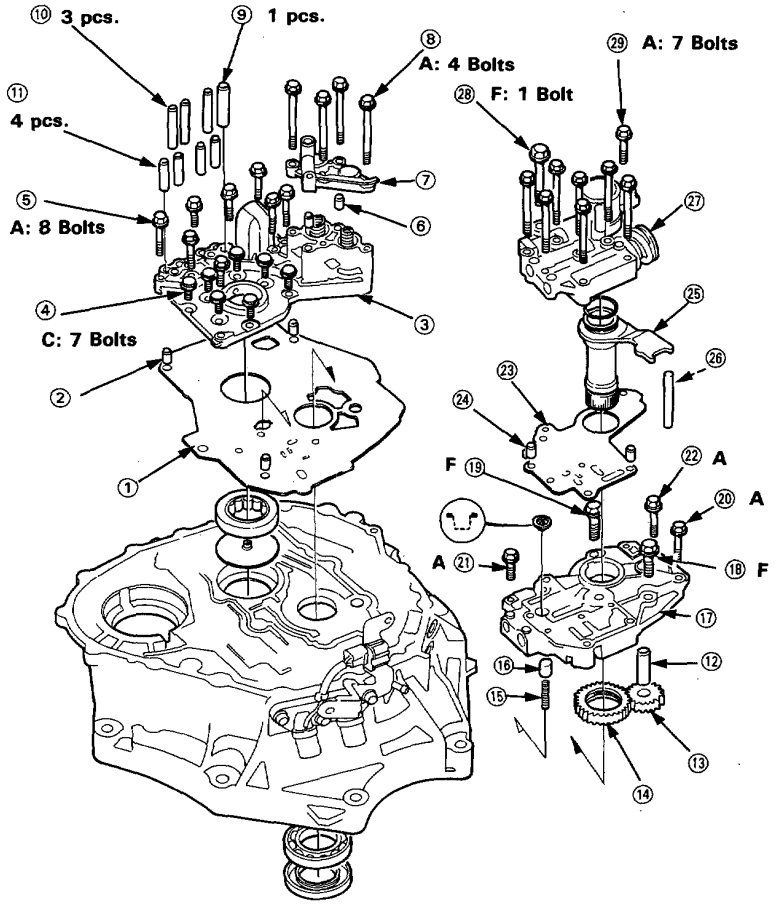

NOTE: Install the oil pump driven gear with its chamfered side facing down.

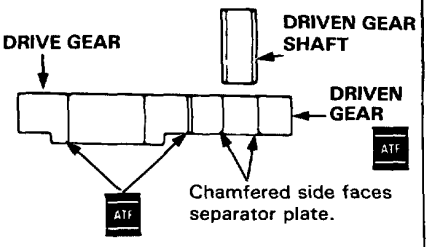

NOTE: Make sure the pump drive gear rotates smoothly in the normal operating direction and the pump shaft moves smoothly in the axial and normal operating directions.

CAUTION: If the pump gear and pump shaft do not move freely, loosen the valve body bolts, realign the shaft, and then retighten to the specified torque. Failure to align the pump shaft correctly will result in seized pump gear or pump shaft.

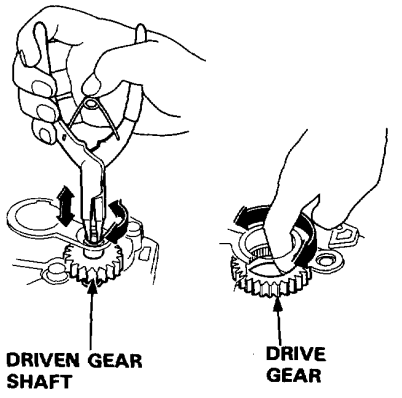

2. Assemble the transmission housing following the numbered sequence.

CAUTION: Make sure that the NM and NC speed sensors are not installed in the transmission housing before installing the transmission on the torque converter housing.

TORQUE SPECIFICATIONS

No.	Torque Value	Bolt Size	Number
A	12 N·m (1.2 kg-m, 9 lb-ft)	6 x 1.0 mm	⑯ ⑰
B	14 N·m (1.4 kg-m, 10 lb-ft)	6 x 1.0 mm	⑤
D	34 N·m (3.4 kg-m, 25 lb-ft)	8 x 1.25 mm	⑫
M	27 N·m (2.7 kg-m, 20 lb-ft)	8 x 1.25 mm	⑬

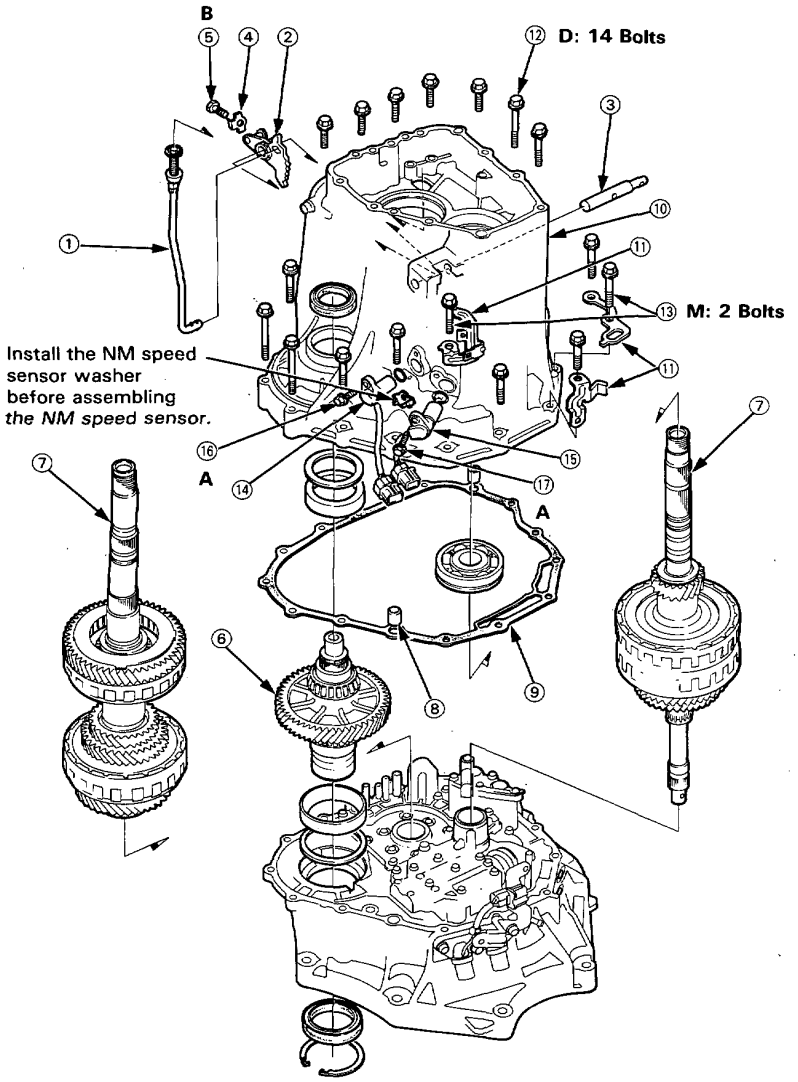

⑦ NOTE: Install the two shafts together.

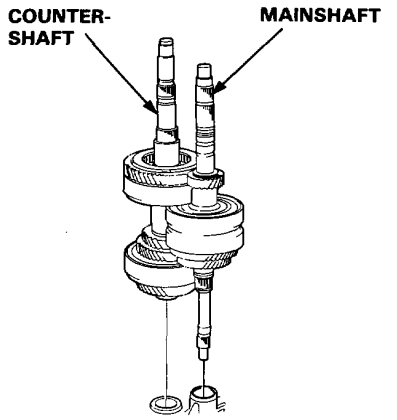

⑫ ⑬

NOTE: Torque bolt ① thru ⑭ to 34 N·m (3.4 kg-m, 25 lb-ft), ⑮ and ⑯ to 27 N·m (2.7 kg-m, 20 lb-ft).

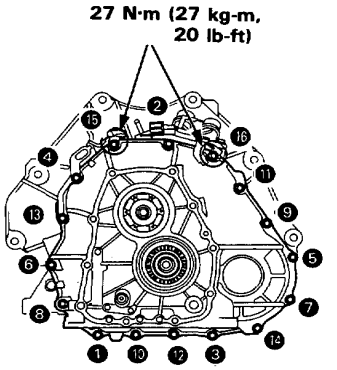

(cont'd)

Reassembly (cont'd)

3. Assemble the rear cover following the numbered sequence.

NOTE: Before installing the O-rings, wrap the shaft splines with tape to prevent damage to the O-rings.

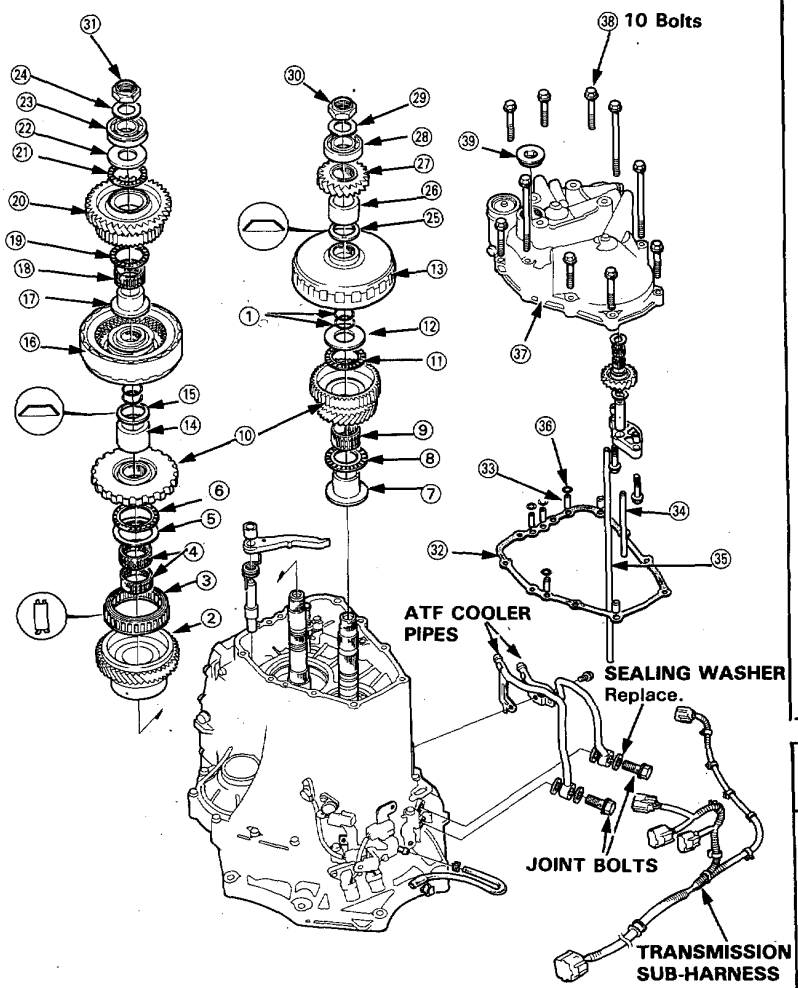

⑩ Combine the mainshaft 2nd gear with the parking gear.

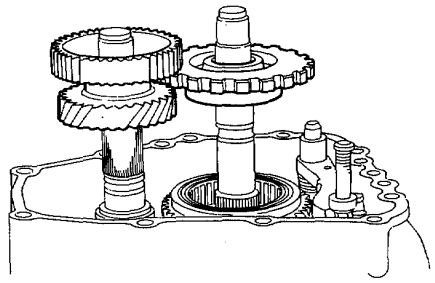

Tap the parking gear using the special tool as shown.

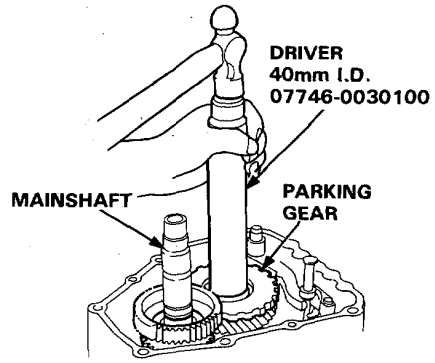

㉟ Install the feed pipe in the accumulator cover.

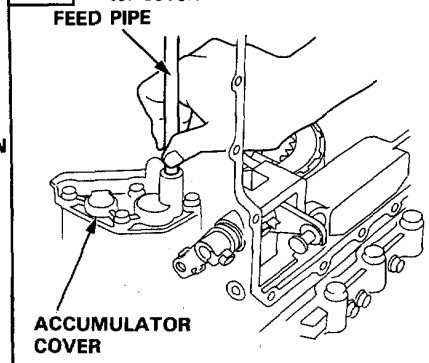

4. Install the special tool onto the mainshaft as shown, and engage the parking brake pawl with the parking gear.

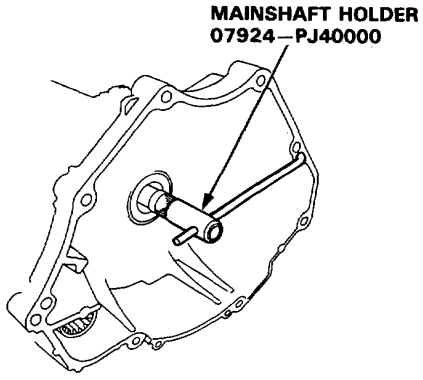

5. Install and torque the new locknuts. Tighten to specified torque, then loosen and retighten to specified torque.

   TORQUE: 170 N·m (17.0 kg-m, 123 lb-ft)

   NOTE: Countershaft locknut has left-hand threads.

6. Stake each locknut into its shaft, using a 3.5 mm punch.

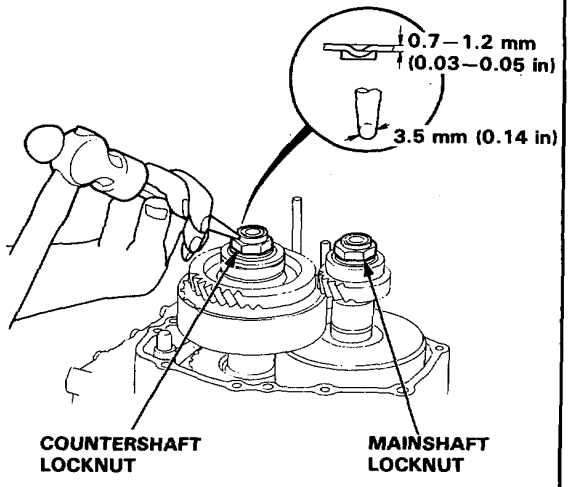

7. Install the rear cover and engage the reverse gears while rotating the mainshaft.

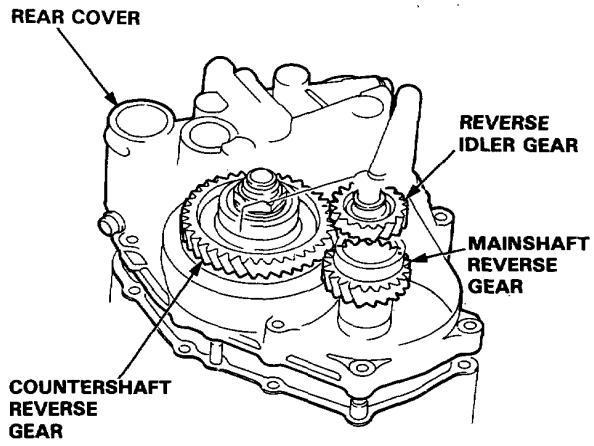

8. Install the snap ring in the ball bearing.

   NOTE: Make sure the snap ring fits in place around the bearing. If not, raise the countershaft to fit the snap ring in place.

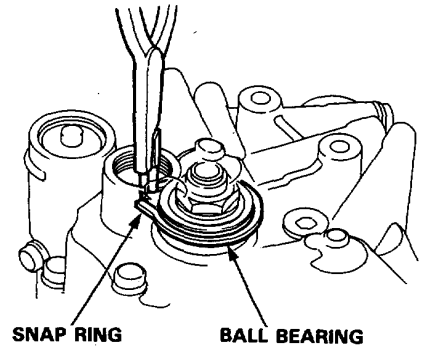

9. Torque the bolts on the rear cover.

   TORQUE: 27 N·m (2.7 kg-m, 20 lb-ft)

10. Apply liquid gasket (P/N: 0Y740—99986) to the sealing bolt threads and install it on the rear cover.

    TORQUE: 80 N·m (8.0 kg-m, 58 lb-ft)

(cont'd)

Reassembly (cont'd)

11. Assemble the lower valve body assembly and oil pan following the numbered sequence.

    NOTE: Pass the shift control solenoid valve/linear solenoid harness through the transmission housing and put the manual valve and detent lever together, then install the valve body.

    TORQUE: 6 × 1.0mm; all bolts: 12N·m (1.2kg-m, 9 lb-ft)

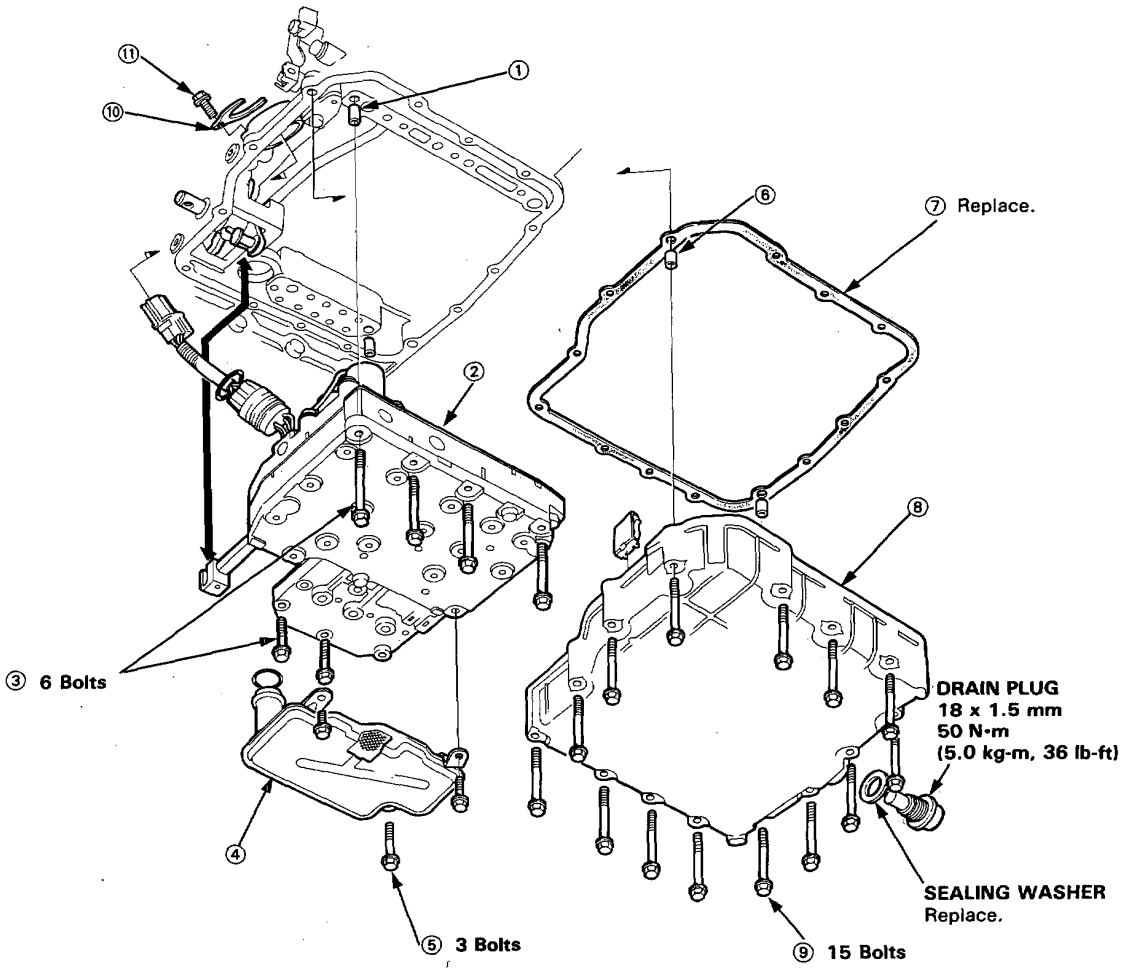

12. Install the ATF cooler pipes and torque the joint bolts.

    TORQUE: 40 N·m (4.0 kg-m, 29 lb-ft)

13. Connect the transmission sub-harness connector to the shift control solenoid valve/linear solenoid harness connector, and install it on the transmission housing.

Disassembly

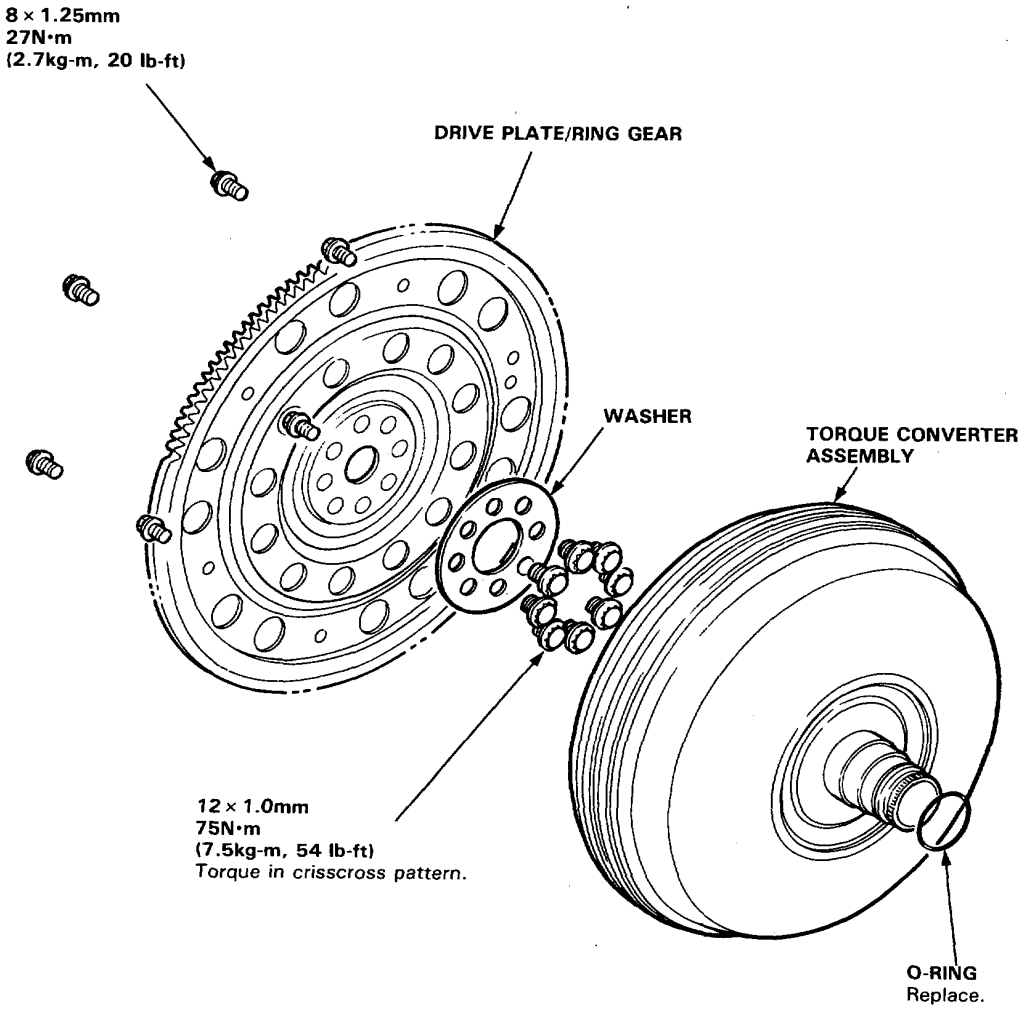

Installation

1. Install the 14 mm dowel pins in the torque converter housing.

2. Set the extension shaft, and apply Honda genuine grease UM264 (P/N 41211—PY5—305) to the shaft splines.

3. Install the secondary spring in the differential side of the extension shaft.

4. Place the transmission on a transmission jack, and raise to the engine level.

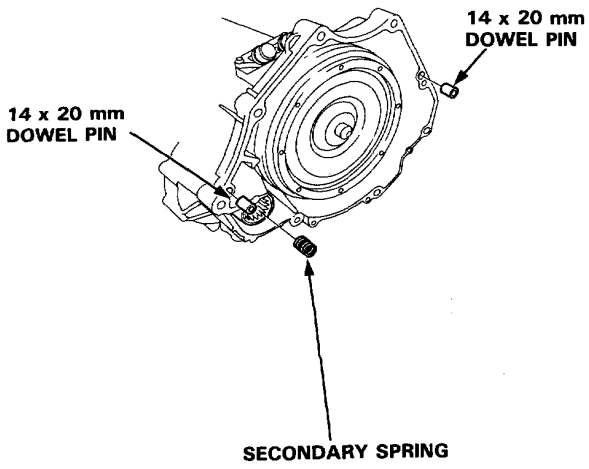

5. Install the transmission housing mounting bolt and 26 mm shim.

6. Attach the torque converter covers to the drive plate with 6 bolts and torque to 27 N·m (2.7 kg-m, 20 lb-ft). Rotate the crankshaft as necessary to tighten the bolts 1/2 of specified torque, then final torque, in a crisscross pattern. Check for free rotation after tightening the last bolt.

7. Install the torque converter covers.

8. Install the engine stiffener.

   NOTE: Loosely install the engine stiffener 8 mm mounting bolts, then torque to specified torque after installing the transmission housing mounting 12 mm bolt on the engine stiffener.

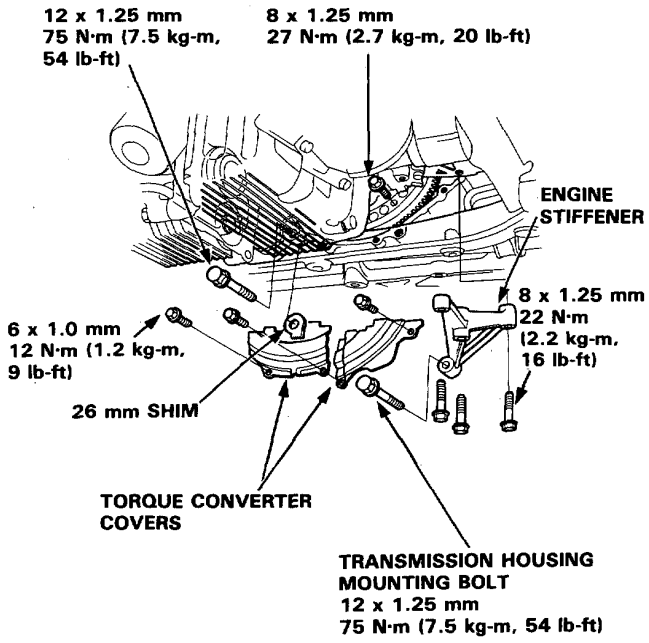

9. Install the 3 transmission housing mounting bolts.

10. Install the transmission mounting bolts and transmission mid mounts.

    NOTE: Loosely install the transmission mid mount nuts, then torque to specified torque after installing the rear transmission mount bracket/mount.

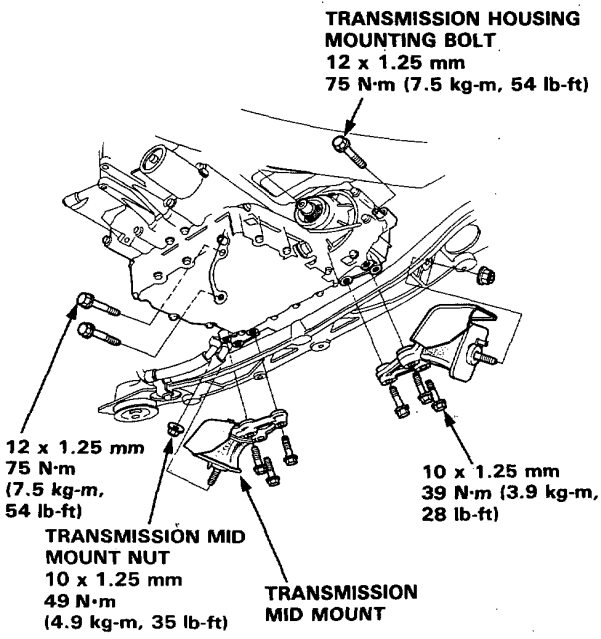

11. Install the rear transmission mount bracket/mount and exhaust pipe stay.

12. Install the shift cable guide.

13. Torque the transmission mid mount nuts to specified torque as shown in step 10.

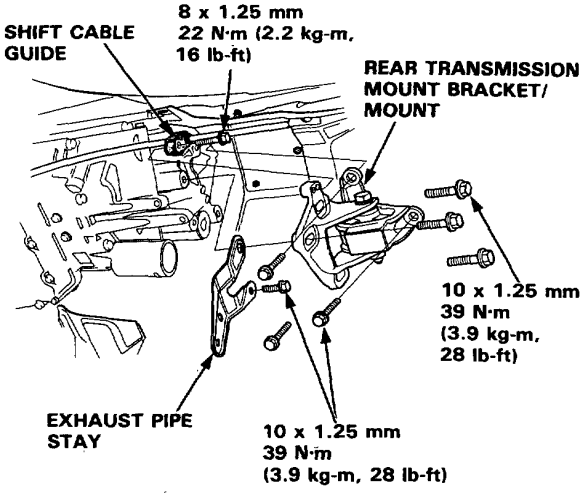

14. Install a new set ring in the extension shaft groove.

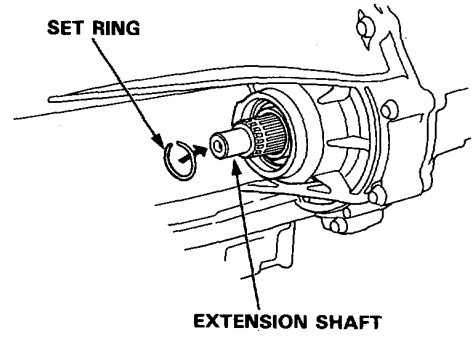

15. Install the extension shaft using the special tool as shown.

    NOTE: Make sure that the secondary spring is installed, and the extension shaft locks securely in the secondary gear shaft.

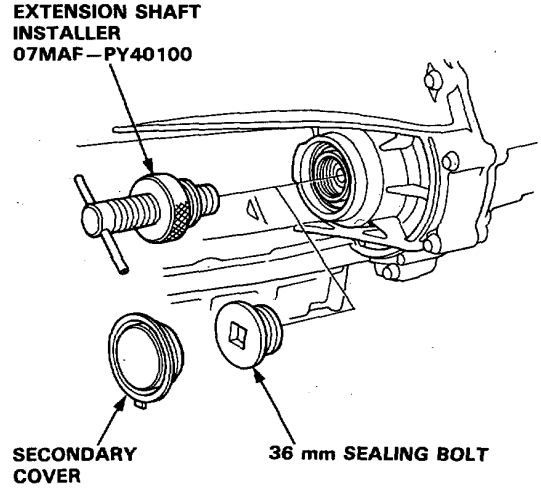

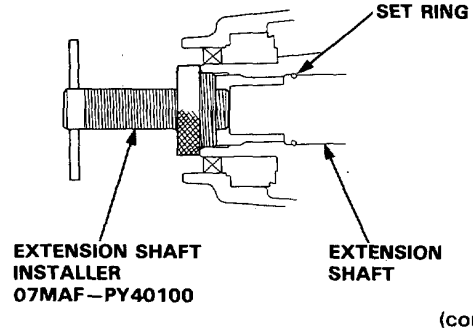

(cont'd)

Installation (cont'd)

16. Fill the opening between the secondary gear shaft and extension shaft with Honda genuine grease UM264 (P/N 41211—PY5—305), as shown.

17. Apply liquid gasket (P/N 0Y740—99986) to the 36 mm sealing bolt threads.

18. Install the 36 mm sealing bolt and secondary cover on the transmission housing.

    NOTE: Shift to P position rotating the control shaft.

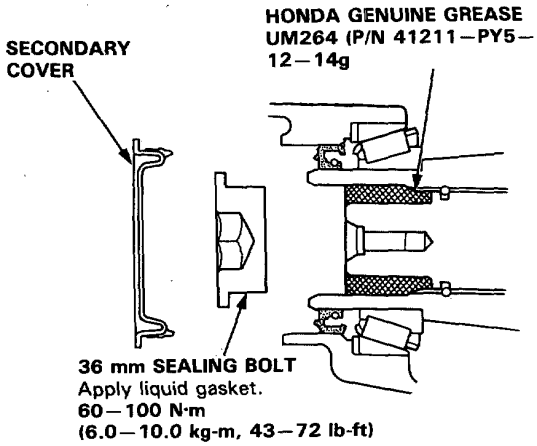

19. Remove the steering gearbox mounting bolts, then install the lower plate.

    NOTE: LHD is shown. The location of the steering gearbox mounting bolts on the RHD are symmetrical.

    ☆: **Corrosion resistant bolt**

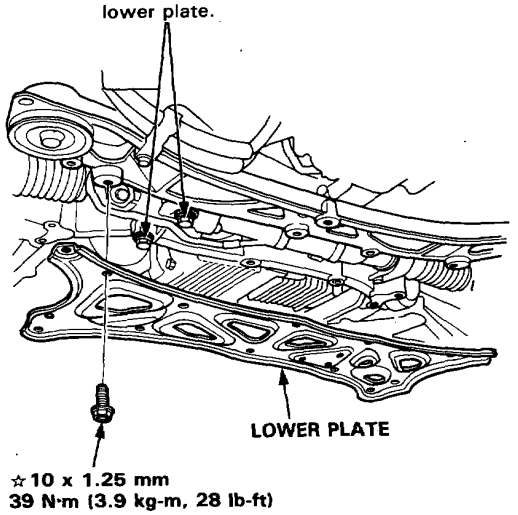

20. Install the control lever to the control shaft with a new lock plate. Bend the lock plate after installing the bolt.

21. Install the shift cable holder on the shift cable holder base.

22. Install the shift cable cover.

23. Connect the cooler hoses to joint pipes.

24. Connect the shift control solenoid valve/linear solenoid connector to the transmission sub-harness connector. Then install the connector on the shift cable cover.

    CAUTION: Take care not to bend the cable when removing/installing it.

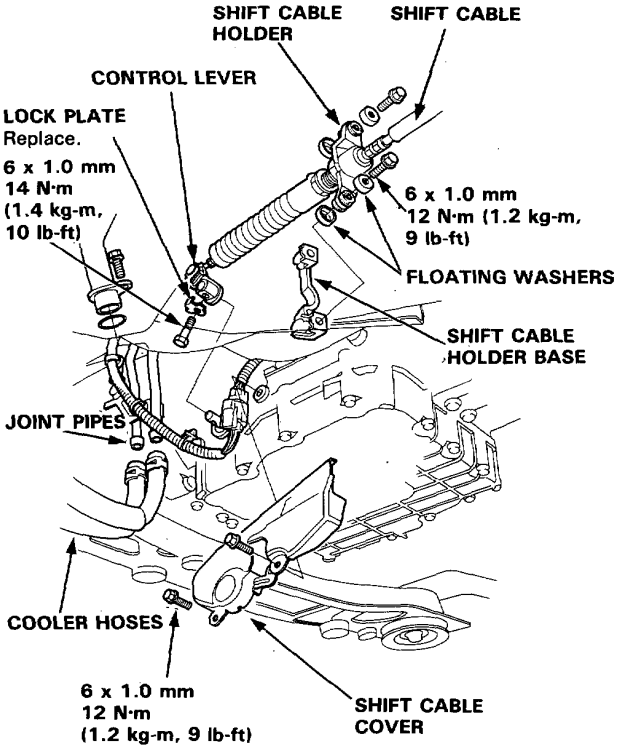

25. Install the bracket and heat shield.

26. Install the exhaust pipe A assembly and the catalytic converter.

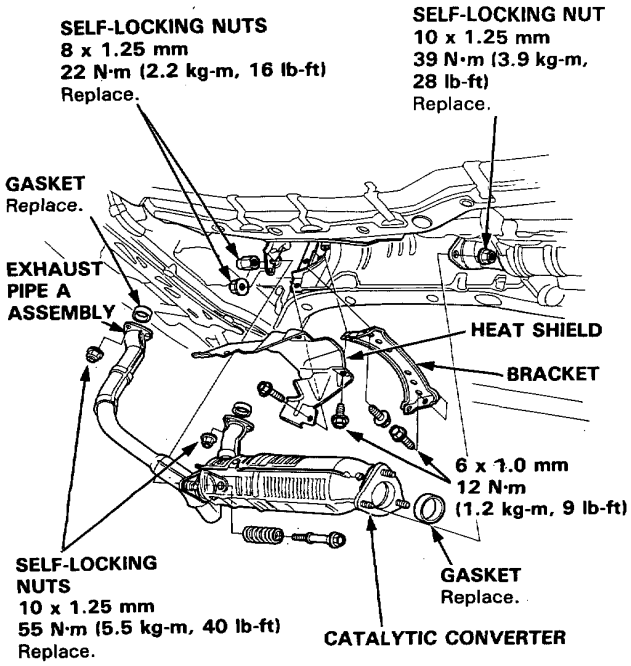

27. Install the transmission housing mounting bolts.

28. Install the ATF level gauge pipe and level gauge.

29. Connect the transmission sub-harness connector.

30. Install the control box. (LHD only)

LHD:

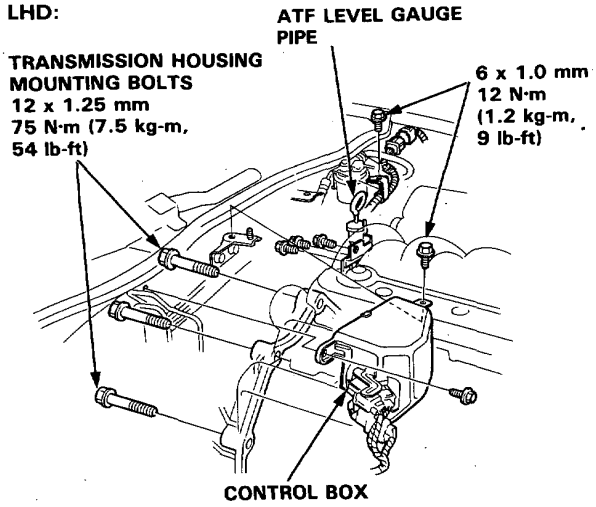

RHD:

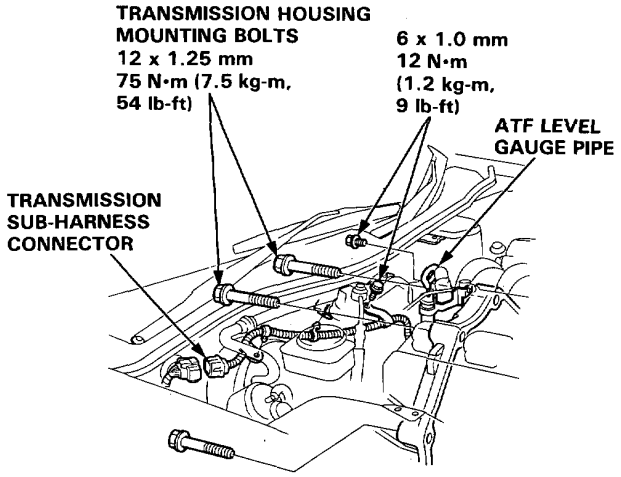

31. Install the strut bar.

32. Refill the transmission with ATF.

33. Connect the battery positive (+) and negative (−) cables to the battery.

34. Start the engine. Set the parking brake, and shift the transmission through all gears three times. Check for proper shift cable adjustment.

35. Let the engine reach operating temperature with the transmission in Neutral or Park, then turn it off and check fluid level.

36. Road test as described on pages 14-88 thru 90.

Shift Cable

Removal/Installation

SRS wire harness is routed near the gearshift selector.

⚠ WARNING **All SRS wire harness and connectors are colored yellow. Do not use electrical test equipment on these circuits.**

CAUTION: Be careful not to damage the SRS wire harness when servicing the gearshift selector.

NOTE: LHD is shown; RHD is similar.

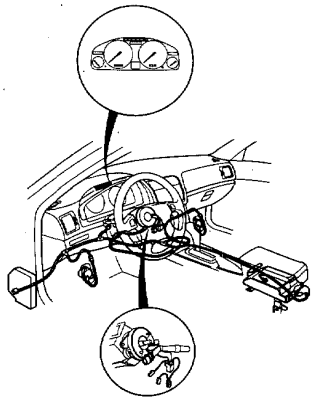

⚠ WARNING

- **Make sure lifts, jacks and safety stands are placed properly (See Section 1).**
- **Apply parking brake and block rear wheels, so the car will not roll off stands and fall while you are working under it.**

1. Remove the center console (See Section 20).
2. Shift to [R] position, then remove the lock pin from the cable adjuster.

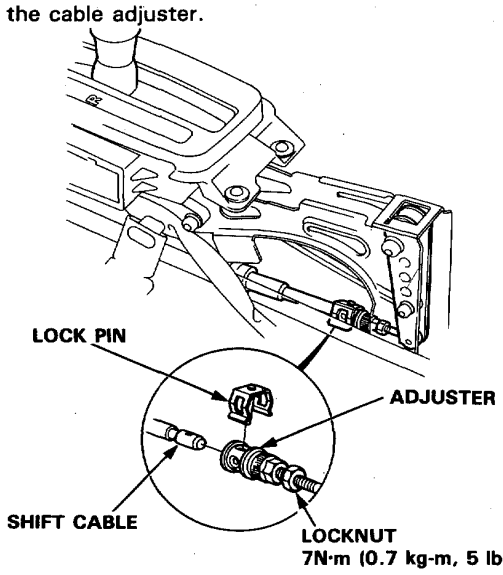

3. Remove the exhaust pipe A assembly, catalytic converter and heat shield.

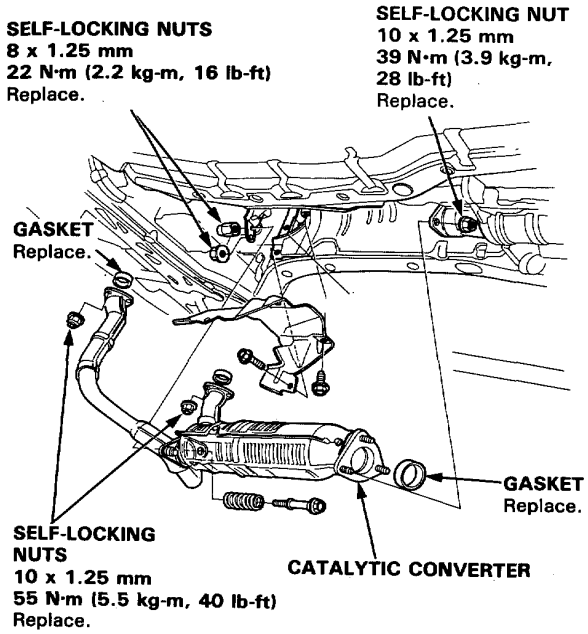

4. Remove the shift cable bracket.

   CAUTION: Take care not to bend the cable when removing/installing it.

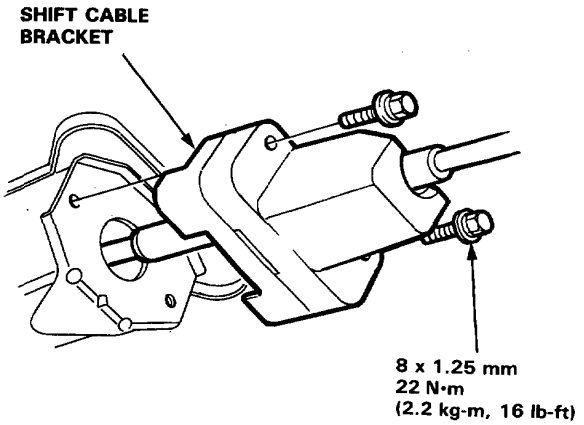

5. Remove the shift cable guide from the rear transmission mount.

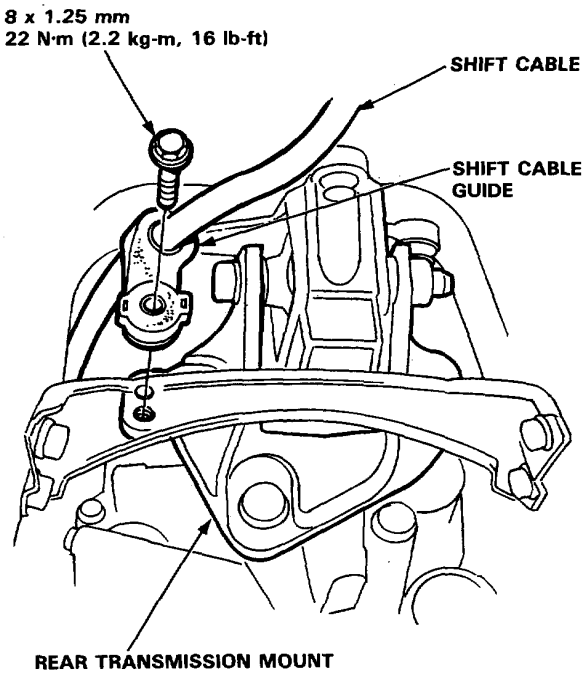

6. Remove the shift cable cover.

7. Remove the shift cable holder from the shift cable holder base and from the shift cable.

8. Remove the control lever from the control shaft.

9. Remove the shift cable.

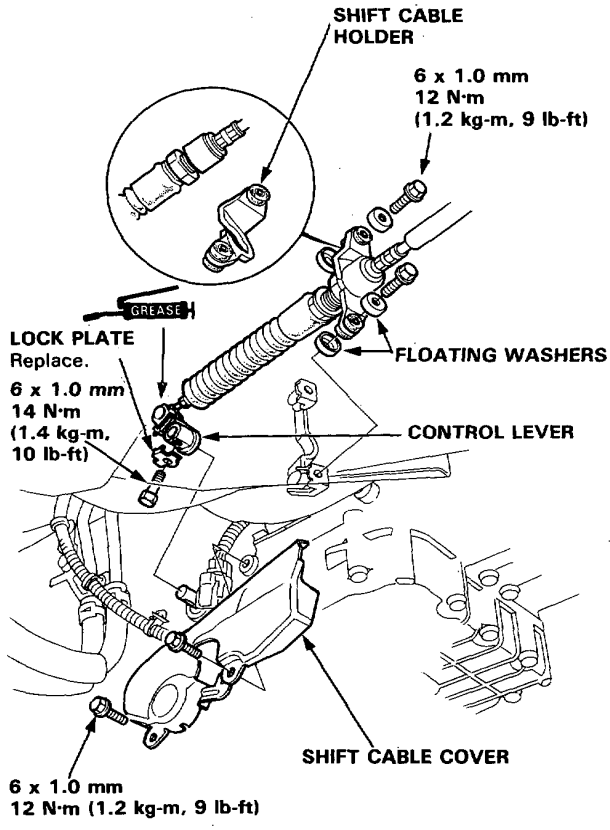

10. Install the shift cable in the reverse order of removal.

11. Check the cable adjustment on reassembly, on page 14-168.

Shift Cable

Adjustment

SRS wire harness is routed near the gearshift selector.

⚠ WARNING All SRS wire harnesses and connectors are colored yellow. Do not use electrical test equipment on these circuits.

CAUTION: Be careful not to damage the SRS wire harness when servicing the gearshift selector.

NOTE: LHD is shown; RHD is similar.

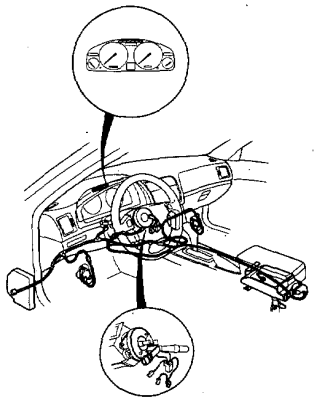

1. Start the engine. Shift to reverse to see if the reverse gear engages. If not, refer to troubleshooting.
2. With the engine off, remove the console. (See Section 20.)
3. Shift to [R] position, then remove the lock pin from the cable adjuster.

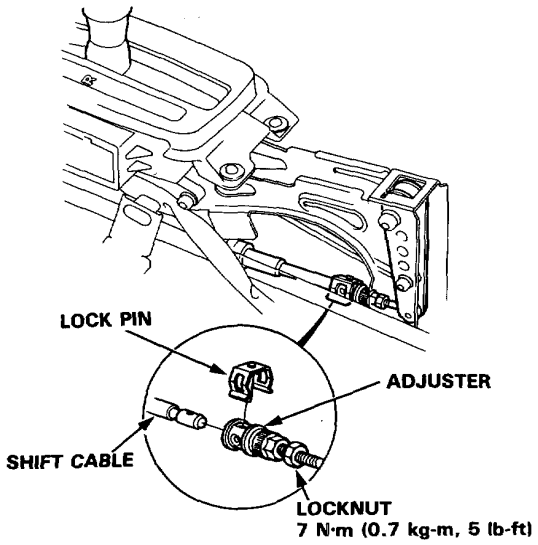

4. Check that the hole in the adjuster is perfectly aligned with the hole in the shift cable.

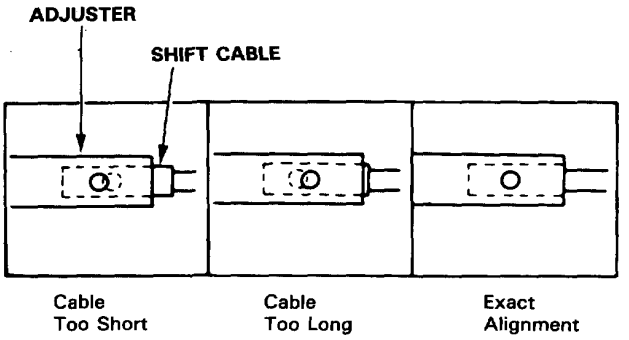

NOTE: There are two holes in the end of the shift cable. They are positioned 90° apart to allow cable adjustments in 1/4 turn increments.

5. If not perfectly aligned, loosen the locknut on shift cable and adjust as required.
6. Tighten the locknut.
7. Install the lock pin on the adjuster.

   NOTE: If you feel the lock pin binding as you reinstall it, the cable is still out of adjustment and must be readjusted.

8. Start the engine and check the shift lever in all gears. If any gear does not work properly, refer to troubleshooting on page 14-82 thru 85.

Gearshift Selector

Disassembly/Reassembly

SRS wire harness is routed near the gearshift selector.

WARNING **All SRS wire harnesses and connectors are colored yellow. Do not use electrical test equipment on these circuits.**

CAUTION: Be careful not to damage the SRS wire harness when servicing the gearshift selector.

NOTE: LHD is shown; RHD is symmetrical.

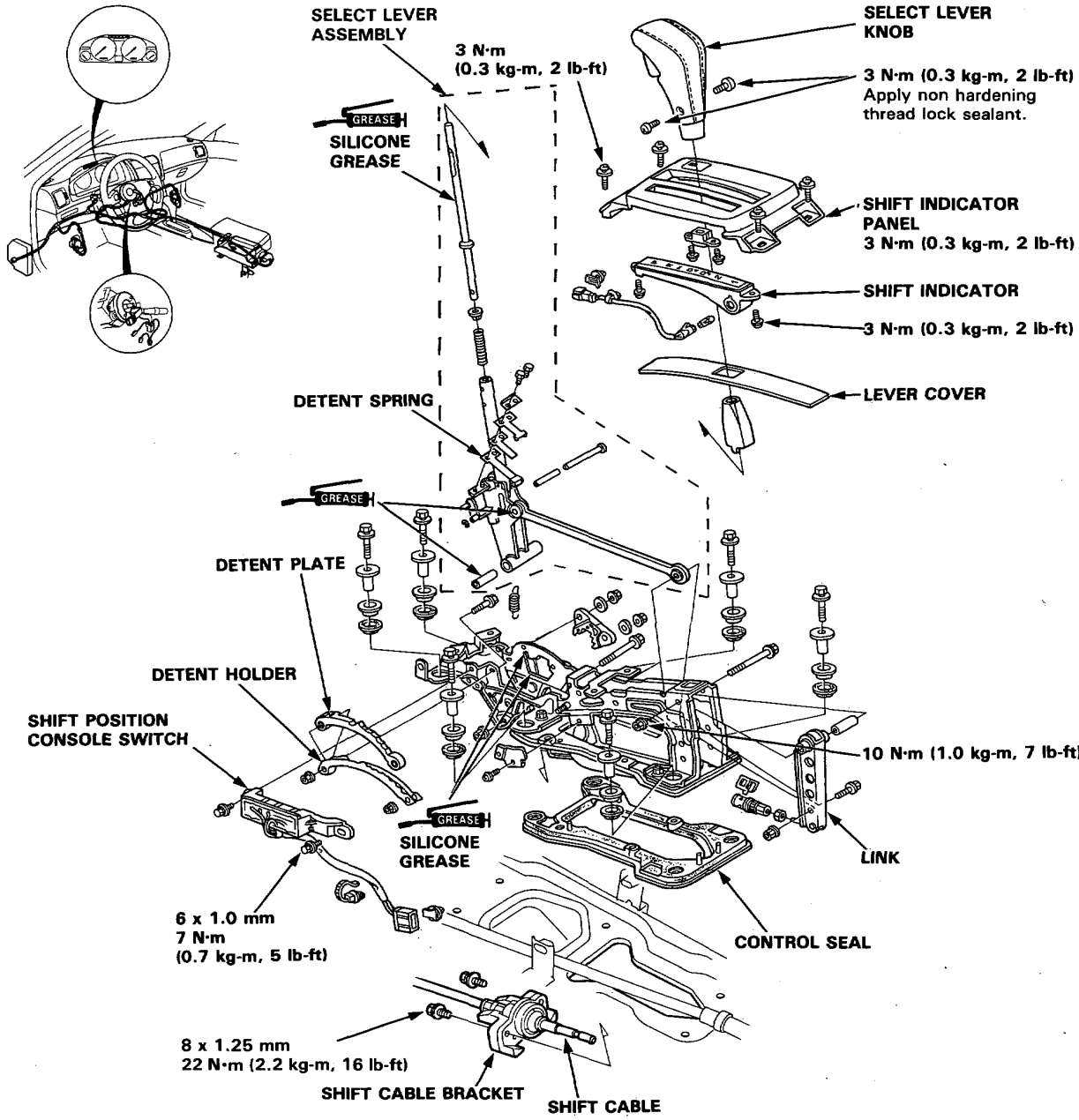

Gearshift Selector

Inspection/Adjustment

SRS wire harness is routed near the gearshift selector.

⚠ WARNING All SRS wire harnesses and connectors are colored yellow. Do not use electrical test equipment on these circuits.

CAUTION: Be careful not to damage the SRS wire harness when servicing the gearshift selector.

NOTE: LHD is shown; RHD is similar.

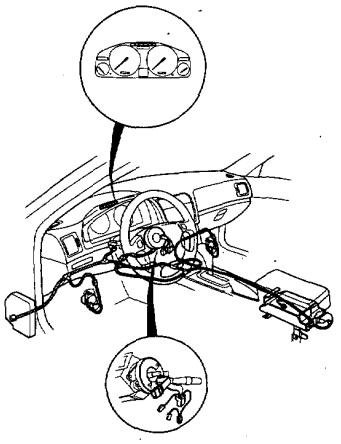

NOTE: Inspect the detent spring adjustment when replacing the selector lever.

1. Install the selector lever assembly onto the selector lever bracket.
2. Verify the gearshift selector movement.

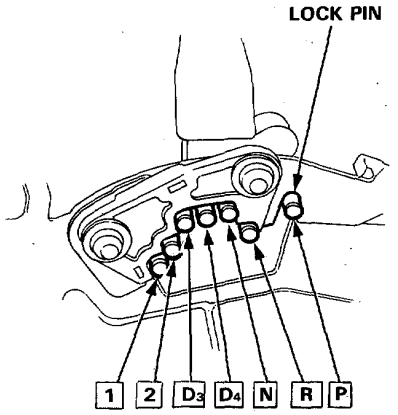

3. Shift the select lever to [N] position.
4. Measure the clearance between the lock pin and lock pin gate as shown.

   Specification: 0.2–0.5 mm (0.008–0.020 in)

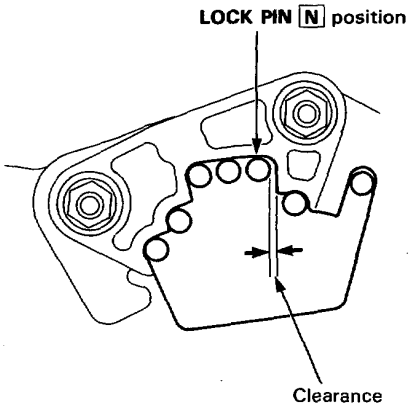

5. If the clearance is out of specification, loosen the bolt B and adjust.

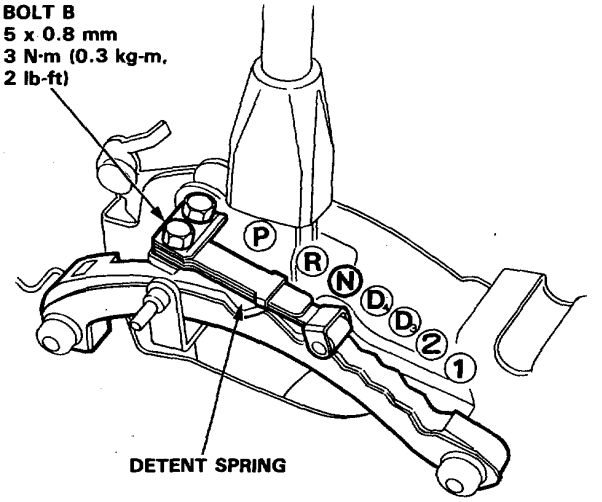

NOTE: Verify the gearshift selector movement after adjusting.

Shift Indicator Panel

Adjustment

SRS wire harness is routed near the gearshift selector.

⚠ WARNING All SRS wire harnesses and connectors are colored yellow. Do not use electrical test equipment on these circuits.

CAUTION: Be careful not to damage the SRS wire harness when servicing the shift indicator panel.

NOTE: LHD is shown; RHD is similar.

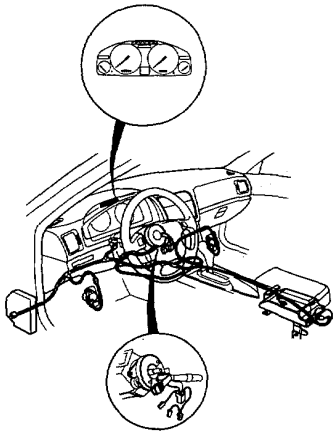

1. Check that the index mark of the indicator aligns with the N mark of the shift indicator panel with the transmission in NEUTRAL.
2. If not aligned, remove the center console panel. (See section 20.)
3. Remove the shift indicator panel mounting screws and adjust by moving the panel.

   NOTE: Whenever the shift indicator panel is removed, reinstall the panel as described above.

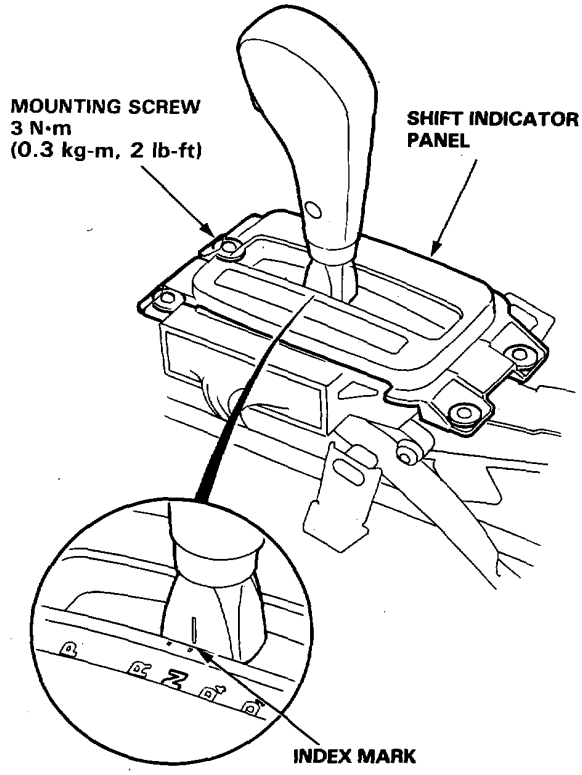

Differential

Special Tools 15-2
Troubleshooting 15-3
Maintenance 15-4
Differential Assembly
  Removal/Installation 15-5
Differential
  Illustrated Index 15-7
  Inspection 15-8
  Disassembly 15-9
Differential Case
  Inspection 15-13
  Disassembly 15-14
  Reassembly 15-15
Differential
  Reassembly 15-16
Drive Pinion
  Height Adjustment 15-22
Ring Gear Tooth Contact
  Adjustment 15-23
Ring Gear Backlash
  Adjustment 15-24

Special Tools

Ref. No.	Tool Number	Description	Qty	Remarks
①	07LAC–PW50100	Extension Shaft Puller	1	
②	07MAF–PY40100	Extension Shaft Installer	1	
③	07979–PJ40001	Magnet Stand Base	1	
④	07LAA–SM40200	Locknut Wrench	1	
⑤	07749–0010000	Outer Handle A	1	
⑥	07GAD–PG40100	Oil Seal Driver	1	
⑦	07746–0030100	Inner Handle C	1	
⑧	07KAF–PS30200	Bearing Race Remover	1	
⑨	07MAD–PR90100	Attachment, 45 x 55 mm	1	
⑩	07744–0010400	Pin Driver, 5.0 mm	1	
⑪	07746–0030400	Inner Driver, 35 mm	1	
⑫	07MAF–SP00100	Bearing Race Installer	1	
⑫-1	07MAF–SP00110	Bearing Race Installer A	(1)	Component Tools
⑫-2	07MAF–SP00120	Bearing Race Installer B	(1)	Component Tools
⑫-3	07JAF–SJ80120	Nut	(1)	Component Tools
⑫-4	07JAF–SJ80110	Shaft	(1)	Component Tools
⑬	07GAD–SD40101	Attachment, 78 x 90 mm	1	
⑭	07MAD–SP00200	Pinion Seal Driver	1	
⑮	07965–SA00600	Oil Seal Driver	1	
⑯	07MAD–PR90200	Pilot Driver, 32 x 50 mm	1	

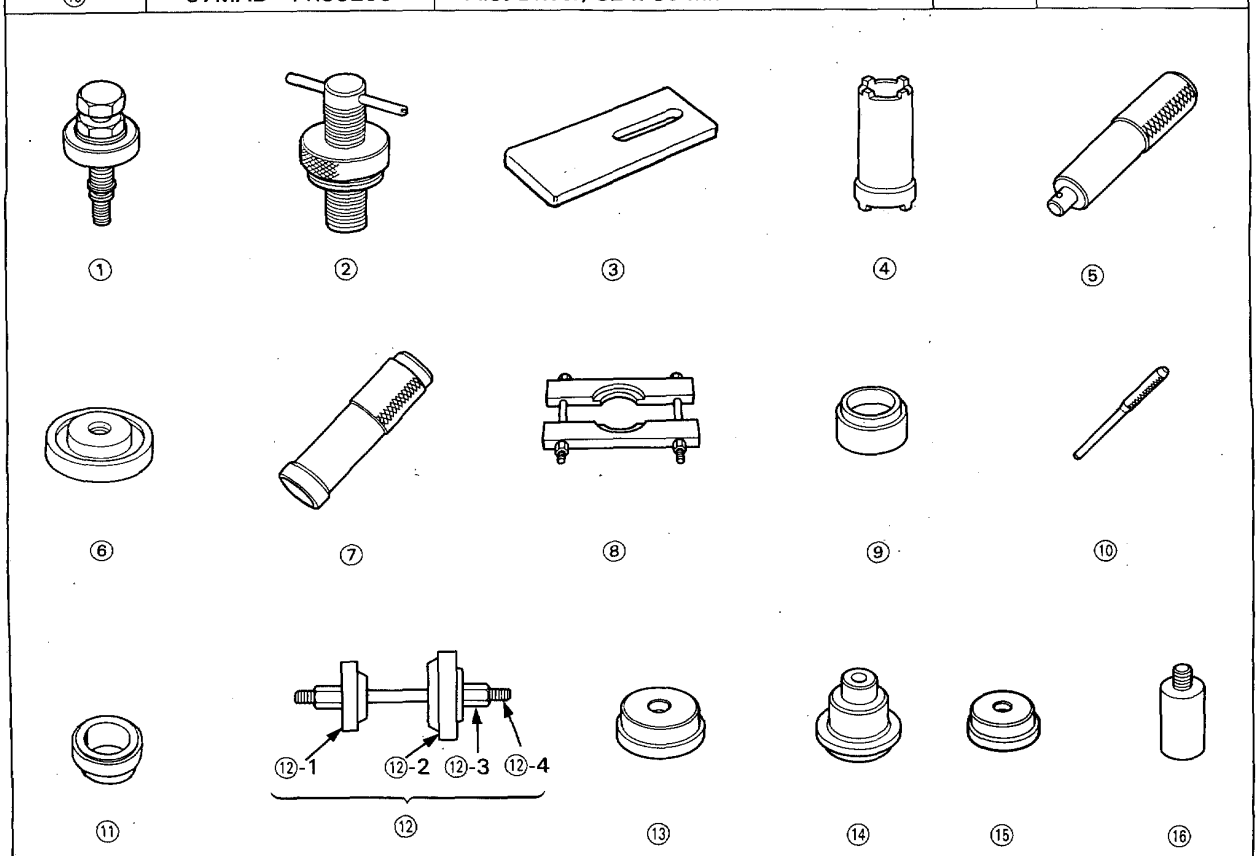

Troubleshooting

NOTE:
Most problems in the unit are to be diagnosed by Identifying noises from the gears or bearings.
Care should be taken during diagnosis not to confuse differential noises with those from other drivetrain components.

[Noise symptoms will be most prominent]

Symptom	Probable Cause	Remedy
Consistent noise during cruising	• Lack of oil • Foreign matter stuck in gears, etc. • Improper tooth contact between ring gear and drive pinion • Worn or damaged side bearing • Deformed ring gear or carrier	• Replenish oil • Clean and inspect • Adjust or replace • Replace any damaged or faulty parts
Gear noises while accelerating	• Lack of oil • Foreign matter stuck in gears, etc. • Improper drive pinion preload • Chipped or damaged gears	• Replenish oil • Clean and inspect • Replace
Gear noises while coasting or accelerating	• Improper drive pinion preload • Damaged or chipped gears	• Adjust or replace
Bearing noises while accelerating or coasting/deceleration	• Cracked or damaged drive pinion bearing or side bearing	• Replace
Abnormal noises when rounding a curve	• Worn (excessive play) or damaged side bearing • Damaged side gear, pinion, or pinion shaft	• Replace
Abnormal noises during acceleration or when first driving away from a stop.	• Excessive backlash between ring gear and drive pinion. • Improper ring gear or drive pinion preload • Excessive pinion backlash • Worn differential splines • Loose companion flange nuts and other fasteners	• Adjust • Replace • Recheck torque or replace
Oil leak	• Oil level too high • Clogged breather hole • Loose carrier or inadequate sealing • Worn or damaged oil seal	• Lower to proper level • Clean or replace • Recheck torque or apply sealant • Replace
Overheating	• Lack of oil • Insufficient ring gear-to-pinion backlash • Excessive ring gear or drive pinion preload • Chipped or damage oil cooler	• Replenish • Adjust • Adjust or replace • Replace
Coolant leak	• Inadequate hose or clamp	• Recheck torque or replace

Differential Oil

NOTE: Check the oil at operating temperature, engine OFF, and the car on level ground.

1. Remove the oil filler plug, then check the level and condition of the oil.

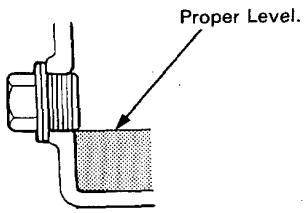

2. The oil level must be up to the fill hole. If it is below the hole, add oil until it runs out, then reinstall the oil filler plug.

3. If the oil is dirty, remove drain plug and drain the differential oil.

4. Reinstall the drain plug with a new washer, and refill to proper level.

   NOTE: The drain plug washer should be replaced at every oil change.

5. Reinstall the oil filler plug with a new washer.

   Oil Capacity
   1.05 ℓ (1.11 U.S. qt.) after drain.
   1.10 ℓ (1.16 U.S. qt.) after overhaul.

   Recommended oil:
   Hypoid gear oil
   API Classification GL4 or GL5 √
   viscosity
   SAE #90 above −18°C (−0.4°F)
   SAE #80 or SAE 80 W 90 below −18°C (−0.4°F)

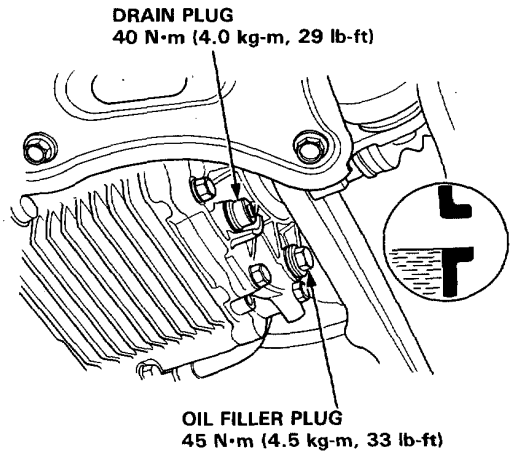

Differential Assembly

Removal/Installation

⚠ WARNING

- **Make sure jacks and safety stands are placed properly, and hoist brackets are attached to correct positions on the engine.**
- **Apply parking brake and block rear wheels, so car will not roll off stands and fall on you while working under it.**

CAUTION: Use fender covers to avoid damaging painted surfaces.

1. Drain the coolant. (See section 10)
2. Remove drain plug and drain differential oil (page 15-4).
3. Remove the driveshafts and intermediate shaft (See section 16).
4. Remove the lower plate.

   NOTE: Install the steering gear box mounting bolts.

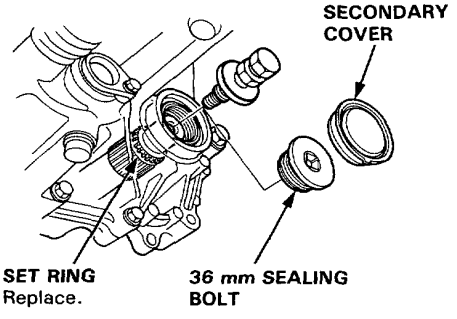

5. Remove the speed sensor.

   NOTE: Do not disconnect the hoses.

6. Disconnect the oil cooler hoses at joint pipes.
7. Remove the secondary cover and 36 mm sealing bolt.

   NOTE: Shift to low gear or [P] position to lock the secondary gear.

8. Disconnect the extension shaft from the differential using the special tool.
9. Remove the mounting bolts and 26 mm shim, then remove the differential assembly.

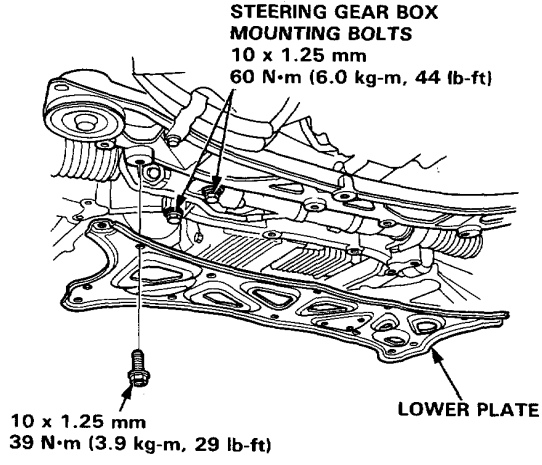

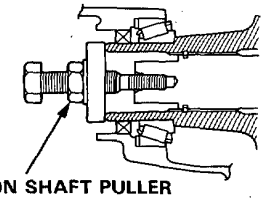

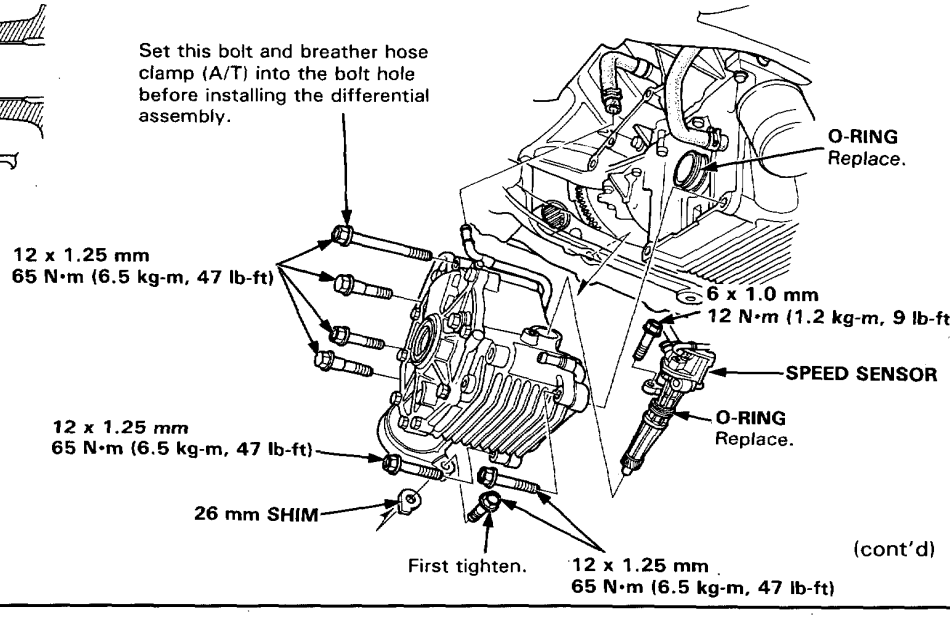

(cont'd)

Removal/Installation (cont'd)

10. Install the differential assembly in the reverse order of removal, and as follows.

• **EXTENSION SHAFT, 36 mm SEALING BOLT**

—1. Apply Genuine Honda UM264 grease to the spline of the extension shaft, then install the new set ring.

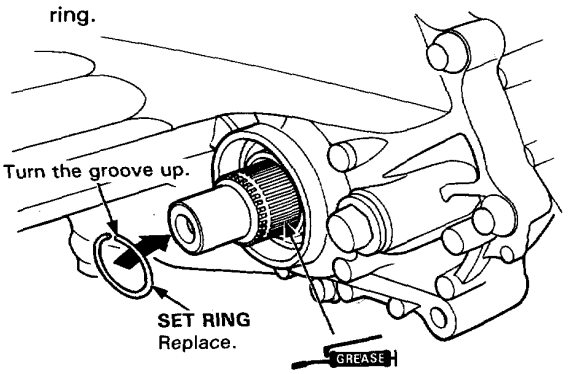

—2. Install the extension shaft using the special tool as shown.

NOTE: Make sure extension locks in the secondary gear.

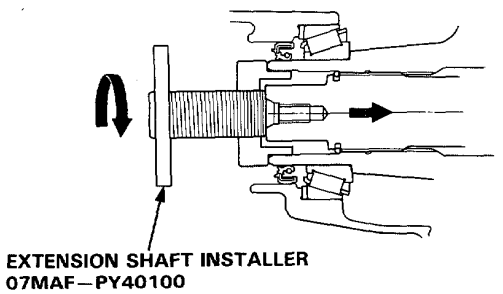

—3. Fill the secondary gear with Genuine Honda UM264 grease.

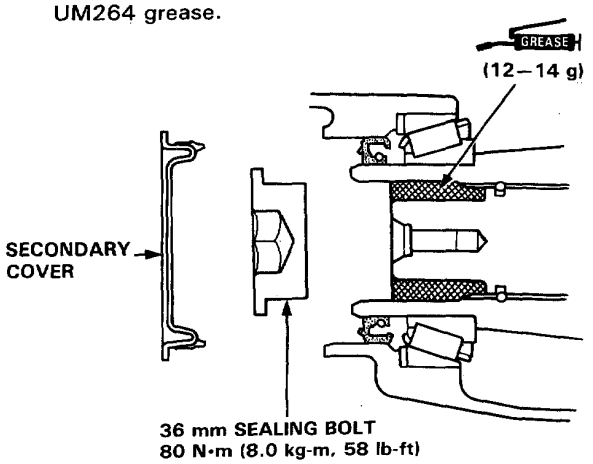

—4. Install the 36 mm sealing bolt and secondary cover.

NOTE: Apply liquid gasket (P/N 08718—0001) to the threads.

• **ADJUSTING THE 26 mm SHIM**

—1. Install the differential assembly.

—2. Measure the clearance between the differential and transmission.

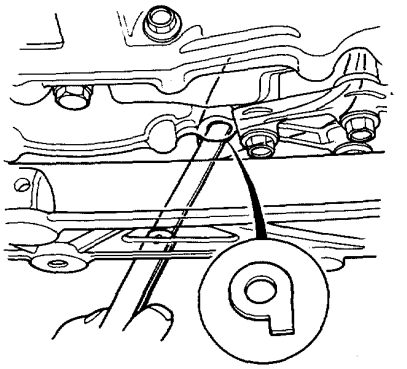

—3. Select shim from the following table.

26 mm SHIM

Part Number	Thickness	Measurement Value
41432—PY4—000	1.9 mm (0.0748 in.)	1.99—1.9 mm
41433—PY4—000	2.0 mm (0.0787 in.)	2.09—2.0 mm
41434—PY4—000	2.1 mm (0.0827 in.)	2.19—2.1 mm
41435—PY4—000	2.2 mm (0.0866 in.)	2.29—2.2 mm
41436—PY4—000	2.3 mm (0.0906 in.)	2.39—2.3 mm
41437—PY4—000	2.4 mm (0.0945 in.)	2.49—2.4 mm
41438—PY4—000	2.5 mm (0.0984 in.)	2.59—2.5 mm
41439—PY4—000	2.6 mm (0.1024 in.)	2.69—2.6 mm
41440—PY4—000	2.7 mm (0.1063 in.)	2.79—2.7 mm
41441—PY4—000	2.8 mm (0.1102 in.)	2.89—2.8 mm
41442—PY4—000	2.9 mm (0.1142 in.)	2.99—2.9 mm
41443—PY4—000	3.0 mm (0.1181 in.)	3.09—3.0 mm

11. Check the following items after reassembly.
    —1. Transmission has been refilled.
    —2. Coolant has been refilled.
    —3. The clip at the tip of the drive shafts is completely inserted into the groove of the differential or intermediate shaft.

Illustrated Index

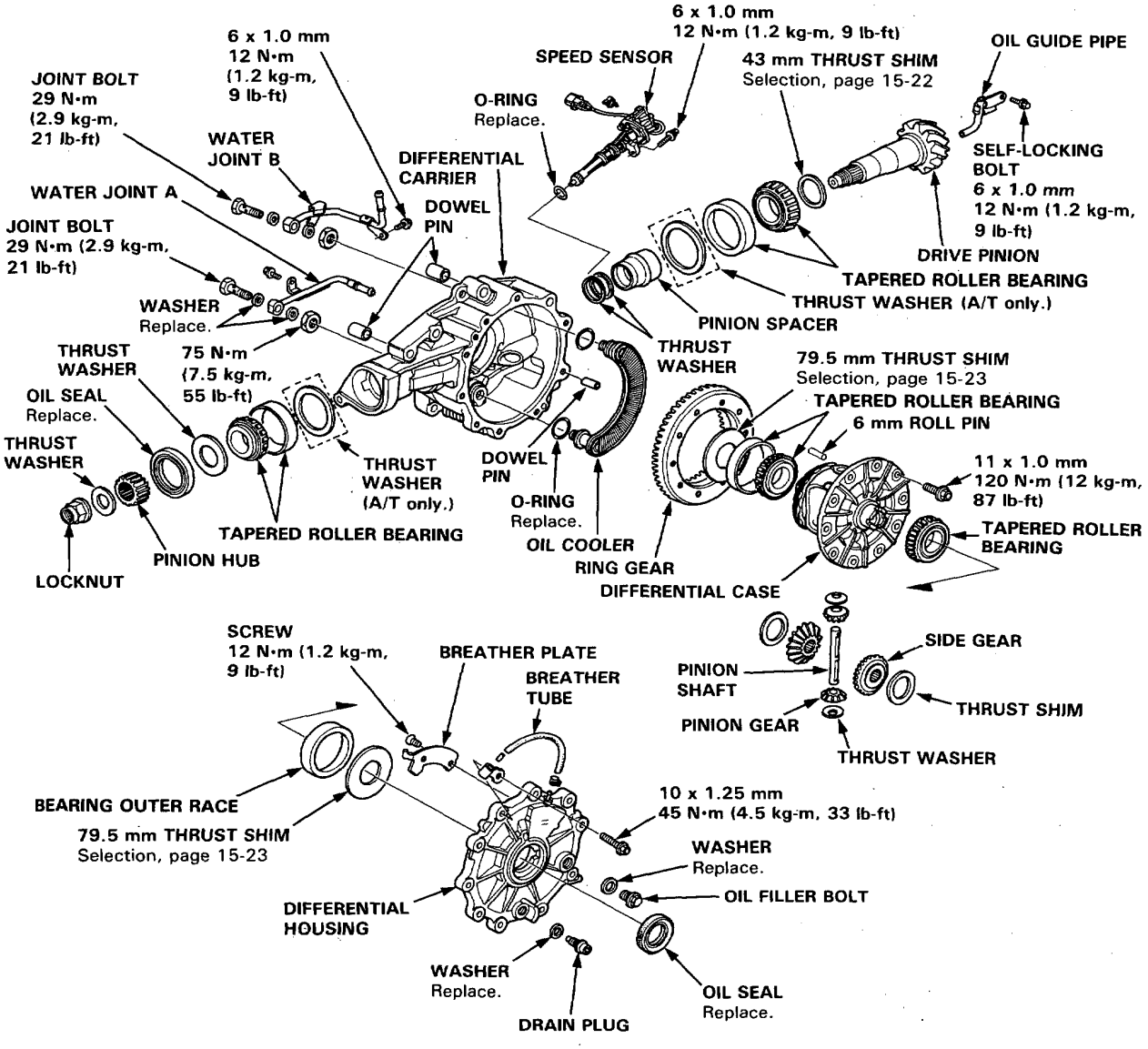

Inspection

1. Remove the oil filler plug and oil seal.

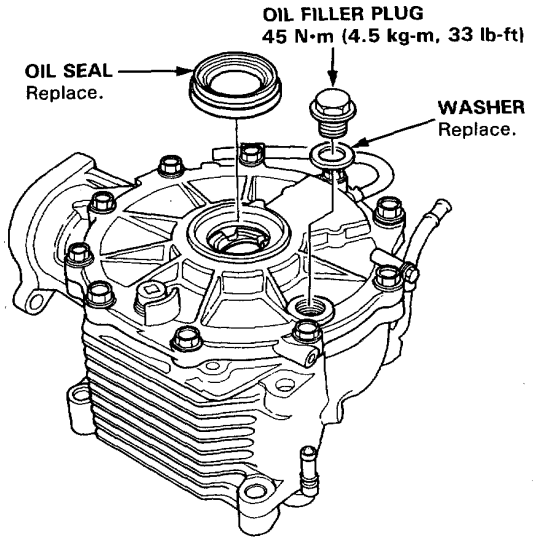

2. Hold the differential using a vice with soft jaws.

3. Align the differential gear inspection hole with the oil filler plug hole.

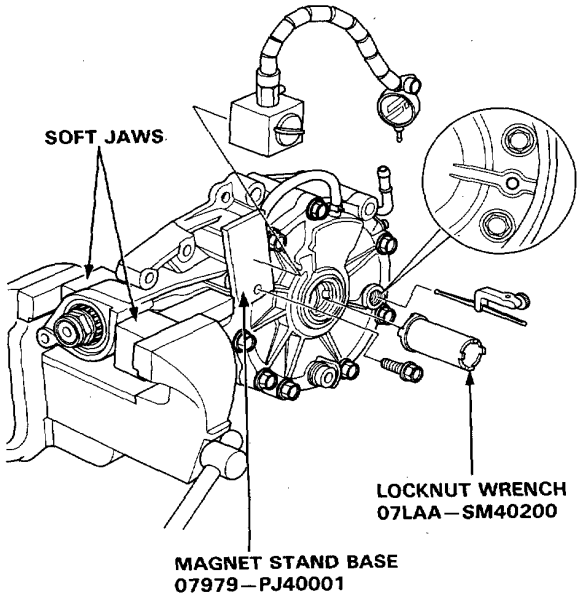

4. Measure backlash of ring gear.

Standard: 0.06–0.14 mm (0.0024–0.0055 in)

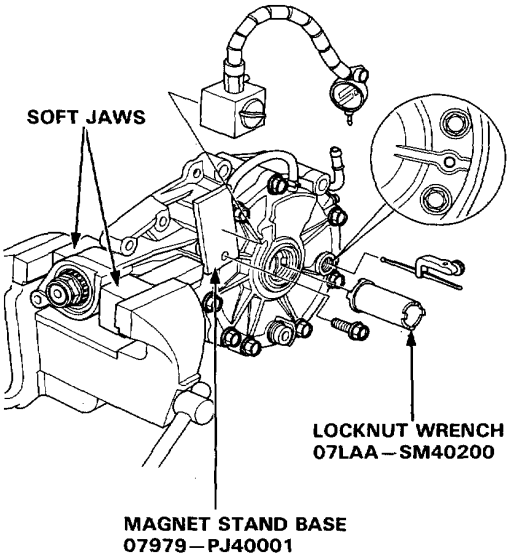

Disassembly

1. Remove the differential housing.

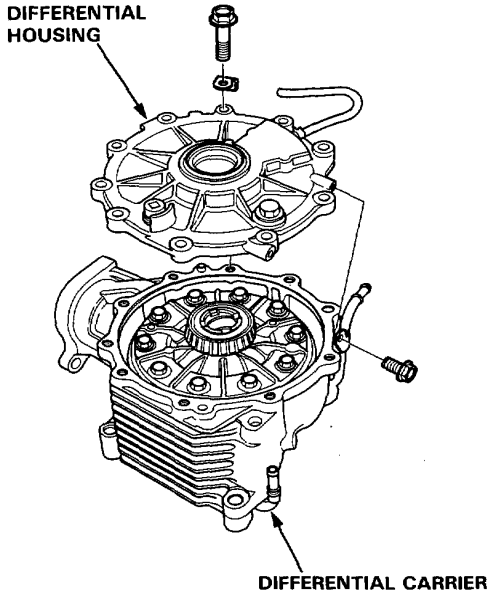

2. Remove the oil seal from the differential housing.

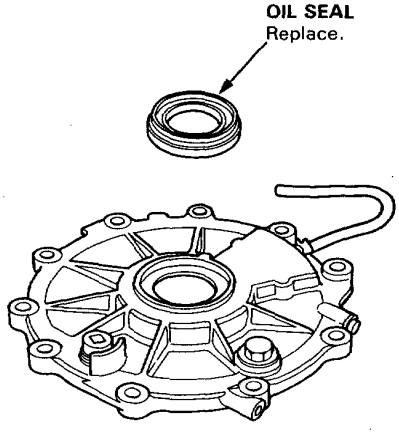

3. Remove the bearing outer race and 79.5 mm thrust shims.

M/T: Use the special tools.

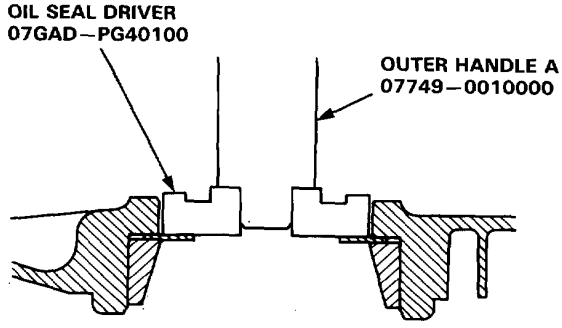

A/T: Pry up on the bearing outer race or heat the housing to about 100°C (212°F).

CAUTION: Do not reuse the thrust shim if the outer race was pried out.

NOTE:
- Let the differential cool to room temperature if the outer race was removed by heating the case before adjusting the bearing preload.
- Do not heat the differential housing in excess of 100°C (212°F).
- Replace the bearing with a new one whenever the outer race is replaced.

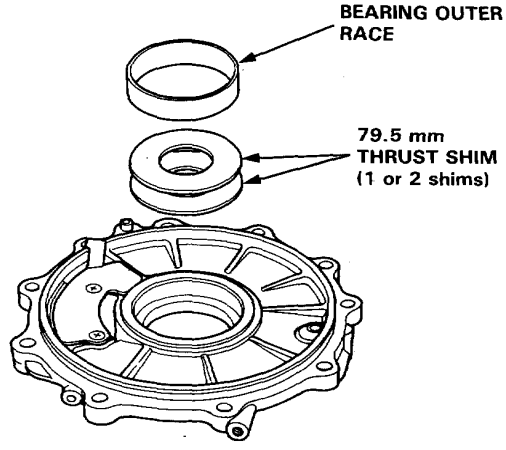

(cont'd)

Disassembly (cont'd)

4. Remove the breather plate.

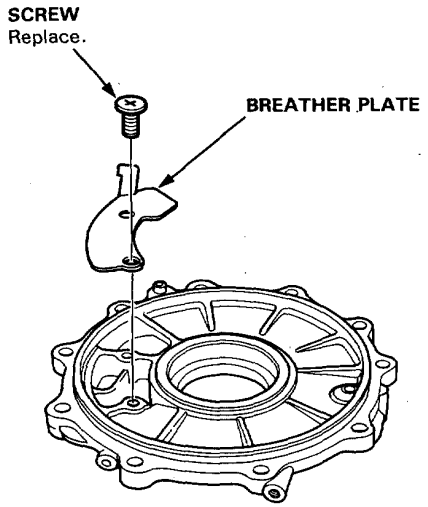

5. Remove the differential assembly from the differential carrier.

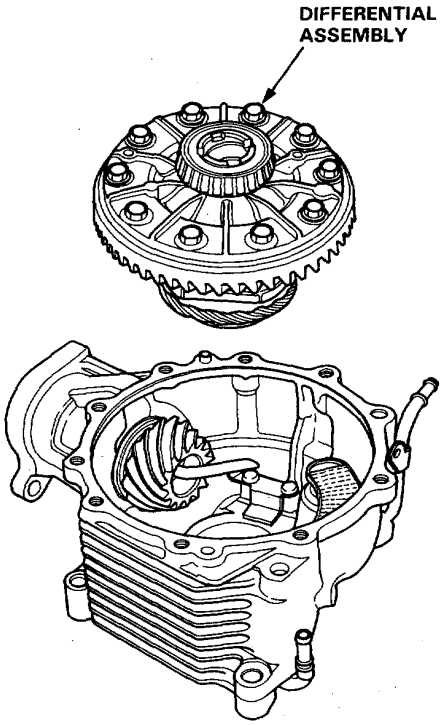

6. Remove the joint bolts, then remove the water joints A and B.

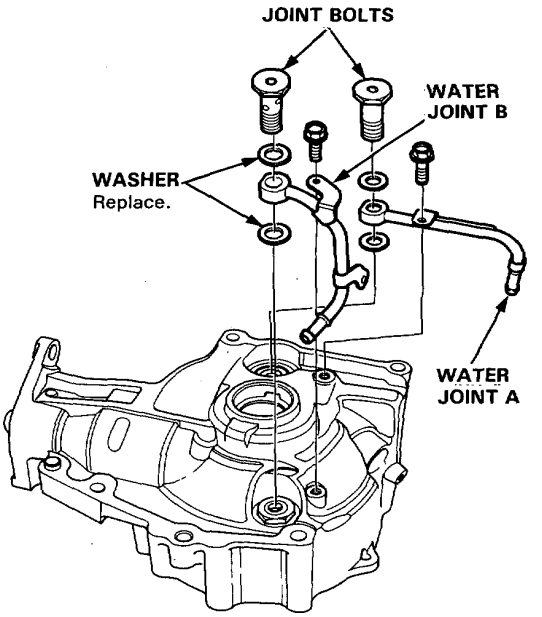

7. Remove the oil cooler and oil guide pipe.

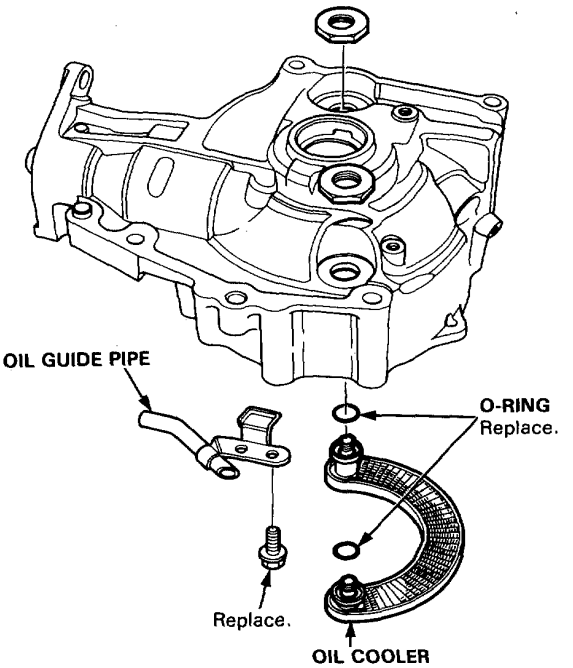

8. Hold the drive pinion using a 17 mm hex wrench as shown.

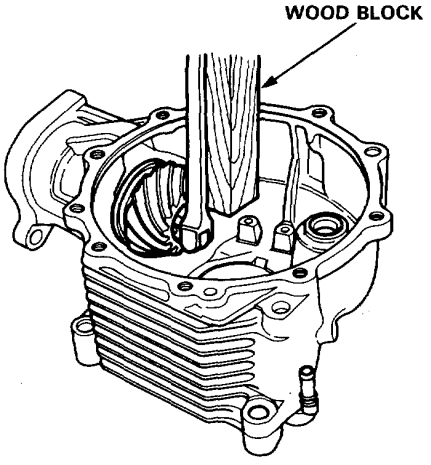

9. Raise the locknut tab from the groove of the shaft and remove the locknut, thrust washer and pinion hub.

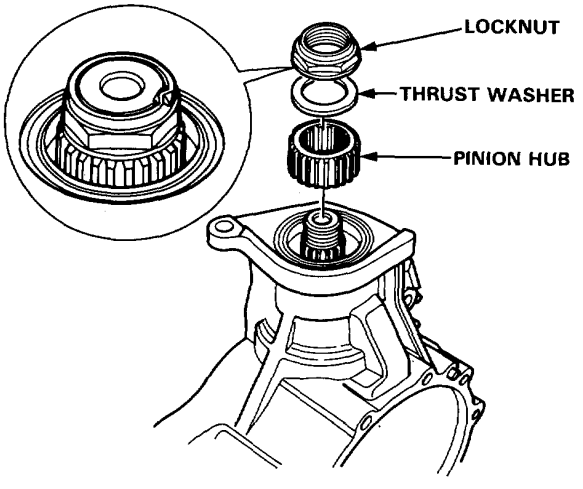

10. Remove the oil seal, then remove the thrust washer and tapered roller bearing.

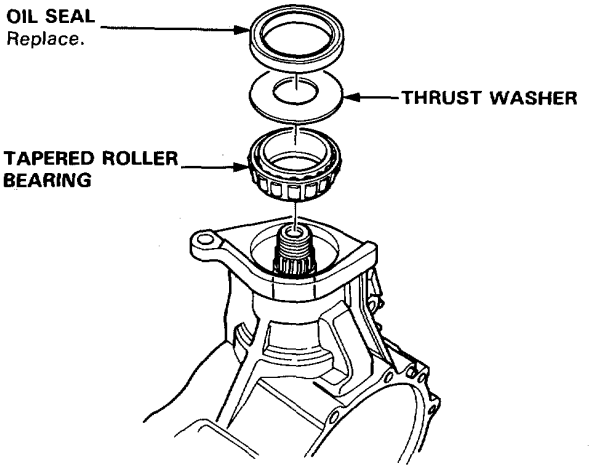

11. Remove the drive pinion, pinion spacer and thrust washer.

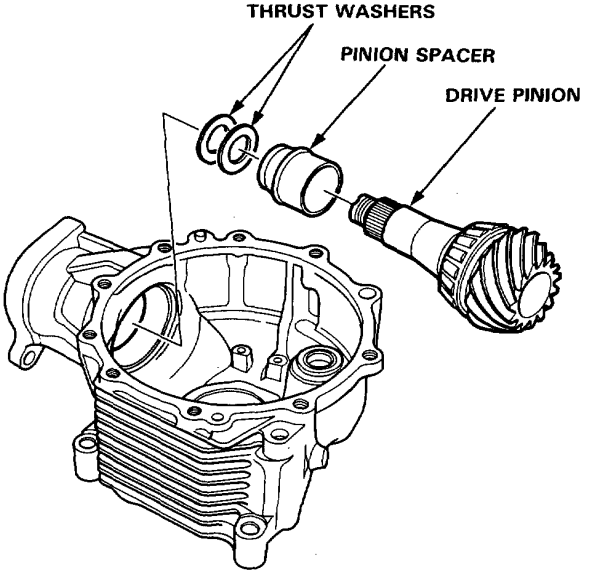

(cont'd)

Disassembly (cont'd)

12. Remove the bearing outer races, thrust washers and thrust shim.

    M/T: Use the special tools.

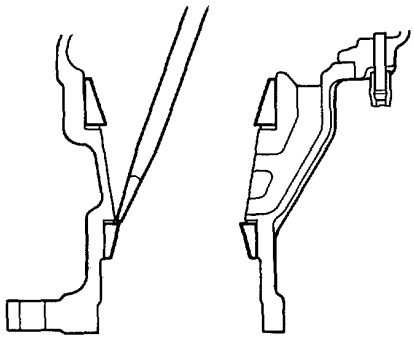

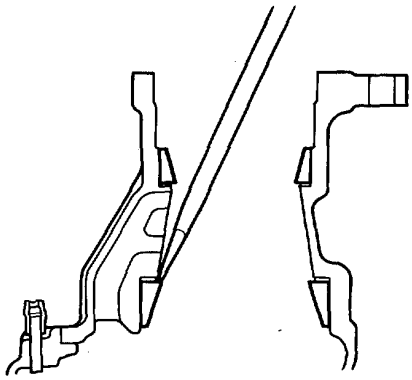

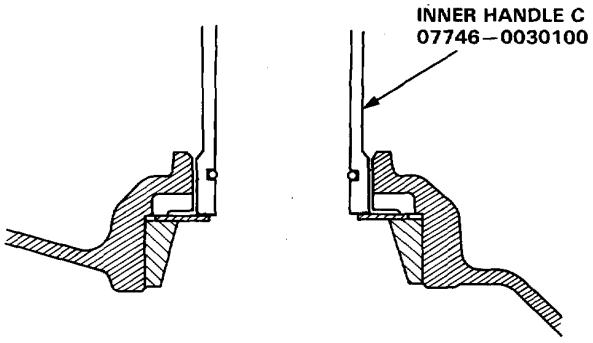

A/T: Pry up on the bearing outer race or heat the housing to about 100°C (212°F).

CAUTION: Do not reuse the thrust shim if the outer race was pried out.

NOTE:
- Let the differential cool to room temperature if the outer race was removed by heating the case before adjusting the bearing preload.
- Do not heat the differential housing in excess of 100°C (212°F).
- Replace the bearing with a new one whenever the outer race is replaced.

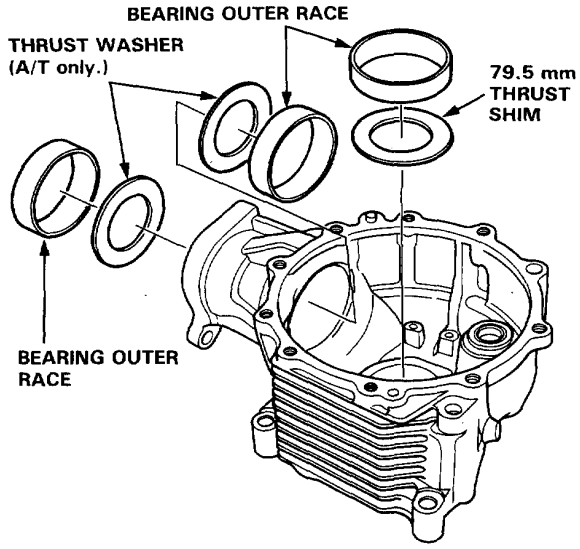

13. Remove the tapered roller bearing using a press.

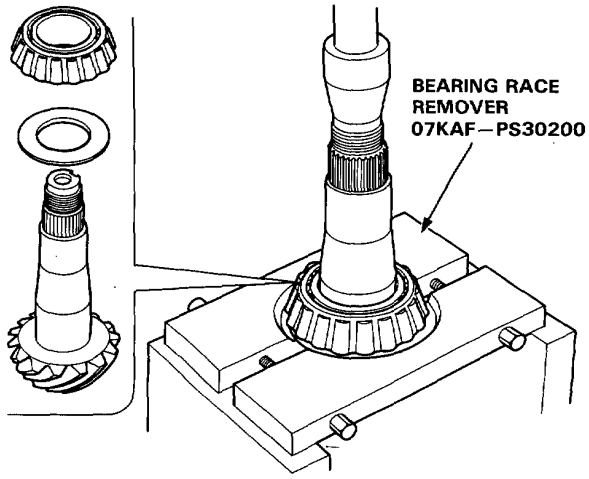

Inspection

1. Remove the tapered roller bearings.

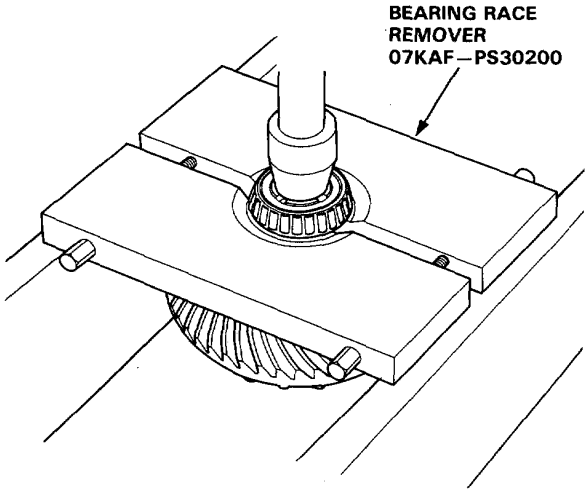

2. Install the L. driveshaft and intermediate shaft in the side gears.

3. Measure the backlash of both pinion gears.

   Standard: 0.05—0.15 mm (0.002—0.006 in)
   Service Limit: 0.3 mm (0.012 in)

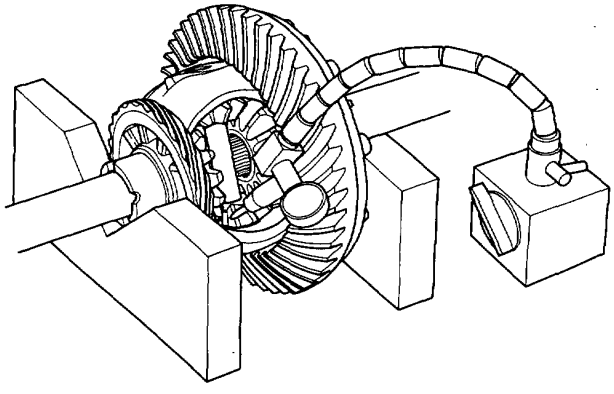

4. If the backlash is less than the service limit, replace the differential assembly.

5. Install the tapered roller bearings using the special tools as shown.

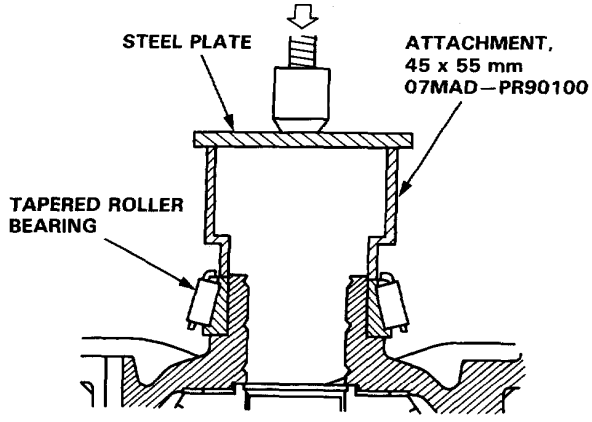

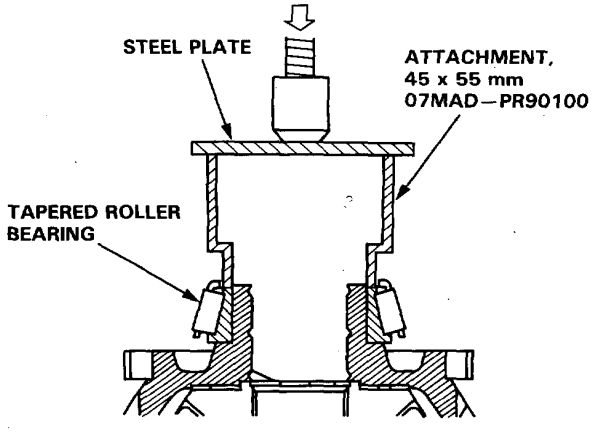

Differential Case

Disassembly

1. Remove the tapered roller bearings (page 15-13).
2. Remove the ring gear.

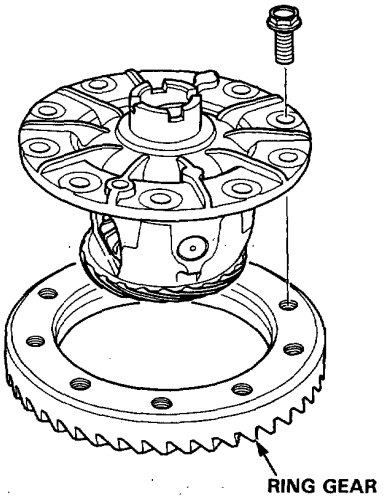

3. Drive out 6 mm roll pin with a pin driver.

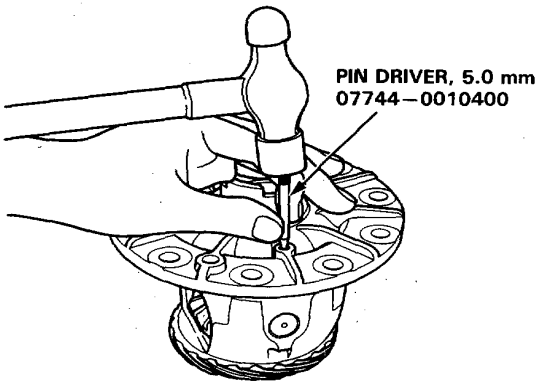

4. Remove the pinion shaft, pinion gears, side gears, thrust washers and thrust shims.

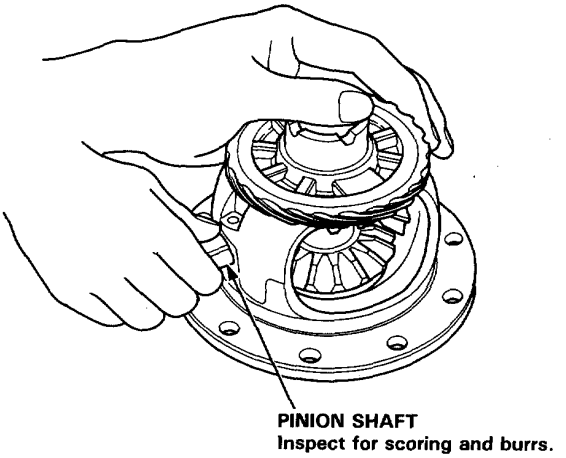

5. Wash the parts thoroughly in solvent and dry them with compressed air. Inspect all parts for wear or damage and replace any that are defective.

Reassembly

1. Install the side gears and thrust washers in the differential carrier.

   NOTE: Coat all gears with molybdenum disulfide grease on all sides.

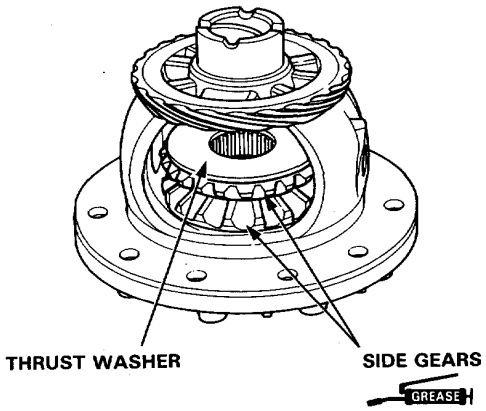

2. Set pinion gears in place exactly opposite each other in mesh with side gears, then install a pinion washer behind each one. Washers must be of equal thickness.

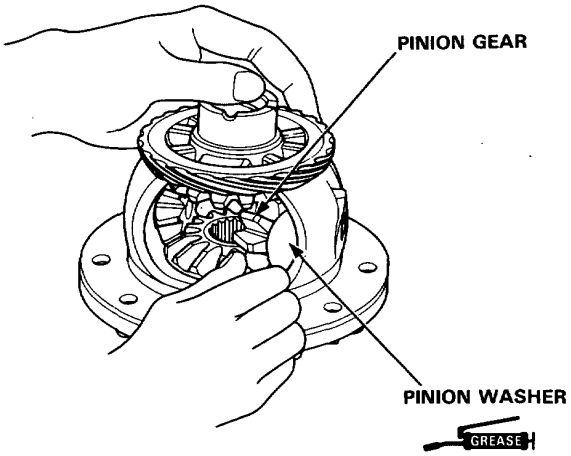

3. Rotate gears as shown until shaft holes in pinion gears line up with shaft holes in carrier.

4. Insert pinion shaft and align spring pin holes in one end with matching hole in carrier.

   NOTE: Align spring pin holes.

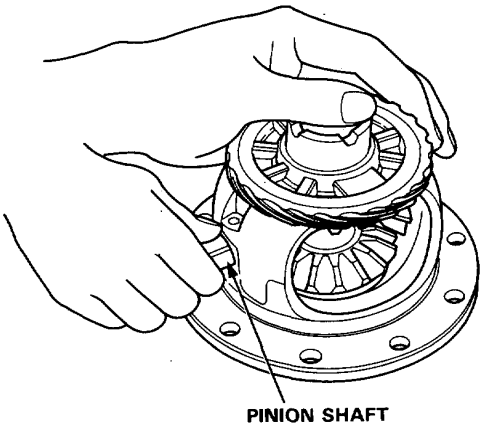

5. Drive in a new 6 mm spring pin with the pin driver.

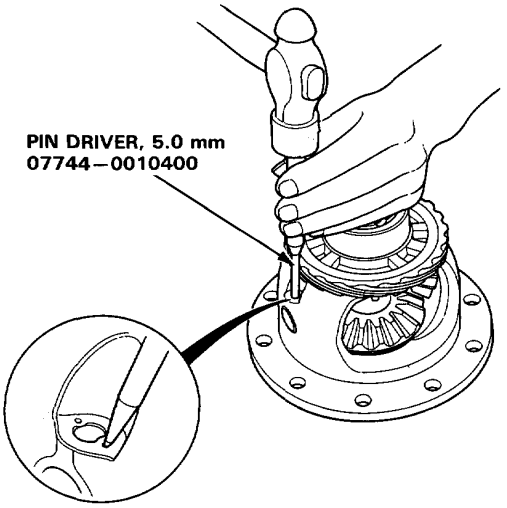

6. Check backlash of both pinion gears again. (see page 15-13)

(cont'd)

Differential Case

Reassembly (cont'd)

7. Install the ring gear.

   CAUTION: The ring gear bolts have left-hand threads.

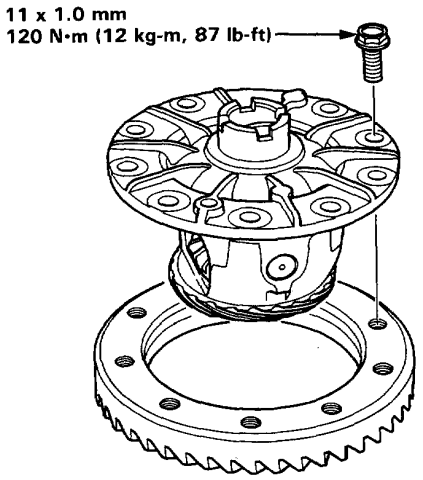

8. Install the tapered roller bearings (see page 15-13).

Differential

Reassembly

NOTE:
- If replacement is required, *always* replace the drive pinion and ring gear as a set.
- If necessary, check the height adjustment, see page 15-22.

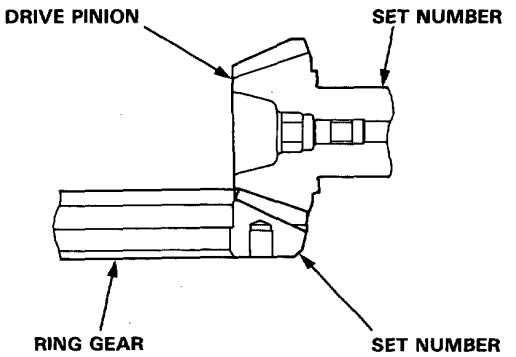

1. Install the 43 mm thrust shim and tapered roller bearing using the special tools as shown.

   NOTE: Use old spacer for bearing installation.

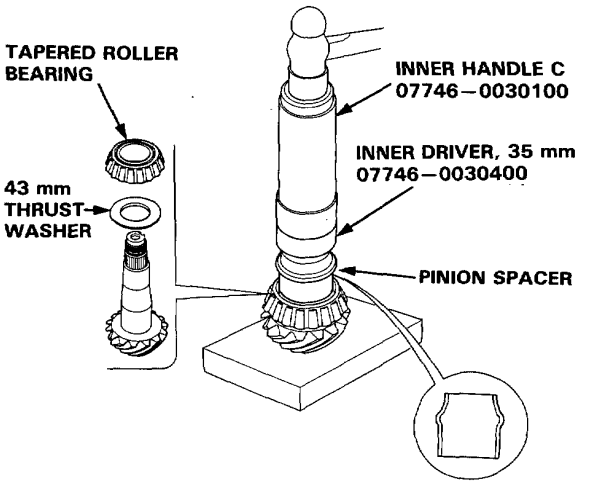

2. Install the thrust washers, thrust shim and bearing outer race using the special tools.

NOTE: Install the 79.5 mm thrust shim that was removed.

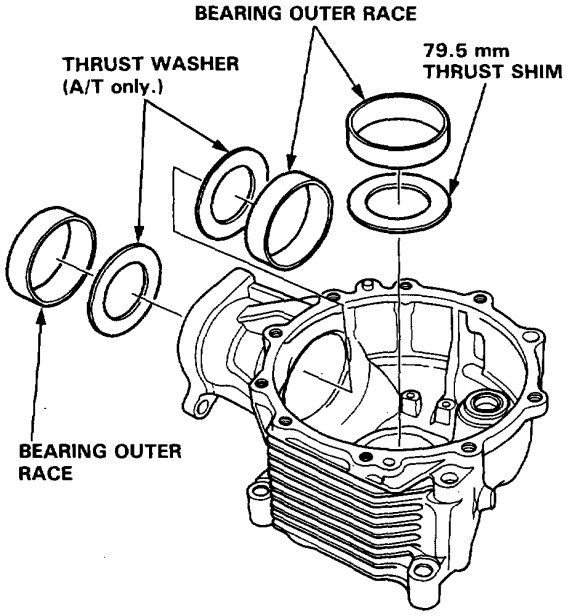

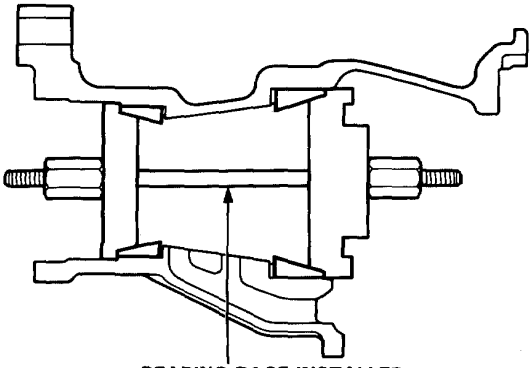

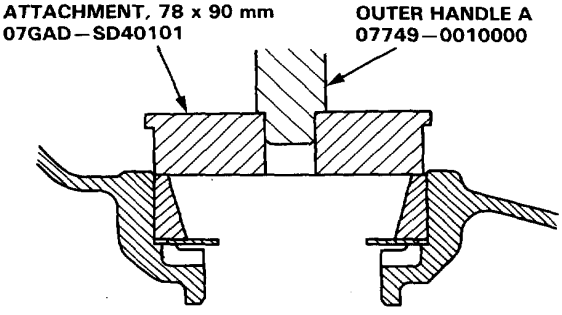

3. Install the thrust washers tapered roller bearing, pinion spacer and drive pinion.

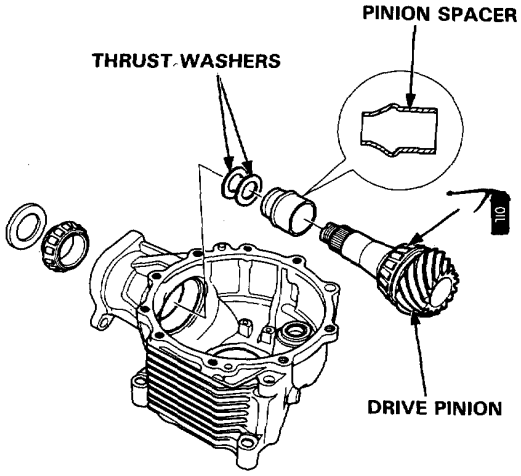

4. Hold the drive pinion using 17 mm hex wrench as shown.

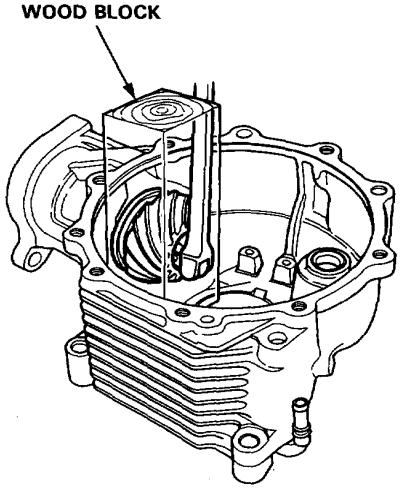

(cont'd)

Reassembly (cont'd)

5. Install the pinion hub, thrust washer and locknut.

   Apply lubricant to the locknut and drive pinion of the threads.

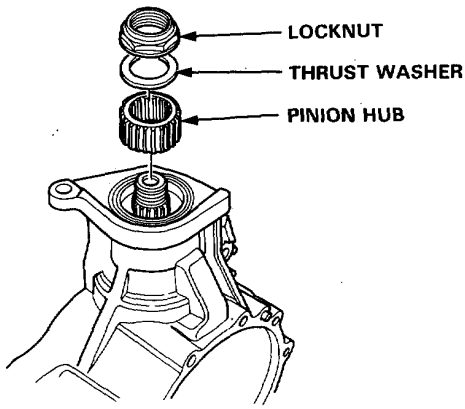

6. Measure the bearing preload.

   NOTE:
   - After adjustment of the gear tooth contact and backlash, adjust the preload.
   - Rotate the drive pinion several times to assure proper bearing contact.

   Standard:
   M/T:
   New: 0.93–1.57 N·m (9.3–15.7 kg-cm, 8.1–13 lb-in)
   Reused: 0.72–1.21 N·m (7.2–12.1 kg-cm, 6.3–10.5 lb-in)
   A/T:
   New: 1.86–2.54 N·m (18.6–25.4 kg-cm, 16.2–22 lb-in)
   Reused: 1.45–1.95 N·m (14.5–19.5 kg-cm, 12.6–16.9 lb-in)

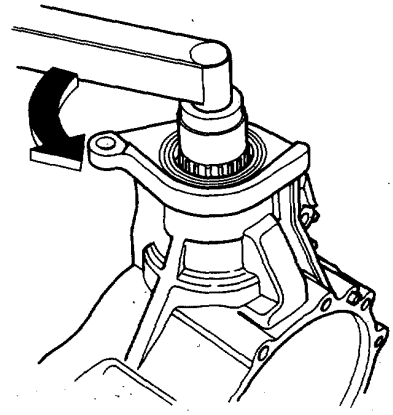

If the preload exceeds the standard, replace the distance collar.

If the bearing preload is less than the standard, adjust by tightening the locknut a little at a time, but keep the torque within 22–32 kg-m. If this is not possible, replace the distance collar.

7. Install the tapered roller bearing and thrust washer, then install the oil seal using the special tools.

   NOTE: Make sure that distance Ⓐ is correct.

   A/T:

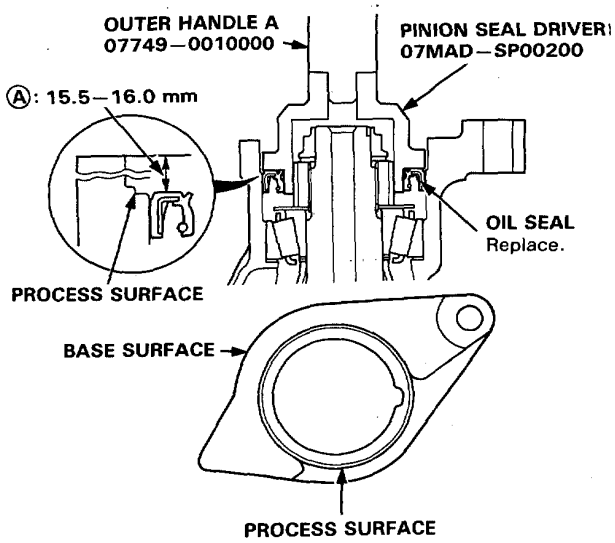

M/T:

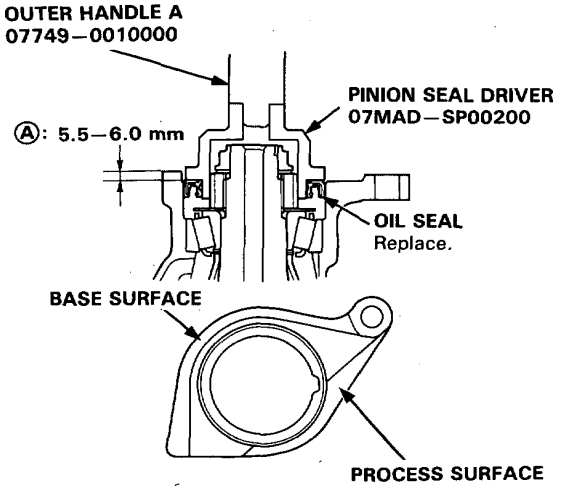

8. Install the oil cooler and oil guide pipe.

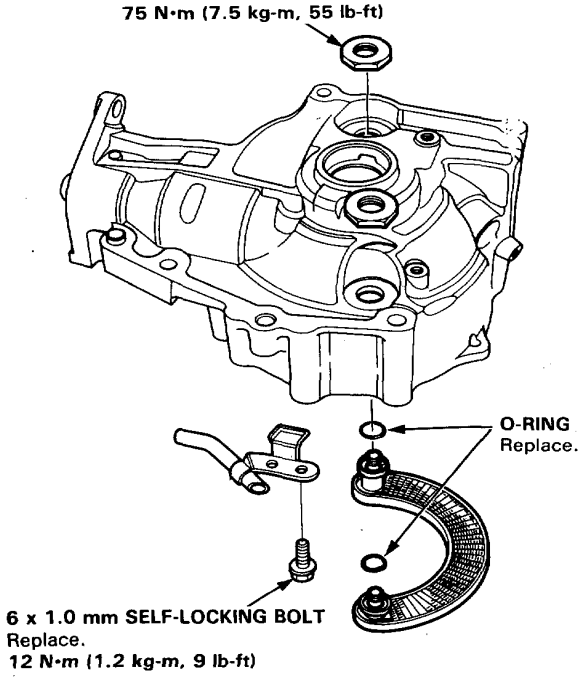

9. Install the water joints A and B, then install the joint bolts.

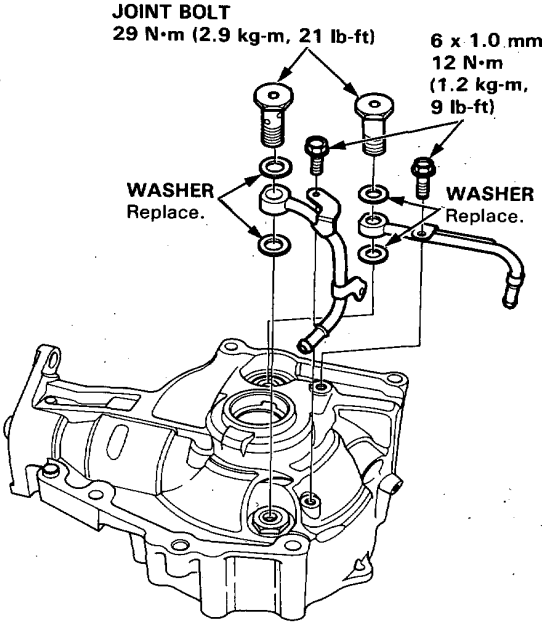

10. Install the differential assembly in the differential carrier.

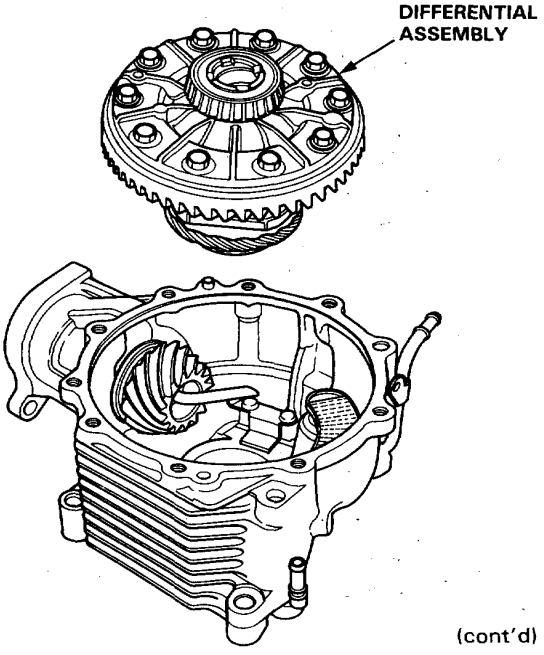

(cont'd)

Reassembly (cont'd)

11. Install the breather plate and stake the screw heads in the groove in the breather plate.

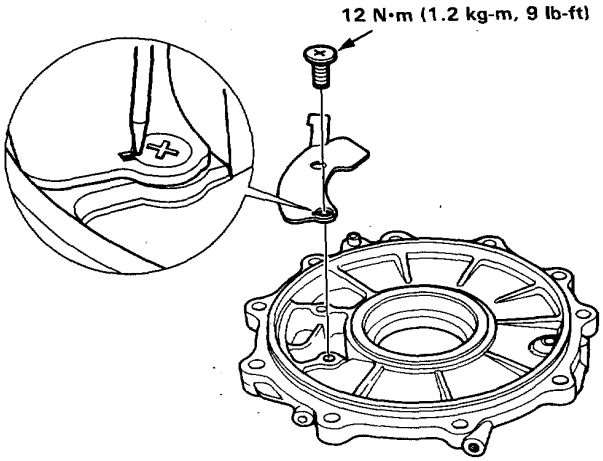

12. Install the 79.5 mm thrust shim and bearing outer race using the special tools.

NOTE: Install the 79.5 mm thrust shim that was removed.

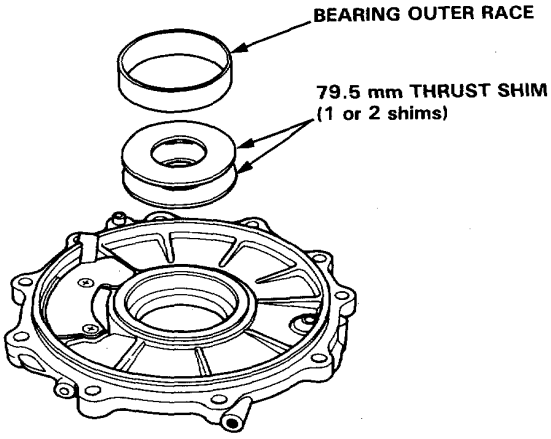

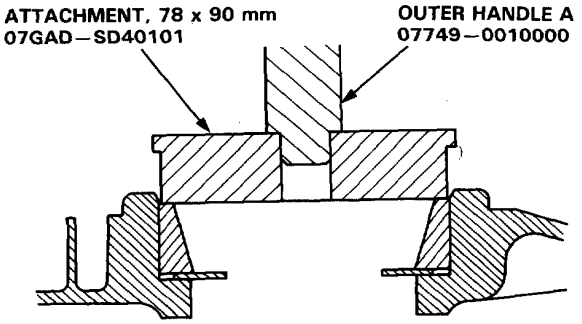

13. Install the differential housing.

NOTE: Torque the bolts in a crisscross pattern.

Torque: 45 N•m (4.5 kg-m, 33 lb-ft)

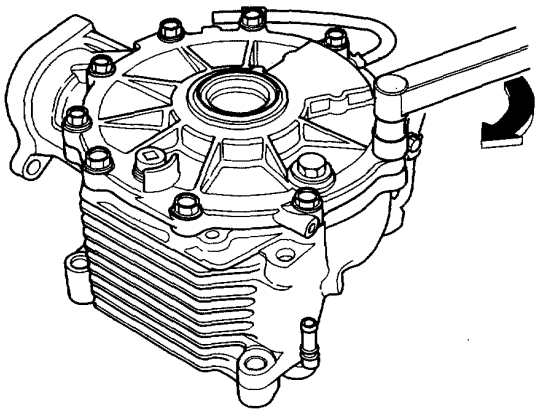

14. Hold the differential using a vise with soft jaws.

15. Align the differential gear inspection hole with the oil filler plug hole.

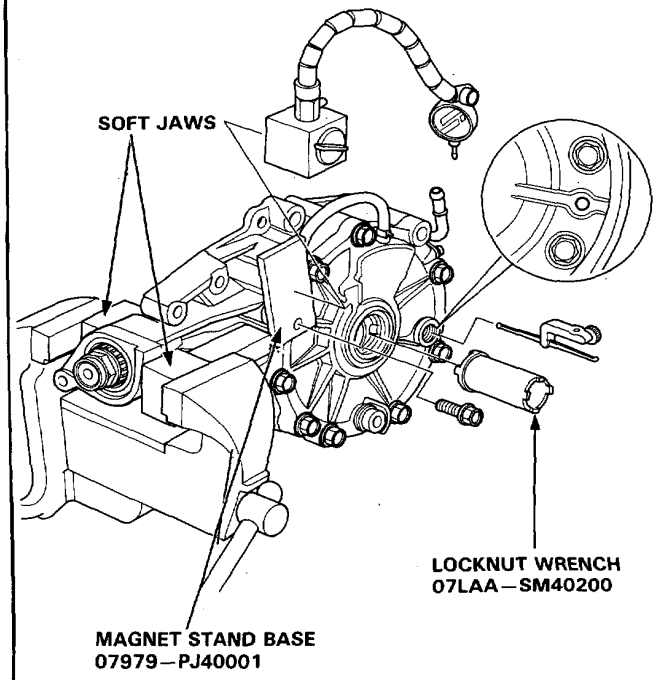

16. Measure backlash of ring gear.

Standard: 0.06–0.14 mm (0.0024–0.0055 in)

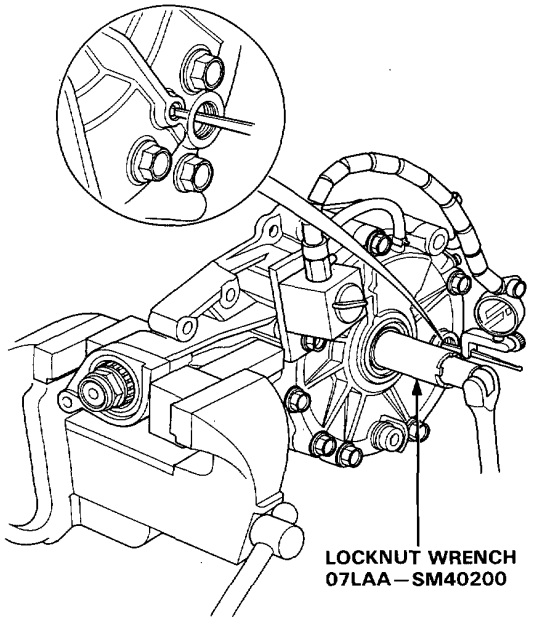

17. If the backlash is less than the standard, adjust the ring gear backlash (See page 15-24).

18. Check the contact between the ring gear and drive pinion.

NOTE:
- Paint the ring gear teeth lightly and evenly with Prussian Blue (on both sides of each tooth).
- Rotate the pinion one full turn forward and backward while applying pressure to the ring gear.

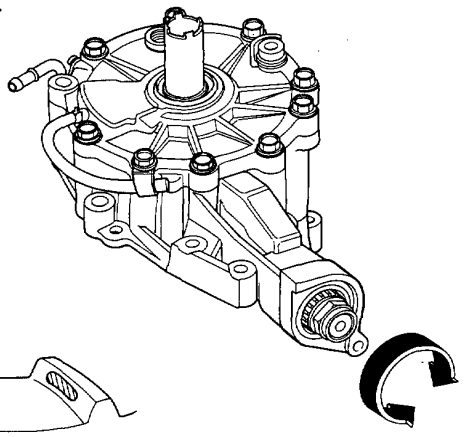

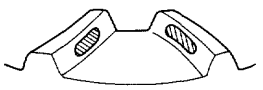

CORRECT TOOTH CONTACT

19. If the tooth contact is not correct, adjust the ring gear tooth contact (see page 15-23).

20. Measure the total preload.

NOTE:
- Rotate the drive pinion several times to assure proper bearing contact.
- Apply lubricant to the tapered roller bearings.

Standard:

M/T:

New bearings:
1.48–2.35 N·m
(14.8–23.5 kg-cm, 12.8–20.3 lb-in)

Reused bearings:
1.37–2.00 N·m
(13.7–20.0 kg-cm, 11.9–17.3 lb-in)

Replaced only the *bearing on the ring gear* side:
1.27–1.99 N·m
(12.7–19.9 kg-cm, 11.1–17.2 lb-in)

Replaced only the bearing on the drive pinion side:
1.58–2.36 N·m
(15.8–23.6 kg-cm, 13.8–20.4 lb-in)

A/T:

New bearings:
2.92–3.82 N·m
(29.2–38.2 kg-cm, 25.4–33.1 lb-in)

Reused bearings:
2.41–3.04 N·m
(24.1–30.4 kg-cm, 21.0–26.3 lb-in)

Replaced only the bearing on the ring gear side:
2.51–3.23 N·m
(25.1–32.3 kg-cm, 21.8–28.0 lb-in)

Replaced only the bearing on the drive pinion side:
2.82–3.63 N·m
(28.2–36.3 kg-cm, 24.5–31.5 lb-in)

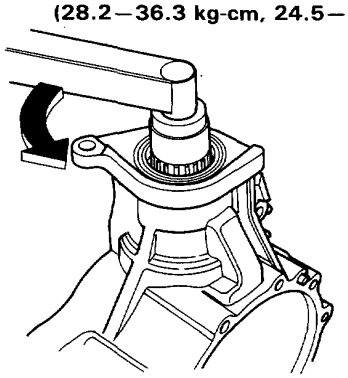

If the preload exceeds the standard, adjust the ring gear backlash (See page 15-24).

(cont'd)

Differential

Reassembly (cont'd)

21. Install the oil seal using the special tools.

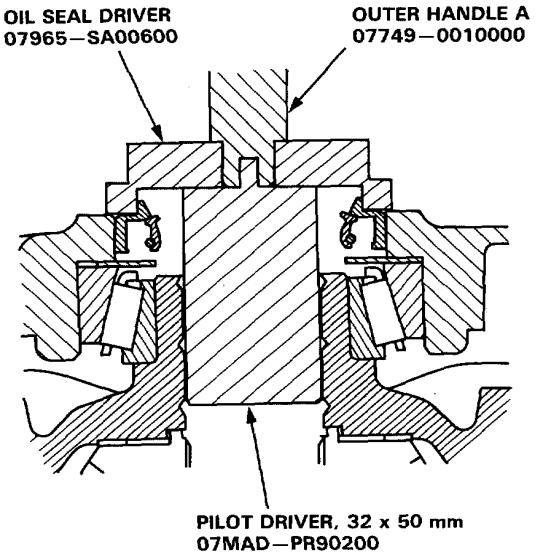

22. Stake the locknut tab into the groove.

Drive Pinion

Height Adjustment

Select the proper shim follows:

NOTE: If replacement is required, always replace the drive pinion and ring gear as a set.

To select the proper shim, you need to calculate the difference in size between the old shim and the new pinion.

The number on each pinion is the plus (+) or minus (−) tolerance in hundredth's of a millimeter. So, a pinion with +2 is 0.02 mm large and a pinion with −2 is 0.02 mm small.

1. If the number on the old pinion is a plus (+), add it to the old shim thickness.
   If it is a minus (−), subtract it from the old shim thickness.

2. If the number on the new pinion is a plus (+), subtract it from the number you got in step 1. If it is a minus (−), add it to the step 1 number.

3. Select the shim that is closest (but not more than) the final number you got from steps 1 and 2.

Example 1:

Old shim	2.00 mm thickness
Old pinion	+2 (0.02 mm)
New pinion	−1 (−0.01 mm)

2.00 + 0.02 + 0.01 = 2.03

Select the 2.03 mm new shim.

Example 2:

Old shim:	1.70 mm thickness
Old pinion:	−1 (−0.01 mm)
New pinion:	−2 (−0.02 mm)

1.70 − 0.01 + 0.02 = 1.71

Select the 1.70 mm new shim.

43 mm THRUST SHIM

	Part Number	Thickness
A	41410–PY4–000	1.64 mm (0.0646 in)
B	41411–PY4–000	1.67 mm (0.0657 in)
C	41412–PY4–000	1.70 mm (0.0669 in)
D	41413–PY4–000	1.73 mm (0.0681 in)
E	41414–PY4–000	1.76 mm (0.0693 in)
F	41415–PY4–000	1.79 mm (0.0705 in)
G	41416–PY4–000	1.82 mm (0.0717 in)
H	41417–PY4–000	1.85 mm (0.0728 in)
I	41418–PY4–000	1.88 mm (0.0740 in)
J	41419–PY4–000	1.91 mm (0.0752 in)
K	41420–PY4–000	1.94 mm (0.0764 in)
L	41421–PY4–000	1.97 mm (0.0776 in)
M	41422–PY4–000	2.00 mm (0.0787 in)
N	41423–PY4–000	2.03 mm (0.0799 in)
O	41424–PY4–000	2.06 mm (0.0811 in)
P	41425–PY4–000	2.09 mm (0.0823 in)
Q	41426–PY4–000	2.12 mm (0.0835 in)
R	41427–PY4–000	2.15 mm (0.0846 in)
S	41428–PY4–000	2.18 mm (0.0858 in)
T	41429–PY4–000	2.21 mm (0.0870 in)
U	41430–PY4–000	2.24 mm (0.0882 in)
V	41431–PY4–000	2.27 mm (0.0894 in)

Adjustment

1) CORRECT TOOTH CONTACT

2) TOE CONTACT
- Use a thinner pinion shim to move the drive pinion away from the ring gear.

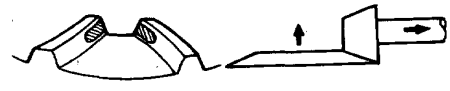

3) HEEL CONTACT
- Use a thicker pinion shim to move the drive pinion toward the ring gear.

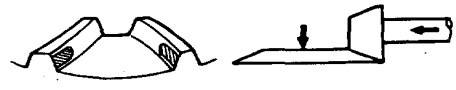

4) FLANK CONTACT
- Use a thinner side bearing shim on the drive pinion side and a thicker one on the ring gear side to move the ring gear toward the drive pinion.

NOTE: Recheck backlash after replacing the side bearing shims. If out of specification, adjust as described under TOE CONTACT.

5) FACE CONTACT
- Use thicker side bearing shim on the drive pinion side and a thinner one on the ring gear side to move the ring gear away from the drive pinion.

NOTE: Recheck backlash after, replacing the side bearing shims.
If out of specification, adjust as described under HEEL CONTACT.

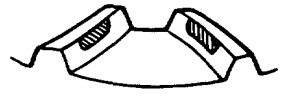

Ring Gear Backlash

Adjustment

1. If the backlash exceeds the standard, correct by decreasing the shim thickness on one side and increasing the thickness of the other shim the same amount.

   NOTE:
   - The total thickness of both shims must still equal the total thickness the original shims.
   - If there is too much backlash, move the ring gear toward the drive pinion. If there is not enough backlash, move the ring gear away from the drive pinion.

   Standard: 0.06–0.14 mm (0.0024–0.0055 in)

79.5 mm THRUST SHIM

	Part Number	Thickness
A	41460–PY4–000	0.66 mm (0.0260 in)
B	41461–PY4–000	1.17 mm (0.0461 in)
C	41462–PY4–000	1.20 mm (0.0472 in)
D	41463–PY4–000	1.23 mm (0.0484 in)
E	41464–PY4–000	1.26 mm (0.0496 in)
F	41465–PY4–000	1.29 mm (0.0508 in)
G	41466–PY4–000	1.32 mm (0.0520 in)
H	41467–PY4–000	1.35 mm (0.0531 in)
I	41468–PY4–000	1.38 mm (0.0543 in)
J	41469–PY4–000	1.41 mm (0.0555 in)
K	41470–PY4–000	1.44 mm (0.0567 in)
L	41471–PY4–000	1.47 mm (0.0579 in)
M	41472–PY4–000	1.50 mm (0.0591 in)
N	41473–PY4–000	1.53 mm (0.0602 in)
O	41474–PY4–000	1.56 mm (0.0614 in)
P	41475–PY4–000	1.59 mm (0.0626 in)
Q	41476–PY4–000	1.62 mm (0.0638 in)
R	41477–PY4–000	1.65 mm (0.0650 in)
S	41478–PY4–000	1.68 mm (0.0661 in)
T	41479–PY4–000	1.71 mm (0.0673 in)
U	41480–PY4–000	1.74 mm (0.0685 in)
V	41481–PY4–000	1.77 mm (0.0697 in)
W	41482–PY4–000	1.80 mm (0.0709 in)
X	41483–PY4–000	1.83 mm (0.0720 in)

Driveshafts

Special Tools 16-2

Driveshafts
- Removal 16-3
- Disassembly 16-4
- Disassembly/Inspection 16-5
- Reassembly 16-6

Intermediate Shaft
- Replacement 16-9
- Disassembly 16-9
- Index/Inspection 16-11
- Reassembly 16-12

Special Tools

Ref. No.	Tool Number	Description	Qty	Page Reference
①	07GAD–PH70200	Oil Seal Driver	1	16-12
②	07GAF–SD40700	Hub Dis Assembly Base	2	16-10,16-13
③	07MAC–SL00100	Ball Joint Remover, 32 mm	1	16-3
④	07MAD–SP00100	Oil Seal Driver Attachment	1	16-13
⑤	07746–0010300	Attachment, 42 x 47 mm	1	16-10
⑥	07746–0010400	Attachment, 52 x 55 mm	1	16-12
⑦	07746–0030100	Driver, 40 mm I.D.	1	16-12
⑧	07749–0010000	Driver	1	16-10, 16-12, 16-13

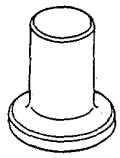

①

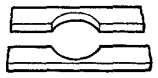

②

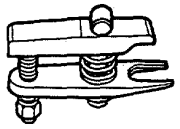

③

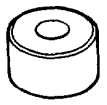

④

⑤

⑥

⑦

⑧

Removal

INSPECTION

Driveshaft Boot
Check the boots on the driveshaft for cracks, damage, leaking grease or loose boot bands.
If any damage is found, replace the boot.

Spline Looseness
Turn the driveshaft by hand and make sure the spline and joint are not excessively loose.
If damage is found, replace the inboard joint.

Twisted or Cracked
Make sure the driveshaft is not twisted or cracked. Replace if necessary.

1. Raise the car and place safety stands in the proper locations (see section 1).

2. Remove the front wheels.

   NOTE: Before installing the wheel, clean the mating surfaces of the brake disc and inside of the wheel.

3. Drain the differential oil.

   NOTE: It is not necessary to drain the differential oil when the left driveshaft is removed.

4. Raise the locking tab on the spindle nut and loosen it.

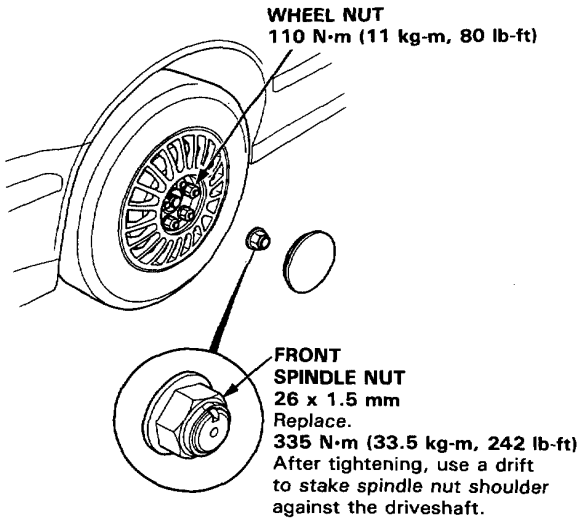

5. Remove the damper fork nut and damper pinch bolt.

6. Remove the damper fork.

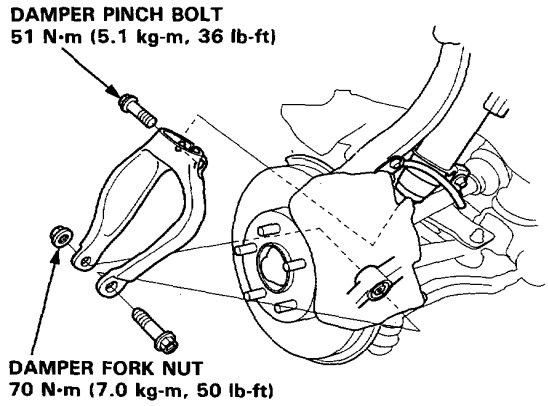

7. Remove the cotter pin from the lower arm ball joint castle nut and remove the nut.

8. Install the 14 mm hex nut on the ball joint. Be sure that the 14 mm hex nut is flush with the ball joint pin end, or the threaded section of the ball joint pin might be damaged by the ball joint remover.

   NOTE: Use the ball joint remover, 32 mm (07MAC–SL00100) as shown on page 18-12 to separate the ball joint and lower arm.

9. Position the special tool between the knuckle and lower arm as shown, then separate the lower arm.

   CAUTION:
   - **Be careful not to damage the ball joint boot.**
   - **Torque the castle nut to the lower torque specification, then tighten it only far enough to align the slot with the pin hole. Do not align the nut by loosening.**

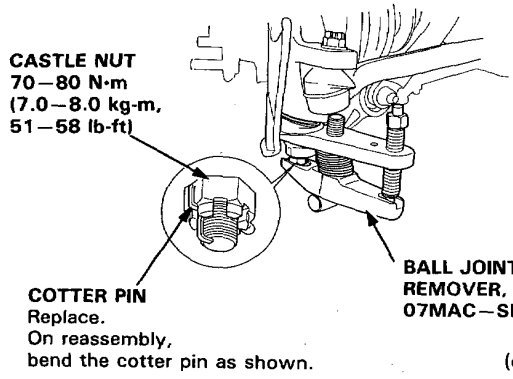

(cont'd)

Removal (cont'd)

10. Pry the driveshaft assembly with a screwdriver as shown to force the set ring past the groove.

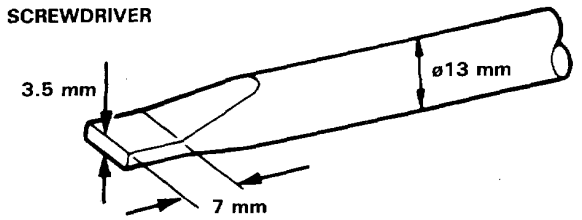

11. Pull the inboard joint and remove the driveshaft and CV joint from the differential case or intermediate shaft as an assembly.

CAUTION:
- **Do not pull on the driveshaft, as the CV joint may come apart.**
- **Use care when prying out the assembly and pull it straight to avoid damaging the differential oil seal or intermediate shaft dust seal.**

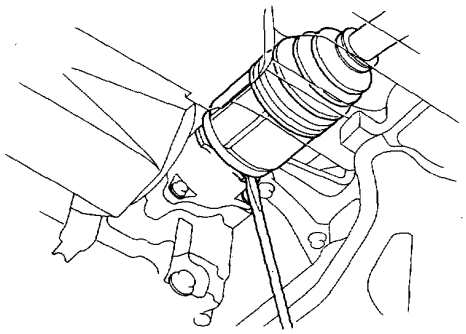

12. Remove the spindle nut.

13. Pull the knuckle outward and remove the driveshaft outboard joint from the front wheel hub using a plastic hammer.

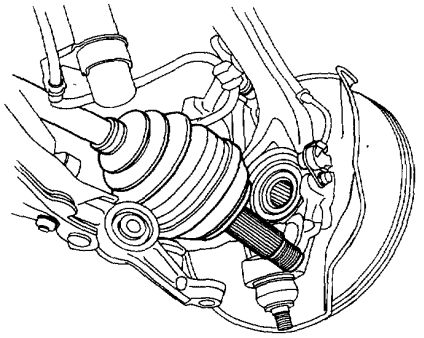

14. Installation is the reverse order of removal.
15. After installing the driveshafts, adjust the wheel alignment (see section 18).

Disassembly

1. To remove the boot band, pry up the locking tabs with a screwdriver and raise the end of the band.

   NOTE: Carefully clamp the driveshaft in a vise with soft jaws.

   CAUTION: Take care not to damage the boots.

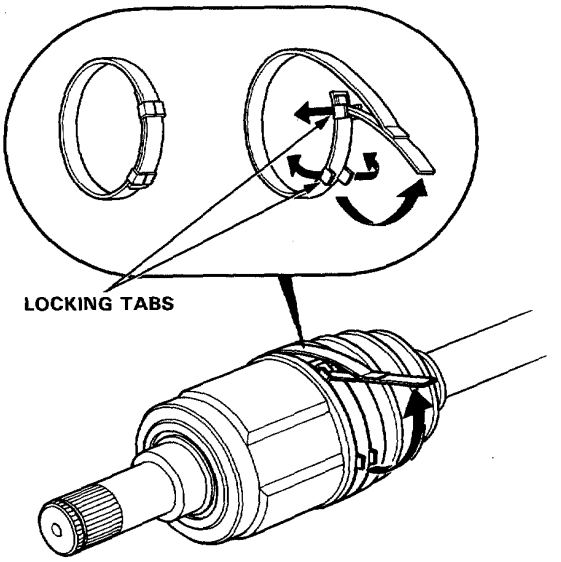

2. Remove the inboard joint and rollers.

3. Remove the stopper ring, then remove the spider with a bearing remover.

   NOTE: Before disassembly, mark the spider and driveshaft so they can be reinstalled in their original positions.

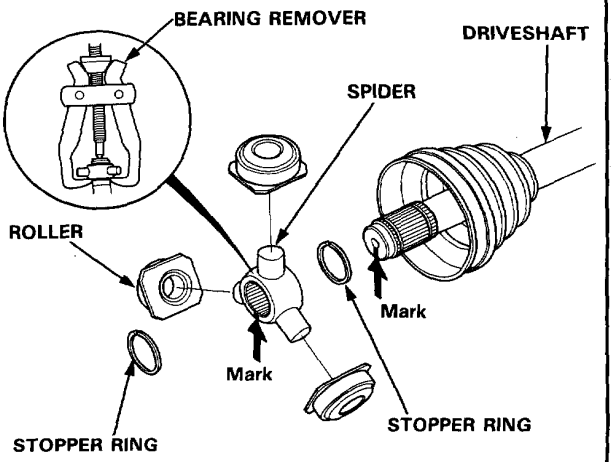

Disassembly/Inspection

NOTE:
- Mark the rollers and roller grooves during disassembly to ensure proper positioning during reassembly.
- Before disassembly, mark the spider and driveshaft so they can be reinstalled in their original positions.
- The inboard joint must be removed to replace the boots.

GREASE Thoroughly pack the inboard joint and both joint boots with joint grease included in the new driveshaft set.

Grease Quantity:

Inboard Joint	130–140 g (4.6–4.9 oz)
Outboard Joint	140–150 g (4.9–5.3 oz)

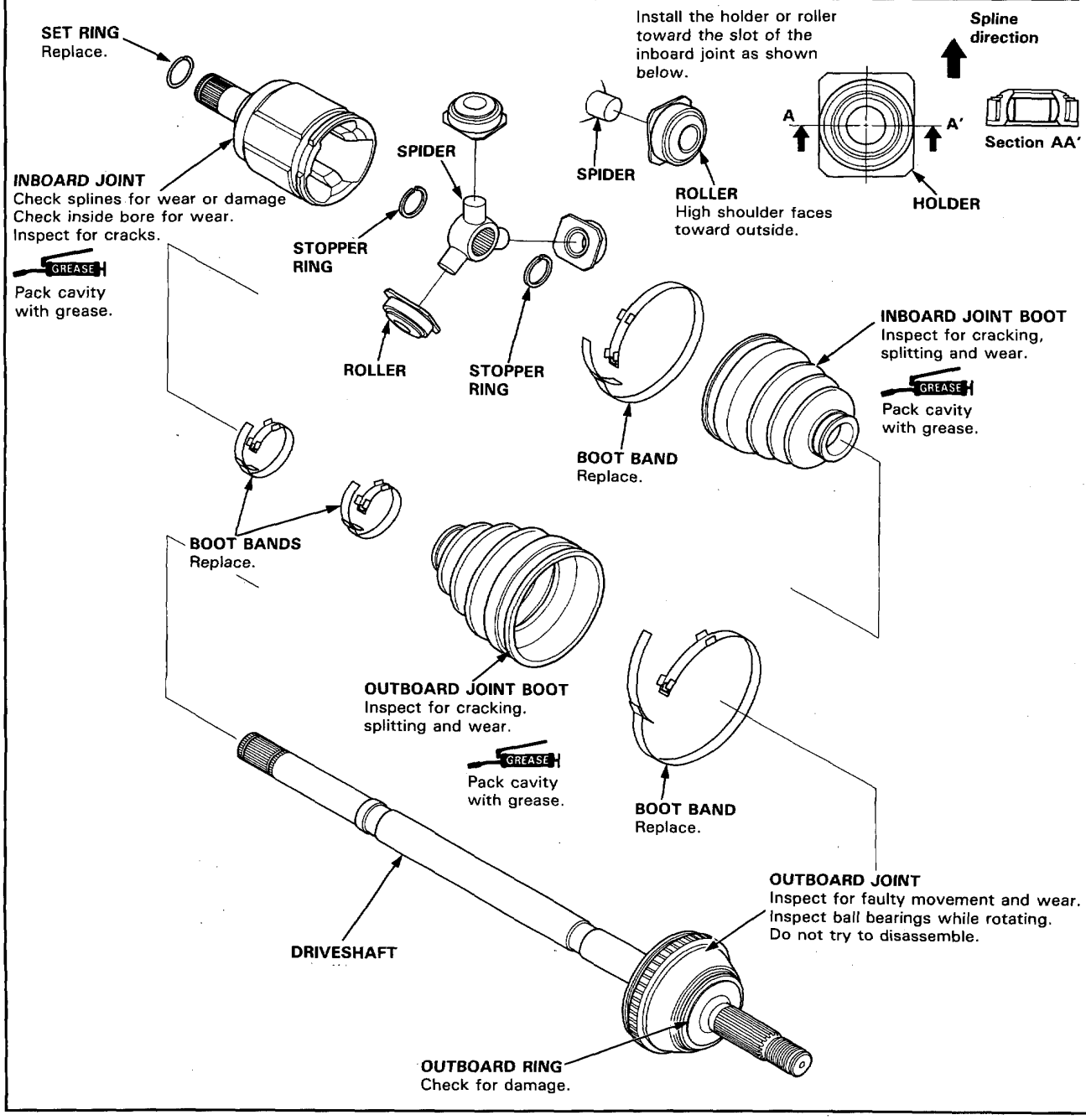

Reassembly

1. Wrap the splines with vinyl tape to prevent damage to the boots.

2. Install the outboard boot and inboard boot to the driveshaft, then remove the vinyl tape.

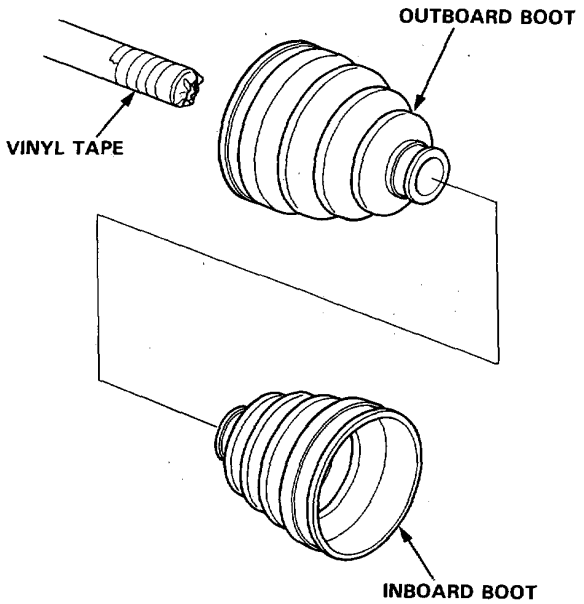

3. Install the stopper ring onto the driveshaft groove.

4. Install the spider on the driveshaft by aligning the marks on the spider and end of the driveshaft.

5. Fit the stopper ring onto the driveshaft groove.

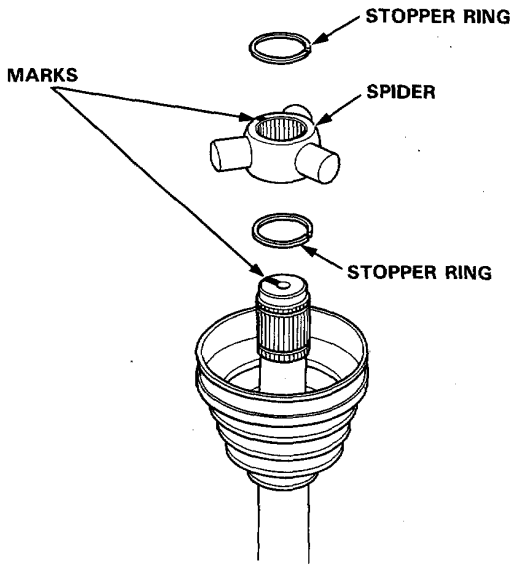

6. Fit the rollers to the spider with their high shoulders facing outward.

CAUTION:
- **Reinstall the rollers to their original positions on the spider.**
- **To prevent it from falling off, hold the driveshaft assembly so the spider and roller point up.**

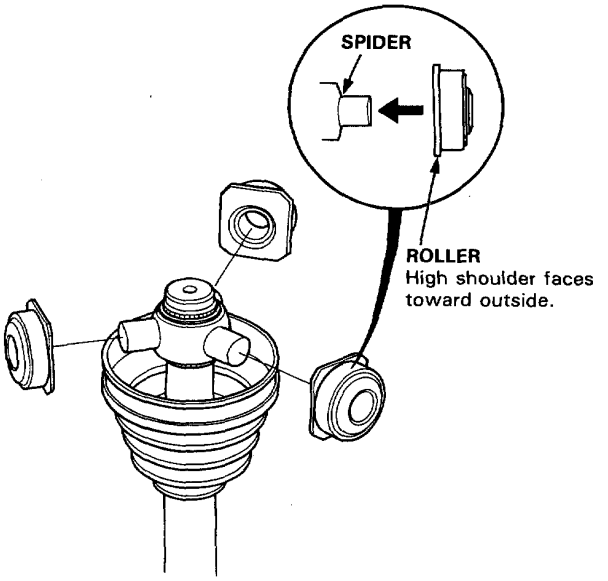

7. Pack the joint with joint grease included in the new driveshaft set.

Grease Quantity: 130—140 g (4.6—4.9 oz)

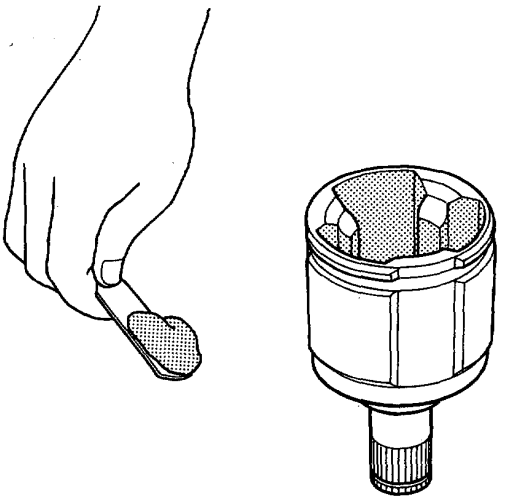

8. Fit the inboard joint onto the driveshaft.

CAUTION: To prevent it from falling off, hold the driveshaft assembly so the inboard joint points up.

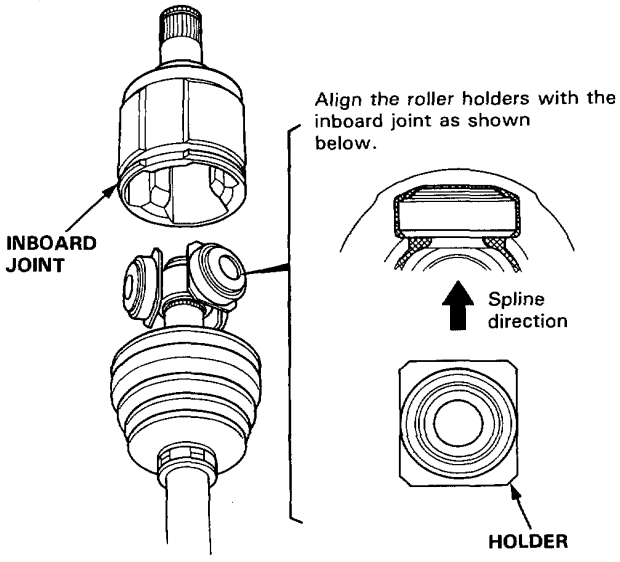

9. Pack the joint with joint grease included in the new driveshaft set.

Grease Quantity: 140—150 g (4.9—5.3 oz)

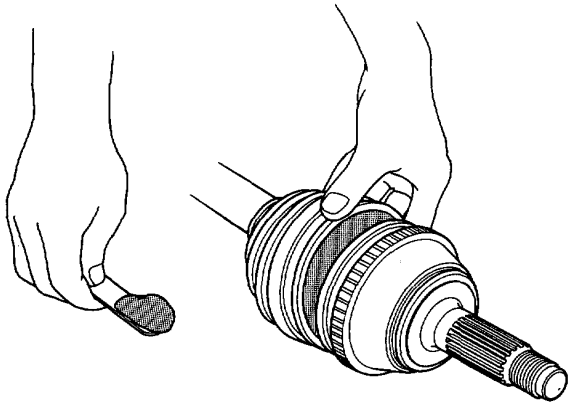

10. Adjust the length of the driveshafts to the figure below, then adjust the boots to halfway between full compression and extension.

NOTE: The ends of boots seat in the groove of the driveshaft and joint.

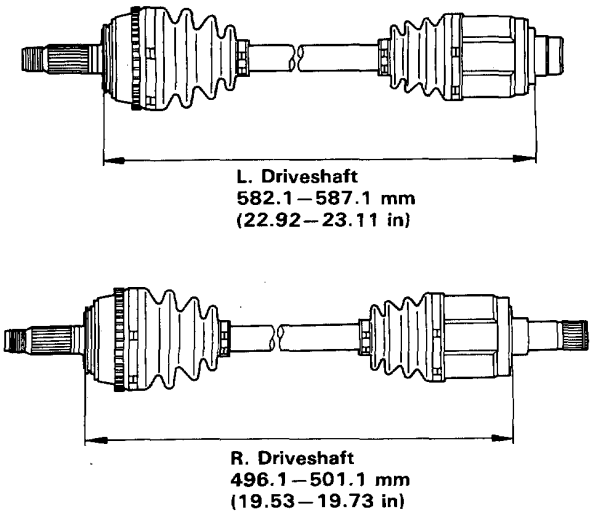

11. Install new boot bands on the boots and bend both sets of locking tabs.

12. Lightly tap on the doubled-over portions to reduce their height.

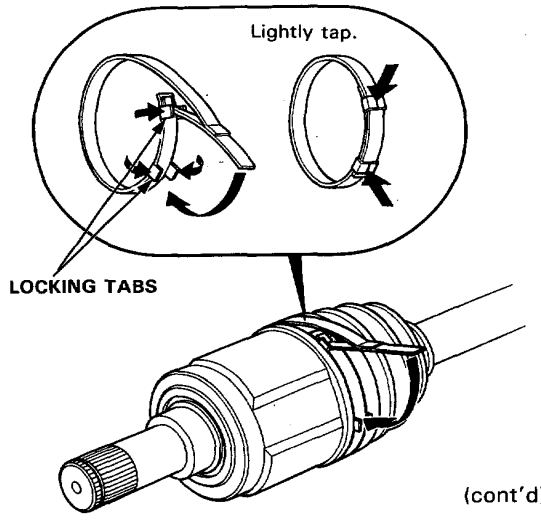

(cont'd)

Reassembly (cont'd)

NOTE: Install the outboard joint in the knuckle before installing the driveshaft into the differential or intermediate shaft. Loosely install the spindle nut at this time.

13. Install the new set rings in the R. driveshaft groove and intermediate shaft groove.

14. Install the inboard end of the driveshaft into differential or intermediate shaft.

CAUTION:

- **Always use a new set ring whenever the driveshaft is being installed.**
- **Make sure the R. driveshaft locks in the differential side gear groove, and the CV joint subaxle bottoms in the differential.**
- **Insert the L. driveshaft CV joint subaxle into the intermediate shaft until the intermediate shaft set ring locks in the groove in the L. driveshaft.**

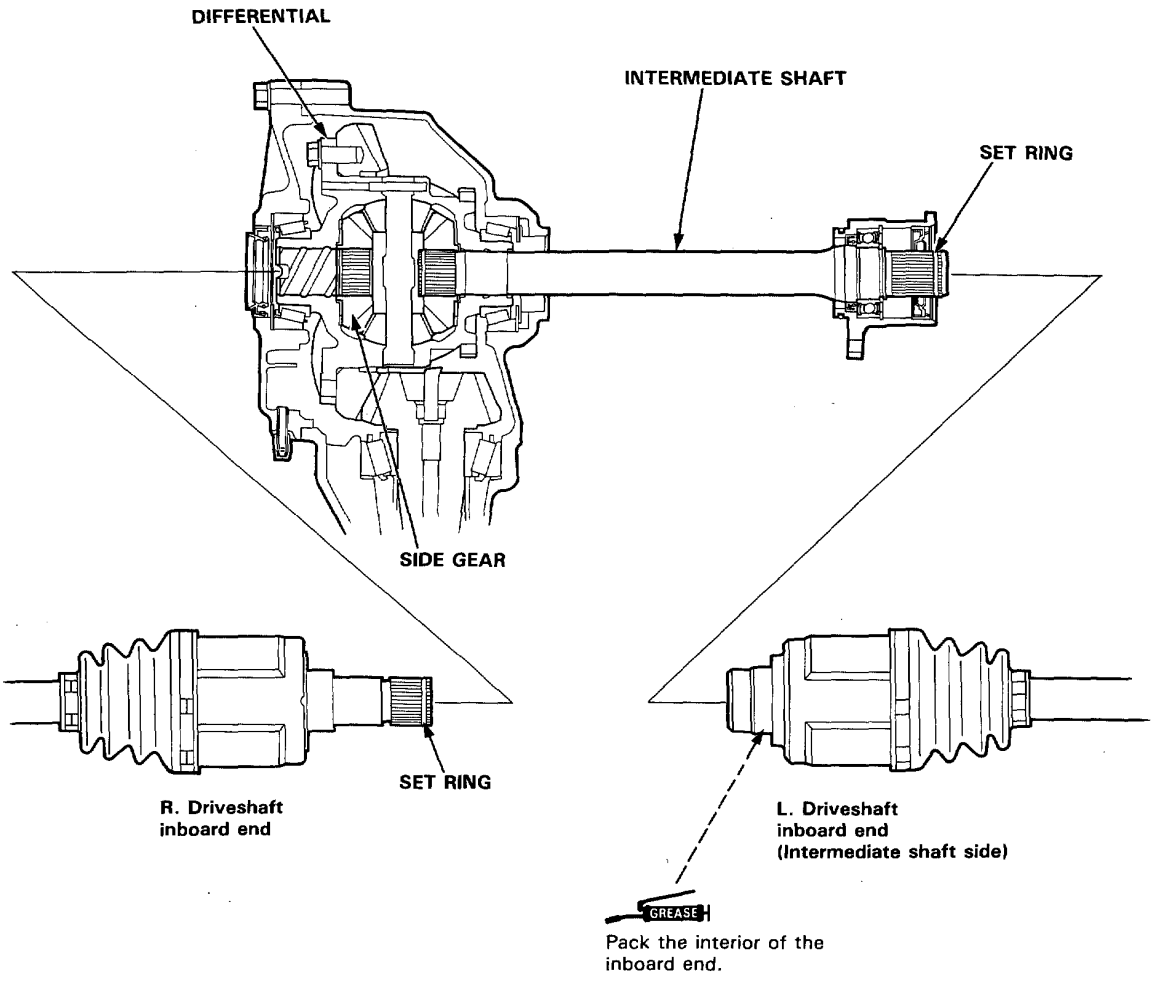

Intermediate Shaft

Replacement

1. Drain the oil from the differential.
2. Remove the left driveshaft assembly (page 16-3).
3. Remove the three bolts.

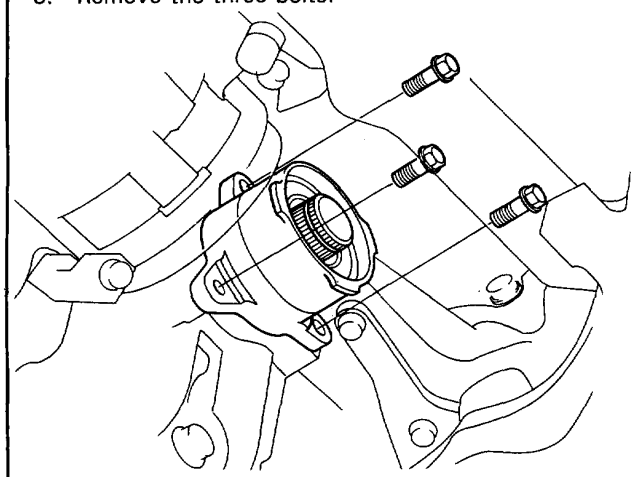

4. Remove the intermediate shaft assembly from the oil pan.

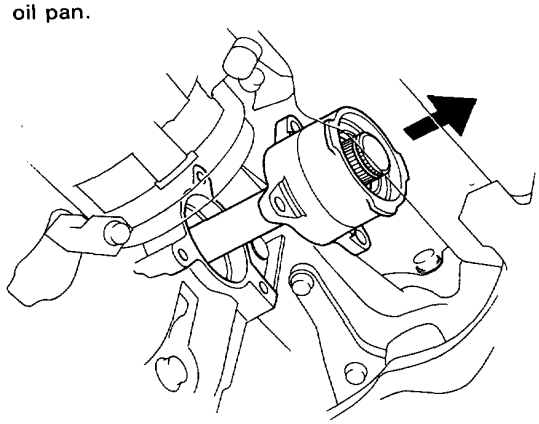

5. Installation is the reverse order of removal.

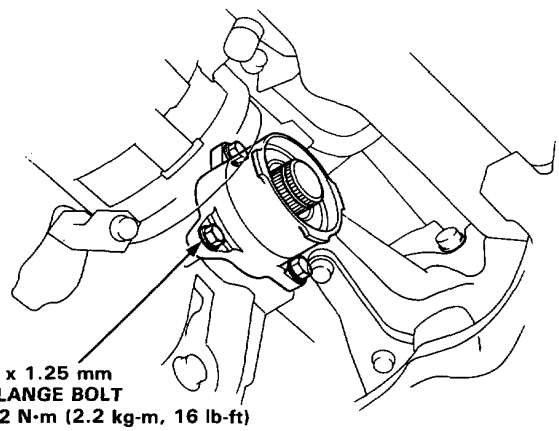

Disassembly

CAUTION: The bearing support and support base are made of aluminum. Be careful not to damage them when servicing.

1. Remove the intermediate shaft outer seal from the bearing support.

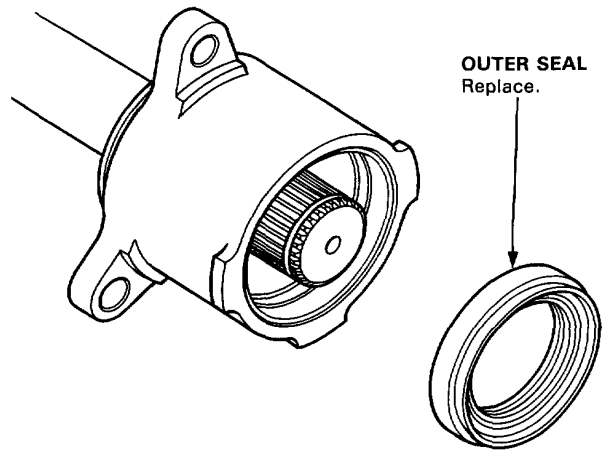

2. Remove the external circlip and internal circlip.

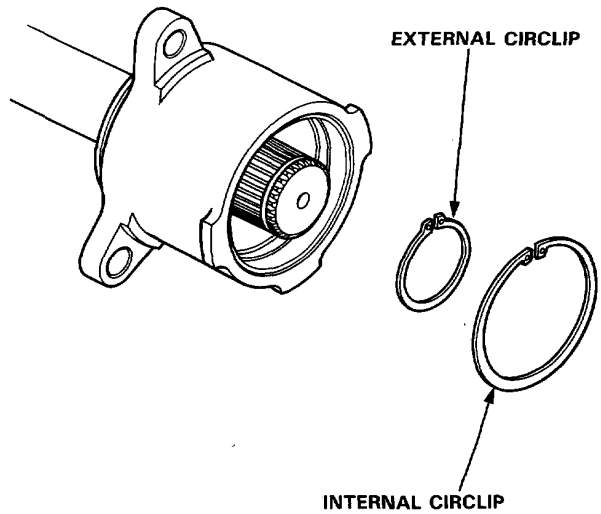

(cont'd)

Disassembly (cont'd)

3. Press the intermediate shaft out of the shaft bearing using the special tool.

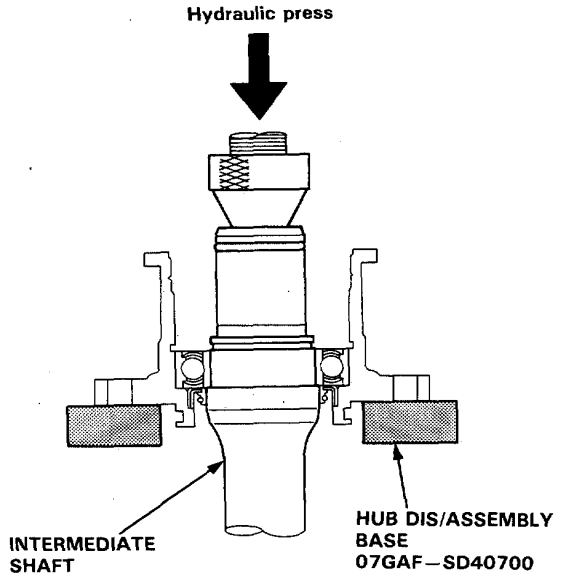

4. Press the intermediate shaft bearing out of the bearing support using the special tools.

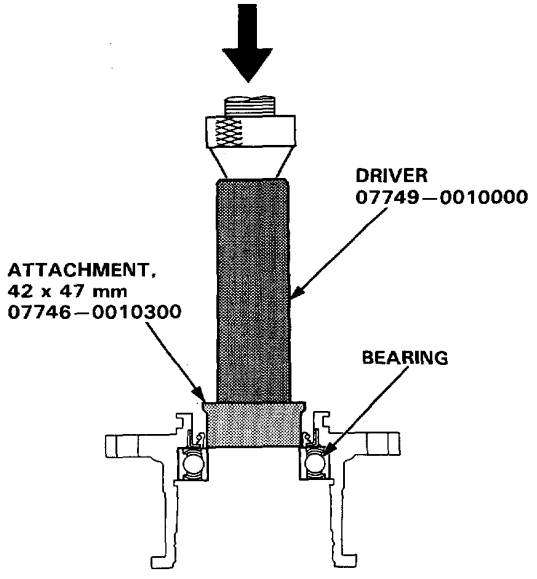

5. Remove the intermediate shaft inner seal from the bearing support.

6. Remove the 58.4 mm O-ring.

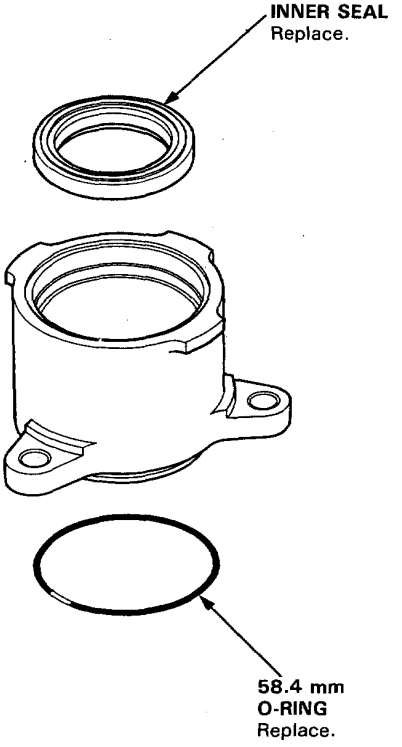

Index/Inspection

CAUTION:
- **The bearing support is made of aluminum. Be careful not to damage it when servicing.**
- **Do not damage the lip on inner and outer seals during installation.**

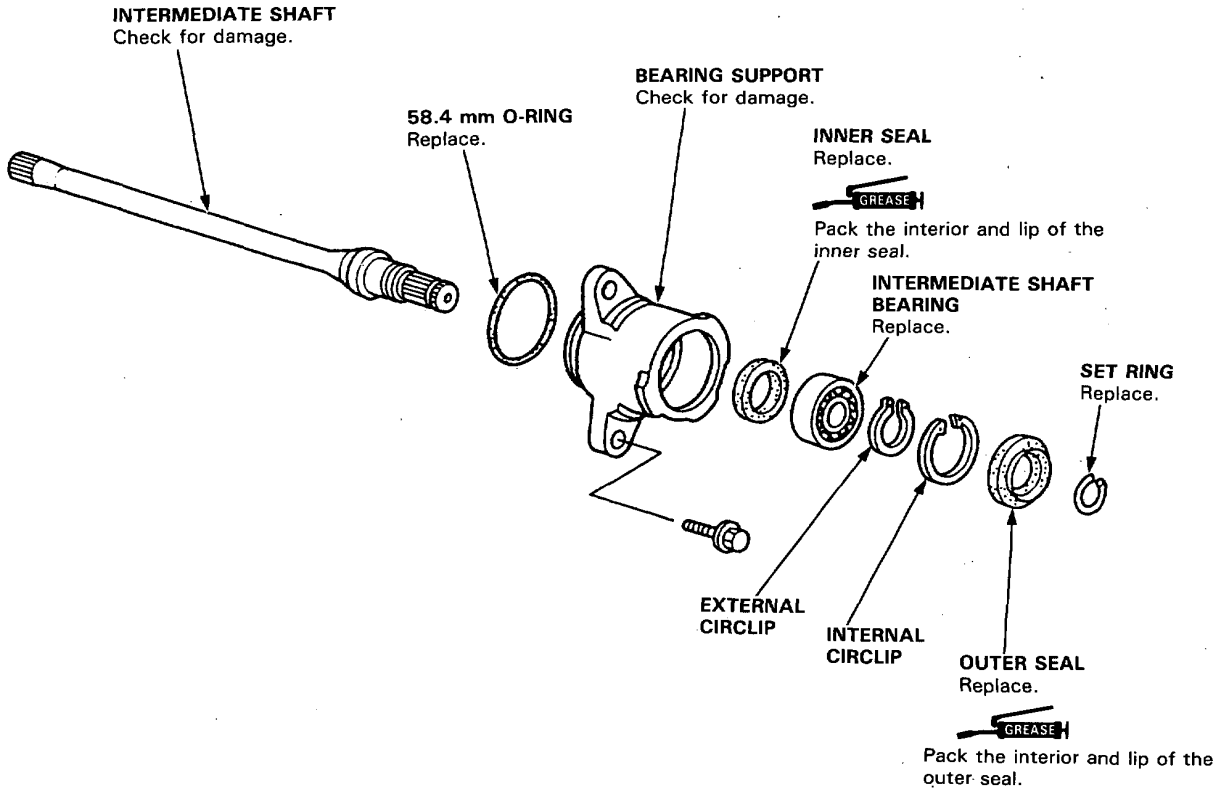

Reassembly

1. Drive the intermediate shaft inner seal into the bearing support using the special tools.

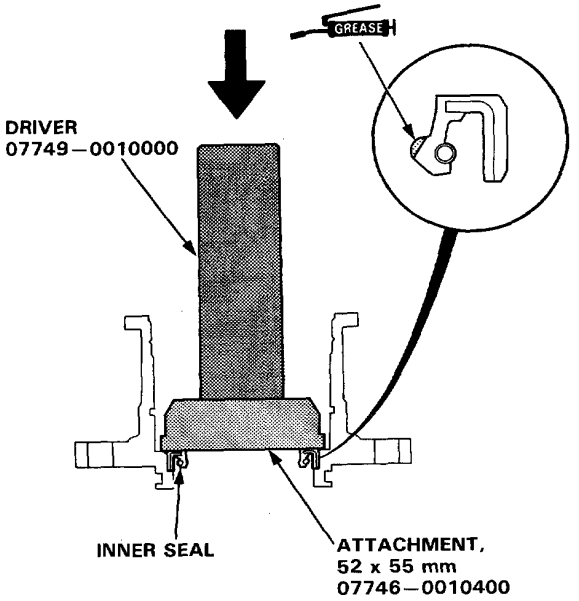

2. Press the intermediate shaft bearing into the bearing support using the special tool.

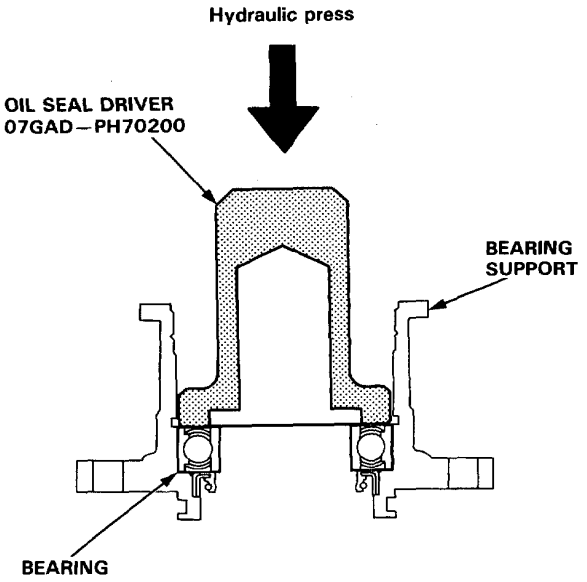

3. Seat the internal circlip in the groove of the bearing support.

CAUTION: Install the circlip with the tapered end facing out.

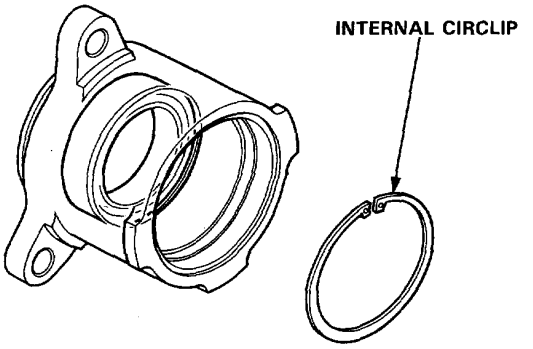

4. Press the intermediate shaft into the shaft bearing using the special tool.

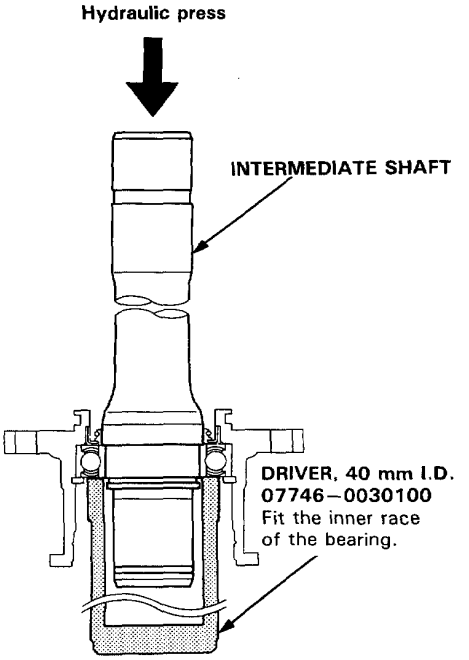

5. Seat the external circlip in the groove of the intermediate shaft.

CAUTION: Install the circlip with the tapered end facing out.

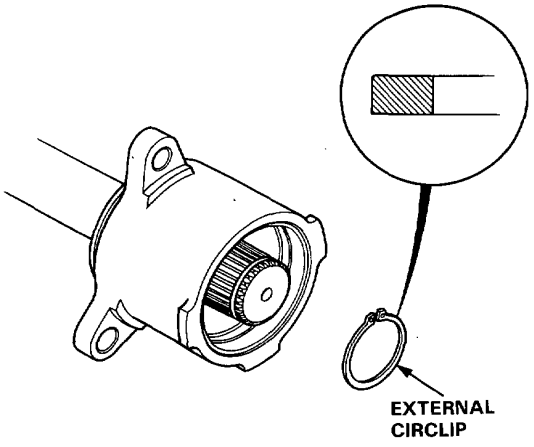

6. Install the outer seal into the bearing support using the special tools.

NOTE: Drive in the outer seal until it is 7 mm (0.28 in) from the end of the bearing support.

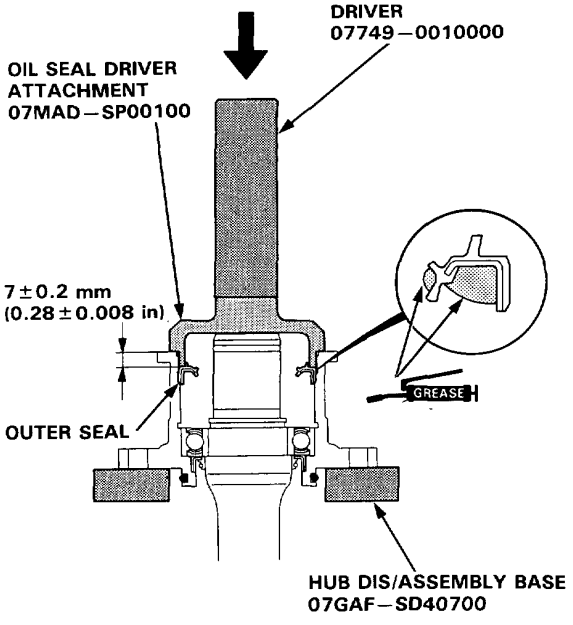

Steering

Special Tools 17-2
Component Location
  Index 17-3
System Description
  Fluid Flow Diagram 17-4
  Steering Pump 17-5
  Fluid Reservoir/Filter 17-6
  Control Valve 17-7
  Full-Lock Unloader System 17-9
  Speed Sensor 17-9
Troubleshooting
General Troubleshooting 17-12
Noise and Vibration 17-15
Fluid Leaks 17-16
Maintenance
  Pump Belt Adjustment 17-17
On-Car Checks
  Rack Guide Adjustment 17-17
  Fluid Replacement 17-18
  Pump Pressure Check 17-18
  Steering Wheel Rotational Play ... 17-19
Power Assist Check With Car
  Parked 17-20
Assist Check at Road Speed..... 17-20
Speed Sensor Replacement 17-21
Steering Wheel
* Removal 17-22
  Disassembly/Inspection 17-23
* Installation 17-24
Steering Column
* Removal 17-26
  Inspection 17-28
* Installation 17-29
Steering Pump
  Replacement 17-31
  Pulley Replacement 17-32
  Control Valve Inspection
    and Replacement 17-32
  Disassembly 17-34
  Reassembly 17-38
Steering Gearbox
  Gearbox Removal 17-41
  Gearbox Installation 17-44
  Valve Body Unit Overhaul 17-47
  Steering Gearbox Overhaul 17-52
  Ball Joint Boot Replacement 17-67

SUPPLEMENTAL RESTRAINT SYSTEM (SRS)

The Legend includes a driver's side Airbag, located in the steering wheel hub. Information necessary to safely service the SRS is included in this Shop Manual. Items marked * in each section table of contents include, or are located near, SRS components. Servicing, disassembling or replacing these items will require special precautions and tools, and should therefore be done only by an authorized HONDA dealer.

⚠WARNING

- **To avoid rendering the SRS inoperative, which can lead to personal injury or death in the event of a severe frontal collision, all maintenance must be performed by an authorized HONDA dealer.**
- **Improper maintenance, including incorrect removal and installation of the SRS, can lead to personal injury caused by unintentional activation of the Airbag.**
- **All SRS electrical wiring harnesses are covered with yellow outer insulation. Related components are located in the steering column, center armrest and dashboard lower panel. Do not use electrical test equipment on these circuits.**

Special Tools

Ref. No.	Tool Number	Description	Q'ty	Page Reference
①	07GAF-SD40700	Hub Dis/Assembly Base	2	17-36
②	07GAG-SD40300	Cylinder End Seal Slider	1	17-60
③	07GAK-SE00112	P/S Joint Adapter (Pump)	1	17-19
④	07GAK-SE00120	P/S Joint Adapter (Hose)	1	17-19
⑤	07GAG-SD40700	Ball Joint Boot Clip Guide	1	17-67
⑥	07JGG-0010100	Belt Tension Gauge	1	17-17
⑦	07MAC-SL00200	Ball Joint Remover, 28 mm	1	17-41
⑧	07MAG-SP00100	Pinion Seal Ring Guide	1	17-59
⑨	07LAG-SM40200	Piston Seal Ring Sizing Tool	1	17-59
⑩	07406-0010001	P/S Pressure Gauge Set	2	17-18
⑩-1	07406-0010400	P/S Pressure Gauge	1	17-18
⑩-2	07406-0010300	P/S Pressure Control Valve	1	17-18
⑪	07406-0010101	Bypass Tube Joint (Included with 07406-0010001)	1	17-20
⑫	07725-0030000	Universal Holder	1	17-32
⑬	07746-0010400	Attachment, 52 × 55 mm	1	17-57
⑭	07749-0010000	Driver	1	17-57
⑮	07916-SA50001	Locknut Wrench, 40 mm	1	17-17, 64
⑯	07974-SA50600	Pinion Dust Seal Guide	1	17-51, 17-65

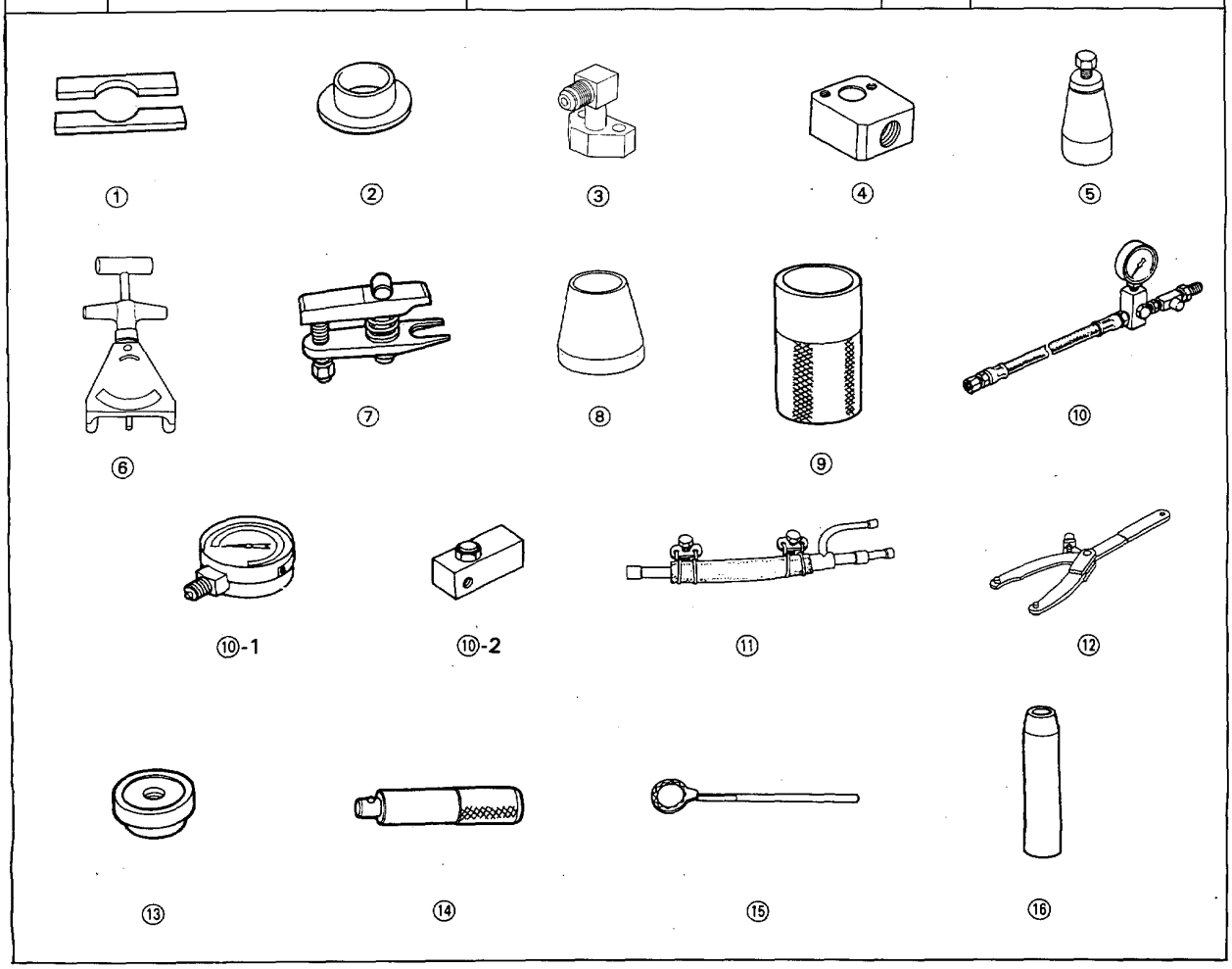

Component Location

Index

NOTE:

- If an intact airbag assembly has been removed from a scrapped car or has been found defective or damaged during transit, storage or service, it should be deployed (See section 23).
- Before removing the gearbox, remove the ignition key to lock the steering shaft from turning.
- After installing the gearbox, check the wheel alignment and adjust if necessary.
- LH drive shown. RH drive is similar

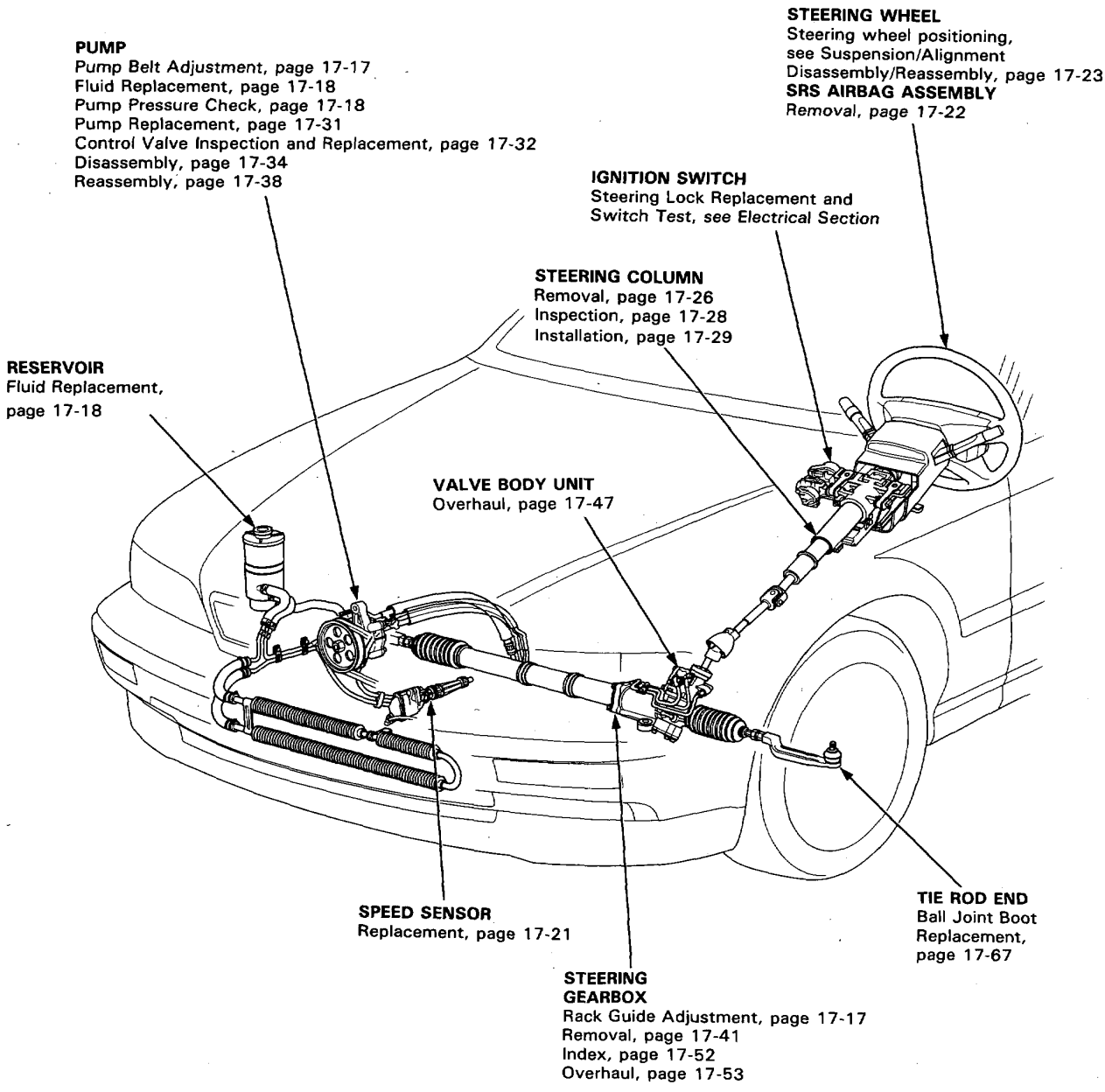

System Description

Fluid Flow Diagram

The reservoir supplies power steering fluid to the pump; the pump pressurizes the fluid to about 8,500 kPa (86 kg/cm^2, 1,200 psi), and delivers it through a high pressure hose to the control unit on the gearbox.
The control valve (in the control unit) controls the direction of the turn by shifting fluid to the left or right side of the piston on the rack (in the power cylinder).
The gain control valve in the control unit controls the amount of the assist by regulating the stroke of the control valve. The operation of the gain control valve is affected by the fluid pressure, which is regulated by the pressure control valve, sensor orifice and speed sensor.
Constant pressure is generated by the pressure control valve. This pressure is used as a reference pressure for the response to the car speed. By introducing this pressure to the speed sensor through the sensor orifice, the pressure downstream of the orifice is changed according to the speed of car. This pressure is then used to operate the gain control valve, Two orifices are provided around the circumference of the gain control valve. These orifices provide the stepless reduction of the pressure from the pump according to the changes in the car speed. The reduced pressure is then sent to the reaction chambers. Therefore the assist varies by regulating the fluid pressure in the control unit according to the speed of car.
Fluid returning from the power cylinder flows back through the control valve and out to the reservoir through the cooler.

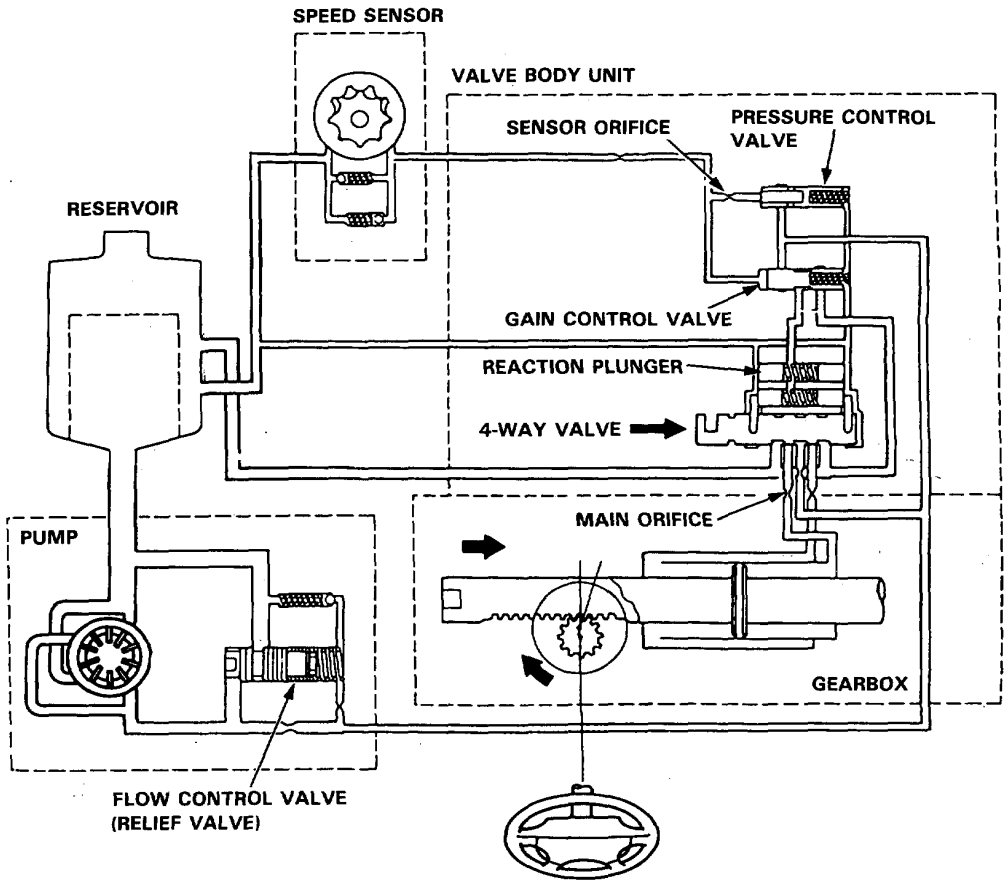

Steering Pump

Construction

The pump is a vane-type incorporating a flow control valve (with an integrated relief valve) and is driven by a V-belt from the crank pulley. The pump features 10 vanes. Each vane performs two intake/discharge operations for every rotation of the rotor. This means that the hydraulic fluid pressure pulse becomes extremely small during discharge.

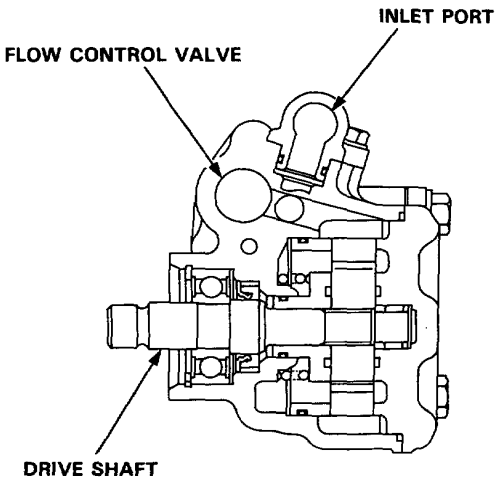

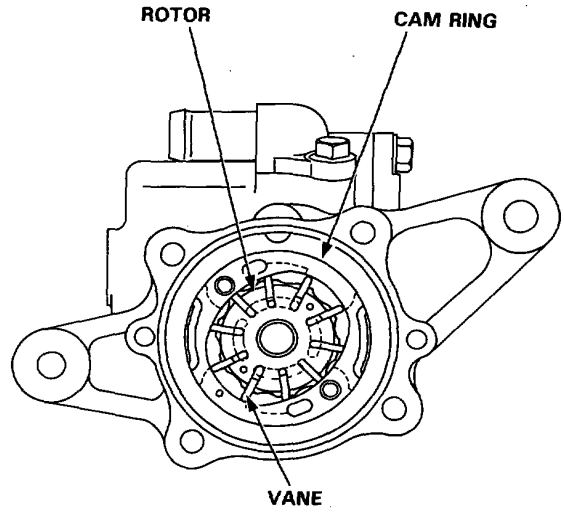

Operation

The belt-driven pulley rotates the rotor through the drive shaft. As the rotor rotates, the hydraulic pressure is applied to the vane chamber of the rotor and the vanes will rotate while being pushed onto the inner circumference of the cam ring. The inner circumference of the cam ring has an extended portion with respect to the center of the shaft, so the rollers move downward in the axial direction as the carrier rotates. As a result of this roller movement, the internal volume of the vane chamber will change, resulting in fluid intake and discharge.

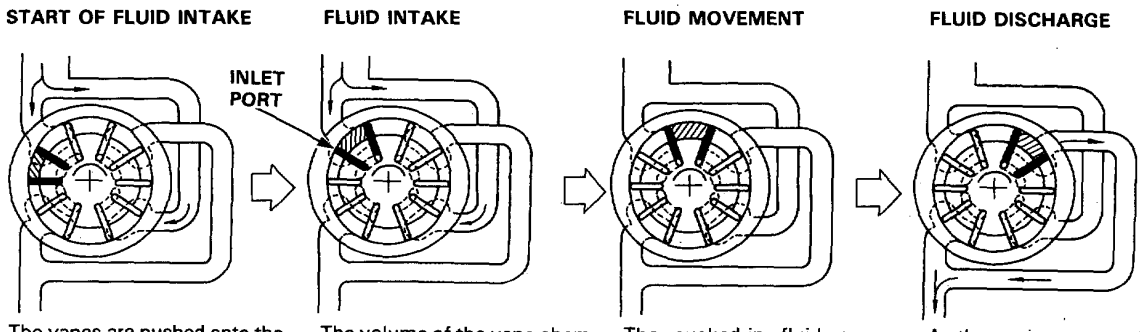

The vanes are pushed onto the inner circumference of the cam ring.

The volume of the vane chamber increases so that fluid is sucked in.

The sucked-in fluid moves toward the discharge port.

As the vanes return to the their original position on the inner side, the volume of the vane chamber decreases so the fluid is discharged from the discharge port.

(cont'd)

Steering Pump (cont'd)

Flow Control

Fluid from the pump runs through a metering orifice to the control unit. This creates a pressure difference between the pump and control unit sides of the orifice. When pressure in the pump side is higher than the force of the spring holding the flow control valve closed, it pushes the valve down (open), and excess fluid returns to the pump inlet. The combined effect of the metering orifice and the flow control valve provides a relatively constant flow of fluid to the control unit.

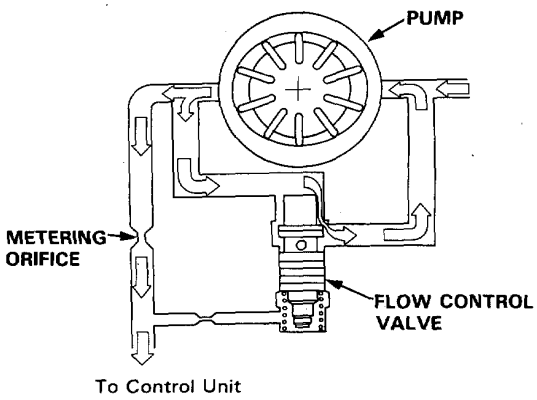

Pressure Relief

As pressure on the control unit side builds up it pushes the relief valve ball (inside the flow control valve) up against its spring, and excess fluid returns to the pump inlet. As the pressure under the flow control valve drops, the relief valve ball is closed by its spring, and the flow control valve is forced down again, allowing excess fluid from the pump side to return to the inlet. This flow control valve-relief valve cylinder keeps pump output pressure between 7845–8826 kPa (80–90 kg/cm^2, 1138–1280 psi).

RELIEF VALVE OPEN

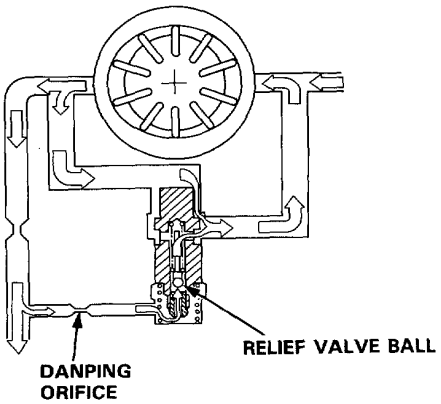

Fluid Reservoir/Filter

A one piece reservoir and filter is attached to the fender apron on the right side of the engine compartment. The fluid and the filter/reservoir should be replaced if the system is opened for repairs, or if the fluid gets water or dirt in it.

CAUTION: Use only Honda Power Steering Fluid-V. The use of other fluid such as A.T.F., or other manufacturer's power steering fluid will cause damage to the system.

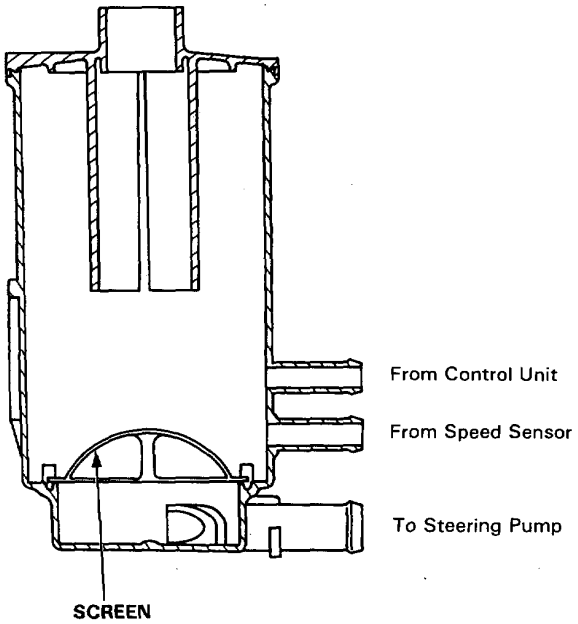

Control Valve

Mounted on the upper side of the gearbox is a control valve that is moved horizontally by a pin on the pinion holder to shift fluid pressure to the right or left side of the Power Cylinder when the steering wheel is turned.
It has thrust pins at both ends, and two inter-connected reaction chambers, one on each side.
Each reaction chamber contains a pair of spring-loaded plungers that rise against right and left thrust pins.
The valve body fluid passages are controlled by the control valve.
Fluid pressure in the reaction chambers is reduced by the gain control valve in order to change the amount of the assist in accordance with the change of car speed.

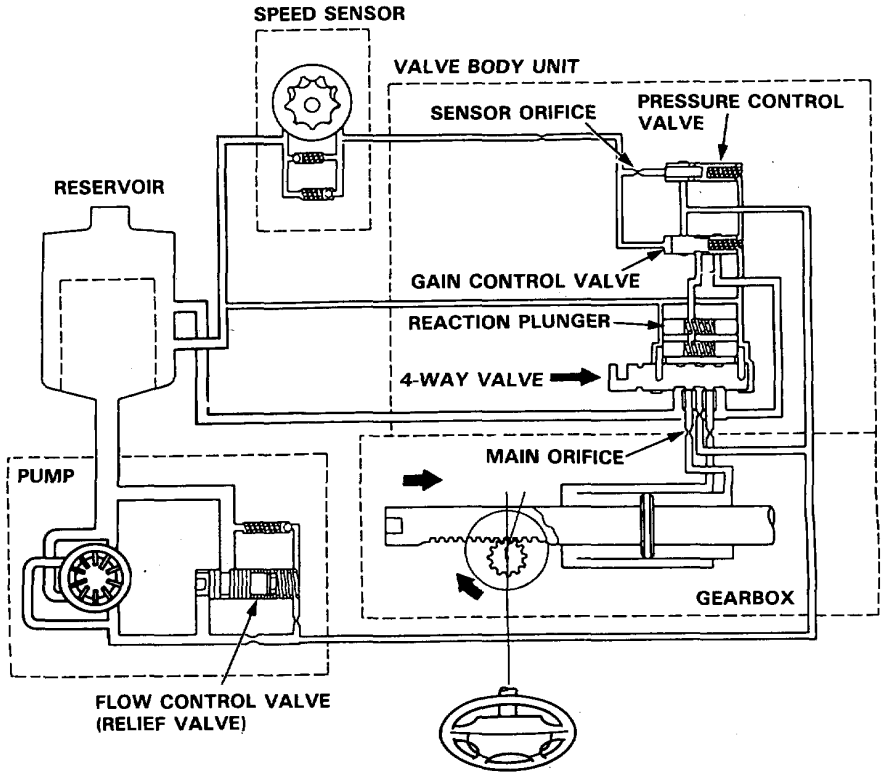

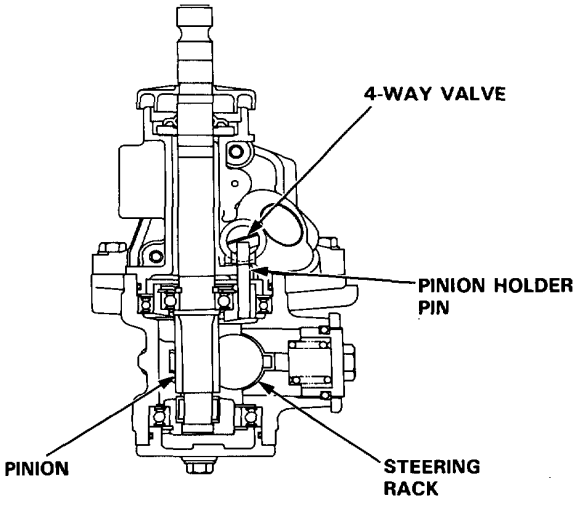

(cont'd)

System Description

Control Valve (cont'd)

In the power steering unit, the method used to direct a single source of fluid pressure in either of two directions (for left or right turns) involves the pinion gear transferring a "message" of direction to the fluid in the 4-way valve.
The pinion is mounted slightly off-center in a pair of bearings, which are in turn mounted in a Pinion Holder cylinder that rotates, centered in its own outer bearings. At the top of the Pinion Holder is a pin which fits in a slot in the 4-way valve. As the pinion is turned (to turn left or right), because it is off-center, it also moves slightly along the rack. This movement is transferred to the holder. The pin in the holder then moves the 4-way valve to direct fluid pressure to either side of the rack in the Power Cylinder.
The back edges of the pinion holder (facing away from the rack) hit the stops cast into both sides of the gear housing to avoid pushing the control valve too far in either direction. The front edge of the pinion holder cuts off assist at full lock as described on the next page.

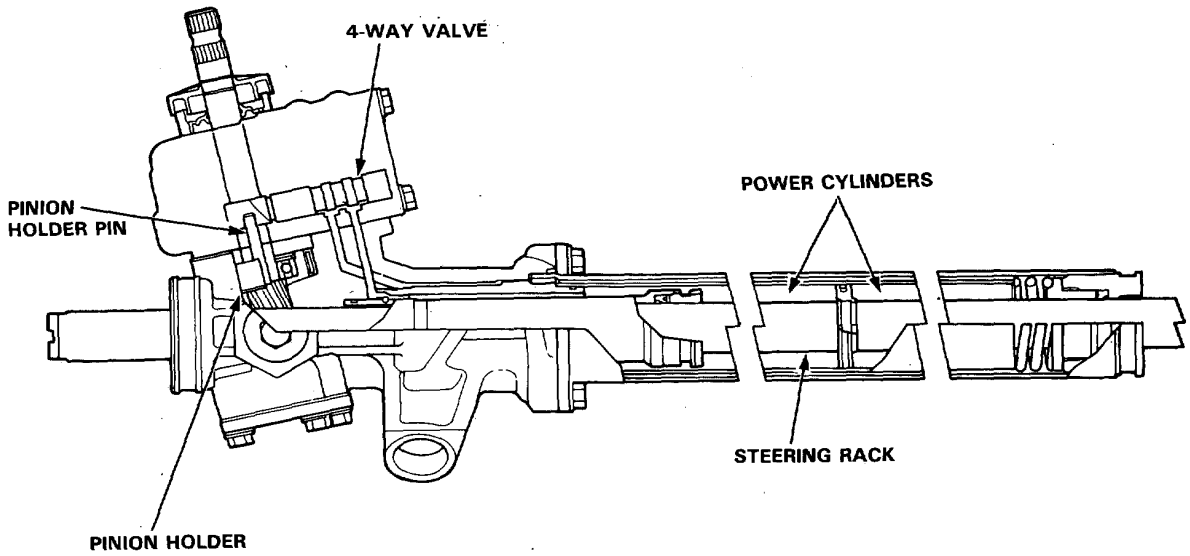

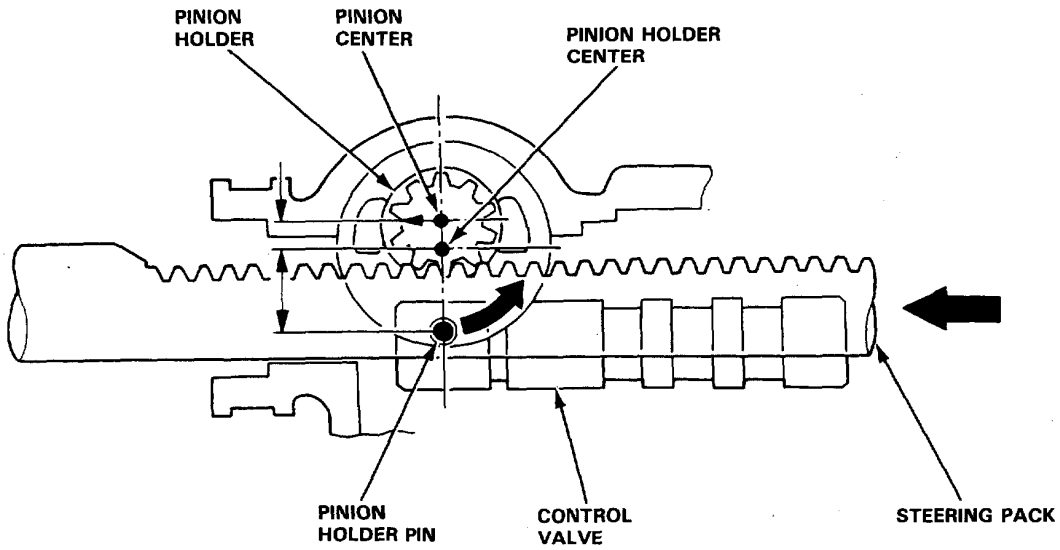

Full-Lock Unloader System

The 4-way valve shifts the direction of fluid flow when the steering wheel is turned right or left. However, when the wheel is turned to the right or left lock at parking speed, the edge of the pinion holder rides up on the end of the rack, moving the pin in the opposite direction which pulls the 4-way valve back to neutral.
This keeps pump pressure from building up (which could cause idle speed to drop), and improves steering feel by increasing resistance at left and right lock.

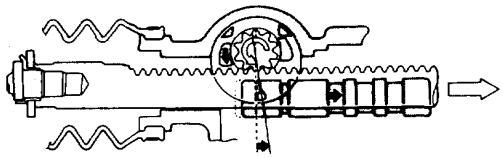

Control in "assist" position

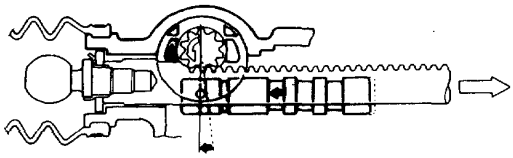

Control valve moves back to "neutral" position

Speed Sensor

The speed sensor is a trochoid-rotor, hydraulic pump combined with a relief valve and a one-way valve. It is driven by the speedometer gear shaft which in turn is driven by a helical gear on the differential.

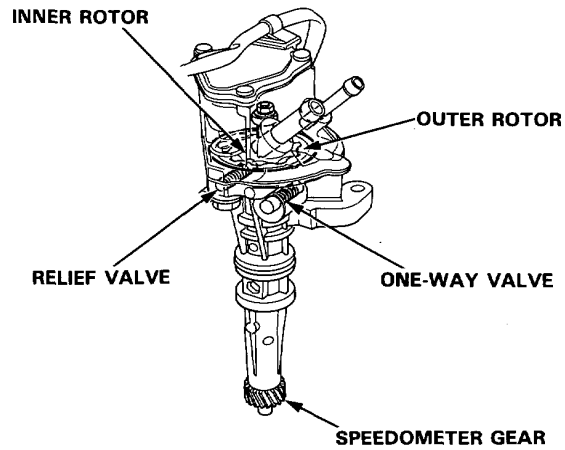

The speed sensor turns only when the car is moving, controlling the gain control valve.

The constant pressure is generated by the pressure control valve.

This pressure is used as a reference pressure for the response to the car speed. By introducing this pressure to the speed sensor through the sensor orifice, the pressure downstream of the orifice is changed according to the speed of the car.

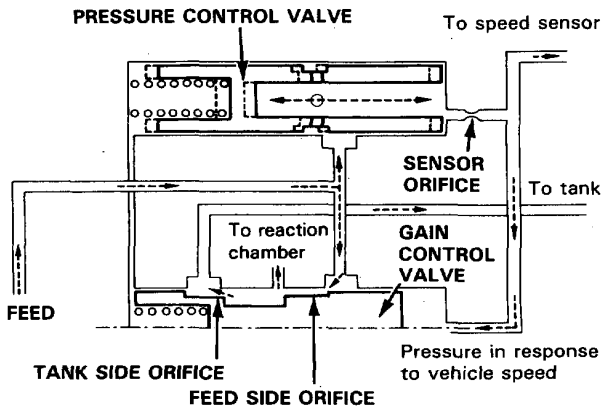

(cont'd)

Speed Sensor (cont'd)

With the engine running at idle in a parked car, fluid flow through the sensor rotors is blocked because the rotors are not turning. Therefore the gain control valve moves left. On the gain control valve, the orifice resistance is high on pump side, while it is low on the tank side, with the result that pressure in the reaction chamber is lowered and steering assist is high.

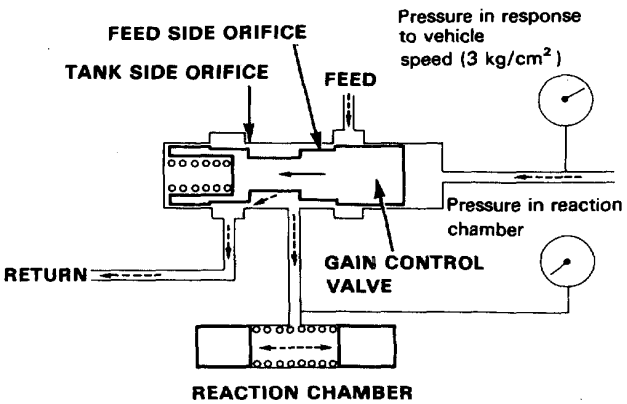

As the car is driven, the rotors start turning and the fluid returns to the reservoir, reducing the fluid pressure at the gain control valve. Therefore, the gain control valve moves right. The orifice resistance on the pump and tank sides is appropriately balanced, with the result that the reaction chamber is in the medium range and the steering resistance is moderate.

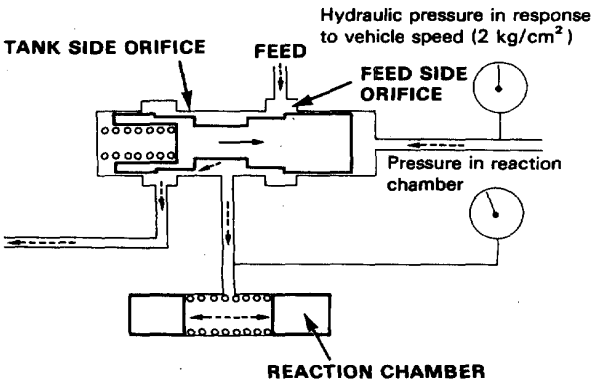

When the car is moving at high speed, the sensor reduces the pressure further and the gain control valve moves right. The orifice pressure on the pump side is low and the pressure on the tank side is high, the fluid pressure in the reaction chamber is also high giving the steering wheel less assist.

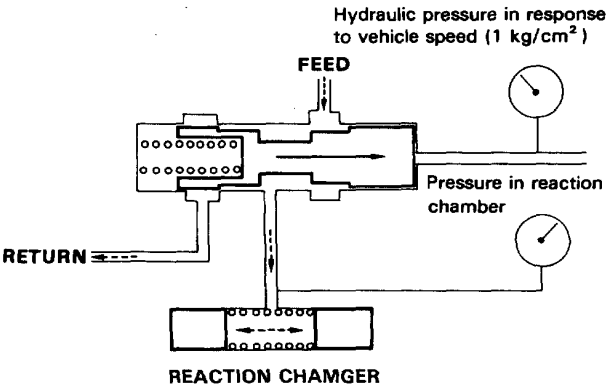

One-way Valve (In Speed Sensor)

When the car is moving at high speed, negative pressure develops at the sensor inlet because the sensor is pumping faster than the fluid can be supplied. To compensate for this, the outlet and inlet ports are connected internally by a passage containing a one-way valve that lets output fluid recirculate to the inlet port to equalize pressure.

Driving at High Speed:

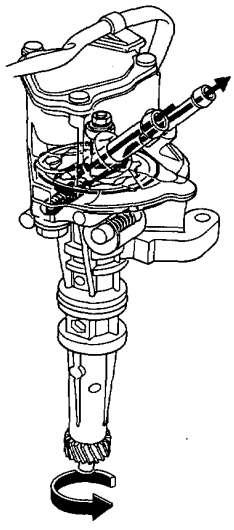

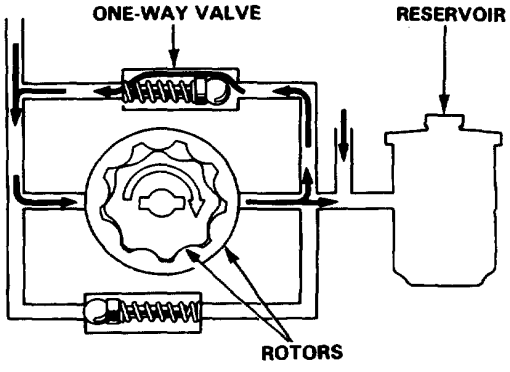

Relief Valve (In Speed Sensor)

When the car is moving in reverse, the speed sensor also turns backward and pumps fluid in the opposite direction. To avoid building up pressure in the reaction chambers that would increase steering effort while driving in reverse, the inlet and outlet-ports are connected by a second internal passage containing a relief valve that allows the fluid to recirculate.

Driving in Reverse:

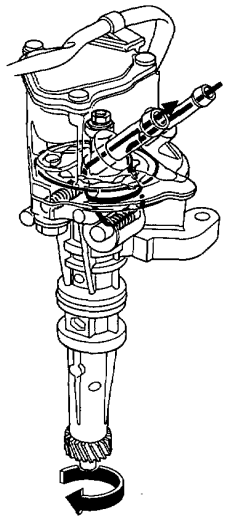

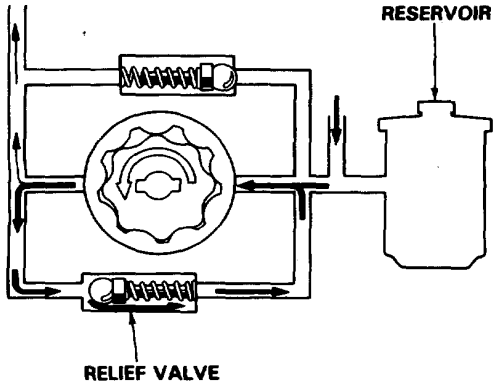

Troubleshooting

General Troubleshooting

Check the following before you begin:

- Has the suspension been modified in a way that would affect steering?
- Are tire sizes and air pressure correct?
- Is the steering wheel original equipment or equivalent?
- Is the power steering pump belt properly adjusted?
- Is steering fluid reservoir filled to proper level?
- Is the engine idle speed correct and steady?

Hard Steering

Little or no assist in both directions with car parked.

Check for bubbles in power steering fluid.

If there are no bubbles, check if assist improves when engine RPM is increased to 3000.

If assist improves, check the pump flow control valve for internal leaking, and clean or replace as necessary (page 17-32). If the valve is OK, replace the steering pump.

Steering effort above normal. Check the gain control valve for sticking or a clogged orifice; clean or replace the valve as necessary (page 17-48). If the gain control valve is OK, check the pinion pin for free movement. If seized or binding, overhaul the steering gearbox.

Steering effort below normal. Check fluid pressure, using power steering gauge with shut-off valve closed (page 17-19).

Fluid pressure below 7845 kPa (80 kg/cm^2, 1138 psi).

Check the pump flow control valve for internal leaking, and clean or replace as necessary (page 17-32). If the valve is OK, replace the pump.

Fluid pressure 7845–8826 kPa (80–90 kg/cm^2, 1138–1280 psi).

If assist does not improve, measure the force required to turn the wheel with the speed sensor hose plugged and the car parked (page 17-20).

If there are bubbles, check the reservoir input side hose and pump front seal for air leaks. Repair as necessary.

Assist in one direction only, little or no assist in the other.

Remove the control valve and check the pinion pin for free movement. If OK check the control valve for free movement (page 17-51). Repair as necessary.

Uneven or rough steering.

- Belt slipping on pulley. → Adjust belt tension. Replace belt, if necessary (page 17-17).
- Gain control valve sticking or leaking. → Check gain control valve; clean or replace the gain control valve or control unit.
- Idle speed low or erratic. → If the engine stalls when wheel is turned while car is stopped or moving at low speed, adjust idle speed (see Fuel Section).
- Air in reserve tank, or check power steering fluid level. → Check power steering fuid level. If level is excessively low, check for leaks in the system. Add fluid to the specified level.
  - If fluid level is OK, check O-rings and seals on both ends of the pump inlet hose, and the oil pump housing mating surfaces for suction leaks. Replace parts as necessary.
- Improperly adjusted rack guide. → Adjust rack guide (page 17-18).
  - If the rack guide adjustment is OK, check the pinion bearings for wear or damage. Replace them as necessary.

(cont'd)

General Troubleshooting (cont'd)

Shock or vibration when wheel is turned to full lock.	Pump belt slipping on pulley (pump stops momentarily).	Adjust belt tension (page 17-17) or replace belt.
	Set the power steering pressure gauge. Close the shut-off valve fully and measure the pump pressure (see page 17-19).	Check if pump pressure is within the range 7845-8826 kPa (80-90 kg/cm^2, 1138—1280 psi) and the gauge needle travel is ±490 kPa (±5 kg/cm^2, ±70 psi) or less. Check the flow control valve if the needle travel exceeds ±490 kPa (±5 kg/cm^2, ±70 psi) (see page 17-33). If the flow control valve is normal, replace the pump as an assembly.
Assist (excessively light steering) at high speed:	Measure force required to turn wheel with bypass tube joint installed, and car parked on dry paved surface (page 17-20).	If below, check gain control/ pressure control valves and control unit and replace parts as necessary.
Steering kicks back during wide turns.	Pump belt slipping.	Adjust belt tension (page 17-17) or replace belt.
	Sticking gain control valve or control valve.	Replace gain valve or control valve.
	Rack guide adjusted too loose.	Adjust rack guide (page 17-18).
Wheel will not return smoothly.	Tire pressure too low.	Inflate to correct pressure.
	Improper front wheel alignment.	Readjust front wheel alignment or replace parts as necessary.
	Improperly adjusted rack guide.	Adjust rack guide (page 17-18).

Noise and Vibration

NOTE: Pump noise in first 2–3 minutes after starting in cold weather (−20°C, −4°F or colder) is normal.

Humming	Humming due to pulsation of fluid is normal, particularly when wheel is turned with car stopped.	
	If equipped with Automatic transmission, the hum could be torque converter or pump noise.	Confirm by temporarily removing pump belt.
	High pressure line touching the frame.	Reposition the line.
Squeaking	Belt slipping.	Tighten or replace belt.
	Pinion shaft seal not lubricated.	Grease it.
	Horn contact not lubricated, or under too much pressure.	Grease the contact, or bend it to reduce the pressure.
	Burrs on the pinion gear.	Replace the pinion gear.
Rattle or chattering	NOTE: A single "clunk" may be a normal amount of linkage clearance. To distinguish this type of clunk, turn the wheel back and forth with the engine OFF.	
	Loose pump pulley.	Tighten or replace pulley. If shaft is loose, replace the pump.
	Loose steering shaft connector, tie-rod, or ball joint.	Check and tighten, or replace parts as necessary.
	Column shaft wobbling.	Replace column assembly.
Hissing	Lines or hoses from the control unit touching each other.	Reposition lines so they don't touch.
	Noise from control valve.	Replace the control unit.
Pump gear noise	NOTE: Pump noise up to 2-3 minutes after starting in cold weather (−20°C, −4°F or colder) is normal. Compare pump noise at operating temperature to another car.	If pump noise is abnormally loud, check the pump ball bearing and any parts. (page 17-37).
Grating noise from pump	Cavitation caused by air bubbles in fluid.	Check fluid level. If low, fill reservoir to proper level, and check for leaks. Tighten or replace as necessary.
		Check for crushed suction hose or a loose hose clamp allowing air into the system. Tighten or replace as necessary.

Fluid Leaks

- **Steering gearbox**
  - Leaking from cylinder end seal into tie-rod boots.
    - Leaking from left side.
      - Remove the control valve and inspect the 11 mm O-ring and the port housing bore for pits, burrs or scratches (page 17-49). Repair as necessary.
    - Leaking from right side.
      - Reseal gerbox and inspect the rack sealing surface between the steering rack piston and the right end (page 17-52).
      - If no abnormality is found, replace the O-ring, reseal the gearbox and inspect the steering rack sealing surface for burrs or scratches between the steering rack gear teeth and the piston. Inspect the seal retainer bore in the gearbox housing for proper chamfer and sharp edges (page 17-52).
  - Leaking from control unit mating surfaces.
    - Tighten attaching bolts or replace valve body or port housing.
  - Leaking from either side of valve body.
    - Replace all control unit seals and O-rings.
  - Leaking from drilled passage plug (steel ball).
    - Replace control valve body.
- **Pump**
  - Front seal leaking.
    - Replace front seal.
  - Pump housing leaks at either end.
    - Replace housing O-rings. If the housing still leaks, replace the pump.
- **Speed sensor**
  - Leaking.
    - Replace the sensor.
- **Reservoir**
  - Leaking from around cap.
    - Reservoir overfilled. Pull off the hose and drain to proper level.
    - Air leak in suction side of system (reservoir, inlet hose, front pump seal).
- **Pump outlet line (high pressure)**
  - Leaking at threaded fitting.
    - Tighten fitting. If still leaking, replace hose.
  - Leaking at swagged joint.
    - Replace hose.
- **Low pressure hoses**
  - Leaking because of damage, deterioration, or improper assembly.
    - Replace or repair as necessary.
- **Pipes**
  - Leaking at gearbox connection. (at flare nut).
    - Tighten connector. If still leaking, replace the pipe or control unit.
  - Leaking at gearbox connection (at O-ring joint).
    - Replace O-ring

Pump Belt Adjustment

1. Remove the air cleaner cover and duct (Section 11).
2. A properly adjusted belt should deflect about 11.5—13.5 mm (0.45—0.53 in) when you push on it mid-way between the pulleys with a force of about 100 N (10 kg, 22 lbs).

   NOTE: On a brand new belt, the deflection should be 7.5—9.5 mm (0.30—0.37 in) when first measured.

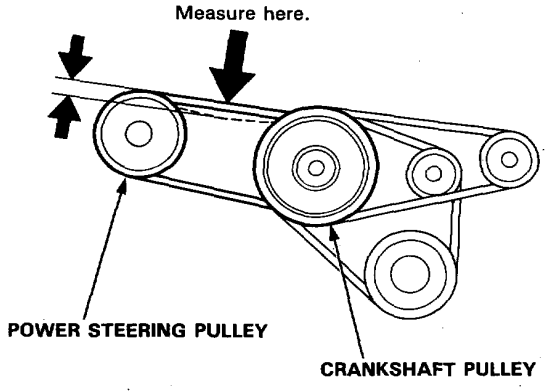

   Test by the Belt Tension Gauge; 07JGG—0010100. Attach the tension gauge to the belt and measure the tension of the belt.

   Tension: 35—55 kg (77—121 lbs)

   NOTE:
   - On a brand new belt, the tension should be 70—90 kb (154—198 lbs) when first measured.
   - See the instructions for the tension gauge.

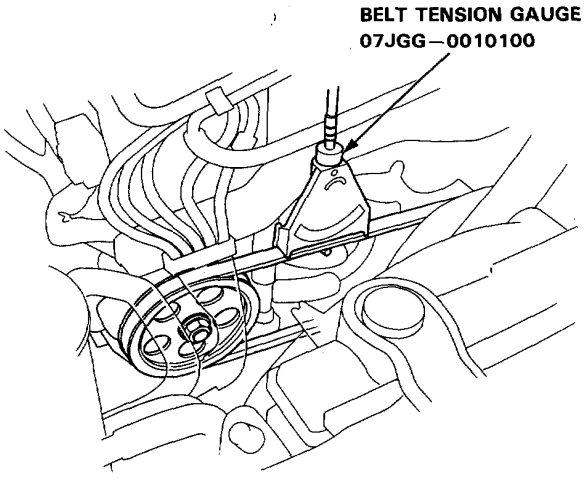

3. Loosen the special bolt and nut and turn the adjusting bolt to get proper tension, then retighten the special bolt and nut.

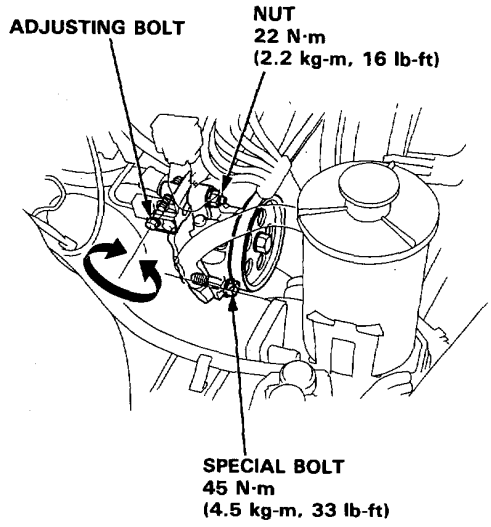

4. Start the engine and turn the steering wheel from lock-to-lock several times, then stop the engine and recheck the belt tension.

Rack Guide Adjustment

1. Loosen the rack guide screw locknut with the special tool.

2. Tighten, loosen and retighten the rack guide screw two times to 4 N·m (0.4 kg-m, 2.9 lb-ft), then back it off $20^{\circ}{}^{+5^{\circ}}_{-0^{\circ}}$

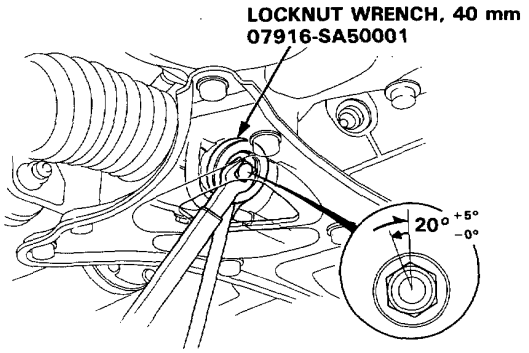

3. Tighten the locknut to about 25N·m (2.5 kg-m, 18 ft-lb) while preventing the guide screw from turning.

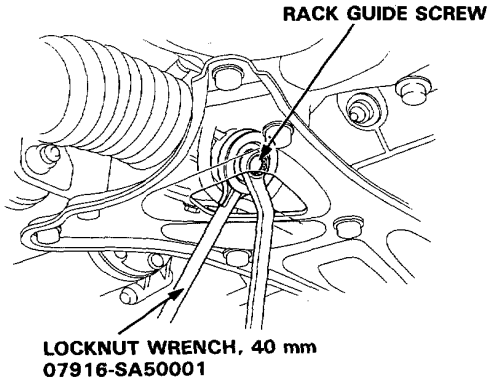

4. Check for tight or loose steering through the complete turning travel.

5. Recheck steering assist (page 17-20).

Fluid Replacement

Check the reservoir at regular intervals, and add fluid as necessary.

CAUTION: Use only GENUINE HONDA Power Steering Fluid-V. Using other fluids such as ATF or other manufactuer's power steering fluid will damage the system.

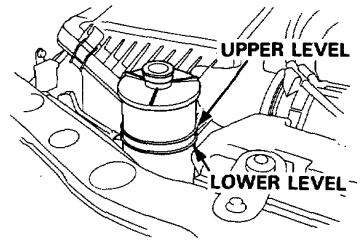

Fluid Replacement

SYSTEM CAPACITY: 1.7 liter (1.8 US qt) at change
RESERVOIR CAPACITY: 0.5 liter (0.7 US qt)

1. Disconnect the return hose from the gearbox at the reservoir, and put the end in a suitable container.

2. Start the engine, let it run at idle, and turn the steering wheel from lock-to-lock several times. When fluid stops running out of the hose, shut off the engine. Discard the fluid.

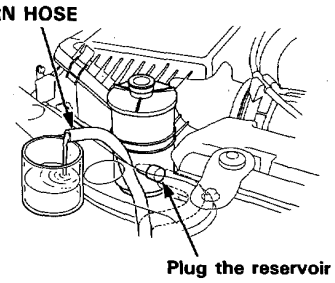

3. Refit the return hose on the reservoir.

4. Fill the reservoir to the upper level mark.

5. Start the engine and run it at fast idle, then turn the steering from lock-to-lock several times to bleed air from the system.

6. Recheck the fluid level and add some if necessary.

CAUTION: Do not fill the reservoir beyond the upper level mark.

Pump Pressure Check

Check the fluid pressure as follows to determine whether the trouble is in the pump or gearbox.

NOTE: First check the power steering fluid level and pump belt tension.

CAUTION: Disconnect the high pressure hose with care not to spill the power steering fluid on the frame and other parts.

1. Disconnect the outlet hose from the pump outlet fitting, and install the pump joint adaptor on the pump outlet.
2. Connect the hose joint adaptor to the power steering pressure gauge, then connect the outlet hose to the adaptor.
3. Install the power steering pressure gauge to the pump joint adaptor as shown.

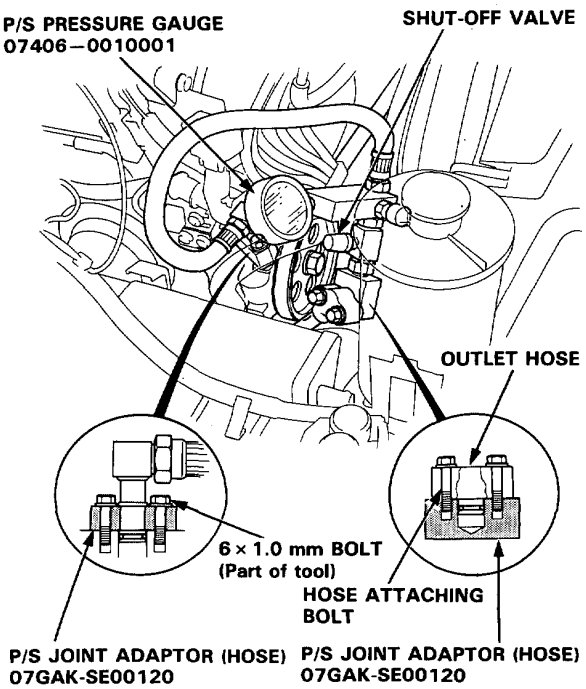

4. Open the shut-off valve fully.
5. Open the pressure control valve fully.
6. Start the engine and let it idle.
7. Turn the steering wheel from lock-to-lock several times to warm the fluid to operating temperature.
8. Close the shut-off valve, then close the pressure control valve gradually until the pressure gauge needle is stable. Read the pressure.
9. Immediately open the shut-off valve fully.

   CAUTION: Do not keep the shut-off valve closed more than 5 seconds or the pump could be damaged by over-heating.

   If the pump is in good condition, the gauge should read at least 7845–8826 kPa (80–90 kg/cm^2, 1138–1280 psi). A low reading means pump output is too low for full assist. Repair or replace the pump.

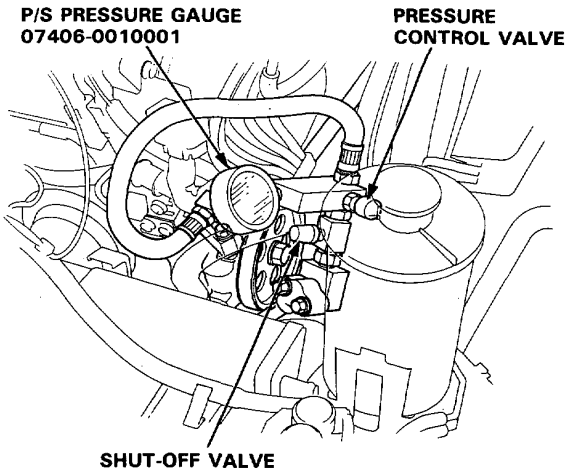

On-Car Checks

Steering Wheel Rotational Play

1. Place the front wheels in a straight ahead position and measure the distance the steering wheel can be turned without moving the front wheels.

2. If the play exceeds the service limit, check all steering components.

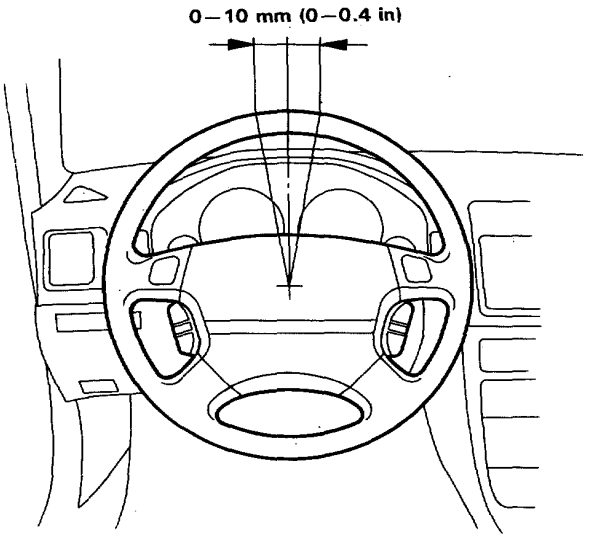

Power Assist Check with Car Parked

1. Check the power steering fluid level and pump belt tension.

2. Start the engine, allow it to idle, and turn the steering wheel from lock-to-lock several times to warm up the fluid.

3. Attach a spring scale to the steering wheel. With the engine idling and the car on a clean, dry floor, pull the scale as shown and read it as soon as the tires begin to turn.

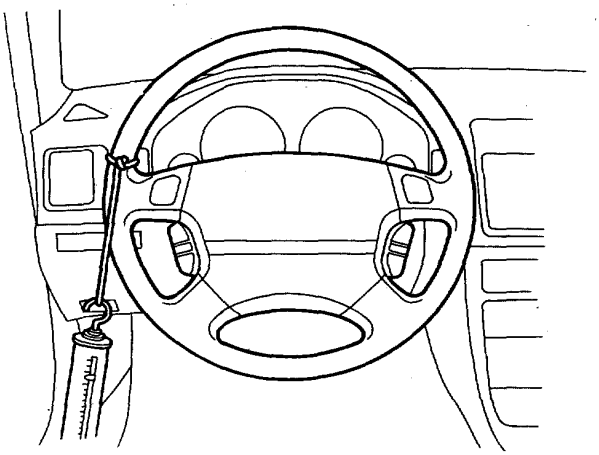

4. The scale should read no more than 30 N (3.0 kg, 6.6 lbs).
   If it reads more or less, go on step 5.

5. Stop the engine. Disconnect the hose from the speed sensor and plug the hose and the sensor fitting as shown.

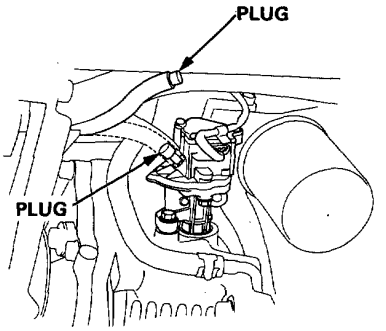

6. Start the engine and let it idle.

   - If the reading is now 30 N (3.0 kg, 6.6 lbs) or less, replace the speed sensor, see page 17-21.

   - If the reading is still more than 30 N (3.0 kg, 6.6 lbs), check the gearbox and pump.

Assist Check at Road Speed

1. Check the power steering fluid level and pump belt tension.

2. Start the engine, let it warm up to normal temperature, and turn the steering wheel lock-to-lock a few times to warm up the fluid.

3. Stop the engine. To simulate speeds above 50 km/h (30 mph), disconnect the hoses from the speed sensor and connect them to the Bypass Tube Joint. Plug the end of the bypass tube joint.

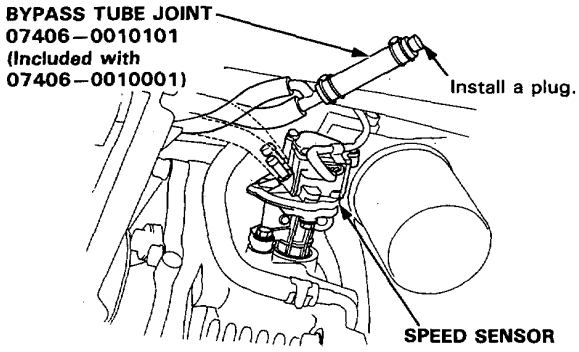

4. Attach the spring scale to the steering wheel. With the engine idling and the car on a clean, dry floor, pull the scale as shown and read it as soon as the tires begin to turn.

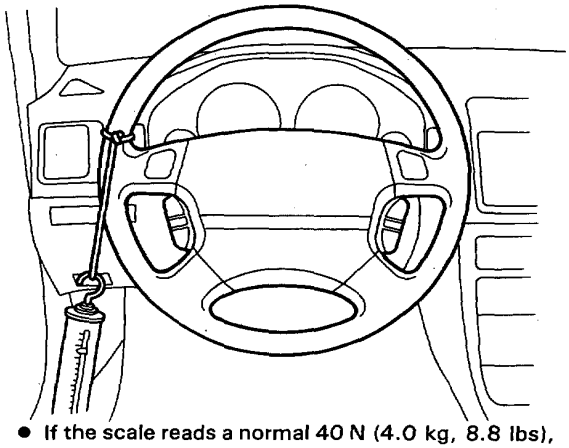

- If the scale reads a normal 40 N (4.0 kg, 8.8 lbs), or more, the assist problem at high speeds is being caused by reduced speed sensor output. Replace the sensor.

- If the scale reads less than 40 N (4.0 kg, 8.8 lbs), the sensor is OK and the problem is in the sensor feed line, the pump, or the control unit. See if the feed line is pinched or bent then check pump.

- See General Troubleshooting (page 17-12).

Speed Sensor Replacement

1. Remove the rear mount bracket stay.

2. Disconnect the speed sensor wire coupler from the speed sensor.

3. Remove the speed sensor mounting bolt and pull the speed sensor from the differential housing.

4. Disconnect the speed sensor hoses and plug the fittings.

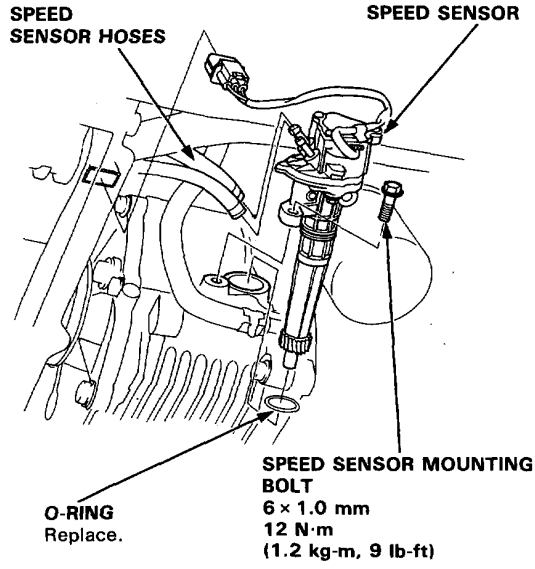

5. After installing a new sensor, turn the steering wheel lock-to-lock with the engine idling to bleed air from the system.

6. Check the reservoir and add fluid if necessary.

Removal

Airbag Removal

⚠ WARNING Store a removed airbag assembly with the pad surface up. If the airbag is improperly stored face down, accidental deployment could propel the unit with enough force to cause serious injury.

CAUTION:
- **Before removing the steering wheel, align the front wheels straight ahead.**
- **Do not install used SRS parts from another car. When repairing, use only new SRS parts.**
- **Carefully inspect the airbag assembly before installing. Do not install an airbag assembly that shows signs of being dropped or improperly handled, such as dents, cracks or deformation.**
- **Always keep the short connector on the airbag connector when the harness is disconnected.**
- **Do not disassemble or tamper with the airbag assembly.**

NOTE: If an intact airbag assembly has been removed from a scrapped car or has been found defective or damaged during transit, storage or service, it should be deployed (See section 23).

1. Disconnect the negative and positive cable from the battery.
2. Remove the access panel/from the steering wheel lower cover, then remove the short connector.
3. Disconnect the connector between the airbag and cable reel.
4. Connect the short connector to the airbag side of the connector.

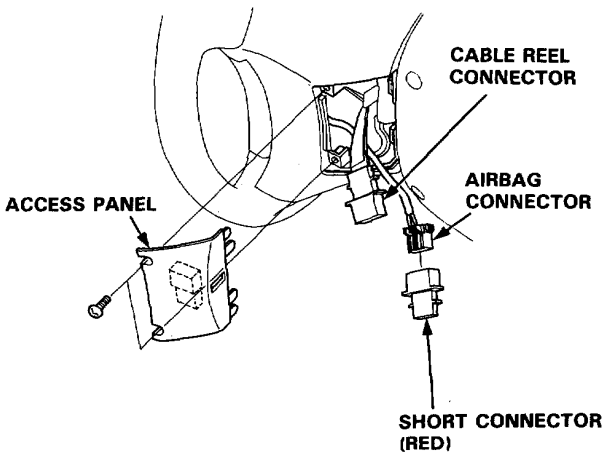

5. Remove the switch assembly covers.
6. Remove the two TORX® T30 bit bolts, then remove the airbag assembly.

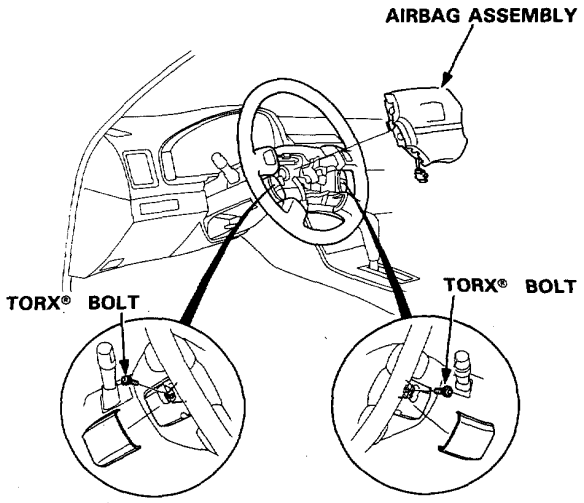

(cont'd)

Removal (cont'd)

7. Disconnect the connectors from the horn and cruise control set/resume switches.

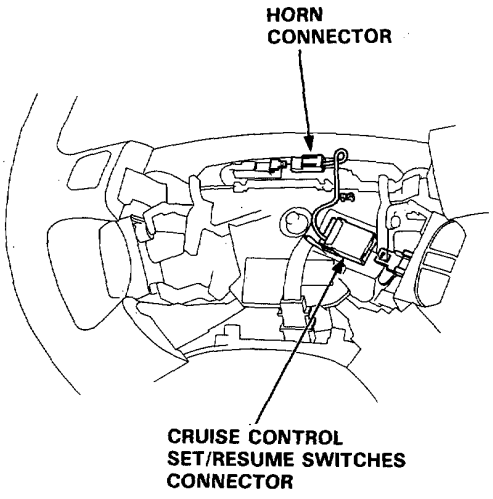

8. Remove the steering wheel nut.

9. Remove the steering wheel by rocking it slightly from side-to-side as you pull steadily with both hands.

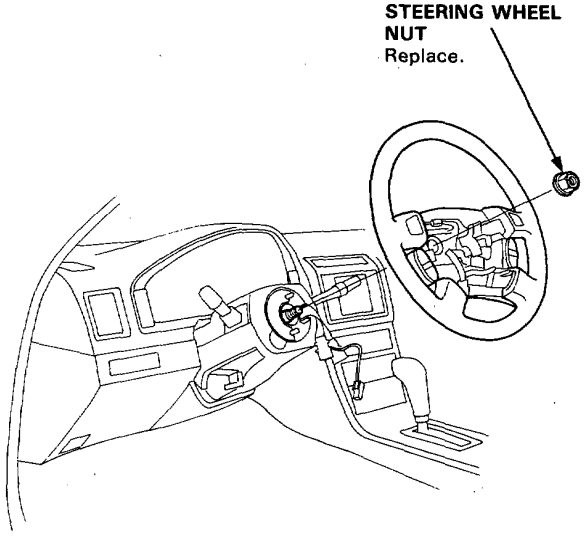

Disassembly/Reassembly

⚠WARNING Store a removed airbag assembly with the *pad surface* up. If the airbag is improperly stored face down, accidental deployment could propel the unit with enough force to cause serious injury.

NOTE: If an intact airbag assembly has been removed from a scrapped car or has been found defective or damaged during transit, storage or service, it should be deployed (See section 23).

CAUTION:

- **Carefully inspect the airbag assembly before installing. *Do not install an airbag assembly that shows* signs of being dropped or improperly handled, such as dents, cracks or deformation.**
- **Always keep the short connector on the airbag connector when the harness is dieconnected.**
- **Do not disassemble or tamper with the airbag assembly.**

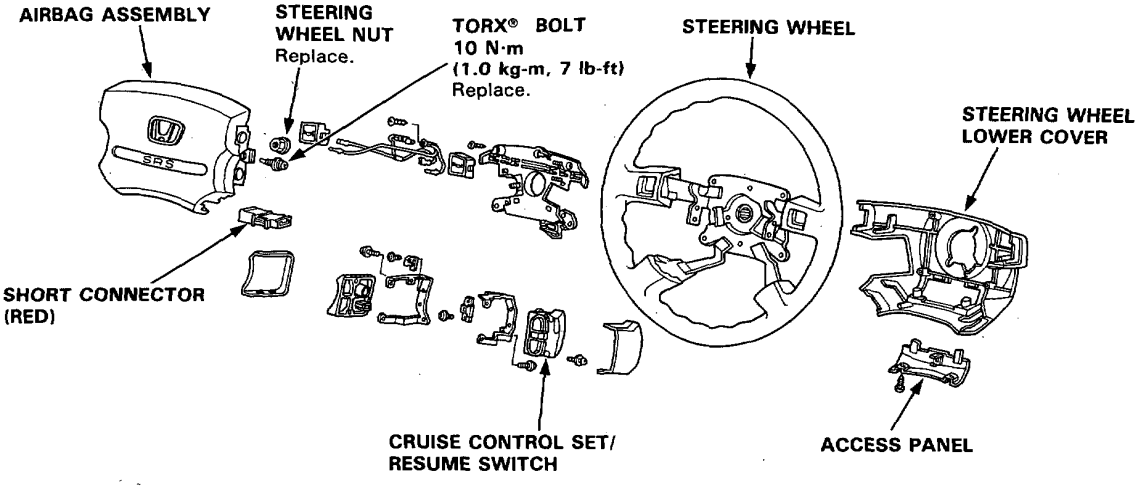

Installation

CAUTION:

- **Before installing the steering wheel, align the front wheels straight ahead.**
- **Be sure to install the harness wires so that they are not pinched or interfering with other car parts.**
- **Do not replace the original steering wheel with any other design, since it will make it impossible to properly install the airbag. (Only use genuine HONDA replacement parts)**
- **After reassembly, confirm that the wheels are still straight ahead and that steering wheel spoke angle is correct. If minor spoke angle adjustment is necessary, do so only by adjustment of the tie rods, not by removing and repositioning the steering wheel.**

⚠ WARNING Confirm that the airbag assembly is securely attached to the steering wheel; otherwise, severe personal injury could result during later airbag deployment.

1. Before installing the steering wheel, center the cable reel.
   Do this by first rotating the cable reel clockwise until it stops.
   Then rotate it counterclockwise (approximately two turns) until:
   - The yellow gear tooth lines up with the mark on the cover.
   - The arrow on the cable reel label points straight up.

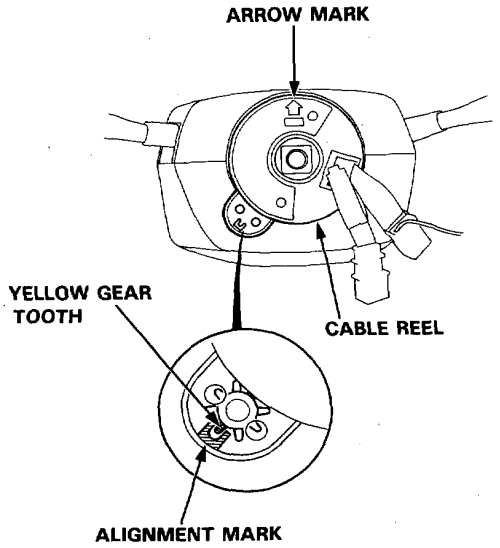

2. Install the steering wheel.
   NOTE: Be sure the steering wheel shaft engages the cable reel.

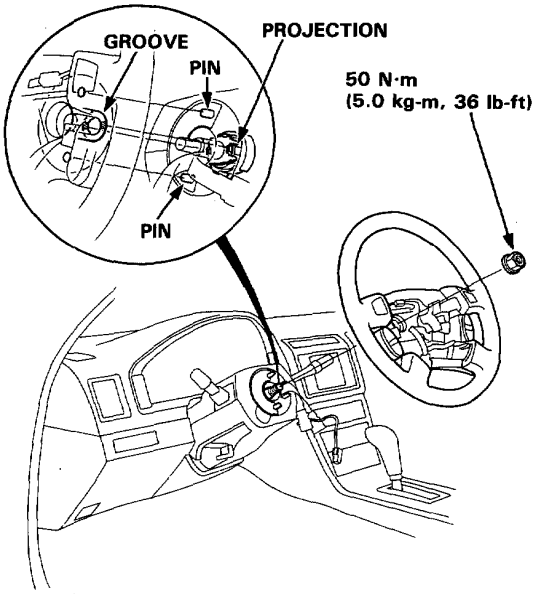

3. Insert the cruise control set/resume 4-P connector and airbag connector to the steering wheel clips.

4. Connect the horn connector.

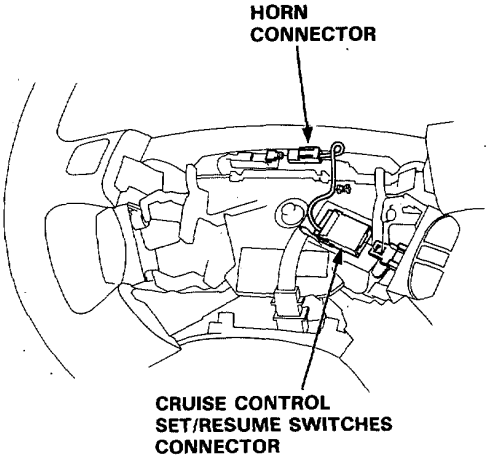

5. Install the airbag assembly with new TORX® bolts.

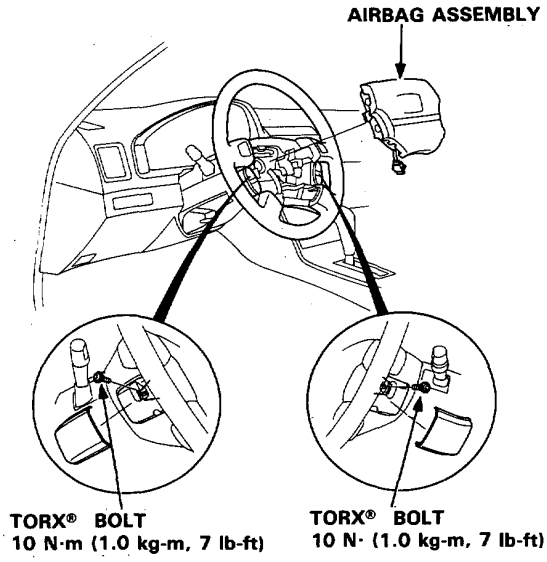

6. Disconnect the short connector from the airbag connector.

7. Connect the airbag 3-P connector and cable reel 3-P connector.

8. Attach the short connector to the access panel, and install the access panel on the steering wheel lower cover.

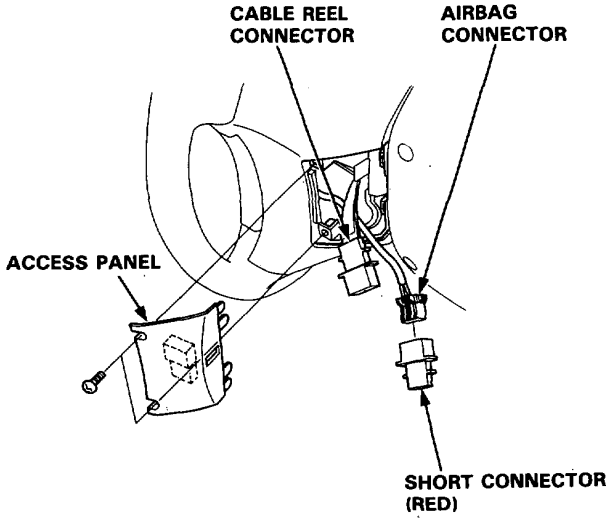

9. Connect the battery positive terminal and then connect the negative terminal.

10. After installing the airbag assembly, confirm proper system operation:
    - Turn the ignition to II: the instrument panel SRS warning light should come on for about 6 seconds and then go off.
    - Confirm operation of horn buttons.
    - Confirm operation of cruise control set/resume switchs.
    - Turn the steering wheel counterclockwise and make sure the yellow gear tooth still lines up with the alignment mark.

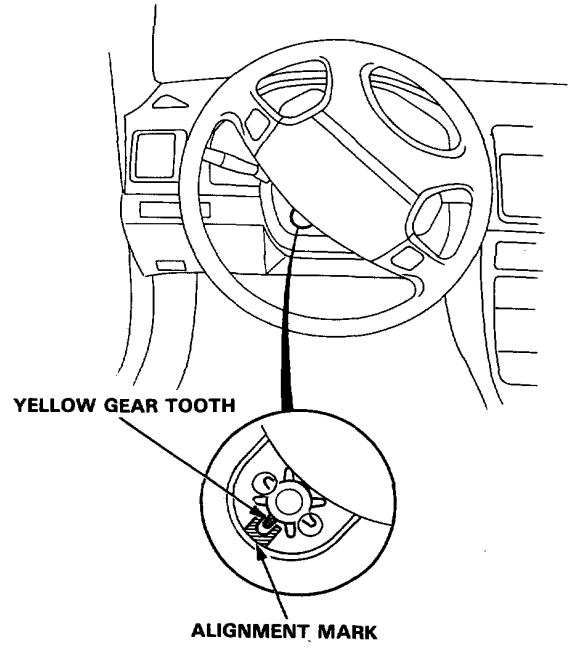

Steering Column

Removal

1. Remove the airbag assembly and steering wheel (page 17-22).
2. Remove the steering joint lower bolt and toothed washer (in the engine compartment.)

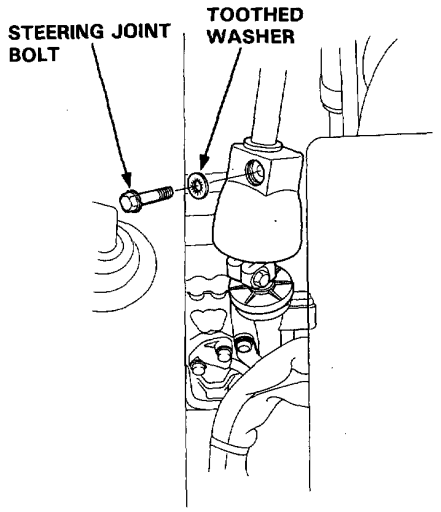

3. Remove the control courtesy light and disconnect the connector, then remove the dashboard lower panel.

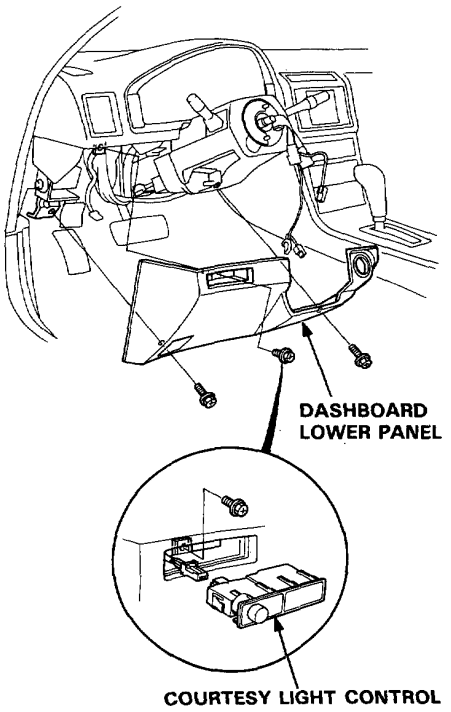

4. Remove the upper column and lower column covers, then disconnect the control switch connector from the lower cover.

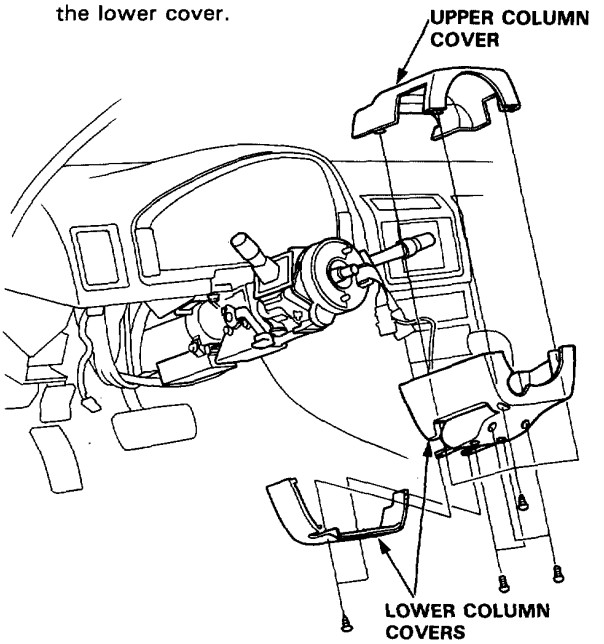

5. Remove the steering joint cover.

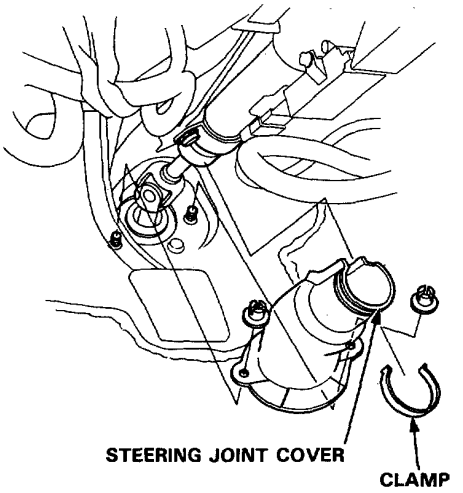

6. Remove the cable reel box from the underside of the column pipe.

7. Remove the clip.

CAUTION: Do not disconnect the cable reel connector and the SRS wire harness. After removing the cable reel box, place it on the car floor so that it does not hinder you in service.

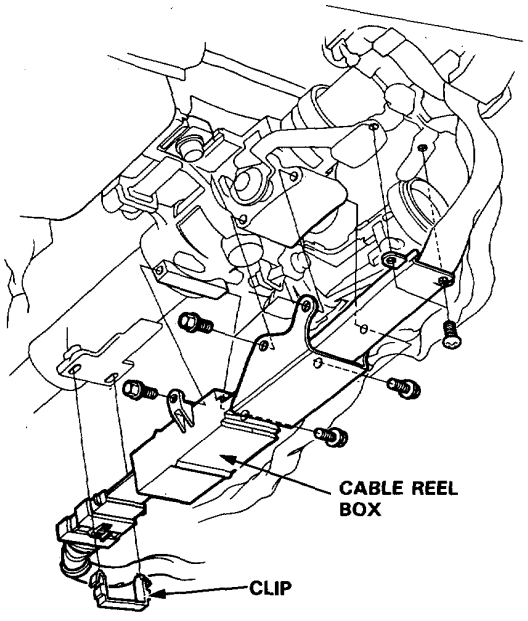

8. Remove the cable reel, turn signal canceling sleeve and combination switch assembly from the column shaft.

NOTE: After removing the combination switch assembly, place it on the floor gently so that it does not hinder you in service. Do not disconnect the cables from the combination switch assembly.

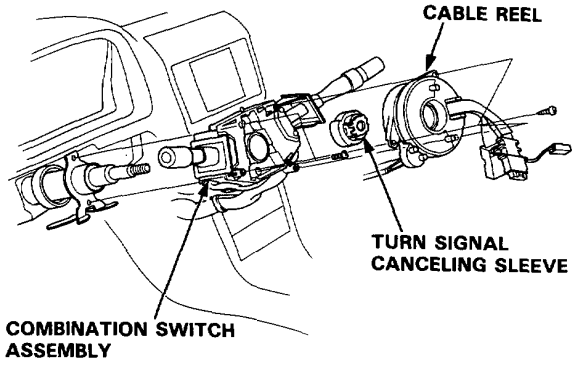

9. Disconnect the wire coupler of the ignition switch from the under-dash fuse box.

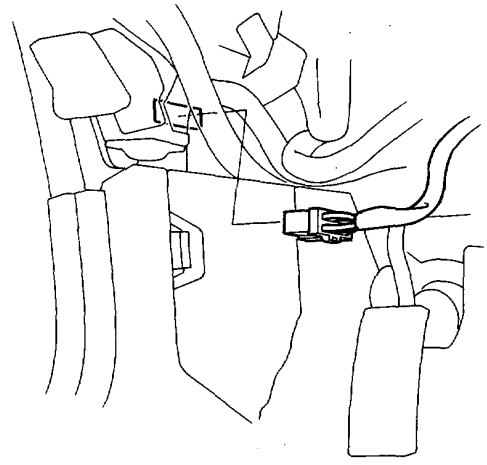

10. Remove the steering column assembly by removing the attaching nuts and bolts.

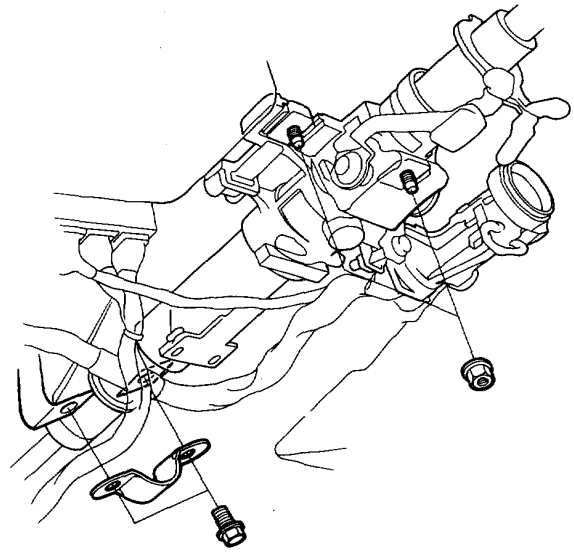

Inspection

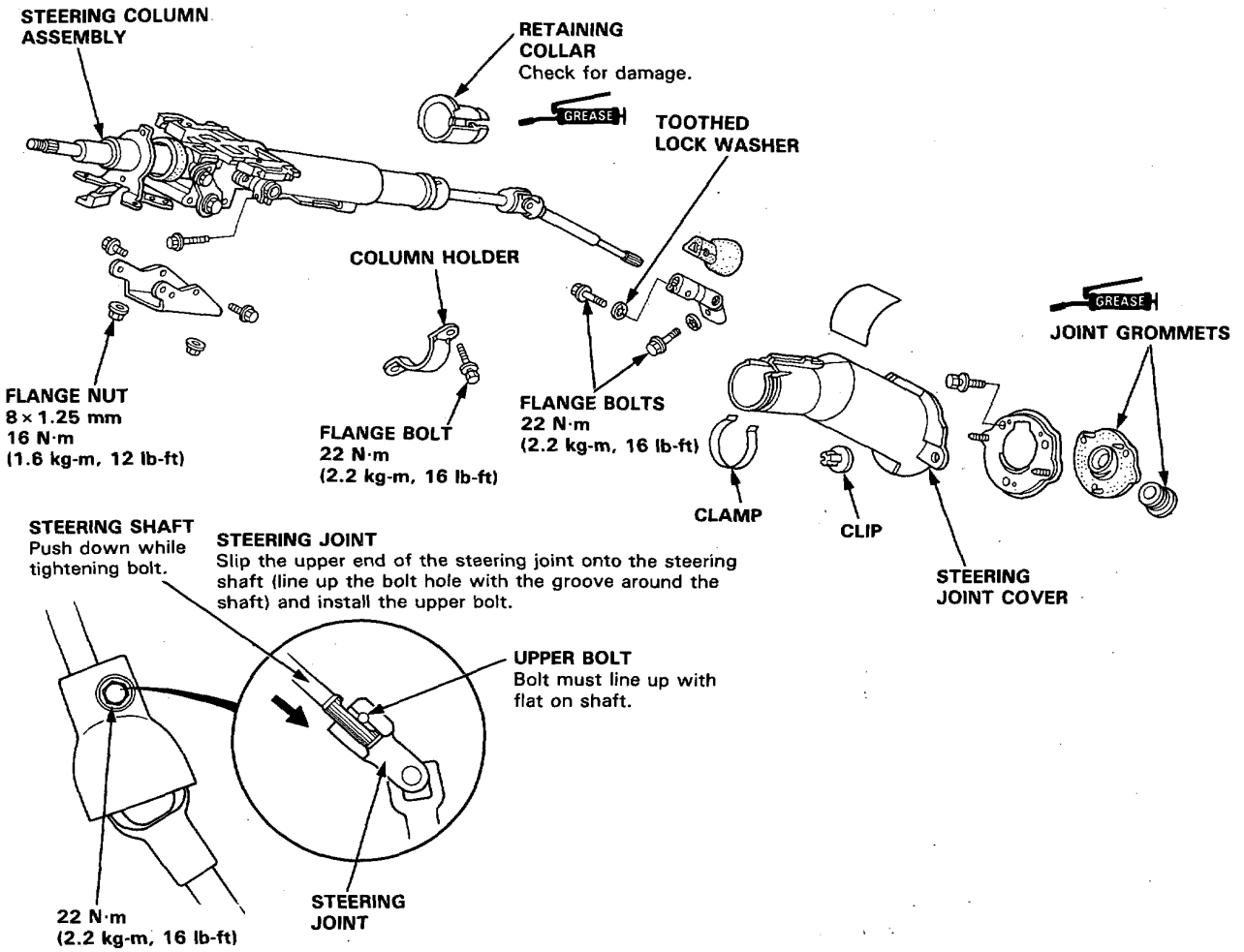

NOTE:

- Check the telescopic mechanism and steering joint bearings or steering shaft for movement and damage. Replace as an assembly if damaged or faulty.

Attach a spring scale to the knob of the telescopic lever.
Measure the force required to move the lever.
Preload: 30–60 N (3–6 kg, 6.6–13.2 lbs)

If the force measured is not within the specification, loosen the lockbolt then the stopper until the correct force can be obtained.

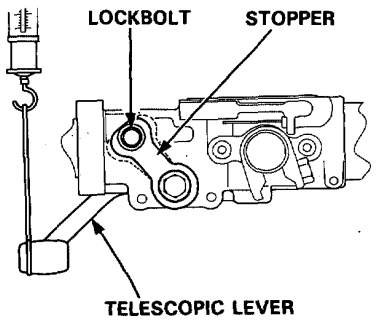

Installation

1. Guide the steering shaft through the engine bulkhead. Align the bolt hole in the steering joint with the slot in the steering shaft, and insert the shaft into the steering joint.

2. Install the steering column assembly with the nuts and column holder.

   NOTE:
   - Be sure the pinion shaft and the steering column shaft are aligned; the joint should slip on freely. If not, reposition the steering rack to correct the misalignment.
   - Coat the interior of the steering joint grommet with grease.

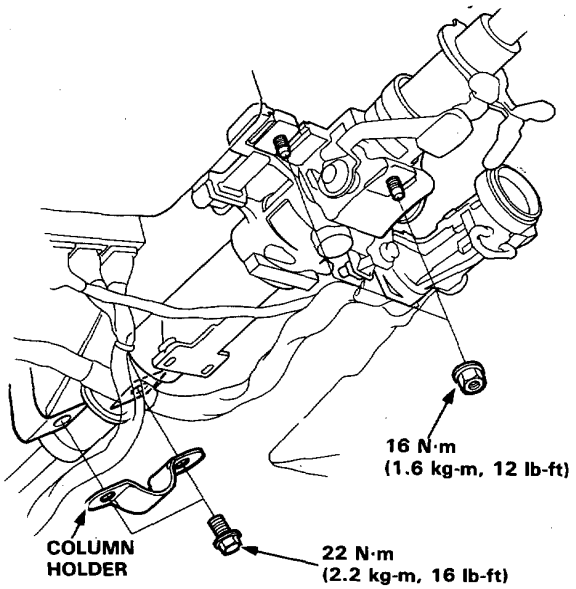

3. Install the upper bolt in the steering joint and tighten.

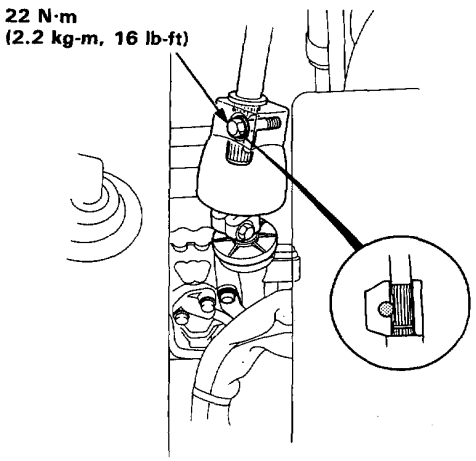

4. Connect the ignition switch connector to the underdash fuse box.

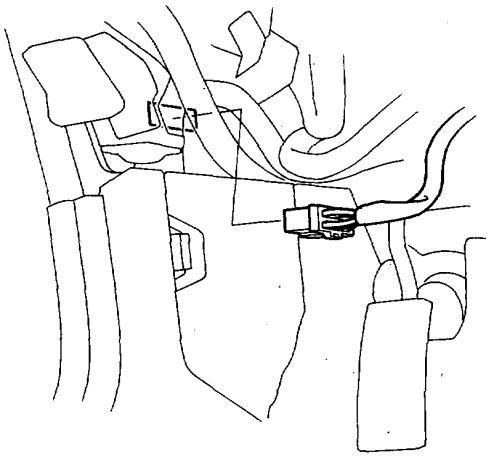

5. Install the combination switch assembly, turn signal canceling sleeve and cable reel onto the steering column.
   NOTE: Be sure the wires are not caught or pinched by any parts when connecting the combination switch and the cable reel.

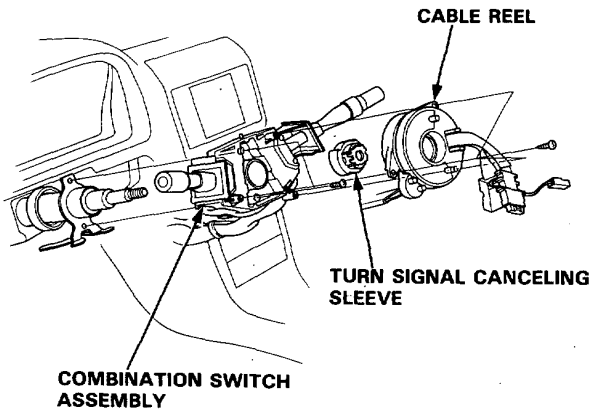

NOTE: Align the slot in the canceling sleeve with the projection on the cable reel.

(cont'd)

Installation (cont'd)

6. Install the cable reel box on the steerng column with the screws.

7. Install the cable reel coupler with the clip.

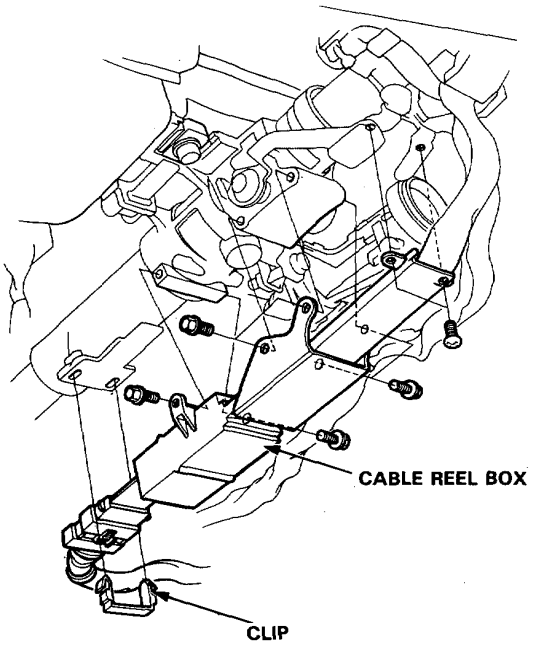

8. Install the steering joint cover with the clamp and clip.

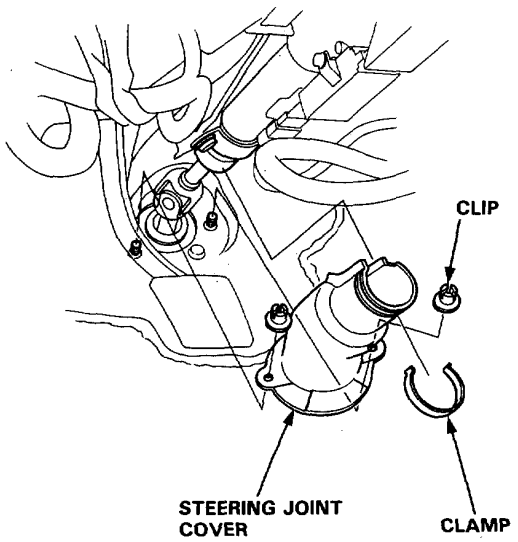

9. Install the column covers.

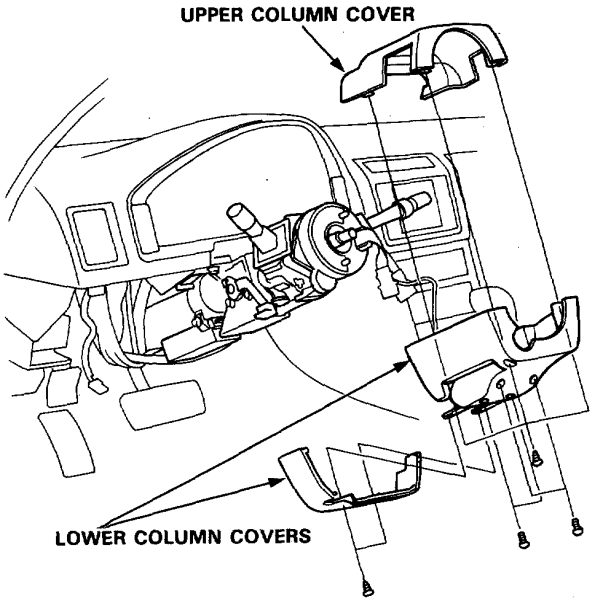

10. Install the dashboard lower panel, then connect the switch connector to the control switch and install the control switch.

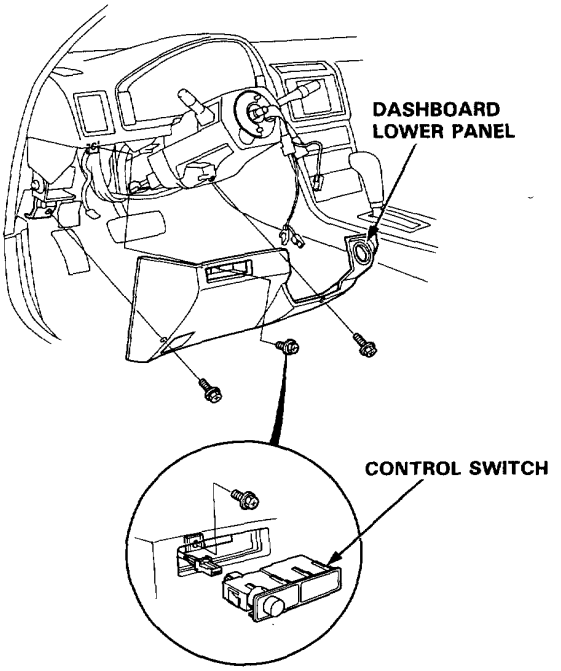

11. Install the steering wheel and airbag assembly (page 17-24).

Replacement

1. Drain the fluid from the system (page 17-18).
2. Remove the air cleaner cover and duct (Section 11).
3. Disconnect the inlet and outlet hoses from the pump and plug them.

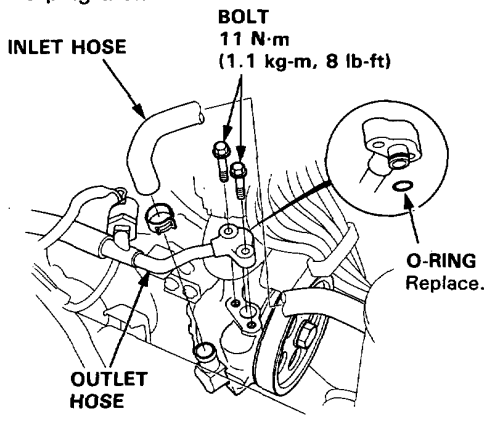

4. Remove the belt by loosening the special bolt, nut and adjusting bolt.
5. Remove the special bolt and nut, then remove the pump.

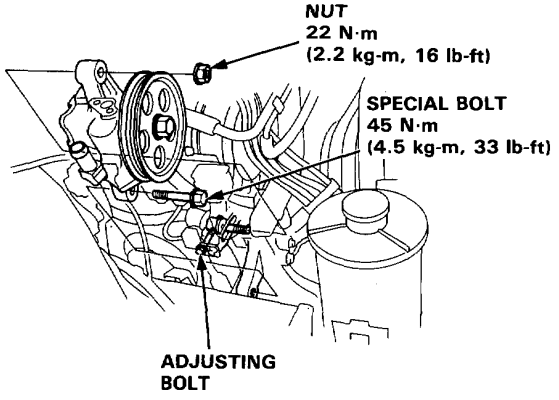

6. Loosely install a new pump on the bracket.
7. Connect the inlet and outlet hoses to the pump.
8. Install and adjust the belt (page 17-17).
9. Fill the reservoir with new fluid to the UPPER LEVEL On the reservoir.
10. Start the engine and let it run at fast idle while turning the steering wheel lock-to-lock several times to bleed air from the system.
11. Check the reservoir and add fluid if necessary.

Steering Pump

Pulley Replacement

Hold the steering pump in a vise with soft jaws, and hold the pulley with the special tool and remove the pulley nut and pulley.

NOTE: Pulley nut has right hand threads.

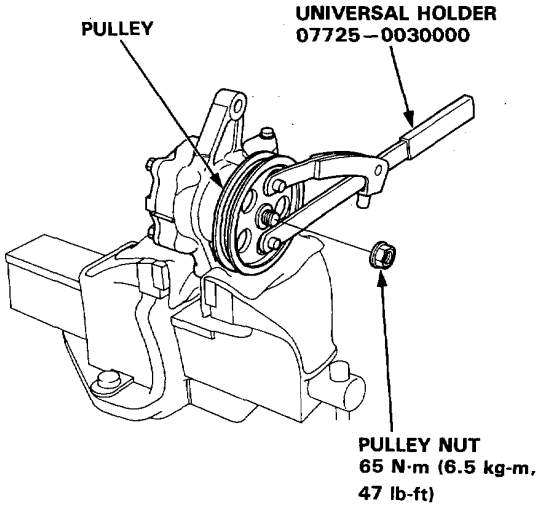

Hold the pulley with the special tool and tighten the pulley nut.

Control Valve Inspection and Replacement

1. Remove the control valve cap by removing the two flange bolts.
2. Remove the control valve, control valve spring and 22.1 × 1.9 mm O-ring.

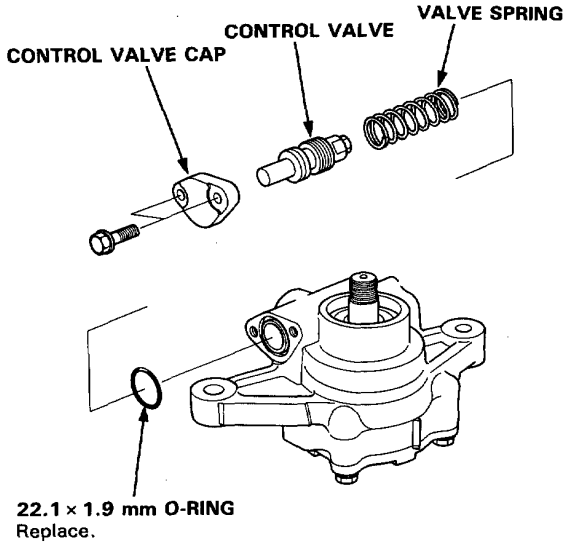

3. Check for wear, burrs, and other damage to the edges of the grooves in the valve.

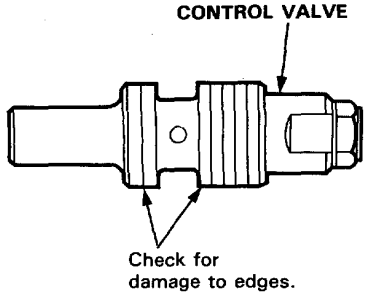

4. Slip the valve back in the pump and check that it moves in and out smoothly.

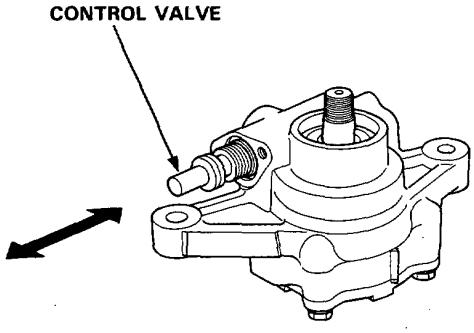

If OK, go on step 5, if not, replace the whole pump as an assembly.

5. Attach a hose to the end of the valve as shown.

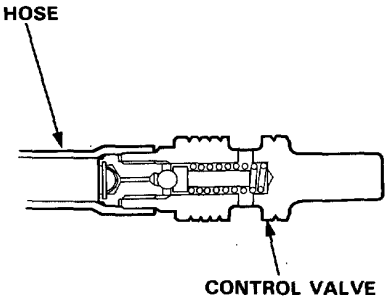

6. Submerge the valve in a container of power steering fluid or solvent, and blow in the hose. If air bubbles leak through the valve, replace or repair it as follows.

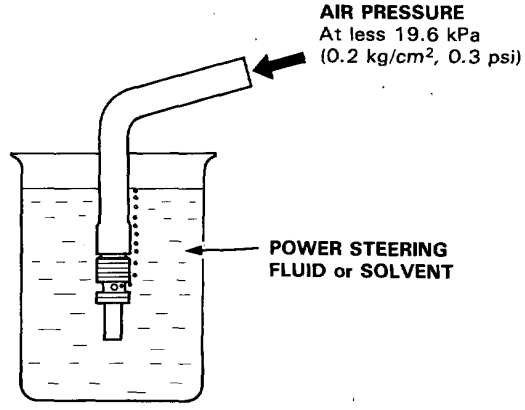

7. Clamp the bottom end of the valve in a vise with soft jaws.

8. Unscrew the seat in the top end of the valve, and remove any shims, the relief check ball, relief valve and relief valve spring.

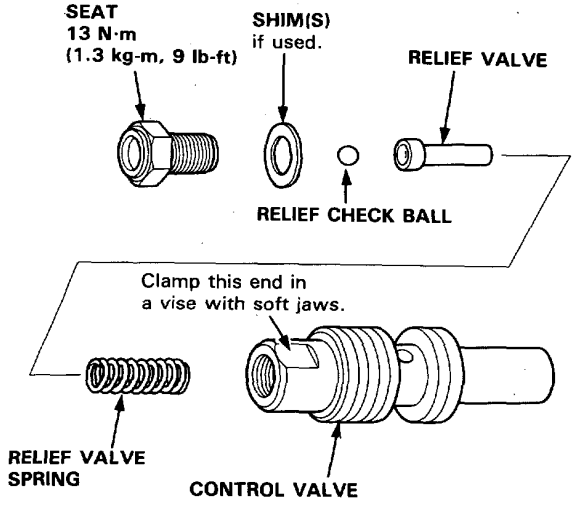

(cont'd)

Control Valve Inspection and Replacement (cont'd)

9. Clean all the parts in solvent, dry them off then reassemble and retest the valve.

   NOTE: If necessary, relief pressure is adjusted at the factory by adding shims under the check ball seat. If you found shims in your valve, be sure you reinstall as many as you took out.

10. Install the control valve in the reverse order of removal.

    - Apply steering grease (Honda P/N 08733—B070E) to new O-ring.
    - Coat the control valve with power steering fluid then install it and valve spring.

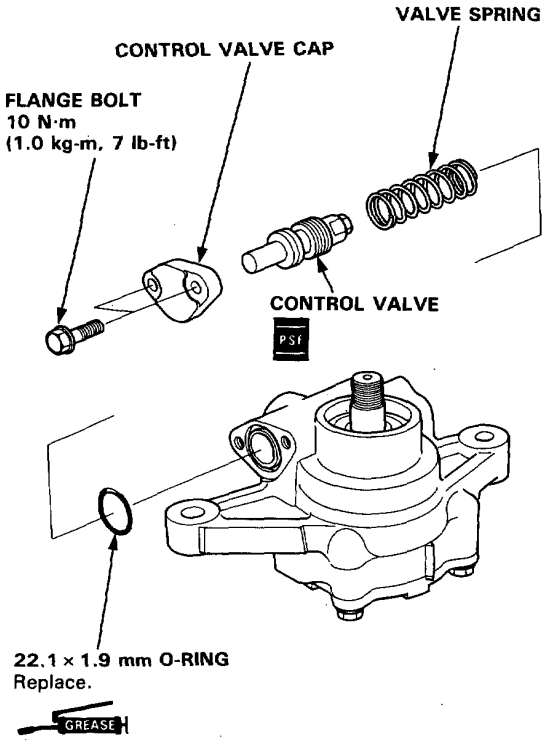

Pump Disassembly

CAUTION: The pump components are made of aluminum. Be careful not to damage them when servicing.

1. Remove the pump from car (page 17-31).
2. Remove the pulley (page 17-32).
3. Remove the control valve (page 17-32).
4. Remove the inlet joint and 13.3 × 1.9 mm O-ring.

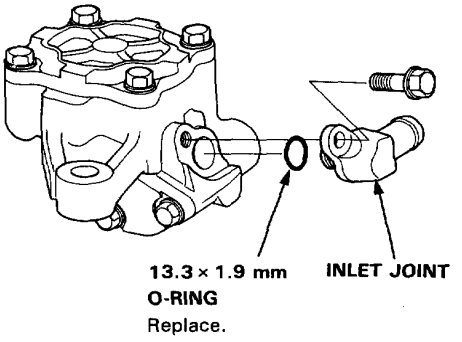

5. Remove the pump cover.

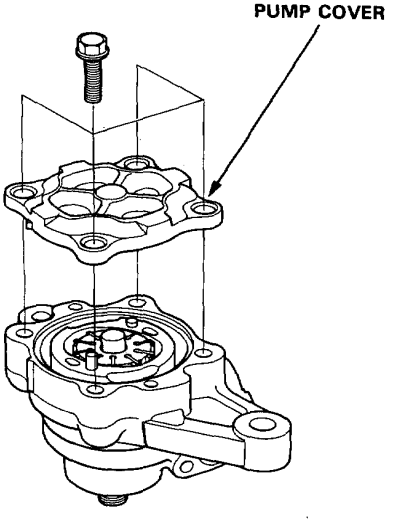

6. Remove the pump cam ring from the pump housing.

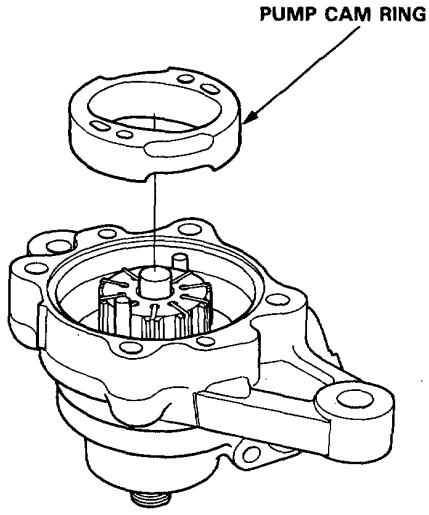

7. Remove the pump rotor and vanes.

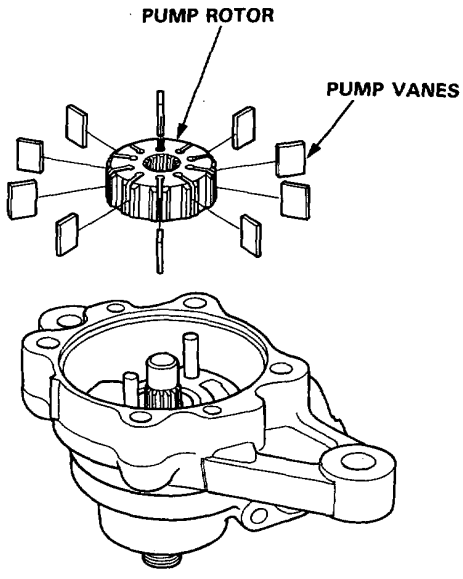

8. Remove the two rollers from the side plate.

9. Remove the side plate and preload spring.

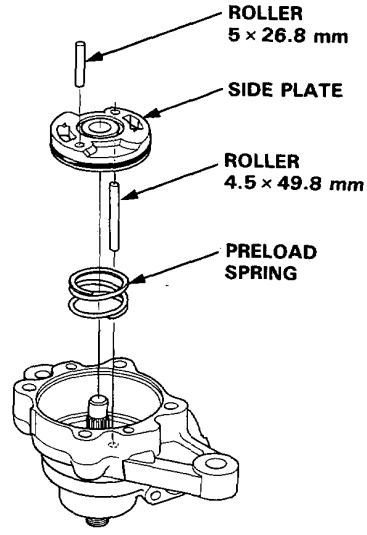

10. Remove the circlip, then remove the drive shaft assembly from the pump housing using a plastic hammer.

11. Remove the seal spacer and oil seal.

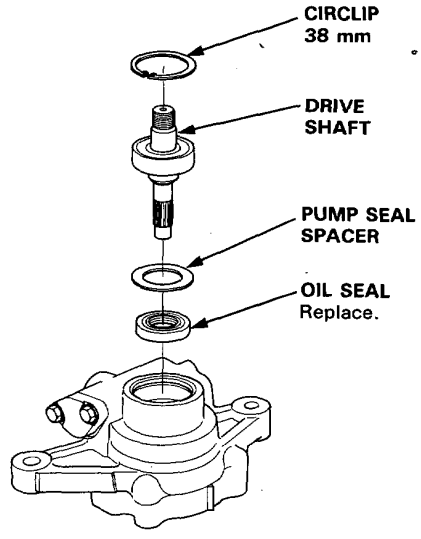

(cont'd)

Pump Disassembly (cont'd)

12. Check the pump ball bearing for play; if it is good and the grease in it is clean, go on step 13.

    – If the bearing is noisy or has excessive play, replace the bearing.

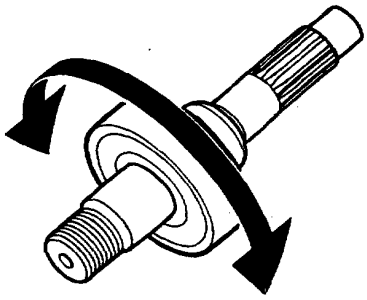

    – Remove the bearing using the special tool and press.

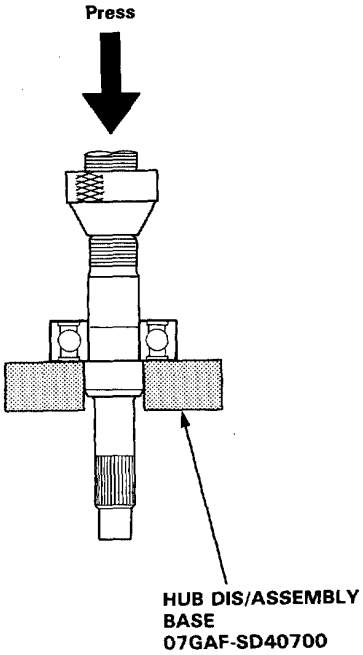

    – Install the new bearing using the press and special tool.

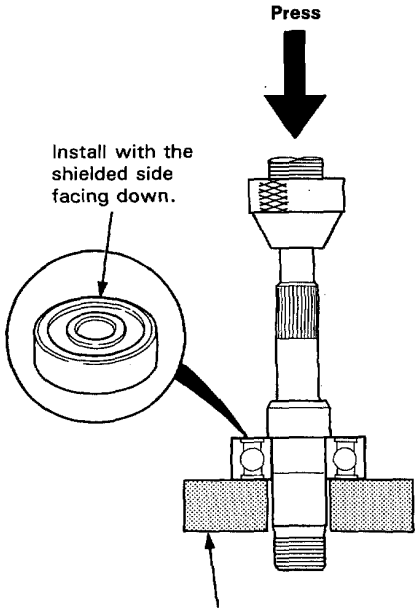

Illustrated Index

CAUTION: Pump components are made of aluminum. Be careful not to damage them when servicing.

NOTE:
- Clean all of the disassembled parts thoroughly.
- Replace all O-rings and seals. Do not dip new O-rings and seals in solvent; coat O-rings with steering grease before installation, and make sure they stay in place during reassembly.
- If any part denoted with an asterisk is worn or damaged, replace the complete pump.

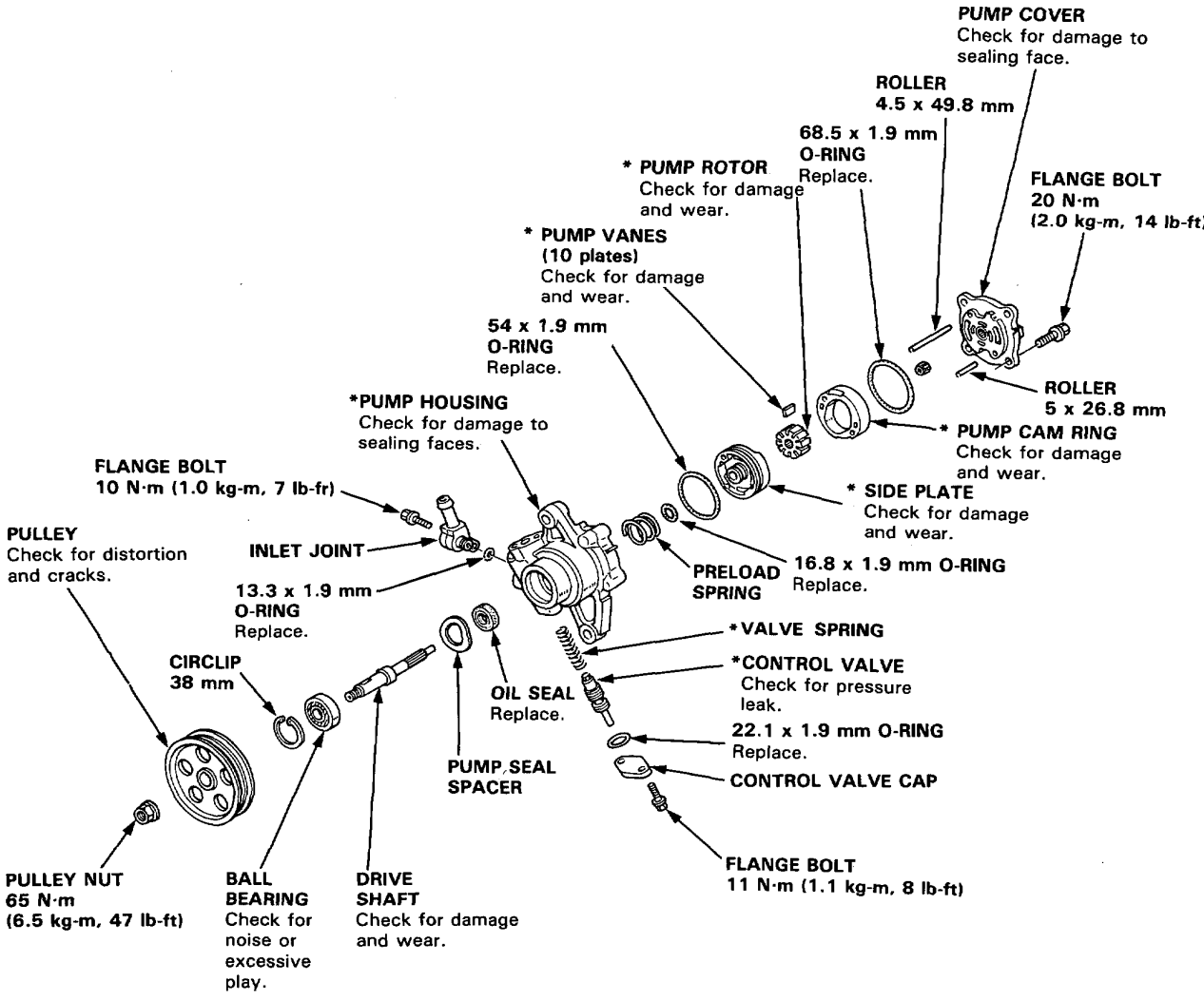

Pump Assembly

1. Coat the lip of the new oil seal with steering grease (Honda P/N 08733-B070E).
2. Install the new oil seal in the pump housing by hand.

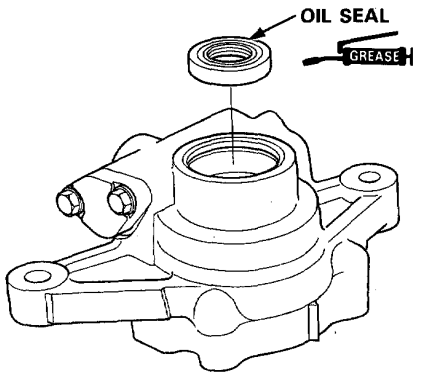

3. Install the pump seal spacer, then install the pump drive shaft assembly.
4. Install the 38 mm circlip with its tapered side facing out.

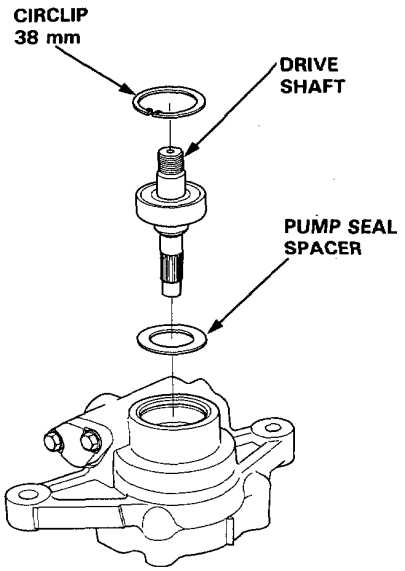

5. Coat the side plate grooves with power steering fluid, then position the 16.8x1.9 mm and 54x1.9 mm O-rings on the side plate.

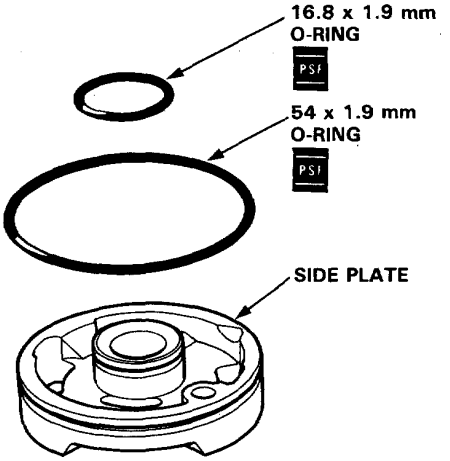

6. Install the preload spring in the pump housing.
7. Set the 4.5x49.8 mm roller in the 4.5 mm hole in the pump housing.
8. Set the side plate over the roller and install it on the pump housing.
9. Set the 5x26.8 mm roller in the 5 mm hole in the side plate.

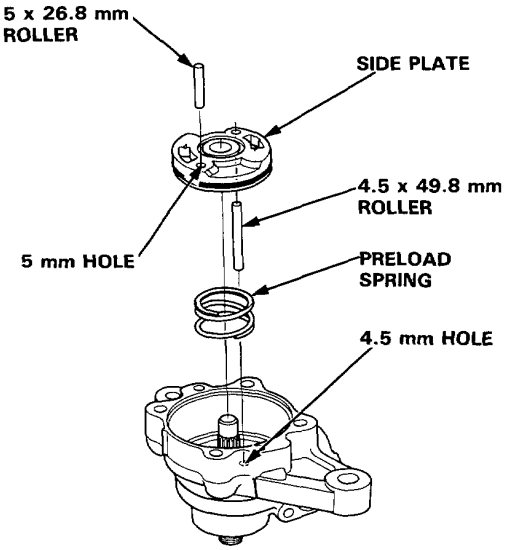

10. Assemble pump rotor to the drive shaft with the "O" mark on the rotor facing upward.

11. Set the 10 vanes in the grooves in the rotor.

NOTE: Be sure that the round end of the vanes is in contact with the sliding surface of the cam ring.

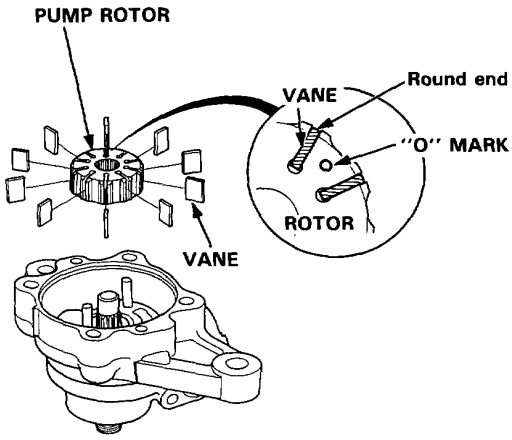

12. Set the pump cam ring over the two rollers with the "O" mark on the cam ring upward.

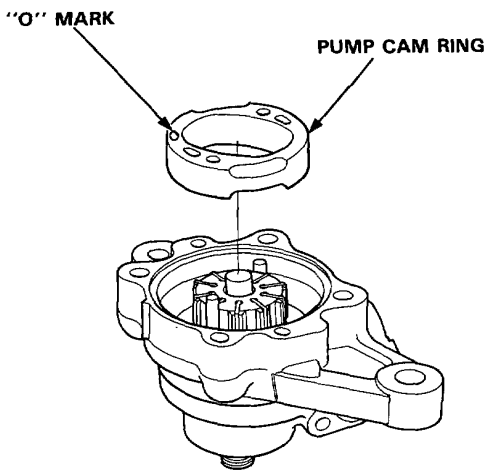

13. Install the 68.5 x 1.9 mm O-ring on the pump cover.

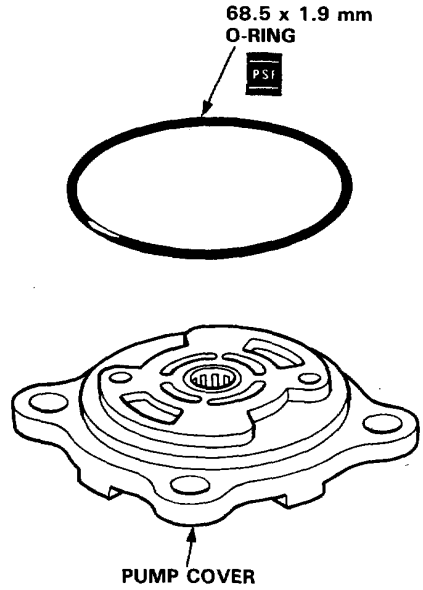

14. Align the roller set holes in the pump cover with the rollers.

15. Align the projection on the pump housing and the projection on the pump cover and tighten the four bolts.

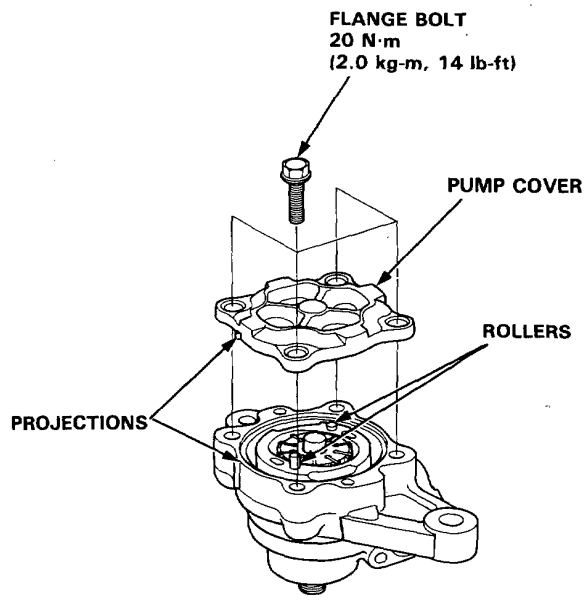

(cont'd)

Pump Assembly (cont'd)

16. Set the 13.3 x 1.9 mm O-ring on the inlet joint.

17. Install the inlet joint on the pump housing.

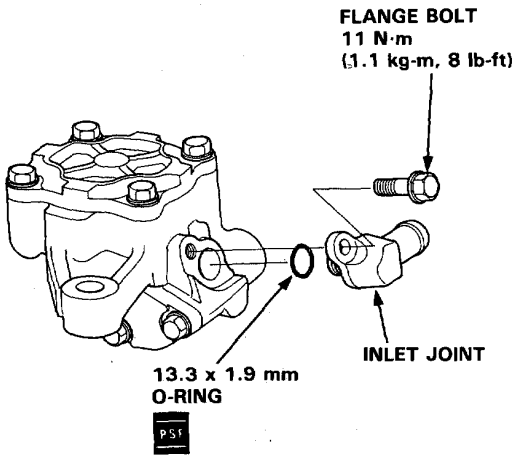

18. Install the control valve (page 17-34).

19. Install the pulley (page 17-32) and check that the pump turns smoothly by turning the pulley.

Gearbox Removal

NOTE:
- Before removing the steering gearbox, align the front wheels straight ahead.
- Disconnect the battery negative terminal and then disconnect the positive terminal.

1. Drain the power steering fluid as described on page 17-18.

2. Raise the front of car and support on safety stands in the proper locations.

3. Remove the front wheels.

4. Remove the cotter pin from the tie-rod ball joint nut and remove the nut.

5. Install the 12 mm hex nut on the ball joint. Be sure that the 12 mm hex nut is flush with the ball joint pin end, or the threaded section of the ball joint pin might be damaged by the ball joint remover.

   NOTE: Use the ball joint remover, 28mm (07MAC-SL00200) as shown on page 18-12 to sepaate the steering arm.

6. Separate the tie-rod ball joint and knuckle using the special tool.

   CAUTION: Avoid damaging the ball joint boot.

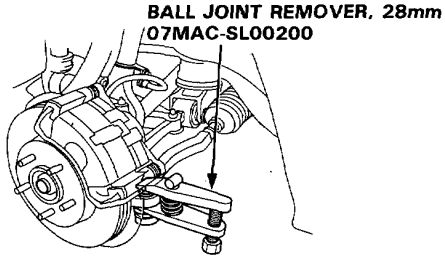

7. Loosen the steering joint bolt.

   NOTE: Do not remove the bolt at this time.

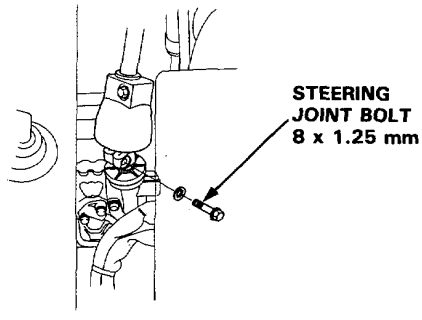

CAUTION: Some splash guard mounting bolts are also used as gearbox mounting bolts. The gearbox will tilt to the side when these bolts are removed. Be sure to remove the joint bolt when lowering the gearbox.

LH Drive (From step 15 for RH drive)

8. Remove the splash guard.

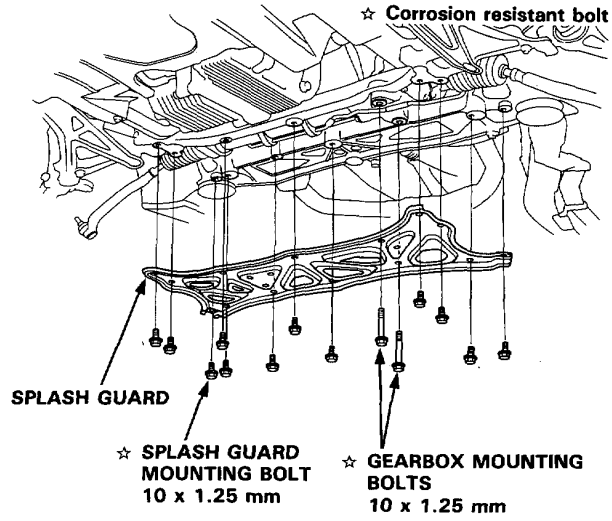

9. Using solvent and a brush, wash any oil and dirt off the control unit, its lines, and the end of the gearbox. Blow dry with compressed air.

10. Remove the hoses from the hose clamp on the right side.

11. Disconnect the four lines from the control unit.

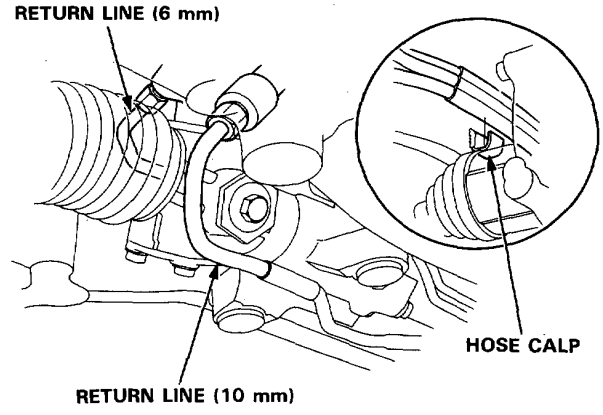

(cont'd)

Gearbox Removal (cont'd)

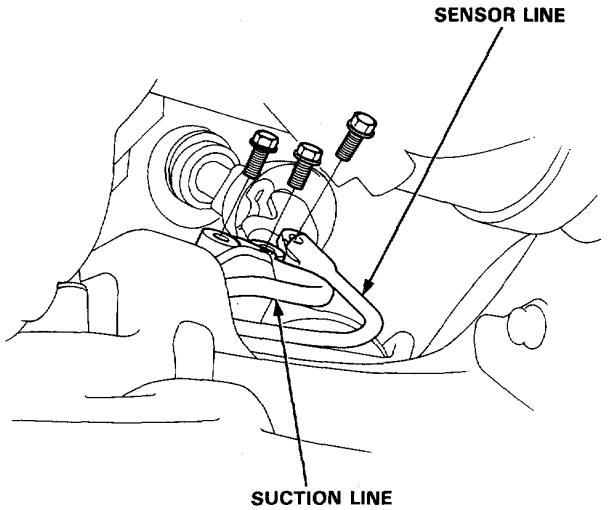

12. Remove the pipe clamps from the gearbox.

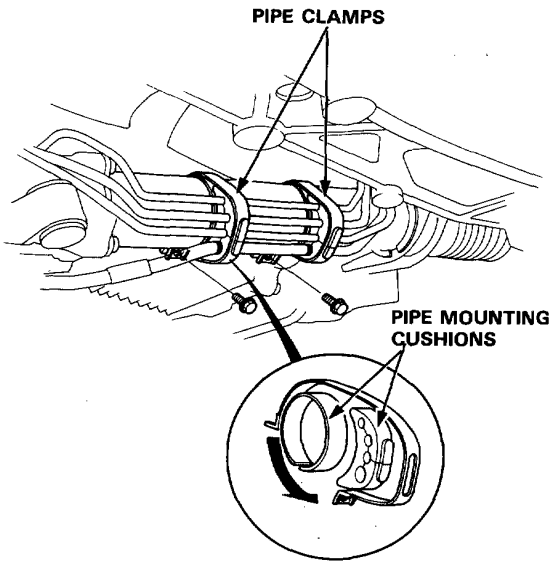

13. Separate the gearbox pinion shaft and column shaft by removing the steering joint bolt.

    NOTE: Before removing the gearbox, place a jack stand under the gearbox.

14. Remove the gearbox mounting bolts and gearbox assembly.

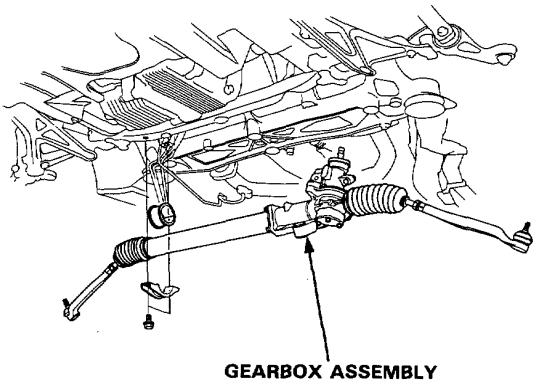

RH Drive

15. Remove the splash guard.

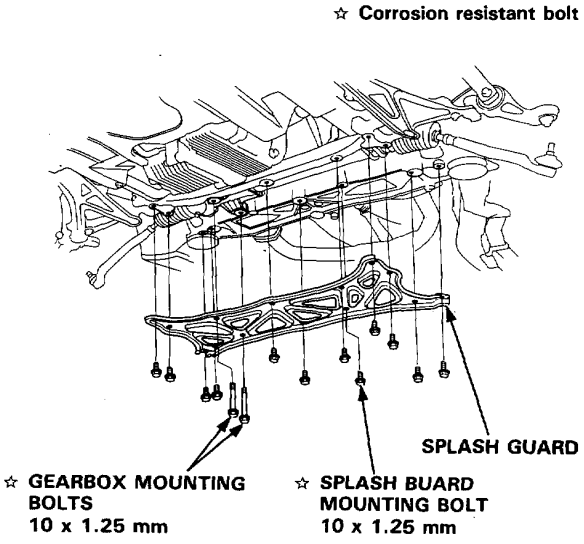

16. Using solvent and a brush, wash any oil and dirt off the control unit, its lines, and the end of the gearbox. Blow dry with compressed air.

17. Remove the hoses from the hose clamp on the right side.

18. Disconnect the four lines from the control unit.

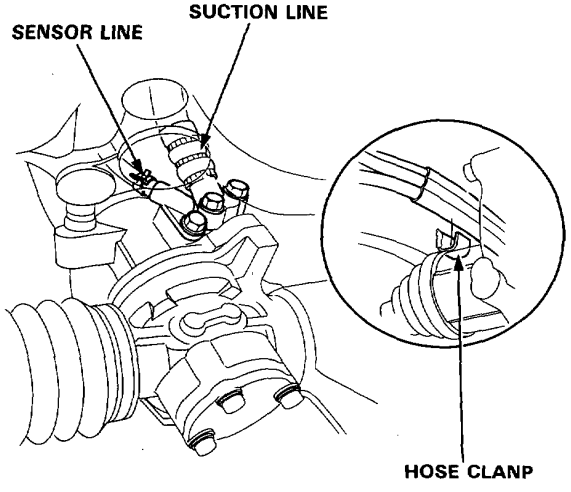

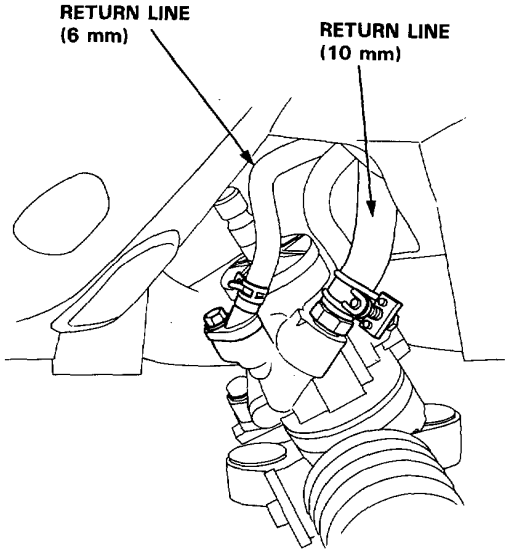

19. Separate the gearbox pinion shaft and column shaft by removing the steering joint bolt.

    NOTE: Before removing the gearbox, place a jack stand under the gearbox.

20. Remove the gearbox mounting bolts and gearbox assembly.

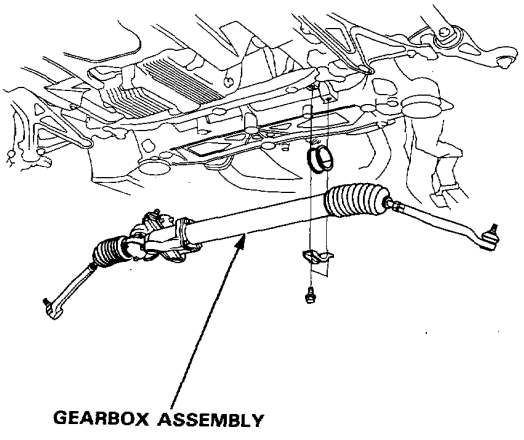

Gearbox Installation

LH Drive (From step 9 for RH drive)

1. Loosely install the two mounting bolts on the right side.

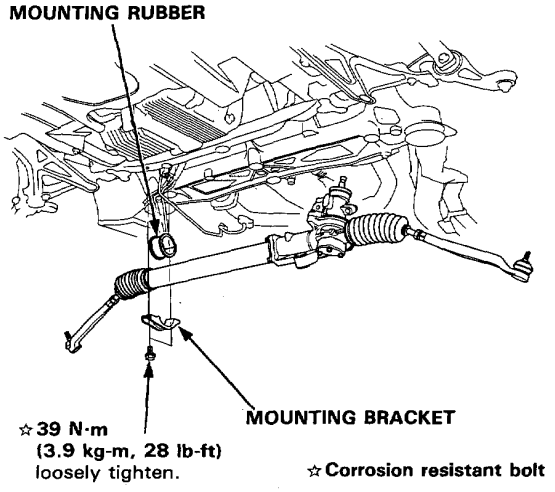

2. Reinstall the pipe mounting cushions with the pipe clamps.

   NOTE: Loosely reconnect the four lines first to the control unit and install the pipe mounting cushions onto the gearbox by aligning the white marks of the 10 mm return line (large diameter pipe).

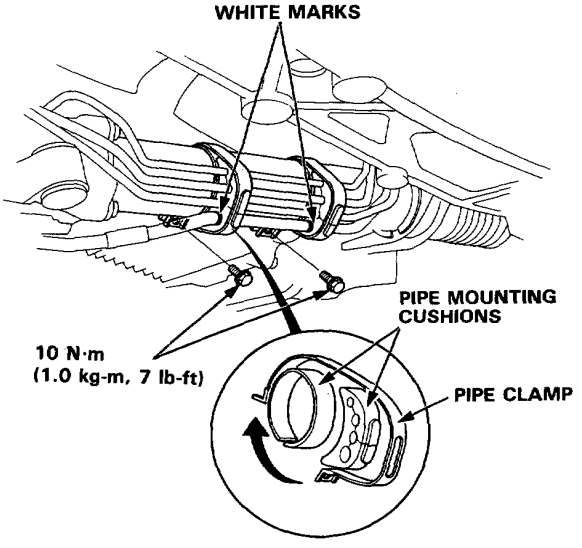

3. Connect the four lines to the control unit.

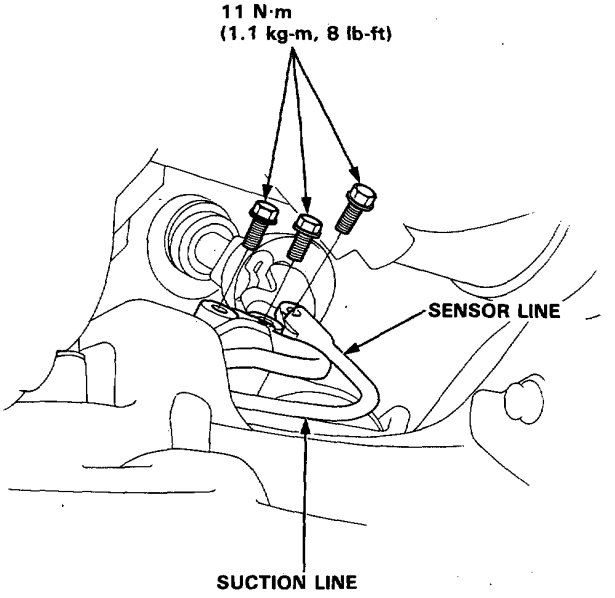

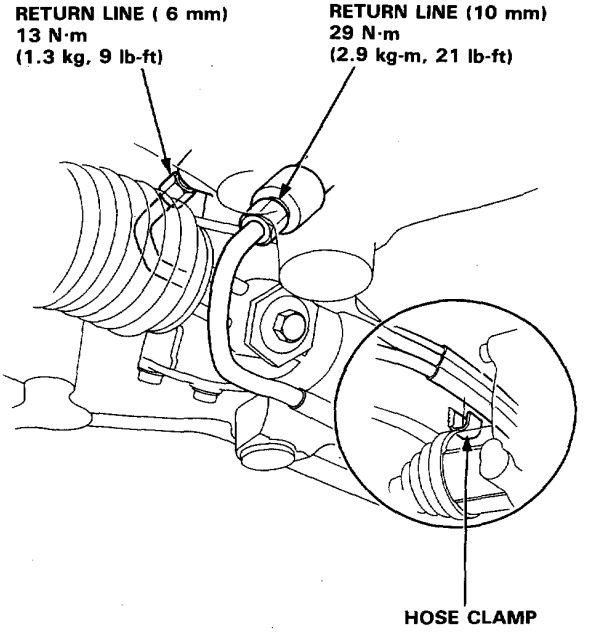

4. Install the hoses on the hose clamps.

5. Reconnect the pinion shaft and column shaft.

NOTE: Pass the bolt through the groove in the pinion shaft securely.

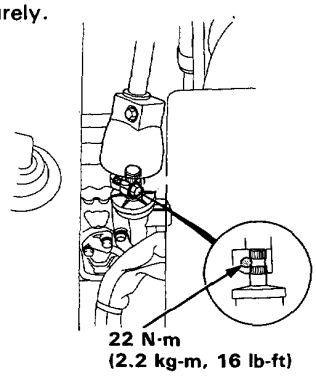

6. Tighten the two mounting bolts on the right side.

7. Install the splash guard with the two gearbox mounting bolts on the left side.

8. Tighten the splash guard attaching bolts.

NOTE: Install the bolts loosely first, then tighten them securely.

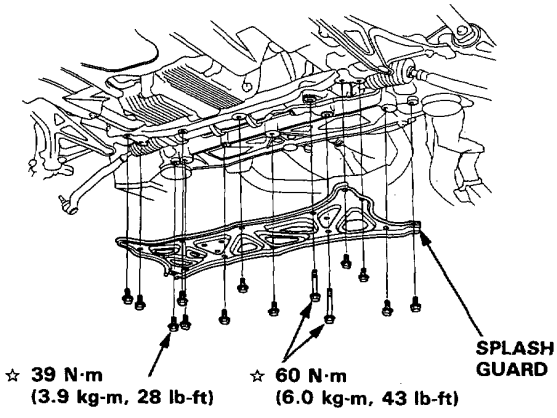

NOTE Reconnect the tie-rods to the steering knuckles (see step 17).

RH Drive

9. Loosely install the two mounting bolts on the left side.

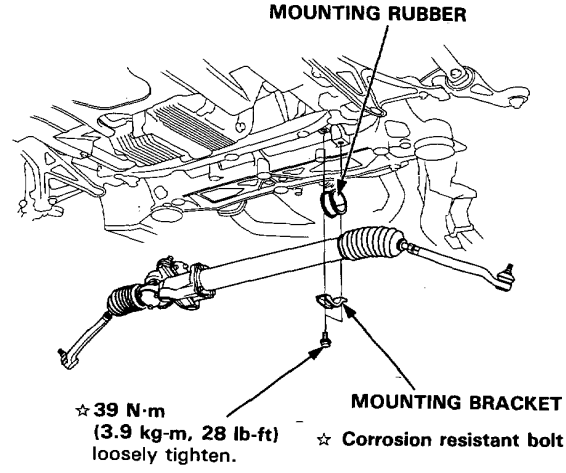

10. Connect the return lines to the control unit.

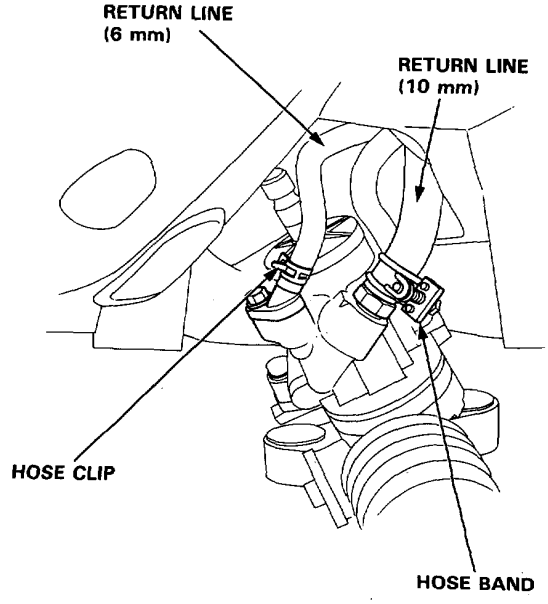

(cont'd)

Gearbox Installation (cont'd)

11. Connect the sensor line and susction line to the control unit.

12. Install the hoses on the hose clamp.

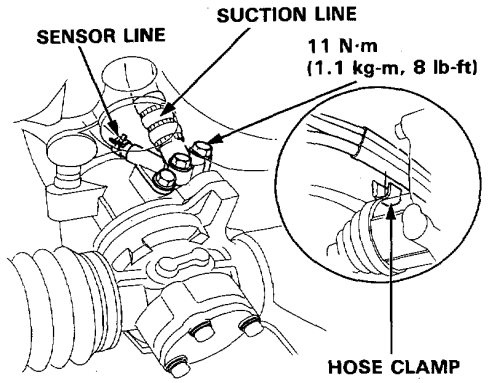

13. Reconnect the pinion shaft and column shaft.

    NOTE Pass the bolt through the groove in the pinion shaft securely.

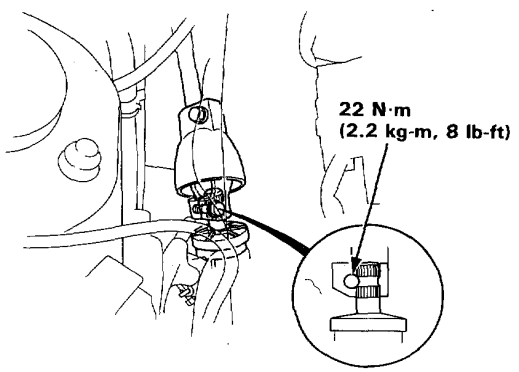

14. Tighten the two mounting bolts on the left side.

15. Install the splash guard with the two gearbox mounting bolts on the right side.

16. Tighten the splash guard attaching bolts.

    NOTE Install the bolts loosely first, then tighten them securely.

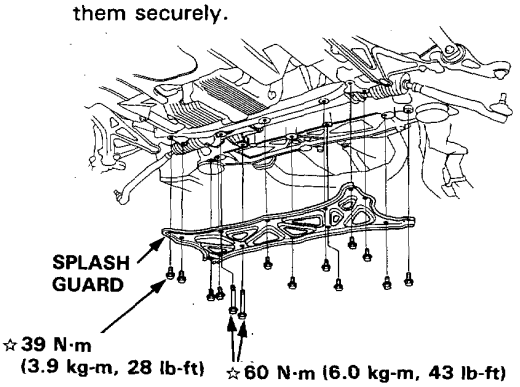

17. Reconnect the tie-rods to the steering knuckles, tighten the ball joint nut to the specified torque, and install new cotter pins.

CAUTION: Torque the castle nut to the lower torque specification, then tigthen it only far enough to align the slot with the pin hole. Do not align the nut by loosening.

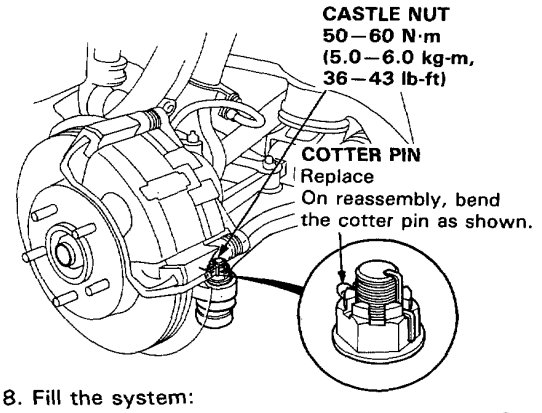

18. Fill the system:
    - Fill the reservoir with new Honda Power Steering Fluid-V.

19. Connect the battery positive terminal and then connect the negative terminal.

    - Start the engine and let it run at fast idle, then turn the steering wheel from lock-to-lock several times to bleed air from the system.

    - Check the fluid again, and add more if necessary.

20. Check the gearbox for leaks.

21. Reinstall the front wheels.

Valve Body Unit Overhaul

1. Remove the steering gearbox (page 17-41).
2. Remove the pinion dust cover.
3. Remove the two 8 mm flange bolts and remove the control valve body unit from the gearbox.
4. Remove the O-rings and orifices from the gearbox.

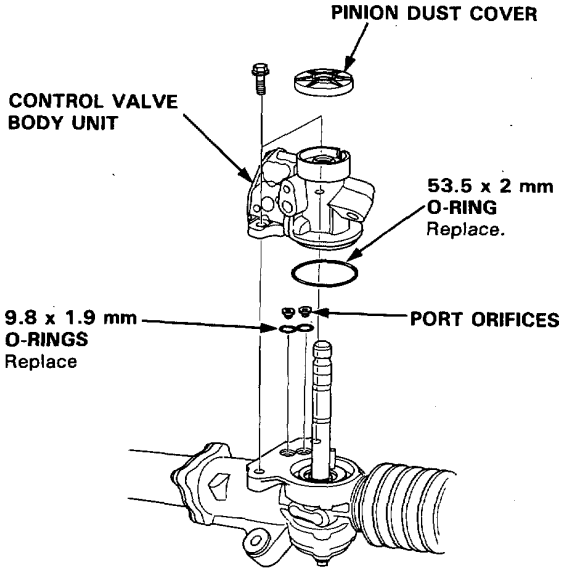

5. Remove the pinion dust seal.

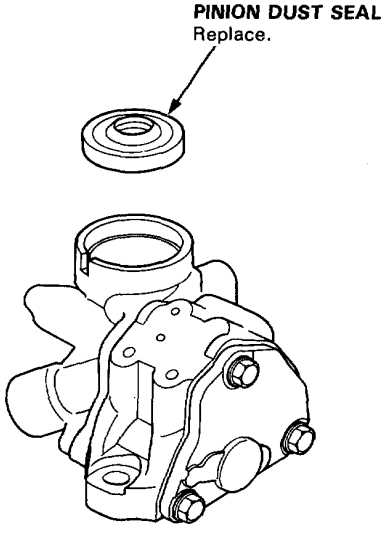

6. Remove the three 6 mm flange bolts, and remove the cap from the valve body.
7. Remove the cap seal from the cap.

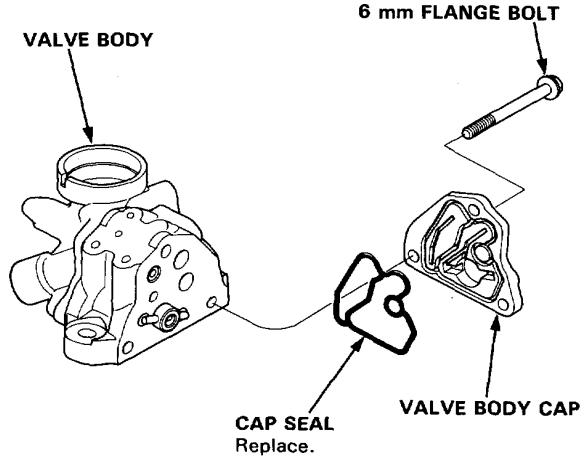

8. Remove the pressure control valve and spring from the valve body.

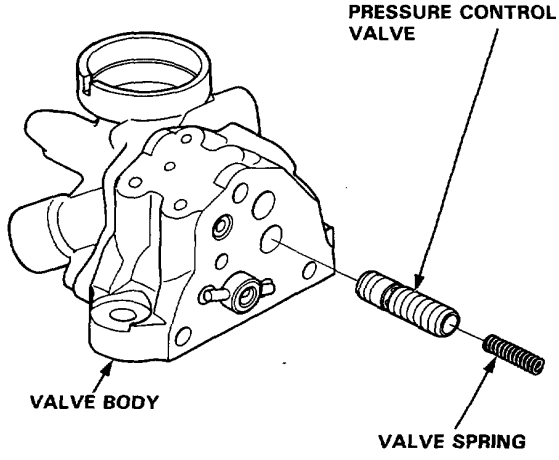

(cont'd)

Valve Body Unit Overhaul (cont'd)

9. Check the pressure control valve:

   - Inspect its surface for scoring or scratches.
   - Slip it back into the valve body, and make sure it slides smoothly without drag and without side play.

   NOTE: If any part of the valve body is damaged, replace the valve body unit (valve body, pressure control valve, gain control valve, control valve) as an assembly.

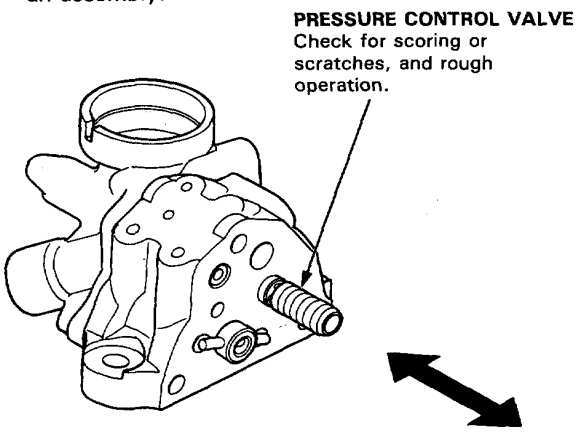

10. Remove the gain control valve and spring from the valve body.

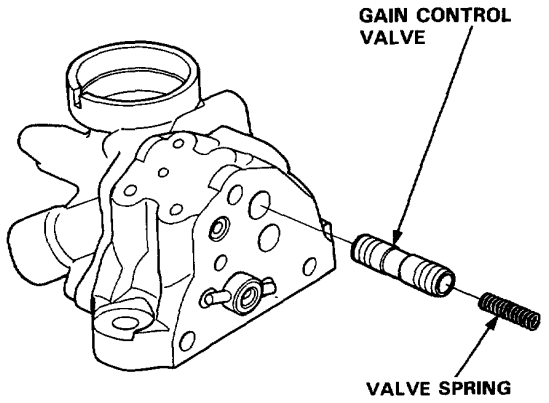

11. Check the gain control valve:

   - Inspect its surface for scoring or scratches.
   - Slip it back into the valve body and make sure it slides smoothly without drag and without side play.

   NOTE: If any part of the valve body is damaged, replace the valve body unit (valve body, pressure control valve, gain control valve, control valve) as an assembly.

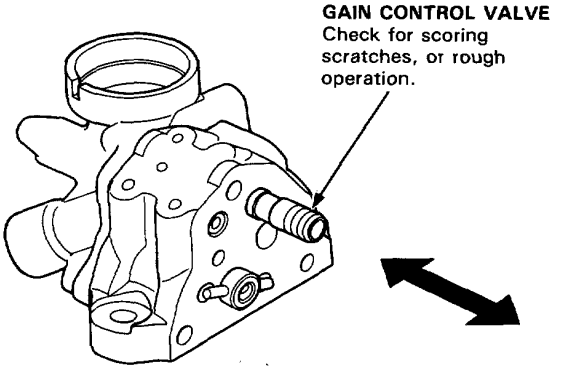

12. Separate the valve body and port housing.

13. Remove the seal and dowel pins from the port housing.

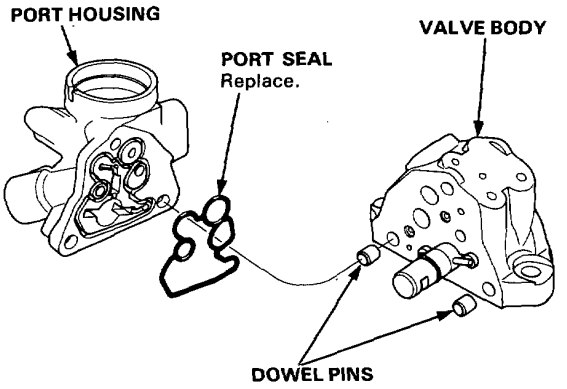

14. Using 1.5 mm (0.06 in) drill bit, remove the sensor orifice and 3.4 mm O-ring.

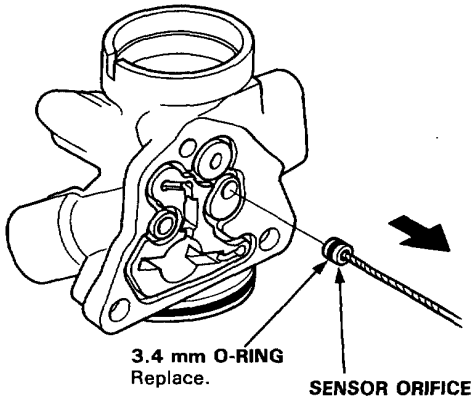

15. Remove the rollers from the control valve by pushing the valve out one side of the valve body, and then the other.

NOTE: When removing the rollers, hold the plungers with your fingers to keep them from popping out.

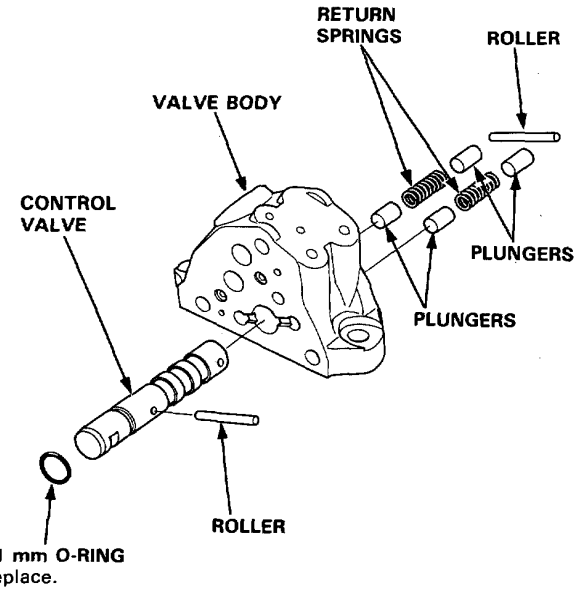

16. Remove the plungers, return springs and control valve from the valve body.

17. Remove the 11 mm O-ring from the control valve.

18. Check the plungers.

- Inspect their surface for scoring or scratches.
- Slip each plunger into the valve body. Make sure it slides smoothly, without drag or side play. If any plunger is damaged, replace it.

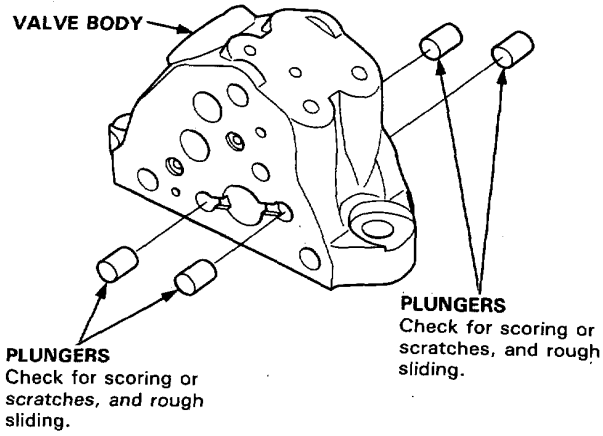

19. Check the control valve.

- Inspect its surface for scoring or scratches.
- Slip it into the valve body, and make sure it slides smoothly, without drag or side play.

NOTE: If any part of the valve body is damaged, replace the valve body unit (valve body, pressure control valve, gain control valve, control valve) as an assembly.

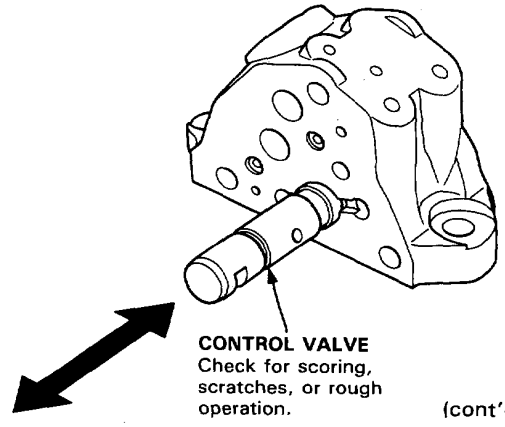

(cont'd)

Assembly:

1. Thoroughly clean the disassembled parts shown below.
2. Coat the plungers, pressure control valve, gain control valve and control valve surfaces with power steering fluid.
3. Reassemble the parts in the reverse order of disassembly.

CAUTION:

- **Replace the O-rings and seals with new ones.**
- **Do not dip the O-rings and seals in solvent.**
- **Apply grease in the seal grooves to keep the seals in place.**
- **Apply grease to new O-rings to keep them in place.**

- GREASE **STEERING GREASE ..... Part Number 08733–B070E**

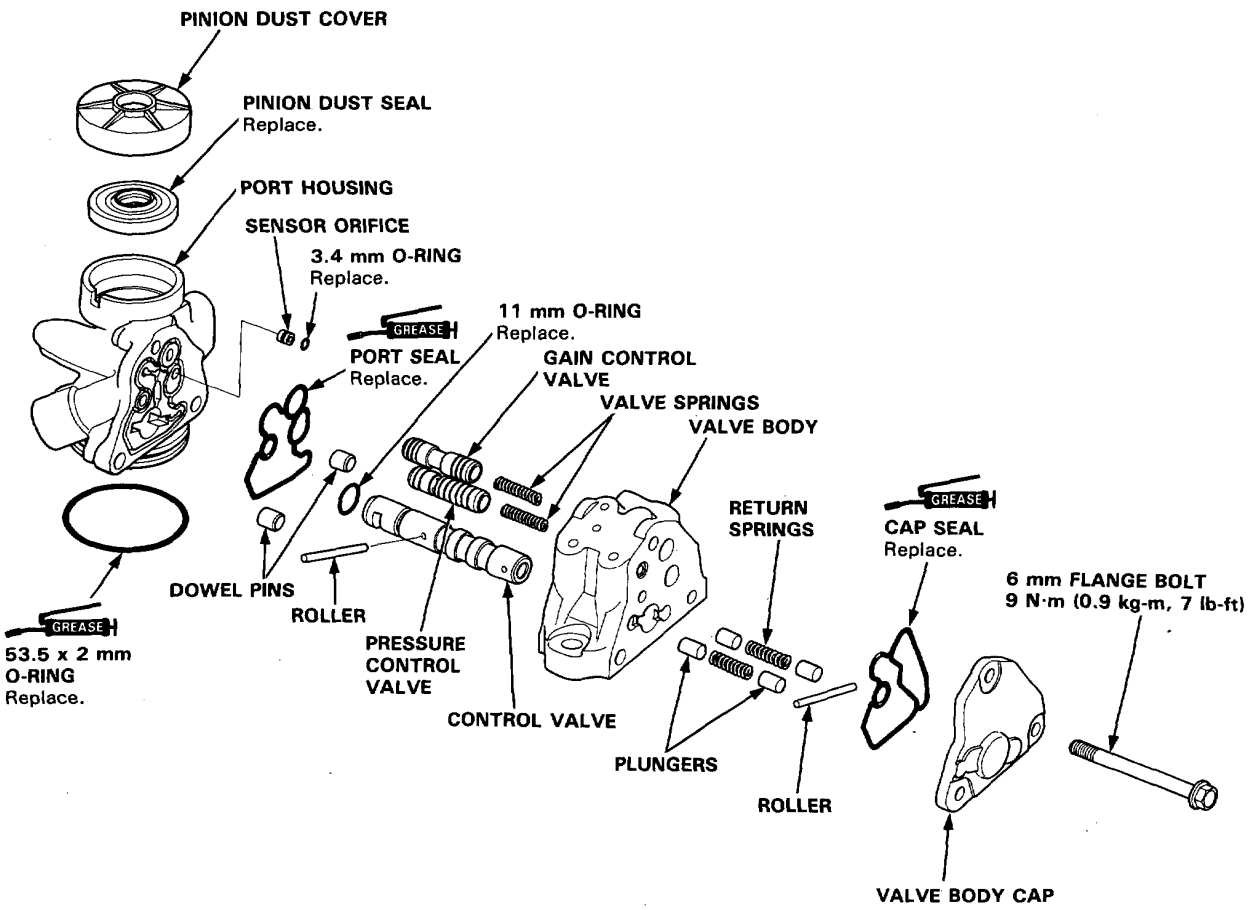

NOTE

- If the valve body is damaged, replace the valve body unit (valve body, pressure control valve, gain control valve, control valve) as an assembly.
- LH drive shown. RH drive is similar.

4. Make sure the control valve moves smoothly, and returns to neutral position.

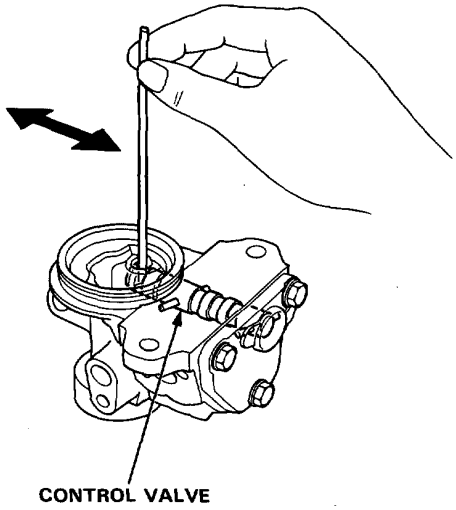

5. Install the new pinion dust seal in the control valve body unit by hand.

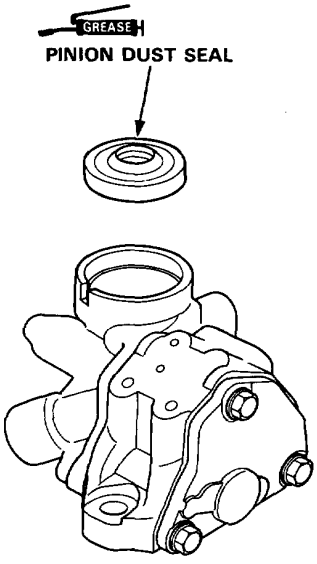

6. Coat the 9.8 x 1.9 mm O-rings with grease, and install them together with the orifices.

7. Install the special tool onto the pinion shaft and coat the special tool with grease.

8. Coat the 53.5 x 2 mm O-ring and pinion holder pin with grease, and install the valve body unit.

9. Install the valve body unit on the gear housing with the two 8 mm bolts.

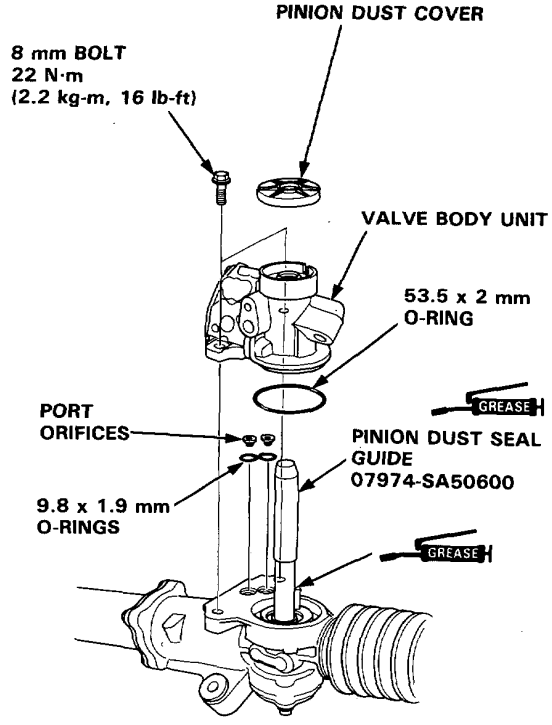

10. Remove the special tool.

CAUTION:
- **When installing, be careful not to hit the pinion holder pin.**
- **Make sure the O-rings are in place and not pinched.**

Steering Gearbox

Illustrated Index

NOTE: LH drive shown. RH drive is similar.

CAUTION:

- **Before disassembling the gearbox, wash it off with solvent and a brush.**
- **Thoroughly clean all disassembled parts.**
- **Always replace O-rings and seals.**
- **Replace parts with damaged sliding surfaces.**
- **Do not dip seals and O-rings in solvent; coat O-rings with grease, make sure they stay in position during reassembly, and use appropriate special tools to install them where necessary.**
- **GREASE STEERING GREASE ..... Part Number 08733—B070E**

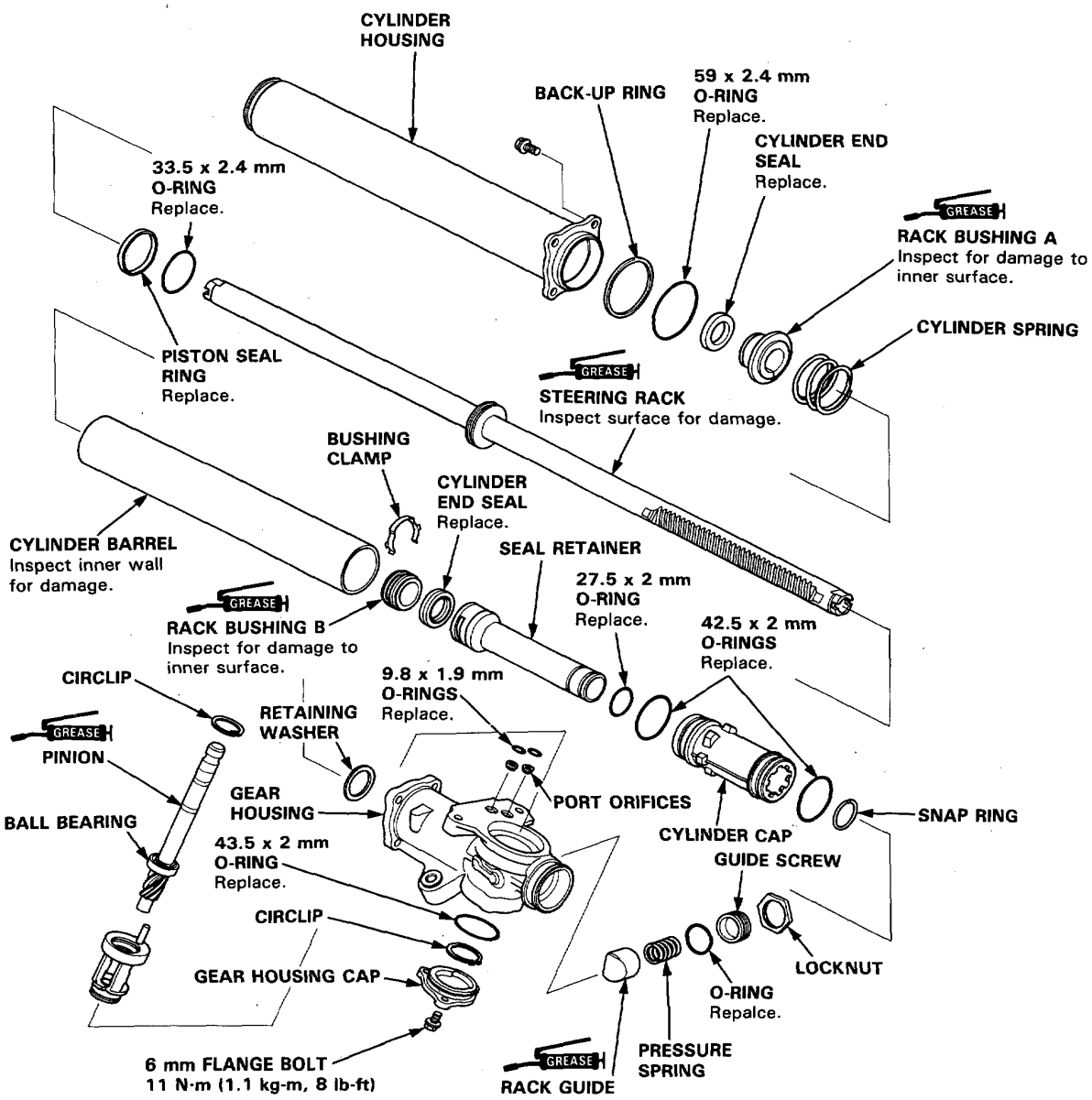

Overhaul

1. Remove the control unit body as described on page 17-47.
2. Carefully clamp the gearbox in a vise with soft jaws.
3. Remove the tie-rod assembly.

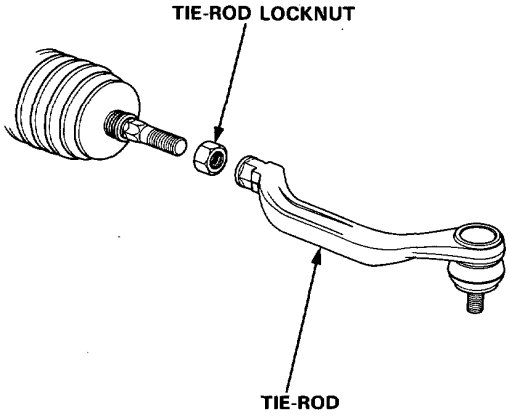

4. Remove the boot bands and tube clamps. Pull the dust seals away from the ends of the gearbox.

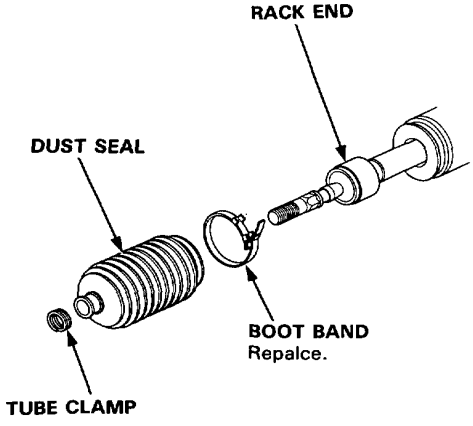

5. Hold the steering rack with a wrench and unscrew the tie-rod end with a wrench.
6. Remove the stop washer.

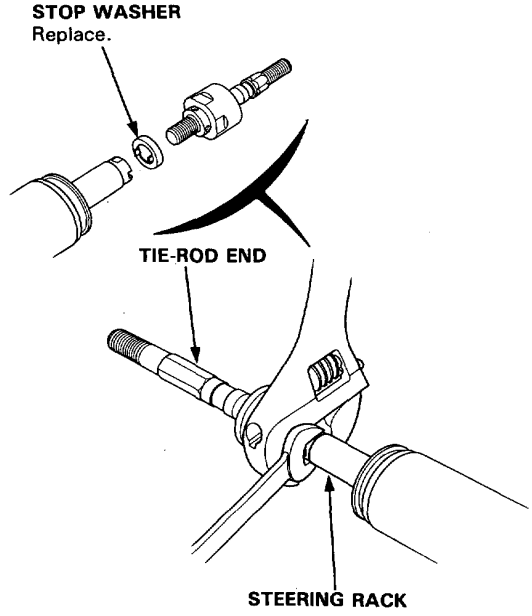

7. Push the right end of the rack back into the cylinder housing so the smooth surface that rides against the seal won't be damaged.

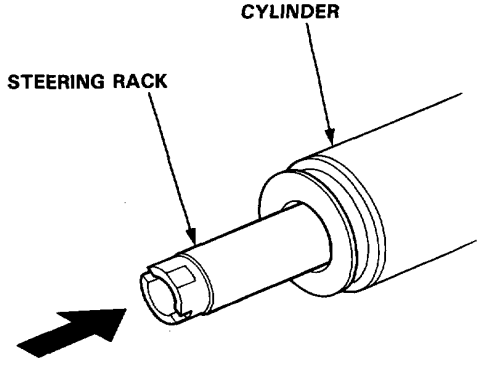

(cont'd)

Overhaul (cont'd)

8. Loosen the rack screw locknut and remove the rack guide screw.

9. Remove the spring and rack guide from the gear housing.

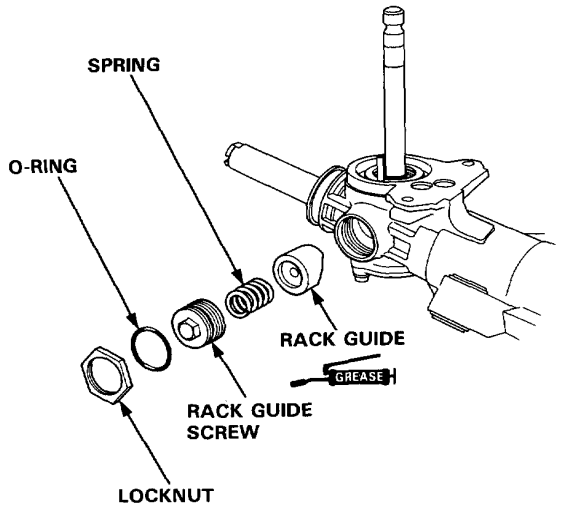

10. Remove the gear housing cap from the gear housing by removing the three 6 mm flange bolts.

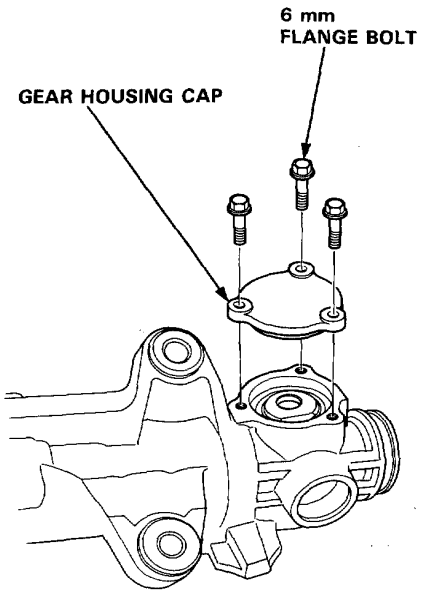

11. Remove the circlip from the bottom of the gear housing.

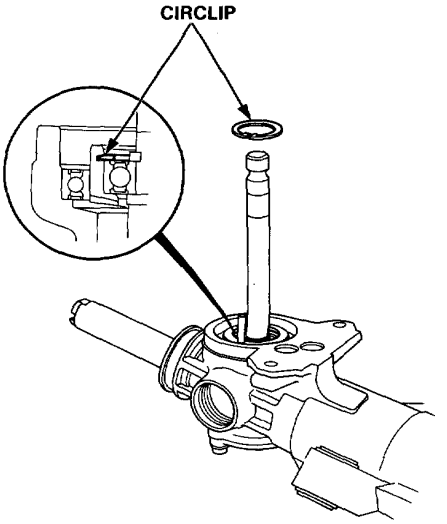

12. Remove the pinion assembly from the gear housing by tapping it lightly with a punch.

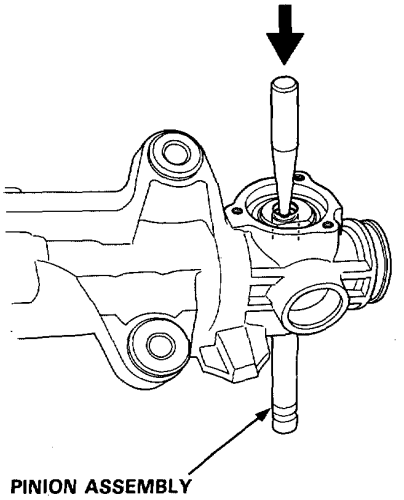

13. Check the pinion lower ball bearing for play; if it is good and the grease in it is clean, go on step 14. If the bearing is noisy or has excessive play, or the grease is contaminated, replace the pinion assembly.

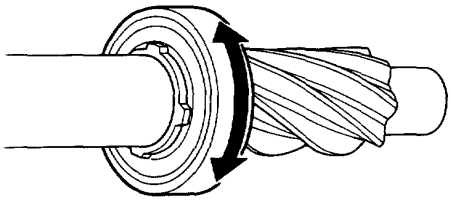

14. Remove the four bolts from the end of the cylinder housing, then slide the housing off the rack.

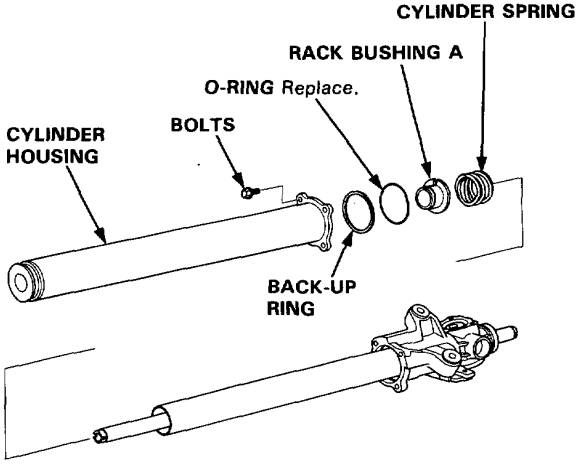

15. Remove the O-ring, back-up ring, steering rack bushing A and cylinder spring.

16. Remove the cylinder end seal from the cylinder housing.

NOTE: Use your fingers or a wooden stick to avoid damaging the housing.

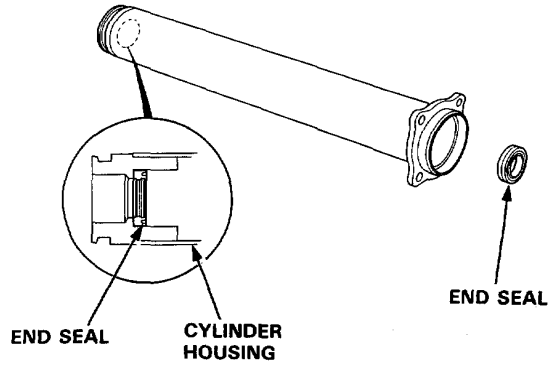

17. Remove the cylinder, cylinder seal retainer, cylinder cap and steering rack from the gear housing.

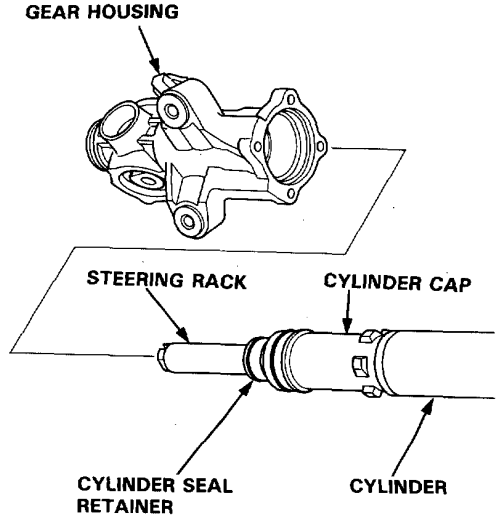

(cont'd)

Overhaul (cont'd)

18. Remove the retainer washer from the gear housing.

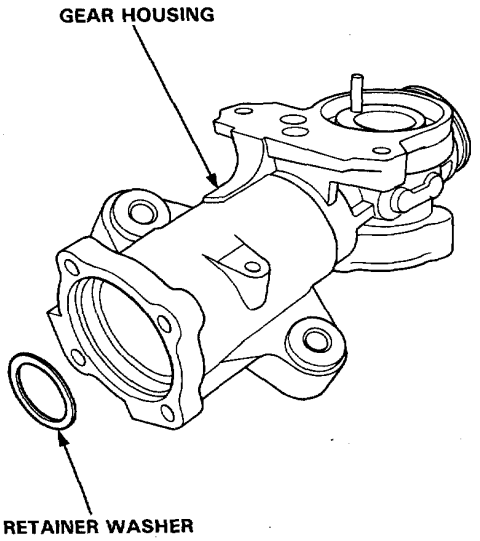

19. Check the lower bearing for free movement and excessive play; if it is good and the grease in it is clean, go on step 20.

    If it is damaged, or if dirt has gone past the seal into the grease, replace the bearing.

    Check the upper bearing for rough movement or excessive play; if it is good and the grease in it is clean, go on step 20.
    If it is damaged, replace the gear housing.

    - Remove the circlip from the pinion holder.

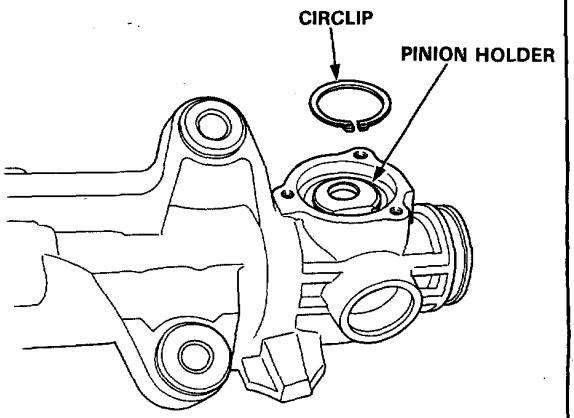

- Remove the pinion holder from the gear housing.

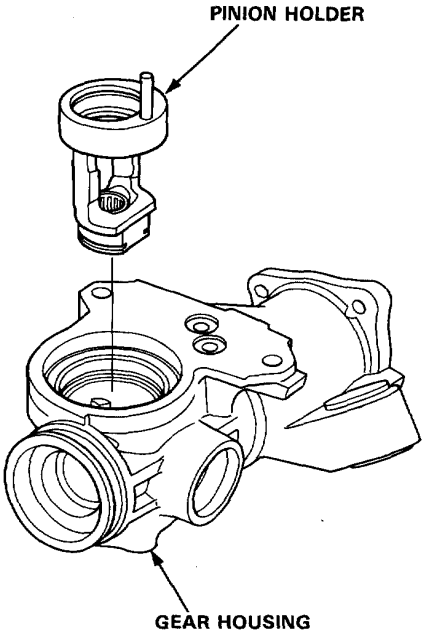

- Remove the pinion lower ball bearing from the gear housing.

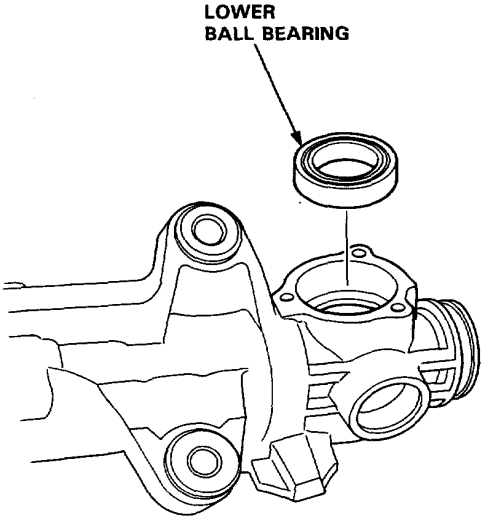

- Check the needle roller bearing in the pinion holder and the ball bearing in the gear housing for damage; if OK, pack the needle roller bearing with grease. If the bearings are damaged, replace them as a set.

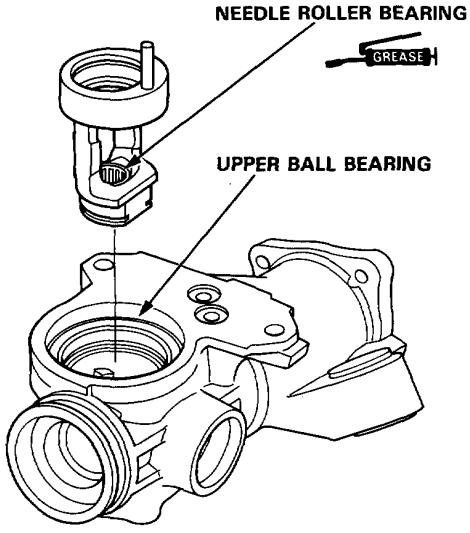

- Pack a new lower bearing with grease, then drive the bearing into the gear housing with its sealed side facing out.

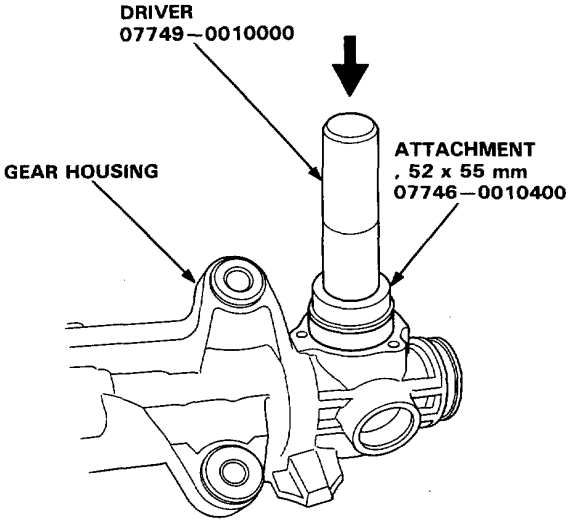

- Install the pinion holder in the gear housing.

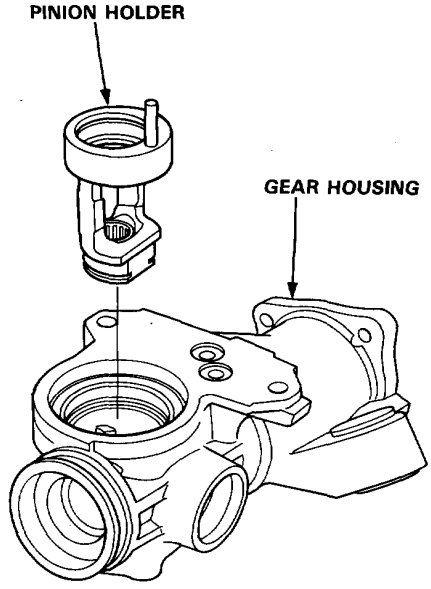

- Reinstall the circlip with its tapered side facing out.

NOTE: Circlip ends must be aligned with the flat area.

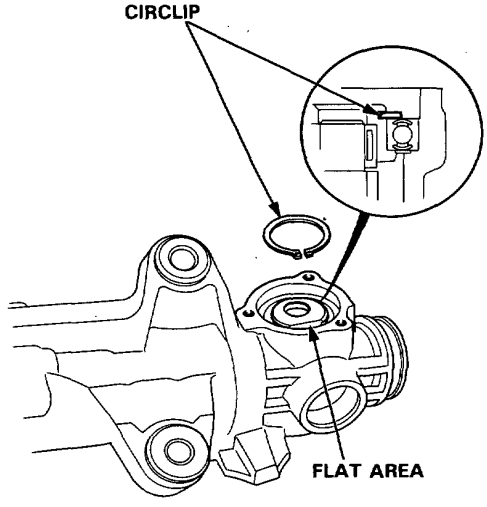

(cont'd)

Overhaul (cont'd)

20. Remove the cylinder and seal retainer from the steering rack.

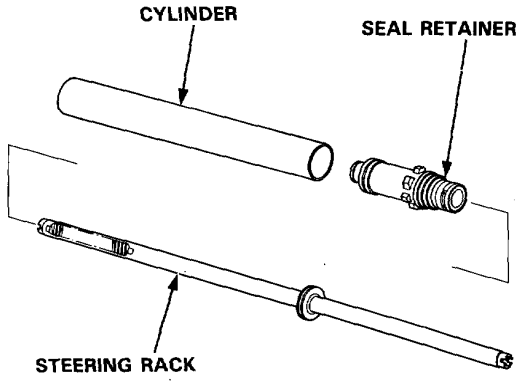

21. Remove the O-ring and snap ring from the seal retainer, then remove the cylinder cap from the seal retainer.

22. Remove the O-rings from the cylinder cap.

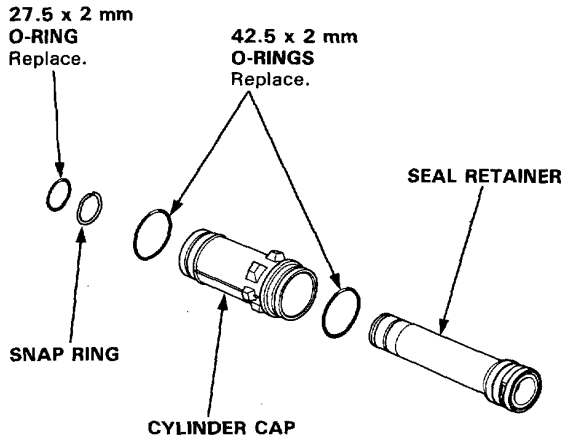

23. Remove the bushing stopper ring from the seal retainer.

24. Remove the cylinder end seal and rack bushing B.

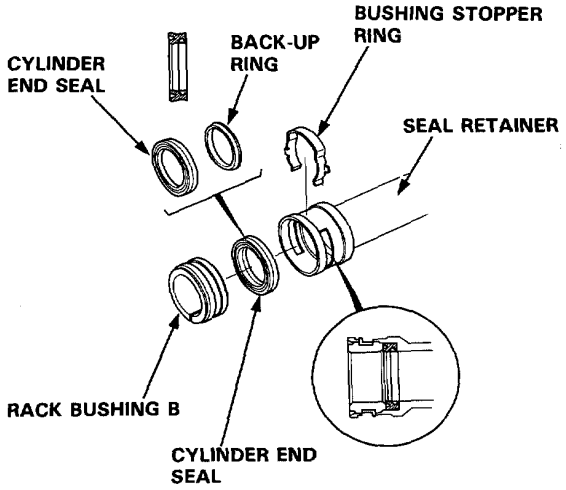

25. Carefully pry the piston seal ring and O-ring off the rack.

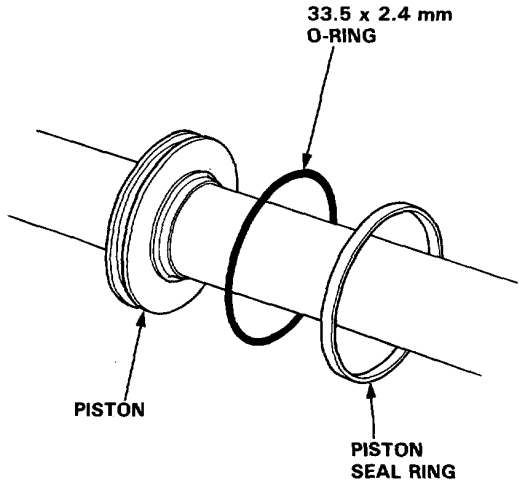

NOTE: Before reassembling any parts, inspect them as described on page 17-50 and make sure they are clean. Replace worn or damaged parts.

26. Install a new O-ring on the rack with its narrow edge facing out.

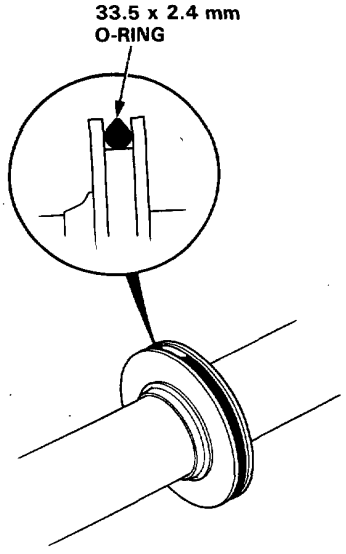

27. Coat the pinion seal ring guide with power steering fluid, then slide it onto the rack, big end first.

28. Position the new piston seal ring on the special tool, slide it down onto the big end of the tool, then pull it off into the piston groove on top of the O-ring.

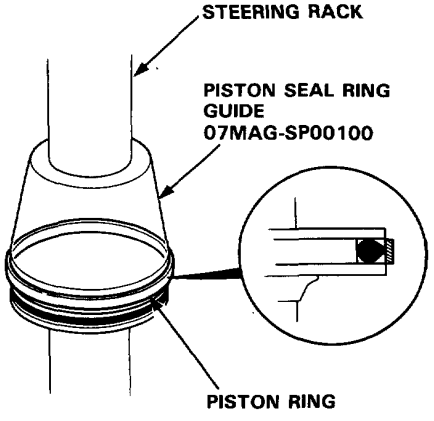

29. Coat the piston seal ring and inside of the special tool with power steering fluid.

30. Carefully slide the tool onto the rack and over the piston ring, then rotate the tool as you move it up and down to seat the piston ring.

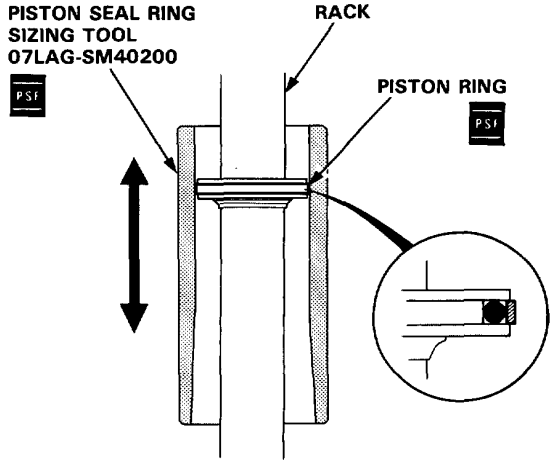

31. Coat new O-rings with grease and install them on the cylinder cap.

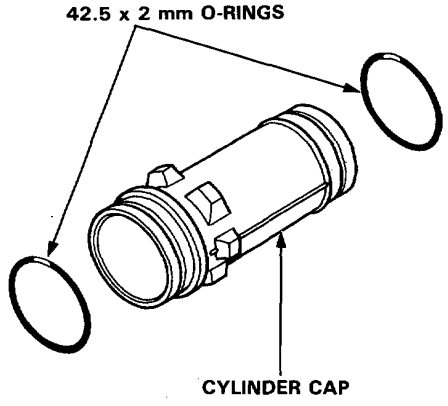

(cont'd)

Overhaul (cont'd)

32. Slide the cylinder cap onto the seal retainer.

33. Install the snap ring and O-ring on the seal retainer.

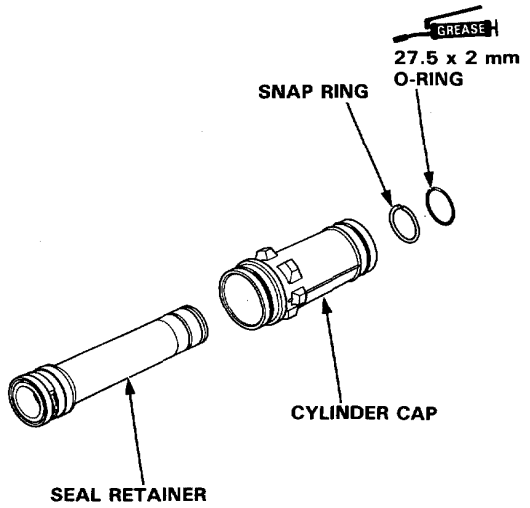

34. Grease the sliding surface of the steering rack bushing B, and install the bushing on the steering rack with the groove of the bushing facing the steering rack piston.

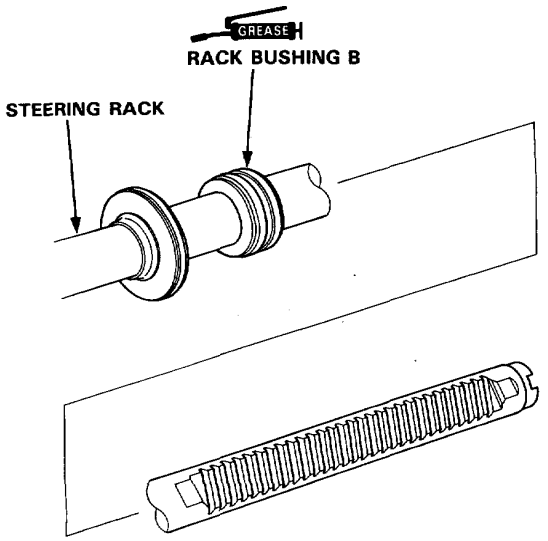

35. Grease the sliding surfaces of the new cylinder end seal and the special tool, then place the seal on the special tool with its grooved side facing opposite the slider.

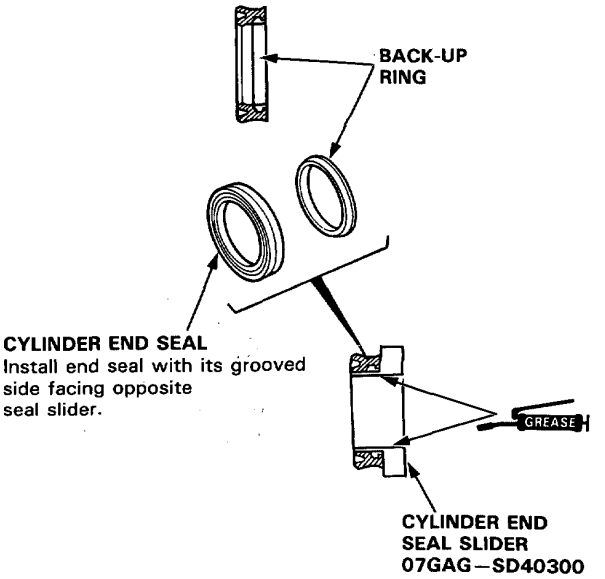

36. Install the special tool and cylinder end seal.

CAUTION: Make sure the rack teeth do not face the slot in the special tool.

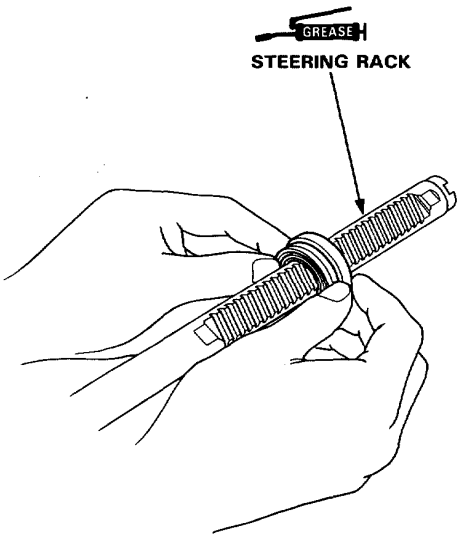

37. Remove the special tool from the cylinder end seal, then separate the ends of the tool and remove it from the rack.

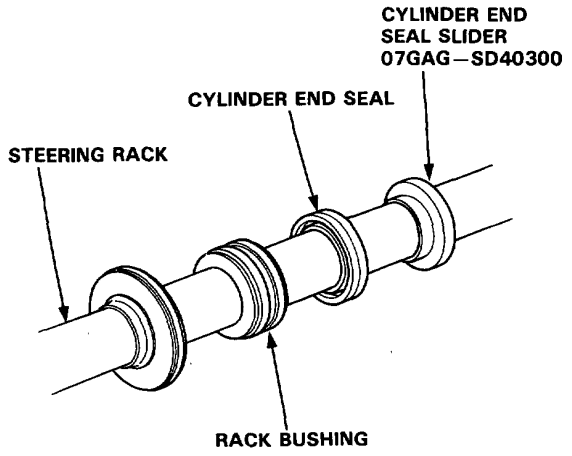

38. Fit the seal retainer on the steering rack.

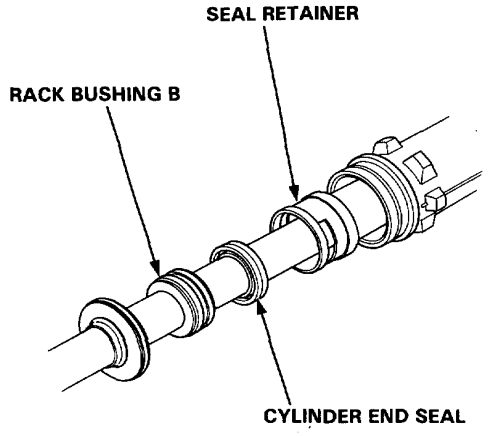

39. Push the rack bushing B toward the seal retainer by hand until the cylinder end seal is seated in the retainer. Fit the seal stopper ring in the groove of the seal retainer securely. Then grease the steering rack.

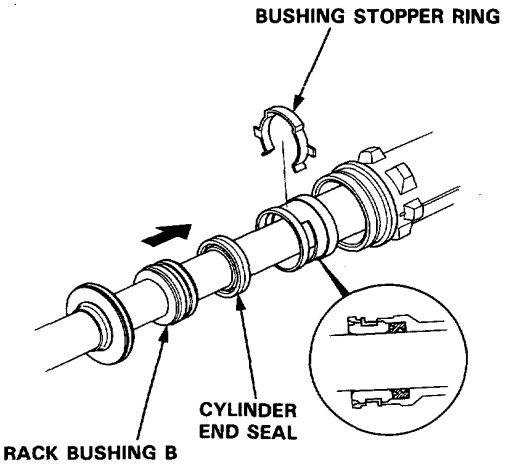

40. Install the retainer washer on the gear housing.

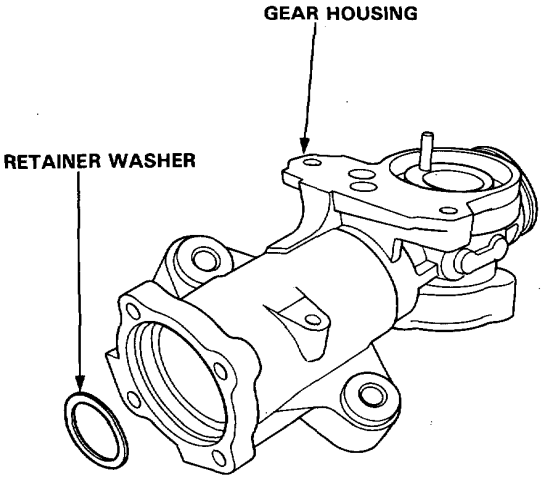

(cont'd)

Overhaul (cont'd)

41. Place the gear housing on the work bench and insert the seal retainer and steering rack into the gear housing.

42. Coat the inside surface of the cylinder with power steering fluid, slide it over the rack and into the gear housing; press it into the housing until it seats.

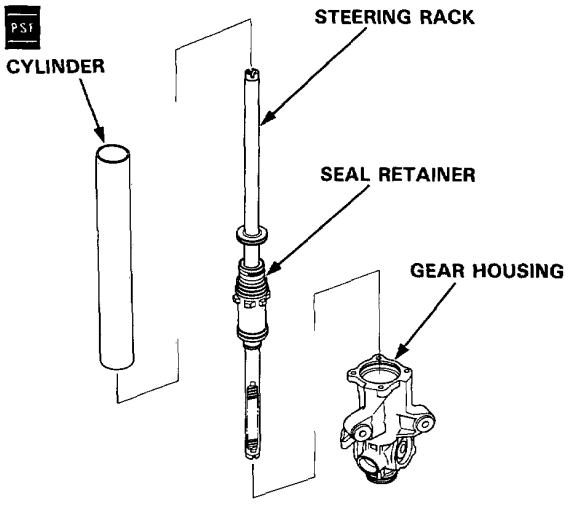

43. Install the cylinder spring over the rack, then coat the rack bushing A with power steering fluid and install it on the spring.

44. Wrap the end of the steering rack with vinyl tape. Coat the tape with grease.

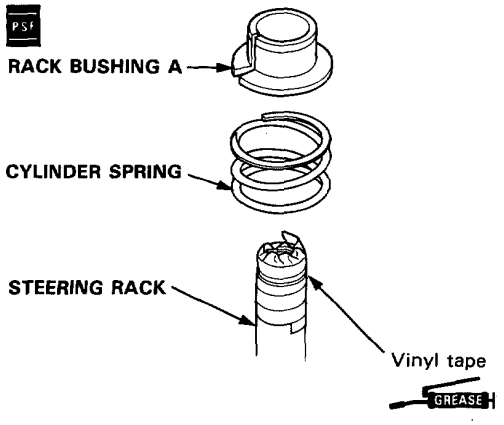

45. Coat the inside surface of the cylinder with power steering fluid and install the cylinder end seal with its grooved side facing out.

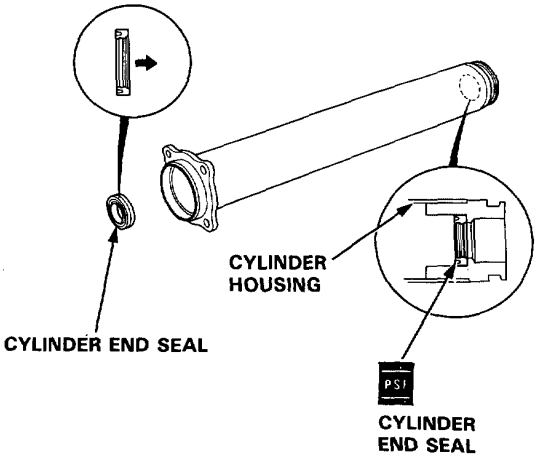

46. Install the O-ring and back-up ring on the gear housing.

47. Carefully position the cylinder on the gear housing and loosely install with four bolts.

CAUTION: Be careful not to damage the end seal in the cylinder housing.

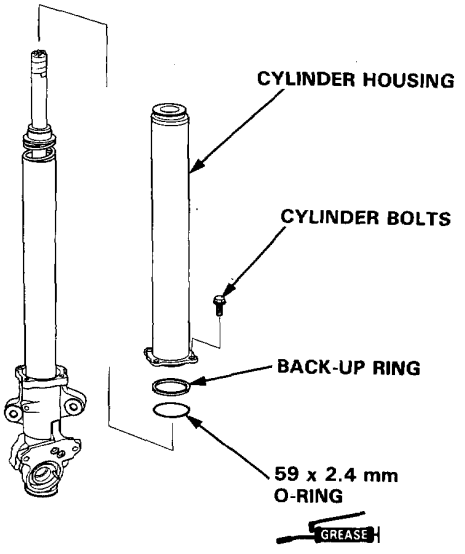

48. Remove the vinyl tape from the steering rack.

49. Tighten the cylinder housing to the gear housing.

NOTE: Before tightening the bolts, make sure the mating surfaces of the cylinder and gear housing fit properly by pushing them together; hold them together while tightening the bolts.

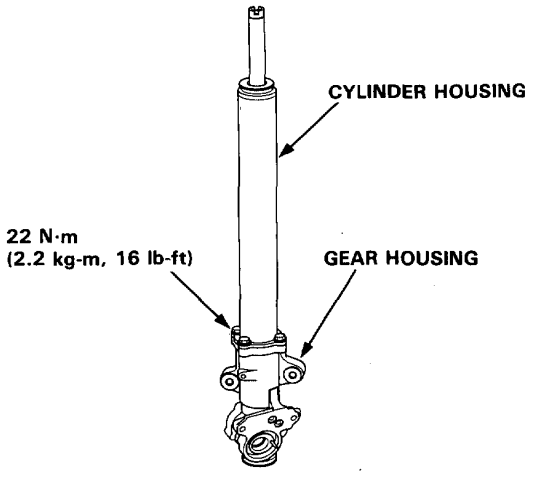

50. Insert the steering rack into the cylinder housing, being careful not to damage the steering rack sliding surface.

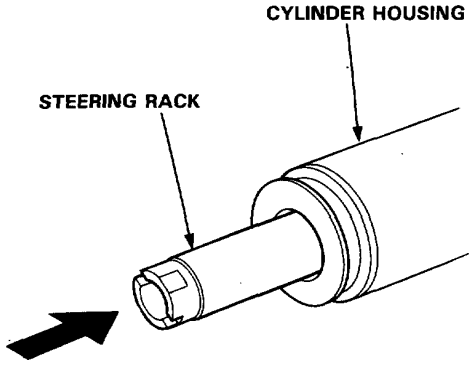

51. Install the steering pinion in the pinion holder.

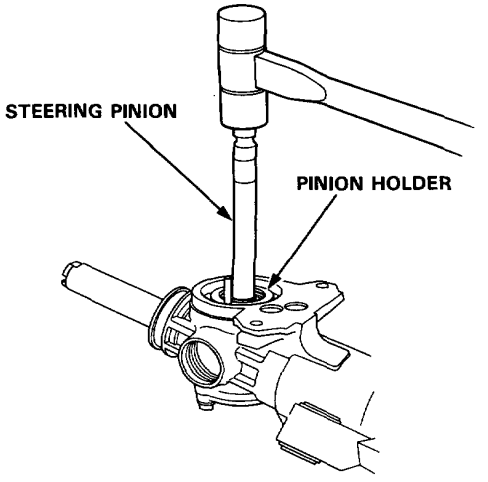

52. Install the circlip securely in the pinion holder groove.

NOTE: Install the circlip with its tapered side facing out.

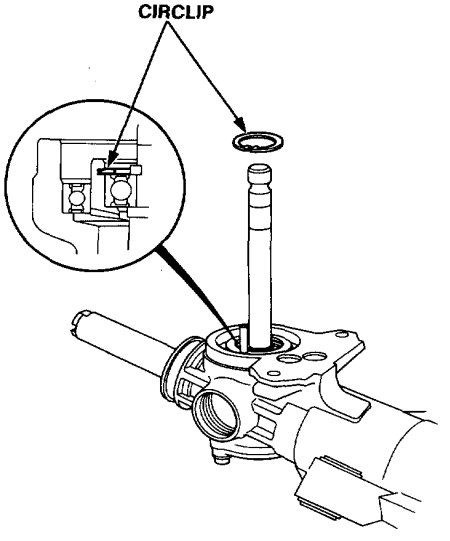

(cont'd)

Overhaul (cont'd)

53. Grease the new O-ring and install it in the groove in the gear housing cap.

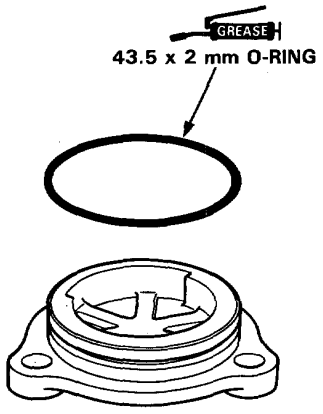

54. Tighten the three flange bolts.

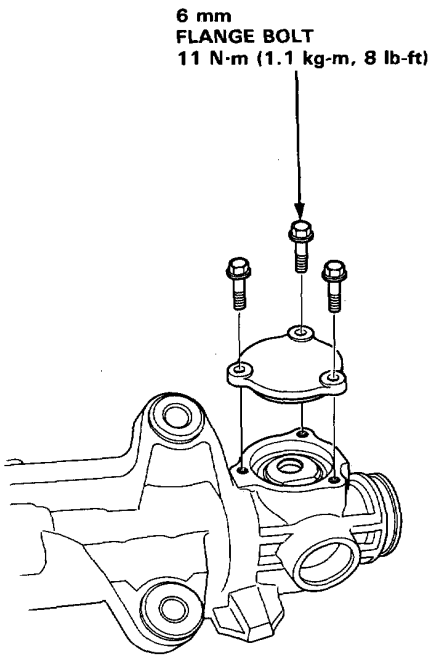

55. Install the O-ring on the rack guide screw.

56. Coat the rack guide with grease.

57. Install the rack guide, spring and rack guide screw on the gear housing.

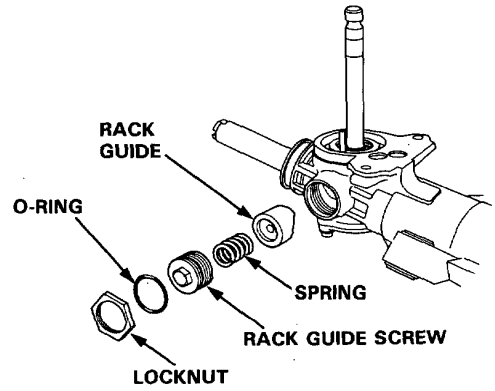

58. Tighten the rack guide screw until it compresses the spring and seats against the rack guide, then loosen it.

59. Retighten it to 4 N·m (0.4 kg-m, 2.9 lb-ft), back off about $20^{\circ}{}^{+5^{\circ}}_{-0^{\circ}}$ and install the locknut on the rack guide screw.

60. Tighten the locknut while holding the rack guide screw with the special tool.

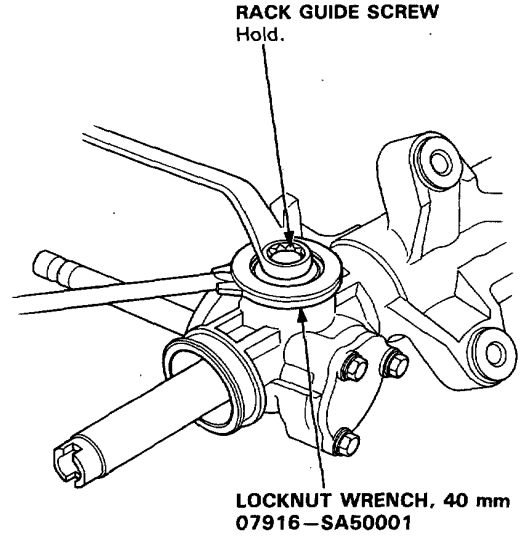

61. Coat the 9.8 x 1.9 mm O-rings with grease, and install them together with the orifices.

62. Install the special tool onto the pinion shaft and coat the special tool with grease.

63. Coat the 53.5 x 2 mm O-ring and pinion holder pin with grease, and install the valve body unit.

64. Install the valve body unit on the gear housing with the two 8 mm bolts.

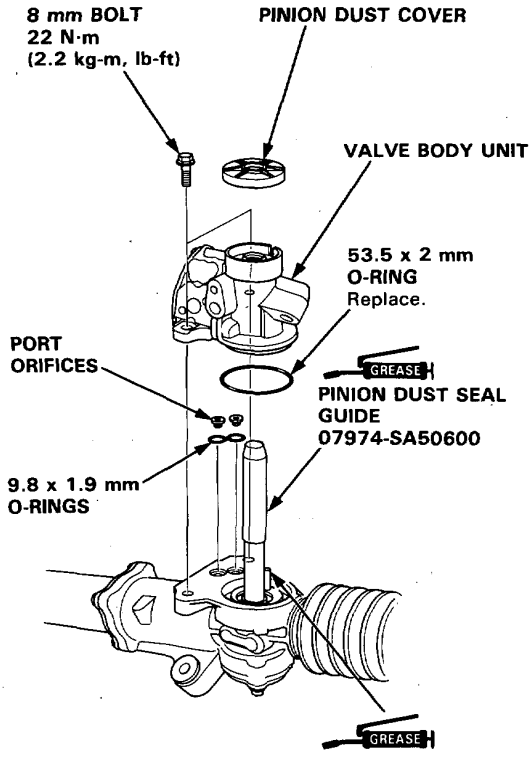

65. Remove the special tool.

CAUTION:
- **When installing, be careful not to hit the pinion holder pin.**
- **Make sure the O-rings are in place and not pinched.**

66. Install the new lock washer in the groove in the steering rack.

67. Hold the steering rack with a wrench and tighten the rack end to 80 N·m (8.0 kg-m, 58 lb-ft).

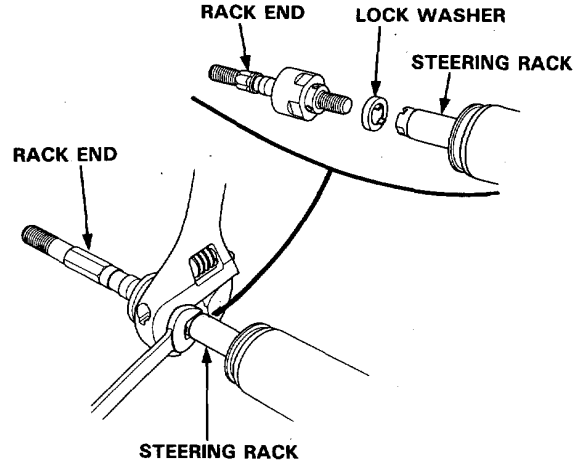

68. After tighting the rack end, stake the two sections of the lock washer.

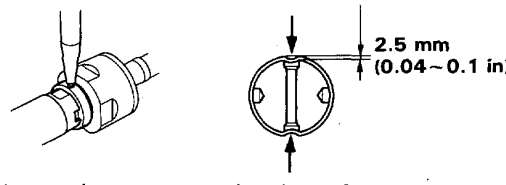

69. Apply steering grease to the circumference of the rack end housing.

70. Install the boots on the rack end with the tube clamps.

NOTE:
- Coat the rack end groove and inside of the boot with silicone grease.

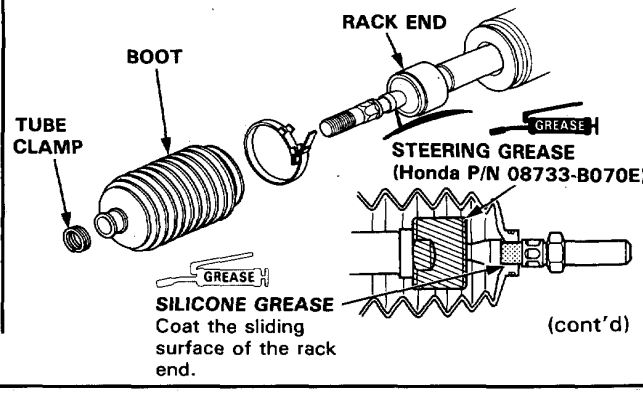

(cont'd)

Overhaul (cont'd)

71. Before installing the boot band, turn up the right and left dust seals at the gear housing side and adjust the pressure inside the dust seals to atmospheric pressure.

    NOTE: Install the boot band with the rack in the straight ahead position (i.e. right and left tie-rods are equal in length).

72. Install the boot band so that the locking tabs of the band (stake points) are in the range shown below. (Tabs should face up and slightly forward.)

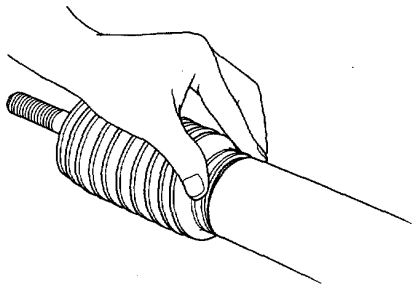

Left Dust Seal Installation:

NOTE: When the car is the left-hand drive type, wind the boot band as shown below when viewed from the left side (i.e. gearbox side).
When the car is the right-hand drive type, wind the boot band in the same manner as the left-hand drive type when viewed from the left side (cylinder side).

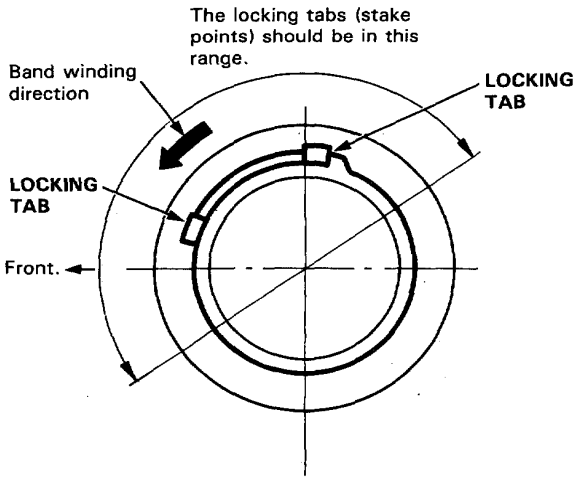

Right Dust Seal Installation:

NOTE: When the car is the left-hand drive type, wind the boot band as shown below when viewed from the right side (i.e. cylinder side). When the car is the right-hand drive type, wind the band in the same manner as the left-hand drive type when viewed from the right side (gearbox side).

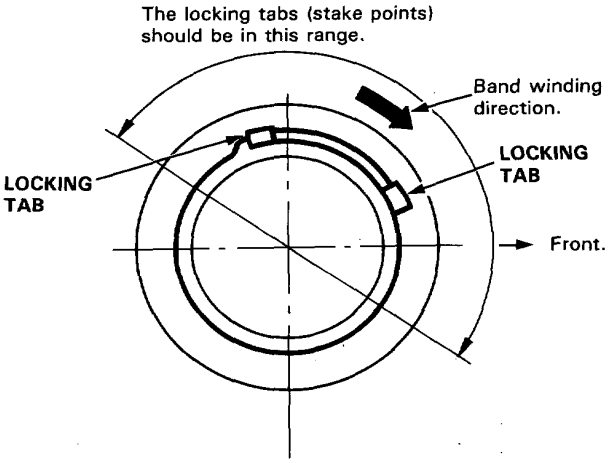

CAUTION: Stake the band locking tabs firmly.

73. Install new boot bands on the boot and bend both sets of locking tabs.

74. Lightly tap on the doubled-over portions to reduce their height.

75. After assembling, slide the rack right and left to be certain that the boots are not deformed or twisted.

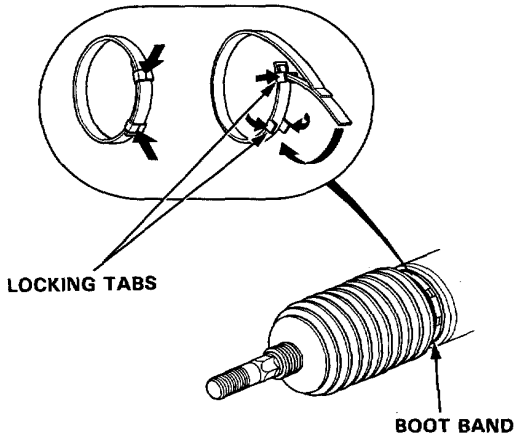

76. Install the right and left tie-rods on the right and left rack ends.

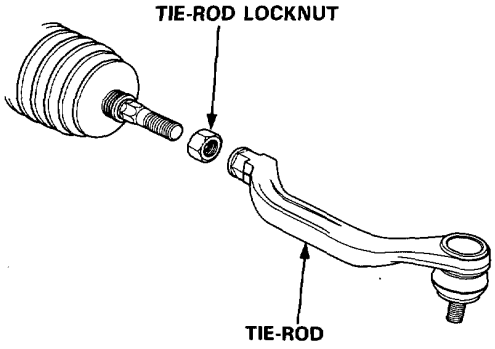

Ball Joint Boot Replacement

1. Remove the circlip and the boot.

   CAUTION: Do not contaminate the boot installation section with grease.

2. Pack the interior of the boot and lip with grease.

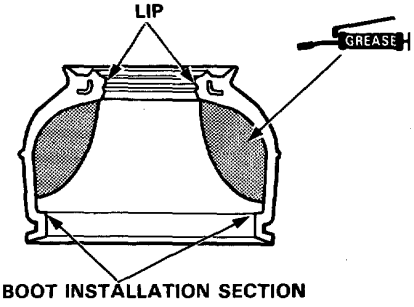

3. Wipe the grease off the sliding surface of the ball pin, then pack the lower area with fresh grease.

   CAUTION:
   - **Keep grease off the boot installation section and the tapered section of the ball pin.**
   - **Do not allow dust, dirt, or other foreign materials to enter the boot.**

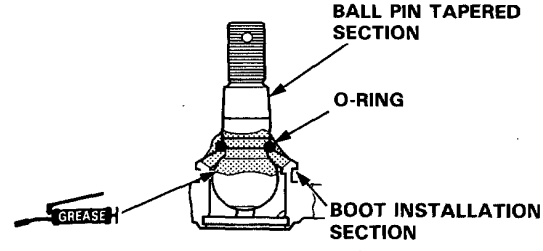

4. Install the boot in the groove of the boot installation section securely, then bleed air.

5. Insert the special tool into the threads in the ball pin and align the end of the bolt with the groove in the boot.
6. Slide the clip over the tool and into position.

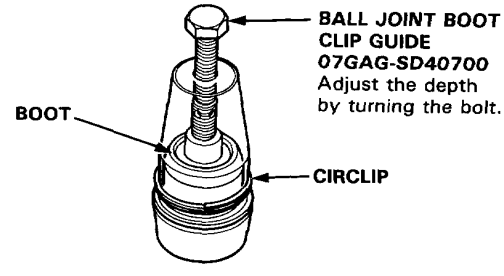

CAUTION: After installing the boot, check the ball pin tapered section for grease contamination and wipe it if necessary.

Suspension

Special Tools 18-2
Component Location
  Index 18-3
Wheel Alignment
  Caster 18-4
  Camber 18-5
  Front Toe Inspection/
    Adjustment 18-5
  Rear Toe Inspection/
    Adjustment 18-6
  Turning Angle Inspection/
    Adjustment 18-6
Wheel Measurements
  Bearing End Play 18-7
  Runout 18-7
Front Suspension
  Torque Specification 18-8
  Illustrated Index 18-9
  Knuckle/Hub Replacement 18-10
Lower/Upper Ball Joint Boot
  Replacement 18-16
Front Damper
  Removal 18-17
  Disassembly/Inspection 18-17
  Reassembly 18-19
  Installation 18-19
Rear Suspension
  Torque Specification 18-20
  Hub Bearing Unit Replacement 18-21
  Illustrated Index 18-24
  Removal 18-25
Lower/Upper Ball Joint Boot
  Replacement 18-28
Rear Damper
  Removal 18-28
  Disassembly/Inspection 18-29
  Reassembly 18-31
  Installation 18-31
  Disposal 18-32

Special Tools

Ref. No.	Tool Number	Description	Qty	Page Reference
①	07GAE–SE00101	Spring Compressor	1	18-17,19,29,31
②	07GAF–SD40700	Hub Dis/Assembly Base	2	18-15
③	07GAF–SE00100	Hub Dis Assembly Tool	1	18-15
④	07GAG–SD40700	Ball Joint Boot Clip Guide	1	18-16,28
⑤	07MAC–SL00100	Ball Joint Remover, 32 mm	1	18-13,27
⑥	07MAC–SL00200	Ball Joint Remover, 28 mm	1	18-12,13,27
⑦	07MAE–SL00100	Suspension Mount Plate	1	18-17,19,29,31
⑧	07MAF–SP00100	Bearing Race Installer	1	18-15
⑨	07MGK–0010100	Wheel Alignment Gauge Attachment	1	18-4,5
⑩	07746–0010400	Attachment, 52 x 55 mm	1	18-16
⑪	07746–0010500	Attachment, 62 x 68 mm	1	18-15,16
⑫	07749–0010000	Driver	1	18-15
⑬	07965–SD90100	Support Base	1	18-15,16

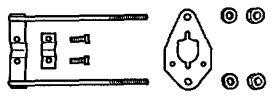
①

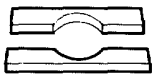
②

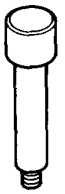
③

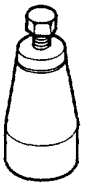
④

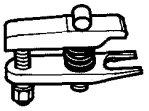
⑤ ⑥

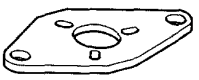
⑦

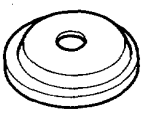
⑧

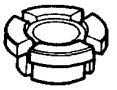
⑨

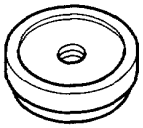
⑩ ⑪

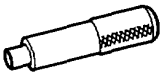
⑫

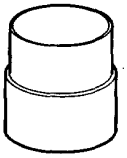
⑬

Component Location

Index

⚠WARNING The front and rear dampers contain nitrogen gas and oil under pressure. The pressure must be relieved before disposal to prevent explosion and possible injury when scrapping.

Rear Suspension:

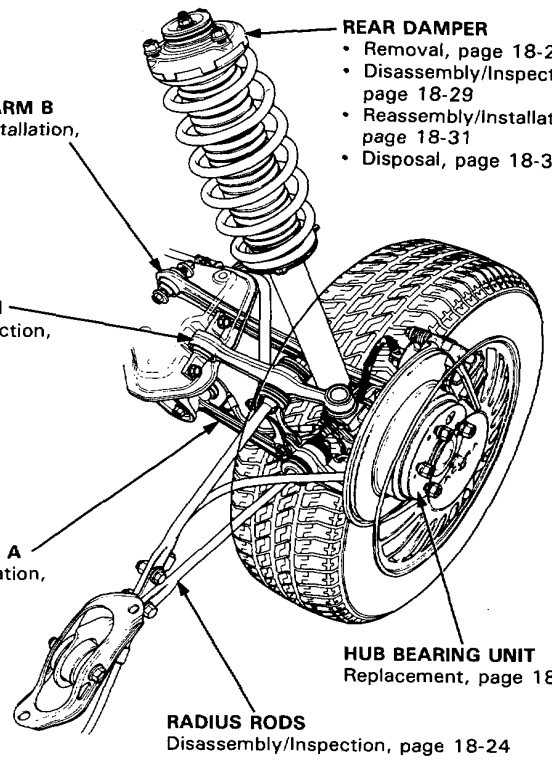

REAR DAMPER
- Removal, page 18-28
- Disassembly/Inspection, page 18-29
- Reassembly/Installation, page 18-31
- Disposal, page 18-32

REAR LOWER ARM B
Disassembly/Installation, page 18-24

REAR UPPER ARM
Disassembly/Inspection, page 18-24

REAR LOWER ARM A
Disassembly/Installation, page 18-24

HUB BEARING UNIT
Replacement, page 18-21

RADIUS RODS
Disassembly/Inspection, page 18-24

Front Suspension:

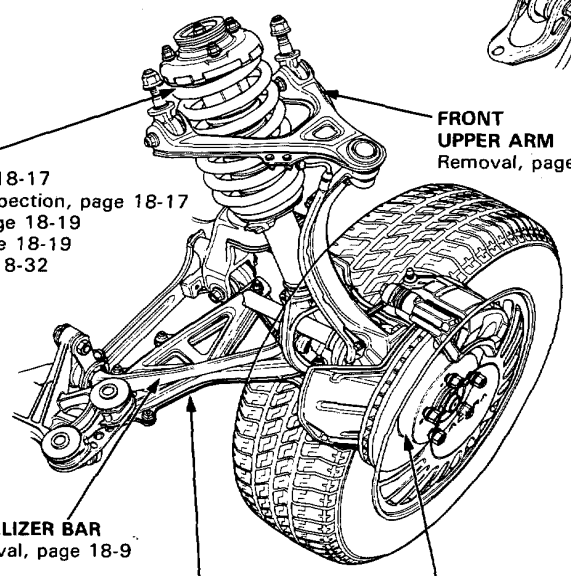

FRONT DAMPER
- Removal, page 18-17
- Disassembly/Inspection, page 18-17
- Reassembly, page 18-19
- Installation, page 18-19
- Disposal, page 18-32

FRONT UPPER ARM
Removal, page 18-9

STABILIZER BAR
Removal, page 18-9

FRONT LOWER ARM
Removal, page 18-9

KNUCKLE/HUB
- Replacement, page 18-10
- Bearing Replacement, page 18-14

Wheel Alignment

Caster

NOTE: For proper inspection/adjustment of the wheel alignment, check and adjust the following before checking the alignment.

- Check that the suspension is not modified.
- Check the tire size and tire pressure.
- Check the runout of the wheels and tires.
- Check the suspension ball joints. (Hold a wheel with your hands and move it up and down and right and left to check for wobbling.)

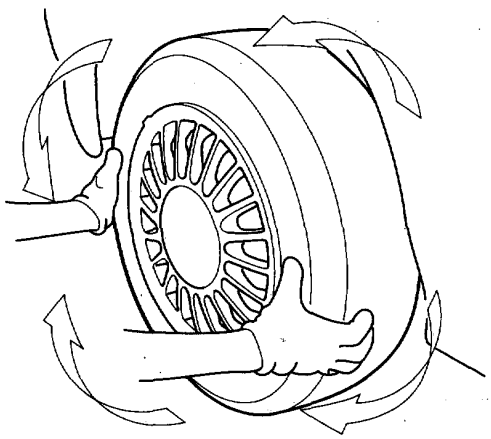

Inspection

1. Check the tire pressure.

2. Check the steering wheel angle: If significantly off center, it may be necessary to remove the steering wheel and reposition it on the splines. Turn the steering wheel to the straight-ahead position.

3. Jack up the front of the car. Set the turning radius gauges beneath the front wheels, then lower the car.

4. Jack up the rear of the car. Place boards under the rear wheels the same thickness as the turning radius gauges, then lower the car.

5. Install the special tool on the wheels.

   NOTE: Make sure the wheel hubs are clean and rust-free before installing the special tool.

6. Install a camber/caster gauge on the special tool. Apply the front brake and turn the wheel 20° inward.

7. Turn the adjust screw so that the bubble in the caster gauge is at 0°

8. Turn the wheel outward 20° and read the caster on the gauge with the bubble centered.

   Caster Angle: 3°45′ ± 1°
   (KY Only: 3°30′ ± 1°)

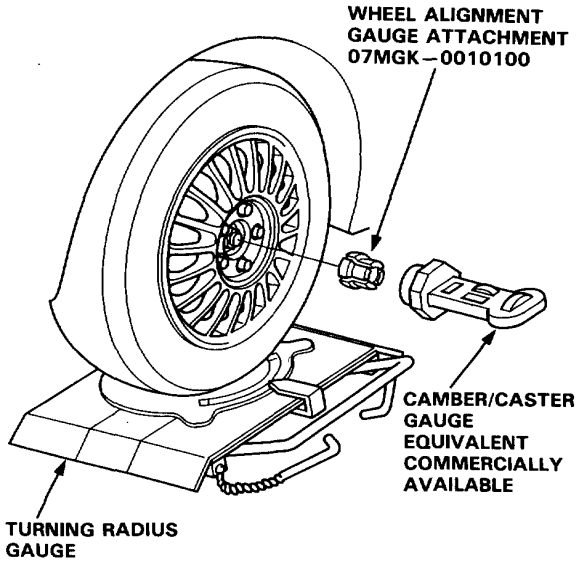

9. If out of specification, check for bent or damaged suspension components.

Camber

Inspection

1. Check the tire pressure.

2. Check the steering wheel angle. If significantly off center, it may be necessary to remove the steering wheel and reposition it on the splines. Turn the steering wheel to the straight-ahead position.

3. Install the special tool on the wheels.

   NOTE: Make sure the wheel hubs are clean and rust-free before installing the special tool.

4. Read the camber on the gauge with the bubble centered.

   Camber angle, Front: 0°00′ ± 1°
   (KY Only: 0°15′ ± 1°)
   Camber angle, Rear: −0°20′ ± 1°
   (KY Only: 0°5′ ± 1°)

   NOTE: When measuring at the rear wheels, remove the hub cap and set the attachment on the hub end properly. Refer to page 18-21 for hub cap removal.

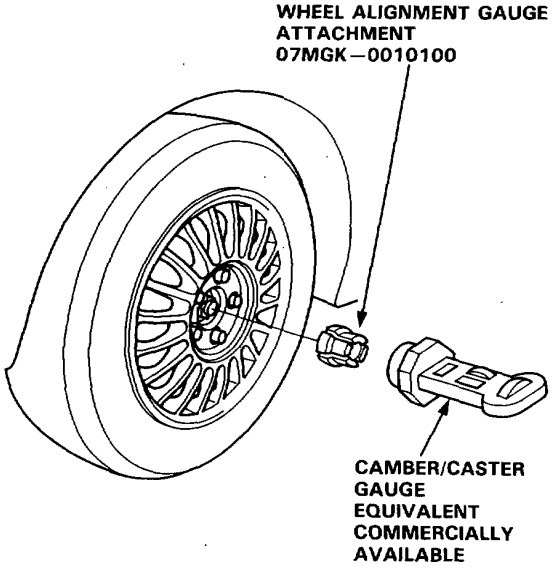

5. If out of specification, check for bent or damaged suspension components.

Front Toe Inspection/ Adjustment

NOTE: Check the tire pressure before inspection.

1. Center steering wheel spokes.

   NOTE: Measure difference in toe measurements with the wheels pointed straight ahead.

   Front toe-out: 1 ± 2 mm

   — If adjustment is required, go on to step 2.

   — If no adjustment is required, remove alignment equipment.

2. Loosen the tie-rod locknuts and turn both tie-rods in the same direction until the front wheels are in straight ahead position.

3. Turn both tie-rods equally until the toe reading on the turning radius gauge is correct.

4. After adjusting, tighten the tie-rod locknuts.

   NOTE: Reposition the tie-rod boot if twisted or displaced.

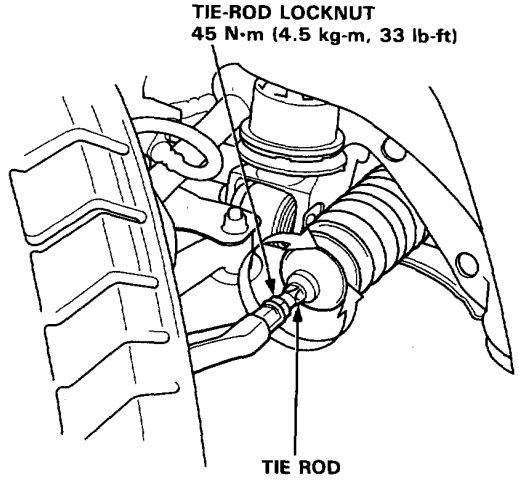

Wheel Alignment

Rear Toe Inspection/Adjustment

1. Release parking brake.

   NOTE:
   - Measure difference in toe measurements with the wheels pointed straight ahead.
   - If the parking brake is engaged, you may get an incorrect reading.

   Rear toe-in: 2 ± 2 mm

   — If adjustment is required, go to step 2.

   — If no adjustment is required, remove alignment equipment.

2. Hold the adjusting bolt on the rear lower arm B and loosen the self-locking nut.

3. Adjust the rear toe by turning the adjusting bolt until toe is correct.

4. Install the self-locking nut and tighten while holding the adjusting bolt.

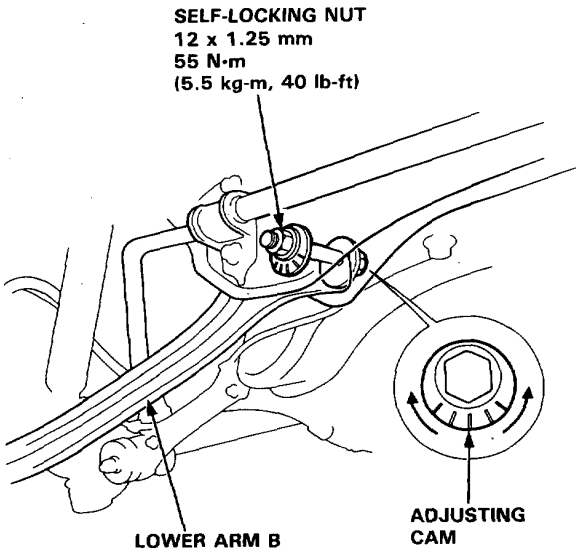

Turning Angle Inspection/ Adjustment

1. Jack up the front of the car. Set the turning radius gauges beneath the front wheels, then lower the car.

2. Jack up the rear of the car. Place boards under the rear wheels the same thickness as the turning radius gauges, then lower the car.

3. Turn the wheel right and left while applying the brake, and measure the turning angle of both wheels.

   Turning angle:
   Inward wheel: 44° ± 2°
   (Outward wheel: 35°)

4. If the measurements are not within the specifications, adjust as required by turning the tie-rods.

   NOTE: After adjusting, recheck the front wheel toe and readjust if necessary. Reposition the tie rod boot if twisted or displaced.

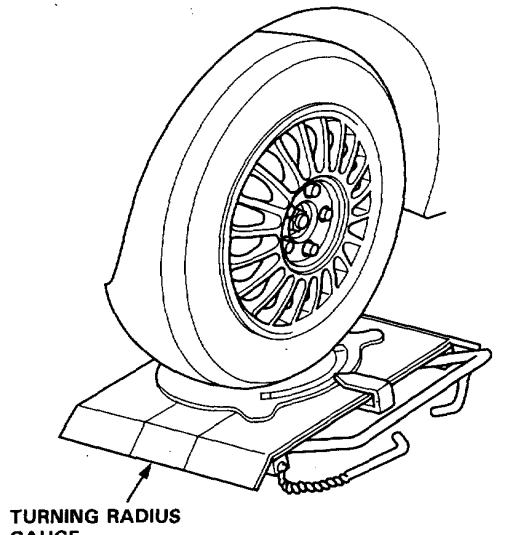

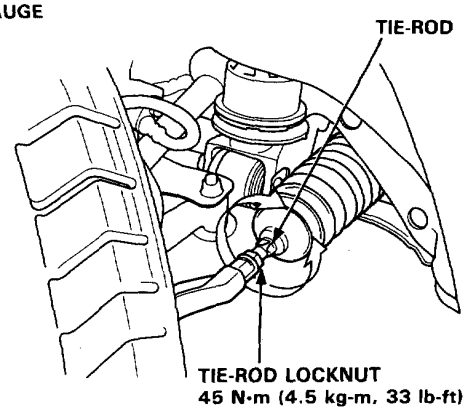

Wheel Measurements

Bearing End Play

Front Wheel End Play

Standard: 0–0.05 mm (0–0.002 in)

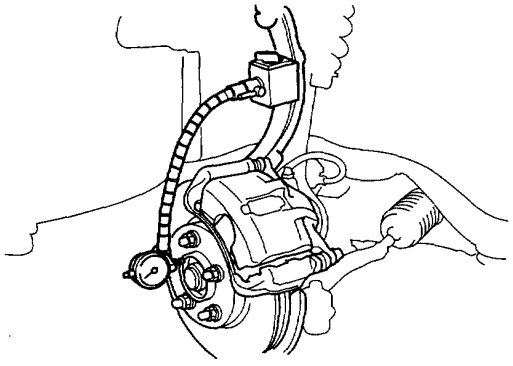

Rear Wheel End Play

Standard: 0–0.05 mm (0–0.002 in)

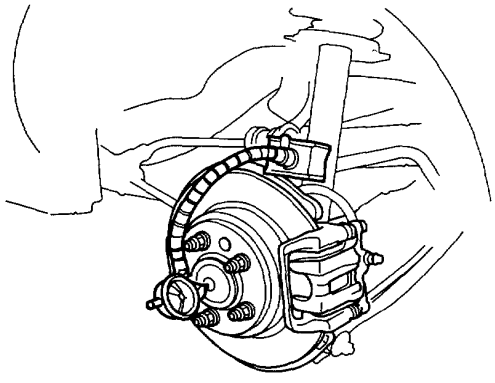

Runout

Front and Rear Wheel Radial Runout

Standard:
Aluminum Wheel: 0–0.7 mm (0–0.028 in)

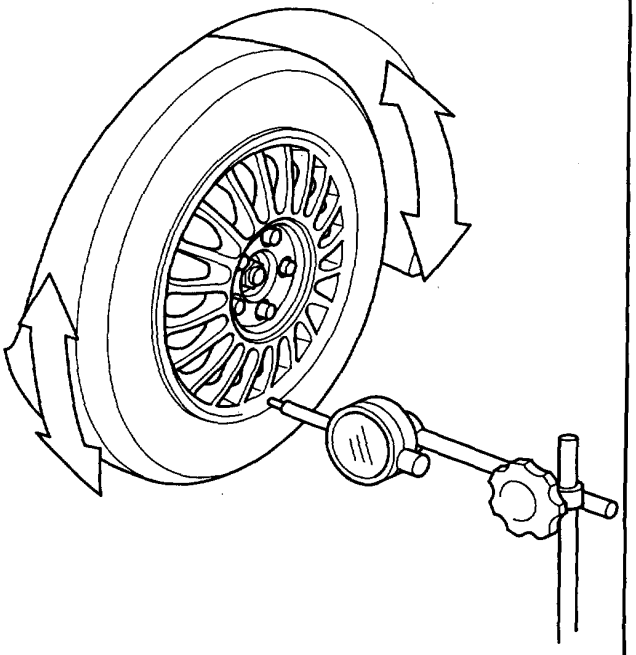

Front and Rear Wheel Axial Runout

Standard:
Aluminum Wheel: 0–0.7 mm (0–0.028 in)

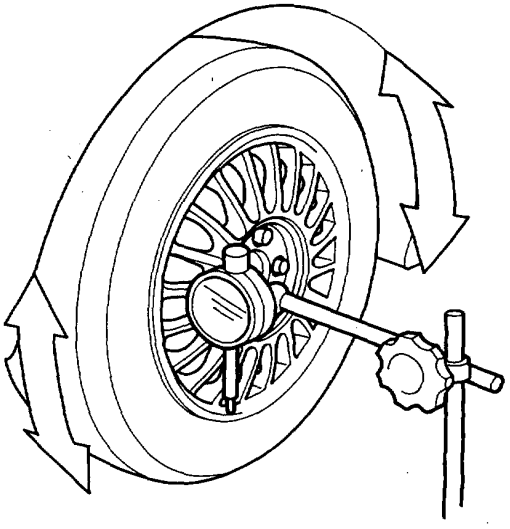

Front Suspension

Torque Specifications

CAUTION:

- **Replace the self-locking nuts after removal.**
- **Replace the self-locking bolts if you can easily thread a non-self-locking nut past their nylon locking inserts. (It should require 1 N·m (0.1 kg-m, 0.7 lb-ft) of torque to turn the test nut on the bolt). The vehicle should be on the ground before any bolts or nuts connected to rubber mounts or bushings are tightened.**
- **Torque the castle nut to the lower torque specification, then tighten it only far enough to align the slot with the pin hole. Do not align the nut by loosening.**

NOTE: Wipe off the grease before tightening the nut at the ball joint.
An asterisk indicates a bolt with a locking insert.

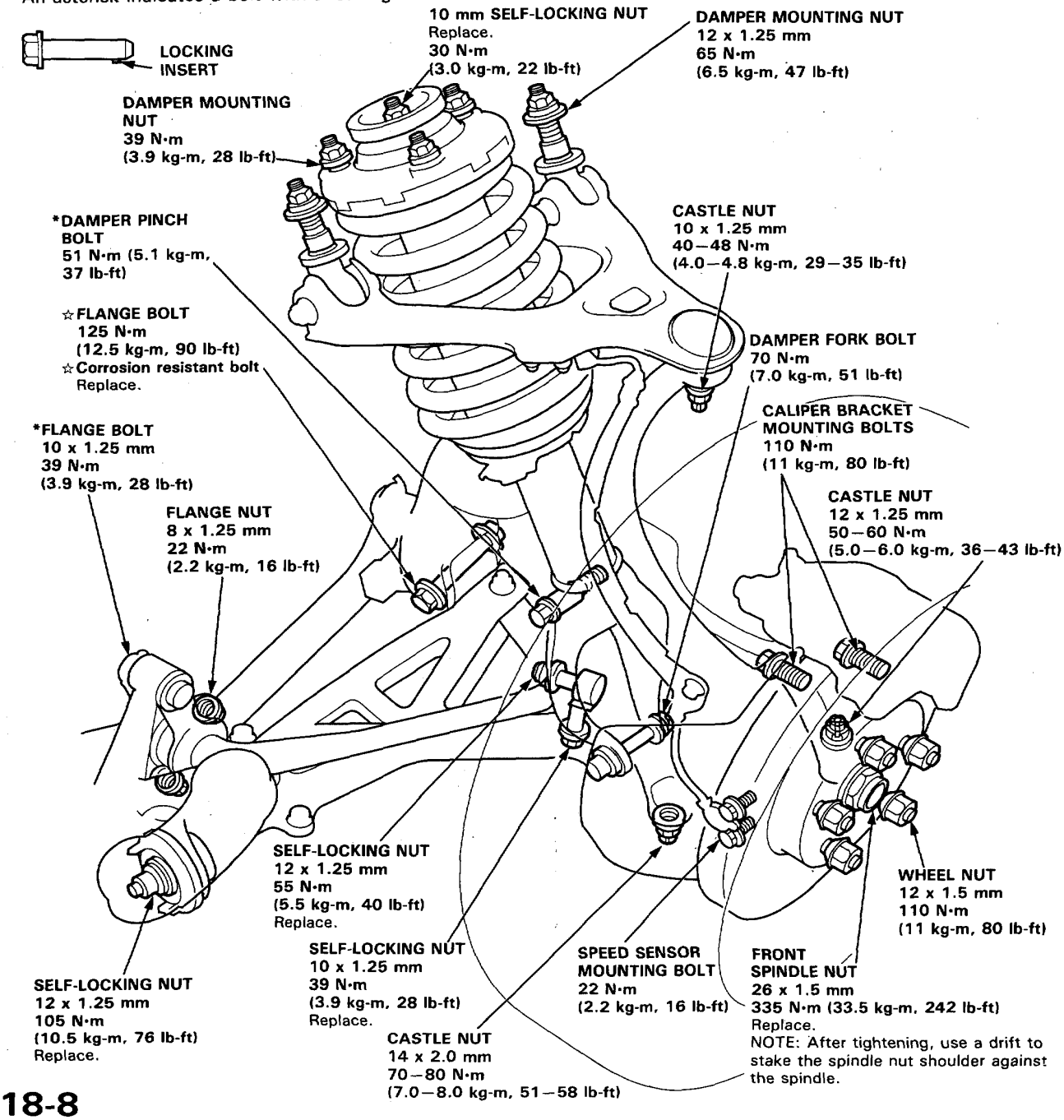

NOTE:
- Wipe off the grease before tightening the nut at the ball joint.
- Torque specifications, see page 18-8.
  The right and left stabilizer springs are symmetrical. Install with the paint mark facing down.
- The right and left damper forks are symmetrical. The left damper fork is marked with "POL" while the right damper fork is marked with "POR". Do not interchange them.
- The right and left upper arms are symmetrical. The left upper arm is marked with "LPJ" while the right arm is marked with "RPJ". Do not interchange them.

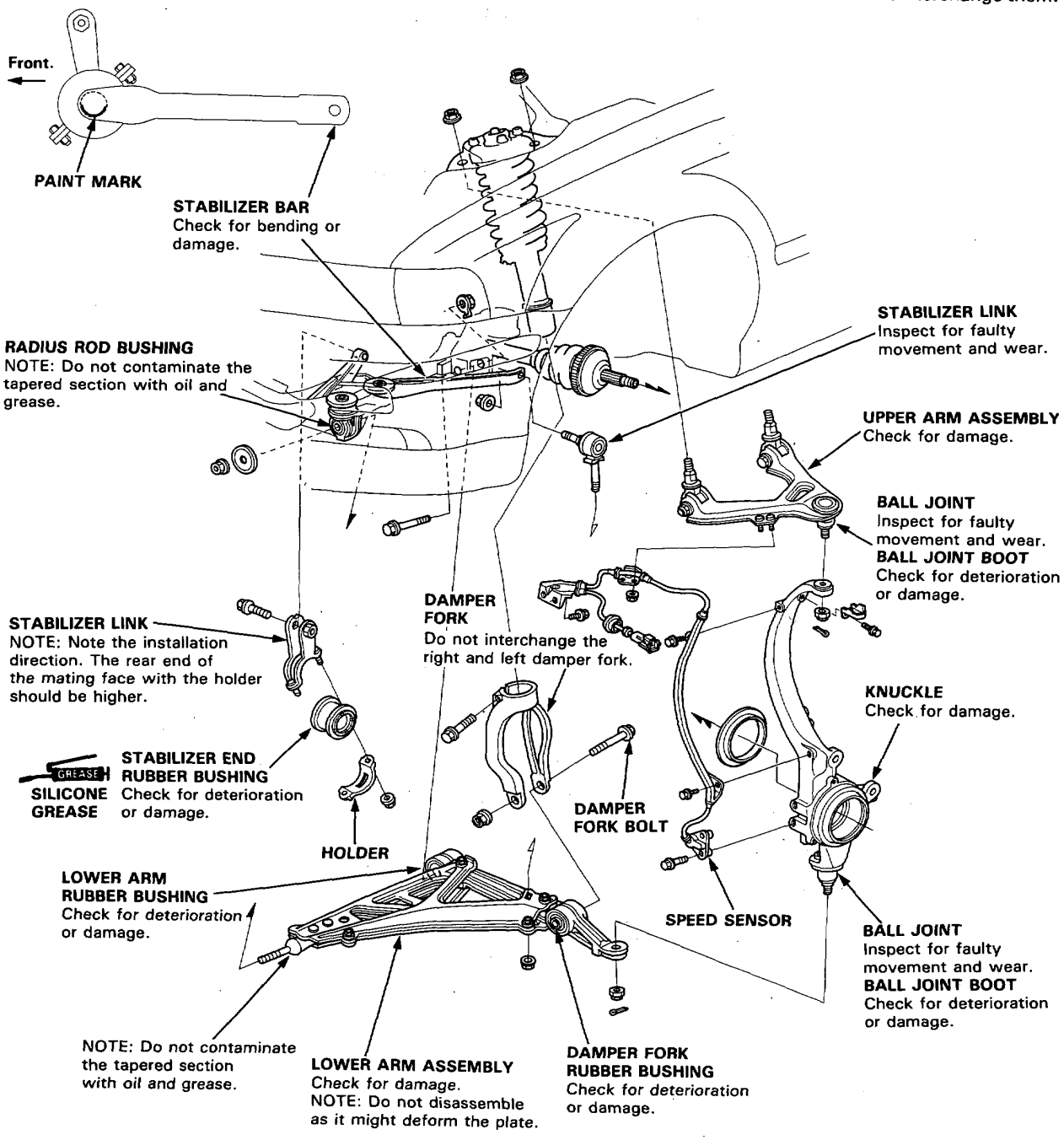

Knuckle/Hub Replacement

NOTE:
- Use only genuine Honda aluminum wheel weights. Non-genuine aluminum wheel weights may corrode and damage aluminum wheels.
- Remove the center cap by prying it out with a flat screwdriver. Avoid damage to the cap by not allowing it to fall during removal.
- Before installing the wheel, clean the mating surface of the brake disc and inside of the wheel.

CAUTION: Use a rag at the point you are going to pry because aluminum alloy wheels can be easily damaged.

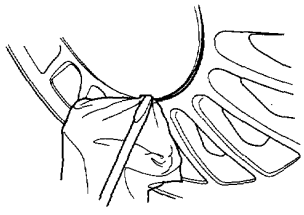

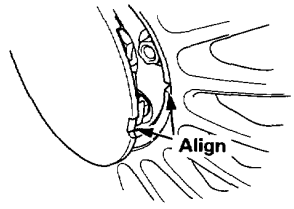

NOTE: Install the center cap by aligning the groove of the wheel side with the groove in the center cap.

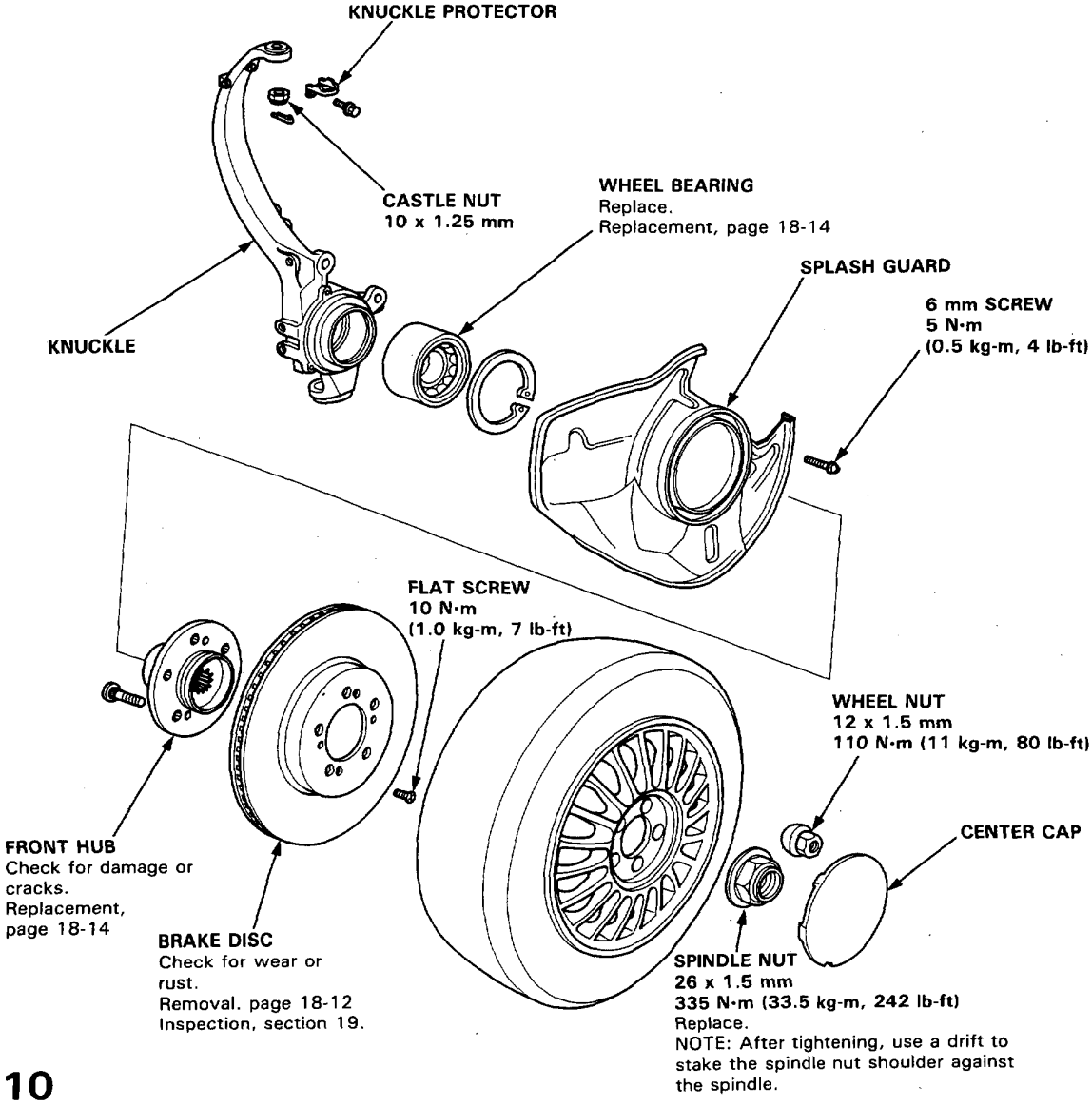

Knuckle/Hub Replacement

1. Pry the spindle nut stake away from the spindle, then loosen the nut.

2. Loosen the wheel nuts slightly.

3. Raise the front of car and support on safety stands in proper locations.

4. Remove the wheel nuts, wheel, and spindle nut.

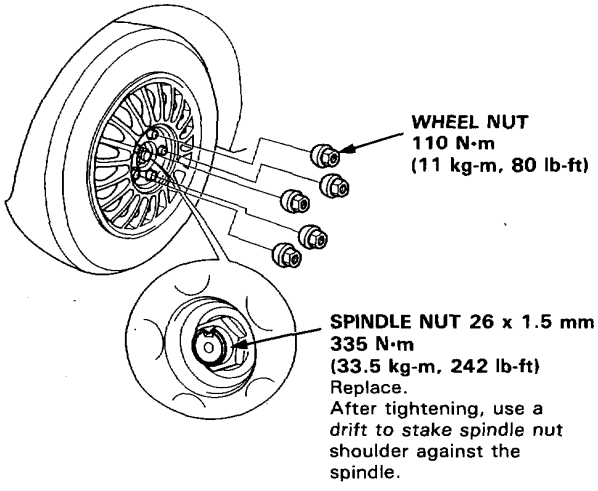

5. Remove the brake hose mounting bolts.

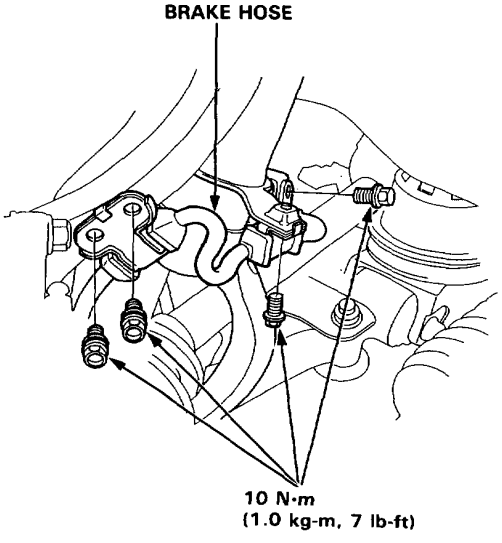

6. Remove the speed sensor from the knuckle and front lower arm, but do not disconnect it.

   NOTE: Be careful when installing the sensors to avoid twisting wires.

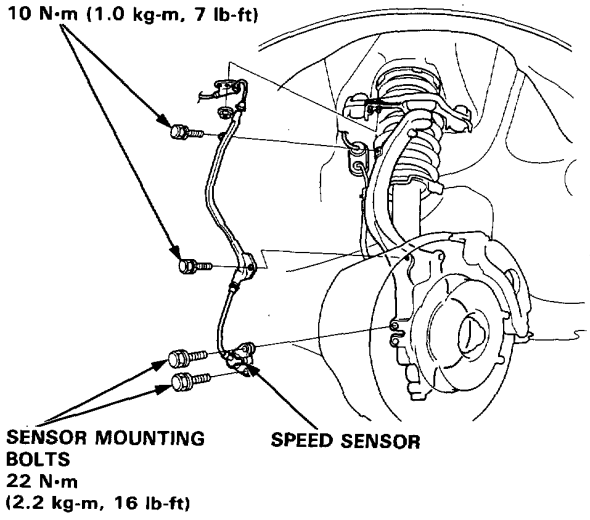

7. Remove the caliper mounting bolts and hang the caliper assembly to one side.

   CAUTION: To prevent accidental damage to the caliper assembly or brake hose, use a short piece of wire to hang the caliper assembly from the undercarriage.

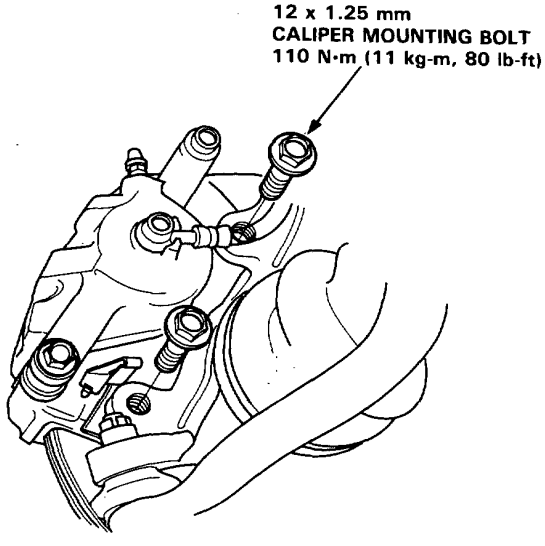

(cont'd)

Knuckle/Hub Replacement (cont'd)

8. Remove the 6 mm brake disc retaining screws.

9. Screw two 8 x 12 mm bolts into the disc to push it away from the hub.

   NOTE: Turn each bolt two turns at a time to prevent cocking the disc excessively.

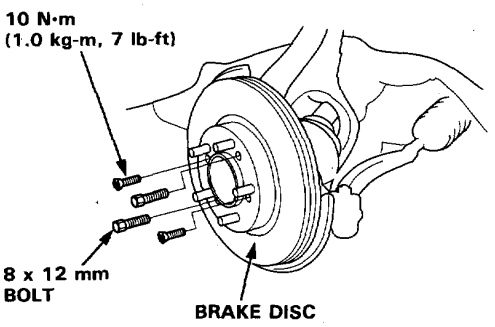

10. Clean any dirt or grease off the ball joint.

11. Remove the cotter pin from the ball joint castle nut and remove the nut.

12. Install a 12 mm hex nut on the ball joint. Be sure that the 12 mm hex nut is flush with the ball joint pin end to prevent damage to the threaded end of the ball joint.

13. Apply grease to the special tool on the areas shown. This will ease installation of the tool and prevent damage to the pressure bolt threads.

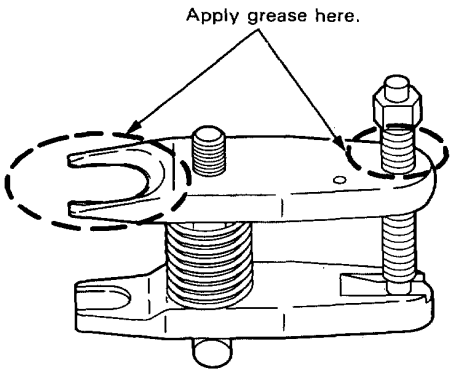

14. Install the special tool as shown. Insert the jaws carefully, making sure you do not damage the ball joint boot. Adjust the jaw spacing by turning the pressure bolt.

    NOTE: If necessary, apply penetrating type lubricant to loosen the ball joint.

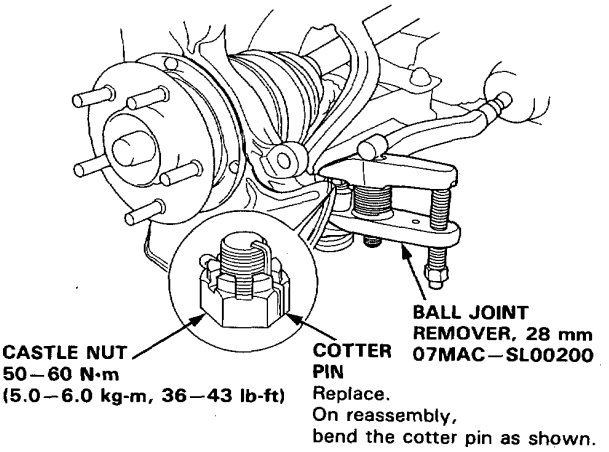

15. Once the tool is in place, turn the adjusting bolt as necessary to make the jaws parallel. Then hand-tighten the pressure bolt and re-check the jaws to make sure they are still parallel.

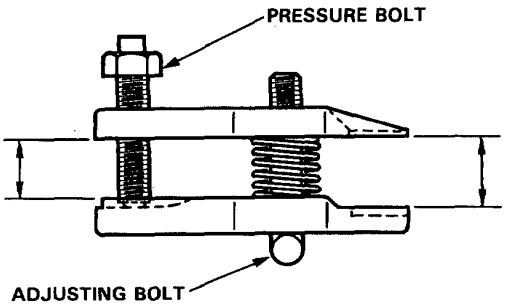

16. With a wrench, tighten the pressure bolt until the ball joint shaft pops loose from the steering arm.

    ⚠WARNING Wear eye protection. The ball joint can break loose suddenly and scatter dirt or other debris in your eyes.

17. Remove the tool, then remove the nut from the end of the ball joint and pull the ball joint out of the steering/suspension arm. Inspect the ball joint boot and replace it if damaged.

18. Remove the cotter pin and lower arm ball joint nut.

19. Install a 14 mm hex nut on the ball joint. Be sure that the 14 mm hex nut is flush with the ball joint pin end, or the threaded section of the ball joint pin might be damaged by the ball joint remover.

20. Use the ball joint remover, 32 mm (07MAC–SL00100) as shown on page 18-12 to separate the ball joint and lower arm.

    NOTE: If necessary, apply penetrating type lubricant to loosen the ball joint.

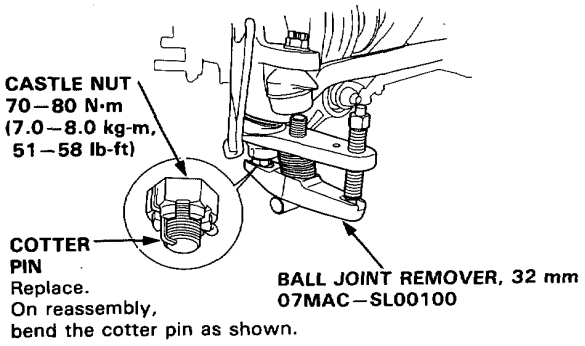

21. Remove the cotter pin and the upper ball joint nut.

22. Install a 10 mm hex nut on the ball joint. Be sure that the 10 mm hex nut is flush with the ball joint pin end, or the threaded section of the ball joint pin might be damaged by the ball joint remover.

23. Use the ball joint remover, 28 mm (07MAC–SL00200) as shown on page 18-12 to separate the ball joint and knuckle.

    NOTE: If necessary, apply penetrating type lubricant to loosen the ball joint.

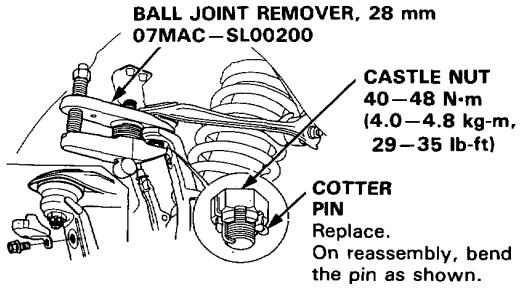

(cont'd)

Knuckle/Hub Replacement (cont'd)

24. Pull the knuckle outward and remove the driveshaft outboard joint from the knuckle using a plastic hammer.

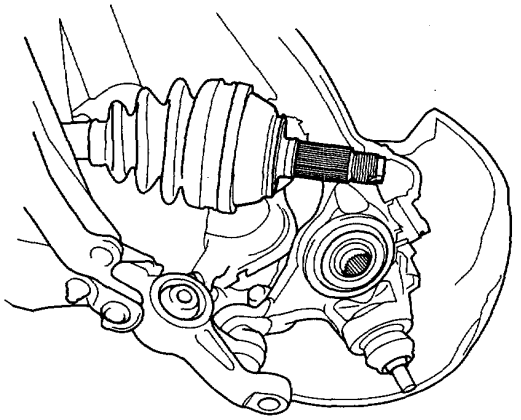

Wheel bearing Replacement:

NOTE: Replace the bearing with a new one after removal.

25. Carefully clamp the caliper bracket mount section of the knuckle in a vise with soft jaws.

26. Separate the hub from the knuckle using a commercially available hub puller.

CAUTION:
- **Hold the knuckle securely so it does not slip out of the vise from the impact.**
- **Take care not to distort the splash guard.**

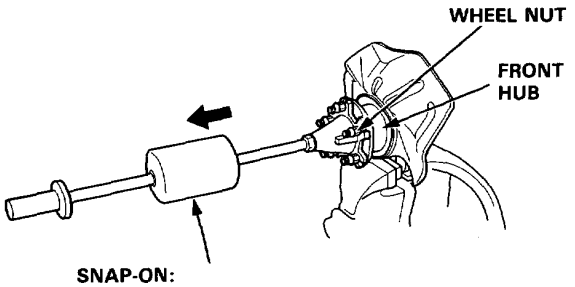

SNAP-ON:
T/N CJ123-1 Adapter Plate
T/N CJ105-4A Shaft Assembly
T/N CJ97-3 Remover Weight
or
Equivalent commercially available

27. Remove the splash guard.

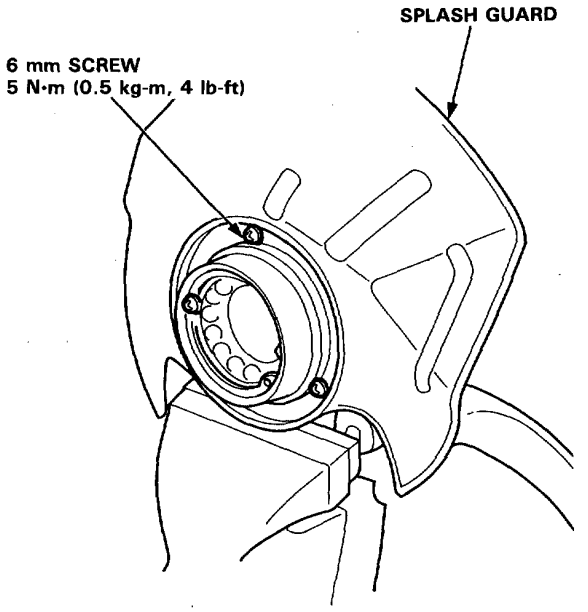

28. Remove the circlip from the knuckle.

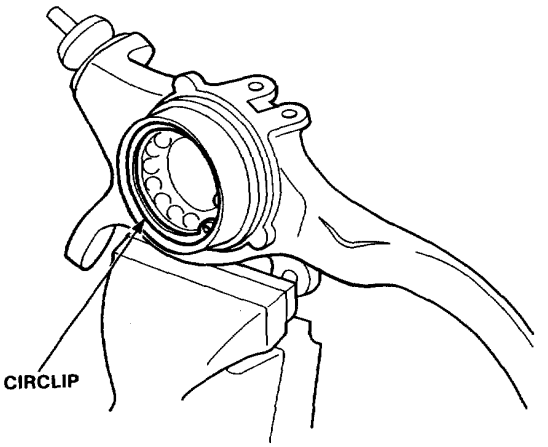

29. Press the wheel bearing out of the knuckle using a hydraulic press and the special tools shown below.

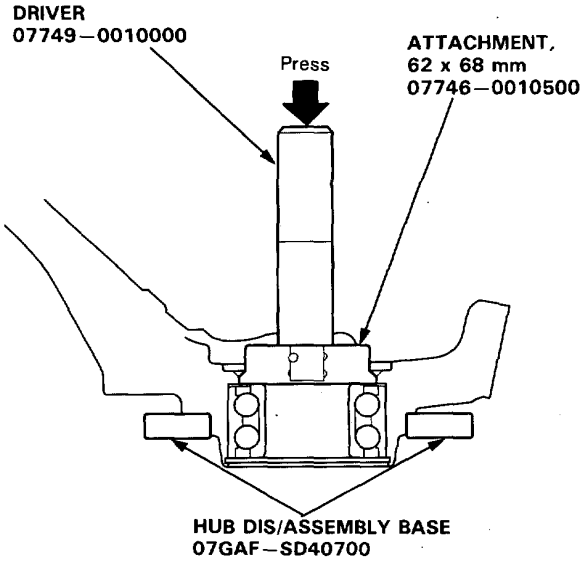

30. Remove the outboard bearing inner race from the hub using the special tools shown and a commercially available bearing separator.

CAUTION: To prevent damage to the tool make sure the threads are fully engaged before pressing.

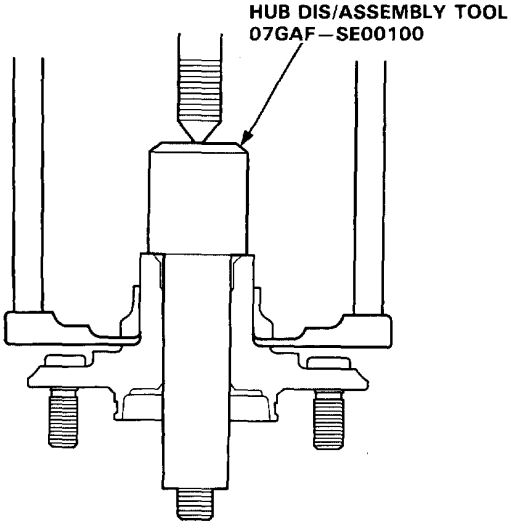

Bearing Separator:
SNAP-ON T/N CJ951
KENT MOORE T/N J-22912-01
or
Equivalent commercially available

NOTE: Wash the knuckle and hub thoroughly in high flash point solvent before reassembly.

31. Press a new wheel bearing into the knuckle using a hydraulic press and the special tools shown below.

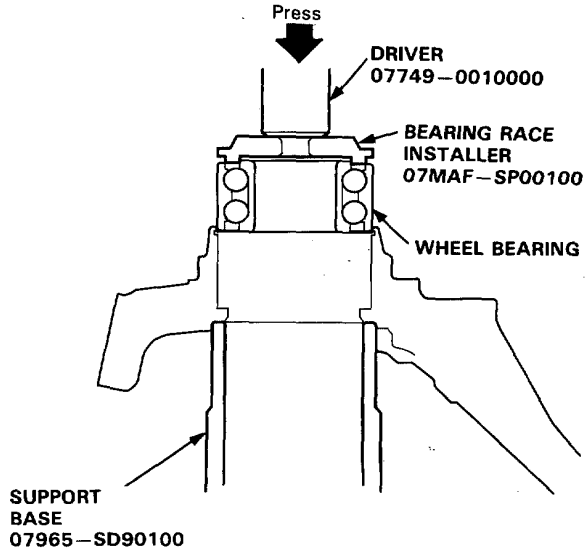

32. Install the circlip securely in the knuckle groove.

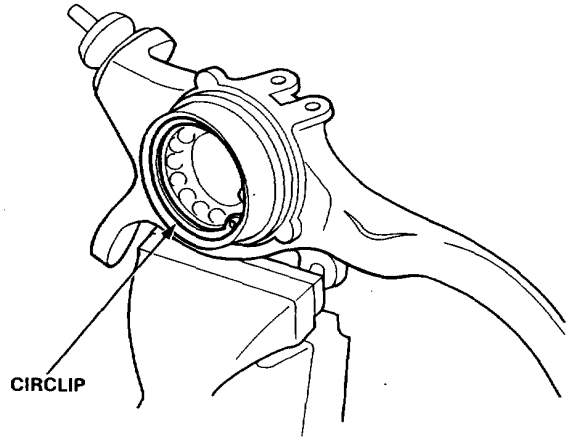

(cont'd)

Knuckle/Hub Replacement (cont'd)

33. Install the splash guard and tighten the screws.

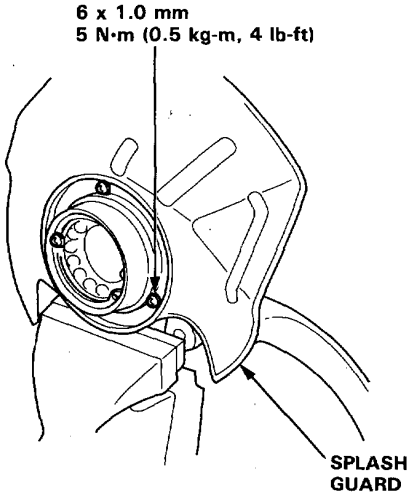

34. Place the front hub in the special tool fixture, then set the knuckle in position and apply downward pressure with a hydraulic press.

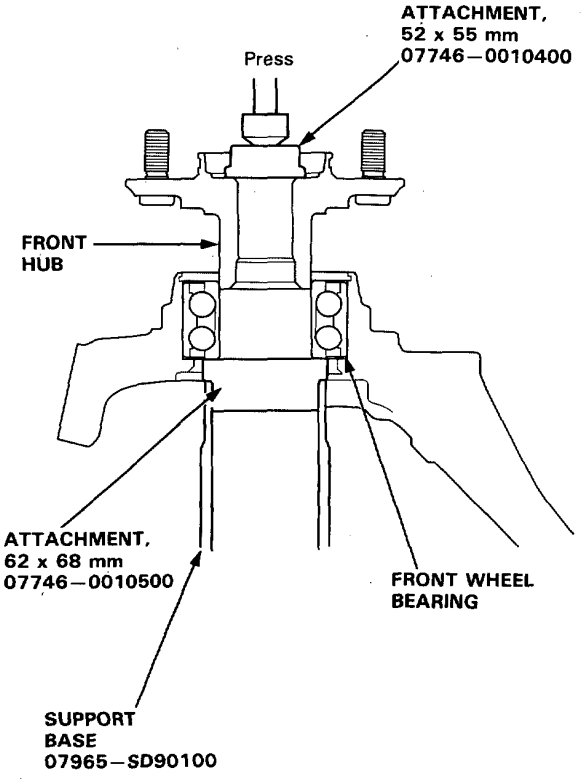

Ball Joint Boot Replacement

1. Remove the circlip and the boot.

   CAUTION: Do not contaminate the boot installation section with grease.

2. Pack the interior of the boot and lip with grease.

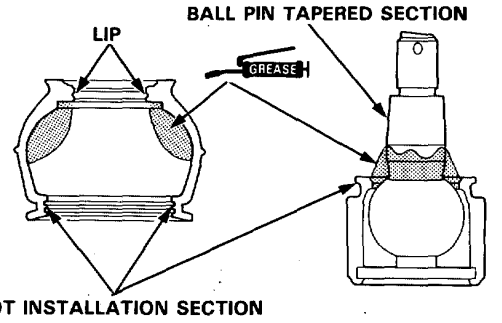

3. Wipe the grease off the sliding surface of the ball pin and pack with fresh grease.

   CAUTION:
   - **Keep grease off the boot installation section and the tapered section of the ball pin.**
   - **Do not allow dust, dirt, or other foreign materials to enter the boot.**

4. Install the boot in the groove of the boot installation section securely, then bleed air.

5. Adjust the special tool with the adjusting bolt until the end of the tool aligns with the groove on the boot. Slide the circlip over the tool and into position.

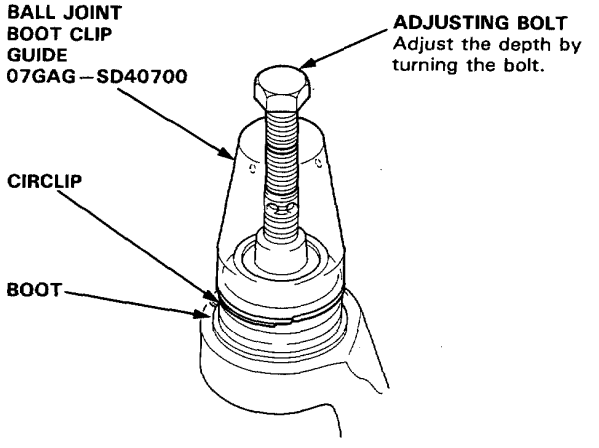

CAUTION: After installing the boot, check the ball pin tapered section for grease contamination and wipe it if necessary.

Damper Removal

1. Remove the brake hose clamps from the damper.
2. Remove the damper pinch bolt.
3. Remove the damper fork bolt and remove the damper fork.

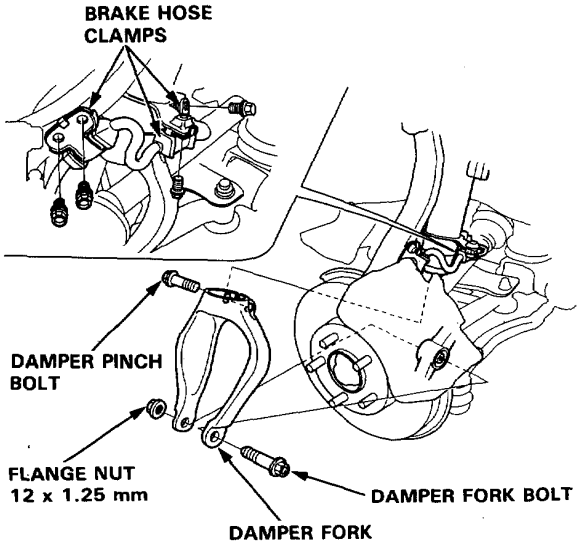

4. Remove the damper by removing the three flange nuts.

   NOTE: Mark the right and left dampers or store them separately. Do not confuse them on installation.

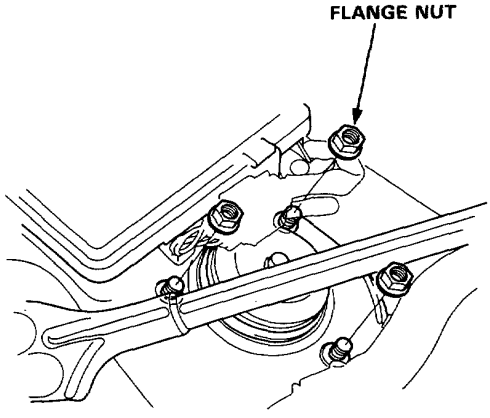

Damper Disassembly/Inspection

1. Compress the damper spring with the spring compressor according to the manufacturer's instructions, then remove the self-locking nut.

   CAUTION: Do not compress the spring more than necessary to remove the nut.

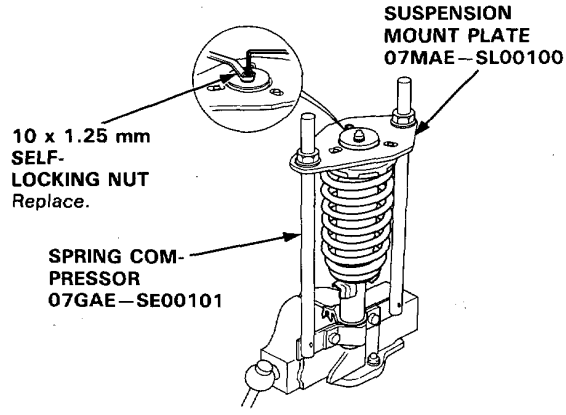

2. Remove the spring compressor, then disassemble the damper as shown on the next page.

Inspection:

1. Reassemble all parts, except the spring.
2. Push on the damper assembly as shown.
3. Check for smooth operation through a full stroke, both compression and extension.

   NOTE: The damper should move smoothly. If it does not (no compression or no extension), then gas is leaking and the damper should be replaced.

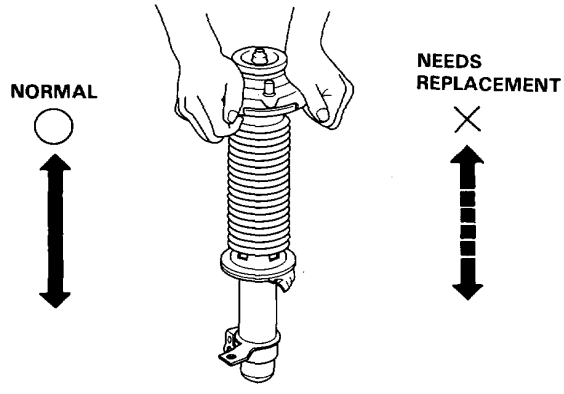

4. Check for oil leaks, abnormal noises or binding during these tests.

Inspection

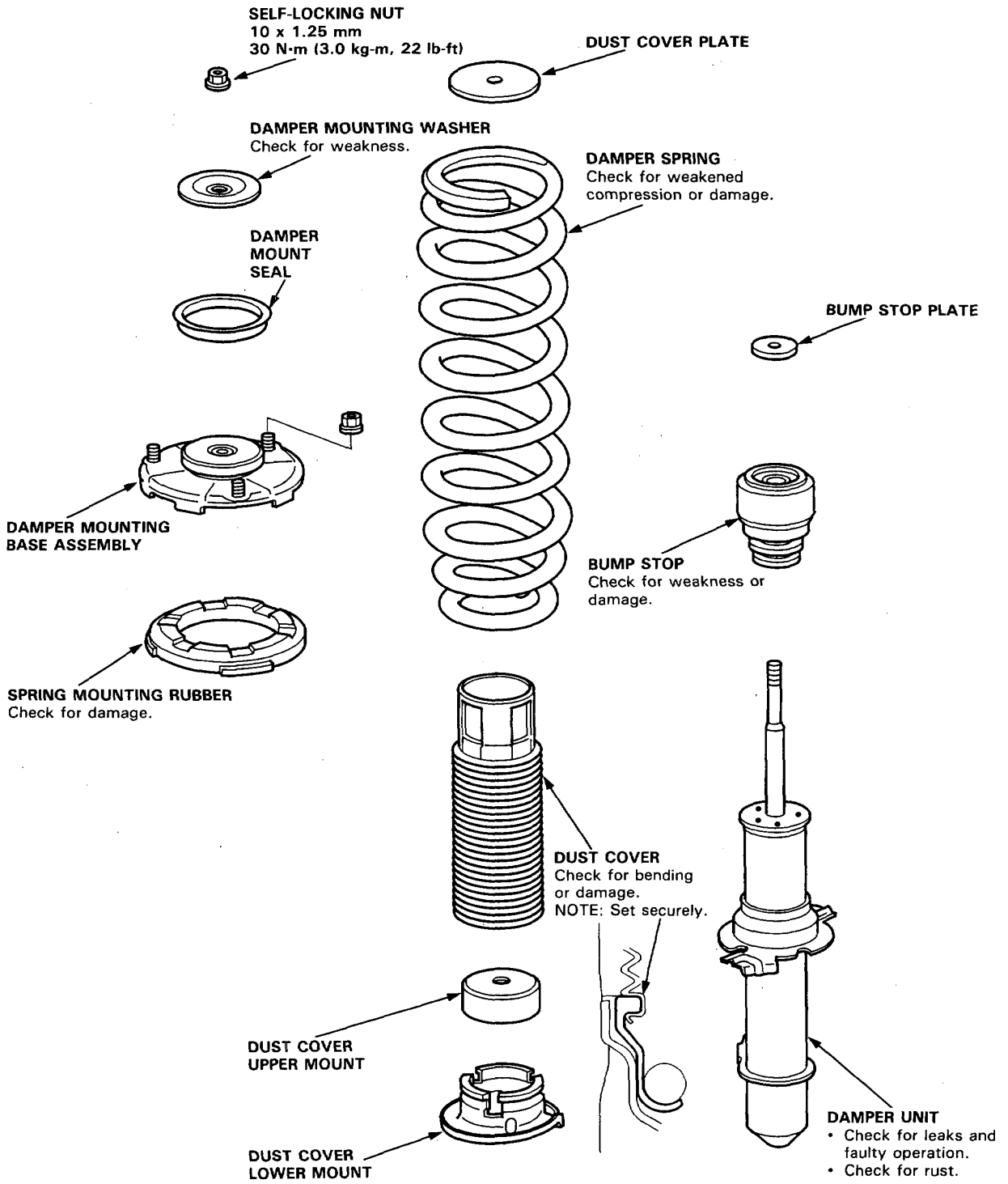

NOTE: Mark the right and left dampers or store them separately. Do not confuse them on installation.

Damper Reassembly

1. Install the damper unit, dust cover lower mount, damper spring, bump stop, bump stop plate, dust cover, dust cover upper mount, dust cover plate, and spring mounting rubber on the spring compressor.

2. Install the damper mounting base assembly on the damper unit as shown.

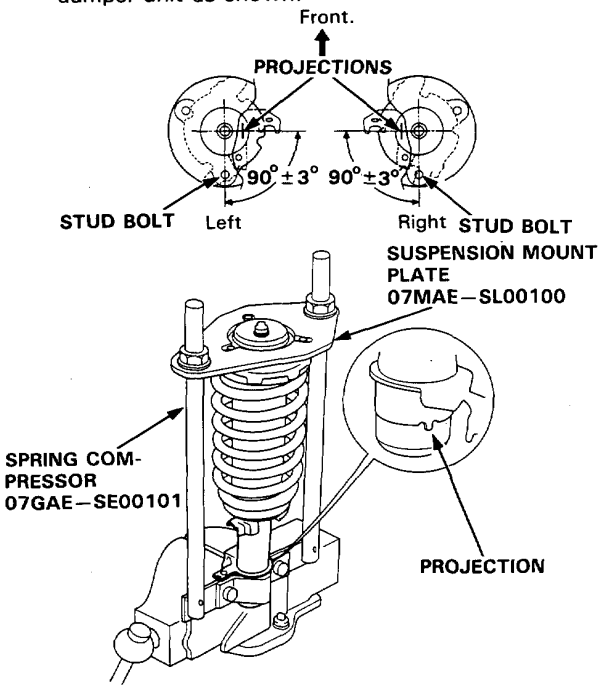

3. Compress the damper spring.

4. Install the damper mount washer and a new 10 mm self-locking nut.

5. Hold the damper shaft and tighten the 10 mm self-locking nut.

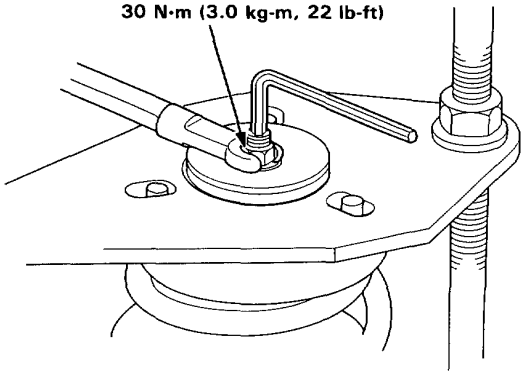

Damper Installation

1. Loosely install the damper on the frame with the aligning tab facing inside.

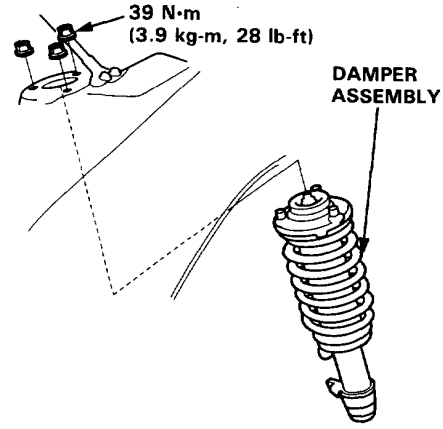

2. Install the damper fork on the driveshaft and lower arm. Install the damper in the damper fork so the aligning tab is aligned with the slot in the damper fork.

3. Hand tighten the bolts and nuts.

4. Raise the knuckle with a floor jack until the car just lifts off the safety stand.

   NOTE: The bolts and nuts should be tightened with the vehicle's weight on the damper.

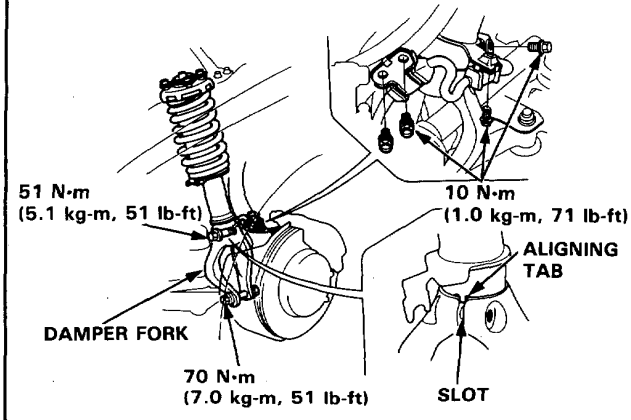

5. Tighten the damper pinch bolt.

6. Secure the damper fork bolt with a new 12 mm nut.

7. Secure the damper assembly to the frame with the flange nuts.

8. Install the brake hose clamps.

Torque Specifications

CAUTION:

- **Replace the self-locking nuts after removal.**
- **Replace the self-locking bolts if you can easily thread a non-self-locking nut past their nylon locking inserts. (It should require 1 N•m (0.1 kg-m,0.7 lb-ft) of torque to turn the test nut on the bolt). The vehicle should be on the ground before any bolts or nuts connected to rubber mounts or bushings are tightened.**
- **Torque the castle nut to the lower torque specification, then tighten it only far enough to align the slot with the pin hole. Do not align the nut by loosening.**

NOTE: Wipe off the grease before tightening the nut at the ball joint.
An asterisk indicates a bolt with a locking insert.

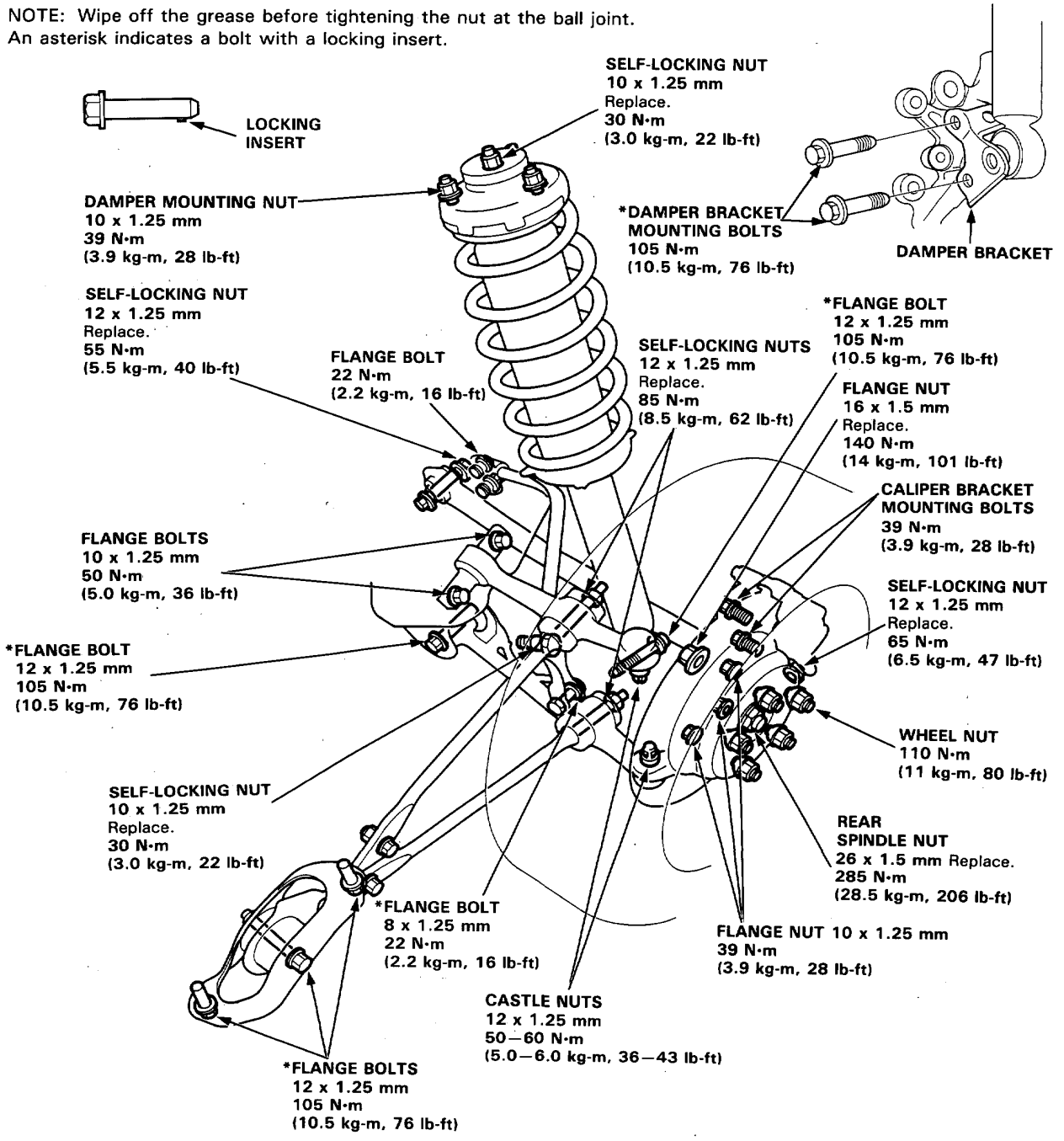

Hub Bearing Unit Replacement

NOTE:
- Use only genuine Honda aluminum wheel weights. Non-genuine aluminum wheel weights may corrode and damage aluminum wheels.
- Remove the center cap by prying it out with a flat screwdriver. Avoid damage to the cap by not allowing it to fall during removal.
- Before installing the wheel, clean the mating surfaces of the brake disc and inside of the wheel.
- Install the center cap by aligning the groove of the wheel side with the groove in the center cap.

CAUTION: Use a rag at the point you are going to pry, *because aluminum alloy wheels can be easily damaged.*

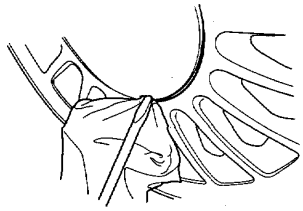

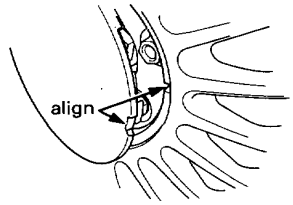

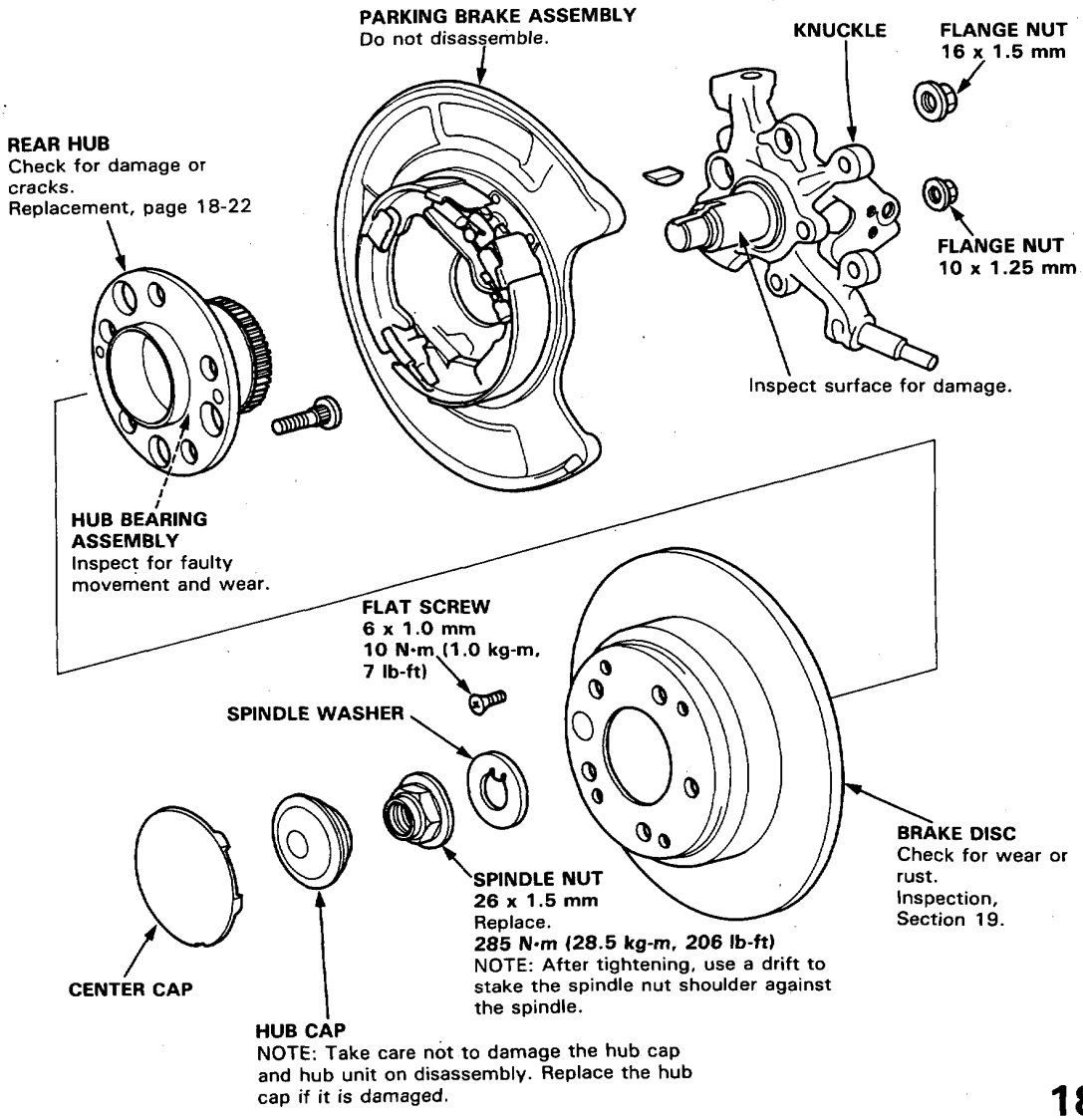

Hub Bearing Unit Replacement

1. Raise the rear of car and support it with safety stands in proper locations.

2. Remove the rear wheel.

3. Remove the hub cap, then pry the spindle nut lock tab away from the spindle and loosen the nut.

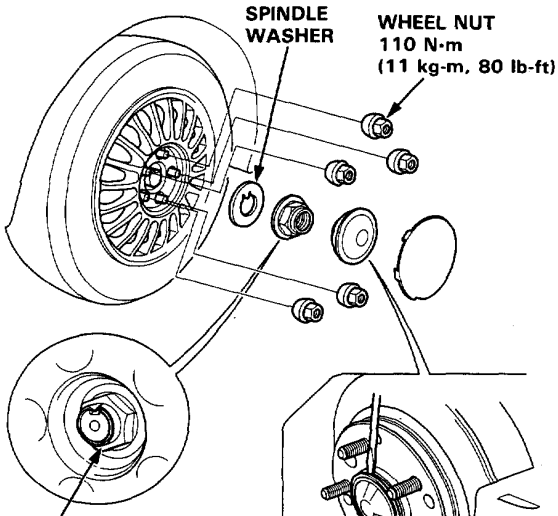

HUB CAP
NOTE: Take care not to damage the hub cap and hub unit on disassembly. Replace the hub cap if it is damaged.

4. Remove the brake hose mounting bolt.

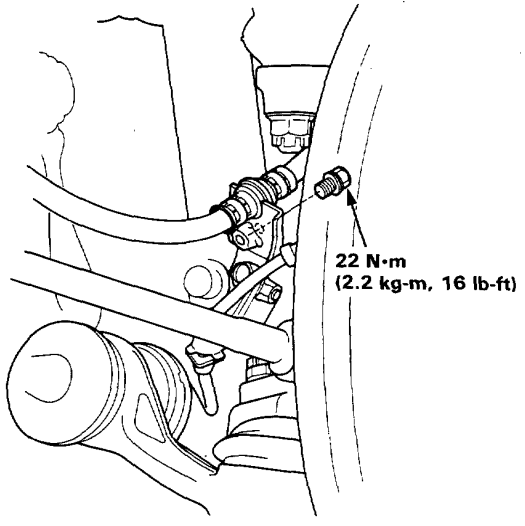

5. Remove the caliper bracket mounting bolts and hang the caliper assembly to one side.

CAUTION: To prevent accidental damage to the caliper assembly or brake hose, use a short piece of wire to hang the caliper assembly from the undercarriage.

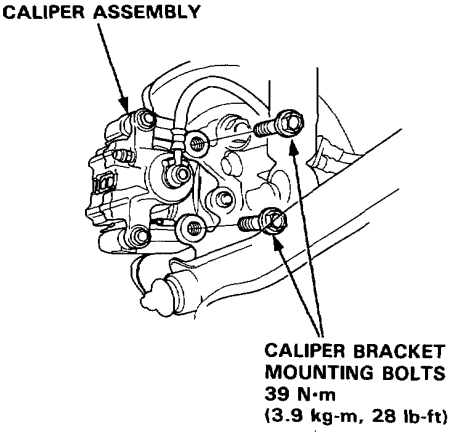

6. Remove the 6 mm brake disc retaining screws.

7. Screw two 8 x 12 mm bolts into the disc to push it away from the hub. Remove the brake disc.

NOTE: Turn each bolt two turns at a time to prevent cocking the disc excessively.

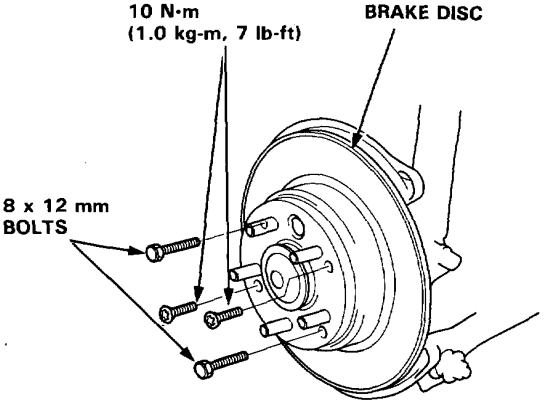

8. Remove the hub unit from the knuckle.

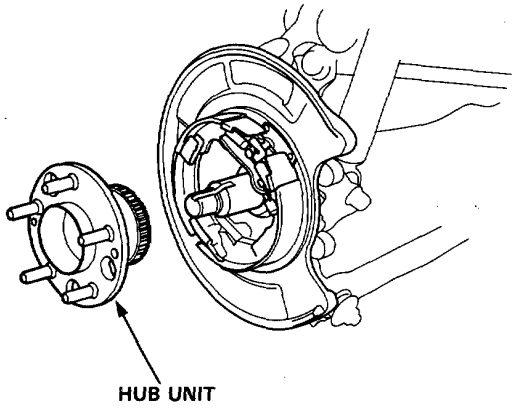

NOTE: Wash the bearing and spindle thoroughly in high flash point solvent before reassembly.

9. *Install in reverse order of removal.*
Tighten the new spindle nut to specified torque, then stake the spindle nut shoulder against the spindle.

Rear Suspension

Illustrated Index

NOTE:
- Wipe off the grease before tightening the nut at the ball joint.
- Torque specifications, see page 18-19.
- Make sure the toe adjuster cams on lower arm B are installed in the same direction.
- The right and left lower arm B are symmetrical. Install so the paint mark of "SPO R UP!" and "SPO L UP!" point to the front.
- "L" is stamped on the left lower arm A and "R" on the right lower arm A.
- The left upper arm is stamped with "POL" while the right upper arm is stamped with "POR."

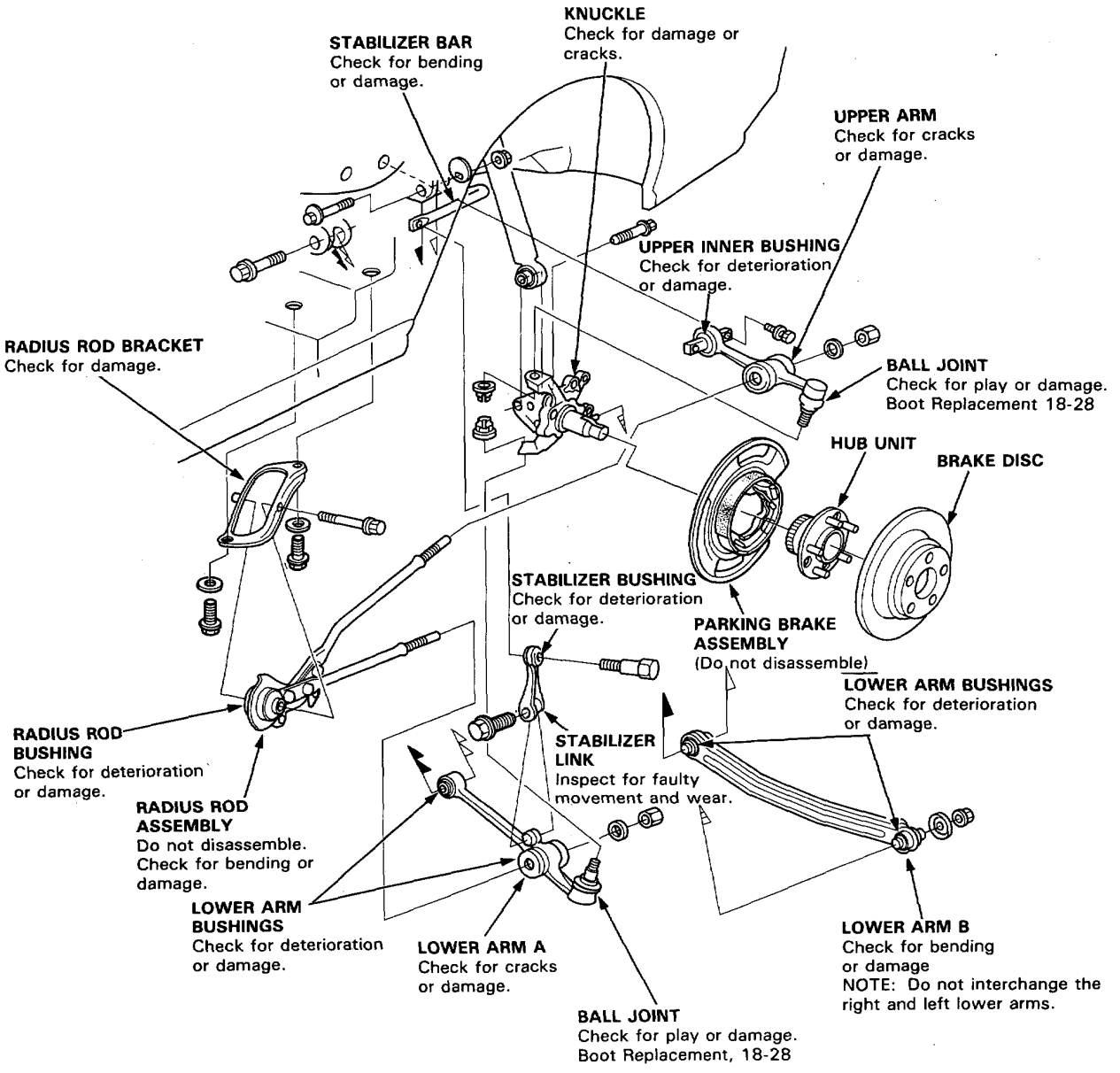

Knuckle/Upper Arm/Lower Arm/Radius Rods Removal

1. Remove the rear wheel and bearing unit assembly (page 18-22).

2. Remove the speed sensor from the knuckle and rear lower arm, but do not disconnect it.

   NOTE: Be careful when installing the sensors to avoid twisting wires.

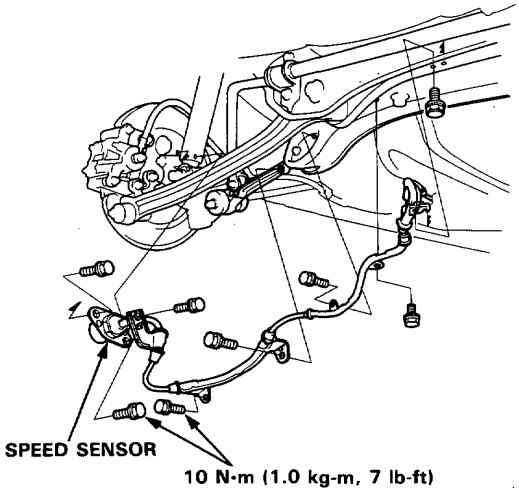

3. Remove the parking brake cable brackets.

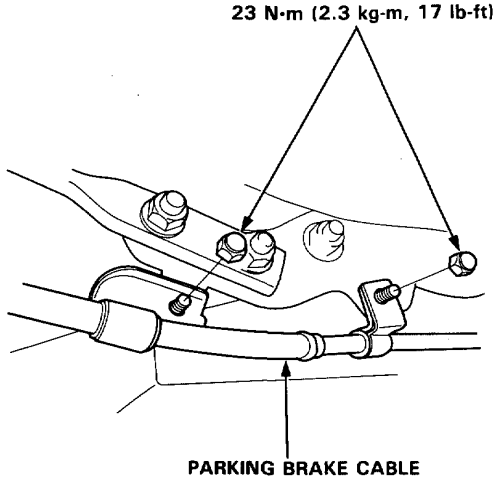

4. Remove the brake hose bracket from the knuckle.

5. Remove the parking brake assembly.

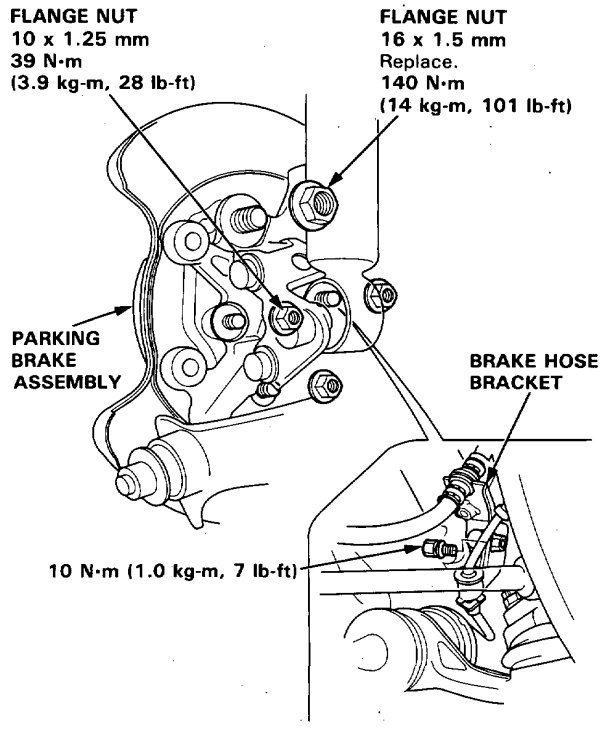

6. Separate the damper and knuckle by removing the damper mounting bolt.

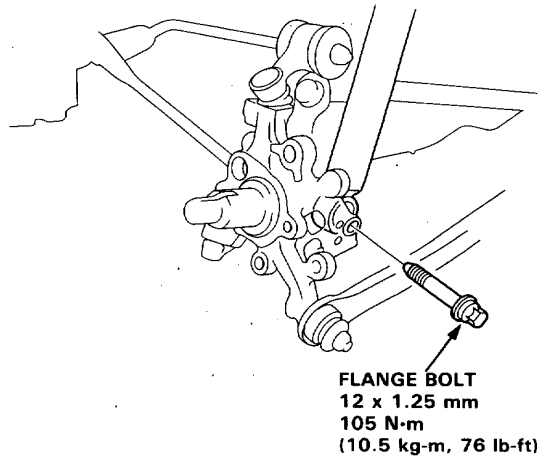

CAUTION: Install the damper assembly on the damper bracket with care not to allow the speed sensor wire to get caught between the damper and the bracket.

(cont'd)

Knuckle/Upper Arm/Lower Arm/Radius Rods Removal (cont'd)

7. Remove the cotter pin from the castle nut of the lower arm ball joint and remove the nut.

8. Install a 12 mm hex nut on the ball joint. Be sure that the 12 mm hex nut is flush with the ball joint pin end, or the threaded section of the ball joint pin might be damaged by the ball joint remover.

9. Use the ball joint remover, 32 mm (07MAC–SL00100) as shown on page 18-12 to separate the lower arm and knuckle.

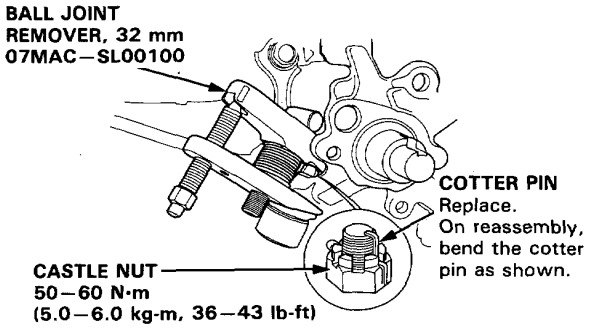

10. Remove the cotter pin from the castle nut of the upper arm ball joint and remove the nut.

11. Install a 12 mm hex nut on the ball joint. Be sure that the 12 mm hex nut is flush with the ball joint pin end, or the threaded section of the ball joint pin might be damaged by the ball joint remover.

12. Use the ball joint remover, 28 mm (07MAC–SL00200) as shown on page 18-12 to separate the upper arm and knuckle.

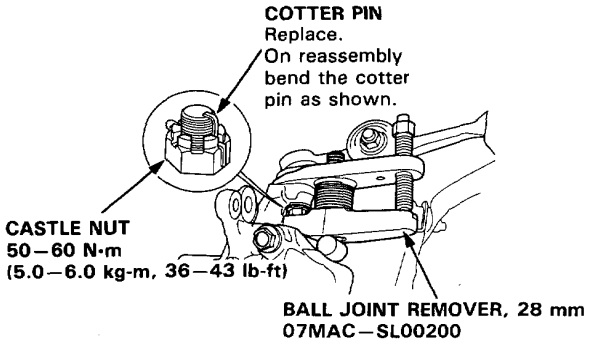

13. Remove the lower arm B.

14. Remove the rear knuckle.

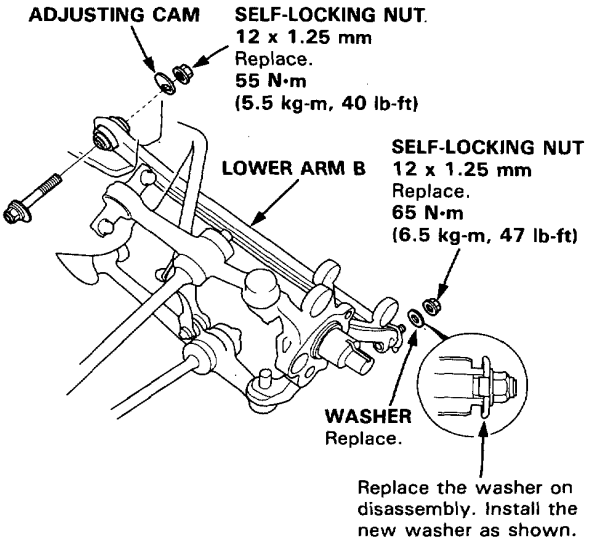

NOTE: Install the lower arm B with the paint mark of "L UP" or "R UP" toward the front.

15. Remove the upper radius rod nut.

16. Remove the upper arm.

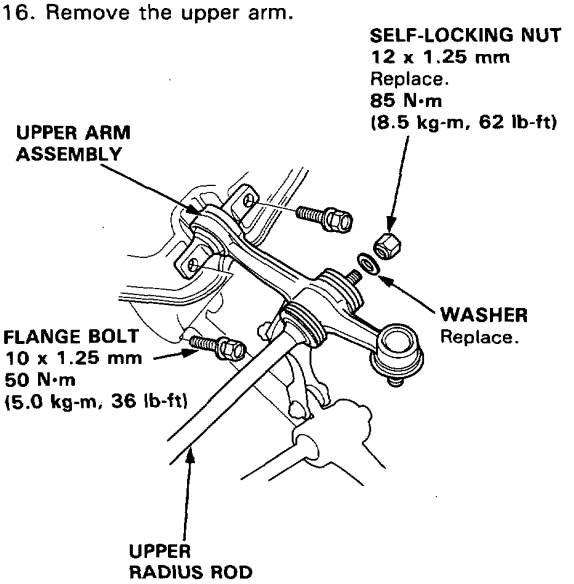

17. Remove the stabilizer link from the lower arm A.

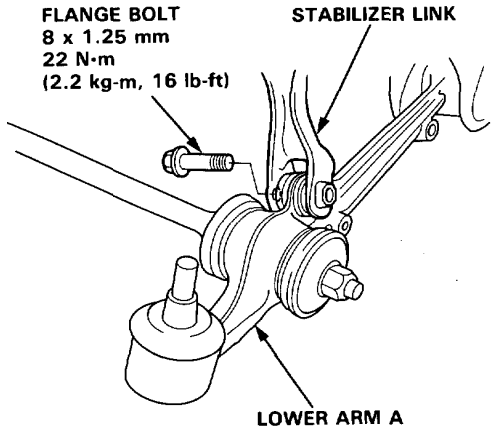

18. Remove the lower radius rod nut.

19. Remove the lower arm A.

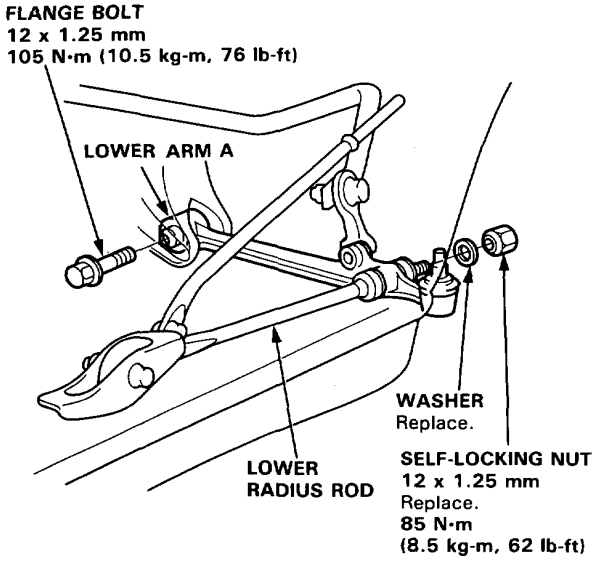

20. Remove the radius rod assembly.

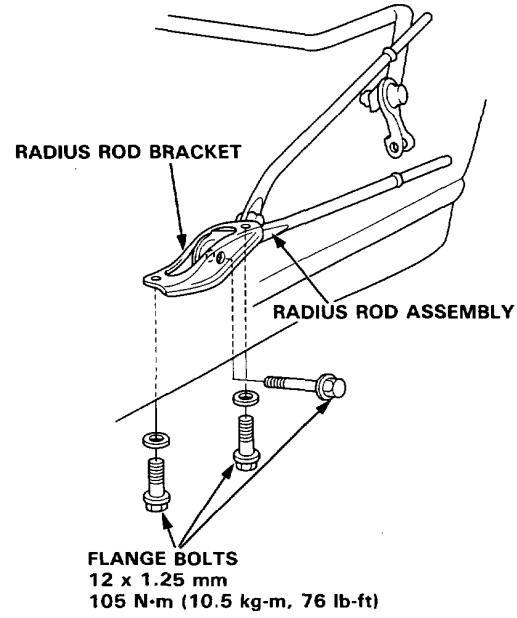

21. Remove the radius rod bracket from the trailing arm bushing.

NOTE:
- Do not disassemble the radius rod assembly.
- Check the bushing for cracks, damage, and/or deformation. Replace the radius rods only as a complete assembly.

Ball Joint Boot Replacement

1. Remove the circlip and the boot.
2. Remove the retainer (upper ball joint only).

   CAUTION: Do not contaminate the boot installation section with grease.

3. Pack the interior of the boot and lip with grease.

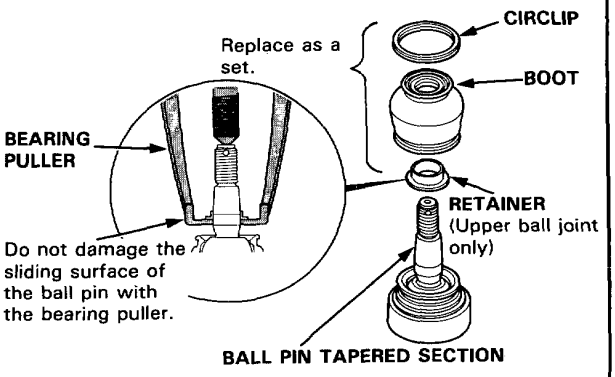

4. Wipe the grease off the sliding surface of the ball pin and pack with fresh grease and install the retainer (Upper ball joint only).

   CAUTION:
   - **Keep grease off the boot installation section and the tapered section of the ball pin.**
   - **Do not allow dust, dirt, or other foreign materials to enter the boot.**

5. Install the boot in the groove of the boot installation section securely, then bleed air.
6. Adjust the special tool with the adjusting bolt until the end of the tool aligns with the groove on the boot. Slide the circlip over the tool and into position.

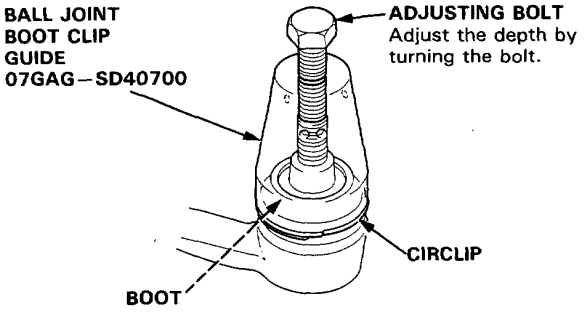

CAUTION: After installing the boot, check the ball pin tapered section for grease contamination and wipe it if necessary.

Damper Removal

1. Jack up the rear of car and support on safety stands in proper locations.
2. Remove the rear speaker and damper cap.
3. Use a floor jack to compress the damper slightly.
4. Remove the damper mounting nuts.

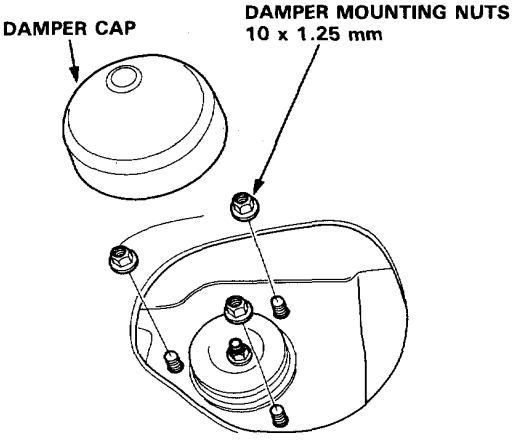

5. Remove the damper mounting bolt.
6. Lower the rear suspension and remove the damper assembly.

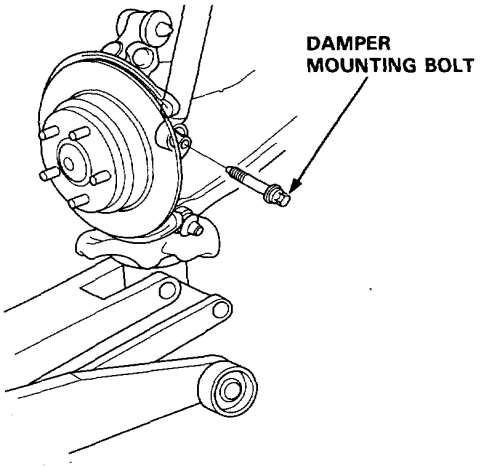

NOTE: Mark the right and left dampers or store them separately so they can be reinstalled on the proper sides.

Damper Disassembly/Inspection

Disassembly:

1. Compress the damper spring with the spring compressor according to the manufacturer's instructions.

   CAUTION: Do not compress the spring more than necessary to remove the 10 mm self-locking nut.

2. Remove the 10 mm self-locking nut from the damper assembly.

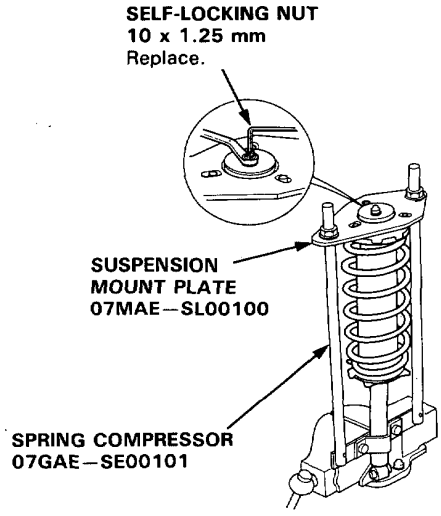

3. Remove the spring compressor and disassemble the damper as shown on page 18-30.

Inspection:

1. Reassemble all parts, except the spring.
2. Push on the damper assembly as shown.
3. Check for smooth operation through a full stroke, both compression and extension.

   NOTE: The damper should move smoothly.
   If it does not (no compression or no extension), then gas is leaking and the damper should be replaced.

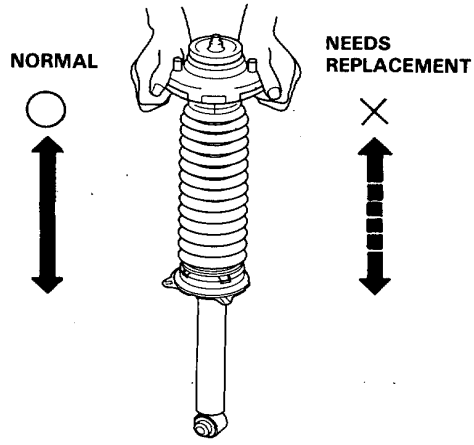

4. Check for oil leaks, abnormal noises or binding during these tests.

Inspection

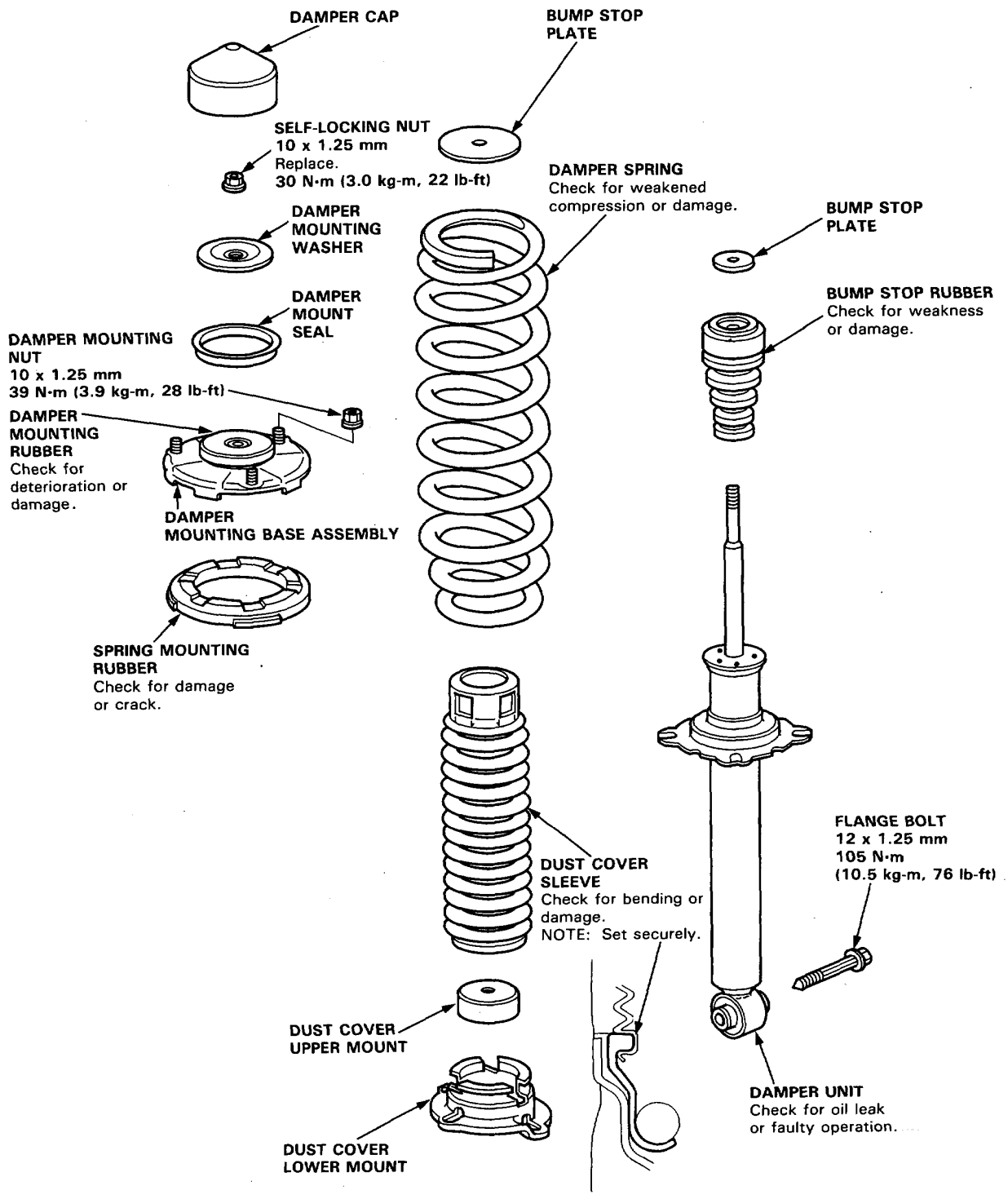

NOTE: Mark the right and left dampers or store them separately so they are reinstalled on the proper sides.

Damper Reassembly

1. Install the damper unit on a spring compressor.

2. Install the spring seat rubber, bump stop, bump stop plate, dust cover sleeve, damper spring, bump stop plate, rubber and damper mounting base on the damper unit.

   CAUTION: Install the damper mounting base so that the angle of the stud bolts is as shown.

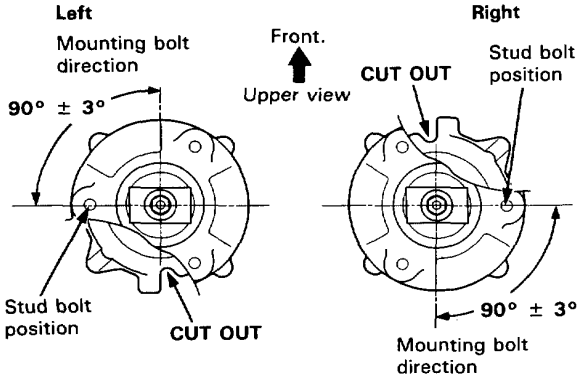

3. Install the upper plate of the spring compressor.

4. Install the damper mounting rubber and damper mounting washer, and loosely install a new 10 mm self-locking nut.

5. Hold the damper shaft and tighten the 10 mm self-locking nut.

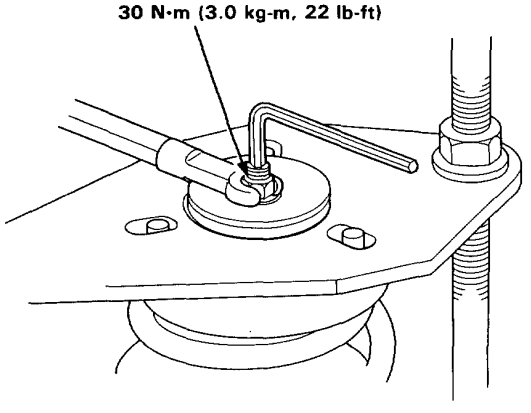

TOOLS:
SPRING COMPRESSOR 07GAE—SE00101
SUSPENSION MOUNT PLATE 07MAE—SL00100

Damper Installation

1. Lower the rear suspension and set the damper assembly in its original position.

2. Loosely install the damper mounting bolt.

3. Raise the rear suspension with a floor jack until the weight of the car is on the damper.

   NOTE:
   - The damper mounting bolts should be tightened with the damper under vehicle load.
   - Do not interchange the right and left dampers.

   CAUTION: Install the damper assembly on the damper bracket with care not to allow the speed sensor wire to get caught between the damper and the bracket.

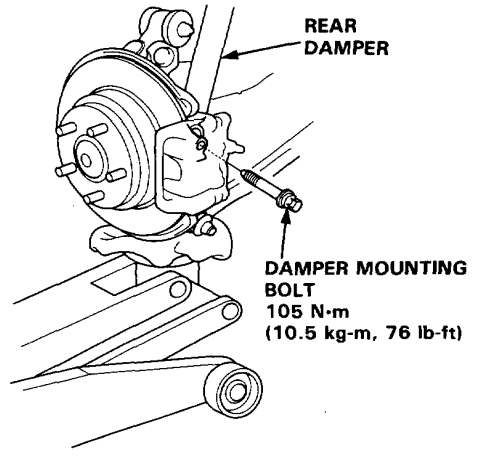

4. Install and tighten the damper mounting nuts.

5. Tighten the damper mounting bolt.

6. Install the damper cap and rear speaker.

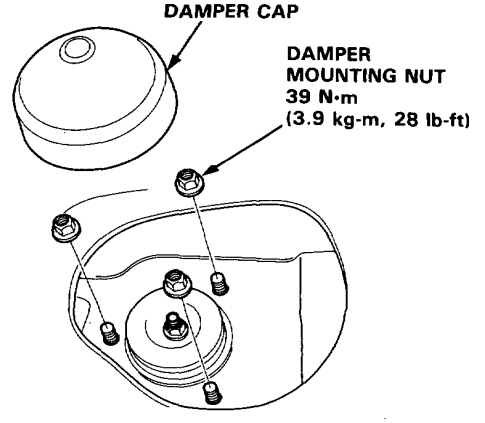

Damper Disposal

⚠WARNING The dampers contain nitrogen gas and oil under pressure.
The pressure must be relieved before disposal to prevent explosion and possible injury when scrapping.

Place the damper on a level surface with its rod extended and drill a hole of 2–3 mm (0.078–0.118 in) diameter in the body to release the gas.

Front Damper

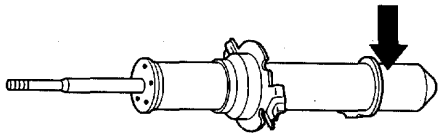

Rear Damper

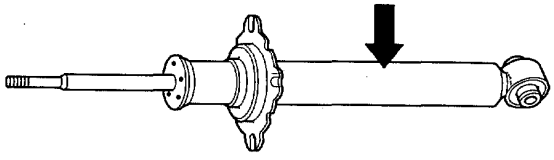

⚠WARNING Always wear eye protection to avoid getting metal shavings in your eyes when the damper pressure is relieved.

Brakes (Anti-lock Brake System)

Special Tools 19-2
Illustrated Index 19-3
Pedal Height
  Adjustment 19-4
Parking Brake
  Inspection/Adjustment 19-4
Front Brakes
  Torque/Inspection 19-6
Front Brake Pads
  Inspection/Replacement 19-8
Front Caliper
  Disassembly 19-10
  Reassembly 19-11
Front Brake Disc
  Run-out Inspection 19-12
  Thickness and Parallelism Inspection 19-12
Bleeding 19-13
Master Cylinder and Brake Booster
  Index/Torque 19-14
Master Cylinder
  Overhaul/Inspeciton 19-15
  Disassembly 19-16
  Reassembly 19-17
Brake Booster
  Tests 19-19
  Pushrod Clearance Adjustment 19-20
Rear Brakes
  Torque/Inspection 19-21
Rear Brake Pads
  Inspection/Replacement 19-22
Parking Drum Brakes
  Index 19-25
  Inspection 19-26
  Disassembly 19-27
  Reassembly 19-28
  Lining Surface Break-in 19-29
Rear Caliper
  Disassembly/Reassembly 19-31
Rear Brake Disc
  Run-Out inspection 19-33
  Thickness and Parallelism Inspection 19-33
Brake Hoses/Pipes
  Inspection 19-34
* Parking Brake Cable
  Disassembly/Assembly 19-35
Anti-lock Brake System
  Features/Construction/Operation 19-37
Circuit Diagram 19-50
Wiring/Connector Location 19-52
ALB Checker
  Function Test 19-53
  Wheel Sensor Signal Confirmation 19-55
Troubleshooting
  Anti-lock Brake System Indicator Light 19-56
  Symptom-to-System Chart 19-58
  Flowcharts 19-59
Hydraulic System
  Index 19-77
  Relieving Accumulator/Line Pressure 19-78
Modulator Unit
  Torque 19-79
  Index/Inspection 19-80
Solenoids
  Leak Test 19-81
Piston
  Removal 19-82
  Installation 19-82
Power/Accumulator/Pressure Switch Unit
  Index/Torque 19-84
  Accumulator Disposal 19-85
Bleeding
  Air Bleeding with ALB Checker 19-86
Electronic Components
  Control Unit Replacement 19-87
  Relays Inspection 19-87
Pulsers/Sensors
  Inspection 19-88
  Replacement 19-89

SUPPLEMENTAL RESTRAINT SYSTEM (SRS)

The Legend includes a driver's side Airbag, located in the steering wheel hub. Information necessary to safely service the SRS is included in this Shop Manual. Items marked * in each section table of contents include, or are located near, SRS components. Servicing, disassembling or replacing these items will require special precautions and tools, and should therefore be done only by an authorized HONDA dealer.

⚠WARNING

- **To avoid rendering the SRS inoperative, which can lead to personal injury or death in the event of a severe frontal collision, all maintenance must be performed by an authorized HONDA dealer.**
- **Improper maintenance, including incorrect removal and installation of the SRS, can lead to personal injury caused by unintentional activation of the Airbag.**
- **All SRS electrical wiring harnesses are covered with yellow outer insulation. Related components are located in the steering column, center armrest and dashboard lower panel. Do not use electrical test equipment on these circuits.**

Special Tools

Ref. No.	Tool Number	Description	Q'ty	Page Reference
①	07HAA—SG00100 or 07HAA—SG00101	Bleeder T-Wrench	1	19-59, 64, 65, 66, 78, 86
②	07HAJ—SG00601 or	ALB Checker	1	19-53, 55, 68 86
	07508—SB00000	ALB Checker	1	19-53, 55, 68 86
	07HAJ—SG00400	Adaptor	1	19-53, 55, 68 86
③	07JAG—SD40100	Pushrod Adjustment Gauge	1	19-20
④	07MAK—SP00100	Brake Shoe Equipment	1	19-4
⑤	07410—5790100	Pressure Gauge Attachment	1	19-19
⑥	07510—6340101	Pressure Gauge Joint Pipe	1	19-19
⑦	07HAK—SG00110	Pressure Gauge Joint Pipe	1	19-19
⑧	07510—6340300	Vacuum Joint Tube A	1	19-19
⑨	07404—5790300	Vacuum Gauge	1	19-19
⑩	07410—5790500	Tube Joint Adaptor	1	19-19
⑪	07406—5790200	Pressure Gauges	2	19-19

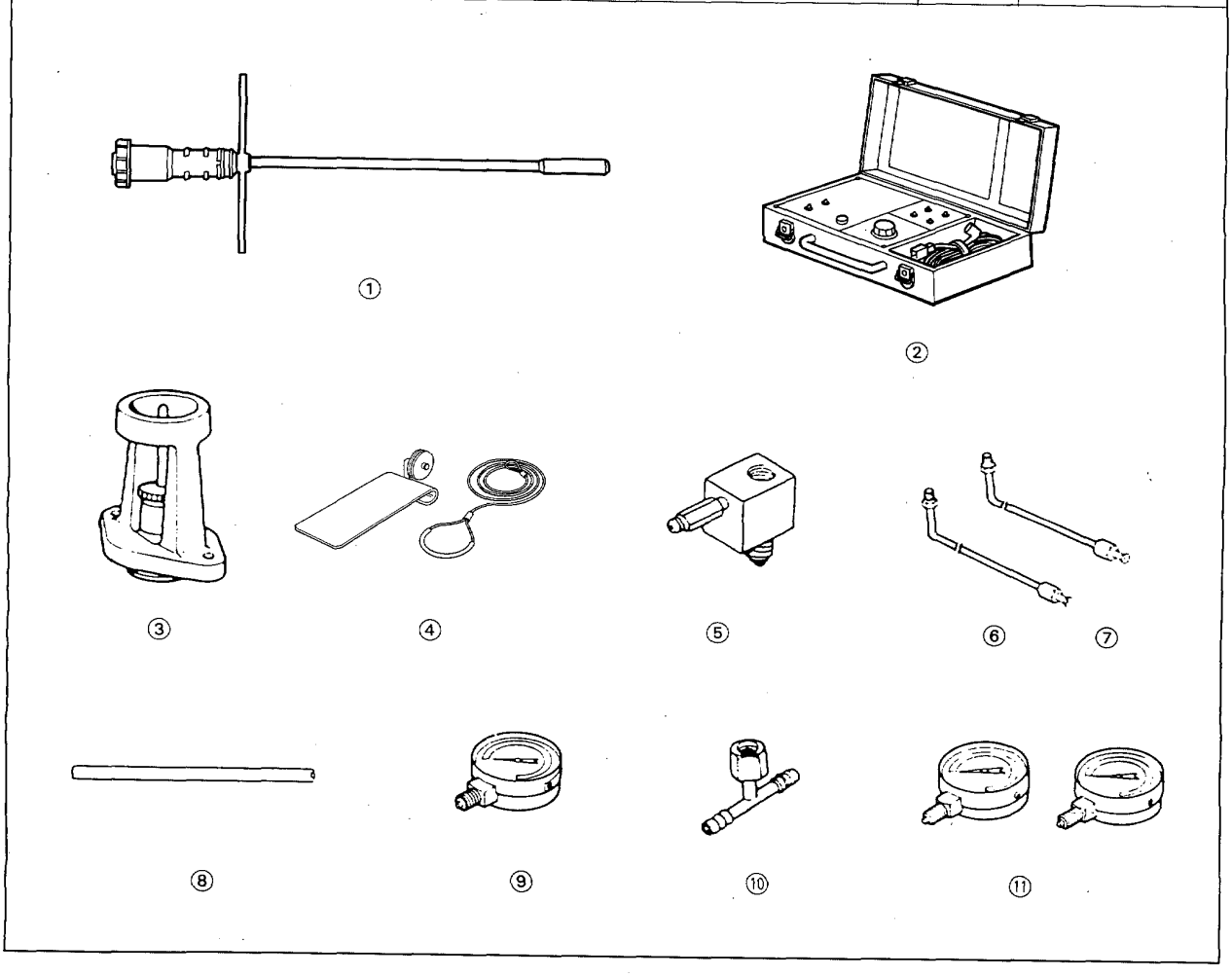

⚠ WARNING ***The accumulator contains high-pressure nitrogen gas, do not puncture, expose to flame or attempt to disassemble the accumulator or it may explode; severe personal injury may result.***

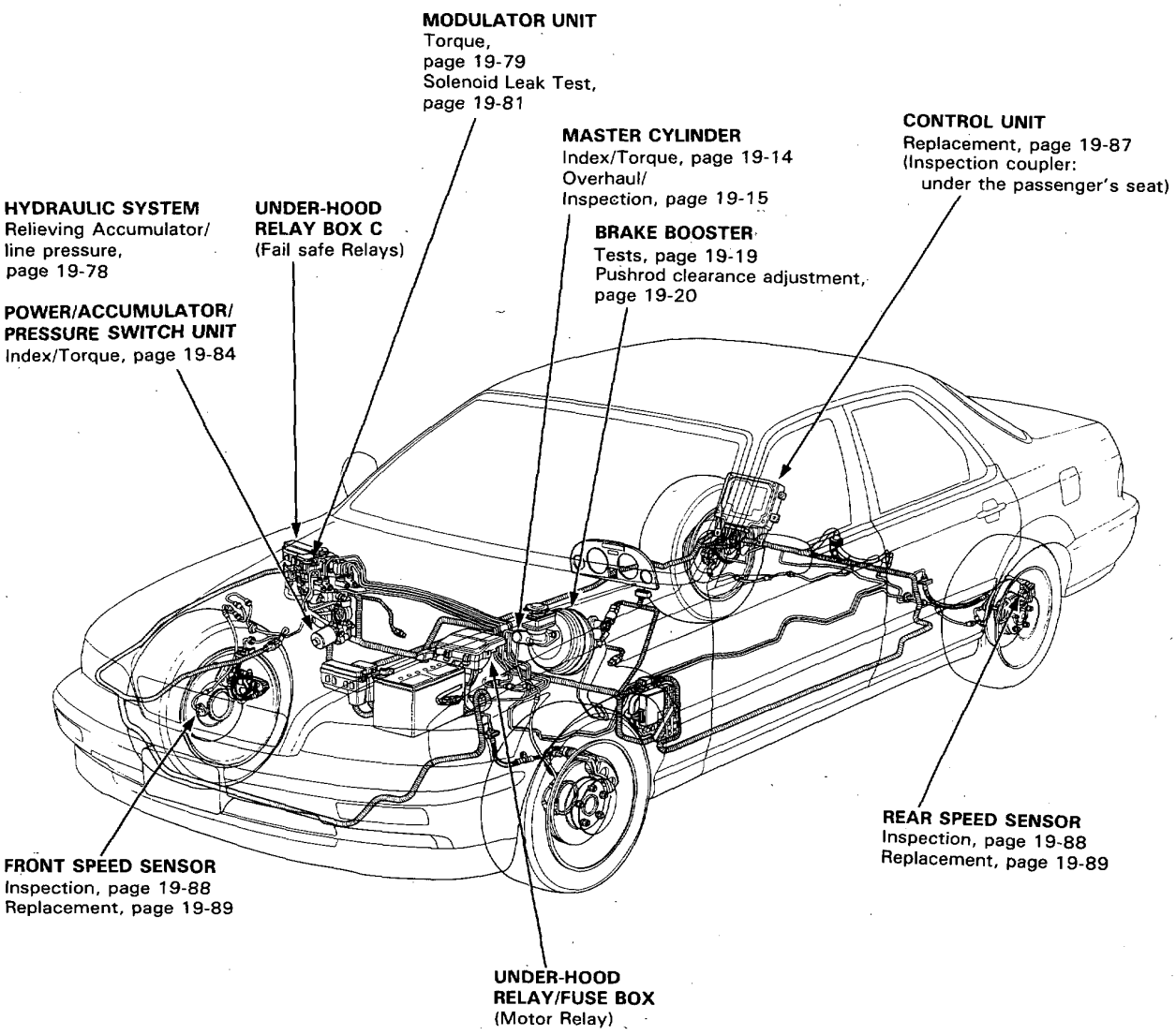

Pedal Height

Adjustment

1. Loosen the brake light switch locknut and back off the brake light switch until it is no longer touching the brake pedal.

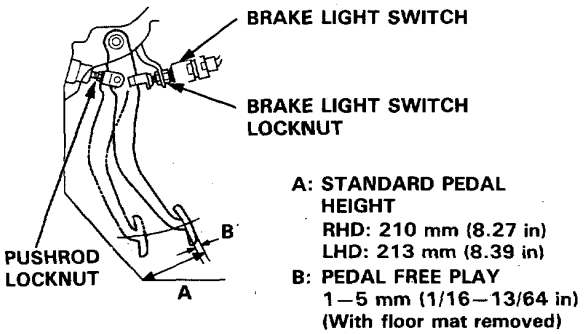

2. Loosen the pushrod locknut and screw the pushrod in or out with pliers until the standard pedal height from the floor. After adjustment, tighten the locknut firmly.

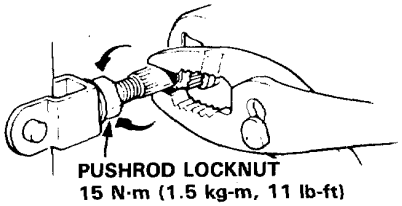

3. Screw in the brake light switch until its plunger is fully depressed (threaded end touching the pad on the pedal arm). Then back off the switch 1/2 turn and tighten the locknut firmly.
CAUTION: Check that the brake lights go off when the pedal is released.

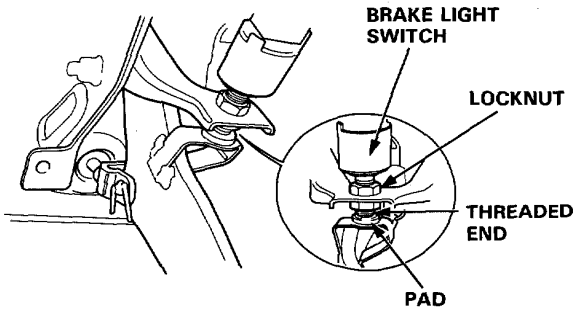

Brake Pedal Play Inspection:
Stop the engine and inspect the play by pushing the pedal by hand.
Brake Pedal Play: 1–5 mm (1/16–13/64 in)

NOTE: Do not adjust the pedal height with the pushrod depressed.

CAUTION: If the pedal free play is out of specification, brake drag may occur.

Parking Brake

Inspection/Adjustment

1. The rear drum brakes should be applied when the parking brake lever (pedal) is pulled up (pushed down) with 20 (30) kg, 8 (6) to 12 (8) clicks.

LEVER TYPE

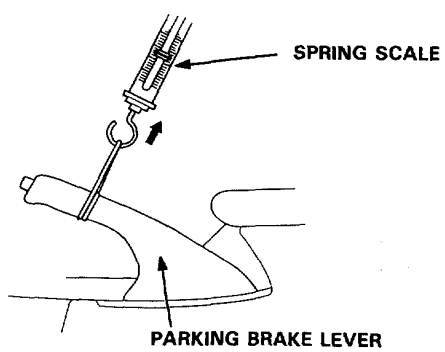

(PEDAL TYPE)

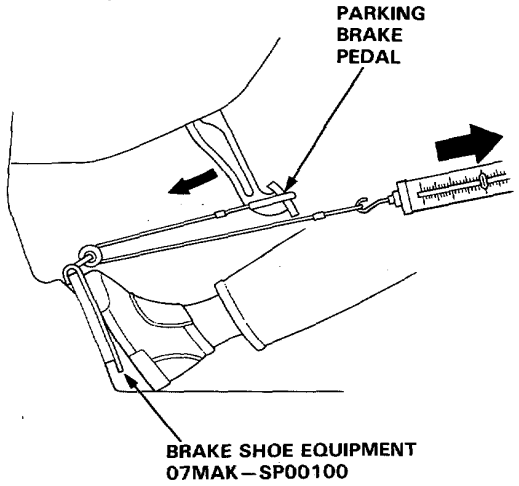

2. If the number of lever (pedal) clicks is excessive, inspect the lining wear (page 19-26). If the parking brake linings are not worn beyond the service limit, minor adjustments (1–2 clicks) can be made with the adjusting nut in the equalizer. For major adjustment, see the next page.

- **Minor adjustment:**

3. Remove the end cover.

4. Pull parking lever up one click or Push the parking pedal down one click.

   ⚠WARNING Block the front wheels before jacking up the rear of the car.

5. Raise the rear wheels off the ground.

6. Tighten the adjusting nut until the rear wheels drag slightly when turned.

7. Release the parking lever (pedal) and check that the rear wheels do not drag when turned. Readjust if necessary.

8. With the equalizer properly adjusted, the rear brakes should be fully applied when the parking brake lever (pedal) is pulled up (pushed down) 8 (6) to 12 (8) clicks.

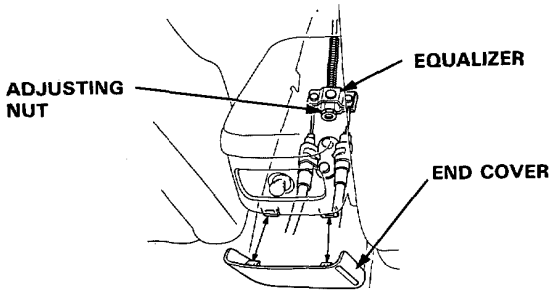

- **Major adjustment:**

Adjust the parking brake shoe lining-to-drum clearance with the adjuster in the drums on both rear wheels.

NOTE:
Make sure the parking brake linings are not worn beyond the recommended limit (page 19-22). If either lining is worn beyond the limit, both brake shoes must be replaced.

CAUTION: After replacing the linings, be sure to drive the car for "break-in" purposes. Refer to page 19-25 for the lining surface adjustment.

9. Remove the rear wheels.

   NOTE: When making a major adjustment, release the parking brake lever and back off the adjusting nut in the equalizer.

10. Turn the brake shoe adjuster up with a screwdriver until the shoes lock, then back off 8 stops.

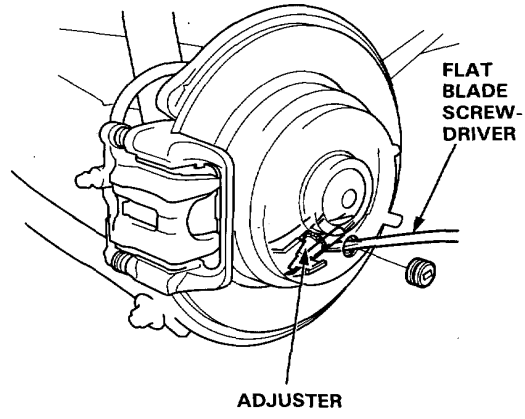

11. Adjust the adjusting nut in the equalizer. Refer to step 1 on page 19-4.

12. Install the console rear cover.

13. Install the rear wheels.

14. Lower the car.

Front Brakes

Torque/Inspection

⚠WARNING

- **Never use an air hose or dry brush to clean brake assemblies.**
- **To avoid breathing brake dust, use an vacuum cleaner.**
- **Contaminated brake discs or pads reduce stopping ability.**

NOTE:

- Coat piston, piston seal, and caliper bore with clean brake fluid.
- Replace all rubber parts with new ones whenever disassembled.
- **This symbol represents brake fluid. Use only DOT 3 or 4 brake fluid.**
- **Use only HONDA Brake Cylinder Grease (P/N 08733–B020E) or equivalent.**

CAUTION:

- **Do not spill brake fluid on the car; it may damage the paint; if brake fluid does contact the paint, wash it off immediately with water.**
- **To prevent spills, cover the hose joints with rags or shop towels.**
- **Clean all parts in brake fluid and air dry; blow out all passages with compressed air.**
- **Before reassembling, check that all parts are free of dust and other foreign particles.**
- **Replace parts with new ones whenever specified to do so.**
- **Make sure no dirt or other foreign matter is allowed to contaminate the brake fluid.**
- **Do not mix different brands of brake fluid as they may not be compaptible.**
- **Do not reuse the drained fluid. Use only clean DOT 3 or 4 brake fluid.**

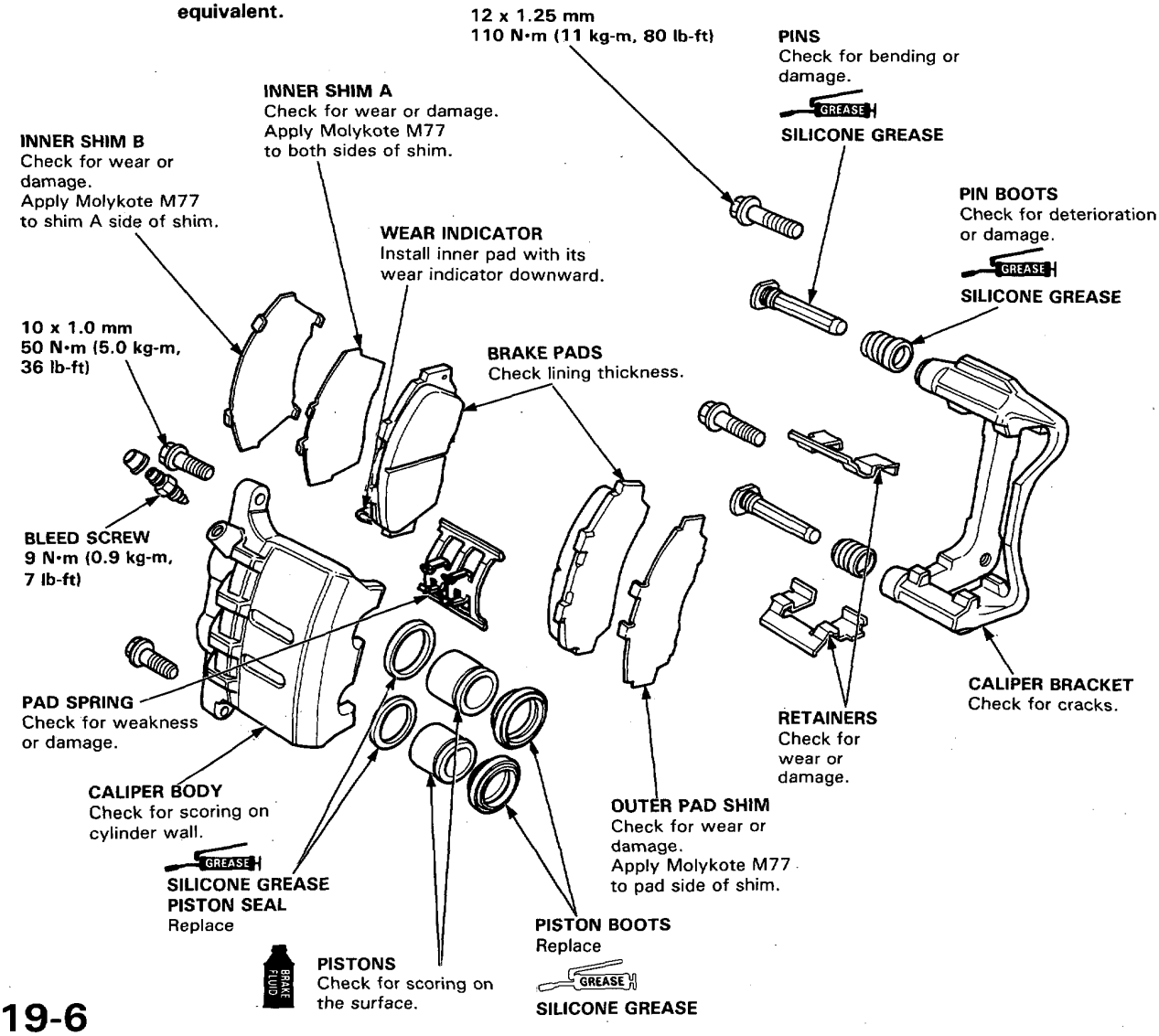

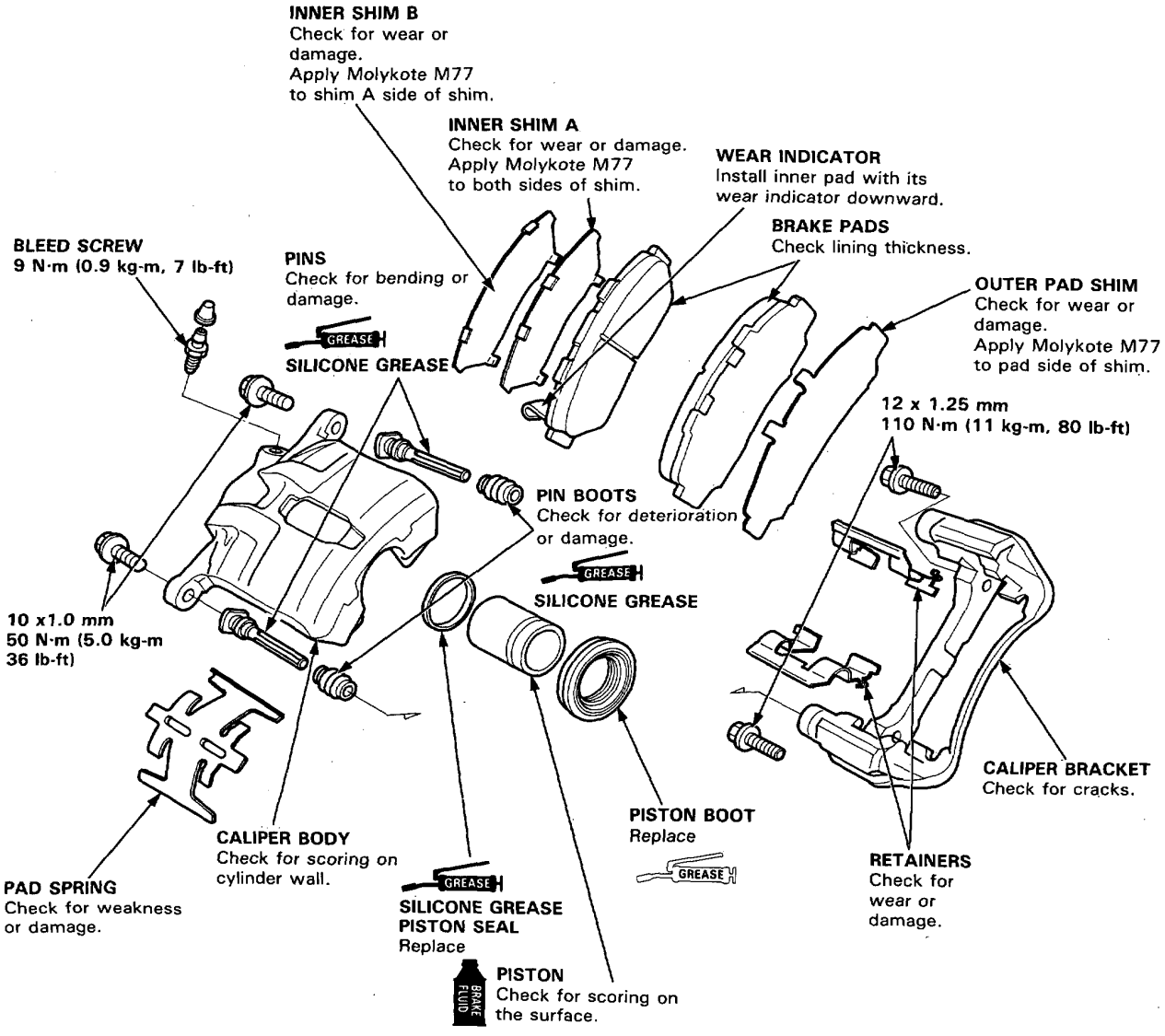
INNER SHIM B
Check for wear or damage.
Apply Molykote M77 to shim A side of shim.
INNER SHIM A
Check for wear or damage.
Apply Molykote M77 to both sides of shim.
WEAR INDICATOR
Install inner pad with its wear indicator downward.
BRAKE PADS
Check lining thickness.
BLEED SCREW
9 N·m (0.9 kg-m, 7 lb-ft)
PINS
Check for bending or damage.
GREASE
SILICONE GREASE
OUTER PAD SHIM
Check for wear or damage.
Apply Molykote M77 to pad side of shim.
12 x 1.25 mm
110 N·m (11 kg-m, 80 lb-ft)
PIN BOOTS
Check for deterioration or damage.
GREASE
SILICONE GREASE
10 x1.0 mm
50 N·m (5.0 kg-m
36 lb-ft)
CALIPER BRACKET
Check for cracks.
PISTON BOOT
Replace
GREASE
CALIPER BODY
Check for scoring on cylinder wall.
RETAINERS
Check for wear or damage.
PAD SPRING
Check for weakness or damage.
GREASE
SILICONE GREASE
PISTON SEAL
Replace
BRAKE FLUID
PISTON
Check for scoring on the surface.

Front Brake Pads

Inspection/Replacement

⚠WARNING

- **Never use an air hose or dry brush to clean brake assemblies.**
- **To avoid breathing brake dust, use an vacuum cleaner.**

1. Loosen the front wheel lug nuts slightly, then support the front of the car on safety stands. Remove the front wheels.

2. Remove the caliper bolts and move the caliper out of the way.

   CAUTION: Support the caliper with a piece of wire so that it does not hang from the brake hose.

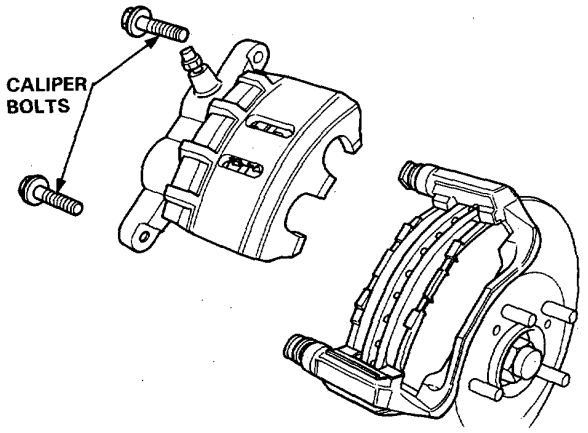

3. If lining thickness is less than service limit, replace both pads as a set.

   NOTE: Engagement of the brake may require a greater pedal stroke immediately after the brake pads have been replaced as a set. Several applications of the brake pedal will restore the normal pedal stroke.

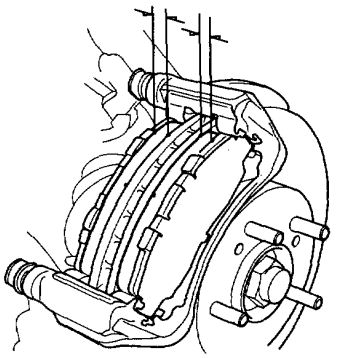

4. Remove the shims, pads and retainers.

5. Using a vernier caliper, measure the thickness of each brake pad lining.

   Brake Pad Thickness:
   Standard: 11 mm (0.43 in)
   Service Limit: 1.6 mm (0.06 in)

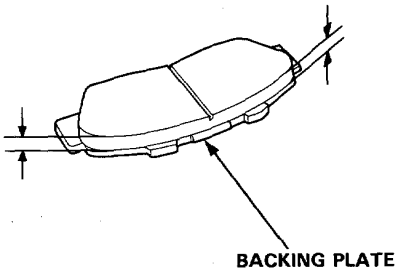

   NOTE: Measurement does not include pad backing plate thickness.

6. Remove the bracket and bracket bolts.

7. Clean the caliper and bracket thoroughly; remove any rust, and check for grooves or cracks.

8. Install the bracket and bracket bolts. Tighten the bracket bolts.

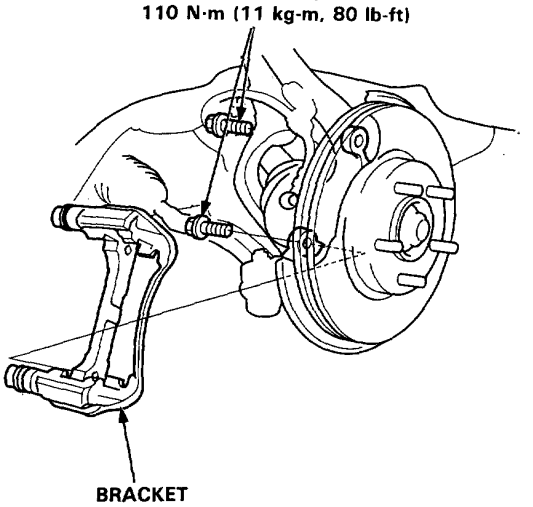

9. Install the pad retainers.

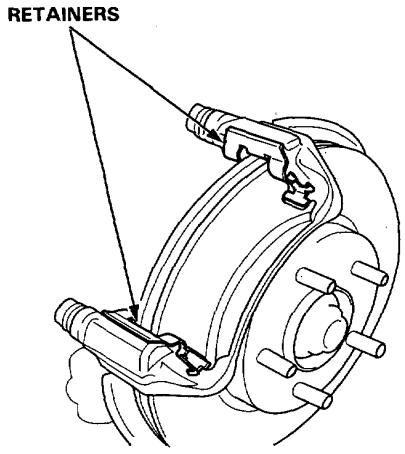

10. Apply Molykote M77 to the shims and the pads as shown on page 19-6 or 7. Wipe excess grease off the shims.

11. Install the shims to the back of the pads.

12. Install the pads in the bracket.

NOTE:
- Install the inner pad with its wear indicator facing downward.

⚠WARNING When reusing the pads, always reinstall the brake pads in the original positions to prevent loss of braking efficiency.

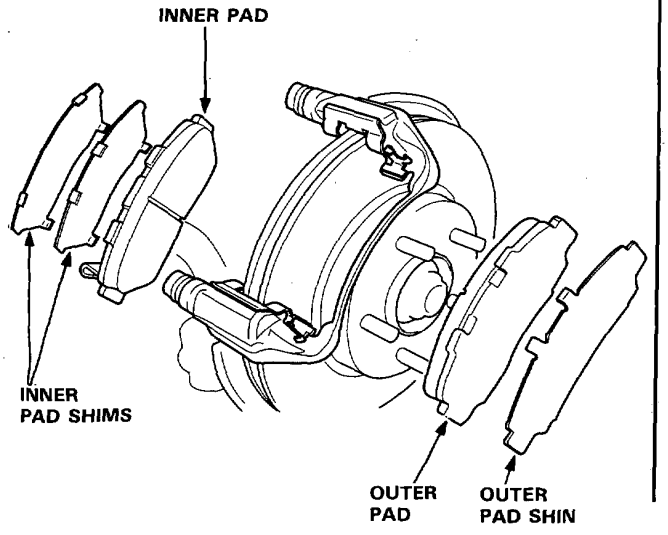

13. Push in the piston so that the caliper will fit over the pads.

14. Set the caliper down into position, then install the caliper bolts.
Tighten the bolts to the specified torque.

[Dual pot caliper type]

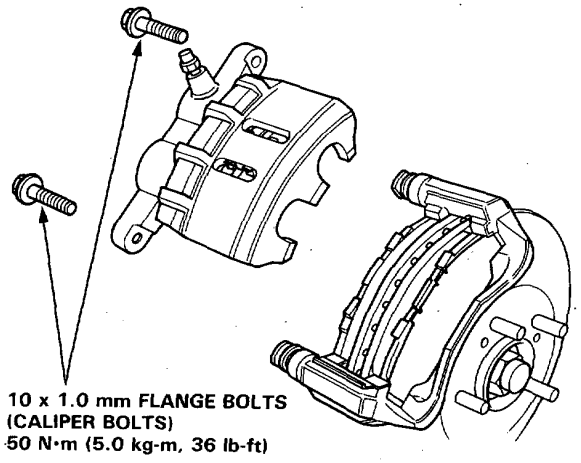

[Single pot caliper type]

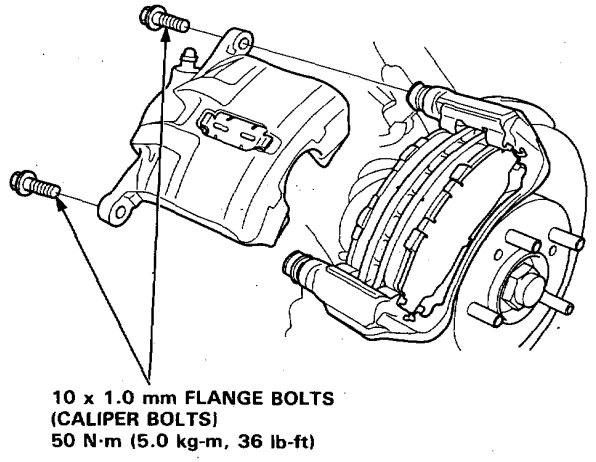

15. Depress the brake pedal several times to make sure the brakes work, then road-test.

NOTE: Clean the mating surface of the wheel and hub before installing the wheel.

⚠WARNING Contaminated brake discs or pads reduce stopping ability. Keep grease off the discs or pads.

Front Caliper

Disassembly

CAUTION:

- **Before reassembling, check that all parts are free of dust and other foreign particles.**
- **Replace parts with new ones whenever specified to do so.**
- **Use only clean DOT 3 or 4 brake fluid.**
- **Make sure no dirt or other foreign matter is allowed to contaminate the brake fluid.**
- **Do not mix different brands of brake fluid as they may not be compatible.**
- **Do not spill brake fluid on the car, it may damage the paint; if brake fluid does contact the paint, wash it off immediately with water.**

1. Remove the banjo bolt and disconnect the brake hose from the caliper.

2. Remove the caliper bolts, then remove the caliper.

[Dual pot caliper type]

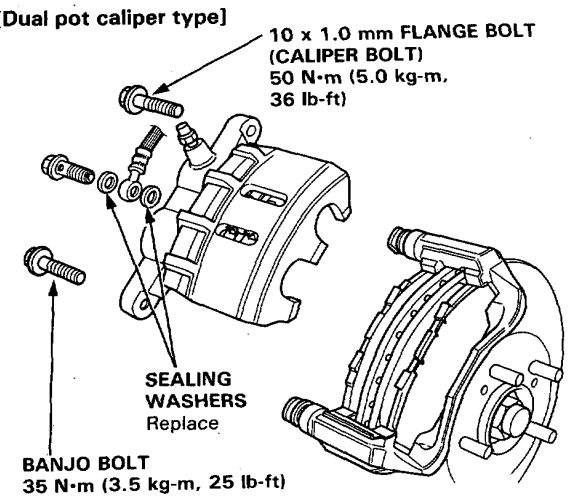

[Single pot caliper type]

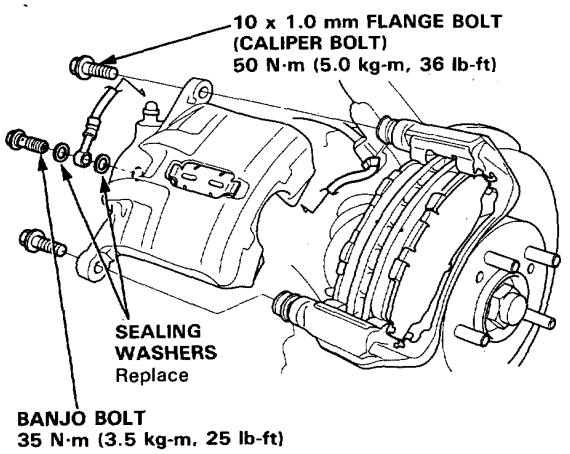

3. Remove the pad spring from the caliper body.

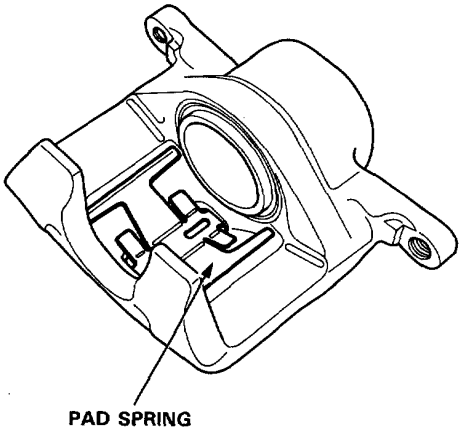

4. Remove the piston(s) from the caliper. If necessary, apply compressed air to the caliper fluid inlet to get the piston(s) out. Place a shop rag or wooden block as shown to cushion the piston(s) when it is expelled.

   Use low pressure air in short spurts.

   ⚠WARNING

   - **Do not place your fingers in front of the piston(s).**
   - **Do not use high air pressure.**

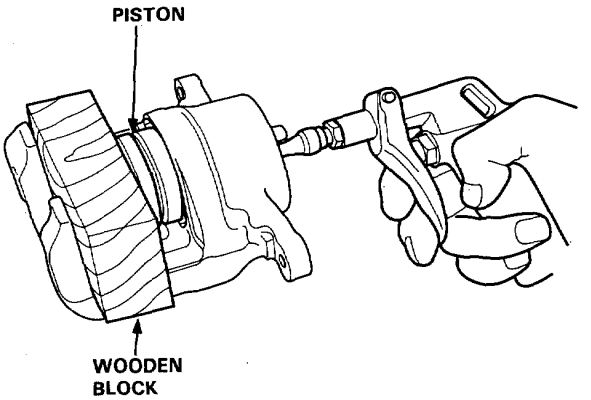

5. Remove the piston boot(s) and piston seal(s).

CAUTION: Take care not damage the cylinder(s).

[Dual pot caliper type]

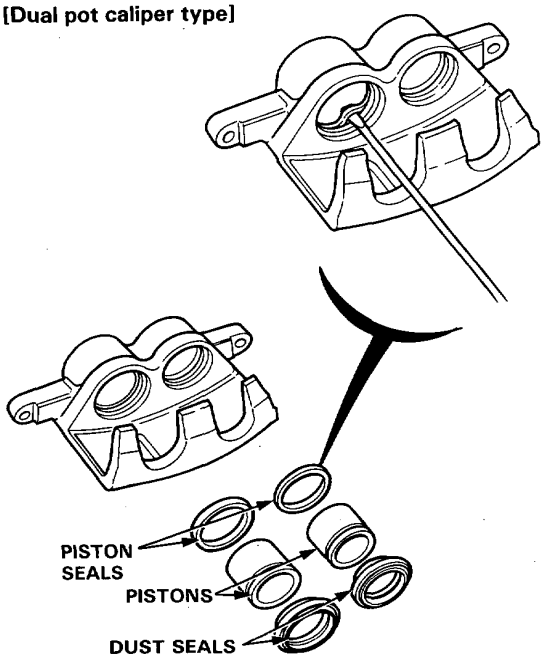

[Single pot caliper type]

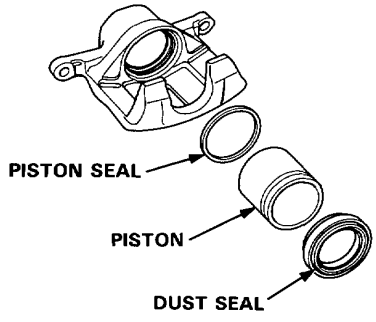

Reassembly

CAUTION:

- **Before reassembling, check that all parts are free of dust and other foreign particles.**
- **Replace parts with new ones whenever specified to do so.**
- **Use only clean DOT3 or 4 brake fluid.**
- **Make sure no dirt or other foreign matter is allowed to contaminate the brake fluid.**
- **Do not mix different brands of brake fluid as they may not be compatible.**
- **Do not spill brake fluid on the car; it may damage the paint, if brake fluid does contact the paint; wash it off immediately with water.**

1. Clean the piston and caliper bore with brake fluid and inspect for wear or damage.

2. Apply silicone grease to new piston seal, then install the piston seal in the cylinder groove.

3. Apply rubber grease to new piston boot, then install the piston boot in the cylinder groove.

[Dual pot caliper type]

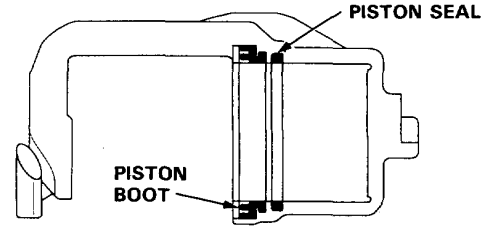

[Single pot caliper type]

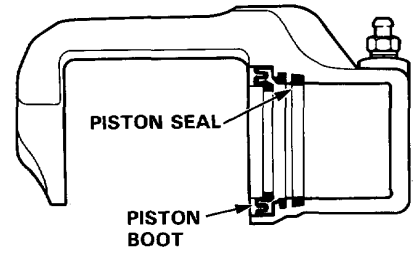

4. Lubricate the caliper cylinder and piston with brake fluid, then install the piston in the cylinder with the dished end facing in.

5. Reinstall the caliper in the reverse order of removal.

⚠WARNING When reusing the pads, always reinstall the brake pads in their original positions to prevent loss of braking efficiency.

6. Fill the brake reservoir up and bleed the brake system (page 19-12).

Front Brake Disc

Run-Out Inspection

1. Support the front of the car on safety stands and remove the front wheels.

2. Remove the front brake disc pads (page 19-8).

3. Inspect the disc surface for grooves, cracks, and rust.
   Clean the disc thoroughly and remove all rust.

4. Use suitable nuts (12 x 1.5 mm) and plain washers to hold the disc securely against the hub. Torque nuts to 11 kg-m (80 lb-ft). Mount a dial indicator as shown.

   Brake Disc Runout:
   Single pot caliper type
   Service Limit: 0.10 mm (0.004 in)
   Max. Refinishing Limit: 21 mm (0.83 in)

   Dual pot caliper type
   Service Limit: 0.10 mm (0.004 in)
   Max. Refinishing Limit: 26 mm (1.024 in)

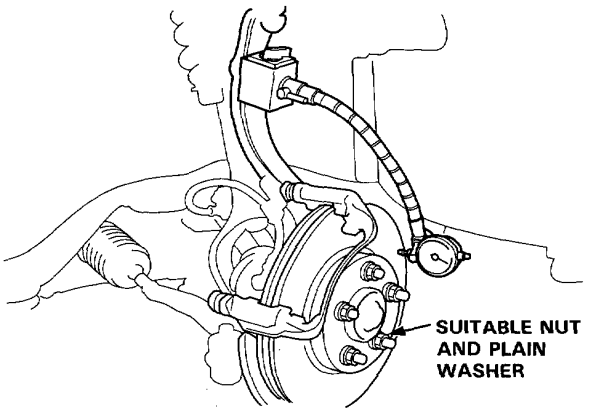

5. If the disc is beyond the service limit, refinish the disc with an on-car brake lathe. Be sure to install washers and nuts to hold disc securely to hub. Torque to 11 kg-m (80 lb-ft). The Kwit-Lathe produced by Kwik-Way Manufacturing Co. and the Front Wheel Drive Disc Brake Lathe offered by Snap-on Tools Co. are approved for this operation.

   NOTE: A new disc should be refinished if its runout is greater than 0.10 mm (0.004 in).

Thickness and Parallelism Inspection

1. Support the front of the car on safety stands and remove the front wheels.

2. Remove the front brake disc pads. (page 19-8).

3. Using a micrometer, measure disc thickness at eight points, approximately 45° apart and 10 mm (0.39 in) in from the outer edge of the disc.

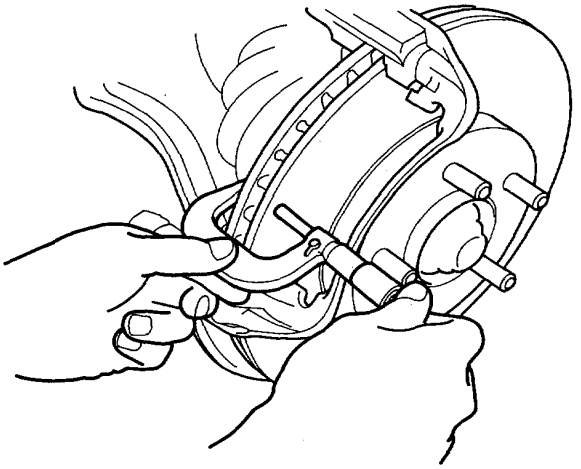

   Brake disc thickness:

   Single pot caliper type
   Standard: 23 mm (0.91 in)
   Max. Refinishing Limit: 21 mm (0.83 in)

   Dual pot caliper type
   Standard: 28 mm (1.10 in)
   Max. Refinishing Limit: 26 mm (1.02 in)

   Brake Disc Parallelism:
   The difference between any thickness measurements should not be more than 0.015 mm (0.0006 in).

4. If the disc is beyond the limits for parallelism, refinish the disc with an on-car brake lathe. Be sure to install washers and nuts to hold disc securely to hub. Torque to 11 kg-m (80 lb-ft). The Kwit-Lathe produced by Kwik-Way Manufacturing Co. and the Front Wheel Drive Disc Brake Lathe offered by Snap-on Tools Co. are approved for this operation.

Bleeding

CAUTION:
- **Use only clean DOT3 or 4 brake fluid.**
- **Make sure no dirt or other foreign matter is allowed to contaminate the brake fluid.**
- **Do not mix different brands of brake fluid as they may not be compatible.**
- **Do not spill brake fluid on the car, it may damage the paint; if brake fluid does contact the paint, wash it off immediately with water.**

NOTE: The reservoir on the master cylinder must be full at the start of bleeding procedure, and checked after bleeding each brake caliper. Add fluid as required. Use only clean DOT3 or 4 brake fluid.

BLEEDING SEQUENCE

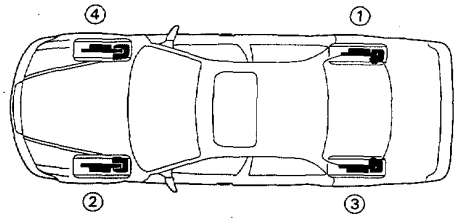

1. Have someone slowly pump the brake pedal several times, then apply steady pressure.
2. Loosen the brake bleed screw to allow air to escape from the system. Then tighten the bleed screw securely.
3. Repeat the procedure for each wheel in the sequence shown above until air bubbles no longer appear in the fluid.

FRONT

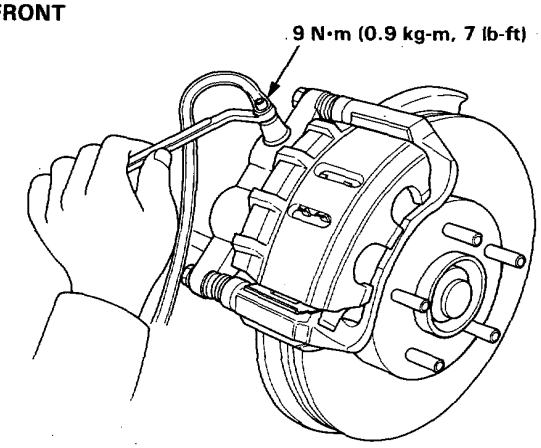

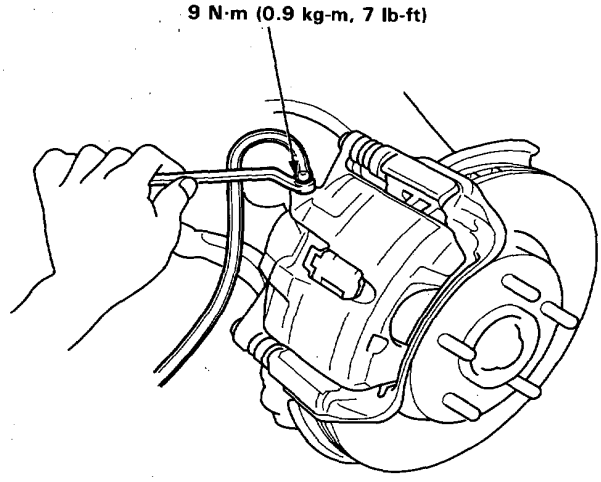

REAR

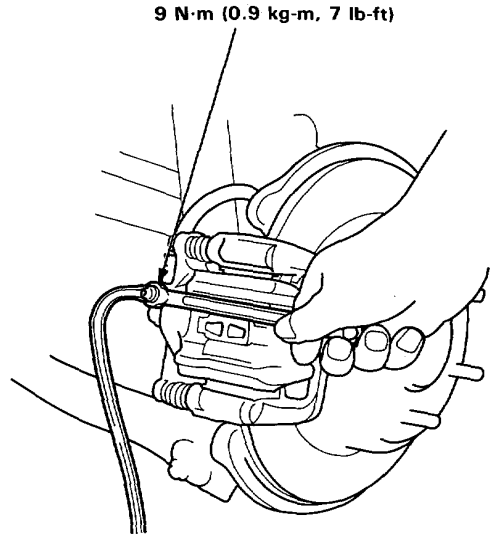

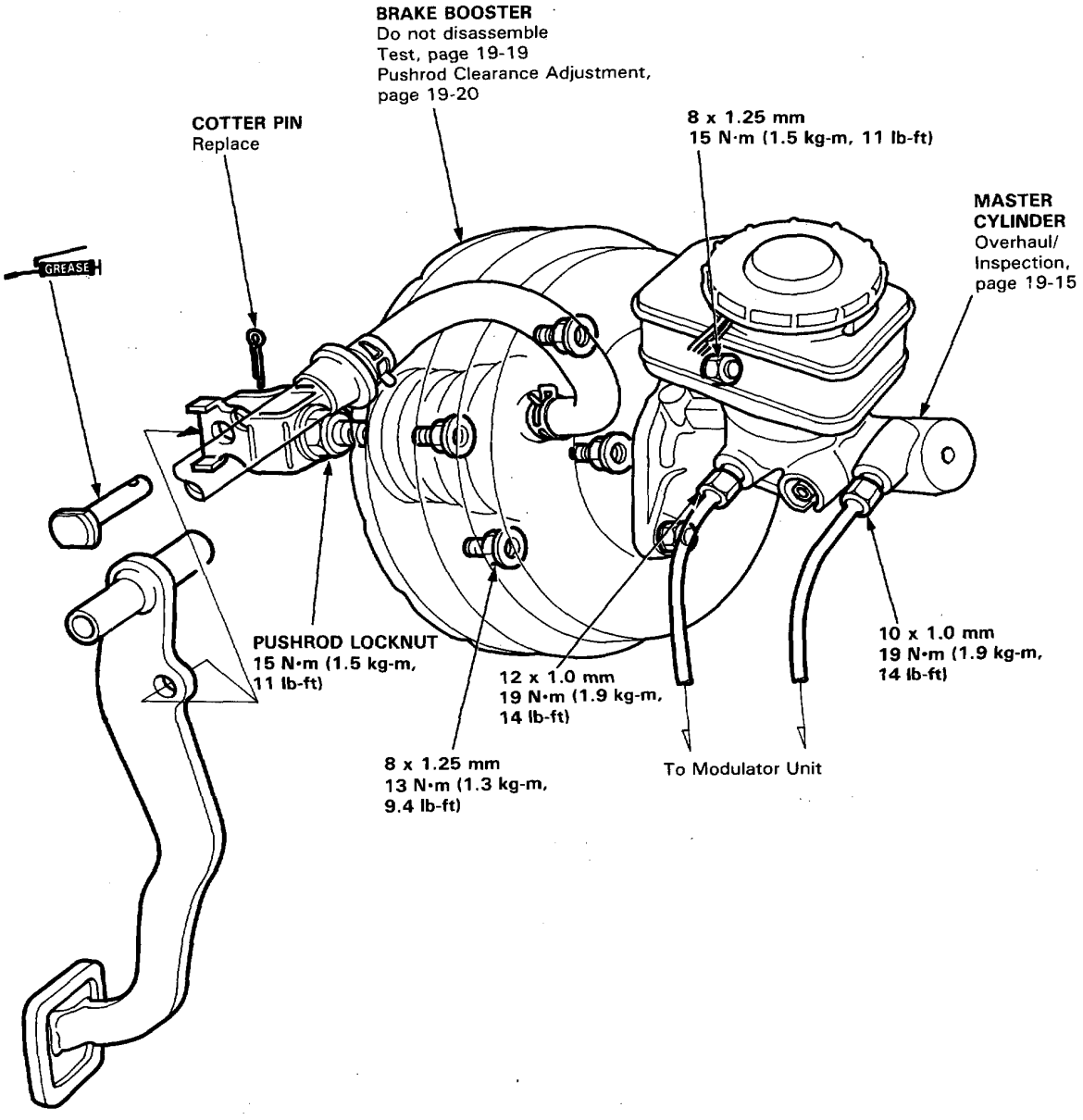
BRAKE BOOSTER
Do not disassemble
Test, page 19-19
Pushrod Clearance Adjustment, page 19-20
COTTER PIN
Replace
8 x 1.25 mm
15 N·m (1.5 kg-m, 11 lb-ft)
MASTER CYLINDER
Overhaul/ Inspection, page 19-15
GREASE
PUSHROD LOCKNUT
15 N·m (1.5 kg-m, 11 lb-ft)
12 x 1.0 mm
19 N·m (1.9 kg-m, 14 lb-ft)
10 x 1.0 mm
19 N·m (1.9 kg-m, 14 lb-ft)
8 x 1.25 mm
13 N·m (1.3 kg-m, 9.4 lb-ft)
To Modulator Unit

Master Cylinder

Overhaul/Inspection

CAUTION:

- **Avoid spilling brake fluid on painted surfaces as severe damage can result. Wipe up spilled fluid at once and rinse well with clean water.**
- **This symbol represents brake fluid. Use only DOT 3 or 4 brake fluid.**
- **Use only HONDA Brake Cylinder Grease (P/N 08733—B020E) or equivalent.**
- **Carefully inspect the bore of the master cylinder for pits, scratches or scoring.**
- **Replace the master cylinder if the bore is damaged or worn. Do not hone or attempt to refinish the bore.**

NOTE:

- Wash all removed parts in brake fluid and blow dry with compressed air. Blow open all passages and fluid ports.
- Replace all rubber parts with new ones whenever the cylinder is disassembled.
- To prevent damage, liberally apply clean brake fluid to the piston cups before installation.
- Do not attempt to refinish master cylinder bore. Replace if pitted or worn.

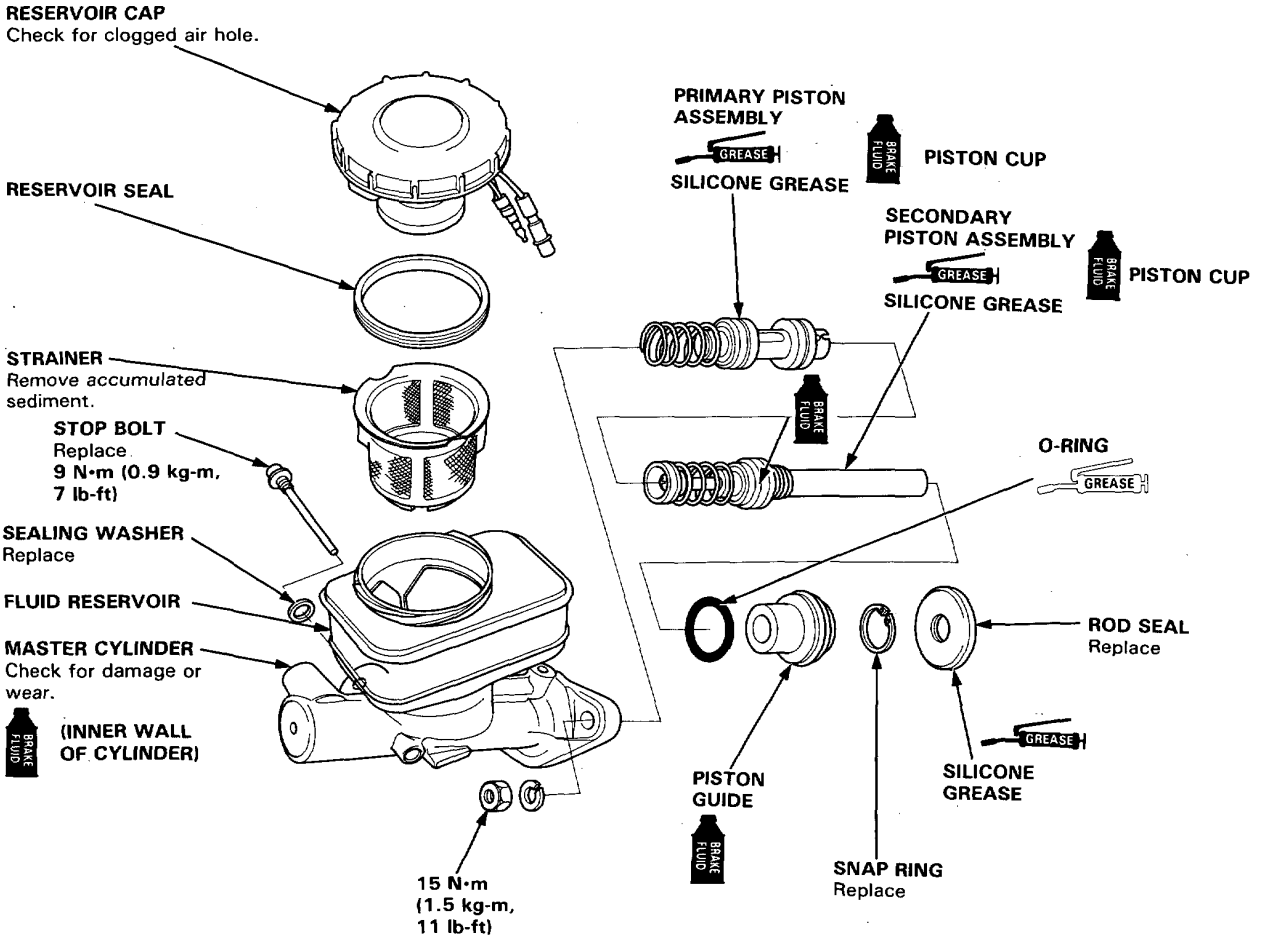

Master Cylinder

Disassembly

CAUTION:
- **Avoid spilling fluid on painted, plastic or rubber parts as it may damage the finish.**
- **Plug the end of the brake hose with a shop rag to prevent brake fluid from flowing out of the brake hose after disconnecting.**
- **Use only new clean DOT 3 or DOT 4 brake fluid.**
- **Clean all parts thoroughly with brake fluid. Blow out all passages with compressed air.**
- **Do not allow foreign matter to enter the system.**
- **Be careful not to bend or damage the brake pipe when removing the master cylinder.**

1. Remove the rod seal.

2. Push the secondary piston assembly, then remove the snap ring.

   CAUTION: Avoid damaging the master cylinder wall.

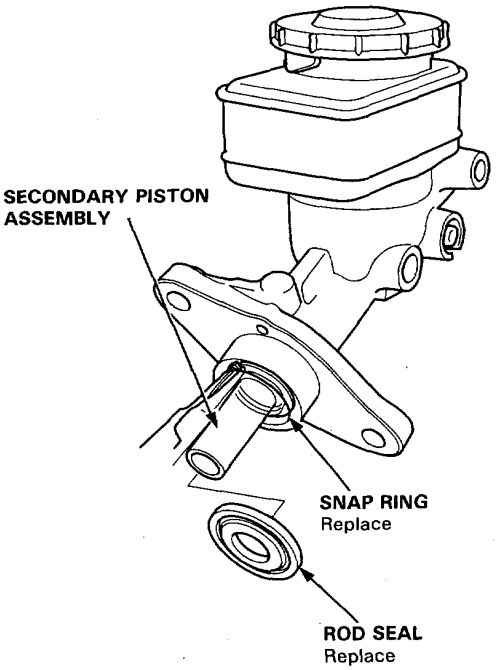

3. Remove the stop bolt while pushing in the secondary piston assembly.

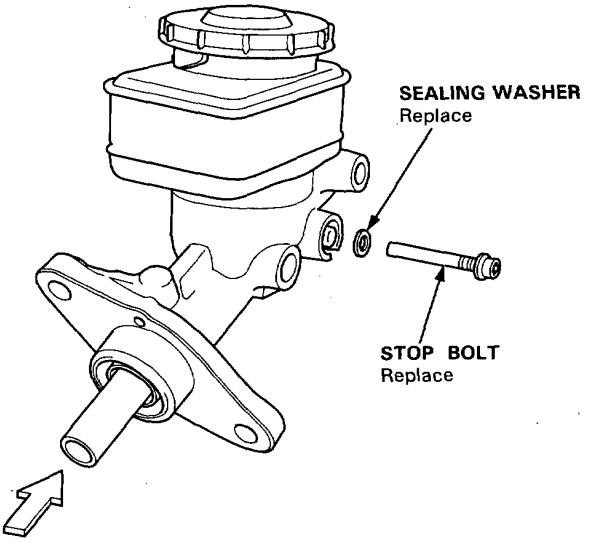

4. Remove the piston guide, secondary piston assembly and primary piston assembly.

   NOTE: If the primary piston assembly is difficult to remove, apply compressed air from the primary piston side outlet.

   CAUTION:
   - **Do not use high pressure air or bring the nozzle too close to the inlet.**
   - **Place a shop rag over the master cylinder to prevent the primary piston from becoming a projectile.**

Reassembly

CAUTION:

- **Do not spill brake fluid on the car; it may damage the paint; if brake fluid does contact the paint, wash it off immediately with water.**
- **To prevent spills, cover the hose joints with rags or shop towels.**
- **Clean all parts in brake fluid and air dry; blow out all passages with compressed air.**
- **Use only new clean DOT3 or DOT4 brake fluid.**
- **Before reaseembling, check that all parts are free of dust and other foreign particles.**
- **Replace parts with new ones whenever specified to do so.**
- **Make sure no dirt or other foreign matter is allowed to contaminate the brake fluid.**
- **Do not mix differnt brands of brake fluid as they may not be compatible.**
- **Do not reuse the draned fluid.**

1. Lubricate the new piston parts with brake fluid.

2. Install the new O-ring and secondary cup onto the piston guide.

PISTON GUIDE ASSEMBLY

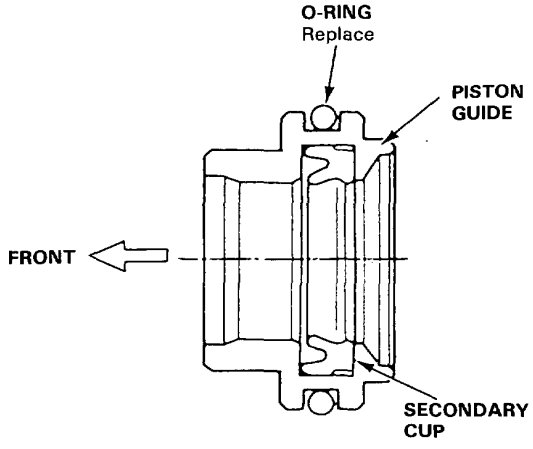

NOTE: Replace the secondary cup and piston guide as a set if necessary.

3. *Make sure that the primary piston assembly and secondary piston assembly are in good condition.*

PRIMARY PISTON ASSEMBLY

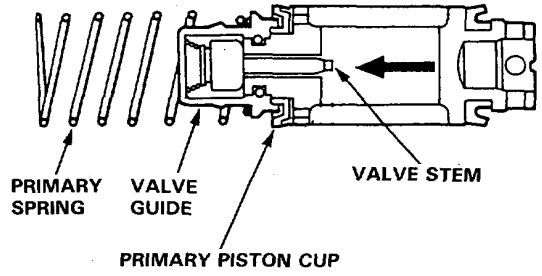

NOTE:

- Reaching through the primary piston stop bolt hole, lightly press on the valve stem to see if it moves smoothly.

SECONDARY PISTON ASSEMBLY

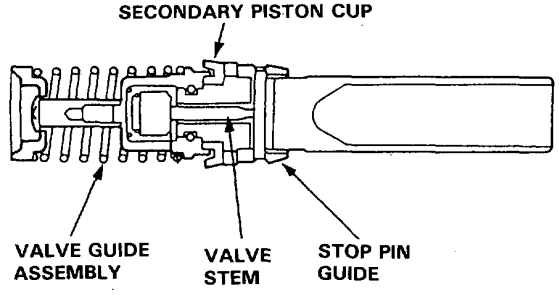

NOTE:

- Lightly press the stop pin guide to see if the valve stem moves smoothly.

(cont'd)

Reassembly (cont'd)

4. Assemble the primary piston assembly, secondary piston assembly and piston guide assembly in the master cylinder body.

   NOTE: Install the primary piston with the slot on the cylinder facing the stop bolt hole side.

5. Push the secondary piston in until slot aligns with the stop bolt hole, then install and tighten the stop bolt.

   CAUTION:
   - **Replace the stop bolt seal with a new one whenever disassembled.**
   - **Apply brake fluid to the inner wall of the cylinder and piston cups, being careful that they are not turned inside out during installation.**

6. Press the secondary piston in and install the snap ring.

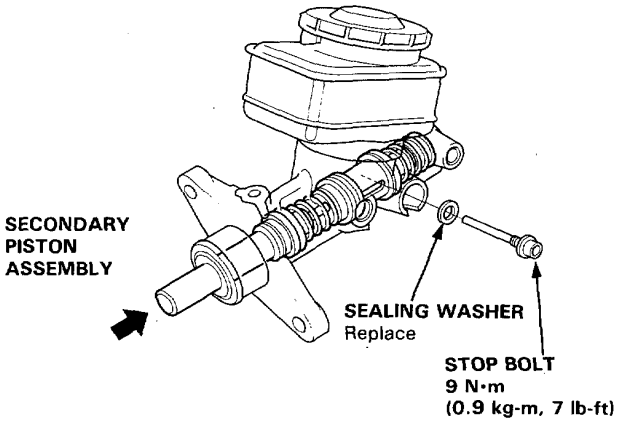

CAUTION: Avoid damaging the sliding surface of the secondary piston when installing the snap ring.

7. Install the rod seal.

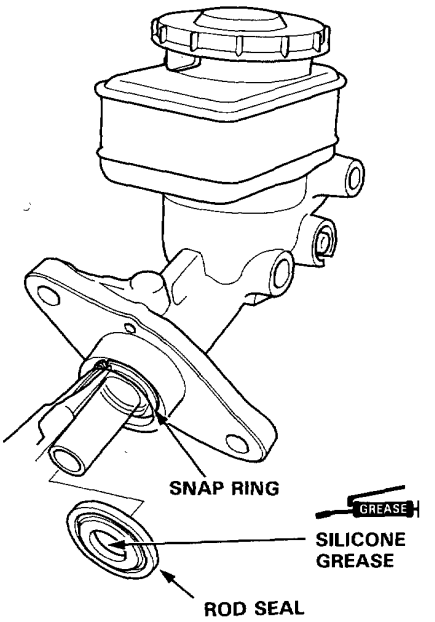

CAUTION:
- **Make sure that there is no interference between the brake pipes and other parts when installing.**
- **Adjust the pushrod length and clearance (page 19-20).**

Brake Booster

Tests

Leak Test

1. Install the Brake Power Kit (07504–6340100) as shown.

2. Start the engine, adjust the engine speed with the accelerator pedal so that the vacuum gauge readings show 300–500 mmHg (11.8–19.7 in-Hg), then stop the engine.

3. Read the vacuum gauge.

   If the vacuum readings decreases 20 mmHg (0.8 inHg) or more after 30 seconds, check following parts for leaks.
   - Check valve
   - Vacuum hose
   - Seals
   - Diaphragm
   - Master cylinder O-ring and cup

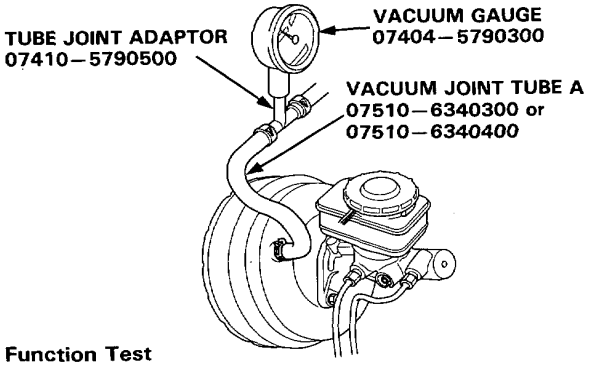

Function Test

1. Install the vacuum gauge as same the leak test.

2. Connect the oil pressure gauges to the master cylinder using the attachments as shown.

3. Bleed air through the valves.

   CAUTION: Avoid spilling brake fluid on painted, plastic or rubber parts as it may damage the finish.

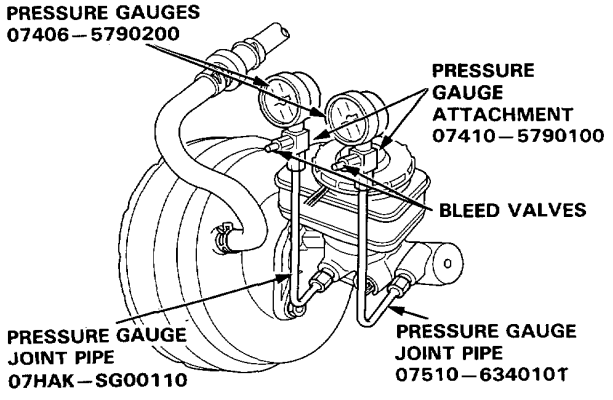

4. Start the engine.

5. Depress the brake pedal with a 200 N (20 kg, 44 lbs) of pressure. The following pressures should be observed at the pressure gauges in each vacuum.

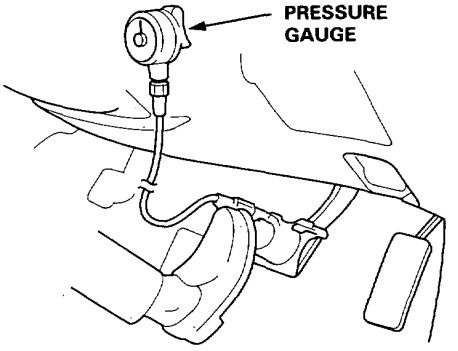

Vacuum mmHg	Line Pressure kPa (kg/cm², psi)
0	686 (7.0, 99.5)
300	6110 (62.3, 886)
500	9728 (99.2, 1411)

6. Inspect the master cylinder pistons and cups in the readings do not fall within the limits shown above.

Check Valve Test

1. Disconnect the brake booster vacuum hose at the booster.

2. Start the engine and let it idle. There should be vacuum available. If no vacuum is available, the check valve is not working correctly.
   Replace the check valve and retest.

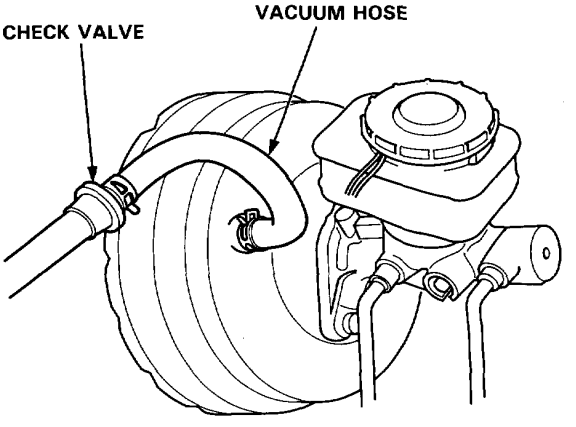

Pushrod Clearance Adjustment

NOTE: Master cylinder pushrod-to-piston clearance must be checked and adjustments made, if necessary, before installing master cylinder.

1. Using the special tool, adjust bolt so the top of it is flush with end of master cylinder piston.

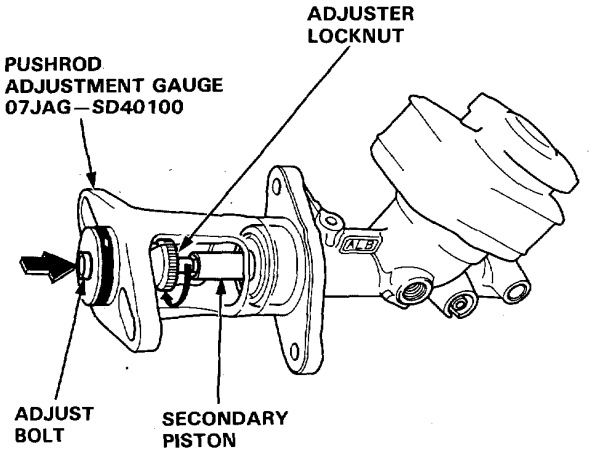

2. Without disturbing the adjusting bolt's position, install the special tool upside down on the booster.

3. Install the master cylinder nuts and tighten to the specified torque.

4. Connect the booster in-line with a vacuum gauge (0—30 in Hg) to the booster's engine vacuum supply, and maintain an engine speed that will deliver 500 mm Hg (20 in Hg) vacuum or connect the booster in-line with a vacuum gauge to the booster's apply a 500 mm Hg (20 in Hg) vacuum and hold.

5. With a feeler gauge, measure the clearance between the gauge body and the adjusting nut as shown.

CLEARANCE: 0.1 ±0.1 mm (0.004 ±0.004 in)

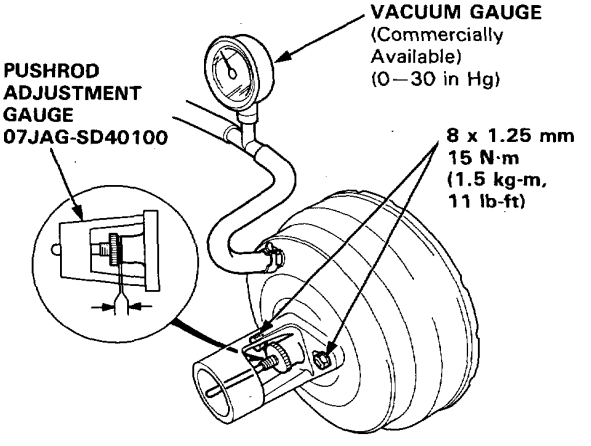

6. If the clearance is incorrect, remove the tool, and adjust the clearance by holding the pushrod and turning the adjuster in or out.

CAUTION: Do not pull the pushrod out of the brake booster.

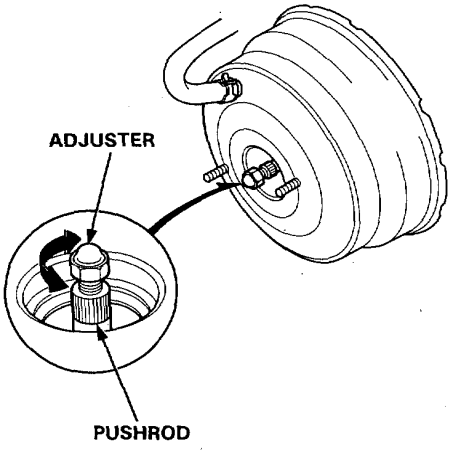

NOTE: If the clearance between the gauge body and adjuster locknut is 0.1 mm, the pushrod-to-piston clearance is 0.1 mm or more. If the clearance between the gauge body and adjuster locknut is 0.2 mm, the pushrod-to-piston clearance is 0 mm.

PUSHROD-TO-PISTON CLEARANCE: 0—0.2 mm (0—0.0008 in.)

7. Install the master cylinder.

Torque/Inspection

WARNING

- **Never use an air hose or dry brush to clean brake assemblies.**
- **To avoid breathing brake dust, use an vacuum cleaner.**
- ***Contaminated brake discs or pads reduce stopping ability.***

GREASE : **BRAKE CYLINDER GREASE (P/N 08733–B020E) OR EQUIVALENT RUBBER GREASE**

GREASE : **SILICONE GREASE**

CAUTION:

- **Do not spill brake fluid on the car; it may damage the paint; if brake fluid does contact the paint, wash it off immediately with water.**
- **To prevent spills, cover the hose joints with rags or shop towels.**
- **Clean all parts in brake fluid and air dry; blow out all passages with compressed air.**
- **Before reassembling, check that all parts are free of dust and other foreign particles.**
- **Replace parts with new ones whenever specified to do so.**
- **Make sure no dirt or other foreign matter is allowed to contaminate the brake fluid.**
- **Do not mix different brands of brake fluid as they may not be compatible.**
- **Do not reuse the drained fluid. Use only clean DOT3 or 4 Brake fluid.**

NOTE:

- Coat piston, piston seal, and caliper bore with clean brake fluid.
- Replace all rubber parts with new ones whenever disassembled.

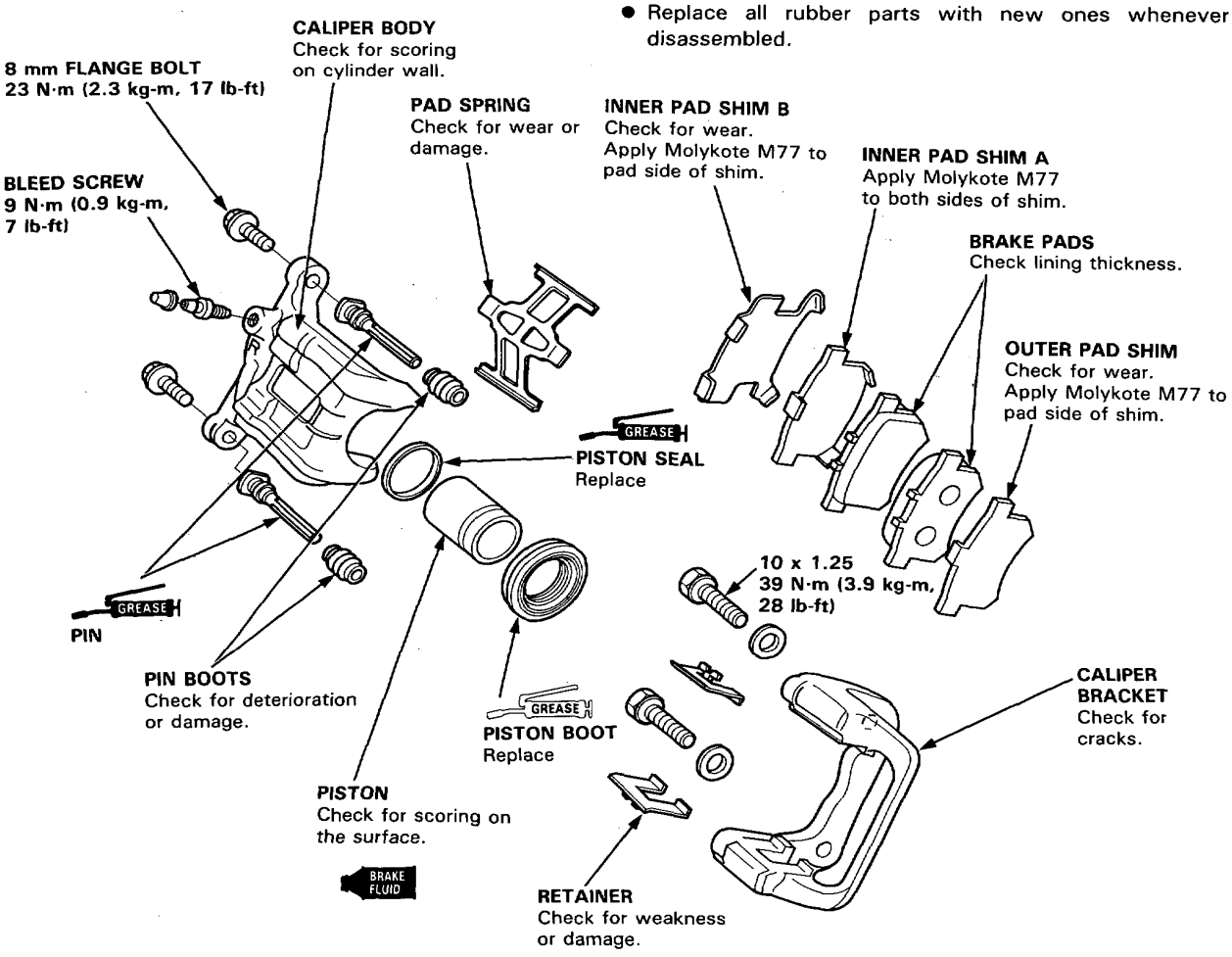

Rear Brake Pads

Inspection and Replacement

⚠WARNING

- **Never use an air hose or dry brush to clean brake assemblies.**
- **To avoid breathing brake dust, use an vacuum cleaner.**

1. Block the front wheels, support the rear of the car on safety stands, then remove the rear wheels.

2. Remove the lower caliper mounting bolt and pivot caliper up out of the way.

   CAUTION:
   - **Thoroughly clean the outside of the caliper to prevent dust and dirt from entering inside.**

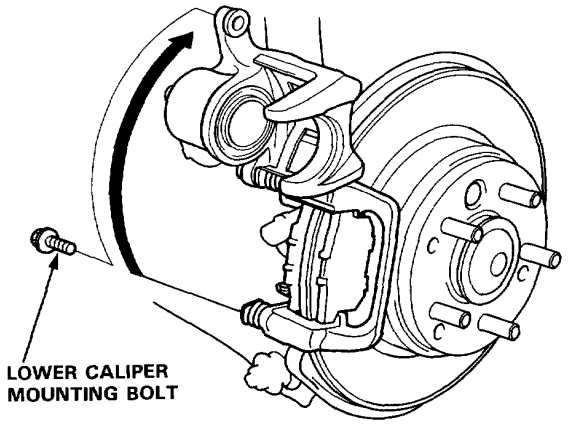

3. If the lining thickness is less than service limit, replace the brake pads as a set.

   NOTE: Engagement of the brake may require a greater pedal stroke immediately after the brake pads have been replaced as a set. Several applications of the brake pedal will restore the normal pedal stroke.

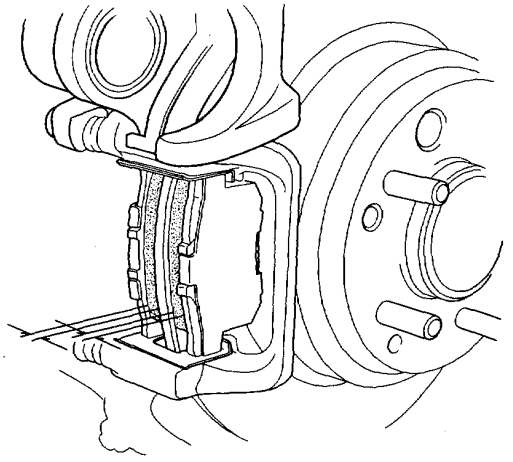

4. Remove the shims, pads and retainers.

5. Remove the pads and measure the thickness of each brake pad lining using a vernier caliper.

   Brake Pad Thickness:
   Standard: 9.0 mm (0.35 in)
   Service limit: 1.6 mm (0.6 in)

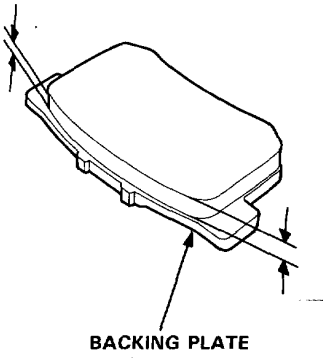

NOTE: Measurement does not include pad backing plate thickness.

6. To remove the caliper bracket, remove the upper caliper mounting bolt and move the caliper up out of the way.

   CAUTION: Support the caliper with a piece of wire so that it does not hang from the brake hose.

7. Remove the bracket bolts and bracket.

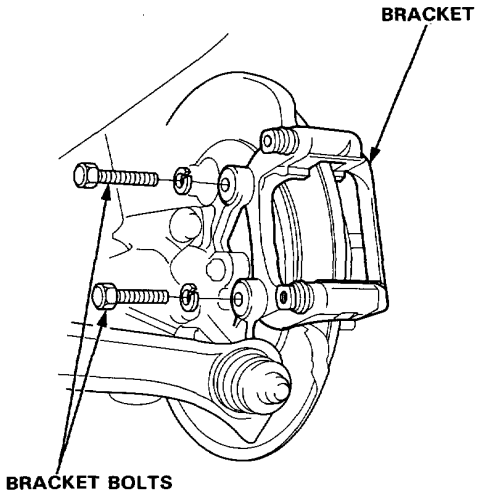

8. Clean the caliper and bracket thoroughly; remove any rust, and check for grooves or cracks.

9. Install the caliper bracket with two bracket bolts and washers.
   Tighten the bracket bolt to the specified torque.

10. Install the retainers in the correct positions.

11. Install the new brake pads and pad shims on caliper bracket.

⚠ WARNING

- **When reusing the pads, always reinstall the brake pads in their original positions to prevent loss of braking efficiency.**
- **A contaminated brake disc or pad reduces stopping ability. Keep grease off the discs and pads.**

NOTE:
- Apply Molykote 77 to the shims (page 19-21). Wipe excess grease off the shims.
- Install the inner pad with its wear indicator facing downward.
- Make sure that the pad spring is installed onto the caliper body.

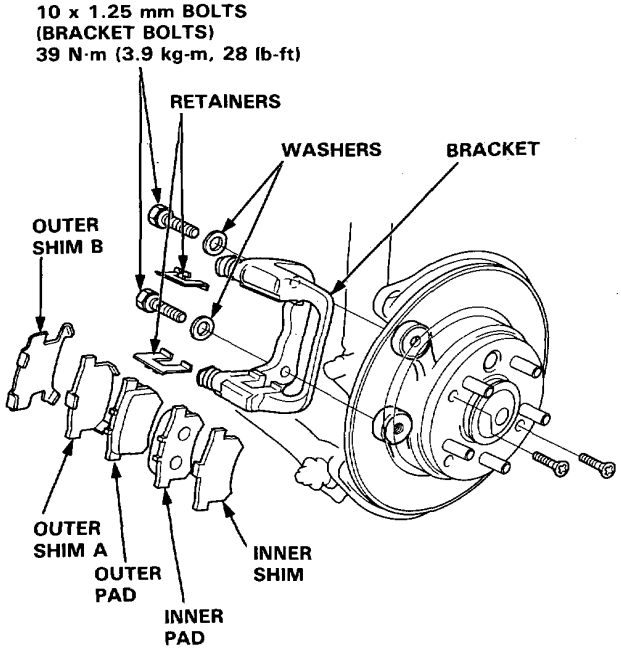

(cont'd)

Rear Brake Pads

Inspection and Replacement (cont'd)

12. Push in the piston so that the caliper will fit over the pads.

13. If the caliper bracket is not removed, pivot the caliper down into position, then install and torque the lower caliper mounting bolt.
    If the caliper bracket was removed, set the caliper down into position, then install the caliper bolts. Tighten the bolts to the specified torque.

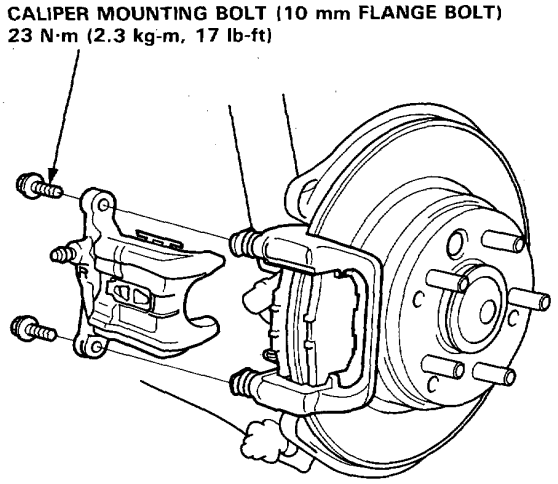

NOTE: Clean the mating surface of the wheel and hub before installing the wheel.

14. Depress the brake pedal several times to make sure the brakes work, then road-test.

Parking Drum Brakes

Index

⚠WARNING Block the front wheels before jacking up the rear of the car.

1. Raise the rear of the car and support with safety stands in proper locations.
2. Loosen the parking brake.
3. Remove the rear wheels.

⚠WARNING Do not use an air hose to blow the brake assembly clean. Use an vacuum cleaner, to avoid breathing brake lining dust.

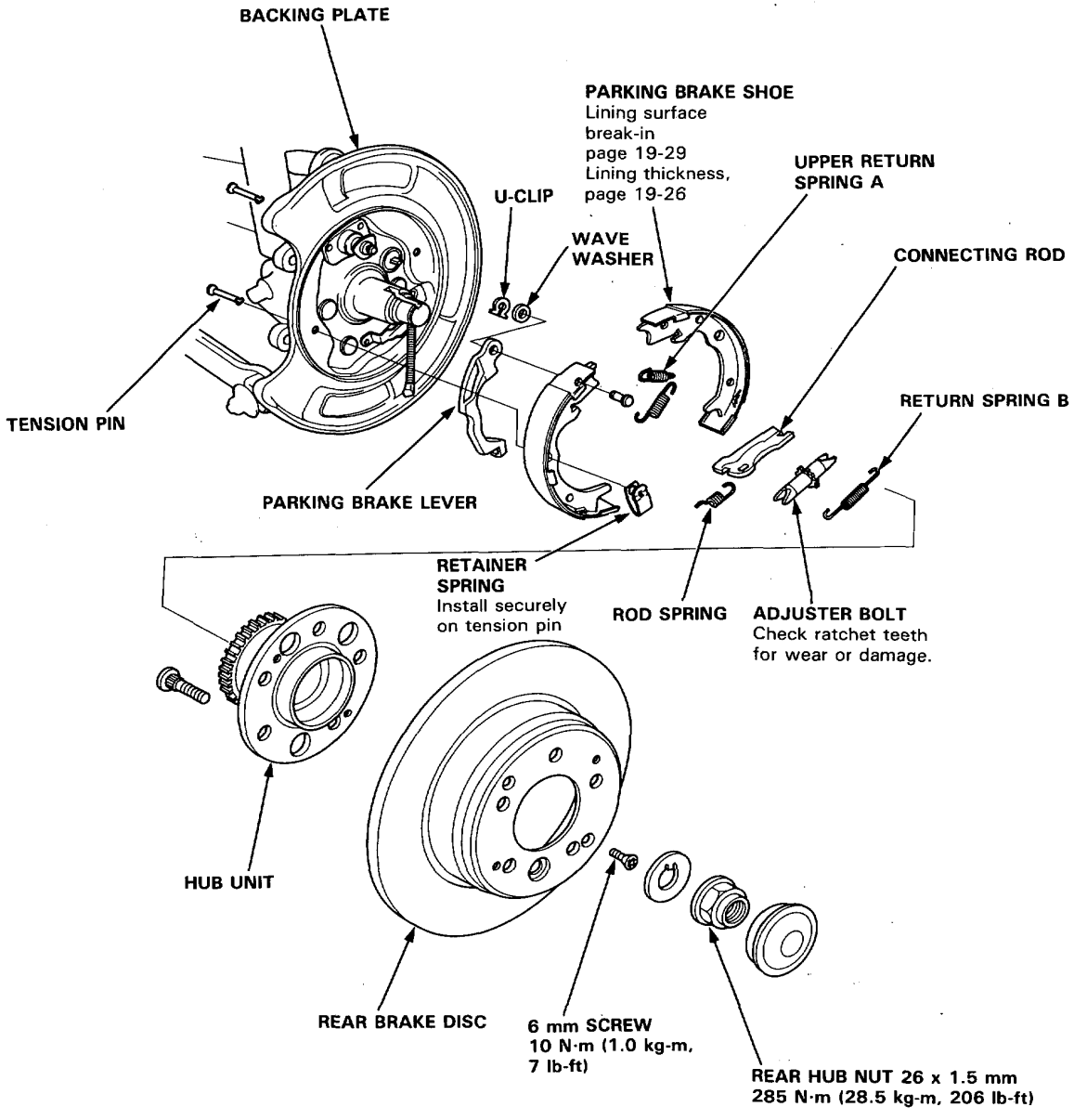

Inspection

1. Remove the two 6 mm screws and brake disc.

   NOTE:
   - If the brake disc is difficult to remove, install 8 mm bolts into the threaded holes and tighten them.
   - Rear discs can be refinished with an off-car disc lathe.

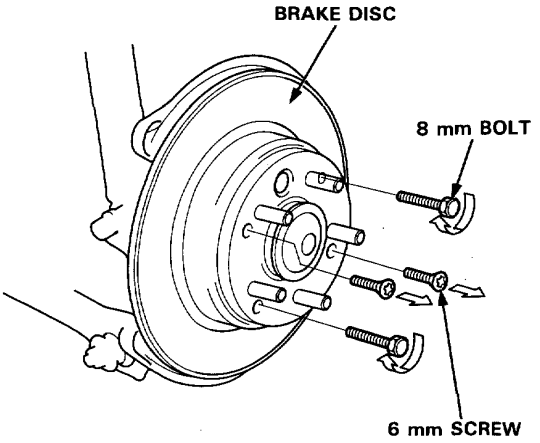

2. Inspect the brake linings for cracking glazing, wear or contamination.

3. Measure the brake lining thickness.

   Lining Thickness
   (Does not include brake shoe thickness)
   Standard: 2.5 mm (0.098 in)
   Service Limit: 1.0 mm (0.039 in)

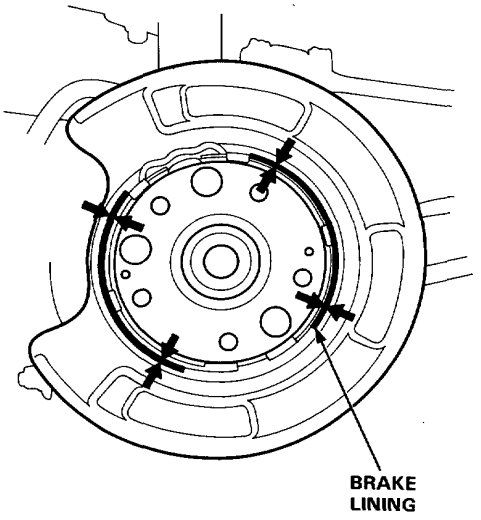

4. Measure inside diameter of the drum.

   Drum Inside Diameter:
   Standard: 170 mm (6.693 in)
   Service Limit: 171 mm (6.732 in)

   NOTE: If the refinishing limit stamped on the drum does not match the one listed above, use the one on the drum.

   Replace the disc/drum if the service limit is exceeded.

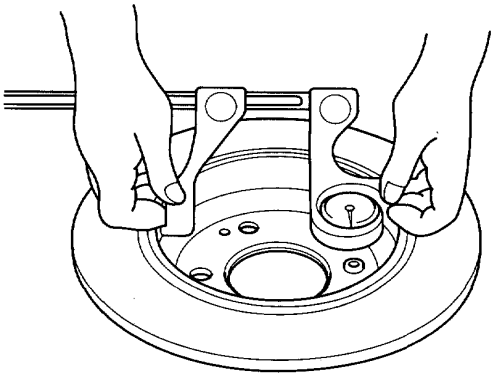

5. Inspect the drum sliding surface for scoring, grooving or cracks.
   Replace the disc/drum if there is excessive scoring or scratching, or cracks.

Disassembly

1. Remove the tension pins by pushing the retainer spring and turning them.

2. Disconnect and remove the return springs.

   NOTE: Remove the rear hub unit (page 19-25) when removing the shoes if necessary.

   ⚠WARNING
   Do not use an air hose to blow the brake assembly clean. To avoid breathing lining dust, use an vacuum cleaner.

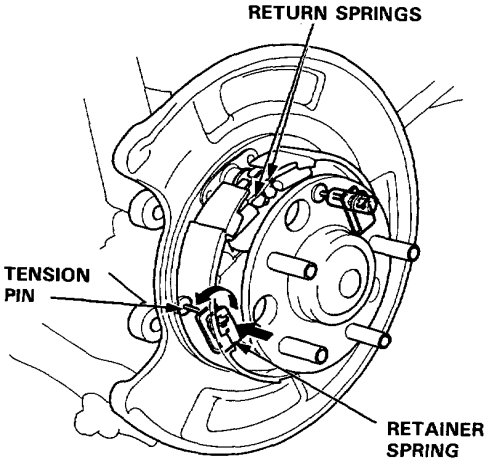

3. Lower the parking brake shoe assembly.

4. Disconnect the parking brake cable from the parking brake arm.

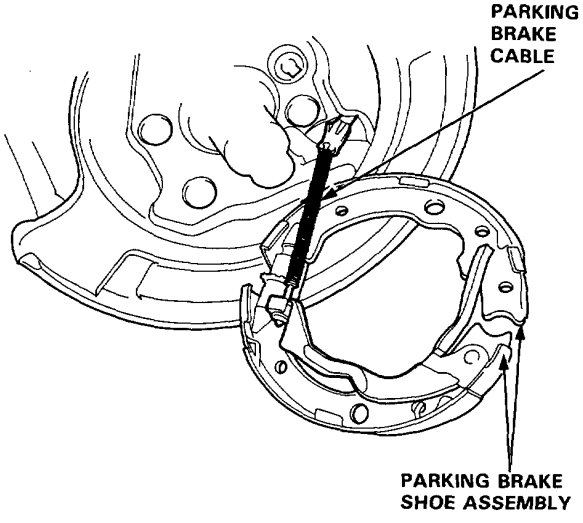

5. Separate the brake shoes by removing adjuster and springs.

6. Remove the wave washer, parking brake lever and pivot pin from the brake shoe by removing the U-clip.

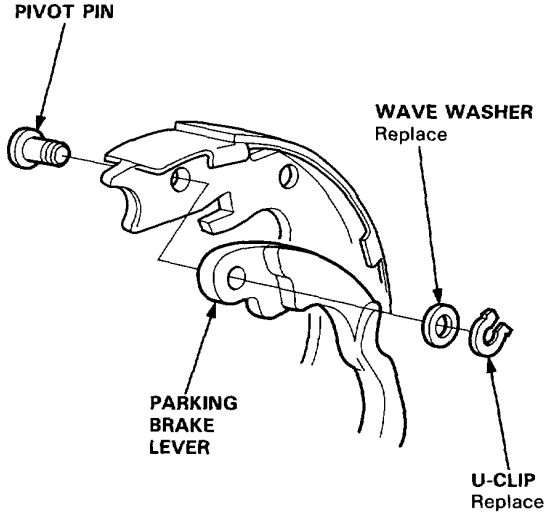

Reassembly

1. Apply brake cylinder grease to the sliding surface of the pivot pin, and insert the pin into the brake shoe.

2. Install the parking brake lever and wave washer on the pivot pin and secure with U-clip.

   NOTE: Pinch the U-clip securely to prevent the pivot pin from coming out of the brake shoe.

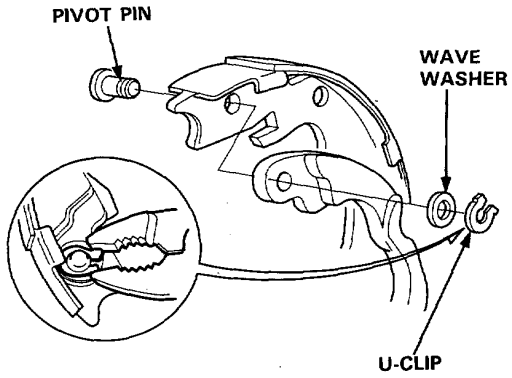

3. Apply grease on each sliding surface.

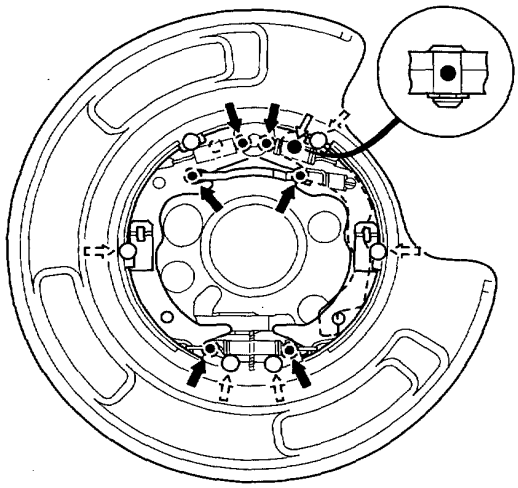

Greasing symbols:

- Brake shoe ends
- Opposite the edge of the shoe
- Sliding surface

4. Connect the rod spring to the connecting rod and brake shoe as shown.

   NOTE: Hook the left rear rod spring to the connecting rod with the end pointing upward.

Right Parking Brake shoes shown:

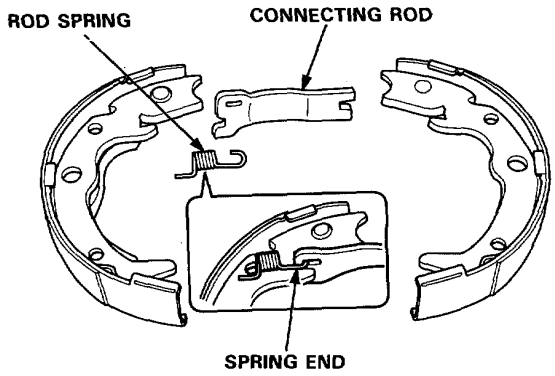

5. Clean the threaded portions of clevises A and B. Coat the threads of the clevises with grease. To shorten the clevises, turn the adjuster bolt.

6. Install the adjuster assembly and return spring B.

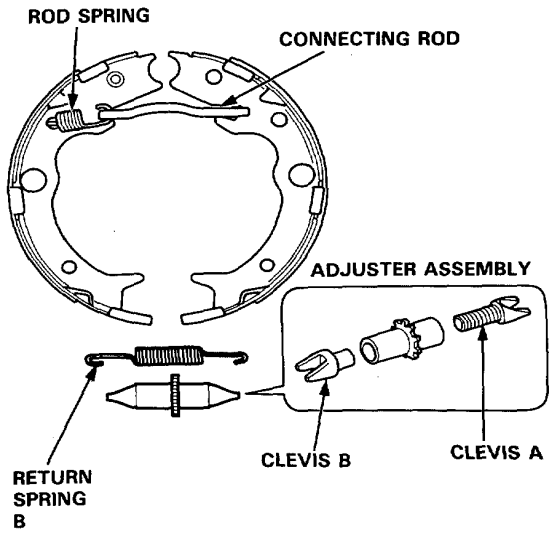

7. Connect the parking brake cable to the parking brake arm.

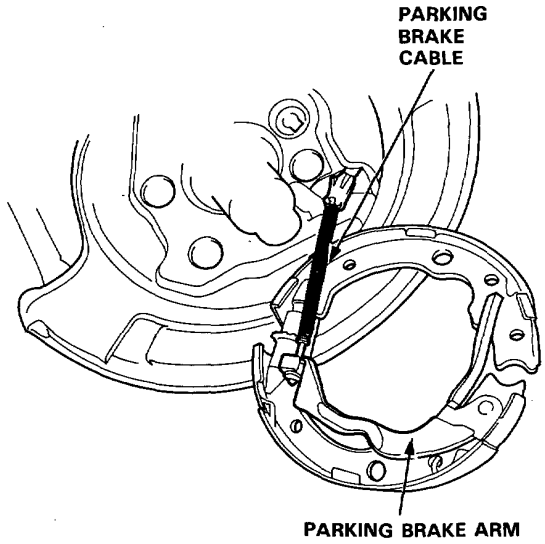

8. Install the tension pins and retainer spring.

9. Install the return springs.

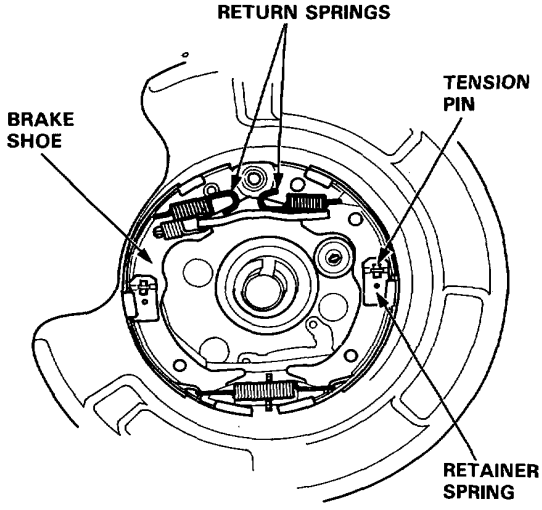

10. If the hub unit was removed, Install it and tighten the nut to the specified torque.
TORQUE: 285 N·m (28.5 kg-m, 206 lb-ft)

11. Install the disc (drum) and 6 mm screws.
- Adjust the parking brake. (page 19-5)
- Install the rear brake caliper. (page 19-22)

Lining Surface Break-in

⚠WARNING

- **Perform the lining surface break-in when replacing the shoes with new linings and/or new discs (drums).**
- **Check the number of parking lever (or pedal) clicks. Adjust the lever (pedal) before breaking-in the lining surface. (page 19-4)**
- **Park the car on a firm, level surface.**

(LEVER TYPE)

1. Keep the parking brake lever release button pushed with a piece of tape.

2. Attach a spring scale to the center of the lever grip.

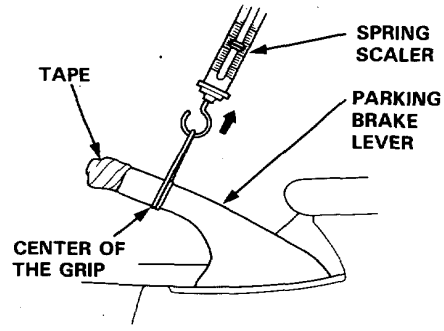

3. Have an assistant pull the parking brake lever up with 9 kg (19.8 lb) of force while you drive the car at about 50 km/h for 400 m.

⚠WARNING Perform this operation with an assistant, in a safe area.

4. Release the button and park the car for 5—10 minuites to allow the drums to cool.
Then repeat step 4.

5. Check the parking brake lever adjustment (page 19-4).

(cont'd)

Lining surface Break-in (cont'd)

(PEDAL TYPE)

1. Keep the parking brake pedal release lever pulled with a piease of tape.

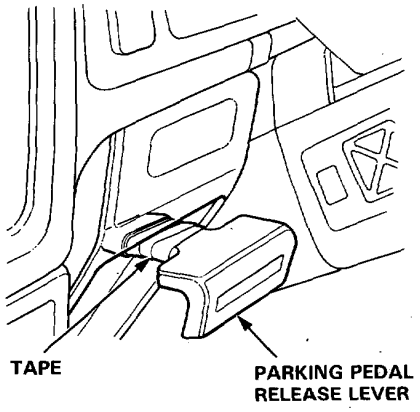

2. Set the special tool as shown.

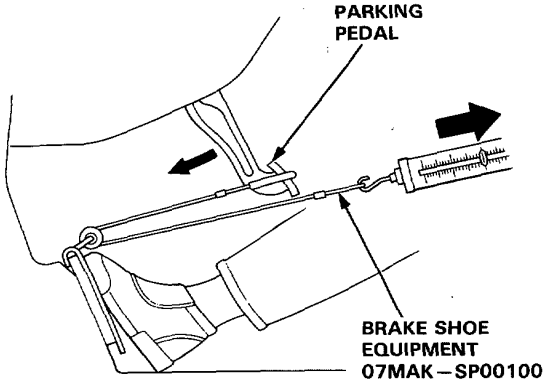

3. Attach a spring scale to the rope of the special tool.

4. Have an assistant pull the parking brake pedal up with 12 kg (26.5 lb) of force while you drive the car at 50 km for 400 m.

   ⚠WARNING Perform this operation with an assistant, in a safe area.

5. Release the lever and park the car for 5–10 minutes to allow the drum to cool.
   Then step 4.

6. Check the parking brake pedal adjustment (page 19-4).

Rear Caliper

Disassembly/Reassembly

CAUTION:
- Make sure all parts are clean before reassembly.
- Use only new replacement parts.
- Use only new clean brake fluid.
- Do not allow dirt or other foreign matter to contaminate the brake fluid.
- Do not mix different brands of brake fluid.
- Avoid spilling brake fluid on painted, plastic or rubber surfaces as it can damage the finish.
  Wash spilled brake fluid off immediately with clean water.

1. Remove the banjo bolt and disconnect the brake hose from the caliper.

2. Remove the two caliper mounting bolts and the caliper from the bracket.

   CAUTION:
   - **Thoroughly clean the outside of the caliper to prevent dust and dirt from entering inside.**
   - **Plug the end of the brake hose to prevent brake fluid from flowing out.**

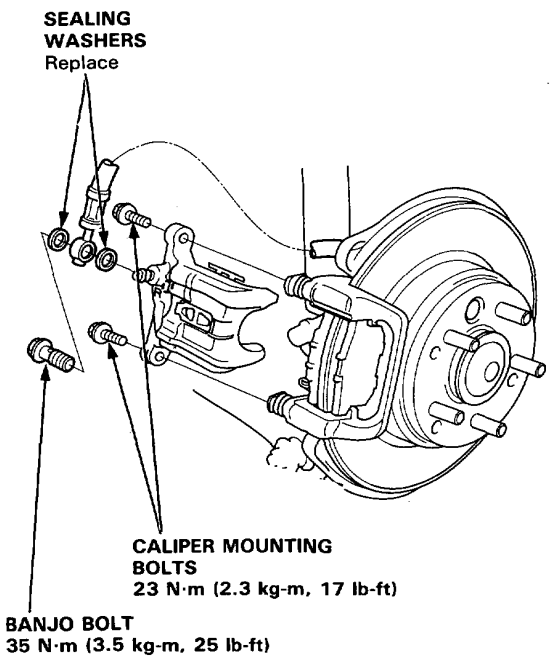

3. Remove the pad spring.

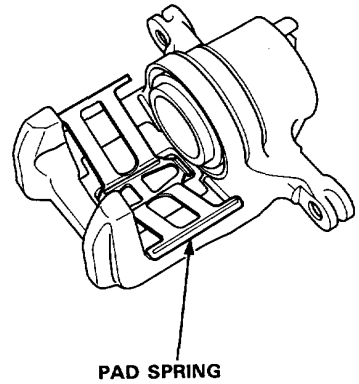

4. Remove the piston from the caliper. If necessary, apply compressed air to the caliper fluid inlet to get the piston out. Place a shop rag or wooden block as shown to cushion the piston when it is expelled.

   Use low pressure air in short bursts.

   ⚠WARNING
   - **Do not place your fingers in front of the piston.**
   - **Do not use high air pressure.**

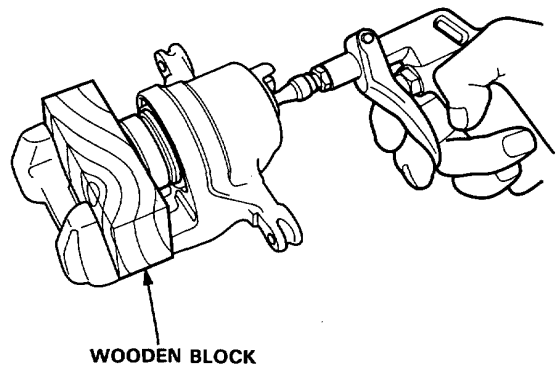

(cont'd)

Disassembly/Reassembly (cont'd)

5. Remove the piston seal.

   CAUTION: Take care not to damage the cylinder bore.

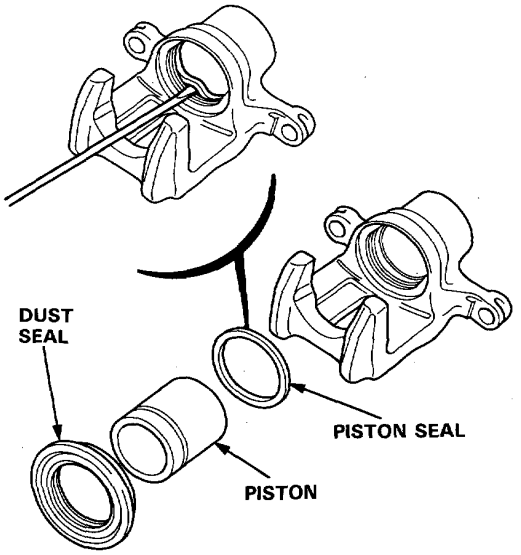

6. Coat the new piston seal and piston boot with grease (page 19-21) and install them in the caliper.

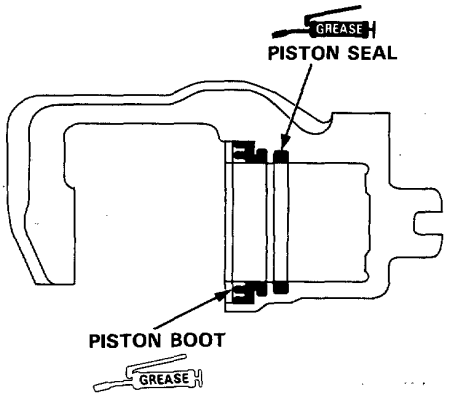

7. Lubricate the caliper cylinder and piston with brake fluid, then install the piston in the cylinder with the dished end facing in.

8. Install the brake pad retainers and brake pads.

9. Install the pad spring on the caliper.

   WARNING When reusing the brake pads, always reinstall the brake pads in their original positions to prevent loss of braking efficiency.

10. Connect the brake hose to the caliper with new sealing washers and tighten the banjo bolt.

11. Install the caliper on the caliper bracket and tighten the caliper mounting bolts.

12. Fill the brake reservoir up and bleed the brake system (page 19-13).

13. Operate the brake pedal several times.

Rear Brake Disc

Run-Out Inspection

1. Support the rear of the car on safety stands and remove the rear wheels.

2. Remove the rear brake disc caliper. (page 19-22)

3. Inspect the disc surface for grooves, cracks, and rust. Clean the disc thoroughly and remove all rust.

4. Use suitable nuts (12 x 1.5 mm) and plain washers to hold the disc securely against the hub. Torque nuts to 11 kg-m (80 lb-ft). Mount a dial indicator as shown.

   Brake Disc Run-out:
   Service Limit: 0.10 mm (0.004 in)

If the disc is beyond the service limit, refinish the disc.

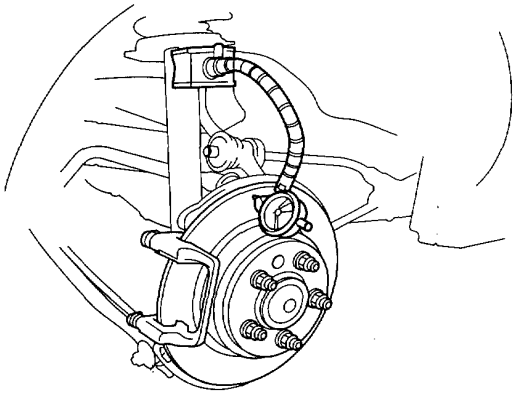

NOTE: A new disc should be refinished if its run-out is greater than 0.10 mm (0.004 in).

Thickness and Parallelism Inspection

1. Support the rear of the car on safety stands and remove the rear wheels.

2. Remove the rear brake disc caliper. (page 19-22)

3. Using a micrometer, measure the brake disc thickness at eight points, approximately 45° apart and 10 mm (0.39 in) in from the outer edge of the disc.

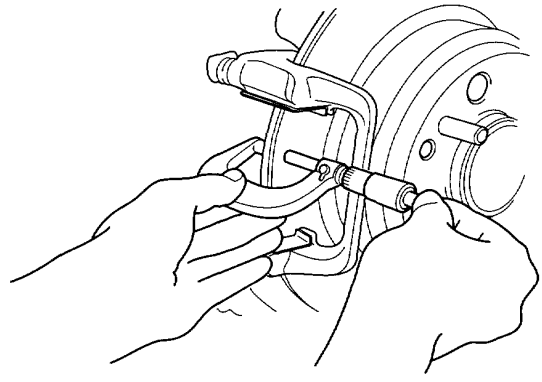

Brake Disc Thickness:

Standard:	**9.0 mm (0.35 in)**
Service limit:	**7.5 mm (0.30 in)**

Brake Disc Parallelism:
The difference between any thickness measurements should not be more than 0.015 mm (0.0006 in).

If the disc is beyond the limits for parallelism, refinish the disc.

Brake Hoses/Pipes

Inspection

1. Inspect the brake hoses for damage, leaks, interference or twisting.
2. Check the brake lines for damage, rusting or leakage. Also check for bent brake lines.
3. Check for leaks at hose and line joints or connections, and retighten if necessary.

CAUTION: Replace the brake hose clip whenever the brake hose is serviced.

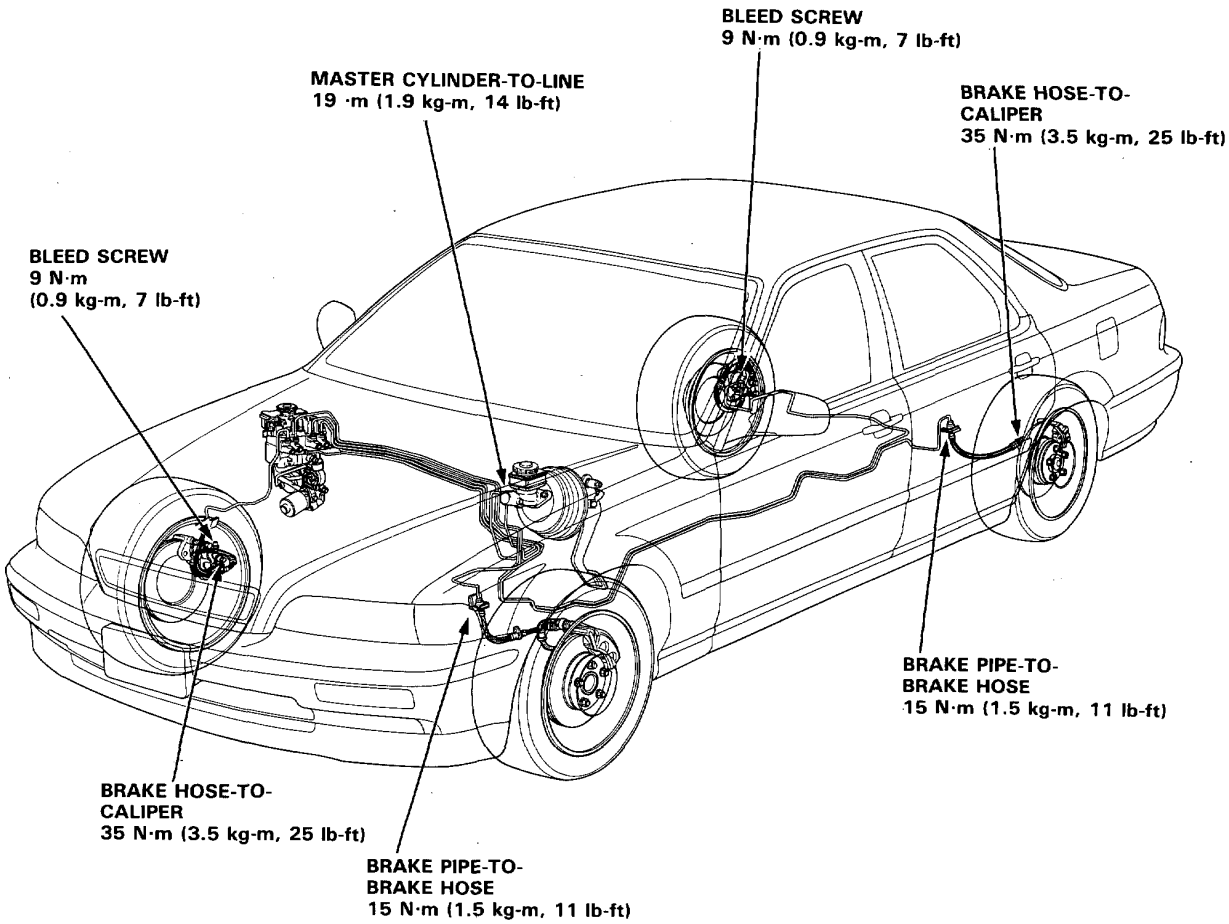

Parking Brake Cable

Disassembly/Assembly

CAUTION: Block the front wheels before jacking up the rear of the car.

NOTE: Remove the parking brake cable from the backing plate using a 12 mm box offset wrench as shown.

⚠WARNING SRS wire harnesses are routed near the center console panel and center armrest. All SRS wire harnesses and connectors are colored yellow. Do not use electrical test equipment on these circuits.

CAUTION: Be careful not to damage the SRS wire harnesses when servicing the center console panel and center armrest.

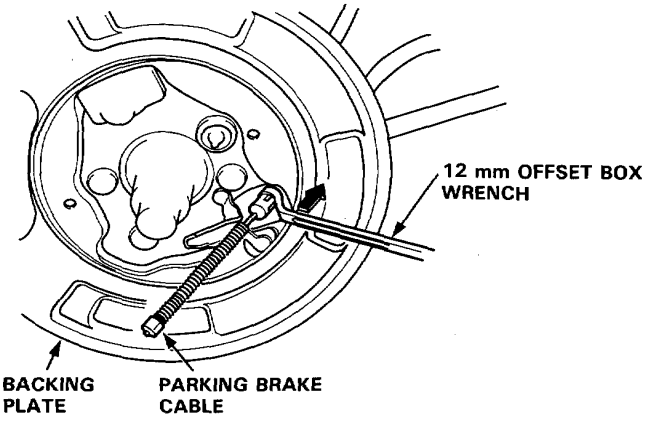

(LEVER TYPE)

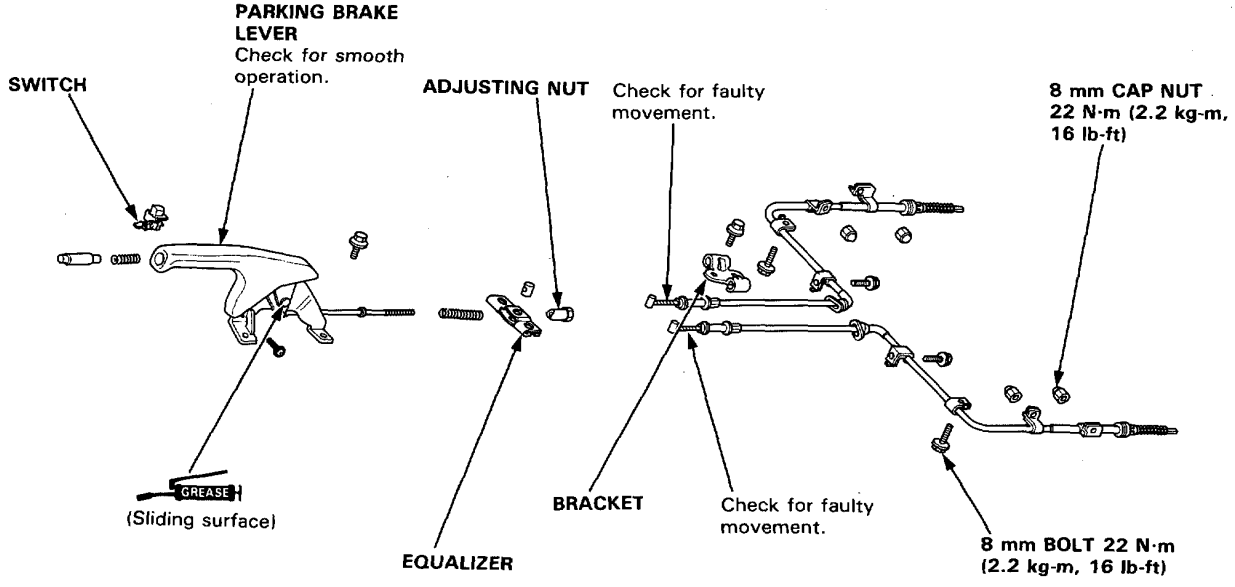

(cont'd)

Parking Brake Cable

Disassembly/Assembly (cont'd)

(PEDAL TYPE)

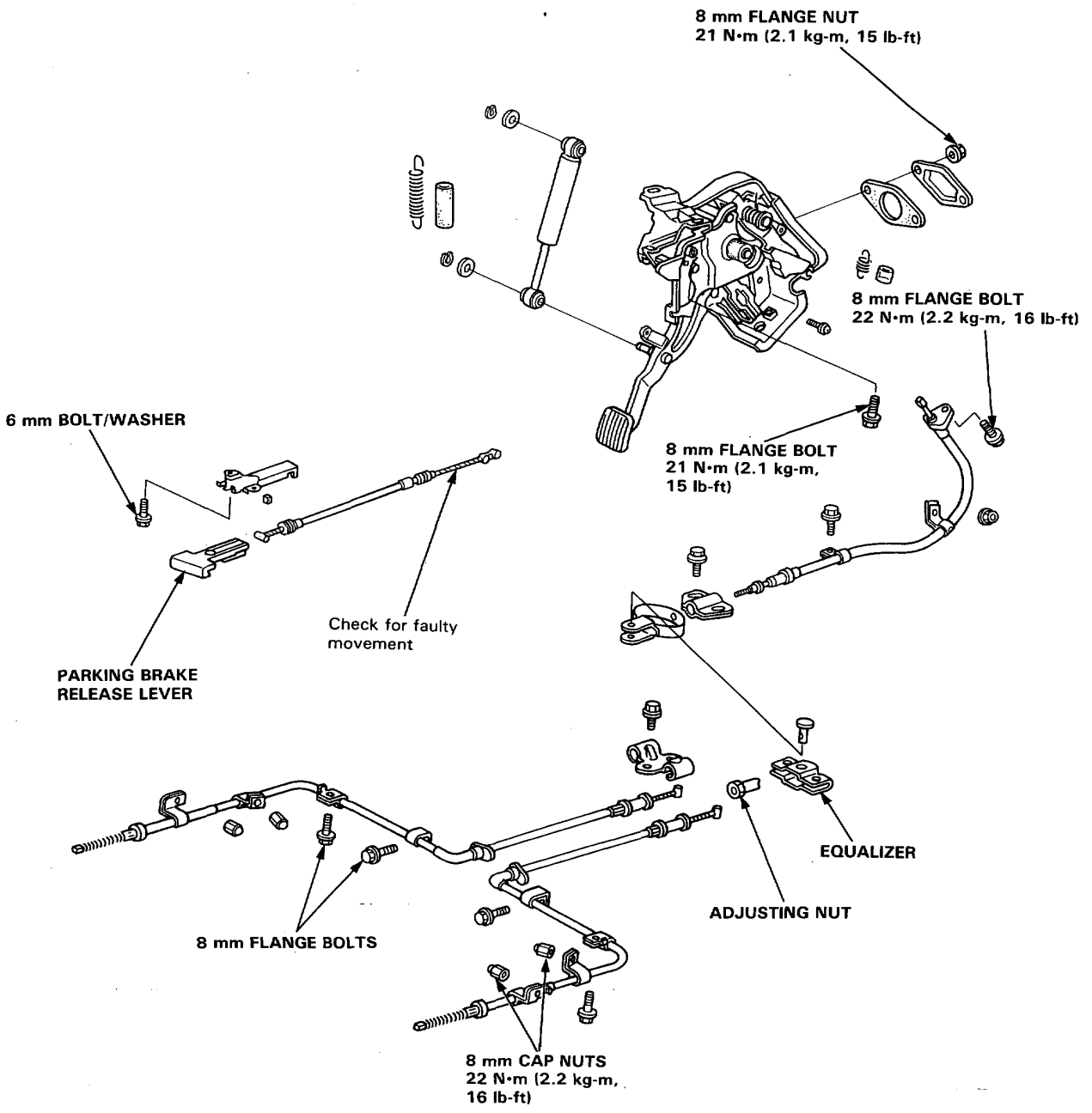

Anti-lock Brake System

Features/Construction/Operation

In a conventional brake system, if the brake pedal is depressed very hard, the wheels can lock before the vehicle comes to a stop. In such a case, the stability of the vehicle is reduced if the rear wheels are locked, and maneuverabily of the vehicle is reduced if the front wheels are locked, creating an extremely unstable condition.
The Anti-Lock Brake System modulates the pressure of the brake fluid applied to each caliper, thereby preventing the locking of the wheels, whenever the wheels are likely to be locked due to hard braking. It then restores normal hydraulic pressure when there is no longer any possibility of wheel locking.

Features

- Increased braking stability can be achieved regardless of changing driving conditions.
- The maneuverability of the vehicle is improved as the system prevents the front wheels from locking.
- When the anti-lock brake system goes into action, a kick-back is felt on the brake pedal.
- The system is equipped with a self-diagonosis function. When an abnormality is detected, the anti-lock brake system indicator light comes on. The location of the system's trouble can be diagnosed from the frequency of the system indicator light blinks.
- This system has individual control of the front wheels and common control ("Select Low") for the rear wheels, "Select Low" means that the rear wheel that would lock first (the one with the lowest resistance to lock-up) determines anti-lock brake system activation for both rear wheels.
- The system has a fail-safe function that allows normal braking if there's a problem with the anti-lock brake system.

Construction

In addition to the conventional braking system, the anti-lock brake system is composed of : gear pulsers attached to the rotating part of individual wheels; speed sensors, which generate pulse signals corresponding to the revolution of the gear pulsers; control unit, which controls the working of the anti-lock brake system by performing calculations based on the signals from the individual speed sensors and the individual switches; modulator unit, which adjusts the hydraulic pressure applied to each caliper on the basis of the signals received from the control unit; an accumulator, in which high-pressure brake fluid is stored, a pressure switch, which detects the pressure in the accumulator and transmits signals to the control unit; a power unit, which supplies the high-pressure working fluid to the accumulator by means of a pump; a motor relay for driving the power unit; a fail-safe relay, which cuts off the solenoid valve ground circuit when the fail-safe device is at work; and, an indicator light.

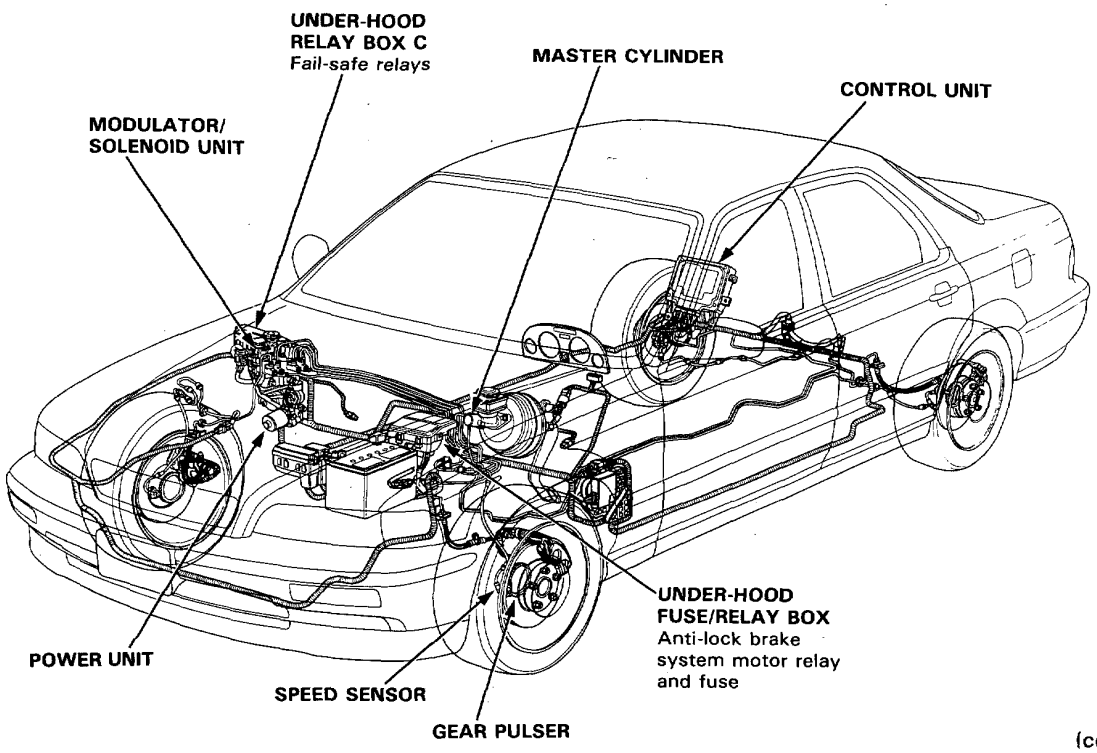

(cont'd)

Features/Construction/Operation (cont'd)

Master Cylinder

1. Construction
   A tandem master cylinder is adopted to improve the safety of the braking system. In addition, a center valve method is introduced so as to match the anti-lock brake system operation.
   The master cylinder has one reservoir tank which is connected to the cylinder sections by two small holes. It has two pistons--primary and secondary, which are criss-cross connected with the calipers so that the fluid pressure works separately on each system (front right wheel & rear left wheel, and front left wheel & rear right wheel).
   A stop bolt for controlling movement of the primary piston is provided at the side of the master cylinder body. A reed switch for detecting the brake fluid volume is also provided in the cap of the reservoir tank.

2. Operation
   When the brake pedal is depressed, the secondary piston is pushed through the brake booster and the center valve B is closed so that fluid pressure is generated on the secondary side. At the same time, the primary piston is pushed by the secondary fluid pressure and the center valve A is closed so that braking fluid pressure is generated both on the primary and secondary sides.
   When the brake pedal is released, the primary and secondary pistons are returned to the original position by the brake fluid pressure and piston spring.

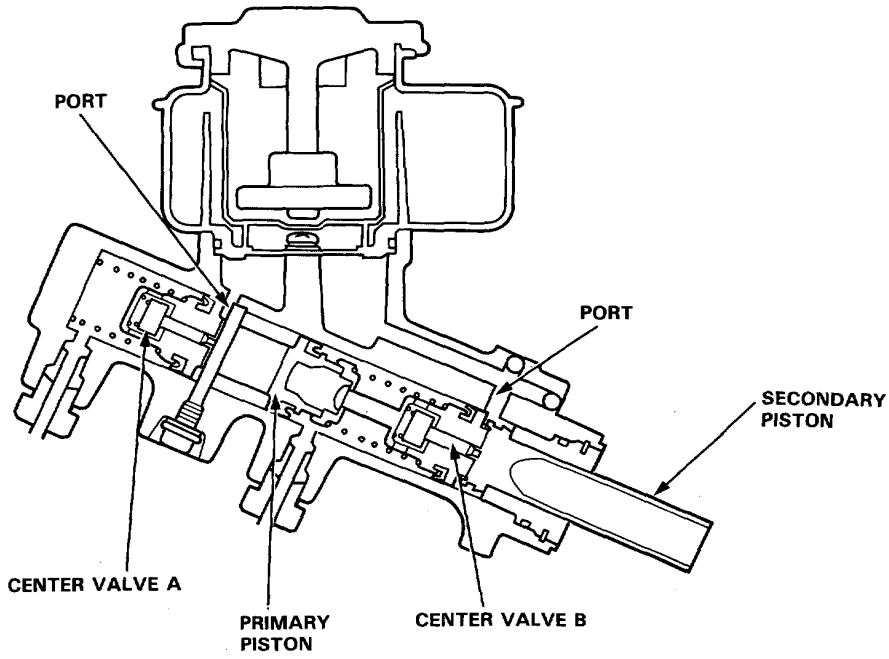

3. Responses when fluid is leaking
   (1) In case of leaking from the primary system:
   Since the fluid pressure on the primary side does not rise, the primary piston is pushed by the fluid pressure of the secondary piston and the tension of the piston spring until the end hits on the cylinder, the braking is performed by the fluid pressure on the secondary side.

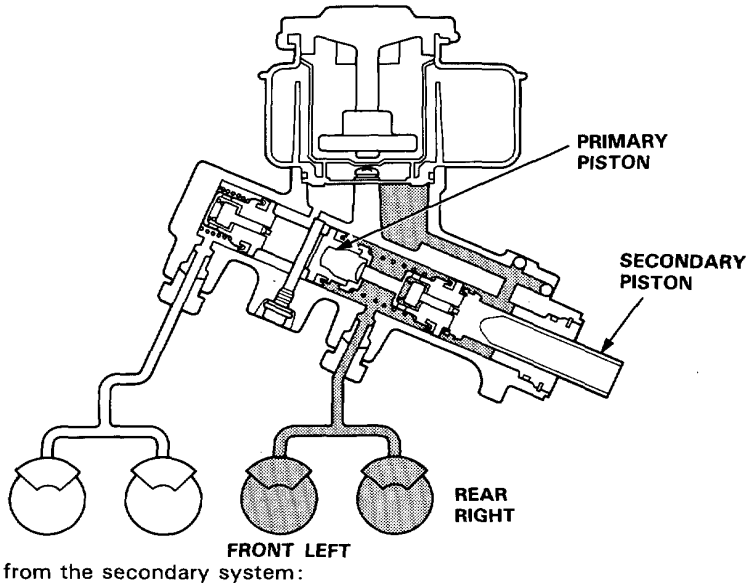

   (2) In case of leaking from the secondary system:
   The secondary piston does not produce fluid pressure, keeps moving ahead, hits on the end surface of the primary piston so that the primary piston is pushed under the same condition as an ordinary rod. Therefore, the braking is conducted by the fluid pressure on the primary side.

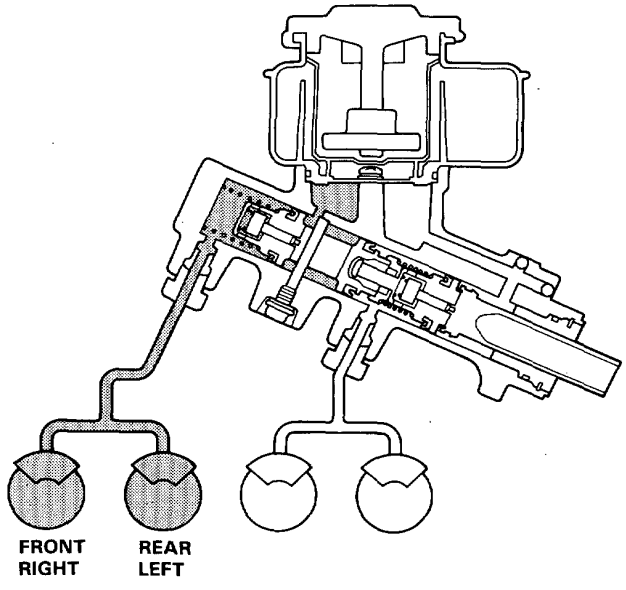

(cont'd)

Features/Construction/Operation (cont'd)

Speed Sensor

The speed sensor is a contactless type that detects the rotating speed of a wheel. It is composed of a permanent magnet and coil. When the gear pulsers attached to the rotating parts of each wheel (front wheel: outboard joint of the driveshaft, rear: hub bearing unit) turn, the magnetic flux around the coil in the speed sensor alternates, generating voltages with frequency in proportion to wheel rotating speed. These pulses are sent to the control unit and the control unit identifies the wheel speeds.

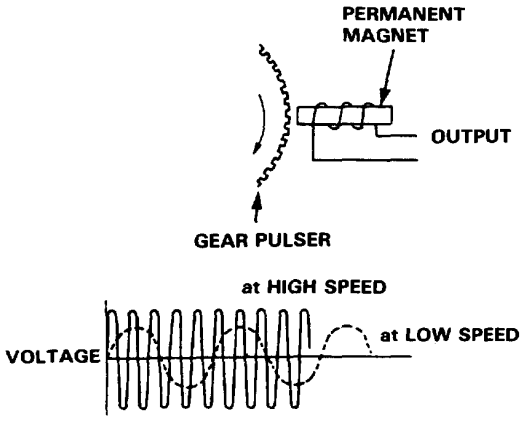

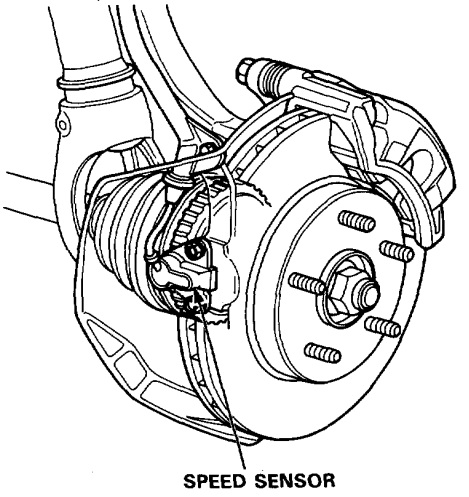

Control Unit

The control unit consists of a main function section, which controls the operation of the anti-lock brake system, and subfunction, which controls the pump motor and "self-diagnosis".

1. Main Function
   The main function section of the control unit performs calculations on the basis of the signals from each speed sensor and controls the operation of the anti-lock brake system by putting into action the solenoid valves in the modulator unit for each front brake and for the two rear brakes.
2. Sub-Function
   The sub-function section gives driving signals to the pump motor and also gives "self-diagnosis" signals, necessary for backing up the anti-lock brake system.

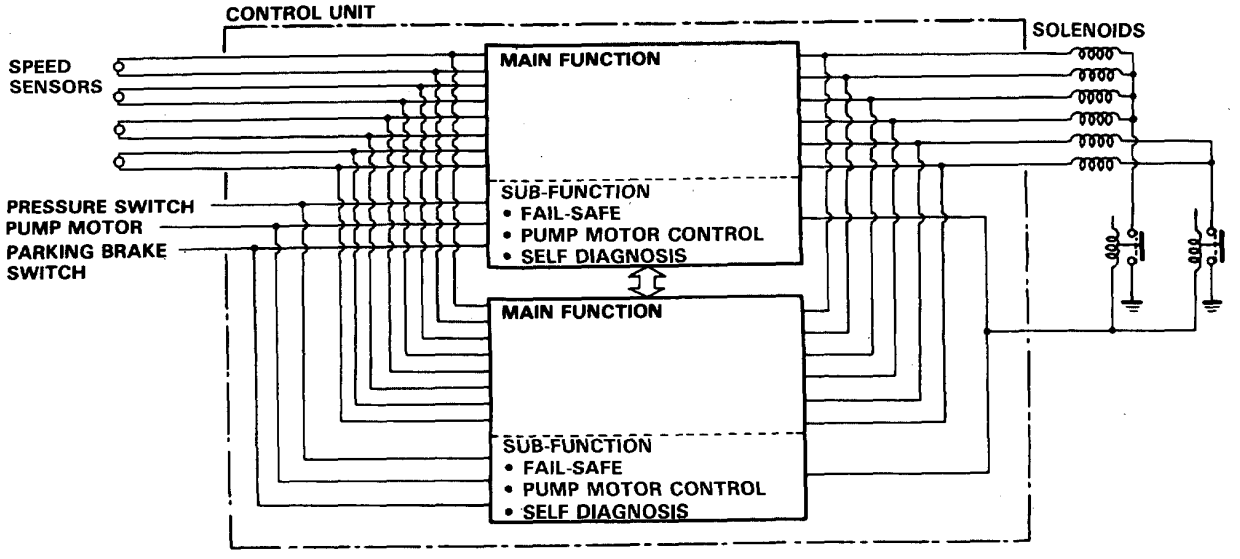

1. Self-Diagnostic Function
   Since the anti-lock brake system modulates the braking pressure when a wheel is about to lock, regardless of the driver's intention, the system operation and the braking power will be impaired if there is a malfunction in the system. To prevent this possibility, at speeds above 6 km/h, the self diagnosis function, provided in the sub-function of the control unit, monitors the main system functions. When an abnormality is detected, the anti-lock brake system indicator light goes on. There is also a check mode of the self-diagnosis system itself; when the ignition switch is first turned on, the anti-lock brake system indicator light comes on and stays on for a few seconds after the engine starts, to signify that the self-diagnosis system is functional.

2. Fail-Safe Function
   When abnormality is detected in the control system by the self-diagnosis, the solenoid operations are suspended by turning off the relay (fail-safe relay) which disconnects the ground lines of all the solenoid valves to inhibit anti-lock brake system operations. Under these conditions, the braking system functions just as an ordinary one, maintaining the necessary braking function. When the anti-lock brake system indicator light is turned on, it means the fail-safe is functioning.

Modulator Unit

Modulators for each wheel and solenoid valves are integrated in the modulator unit.
The modulators for front and rear brakes are of independent construction and are positioned vertically for improved maintainability. The modulators for rear brakes are provided with a PCV function (Proportioning Control Valve) in order to prevent the rear wheel from locking when the anti-lock brake system is malfunctioning or the anti-lock brake system is not activated.
The solenoid valve features quick response (5 ms or less).
The inlet and outlet valves are integrated in the solenoid valve unit. There are three solenoid valves provided, one each for the front-right wheel, for the front-left wheel and for the rear wheels.

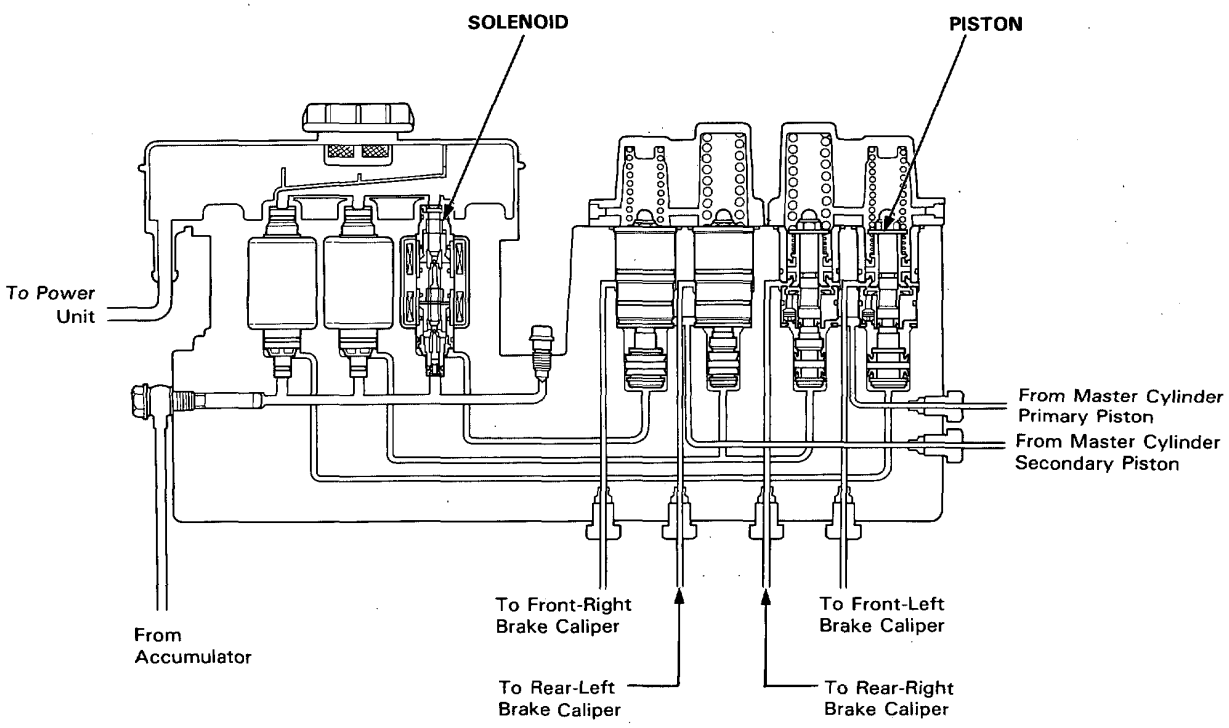

(cont'd)

Features/Construction/Operation (cont'd)

Accumulator

The accumulator is a pneumatic type which accumulates high-pressure brake fluid fed from the pump incorporated in the power unit. When the anti-lock brake system operates, the accumulator and the power unit supply high-pressure brake fluid to the modulator valve via the inlet side of the solenoid valve.

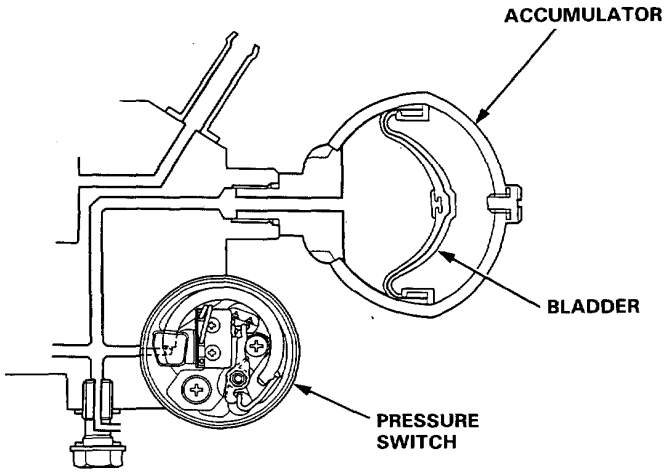

Pressure Switch

The pressure switch monitors the pressure accumulation (pressure from the pump) in the accumulator and is turned off when the pressure becomes lower than a prescribed level. When the pressure switch is turned off, the switching signal is sent to the control unit. Upon receiving the signal, the control unit activates the pump motor relay to operate the motor. If the pressure doesn't reach the prescribed value, the anti-lock brake system indicator light comes on.

Operation

When the pressure in the accumulator rises, the Bourdon tube in the pressure switch deforms outwards. When the free end of the Bourdon tube moves more than the prescribed amount, the micro switch is activated by the force of the spring attached to the sensing lever. When the pressure in the accumulator decreases due to anti-lock brake system operations, the Bourdon tube moves in the direction opposite to the one described above, and the micro-switch is eventually turned off. Upon receiving this signal, the control unit activates the motor relay to operate the motor.

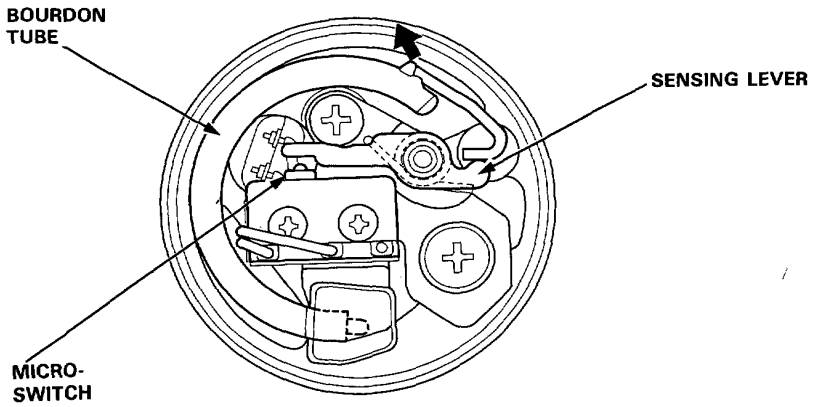

Power Unit

The power unit consists of a motor, filter, guide, piston rod and cylinder body. Since a guide is positioned off-set to the center of the motor shaft, the rotation of the motor and cylinder body provides the reciprocating motion to the piston rod. The brake fluid is thus pressurized and fed to the relief valve, accumulator and modulator.

As the pressure in the accumulator exceeds the prescribed level, the pressure switch is turned on. Approx. 0.5 seconds after receiving the ON-signal, the control unit stops the motor relay operation. In this state, the pressure in the accumulator reaches 230 kg/cm^2.

If the pressure doesn't reach the prescribed value after the motor has operated continuously for a specified period, the control unit stops the motor and activates the anti-lock brake system indicator light.

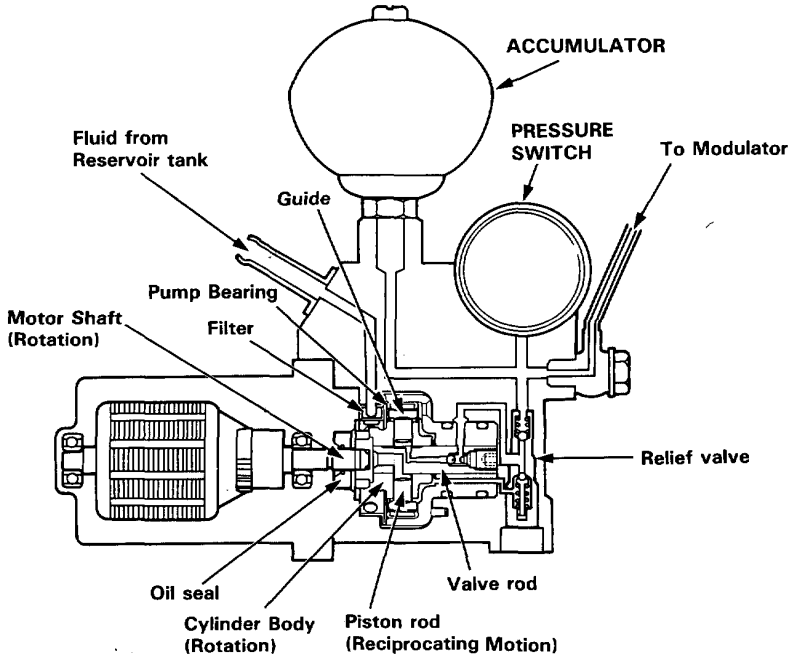

Anti-Lock Brake System Indicator Light

This warning system turns on the anti-lock brake indicator light when one or more of the below described abnormalities is detected. This is only a partial list.

- When the operating time of the motor in the power unit exceeds the specified period.
- When vehicle running time exceeds 30 seconds without releasing the parking brake lever.
- When one of the rear wheels is locked during running.
- When absence of speed signals from any of the four speed sensors is detected.
- When the activation time of all solenoids exceeds a given time or an open circuit is detected in the solenoid system.
- When solenoid output is not detected in the simulated anti-lock brake system operation carried out during running at speeds of 6 mph (10 km/h) or more.

To check the indicator light bulb, the light is activated when the ignition switch is turned on. It is turned off after the engine is started if there is no abnormality in the system.

(cont'd)

Features/Construction/Operation (cont'd)

Operation

1. Ordinary Braking Function
   In ordinary brake operations, the cut-off valve in the modulator is open, transmitting the hydraulic pressure from the master cylinder to the brake calipers via chamber A and chamber B.
   Chamber C is connected to the reservoir through the outlet valve, which is normally open. It is also connected to the hydraulic pressure source (pump, accumulator, pressure switch, etc.) via the inlet valve, which is normally closed. Chamber D serves as an air chamber. Under these conditions, the pressures of chambers C and D are maintained at about atmospheric pressure, permitting regular braking operations.

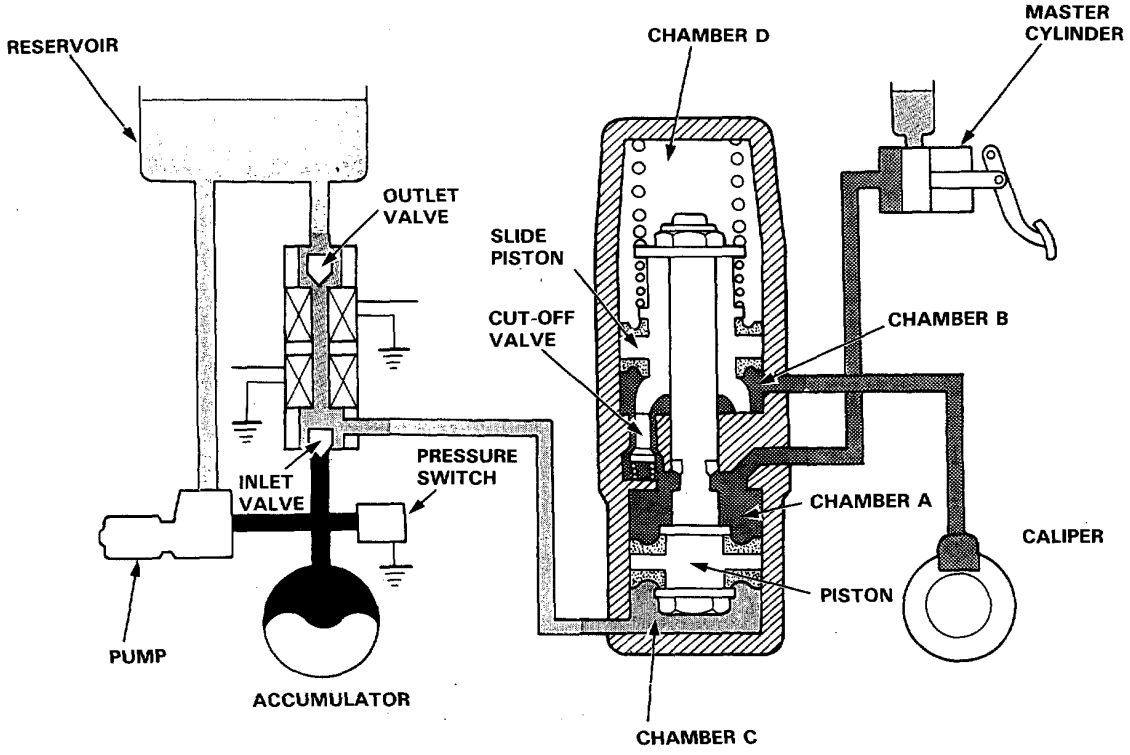

If brake inputs (force exerted on brake pedal) are excessively large and a possibility of wheel locking occurs, the control unit operates the solenoid valve, closing the outlet valve and opening the inlet valve. As a result, the high pressure is directed into chamber C, the piston is pushed upward, causing the slide piston to move upward and the cut-off valve to close. As the cut-off valve closes, the flow from the master cylinder to the caliper is interrupted, the volume of chamber B, which is connected to the caliper, increases, and the fluid pressure in the caliper declines.
When both of the valves, inlet and outlet, are closed (when only the outlet valve is activated) the pressure in the caliper is maintained constant.
When the possibility of wheel locking ceases, it is necessary to restore the pressure in the caliper. The solenoid valve is therefore turned off (outlet valve: open, inlet valve closed).

Process	Caliper Pressure	Outlet Valve		Inlet Valve	
		Electric Power	Hydraulic Circuit	Electric Power	Hydraulic Circuit
Caliper pressure declining	↘	ON	Close	ON	Open
Caliper pressure constant	→	ON	Close	OFF	Close
Caliper pressure increasing	↗	OFF	Open	OFF	Close

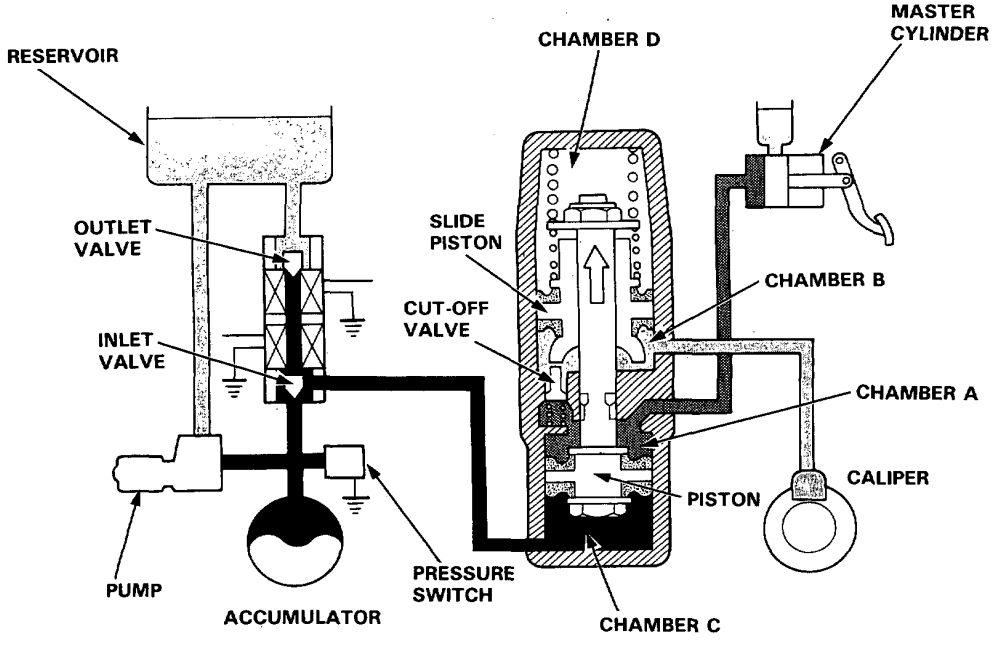

(cont'd)

Features/Construction/Operation (cont'd)

2. Slide Piston Function
When the car is used on rough roads where the tires sometimes lose adhesion, the anti-lock brake system may function excessively, causing a very large volume of brake fluid to flow into chamber C. When this occurs, the piston is moved excessively, resulting in an abnormal loss of pressure in chamber B. In order to overcome this problem, the slide piston is kept in proper position by spring force to prevent the pressure in chamber B from becoming negative.

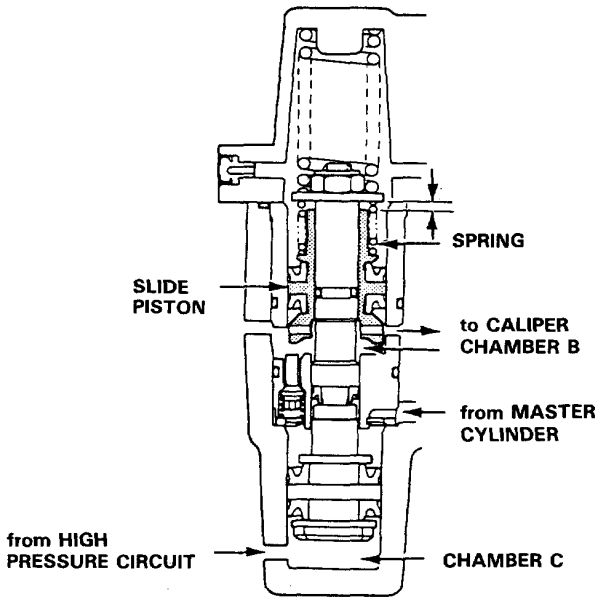

3. Kickback
When the anti-lock brake system is functioning, the piston moves upward, the volume of chamber B increases, and the fluid pressure on the caliper side is reduced. At the same time, the volume of chamber A is reduced and the brake fluid is returned to the master cylinder. When the brake fluid is pushed back to the master cylinder, the driver can feel the functioning of the anti-lock brake system because the brake pedal is kicked back.

4. PCV (Proportioning Control Valve) Function
In the modulator for the rear wheels, the diameters of the piston and the slide piston are distinctly different. This provides a PCV (Proportioning Control Valve) function to prevent the rear wheels from locking during an emergency stop.

(1) Before the Turning Point:
1) When the fluid pressure from the master cylinder is below the turning point, the cut-off valve is always pushed downward by the force of the slide piston and its spring.
Under these conditions, there is a gap between the cut-off valve shoulder and the sleeve. Chamber A and chamber B are therefore connected through the gap. The pressure from the master cylinder flows into the rear calipers through chamber A and chamber B.

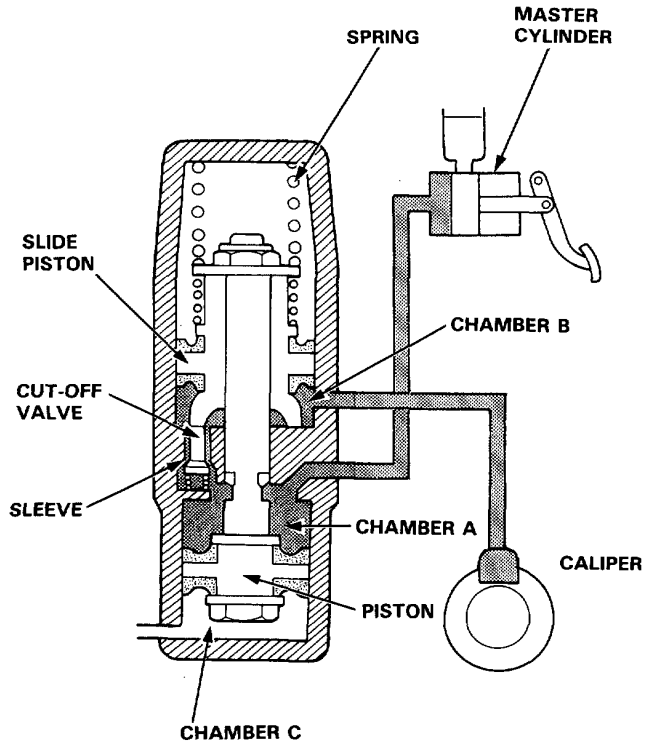

(cont'd)

Features/Construction/Operation (cont'd)

2) When the fluid pressure from the master cylinder reaches the turning point, the force on the slide piston overcomes the force of the spring, causing the slide piston to travel upward.
The cut-off valve, previously being in contact with the bottom of the slide piston, then moves upward and the cut-off valve shoulder hits the sleeve, blocking the fluid passages (the fluid pressure at this point is called the turning point).

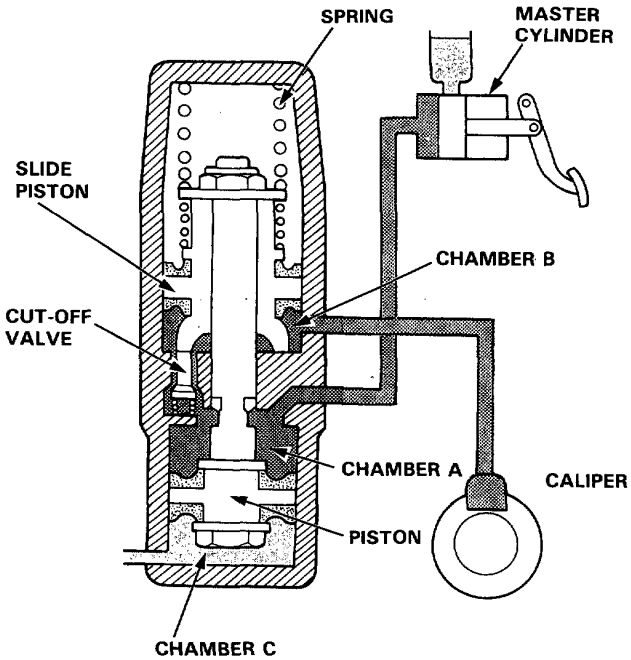

(2) After the turning point:
As the fluid pressure from the master cylinder increases, the pressure in chamber A becomes higher, causing a force to push down the large diameter portion of the piston. Consequently, the slide piston comes down, the cut-off valve is pushed downward by the bottom of the slide piston, allowing chambers A and B to connect momentarily. As this occurs, pressure in chamber B increases, the slide piston is pushed upward, the cut-off valve goes up, and the connection between chamber A and chamber B is blocked again. As described above, when the pressure in the master cylinder is above the turning point, the slide piston reduces the pressure in the rear caliper to the prescribed amount by repeating this process.

Circuit Diagram

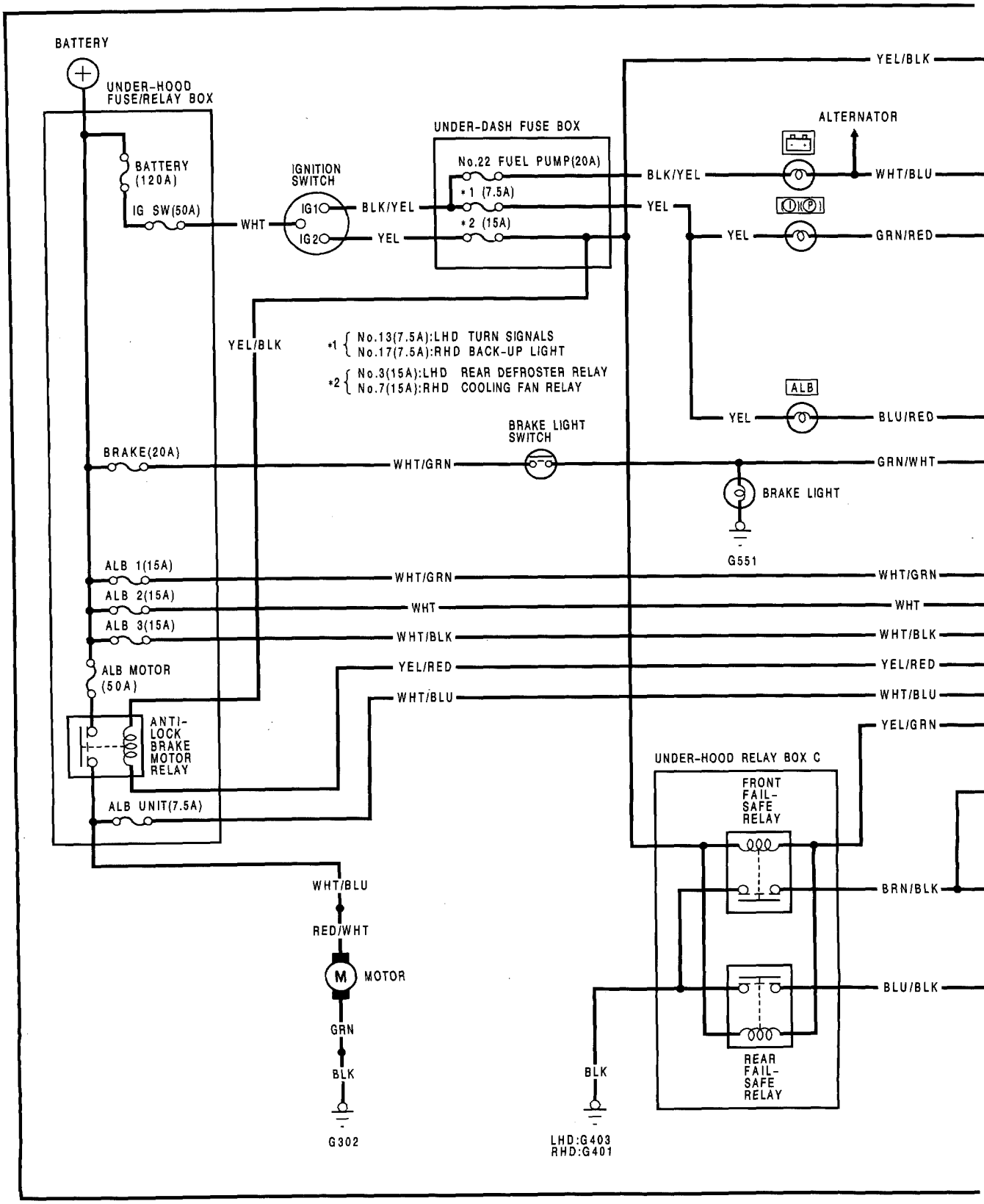

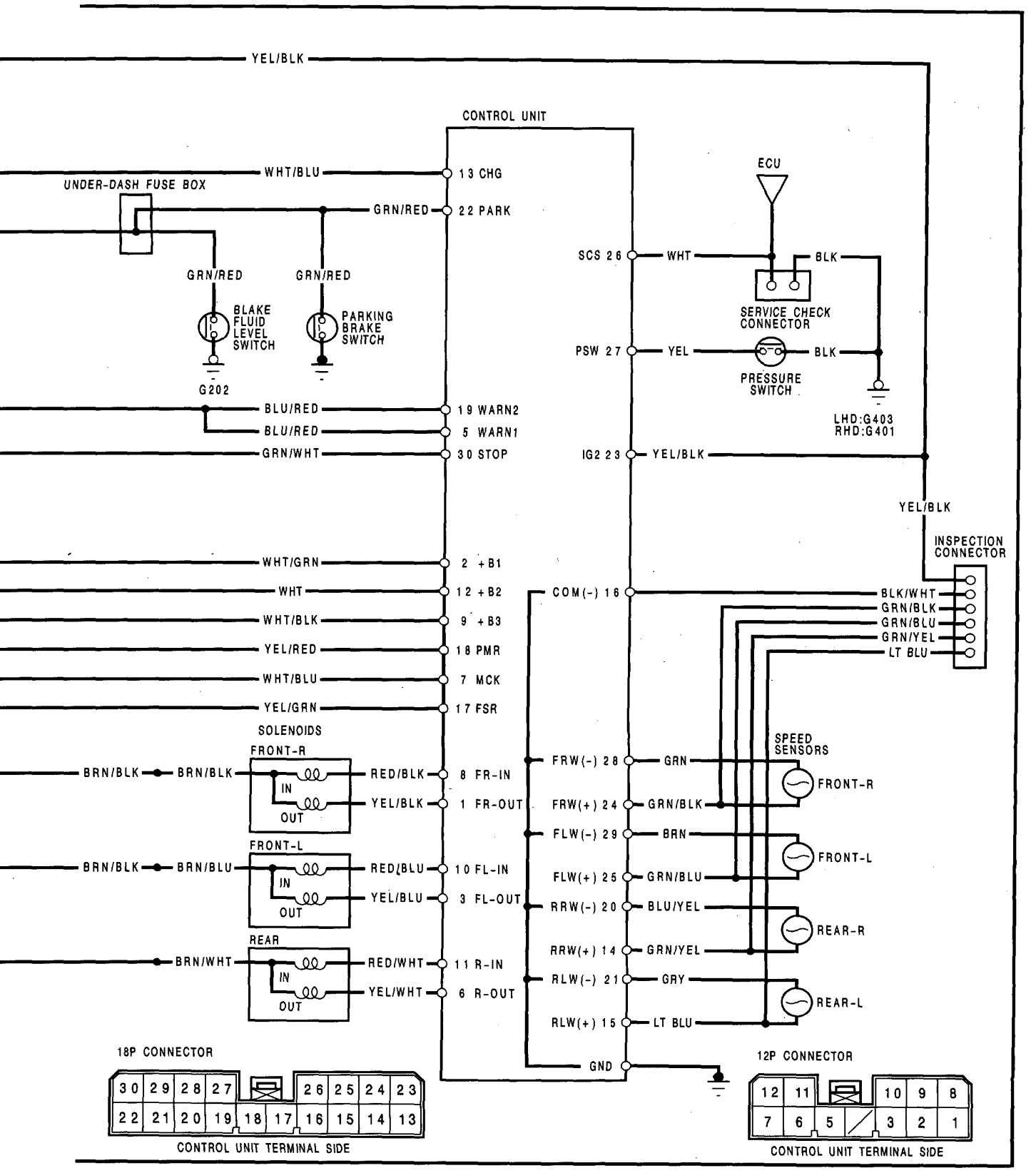
YEL/BLK
CONTROL UNIT
WHT/BLU
13 CHG
UNDER-DASH FUSE BOX
GRN/RED
22 PARK
ECU
SCS 26
WHT
BLK
GRN/RED
GRN/RED
BLAKE FLUID LEVEL SWITCH
PARKING BRAKE SWITCH
SERVICE CHECK CONNECTOR
PSW 27
YEL
BLK
PRESSURE SWITCH
G202
BLU/RED
19 WARN2
BLU/RED
5 WARN1
LHD:G403
RHD:G401
GRN/WHT
30 STOP
IG2 23
YEL/BLK
YEL/BLK
INSPECTION CONNECTOR
WHT/GRN
2 +B1
WHT
12 +B2
COM(-) 16
BLK/WHT
GRN/BLK
GRN/BLU
GRN/YEL
LT BLU
WHT/BLK
9 +B3
YEL/RED
18 PMR
WHT/BLU
7 MCK
YEL/GRN
17 FSR
SOLENOIDS
FRONT-R
SPEED SENSORS
BRN/BLK
BRN/BLK
RED/BLK
8 FR-IN
IN
YEL/BLK
1 FR-OUT
OUT
FRW(-) 28
GRN
FRONT-R
FRW(+) 24
GRN/BLK
FRONT-L
FLW(-) 29
BRN
FRONT-L
BRN/BLK
BRN/BLU
RED/BLU
10 FL-IN
IN
YEL/BLU
3 FL-OUT
OUT
FLW(+) 25
GRN/BLU
RRW(-) 20
BLU/YEL
REAR-R
REAR
RRW(+) 14
GRN/YEL
BRN/WHT
RED/WHT
11 R-IN
IN
YEL/WHT
6 R-OUT
OUT
RLW(-) 21
GRY
REAR-L
RLW(+) 15
LT BLU
GND
18P CONNECTOR
30 29 28 27 26 25 24 23
22 21 20 19 18 17 16 15 14 13
CONTROL UNIT TERMINAL SIDE
12P CONNECTOR
12 11 10 9 8
7 6 5 3 2 1
CONTROL UNIT TERMINAL SIDE

Wiring/Connector Location

NOTE: RHD typs is symmetrical to LHD typs.

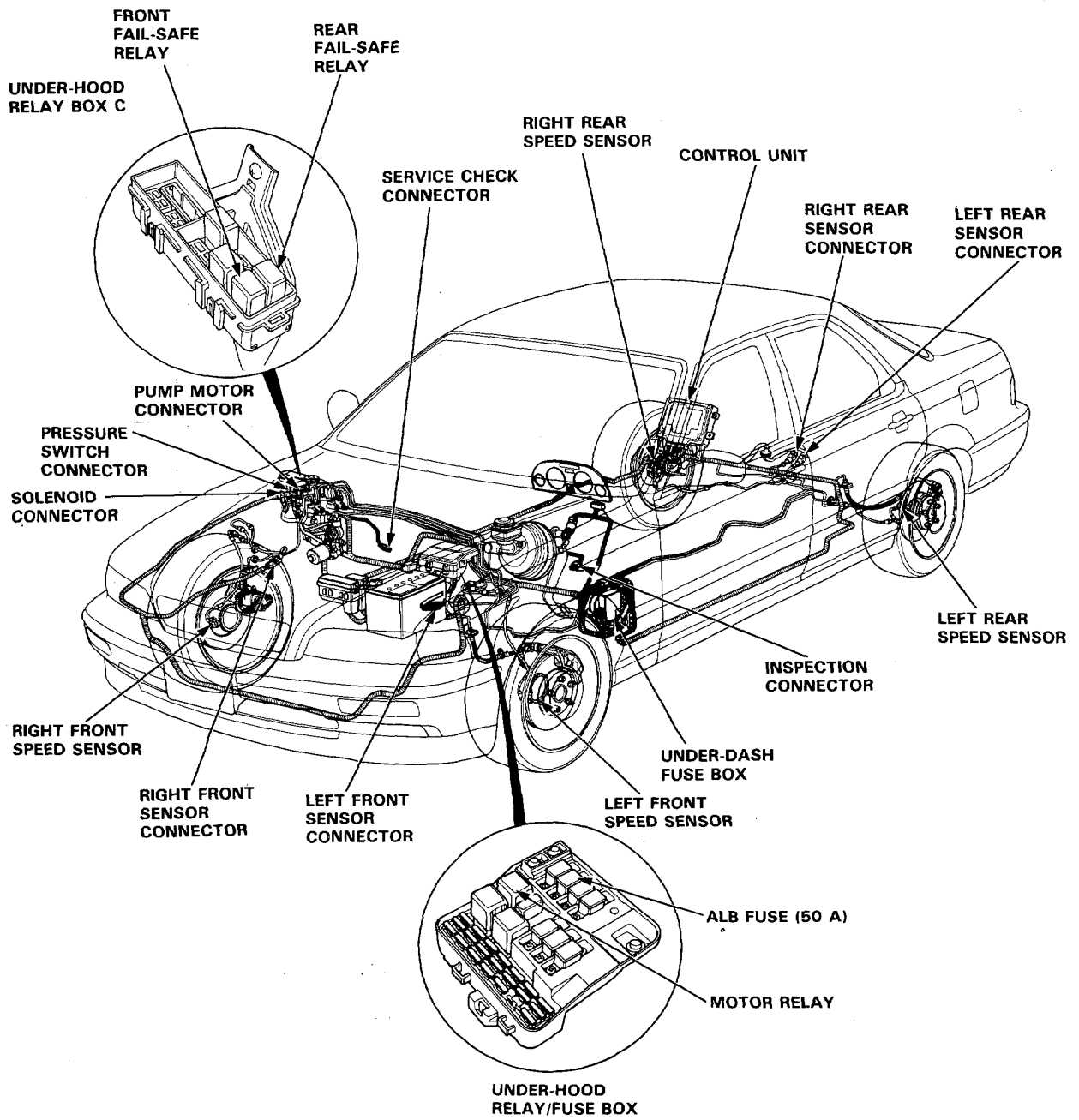

ALB Checker

Function Test

NOTE:
- The ALB checker is designed to confirm proper operation of the anti-lock brake system by simulating each system function and operating condition. Before using the checker, confirm that the anti-lock brake system indicator light is not indicating some other problem with the system. The light should go on when the ignition is first turned on and then go off and stay off one second after the engine is started.
- The checker should be used through modes 1-5 to confirm proper operation of the system in any one of the following situations:
  - After replacing any anti-lock brake system component.
  - After replacing or bleeding the system fluid (0 mode not necessary).
  - After any body or suspension repair that may have affected the sensors or their wiring.
- The procedure for modes 1-5 are on this page and 19-54, mode 0 (wheel sensor signal) is on page 19-55.
- Use the following models of ALB checkers:
  07HAJ–SG00601
  or
  07508–SB00000
  and
  07HAJ–SG00400 (Adaptor)

⚠WARNING Disconnect the ALB checker before driving the car. A collision can result from a reduction, or complete loss, of braking ability causing severe personal injury or death.

1. With the ignition switch off, disconnect the 6-P inspection connector from the connector cover located on the cross-member under the passenger's seat and connect the 6-P inspection connector to the ALB checker.

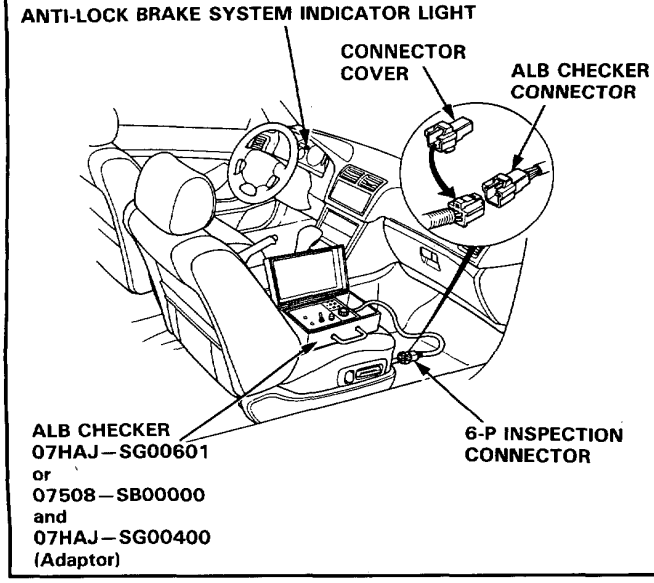

NOTE: Place the vehicle on level ground with the wheels blocked, put the transmission in neutral for manual transmission models, and in P for automatic transmission models.

2. Start the engine and release the parking brake.

3. Operate the ALB checker as follows:
   (1) Turn the Mode Selector switch to "1."
   (2) Push the Start Test switch:
   - The test in progress light should come ON.
   - In one or two more seconds, all four monitor lights should come on (If not the checker is faulty).
   - The anti-lock brake system indicator light should not come ON (If it comes on the checker harness to the 6-P connector connection is faulty).

NOTE: When the test in progress indicator light is ON. Don't turn the Mode Selector switch.

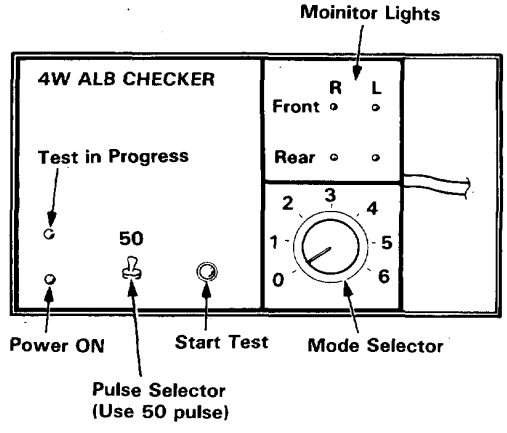

4. Turn the Mode Selector Switch to "2."

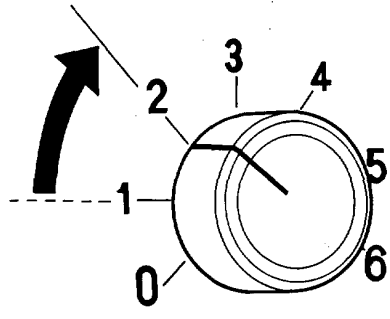

(cont'd)

Function Test (cont'd)

5. Depress the brake pedal firmly and push the Start Test switch.
   The anti-lock brake system indicator light should not go on while the Test in Progress light is ON. There should be kickback on the brake pedal. If not as described, go to troubleshooting, page 19-58.

   NOTE: The operation sequence simulated by Modes 2, 3, 4 and 5:

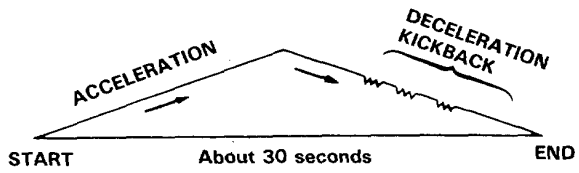

6. Turn the Mode Selector switch to 3, 4 and 5.
   Perform step 5 for each of the test mode positions.

Mode 1:
Sends the simulated driving signal 0 km/h (0 mph) → 180 km/h (112.5 mph) → 0 km/h (0 mph) of each wheel to the control unit to check the control unit self diagnosis circuit. There should be NO kickback.

Mode 2:
Sends the driving signal of each wheel, then sends the lock signal of the left rear wheel to the control unit. There should be kickback.

Mode 3:
Sends the driving signal of each wheel, then sends the lock signal of the right rear wheel to the control unit. There should be kickback.

Mode 4:
Sends the driving signal of each wheel, then sends the lock signal of the left front wheel to the control unit. There should be kickback.

Mode 5:
Sends the driving signal of each wheel, then sends the lock signal of the right front wheel to the control unit. There should be kickback.

Mode 6:
Not used on this model.

Inspection points:

1. The anti-lock brake system indicator light comes ON in mode 1.
   - Check the wiring.

2. There is no kickback in modes 2 through 5.
   - Shorted wires.
   - Faulty or disconnected power unit connector.
   - Faulty power unit.

Wheel Sensor Signal Confirmation

NOTE: Use the ALB checker (mode 0) to confirm proper wheel sensor operation.

1. Disconnect the 6-P inspection connector from the connector cover located on the cross-member under the passenger's seat and connect the 6-P inspection connector to the ALB checker.

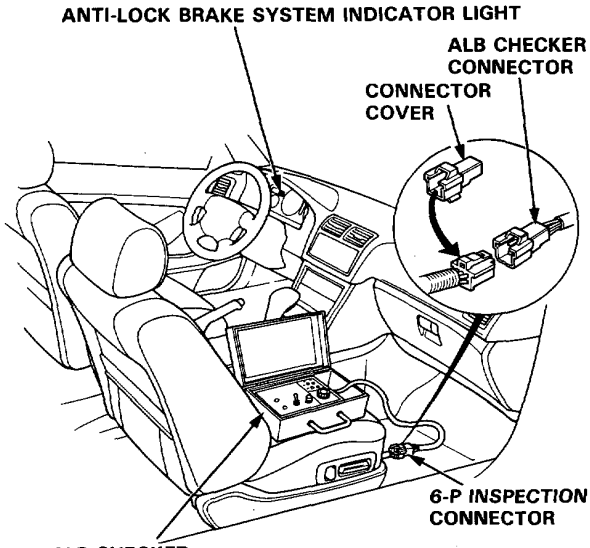

ALB CHECKER
07HAJ—SG00601
or
07508—SB00000
and
07HAJ—SG00400 (Adaptor)

2. Raise the car so that all four wheels are off the ground and support on safety stands.

3. Turn the ignition switch ON.

4. Turn the Mode Selector switch to "0."

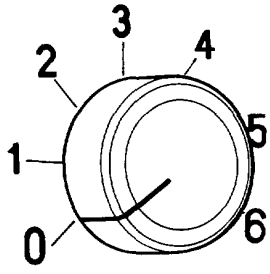

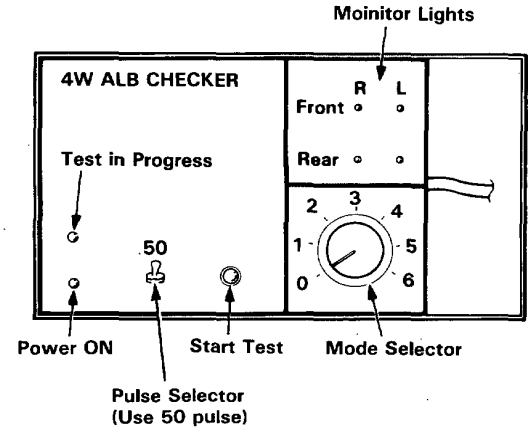

5. With the transmission in neutral, rotate each wheel briskly (one revolution per second) by hand, and confirm that its respective monitor light on the checker blinks as the wheel rotates.

   NOTE:
   - Rotating a wheel too slowly will produce only a weak blink of its monitor light that may be difficult to see.
   - In bright sunlight, the monitor light may be difficult to see. Perform tests in a shaded area.
   - In some instances, it may not be possible to spin the front wheels fast enough to get a monitor indication. If necessary, start the engine and slowly accelerate and decelerate the front wheels. The monitor lights should blink, indicating a good wheel sensor signal.

If any monitor light fails to blink, check the suspected sensor, its air gap and its wiring/connectors.

Anti-lock Brake System Indicator Light

Temporary Driving Conditions:

1. The anti-lock brake system indicator light comes on and the control unit memorizes the problem under certain conditions.

   NOTE: Problem codes explained on pages 19-58.

   - The tire(s) adhesion is lost due to excessive cornering speed.
     Problem codes: 5, 5-4, 5-8.
   - The vehicle loses traction when starting from a stuck condition on a muddy, snowy, or sandy road.
     Problem code: 4-1, 4-2, 4-4, 4-8.
   - When the parking brake is applied for more than 30 seconds while the vehicle is being driven.
     Problem code: 2-1.
   - The vehicle is driven on an extremely rough road.

2. The anti-lock brake system is OK if the anti-lock brake system indicator light goes off after the engine is restarted.

   ANTI-LOCK BRAKE SYSTEM INDICATOR LIGHT

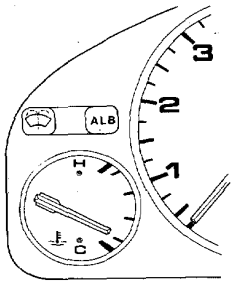

3. If you receive a customer's report that the anti-lock brake system indicator light sometimes comes on, check the system using the ALB checker to confirm whether there is any trouble in the system.
   See page 19-53.

4. The anti-lock brake system indicator light will come on and the control unit will memorize a problem code when there is insufficient battery voltage to the control unit. An example would be when the battery is so weak that the car must be jump-started. After the battery is sufficiently recharged, the anti-lock brake system indicator light will work normally after the engine is stopped and restarted.

   However, after recharging the battery, the problem code must be cleared from the control unit's memory by disconnecting the ALB 2 (15 A) fuse for at least 3 seconds.

Anti-lock Brake System Indicator Light Circuit:

CAUTION: Use only the digital multimeter to check the system.

1. The indicator light does not go on when the ignition switch is turned on.

   Check the following items. If they are OK, check the control unit connectors. If not loose or disconnected, substitute a known-good control unit and recheck:

   - Blown anti-lock brake system indicator light bulb.
   - Open circuit in YEL wire between No. 13 (7.5 A) fuse and gauge assembly.
   - Open circuit in BLU/RED wire between gauge assembly and control unit.
   - Loose component grounding of the control unit to the body.

2. The anti-lock brake system indicator light remains ON after the engine is started, however the anti-lock brake system indicator light does not blink any code or sub-code. Check the following items:

   - Loose or poor connection of the wire harness at the control unit.
   - Faulty ALB 2 (15 A) fuse.
   - Open circuit in WHT wire between ALB 2 (15 A) fuse and control unit.
   - Open circuit in YEL/BLK wire between fuse No. 3 (15 A) and fail-safe relay(s).
   - Open or short circuit in the YEL/GRN wire between fail-safe relay(s).
   - Short circuit in BLU/RED wire between gauge assembly and control unit.
   - Open circuit in WHT/BLU wire between alternator and control unit.

If the problem is not found, substitute a known-good control unit and recheck whether the anti-lock brake system indicator light remains ON.

Comes on and remains on while running:

1. Stop the engine.
2. Turn the ignition switch on and make sure that the anti-lock brake system indicator light comes on.
3. Restart the engine and check the anti-lock brake system indicator light.
   - There is no problem in the anti-lock brake system if the anti-lock brake system indicator light goes off.
   - Go to step 4 if the anti-lock brake system indicator light goes off and then comes back on.
4. Stop the engine.
5. Disconnect the service check connector from the connector cover located under the glove box. Connect the two terminals of the service check connector with a jumper wire.
6. Turn the ignition switch on, but do not start the engine.
7. Record the blinking frequency of the anti-lock brake system indicator light. The blinking frequency indicates the problem code.

CAUTION: Before starting the engine, disconnect the jumper wire from the service check connector, or else the he Check Engine light will stay on with the engine running.

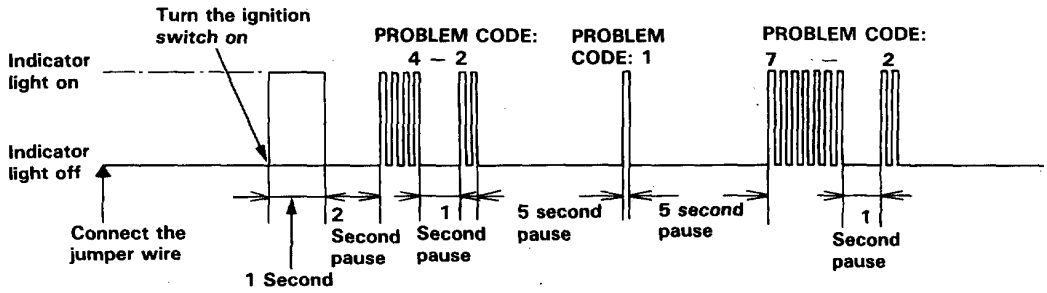

NOTE:

- The control unit can indicate three problem codes (one, two or three problems).
- If the anti-lock brake system indicator light does not light, see Troubleshooting of Anti-lock Brake System Indicator Light Circuit page 19-56.
- If you miscount the blinking frequency, turn the ignition switch off then on to cycle the anti-lock brake system indicator light again.
- After the repair is completed, disconnect the ALB 2 (15 A) fuse for at least 3 seconds to erase the control unit's memory. Then turn the ignition key on again and recheck.
- The memory is erased if the connector is disconnected from the control unit or the control unit is removed from the body.

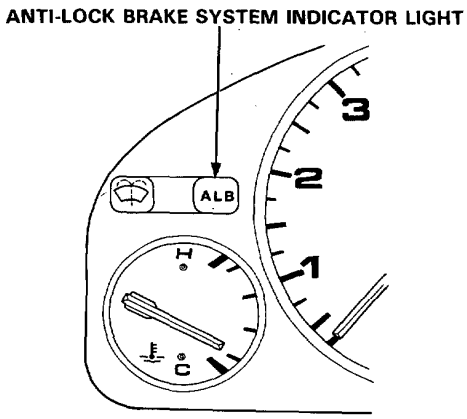

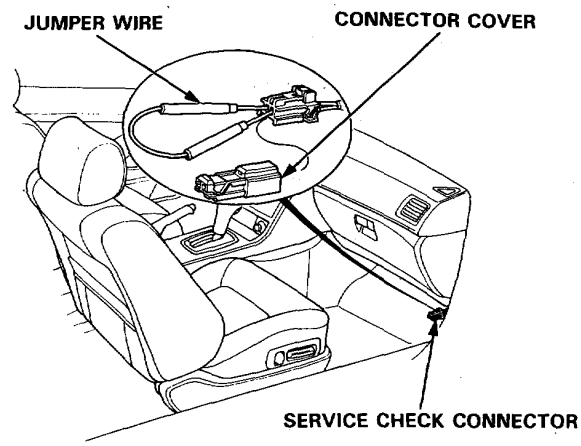

Symptom-to-System Chart

PROBLEM CODE		PROBLEMATIC COMPONENT/ SYSTEM	AFFECTED				See page	OTHER COMPONENT	See page
MAIN CODE	SUB CODE		FRONT RIGHT	FRONT LEFT	REAR RIGHT	REAR LEFT			
1	–	Pump motor over-run	–	–	–	–	19-59	Motor fuse Motor relay Pressure switch	19-87
	2	Pump motor circuit problem	–	–	–	–	19-61	Motor relay unit fuse	19-87
	3	High pressure leakage	–	–	–	–	19-64	Solenoid	
	4	Pressure switch	–	–	–	–	19-65		
	8	Accumulator gas leakage	–	–	–	–	19-66		
2	1	Parking brake switch-related problem	–	–	–	–	19-66	Brake fluid level switch (D)(P) light	
3	1	Pulser(s)	○				19-88		
	2			○					
	4				○				
	8					○			
4	1	Speed sensor	○				19-67		
	2			○					
	4				○				
	8					○			
5	–	Speed sensor(s)			○	○	19-68	Modulator	
	4				○				
	8					○			
6	–	Fail-safe relay (short)	–	–	–	–	19-69 (Function Test)	Front or rear fail-safe relay	19-87
	1		–	–	–	–		Front fail-safe relay	
	4		–	–	–	–		Rear fail-safe relay	
7	1	Solenoid related problem (Open)	○				19-73	ALB 3 fuse	
	2			○				ALB 1 fuse Front fail-safe relay	
	4				○	○		Rear fail-safe relay	

Flowcharts

Problem code 1: Pump Motor Over-run
CAUTION: Use only the digital multimeter to check the system.

Bleed high pressure fluid from the maintenance bleeder with the Bleeder T-wrench (see page 19-78).

Remove the pump motor relay.

Connect the No. 1 and No. 2 terminals using a jumper wire for about 8 seconds.

Does the pump motor run with an increasingly loud, raspy sound?

NO → **Pump runs with a constant soft sound: Bleed air from anti-lock brake system using the procedure on page 19-78 and check the pump sound again.**

YES

Check the accumulator fluid quantity by bleeding the high pressure line with the Bleeder T-wrench.

Is there 40—70 cc?

NO → (To page 19-60)

YES

(To page 19-60)

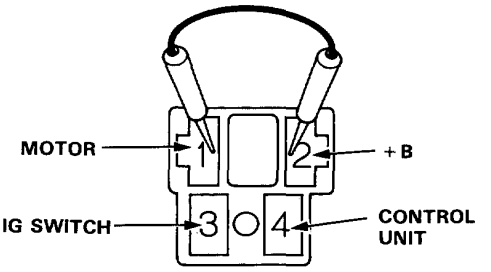

View from under-hood relay/fuse box terminal side.

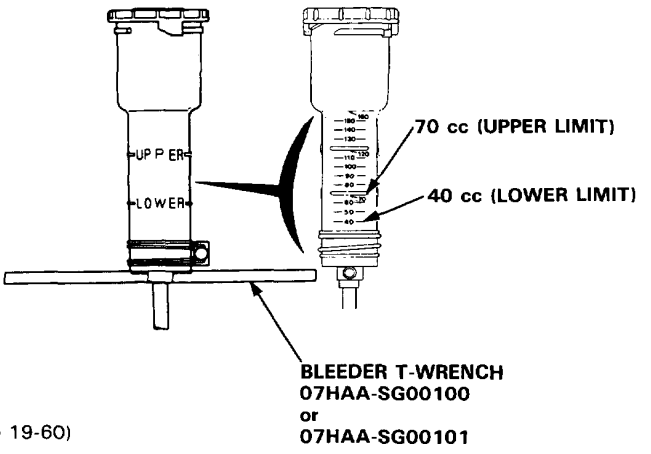

(cont'd)

Flowcharts (cont'd)

(From page 19-59)

Connect the No.1 and No.2 terminals using a jumper wire for about 10 seconds.

Disconnect the pressure switch 2-P connector and check the continuity between the No.1 (YEL) and No.2 (YEL) terminals.

Is there continuity?

NO → **Faulty pressure switch.**

YES → **Faulty accumulator (leakage).**

(From page 19-59)

Connect the No.1 and No.2 terminals using a jumper wire for about 10 seconds.

Check if there is any change in the fluid level in the resevoir tank.

Is there any change?

NO → **Faulty pump motor (Relief valve is defective and open).**

YES → **Faulty solenoid (leakage).**

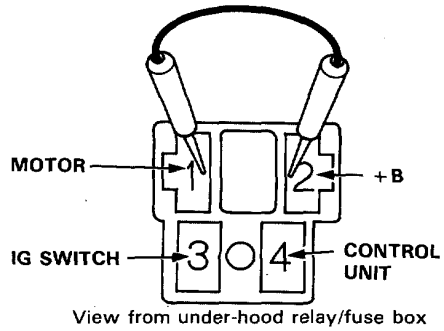

View from under-hood relay/fuse box terminal side.

SWITCH-SIDE CONNECTOR

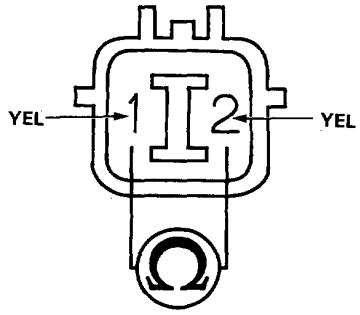

View from terminal side.

Problem code 1-2: Pump Motor Circuit Problem

CAUTION: Use only the digital multimeter to check the system.

NOTE: If a malfunction is detected, this code appears and the fail-safe function is activated. The indicator light comes ON after restarting the engine until the malfunction code is erased (by disconnecting the ALB 2 fuse for 3 seconds).

Pre-test steps:
- Check ALB MOTOR (50A) FUSE
- Check No.3 (15A) FUSE
- Check ALB UNIT (7.5A) FUSE

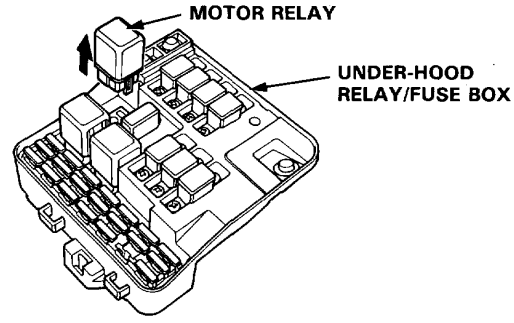

Remove and check the pump motor relay (page 19-87).

Does it work properly? — NO → **Faulty pump motor relay.**

YES

Connect the No.1 and No.2 terminals using a jumper wire.

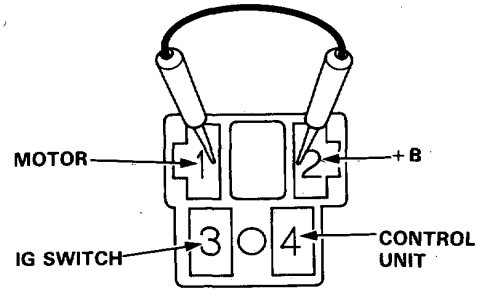

View from under-hood relay/fuse box terminal side.

Does the pump motor run? — NO → (To page 19-63)

YES

Disconnect the jumper wire.

Disconnect the 2-P connector from the pump motor.

(To page 19-62)

(cont'd)

Flowcharts (cont'd)

(From page 19-61)

Remove the ALB UNIT (7.5A) fuse from under-hood relay/fuse box.

Turn the ignition switch ON.

Check for voltage between the under-hood relay/fuse box ALB unit fuse A terminal and body ground.

Is there battery voltage?

- NO → **Repair open in WHT/BLU wire between the ALB unit fuse and control unit.**
- YES ↓

Reinstall the fuse to the under-hood relay/fuse box.

Check for voltage between the pump motor relay No.1 terminal (+) and body ground (−).

Is there battery voltage?

- NO → **Faulty under-hood relay/fuse box.**
- YES ↓

Check for voltage between the No.3 terminal and body ground.

Is there battery voltage?

- ON → **Repair open in YEL/BLK wire between the fuse and pump motor relay.**
- YES ↓

Reinstall the pump motor relay.

Disconnect the 18-P connector from the control unit.

Check for voltage between the control unit connector No.18 (YEL/RED) terminal and body ground.

Is there battery voltage?

- ON → **Repair open in YEL/RED wire between the pump motor relay and control unit.**
- YES ↓

Check for loose control unit connectors. If necessary, substitute a known-good control unit and recheck.

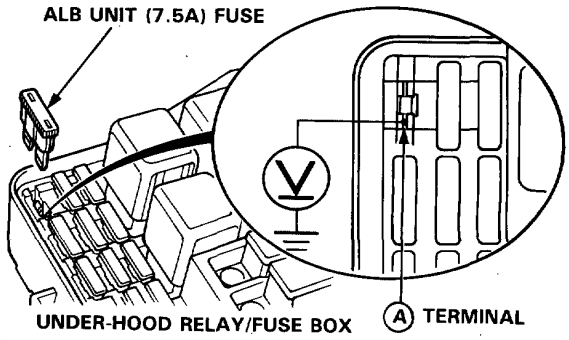

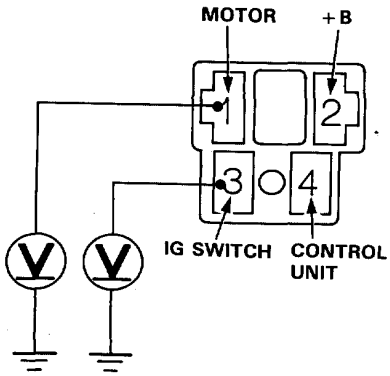

View from under-hood relay/fuse box terminal side.

18-P CONNECTOR

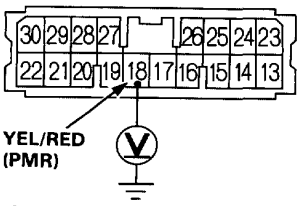

View from control unit terminal side.

(From page 19-61)

Check for voltage between the No.2 terminal (+) and body ground (−).

Is there battery voltage?

NO → **Faulty under-hood relay/fuse box.**

YES

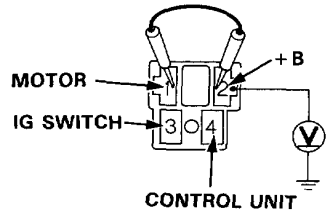

View from under-hood relay/fuse box terminal side.

Diconnect the 2-P connectors from the pump motor.

Check for voltage between the No.1 (WHT/BLU) terminal (+) and body ground (−).

Is there battery voltage?

NO → **Repair open in WHT/BLU wire between the motor relay and pump motor.**

YES

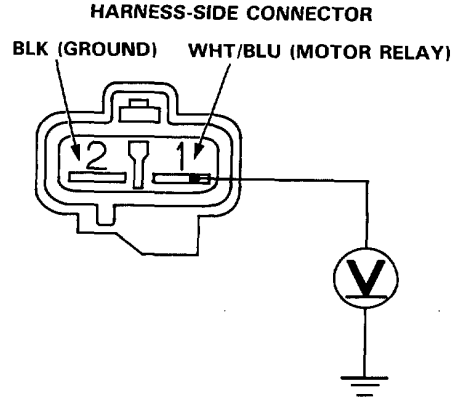

View from terminal side.

Check for voltage between the No.1 (WHT/BLU) terminal (+) and No.2 (BLK) terminal (−).

Is there battery voltage?

NO → **Repair open in BLK wire between the pump motor and ground or poor ground (G 302).**

YES

Faulty pump motor.

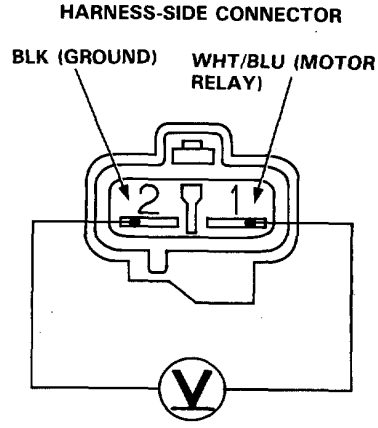

View from terminal side.

(cont'd)

Flowcharts (cont'd)

Problem code 1-3: High Pressure leakage

CAUTION: Use only the digital multimeter to check the system.

Pre-test steps:
- Check reservoir fluid level, and if necessary, fill to the MAX level.
- Check for fluid leaks from the functional parts and replace the faulty parts if there is a leak.

Functional parts:
- Modulator
- Power unit
- High pressure hoses

Bleed high pressure fluid from the maintenance bleeder with the Bleeder T-wrench (See page 19-78).

Remove the pump motor relay.

Connect the No.1 and No.2 terminals using a jumper wire for about 10 seconds.

Disconnect the 2-P connector from the pressure switch.

After 30 minutes, check for continuity between the No.1 (YEL) and No.2 (YEL) terminals on the switch side of connector.

Is there continuity?

YES → **Vehicle is OK at this time.**

NO → **Faulty solenoid (leakage).**

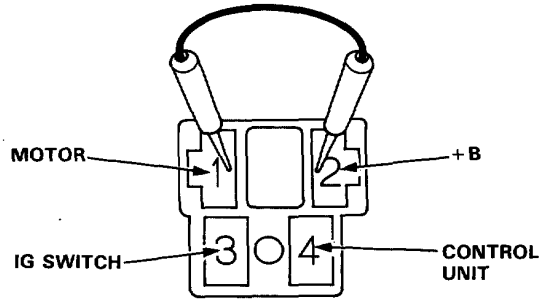

View from under-hood relay/fuse box terminal side.

SWITCH-SIDE CONNECTOR

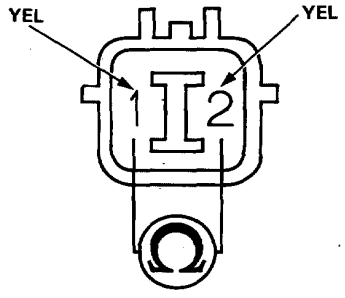

View from terminal side.

Problem code 1-4: Pressure Switch Circuit

CAUTION: Use only the digital multimeter to check the system.

Bleed high pressure fluid from the maintenance bleeder with the Bleeder T-wrench (See page 19-78).

Disconnect the 2-P connector from the pressure switch.

Check the continuity of pressure switch between the No.1 (YEL) and No.2 (YEL) terminals.

Is there continuity?

YES → **Faulty pressure switch (closed).**

NO

Check for continuity between the No.1 (YEL) terminal and body ground on the harness-side connector.

Is there continuity?

YES → **Repair short YEL wire between the control unit and pressure switch.**

NO

Check for loose control unit conectors. If necessary, substitute a known-good control unit and recheck.

SWITCH-SIDE CONNECTOR

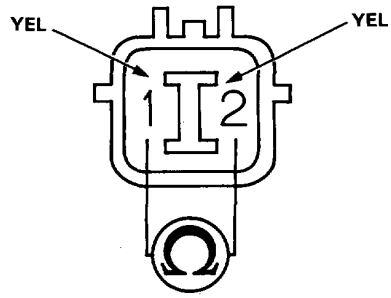

View from terminal side.

HARNESS-SIDE CONNECTOR

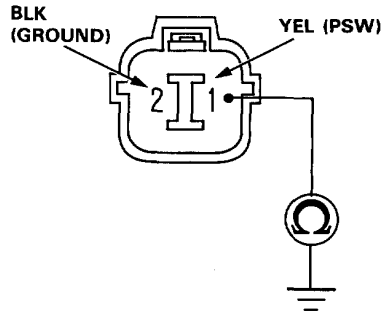

View from terminal side.

(cont'd)

Flowcharts (cont'd)

Problem Code 1-8: Accumulator Gas Leakage
Check the following items:

- The relief plug is loose.
- The relief plug O-ring is out of place.
- Bleed the high pressure line with the Bleeder T-wrench. If no fluid comes out, it is likely that all gas has leaked.

NOTE: If a malfunction is detected, this code appears and the fail-safe function is activated. The indicator light comes ON after restarting the engine until the malfunction code is erased (by disconnecting the ALB 2 fuse for 3 seconds).

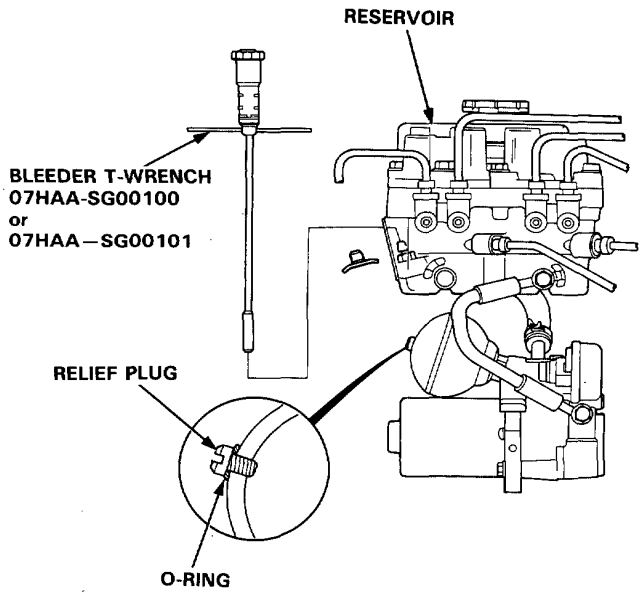

Problem code 2-1: Parking Brake Switch Related Problem
If the parking brake has been released, the following items are possible causes. If they are OK, check the control unit connectors for good connection. If not loose or disconnected, substitue a known-good control unit and recheck.

NOTE: Before Troubleshooting Problem Code 2-1, remove the ALB 2 (15A) fuse for 3 seconds to clear the control unit's memory, then test drive the car.
If the anti-lock brake system indicator light stays off, the probability is that the car was driven with the parking brake applied.

- The parking brake is applied for more than 30 seconds while driving.
- The brake fluid level in the master cylinder is too low.
- GRN/RED wire is shorted between the (D)(P) indicator light and parking brake switch.
- GRN/RED wire is shorted between the (D)(P) indicator light and brake fluid level switch.
- The (D)(P) indicator light is blown.
- GRN/RED has an open between the (D)(P) indicator light and parking brake switch.
- GRN/RED has an open between the parking brake switch and control unit.

Problem Code 4-1 to 4-8: Speed Sensor

CAUTION: Use only the digital multimeter to check the system.

NOTE: If a malfunction is detected, this code appears and the fail-safe function is activated. The indicator light comes ON after restarting the engine until the malfunction code is erased (by disconnecting the ALB 2 fuse for 3 seconds).

Disconnect the 18-P connector from the control unit.

Check each sensor for continuity between the positive and negative:
- GRN/BLK: Front Right Positive
  GRN: Front Right Negative
- GRN/BLU: Front Left Positive
  BRN: Front Left Negative
- GRN/YEL: Rear Right Positive
  BLU/YEL: Rear Right Negative
- LT BLU: Rear Left Positive
  GRY: Rear Left Negative

Is there
Front: 500-1000Ω,
Rear : 1000-1500Ω?

YES → Check for continuity to ground of wire and sensor.

Is there continuity?

YES → Repair short in sensor wire or faulty speed sensor.

NO → **Check for loose control unit connecters. If necessary, substitute a known-good control unit and recheck.**

NO → Disconnect the wire harness from speed sensor.

Check for resistance between the sensor terminals.

Is there
Front: 500-1000Ω,
Rear : 1000-1500Ω?

NO → **Faulty speed sensor.**

YES → Reconnect the 18-P connector from the control unit.

Check each wire for continuity between the speed sensor harness-side terminals and body ground.

Is there continuity?

NO → **Repair open in sensor wire.**

YES → **Check for loose control unit connectors. If necessary, substitute a known-good control unit and recheck.**

Positive: Less than 3.8 kΩ is OK.
Negative: Less than 1 Ω is OK.

18-P CONNECTOR

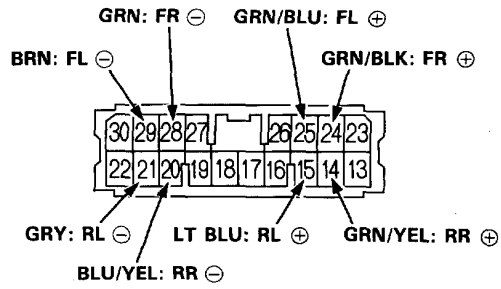

View from control unit terminal side.

SENSOR-SIDE CONNECTOR

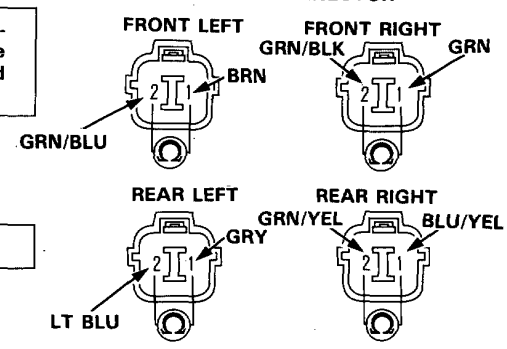

View from terminal side.

HARNESS-SIDE CONNECTOR

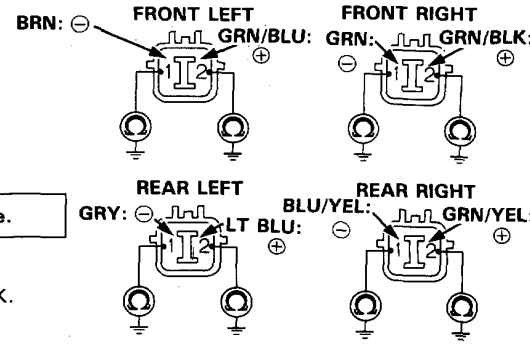

View from terminal side.

(cont'd)

Flowcharts (cont'd)

Problem Code 5 to 5-8: Speed Sensor(s)

CAUTION: Use only the digital multimeter to check the system.

NOTE: If a malfunction is detected, this code appears and the fail-safe function is activated. The indicator light comes ON after restarting the engine until the malfunction code is erased (by disconnecting the ALB 2 fuse for 3 seconds).

Disconnect the 18-P connector from the control unit.

Check each sensor for continuity between the positive and negative:
- GRN/YEL: Rear Right Positive
  BLU/YEL: Rear Right Negative
- LT BLU: Rear Left Positive
  GRY: Rear Left Negative

Is there 1000-1500Ω?

YES → Check for continuity to ground.

Is there continuity?

YES → **Repair short in sensor wire or faulty speed sensor.**

NO → Reconnect the 18-P connector to the control unit.

Connect the ALB checker to the inspection connector.

Check for ALB function in MODE 2 and 3.

Does it work properly?

NO → **Faulty modulator.**

YES → **Check for rear brake drag. If OK, substitute a known-good control unit and recheck.**

NO → Disconnect the wire harness from speed sensor.

Check for resistance between the sensor terminals.

Is there 1000-1500Ω?

NO → **Faulty speed sensor.**

YES → Reconnect the 18-P connector from the control unit.

Check each wire for continuity between the speed sensor harness-side terminals and body ground.

Is there continuity?

NO → **Repair open in sensor wire.**

YES → **Check for loose control unit connectors. If necessary, substitute a know-good control unit and recheck.**

18-P CONNECTOR

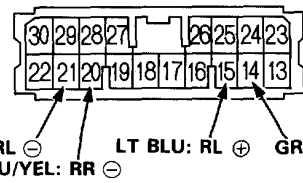

View from control unit terminal side.

SENSOR-SIDE CONNECTOR

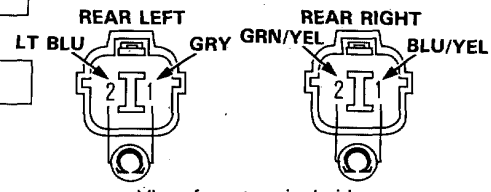

View from terminal side.

HARNESS-SIDE CONNECTOR

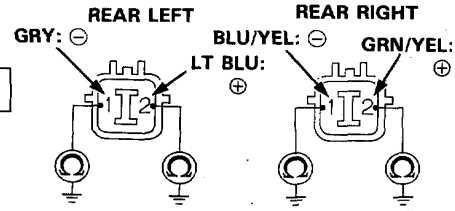

View from terminal side.

Positive: Less than 3.8 kΩ is OK.
Negative: Less than 1 Ω is OK.

Problem Code 6-1: Front Fail-Safe Relay Circuit

CAUTION: Use only the digital multimeter to check the system.

Remove the front fail-safe relay.

Check relay function (page 19-87).

Does it work properly?
- NO → **Faulty front fail-safe relay.**
- YES ↓

Disconnect the 10-P connector from the solenoid.

Check for continuity between the fail-safe relay No.2 (BRN/BLK) terminal and body ground.

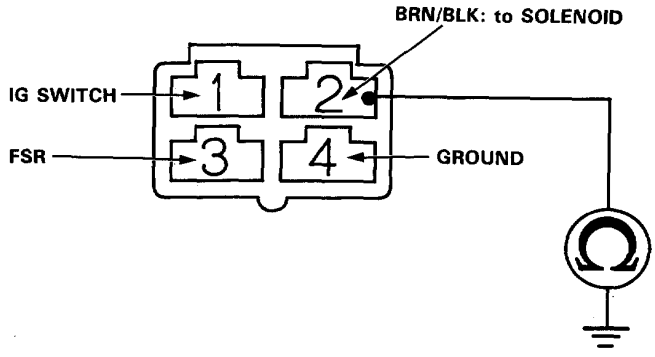

View from terminal side.

Is there continuity?
- YES → **Repair short in BRN/BLK wire between the solenoid and front fail-safe relay.**
- NO ↓

Check each wire for continuity between the solenoid terminals and body ground
No.4 (BRN/BLK): Front Right
No.6 (BRN/BLU): Front Left

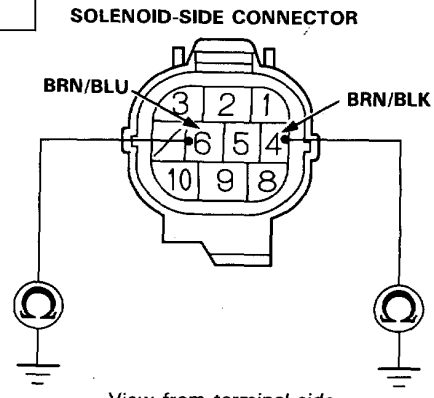

View from terminal side.

Is there continuity?
- YES → **Faulty solenoid (short).**
- NO ↓

(To page 19-70)

(cont'd)

Flowcharts (cont'd)

(From page 19-69)

Disconnect the 18-P and 12-P connector from the control unit.

Check each wire for continuity between the control unit and body ground.
No.8 (RED/BLK): Front Right Inlet
No.1 (YEL/BLK): Front Right Outlet
No. 10 (RED/BLU): Front Left Inlet
No. 3 (YEL/BLU): Front Left Outlet

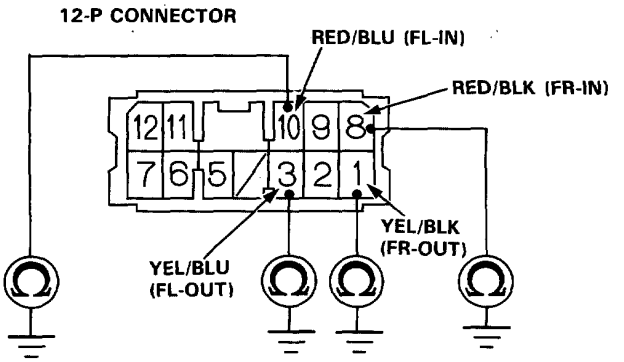

View from control unit terminal side.

Is there continuity?

YES → **Repair short in wire between the solenoid and control unit:**
RED/BLK: Front Right Inlet
YEL/BLK: Front Right Outlet
RED/BLU: Front Left Inlet
YEL/BLU: Front Left Outlet

NO

Check for continuity between the No.17 (YEL/GRN) terminal and body ground.

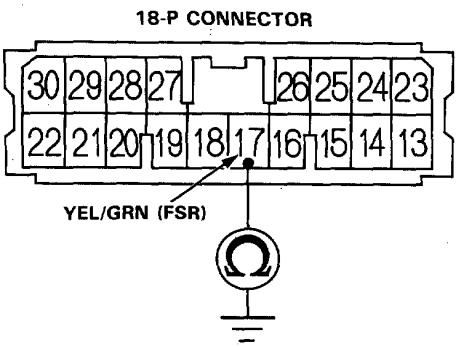

View from control unit terminal side.

Is there continuity?

YES → **Repair short in YEL/GRN wire between the control unit and front fail-safe relay.**

NO

Check for loose control unit connectors. If necessary, substitute a know-good control unit and recheck.

Problem Code 6-4: Rear Fail-Safe Relay Circuit

CAUTION: Use only digital multimeter to check the system.

Remove the rear fail-safe relay.

Check relay function (page 19-87)

Does it work properly?

NO → **Faulty rear fail-safe relay.**

YES

Disconnect the 10-P connector from the solenoid.

Check for continuity between the fail-safe relay No.2 (BLU/BLK) terminal and body ground.

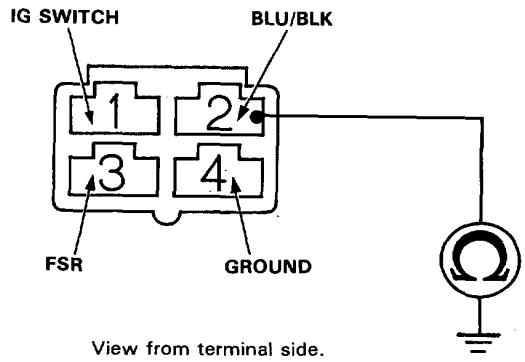

View from terminal side.

Is there continuity?

YES → **Repair short in BLU/BLK wire between the solenoid and rear fail-safe relay.**

NO

Check for continuity between the solenoid No.5 (BRN/WHT) terminal and body ground.

SOLENOID-SIDE CONNECTOR

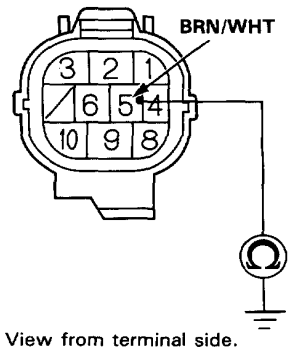

View from terminal side.

Is there continuity?

YES → **Faulty solenoid (short).**

NO

(To page 19-72)

(cont'd)

Flowcharts (cont'd)

(From page 19-71)

Disconnect the 18-P and 12-P connector from the control unit.

Check each wire for continuity between the control unit and body ground.
No.11 (RED/WHT): Rear Inlet
No.6 (YEL/WHT): Rear Outlet

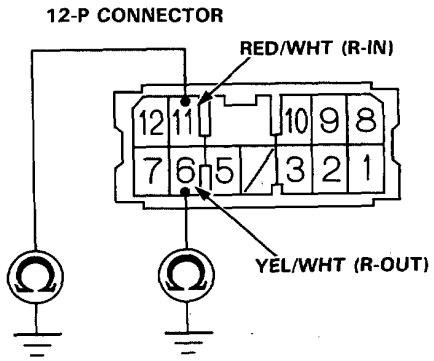

View from control unit terminal side.

Is there continuity?

YES → **Repair short in wire between the solenoid and control unit**
RED/WHT: Rear Inlet
YEL/WHT: Rear Outlet

NO

Check for continuity between the No.17 (YEL/GRN) terminal and body ground.

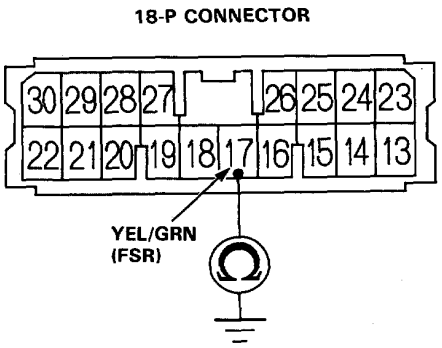

View from control unit terminal side.

Is there continuity?

YES → **Repair short in YEL/GRN wire between the control unit and rear fail-safe relay.**

NO

Check for loose control unit connectors. If necessary, substitute a known-good control unit and recheck.

Problem Code 7-1 and 7-2 Front Solenoid Related Problem

CAUTION: Use only the digital multimeter to check the system.

Disconnect the 10-P connector *from the solenoids.*

Check for resistance between the solenoid terminals:
No.1 (RED/BLK) and No.4 (BRN/BLK): Front Right Inlet
No.3 (RED/BLU) and No.6 (BRN/BLU): Front Left Inlet

Is there 1-3Ω?

NO → **Faulty solenoid.**

YES

Check for resistance between the solenoid terminals:
No.8 (YER/BLK) and No.4 (BRN/BLK): Front Right Outlet
No.10 (YER/BLU) and No.6 (BRN/BLU): Front Left Outlet

Is there 1-3Ω

NO → **Faulty solenoid.**

YES

Disconnect the 12-P connector from control unit.

Check each wire for continuity between the control unit and front solenoid:
RED/BLK: Front Right Inlet
YEL/BLK: Front Right Outlet
RED/BLU: Front Left Inlet
YEL/BLU: Front Left Outlet

Is there continuity?

NO → **Repair open in wire:**
RED/BLK: Front Right Inlet
YEL/BLK: Front Right Outlet
RED/BLU: Front Left Inlet
YEL/BLU: Front left Outlet

YES

(To page 19-74)

SOLENOID-SIDE CONNECTOR

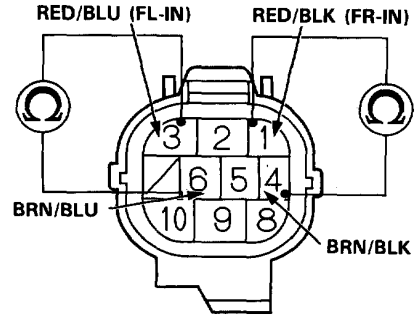

View from terminal side.

SOLENOID-SIDE CONNECTOR

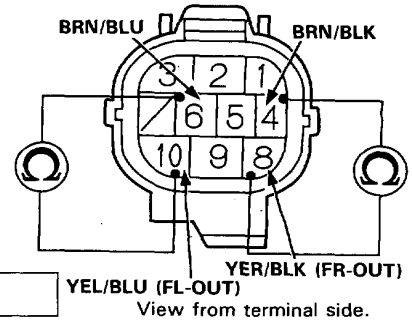

View from terminal side.

HARNESS-SIDE CONNECTOR

View from terminal side.

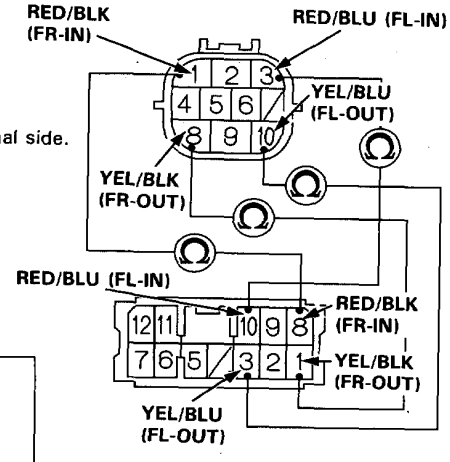

View from control unit terminal side.

(cont'd)

Flowcharts (cont'd)

(From page 19-73)

Check each wire for continuity between the control unit and body ground:
No.8 (RED/BLK): Front Right Inlet
No.1 (YEL/BLK): Front Right Outlet
No.10 (RED/BLU): Front Left Inlet
No.3 (YEL/BLU): Front Left Outlet

Is there continuity?

YES → **Repair short in wire:**
RED/BLK: Front Right Inlet
YEL/BLK: Front Right Outlet
RED/BLU: Front Left Inlet
YEL/BLU: Front Left Outlet

NO

Remove the front fail-safe relay.

Check for relay function (page 19-87).

Does it work properly?

NO → **Faulty front fail-safe relay.**

YES

Check for continuity between the No.4 (BLK) terminal and body ground.

Is there continuity?

NO → **Repair open in BLK wire between the fail-safe relay and ground or poor ground (LHD: G403, RHD: G401).**

YES

Check BRN/BLK wire for continuity between the solenoids and front fail-safe relay.

Is there continuity?

NO → **Repair open in BRN/BLK wire between the solenoids and front fail-safe relay.**

YES

Check for loose control unit connectors. If necessary, substitute a known-good control unit and recheck.

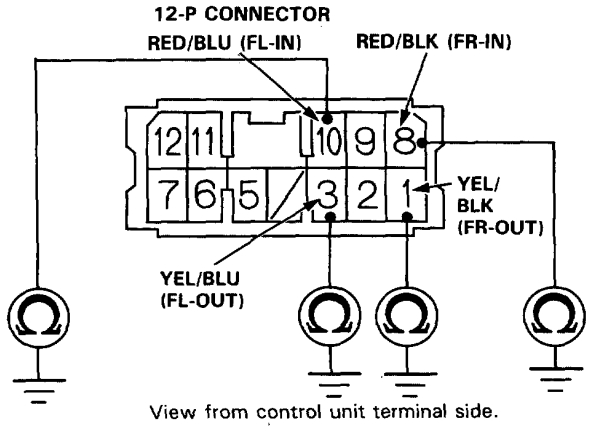

View from control unit terminal side.

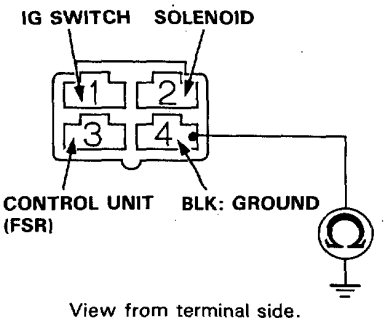

View from terminal side.

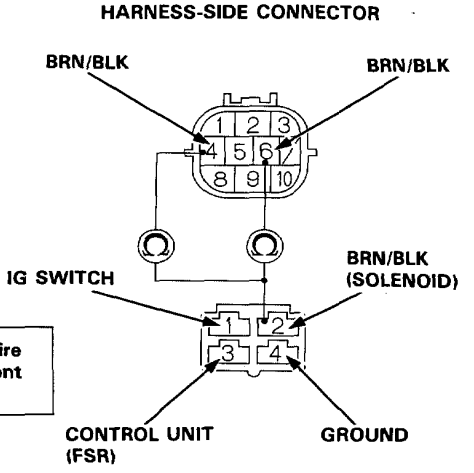

View from terminal side.

Problem Code 7-4: Rear Solenoid Problem

CAUTION: Use only the digital multimeter to check the system.

Disconnect the 10-P connector from the solenoids.

Check for resistance between the solenoid terminals:
No.2 (RED/WHT) and No.5 (BRN/WHT): Rear Inlet
No.9 (YEL/WHT) and No.5 (BRN/WHT): Rear Outlet

Is there 1-3Ω?
- NO → **Faulty solenoid.**
- YES ↓

Disconnect the 12-P connector from control unit.

Check each wire for continuity between the control unit and rear solenoid:
RED/WHT: Rear Inlet
YEL/WHT: Rear Outlet

Is there continuity?
- NO → **Repair open in wire:**
  RED/WHT: Rear Inlet
  YEL/WHT: Rear Outlet
- YES ↓

Check each wire for continuity between the control unit and body ground:
No.11 (RED/WHT): Rear Inlet
No.6 (YEL/WHT): Rear Outlet

Is there continuity?
- YES → **Repair short in wire:**
  RED/WHT: Rear Inlet
  YEL/WHT: Rear Outlet
- NO ↓

(To page 19-76)

SOLENOID-SIDE CONNECTOR

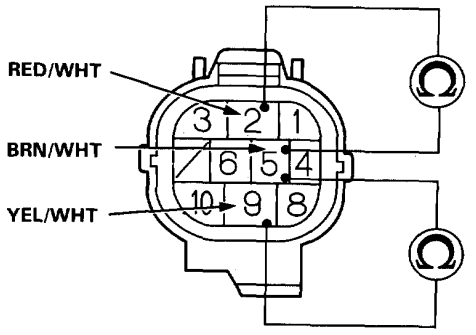

View from terminal side.

HARNESS-SIDE CONNECTOR

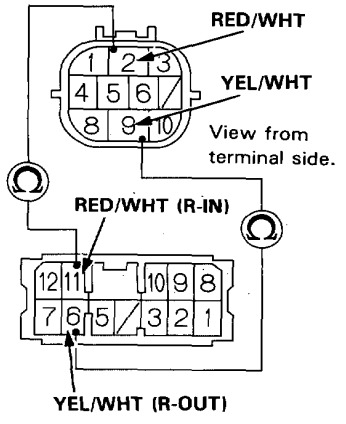

View from control unit terminal side.

12-P CONNECTOR

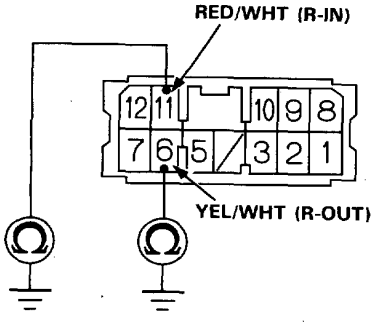

View from control unit terminal side.

(cont'd)

Flowcharts (cont'd)

(From page 19-75)

Remove the rear fail-safe relay.

Check for relay function (page 19-87).

Does it work properly?

NO → **Faulty rear fail-safe realy.**

YES

Check for continuity between the No.4 (BLK) terminal and body ground.

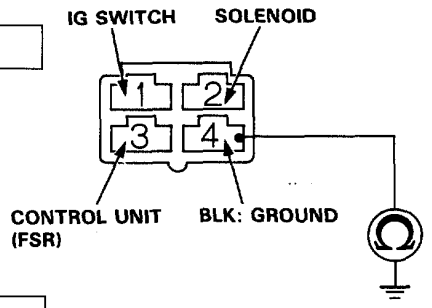

Is there continuity?

NO → **Repair open in BLK wire between the fail-safe relay and ground or poor ground (LHD: G403, RHD: G401).**

YES

View from terminal side.

Check BLU/BLK wire for continuity between the solenoid and rear fail-safe realy.

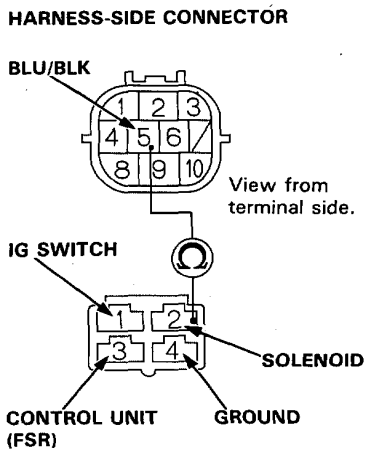

Is there continuity?

NO → **Repair open in BLU/BLK wire between the solenoid and rear fail-safe relay.**

YES

Check for loose control unit connectors. If necessary, substitute a known-good control unit and recheck.

CAUTION:

- Do not spill brake fluid on the car; it may damage the paint; if brake fluid does contact the paint, wash it off immediately with water.

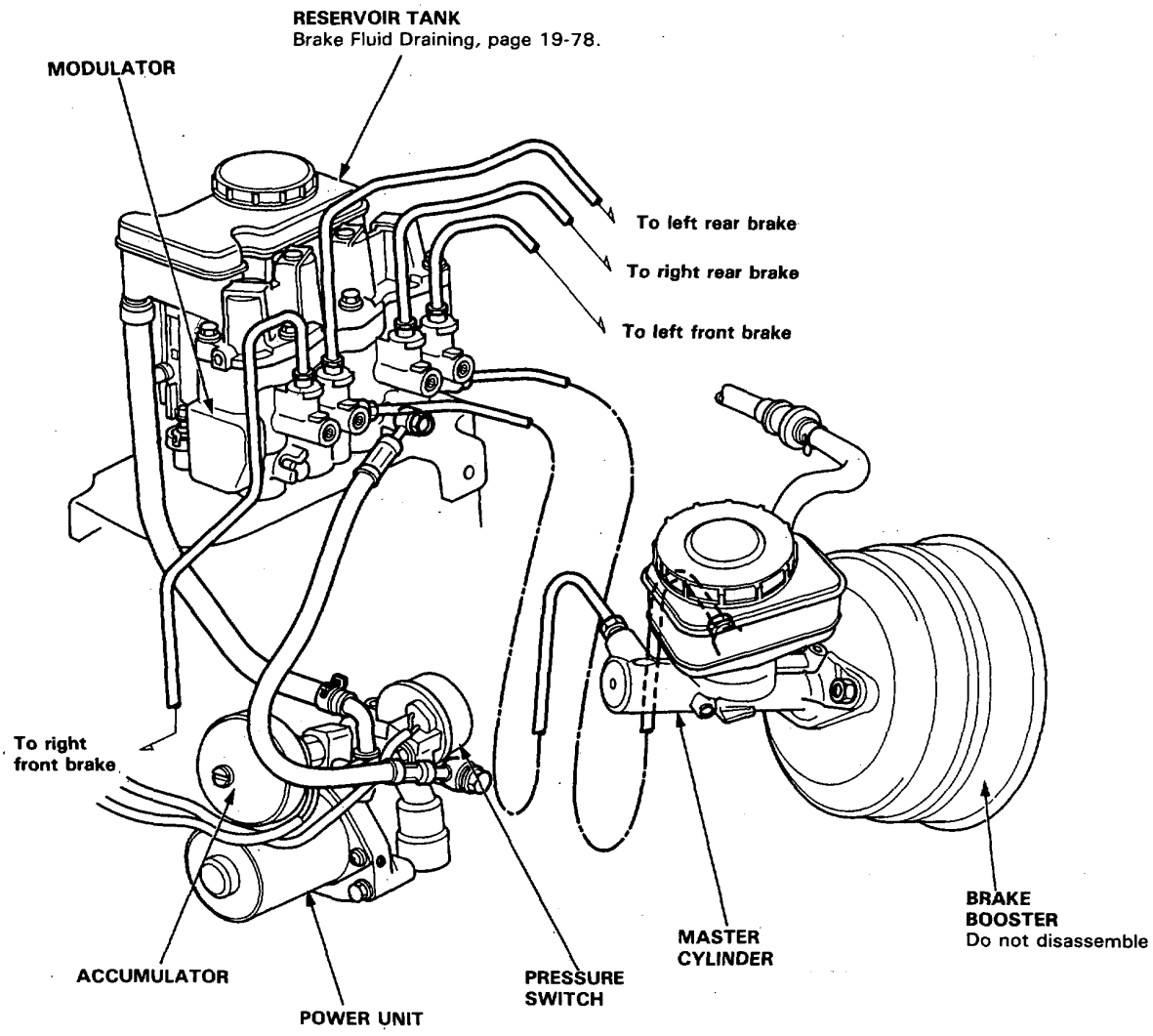

NOTE: Replace the accumulator, power unit and pressure switch, as an assembly.

Relieving Accumulator/Line Pressure

⚠WARNING Use the Bleeder T-wrench before disassembling the parts shaded in the illustration.

1. Open the hood.
2. Remove the red cap from the bleeder on the top of the power unit.
3. Install the Bleeder T-wrench on the bleeder screw and turn it out slowly 90° to collect high-pressure fluid into the reservoir. Turn the T-wrench out one complete turn to drain the brake fluid thoroughly.
4. Retighten the bleeder screw and discard the fluid.
5. Reinstall the red cap.

Reservoir Brake Fluid Draining

1. Draining brake fluid from modulator tank:
   The brake fluid may be sucked out through the top of the modulator tank with a syringe. It may also be drained through the pump joint after disconnecting the pump hose.
2. Draining brake fluid from master cylinder:
   Loosen the bleed screw and pump the brake pedal to drain the brake fluid from the master cylinder.

⚠WARNING

- **High-pressure fluid will squirt out if the shaded tube is removed or the modulator head 8 mm and 10 mm bolts are loosened.**
- **To drain high-pressure brake fluid, follow the procedure on this page.**

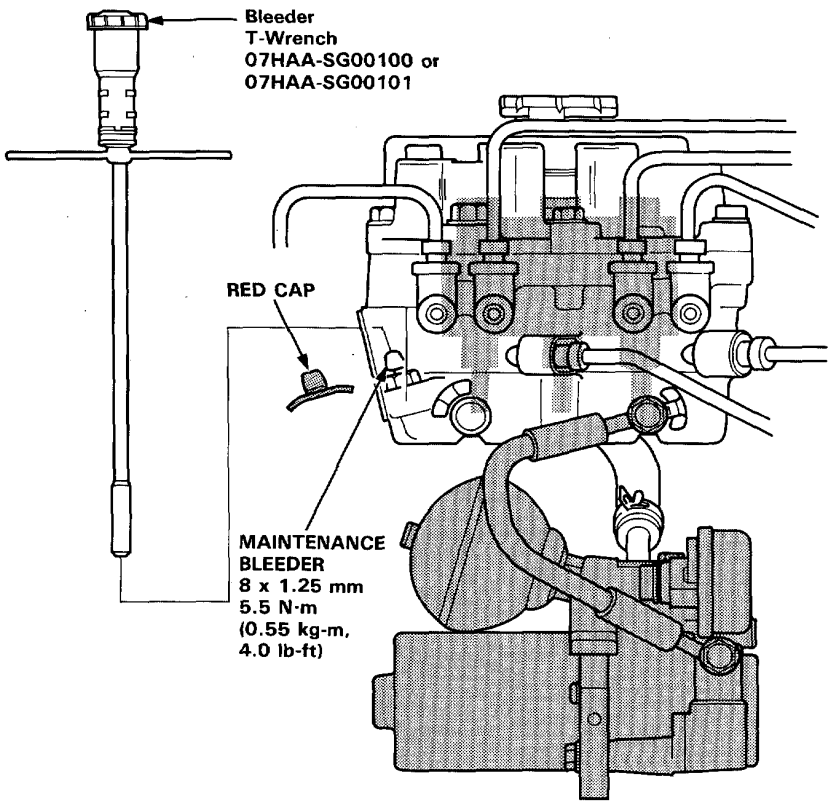

Modulator Unit

Torque

CAUTION:

- Be careful not to bend or damage the brake pipes when removing the modulator.
- Do not spill brake fluid on the car; it may damage the paint; if brake fluid does contact the paint, wash it off immediately with water.
- To prevent spills, cover the hose joints with rags or shop towels.
- Before reassembling, check that all parts are free of dust and other foreign particles.
- Replace the modulator as an assembly if it is defective for any reason.
- Do not mix different brands of brake fluid as they may not be compatible.
- Do not reuse the drained fluid. Use only clean Dot 3 or 4 brake fluid.
- When connecting the brake pipes, make sure that there is no interference between the brake pipes and other parts.

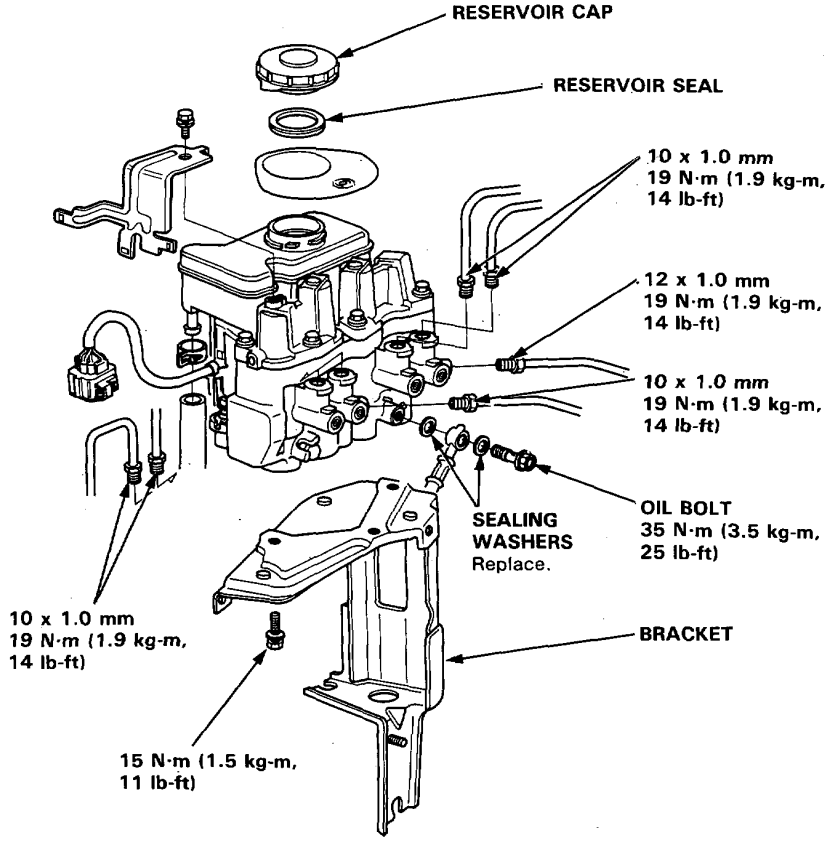

Modulator Unit

Index/Inspection

CAUTION:

- Do not spill brake fluid on the car; it may demage the paint; if brake fluid does contact the paint, wash it off immediately with water.
- To prevent spills, cover the hose joints with rags or shop towels.
- Clean all parts in brake fluid and air dry; blow out all passages with compressed air.
- Use only new DOT3 or DOT4 clean brake fluid.
- Before reassembling, check that all parts are free of dust and other foreign particles.
- Replace parts with new ones whenever specified to do so.
- Make sure no dirt or other foreign matter is allowed to contaminate the brake fluid.
- Do not mix different brands of brake fluid as they may not be compatible.
- Do not reuse the drained fluid.
- Replace all rubber parts with new ones whenever the modulator is disassembled.

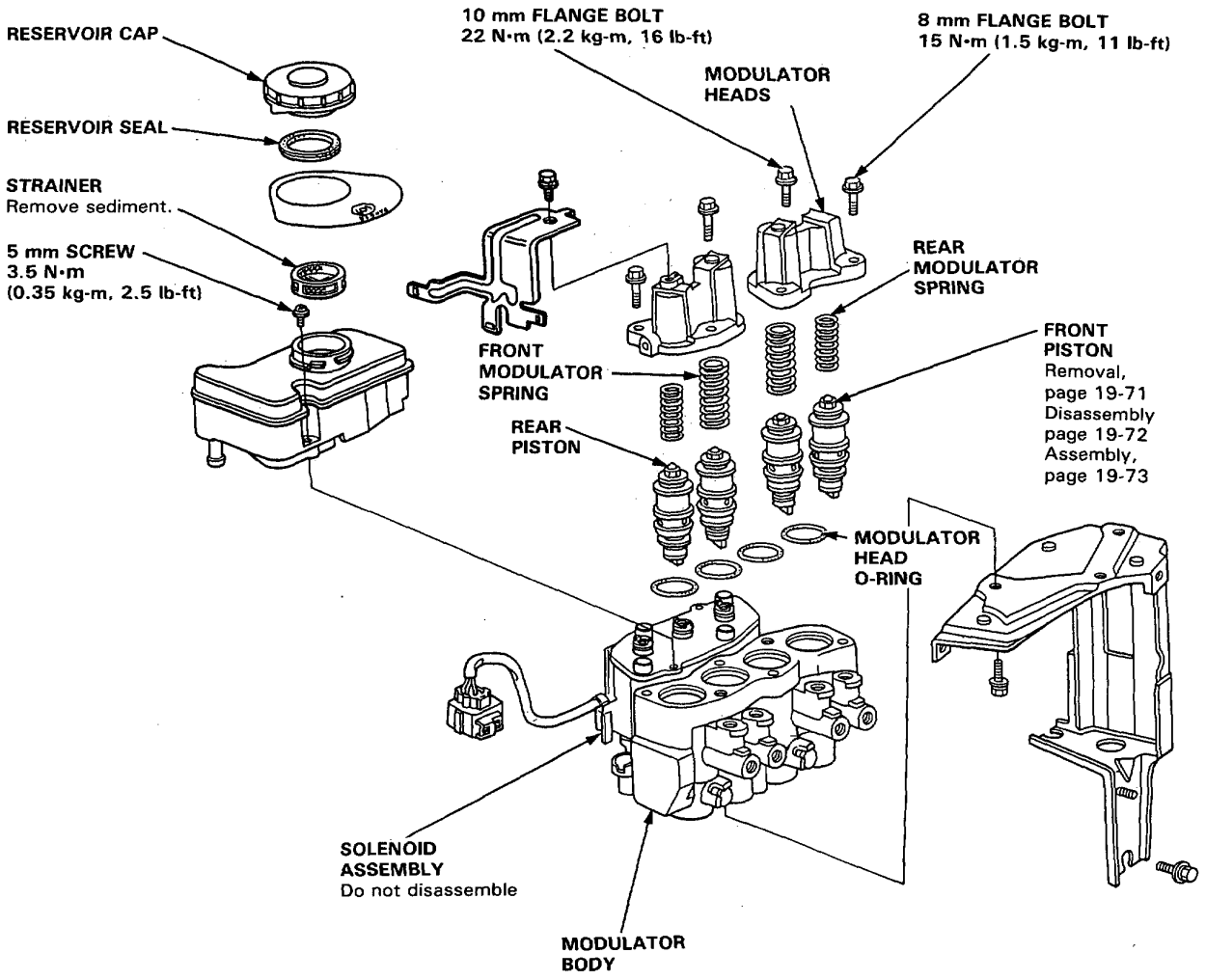

Leak Test

NOTE: If the solenoid leaks excessively, the brake fluid level in the modulator reservoir tank will rise when operating the ALB motor. Modulator reservoir may overflow.

1. Connect circuit tester (Ω range) between the YEL and YEL terminals of the accumulator pressure switch connector.

2. Attach the positive (+) lead of a fully charged 12 V battery to the RED/WHT terminal of the power unit motor connector and negative (−) lead to the GRN terminal, and install a switch between as shown.

3. Turn the switch on to allow sufficient pressure to build up within the accumulator and check for continuity with the circuit tester. If the circuit tester shows continuity (pressure switch turned on), run the power unit for 10 seconds more, then turn the switch off.

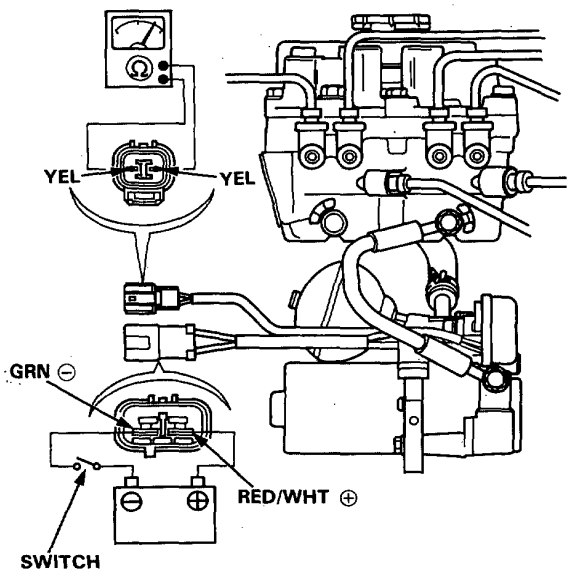

- Check if the solenoid hisses or squeaks. Replace the modulator if the solenoid hisses or squeaks.

- Check the pressure switch for continuity within 30 minutes. It is normal if there is continuity. If there is no continuity, solenoid is faulty and must be replaced.

Piston

Removal

1. Remove the modulator heads.

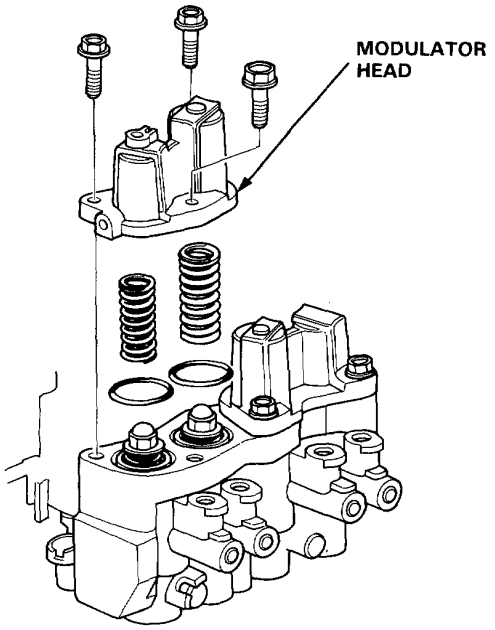

2. Insert the driver into the spring, pry off the piston assembly until it lifts up slightly and pull out the lock nut with a pair of pliers.

CAUTION:
- **Set the washer between the driver and modulator body to prevent damage to the body.**
- **Be careful not to damage the piston sleeve.**

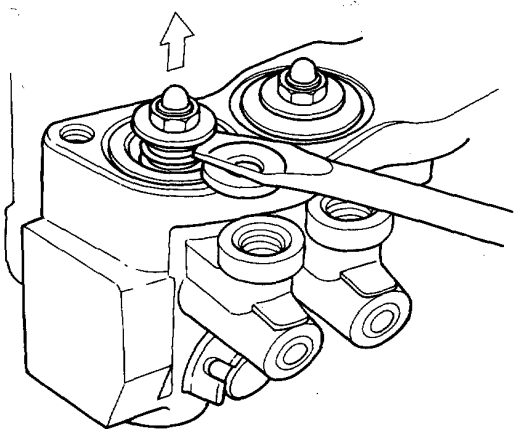

Installation

1. Apply rubber grease to the shaded sections of the piston assembly, shown in the drawing below.

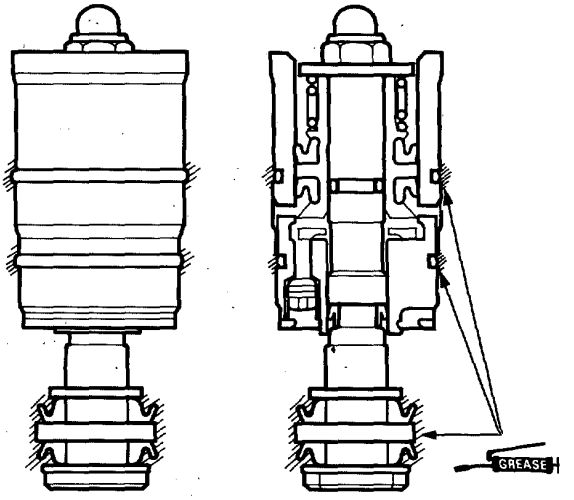

2. Adjust so that the brake fluid flows into the piston mounting hole in the modulator body.

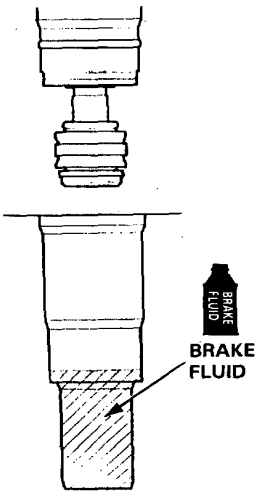

3. Set the piston assembly in the piston mounting hole in the modulator body and push down on the piston.

4. Push on the pistom about 5 times until no bubbles come out of the solenoid side.

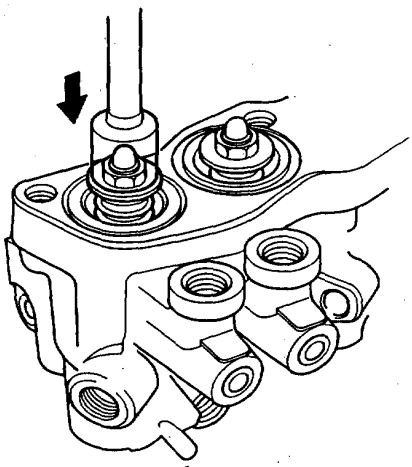

5. Install the modulator springs.

6. Install the modulator heads with care not to pinch the O-rings.

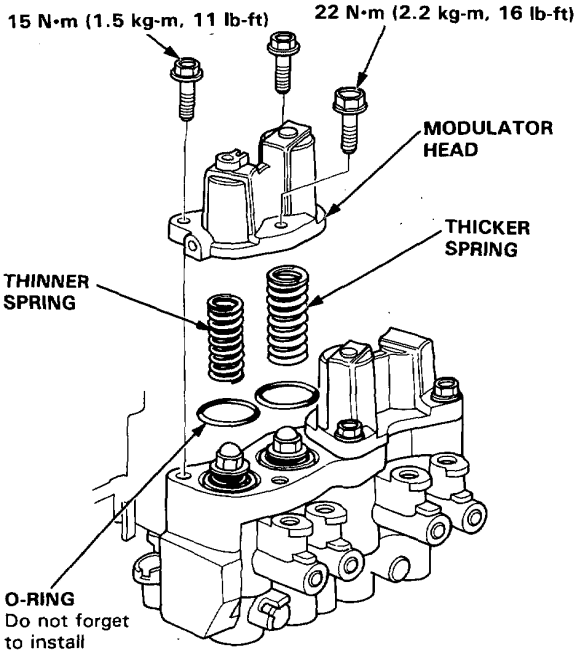

Power/Accumulator/Pressure Switch Unit

Index/Torque

CAUTION:

- Be careful not to bend or damage the brake pipe when removing the power unit and accumulator.
- Do not spill brake fluid on the car; it may damage the paint; if brake fluid does contact the paint, wash it off immediately with water.
- To prevent spills, cover the hose joints with rags or shop towels.
- Before reassembling, check that all parts are free of dust and other foreign particles.
- Do not try to disassemble the power/accumulator unit assembly. Replace the assembly with a new part if necessary.
- Do not mix different brands of brake fluid as they may not be compatible.
- Do not reuse the drained fluid. Use only clean Dot 3 or 4 brake fluid.
- When connecting the brake pipes, make sure that there is no interference between the brake pipes and other parts.

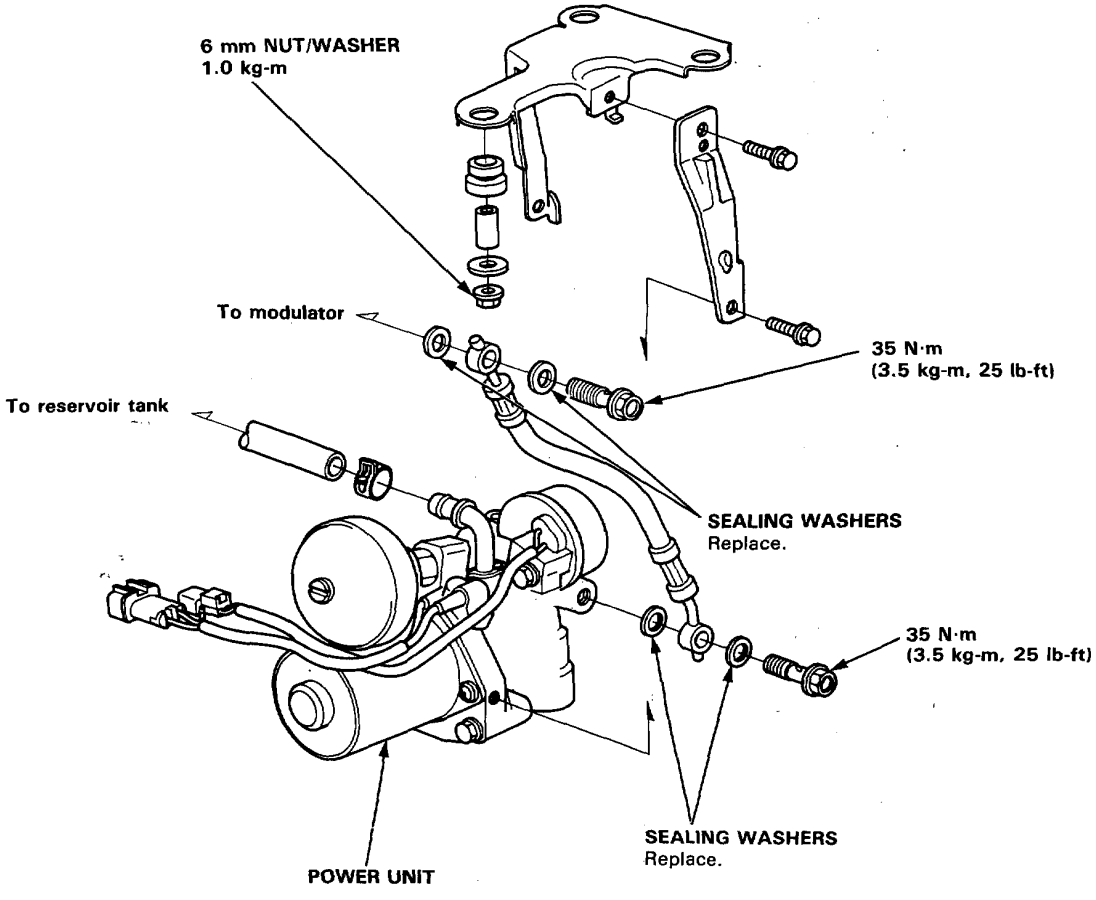

Accumulator

Disposal

⚠WARNING The accumulator contains high pressure nitrogen gas. Do not puncture, expose to the flame, or attempt to disassemble the accumulator or it may explode and severe personal injury may result.

1. Remove the accumulator.

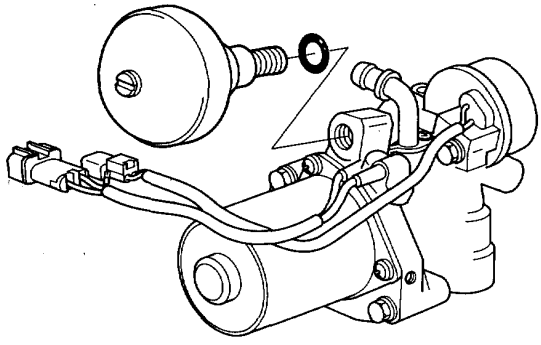

2. Secure the accumulator in a vise so that the relief plug points straight up.
3. Slowly turn the plug 3-1/2 turns and then wait 3 minutes for all pressure to escape.
4. Remove the plug completely and dispose of the accumulator unit.

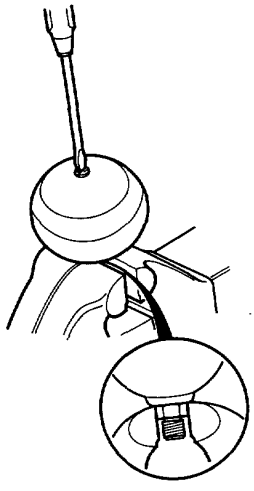

Air Bleeding with ALB Checker

1. Disconnect the 6-P inspection connector from the cross-member under the passenger's seat and connect the inspection connector to the ALB checker.

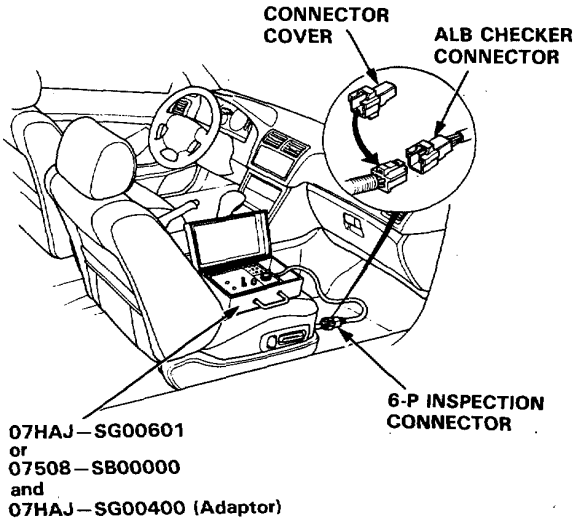

CAUTION: Place the vehicle on level ground with the wheels blocked. Put the transmission in neutral for manual transmission models, and in P for automatic transmission models.

2. Bleed high-pressure fluid from the maintenance bleeder with the special tool.
3. Fill the modulator reservoir to the MAX level.

NOTE: Do not reuse aerated brake fluid that has been bled from the power unit.

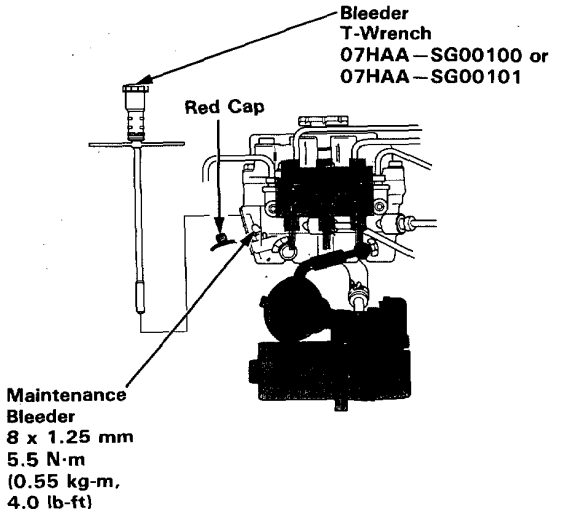

4. Start the engine and release the parking brake.
5. Turn the Mode Selector to 2, 3, 4, 5 and press the Start Test button.
   Visually inspect the kickbacks of the brake pedal. There should be at least two kickbacks. If not, repeat steps 2 through 5, as necessary.
6. Fill the modulator reservoir up to the MAX level.

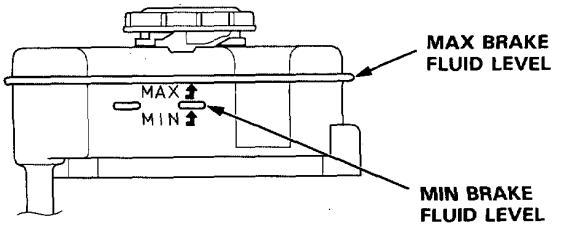

7. Install the reservoir cap.
8. Check the anti-lock brake system function in all modes by using the ALB checker.

Electronic Components

Control Unit Replacement

1. Remove the rear seat back.
2. Remove the control unit attaching bolts, then remove the control unit.

CAUTION:
- **When the control unit mounting bolts are removed, the control unit's memory is cleared.**
- **Handle the control unit with care. Do not drop it.**

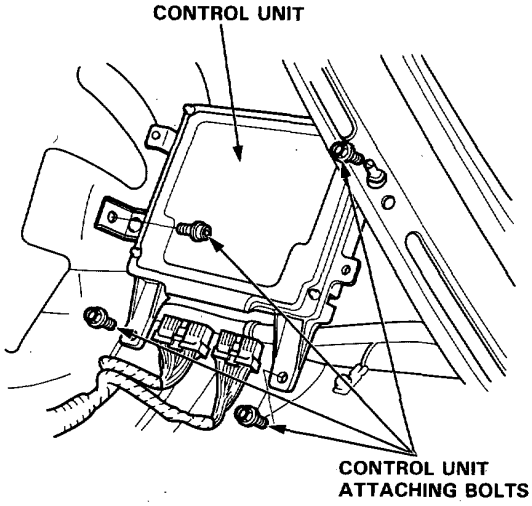

Installation is the reverse order of removal.

NOTE: After installation, turn the ignition switch on and check the anti-lock brake system indicator light for operation.

Relays Inspection

1. Remove the fail safe-relay from the relay box C (Location: page 19-37).
2. Check for continuity between the terminals A and B. There should be no continuity.
3. Connect a 12 V battery across the terminals C and D. There should be continuity between the terminals A and B.

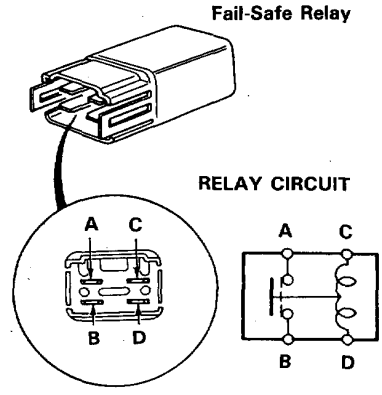

4. Remove the motor relay from the under-hood relay/fuse box (Location: page 19-37).
5. There should be continuity between the C and D terminals.
6. There should be continuity between the A and B terminals when the battery is connected to C and D terminals.
   There should be no continuity when the battery is disconnected.

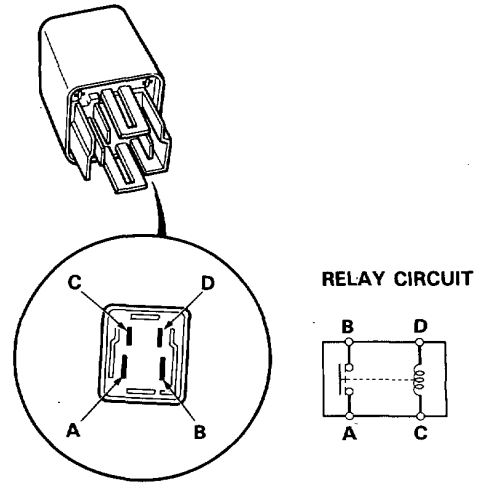

Inspection

Front

1. Check the pulser for chipped or damaged teeth and replace if necessary.

2. Measure air gap between the sensor and pulser all the way around while rotating the driveshaft by hand.

   Standard: 0.6—1.2 mm (0.024—0.047 in)

   NOTE: If the gap exceeds 1.2 mm (0.047 in) at any point, the probability is a distorted knuckle which should be replaced.

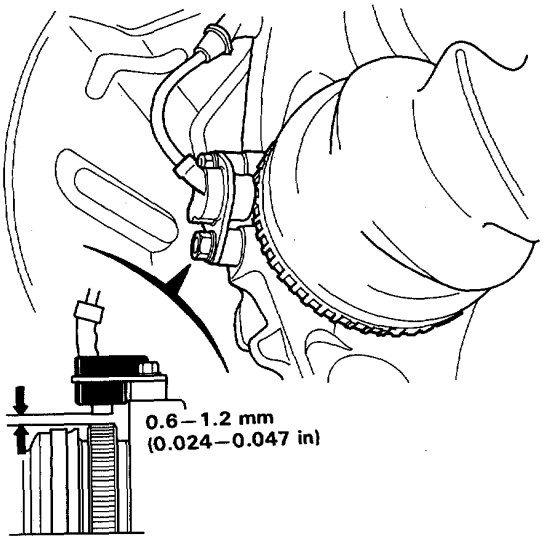

Rear

1. Remove the rear caliper assembly.

2. Remove the rear brake disc.

3. Check the rear pulser for chipped or damaged teeth and replace if necessary.

4. Measure the air gap between the sensor and pulser all the way around while rotating the hub bearing unit by hand.

   Standard: 0.3—1.3 mm (0.012—0.051 in)

   NOTE: If the gap exceeds 1.3 mm (0.051 in) at any point, the probability is a distorted knuckle which should be replaced.

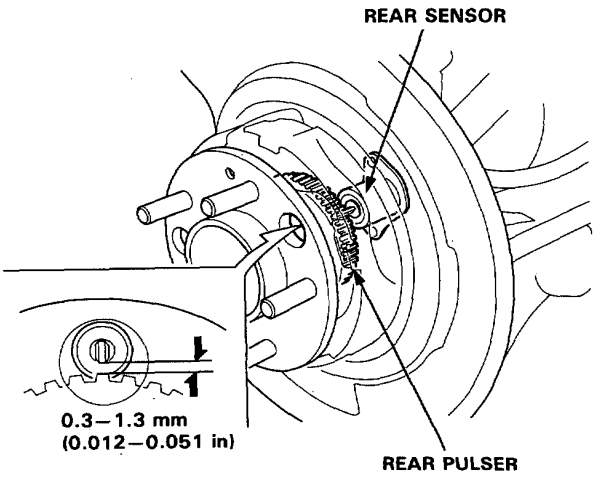

Pulsers/Sensors

Front Sensor Replacement

NOTE:
- Be careful when installing the sensors to avoid twisting the wires.
- After sensor replacement, confirm proper operation (page 19-55).

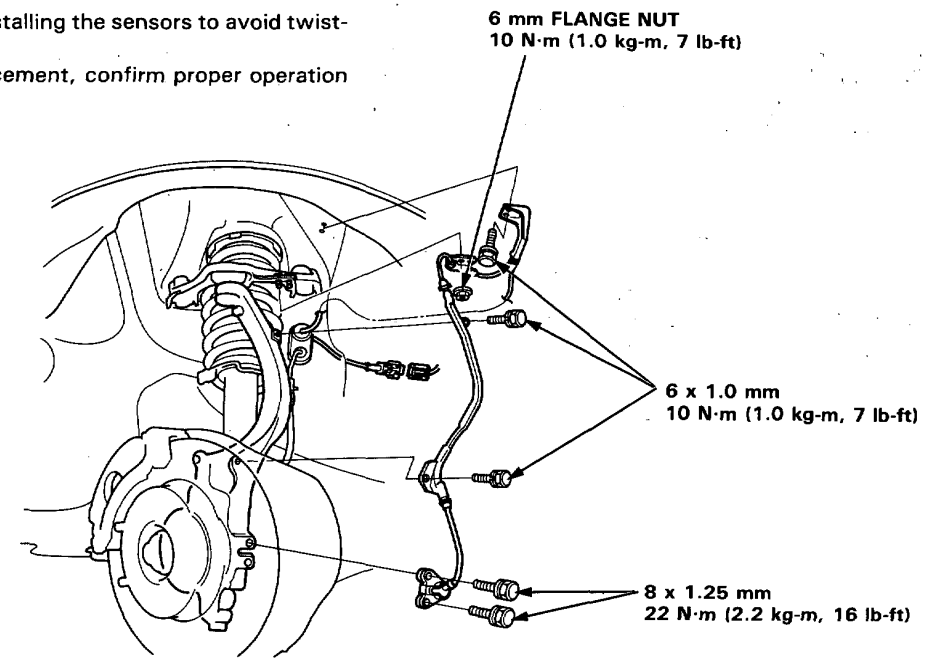

Rear Sensor Replacement

NOTE:
- Be careful when installing the sensors to avoid twisting the wires.
- After sensor replacement, confirm proper operation (page 19-55).

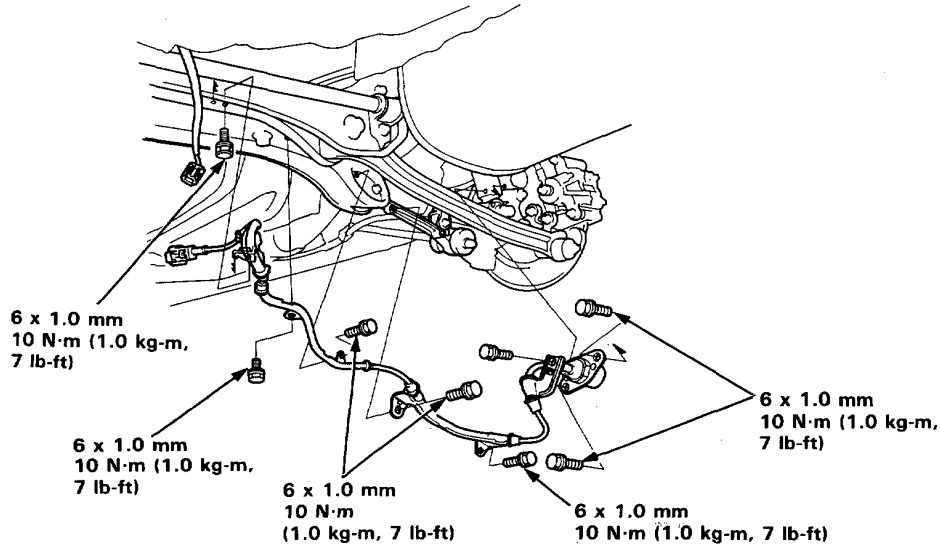

SUPPLEMENTAL RESTRAINT SYSTEM (SRS) (if body maintenance is required)

The Legend includes a driver's side Airbag, located in the steering wheel hub. Information necessary to safely service the SRS is included in this Shop Manual. Items marked * in each section table of contents include, or are located near, SRS components. Servicing, disassembling or replacing these items will require special precautions and tools, and should therefore be done only by an authorized HONDA dealer.

⚠WARNING

- **To avoid rendering the SRS inoperative, which can lead to personal injury or death in the event of a severe frontal collision, all maintenance must be performed by an authorized HONDA dealer.**
- **Improper maintenance, including incorrect removal and installation of the SRS, can lead to personal injury caused by unintentional activation of the Airbag.**
- **All SRS electrical wiring harnesses are covered with yellow outer insulation. Related components are located in the steering column, center armrest and dashboard lower panel. Do not use electrical test equipment on these circuits.**

Body

Bumpers
- Front Replacement 20-66
- Rear Replacement 20-67

* Carpet 20-58

* Center Console Panel/Center Armrest 20-60

* Center Console 20-61

* Dashboard
- Component Removal/Installation 20-62
- Replacement 20-64

Doors
- Front Door Index 20-3
  - Panel/Plastic Cover 20-4
  - Outside Door Handle 20-6
  - Latch 20-7
  - Glass/Regulator 20-8
  - Outer Molding/Inner Molding 20-10
  - Sash Trim 20-10
  - Inner Trim 20-11
  - Weatherstrip 20-11
- Rear Door Index 20-12
  - Panel/Plastic Cover 20-13
  - Outside Door Handle 20-15
  - Latch 20-16
  - Glass/Regulator 20-17
  - Outer Molding/Inner Molding 20-19
  - Sash Trim 20-19
  - Inner Trim 20-20
  - Weatherstrip 20-20
- Glass Adjustment 20-21
- Position Adjustment 20-23
- Striker Adjustment 20-23

Exterior Moldings/Panels
- Roof/Side Window Moldings 20-72
- Side Moldings/Fender Well Trim 20-73
- Side Sill Panels/Moldings 20-74

* Frame Repair Chart 20-77

Fuel Filler
- Opener/Latch 20-71

Front Grille/Hood Edge Protector 20-75

Headliner 20-49

Hood
- Replacement/Adjustment 20-69
- Opener/Latch 20-69

Interior Trim 20-48

Mirrors
- Door Mirror Removal 20-24
- Mirror Glass 20-24
- Rearview Mirror 20-57

Seats
- Front Replacement 20-50
- Seat Linkage Disassembly 20-52
- Seat Cover 20-53
- Rear Replacement 20-54

Seat Belts
- Front Replacement 20-55
- Rear Replacement 20-56
- Inspection 20-57

Stereo Cassette/Radio 20-61

Sub-Frame 20-76

Sunroof
- Index 20-39
- Troubleshooting 20-40
- Glass Height Adjustment 20-40
- Wind Deflector Adjustment 20-41
- Sliding Glass Replacement 20-41
- Glass Bracket Replacement 20-42
- Sunshade Replacement 20-43
- Drain Channel Rod/Guide Plate Replacement 20-43
- Motor/Drain Tube/Frame 20-44
- Guide Rails/Cable 20-45
- Slide Switch Adjustment (Fully Closed Position) 20-46
- Closing Drag Check 20-47
- Closing Force Check 20-47

Trunk
- Lid Replacement/Adjustment 20-70
- Lid Latch 20-71

Windshield/Rear Window Glass
- Index 20-25
- Windshield 20-28
- Rear Window 20-34

Special Tool

Ref. No.	Tool Number	Description	Qty	Remarks
①	07GAZ–SE30100	Torsion Bar Assembly Tool	1	

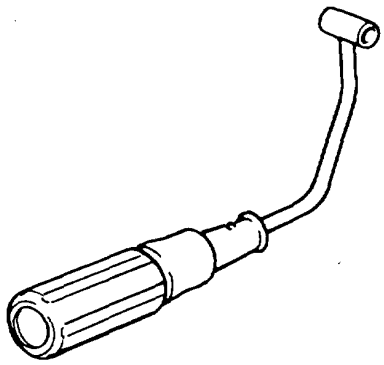

①

Front Door

Index

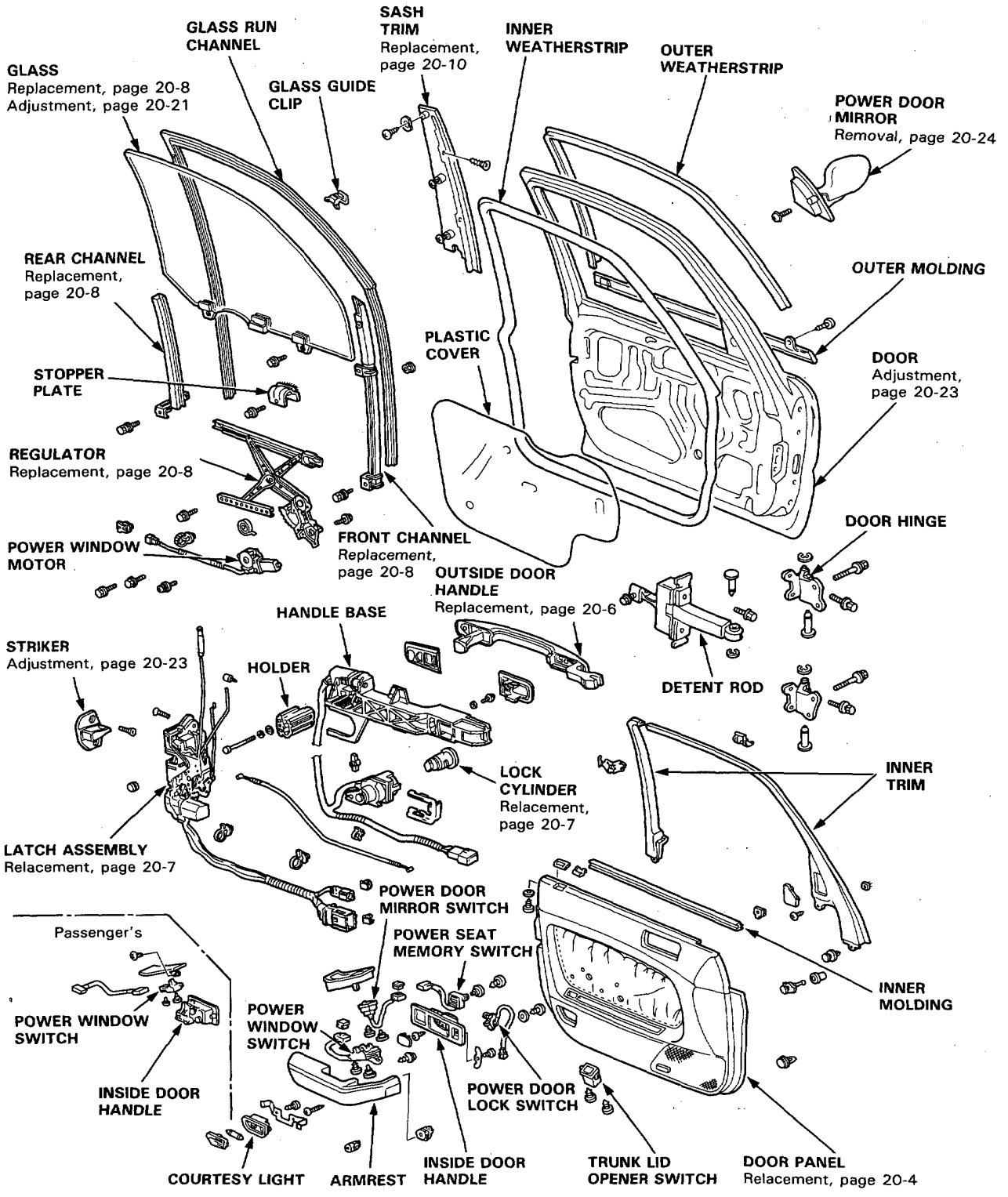

Door Panel/Plastic Cover Replacement

1. Remove the trim plate, then remove the door panel mounting screws.

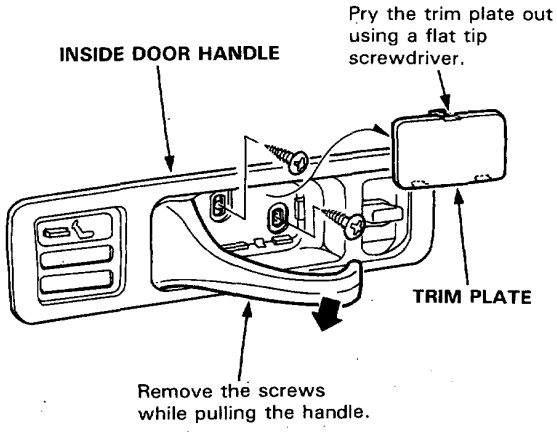

NOTE: Do not remove the inside door handle from the door panel.

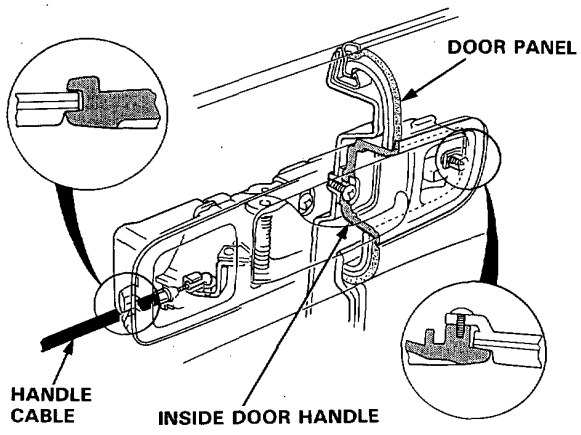

NOTE: Remove the panel with as little bending as possible to avoid creasing or breaking it.

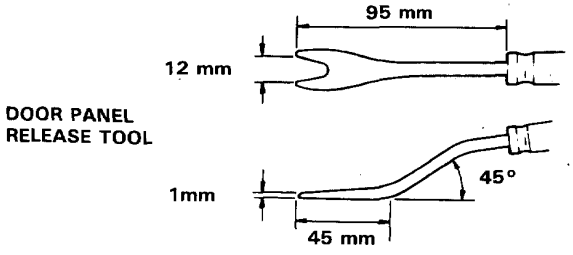

2. Remove the screws and clips (see door panel release tool) attaching the door panel.
Remove the door panel by pulling it upward and disconnecting handle cable.
Disconnect the connectors.
- Trunk lid opener switch
- Power door lock switch
- Courtesy light
- Power window/door mirror switch
- Security alarm
- Power seat memory switch

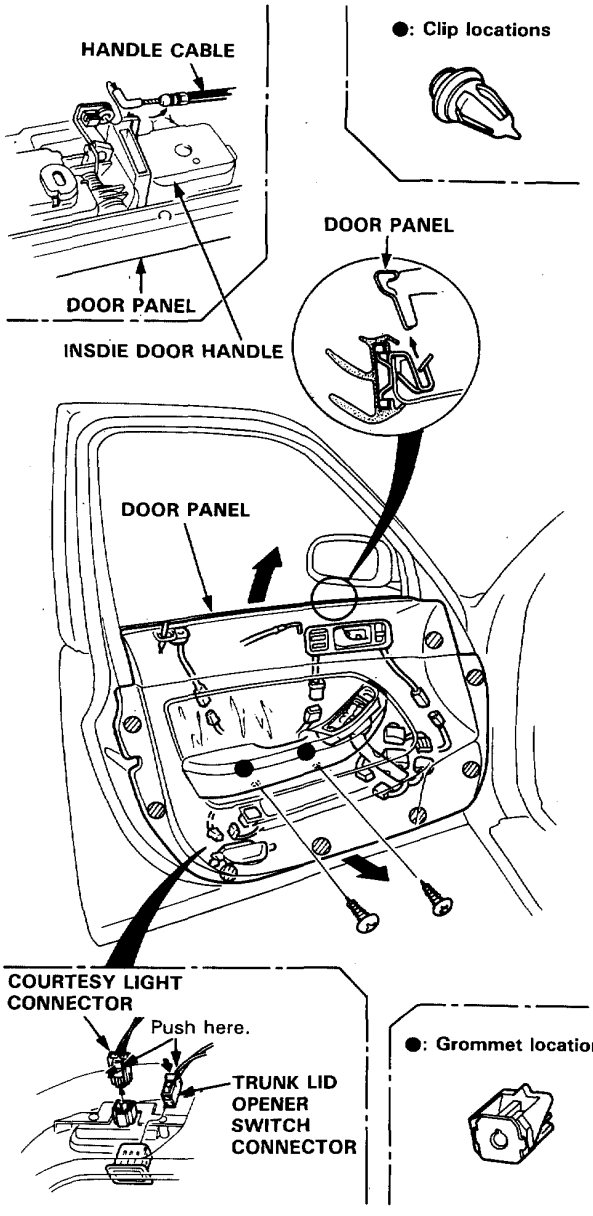

3. If necessary, remove the armrest and inside door handle from the door panel.

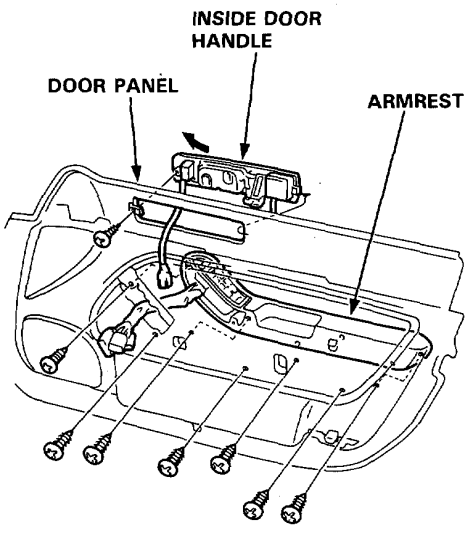

4. Remove the grommets and carefully remove the plastic cover.

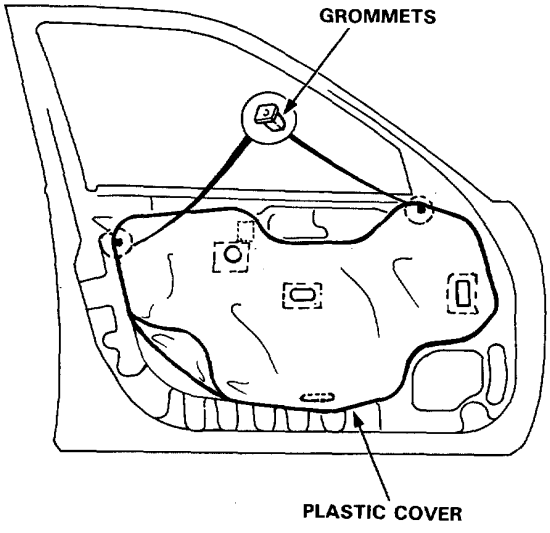

5. Install the door panel and plastic cover in the reverse order of removal.

NOTE:
- Make sure the wire harnesses and connectors are fastened correctly on the door.

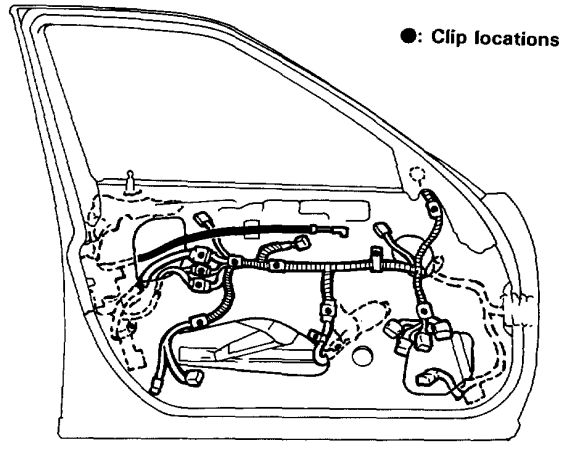

- Apply adhesive along the edge where necessary to maintain a continuous seal and prevent air/water leaks.

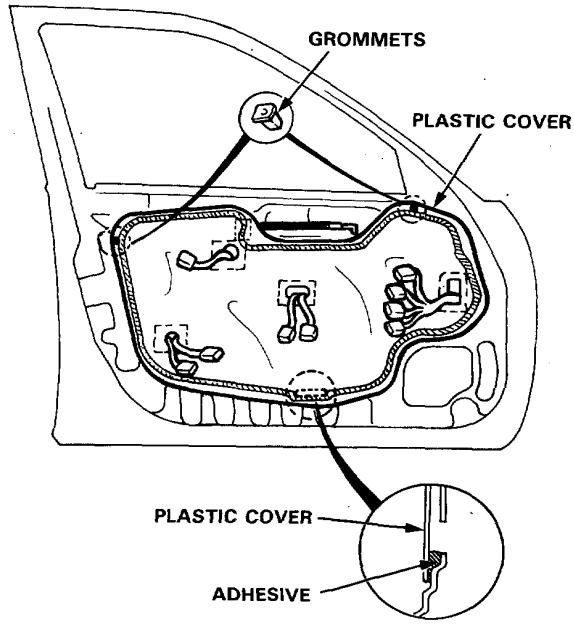

- Before tightening the door panel mounting screws, make sure the wire harnesses are not pinched.

Outside Door Handle Replacement

NOTE: Raise the window fully.

1. Remove
   - Door panel (page 20-4)
   - Plastic cover (page 20-5)
   - Rear channel

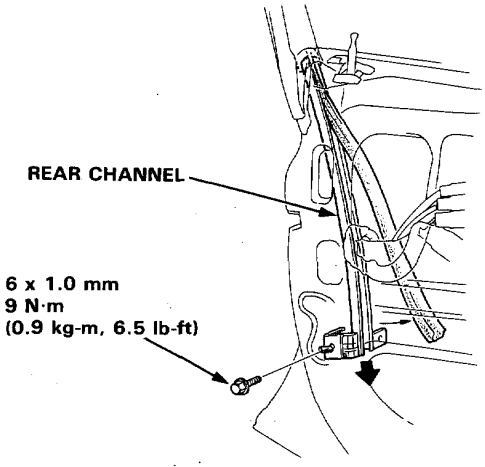

2. Disconnect the connector and harness clip.

3. Remove the maintenance seal and mounting bolt, then remove the holder from the handle base. Pry the door handle latch rod out of its joint using a flat tip screwdriver.

   NOTE: To ease reassembly, note the location A of the rod on the joint before disconnecting it.

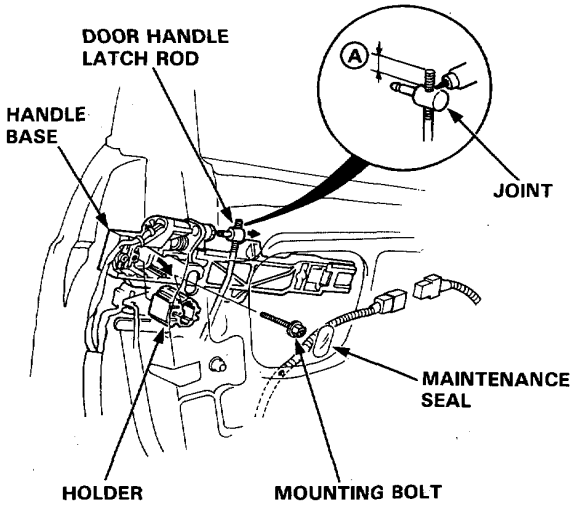

4. Remove the screw cover while pulling the handle.

5. Remove the outside door handle by sliding it backward and pulling out from the handle base.

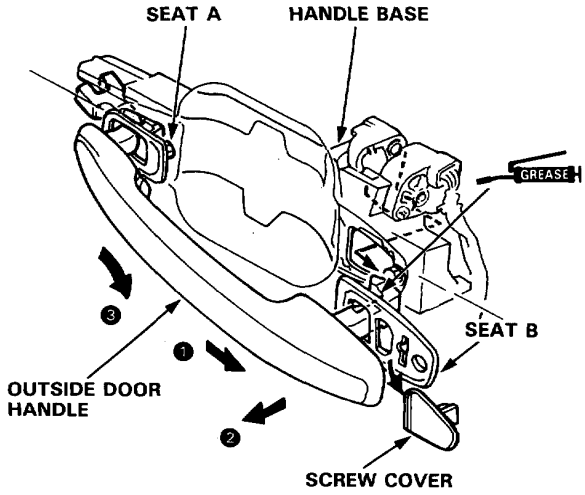

6. Loosen the mounting bolts and remove the handle base by sliding it forward.

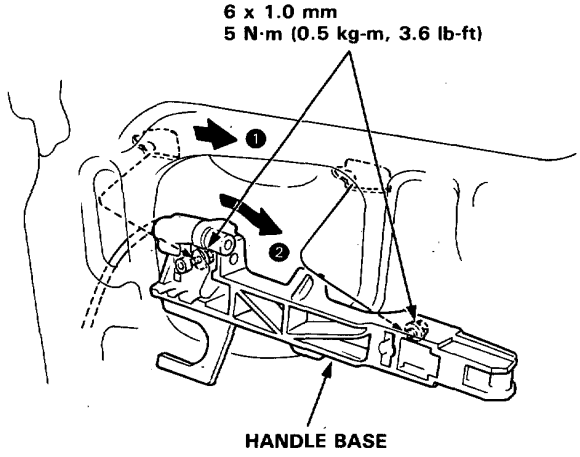

7. Pull out the retainer clip, remove the lock cylinder and cylinder base.

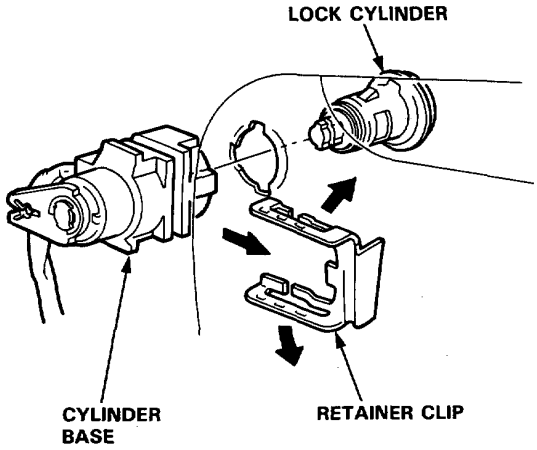

8. Installation is the reverse order of removal.

NOTE: Make sure handle wires are not pinched.

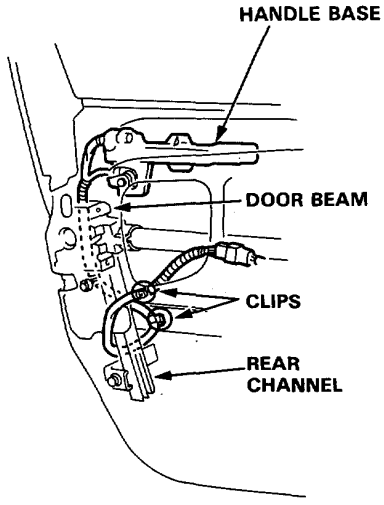

Door Latch Replacement

NOTE: Raise the window fully.

1. Remove
   - Door panel (page 20-4)
   - Plastic cover (page 20-5)
   - Rear channel (page 20-8)

2. Pry the door handle latch rod and lock rod out of its joint using a flat tip screwdriver.
   Disconnect the connectors from the door. Remove the mounting screws and nut, then remove the latch assembly throught the hole in the door.

   NOTE:
   - Take care not to bend the handle cable.
   - To ease reassembly, note the location Ⓐ of the rod on the joint before disconnecting it.

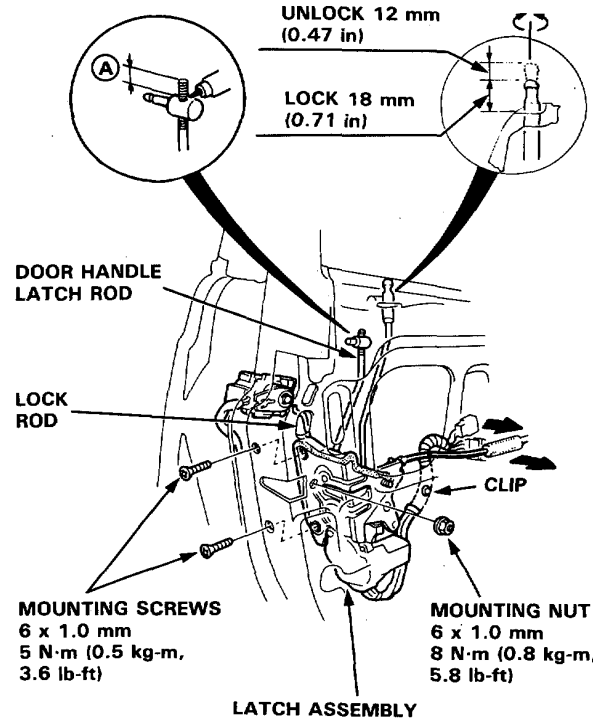

3. Installation is the reverse order of removal.

Front Door

Glass/Regulator Replacement

1. Remove
   - Door panel (page 20-4)
   - Plastic cover (page 20-5)
   - Inner molding (page 20-10)
   - Stopper plate

2. Remove the bolts in the front channel and slide the front channel toward the front of the door.

3. Carefully lower the window until you can see its mounting bolts, then loosen the bolts.
   Slide the guide to the rear, then remove the glass.

4. Carefully pull the glass out through the window slot.

   NOTE: Take care not to drop the glass inside the door.

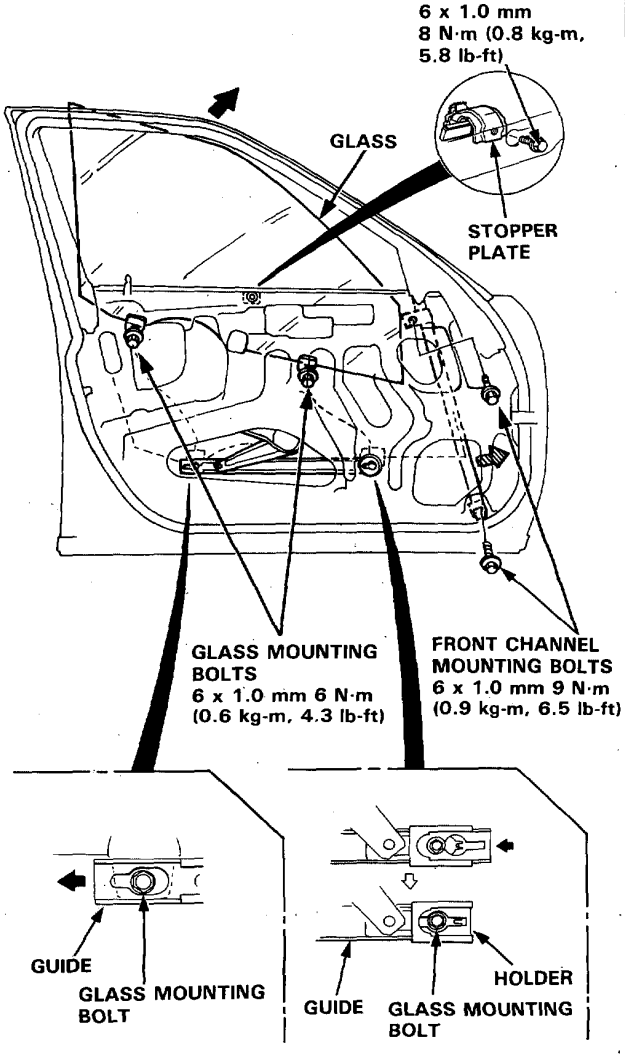

5. To remove the front channel, first remove the:
   - Door mirror (page 20-24)
   - Outer molding (page 20-10)

6. Peel the glass run channel out of the channels.

7. Remove the inner trim until you can see the front channel mounting nut. Remove the front channel mounting nut (page 20-11). Remove the rear channel mounting bolt.

8. Remove the channels.

   NOTE: After installing, make sure the glass run channel is not twisted.

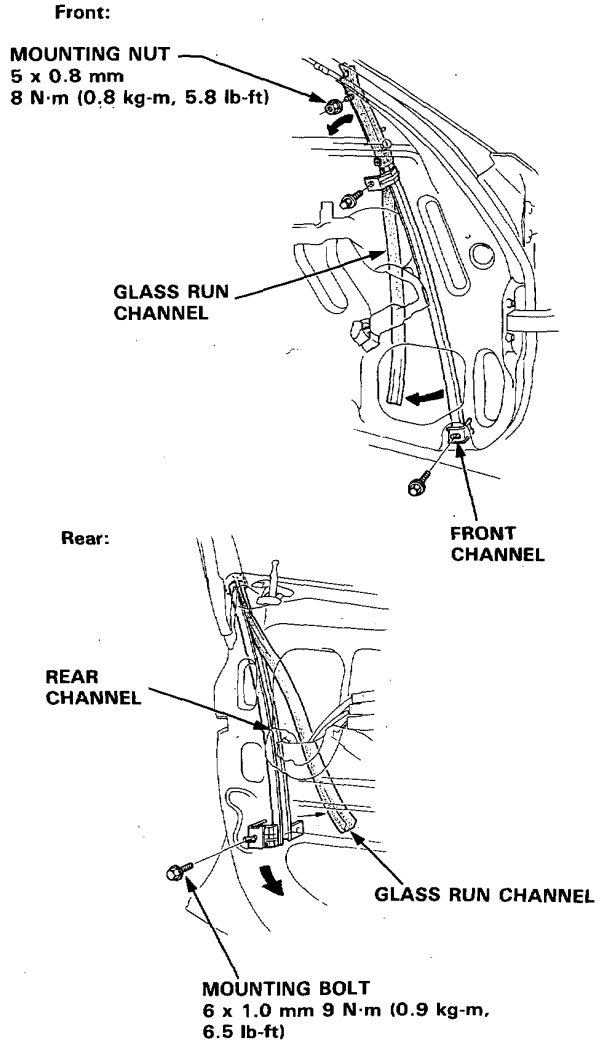

9. Remove the 2 mounting bolts, 2 roller guide bolts and loosen the 2 motor bolts. Take out the regulator assembly through the center hole in the door.

NOTE: Scribe a line around the roller guide mounting bolt to show the original adjustment.

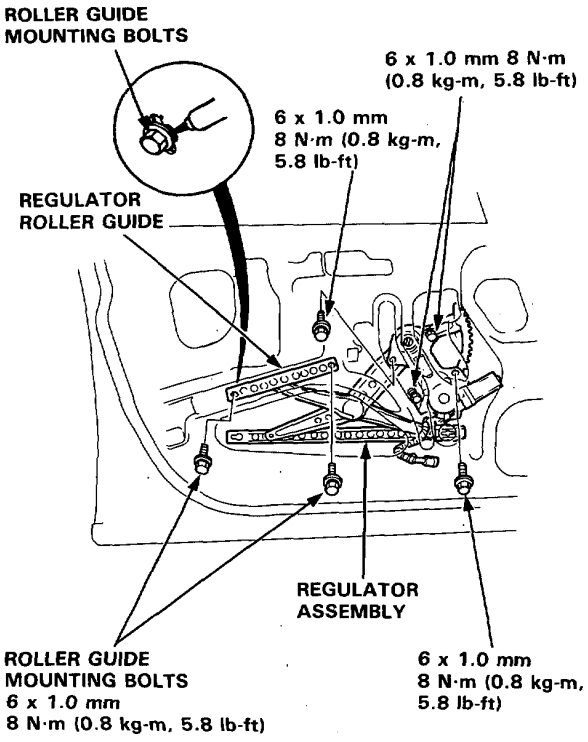

10. Grease all the sliding surfaces of the window regulator where shown.

11. Before removing the motor, mark the location by scribing a line across the sector gear and regulator. Install using the 3 mounting bolts. Move the window regulator to the original position by connecting a 12 V battery to the motor (See Seciton 23).

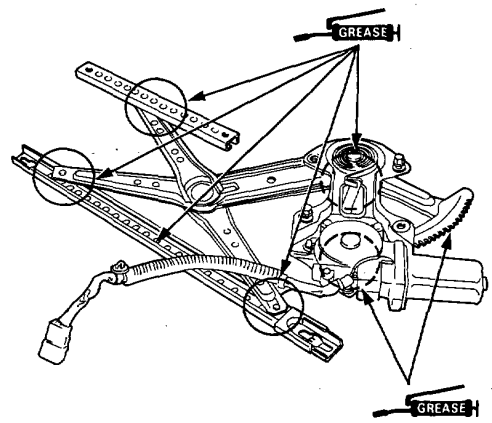

12. Installation is the reverse order of removal.

13. Roll the glass up and down to see if it moves freely without binding. Also make sure that there is no clearance between the glass and glass run channel when the glass is closed. Adjust the position of the door glass as necessary (page 20-21).

14. Attach the wire harness to the door correctly (page 20-5).

15. When reinstalling the plastic cover, apply adhesive along the edge where necessary to maintain a continuous seal and prevent air/water leaks (page 20-5).

Front Door

Outer Molding/Inner Molding Replacement

1. Lower the window fully

NOTE: Take care not to twist or scratch the molding.

Outer Molding:

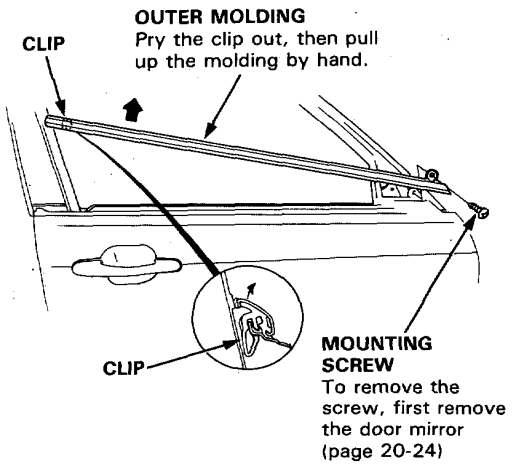

Inner Molding:

INNER MOLDING
- Remove the door panel (page 20-4)
- Pry the clips out using a flat tip screwdriver, then pull up the molding.

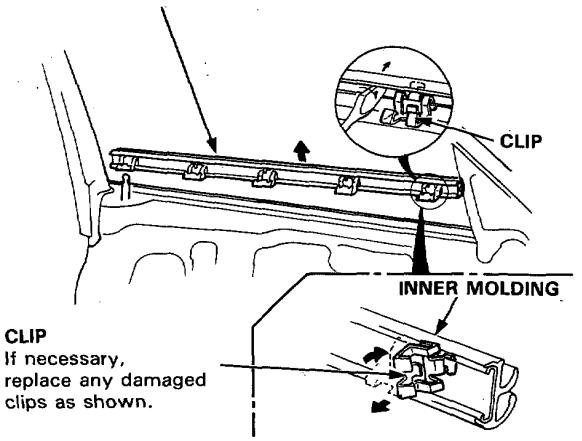

2. Installation is the reverse order of removal.

Sash Trim Replacement

NOTE: Lower the window fully.

1. Peel the outer weatherstrip out, then loosen the 2 mounting screws, and detach the upper clip.

2. Peel the glass run channel out and remove the mounting screws, then remove the sash trim by hand.

   NOTE: Take care not to scratch the sash trim.

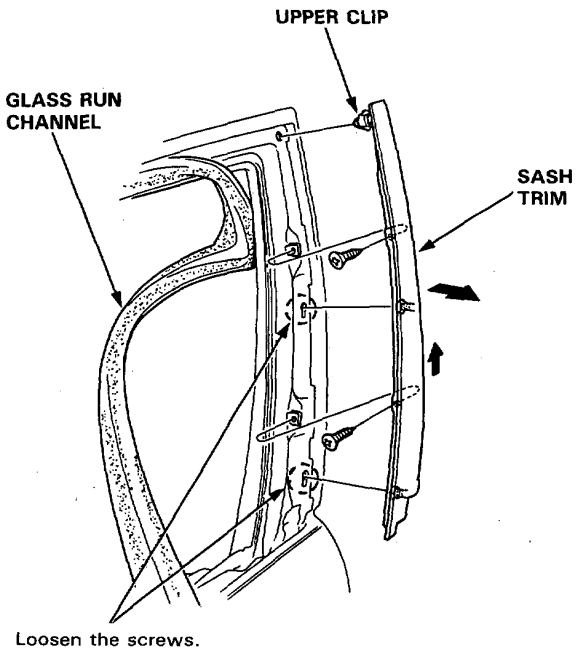

3. Installation is the reverse order of removal.

   NOTE:
   - After installing, make sure the glass run channel is not twisted.
   - Roll the glass up and down to make sure it moves freely without binding.

Inner Trim Replacement

NOTE: Lower the window fully.

1. Remove the door panel (page 20-4).
2. Remove the mounting screws, then remove the inner trim.

   NOTE:
   - Take care not to scratch the inner trim.
   - Remove the inside clips from inner weatherstrip side.

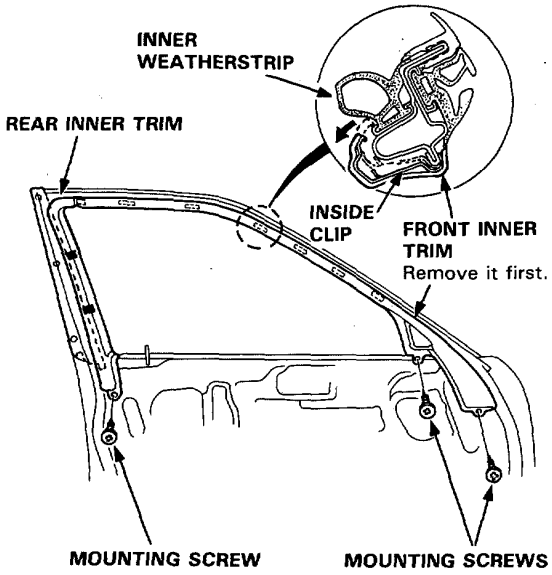

■: Clip locations (2) ⬚: Clip locations (6)

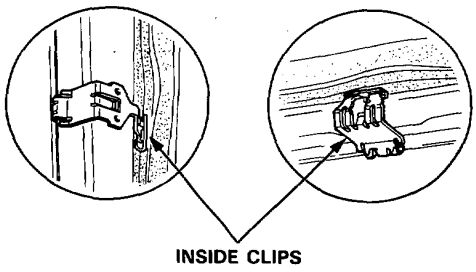

3. Installation is the reverse order of removal.

Weatherstrip Replacement

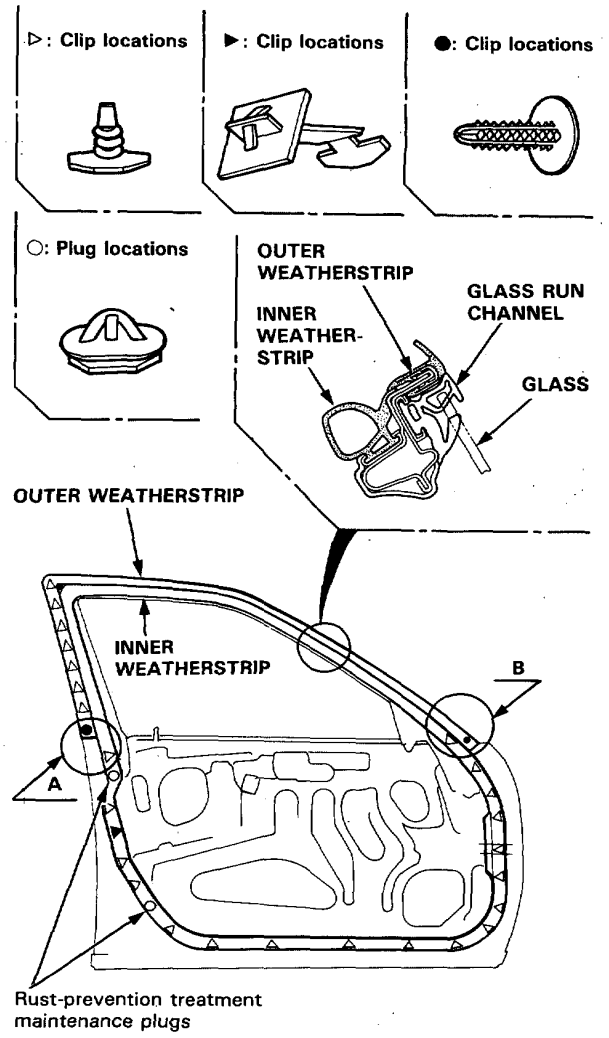

*: 40 mm (1.6 in)
Sealant: cemedine #8500

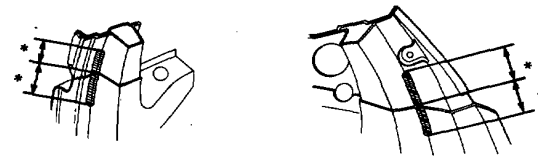

VIEW A VIEW B

NOTE:
- Before installing the weatherstrip, apply clear sealant to the shadowed areas of the door as shown.
- If necessary, replace any damaged clips.

Rear Door

Index

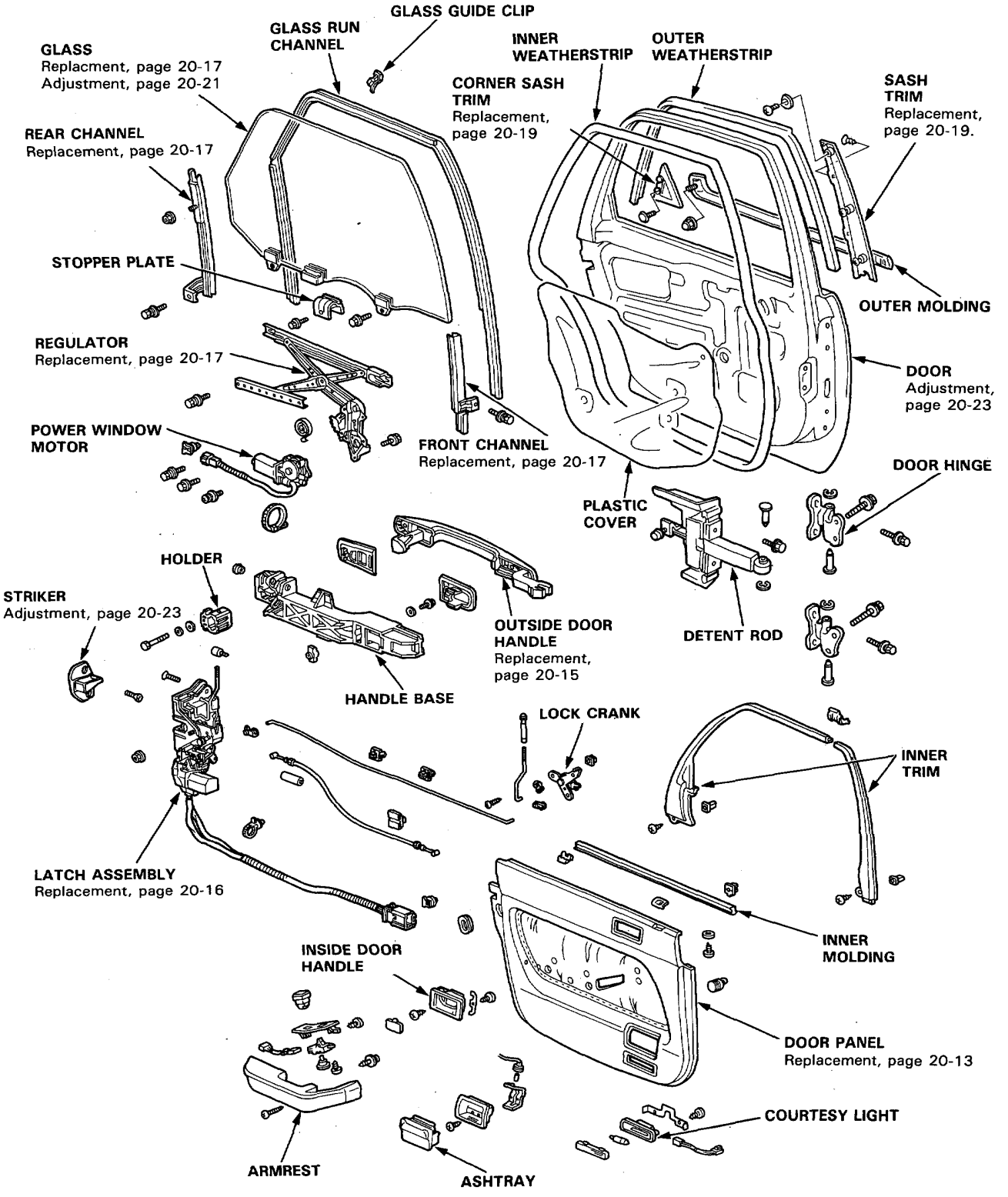

Door Panel/Plastic Cover Replacement

1. Remove the trim plate, then remove the door panel mounting screws.

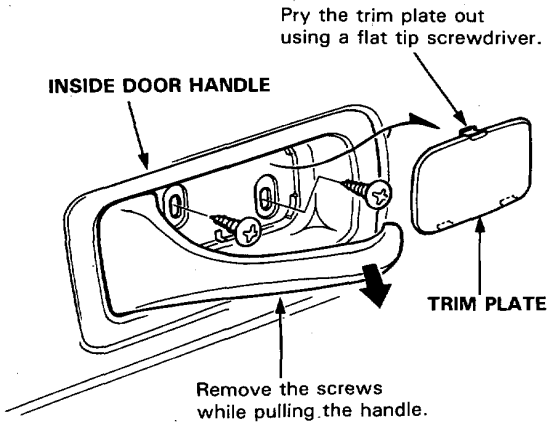

NOTE: Do not remove the inside door handle from the door panel.

2. Remove the screws and clips (see trim pad remover page 20-4) attaching the door panel.
Remove the door panel by pulling it upward and disconnect the handle cable.
Disconnect the connectors.
   - Power window switch
   - Courtesy light
   - Ashtray light.

NOTE: Remove the panel with as little bending as possible to avoid creasing or breaking it.

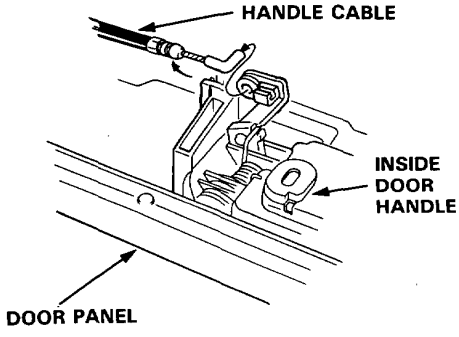

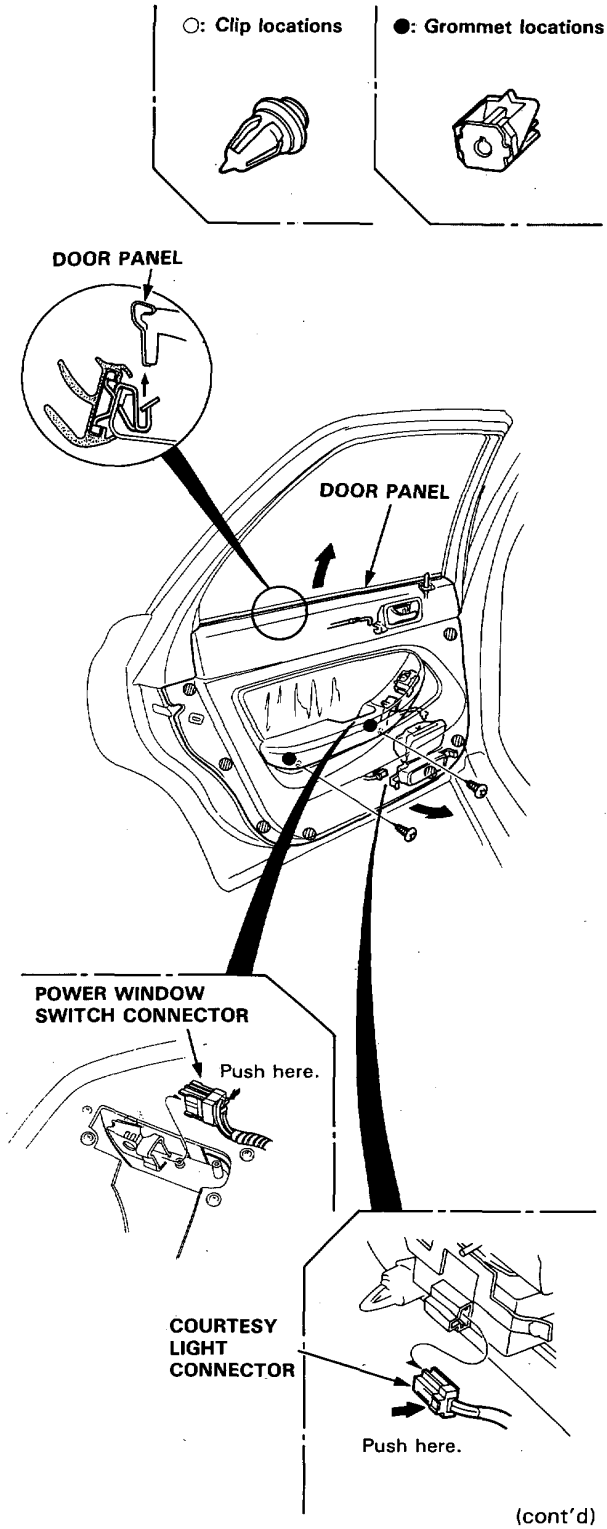

(cont'd)

Door Panel/Plastic Cover Replacement (cont'd)

3. If necessary, remove the armrest, ashtray and inside door handle from the door panel.

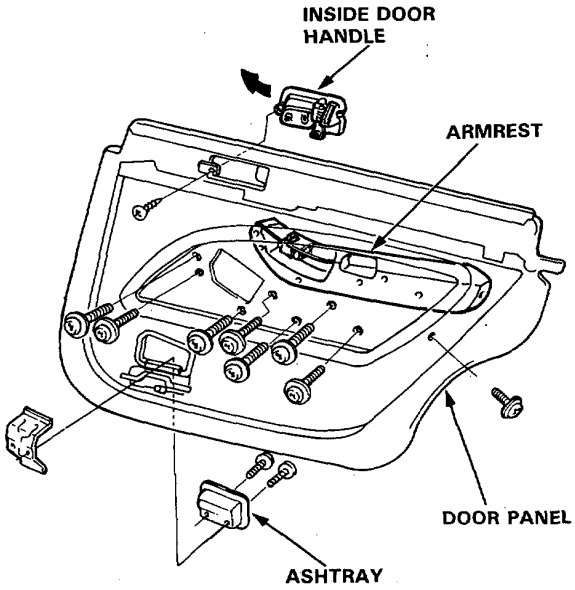

4. Remove the grommets and carefully remove the plastic cover.

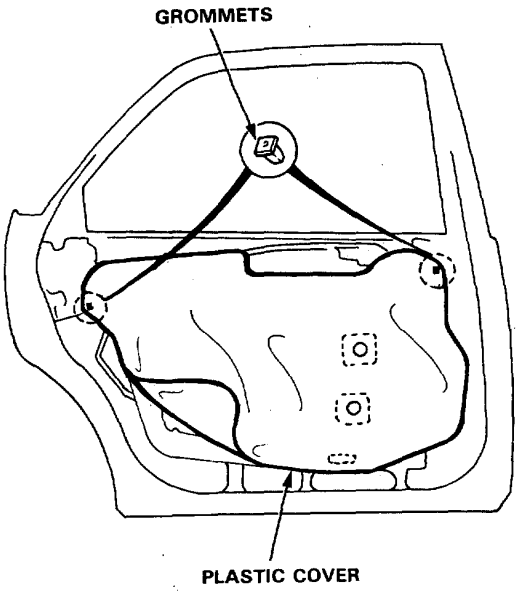

5. Install the door panel and plastic cover in the reverse order of removal.

NOTE:
- Make sure the wire harnesses and connectors are fastened correctly on the door.

●: Clip locations

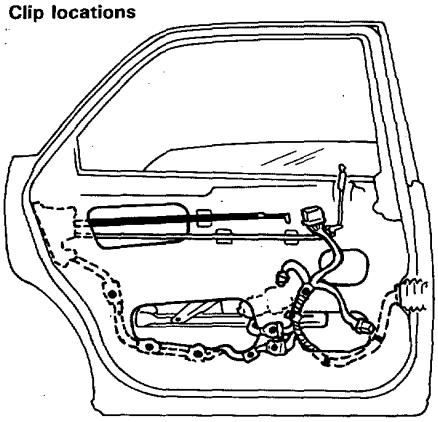

- Apply adhesive along the edge where necessary to maintain a continuous seal and prevent air/water leaks.

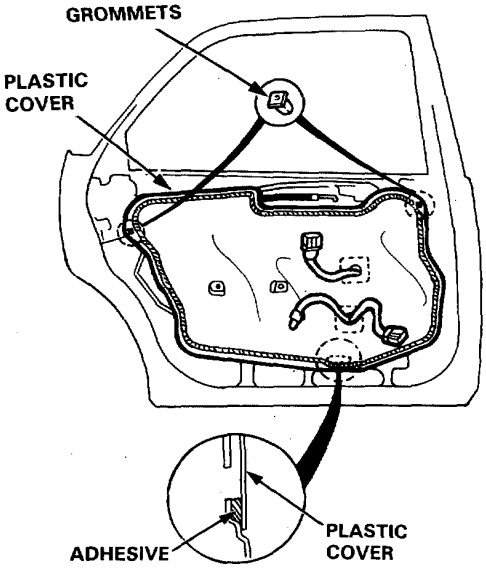

- Before tightening the door panel mounting screws, make sure the wire harnesses are not pinched.

Outside Door Handle Replacement

NOTE: Raise the window fully.

1. Remove
   - Door panel (page 20-13)
   - Plastic cover (page 20-14)
   - Rear channel (page 20-17)

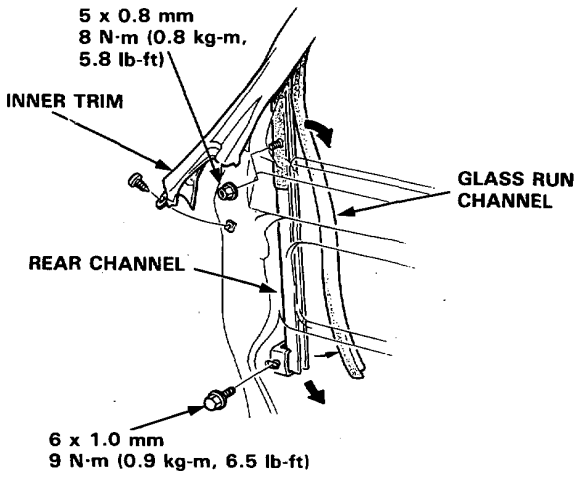

2. Remove the door latch (page 20-16).

3. Remove the mounting bolt, then remove the holder from the handle base.

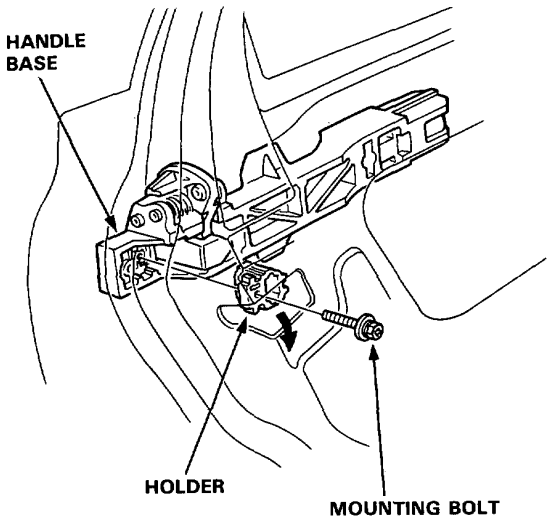

4. Remove the screw cover while pullling the handle.

5. Remove the outside dooor handle by sliding it backward and pulling out from the handle base.

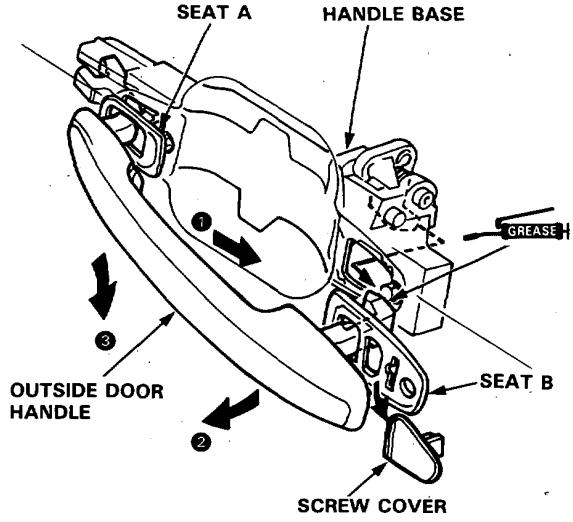

6. Loosen the mounting bolts and remove the handle base by sliding it forward.

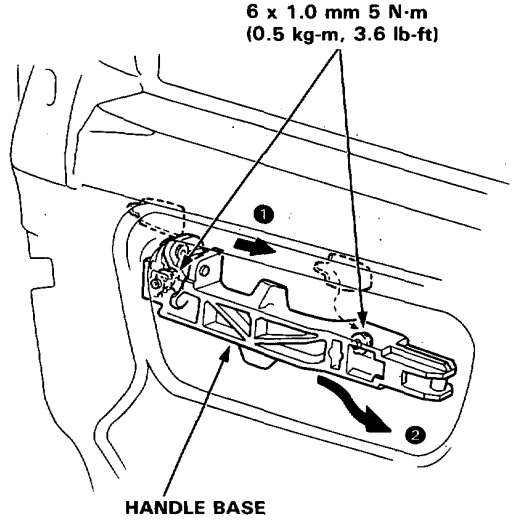

7. Installation is the reverse order of removal.

Door Latch Replacement

NOTE: Raise the window fully.

1. Remove
   - Door panel (page 20-13)
   - Plastic cover (page 20-14)
   - Rear channel (page 20-17)

2. Disconnect the latch rod from the latch side. Remove the mounting screw and detach the latch rod, then remove the door lock crank.

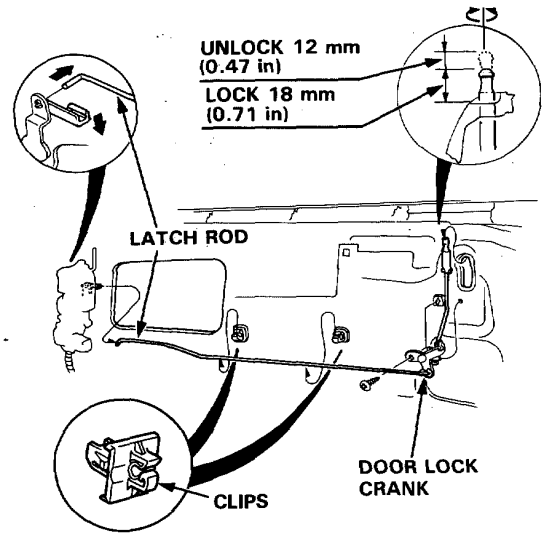

3. Pry the door handle latch rod out of its joint using a flat tip screwdriver.

4. Remove the mounting screws and nut, then remove the latch assembly through the hole in the door.

   NOTE: Take care not to bend the handle cable.

NOTE: To ease reassembly, note the location Ⓐ of the rod on the joint before disconnecting it.

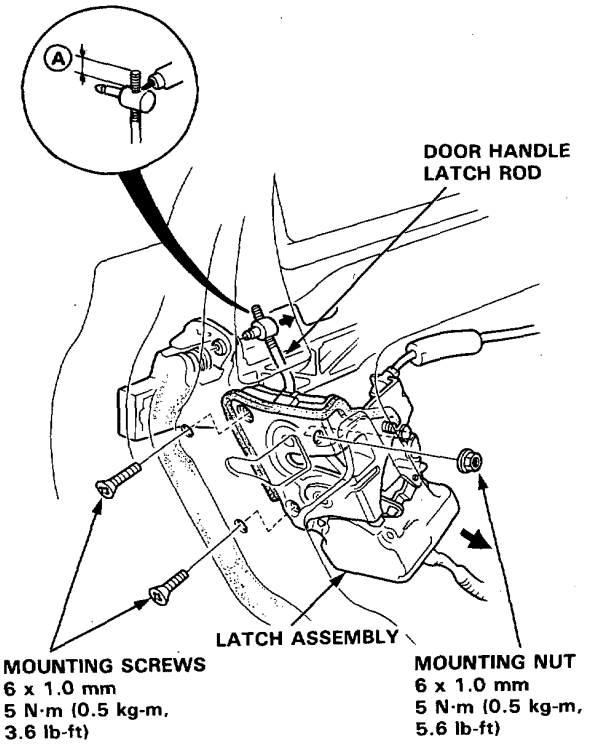

5. Installation is the reverse order of removal.

Glass/Regulator Replacement

1. Remove
   - Door panel (page 20-13)
   - Plastic cover (page 20-14)
   - Inner molding (page 20-19)
   - Stopper plate

2. Remove the bolt from the rear channel and slide the rear channel toward the rear of the door.

3. Carefully lower the window until you can see its mounting bolts, then loosen the bolts.
   Slide the guide to the rear, then remove the glass.

   NOTE: Take care not to drop the glass inside the door.

4. Carefully pull the glass out through the window slot.

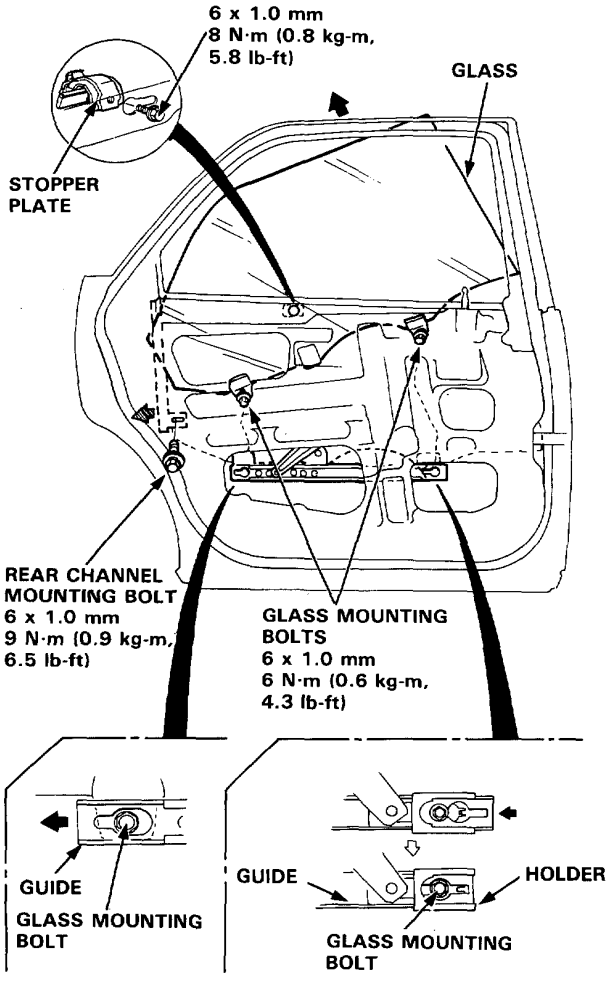

5. To remove the rear channel, first remove the corner sash trim (page 20-19).

6. Peel the glass run channel out of the channels.

7. Remove the inner trim until you can see the rear channel mounting nut. Remove the rear channel mounting nut.
   Remove the front channel special bolt.

8. Remove the channels.

   NOTE: After installing, make sure the glass run channel is not twisted.

Front:

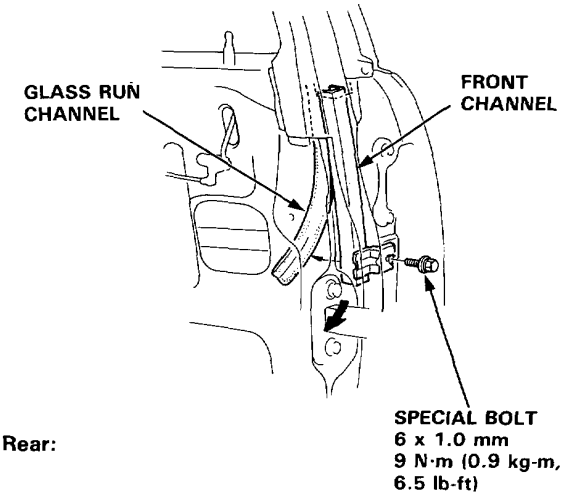

Rear:

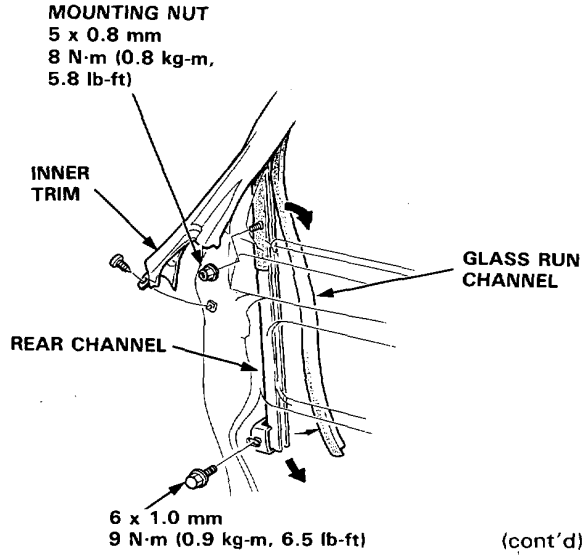

(cont'd)

Glass/Regulator Replacement (cont'd)

9. Remove the 2 mounting bolts, 2 roller guide bolts and loosen the 2 motor bolts. Take out the regulator assembly through the center hole in the door.

   NOTE: Scribe a line around the roller guide mounting bolt to show the original adjustment.

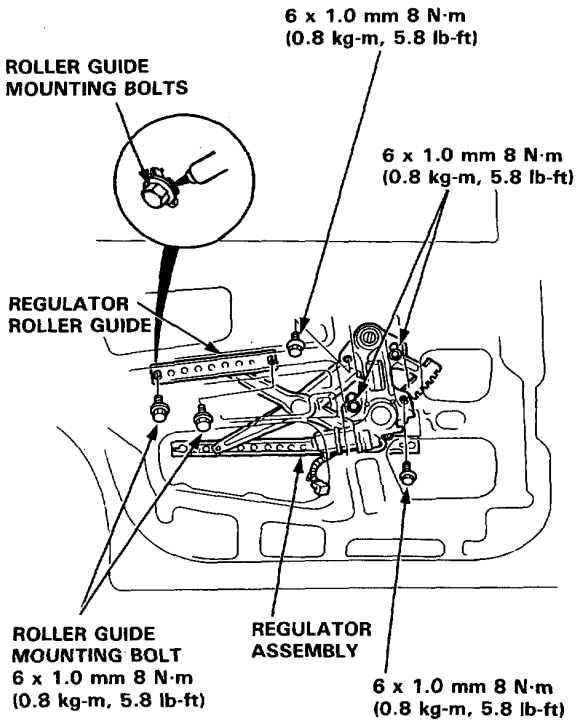

10. Grease the sliding surfaces of the window regulator where shown.

11. Before removing the motor, mark the location by scribing a line across the sector gear and regulator. Install using the 3 mounting bolts. Move the window regulator to the original position by connecting a 12 V battery to the motor (See Section 23).

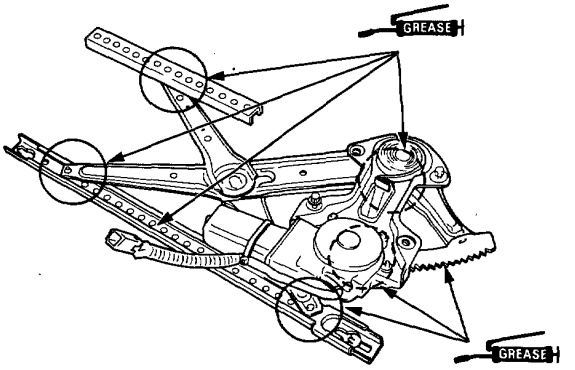

12. Installation is the reverse order of removal.

13. Roll the glass up and down to see if it moves freely without binding. Also make sure that there is no clearance between the glass and glass run channel when the glass is closed. Adjust the position of the door glass as necessary (page 20-21).

14. Reinstall the wire harness correctly to the door. (page 20-14).

15. When reinstalling the plastic cover, apply adhesive along the edge where necessary to maintain a continuous seal and prevent air/water leaks (page 20-14).

Outer Molding/Inner Molding Replacement

1. Lower the window fully.

   NOTE: Take care not to twist or scratch the molding.

Outer Molding:

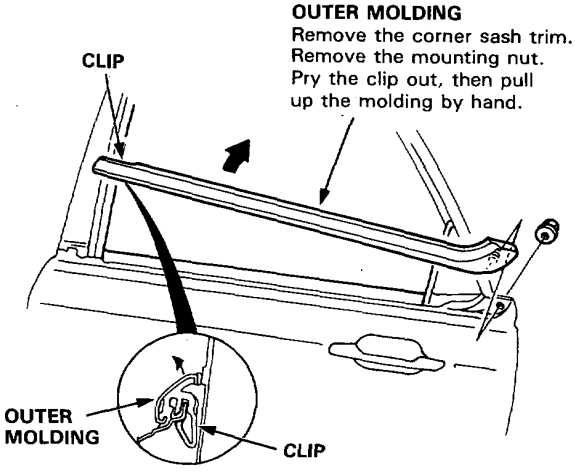

Inner Molding:

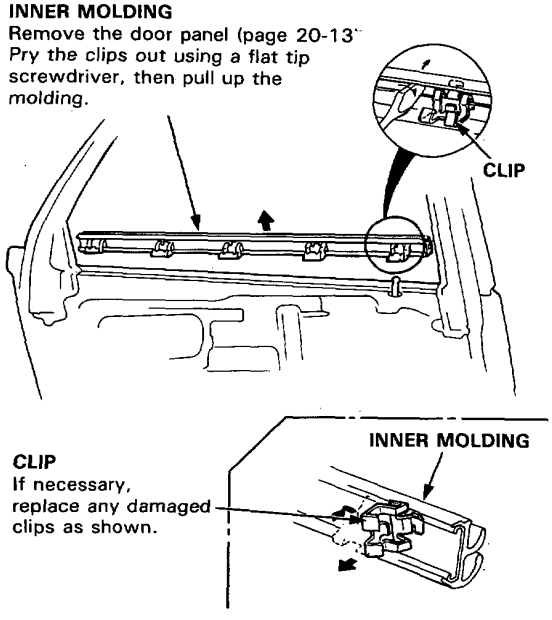

2. Installation is the reverse order of removal.

Sash Trim Replacement

NOTE: Remove the glass (page 20-17).

1. Peel the outer weatherstrip out, then loosen the 2 mounting screws and detach the upper clip.

2. Peel the glass run channel out, and remove the mounting screws, then remove the sash trim by hand.

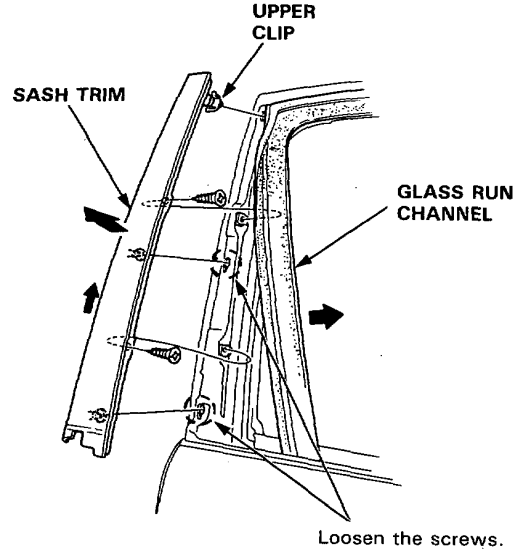

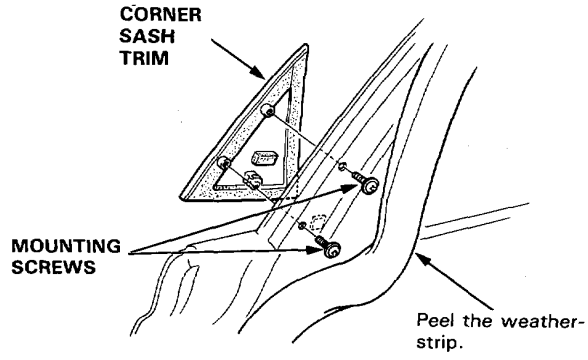

3. Installation is the reverse order of removal.
   NOTE:
   - After installing, make sure the glass run channel is not twisted.
   - Roll the glass up and down to see if it moves freely without binding.

Rear Door

Inner Trim Replacement

NOTE: Lower the window fully.

1. Remove the door panel (page 20-13).
2. Remove the mounting screws, then remove the inner trim.

   NOTE:
   - Take care not to scratch the inner trim.
   - Remove the inside clips from inner weatherstrip side.

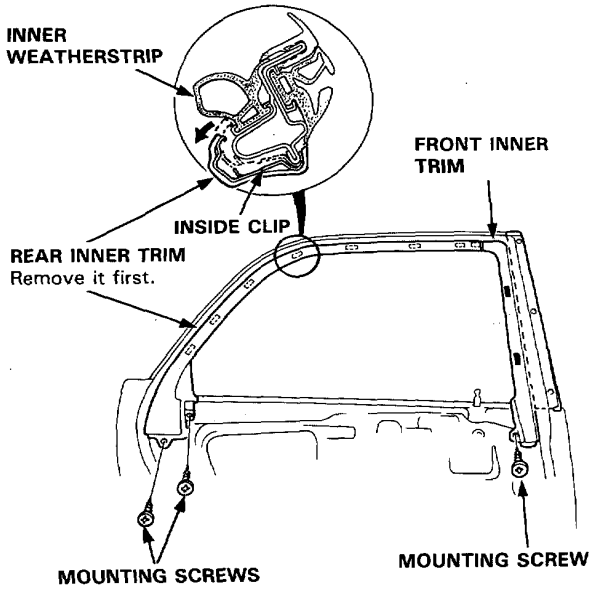

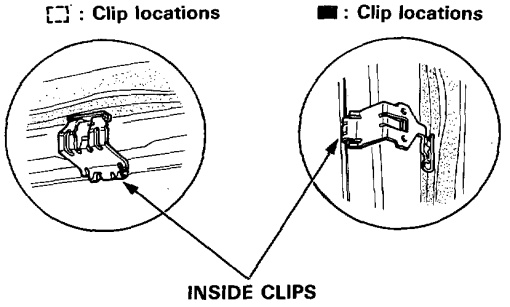

3. Installation is the reverse order of removal.

Weatherstrip Replacement

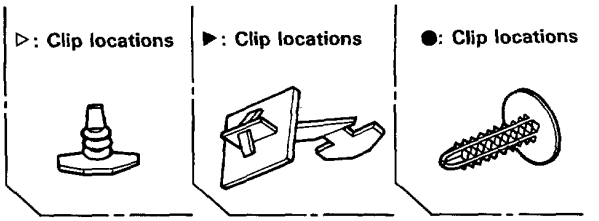

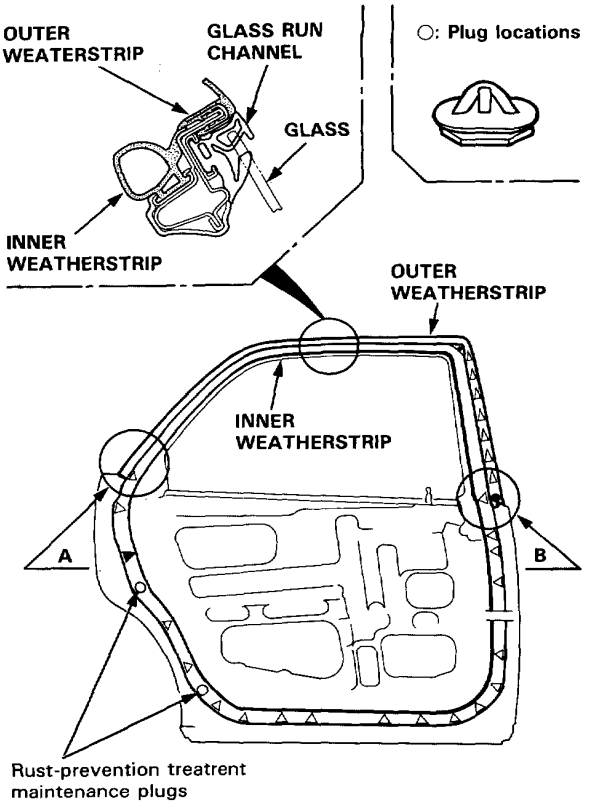

*: 40 mm (1.6 in)
Sealant: cemedine #8500

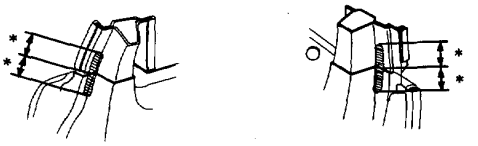

VIEW A VIEW B

NOTE:
- Before installing the weatherstrip, apply clear sealant to the shadowed areas of the door as shown.
- If necessary, replace any damaged clips.

Glass Adjustment

NOTE:
- Place the vehicle on a firm, level surface when adjusting door fit.
- Check the weatherstrip and glass run channel for damage or deterioration and replace if necessary.

1. Remove the door panel and peel off the plastic cover (pages 20-4, 5, 13, 14).
   Remove the power window switch from the door panel.
   Driver's: (page 20-5).
   Passenger's/Rear door: (page 20-14)

2. Connect the power window switch connector to the door harness.

3. To adjust glass fit in the door, raise the glass as far up as possible and hold it against the door sash. Then tighten the roller guide bolts.
   Check for smooth movement of the door glass.

Front:

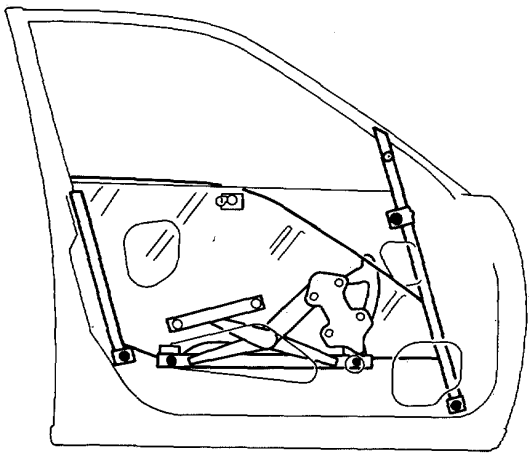

Rear:

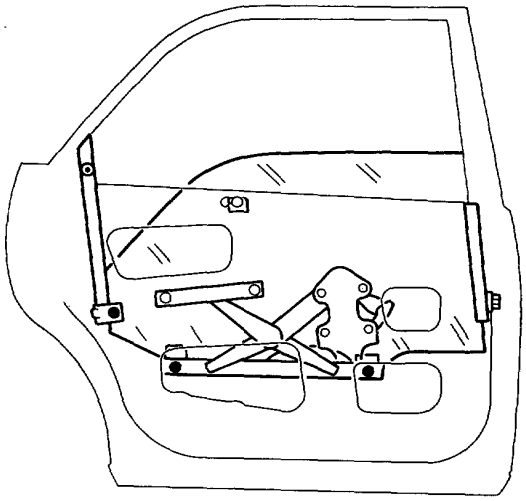

4. If necessary, loosen the roller guide bolt and adjust the window glass so it is parallel with the glass run channel.

Front:

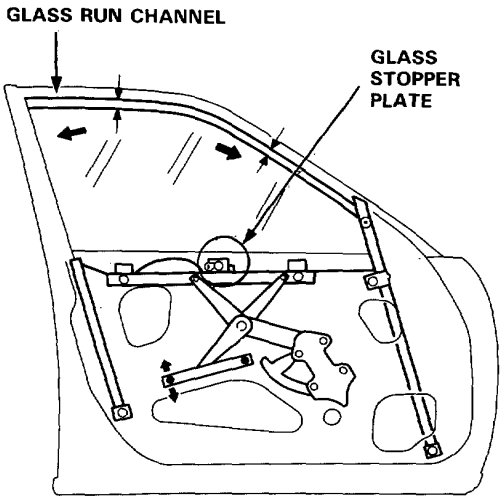

(cont'd)

Glass Adjustment (cont'd)

Rear:

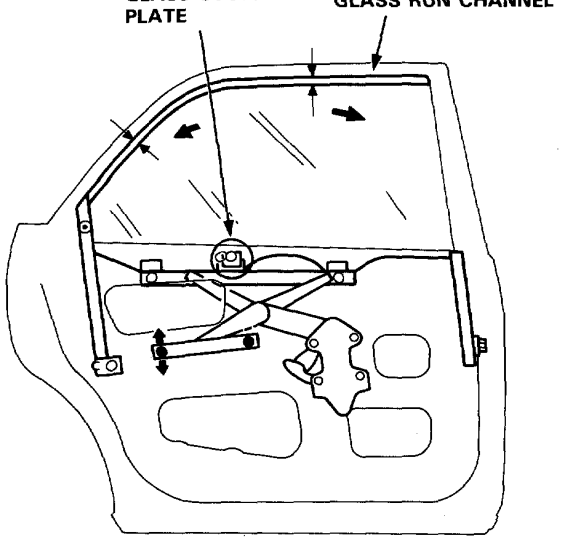

5. Raise the window glass fully and check gap.

6. Check window operation.

   NOTE:
   - Check that the glass run channel is not pinched by the glass.
   - Check that the stopper plate contacts the glass evenly.

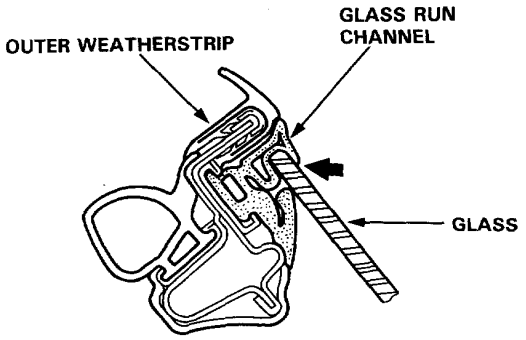

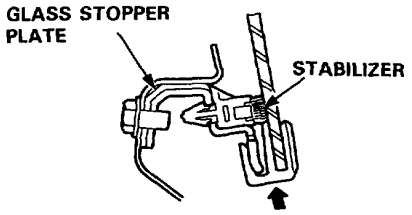

7. With the door and glass closed fully, check for water leaks.

   NOTE: Do not use high pressure water.

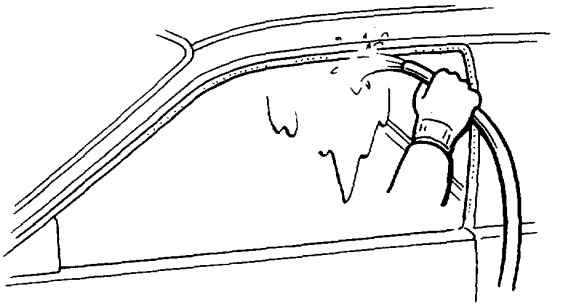

8. Route the wire harness and connectors, fasten them to the door. (pages 20-5, 14).

9. Attach the plastic cover, and install the door panel (pages 20-4, 5, 13, 14).

10. Check for air leaks.

Door Position Adjustment

After installing the door, check for a flush fit with the body, then check for equal gap between the front and rear, and top and bottom door edges and the body. The door and body edges should also be parallel. Adjust at the hinges as shown.

CAUTION: Place a shop towel on the jack to prevent damage to the door and under molding when the hinge bolts are loosened for adjustment.

DOOR MOUNTING BOLTS
8 x 1.25 mm 30 N·m (3.0 kg-m, 22 lb-ft)
Loosen the bolts slightly to move the door IN or OUT until it's flush with the body. If necessary, you can install a shim behind one hinge to make the door edges PARALLEL with the body.

HINGE MOUNTING BOLTS
8 x 1.25 mm
30 N·m (3.0 kg-m, 22 lb-ft)
Loosen the bolts, and move the door BACKWARD or FORWARD, UP or DOWN as necessary to equalize the gaps.

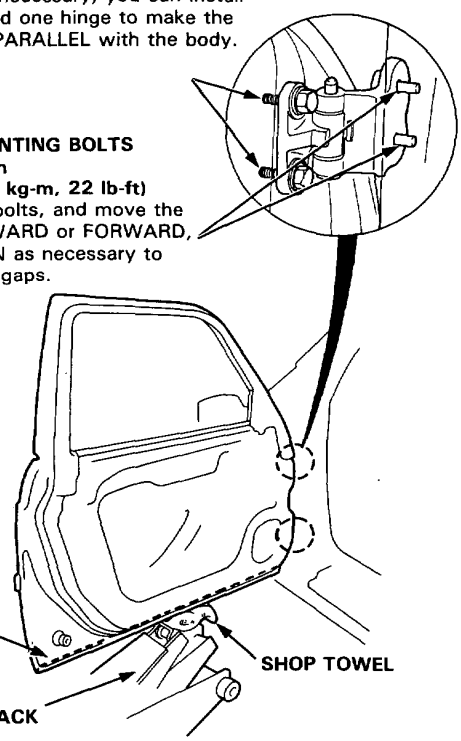

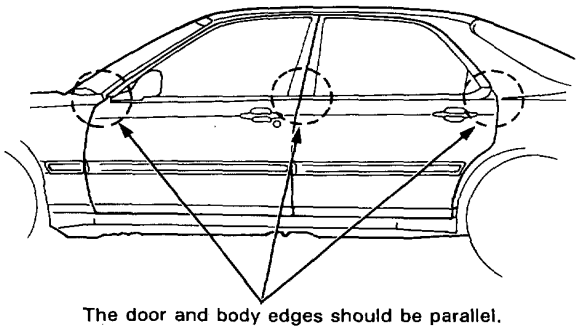

The door and body edges should be parallel.

NOTE: Check for water and air leaks.

Door Striker Adjustment

Make sure the door latches securely without slamming. If it needs adjustment:

1. Draw a line around the striker plate for reference.
2. Loosen the striker screws and move the striker IN or OUT to make the latch fit tighter of looser. Move the striker UP or DOWN to align it with the latch opening. Then lightly tighten the screws and recheck.

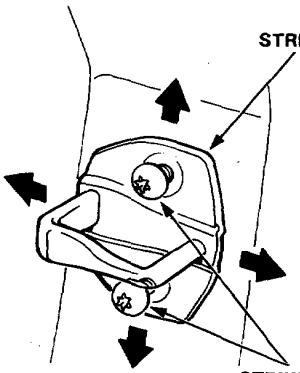

STRIKER MOUNTING BOLTS
Use TORX® T40
18 N·m (1.8 kg-m, 13 lb-ft)

NOTE: Hold the outside handle out and push the door against the body to be sure the striker allows a flush fit.

3. If the door latches properly, tighten the screws and recheck.

Door Mirror

Removal

1. Pry out the forward edge of the cover panel with a flat tip screwdriver, then remove the cover panel.

2. Remove the mirror mounting screws while holding the mirror.
   Disconnect the connector.

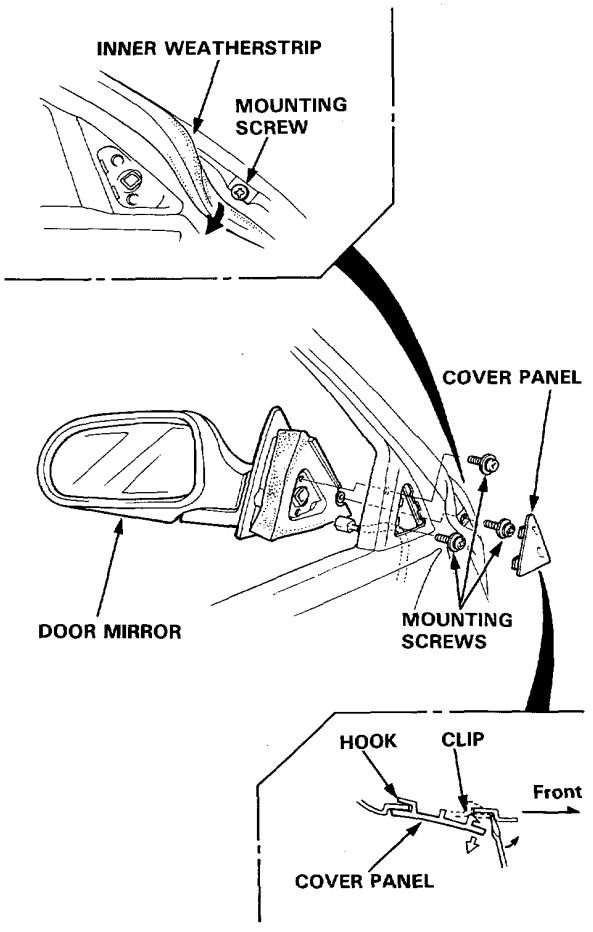

3. Install the door mirror in the reverse order of removal.

4. With the door and door glass closed fully, check for water and air leaks.

   NOTE: Do not use high pressure water.

Mirror Glass Replacement

1. Insert a screwdriver in the mirror through the service hole, and loosen the actuator retaining screw.

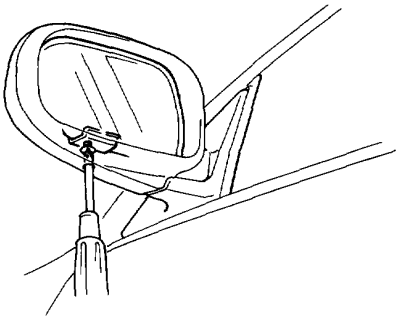

2. Pull the actuator out from the mirror housing.

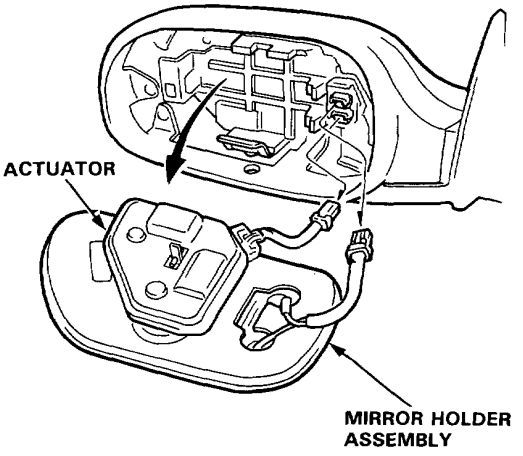

3. Install the actuator and glass in the reverse order of removal.

Windshield, Rear Window

Index

( ): Quantity of part used.

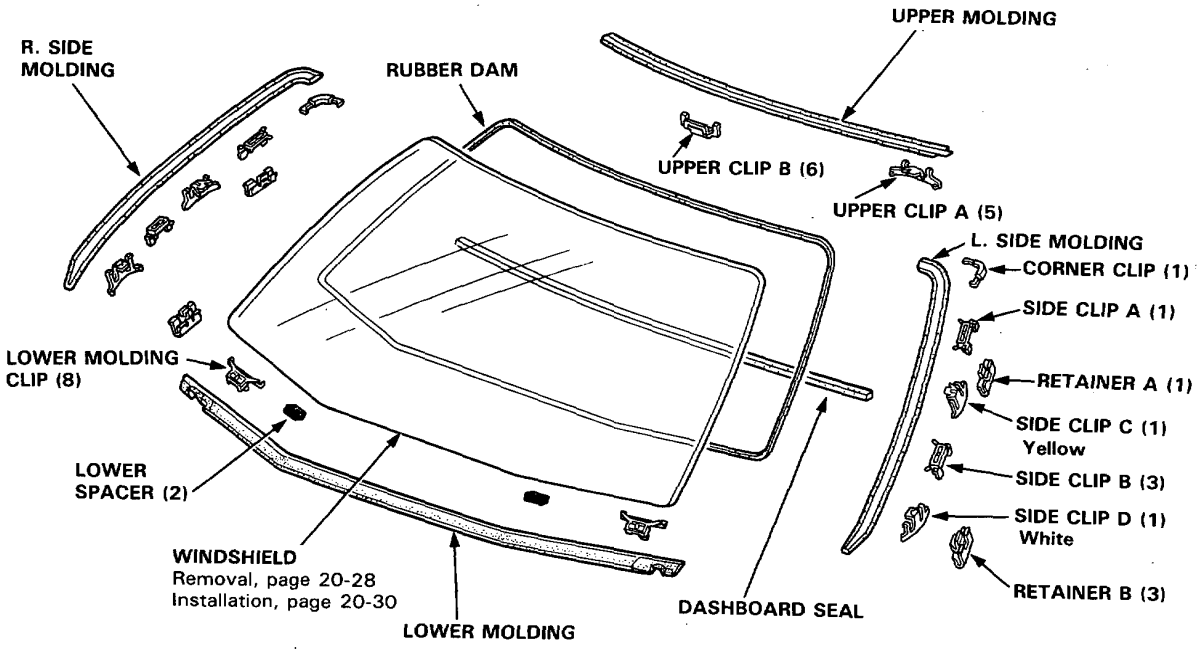

( ) Molding clip color: Glass thickness 4.7 mm

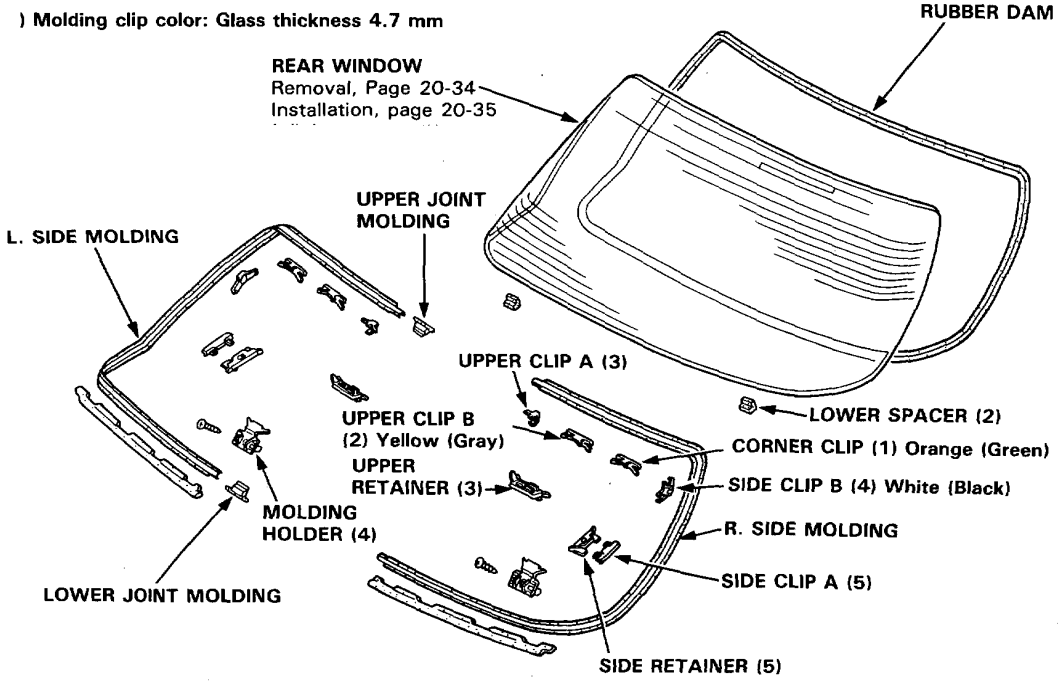

Windshield, Rear Window Glass, Rear Hatch Glass

Installation

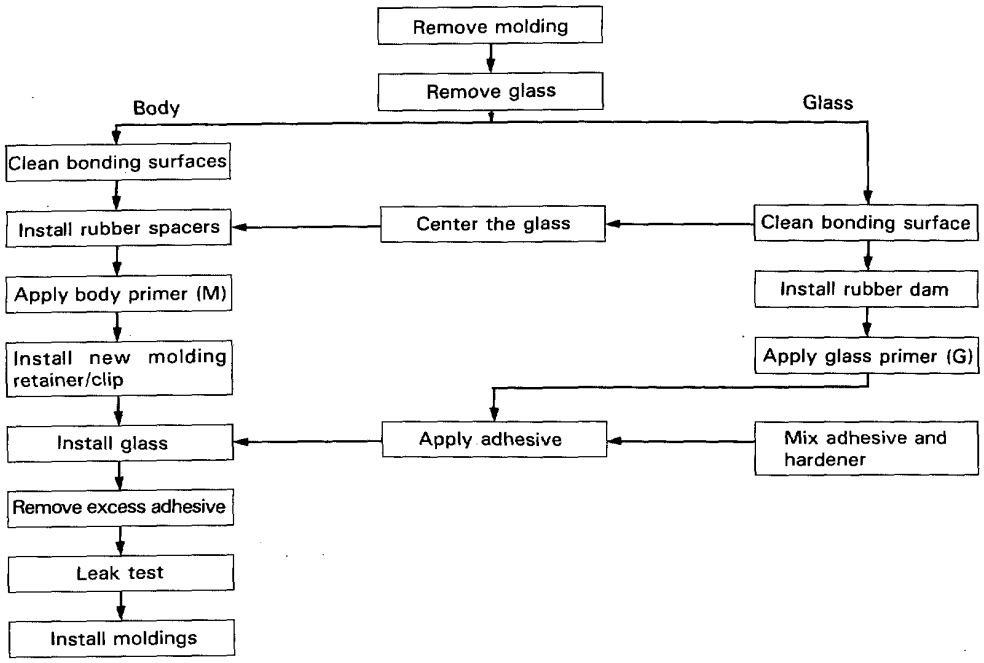

Parts

Part Number	Contents	Comment
Adhesive kit — Low temperature 08718—99960 / High temperature 08718—99961	Adhesive sealant (500 g)	
	Hardener (75 g)	
	Glass primer G (20 g)	
	Body primer M (20 g)	
	Piano wire (0.6ø x 1 m (3f))	
	Gauze	
	Cartridge	For glass primer (G)
	Sponge	For applying primers

NOTE:
- Both kits have two types of adhesive primer: one for the body (metal), and one for glass.
- Always use new genuine Honda adhesive, or equivalent.
- Do not use the adhesive if 6 months have elapsed since date of manufacture.
- Store adhesive in a cool, dry place.
- Open only immediately before you are going to use it.

Tools

Tool/Material	Remarks
Glass or steel plate	To mix adhesive and hardener on
Putty knife	To mix adhesive and remove excess
Caulking gun	To apply bead of adhesive to windshield.
Suction cups	To install windshield
Knife	To scrape bonding surface around window opening
Awl	To make hole through existing adhesive for piano wire
Two wood sticks	To hold piano wire
Toluene or alcohol	To clean bonding surfaces

Workable Time

Adhesive workable time varies widely according to temperature, so choose the correct adhesive kit for the temperature range you will be working in.
After mixing and applying adhesive, you should install the windshield within the time shown on the chart.

For example, when the ambient temperature is 25°C (77°F), the glass should be installed within 45 minutes using the high temperature type adhesive.
Kit part numbers and contents are listed on the page before.

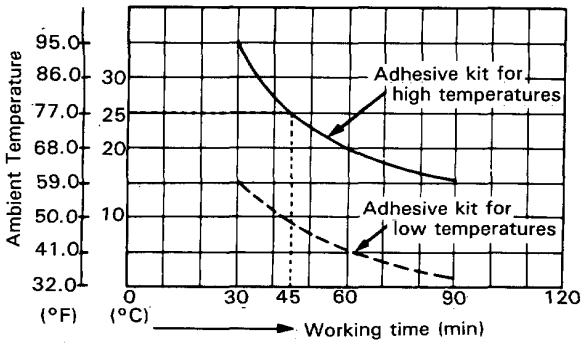

Hardening Time

Hardening time can be shortened by heating with infrared light.

For example, the adhesive will start to harden within 270 minutes mixing at 20°C (63°F). If however, it is heated to 35°C (95°F), it will start to harden within 90 minutes.

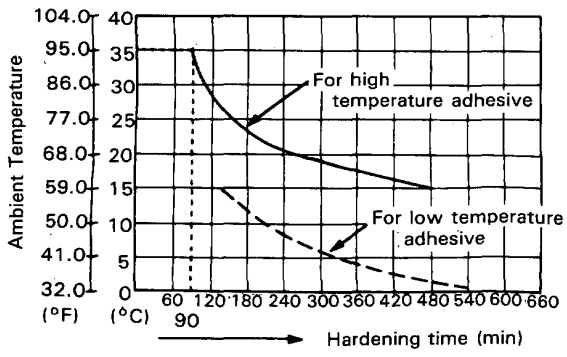

Broken Glass Removal

SRS wire harnesses are routed near the dashboard, steering column and carpet.

⚠WARNING All SRS wire harnesses and connectors are colored yellow. Do not use electrical test equipment on these circuits.

CAUTION: Be careful not to damage the SRS wire harnesses when servicing the dashboard, steering column and carpet.

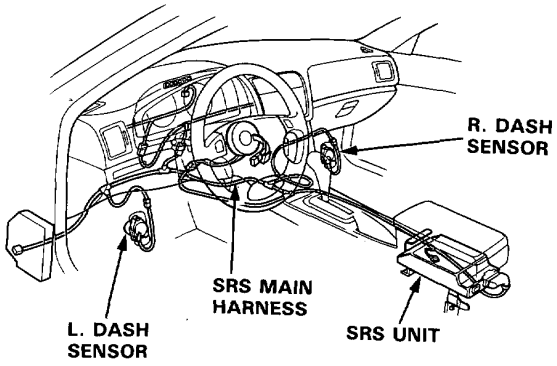

Remove as much broken glass as possible with a vacuum cleaner.
Blow out the glass in the heater and behind the dashboard with low pressure compressed air:

⚠WARNING Wear eye protection while using the air gun.

1. Set the temperature control dial to COLD.
2. Push the HEAT button on the function pawel.
3. Make sure the recirculation button is OFF.
4. Blow compressed air throught the defroster center vent outlet.
5. Remove the blower duct, and remove any glass from the air mix chamber.
6. Remove the any glass from the top of the vent/defrost door.
7. Remove any glass from top and bottom of carpet and seats with a vacuum cleaner.

   NOTE: It is recommended to remove the seats to shake off any glass (page 20-50).

Windshield

Removal

CAUTION:
- **Wear gloves to remove and install the glass.**
- **Use seat covers to avoid damaging surface.**

1. To remove the windshield, first remove the:
   - Rearview mirror (page 20-57).
   - Sun visors, center visor and holders (page 20-49).
   - Front pillar trim (page 20-48).
   - Front wipers (See Section 23).

2. Detach the clips from the retainers then remove the side molding as shown.

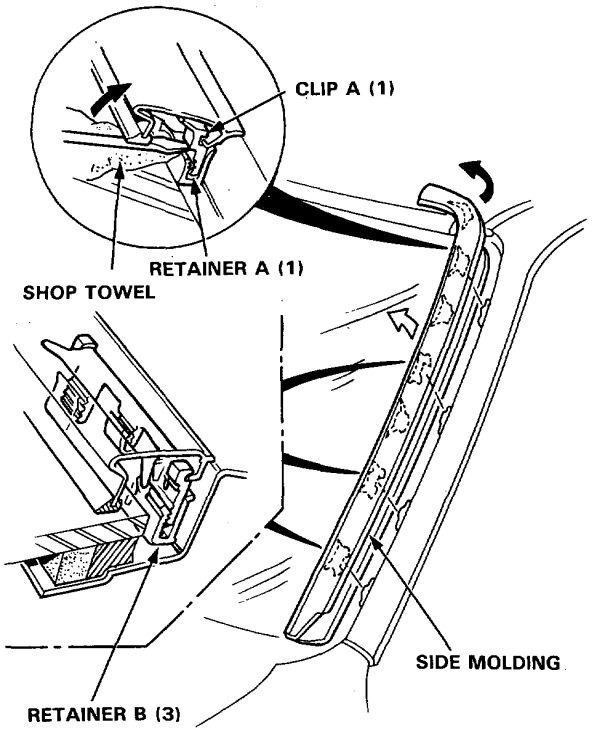

NOTE: You will need a molding clip release tool to remove some moldings. If necessary, make one that has the dimensions shown.

Molding Clip Release Tool

Thickness: 2 mm (0.08 in), pointed at the end.

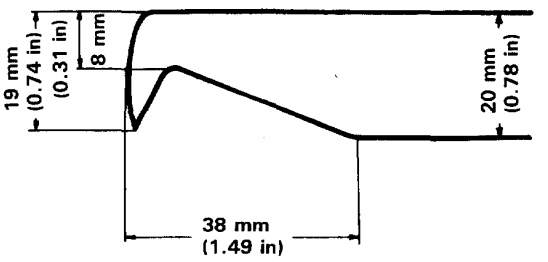

3. Remove the upper molding with a molding clip release tool.

4. Detach the clips and remove the upper moldings.

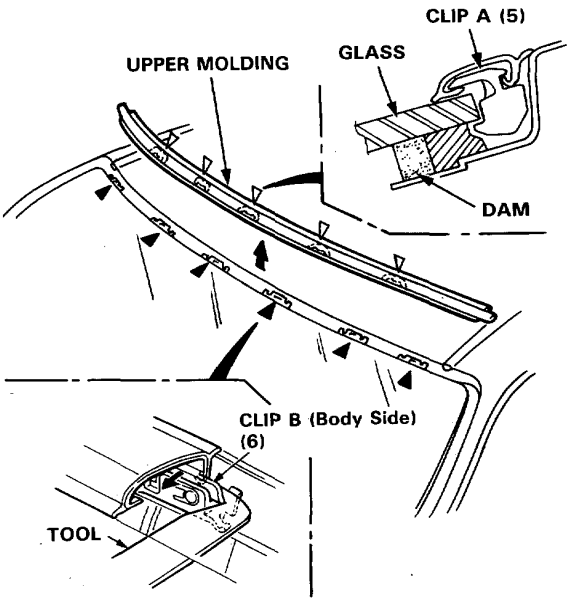

5. Remove the other clips and retainers from the body.

6. Remove the lower molding and clips.

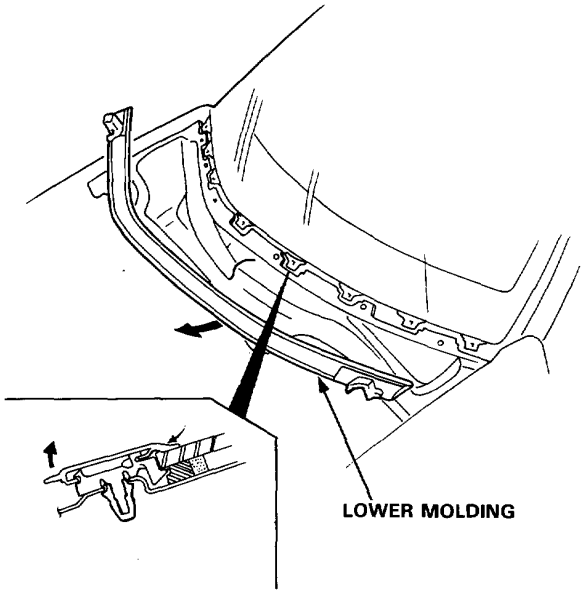

7. Pull down the front of headliner.

CAUTION: Take care not to bend the headliner excessively.

8. Apply protective tape along the edge of the dashboard and body next to the glass as shown.

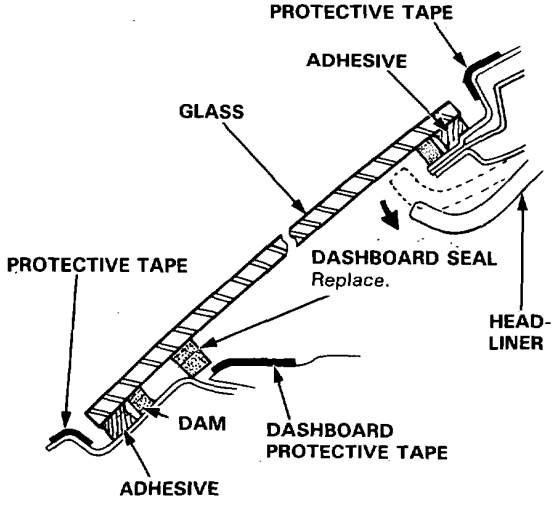

9. Using an awl, make a hole through the windshield adhesive from inside the car. Push piano wire through the hole and wrap each end around a piece of wood.

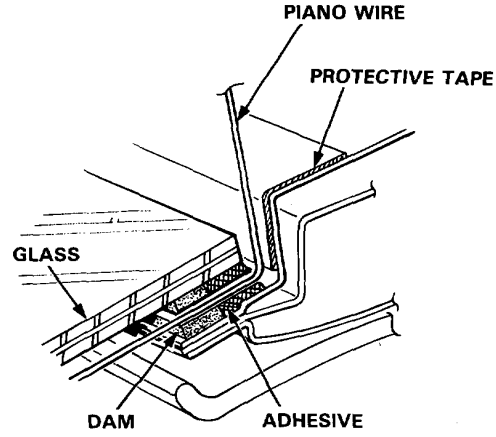

10. With a helper on the outside, pull the wire back and forth in a sawing motion and carefully cut through the adhesive around the entire windshield.

CAUTION: Hold the piano wire as close to the glass as possible to prevent damage to the body and dashboard.

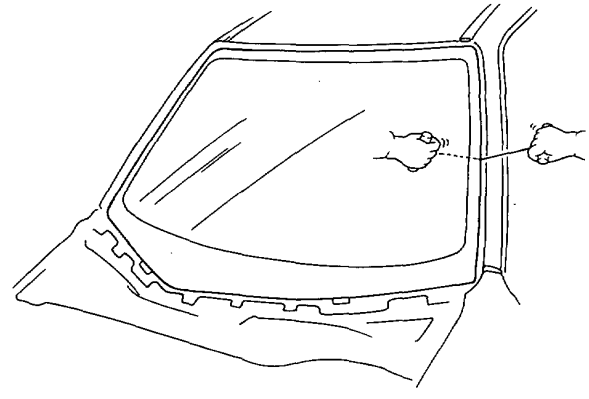

11. Cut the rubber spacers away from the body with a knife; they are cemented in place.

NOTE: Replace the rubber spacers with new ones whenever the windshield is removed.

Installation

1. Scrape the old adhesive smooth with a knife, to a thickness of about 2 mm (0.08 in) on the bonding surface around the entire windshield flange.

   NOTE:
   - Do not scrape down to the painted surface of the body; damaged paint will interfere with proper bonding.
   - Remove all traces of the rubber spacer material from the body.
   - Mask off surrounding surfaces before painting.

2. Clean the body bonding surface with a sponge dampened in alcohol.

   NOTE: After cleaning, keep oil, grease or water from getting on the surface.

3. If the old glass is to be reinstalled, use a putty knife to scrape off all traces of old adhesive, then clean the glass surface with alcohol where new adhesive is to be applied.

   NOTE: Make sure the bonding surface is kept free of water, oil and grease.

   CAUTION: Avoid setting the glass on its edges; small chips may later develop into cracks.

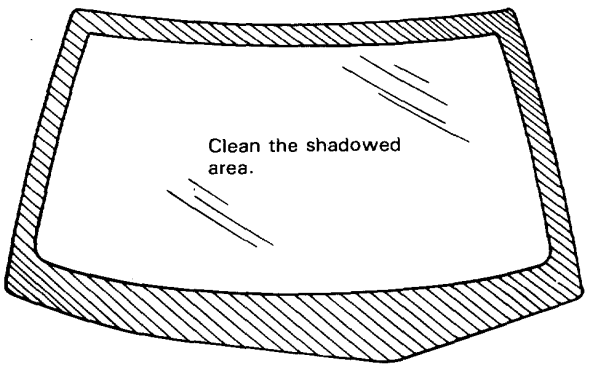

4. Glue the dashboard seal and rubber dam to the inside face of the windshield as shown to contain the adhesive during installation.

   NOTE: Be careful not to touch the glass where adhesive will be applied.

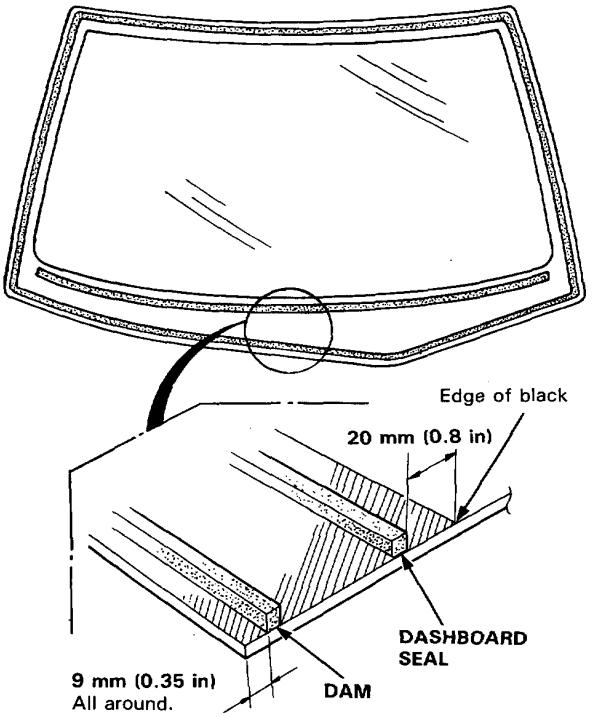

5. Install the clips and retainers as shown. Glue the lower spacers to the body.

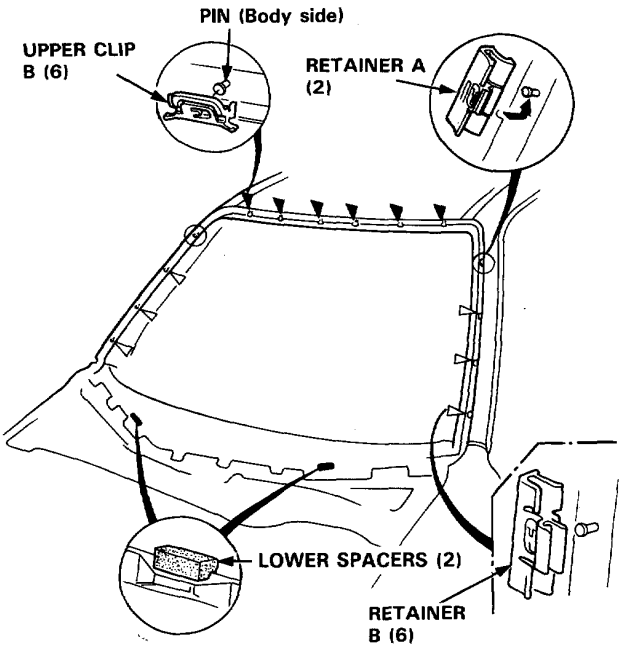

6. Set the windshield upright on the spacers, then center it in the opening. Mark the location by marking lines across the glass and body with a grease pencil at the four points shown.

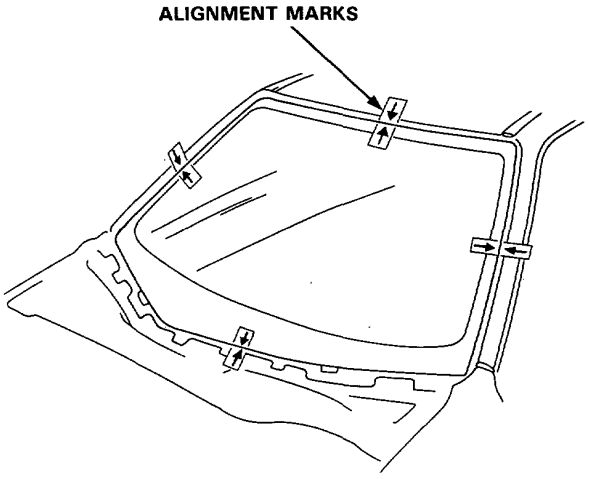

7. With a sponge, apply a light coat of glass primer around the edge of the glass as shown, then lightly wipe it off with gauze or cheesecloth.

NOTE:
- Do not apply body primer to the glass, and do not get body and glass primer sponges mixed up.
- Never touch the primed surfaces with your hands. If you do, the adhesive may not bond to the glass properly, causing a leak after the windshield is installed.
- Keep water, dust, and abrasive materials away from the primed surface.

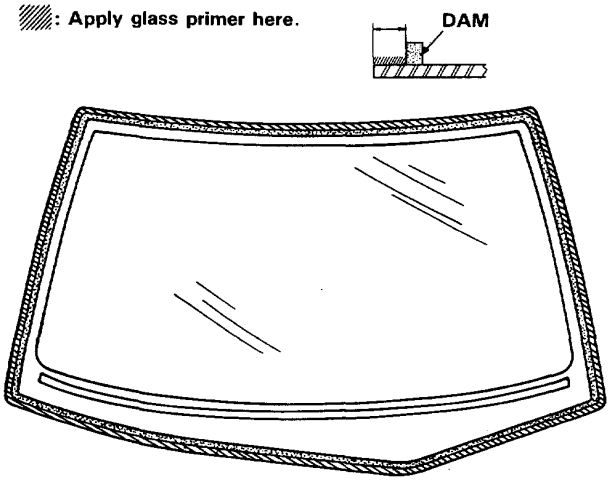

8. With a sponge, apply a light coat of body primer to the original adhesive remaining around the window opening flange. The glass should be installed 10 minutes after you apply the primer.

NOTE:
- Do not apply glass primer to the body, and be careful not to mix up glass and body primer sponges.
- Never touch the primed surfaces with your hands.
- Mask off the dashboard before painting the flange.

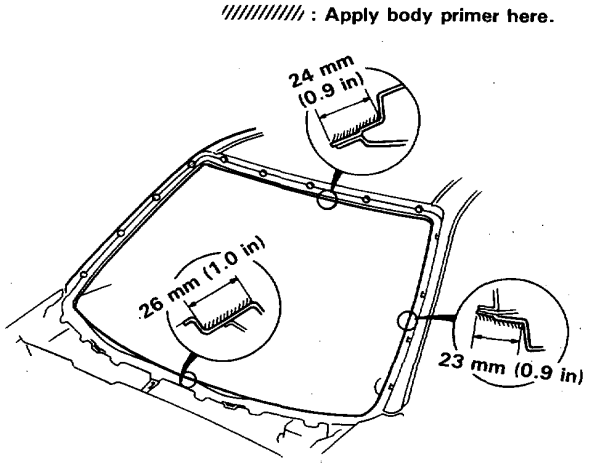

9. Thoroughly mix all the adhesive and hardener together on a glass or metal plate with a putty knife.

NOTE:
- Clean the plate with a sponge and alcohol before mixing.
- Follow the instructions that come with the adhesive.

10. Before filling a cartridge, cut off the end of the nozzle at the angle shown.

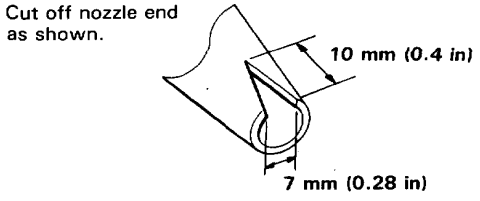

(cont'd)

Installation (cont'd)

11. Pack adhesive into the cartridge without air pockets to ensure continuous delivery. Put the cartridge in a caulking gun and run a bead of adhesive around the edge of the glass as shown.

    NOTE: Apply the adhesive within 30 minutes after applying the glass primer.

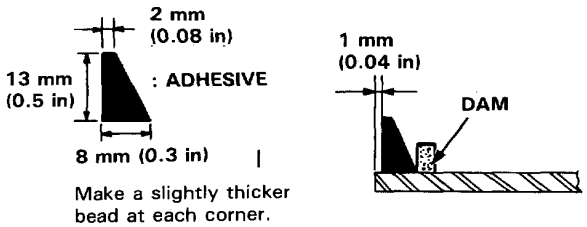

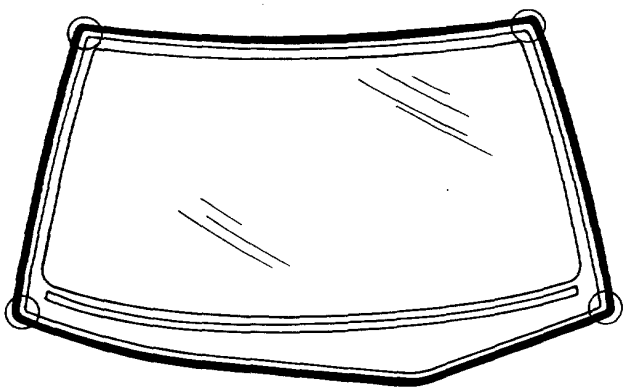

12. Use suction cups to hold the glass over the opening, align it with the marks made in step 6 and set it down on the adhesive. Lightly push on the glass until its edge is fully seated on the adhesive all the way around.

    NOTE: Do not close or open the doors until adhesive is dry.

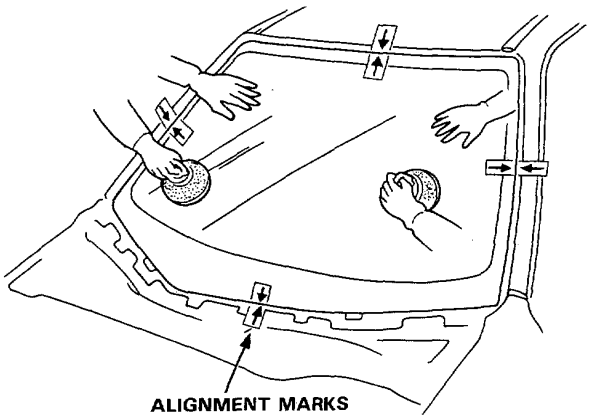

13. Install the clips on the lower molding, upper molding and side molding.

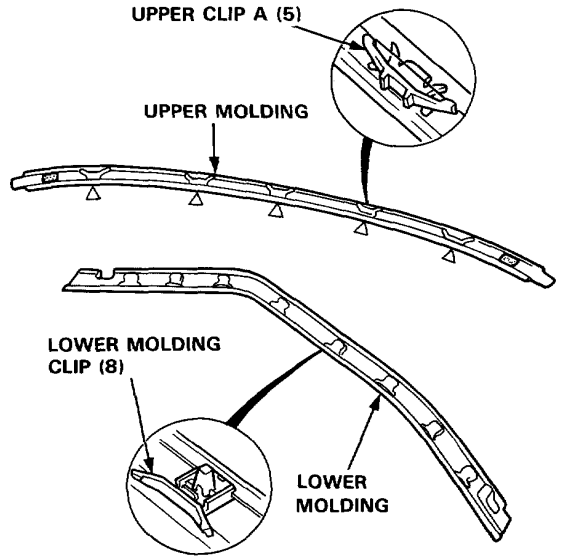

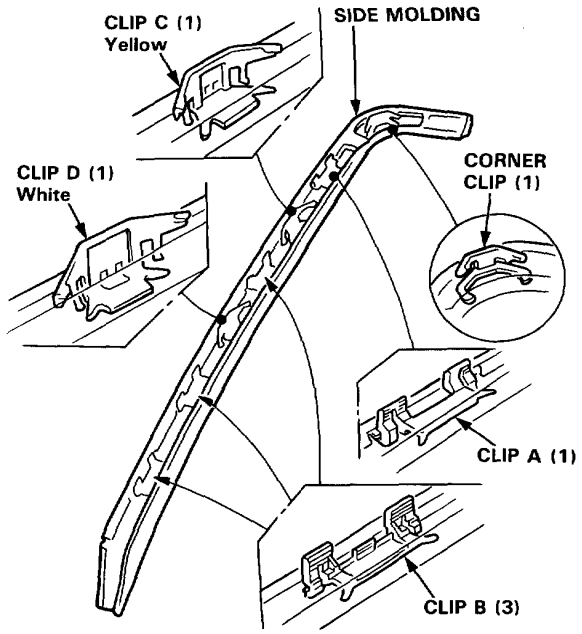

NOTE: Check the proper application of side clips C, D.

14. Scrape or wipe the excess adhesive off with a putty knife or gauze.

    NOTE: To remove adhesive from a painted surface or glass, wipe with a soft shop towel dampened with alcohol.

15. Install the upper molding and lower molding.

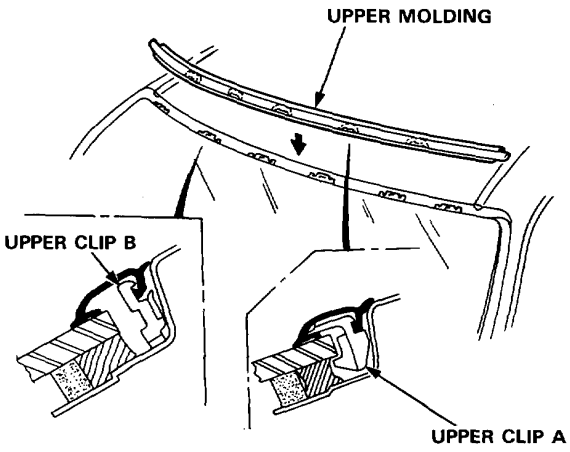

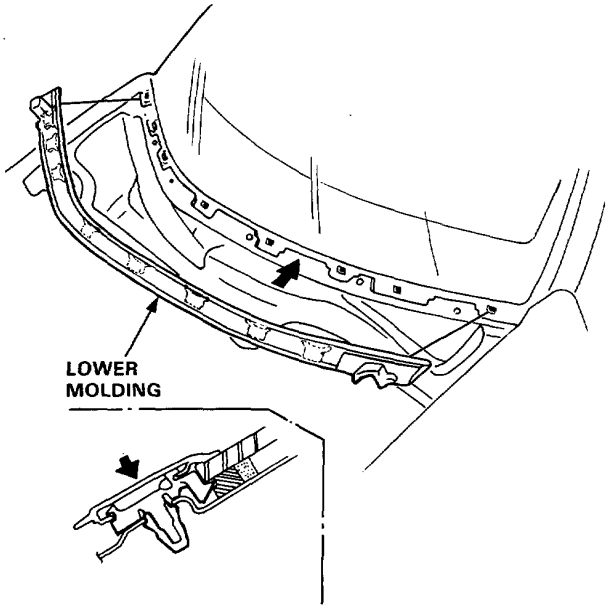

16. Install the side molding.

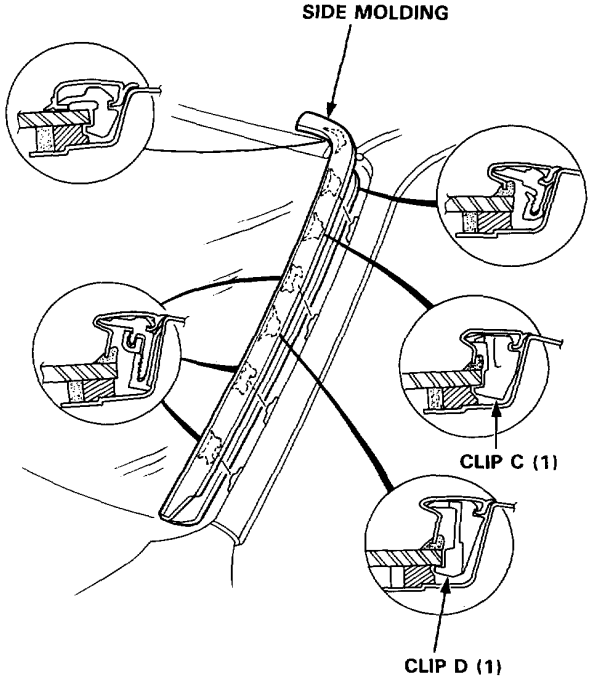

17. Let the adhesive dry for at least 1 hour, then spray water over the glass and check for leaks. Mark leaking areas and let the glass dry, then seal with urethane windshield adhesive.

    NOTE:
    - Let the car stand for at least 4 hours after glass installation. If the car has to be used within the first 4 hours, it must be driven slowly.
    - Keep the glass dry for the first hour after installation.
    - Check that the ends of the molding are set under the air scoop.

18. Reassemble all removed parts.

    NOTE: Install the rearview mirror rubber damper after the adhesive has dryed thoroughly.

Rear Window

Removal

CAUTION:
- **Wear gloves to remove and install the glass.**
- **Do not damage the defroster grid lines.**

1. To remove the rear window, first remove:
   - Rear seat back (page 20-54).
   - Rear shelf (page 20-48).
   - Rear pillar trim panel (page 20-48).

2. Disconnect the defroster leads, and remove their holders.

   NOTE: Avoid scratching or scoring the glass with the cutter blade.

3. Remove the molding holders and detach the side clips.

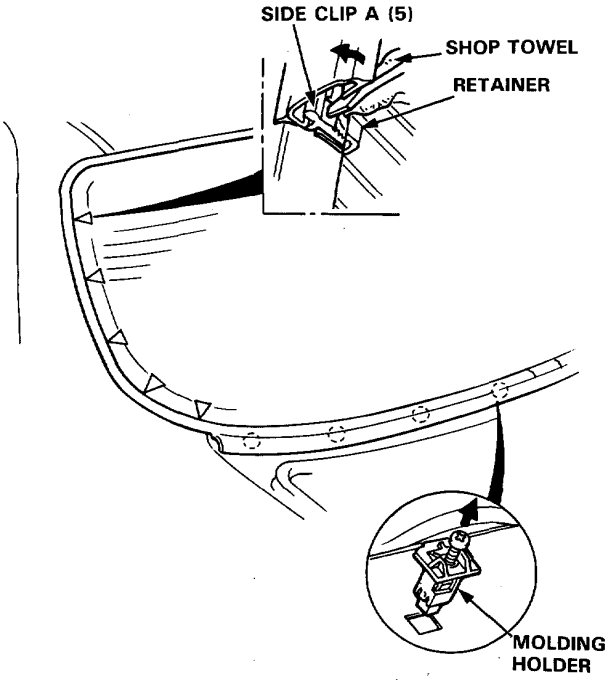

Molding Holder removal:

1) Remove or loosen the screw.

2) Place the screw in the grommet again (do not screw it in) and press it down.

3) Pull the screw with the molding holder out of the body.

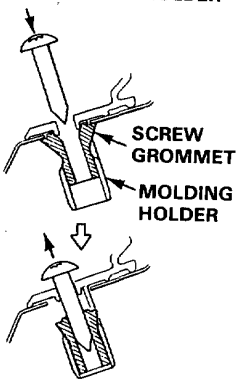

4. Detach the clips and remove the side molding.

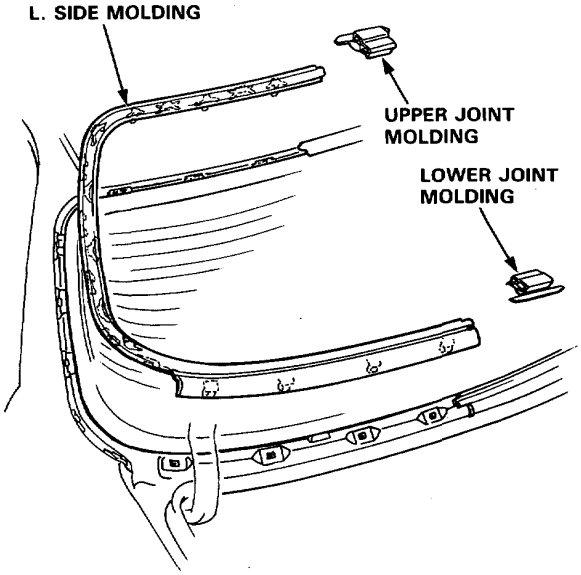

5. Remove the other clips and retainers from the body.

6. Pull down the rear of the headliner (page 20-49).

   CAUTION: Take care not to bend the headliner excessively.

7. Apply protective tape along the edge of the body next to the glass as shown.

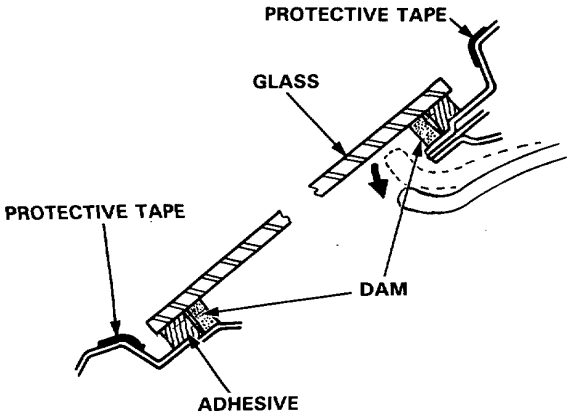

8. Using an awl, make a hole through the glass adhesive from inside the car. Push piano wire through the hole and wrap each end around a piece of wood.

9. With a helper on the outside, pull the wire back and forth in a sawing motion and carefully cut through the adhesive around the entire glass.

CAUTION: Hold the piano wire as close to the glass as possible to prevent damage to the body.

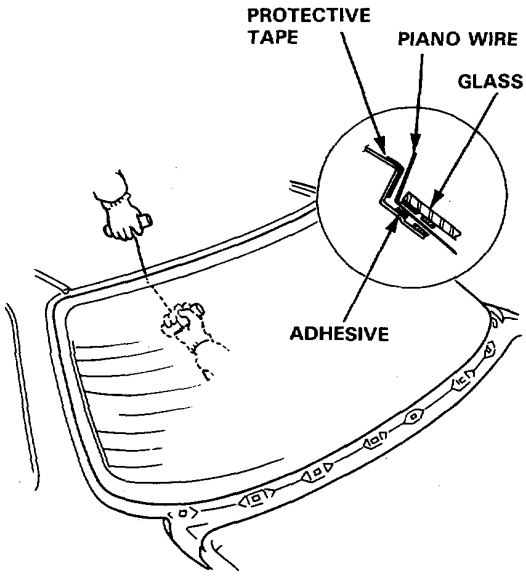

10. Cut the rubber spacers away from the body with a knife: they are cemented in place.

NOTE: Replace the rubber spacers with new ones whenever the rear window is removed.

Installation

1. Scrape the old adhesive smooth with a knife, to a thickness of about 2 mm (0.08 in) on the bonding surface around the entire glass flange.

NOTE:
- Do not scrape down to the painted surface of the body; damaged paint will interfere with proper bonding.
- Remove all traces of the rubber spacer material from the body.
- Mask off surrounding surfaces before applying primer.

2. Clean the body bonding surface with a sponge dampened in alcohol.

NOTE: After cleaning, keep oil, grease or water from getting on the surface.

3. If the old glass is to be reinstalled, use a putty knife to scrape off all traces of old adhesive, then clean the glass surface with alcohol where new adhesive is to be applied.

NOTE: Make sure the bonding surface is kept free of water, oil and grease.

CAUTION: Avoid setting the glass on its edges; small chips may later develop into cracks.

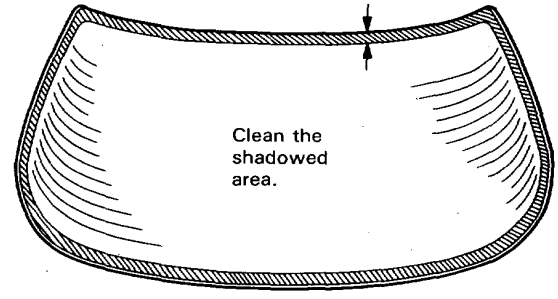

(cont'd)

Installation (cont'd)

4. Install the molding clips and retainers as shown. Glue the lower spacers to the body.

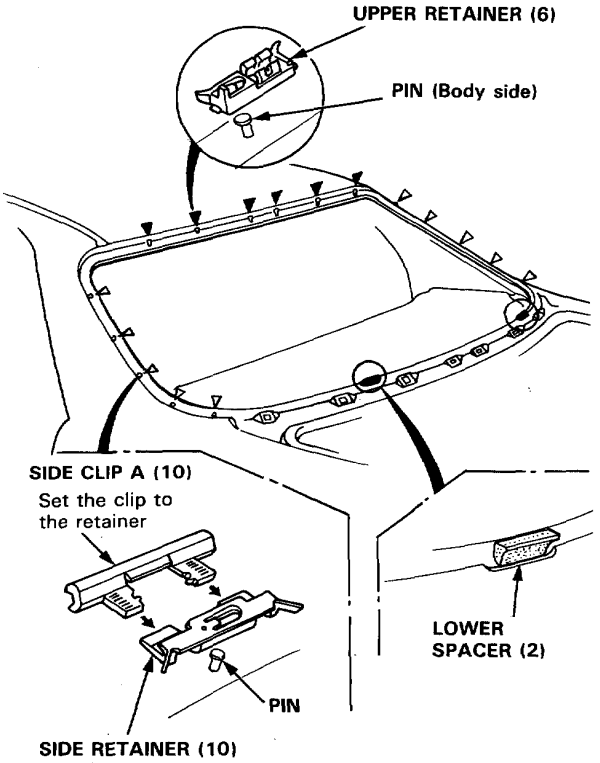

5. Glue the rubber dams to the inside face of the glass as shown to contain the adhesive during installation.

   NOTE: Be careful not to touch the glass where adhesive will be applied.

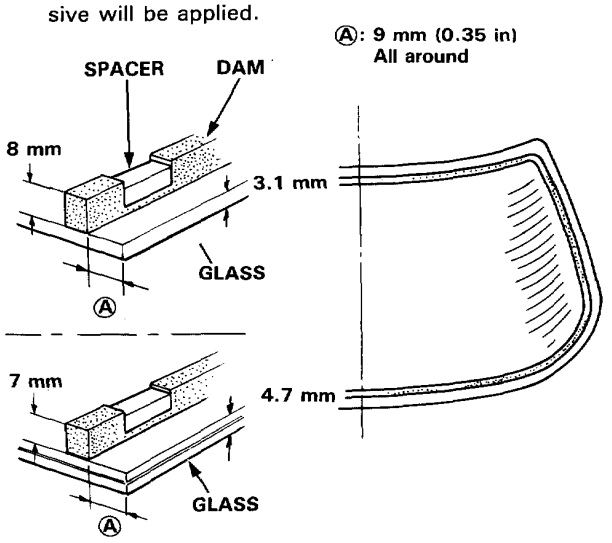

6. Set the glass upright on the glass stoppers, then center it in the opening. Mark the location by marking lines across the glass and body with a grease pencil at the four points shown.

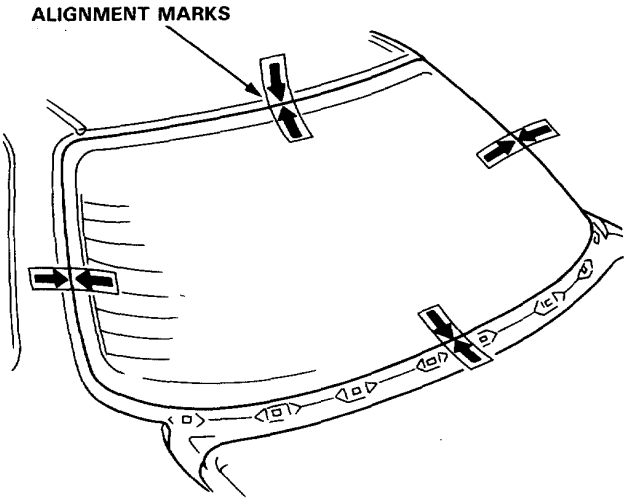

7. With a sponge, apply a light coat of glass primer around the edge of the glass as shown, then lightly wipe it off with gauze or cheesecloth.

   NOTE:
   - Do not apply body primer to the glass, and do not get body and glass primer sponges mixed up.
   - Never touch the primed surfaces with your hands. If you do, the adhesive may not bond to the glass properly, causing a leak after the glass is installed.
   - Keep water, dust, and abrasive materials away from the primed surface.

   : Apply glass primer here.

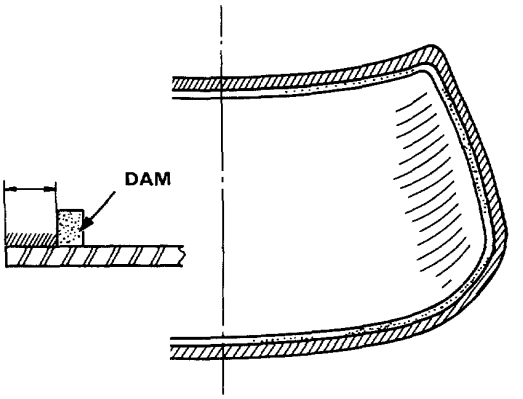

8. With a sponge, apply a light coat of body primer to the original adhesive remaining around the window opening flange.

NOTE:
- Do not apply glass primer to the body, and be careful not to mix up glass and body primer sponges.
- Never touch the primed surfaces with your hands.

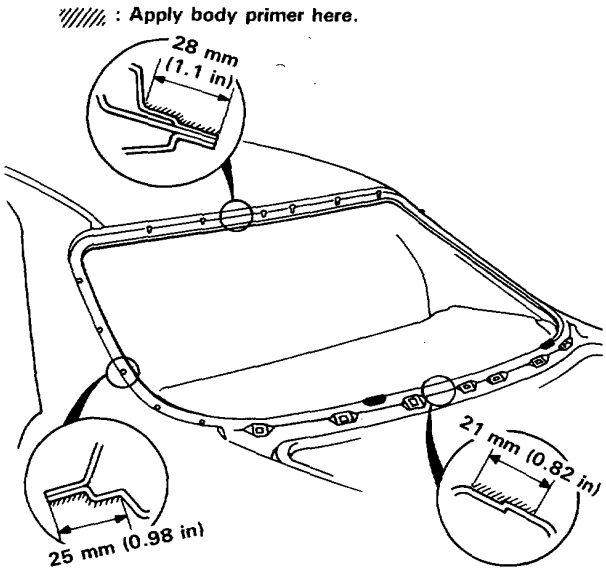

9. Thoroughly mix the adhesive and hardener together on a glass or metal plate with a putty knife. Follow the instructions that came with the adhesive.

NOTE: Clean the plate with a sponge and alcohol before mixing.

10. Before filling a cartridge, cut off the end of the nozzle at the angle shown.

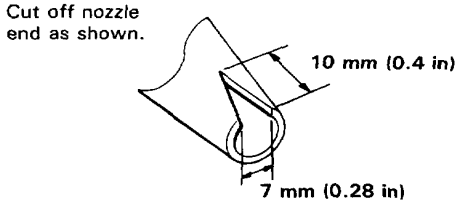

11. Pack adhesive into the cartridge without air pockets to ensure continuous delivery. Put the cartridge in a caulking gun and run a bead of adhesive around the edge of the glass as shown.

NOTE: Apply the adhesive within 30 minutes after applying the glass primer.

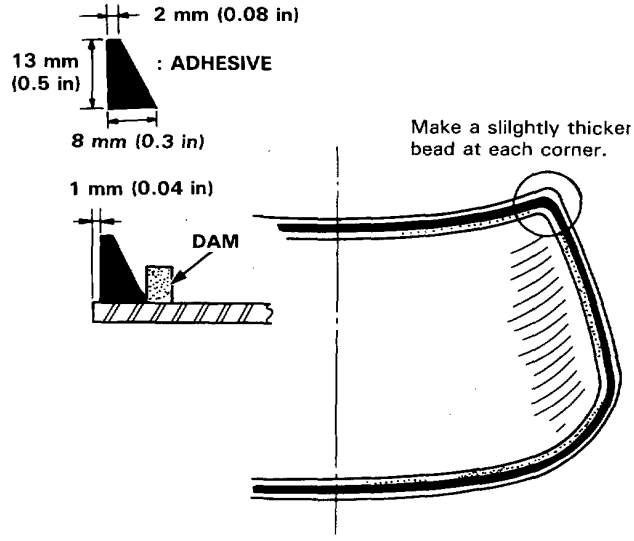

12. Use suction cups to hold the glass over the opening, align it with the marks made in step 6 and set it down on the adhesive. Lightly push on the glass until its edges are fully seated on the adhesive all the way around.

NOTE: Do not close or open the doors until adhesive is dry.

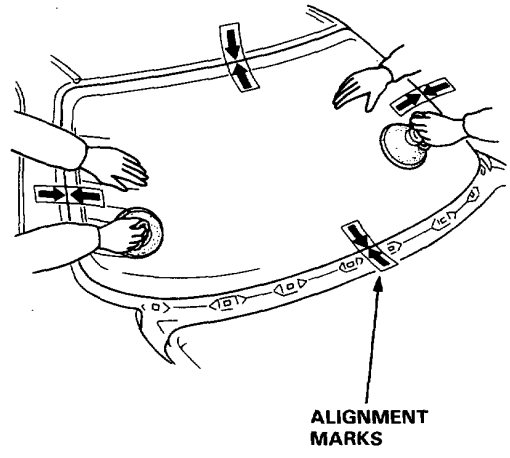

(cont'd)

Installation (cont'd)

13. Scrape or wipe the excess adhesive off with a putty knife or gauze.

    NOTE: To remove adhesive from a painted surface or glass, use a soft shop towel dampened with alcohol.

14. Install the clips on the side molding.

    ( ) Molding clip color: Glass thickness 4.7 mm

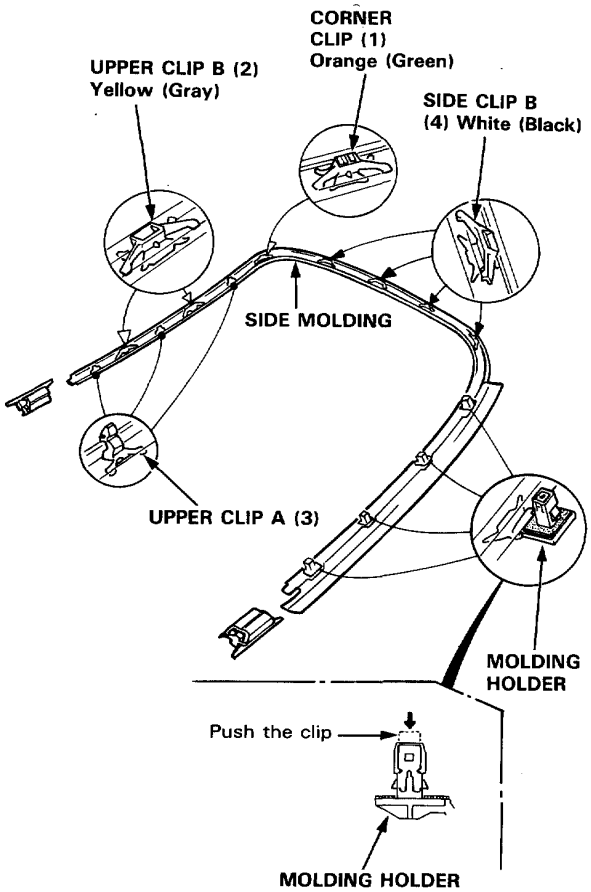

15. Install the side moldings.

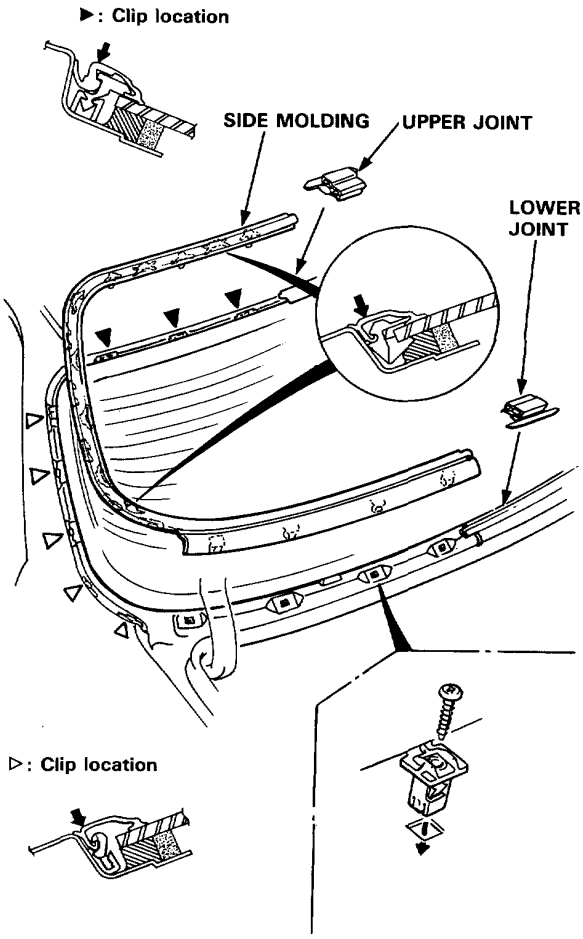

16. After the adhesive is dry, spray water over the glass and check for leaks. Mark leaking areas and let the glass dry, then seal with sealant.

    NOTE: Let the car stand for at least 4 hours after glass installation. If the car has to be used within the first 4 hours, it must be driven slowly.

17. Raise the headliner back into position then install:
    - Rear pillar trim panel.
    - Rear shelf.
    - Rear seat back.

Index

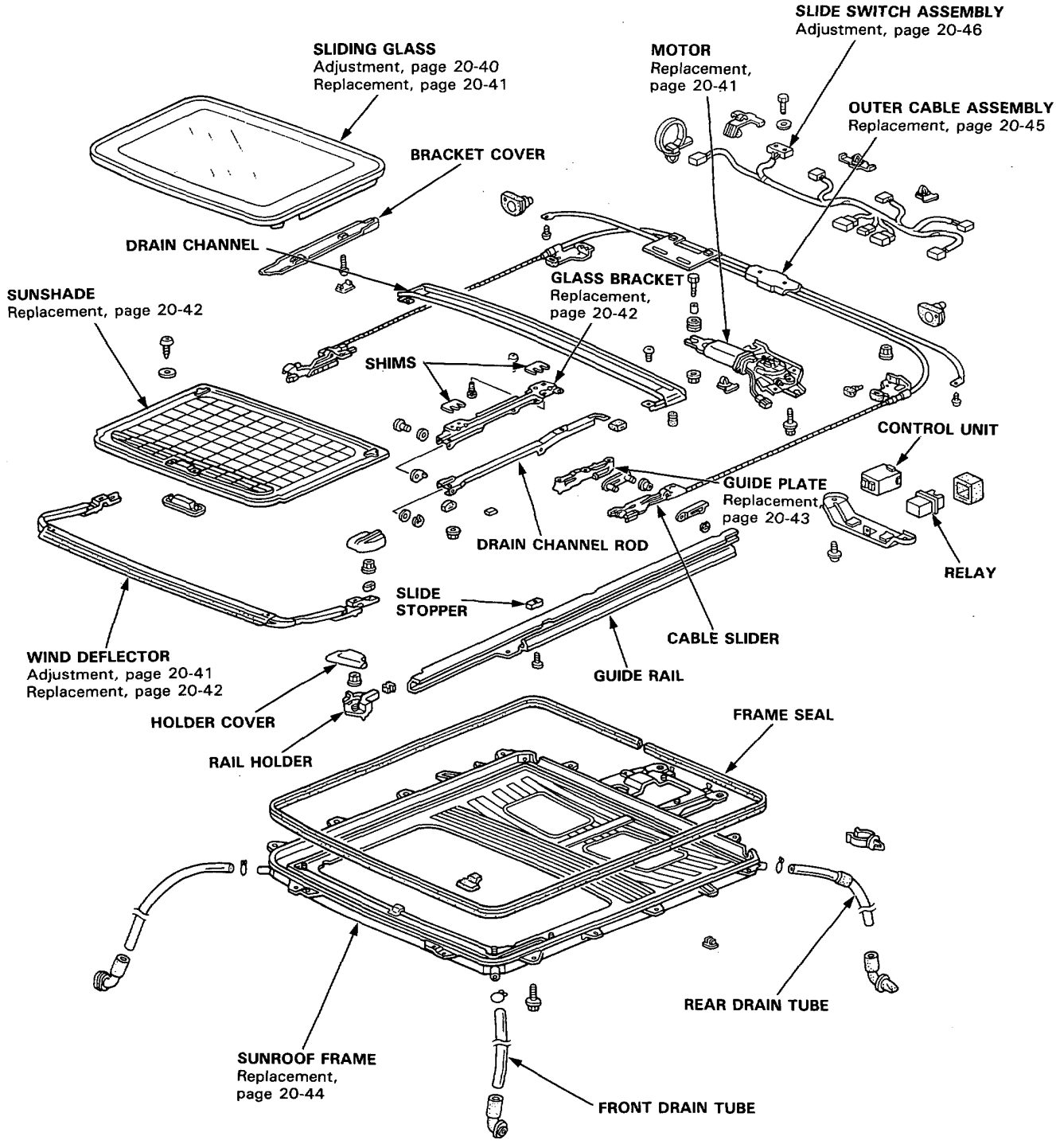
SLIDE SWITCH ASSEMBLY
Adjustment, page 20-46
SLIDING GLASS
Adjustment, page 20-40
Replacement, page 20-41
MOTOR
Replacement, page 20-41
OUTER CABLE ASSEMBLY
Replacement, page 20-45
BRACKET COVER
DRAIN CHANNEL
GLASS BRACKET
Replacement, page 20-42
SUNSHADE
Replacement, page 20-42
SHIMS
CONTROL UNIT
GUIDE PLATE
Replacement page 20-43
DRAIN CHANNEL ROD
RELAY
SLIDE STOPPER
CABLE SLIDER
WIND DEFLECTOR
Adjustment, page 20-41
Replacement, page 20-42
GUIDE RAIL
HOLDER COVER
FRAME SEAL
RAIL HOLDER
REAR DRAIN TUBE
SUNROOF FRAME
Replacement, page 20-44
FRONT DRAIN TUBE

Sunroof

Troubleshooting

Symptom	Probable Cause
Water leak	1. Clogged drain tube. 2. Gap between glass weatherstrip and roof panel. 3. Defective or improperly installed glass weatherstrip. 4. Gap between frame seal and roof panel.
Wind leak, noise	1. Excessive clearance between glass weatherstrip and roof panel.
Deflector noise	1. Improper clearance between deflector seal and roof panel. 2. Insufficient deflector extension. 3. Deformed deflector.
Motor noise	1. Loose motor. 2. Worn gear or bearing. 3. Outer cable deformed.
Sliding glass does not move, but motor turns	1. Clutch out of adjustment. 2. Foreign matter stuck between guide rail and slider. 3. Inner cable loose. 4. Outer cable not attached properly.
Sliding glass does not move and motor does not turn (Sliding glass can be moved with sunroof wrench)	1. Blown fuse. 2. Faulty switch. 3. Battery run down. 4. Defective motor. 5. Wrong operation of relay.

Glass Height Adjustment

Roof panel should be even with the glass weatherstrip, to within 2 ±0.5 mm (0.08 ±0.02 in) all the way around. If not, open the glass fully, and:

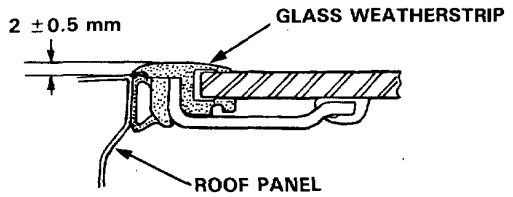

1. Pry the plug out of the bracket cover, remove the screw, then slide the cover off to the rear.
2. Loosen the bracket mounting nuts and install shims between glass frame and bracket as shown.

   Shim thickness: Max. 2 mm (0.08 in)
3. Repeat on opposite side if necessary.

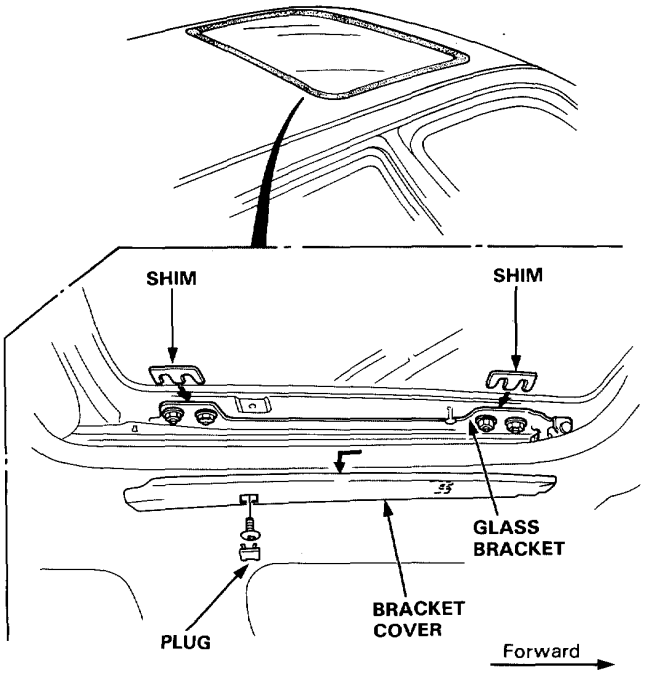

Wind Deflector Adjustment

NOTE: A gap between deflector seal and roof panel will cause wind noise when driving at high speed with the sunroof open.

1. Open the sunroof and pry the rail covers off both sides.

2. Loosen the deflector mounting nuts.

   NOTE: The wind deflector can be adjusted 2 mm (0.08 in) forward or backward.

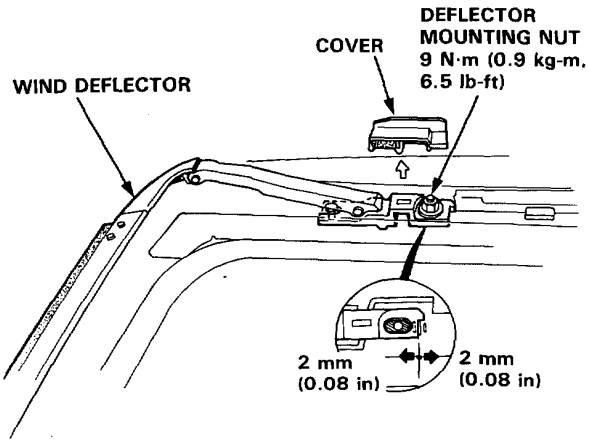

3. Adjust the deflector forward or backward so the edge of its seal touches the roof panel evenly. The deflector seal should touch the roof panel across entire front edge.

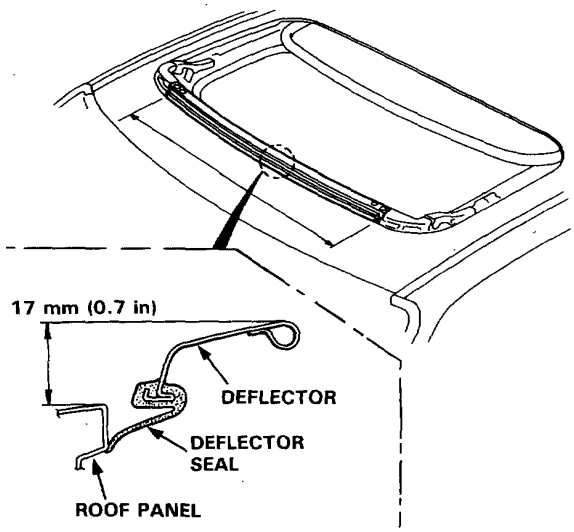

NOTE: The height of the deflector arm when open cannot be adjusted. If damaged or deformed, replace it (page 20-42).

Sliding Glass Replacement

1. Close the glass fully.

2. Slide sunshade all the way back.

3. Pry the plug out of each bracket cover, remove the screw, and slide the cover off to the rear.

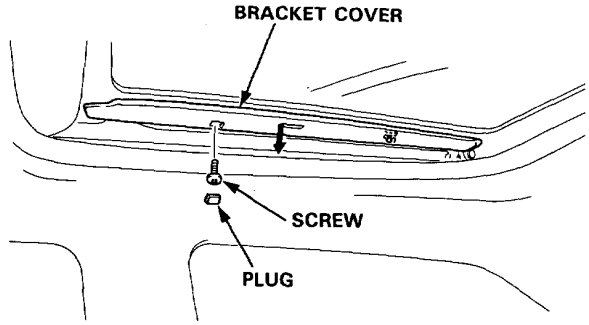

4. Remove the mounting nuts from the glass brackets on both sides.

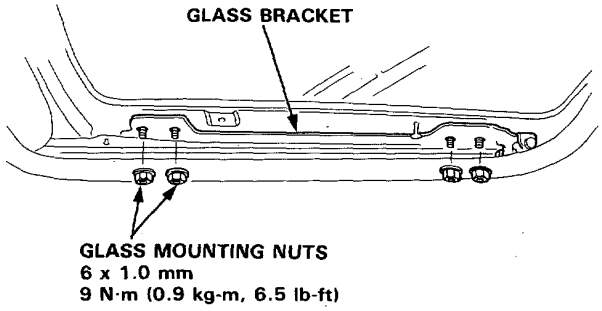

5. Remove the glass by lifting up and pulling forward as shown.

   NOTE: Do not damage the roof panel.

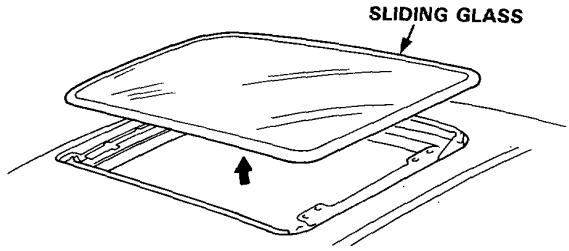

6. Install the glass in the reverse order of removal.

7. Check for water and air leaks.

   NOTE: Do not use high pressure water.

Glass Bracket/Sunshade Replacement

1. Remove the sliding glass (page 20-41).
2. Remove the screws and drain channel by sliding it forward.

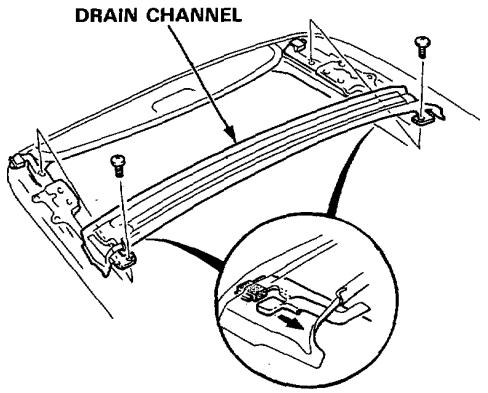

3. Remove the covers and mounting nuts. Remove the wind deflector by sliding it backward.

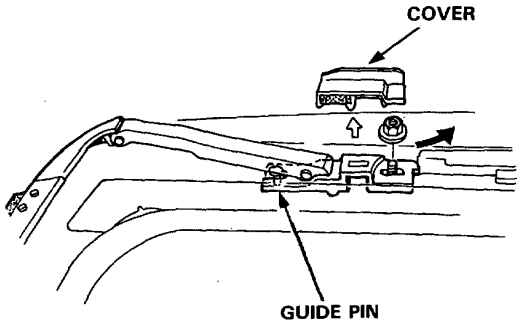

4. Using the sunroof wrench, move the glass bracket to the position where the sunroof normally pivots down and remove the mounting screws.

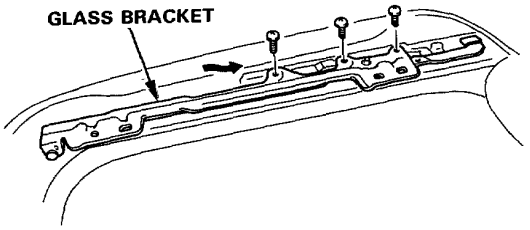

5. Remove the cover and mounting nut, then remove the guide rail holder.
6. Remove the drain channel rod slider by moving the cable slider foward using the sunroof wrench.
7. Detach the drain channel rod stopper from the cut-out of the guide rail.

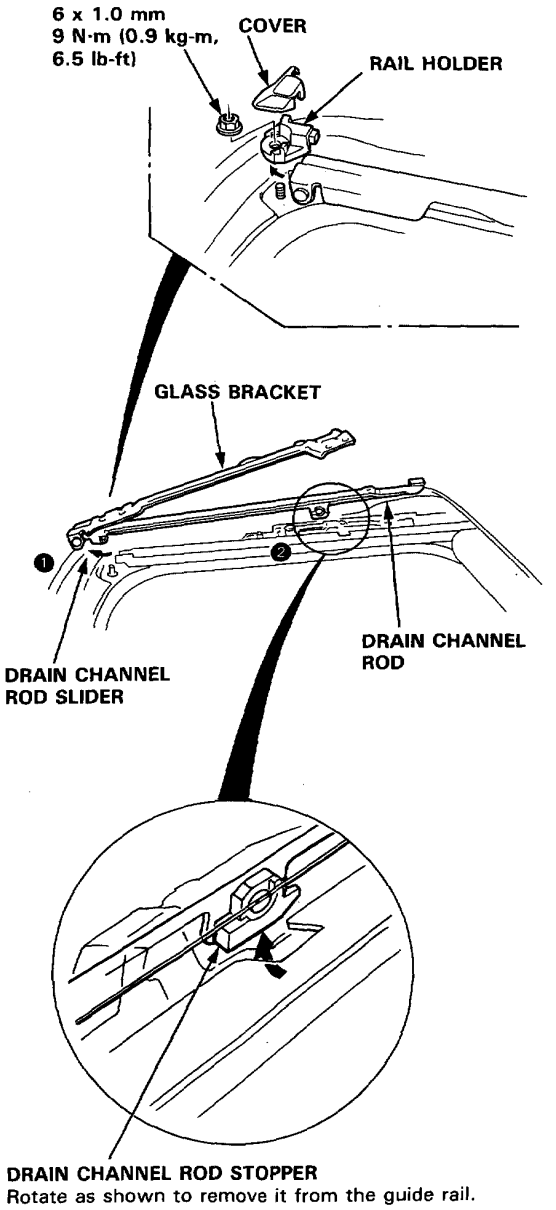

8. Slide the sunshade forward, then remove it.

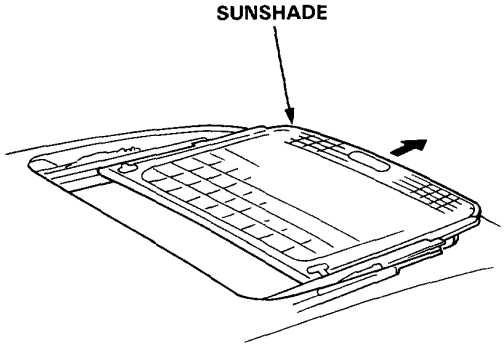

9. Install the sunshade in the reverse order of removal. Make sure it moves smoothly.

Drain Channel Rod/Guide Plate Replacement

1. Remove the glass bracket (page 20-42).

2. Pry the E-clips off and remove the shafts, then separate the glass bracket and drain channel rod.

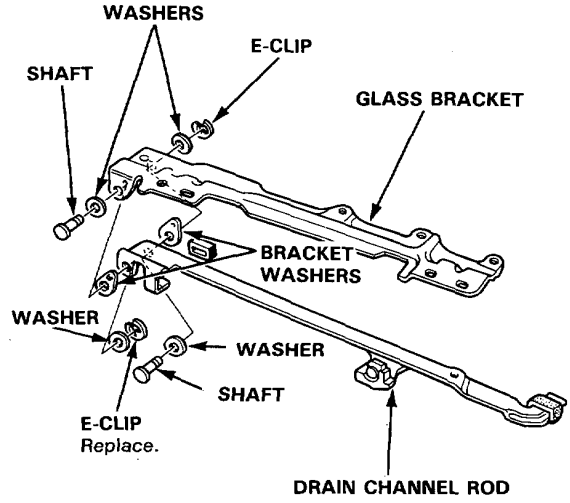

3. Pry the E-clip and remove the guide plate from the tilt-up link A.

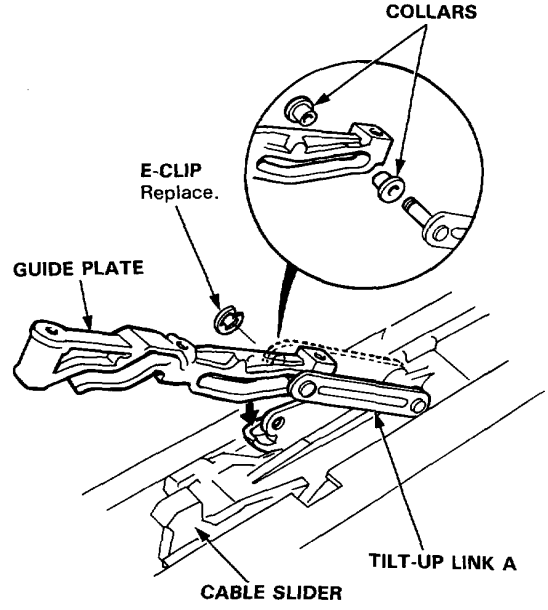

4. Assemble the guide plate and drain channel rod in the reverse order of removal.

NOTE: Apply grease to the moving surface.

Motor, Drain Tube and Frame Replacement

CAUTION: Be careful not to damage the seats, dashboard and other interior trim.

1. Remove the sliding glass (page 20-41) and the headliner (page 20-49).
2. Disconnect the motor and relay wire harness; remove the clips securing the dome light wire harness.

   NOTE: When removing the sunroof motor, remove the 2 mounting bolts and 3 nuts.
3. Disconnect the drain tubes.
4. Remove the 12 mounting bolts and rear hooks, then remove the frame from the car.

   NOTE: You may require assistance when removing the frame.

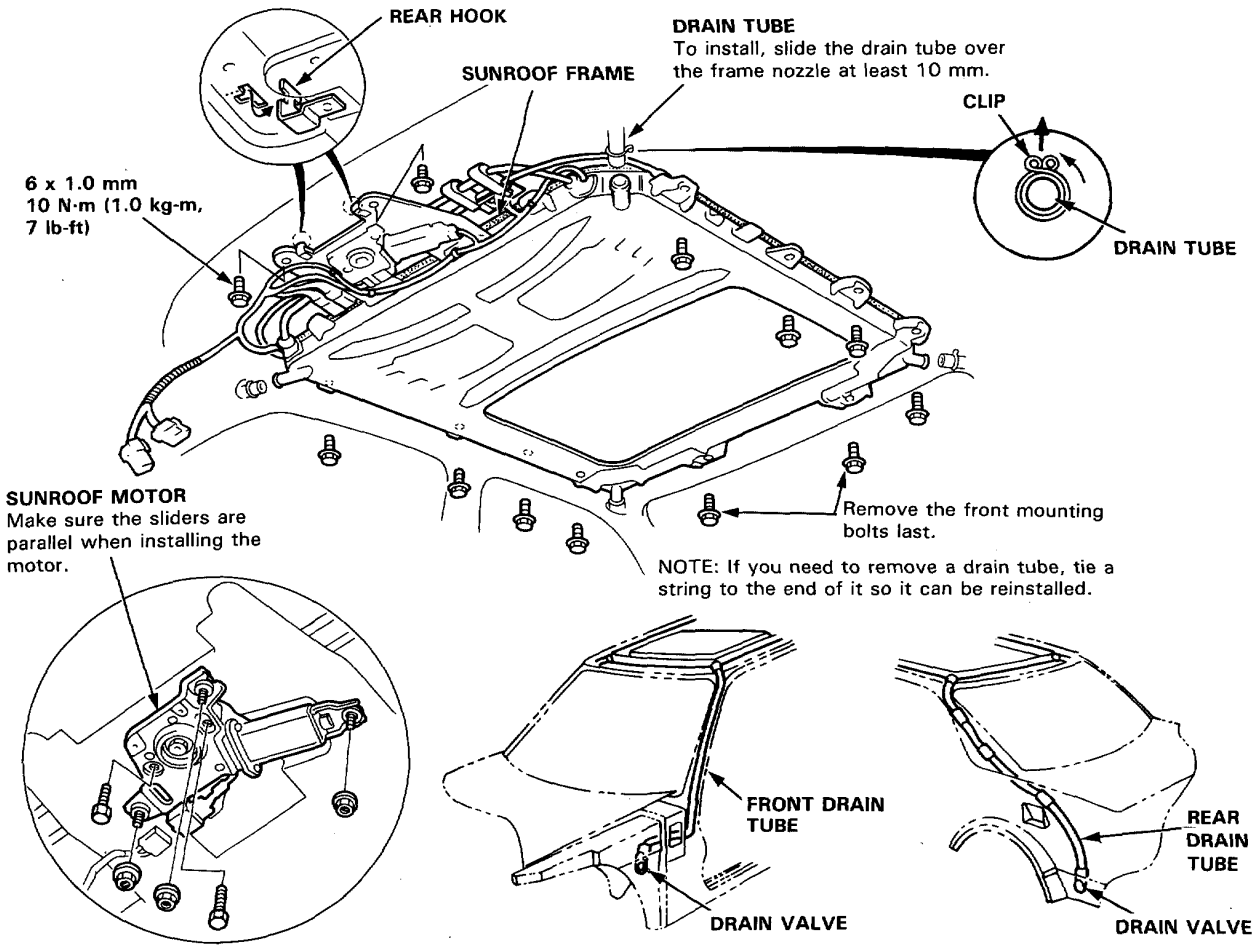

5. To install, insert the frame's rear hooks into the body holes, then install parts in the reverse order of removal.

   NOTE:
   - Install the tube clips with the ends facing upward to ease installation of the headliner.
   - Clean the surface of sunroof frame.
   - Check the drain seal assembly.
   - Check for water and air leaks.

Guide Rails/Cable Replacement

1. With sunroof out of the car, remove the sunroof motor from the frame (page 20-44).
2. Remove the guide rail mounting nuts and lift off the guide rails, then remove the cables with sliders attached.

   NOTE: Take care not to bend the cable pipes and guide rails.

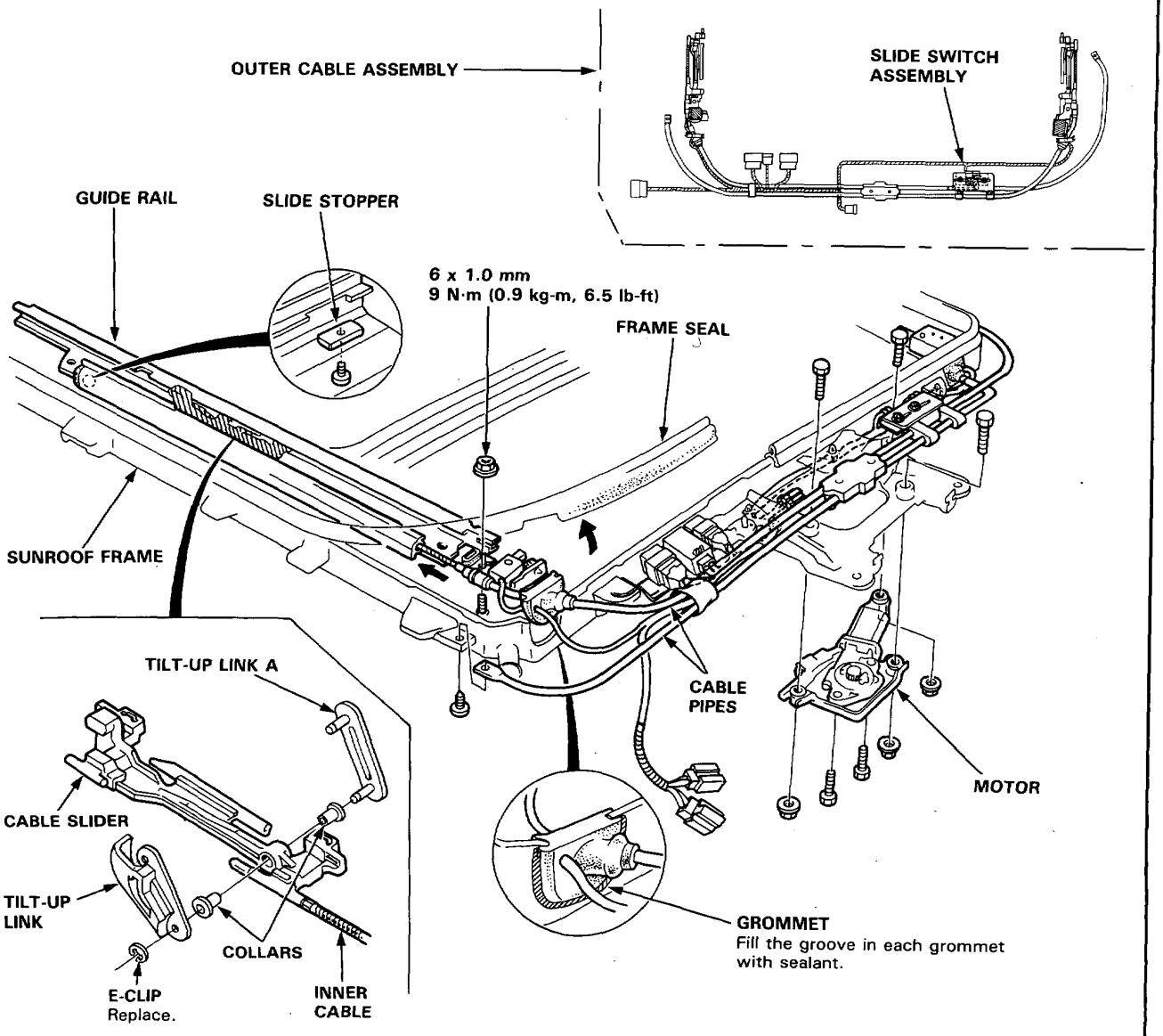

3. Assemble the slider and tilt-up link in the reverse order of removal.

   NOTE:
   - Damaged parts should be replaced.
   - Apply grease to the sliding portion.

Slide Switch Adjustment (Fully Closed Position)

1. Remove the headliner (page 20-49).
2. Using the sunroof wrench, close the glass fully.

   NOTE: Check the sliding glass fit to the roof panel (page 20-40).
3. Using the spanner, loosen the switch plate mounting bolts.
4. Adjust position of the slide switch (switch cam) as shown.
5. Check the operation of the sliding glass (from tilt-up position to fully closed position, from fully open position to fully closed position) by operating the sunroof switch.

   NOTE: Check the height of the sliding glass (page 20-40).

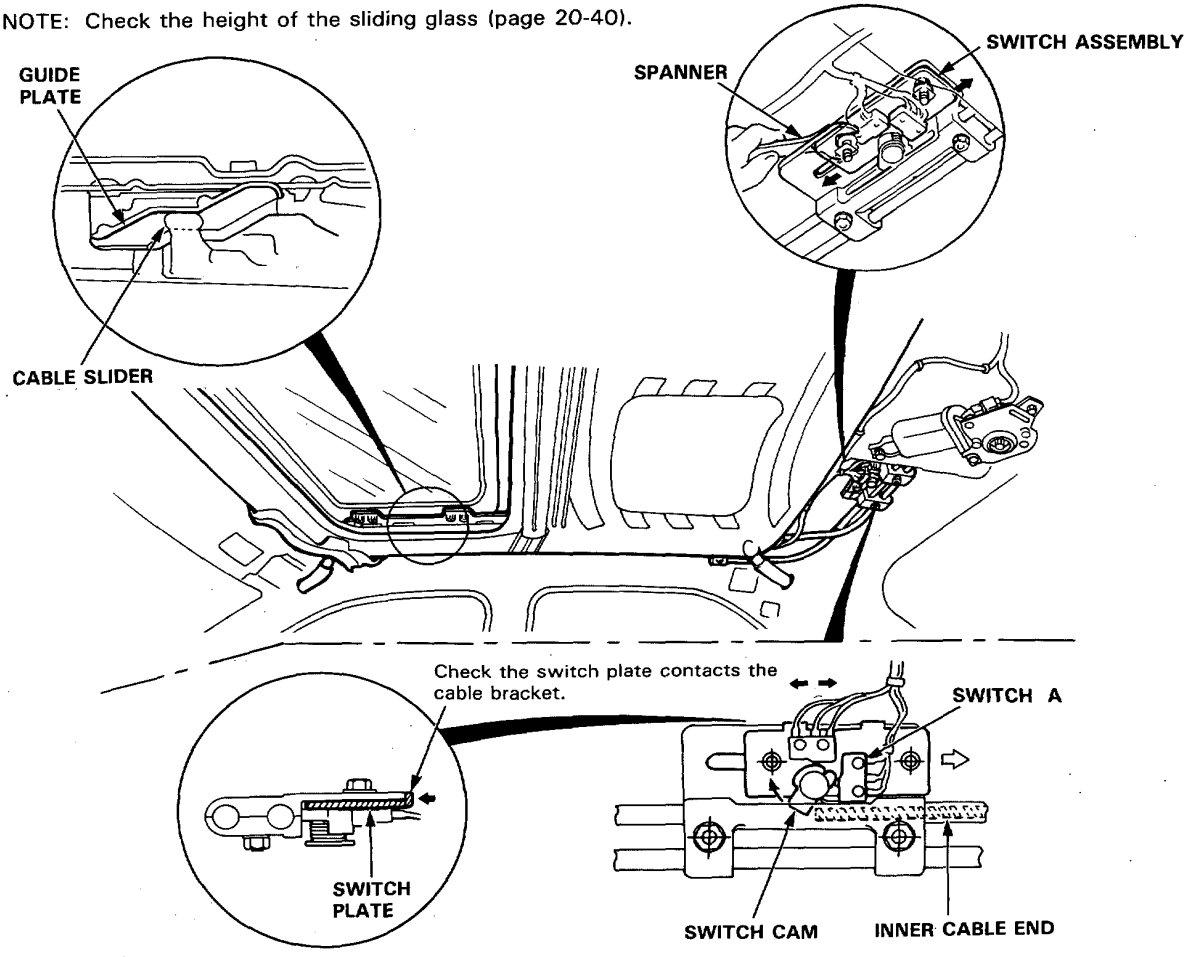

While moving the switch assembly little by little, fix the switch plate at the position where the switch cam contacts the switch A (a faint click is heard).

6. Close the sliding glass fully and check for water and air leaks.

   NOTE: Do not use high pressure water.

Closing Drag Check (Motor Removed)

Before installing the sunroof motor, measure effort required to open sliding glass using a spring scale as shown.

CAUTION: *When using the spring scale, protect the leading edge of the sunroof with a shop towel.*

If load is over 98 N (10 kg, 22 lb), check side clearance and glass height adjustment (page 20-37).

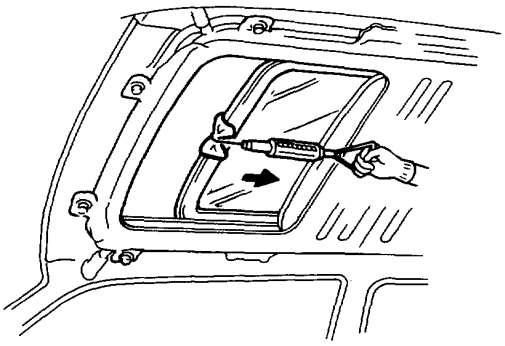

Closing Force Check (Motor Installed)

1. After installing all removed parts, have a helper hold the switch to close the sliding glass while you measure force required to stop it. Attach spring scale as shown. Read force as soon as glass stops moving, then immediately release the switch and spring scale.

   CAUTION: When using the spring scale, protect the leading edge of the sunroof with a shop towel.

   Closing Force: 196–245 N (20–30 kg, 44–55 lb)

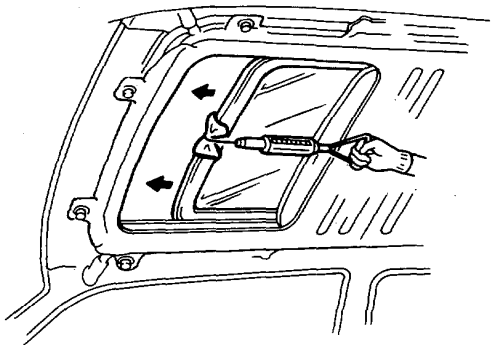

2. If force is not within specification, install a new lockwasher, adjust the tension by turning the sunroof motor clutch adjusting nut, and bend the lockwasher against the adjusting nut.

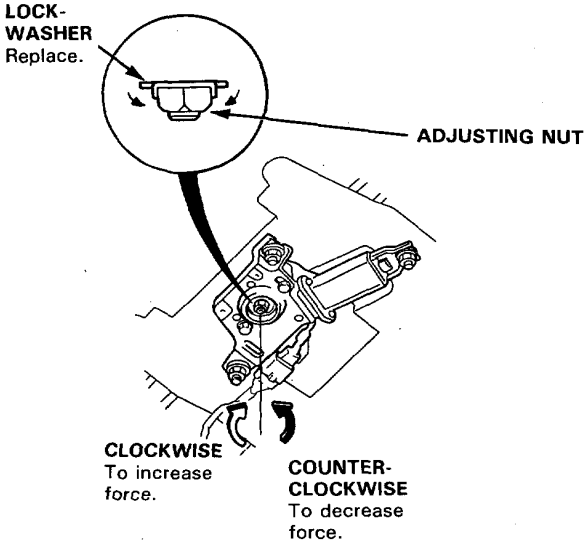

Interior Trim

Replacement

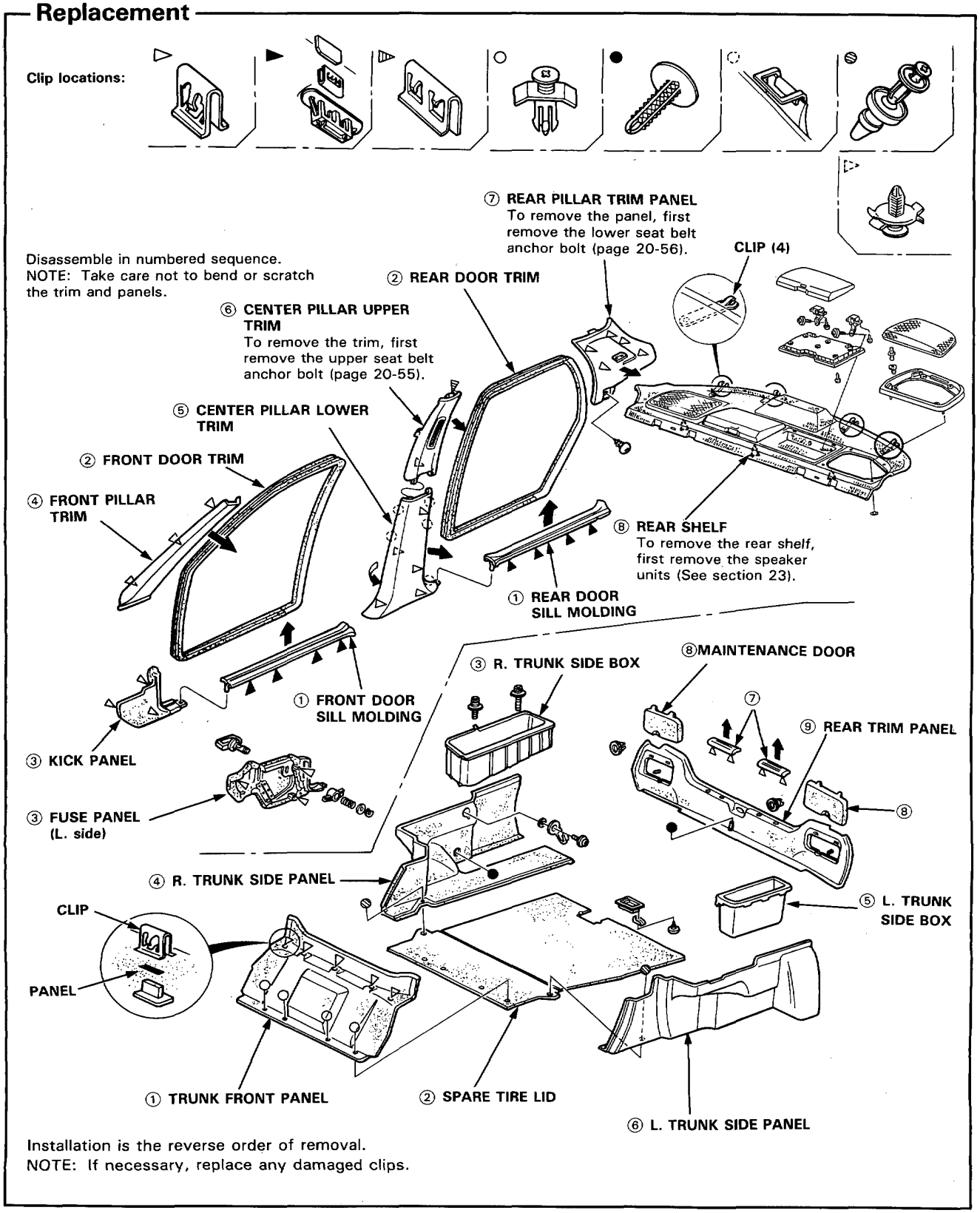

Installation is the reverse order of removal.
NOTE: If necessary, replace any damaged clips.

Headliner

Replacement

1. Remove:
   - Sun visors, center visor and holders.
   - Dome lights.
   - Rearview mirror assembly (page 20-57).
   - Front pillar trim (page 20-48).
   - Center pillar trim (page 20-48).
   - Rear pillar trim (page 20-48).
   - Roof trim.
   - Grab handles.
   - Center armrest (page 20-60).
   - Front seat (page 20-50).
   - Rear seat (page 20-54).

2. Remove the 8 mounting screws.

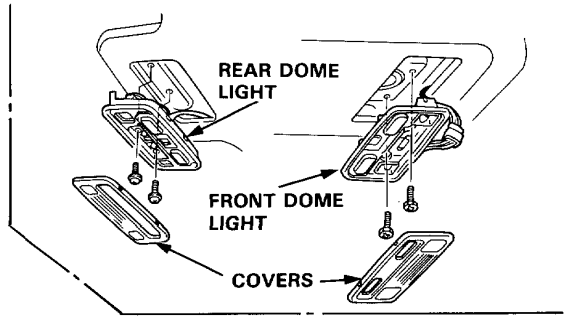

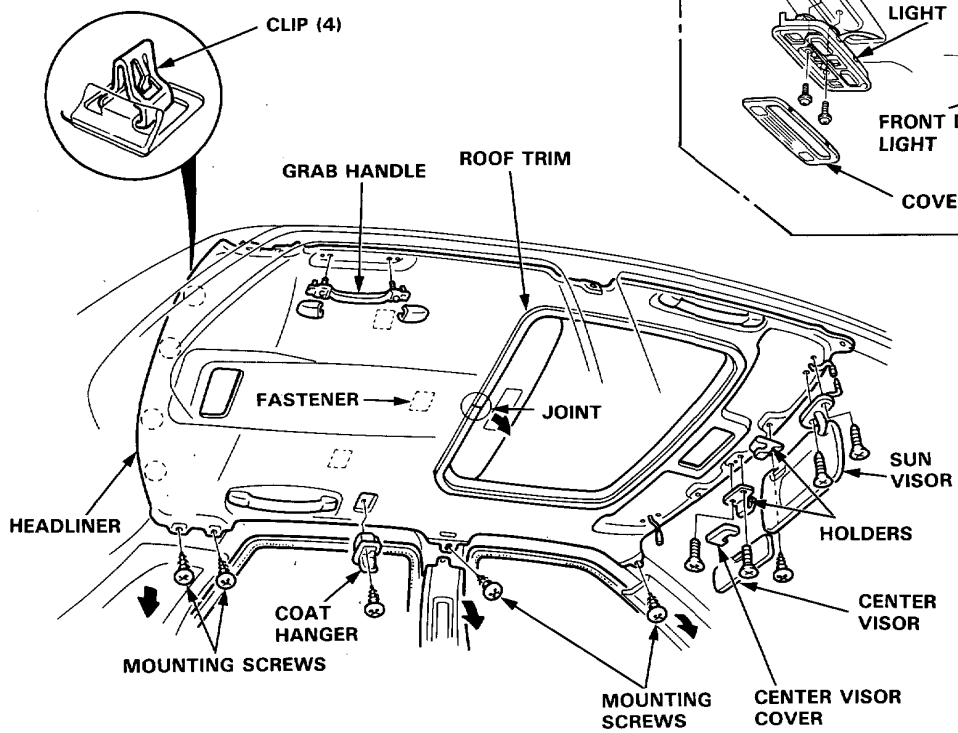

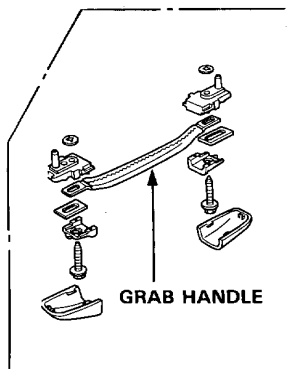

3. Remove the front clips and fasteners, then remove the headliner.

4. Remove the headliner from the passenger's side door opening.

   NOTE:
   - Take care not to bend the headliner.
   - Keep water away from the headliner.
   - Be careful not to damage the dashboard and other interior trim.

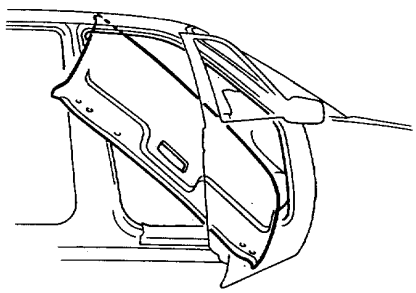

5. Install the headliner in the reverse order of removal.

   NOTE:
   - When installing the headliner inside the passenger cabin, be careful not to fold or bend it. Also, be careful not to scratch the body.
   - Check that the two sides of the headliner are securely attached to the trim.
   - When installing the roof trim, install the joint towards the rear.

Front Seat

Replacement

NOTE: Take care not to scratch the seat covers and body.

1. Remove the seat track end covers as shown.
2. Remove the mounting bolts and disconnect the connectors, then remove the seat assembly.

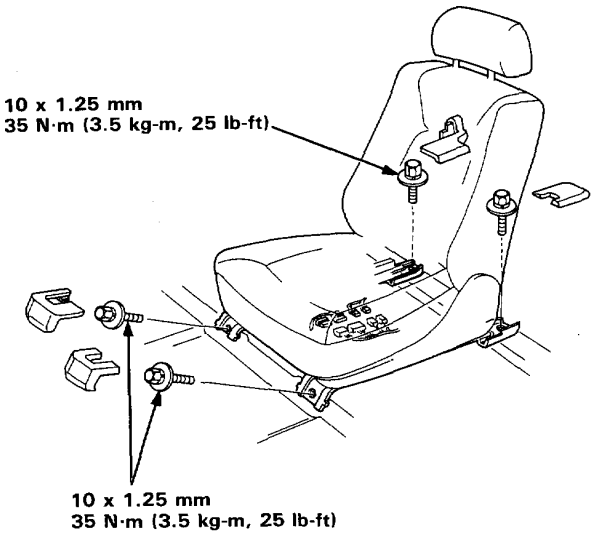

3. Remove the seat cushion front cover.
4. Remove the reclining cover and height cover.

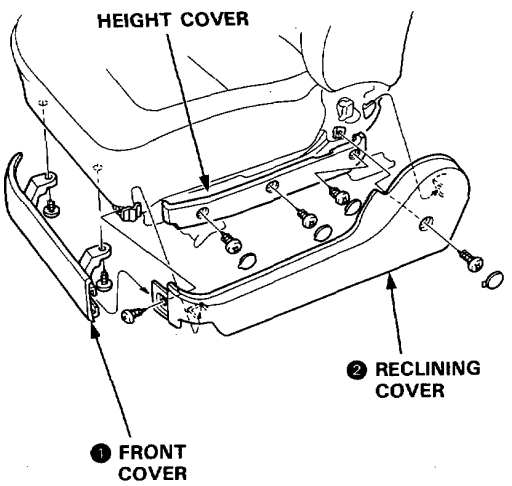

5. Pull the switch knobs. Remove the trim panel by sliding it forward.
6. Remove the clips as shown.

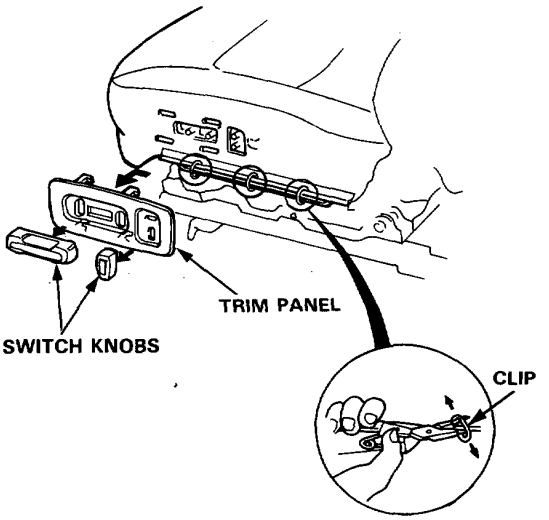

7. Remove the center cover.

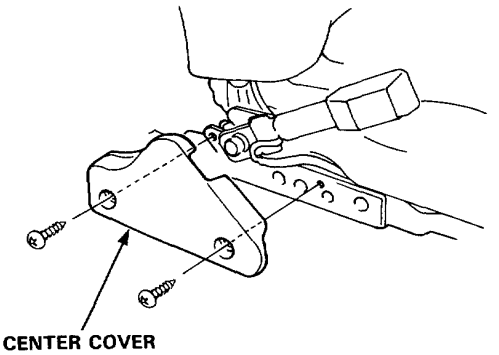

Seat cushion removal:

8. Remove the mounting bolts, then remove the seat cushion.

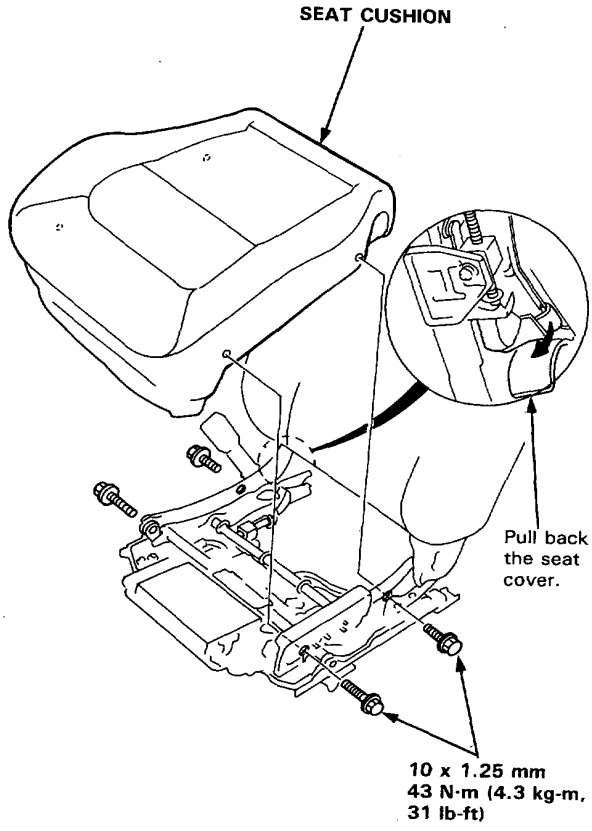

Seat back removal:

9. Remove the seat back cover.
   Pull back the seat cover and remove the 2 mounting bolts.
   Remove the pivot nut, then remove the seat back.

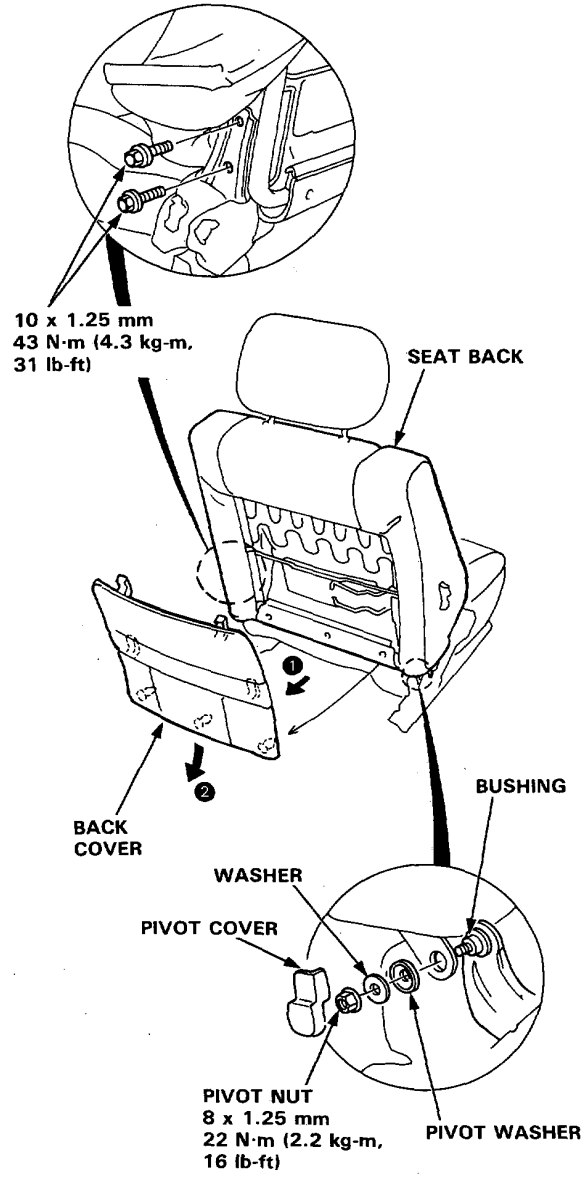

10. Installation is the reverse order of removal.

Seat Linkage Disassembly

Fully power adjustable (with memory):

NOTE:
- Apply grease to the moving surfaces.
- Before installing the seat linkage, make sure there are no twists or pinching of the wires.

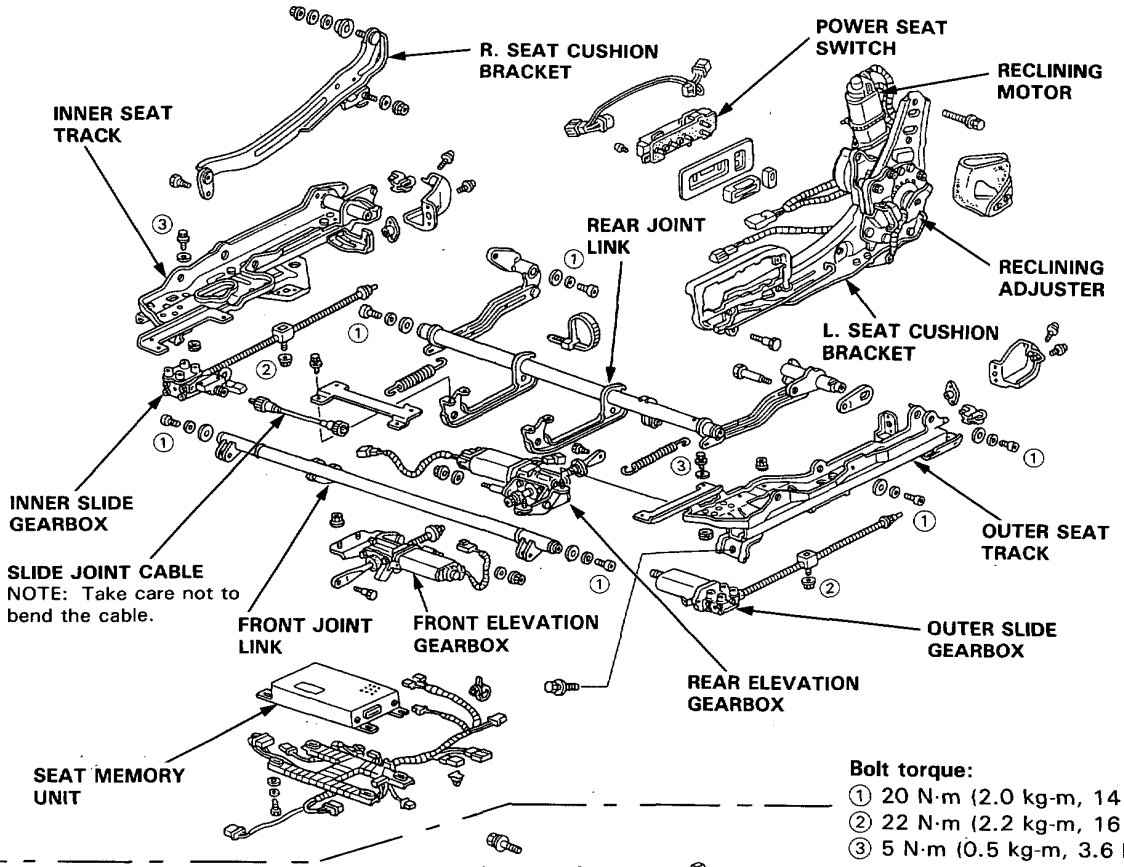

Bolt torque:
① 20 N·m (2.0 kg-m, 14 lb-ft)
② 22 N·m (2.2 kg-m, 16 lb-ft)
③ 5 N·m (0.5 kg-m, 3.6 lb-ft)

Power two-way adjustable:

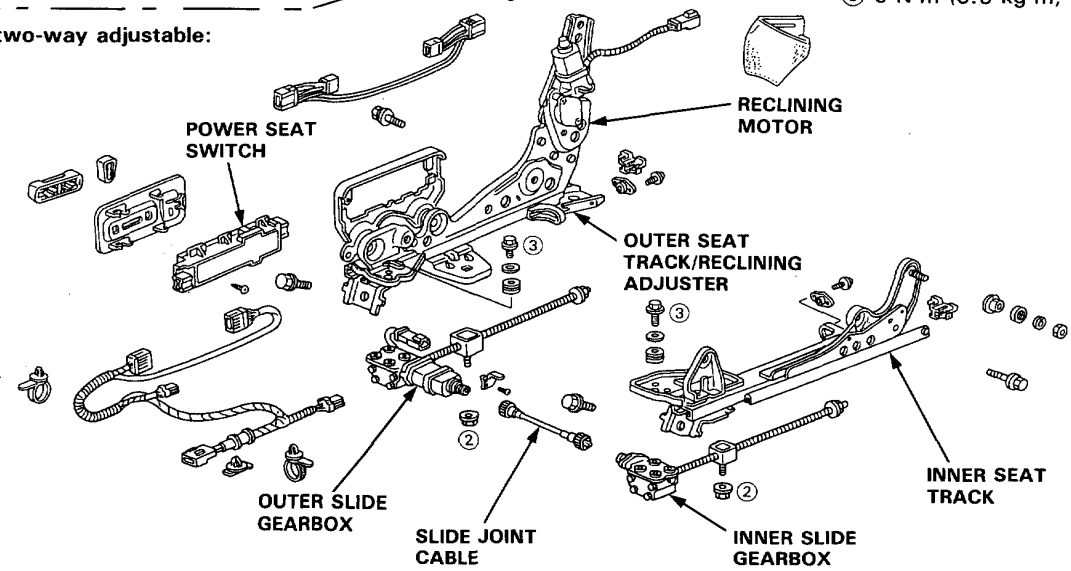

Seat Cover Replacement

CAUTION: Wear gloves to remove and install the seat cover.

NOTE: Take care not to tear the seams or damage the cover.

Seat back cover removal.

1. Remove the seat back from the seat track and reclining adjuster.
2. Remove the lumbar support knob.
3. Loosen the seat cover by releasing all the hooks and inside springs.
4. Remove the headrest guides, then remove the seat cover.

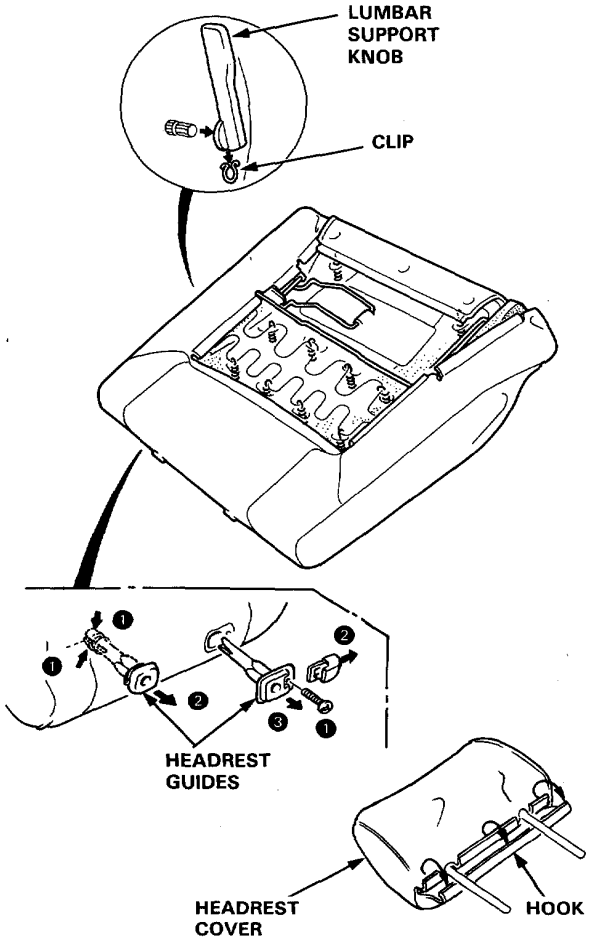

Seat cushion cover removal.

1. Remove the seat cushion from the seat tracks.
2. Remove all hooks, clips and inside springs from under the seat cushion, then loosen the seat cover.

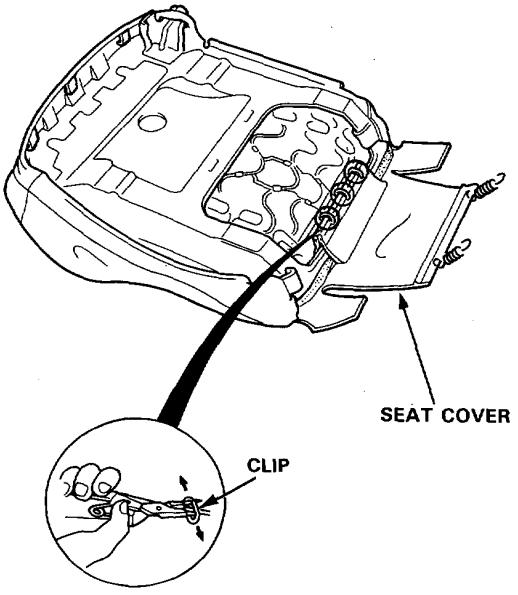

3. Pull back the edge of the trim cover all the way around, then release the clips of the pad.

   NOTE: To prevent wrinkles when installing a seat cover, make sure the material is stretched evenly over the frame before securing all the clips.

Rear Seat

Replacement

Disassemble in numbered sequence.

NOTE: Take care not to tear the seams or damage the cover.

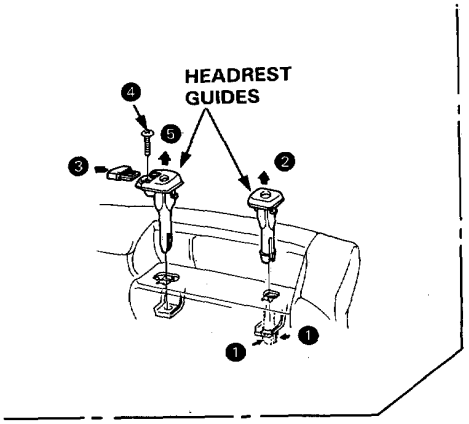

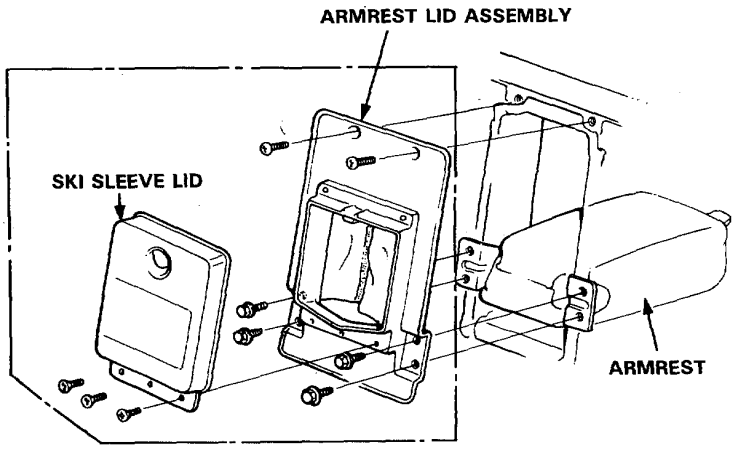

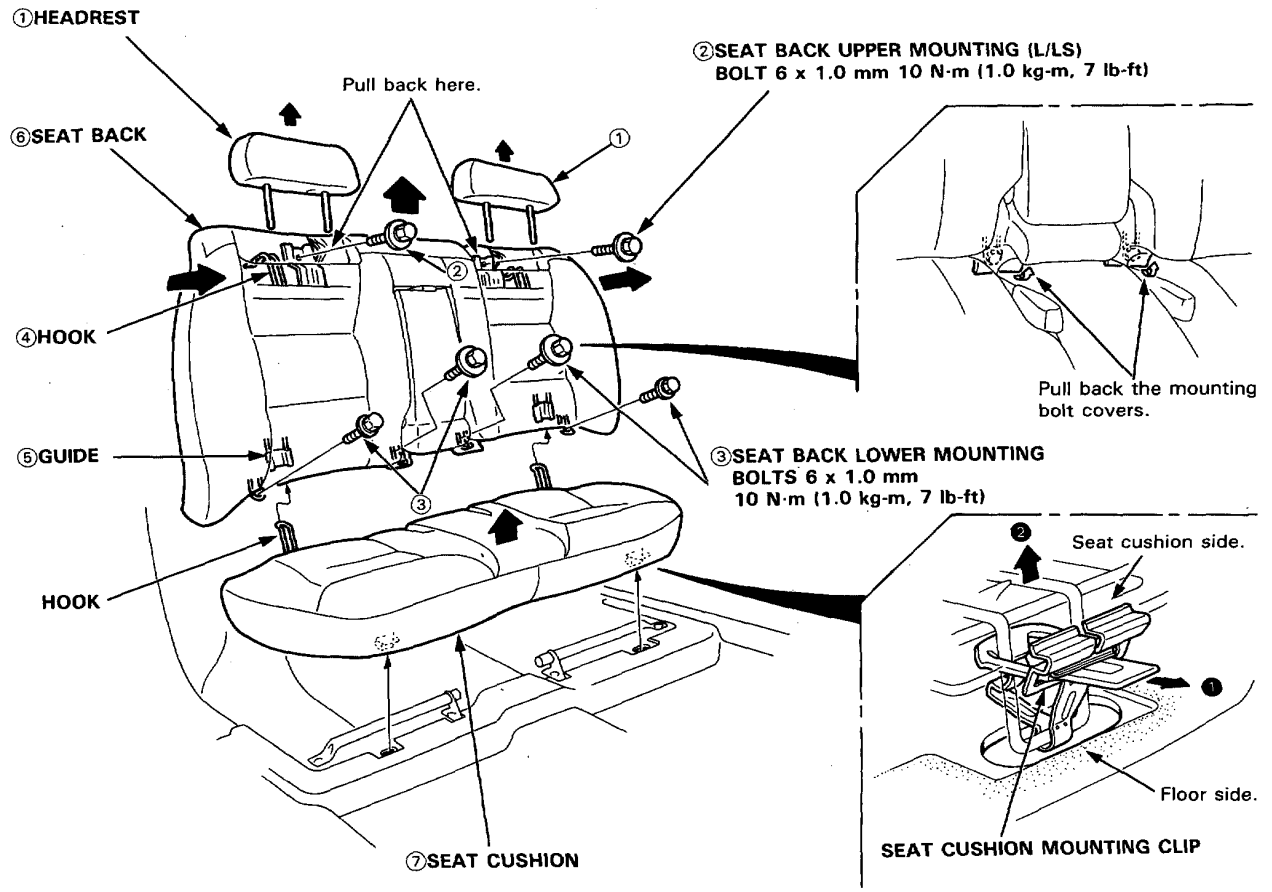

Installation is the reverse order of removal.

Front Replacement

CAUTION: Check the seat belts for damage and replace them if necessary. Be careful not to damage then during removal and installation.

1. Remove the center pillar lower trim.
2. Remove the upper anchor bolt, lower anchor bolt and retractor bolt with a 17 mm socket or box-end wrench.
3. Remove the front seat, then remove the bolt and the center anchor.

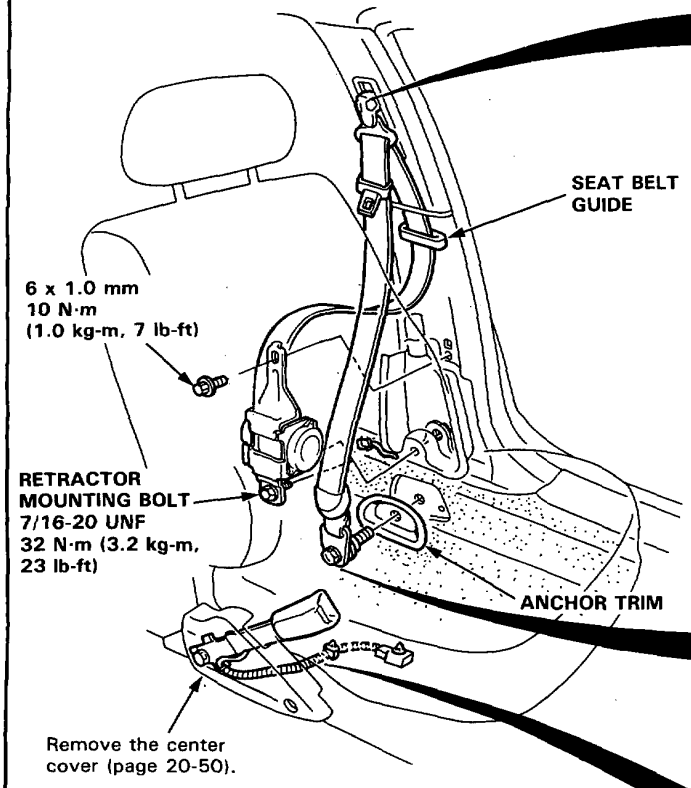

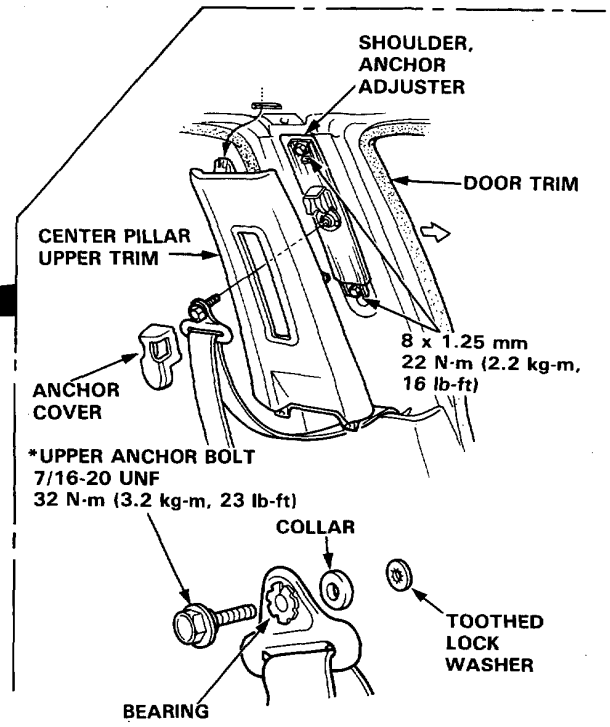

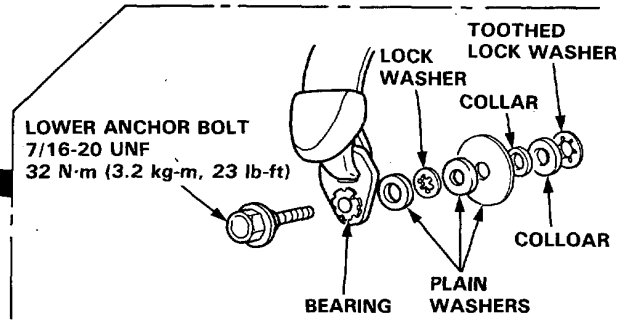

4. Check that the retractor locking mechanism functions as described on page 20-57.
5. Install the front seat belts in the reverse order of removal.
   NOTE:
   - Make sure you assemble the washers and collars on the upper and lower anchor bolts as shown.
   - Before attaching the center pillar lower trim, make sure there are no twists or kinks in the belts.
   - On reassembly, replace the upper anchor bolt* and use liquid thread lock.

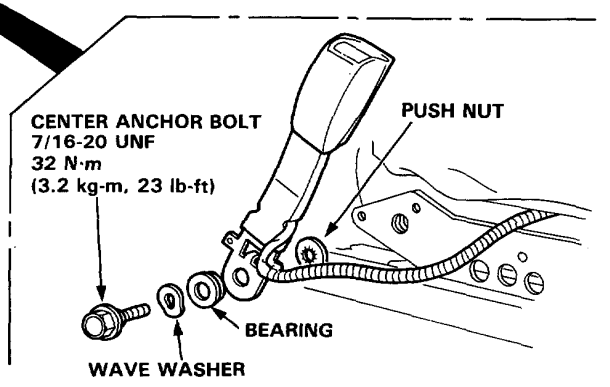

Rear Replacement

CAUTION: Check the seat belts for damage and replace them if necessary. Be careful not to damage them during removal and installation.

1. Remove:
   Rear seat (page 20-54).

2. Remove the rear pillar trim panel.

3. Remove the upper anchor bolt, the lower anchor bolt and retractor bolt with a 17 mm socket or box-end wrench.

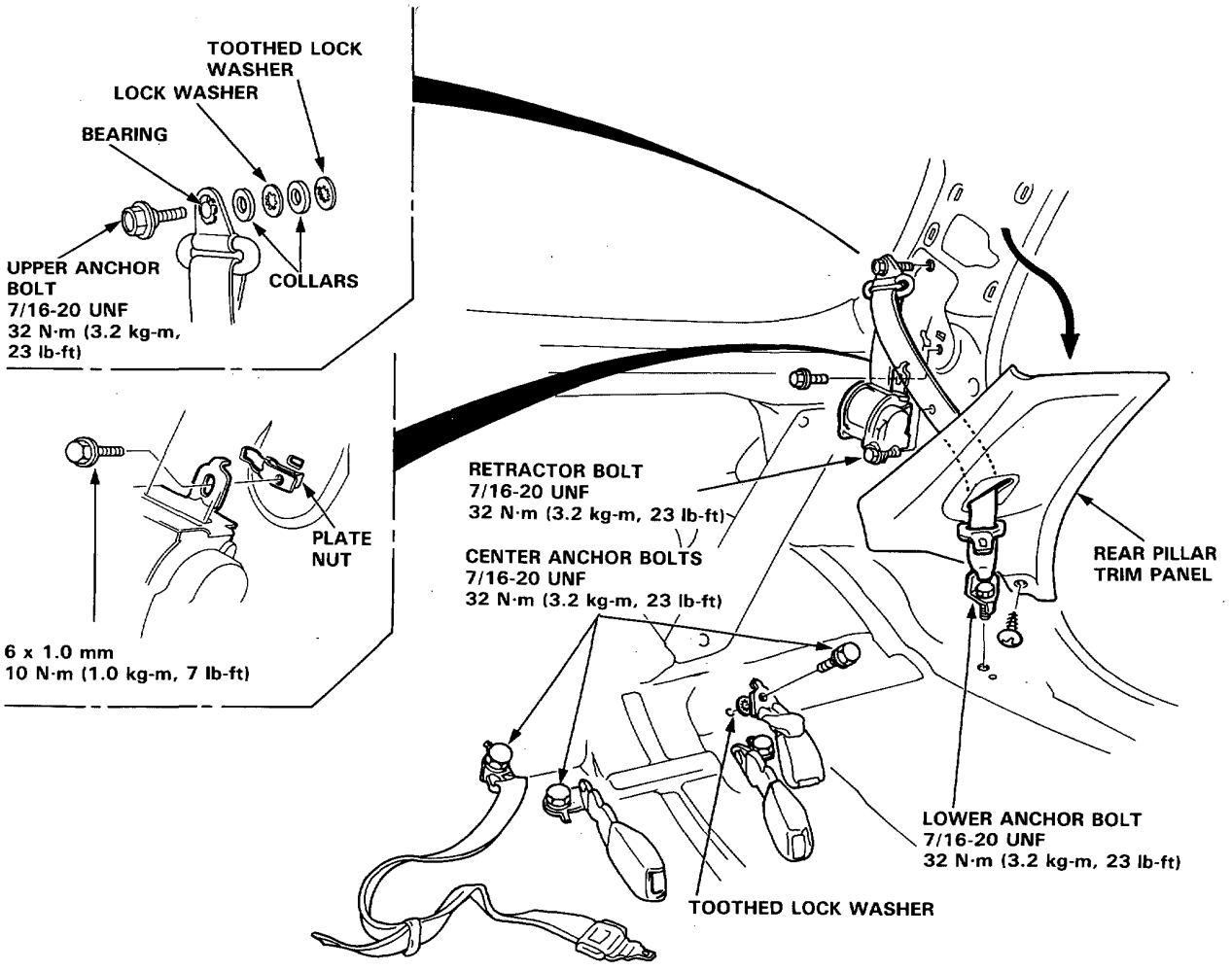

4. Check that the retractor locking mechanism functions as described on page 20-57.

5. Install the seat belt in the reverse order of removal.

   NOTE: Before attaching the rear pillar trim panel and rear seat, make sure there are no twists in the belt.

Inspection

Retractor Inspection

1. With the retractor installed, check that the belt can be pulled out freely.

2. Make sure that the belt does not lock when the retractor is leaned slowly up to 15° from the mounted position. The belt should lock when the retractor is leaned over 40°.

   CAUTION: Do not attempt to disassemble the retractor.

Front: *** : Mounted Position.**

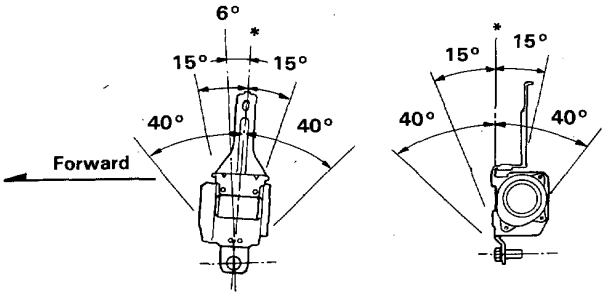

Rear:

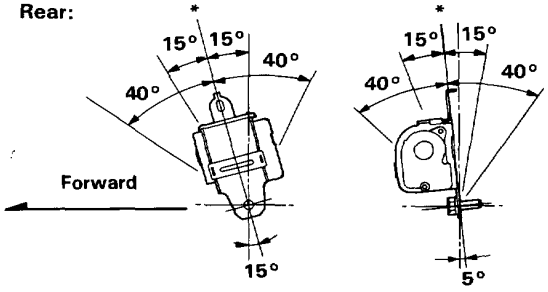

3. Replace the belt assembly with a new one if there is any abnormality.

On-the-Car Belt Inspection

1. Check that the belt is not twisted or caught on anything.
2. After installing the anchors, check for free movement on its retaining bolt. If necessary, remove the bolt and check that the washers and other parts are not damaged or improperly installed.
3. Check the belts for damage or discoloration. Clean with a shop towel if necessary.

   CAUTION: Use only soap and water to clean.

4. Check that the belt does not lock when pulled out slowly. The belt is designed to lock only during a sudden stop or impact.
5. Make sure that the belt will retract automatically when released.
6. Replace the belt assembly with a new one if there is any abnormality.

Replacement

1. Carefully remove the cover with a flat tip screwdriver.

2. Loosen the lock bolt, then slide the mirror stay from the lug.

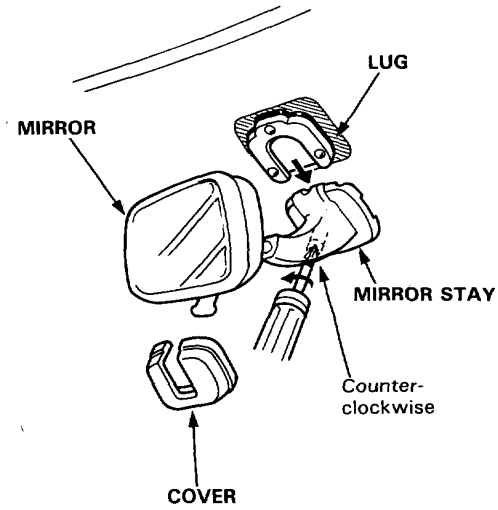

3. Remove the lock bolt, then remove the toothed lock washer and hold spring from the mirror stay.

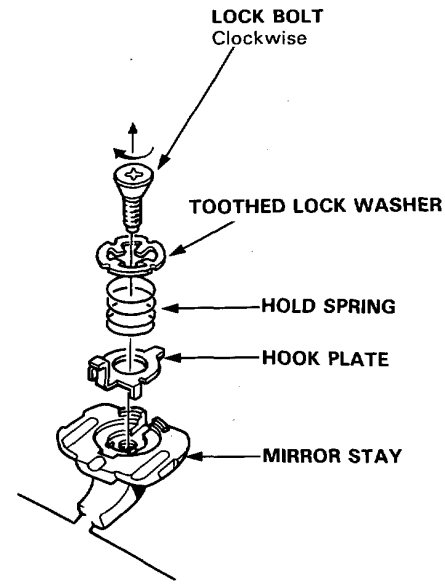

4. Installation is the reverse order of removal.

Carpet

Replacement

SRS wire harnesses are routed near the carpet.

⚠WARNING All SRS wire harnesses and connectors are colored yellow. Do not use electrical test equipment on these circuits.

CAUTION: BE careful not to damage the SRS wire harnesses when replacing the carpet.

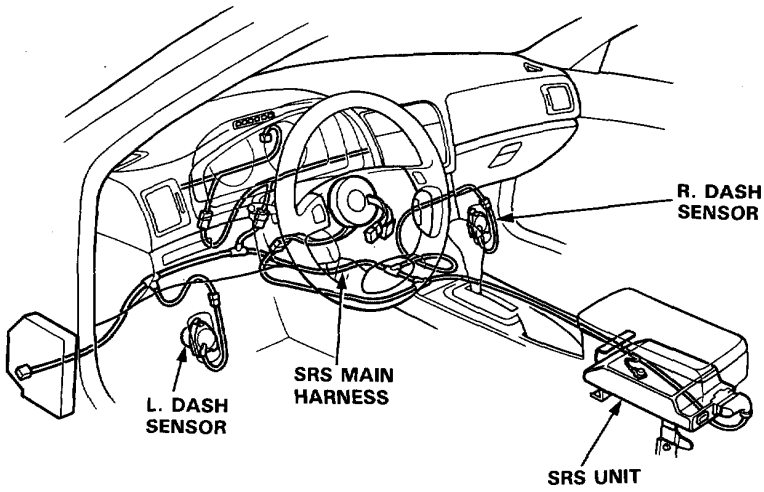

1. Remove
   - Front seats (page 20-50).
   - Rear seat back and rear seat cushion (page 20-51).
   - Center console panel (page 20-60).
   - Center armrest (page 20-60).
   - Stereo cassette/radio (page 20-61).
   - Glove box lower panel (page 20-63).
   - Glove box and glove box cover (page 20-63).
   - Dashboard lower cover (page 20-63).
   - Center console (page 20-61).
   - Opener cover (page 20-71).
   - Front seat belt lower anchor and anchor trim (page 20-55).
   - Center pillar lower trim (page 20-48).
   - Door sill moldings and door trims (page 20-48).
   - Footrest and pedal stopper.
   - Carpet lid.
2. Pry out the clips at the rear edge and bottom of the center armrest.
3. Cut the Ⓐ area first, then pull back the carpet as shown.
4. Remove the carpet by sliding it rearward.

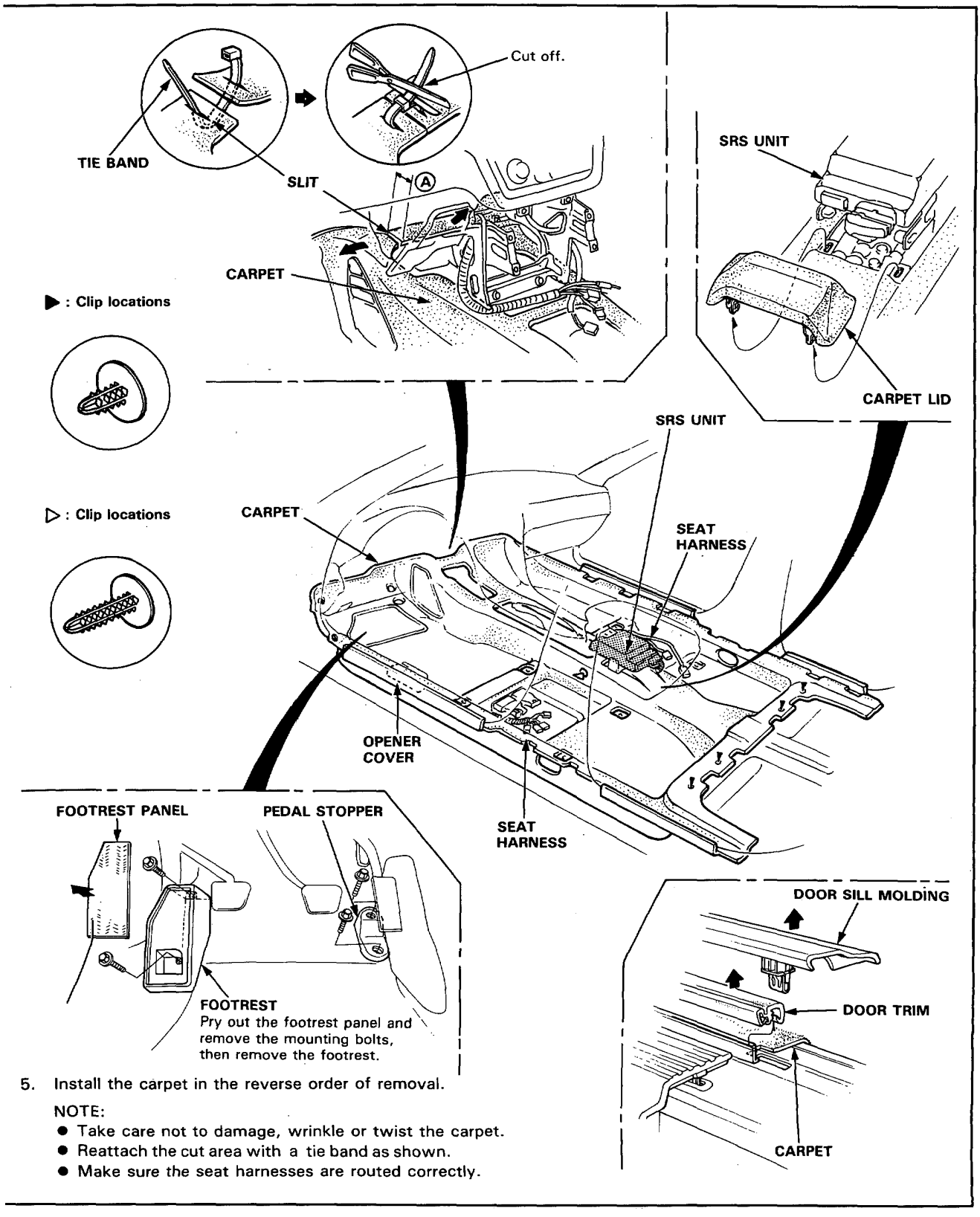

5. Install the carpet in the reverse order of removal.

NOTE:

- Take care not to damage, wrinkle or twist the carpet.
- Reattach the cut area with a tie band as shown.
- Make sure the seat harnesses are routed correctly.

Center Console Panel/Center Armrest

Replacement

SRS wire harnesses are routed near the center console panel and center armrest.

⚠WARNING All SRS wire harnesses and connectors are colored yellow. Do not use electrical test equipment on these circuits.

CAUTION: Be careful not to damage the SRS wire harnesses when servicing the center console panel and center armrest.

NOTE:
- Take care not to scratch or score the dashboard.
- Do not drop the screw inside the center console.

Disassemble in numbered sequence.

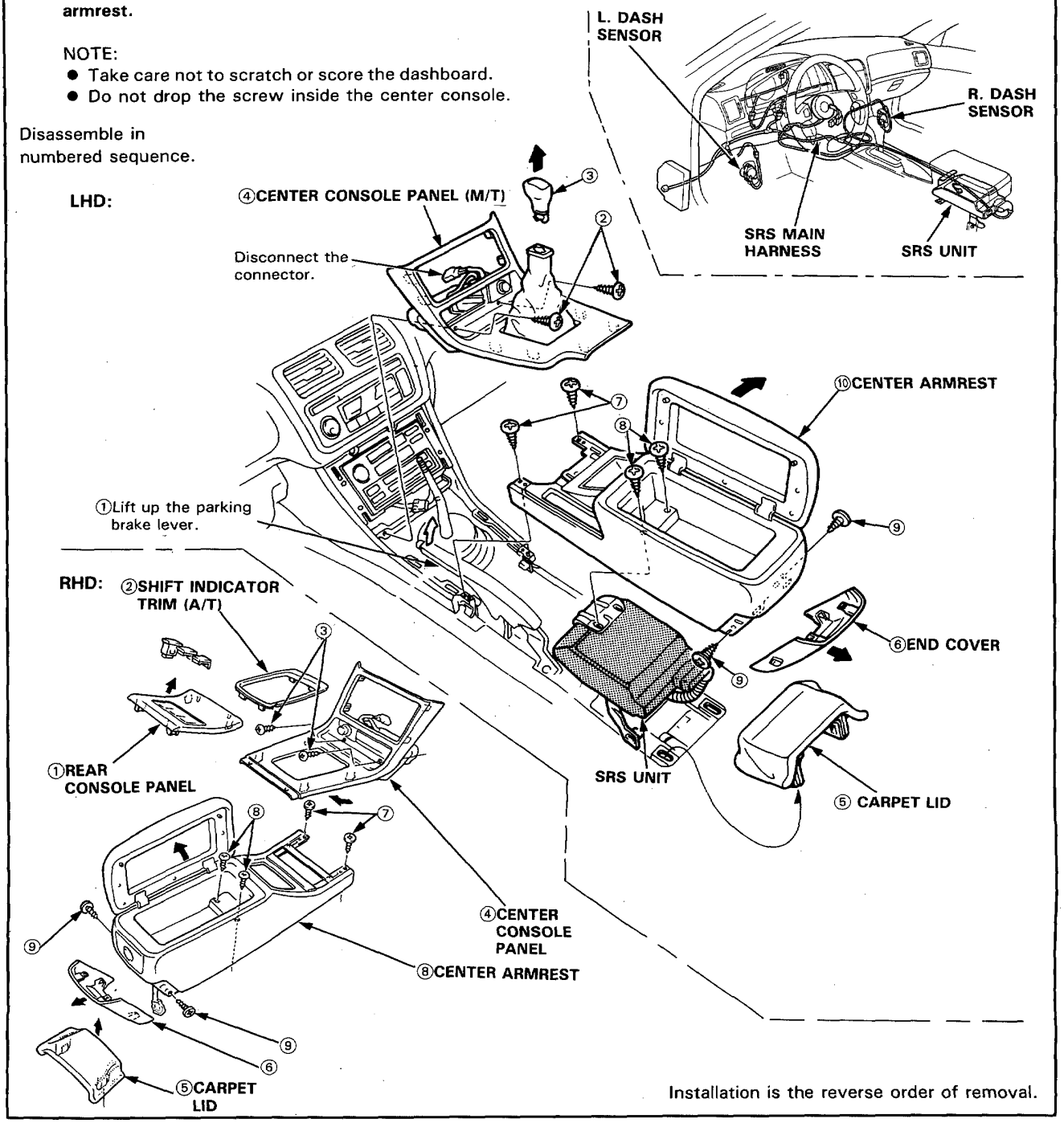

Installation is the reverse order of removal.

Center Console

Replacement

1. To remove the center console, first remove the:
   - Center console panel (page 20-60).
   - Center armrest (page 20-60).
   - Stereo cassette/radio (page 20-61).
   - Glove box lower panel (page 20-63).
   - Glove box (page 20-63).
   - L. glove box cover (page 20-63).
   - Dashboard lower cover (page 20-63).

2. Remove the 10 screws and 4 bolts, then remove the center console.

   NOTE:
   - Take care not to scratch the dashboard.
   - Do not drop the screws and bolts inside the dashboard.

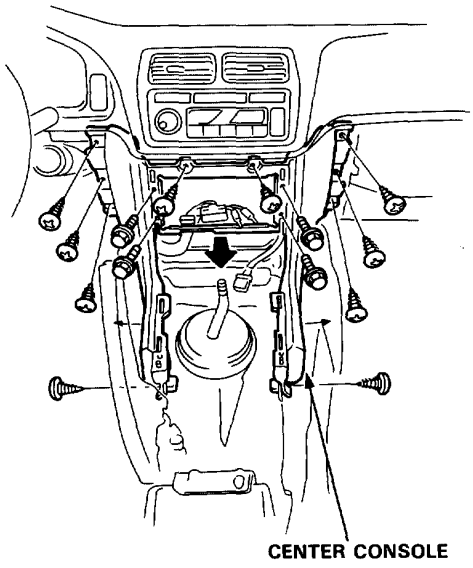

3. Installation is the reverse order of removal.

Stereo Cassette/Radio

Replacement

1. To remove the stereo cassette/radio, first remove the:
   - Center console panel (page 20-60).
   - Center armrest (page 20-60).

2. Remove the 2 mounting bolts, then disconnect the ground cable. Remove the stereo cassette/radio by pulling it out of the console.

3. Disconnect the connectors.

   NOTE: Do not drop the bolts inside the dashboard.

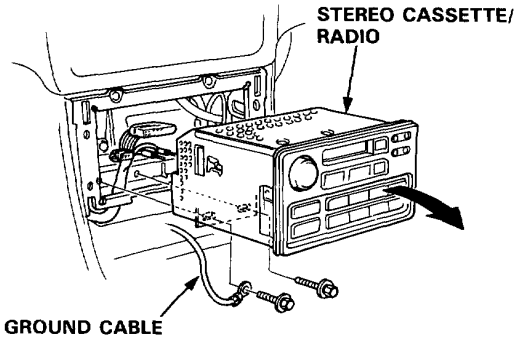

4. Installation is the reverse order of removal.

   NOTE: Before tightening the mounting bolts, make sure the harnesses are not pinched.

Dashboard

Component Removal/Installation

SRS wire harnesses are routed near the steering column.

WARNING **All SRS wire harnesses and connectors are colored yellow. Do not use electrical test equipment on these circuits.**

CAUTION: Be careful not to damage the SRS wire harnesses when servicing the steering column.

NOTE: Take care not to scratch the dashboard and steering column.

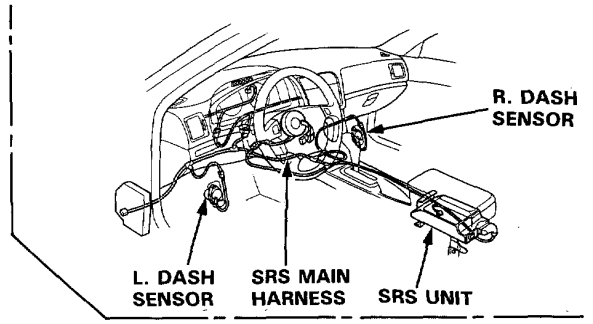

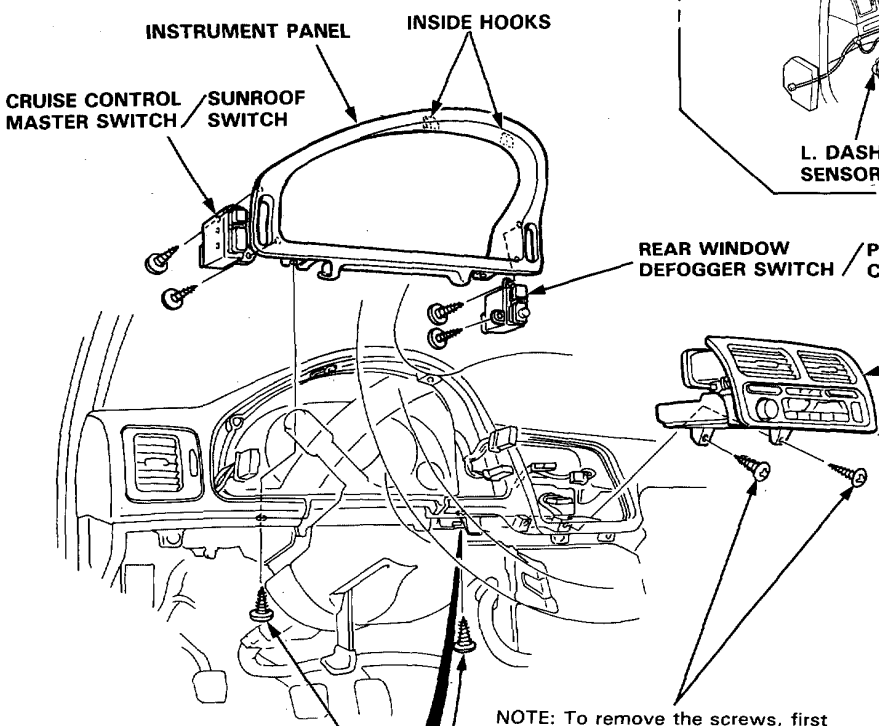

NOTE: To remove the screws, first remove the:
- Center console panel (page 20-60).
- Stereo cassette/radio (page 20-61).

NOTE: To remove the screws, first remove the dashboard lower cover (page 20-63).

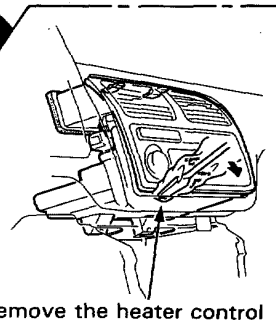

Remove the heater control unit/center air vent as an assembly, remove the lower screws, then pry at the lower edge.

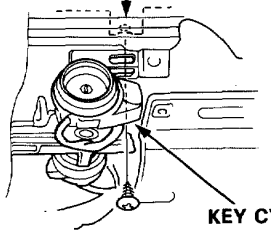

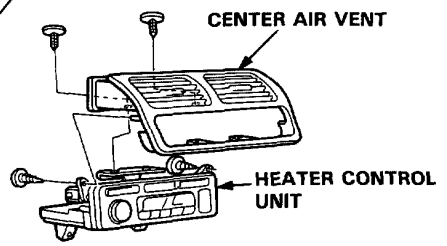

To separate the heater control unit, remove the screws.

Disassemble in numbered sequence.

NOTE: Take care not to scratch or score the dashboard, center console, steering column and glove box.

Passenger's side:

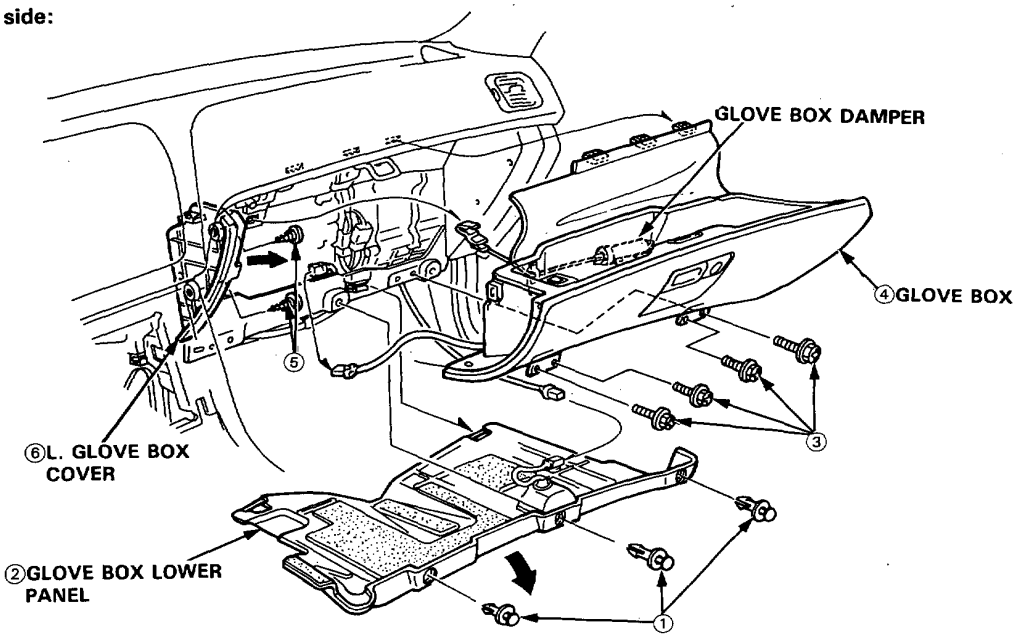

Driver's side:

RHD:

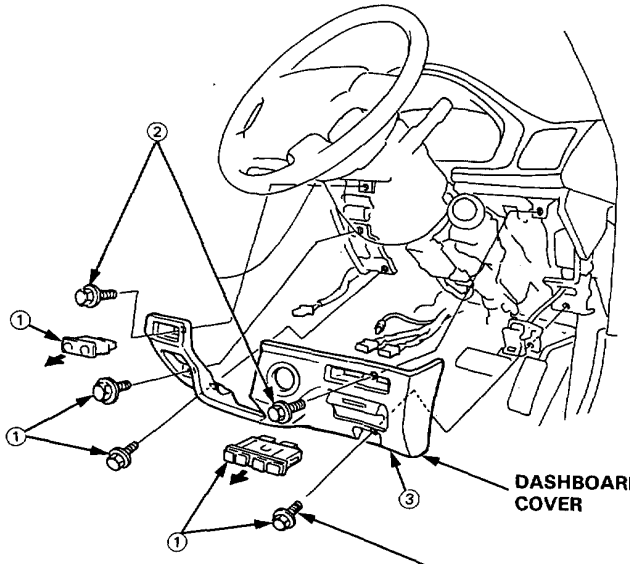

LHD:

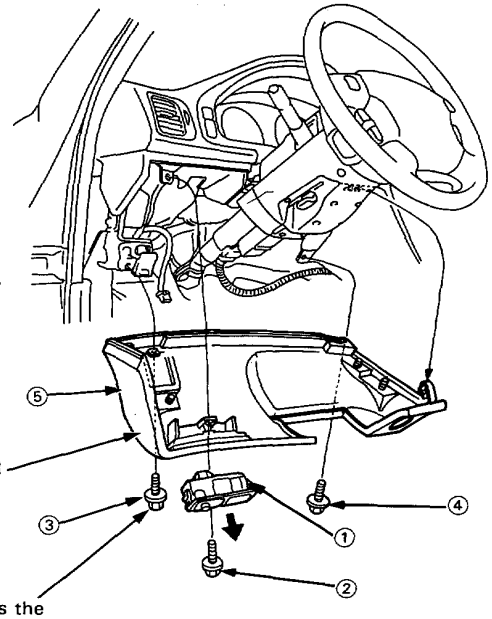

DASHBOARD LOWER COVER

This bolt also secures the *hood release handle.*

Replacement

SRS wire harnesses are routed near the dashboard and steering column.

⚠WARNING All SRS wire harnesses and connectors are colored yellow. Do not use electrical test equipment on these circuits.

CAUTION: Be careful not to damage the SRS wire harnesses when servicing the dashboard and steering column.

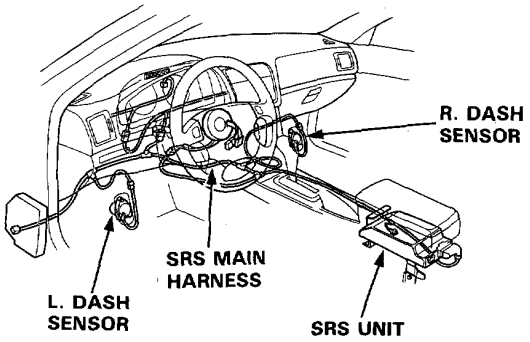

1. To remove the dashboard, first remove the:
   - Front seats (page 20-50).
   - Center console panel (page 20-60).
   - Center armrest (page 20-60).
   - Stereo cassette/radio (page 20-61).
   - Glove box lower panel (page 20-63).
   - Glove box (page 20-63).
   - L. glove box cover (page 20-63).
   - Dashboard lower cover (page 20-63).
   - Kick panel (page 22-48).

⚠WARNING To avoid accidental deployment and possible injury always install the protective short connector on the inflator connector when the harness is disconnected.

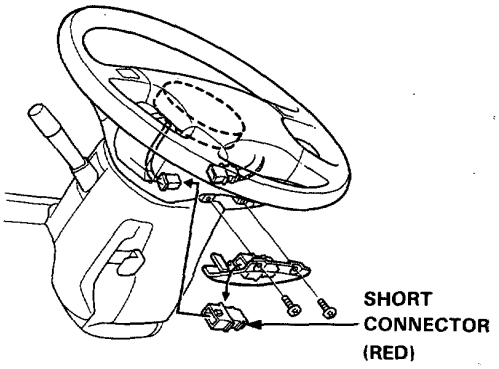

2. Lower the steering column (See section 17).

   NOTE: To prevent damage to the steering column, wrap it with a shop towel.

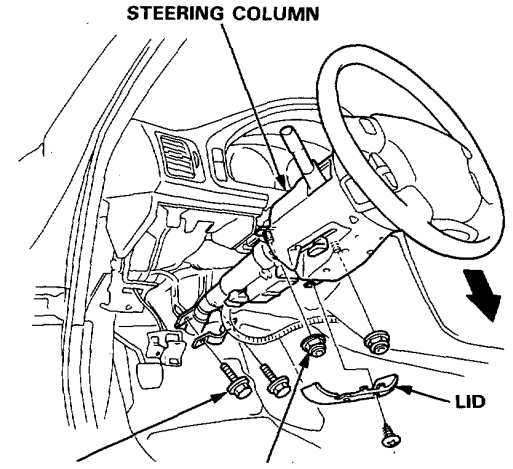

8 x 1.25 mm
22 N·m (2.2 kg-m, 16 lb-ft)

8 x 1.25 mm
16 N·m (1.6 kg-m, 12 lb-ft)
Replace.

3. Disconnect the opener cable from the hood release handel (page 20-69).

4. Remove the parking brake release lever (RHD).

5. Remove the glove box side cover and dashboard side cover.

6. Disconnect the connectors.

7. Remove the 6 mounting bolts, then lift and remove the dashboard.

NOTE:
- Use protective tape on the bottom of the front pillar trim.
- Take care not to scratch the dashboard.

RHD:

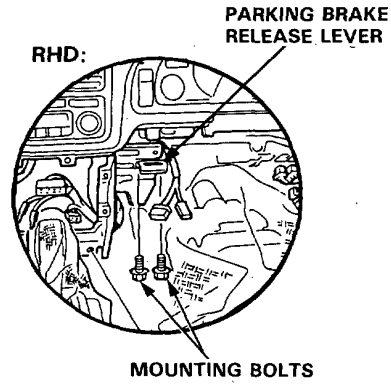

LHD:

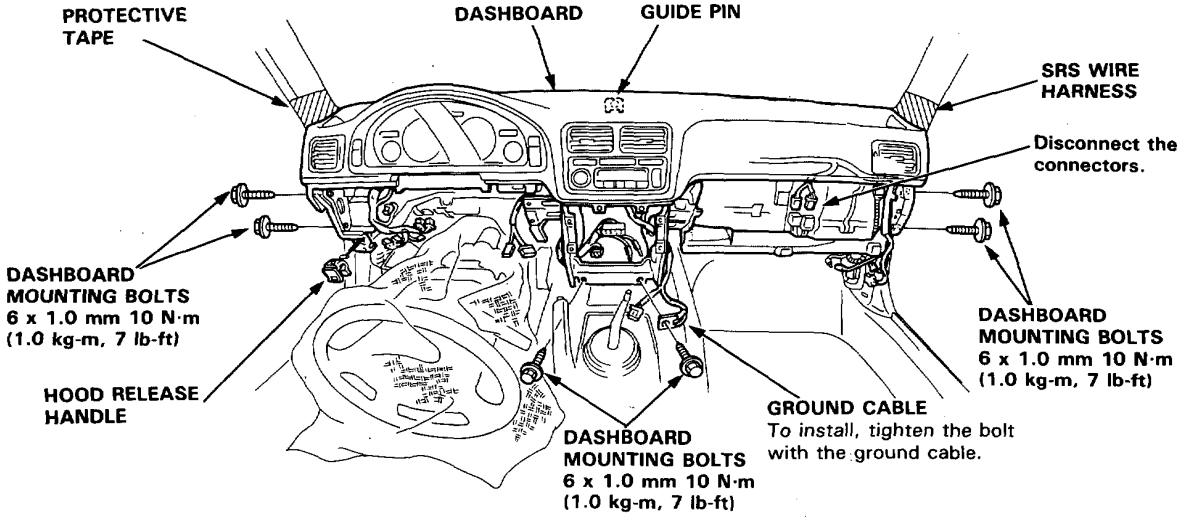

Driver's side:

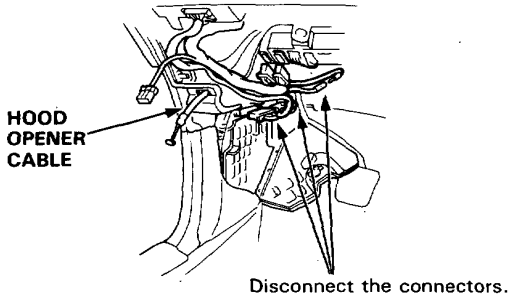

Passenger's side:

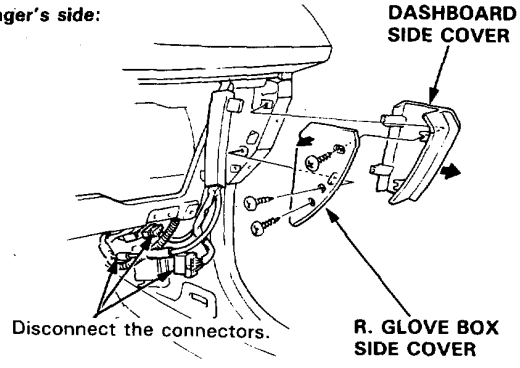

8. Installation is the reverse order of removal.

NOTE:
- Make sure the dashboard fits onto the guide pin correctly.
- Before tightening the dashboard bolts, make sure the dashboard wires are not pinched.

Front Bumper

Replacement

1. Remove the covers, then remove the right and left front turn signal lights.
2. Remove the 2 bumper mounting bolts on each side.
3. Remove the 4 lower skirt mounting bolts.
4. Disconnect the headlight washer hose.
5. Lift and remove the bumper by sliding it forward.

NOTE:
- An assistant is helpful when removing the front bumper.
- Take care not to scratch the bumper.

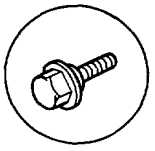

○: Lower skirt mounting bolt locations

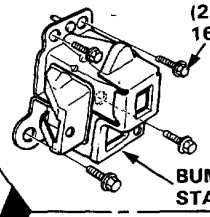

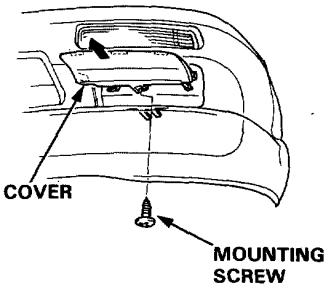

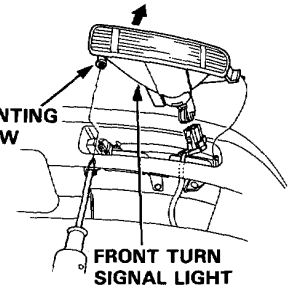

Loosen the mounting screw and pull off and disconnect the connector.

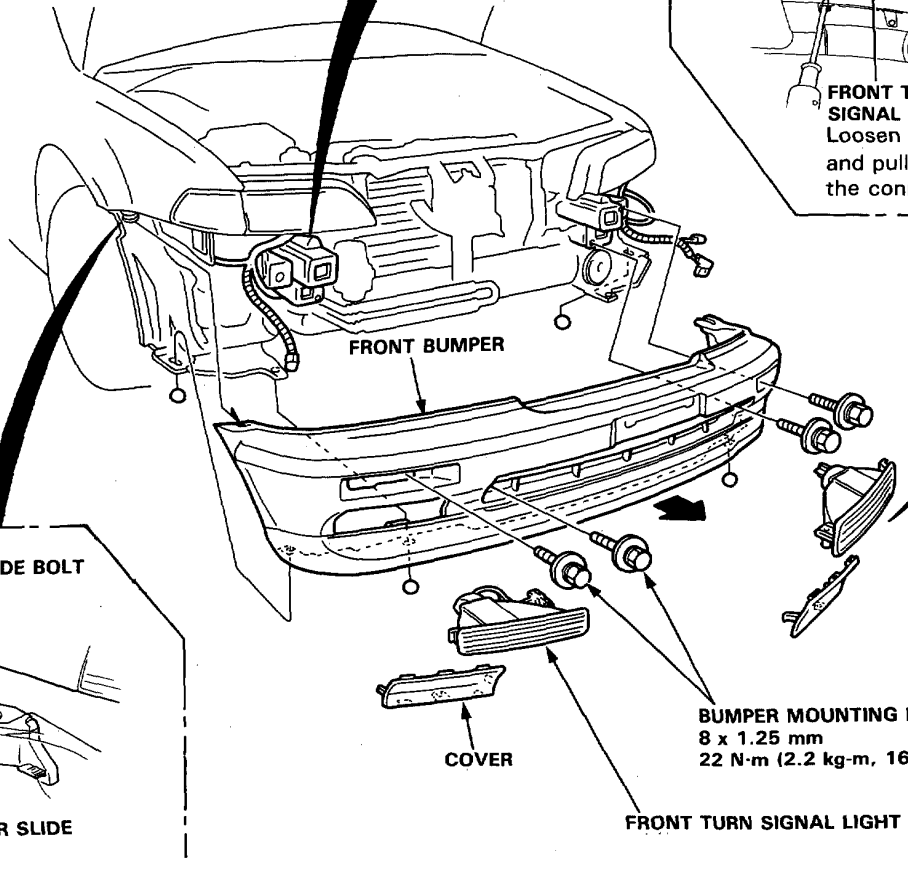

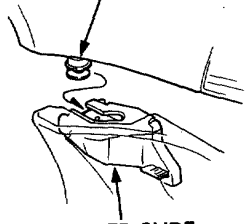

6. To install, insert the corner slide bolts into the corner slides, and install parts in the reverse order of removal.

Rear Bumper

Replacement

1. Fold the rear trim panel forward and remove the 2 upper bumper mounting nuts on each side from the trunk area.
2. Remove the 2 inner fender mouting screws. Move the inner fenders out of the way on each side.
3. Remove the 2 lower bumper mounting nuts at the front edge of the bumper on each side.
4. Remove the upper bumper molding, then remove the 3 upper bumper mounting clips.
5. Remove the 2 lower bumper mounting clips.
6. Pull back the front edge of the bumper on each side, then remove the bumper and the absorbers by sliding it to the rear.

NOTE:
- Disconnect the license light connector.
- An assistant is helpful when removing the rear bumper.
- Take care not to scratch the bumper.

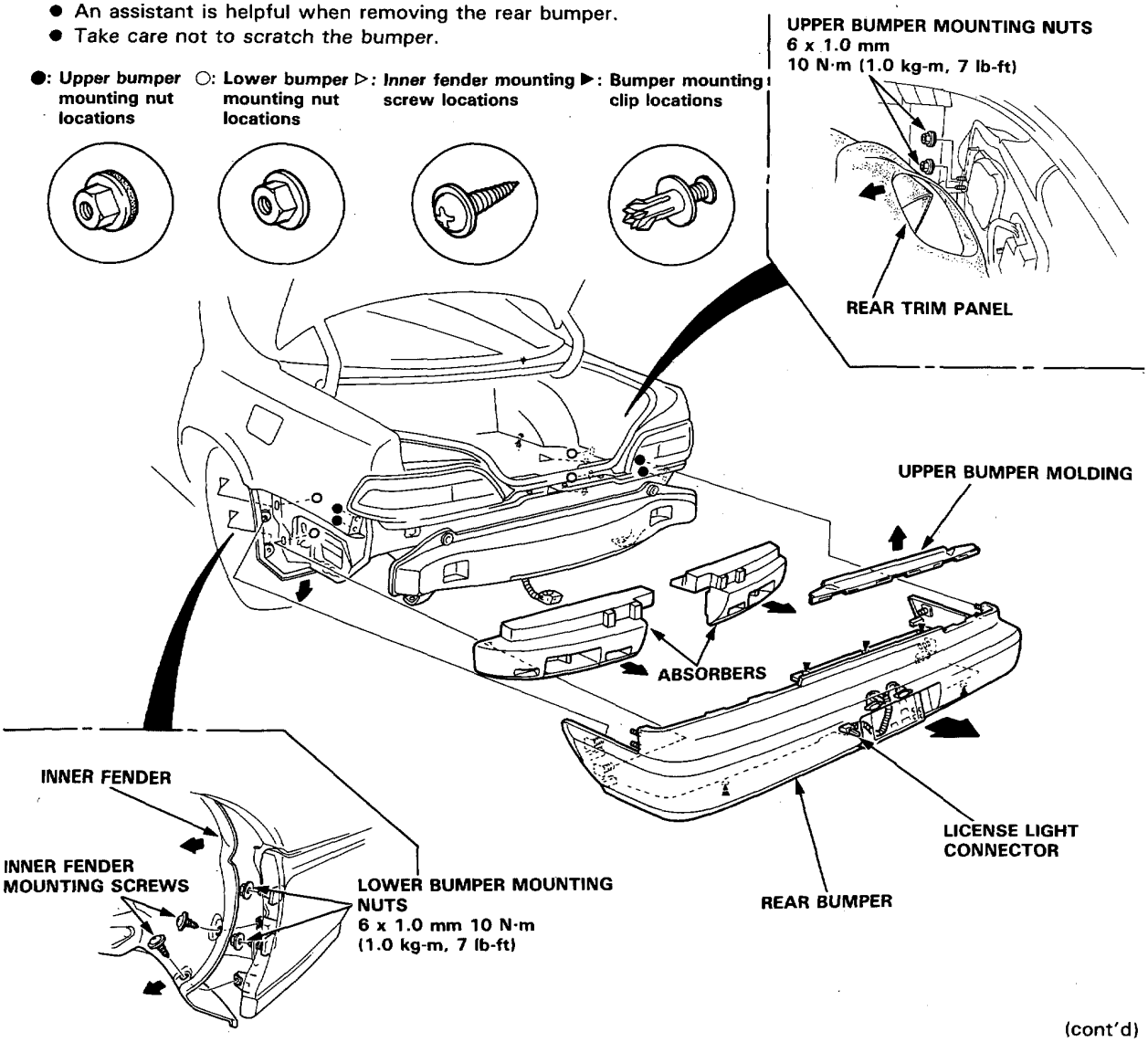

(cont'd)

Replacement (cont'd)

7. Fold the trunk side panel, and remove the 2 hole caps on each side from the trunk area.

8. Remove the 2 bumper beam mounting bolts on each side.

9. Remove the bumper beam by sliding it to the rear.

   NOTE: An assistant is helpful when removing the bumper beam.

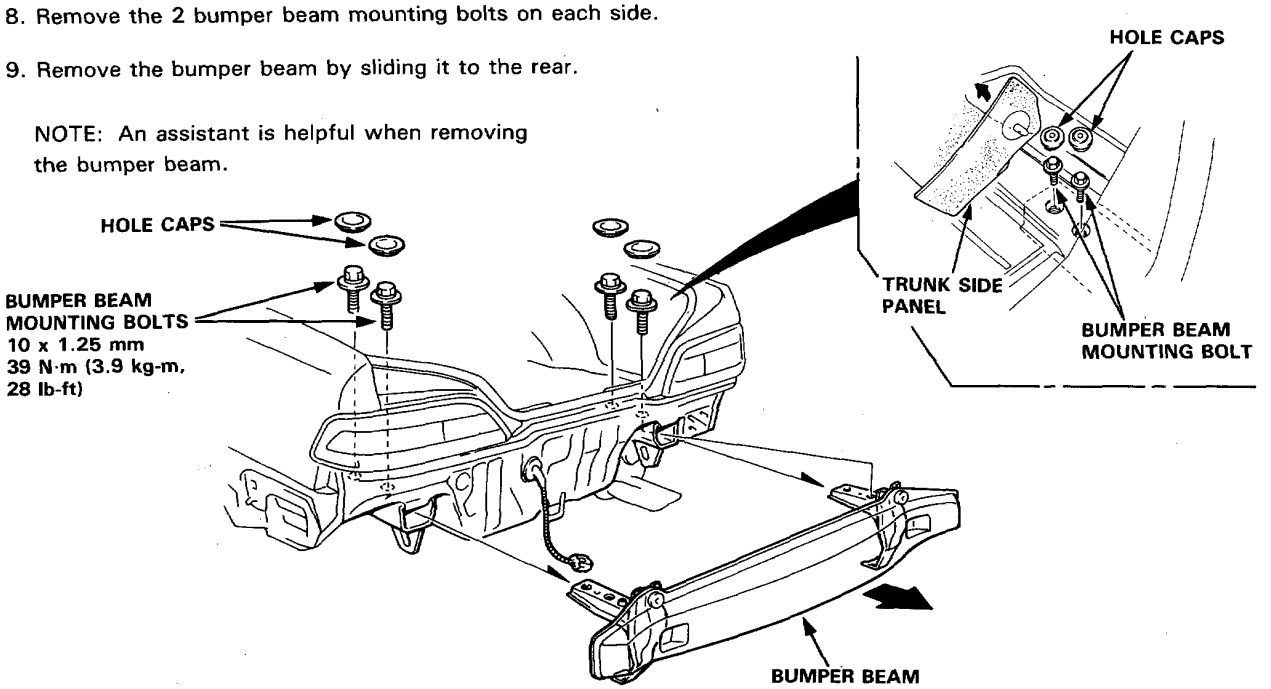

10. Remove the 4 bumper upper beam mounting nuts, then remove the bumper upper beam by sliding it to the rear.

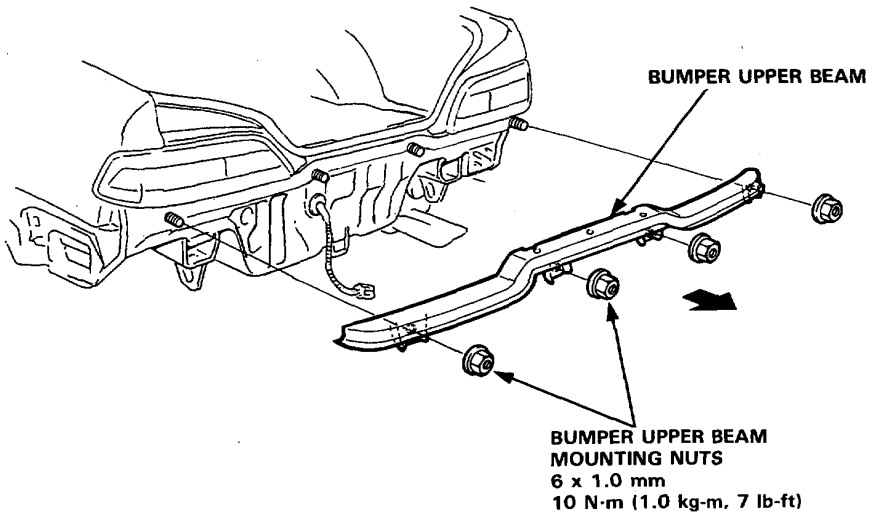

11. Installation is the reverse order of removal.

Replacement/Adjustment

1. Disconnect the windshield washer hose, then pull it out of the hood.
2. Hold the hood up and remove the bolts from both support strut mounts.
3. Remove the hood by removing the 2 hood mounting bolts on each side.
4. To remove the hood hinges, remove the windshield lower molding (page 20-29).
5. Install the new hood. After installing, adjust the hood alignment.

ALIGNMENT:
- The hinges can be adjusted right and left as well as fore and aft by using the elongated holes.

NOTE:
- When replacing the opener cable, tie a string to the cable so you can pull it back in later.
- Take care not to bend the opener cable.

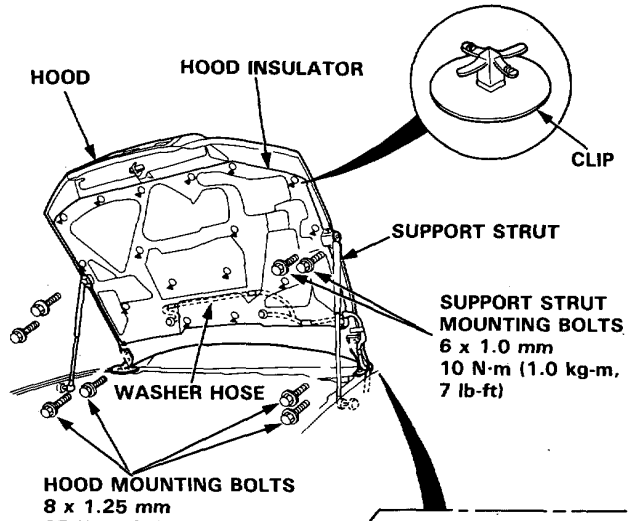

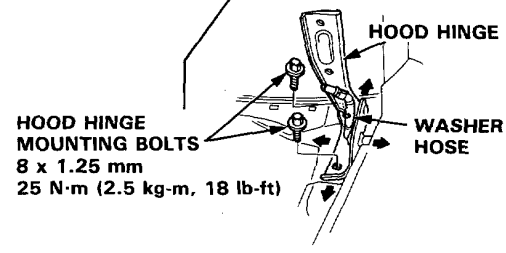

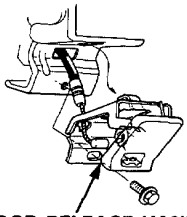

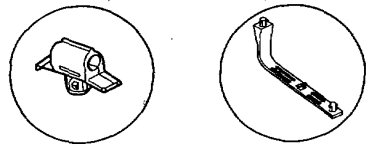

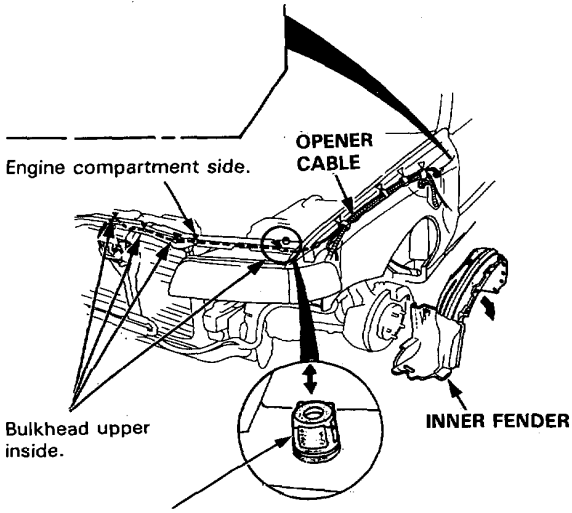

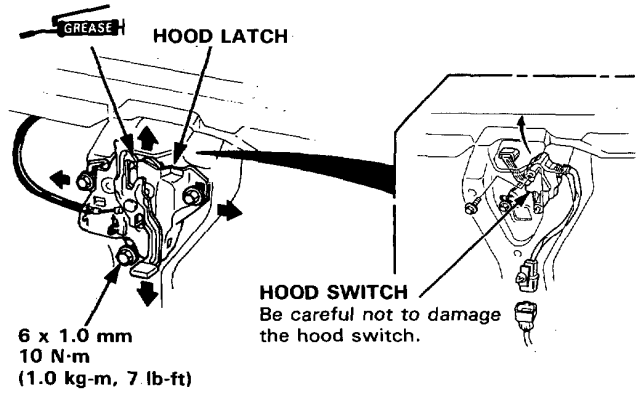

NOTE: After installing, check that the opener cable is routed and connected properly.

Trunk Lid

Replacement/Adjustment

1. Remove the clips, then remove the trunk lid inner trim panel.
2. Disconnect the wire connectors, then remove the wire harness.
3. Remove the trunk lid hinge bolts, then lift off the lid.
4. Remove the torsion bar using a torsion bar assembly tool.
5. Remove the rear shelf.
6. Remove the hinge bracket mounting bolts, then remove the hinges from the trunk.
7. Assemble in the reverse order.

NOTE: Before tightening the hinge bolts, check the adjustments shown below.

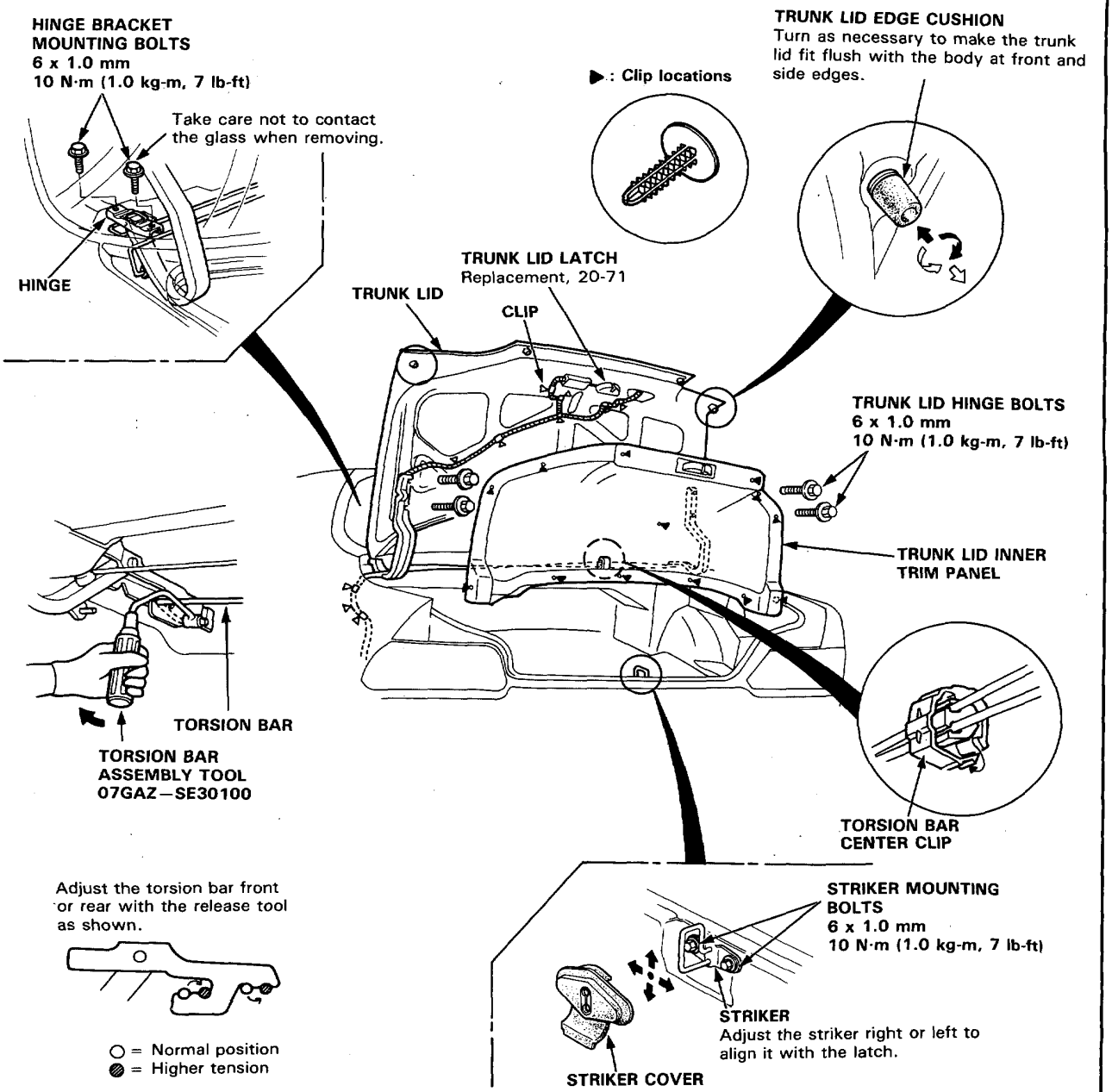

Trunk Lid Latch/Fuel Opener and Latch

Trunk Lid Latch Replacement

NOTE:
- To remove the trunk lid latch, first remove the trunk lid inner trim panel (page 20-70).
- After installing, adjust the trunk lid alignment with the striker.

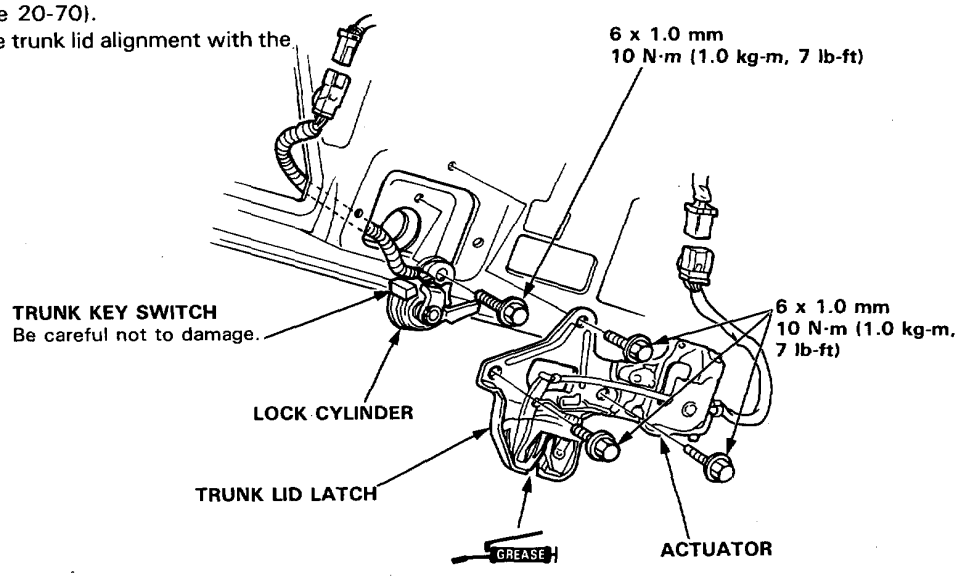

Fuel Opener and Latch Replacement

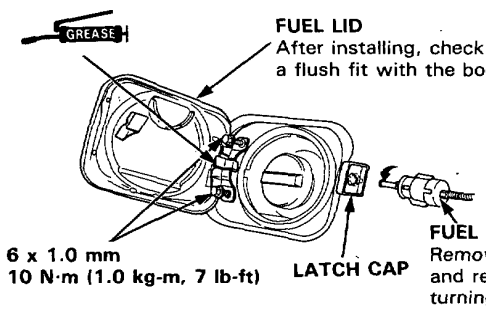

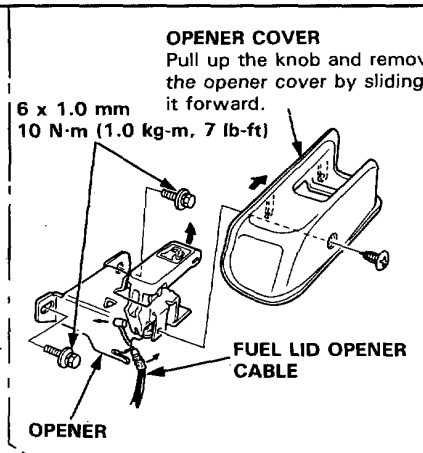

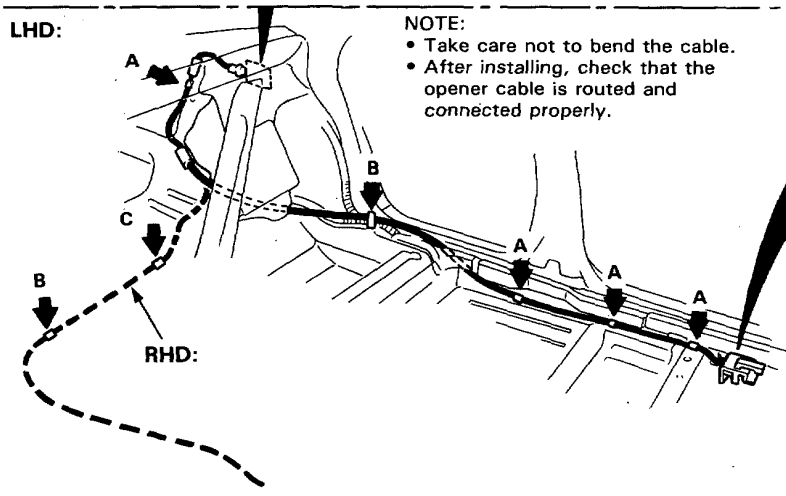

NOTE:
- Take care not to bend the cable.
- After installing, check that the opener cable is routed and connected properly.

: Clip locations.

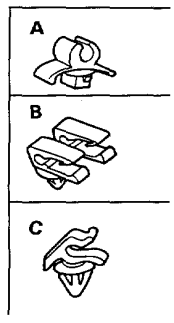

Roof Molding/Side Window Moldings

Replacement

ROOF MOLDING

CLIP (4)

ROOF MOLDING

FRONT SIDE WINDOW MOLDING

FRONT SIDE WINDOW MOLDING

REAR SIDE WINDOW MOLDING

CLIP (11)

FRONT SIDE WINDOW MOLDING
Remove the screw, then remove the front side window molding by hand.

PLUG

MOUNTING NUT

CLIP

CLIP

MOUNTING NUT

PLUG

REAR SIDE WINDOW MOLDING

1. Remove the front side window molding.
2. Remove the pillar trim panels (page 20-48).
3. Lower the headliner (page 20-49).
4. Remove the plugs.
5. Remove the nuts, then remove the rear side window molding by hand.

NOTE:

- Take care not to drop the nuts inside the body panels.
- If necessary, replace any damaged clips.

○: Front side window molding clip locations

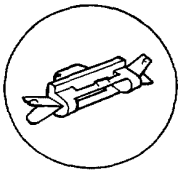

●: Rear side window molding clip location

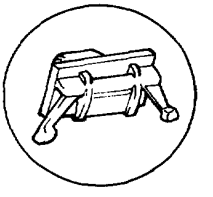

Side Moldings/Fender Well Trim

Replacement

NOTE:
- Take care not to bend the moldings.
- If necessary, replace any damaged clips.
- Before reassembling, clean the body bonding surface with a sponge dampened in alcohol.

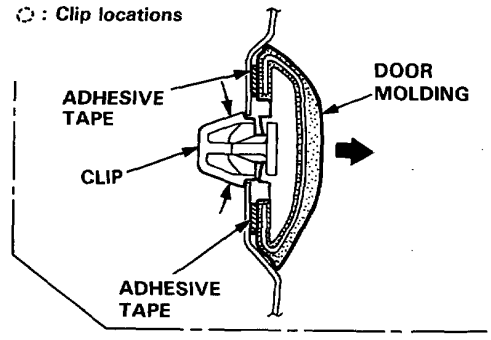

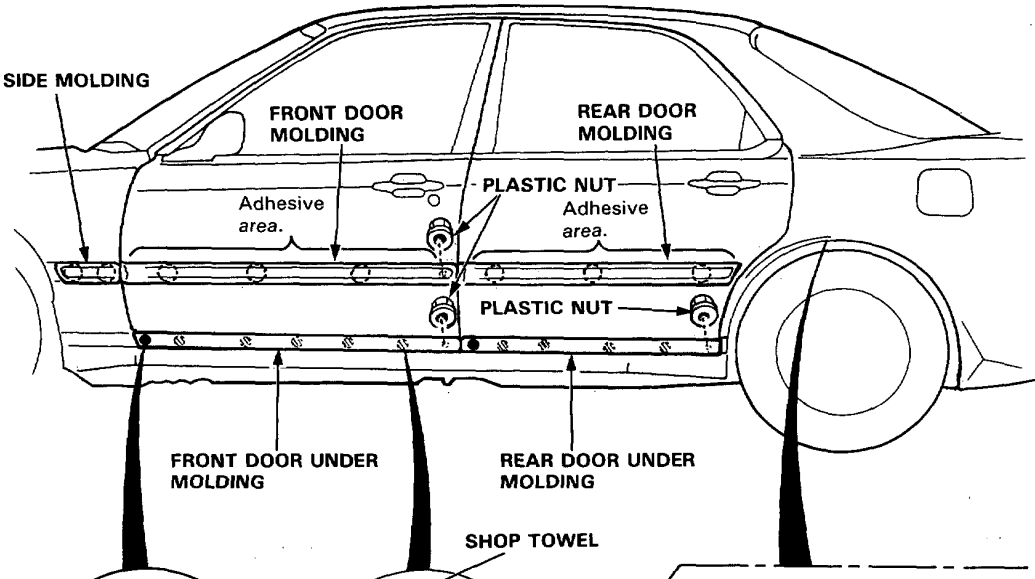

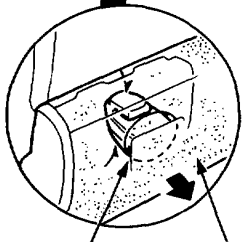

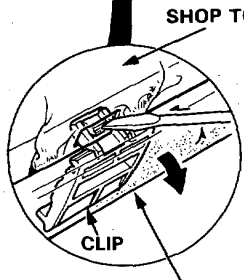

CLIP
Detach the clip from inside of the door.

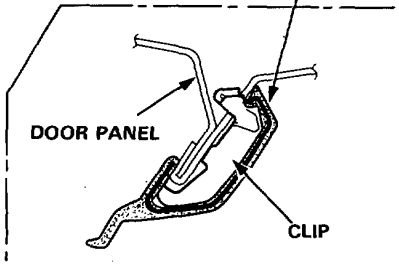

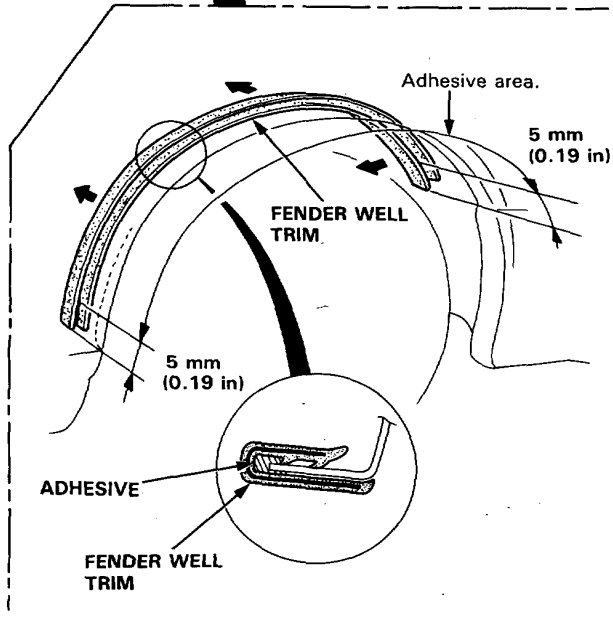

Side Sill Panels/Side Sill Moldings

Replacement

Disassemble in numbered sequence.

▷: Clip locations

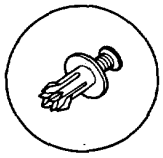

▶: Clip locations

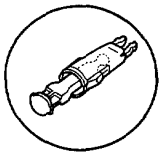

○: Screw locations

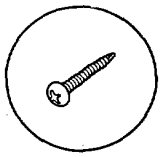

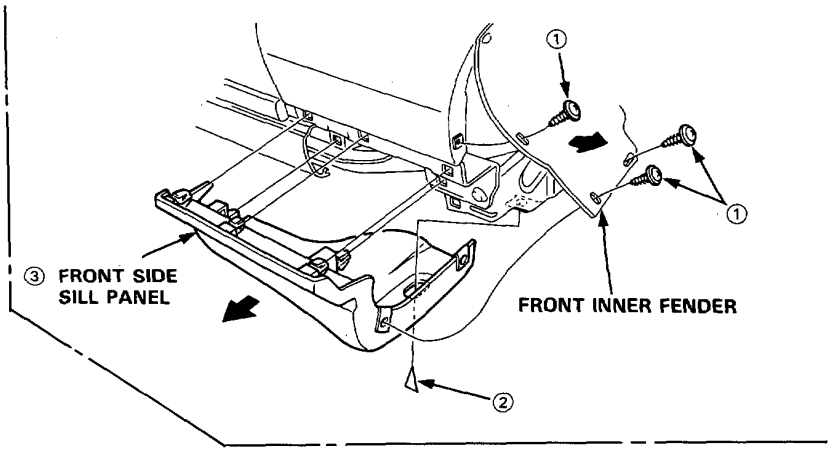

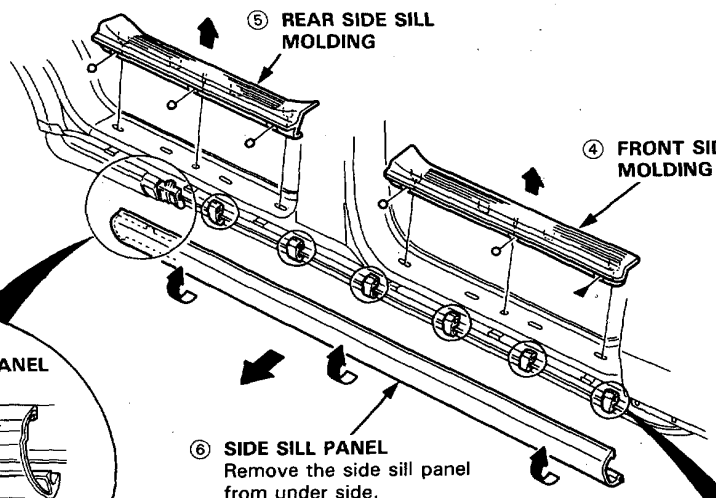

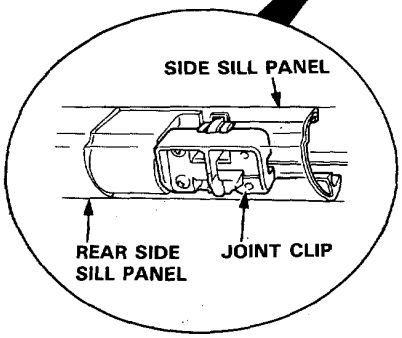

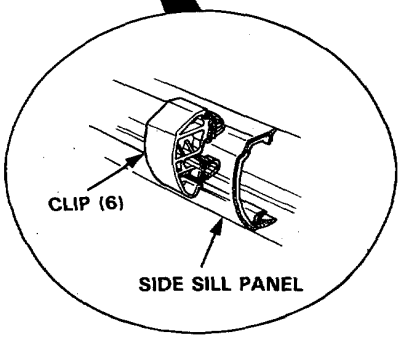

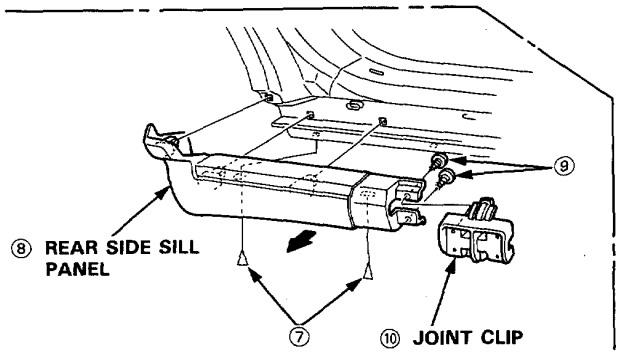

NOTE:
- Take care not to twist the side sill panel.
- If necessary, replace any damage clips.

Front Grille/Hood Edge Protector

Front Grille Replacement

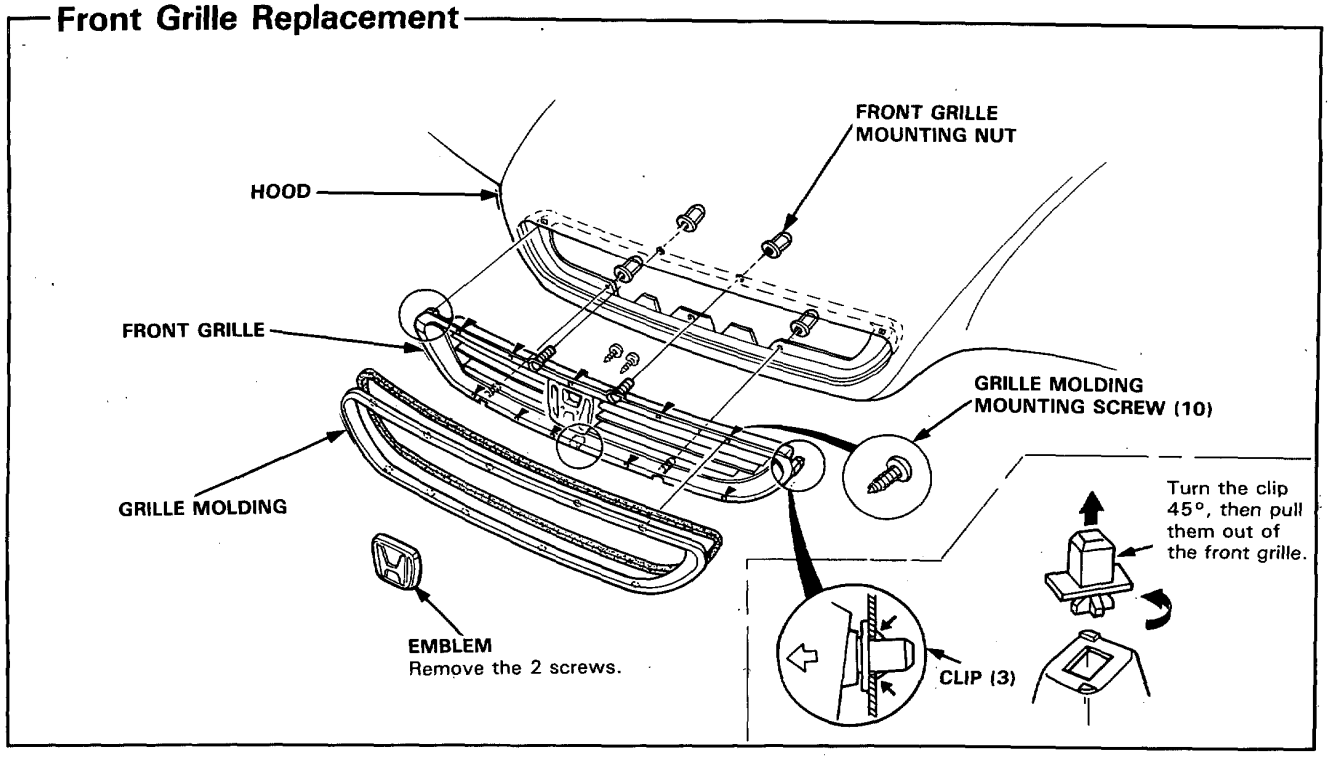

Hood Edge Protector Replacement

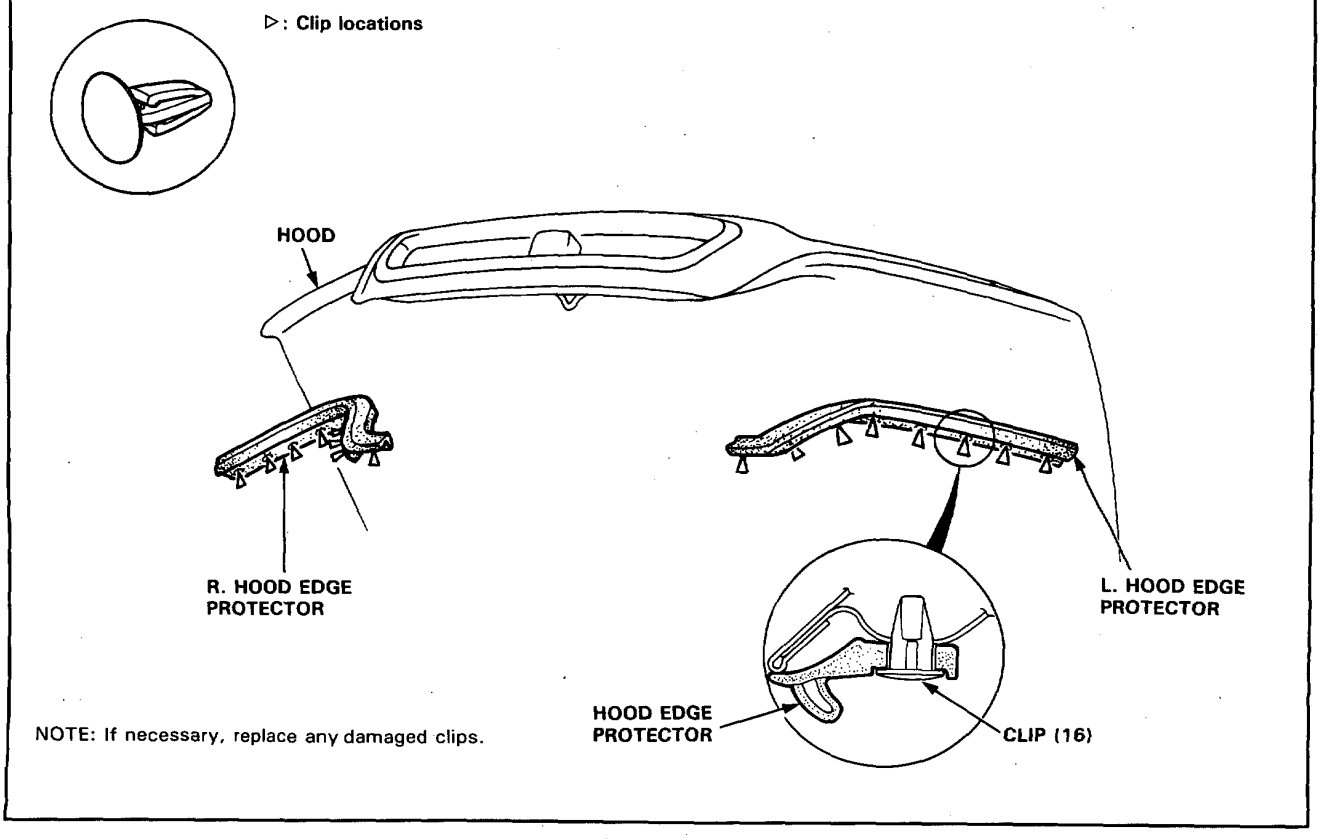

NOTE: If necessary, replace any damaged clips.

Sub-Frame Torque:

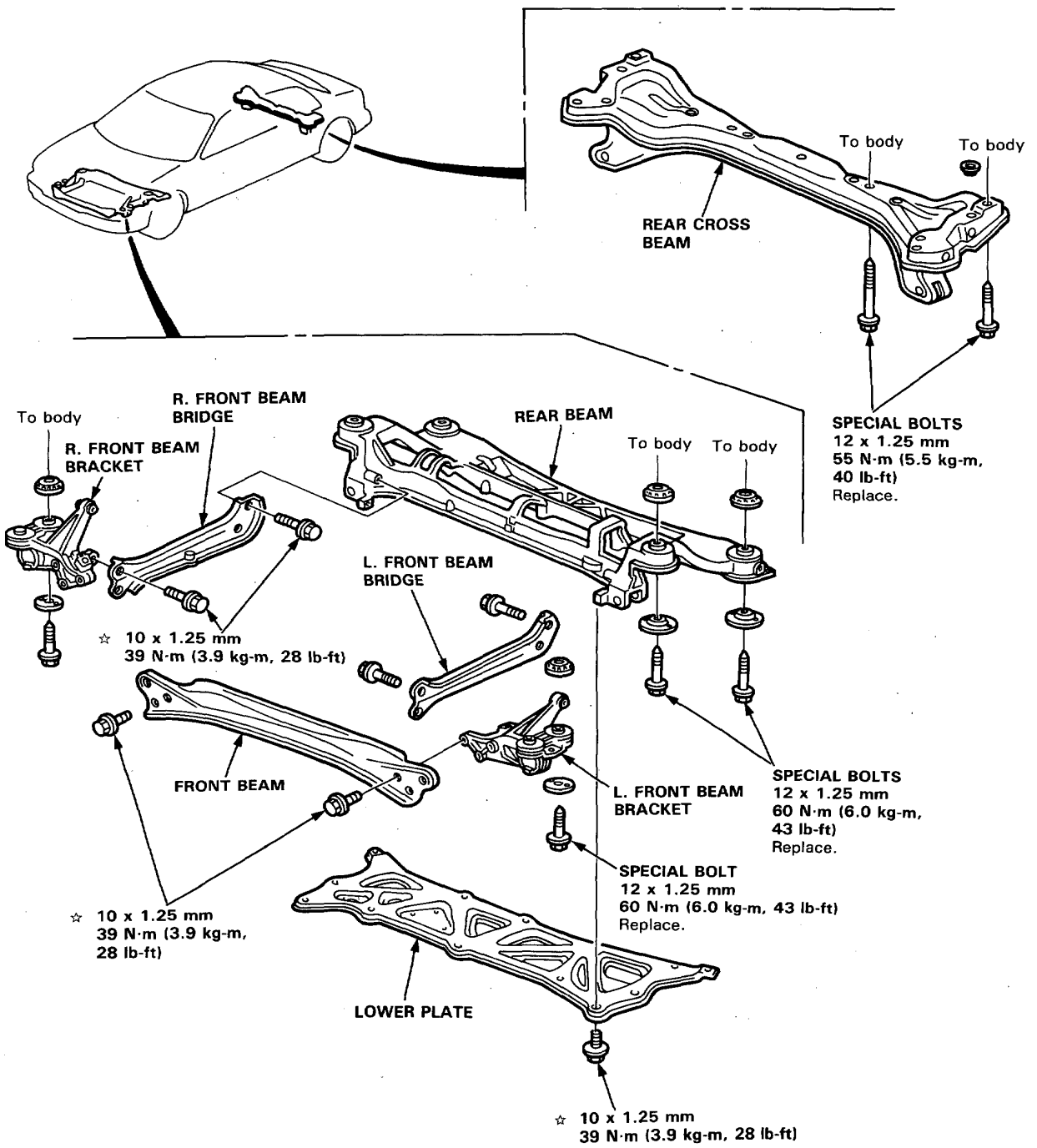

☆ CORROSION RESISTANT BOLT

Frame Repair Chart

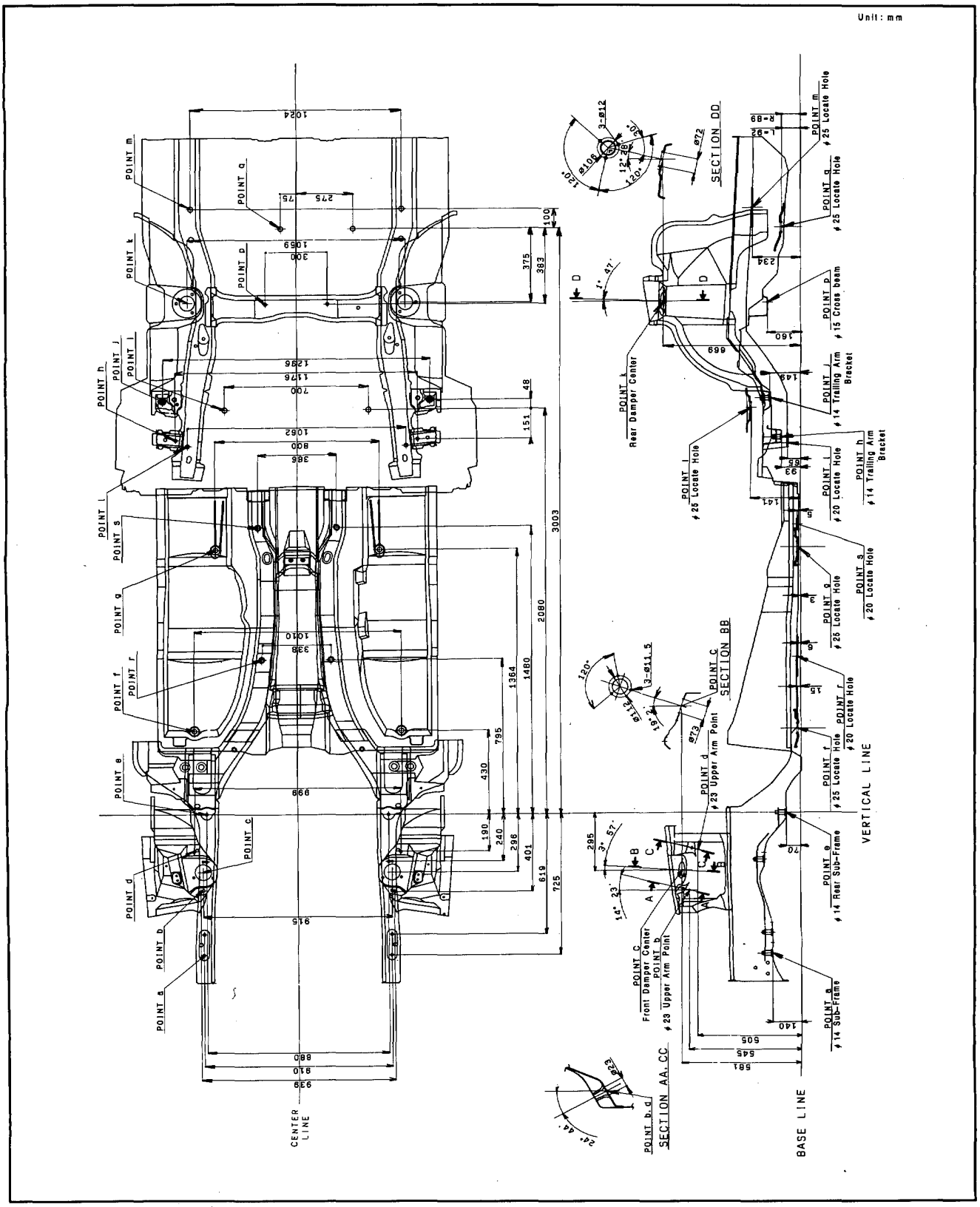

Heater and Air Conditioner

Heater 21-1

This vehicle has a compact heater assembly with the heater and evaporator together. Also refer to 22 section (Automatic Climate Control).

Automatic Climate Control 22-1

Automatic Climate Control

Special Tools 22-2
Illustrated Index 22-3
Heater-Evaporator Door Positions 22-4
Description
  Air Conditioner 22-8
  Triple Pressure Switch 22-9
  Fan Control Unit 22-10
Wiring And Connector Locations 22-11
Circuit Diagram 22-12
Climate Control Unit
  Removal 22-14
Troubleshooting
  Self-diagnosis Circuit Check/Function
  Selection and Operation Check 22-15
  Reference Chart 22-16
  Heater-Evaporator Illustrated Index 22-17
  Climate control Unit Input/Output
    Signals 22-18
  Blower Motor 22-19
  Blower Motor Speed 22-24
  Recirculation Control Motor 22-26
  Mode Control Motor 22-28
  Air Mix Control Motor 22-30
  Max Cool Motor 22-32
  Evaporator Temperature Sensor 22-34
  Coolant Temperature Sensor 22-36
  Outside Air (Ambient) Temperature
    Sensor 22-38
  Sunlight Sensor 22-40
  Climate Control Unit 22-42
  Fan motors and Compressor 22-43
  Compressor 22-46
  Fan Motors 22-50
*Blower
  Removal 22-64
  Overhaul 22-65
* Heater-Evaporator Unit
  Removal 22-66
  Overhaul 22-68
Recirculation Control Motor 22-69
Mode Control Motor 22-70
Air Mix Control Motor 22-71
Max Cool Motor 22-72
Aspirator Fan Motor 22-73
Air mix Control Door Adjustment 22-74
Evaporator Temperature Sensor 22-75
Coolant Temperature Sensor 22-76
In-car Temperature Sensor 22-77
Outside Air (Ambient) Temperature
  Sensor 22-78
Sunlight Sensor 22-79
Relay Testing 22-80
Power Transistor Testing 22-81
A/C Service Tips and Precautions 22-82
A/C System Service
  Discharge 22-83
  Performance Test 22-84
  Pressure Test Chart 22-85
Compressor
  Description 22-86
  Replacement 22-87
  Belt Adjustment 22-89
  Clutch Inspection 22-90
  Replacement/Overhaul 22-91
  Relief Valve Replacement 22-92
Condenser
  Replacement 22-93
A/C System Service
  Evacuation 22-96
  System Charging 22-97
  Leak Test 22-98

*: Read SRS precautions before working in these areas.

SUPPLEMENTAL RESTRAINT SYSTEM (SRS)

The Legend includes a driver's side Airbag, located in the steering wheel hub. Information necessary to safely service the SRS is included in this Shop Manual. Items marked * in each section table of contents include, or are located near, SRS components. Servicing, disassembling or replacing these items will require special precautions and tools, and should therefore be done only by an authorized HONDA dealer.

⚠ WARNING

- **To avoid rendering the SRS inoperative, which can lead to personal injury or death in the event of a severe frontal collision, all maintenance must be performed by an authorized HONDA dealer.**
- **Improper maintenance, including incorrect removal and installation of the SRS, can lead to personal injury caused by unintentional activation of the Airbag.**
- **All SRS electrical wiring harnesses are covered with yellow outer insulation. Related components are located in the steering column, center armrest and dashboard lower panel. Do not use electrical test equipment on these circuits.**

Special Tools

Ref. No.	Tool Number	Description	Q'ty	Page Reference
①	07LAB–SK70100	A/C Clutch Holder	1	22-91
②		Belt Tension Gauge	1	22-89
③	07LAJ–PT30100	ECU Test Harness	1	22-49

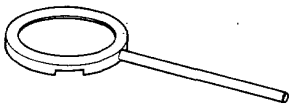

①

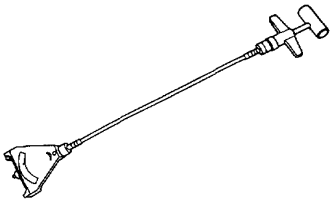

②

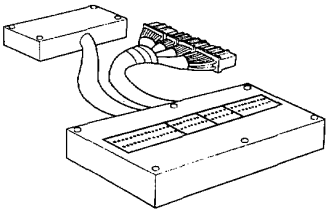

③

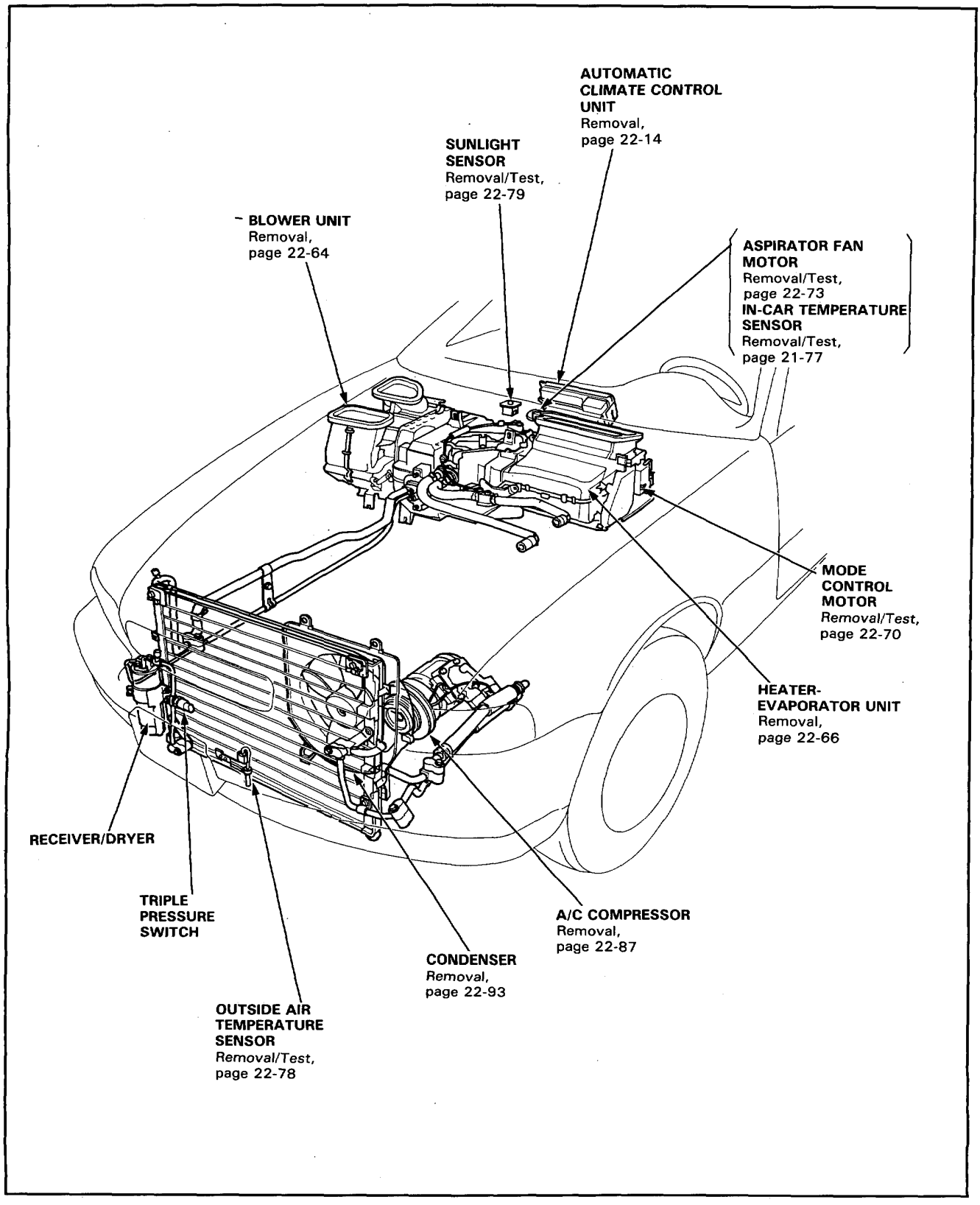
AUTOMATIC CLIMATE CONTROL UNIT
Removal, page 22-14
SUNLIGHT SENSOR
Removal/Test, page 22-79
BLOWER UNIT
Removal, page 22-64
ASPIRATOR FAN MOTOR
Removal/Test, page 22-73
IN-CAR TEMPERATURE SENSOR
Removal/Test, page 21-77
MODE CONTROL MOTOR
Removal/Test, page 22-70
HEATER-EVAPORATOR UNIT
Removal, page 22-66
RECEIVER/DRYER
TRIPLE PRESSURE SWITCH
A/C COMPRESSOR
Removal, page 22-87
CONDENSER
Removal, page 22-93
OUTSIDE AIR TEMPERATURE SENSOR
Removal/Test, page 22-78

Heater-Evaporator Door Positions

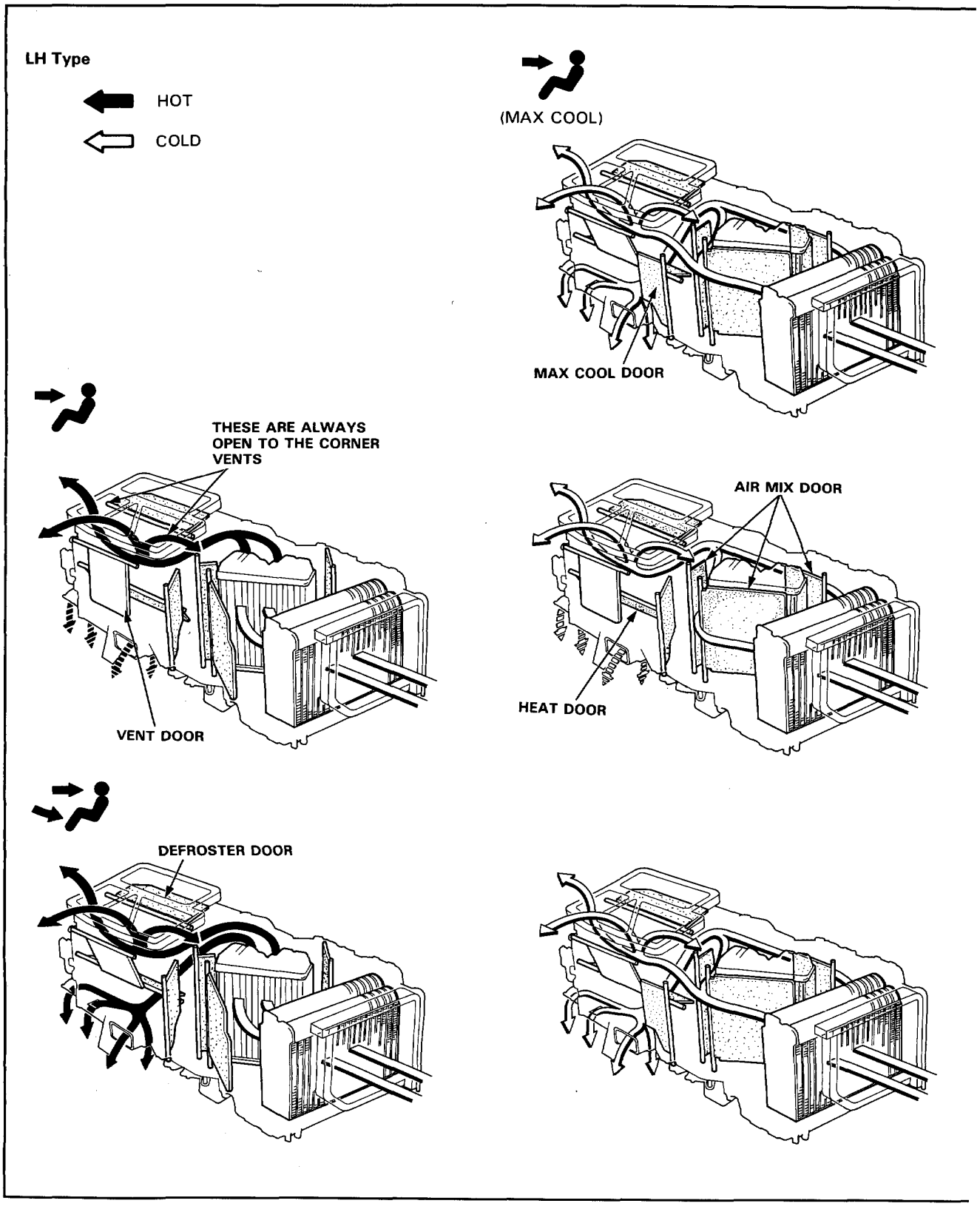

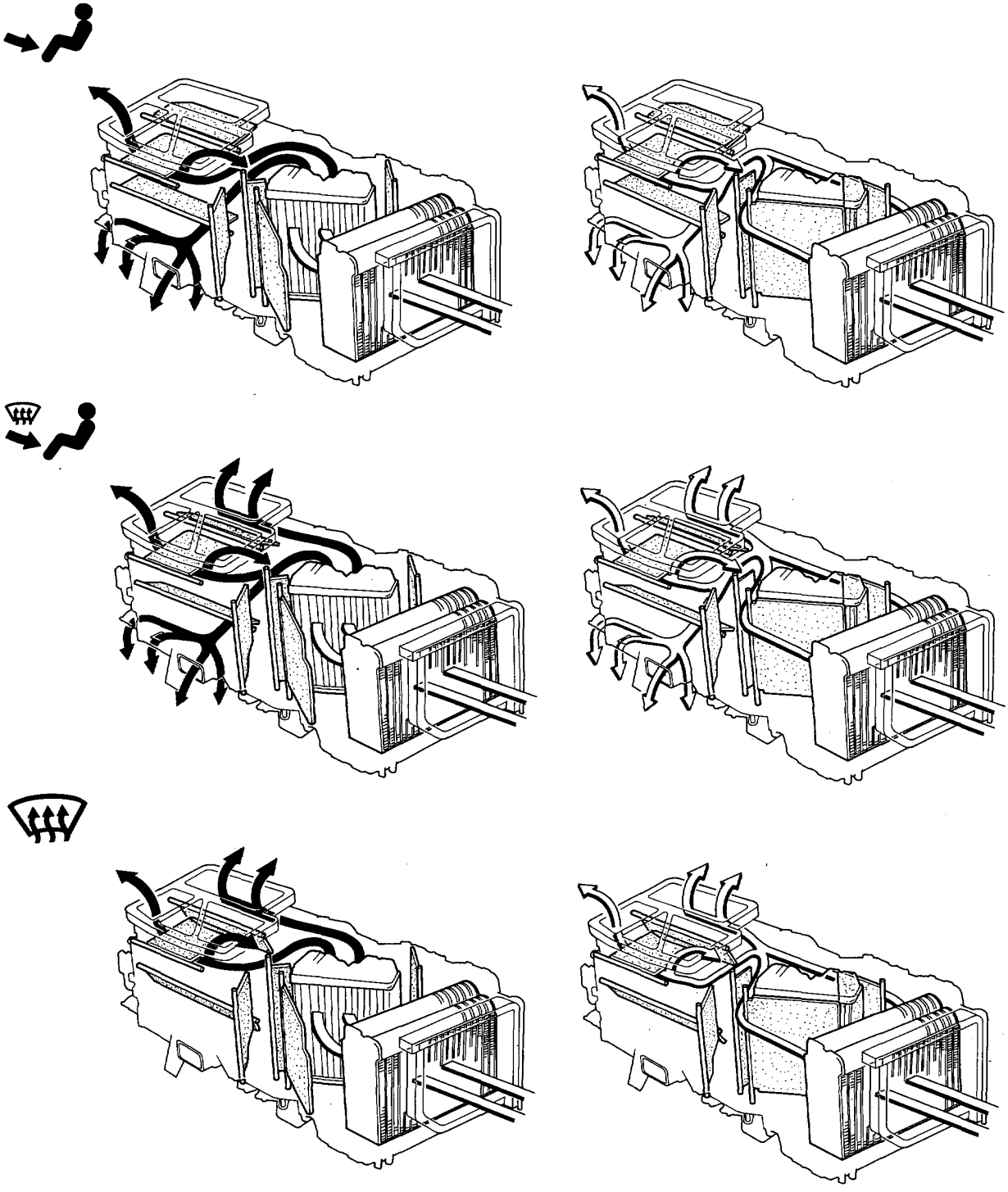

Heater-Evaporator Door Positions

RH Type

HOT

COLD

MAX COOL

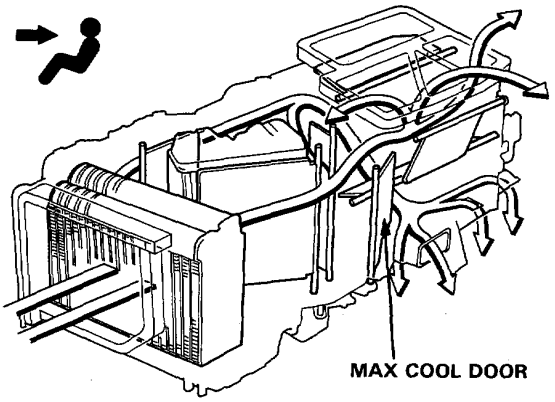

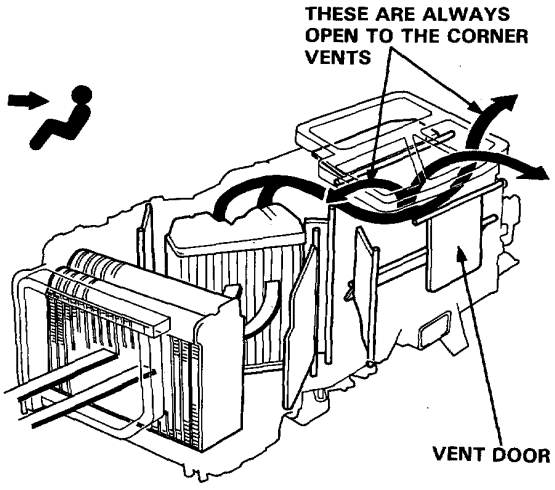

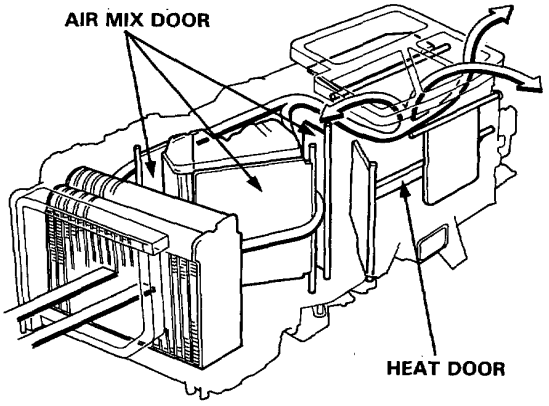

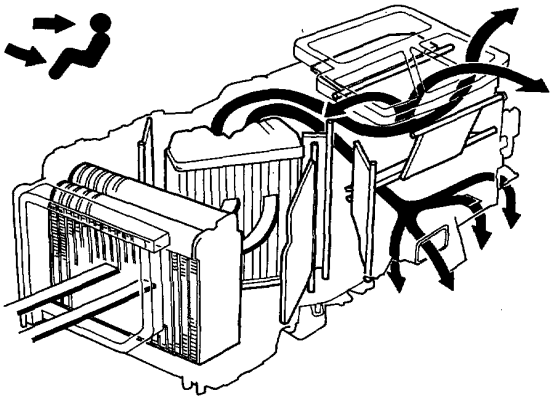

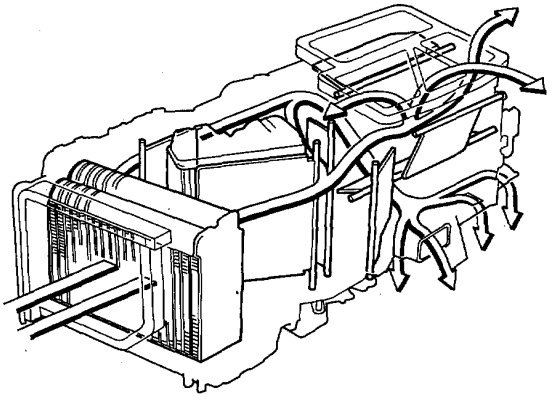

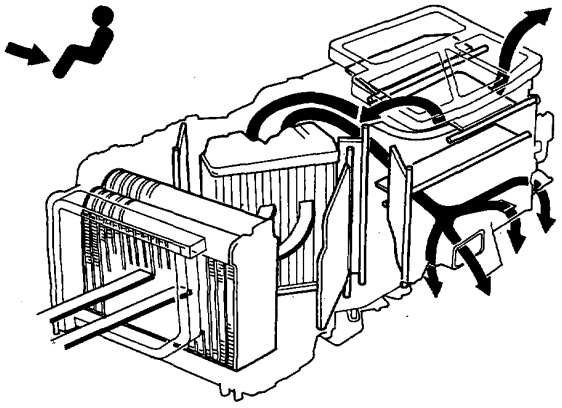

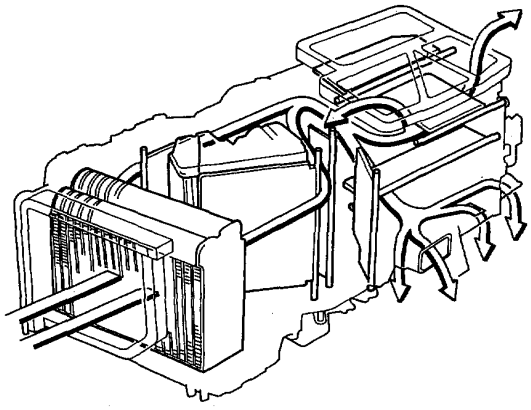

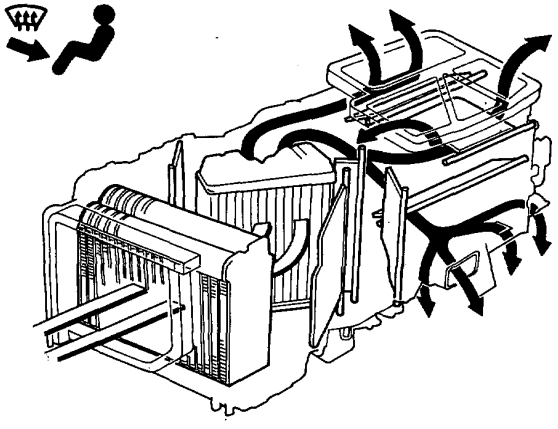

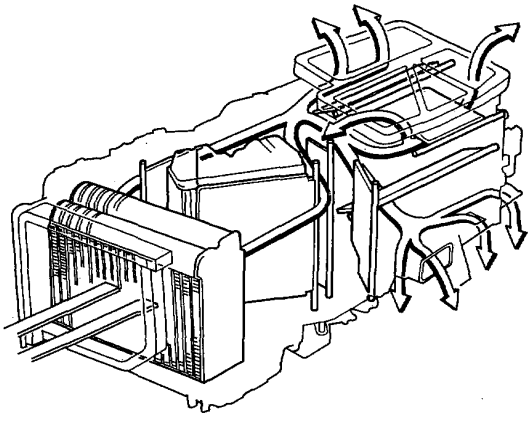

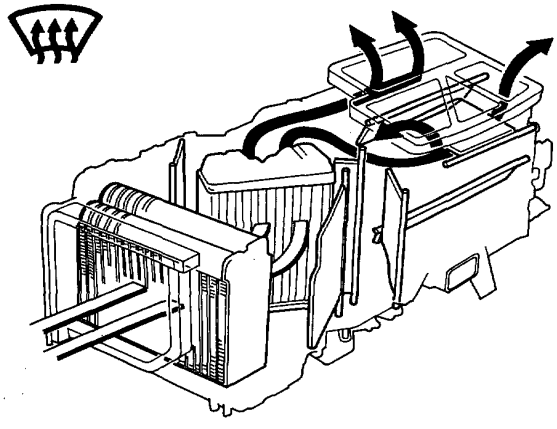

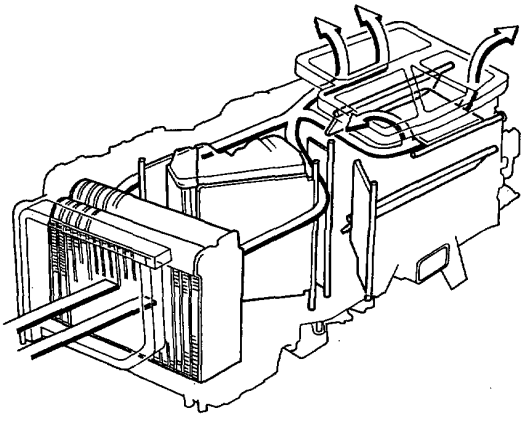

Description

Air Conditioner

The air conditioner delivers cooled air into the passenger compartment by circulating refrigerant through the system as shown below.

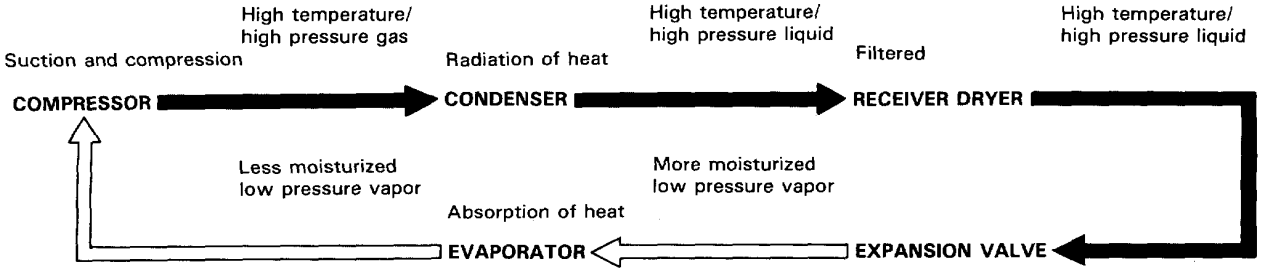

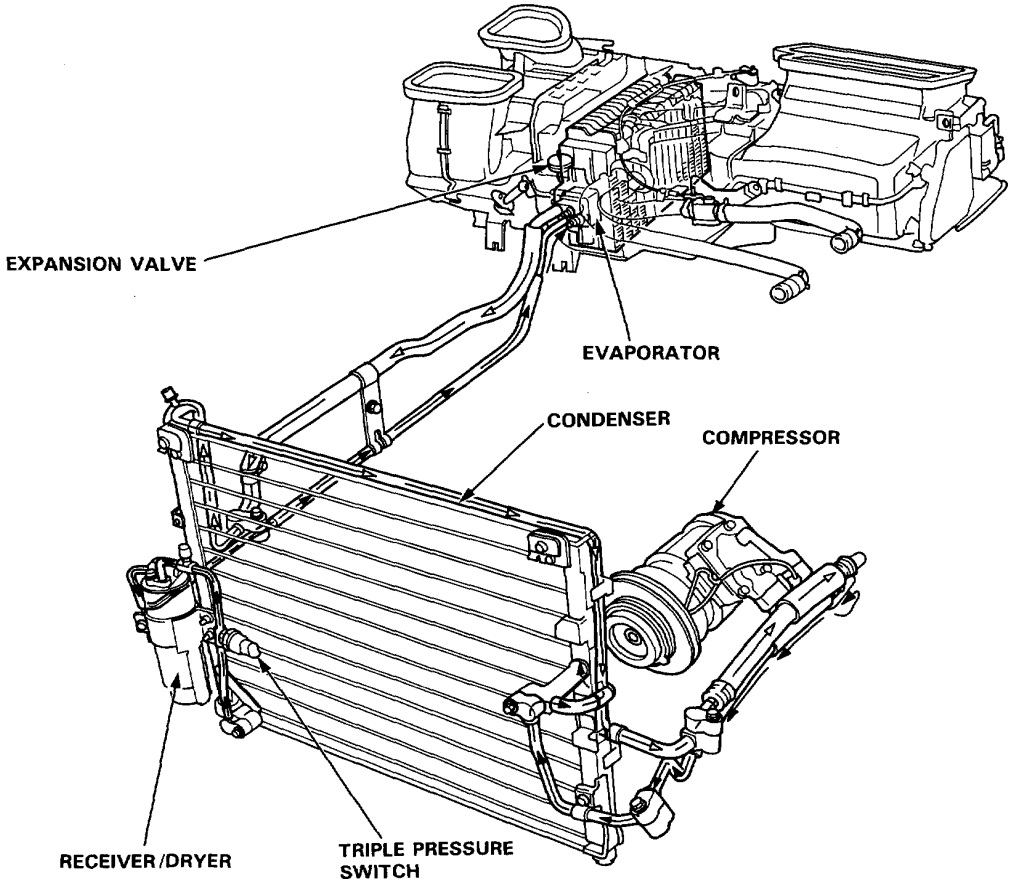

Triple Pressure Switch

The triple pressure switch consists of a Hi-Low pressure switch and a middle pressure switch.

- Hi-Low pressure switch
  If the refrigerant pressure becomes too high (due to blockage), or too low (due to leakage), the triple pressure switch sends a signal to the fan control unit to prevent the compressor from operating.

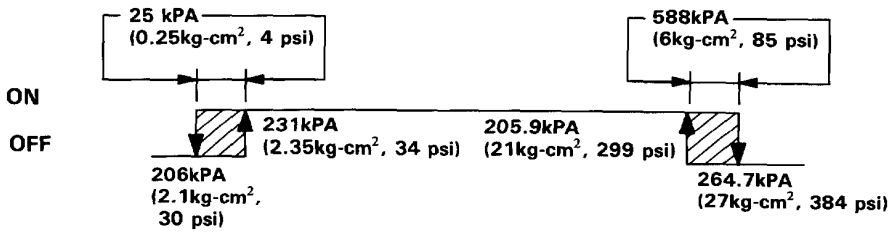

- Middle pressure switch
  If the refrigerant pressure goes above or below 1520 kpa (15.5kg-cm², 220 psi), the triple pressure switch sends a signal to the fan control unit to change the speed of the condensor fan and radiator fan (Hi-Low).

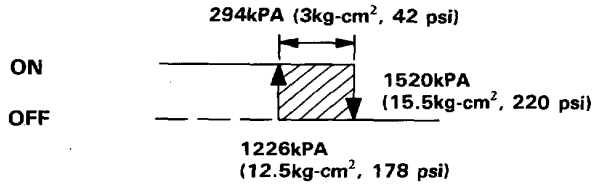

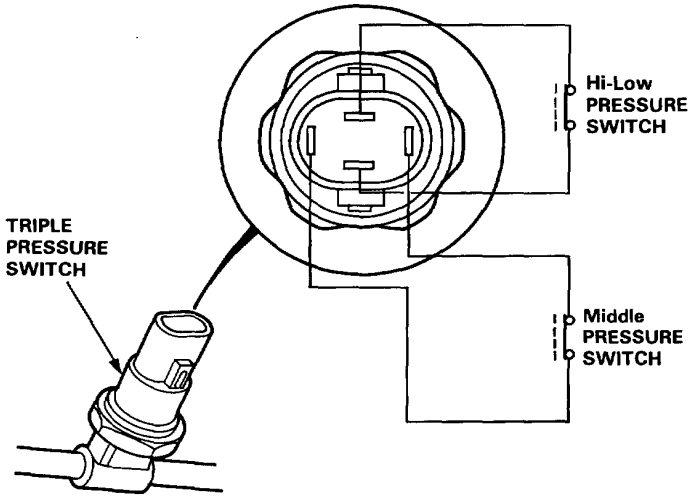

Description

Fan Control Unit

The fan control unit makes calculations based on signals from the water temperature sensor. It then controls the operation of the radiator fan, condenser fan and A/C system.

- TEMP 1: When radiator coolant temperature is above 183°F (84°C), the control unit turns Tr_1 ON then the radiator fan (Lo) and condenser fan runs (Lo).
- TEMP 2: When radiator coolant temperature is above 194°F (90°C), the control unit turns Tr_2 ON then the radiator fan (Hi) runs, and the condenser fan (Hi) goes on.
- TEMP 3: When radiator coolant temperature is above 268°F (109°C), the control unit turns Tr_3 OFF then stops the A/C compressor.

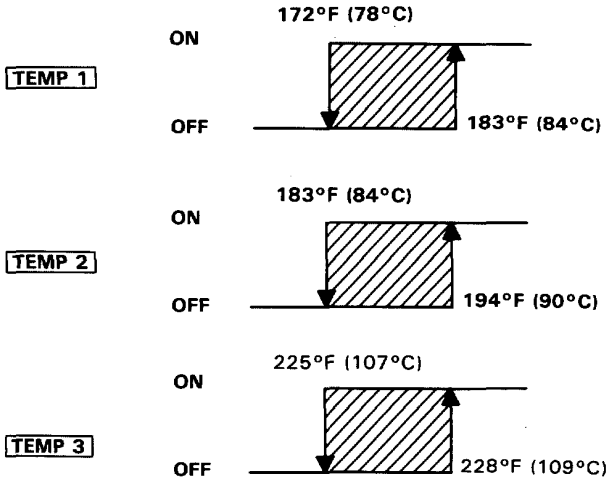

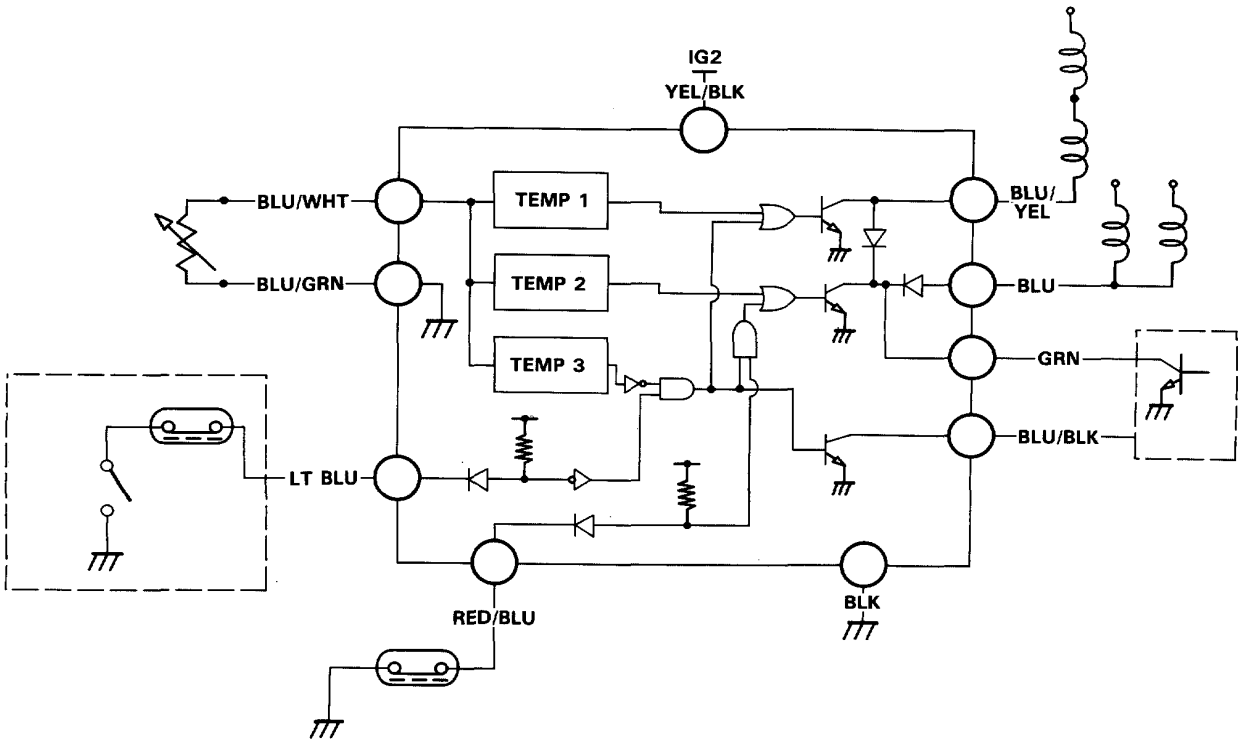

Wiring and Connector Locations

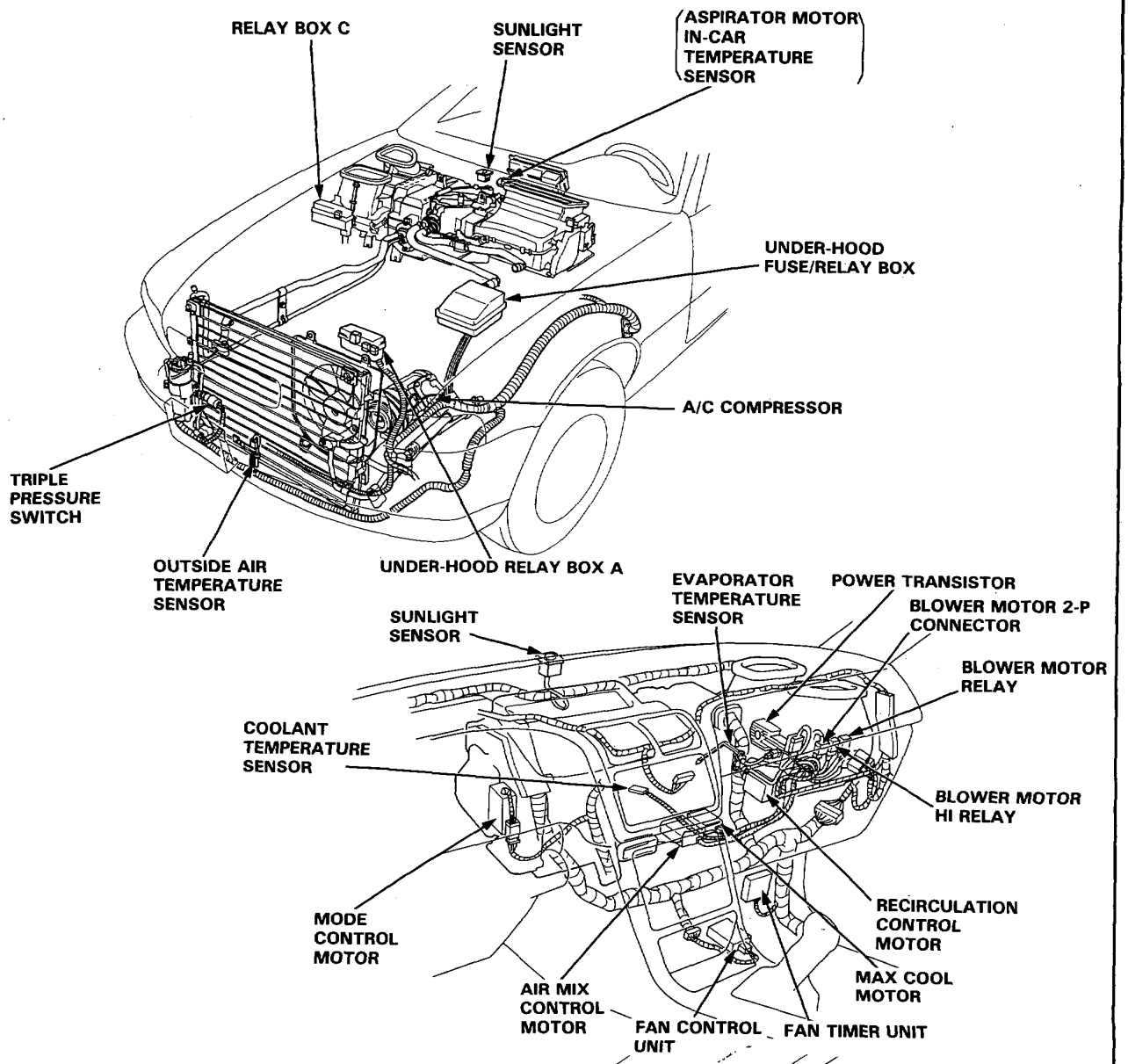

The SRS wire harness is routed near the air conditioner harness.

WARNING **All SRS wire harnesses and connectors are colored yellow. Do not use electrical test equipment on these circuits.**

CAUTION: Be careful not to damage the SRS wire harnesses when servicing the air conditioner harness.

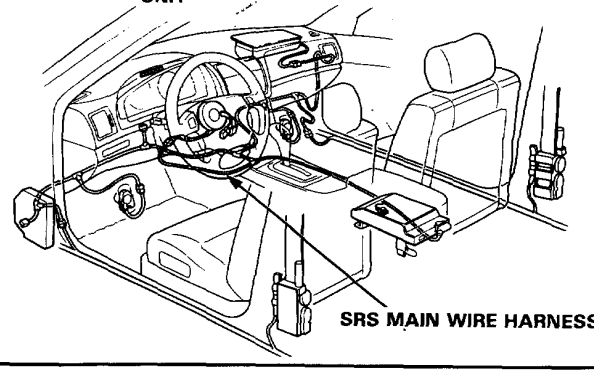

Circuit Diagram

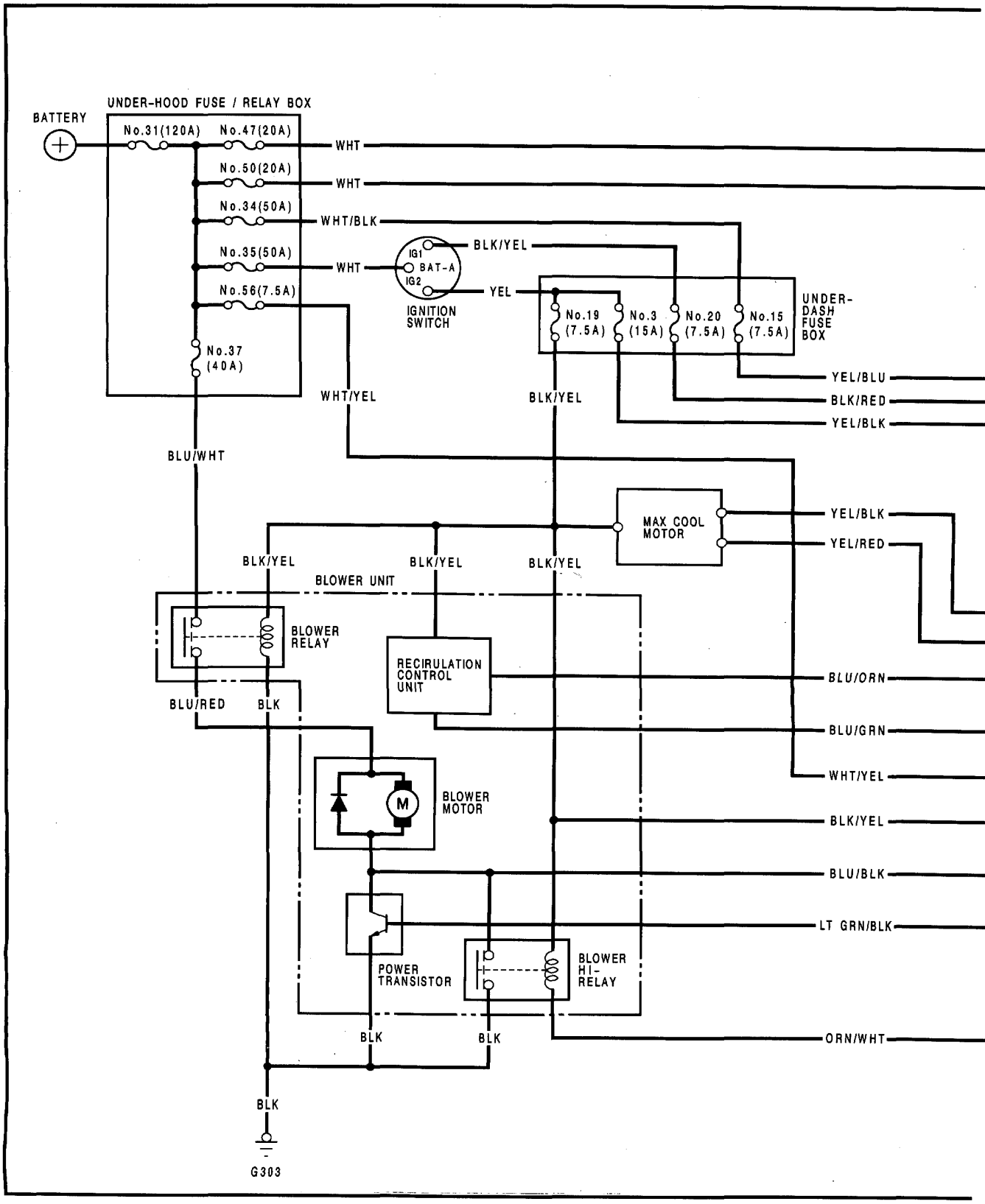

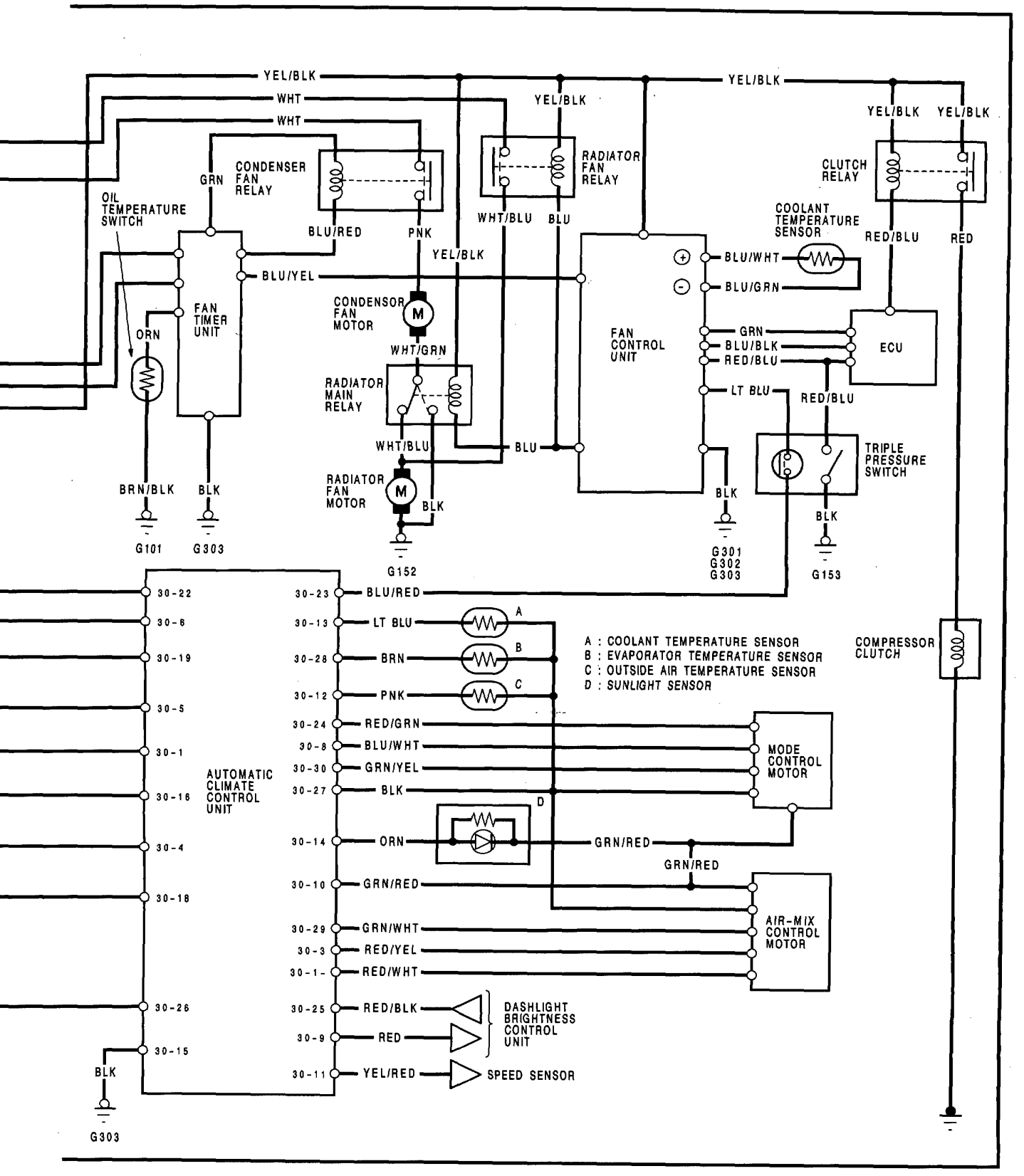
YEL/BLK
WHT
WHT
YEL/BLK
YEL/BLK
YEL/BLK
YEL/BLK
YEL/BLK
CONDENSER FAN RELAY
GRN
OIL TEMPERATURE SWITCH
BLU/RED
PNK
RADIATOR FAN RELAY
WHT/BLU
BLU
CLUTCH RELAY
COOLANT TEMPERATURE SENSOR
RED/BLU
RED
YEL/BLK
BLU/YEL
FAN TIMER UNIT
ORN
CONDENSOR FAN MOTOR
WHT/GRN
RADIATOR MAIN RELAY
WHT/BLU
BLU
RADIATOR FAN MOTOR
BLK
BRN/BLK
BLK
G101
G303
G152
BLU/WHT
BLU/GRN
FAN CONTROL UNIT
GRN
BLU/BLK
RED/BLU
ECU
LT BLU
RED/BLU
TRIPLE PRESSURE SWITCH
BLK
BLK
G301
G302
G303
G153
30-22
30-6
30-19
30-5
30-1
30-16
30-4
30-18
30-26
30-15
BLK
G303
AUTOMATIC CLIMATE CONTROL UNIT
30-23 BLU/RED
30-13 LT BLU
30-28 BRN
30-12 PNK
30-24 RED/GRN
30-8 BLU/WHT
30-30 GRN/YEL
30-27 BLK
30-14 ORN
30-10 GRN/RED
30-29 GRN/WHT
30-3 RED/YEL
30-1 RED/WHT
30-25 RED/BLK
30-9 RED
30-11 YEL/RED
A
B
C
D
A : COOLANT TEMPERATURE SENSOR
B : EVAPORATOR TEMPERATURE SENSOR
C : OUTSIDE AIR TEMPERATURE SENSOR
D : SUNLIGHT SENSOR
COMPRESSOR CLUTCH
MODE CONTROL MOTOR
GRN/RED
GRN/RED
AIR-MIX CONTROL MOTOR
DASHLIGHT BRIGHTNESS CONTROL UNIT
SPEED SENSOR

Climate Control Unit

Removal

SRS wire harness is routed near the console.

⚠WARNING All SRS wire harnesses and connectors are colored yellow. Do not use electrical test equipment on these circuits.

CAUTION: Be careful not to damage the SRS wire harnesses when servicing the console.

1. Remove the radio cassette unit (See section 23).
2. Remove the screws then disconnect the automatic climate control unit connectors.
3. Remove the climate control unit assembly by pushing the clips down as shown.

CAUTION: Be careful not to damage the center console panel and the dashboard.

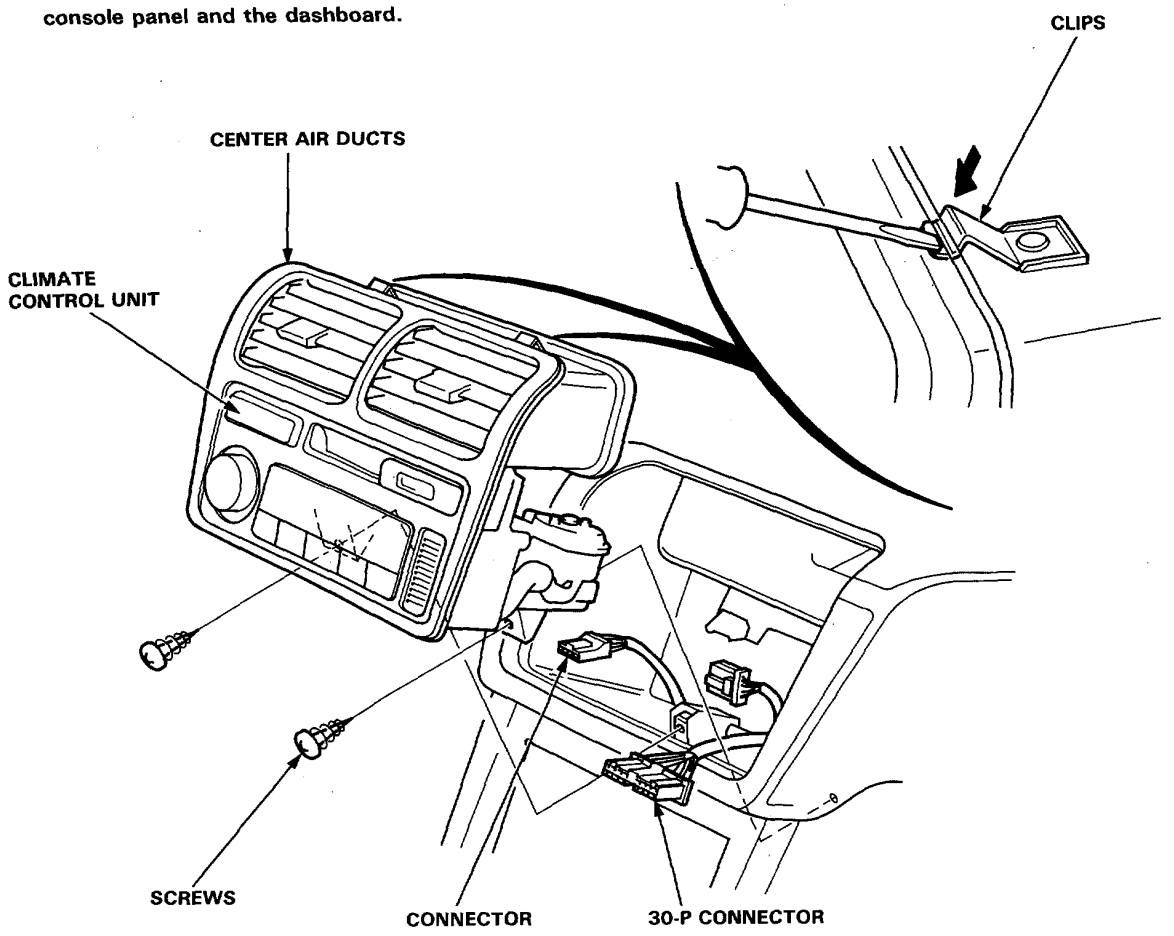

Self-diagnosis Circuit Check/Function Selection and Operation Check

- The Automatic Climate Control System has a built-in self-diagnosis feature. To run it, turn the ignition switch ON and turn the FAN switch to AUTO position. Wait for at least one minute on each TEMP display 18°C (64°F)—32°C(90°F). Then, push both the AUTO and OFF buttons on the control unit at the same time. Any problems in circuits "A" through "G" listed below will be indicated by the respective indicator coming on.
  The climate control unit does not memorize which self-diagnosis indicator lights come on. If you turn the ignition switch OFF, the indicator light memory will be lost.

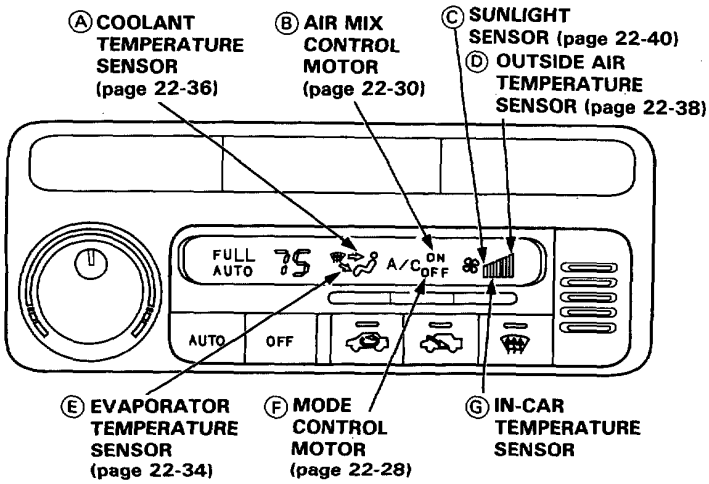

	INDICATOR	COMPONENT WITH PROBLEM
A		COOLANT TEMPERATURE SENSOR
B	A/C ON	AIR MIX CONTROL MOTOR
C		SUNLIGHT SENSOR
D		OUTSIDE AIR TEMPERATURE SENSOR
E		EVAPORATOR TEMPERATURE SENSOR
F	A/C OFF	MODE CONTROL MOTOR
G		IN-CAR TEMPERATURE SENSOR

- This check will quickly and automatically select and operate all functions of the climate control system, in the combinations and sequence shown below. It may help clarify a problem, or identify one that didn't show up when you ran the self-diagnosis circuit check.
  Turn the FAN switch to AUTO, then push in both the MODE and AUTO buttons and hold them in while you start the engine. The control unit will then automatically run the check in eight steps, one step every 5 seconds.
  To stop at one of those steps, push the MODE button; to continue, push it again for each step after that.
  Pushing the OFF button or turning the ignition OFF, will turn off the check.
  Check the temperature, volume, and source of the air flow, and compare it to what the chart shows it should be.

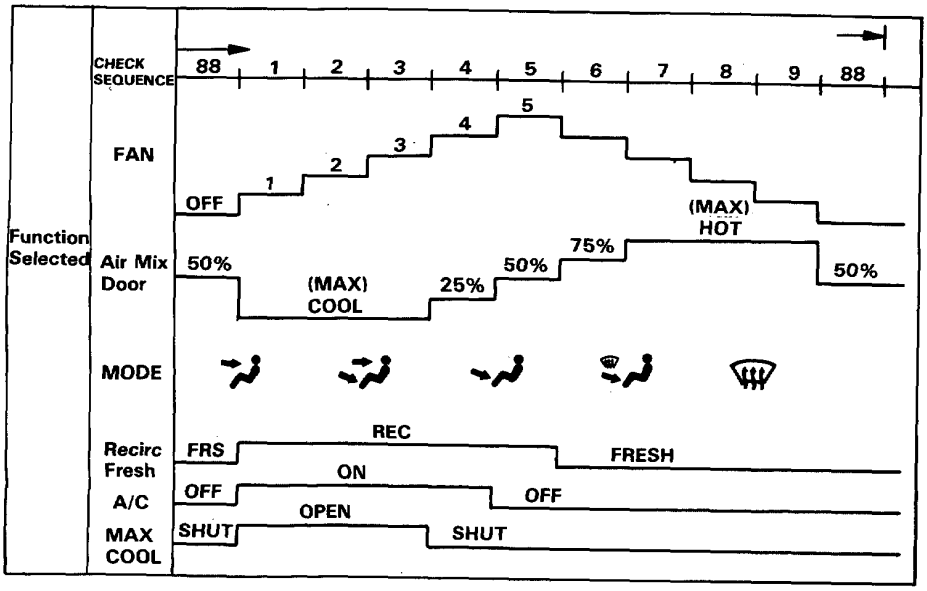

Troubleshooting

Reference Chart

Use this chart if the self-diagnosis checks don't identify any cause for the symptom.
Across each row in the chart, the potential sources of a symptom are ranked in the order they should be inspected, starting with ①. Find the symptom in the left column, read across to the most likely source, then refer to the page listed at the top of that column. If inspection shows the component is OK, try component ②, etc.

PAGE / SYSTEM / SYMPTOM	BLOWER MOTOR	POWER TRAN-SISTOR	RECIRCU-LATION CONTROL MOTOR	MODE CONTROL MOTOR	AIR MIX CONTROL MOTOR	EVAPO-RATOR TEMPE-RATURE SENSOR	OUTSIDE AIR TEMPE-RATURE SENSOR	CLIMATE CONTROL UNIT
	22-20	22-24	22-26	22-28	22-30	22-34	22-38	22-42
Climate control system does not work at all.								①
Blower motor does not run at all.	①							②
Blower motor speed does not change.		①						②
Recirc control does not work.			①					②
Mode controls do not work				①				②
No cold air from blower.						②	①	
No hot air from blower.					①		②	
Actual temperature is different from set temperature.						①	①	②

SYSTEM / SYMPTOM	FAN MOTORS	FAN TIMER UNIT	A/C SYSTEM PRES-SURE	TRIPLE PRES-SURE SWITCH	FAN CON-TROL UNIT	CLIMATE CONTROL UNIT	PAGE
Both fan motors do not run at all.	①	②			③		22-50
Both fan motors do not run at high speed.			①	②	③		22-56
Both fan motors do not run at low speed		①	②	③	④		22-62
A/C compressor clutch does not engage.			①	②	③	④	22-46

Heater-Evaporator Illustrated Index

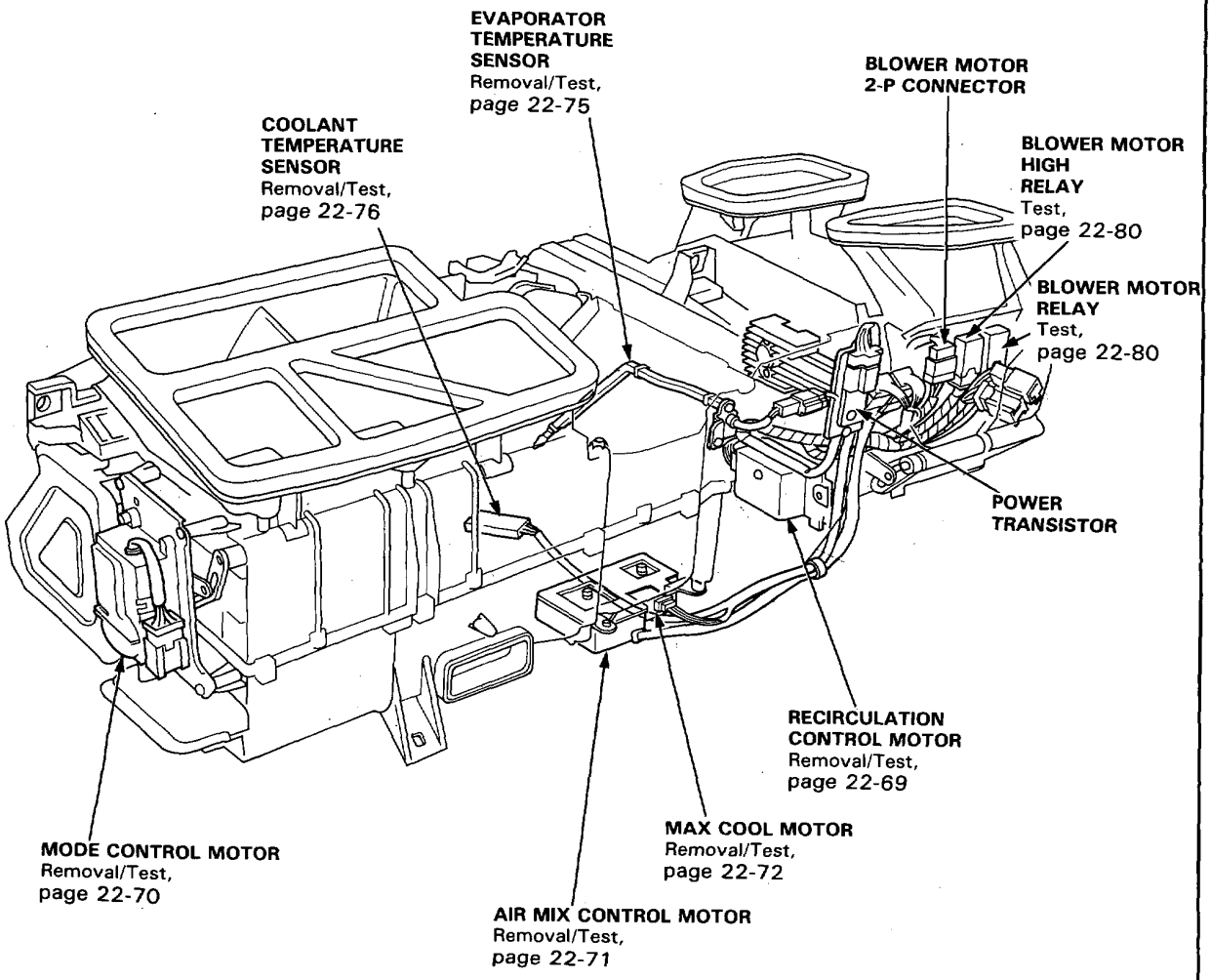

Climate Control Unit Input/Output Signals

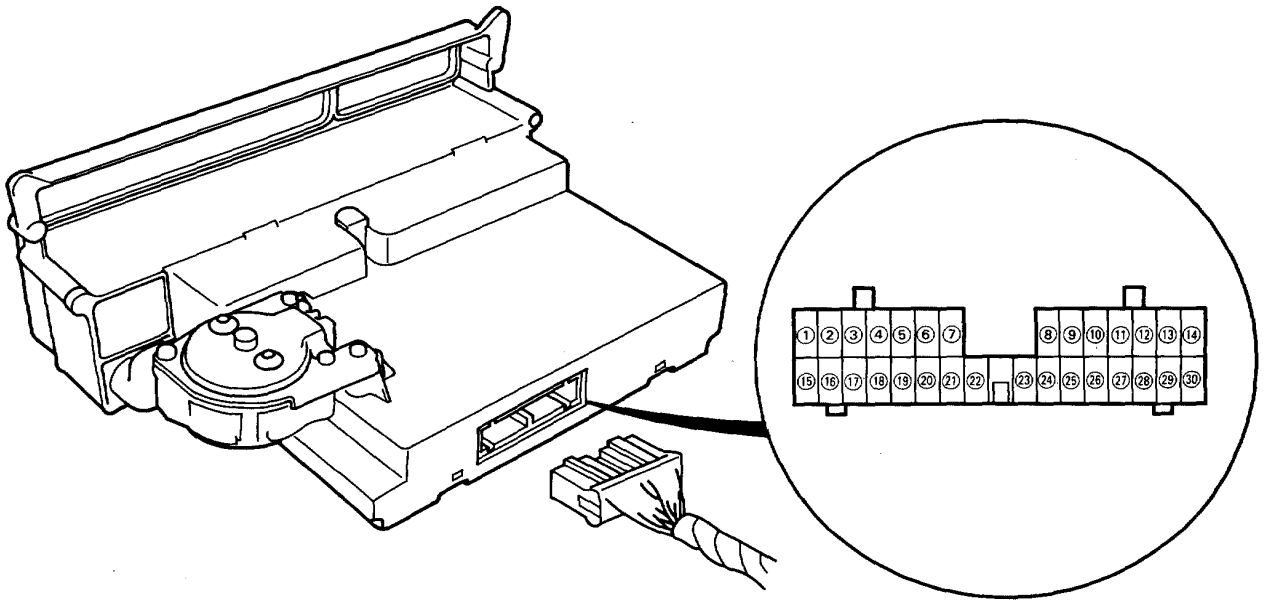

30-P

No.	Signal	No.	Signal	No.	Signal
①	+B	⑪	SPEED SENSOR	㉑	
②		⑫	OUTSIDE AIR SENSOR	㉒	MAX COOL SHUT
③	AIR MIX HOT	⑬	COOLANT TEMPERATURE SENSOR	㉓	A/C ON
④	BLOWER FEEDBACK	⑭	SUNLIGHT SENSOR	㉔	MODE VENT
⑤	FRESH	⑮	GND	㉕	ILLUMINATION ⊕
⑥	MAX COOL OPEN	⑯	IG2	㉖	EX-HI
⑦		⑰	AIR MIX COOL	㉗	SENSOR GND
⑧	MODE DEFROST	⑱	POWER TRANSISTOR BASE	㉘	EVAPORATOR SENSOR
⑨	ILLUMINATION CONTROL ⊖	⑲	RECIRC	㉙	AIR MIX POSITION
⑩	⊕ 5 V SENSOR	⑳		㉚	MODE MOTOR POSITION

Blower Motor

Blower only runs on HIGH in any fan switch positions, with the ignition switch ON.

Turn the ignition switch ON.

Remove the blower motor HIGH relay.

Does the blower motor stop?

YES → Turn the ignition switch OFF.

Test the blower HIGH relay. (page 22-80)

Is the relay OK?

NO → **Replace the blower motor HIGH relay.**

YES → **Repair short in the ORN/WHT wire between the blower motor HIGH relay and the climate control unit. If wire is OK, substitute a known-good climate control unit and retest.**

NO → Disconnect the 3-P connector of power transistor.

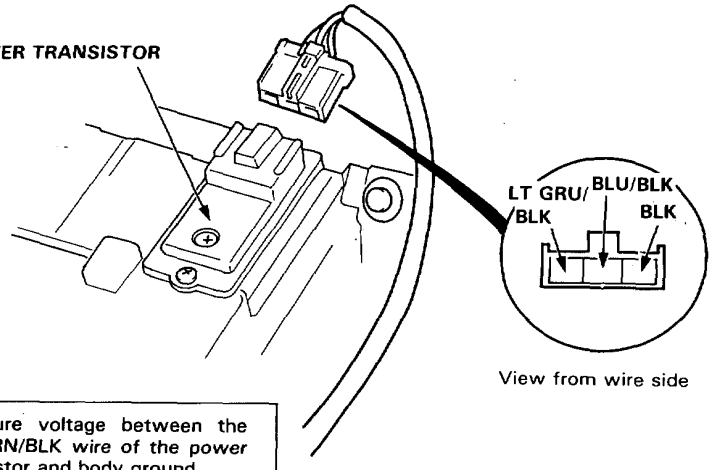

Does the blower motor stop?

YES → Measure voltage between the LT GRN/BLK wire of the power transistor and body ground.

Is there more than 7V?

NO → **Replace the power transistor.**

YES → **Substitute a known-good climate control unit and retest.**

NO → **Repair short in BLU/BLK wire between the climate control unit, the blower motor, the blower motor HIGH relay, and the power transistor. If wire is OK, substitute a known-good climate control unit and retest.**

Blower Motor

Blower motor does not run at all.

Check for blown No. 37 (40 A) and No. 19 (7.5 A) fuses.

Are fuse(s) OK?

NO → **Replace blown fuses.**

YES

Remove the blower relay and blower HIGH relay.

Turn the ignition switch ON.

Measure voltage between the BLK/YEL wire terminal (+) of blower relay and body ground (−).

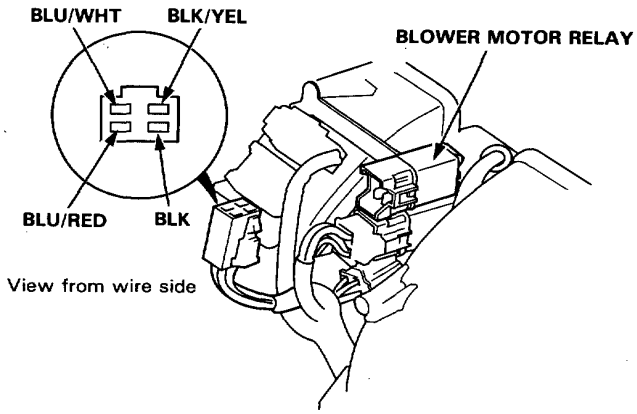

Is there battery voltage?

NO → **Repair open in the BLK/YEL wire between the No. 19 (7.5 A) fuse and blower relay.**

YES

Measure voltage between the BLK/YEL wire terminal (+) of blower HIGH relay and body ground (−).

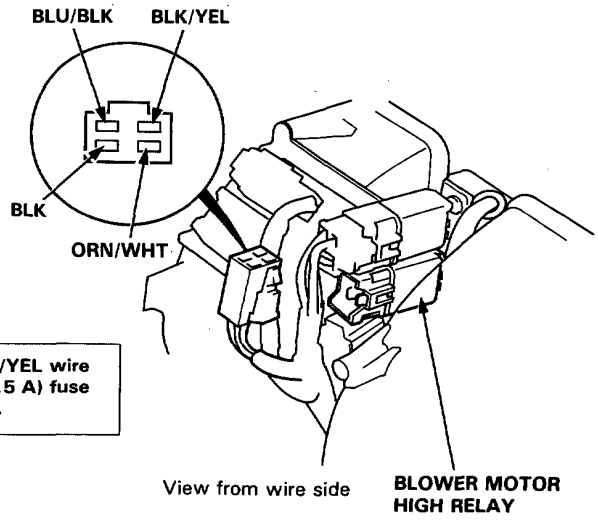

Is there battery voltage?

NO → **Repair open in the BLK/YEL wire between the No. 19 (7.5 A) fuse and blower HIGH relay.**

YES

Turn the ignition switch OFF.

(To page 22-21)

(From page 22-20)

Check for continuity in the BLK wire between the blower HIGH relay and body ground.

Is there continuity?

NO → **Repair open in the BLK wire between blower HIGH relay and body ground. If wire is OK, check for poor ground at G303.**

YES

Check for continuity in the BLK wire between the blower relay and body ground.

Is there continuity?

NO → **Repair open in the BLK wire between the blower relay and body ground. If wire is OK, check for poor ground at G303.**

YES

Measure voltage between the BLU/WHT wire terminal of blower relay and body ground.

Is there battery voltage?

NO → **Repair open in the BLU/WHT wire between the No. 37 (40 A) fuse and blower relay.**

YES

Disconnect the 2-P connector from blower motor.

Check for continuity in the BLU/RED wire between the blower relay and blower motor.

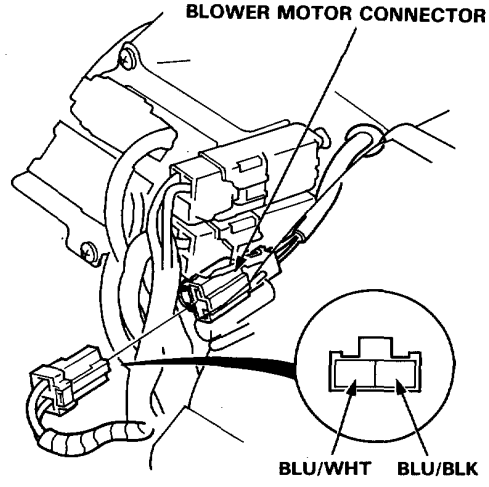

View from wire side

Is there continuity?

NO → **Repair open in BLU/RED wire between the blower relay and blower motor.**

YES

(To page 22-22)

(cont'd)

Blower Motor (cont'd)

(From page 22-21)

Test the blower motor.
Connect the battery power to the BLU wire terminal and connect the BLK wire terminal to body ground. The blower motor should run.

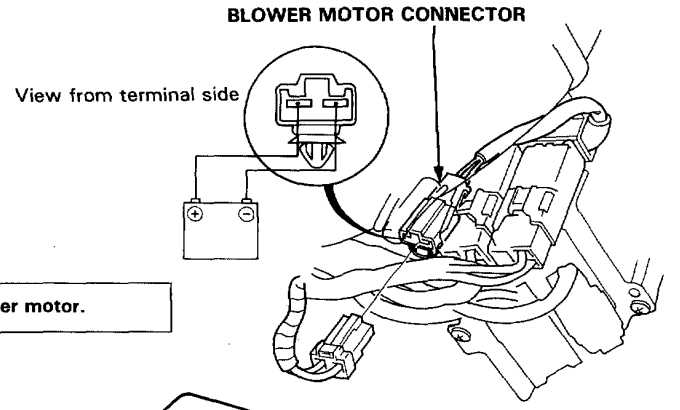

Is the motor OK?

NO → **Replace the blower motor.**

YES

Test the blower relay. (page 22-80)

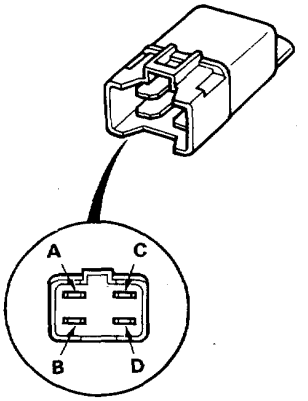

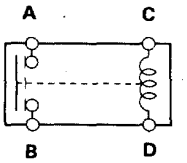

Is the relay OK?

NO → **Replace the blower relay.**

YES

Check for continuity in the BLU/BLK wire between the blower HIGH relay and blower motor.

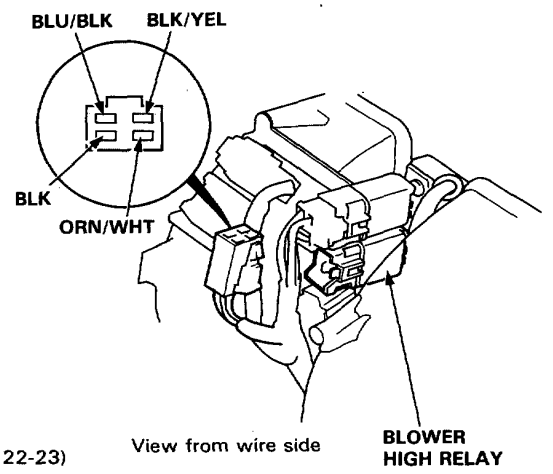

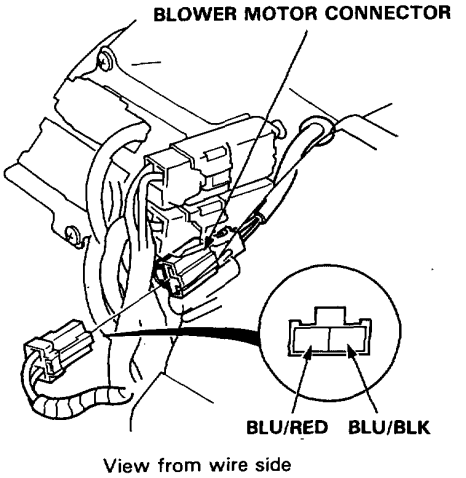

(To page 22-23)

(From page 22-22)

Is there continuity?

NO → **Repair open in the BLU/BLK wire between the blower HIGH relay and blower motor.**

YES

Test the blower HIGH relay. (page 22-80)

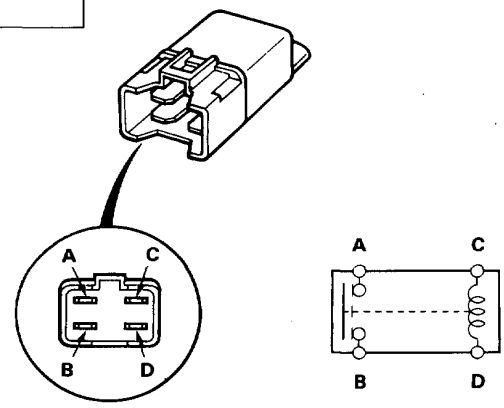

Is the relay OK?

NO → **Replace the blower HIGH relay.**

YES

Install the blower, blower HIGH relay and connect the 2-P connector to blower motor.

Remove the climate control unit. (page 22-14)

Using a jumper wire, connect the ORN/WHT wire terminal of climate control unit and body ground.

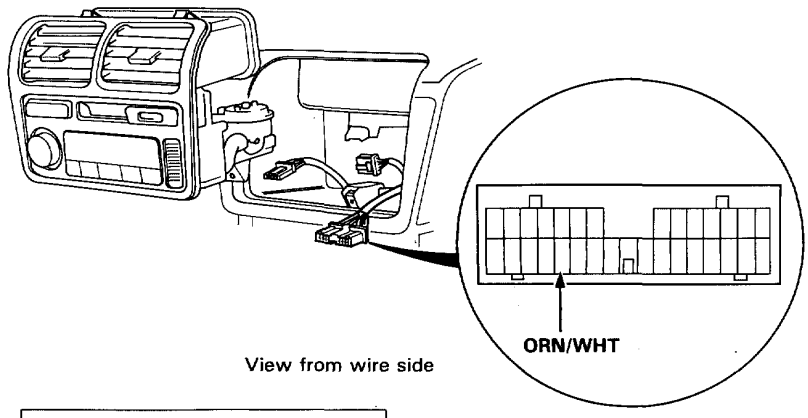

View from wire side

Does the blower motor run?

NO → **Repair open in the ORN/WHT wire between the blower HIGH relay and climate control unit.**

YES

Substitute a known-good climate control unit and recheck. If symptom/indication goes away, replace original climate control unit.

Blower Motor Speed

Blower motor only runs in TOP (5) speed position; does not run in any other speed positions.

Connect a jumper wire between the BLU/BLK wire of power transistor and body ground.

Turn the ignition switch ON.

Does the blower motor run at HIGH speed?

NO → **Repair open in BLU/BLK wire between the power transistor and blower motor.**

YES

Connect a jumper wire between the BLU/BLK and BLK wires of the power transistor.

Does the blower motor run at HIGH speed?

NO → **Repair open in BLK wire between the power transistor and body ground. If wire is OK, check for poor ground at G303.**

YES

Turn the ignition switch OFF.

Power the LT GRN/BLK wire terminal of the power transistor through a test light.

Turn the ignition switch ON.

(To page 22-25)

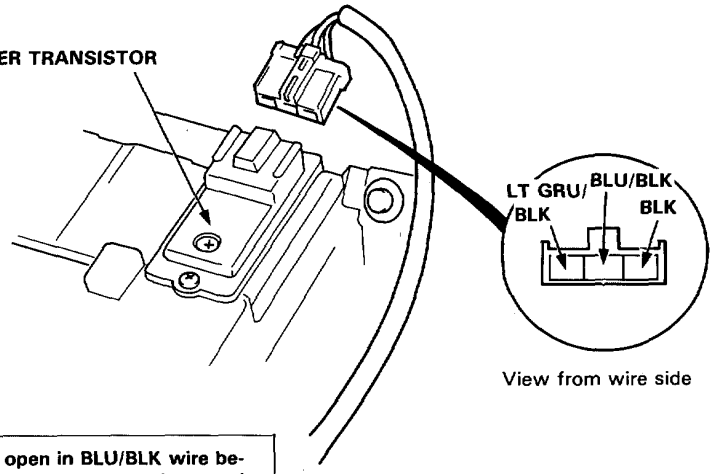

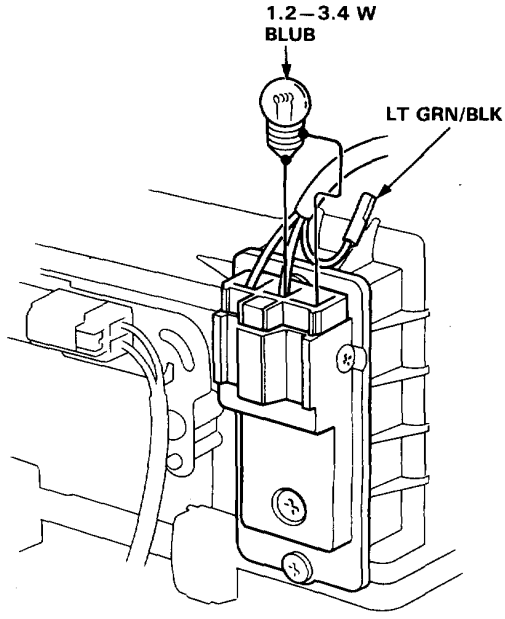

(From page 22-24)

Does the blower motor run at less than HIGH speed?

NO → **Repair short in the LT GRN/BLK wire between the power transistor and climate control unit. If wire is OK, replace the power transistor.**

YES

Turn the ignition switch OFF

Remove the climate control unit.

Turn the ignition switch ON.

Using a jumper wire, connect the BLU/BLK wire terminal of climate control unit to body ground.

Does the blower motor run at HIGH speed?

NO → **Repair open in the BLU/BLK wire between the climate control unit and blower motor.**

YES

Repair open in the LT GRN/BLK wire between the power transistor and the climate control unit. If wire is OK, substitute a known-good climate control unit and re-test.

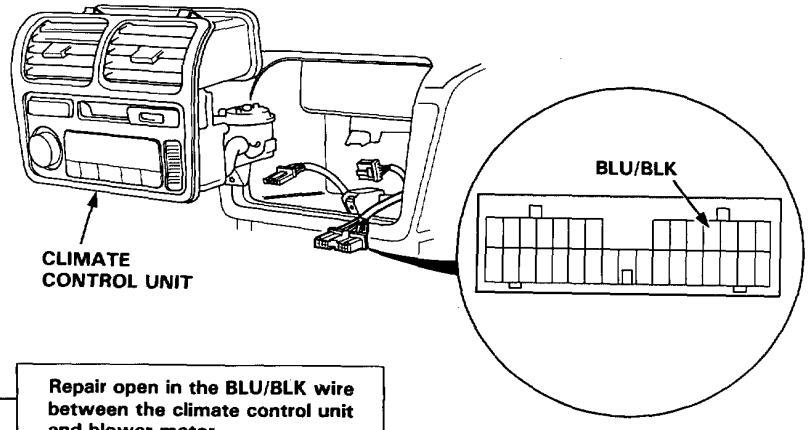

View from wire side

Recirculation Control Motor

Recirculation function does not work properly.

Remove the dashboard lower cover. (page 22-69)

Disconnect the 4-P connector from the recirculation control motor.

Turn the ignition switch ON.

Measure voltage between the BLK/YEL wire terminal in the recirculation control motor connector harness half and body ground.

Is there battery voltage?

NO → **Repair open in the BLK/YEL wire between the No. 19 (7.5 A) fuse and recirculation control motor.**

YES

Turn the ignition switch OFF.

Test the recirculation control motor. (page 22-69)

Is the recirculation control motor OK?

NO → **Replace the recirculation control motor. If the recirculation control door is stuck, repair it.**

YES

Remove the climate control unit. (page 22-14)

Disconnect the 30-P connector from the climate control unit.

(To page 22-27)

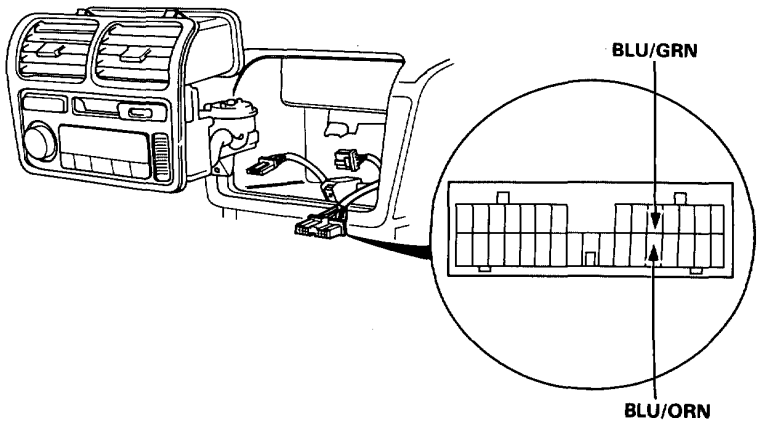

View from wire side

(From page 22-26)

Check for continuity between the recirculation control motor and climate control unit:
- BLU/ORN wire
- BLU/GRN wire

Is there continuity?

NO → **Repair any open in the wire(s) between the recirculation motor and control unit.**

YES ↓

Check for continuity between the recirculation control motor and body ground:
- BLU/ORN wire
- BLU/GRN wire

Is there continuity?

YES → **Repair any short in the wire(s) between the recirculation control motor and climate contrtol unit.**

NO ↓

Substitute a known-good climate control unit and recheck. If symptom/indication goes away, replace original climate control unit.

Mode Control Motor

Self-diagnosis circuit check indicates a problem in the mode control motor.

Disconnect the 6-P connector from the mode control motor.

Test the mode control motor. (page 22-70)

Is the motor OK?

NO → **Replace the mode control motor. If any mode control door is stuck, repair it.**

YES

Remove the climate control unit. (page 22-14)

Disconnect the 30-P connector from the climate control unit.

(To page 22-29)

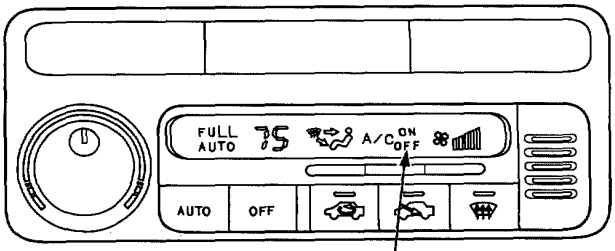

MODE CONTROL MOTOR INDICATOR

(From page 22-28)

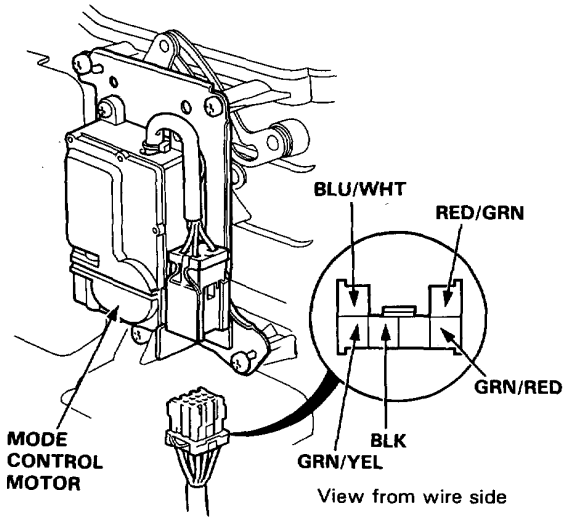

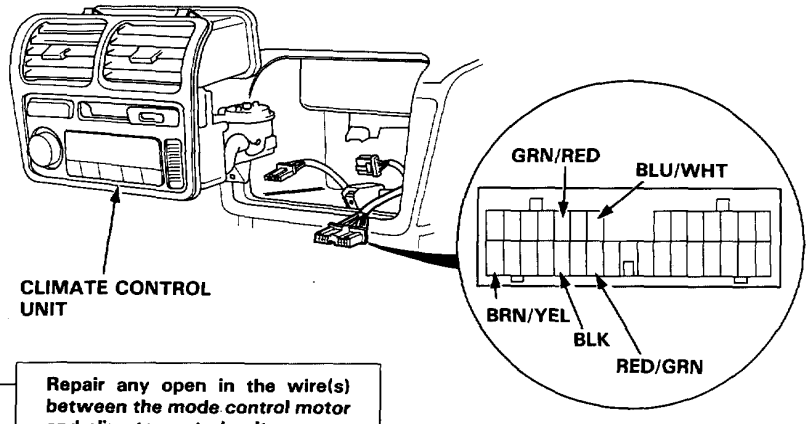

Check each wire for continuity between the mode control motor and climate control unit:
- RED/GRN wire
- GRN/RED wire
- BLU/WHT wire
- GRN/YEL wire
- BLK wire

Is there continuity?

NO → **Repair any open in the wire(s) between the mode control motor and climate control unit.**

YES ↓

At either connector, check each wire for continuity to body ground.
- RED/GRN wire
- GRN/RED wire
- BLU/WHT wire
- GRN/YEL wire

Is there continuity?

YES → **Repair any short in the wire(s) between the mode control motor and climate control unit.**

NO ↓

Substitute a known-good climate control unit and recheck. If symptom/indication goes away, replace the original climate control unit.

Air Mix Control Motor

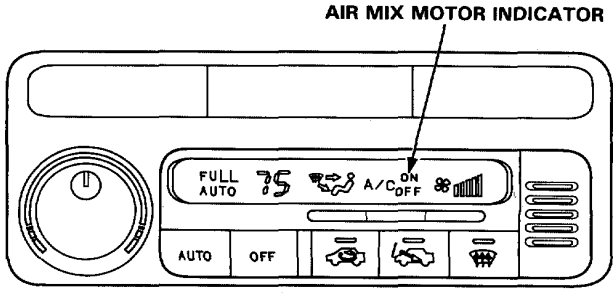

Self-diagnosis circuit check indicates a problem in the air mix control motor.

Disconnect the 6-P connector from the air mix control motor.

Test the air mix control motor. (page 22-71)

Is the motor OK?

NO → **Replace the air mix control motor. If the air mix control door is stuck, repair it.**

YES

Remove the climate control unit. (page 22-14)

Disconnect the 30-P connector from the climate control unit.

(To page 22-31)

(From page 22-30)

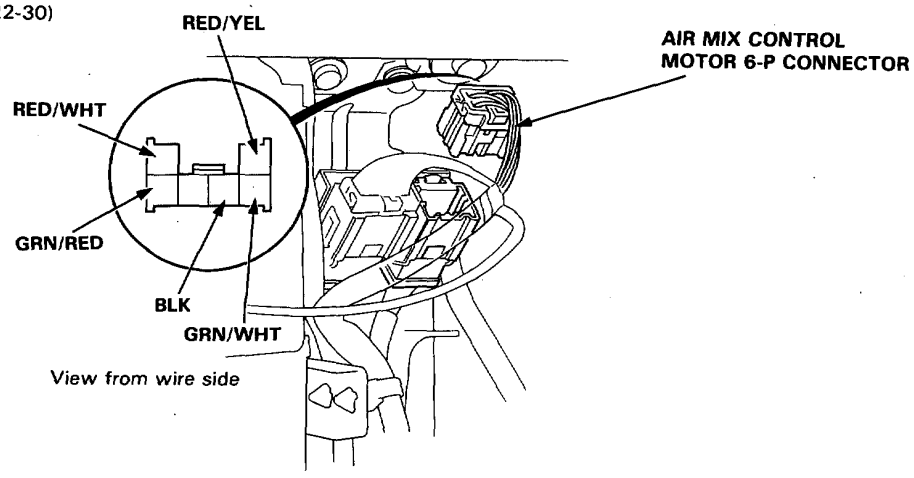

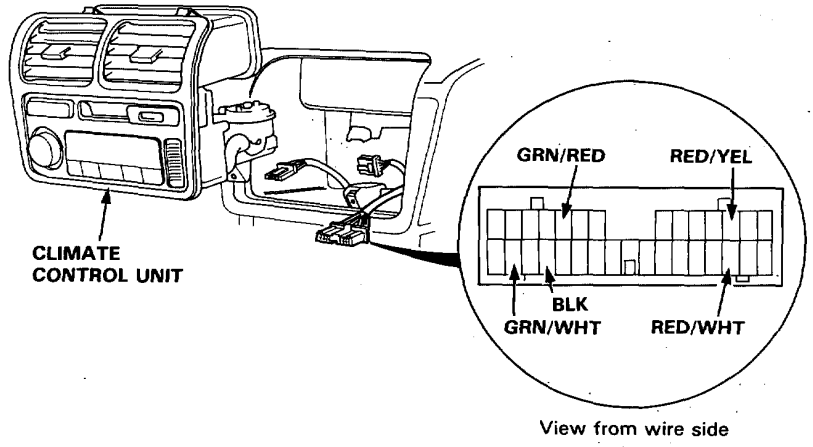

Check each wire for continuity between the air mix motor and climate control unit:
- RED/WHT wire
- GRN/RED wire
- GRN/WHT wire
- RED/YEL wire
- BLK wire

Is there continuity?

NO → **Repair any open in the wire(s) between the air mix control motor and climate control unit.**

YES

At either connector, check each wire for continuity to body ground.
- RED/WHT wire
- GRN/RED wire
- GRN/WHT wire
- RED/YEL wire

Is there continuity?

YES → **Repair any short in the wire(s) between the air mix control motor and climate control unit.**

NO

Substitute a known-good climate control unit and recheck. If symptom/indication goes away, replace the original climate control unit.

Max Cool Motor

Problem in the max cool motor circuit.

Remove the dashboard lower cover. (page 22-64)

Disconnect the 4-P connector from the max cool motor.

Turn the ignition switch ON.

Measure voltage between the BLK/YEL wire terminal in the max cool motor connector (harness half) and body ground.

Is there battery voltage?

- NO → **Repair open in the BLK/YEL wire between the No. 19 (7.5 A) fuse and the max cool motor.**
- YES ↓

Turn the ignition switch OFF.

Test the max cool motor. (page 22-72)

Is the max cool motor OK?

- NO → **Replace the max cool motor. If the max cool door is stuck, repair it.**
- YES ↓

Remove the climate control unit. (page 22-14)

Disconnect the 30-P connector from the climate control unit.

(To page 22-33)

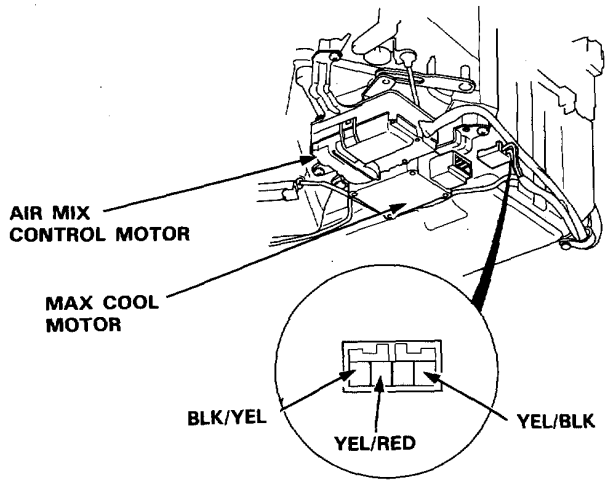

View from wire side

(From page 22-32)

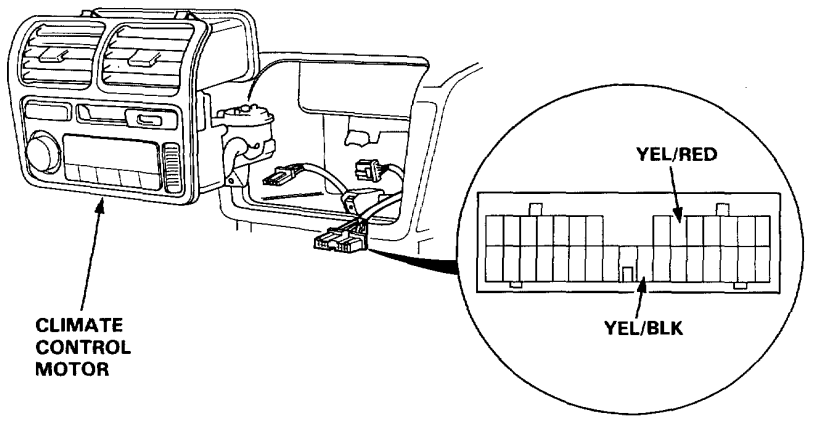

View from wire side

Check for continuity between the max cool motor and climate control unit:
- YEL/BLK wire
- YEL/RED wire

Is there continuity?

NO → **Repair any open in the wire(s) between the max cool motor and climate control unit.**

YES →

Check for continuity at either *connector to body ground:*
- YEL/BLK wire
- YEL/RED wire

Is there continuity?

YES → **Repair any short in the wire(s) between the max cool motor and climate control unit.**

NO →

Substitute a known-good climate control unit and recheck. If symptom/indication goes away, replace original climate control unit.

Evaporator Temperature Sensor

Self-diagnosis circuit check indicates a problem in the evaporator temperature sensor.

Disconnect 2-P connector from the evaporator temperature sensor.

Measure resistance between the No. 1 and No. 2 wire terminal of sensor.

Is the sensor within the range of resistance shown on the chart?

NO → **Replace the evaporator temperature sensor.**

YES

Turn the ignition switch ON.

Measure voltage between the BRN wire terminal of evaporator temprature sensor (harness half) and body ground.

Is there approx. 5 V?

NO → (To page 22-35)

YES

Substitute a known-good climate control unit and recheck. If symptom/indication goes away, replace original climate control unit.

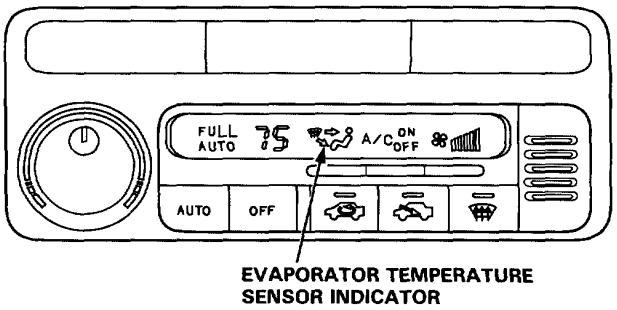

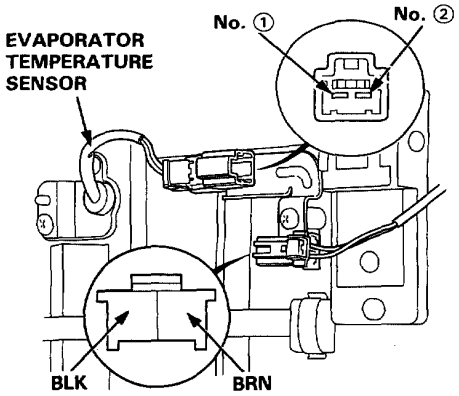

View from wire side

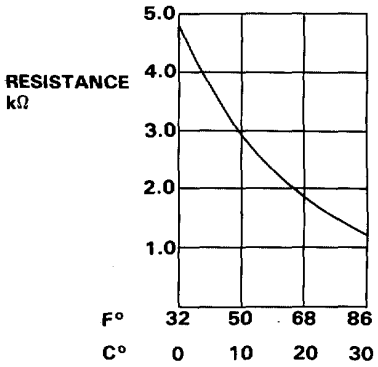

CAUTION: The sensor uses a thermistor which can be damaged if high current is applied to it during testing. Therefore, use a circuit tester that puts out a measuring current of 1 mA or less. (At the 20 kΩ ranged.

(From page 22-34)

Turn the ignition switch OFF.

Remove the climate control unit. (page 22-14)

Disconnect the 30-P connector from the control unit.

Check the BRN wire for continuity to body ground.

Is there continuity?

- YES → **Repair short in the BRN wire between the temperature sensor and climate control unit.**
- NO ↓

Check for continuity in the BRN wire between the temperature sensor and climate control unit.

Is there continuity?

- NO → **Repair open in the BRN wire between the evaporator temperature sensor and the climate control unit.**
- YES ↓

Substitute a known-good climate control unit and recheck. If symptom/indication goes away, replace the original climate control unit.

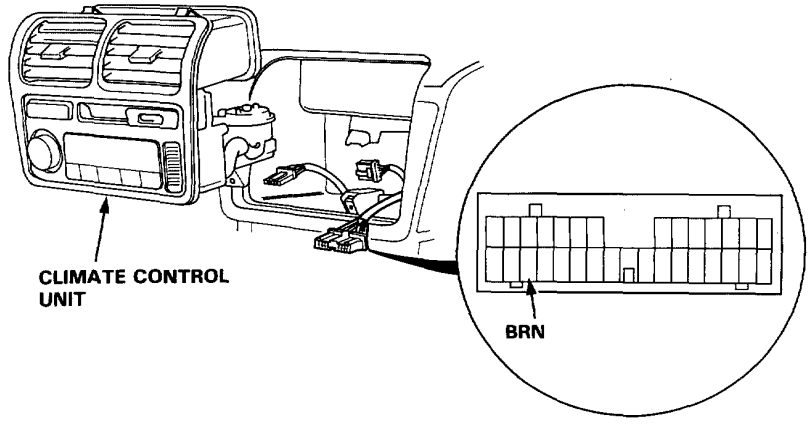

View from wire side

Coolant Temperature Sensor

Self-diagnosis circuit check indicates a problem in the coolant temperature sensor circuit.

Disconnect the 8-P connector from the max cool motor/coolant temperature sensor.

Measure resistance between the BLK and LT BLU wire terminals of the sensor.

Is the resistance within the range shown on the chart? — NO → **Replace the coolant temperature sensor.**

YES

Turn the ignition switch ON.

Measure voltage between the LT BLU wire terminal of coolant temperature sensor (harness half) and body ground.

Is there approx. 5 V? — NO → (To page 22-37)

YES

Substitute a known-good climate control unit and recheck. If symptom/indication goes away, replace the original climate control unit.

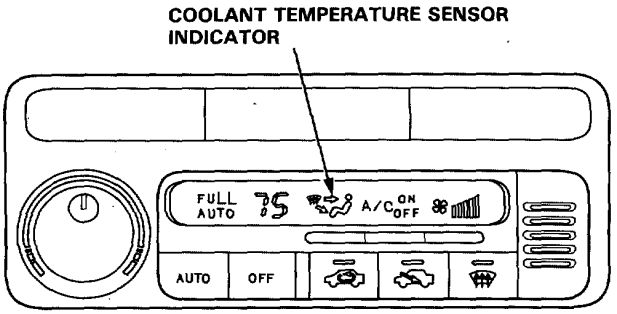

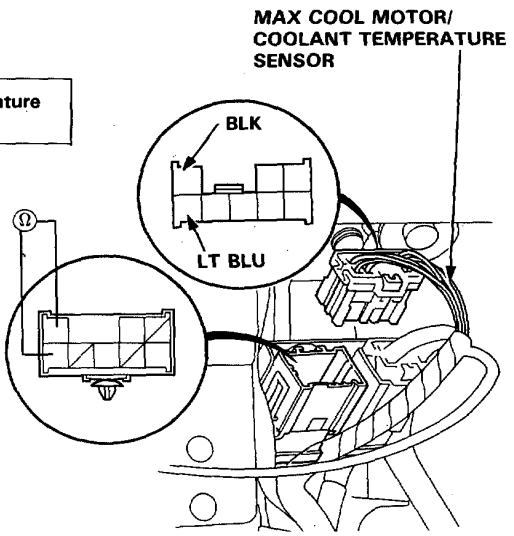

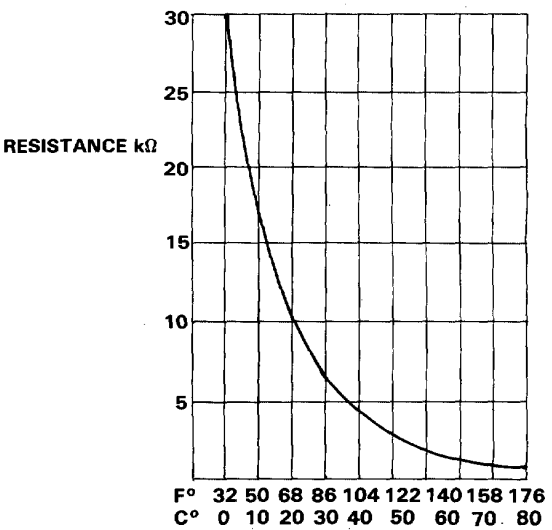

CAUTION: The sensor uses a thermistor which can be damaged if high current is applied to it during testing. Therefore, use a circuit tester that puts out a measuring current of 1 mA or less. (At the 20 kΩ range.)

(From page 22-36)

Turn the ignition switch OFF.

Remove the climate control unit. (page 22-14)

Disconnect the 30-P connector from the control unit.

Check the LT BLU wire for continuity to body ground.

Is there continuity?

- YES → **Repair short in the LT BLU wire between the temperature sensor and climate control unit.**
- NO ↓

Check for continuity in the LT BLU wire between the coolant temperature sensor and climate control unit.

Is there continuity?

- NO → **Repair open in the LT BLU wire between the coolant temperature sensor and the climate control unit.**
- YES ↓

Substitute a known-good climate control unit and recheck. If symptom/indication goes away, replace the original climate control unit.

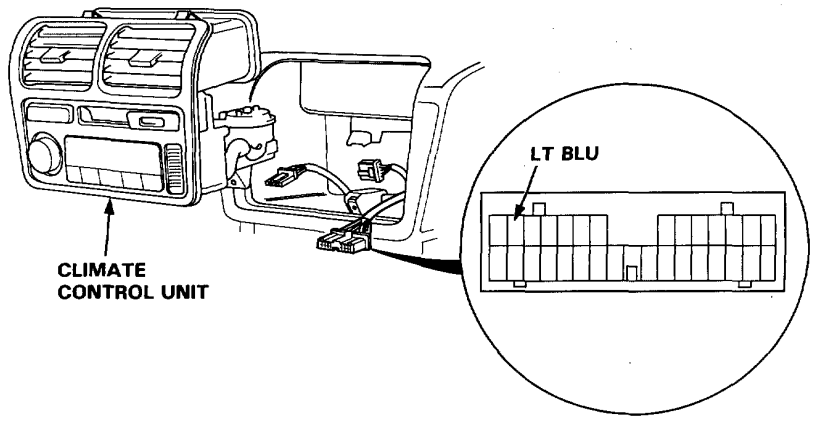

View from wire side

Outside Air Temperature Sensor

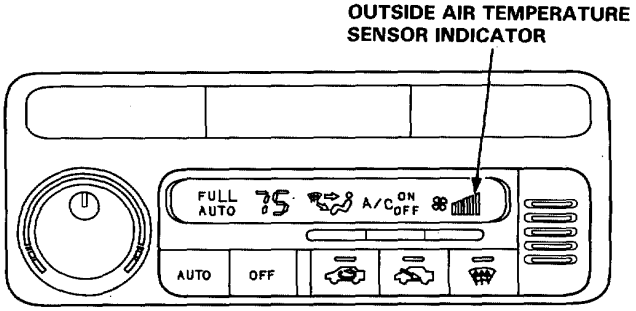

Self-diagnosis circuit check indicates a problem in the outside air temperature sensor circuit.

Disconnect the 2-P connector from the outside air temperature sensor.

Measure resistance between the BLK and PNK wire terminal of the sensor.

Is the resistance within the range shown on the chart?

NO → **Replace the outside temperature sensor.**

YES

Turn the ignition switch ON.

Measure voltage between the PNK wire terminal of outside temperature sensor (harness half) and body ground.

Is there approx. 5 V?

NO → (To page 22-39)

YES

Substitute a known-good climate control unit and recheck. If symptom/indication goes away, replace original climate control unit.

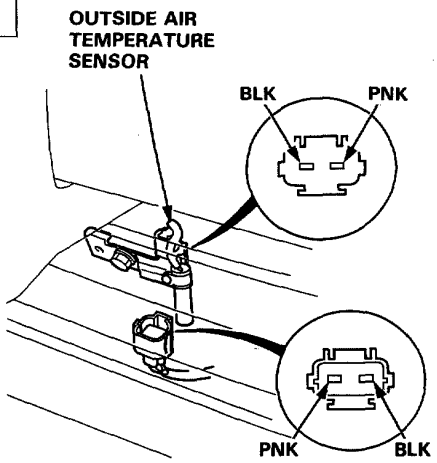

View from terminal side

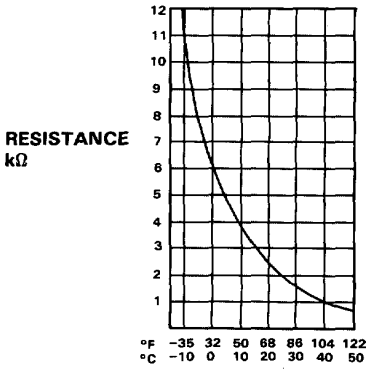

CAUTION: The sensor uses a thermistor which can be damaged if high current is applied to it during testing. Therefore, use a circuit tester that puts out a measuring current of 1 mA or less. (At 20 kΩ range)

(From page 22-38)

Turn the ignition switch OFF.

Rrmove the climate control unit. (page 22-14)

Disconnect the 30-P connector from the climate control unit.

Check the PNK wire for continuity to body ground.

Is there continuity?

YES → **Repair short in the PNK wire between the outside air temperature sensor and climate control unit.**

NO

Using a jumper wire, connect the PNK wire terminal in the outside air temperature sensor connector (harness half) to body ground.

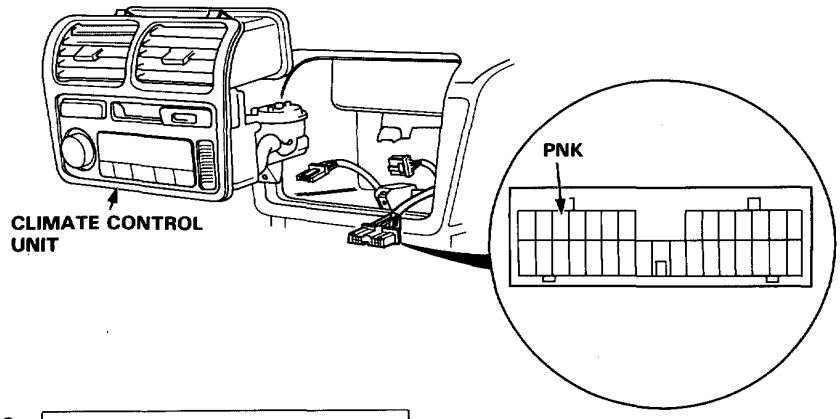

Check for continuity in the PNK wire between the climate control unit connector and body ground.

Is there continuity?

NO → **Repair open in the PNK wire between the outside air temperature sensor and climate control unit.**

YES

Substitute a known-good climate control unit and recheck. If symptom/indication goes away, replace the original climate control unit.

Sunlight Sensor

Self-diagnosis circuit check indicates a problem in the sunlight sensor circuit.

Remove the sunlight sensor. (page 22-79)

Disconnect the 2-P connector from the sunlight sensor.

Test the sunlight sensor. (page 22-79)

Is the sensor OK?

NO → **Replace the sunlight sensor.**

YES

Remove the climate control unit. (page 22-14)

Disconnect the 30-P connector from the climate control unit.

(To page 22-41)

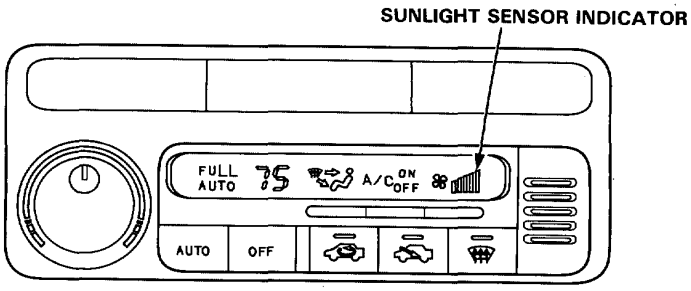

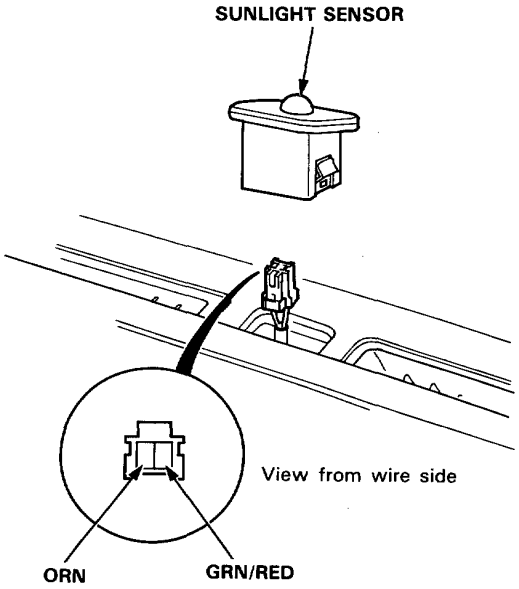

(From page 22-40)

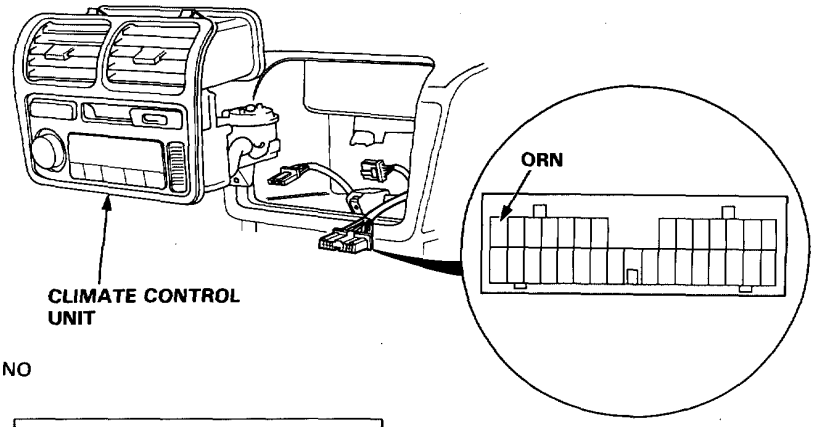

Check for continuity in the ORN wire between the sunlight sensor and climate control unit.

Is there continuity?

NO → **Repair open in the ORN wire between the sunlight sensor and climate control unit.**

YES

Check for continuity in the ORN wire between the sunlight sensor and body ground.

Is there continuity?

YES → **Repair short in the ORN wire between the sunlight sensor and climate control unit.**

NO

Substitute a known-good climate control unit and recheck. If symptom/indication goes away, replace the original climate contarol unit.

Climate Control Unit

No heater and A/C in either manual or AUTO modes.

First, check for blown No. 56 (7.5 A) and No. 19 (7.5 A) fuses.

Are fuses OK?

- NO → **Replace blown fuse(s).**
- YES ↓

Remove the climate control unit. (page 22-14)

Disconnect the 30-P connector from the climate control unit.

Check for continuity between the BLK wire terminal of climate control unit and body ground.

Is there continuity?

- NO → **Repair open BLK wire between the climate control unit and body ground. If wire is OK, check for poor ground at G303.**
- YES ↓

Measure voltage between the WHT/YEL wire terminal of the climate control unit and body ground.

Is there battery voltage?

- NO → **Repair open in the WHT/YEL wire between the climate control unit and No. 56 (7.5 A) fuse.**
- YES ↓

Turn the ignition switch ON.

Measure voltage between the BLK/YEL wire terminal of the climate control unit and body ground.

Is there battery voltage?

- NO → **Repair open in the BLK/YEL wire between the climate control unit and No. 19 (7.5 A) fuse.**
- YES ↓

Substitute a known-good climate control unit and recheck. If symptom/indication goes away, replace the original climate control unit.

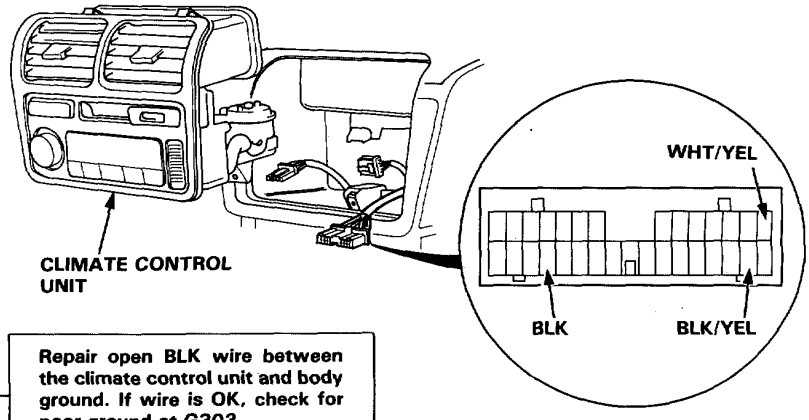

View from wire side

Fan Motors and A/C Compressor

Fan motors and A/C compressor do not work.

Check for blown No. 3 (15 A) fuse.

Is the fuse OK?

NO → **Replace blown fuse. No. 3 (15 A)**

YES

Disconnect the 4-P connector from the triple pressure switch.

Turn the ignition switch ON.

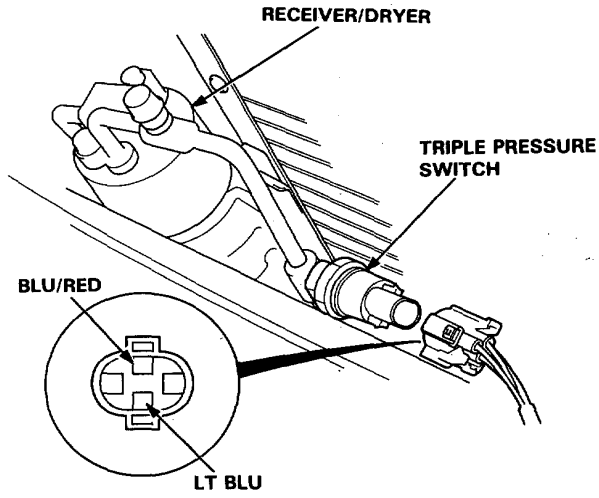

View from terminal side

Turn the A/C switch ON.

Check for continuity in the BLU/RED wire terminal of triple pressure switch connector (harness half) and body ground.

Is there continuity?

NO → Run a self-diagnosis circuit check on the climate control unit.

Did the check indicate any problems?

NO → **Repair open in the BLU/RED wire between the triple pressure switch and control unit. If wire is OK, replace the control unit.**

YES → **Go to the appropriate trouble-shooting chart for the problem indicated.**

Turn the ignition switch OFF.

(To page 22-44)

(cont'd)

Fan Motors and A/C Compressor (cont'd)

(From page 22-43)

Check for continuity between the No. 1 terminal and No. 2 terminal of the triple pressure switch.

Is there continuity?

NO — (To page 22-45)

YES

Disconnect the 12-P connector from the fan control unit.

Check for continuity between in the BLK wire terminal in the fan control unit connector and body ground.

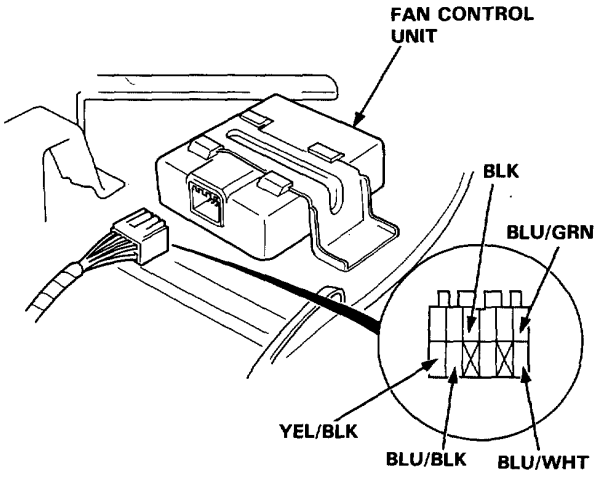

View from wire side

Is there continuity?

NO — **Repair open in the BLK wire between the fan control unit and body ground. If the wire is OK, check for poor ground at G301, 302, 303.**

YES

Check A/C system pressure.

Is the pressure OK?

NO — **Start the Leak test. (page 22-97)**

YES

Replace the triple pressure switch.

(From page 22-44)

Turn the ignition switch ON.

Measure voltage between the YEL/BLK wire terminal (+) in of the fan control unit connector and body ground (−)

Is there battery voltage?

NO → **Repair open in the YEL/BLK wire between the fan control unit and No. 3 (15 A) fuse.**

YES

Turn the ignition switch OFF.

Using a jumper wire, connect the LT BLU wire terminal of the triple pressure switch connector to body ground.

Check for continuity between in the LT BLU wire terminal of the fan control unit and body ground.

Is there continuity?

NO → **Repair open in the LT BLU wire between the triple pressure switch and fan control unit.**

YES

Substitute a known-good fan control unit and recheck. If symptom/indication goes away, replace original fan control unit.

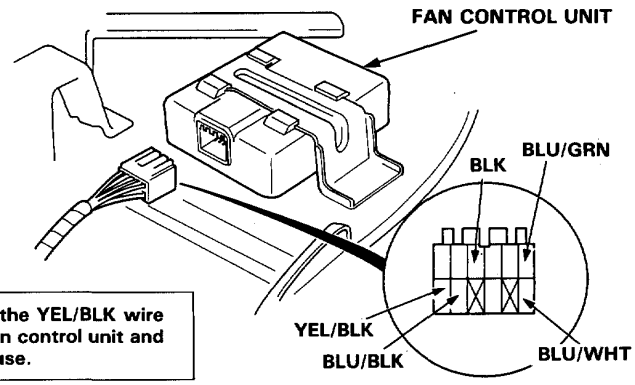

View from wire side

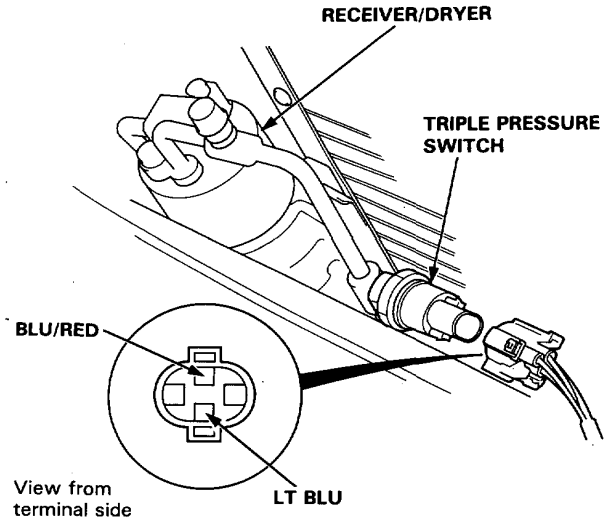

View from terminal side

Compressor

A/C Compressor does not work.

Remove the compressor clutch relay from under-hood relay box C.

Turn the ignition switch ON.

Measure voltage between the No. ④ terminal (+) in the compressor clutch relay connector and body ground (−).

Is there battery voltage?

NO → **Repair open in the YEL/BLK wire between the compressor clutch relay and No. 3 (15 A) fuse.**

YES

Measure voltage between the No. ③ terminal (+) in the compressor clutch relay connector and body ground (−).

Is there battery voltage?

NO → **Repair open in the YEL/BLK wire between the compressor clutch relay and No. 3 (15 A) fuse.**

(To page 22-47)

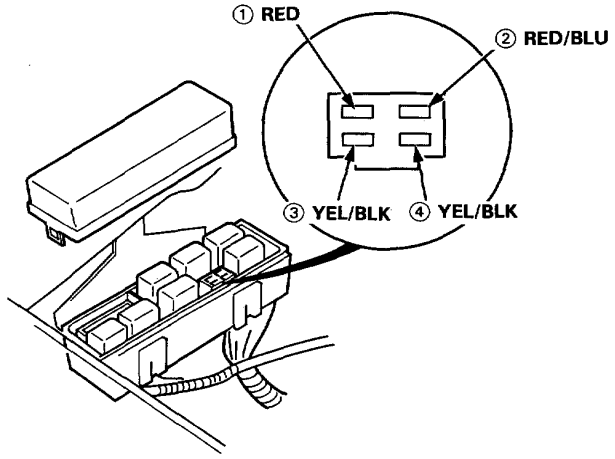

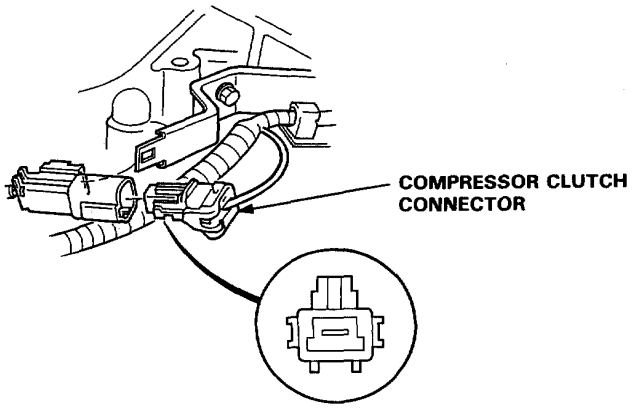

(From page 22-46)

Using a jumper wire, connect the No. ① and No. ③ terminals of the compressor clutch relay.

Does the compressor clutch engage?

NO → **Repair open in the RED wire between the compressor clutch relay and compressor clutch. If the wire is OK, inspect the clutch air gap. If the gap is OK, replace the compressor clutch.**

YES

Turn the ignition switch OFF.

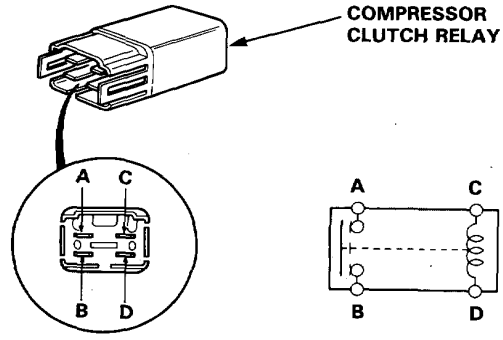

Remove and test the compressor clutch relay. (page 22-80)

Is the relay OK?

NO → **Replace the compressor clutch relay.**

YES

Reinstall the compressor clutch relay.

Disconnect the 12-P connector from the fan control unit.

(To page 22-48)

(cont'd)

Compressor (cont'd)

(From page 22-47)

Start the engine.

Using a jumper wire, connect the BLU/BLK wire terminal in the fan control unit connector to body ground.

Does the compressor clutch engage?

NO — (To page 22-49)

YES

Check the resistance between the BLU/WHT and BLU/GRN wires.

Is there 0.5 to 1.2 kΩ resistance?

NO — **Check the BLU/WHT and BLU/GRN wires for an open between the fan control unit and radiator fan temperature sensor. If the wires are OK, replace the sensor.**

YES

Disconnect the radiator fan temperature sensor.

At the 12-P fan control unit connector, check for continuity to ground at the BLU/WHT wire terminal and the BLU/GRN wire terminal.

Is there continuity?

NO — **Replace the fan control unit.**

YES

Repair short to ground in the BLU/WHT or BLU/GRN wire.

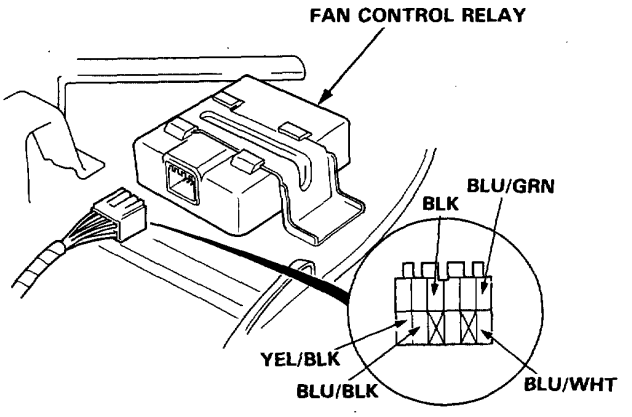

View from wire side

(From page 22-48)

STOP the engine.

Disconnect the 4 connectors from PGM-FI-ECU connect the ECU test harness connectors to the ECU.

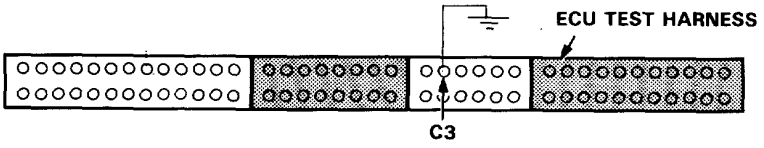

Check for continuity in the BLU/BLK wire between the fan control unit and C3 of ECU test harness terminal.

Is there continuity?

NO → **Repair open in the BLU/BLK wire between the fan control unit and ECU.**

YES

Install the compressor clutch relay.

Turn the ignition switch ON.

Measure voltage between ECU test harness terminal A15 and body ground.

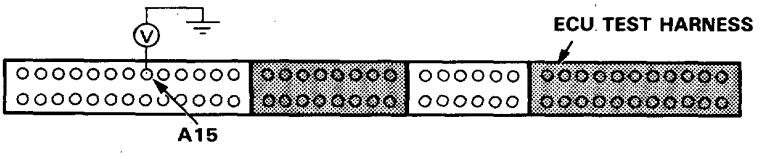

Is there battery voltage?

NO → **Repair open in the RED/BLU wire between the compressor clutch relay and ECU.**

YES

Substitute a known-good ECU and recheck. If symptom/indication goes away, replace the original ECU.

Fan Motors

Both fan motors do not run at all.

First check for blown No. 15 (7.5 A) and No. 50 (20 A) fuses.

Are fuses OK?

NO → **Replace blown No. 15 (7.5 A) or No. 50 (20 A) fuse.**

YES

Disconnect the 2-P connector from the radiator fan motor.

Check for continuity the BLK wire terminal between the radiator fan motor and body ground.

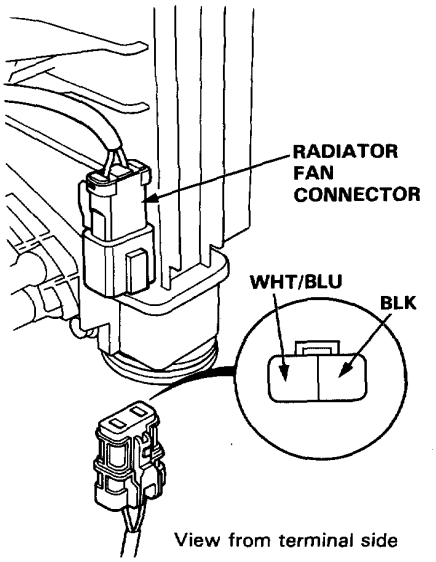

Is there continuity?

NO → **Repair open in the BLK wire between the radiator fan motor and body ground. If wire is OK, check for a poor ground at G152.**

YES

Remove the condenser fan relay.

Measure voltage between the No. 1 wire terminal of condenser fan relay and body ground.

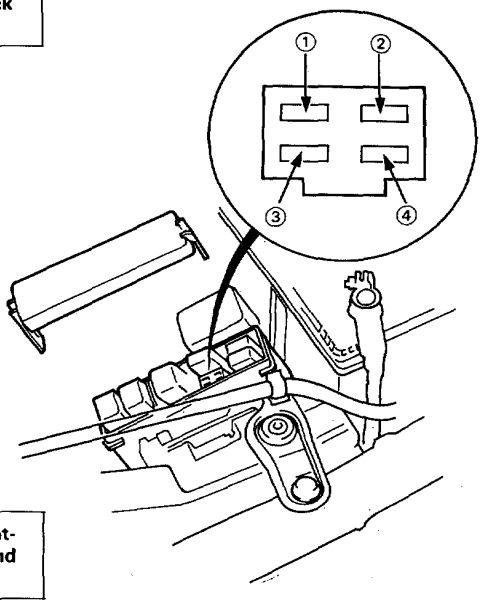

Is there battery voltage?

NO → **Repair open in the WHT wire between the No. 50 (20 A) fuse and condenser fan relay.**

YES

(To page 22-51)

(From page 22-50)

Test the condenser fan motor. Connect the battery power to the BLU wire terminal and connect the BLK wire terminal to body ground. The condenser fan motor should run.

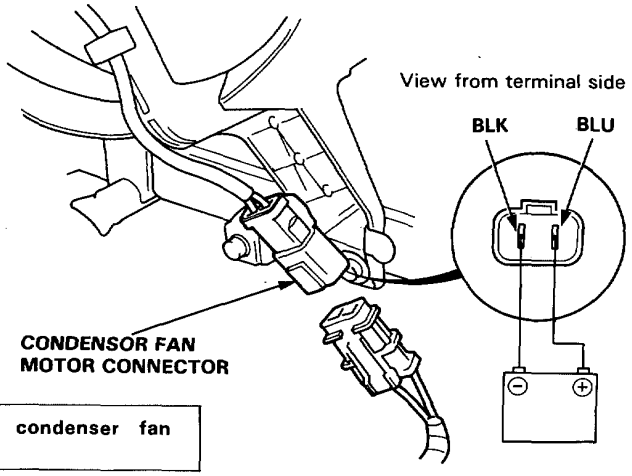

Is the motor OK?

NO → **Replace the condenser fan motor.**

YES

Check for continuity on the WHT/BLU wire between the No. ④ terminal of the fan control relay and the radiator fan motor.

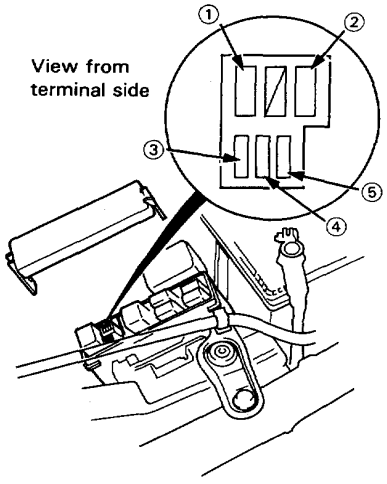

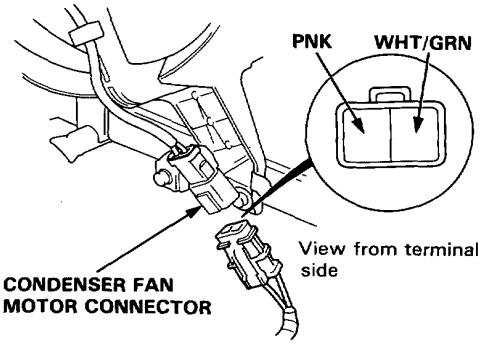

Is there continuity?

NO → **Repair open in the WHT/BLU wire between the fan control relay and radiator fan motor.**

YES

Test the radiator fan motor. Connect the battery power to the BLU wire terminal and connect the BLK wire terminal to body ground. The radiator fan motor should run.

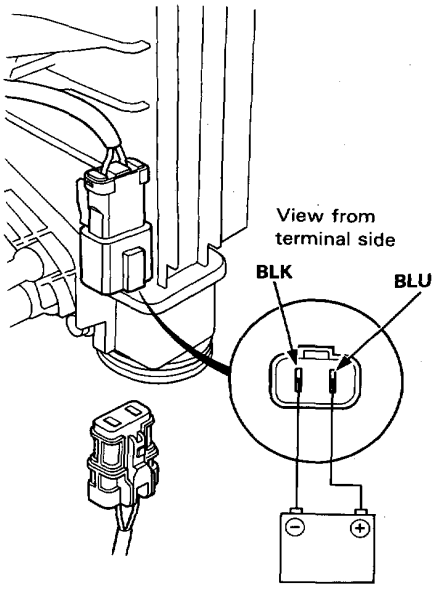

Is the motor OK?

NO → **Replace the radiator fan motor.**

YES

(To page 22-52)

(cont'd)

Fan Motors (cont'd)

(From page 22-51)

Disconnect the 2-P connector from condenser fan motor.

Check for continuity on the PNK wire between the No. ③ terminal of the condenser fan relay and the condenser fan motor.

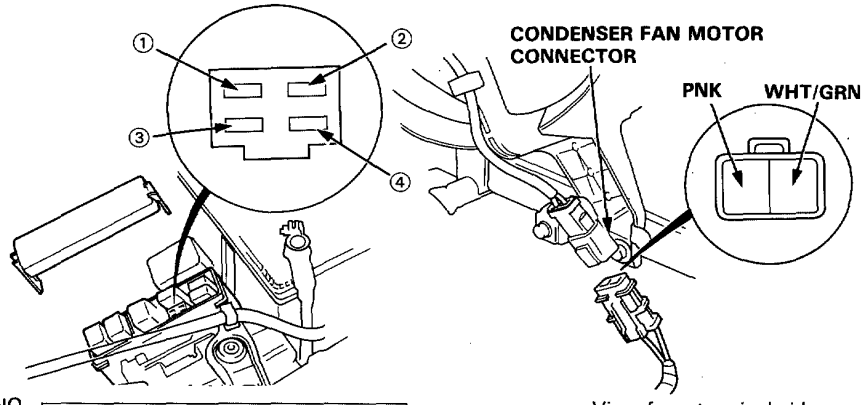

Is there continuity?

NO → **Repair open in the PNK wire between the condenser fan relay and condenser fan motor.**

YES

Test the condenser fan relay. (see page 22-80)

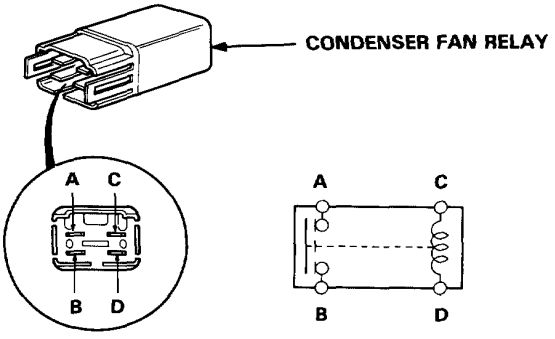

Is the relay OK?

NO → **Replace the condenser fan relay.**

YES

Remove the fan control relay.

Check for continuity the WHT/GRN wire between the No. ② terminal of the fan control relay and the condenser fan motor.

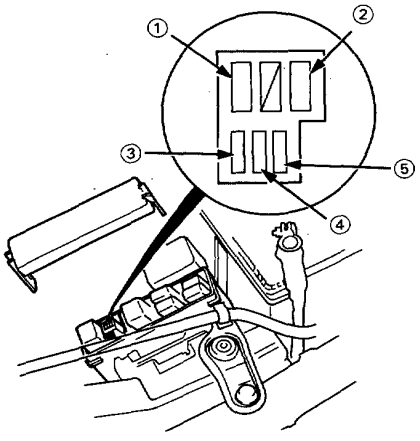

Is there continuity?

NO → **Repair open in the WHT/GRN wire between the fan control relay and condenser fan motor.**

YES

(To page 22-53)

(From page 22-52)

Test the fan control relay. (see page 22-80)

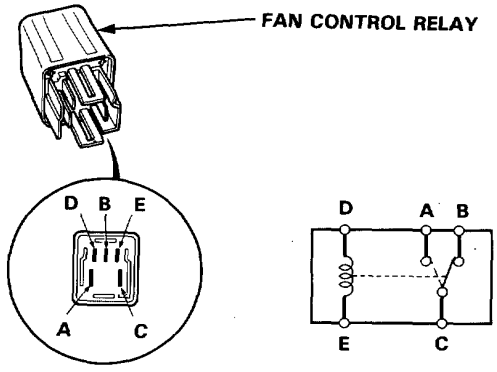

Is the relay OK?

NO → **Replace the fan control relay.**

YES

Disconnect 8-P connector from the fan timer unit.

Check for continuity the BLK wire terminal berween the fan timer unit and body ground.

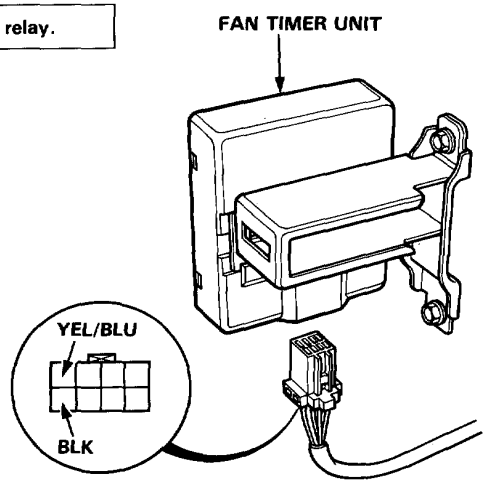

View from wire side

Is there continuity?

NO → **Repair open in the BLK wire between the fan timer unit and body ground. If wire is OK, check for a poor ground at G303.**

YES

Measure voltage between the YEL/BLU wire terminal of fan timer unit and body ground.

Is there battery voltage?

NO → ***Repair open in the* YEL/BLU wire between the No. 15 (7.5 A) fuse and fan timer unit.**

YES

(To page 22-54)

(cont'd)

Fan Motors (cont'd)

(From page 22-53)

Check for continuity the GRN wire between the fan timer unit and body ground.

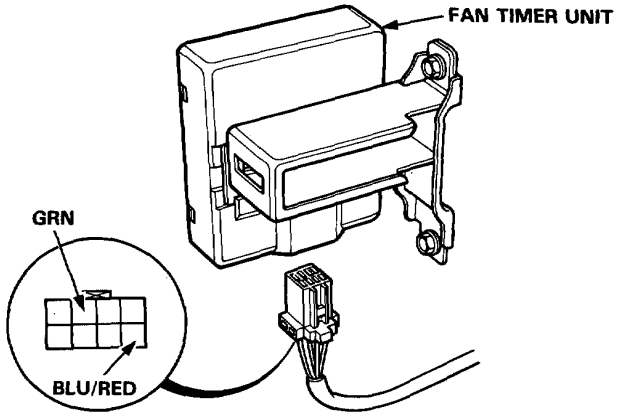

View from wire side

Is there continuity?

- NO → **Repair short in the GRN wire between the fan timer unit and condenser fan relay.**
- YES ↓

Using a jumper wire, connect the No. ② terminal of condenser fan relay and body ground.

Check for continuity on the GRN wire between the fan timer unit and body ground.

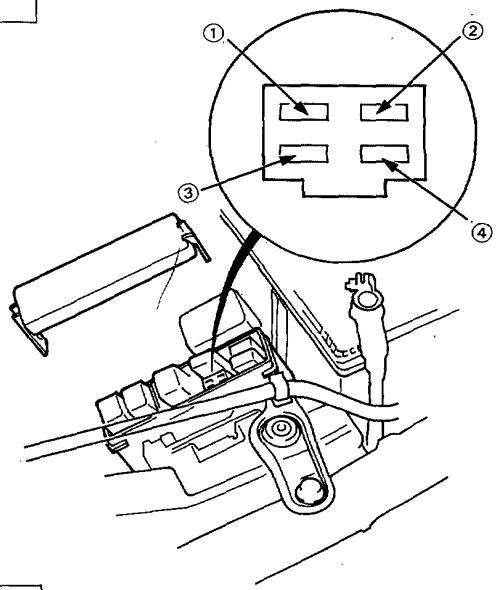

Is there continuity?

- NO → **Repair open in the GRN wire between the condenser fan relay and fan timer unit.**
- YES ↓

Check for continuity on the BLU/RED wire between the No. ② terminal of condenser fan relay and fan timer unit.

Is there continuity?

- NO → **Repair open in the BLU/RED wire between the condenser fan relay and fan timer unit.**
- YES ↓

(To page 22-55)

(From page 22-54)

Disconnect the 12-P connector from fan control unit.

Check for continuity on the BLU/YEL wire between the fan timer unit and fan control unit.

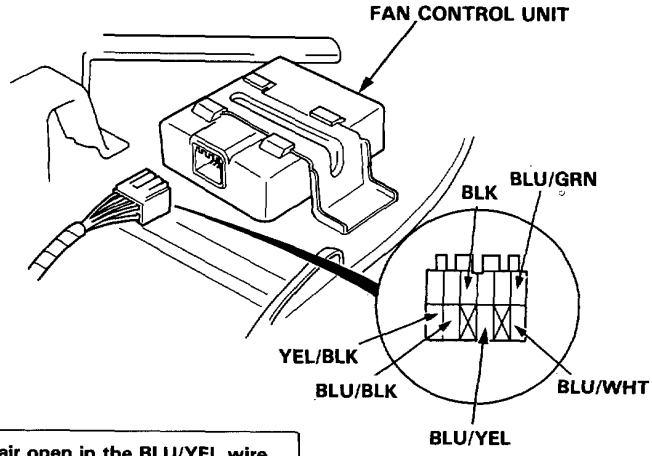

View from wire side

Is there continuity?

NO → **Repair open in the BLU/YEL wire between the fan timer unit and fan control unit.**

YES

Reinstall both relays, reconnect the both fan motors and the fan timer unit.

Using a jumper wire, connect the BLU/YEL wire terminal of fan control unit and body ground.

Do both fan motors run at low speed?

NO → ***Replace the fan timer unit.***

YES

Substitute a known-good fan control unit and recheck. If symptom/indication goes away, replace original fan control unit.

(cont'd)

Fan Motors (cont'd)

Both fan motors do not run at Hi-speed

First check for blown fuse No. 47 (20 A).

Is the fuse OK?

- NO → **Replace blown No. 47 (20 A) fuse.**
- YES ↓

Disconnect the 4-P connector from the triple pressure switch.

Turn the ignition switch ON.

Using a jumper wire, connect the LT BLU wire terminal of triple pressure switch and body ground.

Do both fan motors run at high speed?

- YES → (To page 22-61)
- NO ↓

Turn the ignition switch OFF.

Remove the radiator fan relay.

Measure voltage between the No. ① wire terminal of condenser fan relay and body ground.

Is there battery voltage?

- NO → **Repair open in the WHT wire between the No. 47 (20 A) fuse and radiator fan relay.**
- YES ↓

(To page 22-57)

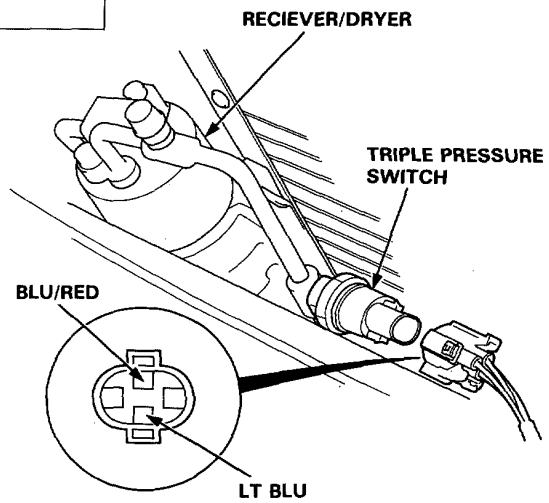

View from terminal side

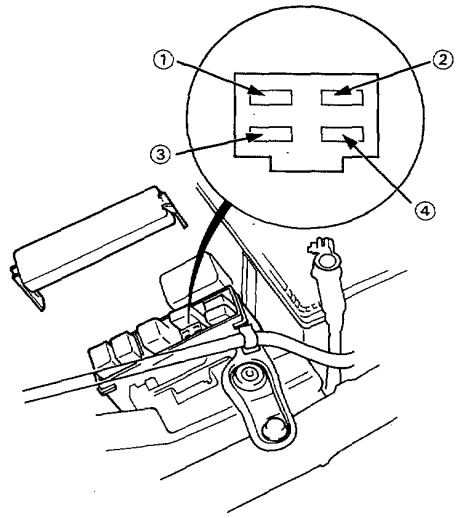

(From page 22-56)

Turn the ignition switch ON.

Measure voltage between the No. ④ wire terminal of radiator fan relay and body ground.

Is there battery voltage?

NO → **Repair open in the YEL/BLK wire between the No. 3 (15 A) fuse and radiator fan relay.**

YES

Turn the ignition switch OFF.

Test the radiator fan relay. (see page 22-80)

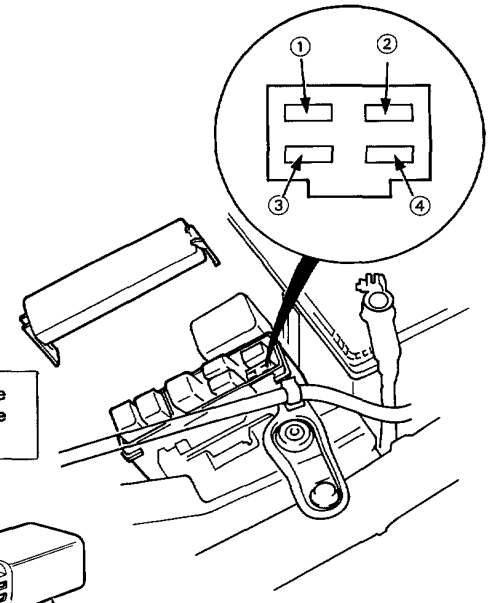

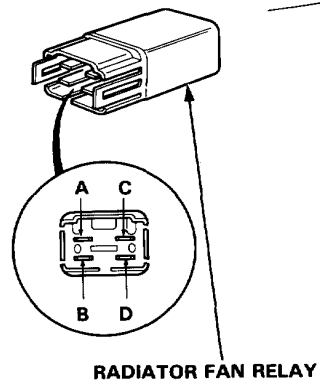

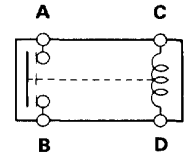

Is the relay OK?

NO → **Replace the radiator fan relay.**

YES

(To page 22-58)

(cont'd)

Fan Motors (cont'd)

(From page 22-57)

Disconnect 2-P connector from the radiator fan motor.

Check for continuity on the WHT/BLU wire between the No. ③ terminal of the radiator fan relay and radiator fan motor.

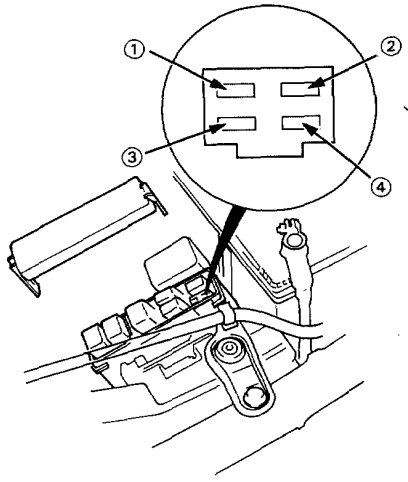

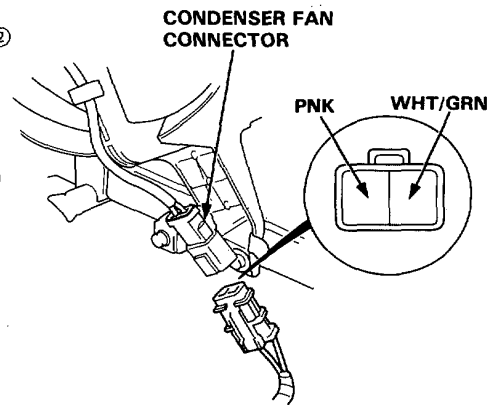

View from terminal side

Is there continuity?

NO → **Repair open in the WHT/BLU wire between the radiator fan relay and radiator fan motor.**

YES

Remove the fan control relay.

Turn the ignition switch ON.

Measure voltage between the No. ⑤ terminal of fan control relay and body ground.

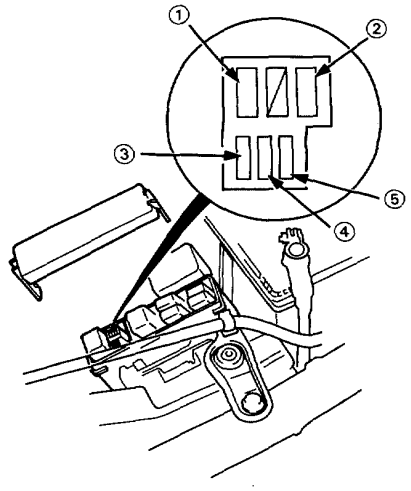

Is there battery voltage?

NO → **Repair open in the YEL/BLK wire between the No. 3 (15 A) fuse and fan control relay.**

YES

Turn the ignition switch OFF.

(To page 22-59)

(From page 22-58)

Check for continuity on the BLK wire between the No. ① terminal of the fan control relay and body ground.

Is there continuity?

NO → **Repair open in the BLK wire between the fan control relay and body ground at G152.**

YES

Test the fan control relay. (see page 22-80)

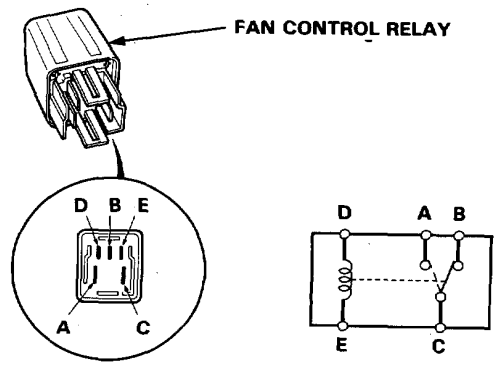

Is the relay OK?

NO → **Replace the radiator fan relay.**

YES

Reinstall the radiator fan relay and fan control relay, reconnect the 2-P connector to the radiator fan motor.

(To page 22-60)

(cont'd)

Fan Motors (cont'd)

(From page 22-59)

Disconnect the 12-P connector from the fan control unit.

Turn the ignition switch ON.

Using a jumper wire, connect the BLU wire terminal and the BLU/YEL wire terminal of fan control unit and body ground.

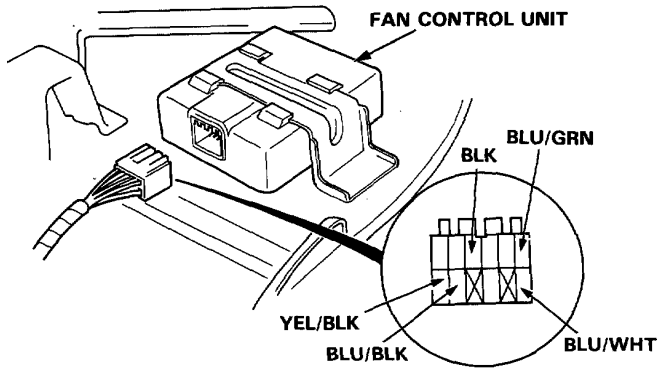

View from wire side

Do both fan motors run at high speed?

NO → **Repair open in the BLU wire between the radiator fan relay, fan control relay and fan control unit.**

YES → **Substitute a known-good fan control unit and recheck. If symptom/indication goes away, replace original fan control unit.**

(From page 22-56)

Turn the ignition switch OFF.

Disconnect the 12-P connector from fan control unit.

Disconnect the 12-P connector from ECU.

Check for continuity on the RED/BLU wire between the RED/BLU wire terminal of fan control unit and body ground.

Is there continuity?

YES → **Repair short in the RED/BLU wire between the triple pressure switch, fan control unit and ECU.**

NO → Start the performance test. (see page 22-84)

Is the A/C pressure OK?

NO → **Start the leak test. (see page 22-98)**

YES → **Replace the triple pressure switch.**

(cont'd)

Fan Motors (cont'd)

Both fan motors do not run at low-speed.

Disconnect 4-P connector from the triple pressure switch.

Check for continuity on the BLK wire between the triple pressure switch and body ground.

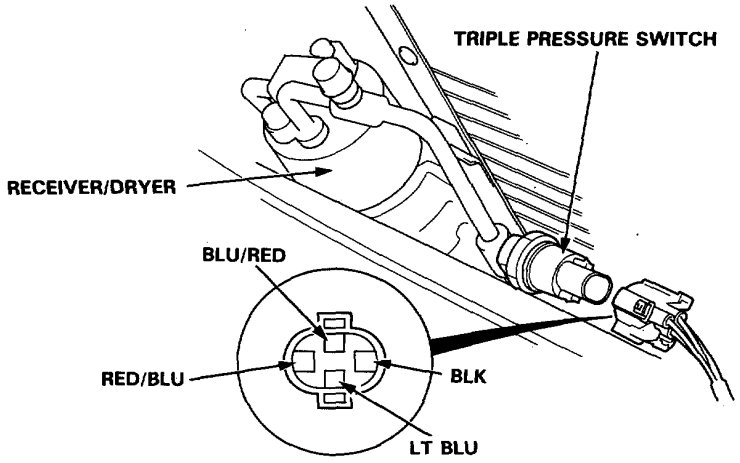

View from terminal side

Is there continuity?

NO → **Repair open in the BLK wire between the triple pressure switch and body ground. If wire is OK, check for a poor ground at G153.**

YES

Turn the ignition switch ON.

Using a jumper wire, connect the LT BLU wire terminal, the RED/BLU wire terminal of triple pressure switch and body ground.

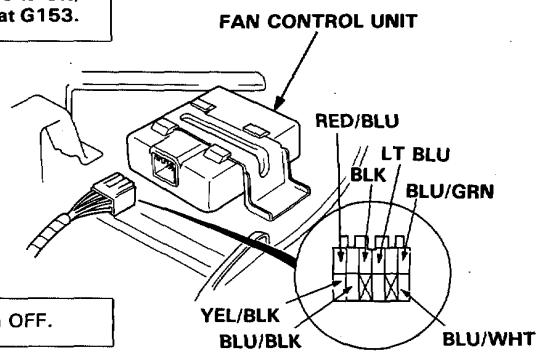

View from wire side

Do the both fan motors run at low speed?

YES → Turn the ignition switch OFF.

Disconnect the 12-P connector from fan control unit.

Check for continuity on the RED/BLU wire between the triple pressure switch and fan control unit.

Is there continuity?

NO → **Repair open in the RED/BLU wire between the triple pressure switch and fan control unit.**

YES → **Replace the triple pressure switch.**

NO

Turn the ignition switch OFF.

Remove the fan control relay.

Disconnect 2-P connector from the radiator fan motor.

(To page 22-63)

(From page 22-62)

Check for continuity on the WHT/BLU wire between the No. ④ terminal of the fan control relay and radiator fan motor.

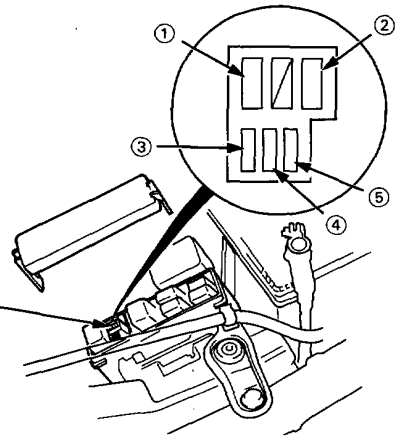

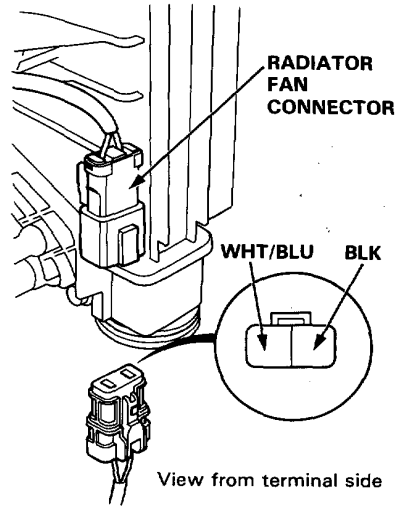

Is there continuity?

NO → **Repair open in the WHT/BLU wire between the fan control relay and radiator fan motor.**

YES

Test the fan control relay. (see page 22-80)

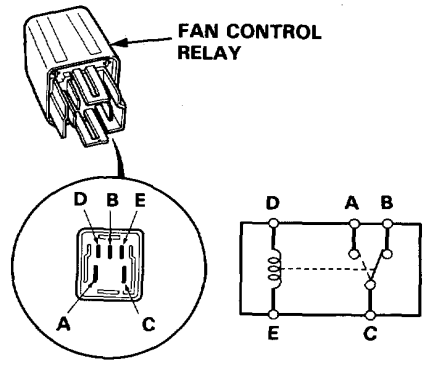

Is the relay OK?

NO → **Replace the radiator fan relay.**

YES

Remove the radiator fan relay.

Disconnect 12-P connector from fan control unit.

Check for continuity on the BLU wire between the No. ③ terminal of the fan control relay and body ground.

Is there continuity?

YES → **Repair short the BLU wire between the fan control relay, radiator fan relay and fan control unit.**

NO

Substitute a known-good fan control unit and recheck.
If symptom/indication goes away, *replace original fan control unit.*

Blower

Removal

SRS wire harness is routed near the heater.

⚠ WARNING **All SRS wire harnesses and connectors are colored yellow. Do not use electrical test equipment on these circuits.**

CAUTION: Be careful not to damage the SRS wire harnesses when servicing the heater.

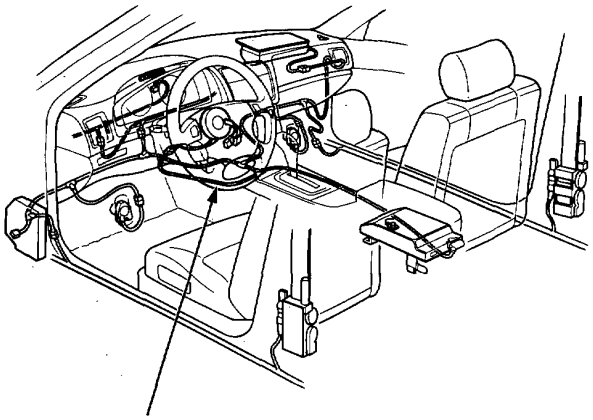

1. Remove the dashboard lower panel and disconnect the connector from it.

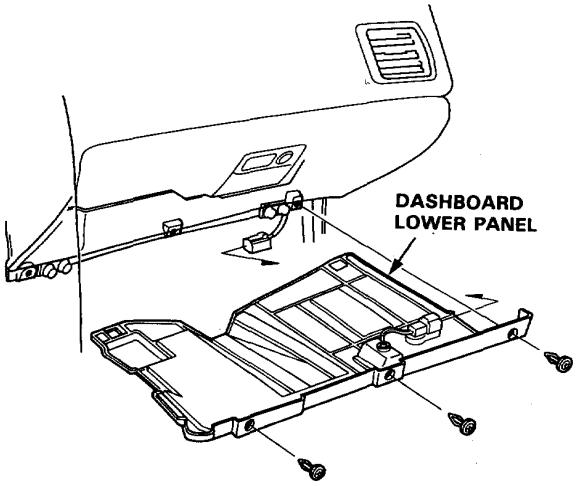

2. Disconnect the glove box light connector and glove box mounting bolts, then remove the glove box.

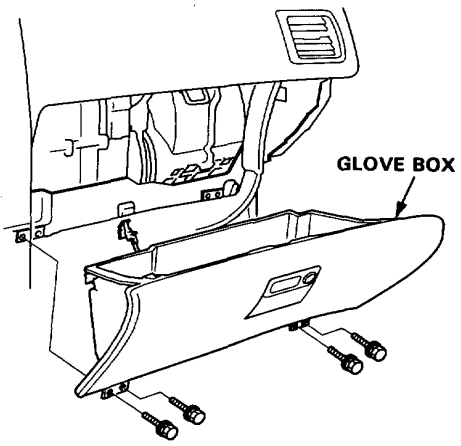

3. Remove both dashboard right end cap and the left side panel in the glove box opeing.

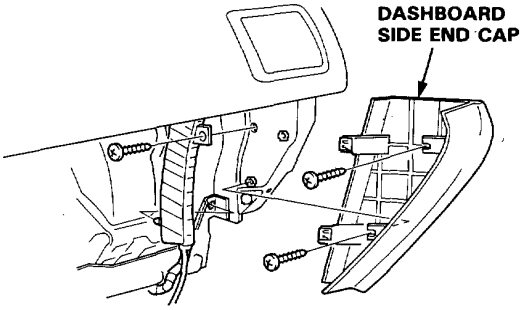

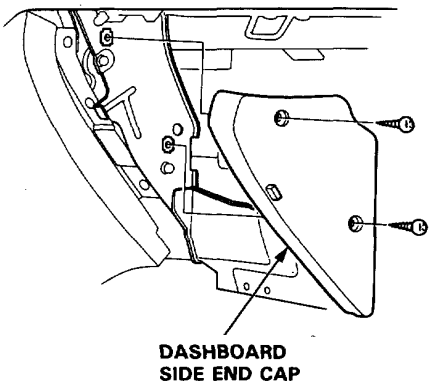

4. Remove the glove box frame mounting bolts and nuts, then remove the glove box frame.

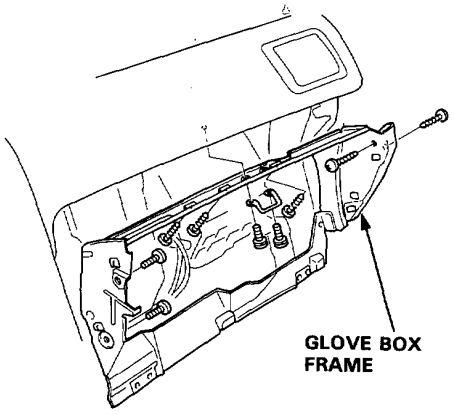

5. Disconnect the connectors as shown.

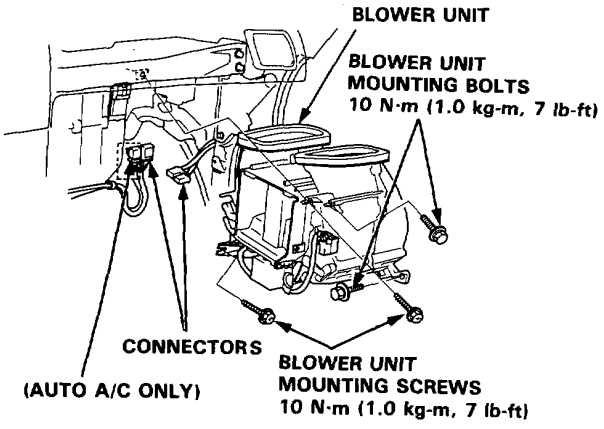

6. Remove the blower mounting bolts and screws, then remove the blower.

7. Install the blower in the reverse order of removal, then make sure it runs and doesn't leak any air.

Overhaul

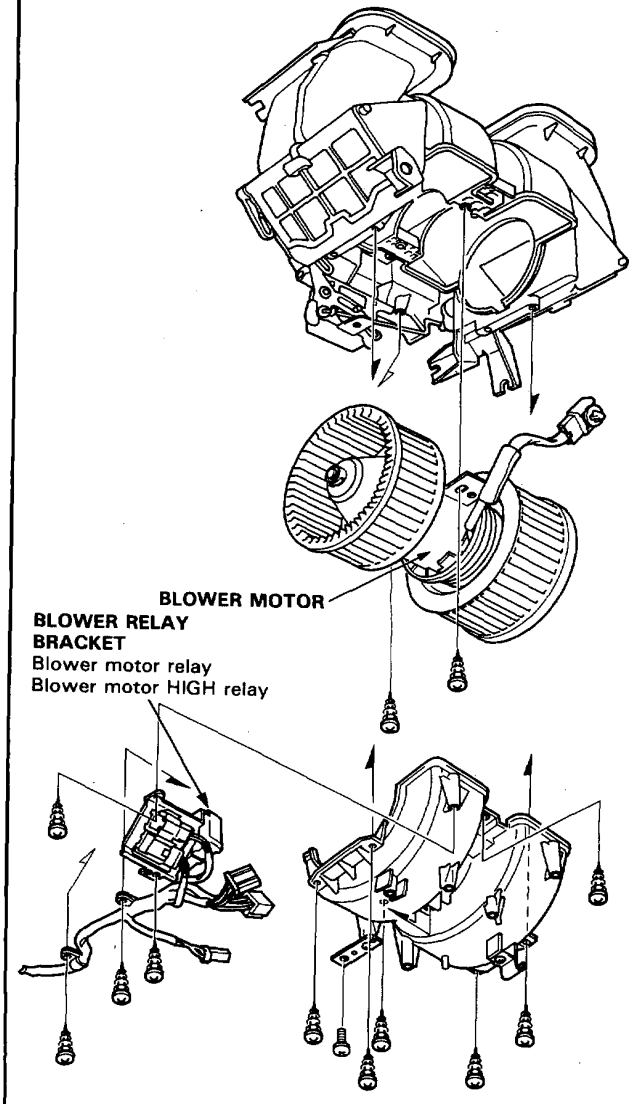

Heater-Evaporator Unit

Removal

SRS wire harness is routed near the heater.

⚠ WARNING **All SRS wire harnesses and connectors are colored yellow. Do not use electrical test equipment on these circuits.**

CAUTION: Be careful not to damage the SRS wire harnesses when servicing the heater.

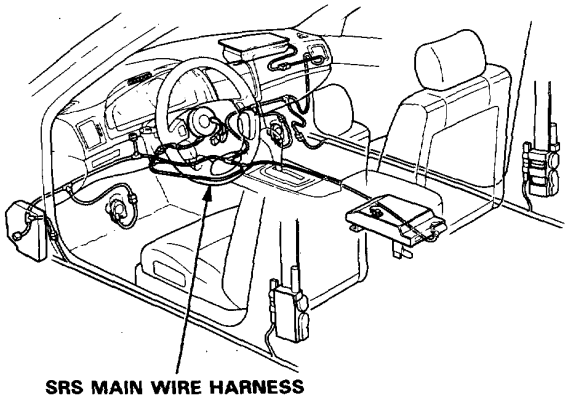

1. Remove the dashboard. (section 20).
2. Remove the blower (page 22-64).
3. When the engine is cool, drain the coolant from the radiator (Section 10).

⚠ WARNING

- **Do not remove the radiator cap when the engine is hot; the coolant is under pressure and could severely scald you.**
- **Keep hands away from the radiator fan. The fan may start automatically without warning and run for up to 30 minutes, even after the engine is turned off.**

CAUTION: Radiator coolant will damage paint. Quickly rinse any spilled coolant off pained surfaces.

4. Disconnect the heater hoses at the heater. Coolant will run out when the hoses are disconnected, drain it into a clean drip pan.
5. Disconnect the heater valve cable from the heater valve.

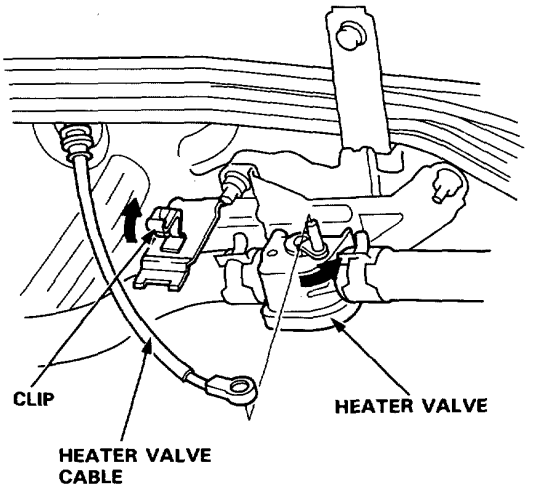

6. Release the clamps, then disconnect the heater hoses.

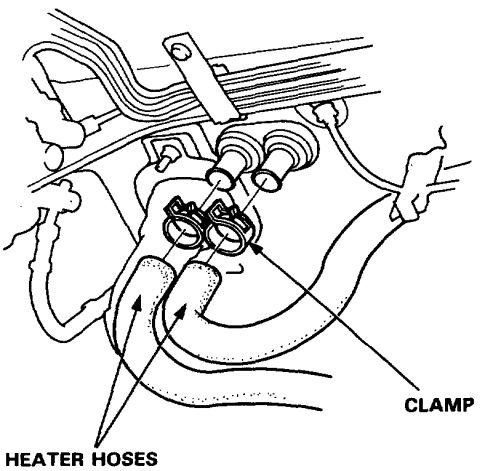

Remove all refrigerant from the A/C system with a refrigerant recovery system.

7. Remove the A/C suction line bolt and the receiver line bolt, then remove the suction line and receiver line.

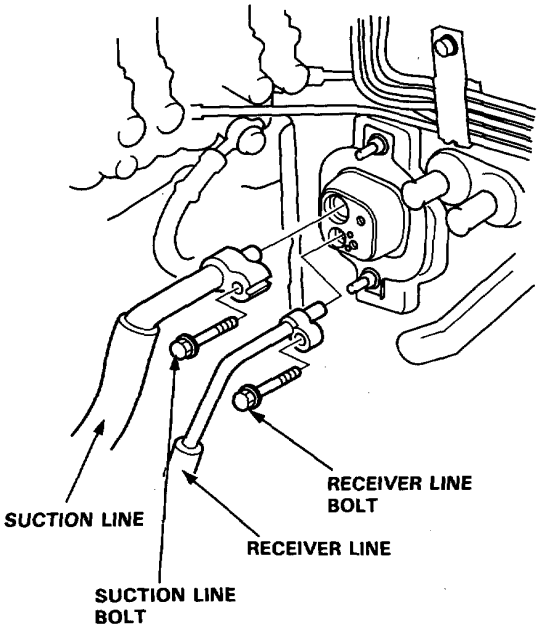

8. Remove the nuts and evaporator seal plate.

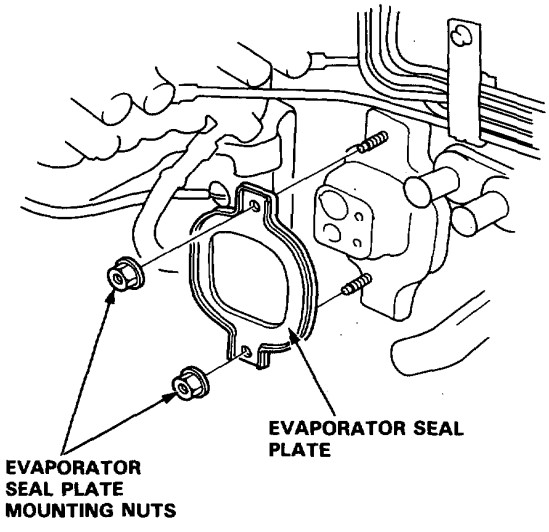

9. Remove the ducts and disconnect the connectors, then remove the heater-evaporator mounting nuts and bolts.

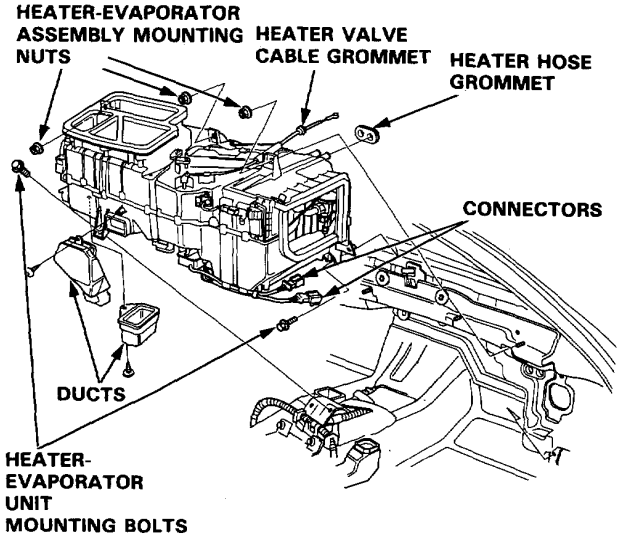

10. Disconnect the air-mix control motor connector and max cool motor connector.
Then remove the heater-evaporator assembly.

CAUTION: After reinstalling the heater-evaporator follow the sequence described in the air bleed procedure. If you don't, you may leave air in the system which could damage the engine.

Heater-Evaporater

Overhaul

1. Remove the heater core cover, remove the clamps from the inlet and outlet lines, then lift out the heater core.
2. Remove the upper half of the housing, then remove the evaporater.
3. Remove the expansion valve if necessary.
4. Assemble the heater-evaporator unit in the reverse order of disassembly. Hold the expansion valve capillary tube down against the suction line, and wrap it with tape to hold it there.

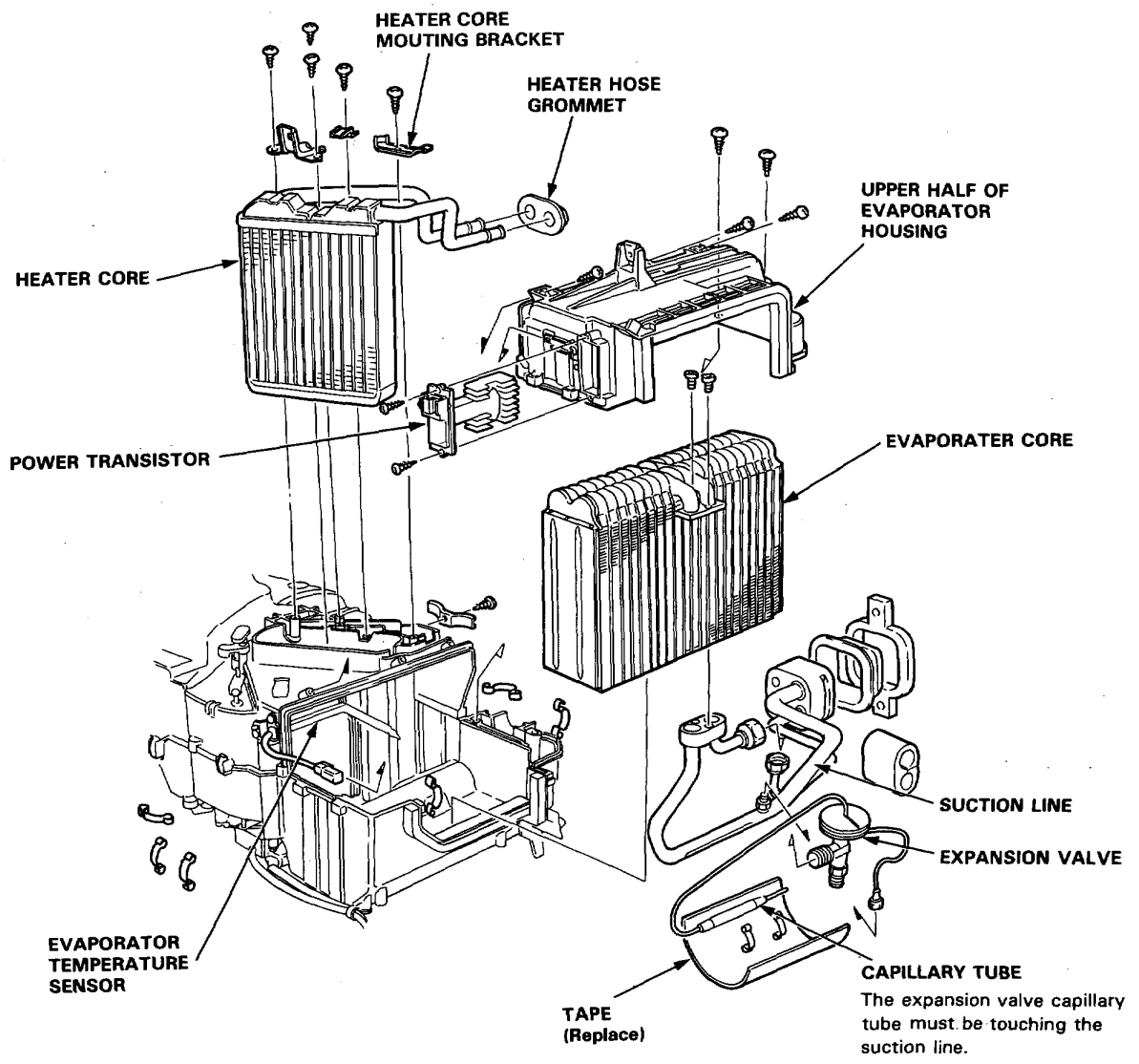

Recirculation Control Motor

Test

1. Connect battery power to the No. 1 terminal of the recirculation control motor, and connect the No.2 terminal to ground.
   The motor should run. If it doesn't, reverse the connections; the motor should then run.

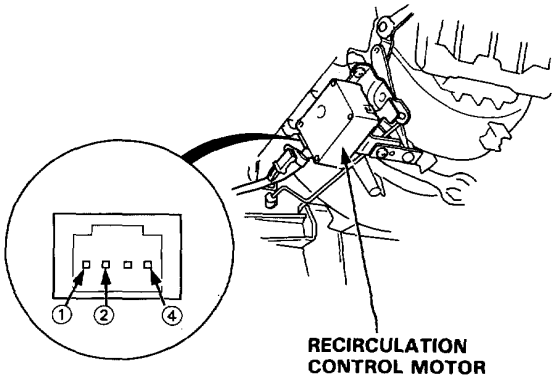

2. Check for continuity between the terminals of the recirculation control motor according to the table.

Position \ Terminal	1	2	4
	○	○	
	○		○

Removal

1. Remove the dashboard lower panel (page 22-64).
2. Disconnect the recirculation motor connector.
3. Remove the recirculation control motor mounting screws and the recirculation control motor.

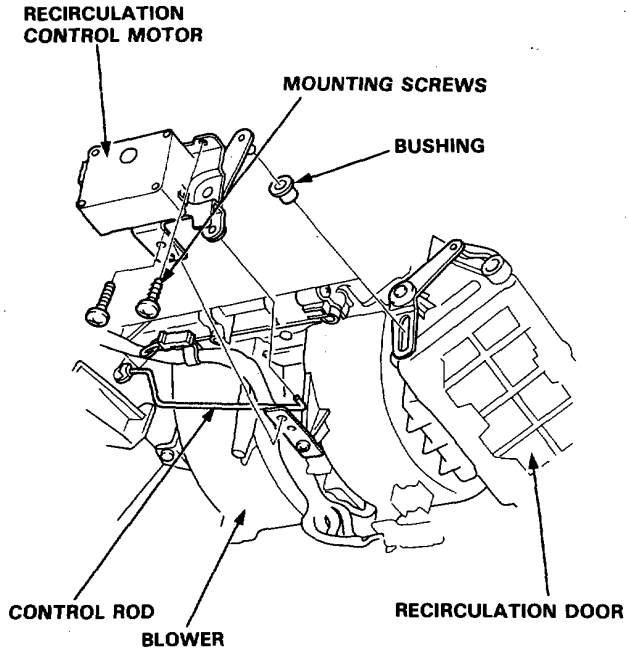

Mode Control Motor

Test

1. Measure the resistance between the No. 3 and 5 terminals.

   - Resistance: approx. 6 kΩ

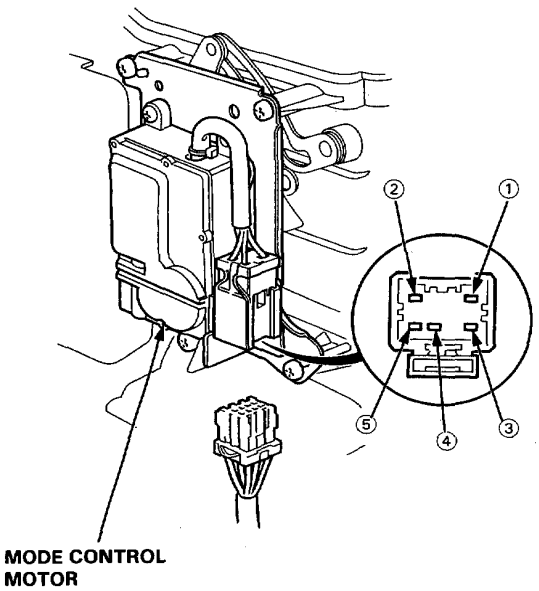

2. Check the motor operation by briefly connecting battery power to the No. 2 terminal and grounding the No. 1 terminal.

3. Reverse the wires to be sure the motor will run in both directions.

   CAUTION: Be sure to disconnect power from the motor as soon as the motor has started. Failure to do so will damage the motor.

4. While repeating stop 2, measure the resistance between terminals No. 4 and No. 5. Resistance should be approximately 1.2 kΩ at VENT and 4.8 kΩ at DEF. Also check the resistances with the battery polarity reversed.

Removal

1. Remove the heater-evaporator unit. (page 22-66)

2. Disconnect the mode control motor connector.

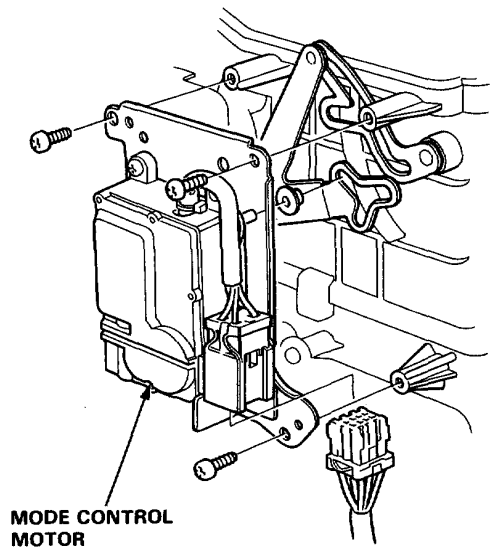

3. Remove its mounting screws and the mode control motor.

Air Mix Control Motor

Test

1. Measure the resistance between the No. 3 and 5 terminals.

   - Resistance: approx. 6 kΩ

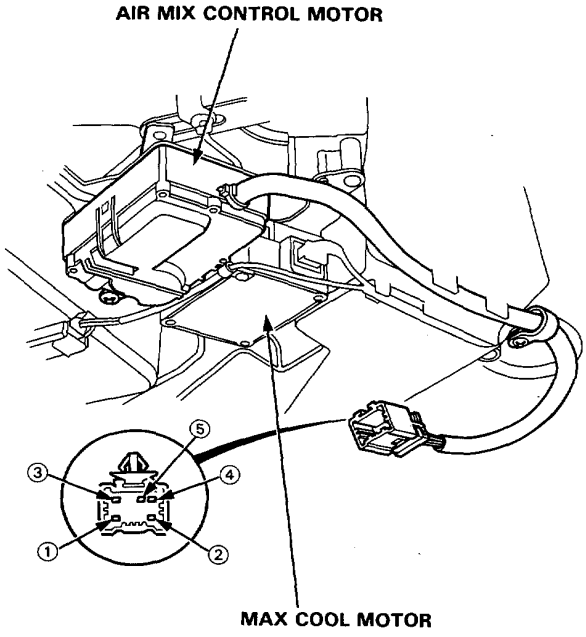

2. Check the motor operation by briefly connecting battery power to the No. 2 terminal and grounding the No. 1 terminal.

3. Reverse the wires to be sure the motor will run in both directions.

   CAUTION: Be sure to disconnect power from the motor as soon as the motor has started. Failure to do so will damage motor.

4. While repeating step 2, measure the resistance between terminals No. 4 and No. 5. Resistance should be approx. 1.2 kΩ at COOL and approx. 4.8 kΩ at HOT. Also check the resistances with the battery polarity reversed.

Removal

1. Remove the dashboard lower panel and disconnect the connector from it.

2. Disconnect the air mix control motor connector and clamp.

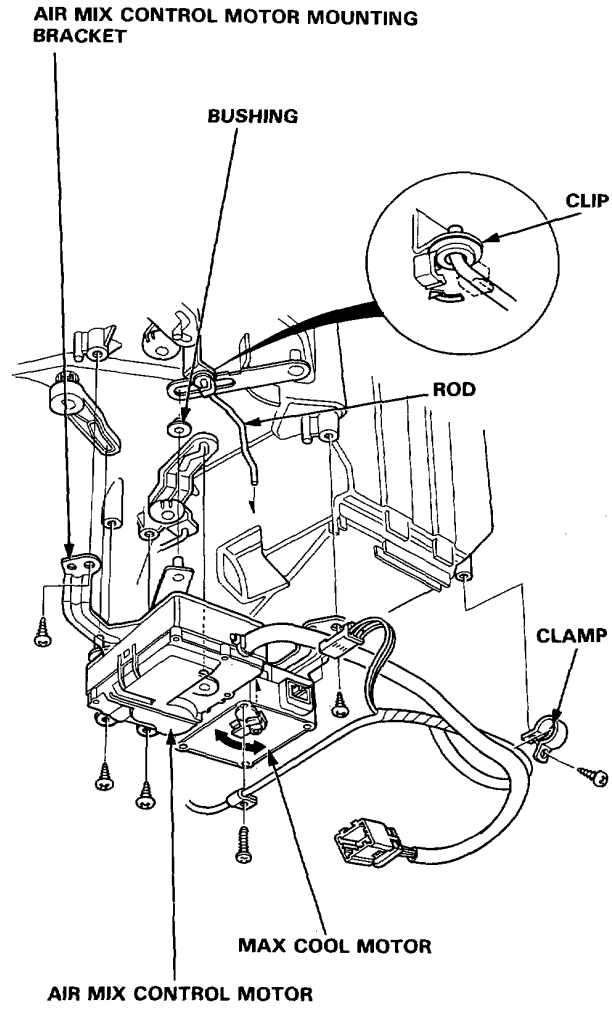

3. Unhook the clips from the max cool motor rod, then remove its mounting screws and the air mix control motor mounting bracket.

4. Remove the air mix control motor from the max cool motor as shown on the next page.

Max Cool Motor

Test

1. Connect battery power to the No. 1 terminal of the max cool motor, and connect the No. 2 terminal to ground.

2. The max cool motor should run. If it doesn't connect the No. 4 terminal; the motor should then run.

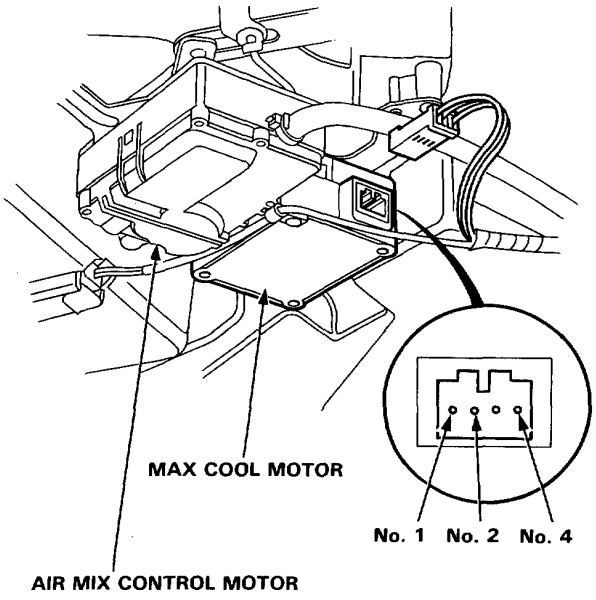

Removal

1. Remove the air mix motor mounting bracket (previous page).

2. Remove the max cool motor from the air mix motor mounting bracket as shown.

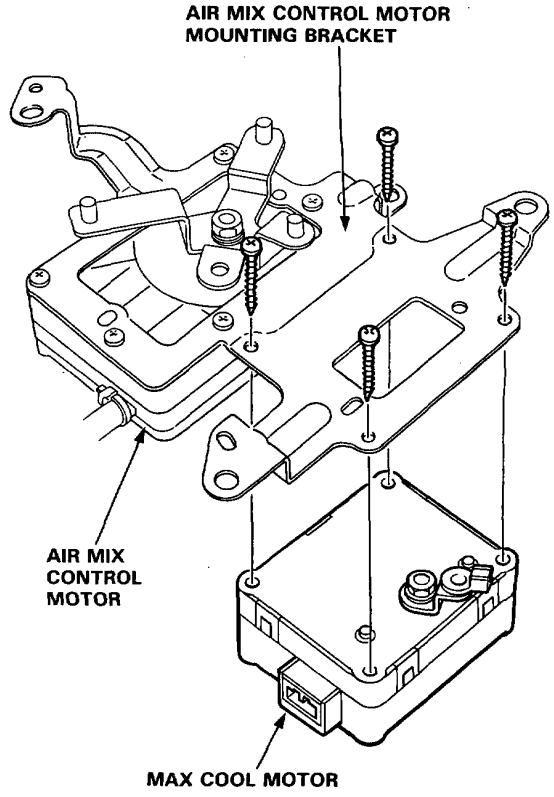

Aspirator Fan Motor

Removal

SRS wire harness is routed near the console.

⚠WARNING All SRS wire harnesses and connectors are colored yellow. Do not use electrical test equipment on these circuit.

CAUTION: Be careful not to damage the SRS wire harnesses when servicing the console.

1. Remove the climate control unit. (page 22-14)
2. Disconnect the aspirator fan connector as shown.

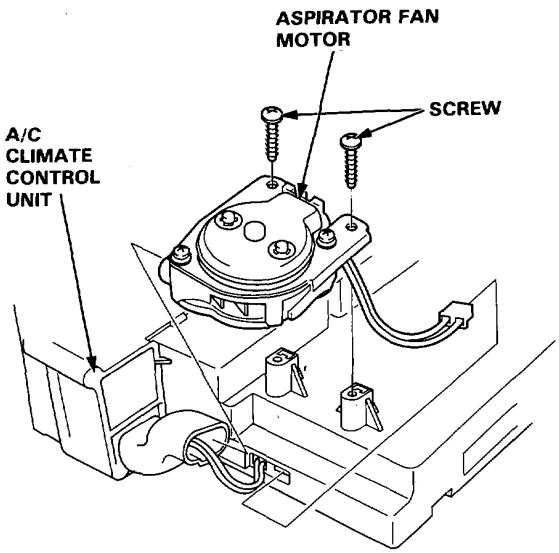

3. Remove its mounting screws, then remove the aspirator fan.

Test

Connect battery power to the No. ① terminal of the connector, and connect the No. ② terminal to ground. The fan should run.

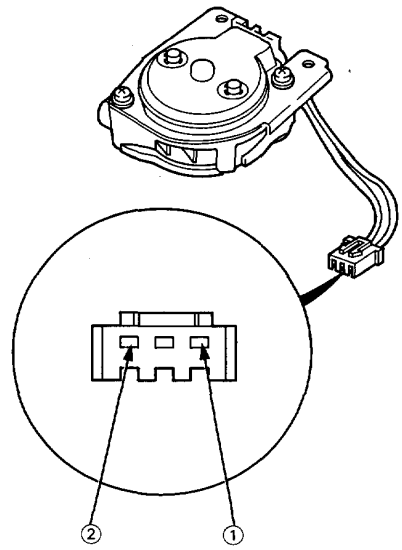

Air Mix Control Door Adjustment

Control Rod and Arm Positions

1. Set the control unit to HOT.
2. Then make sure the air mix control rod, the max cool rod, and the air mix control arm are in the positions shown.

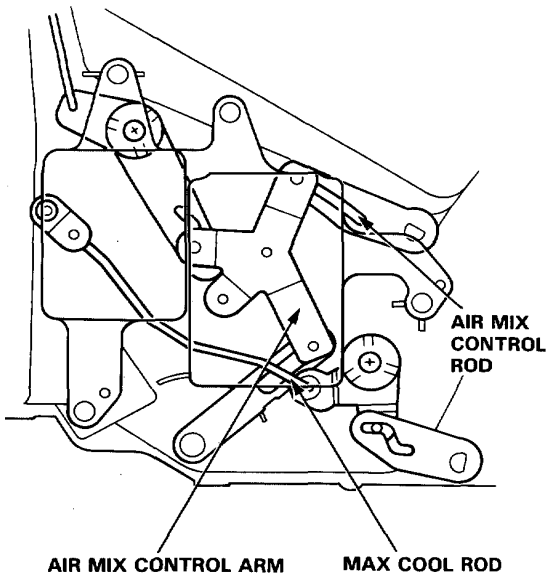

Evaporator Temperature Sensor

Removal

1. Disconnect the evaporator temperature sensor connector.

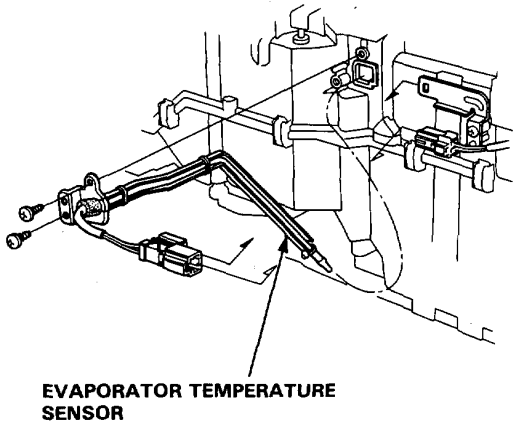

2. Remove the evaporator temperature sensor by removing the clips and screws.

Test

Compare the resistance reading between teminals of the evaporator temperature sensor with the specifications shown in the following graph: It should be within specifications.

CAUTION: The sensor uses a thermistor which can be damaged if high current is applied to it during testing. Therefore, use a circuit tester that puts out a measuring current of 1 mA or less. (At the 20 kΩ range)

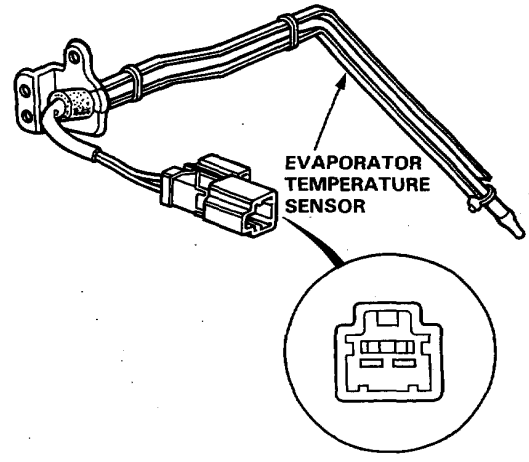

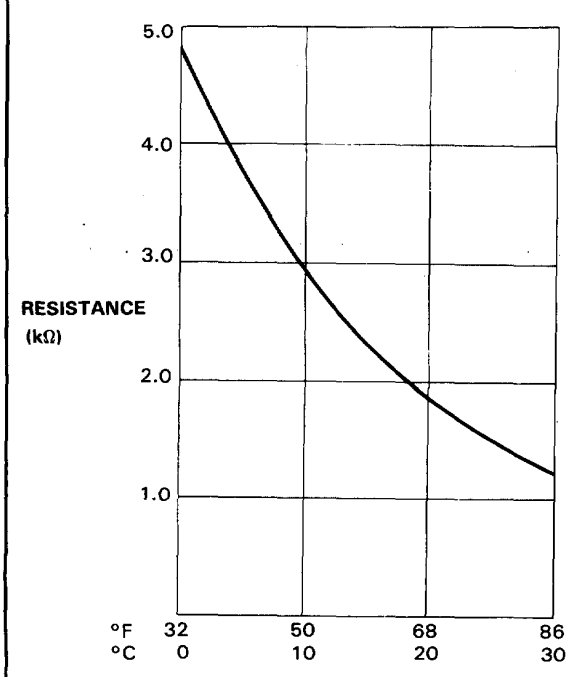

Coolant Temperature Sensor

Removal

1. Remove the dashboard lower panel.
2. Disconnect the 7-P connector from the max cool motor.

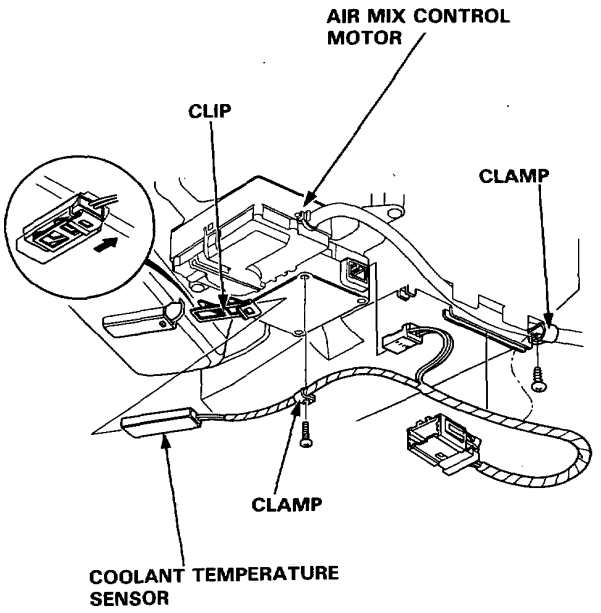

3. Remove the screw from the harness clamp, then pull the retaining clip out of the slot the sensor sits in and remove the sensor.

Test

Compare the resistance reading between terminals of the coolant temperature sensor with specifications shown in the following graph: It should be within specifications.

- Use DIGITAL MULTIMETER (KS—AHM—32—003) or equivalent.
- Use 20 kΩ range.

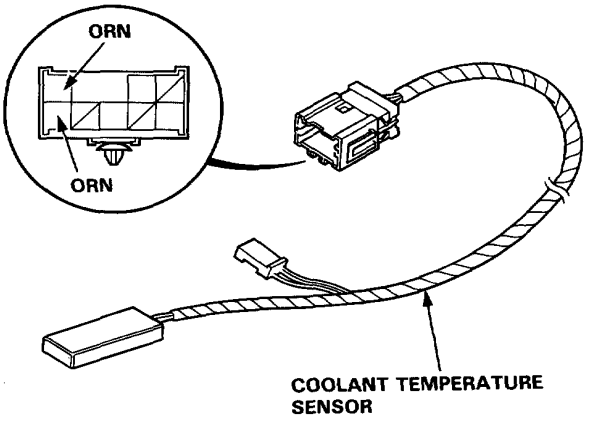

Resistance at 68°F (20°C): approx. 7kΩ.

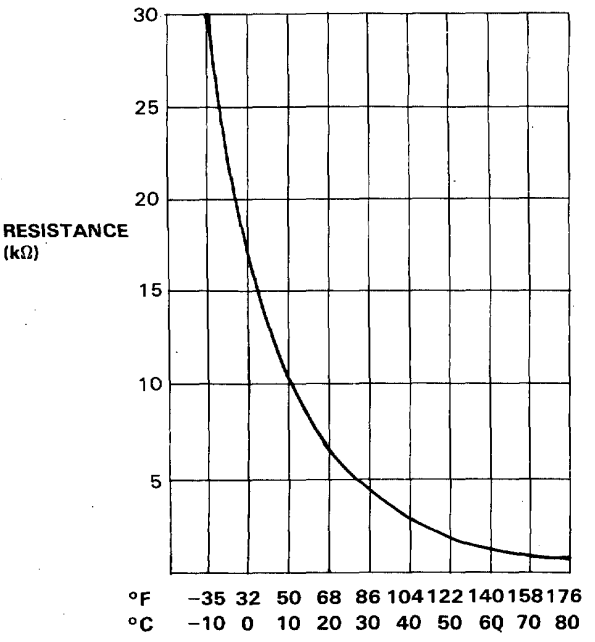

In-car Temperature Sensor

Removal

The in-car temperature sensor assembly includes a small fan (aspirator fan) to draw air past the sensor.

SRS wire harness is routed near the console.

⚠WARNING All SRS wire harnesses and connectors are colored yellow. Do not use electrical test equipment on these circuit.

CAUTION: Be careful not to damage the SRS wire harnesses when servicing the console.

1. Remove the climate control unit. (page 22-14)
2. Remove the front panel of climate control unit.

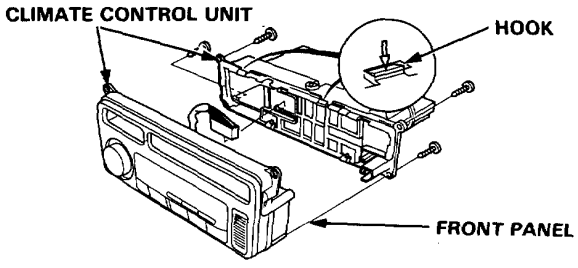

3. Disconnect the in-car sensor connector from the side of the climate control unit.

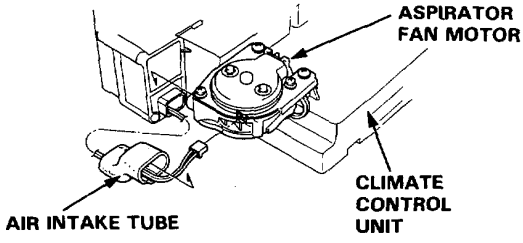

4. Remove the air intake tube.
5. Release the holder claws, then pull out the sensor.

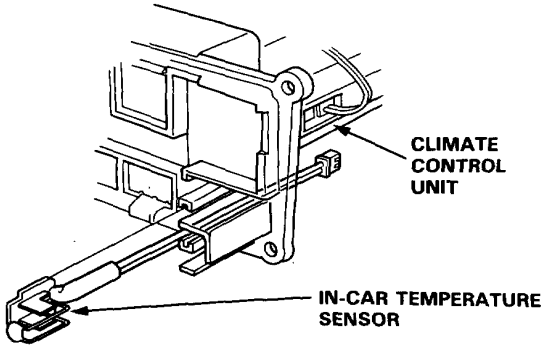

Test

NOTE: It is not necessary to remove the sensor from the control panel to test it.

Compare the resistance reading between No. 1 and No. 2 terminals of the in-car temperature sensor with specifications shown in the following graph: It should be within specifications.

CAUTION: The sensor uses a thermistor which can be damaged if high current is applied to it during testing. Therefore, use a circuit tester that puts out a measuring current of 1 mA or less. (At the 20 kΩ range)

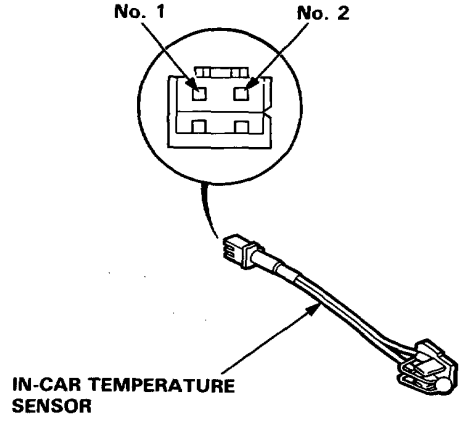

Resistance at 68°F (20°C): approx. 2 kΩ.

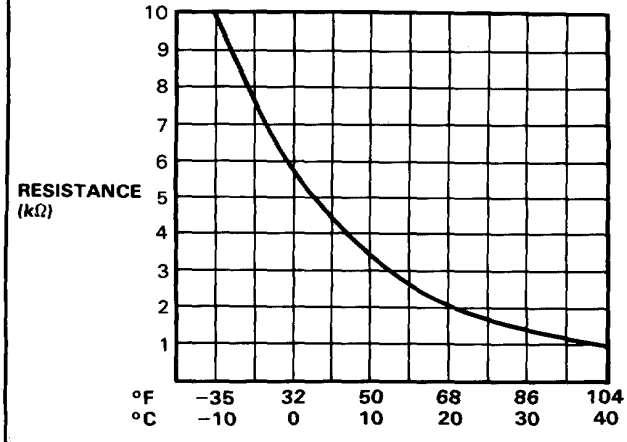

Outside Air Temperature Sensor

Removal

Remove the screw, disconnect the wire harness, then remove the outside air temperature sensor. Be careful not to damage the front grille and front bumper.

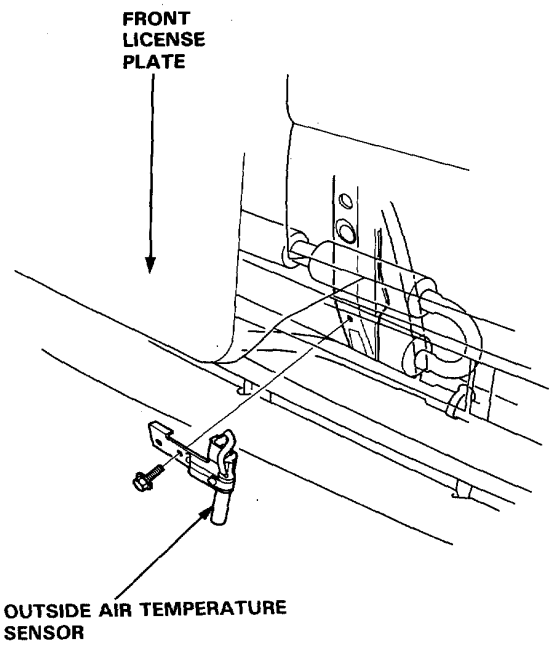

Test

Compare the resistance reading between terminals of the outside air temperature sensor with specifications shown in the following graph: It should be within specifications.

CAUTION: The sensor uses a thermistor which can be damaged if high current is applied to it during testing. Therefore, use a circuit tester that puts out a measuring current of 1 mA or less. (At 20 kΩ range)

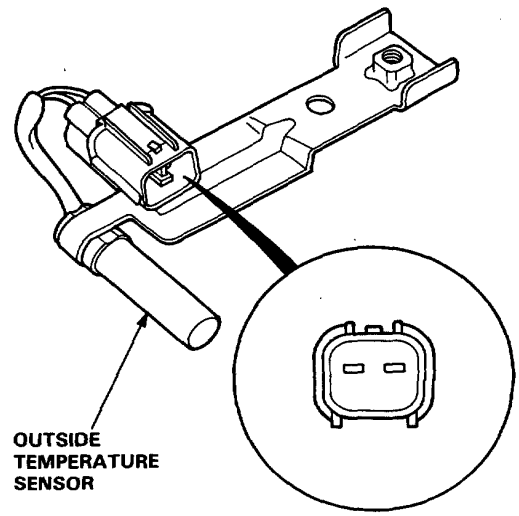

Resistance at 68°F (20°C): approx. 2 kΩ.

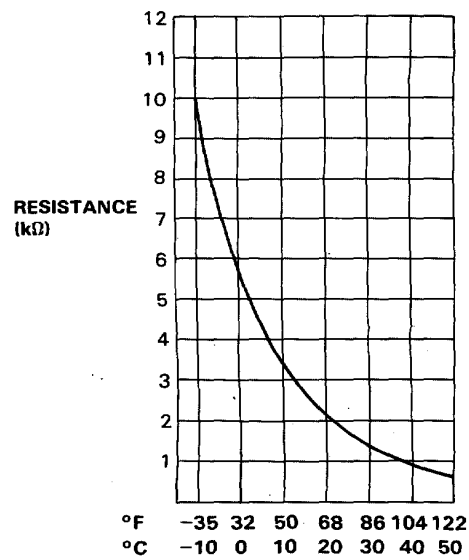

Sunlight Sensor

Removal

With a small screwdriver, carefully pry the sunlight sensor out of the dashboard and disconnect its wire harness. Protect the dashboard; cover it with a shop towel before you pry against it.

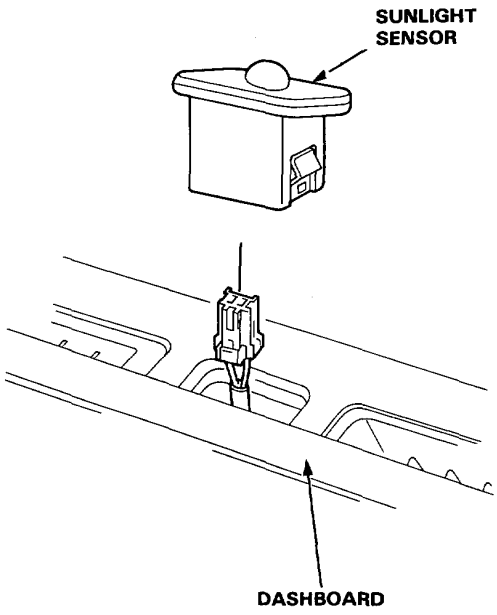

Test

Measure the voltage between the terminals with the sensor out of direct sunlight.

- **The voltage should be 1.4 ± 0.2 V.**

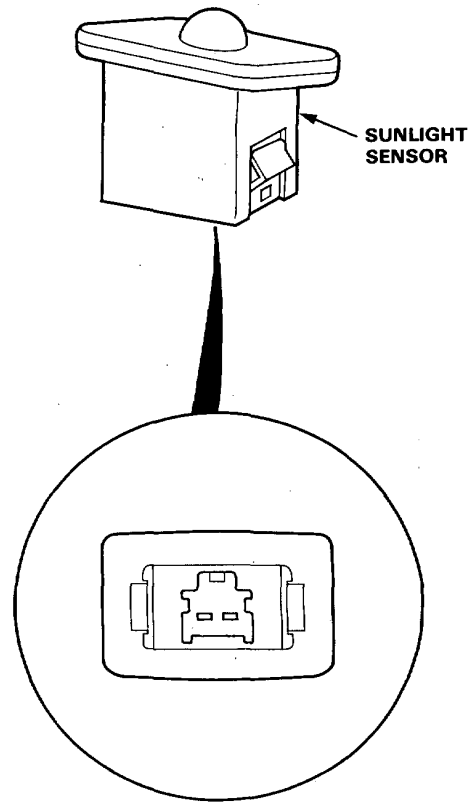

Relay Testing

Blower, Condenser, Radiator Fans

There should be continuity between the A and B terminals when the battery is connected to the C and D terminals.
There should be no continuity when the battery is disconnected.

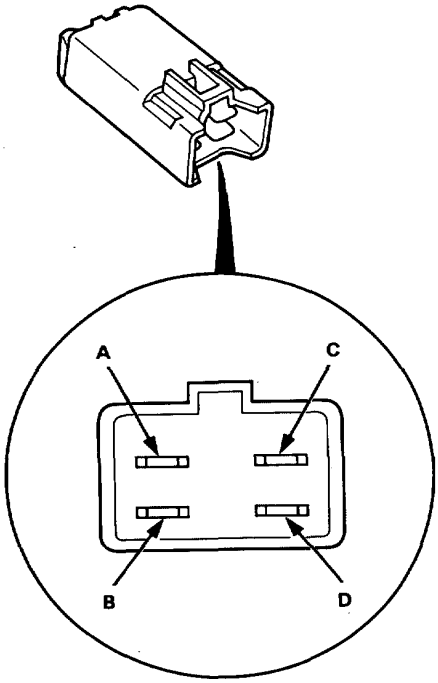

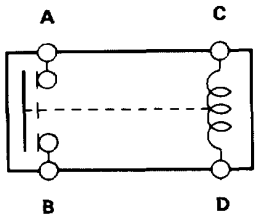

Fan Control

There should be continuity between the A and C terminals when the battery is connected to the D and E terminals. There should be no continuity when the battery is disconnect.

FAN CONTROL RELAY

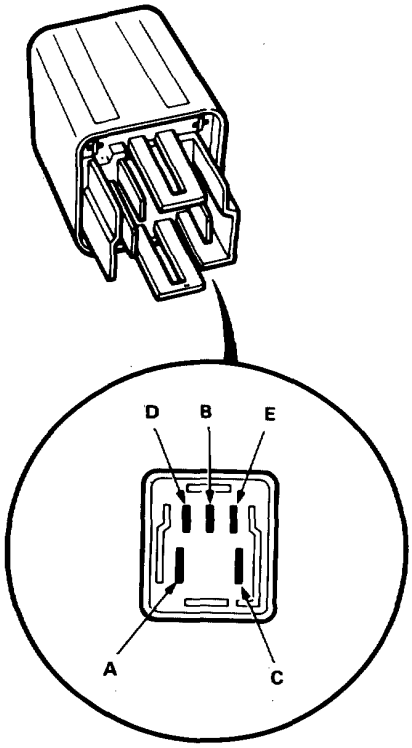

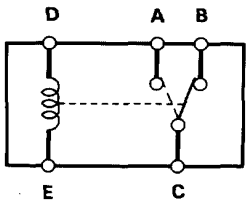

Power Transistor

Test

NOTE: The power transistor cannot be tested with ordinary circuit testers. If the blower motor does not operate and you feel that the problem may be the power transistor, test it as described below.

1. Check the blower motor and its wire harness.

   — If they are not OK, repair or replace them as necessary, then retest.

   — If they are OK, go to step 2.

2. Disconnect the wire harness from the power transistor. Pull out the LT GRN/BLK lead from the connector and connect a 1.2—3.4 watt bulb as shown. Then, reconnect the wire harness to the transistor.

   CAUTION:
   - **To avoid a loose or disconnected terminal, be careful not to damage the locking tab when disconnecting and connecting the terminal.**
   - **Insulate the LT GRN/BLK lead terminal from the body until the testing is completed.**

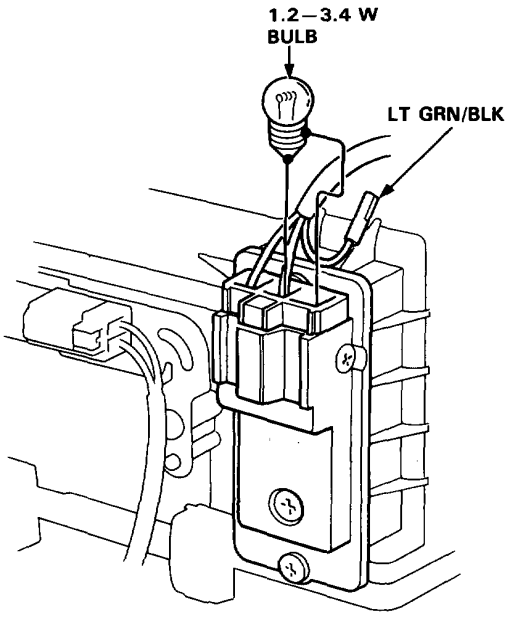

3. Turn the ignition on.

   — If the blower motor now operates, the controller is faulty. Replace it and retest.

   — If the blower motor still does not operate, the power transistor is faulty. Replace it and retest.

A/C Service Tips and Precautions

1. Always disconnect the negative cable from the battery whenever replacing air conditioner parts.
2. Keep moisture and dust out of the system. When disconnecting any lines, plug or cap the fittings immediately; don't remove the caps or plugs until just before you reconnect each line.
3. Before connecting any hose or line, apply a few drops of refrigerant oil to the O-ring.
4. When tightening or loosening a fitting, use a second wrench to support the matching fitting.
5. When discharging the system, use a refrigerant recovery system; don't release refrigerant into the atmosphere.
6. Add refrigerant oil after replacing the following parts:

Condenser	30 cc (1/2 fl oz)
Evaporator	60 cc (1/2 fl oz)
Line or hose	10 cc (1/3 fl oz)
Receiver	10 cc (1/3 fl oz)
Compressor	On compressor replacement, subtract the volume of oil drained from the removed compressor from 100 cc (3 fl oz), and drain the calculated volume of oil from the new compressor: 100 cc (3 fl oz) minus the Volume of oil from the removed compressor = Volume to drain from new compressor.

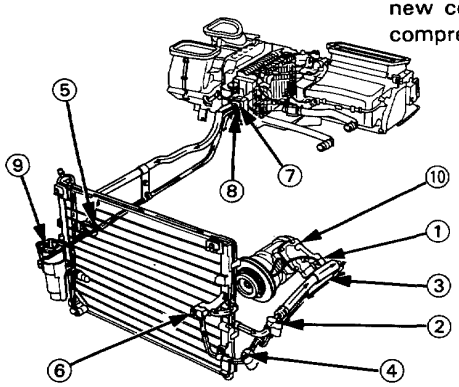

Don't overtighten fittings; you could damage them. Leaks are caused by faulty O-rings; overtightening won't stop them.

① Suction hose at the compressor
29 N·m (2.9 kg—21 lb-ft)
② Suction hose and suction line
9 N·m (0.9 kg—6.5 lb-ft)
③ Discharge hose at the compressor
29 N· (2.9 kg—21 lb-ft)
④ Discharge hose to the Discharge line
9 N·m (0.9 kg—6.5 lb-ft)
⑤ Suction line to suction line
10 N·m (1.0 kg—7.2 lb-ft)
⑥ Discharge hose at the condenser
29 N·m (2.9 kg—21 lb-ft)
⑦ Suction line at the heater unit
10 N·m (1.0 kg—7.2 lb-ft)
⑧ Receiver line at the heater unit
10 N·m (1.0 kg—7.2 lb-ft)
⑨ Receiver line at the receiver/dryer
10 N·m (1.0 kg—7.2 lb-ft)
⑩ Compressor mounting bolts
25 N·m (2.5 kg—18 lb-ft)

⚠ WARNING

When handling refrigerant (R-12):

- **Always wear eye protection.**
- **Do not let refrigerant get on your skin or in your eyes. If it does:**
  - **Do not rub your eyes or skin.**
  - **Splash large quantities of cool water in your eyes or on your skin.**
  - **Rush to a physician or hospital for immediate treatment. Do not attempt to treat it yourself.**
- **Keep refrigerant containers stored below 40°C (100°F).**
- **Do not handle or discharge refrigerant in an enclosed area near an open flame: it may ignite and produce a poisonous gas.**
- **Chlorine from chemicals called chlorofluorocarbons (CFCs) destroys the ozone in the stratosphere. Automotive air conditioning systems currently use chlorofluorocarbns as the refrigerant. Auto air conditioning service equipment has been developed to minimize the release of CFCs to the atmosphere. All service procedures should be performed using this equipment and the manufacturer's instructions.**

Discharge

⚠WARNING

- **Keep away from open flames. The refrigerant, although nonflammable, will produce a poisonous gas if burned.**
- **Work in a well-ventilated area. Refrigerant evaporates quickly, and can force all the air out of a small enclosed area.**

1. Connect a Refrigerant Recovery System to the A/C system.

2. Operate the Refrigerant Recovery System according to the manufacturer's instractions.
   IMPORTANT: Do not vent refrigerant to the atmosphere. The chlorofluorocarbons (CFCs) used in conventional refrigerant (R-12) may damage the earth's ozone layer.
   Always use UL-listed, refrigerant recovery/recycling equipment to extract the refrigerant before you open an A/C system to make repairs. Follow the equipment manufacturer's instructions.

Refrigerant Recovery/Recycling System.

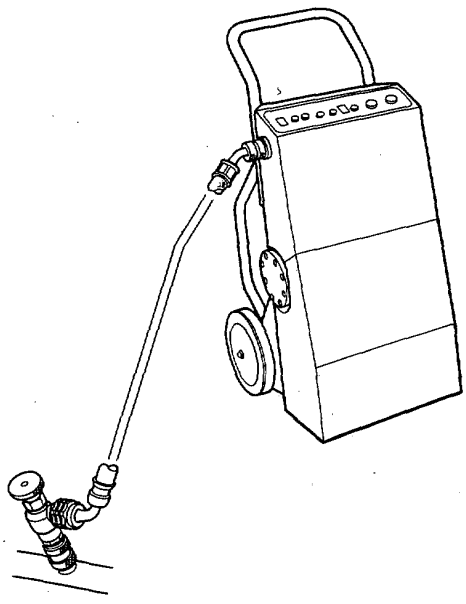

Performance Test

The performance test will help determine if the air conditioning system is operating within specifications.

1. Connect the hoses as shown.

2. Insert a thermometer in the vent outlet. Determine the relative humidity and air temperature by calling the local weather information line.

3. Test conditions:
   - Avoid direct sunlight.
   - Open engine cover.
   - Open front doors.
   - Set the temperature control dial to max cold and push the VENT and fresh air buttons.
   - Turn the fan switch to MAX.
   - Run the engine at 1,500 RPM.
   - No driver or passengers in vehicle.

4. After running the air conditioning for 10 minutes under the above conditions, read the delivery temperature from the thermometer in the dash vent and the high and low system pressure from the A/C gauges.

5. To complete the charts:
   - Mark the delivery temperature along the vertical line.
   - Mark the intake temperature (air temperature) along the bottom line.
   - Draw a line straight up from the air temperature to the humidity.
   - Mark a point one line above and one line below the humidity level. (10% above and 10% below the humidity level)
   - From each point, draw a horizontal line across to the delivery temperature.
   - The delivery temperature should fall between the two lines.
   - Complete the low side pressure test and high side pressure test in the same way.

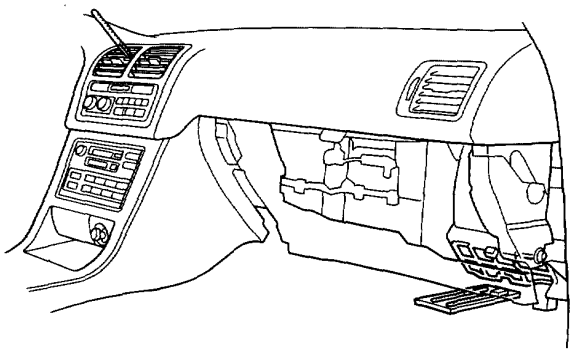

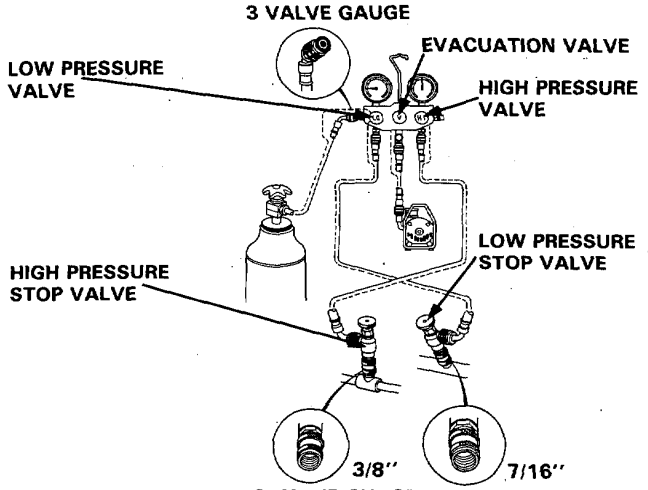

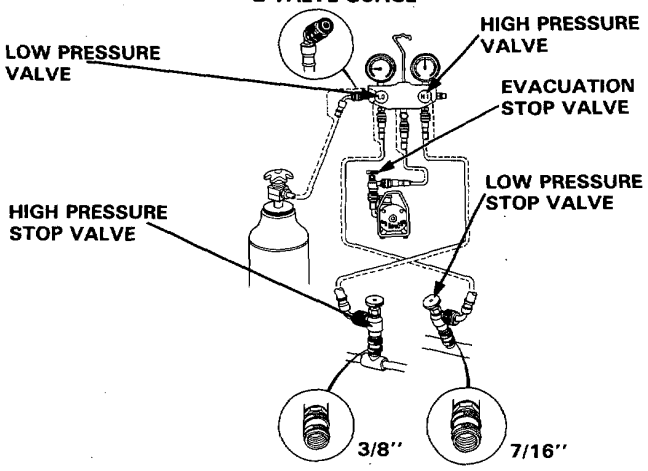

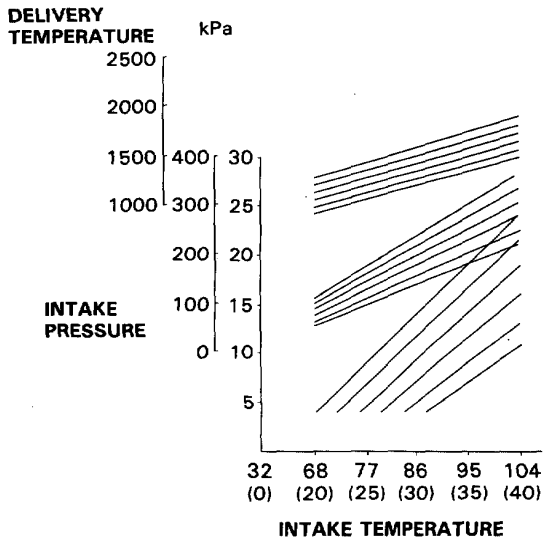

Pressure Test Chart

NOTE: Performance Test on next page.

TEST RESULTS	RELATED SYMPTOMS	PROBABLE CAUSE	REMEDY
Discharge (high) pressure abnormally high	After stopping compressor, pressure drops to about 196 kPa (28 psi) quickly, and then falls gradually	Air in system	Evacuate system: then recharge Evacuation: page 21-67 Recharging: page 21-68
	No bubbles in sight glass when condenser is cooled by water	Excessive refrigerant in system	Discharge refrigerant as necessary
	Reduced or no air flow through condenser	• Clogged condenser or radiator fins • Condenser or radiator fan not working properly	• Clean • Check voltage and fan rpm
	Line to condenser is excessively hot	Restricted flow of refrigerant in system	Expansion valve
Discharge pressure abnormally low	Excessive bubbles in sight glass; condenser is not hot	Insufficient refrigerant in system	• Check for leak • Charge system
	High and low pressures are balanced soon after stopping compressor	• Faulty compressor discharge or inlet valve • Faulty compressor seal	Replace
	Outlet of expansion valve is not frosted, low pressure gauge indicates vacuum	• Faulty expansion valve	Replace
Suction (low) pressure abnormally low	Excessive bubbles in sight glass: condenser is not hot	Insufficient refrigerant	Check for leaks. Charge as required.
	Expansion valve is not frosted and low pressure line is not cold. Low pressure gauge indicates vacuum	• Frozen expansion valve • Faulty expansion valve	Replace expansion valve
	Discharge temperature is low and the air flow from vents is restricted	Frozen evaporator	Run the fan with compressor off then check capillary tube.
	Expansion valve frosted	Clogged expansion valve	Clean or Replace
	Receiver dryer is cool (should be warm during operation)	Clogged receiver dryer	Replace
Suction pressure abnormally high	Low pressure hose and check joint are cooler than around evaporator	• Expansion valve open too long • Loose expansion valve	Repair or Replace.
	Suction pressure is lowered when condenser is cooled by water	Excessive refrigerant in system	Discharge refrigerant as necessary
	High and low pressure are equalized as soon as the compressor is stopped	• Faulty gasket • Faulty high pressure valve • Foreign particle stuck in high pressure valve	Replace compressor
Suction and discharge pressures abnormally high	Reduced air flow through condenser	• Clogged condenser or radiator fins • Condenser or radiator fan not working properly	• Clean condenser and radiator • Check voltage and fan rpm
	No bubbles in sight glass when condenser is cooled by water	Excessive refrigerant in system	Discharge refrigerant as necessary.
Suction and discharge pressure abnormally low	Low pressure hose and metal end areas are cooler than evaporator	Clogged or kinked low pressure hose parts	Repair or Replace
	Temperature around expansion valve is too low compared with that around receiver dryer	Clogged high pressure line	Repair or Replace
Refrigerant leaks	Compressor clutch is dirty	Compressor shaft seal leaking	Replace compressor
	Compressor bolt(s) are dirty	Leaking around bolt(s)	Tighten bolt(s) or replace compressor
	Compressor gasket is wet with oil	Gasket leaking	Replace compressor

Compressor

Description

The compressor is a Nippondenso piston type. A revolving inclined disc drives the surrounding 10 reciprocating pistons. As the inclined disc revolves, it pushes the pistons, protected by a ceramic shoe, thus compressing the refrigerant.

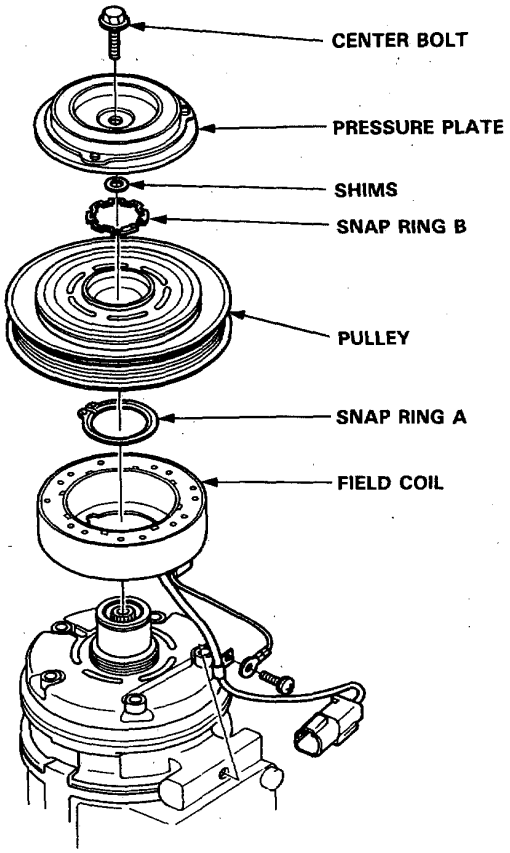

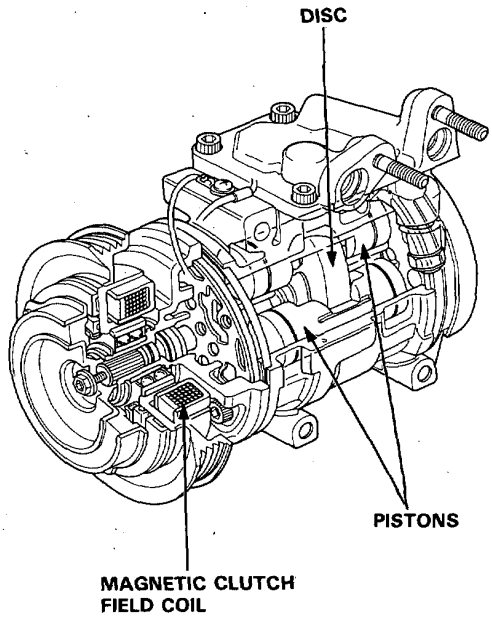

Replacement

1. If the compressor still works, run the engine at idle for a few minutes with the A/C ON, then shut the engine off and disconnect the regative cable from the battery.

2. Use a refrigerant recovery system to discharge the refrigerant from the systems (page 22-83)..

3. Disconnect the compressor connector.

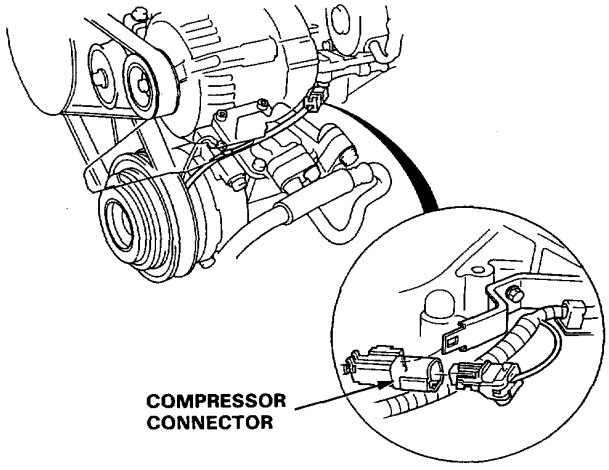

4. Raise the car on a hoist. Make sure it's properly supported (Section 1).

5. Disconnect the sections and discharge hoses from the compressor. Cap the open fitting immediately to keep moisture and dirt out of the system.

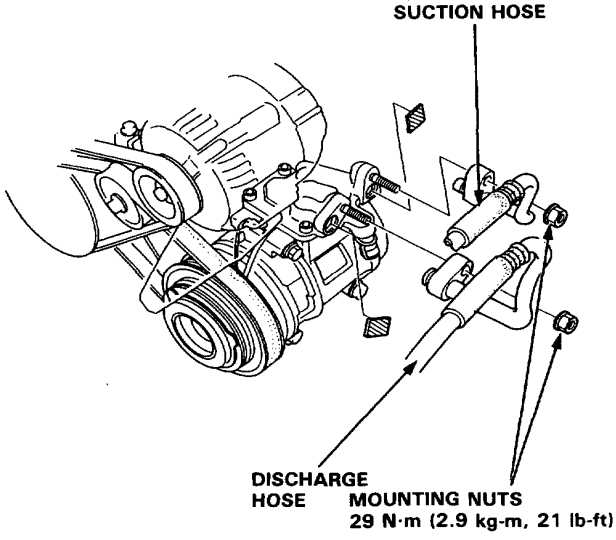

6. Loosen the idler pulley center nut and adjusting bolt, then remove the belt from the compressor.

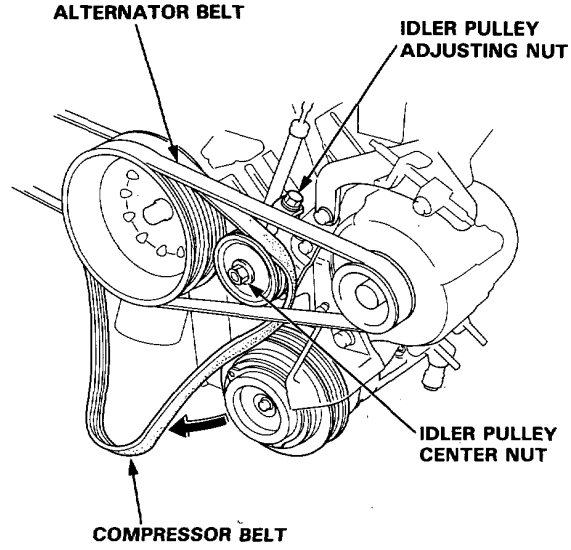

7. Support the front of the car on safety stands and remove the engine splash shield.

8. Remove the four compressor mounting bolts and the compressor.

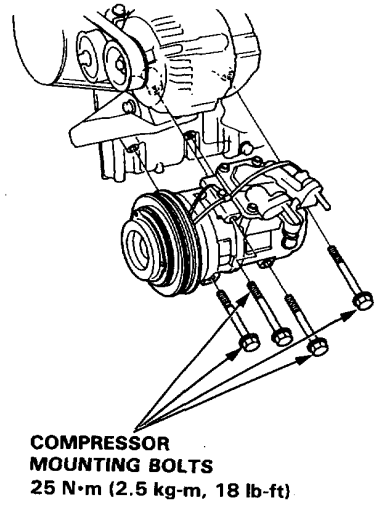

(cont'd)

Replacement (cont'd)

9. If necessary remove the idler pulley.

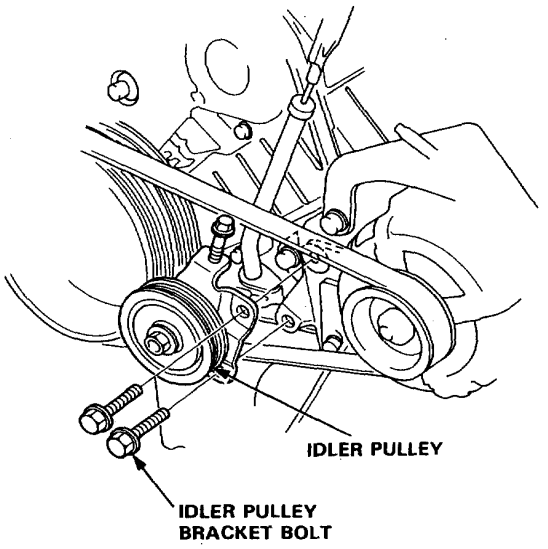

Check the idler pulley bearing for play and drag. Replace it with a new one if it's noisy or has excessive play or drag.

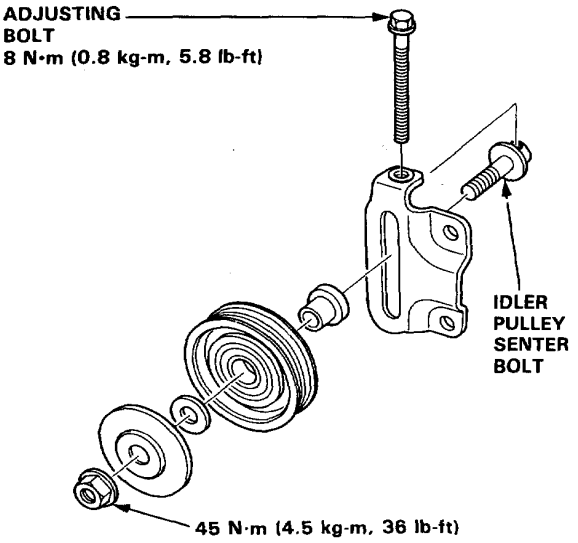

10. Install the compressor in the reverse order of removal. If you're installing a new compressor, drain all the refrigerant oil out of the old compressor and measure its volume.

11. Subtract the volume of old oil from 100 cc (3 floz); the result is the amount of oil you should drain from the new compressor (through he suction fitting).

12. Adjust the compressor belt (next page).
After adjusting the belt, tighten the pully center nut. Then tighten the adjuting bolt securely.

13. Charge the system (page 22-98).
Test system performance (page 22-84).

Compressor Belt Adjustment

1. Loosen the idler pulley center nut and the adjusting bolt.

2. Adjust the compressor belt tension by turning the adjusting bolt.

3. Tighten the pulley center nut, then tighten the adjusting bolt securely.
   - "New belt" refers to a belt which has been used less than 5 minutes on a running engine.
   - "Used belt" refers to a belt which has been used on a running engine for 5 minutes or more.

NOTE:
Check for belt damage. If necessary, replace the belt.

Belt movement under a force of 100N (10 kg, 22 lb)	
New belt	Used belt
0.30~0.26 in 5.0~6.5 mm	0.32~0.40 8.0~10.0 mm

Belt tension (kg)	
New belt	Used belt
80~100	40~60

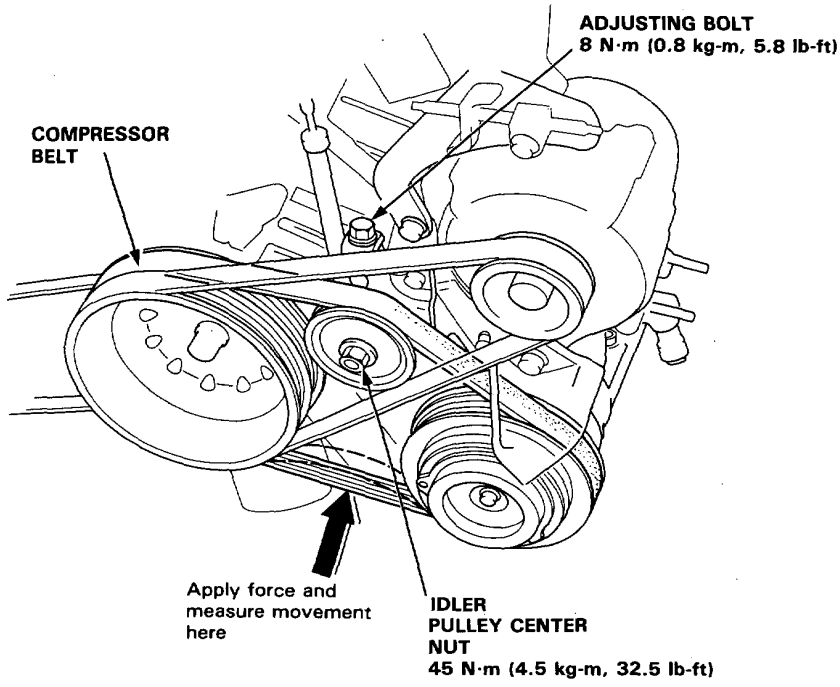

Clutch Inspection

1. Check pulley bearing play and drag by rotating the pulley by hand. Replace the pulley with a new one if it is noisy or has excessive play/drag.

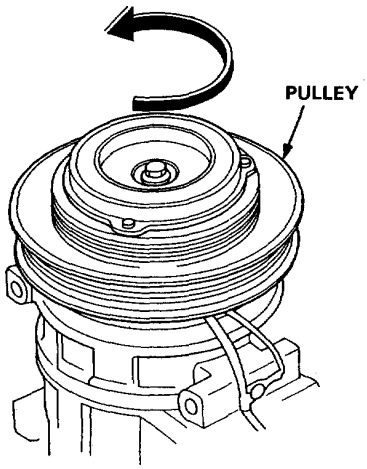

2. Check resistance of the field coil:

   Field Coil Resistance: 3.6 ± 0.2 ohm at 20°C (68°F)

   If resistance is not within specifications replace the coil.

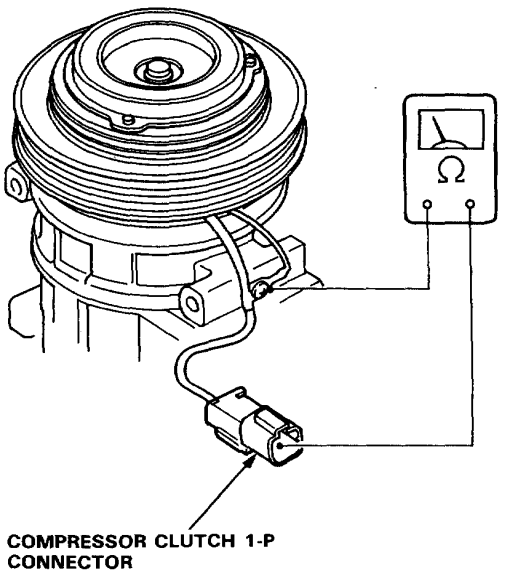

3. Measure the clearance between the pulley and pressure plate all the way around. If the clearance is not within specified limits, the pressure plate must be removed and shims added or removed as required, following the procedure on the next page.

   CLEARANCE: 0.5 ± 0.15 (0.020 ± 0.006 in)

   NOTE:
   The shims are available in three sizes: 0.1 mm, 0.2 mm and 0.5 mm thick.

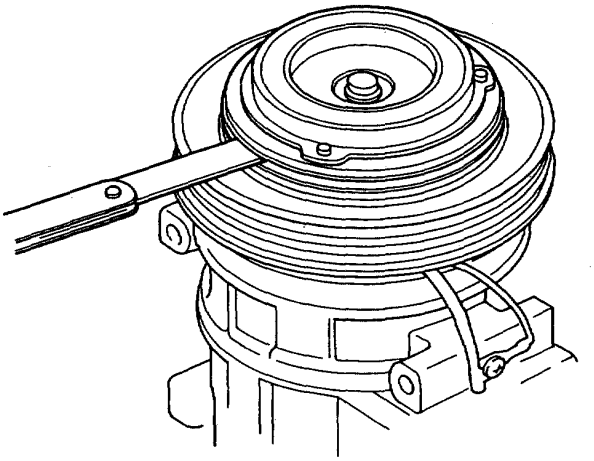

Replacement/Overhaul

1. Remove the center bolt.

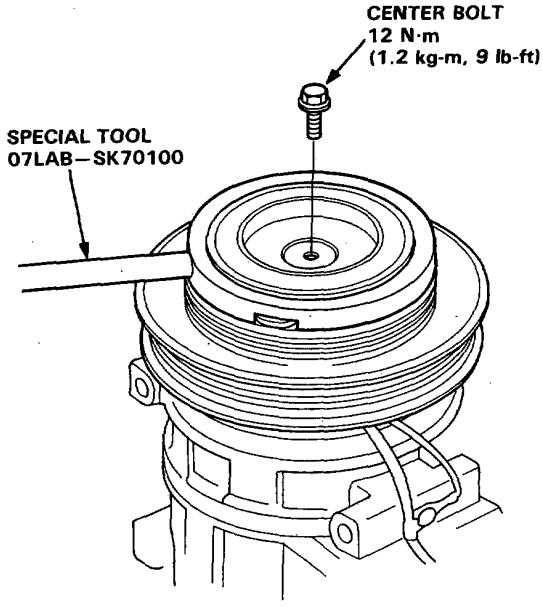

2. Remove the pressure plate and shim(s) taking care not to lose the shims.

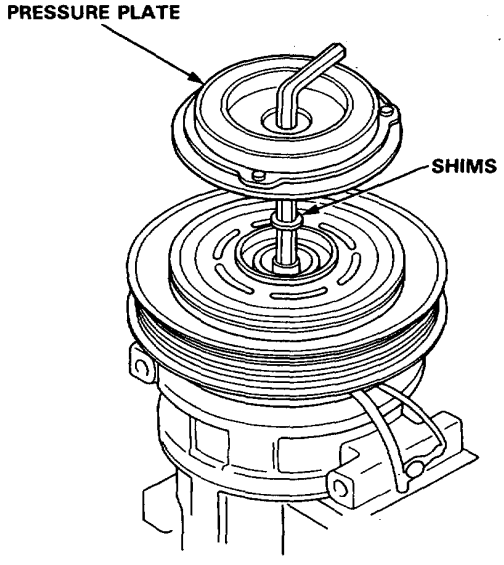

3. Use circlip pliers to remove snap ring B, then remove the pulley.

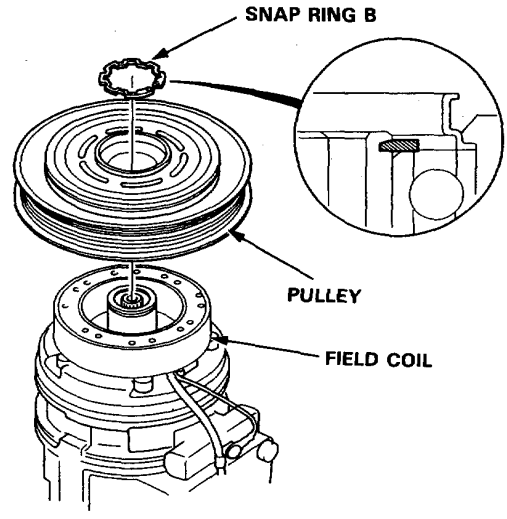

4. Remove snap ring A and the field coil.

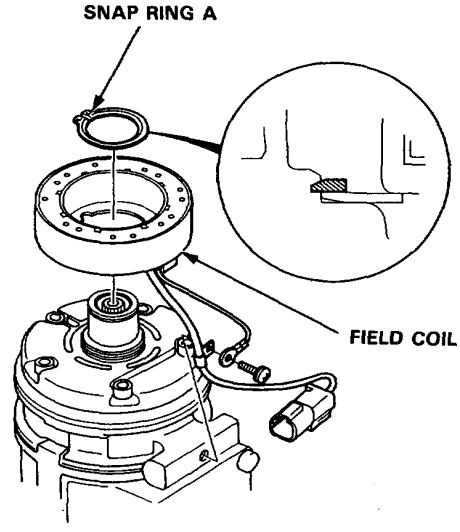

(cont'd)

Clutch Replacement/Overhaul (cont'd)

5. Install parts in the reverse order of removal, and:
   - Install the field coil with the wire side facing up (see step 4).
   - Clean the pulley and compressor sliding surfaces with non-petroleum solvent.
   - Check the pulley bearings for excessive play.
   - Make sure the circlip fits in its groove properly.
   - Apply locking agent to the threads on the center bolt.
   - Make sure that the pulley turns smoothly, after it's reassembled.

Relief Valve Replacement

1. Remove the relief valve and O-ring.
   Don't let any compressor oil run out.

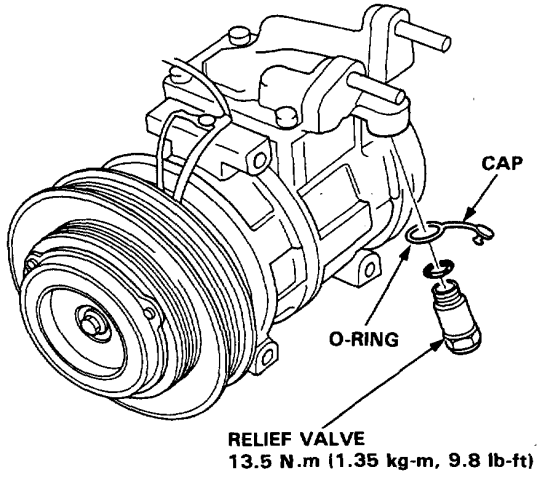

2. Clean off the O-ring seating surface.
3. Apply compressor oil to the new O-ring.
4. Install and tighten the relief valve.
5. Charge the system and check for leaks, then push the cap into the valve.

Condenser

Replacement

1. Use a refrigerant recovery system to discharge the refrigerant (page 22-83).

2. Remove the battery and battery tray.

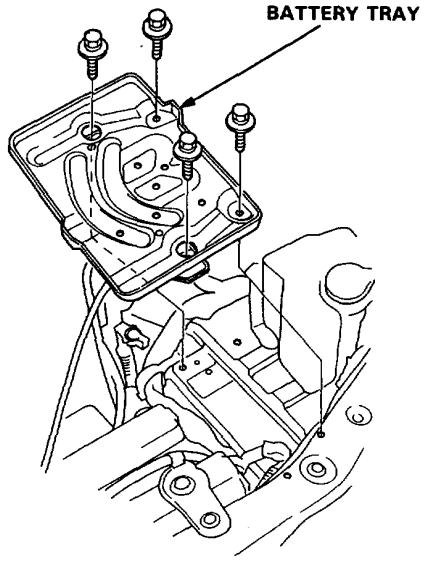

3. Remove the air intake duct.

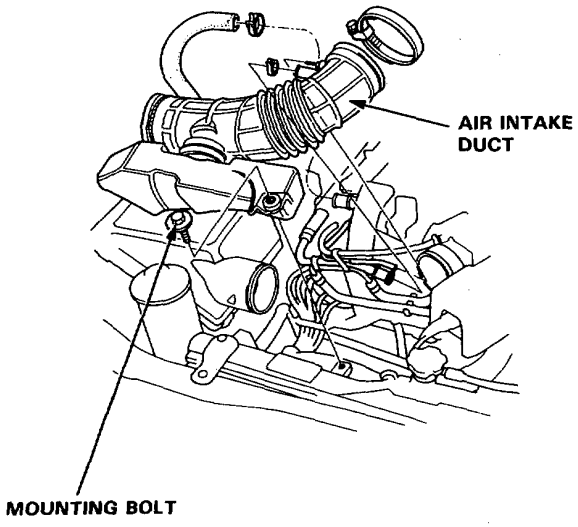

4. Remove the throttle cable cover (2 bolts).

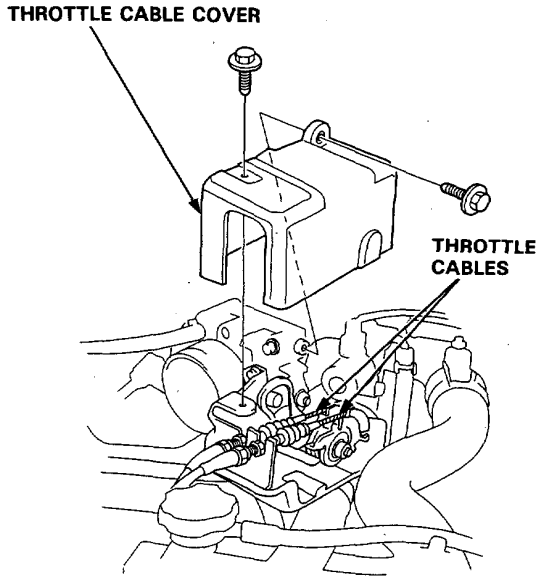

5. Loosen their locknut's and remove the throttle cables from the cable holder.
   Then disconnect the cables from the throttle drum.

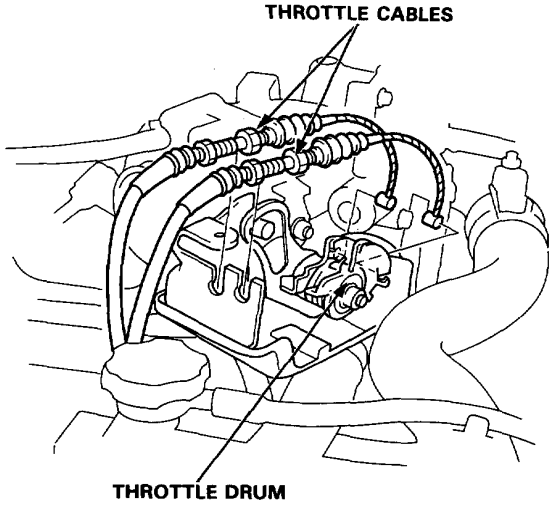

(cont'd)

Replacement (cont'd)

6. Remove the bolt from the suction hose fitting.

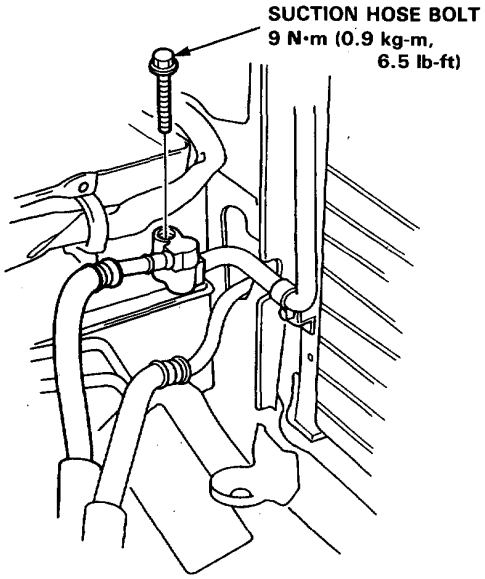

7. Remove the bolt holding suction line A and suction line B together.

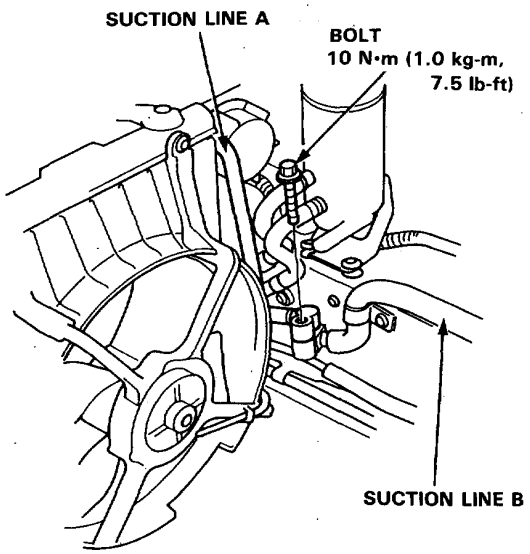

8. Remove the receiver/dryer mounting nuts. Remove the receiver/dryer pipe line bolt.

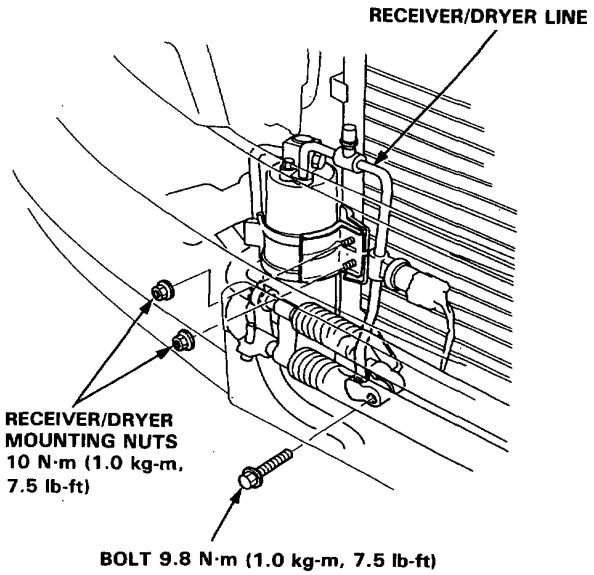

9. Remove the discharge line fitting bolt and the clamp bolt.

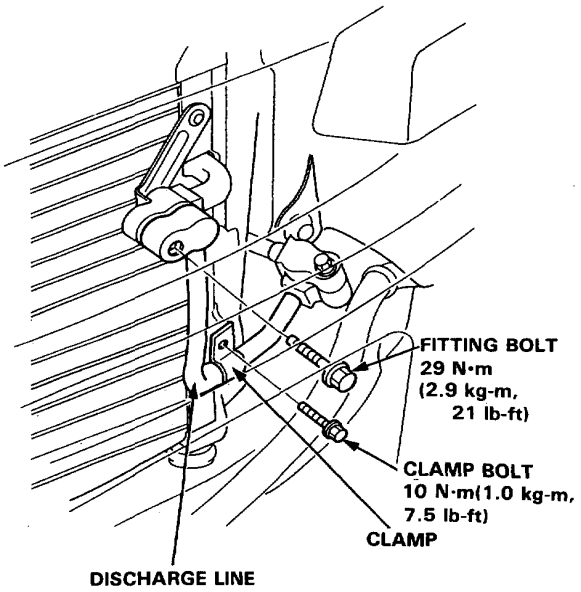

10. Remove the under-hood relay box A and upper condenser fan bolt as shown.

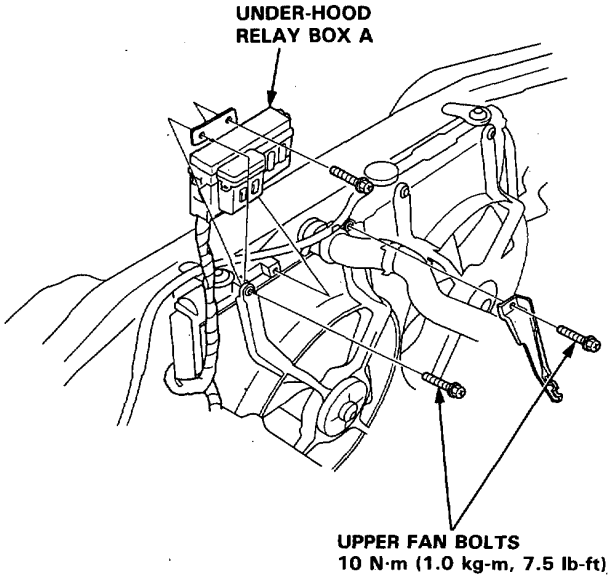

11. Disconnect the condenser fan connector, then remove the lower mounting bolts and the condenser fan.

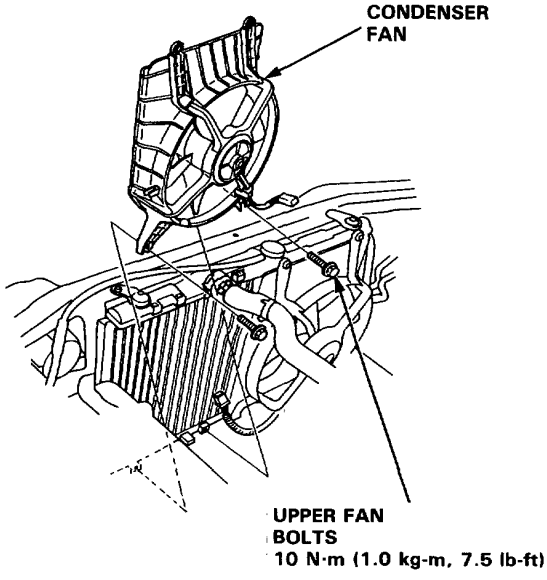

12. Remove the condenser mount brackets as shown.

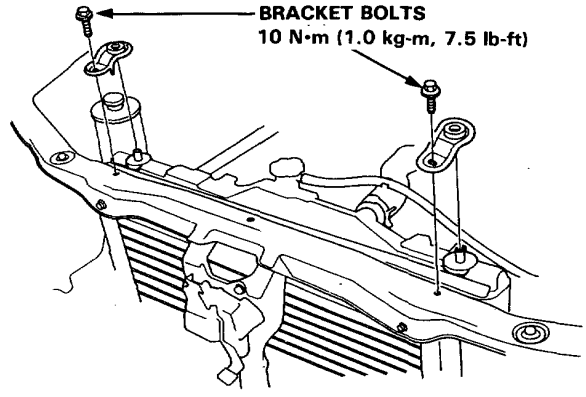

13. Remove the condenser mounting nuts, then, lift out the condenser as shown.

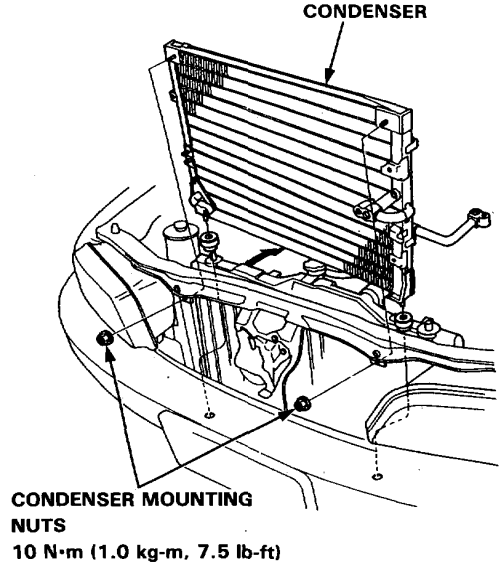

14. Install the condenser in reverse order of removal, and:
    - Replace all O-rings with new ones.
    - Change the system (page 22-98) and test its performance (page 22-84).

System Evacuation

The following are the procedures to be adhered to when servicing air conditioners to reduce the amount of Fron R-12 into the atmoshpere.

1. When an A/C System has been opened to the atmosphere, such as during installation or repair, it must be evacuated using a vacuum pump. (If the system has been open for several days, the receiver/dryer should be replaced).
2. Connect a gauge, pump and refrigerant containers (recovery tank of R-12) as shown.
   NOTE: Do not open the recovery tank.
3. Start the pump, then open the both pressure valves, both pressure stop valves and evacuation valve (2 valve gauge: evacuation stop valve). Run the pump for about 15 minutes. Close the both pressure valves and evacuation valve (2 valve gauge: evacuation stop valve) and stop the pump. The low gauge should indicate above 700mmHg (27 in-Hg) and remain steady with the valves closed.
   NOTE: If low pressure does not reach more than 700 mmHg (27 in-Hg) in 15 minutes, there is probably a leak in the system. Check for leaks, and repair (see Leak Test).
4. If there are no leaks open the valves and continue pumping for at least another 15 minutes, then close both valves, stop the pump.

3 VALVE GAUGE

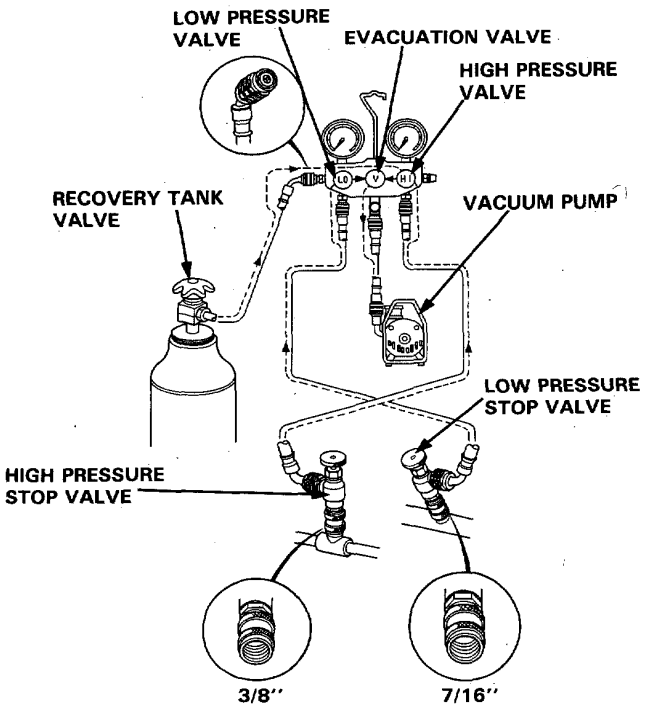

2 VALVE GAUGE

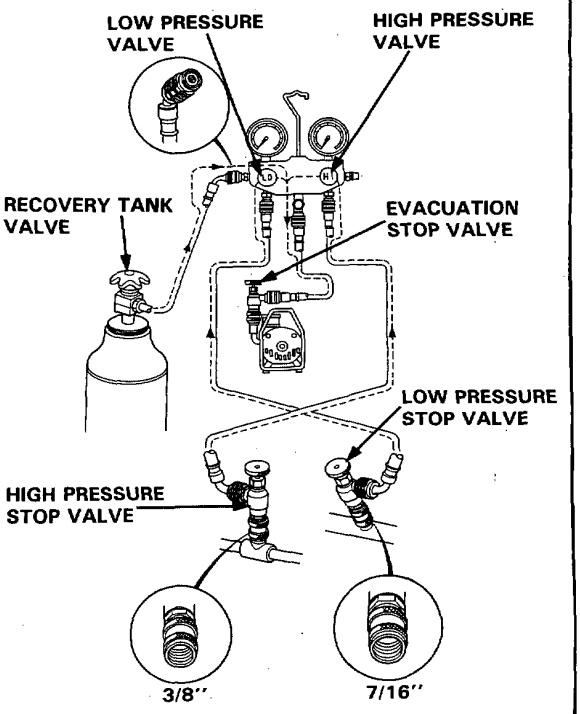

Leak Test

The following are the procedures to be adhered to when servicing air conditioners to reduce the amount of Fron R-12 into the atmoshpere.

⚠WARNING When handling refrigerant (R-12):

- **Always wear eye protection.**
- **Do not let refrigerant get on your skin or in your eyes. If it does:**
  - **Do not rub your eyes or skin.**
  - **Splash large quantities of cool water in your eyes or on your skin.**
  - **Rush to a physician or hospital for immediate treatment. Do not attempt to treat it yourself.**
- **Keep refrigerant containers stored below 40°C (100°F)**
- **Keep away from open flame. Refrigerant, although non-flammable, will produce poisonous gas if burned.**
- **Work in well-ventilated area. Refrigerant evaporates quickly, and can force all the air out of a small, enclosed area.**

NOTE: Check for leaks after evacuation.

1. Close the evacuation valve (2 valve gauge; evacuation stop valve).
2. Open the recovery tank.
3. Open high pressure valve to charge the system to about 100 kPa (14 psi), then close the supply valve. NOTE: Close the low pressure valve.
4. Check the system for leaks using a leak detector. NOTE: Particularly check for leaks around the compressor, condenser, and receiver-dryer.
5. If you find any leaks, tighten the joint nuts and bolts to the specified torque.
6. Recheck the system for leaks using a leak detector.
7. If you find leaks that require the system to be opened (to repair or replace hoses, fittings, etc.), release any charge in the system according to the Discharge Procedure on page 22-83.
8. After checking and repairing leaks, the system must be evacuated (see System Evacuation on page 22-96).

3 VALVE GAUGE

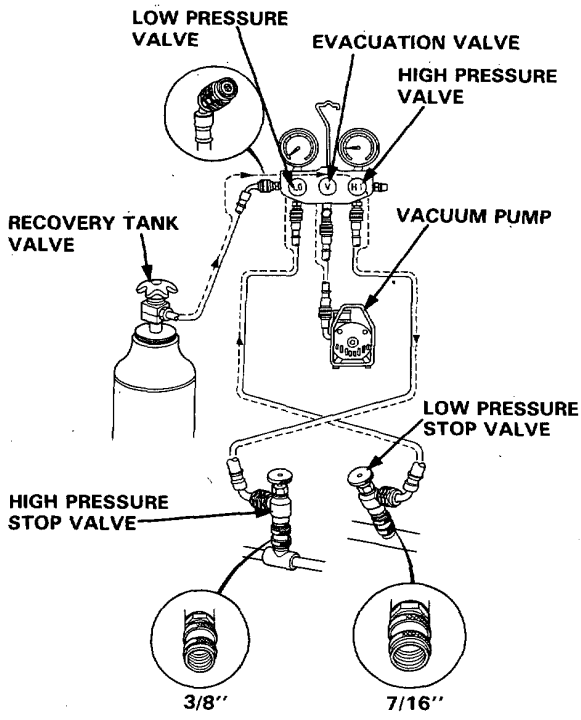

2 VALVE GAUGE

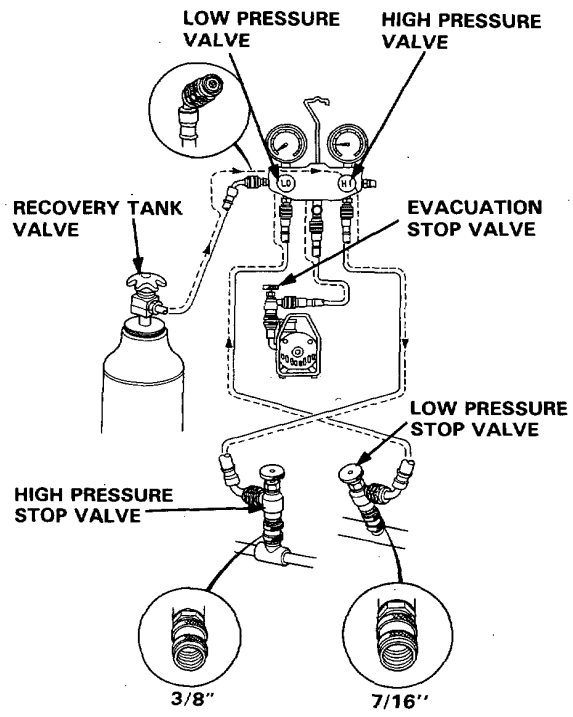

Charging Procedures

The following are the procedures to be adhered to when servicing air conditioners to reduce the amount of Fron R-12 into the atmoshpere.

⚠WARNING When handling refrigerant (R-12):

- **Always wear eye protection.**
- **Do not let refrigerant get on your skin or in your eyes. If it does:**
  - **Do not rub your eyes or skin.**
  - **Splash large quantities of cool water in your eyes or on your skin.**
  - **Rush to a physician or hospital for immediate treatment. Do not attempt to treat it yourself.**
- **Keep refrigerant containers stored below 40°C (100°F)**
- **Keep away from open flame. Refrigerant, although non-flammable, will produce poisonous gas if burned.**
- **Work in well-ventilated area. Refrigerant evaporates quickly, and can force all the air out of a small, enclosed area.**

CAUTION: Do not overcharge the system; the compressor will be damaged.

1. After leak test, check that the high pressure valve is closed and start the engine.
   NOTE: Run the engine below 1500 rpm.
2. Open the front door.
   Turn the A/C switch on.
   Turn the air mix dial (lever) to COOL.
   Turn function control switch (lever) on .
   Turn the heater fan switch on "E" (MAX).
3. Open the low pressure valve and charge with refrigerant.

⚠WARNING

- **Do not open the high gauge valve.**
- **Do not turn the cans upside down.**

4. Charge the system with refrigerant capacity.
   Refrigerant capacity: 700—750 g (24—26 oz)
   * Measure the charged refrigerant capacity using a weighing instrument.
5. When fully charged, close the low pressure valve and the refrigerant cans. Check the system.
6. Close the high pressure stop valve.
7. Open the low pressure valve and gradually open the high pressure valve. When both pressure gauge are the same, close the low pressure stop valve and stop the engine.
8. Disconnect the charge hose quickly.
9. Check the system for leaks using a leak detector.
   NOTE: Particularly check for leaks around the compressor, condenser, and receiver-dryer.

3 VALVE GAUGE

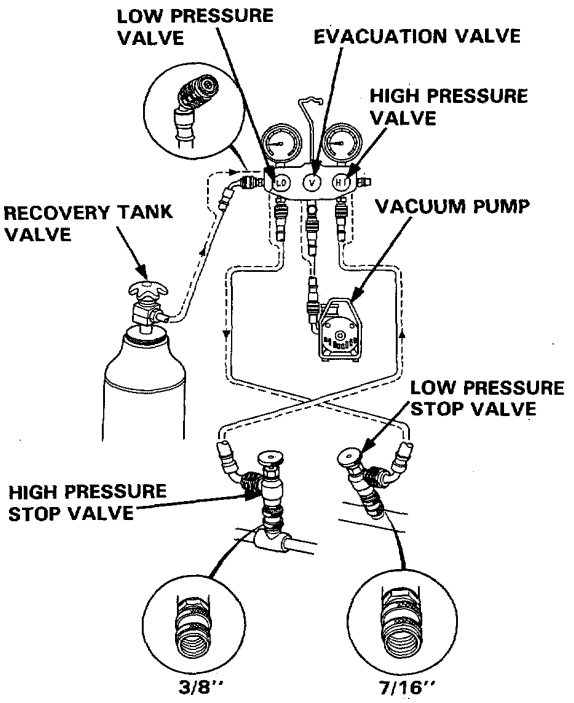

2 VALVE GAUGE

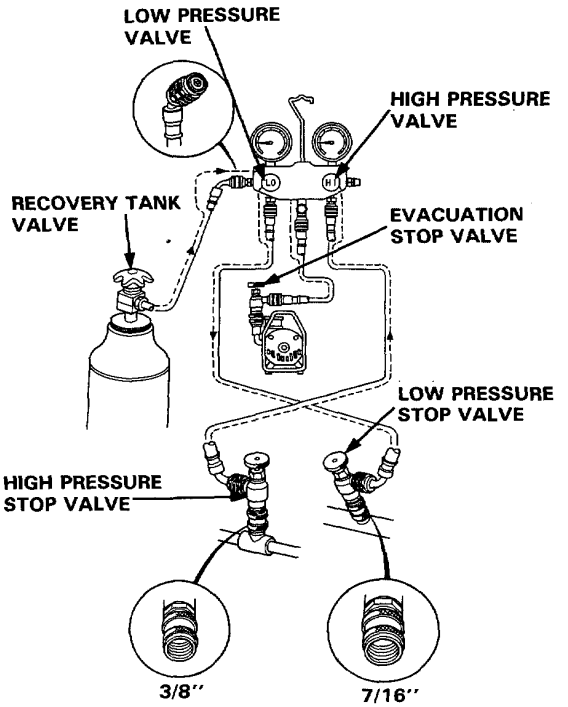

The following are the procedures to be adhered to when servicing air conditioners to reduce the amount of Fron R-12 into the atmoshpere.

⚠WARNING When handling refrigerant (R-12):

- **Always wear eye protection.**
- **Do not let refrigerant get on your skin or in your eyes. If it does:**
  - **Do not rub your eyes or skin.**
  - **Splash large quantities of cool water in your eyes or on your skin.**
  - **Rush to a physician or hospital for immediate treatment. Do not attempt to treat it yourself.**
- **Keep refrigerant containers stored below 40°C (100°F)**
- **Keep away from open flame. Refrigerant, although non-flammable, will produce poisonous gas if burned.**
- **Work in well-ventilated area. Refrigerant evaporates quickly, and can force all the air out of a small, enclosed area.**

CAUTION: Do not overcharge the system; the compressor will be damaged.

1. Connect the gauge as shown, close both pressure stop valves. Purge air from the charge hose A, then loosen the stop valve connector.
2. Attach a pump and refrigerant containers as shown.
   NOTE: Do not open recovery tank.
3. Open both pressure valves and evacuation valve (2 valve gauge: evacuation stop valve), start the pump. The low gauge should indicate above 700 mmHg (27 in-Hg), then run the pump about 1 minute.
4. Close both pressure valves and evacuation valve (2 valve gauge: evacuation stop valve). Open both pressure stop valve.
5. Start the engine and turn on A/C switch.
6. Stop the engine and check for leaks using a leak detector.
   NOTE: Particularly check for leaks around the compressor, condenser, and receiver-dryer.
7. Test the system using the pressure test and inspection data.
   Test condition:
   - Start the engine.
   - Turn the air mix dial (lever) to COOL.
   - Turn the function control switch (lever) on .
   - Turn the recirculation control switch on .
   - Turn the heater fan switch on "E" (MAX).

   If there is insufficient refrigerant in system, continue to charge system.
8. Open one or two cans, open the low pressure gauge. Charge the system until there are no bubbles in the sight glass.

⚠WARNING

- **Do not open the high gauge valve.**
- **Do not turn the cans upside down.**

9. After adding supplemental refrigerant, close the high pressure stop valve. Open the low pressure valve and gradually open the high pressure valve. When pressure gauges read same, close the low pressure stop valve and stop the engine.
10. Disconnect the charge hose quickly.
11. Check the system for leaks using a leak detector.

3 VALVE GAUGE

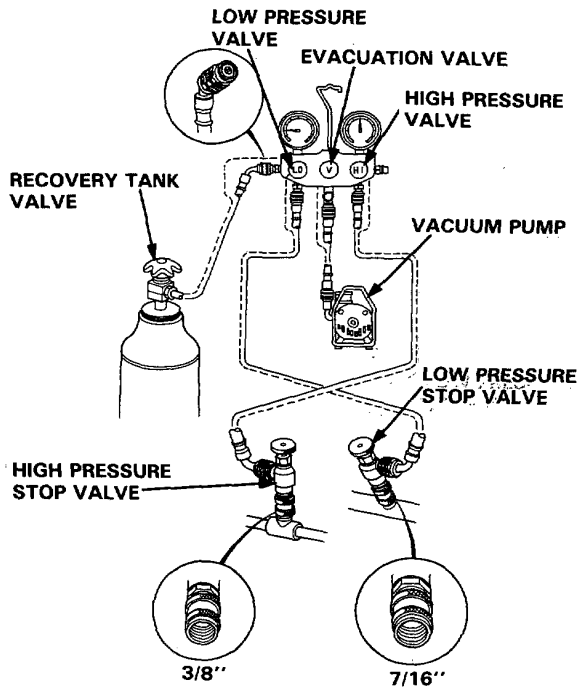

2 VALVE GAUGE

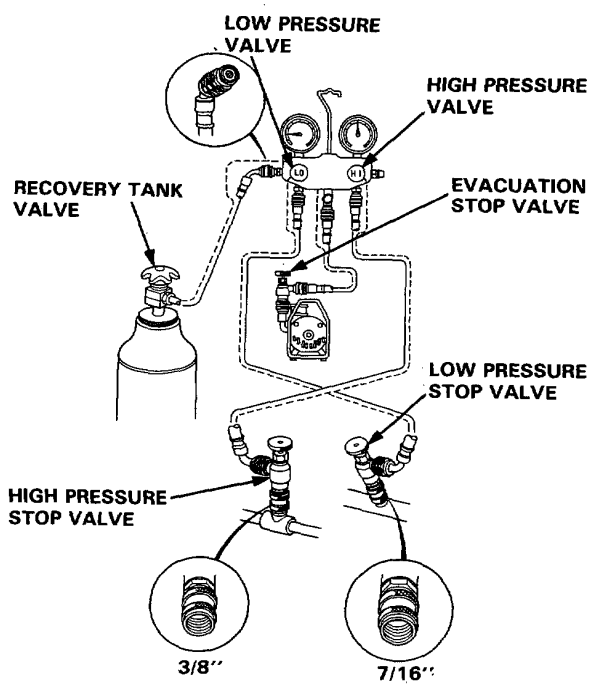

SUPPLEMENTAL RESTRAINT SYSTEM (SRS) (if electrical maintenance is required)

The Legend includes a driver's side Airbag, located in the steering wheel hub. Information necessary to safely service the SRS is included in this Shop Manual. Items marked * in each section table of contents include, or are located near, SRS components. Servicing, disassembling or replacing these items will require special precautions and tools, and should therefore be done only by an authorized HONDA dealer.

⚠ WARNING

- **To avoid rendering the SRS inoperative, which can lead to personal injury or death in the event of a severe frontal collision, all maintenance must be performed by an authorized HONDA dealer.**
- **Improper maintenance, including incorrect removal and installation of the SRS, can lead to personal injury caused by unintentional activation of the Airbag.**
- **All SRS electrical wiring harnesses are covered with yellow outer insulation. Related components are located in the steering column, center armrest and dashboard lower panel. Do not use electrical test equipment on these circuits.**

Electrical

Special Tools 23-2

How to Use This Section

Troubleshooting Precautions 23-3
Five-step Troubleshooting 23-8
Schematic Symbols 23-9
Wire Color Codes 23-9
Relays and Control Unit Locations
  Engine Compartment 23-10
  Dashboard 23-12
  Dashboard, Door and Floor 23-18
  Roof and Rear Bulkhead 23-21

Index to Circuits and Systems

Air Conditioner ..... Section 21
Alternator 23-118
Antenna, Power 23-259
Anti-Lock Brake System ..... Section 19
Automatic Transmission
  Control System ..... Section 14
Battery 23-80
Blower Controls ..... Section 21
Charging System 23-118
Cigarette Lighter 23-274
Clock 23-272
* Cruise Control 23-376
Defogger, Rear Window 23-277
Fuel Pump ..... Section 11
* Fuse Box 23-42
Fuse/Relay Box 23-46
Fuel Injection System ..... Section 11
* Gauges
  Circuit Diagram 23-142
  Coolant Temperature Gauge 23-156
  Fuel Gauge 23-154
  Speedometer 23-146
  Tachometer 23-146
Grounds
  Distribution 23-66
  Locations 23-22
* Heater Controls ..... Section 21
* Horns 23-262
* Ignition Switch 23-86
Ignition System..... 23-108
Ignition Timing Control 23-112
Indicators
  * High Beam Indicator 23-142
  * Safety Indicator 23-171
  * Shift Lever Position Indicator 23-164
  * Turn Signal Indicator 23-251
Integrated Control Unit 23-184
Lights, Exterior
  Back-up Lights 23-247
  Front Side Marker Lights 23-225
  Hazard Lights 23-249
  Headlights-Adjustment 23-219
  Brake Lights 23-243
  License Plate Lights 23-226
  Parking Lights 23-225
  Rear Fog Light 23-228
  Rear Side Marker Lights 23-227
  Taillights 23-227
  Turn Signal Lights 23-250
Lights, Interior
  Coutesy Lights 23-233
  Dashlights Brightness Control 23-229
  Dome Lights 23-236
  Entry Light Timer System 23-233
  Front Spot Lights 23-236
  Glove Box Light 23-242
  Rear Spot Lights 23-237
  Trunk Light 23-241
  Vanity Mirror Lights 23-242
* Lighting System 23-202
Locks, Power 23-303
Mirrors, Power 23-282
Oil Level Warning System 23-160
Opener, Trunk 23-268
Power Relay Inspection 23-82
Power Distribution 23-48
Radiator and Condenser Fan
  Controls 23-130
Relay Locations 23-10
Seats, Power 23-316
Seats, Heater 23-354
Security Alarm System 23-389
Spark Plugs 23-116
Speed Alarm System 23-163
Starting System 23-90
* Stereo Sound System 23-225
Sunroof 23-286
* Supplemental Restraint system
  (SRS) 23-406
Side Marker/Turn Signal/Hazard
  Flasher System 23-249
Washer
  Headlights 23-360
  Windshield 23-360
Windows, Power 23-292
Wipers, Windshield 23-360
* Wires, Harnesses and Connectors
  Wire Color Codes 23-9
  Wire Harness Routing 23-22
  Wiring Diagrams 23-438

*: Read SRS precautions on page 1-30, then install short connectors on the airbag before working in these areas.

Special Tools

Ref. No.	Tool Number	Description	Qty	Page Reference
①	07JGG–0010100	Belt Tension Gauge	1	23-128
②	07MAZ–SL00500	Test Harness A	1	23-417
③	07MAZ–SP00500	Test Harness B	1	23-419
④	07MAZ–SP00600	Test Harness C	1	23-422
⑤	07LAZ–SL40400	Test Harness D	1	23-420
⑥	07HAZ–SG00500	Deployment Tool	1	23-428
⑦	07MAJ–SP00200	Keyless Entry Checker	1	23-314

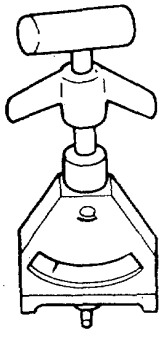

①

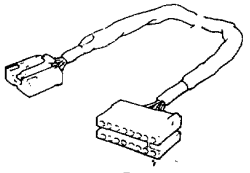

②

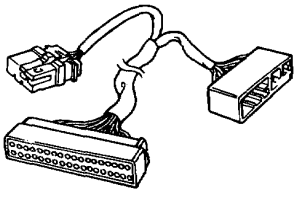

③

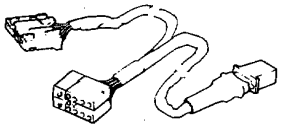

④

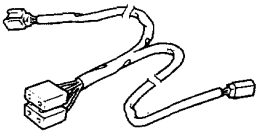

⑤

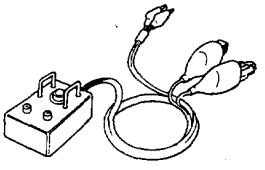

⑥

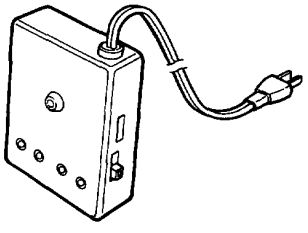

⑦

Troubleshooting Precautions

Before Troubleshooting

- Check the main fuse and the fuse box.
- Check the battery for damage, state of charge, and clean and tight connections.
- Check the alternator belt tension.

CAUTION:

- **Do not quick-charge a battery unless the battery ground cable has been disconnected, or you will damage the alternator diodes.**
- **Do not attempt to crank the engine with the battery ground cable connected incompletely or you will severely damage the wiring.**

While You're Working

- Make sure connectors are clean, and have no loose pins or receptacles.
- Make sure multiple pin connectors are packed with grease (except watertight connectors).

Since new type connectors are used, connection and disconnection of them should be done paying attention to the following precautions.

- Because all the connectors except terminal of 1-P are equipped with push-down type locks, unlock them first before disconnecting the connectors.
- On the connectors installed on the bracket a pull type lock is equipped between the bracket and the connector.
  Some connectors of this type can not be disconnected unless they are removed from their brackets. When disconnecting, check their shapes.
- On the bracket mounted connector with dual locks, remove the connector from the bracket before disconnecting.

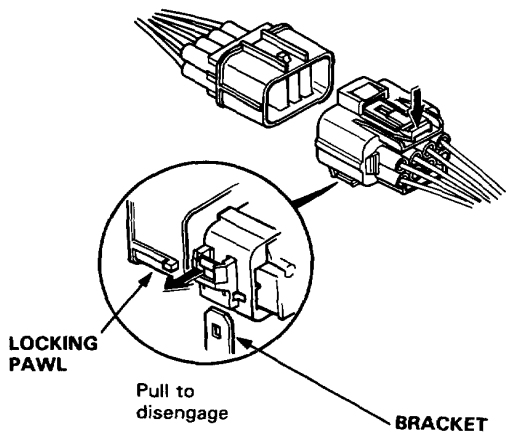

- Push the locking tab to disconnect.

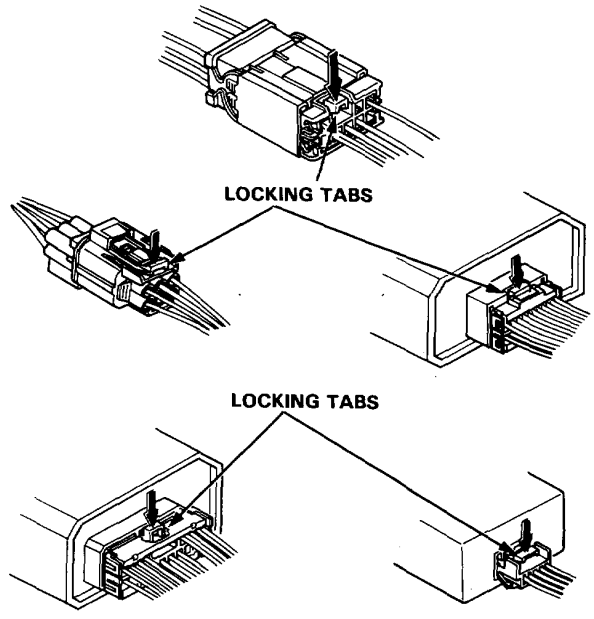

(cont'd)

Troubleshooting Precautions (cont'd)

- Pull the locking tab to remove the connector from the bracket.

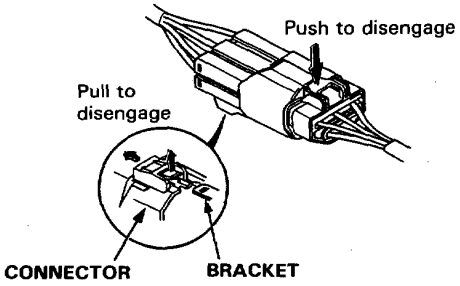

- When disconnecting locks, first press in the connector tightly (to provide clearance to the locking device), then operate the tab fully and remove the connector in the designated manner.

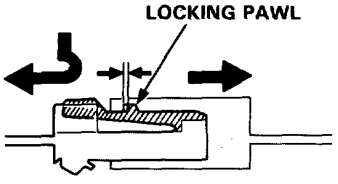

- When disconnecting a connector, pull it off from the mating connector by holding on both connectors.
- Never try to disconnect connectors by pulling on their wires.

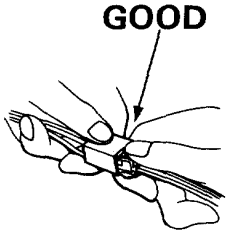

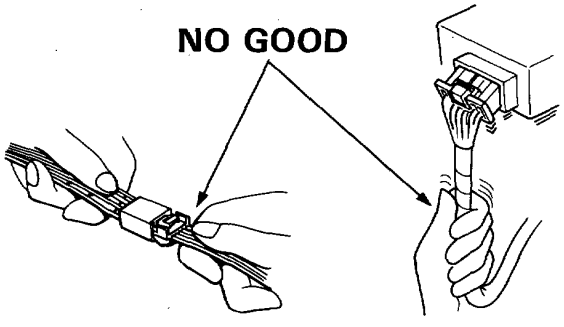

- Place the plastic cover over the mating connector after reconnecting. Also check that the cover is not distorted.

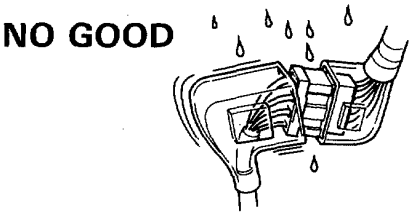

- Before connecting connectors, check to see that the terminals are in place and not bent or distorted.

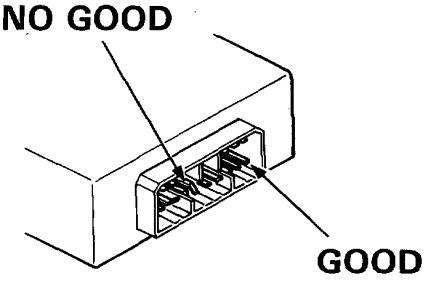

- Check for loose retainer and rubber seals.
  The illustration shows examples of terminal and seal abnormality.

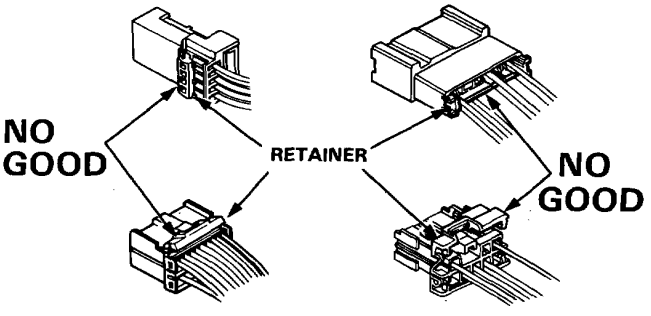

- Example of waterproof connector:

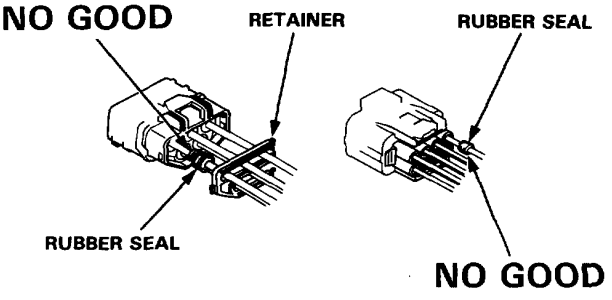

- For the connector which uses insulation grease, clean the connector then apply grease if the grease is insufficient or contaminated.

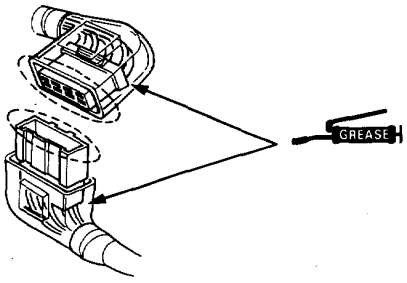

- Insert the connector tightly and make sure it is securely locked.
- Check all the wire harnesses are connected.
- There are two types of locking tab: one that you have to push and the other you should not touch when connecting the connector. Check the shape of the locking tab before connecting.
- The locking tab having a taper end should not be touched when connecting.

- The locking tab with an angle end should be pushed when connecting.

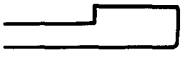

- Insert connectors fully until they will no longer go.
- The connectors must be aligned and engaged securely.
- Do not use wire harnesses with a loose wire or connector.

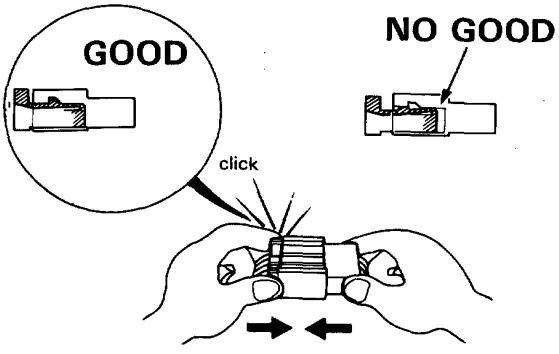

- Before connecting, check each connector cover for damage. Also make sure that the female connector is tight and not loosened from the previous use.

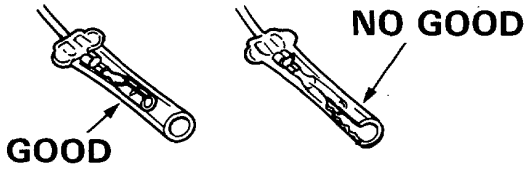

- Insert male connectors into the female connectors fully until they will no longer go.
- Be sure that plastic cover is placed over the connection.
- Position the wires so that the open end of the cover faces down.

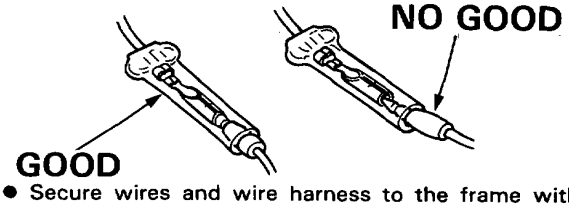

- Secure wires and wire harness to the frame with their respective wire bands at the designated locations.
  Position the wiring in the bands so that only the insulated surfaces contact the wires or harnesses.
- Remove with care not to damage the lock.

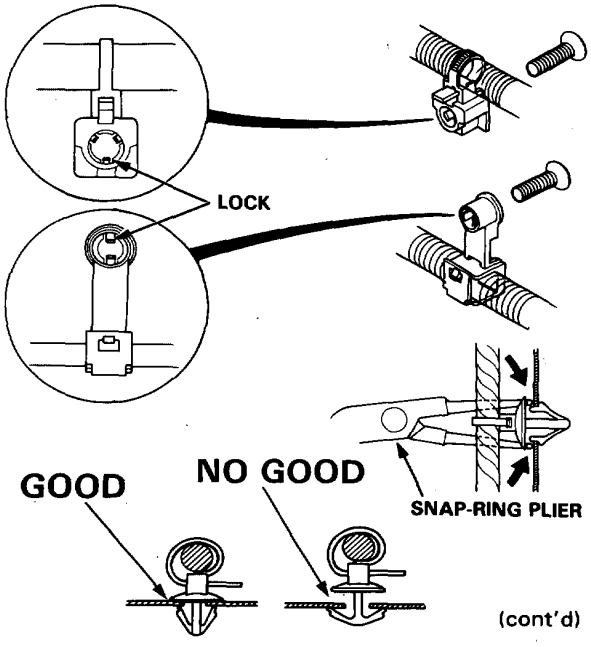

(cont'd)

Troubleshooting Precautions (cont'd)

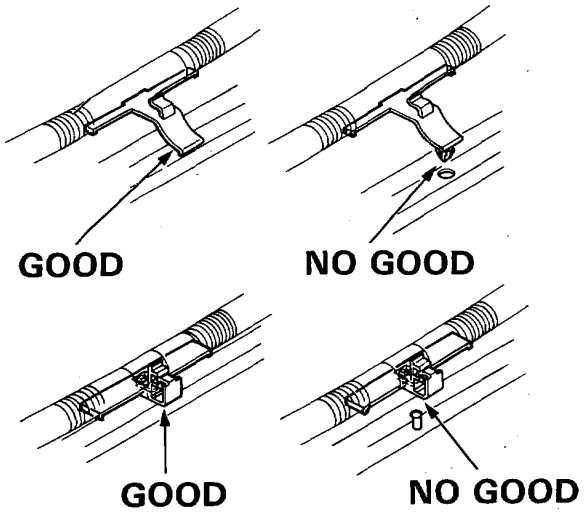

- After clamping, check each harness to be certain that it is not interfering with any moving or sliding parts of the vehicle.
- Keep wire harnesses away from the exhaust pipes and other hot parts.

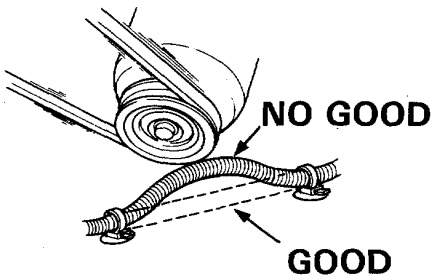

- Always keep a safe distance between wire harnesses and any heated parts.

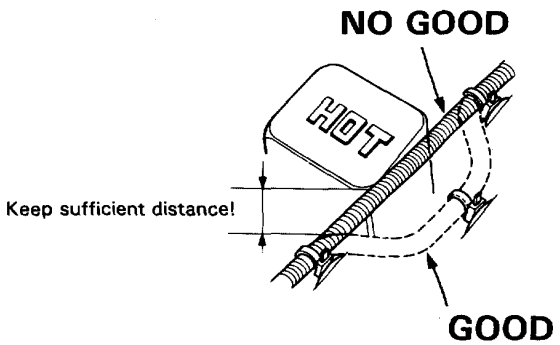

- Do not bring wire harnesses in direct contact with sharp edges or corners.
- Also avoid contact with the projected ends of bolts, screws and other fasteners.

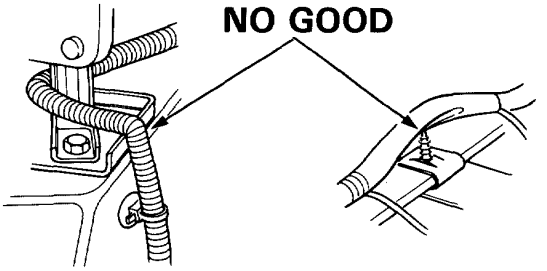

- Route harnesses so they are not pulled taut or slackened excessively.

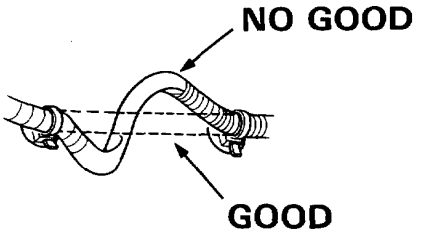

- Protect wires and harnesses with a tape or a tube if they are in contact with a sharp edge or corner.

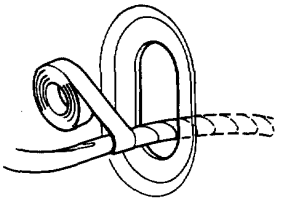

- Clean the attaching surface thoroughly if an adhesive is used. First, wipe with solvent or alcohol if necessary.

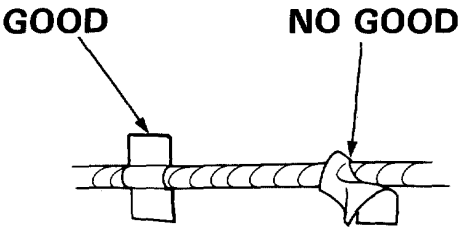

- Seat grommets in their grooves properly.

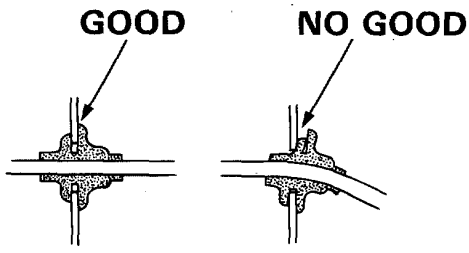

- Do not damage the insulation when connecting a wire.

- Do not use wires or harnesses with a broken insulation.
  Repair by wrapping with protective tape or replace with new ones if necessary.

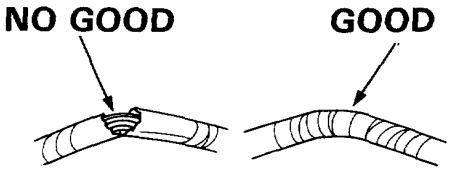

- After installing parts, make sure that wire harnesses are not pinched.

- After routing, check that the wire harnesses are not twisted or kinked.

- Wire harnesses should be routed so that they are not pulled taut, slackened excessively, pinched, or interfering with adjacent or surrounding parts in all steering positions.

- When using the Service Tester, follow the manufacturer's instructions and those described in the Shop Manual.

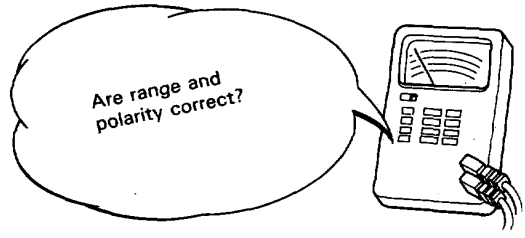

- Always insert the probe of the tester from the wire harness side (except waterproof connector).

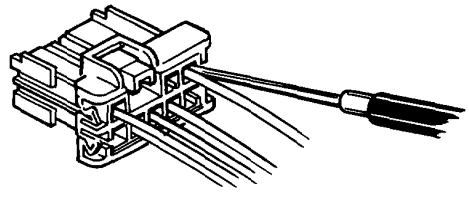

- Make sure to use the probe with a tapered tip.

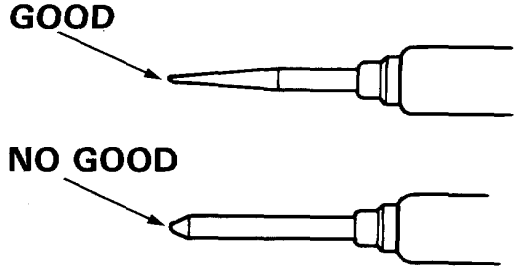

- Do not drop parts.

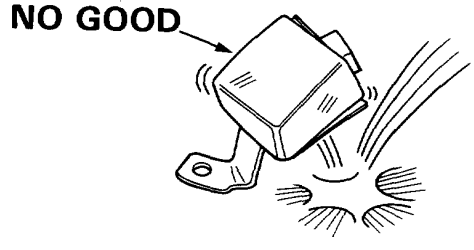

Five-Step Troubleshooting

1. **Verify The Complaint**
   Turn on all the components in the problem circuit to verify the customer complaint. Note the symptoms. Do not begin disassembly or testing until you have narrowed down the problem area.

2. **Analyze The Schematic**
   Look up the schematic for the problem circuit. Determine how the circuit is supposed to work by tracing the current paths from the power feed through the circuit components to ground. If several circuits fail at the same time, the fuse or ground is a likely cause.

   Based on the symptoms and your understanding of the circuit operation, identify one or more possible causes of the problem.

3. **Isolate The Problem By Testing The Circuit**
   Make circuit tests to check the diagnosis you made in step 2. Keep in mind that a logical, simple procedure is the key to efficient troubleshooting. Test for the most likely cause of failure first. Try to make tests at points that are easily accessible.

4. **Fix The Problem**
   Once the specific problem is identified, make the repair. Be sure to use proper tools and safe procedures.

5. **Make Sure The Circuit Works**
   Turn on all components in the repaired circuit in all modes to make sure you've fixed the entire problem. If the problem was a blown fuse, be sure to test all of the circuits on that fuse. Make sure no new problems turn up and the original problem does not recur.

How to Use This Section

Schematic Symbols

BATTERY	GROUND		FUSE	COIL, SOLENOID	CIGARETTE LIGHTER
or	Ground terminal	Component ground			

RESISTOR	VARIABLE RESISTOR	THERMISTOR	IGNITION SWITCH	BULB	HEATER

MOTOR	PUMP	CIRCUIT BREAKER	HORN	DIODE	SPEAKER, BUZZER
M	P		H		

ANTENNA		TRANSISTOR (Tr)
Mast	Window	

RELAY (In normal condition)		CONDENSER
Normal open relay	Normal closed relay	

SWITCH (In normal condition)		LUMINOUS DIODE (LED)
Normal open switch	Normal closed switch	

CONNECTION		CONNECTOR	REED SWITCH
Input	Output	Male / Female	

Wire Color Codes

The following abbreviations are used to identify wire colors in the circuit schematics.

WHT ..... White
YEL ..... Yellow
BLK ..... Black
BLU ..... Blue
GRN ..... Green
RED ..... Red
ORN ..... Orange
PNK ..... Pink
BRN ..... Brown
GRY ..... Gray
PUR ..... Purple
LT BLU ..... Light Blue
LT GRN ..... Light Green

Wire insulator has one color or one color with another color stripe. The second color is the stripe.

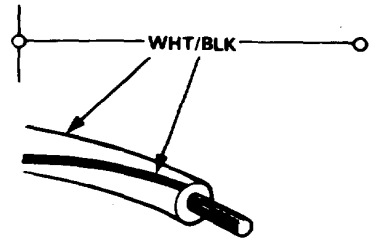

Relay and Control Unit Locations

Engine Compartment (LHD)

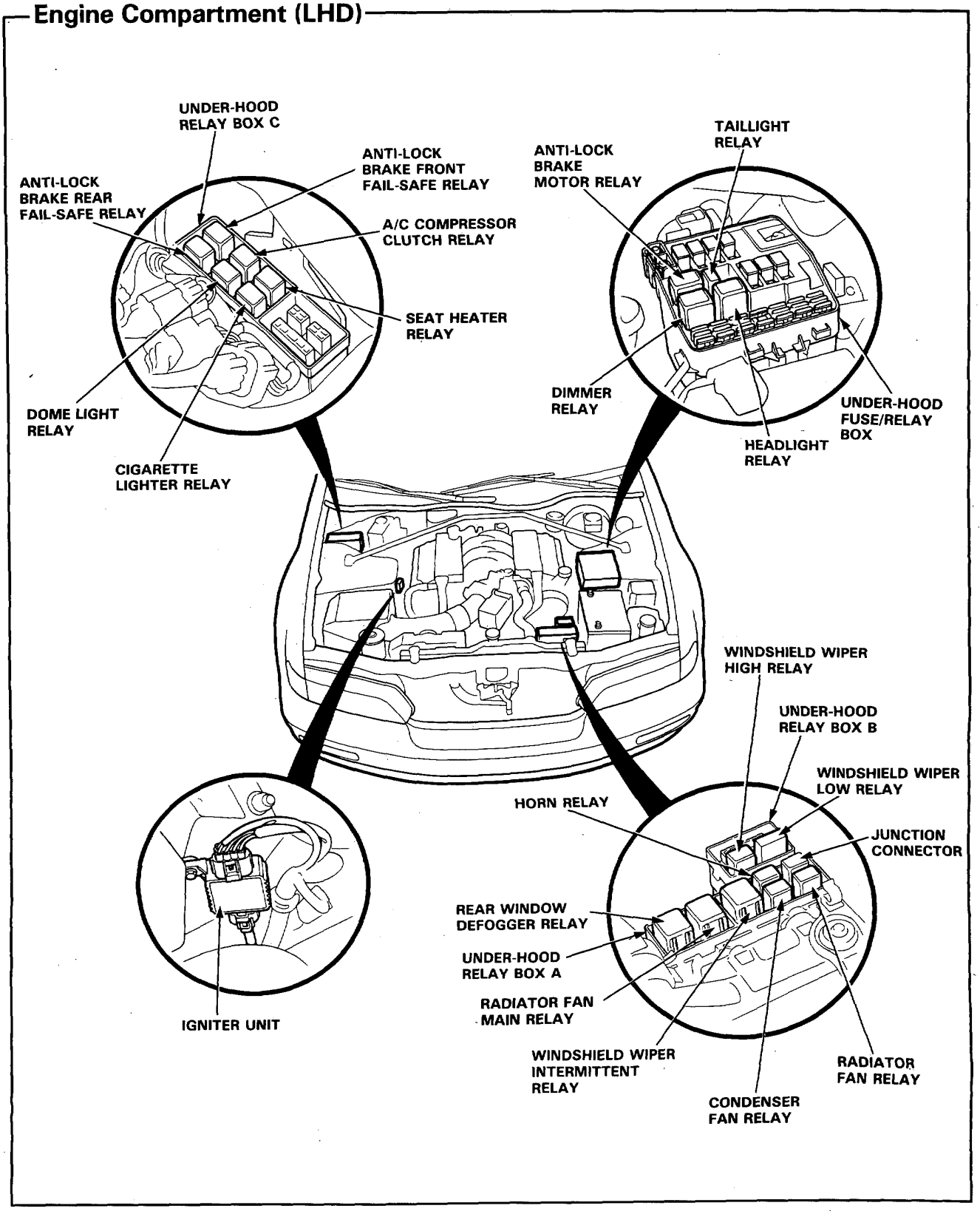

Engine Compartment (RHD)

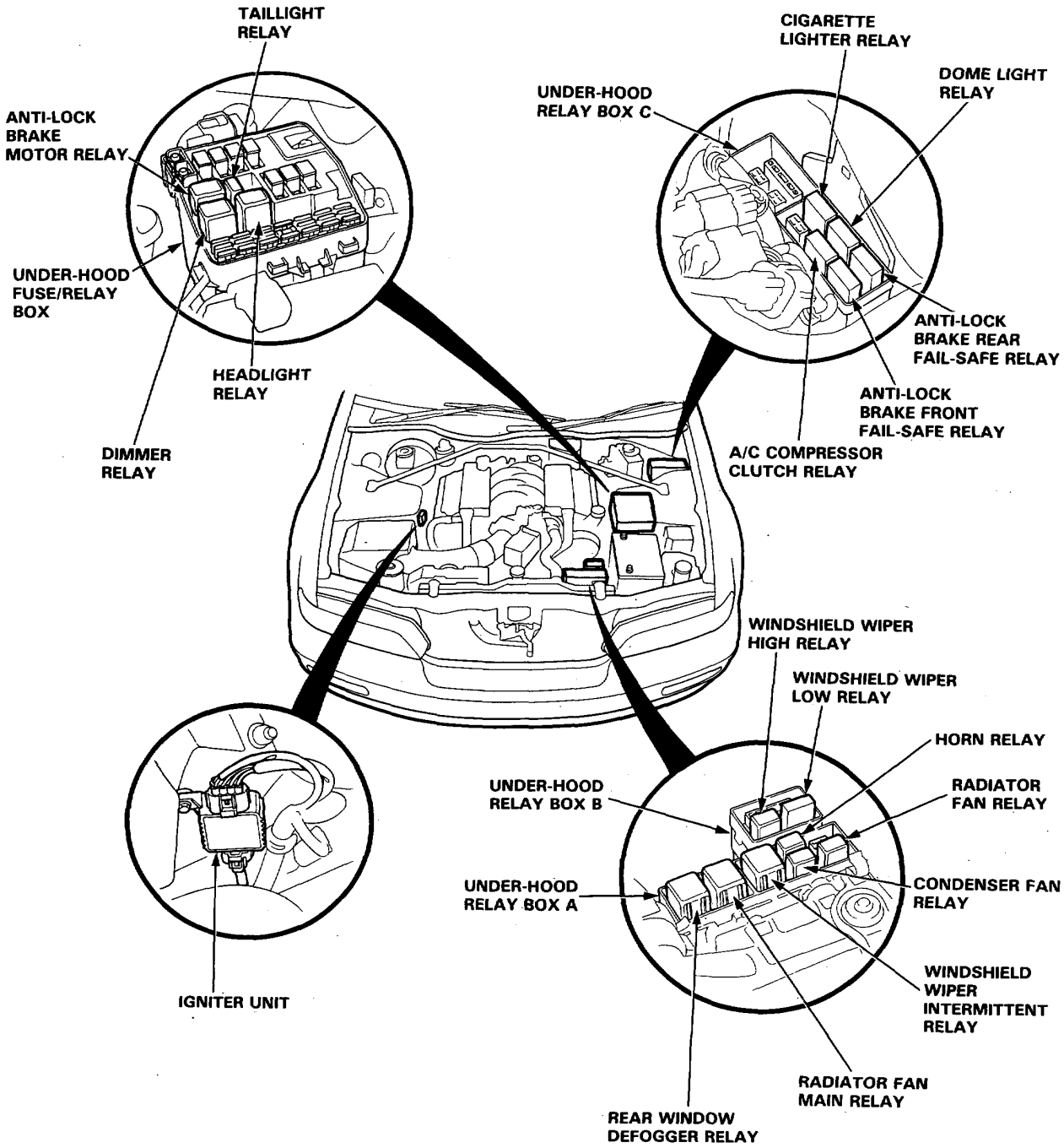

Relay and Control Unit Locations

Dashboard (LHD)

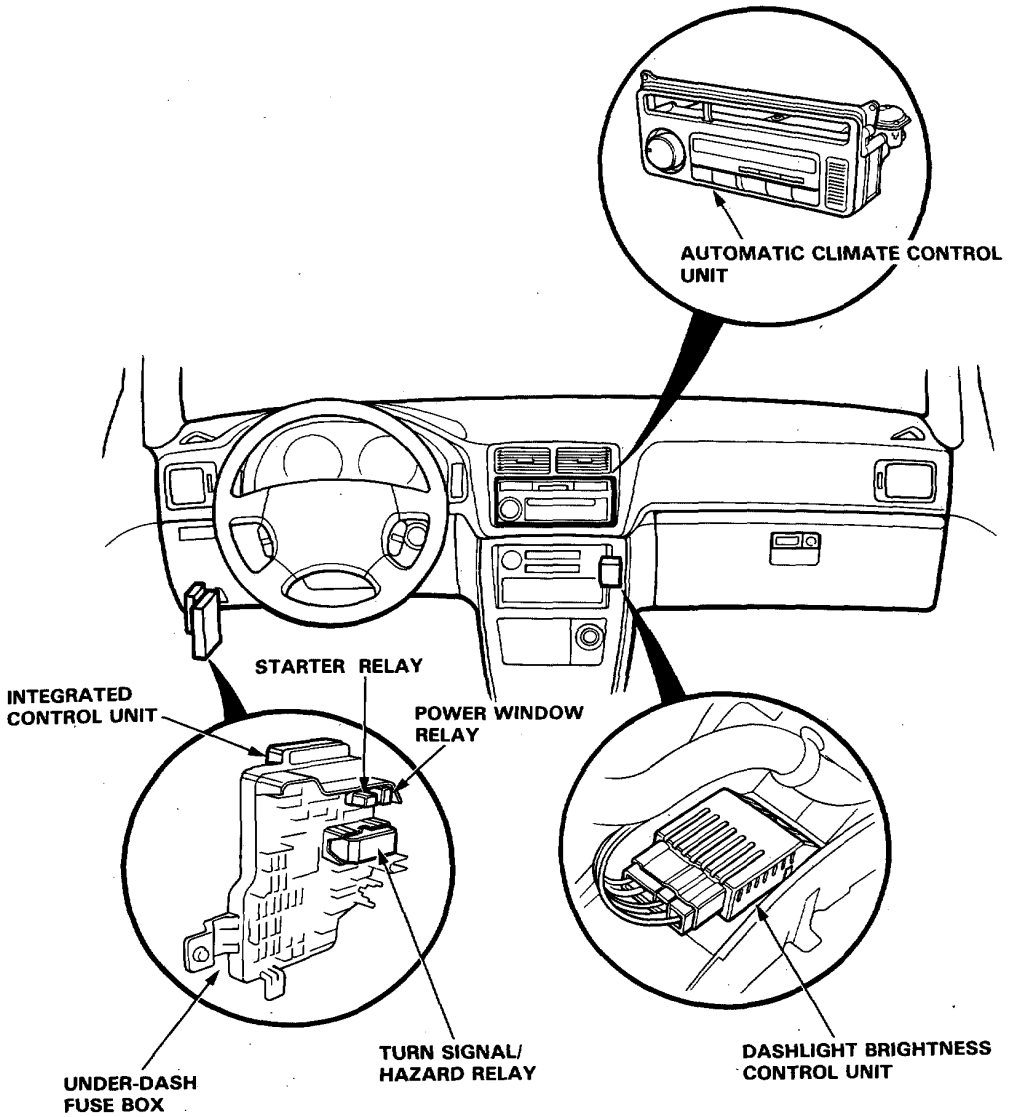

Dashboard (RHD)

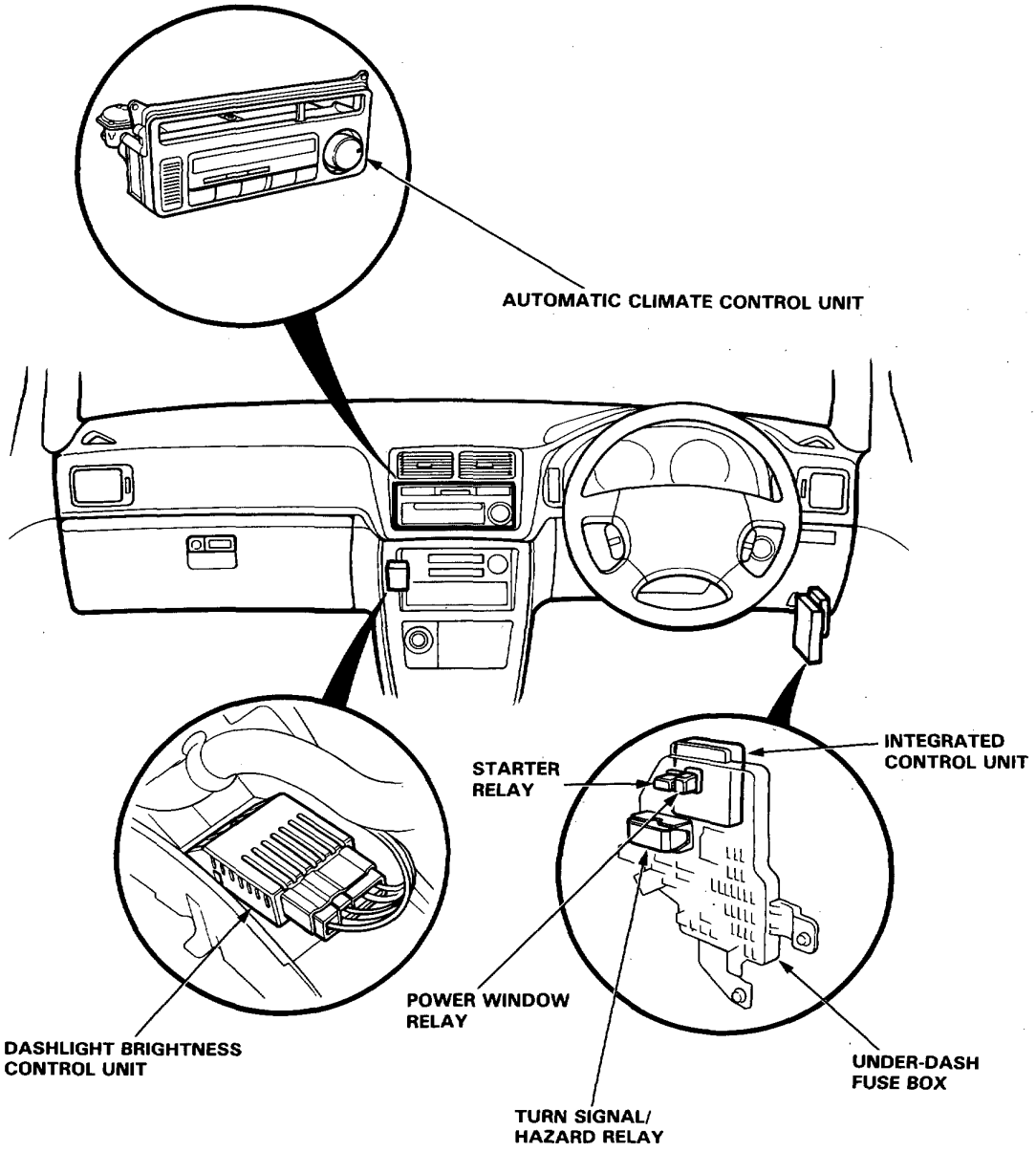

Relay and Control Unit Location

Dashboard (LHD)

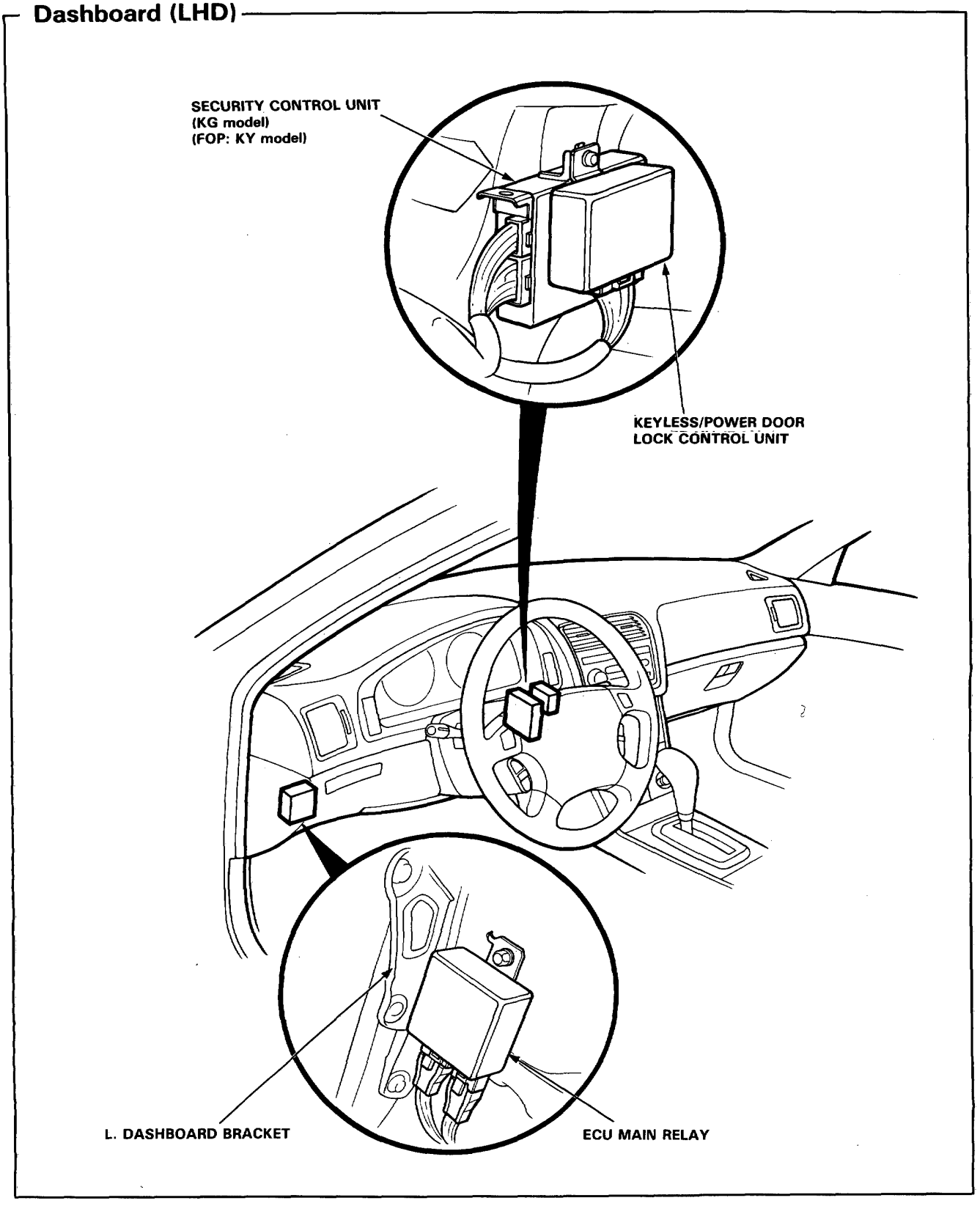

Dashboard (RHD)

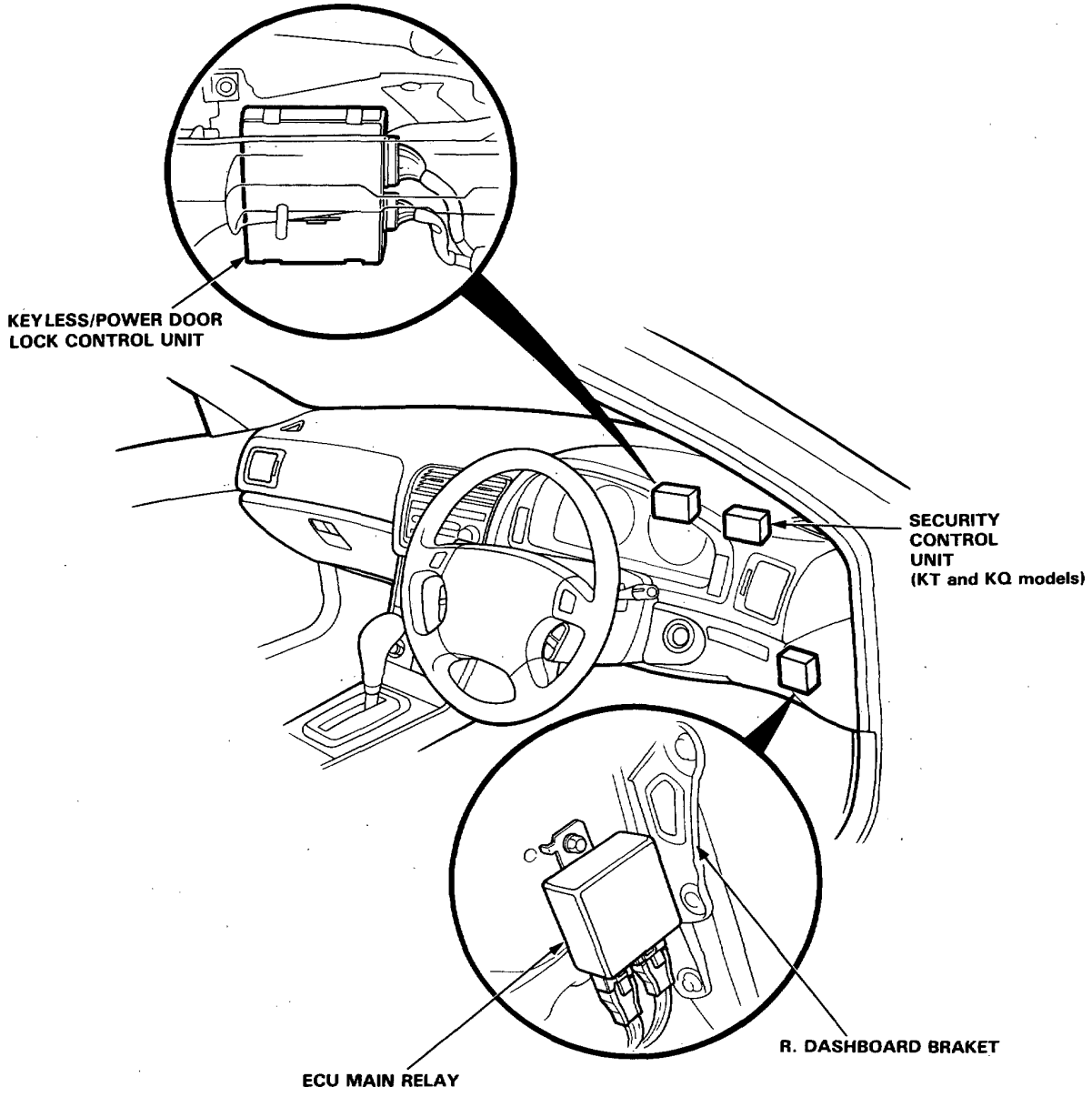

Relay and Control Unit Locations

Dashboard (LHD)

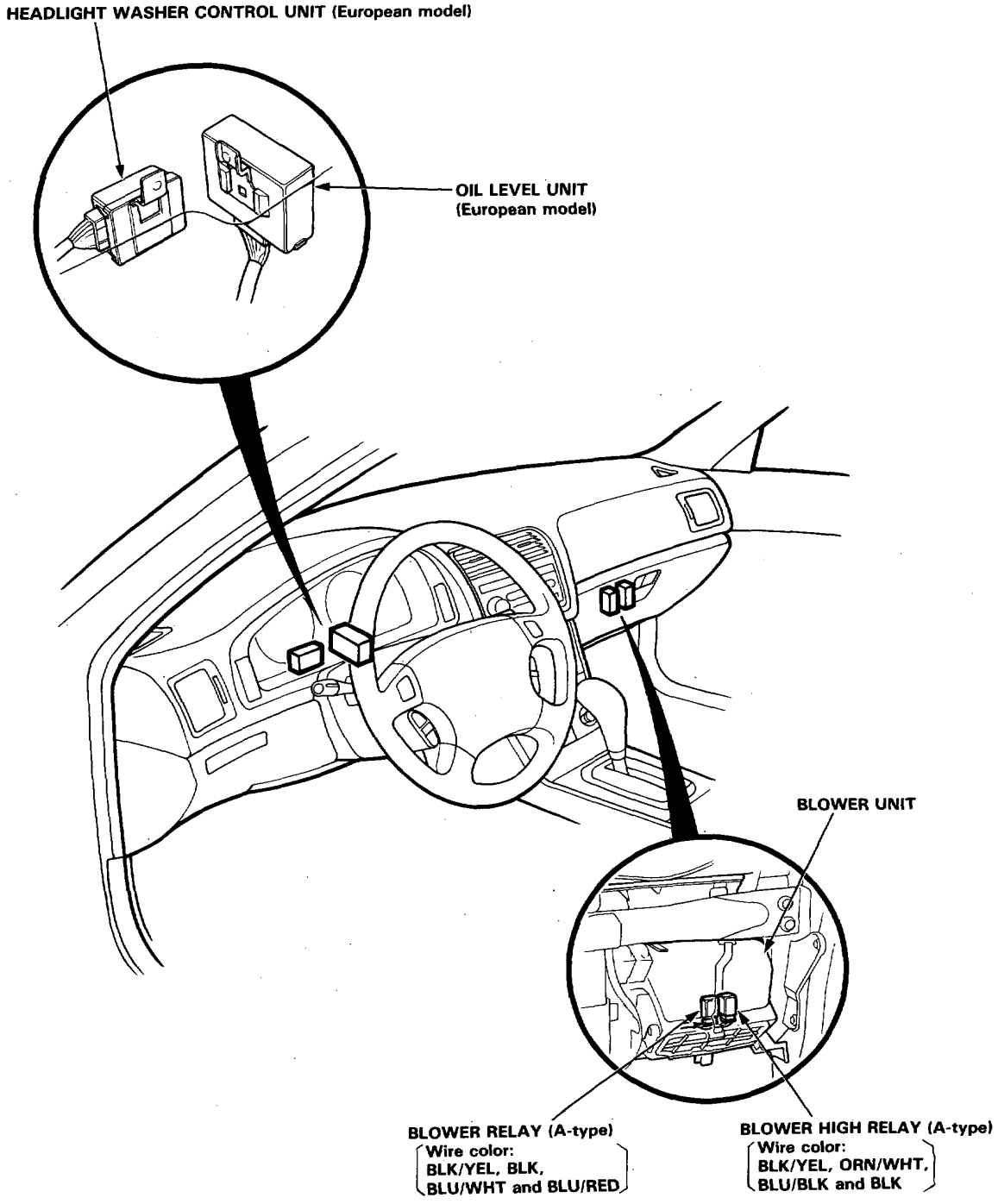

Dashboard (RHD)

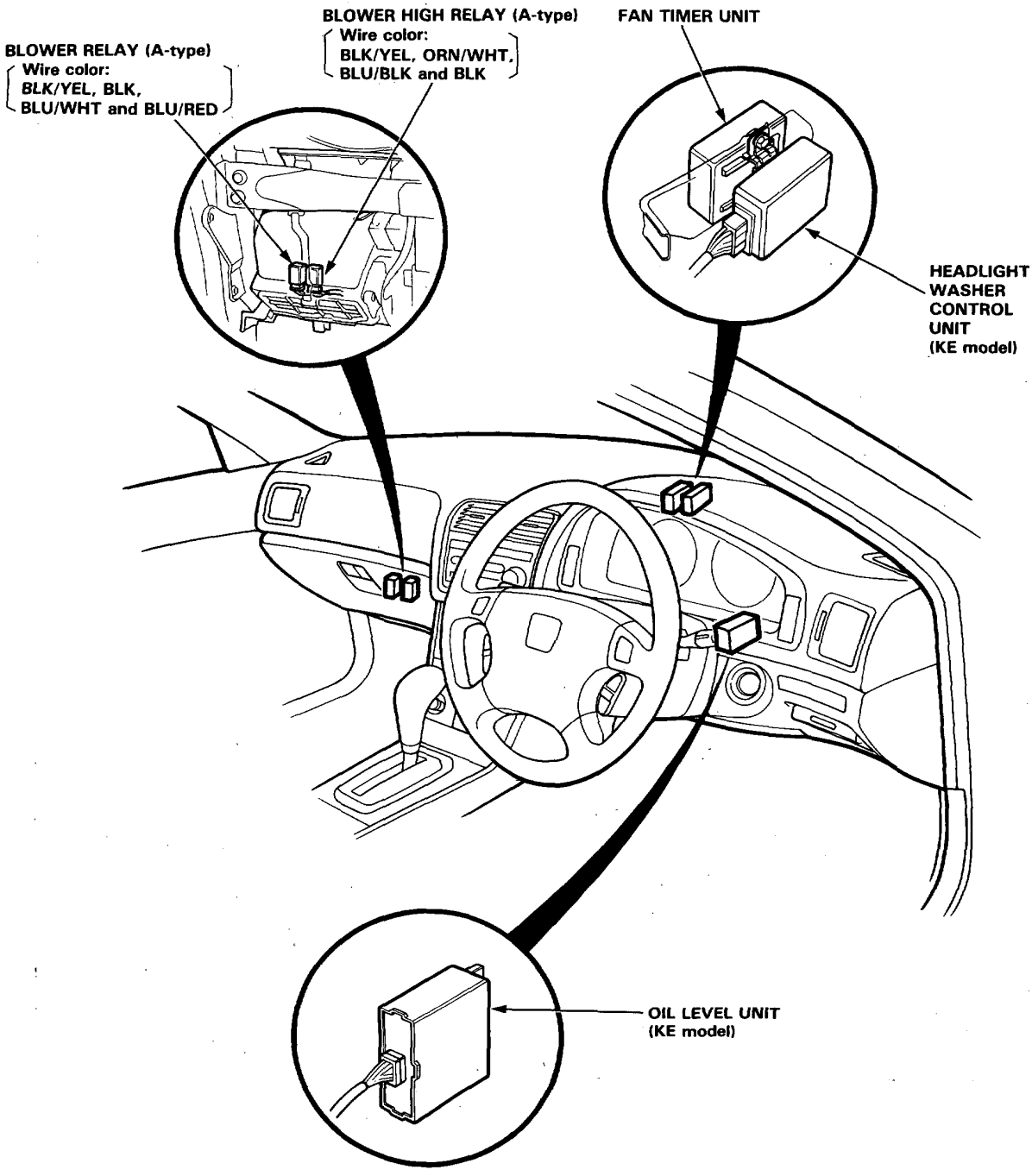

Relay and Control Unit Locations

Dashboard, Door and Floor (LHD)

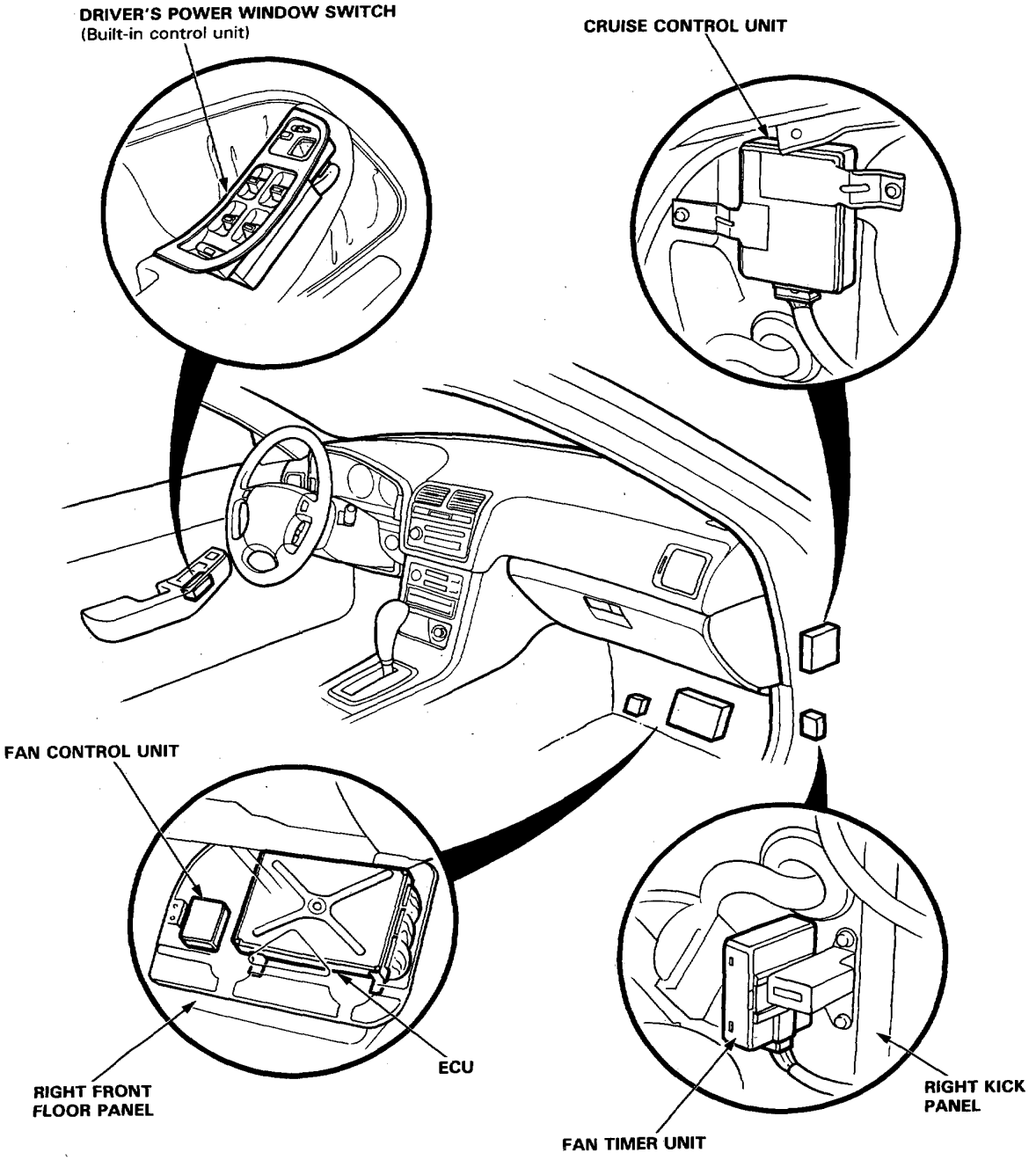

Dashboard, Door and Floor (RHD)

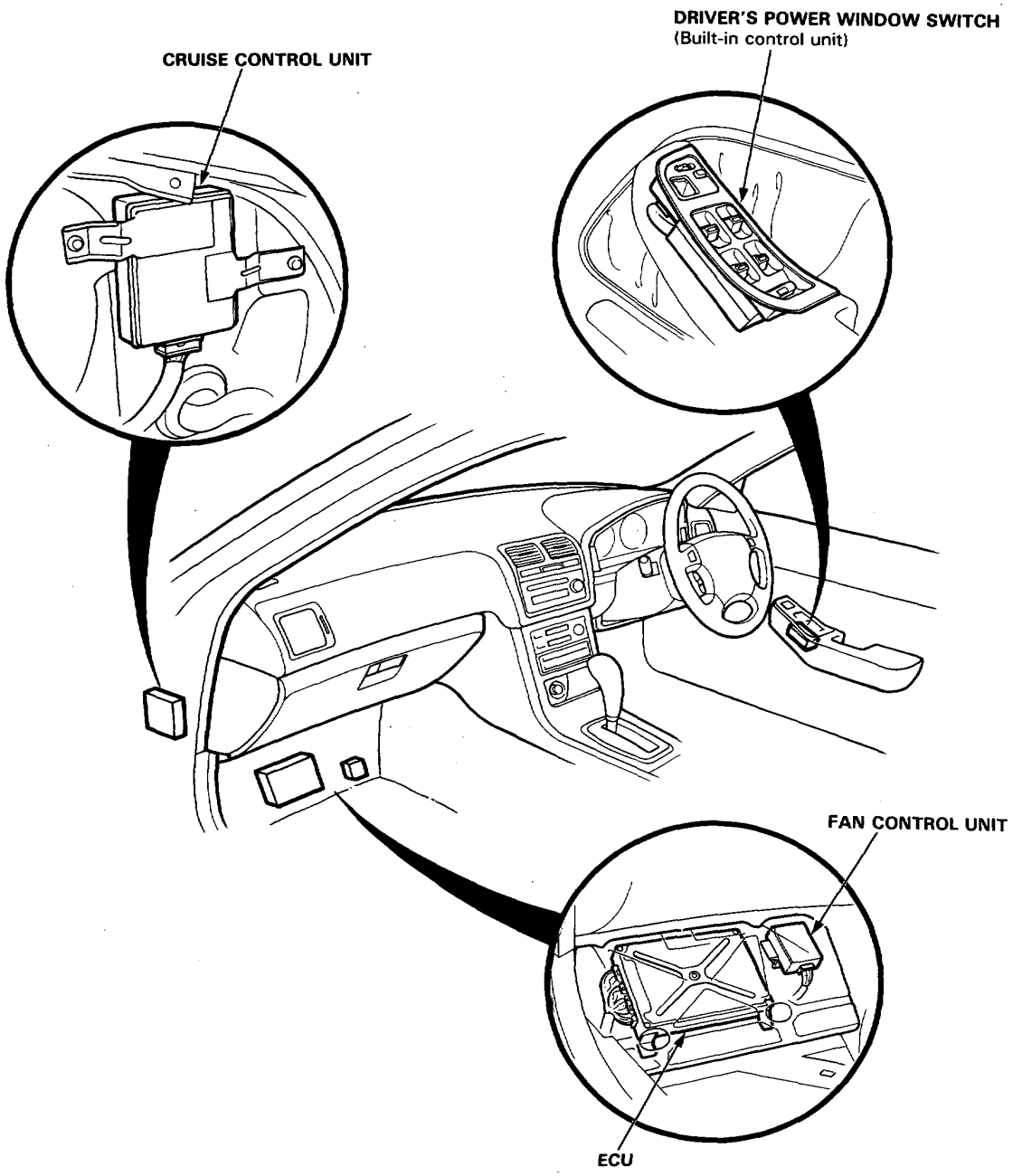

Relay and Control Unit Locations

Floor

NOTE: RHD type is symmetrical to LHD type.

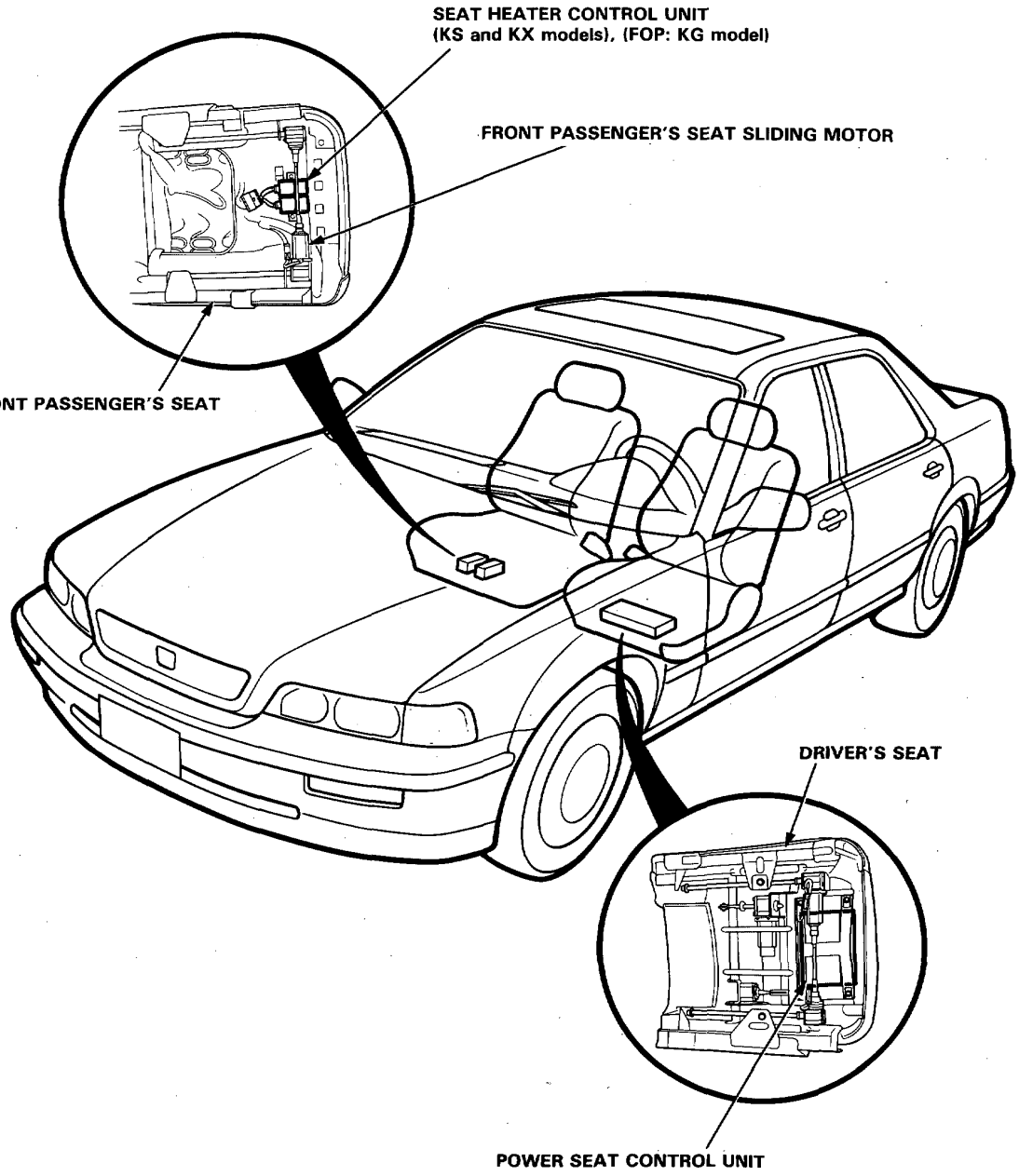

Floor, Roof and Rear Bulkhead

NOTE: *RHD type is symmetrical to LHD type.*

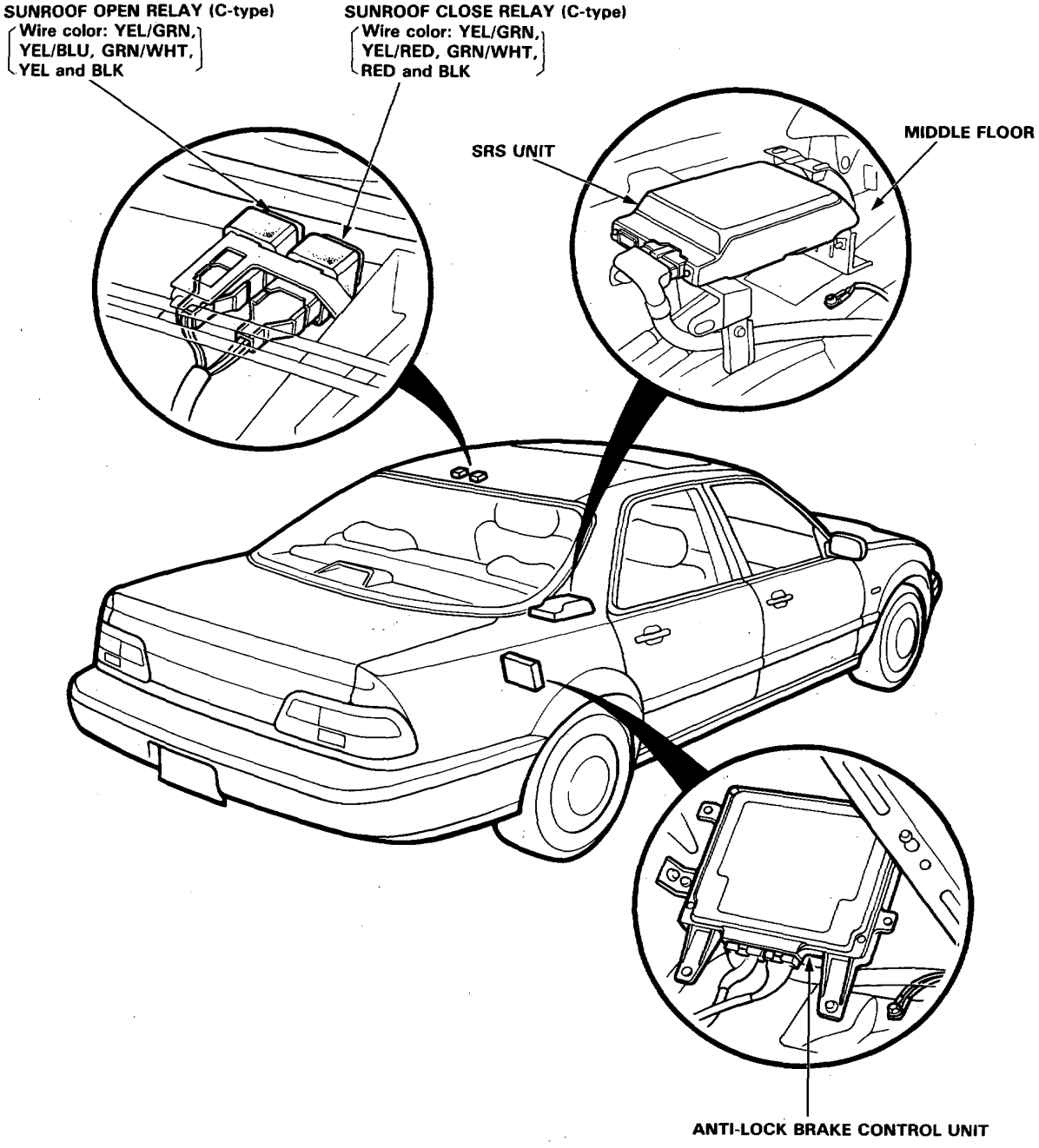

Wire Harness and Ground Locations

Engine Compartment

NOTE: LHD type is shown. RHD type is similar.

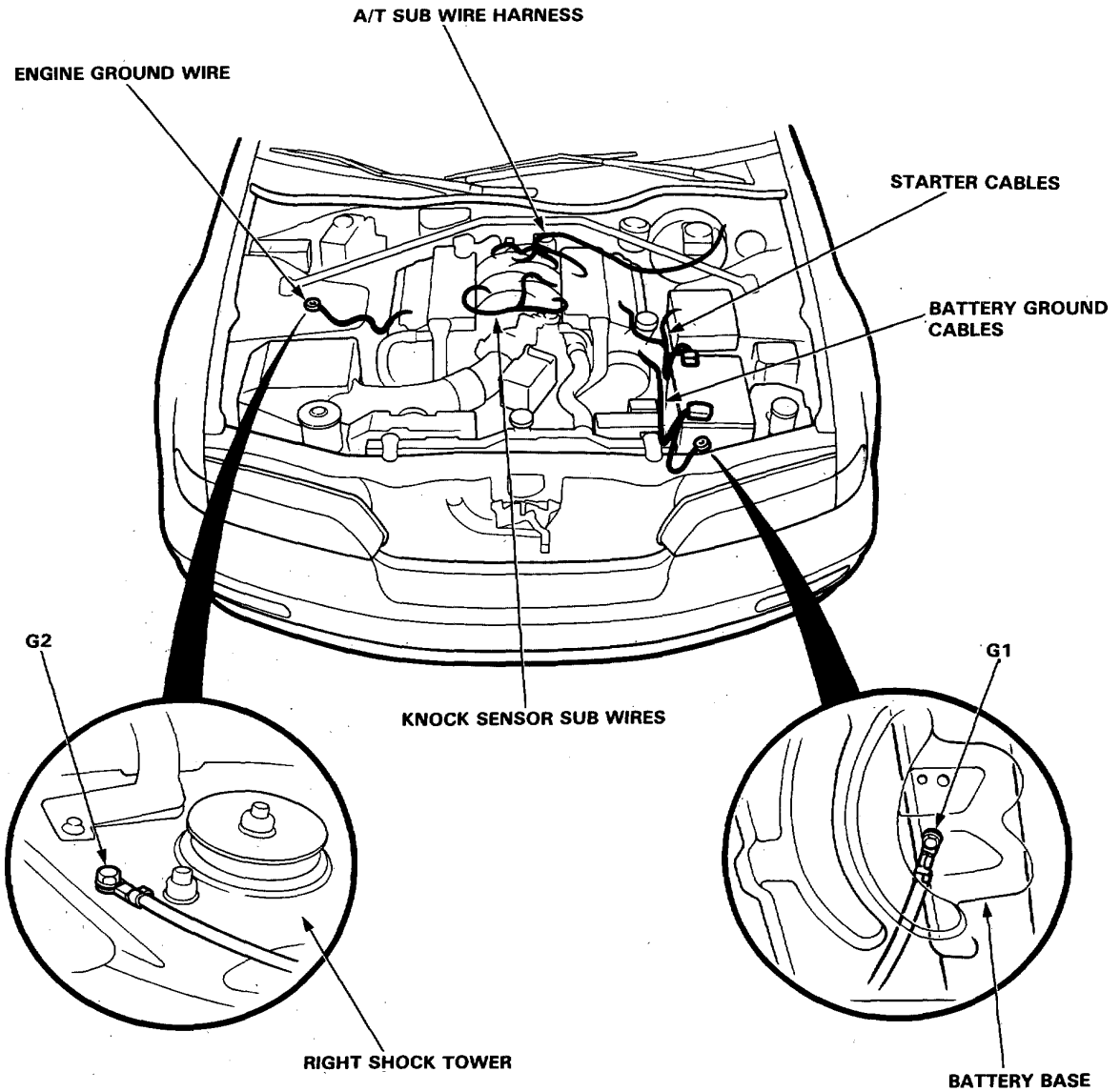

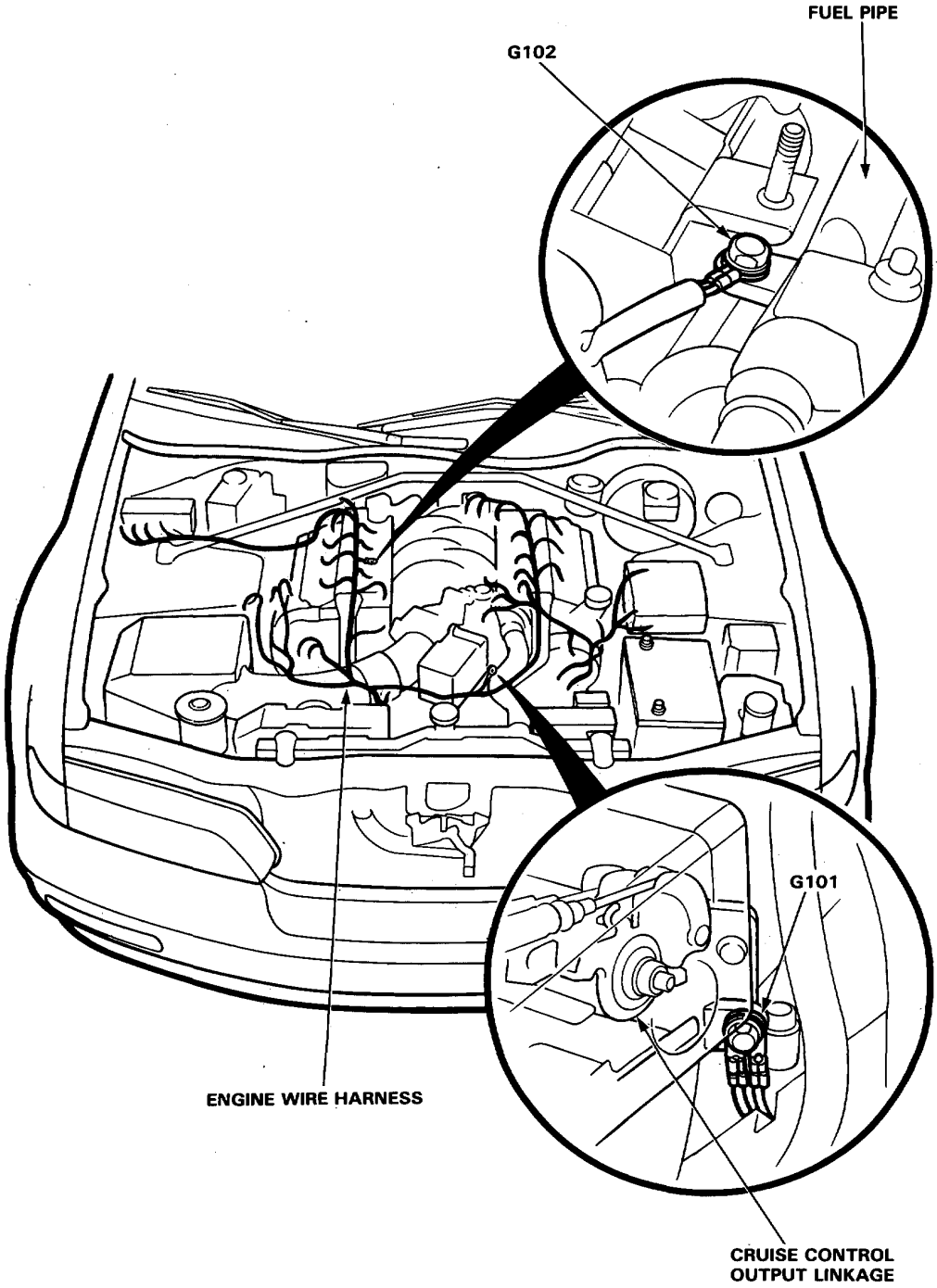
FUEL PIPE
G102
G101
ENGINE WIRE HARNESS
CRUISE CONTROL
OUTPUT LINKAGE

Wire Harness and Ground Locations

Engine Compartment (LHD)

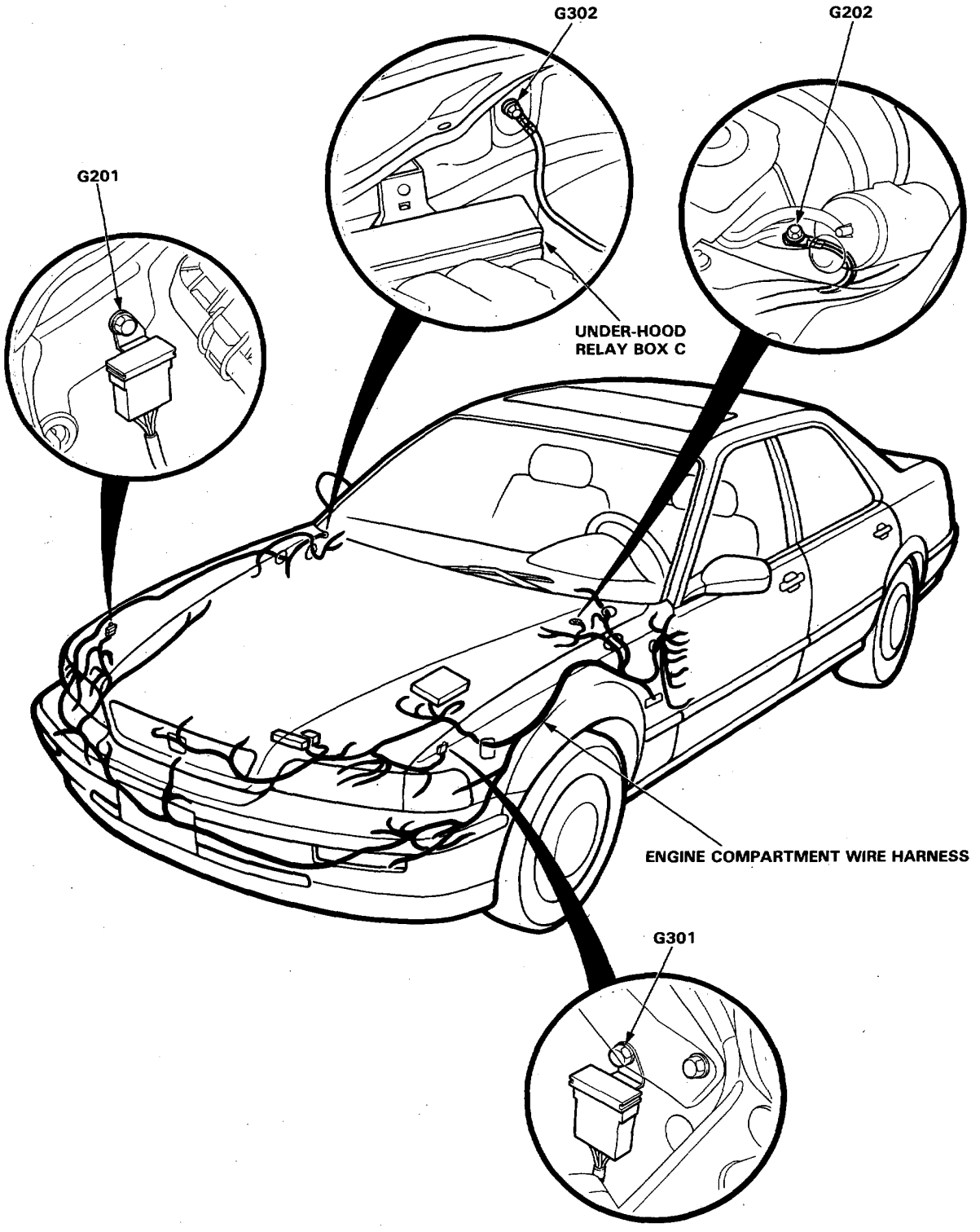

Engine Compartment (RHD)

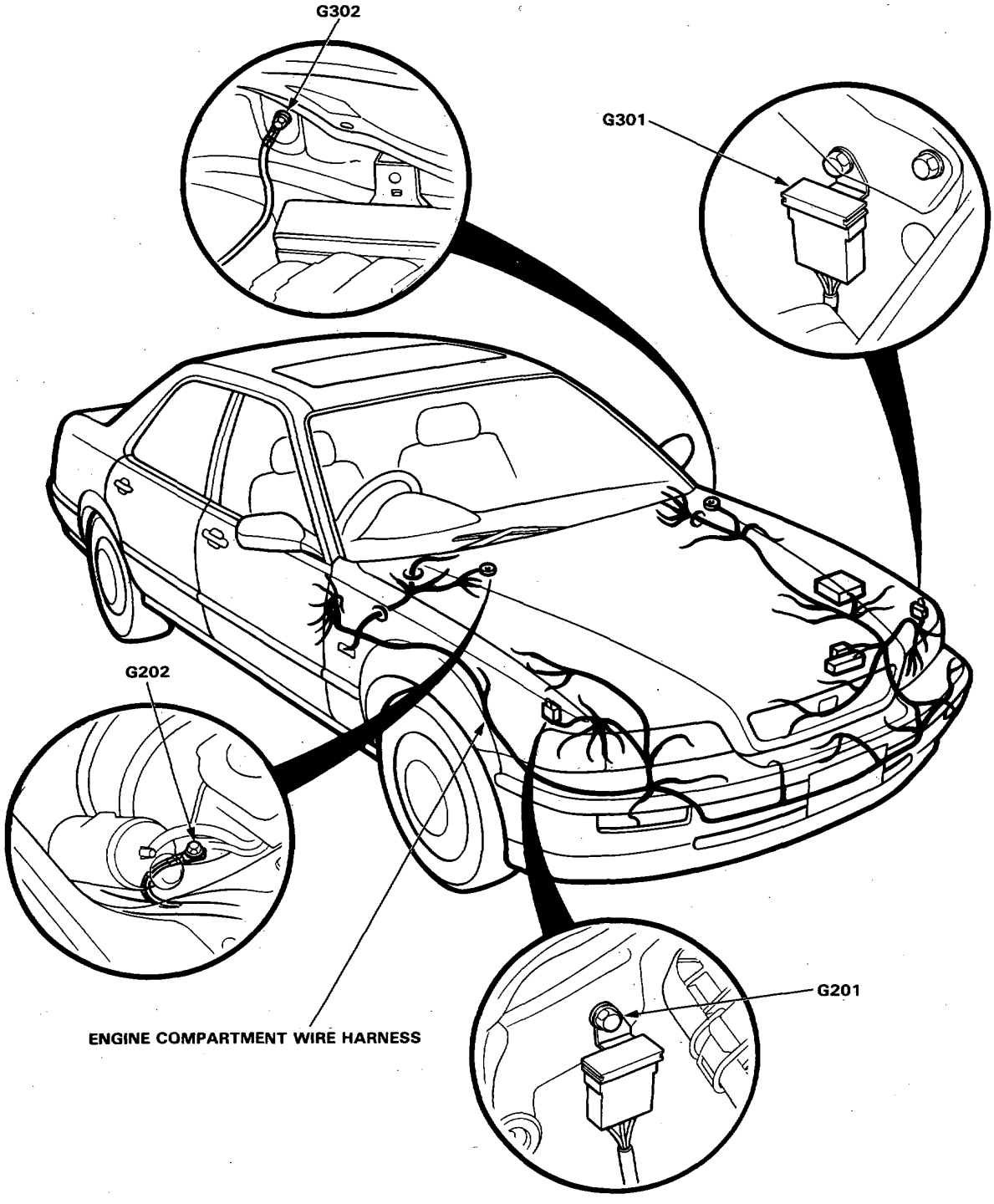

Wire Harness and Ground Locations

Dashboard and Floor (LHD)

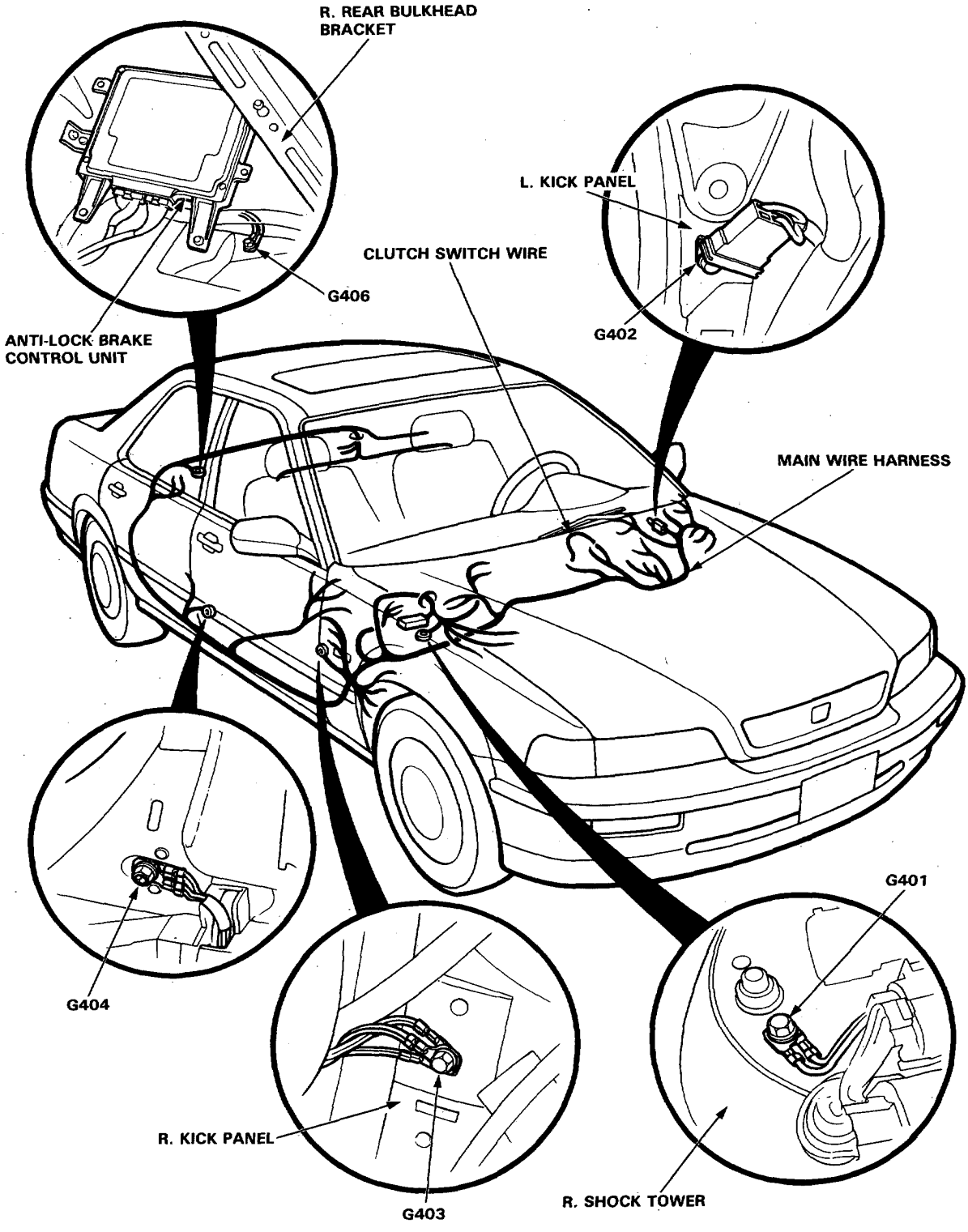

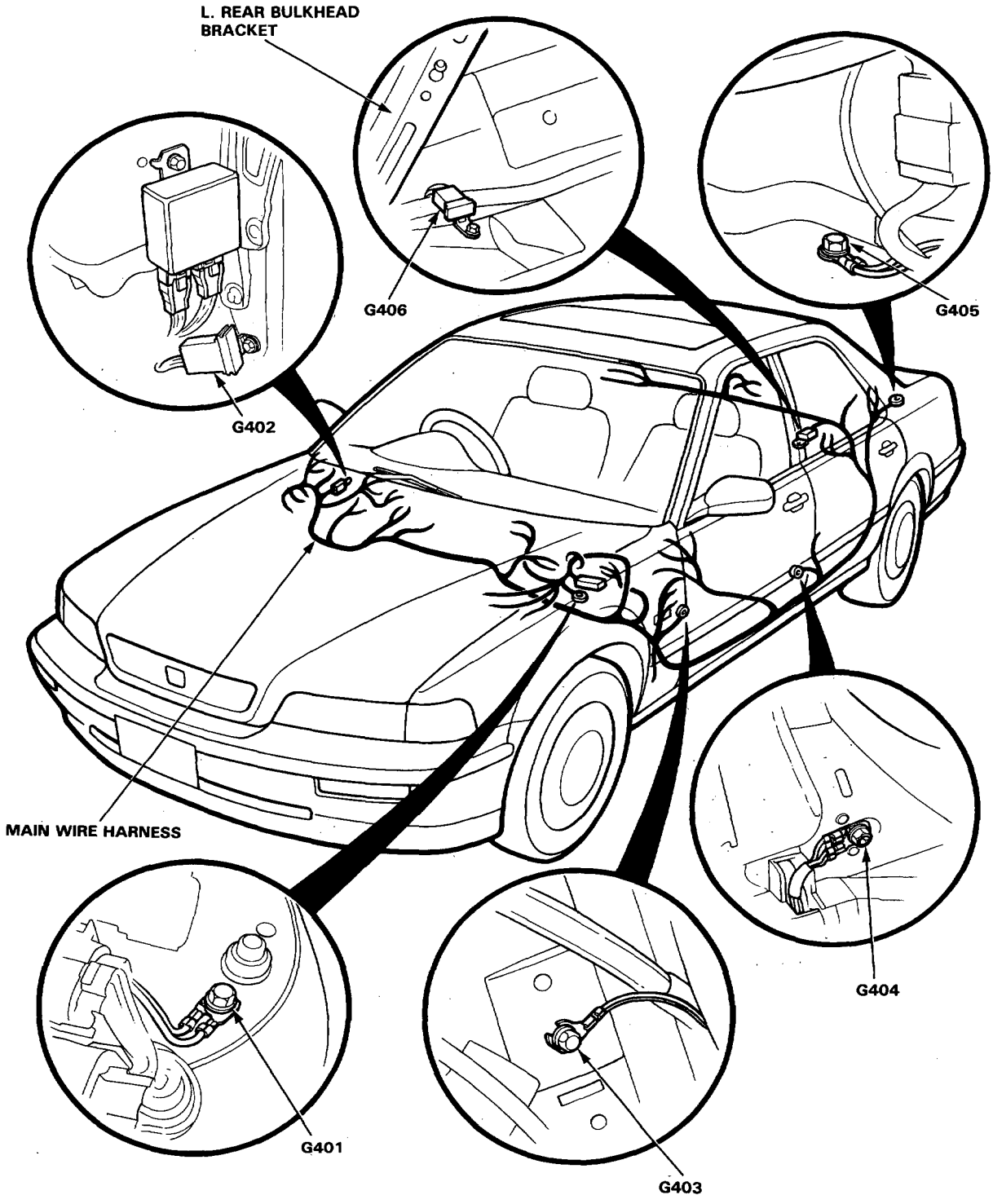
L. REAR BULKHEAD BRACKET
G406
G405
G402
MAIN WIRE HARNESS
G404
G401
G403

Wire Harness and Ground Locations

Dashboard (LHD)

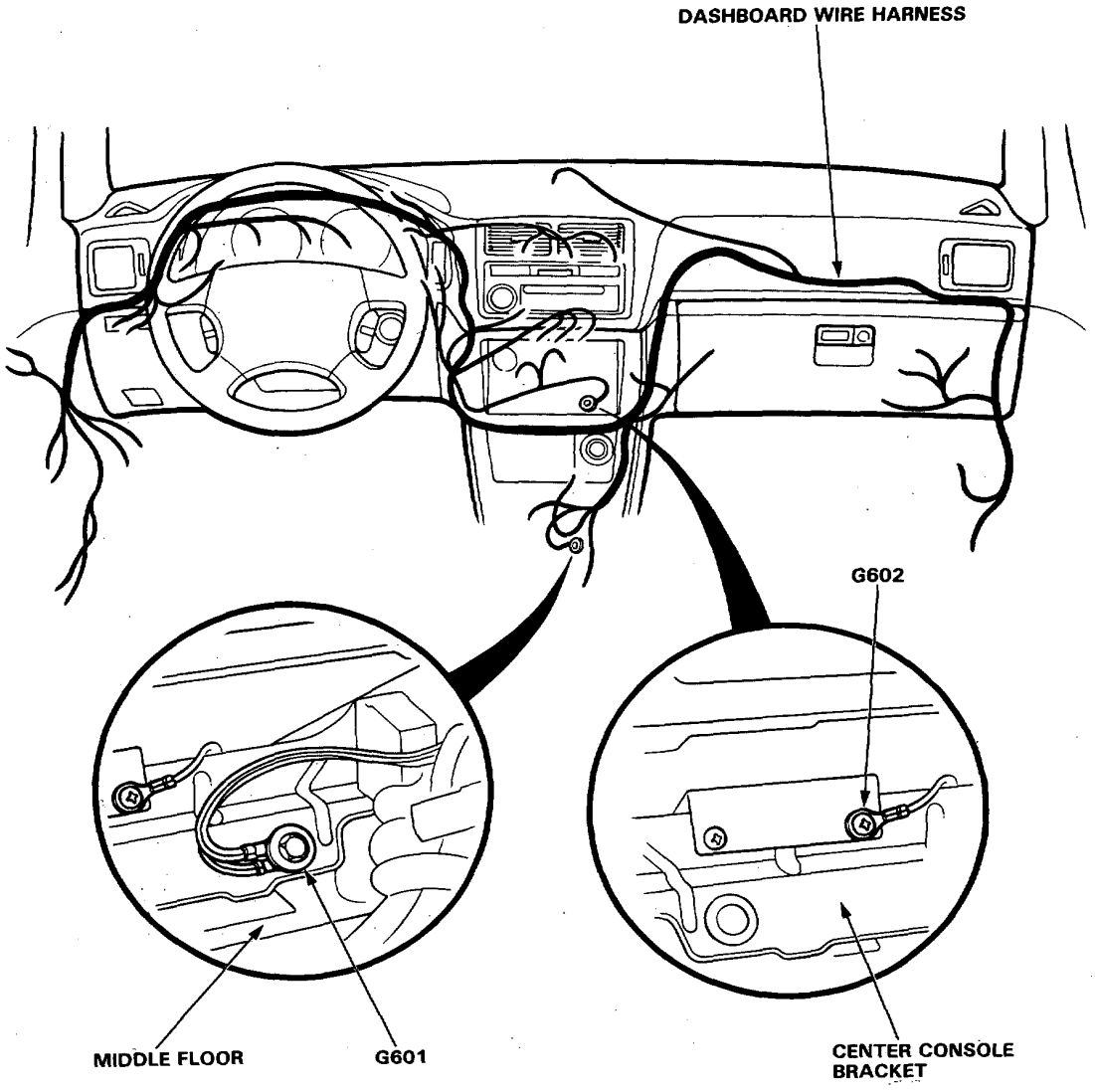

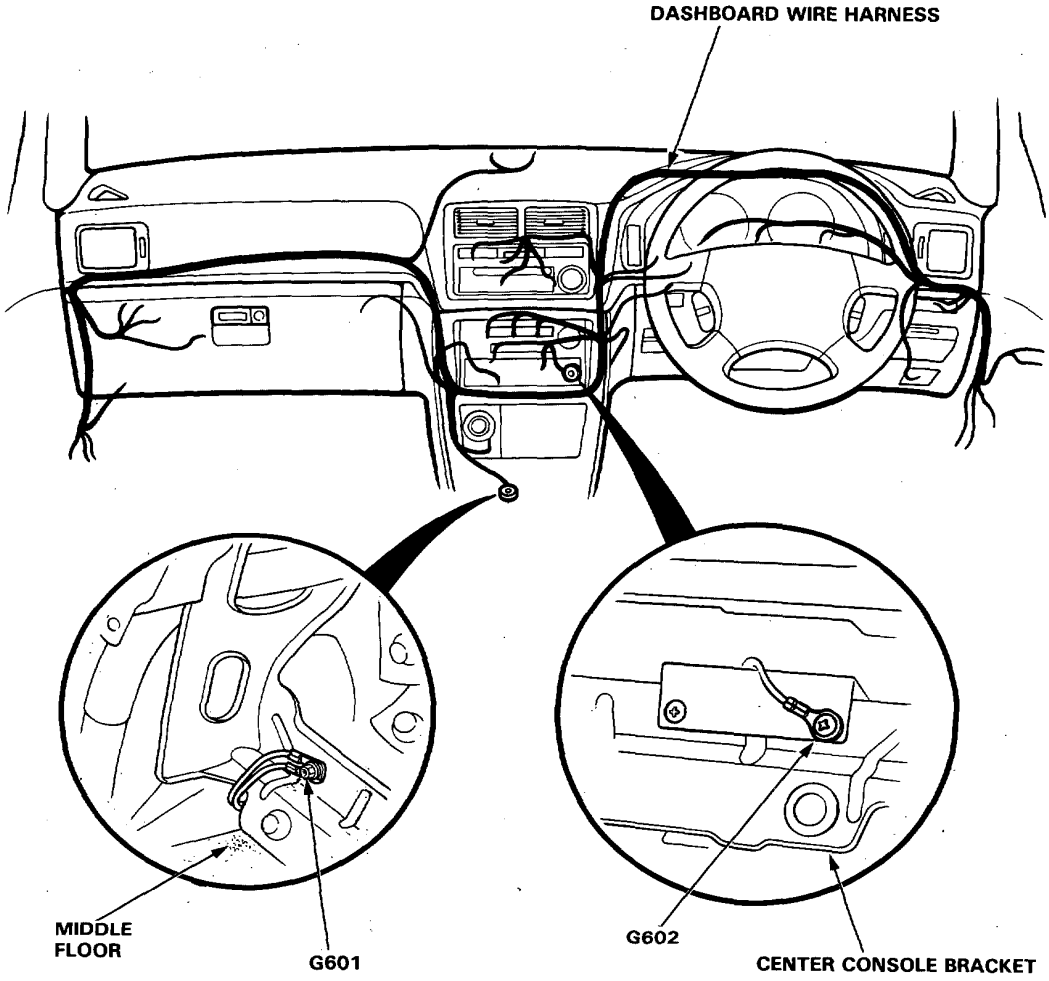
DASHBOARD WIRE HARNESS
MIDDLE FLOOR
G601
G602
CENTER CONSOLE BRACKET

Wire Harness and Ground Locations

Dashboard

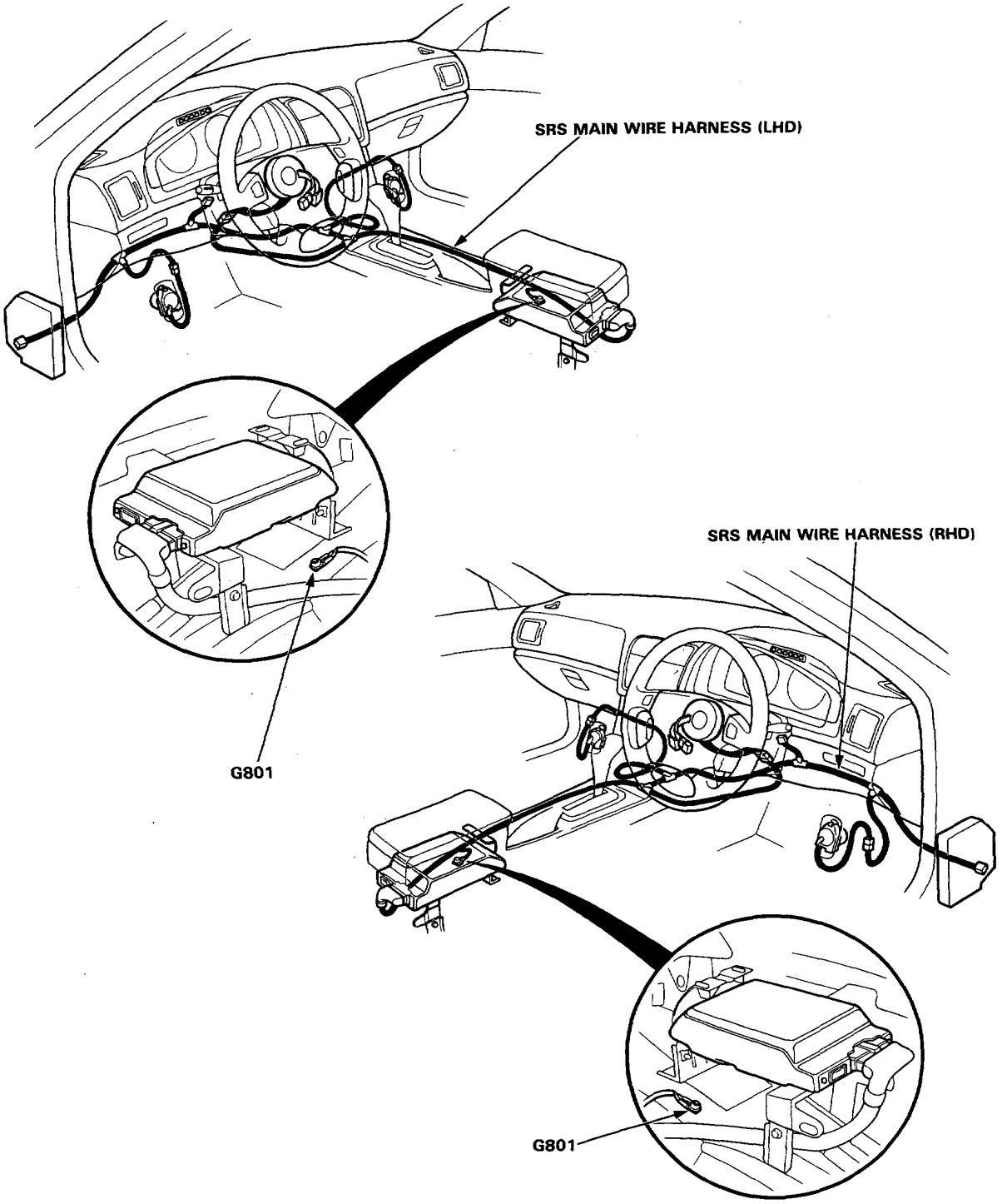

NOTE: LHD type is shown. RHD type is symmetrical to LHD type.

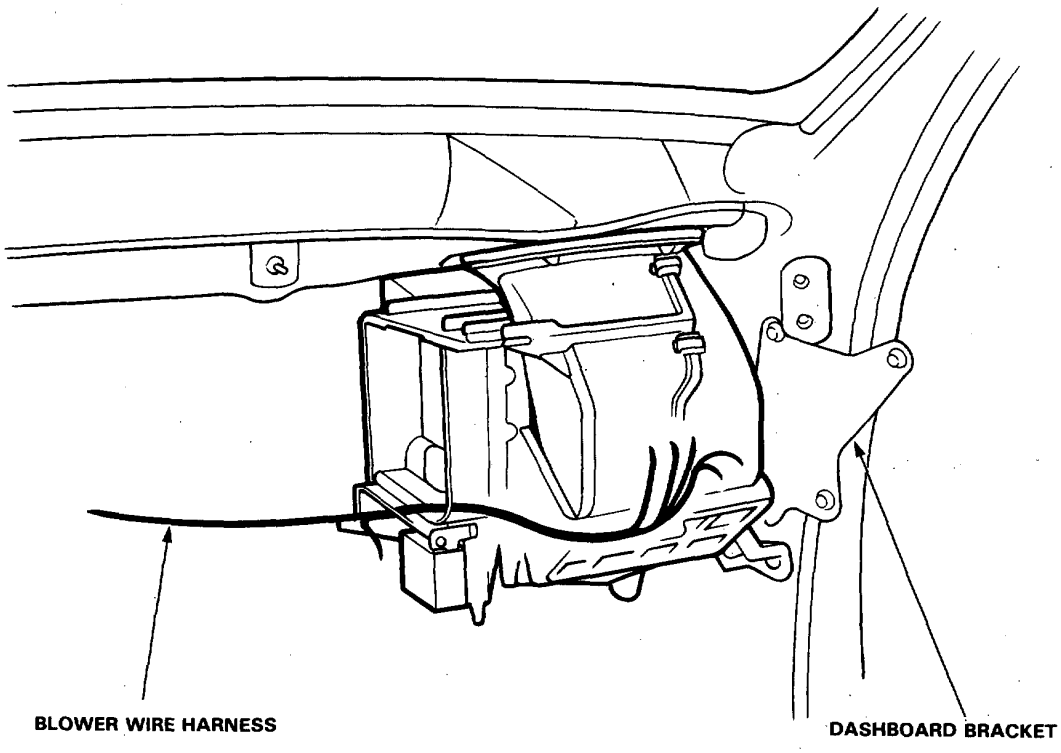

Wire Harness and Ground Locations

Floor (LHD)

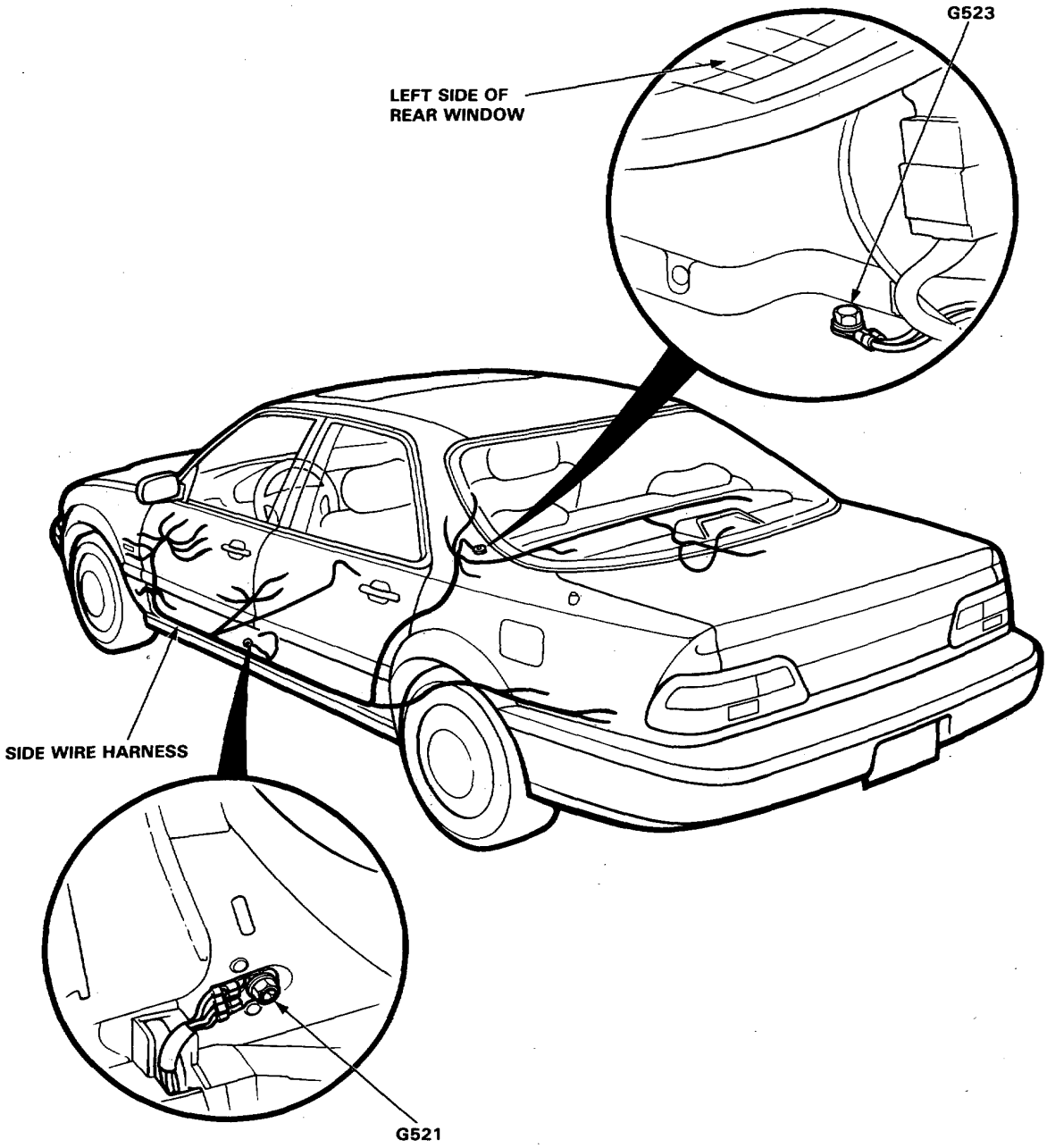

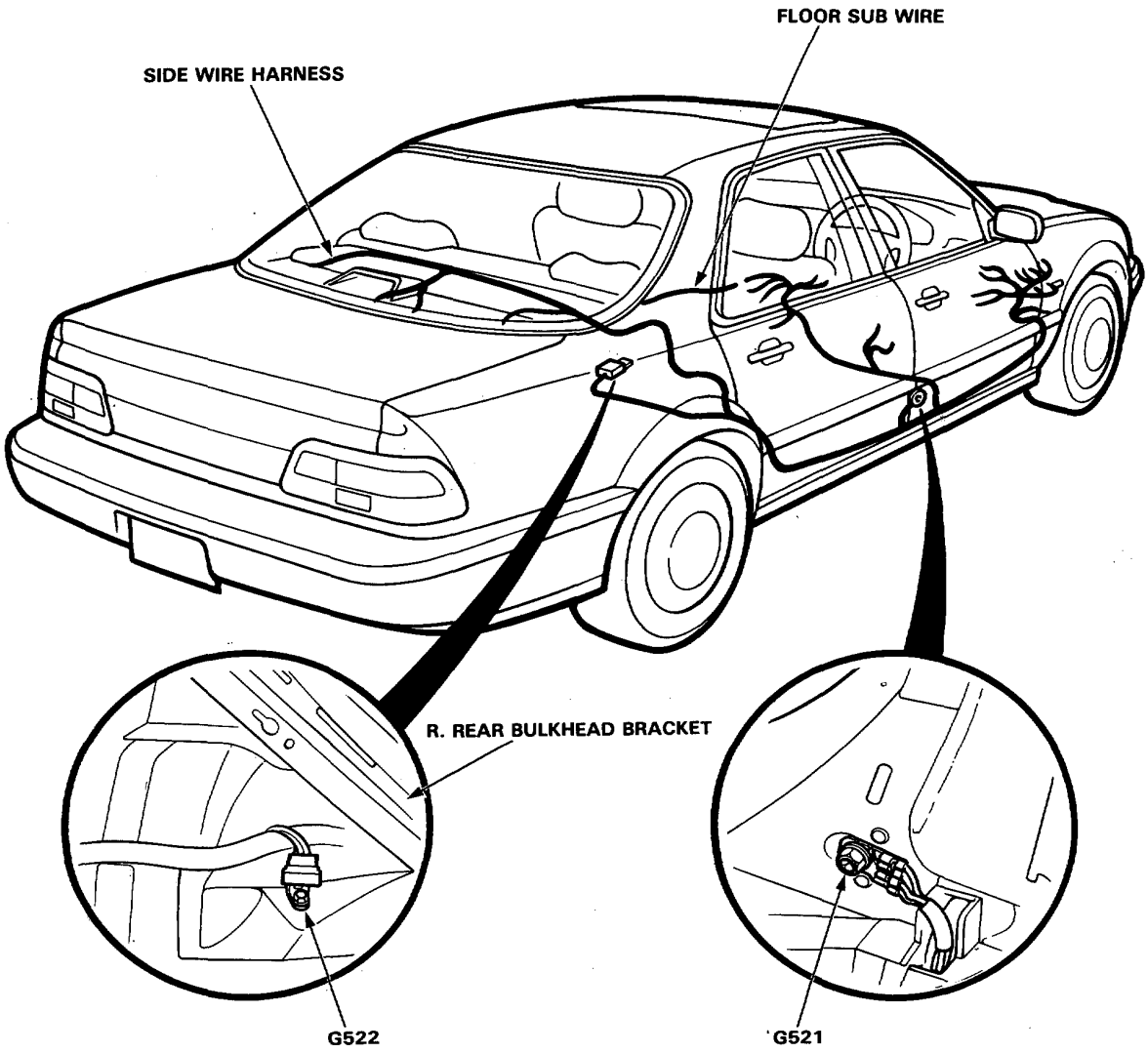
FLOOR SUB WIRE
SIDE WIRE HARNESS
R. REAR BULKHEAD BRACKET
G522
G521

Wire Harness and Ground Locations

Roof (LHD)

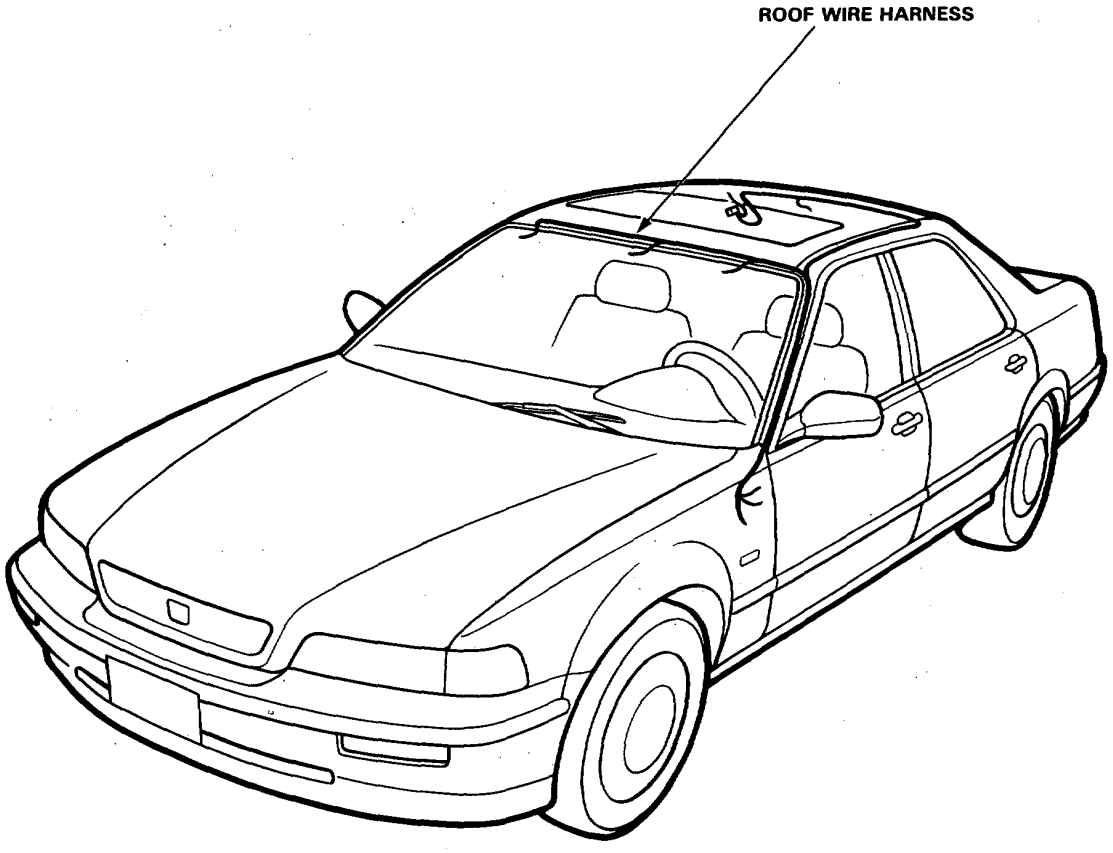

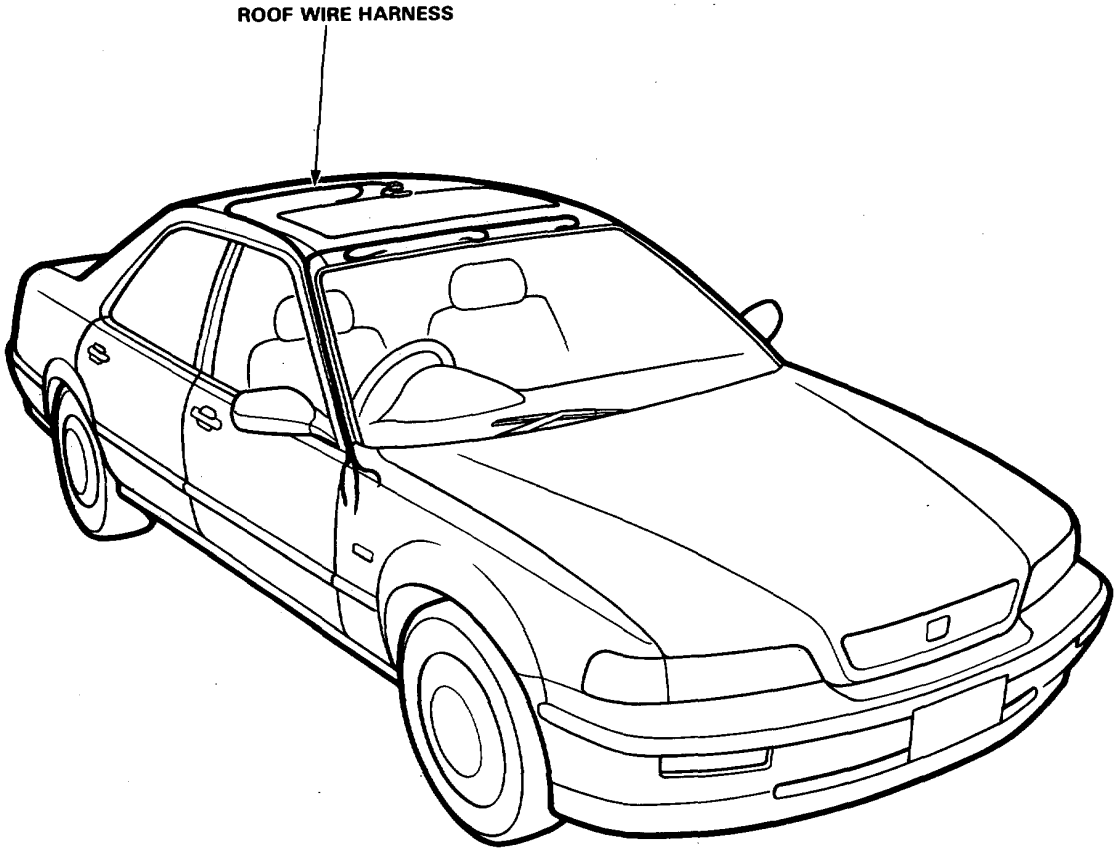
ROOF WIRE HARNESS

Wire Harness and Ground Locations

Roof

NOTE: LHD type is shown. RHD type is similar.

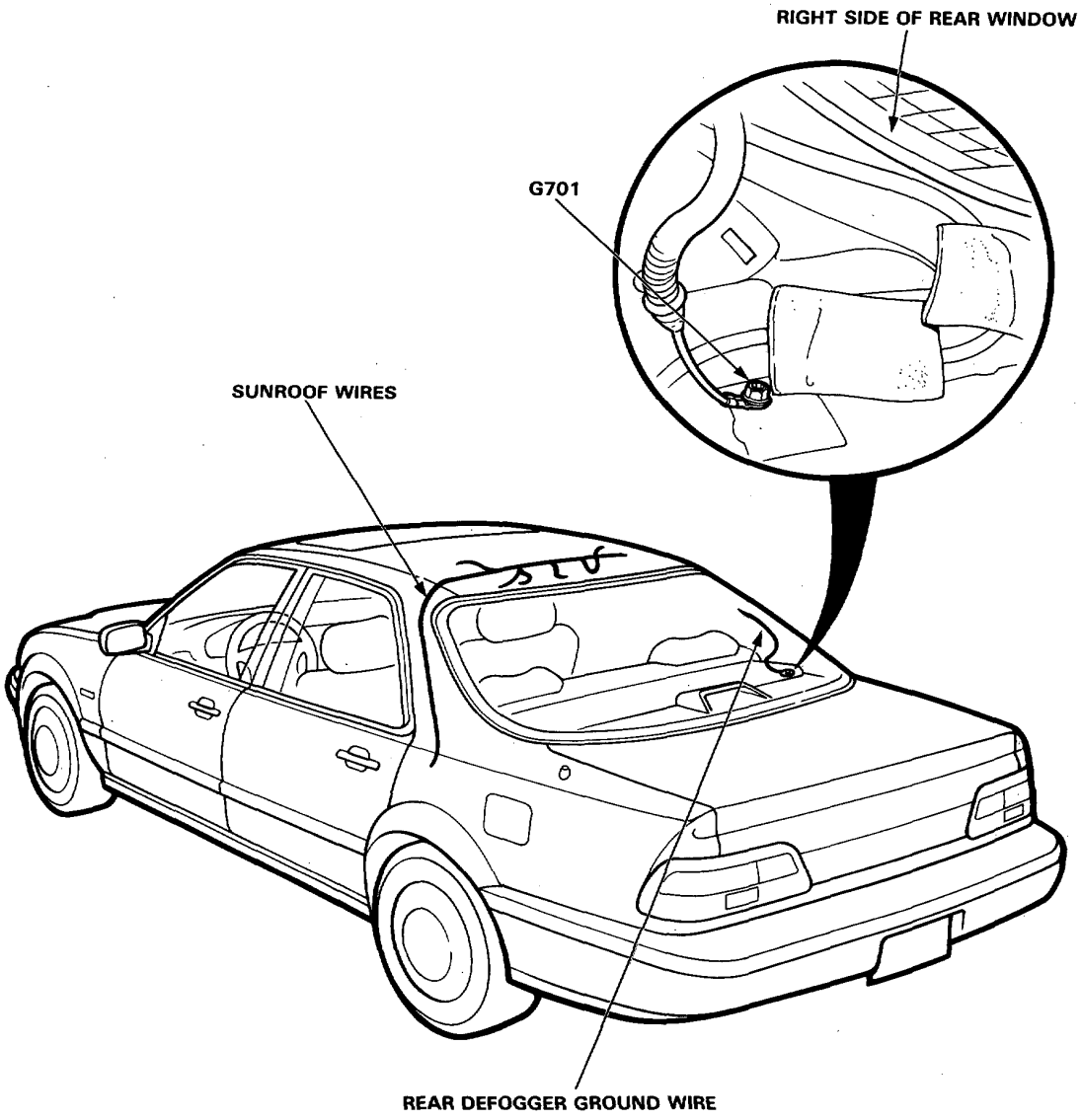

Trunk

NOTE: LHD type is shown. RHD type is similar.

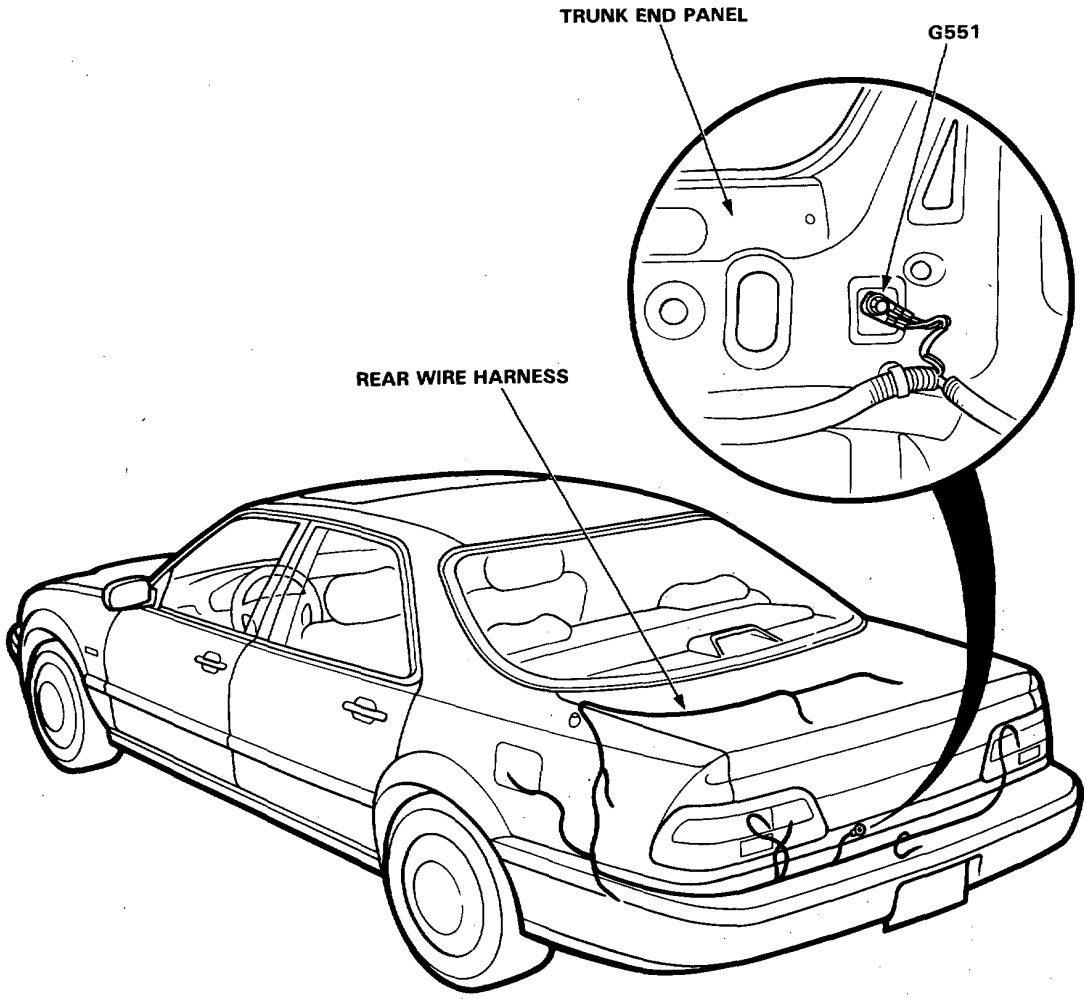

Wire Harness and Ground Locations

Door (LHD)

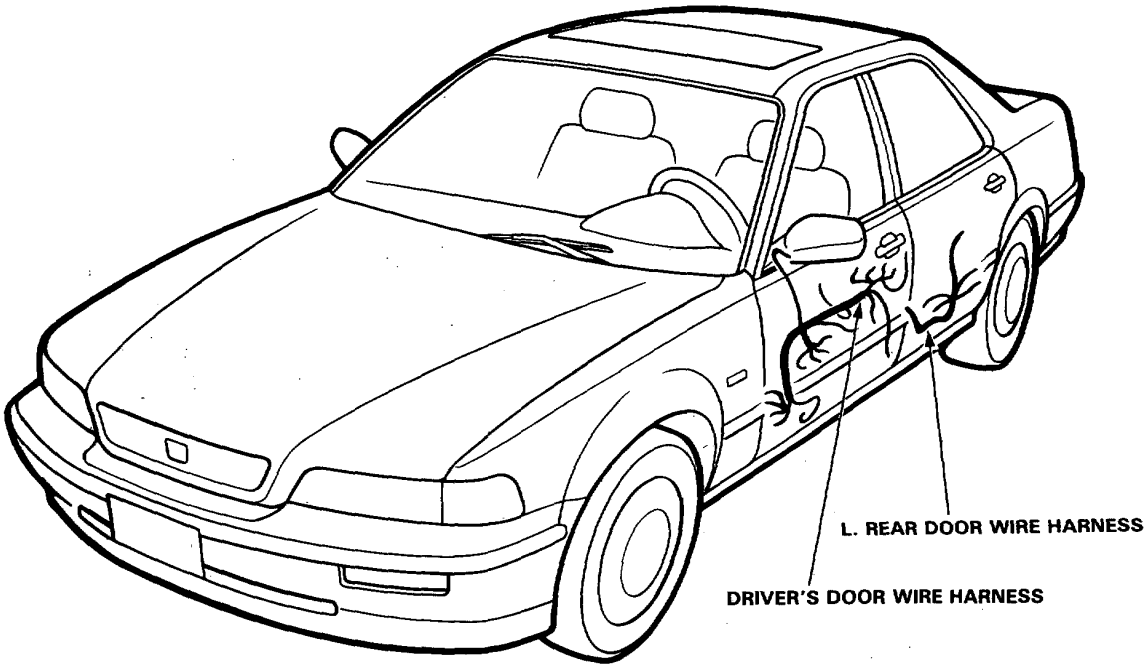

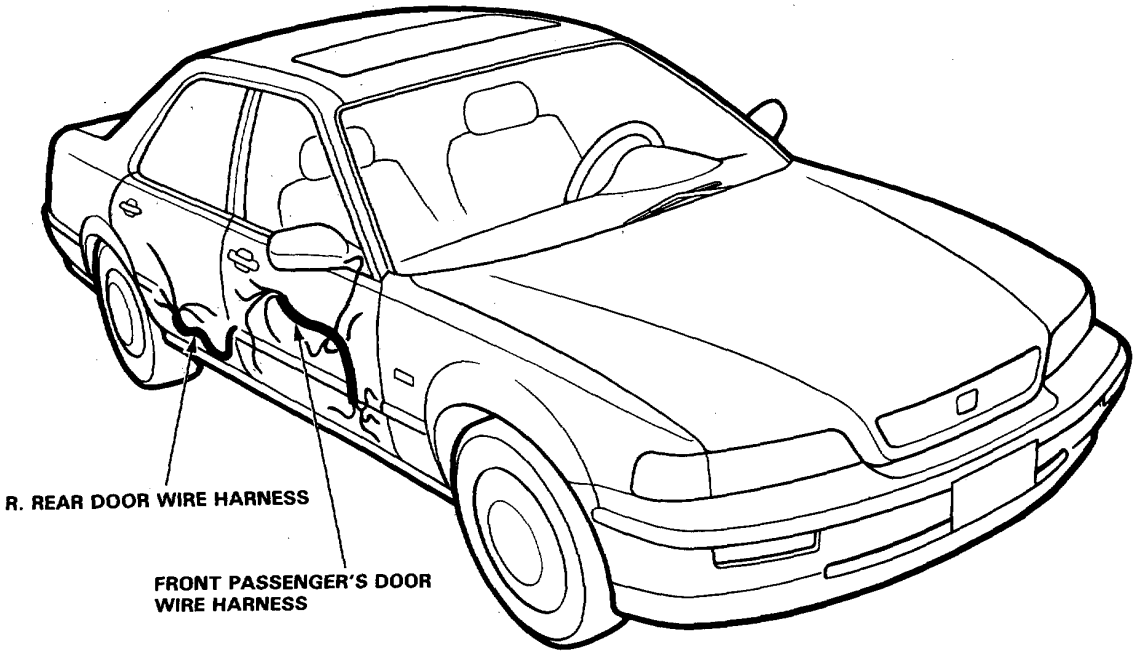

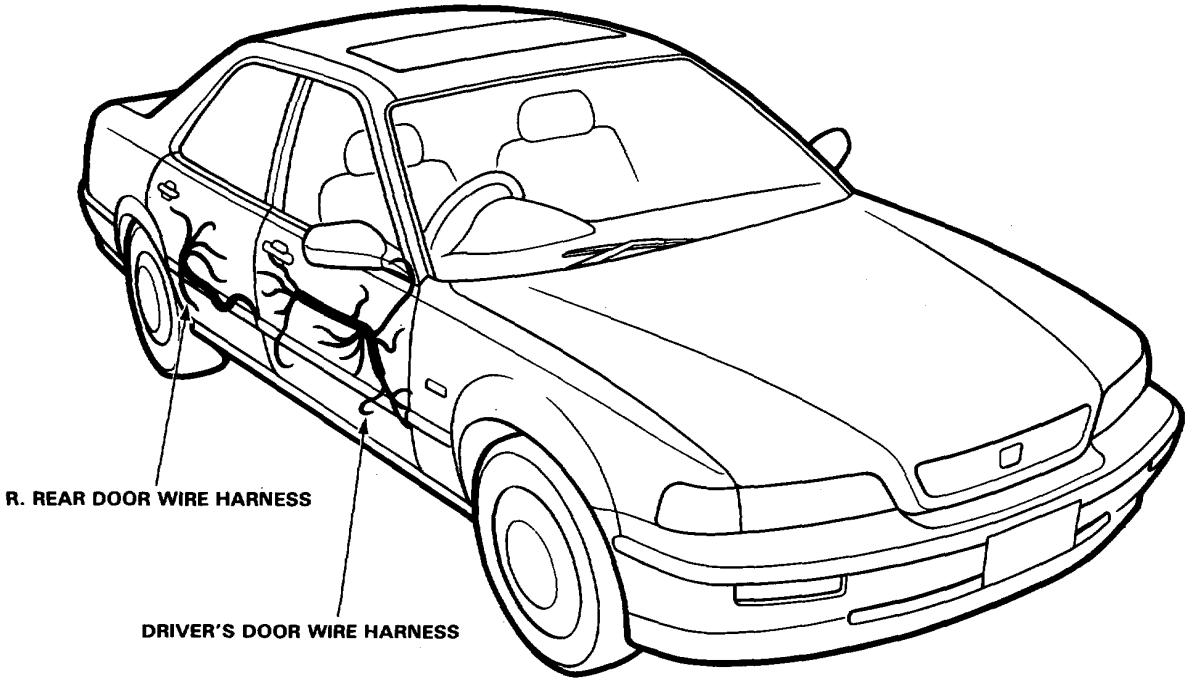
R. REAR DOOR WIRE HARNESS
DRIVER'S DOOR WIRE HARNESS

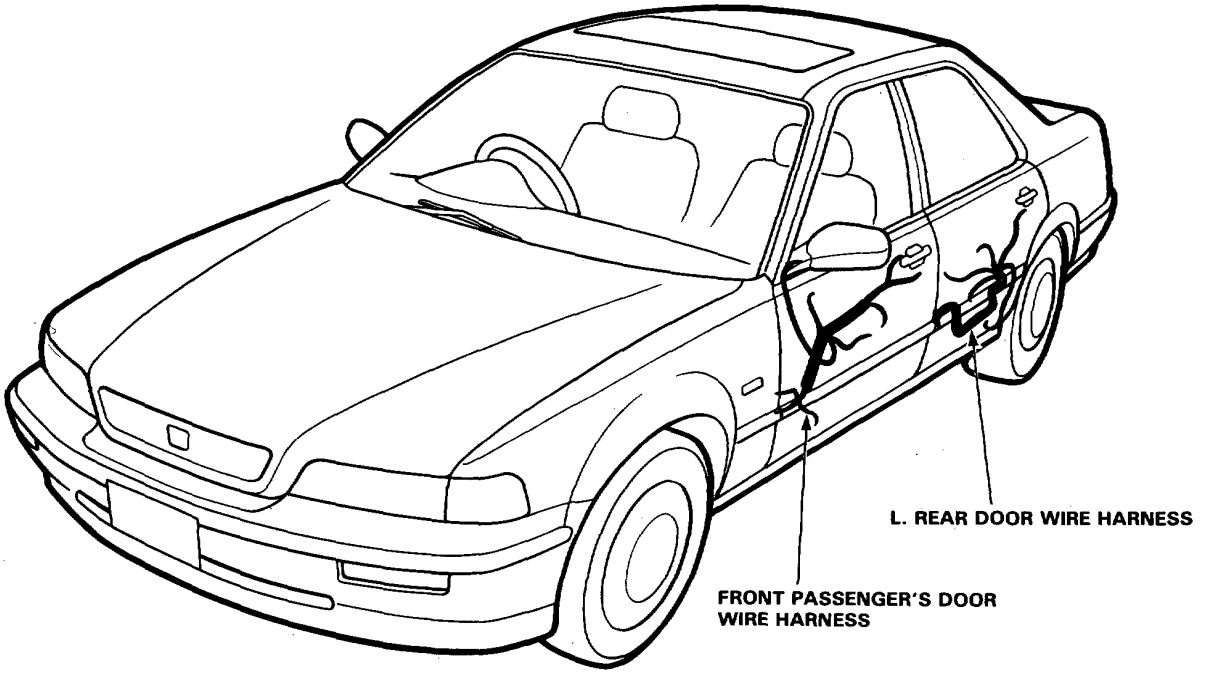
L. REAR DOOR WIRE HARNESS
FRONT PASSENGER'S DOOR
WIRE HARNESS

Wire Harness and Ground Locations

Seat (LHD)

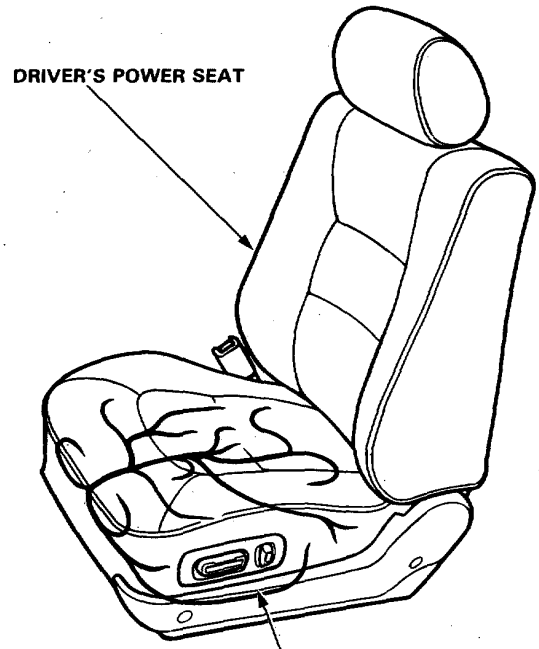

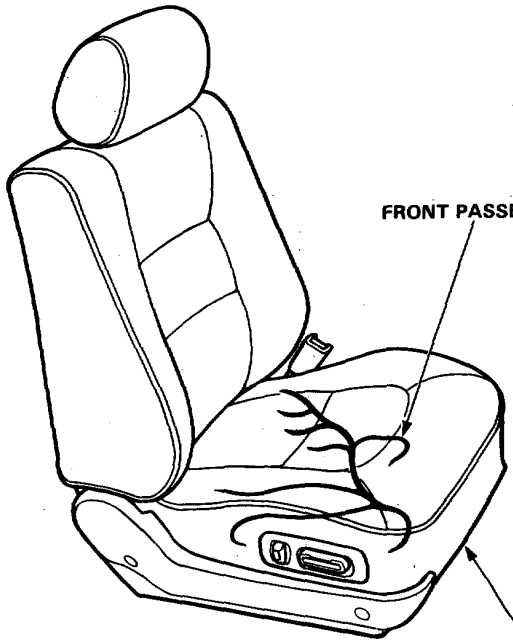

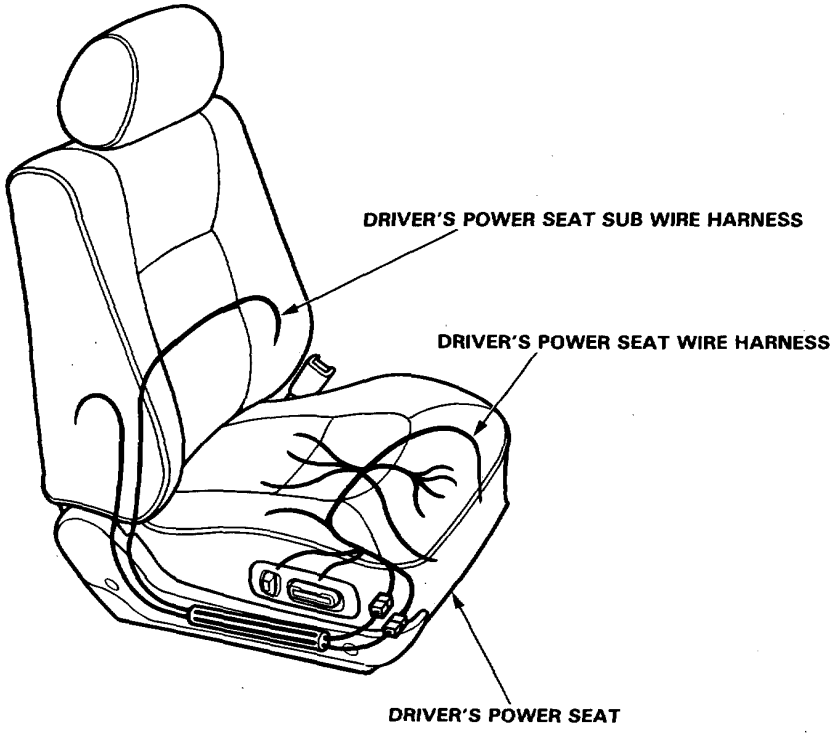
DRIVER'S POWER SEAT SUB WIRE HARNESS
DRIVER'S POWER SEAT WIRE HARNESS
DRIVER'S POWER SEAT

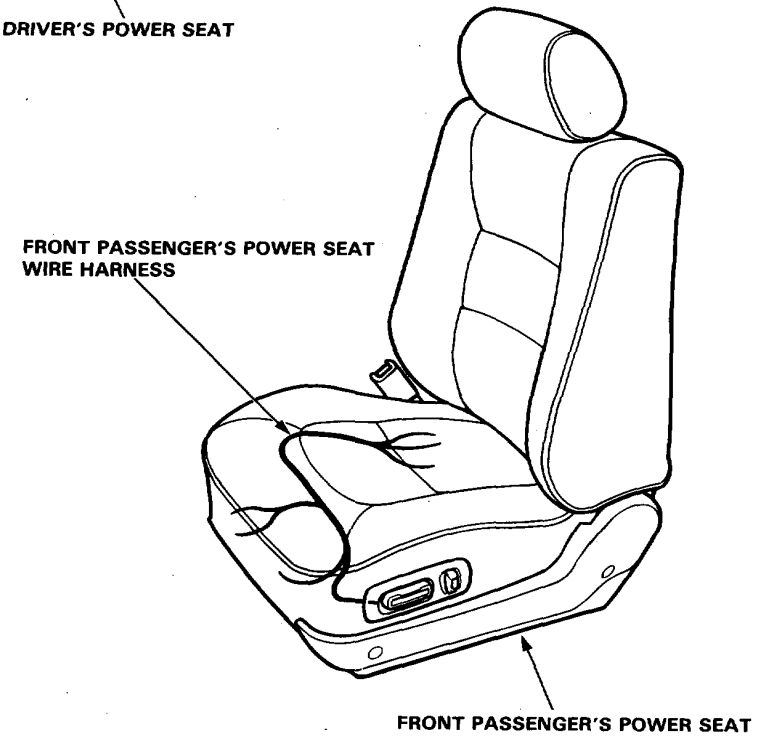
FRONT PASSENGER'S POWER SEAT WIRE HARNESS
FRONT PASSENGER'S POWER SEAT

Fuses

Under-Dash Fuse Box (LHD)

*: NOT USED
●: OPTION
< >: KS model

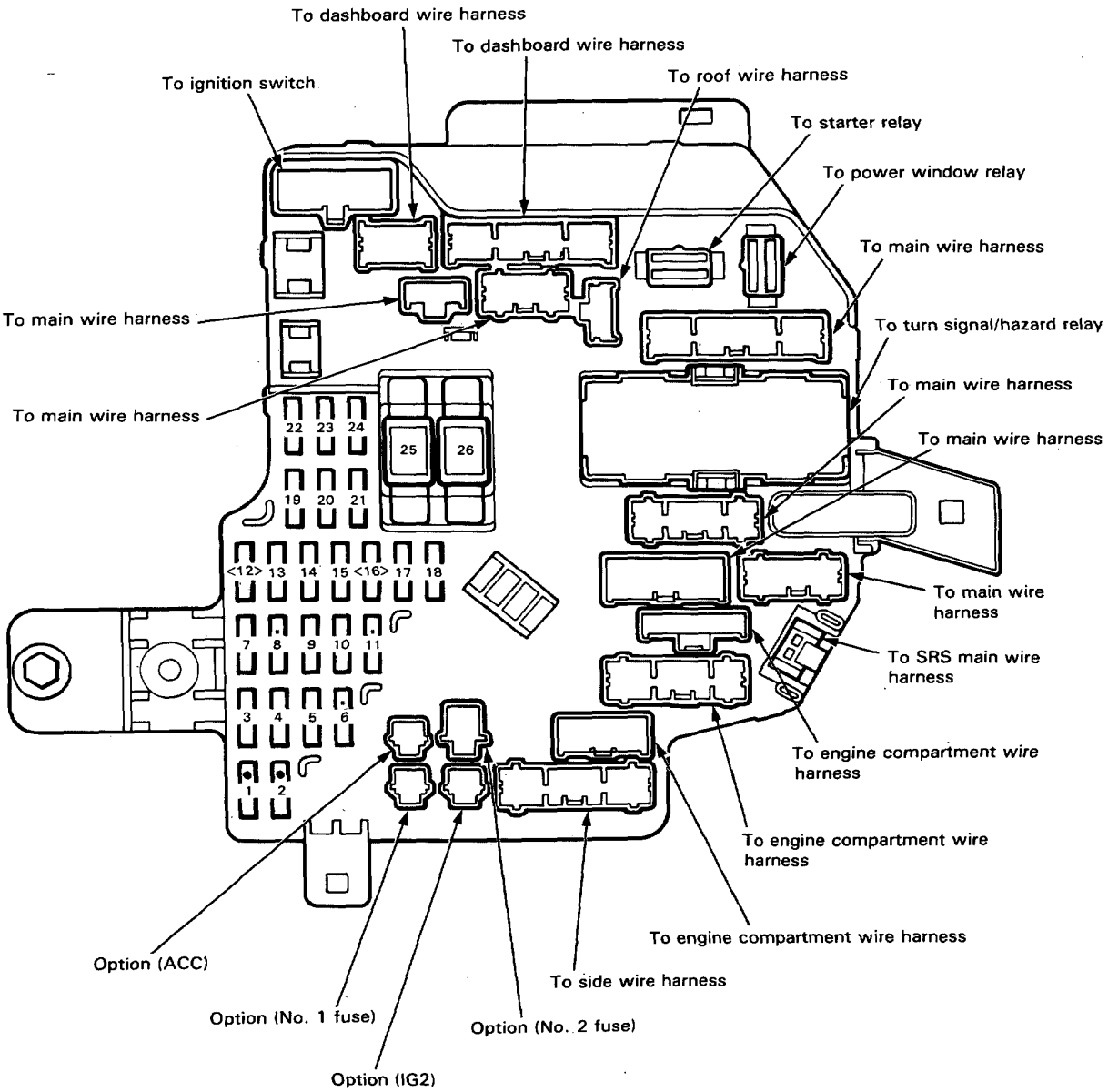

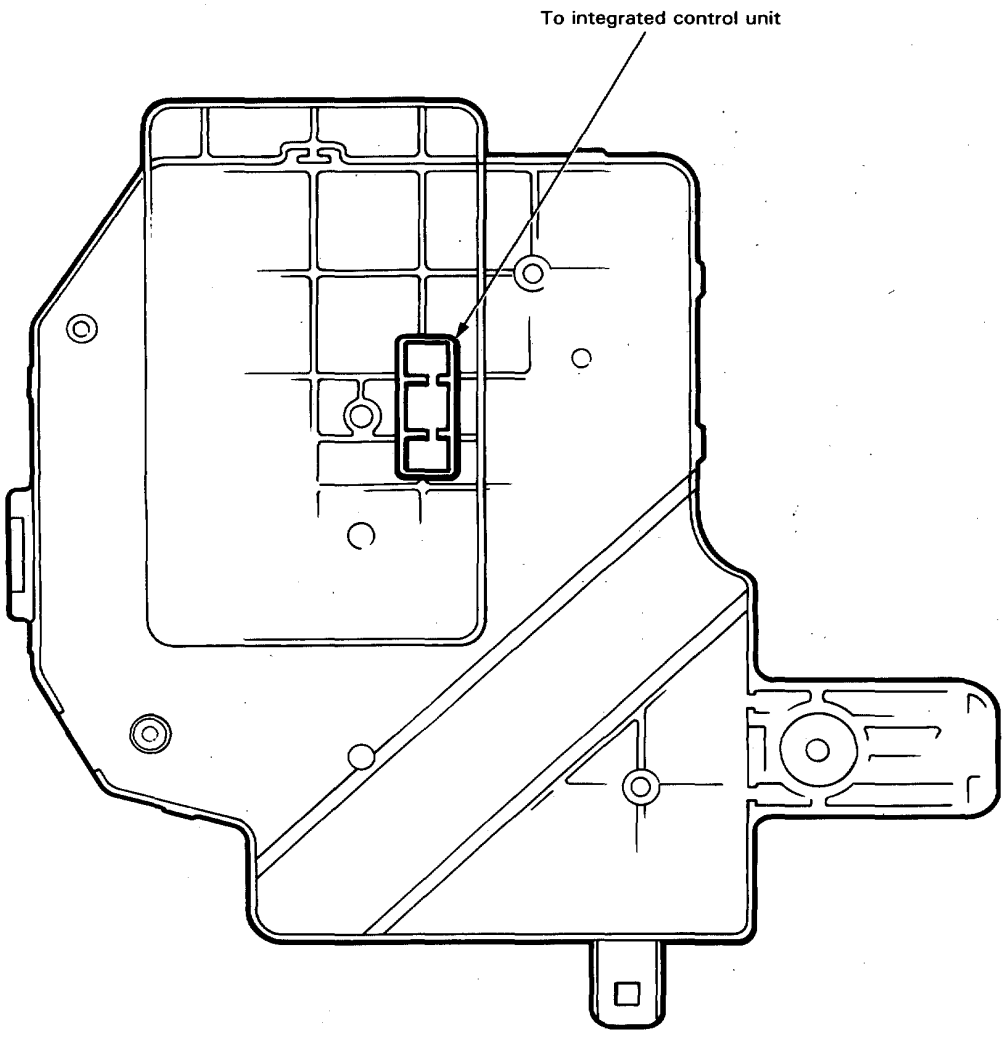
To integrated control unit

Under-Dash Fuse Box (RHD)

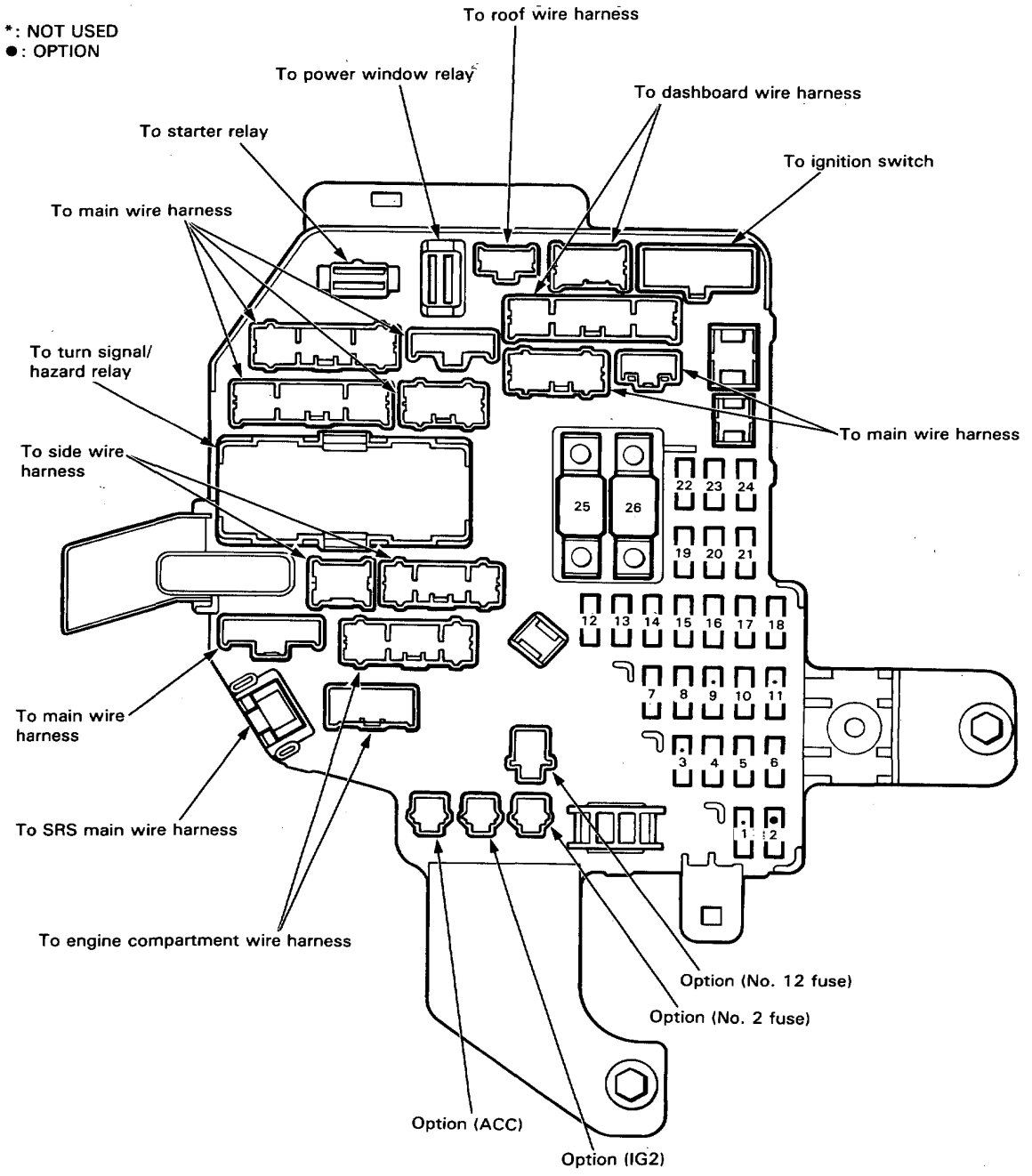

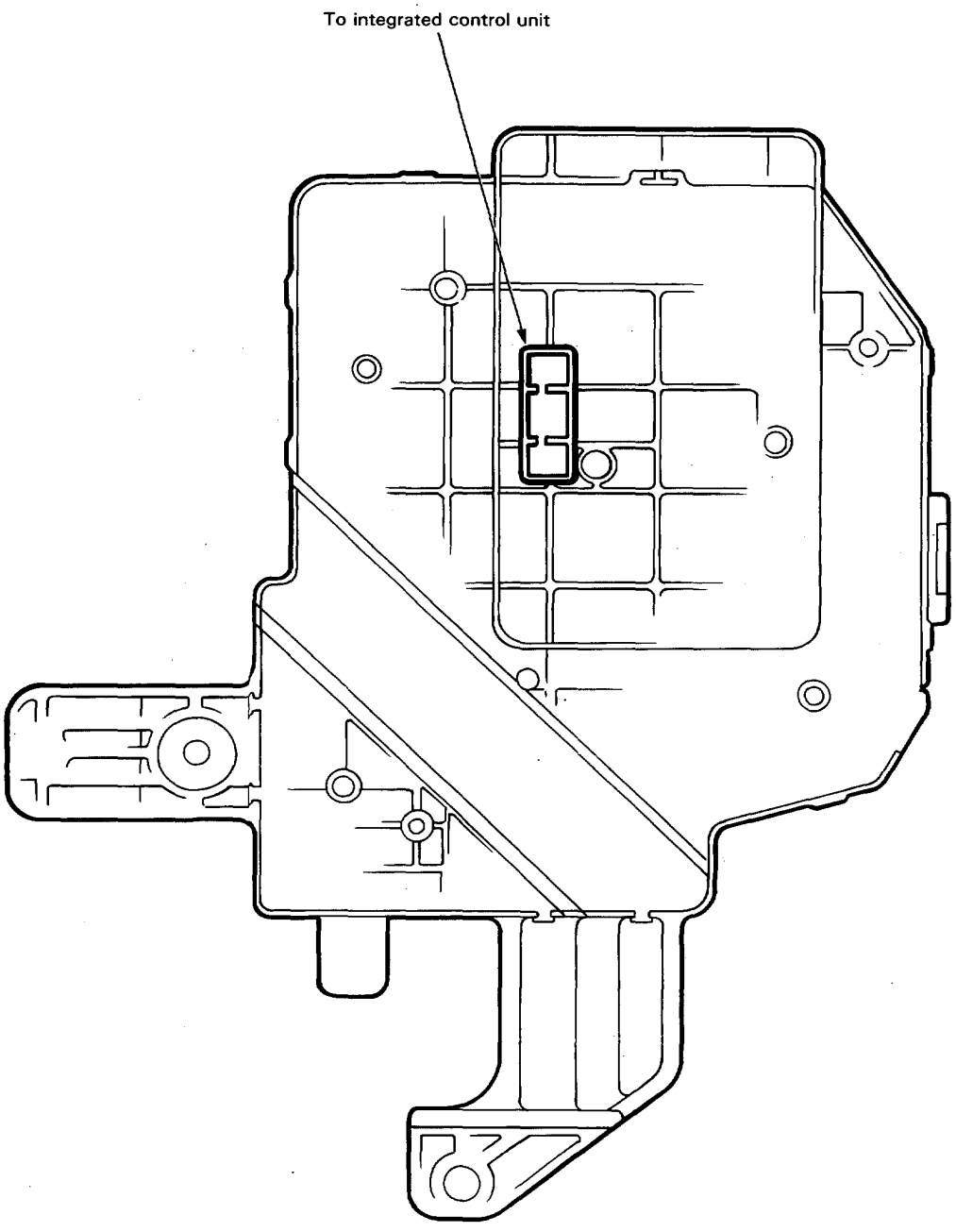
To integrated control unit

Under-Hood Fuse/Relay Box

* : NOT USED
( ): EXCEPT KS model

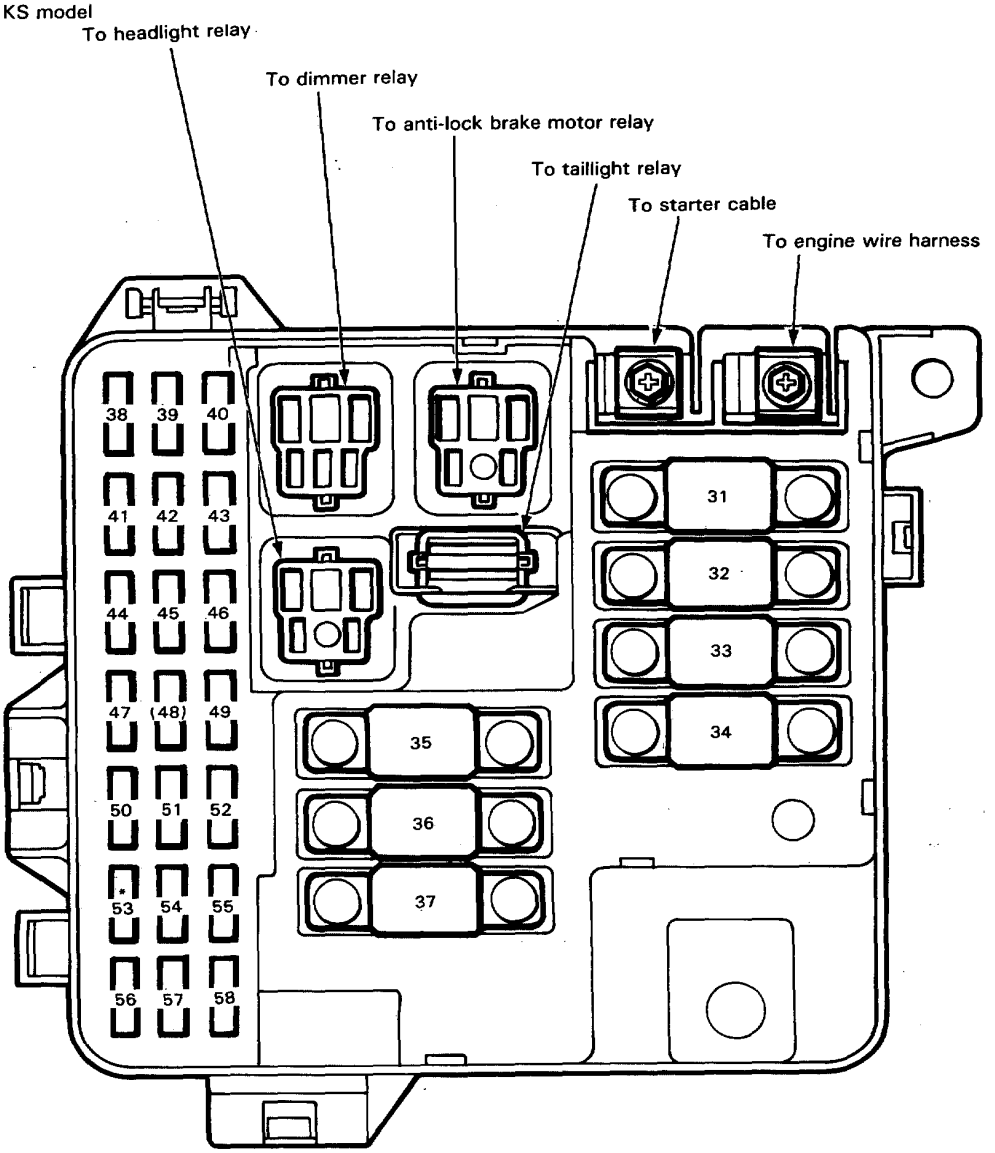

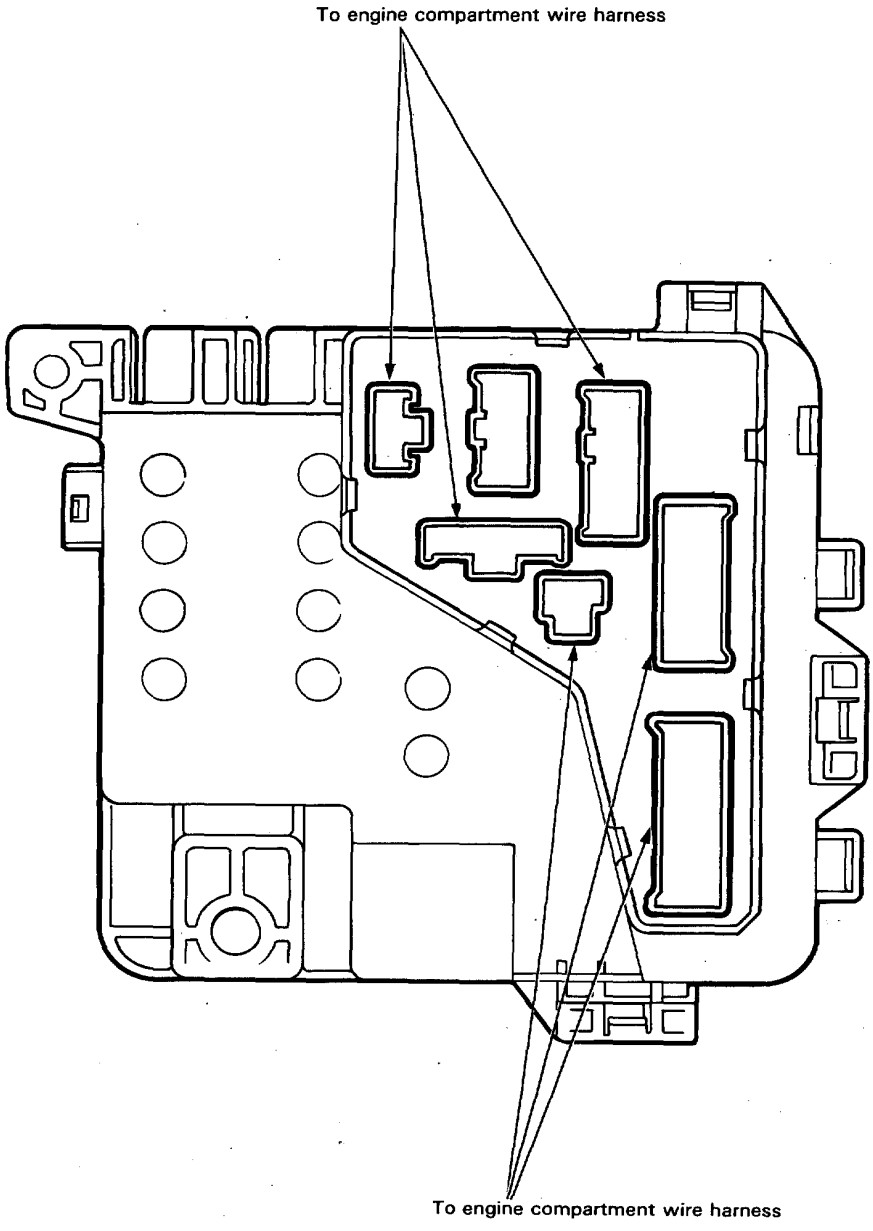
To engine compartment wire harness
To engine compartment wire harness

Power Distribution (LHD)

Circuit Identification

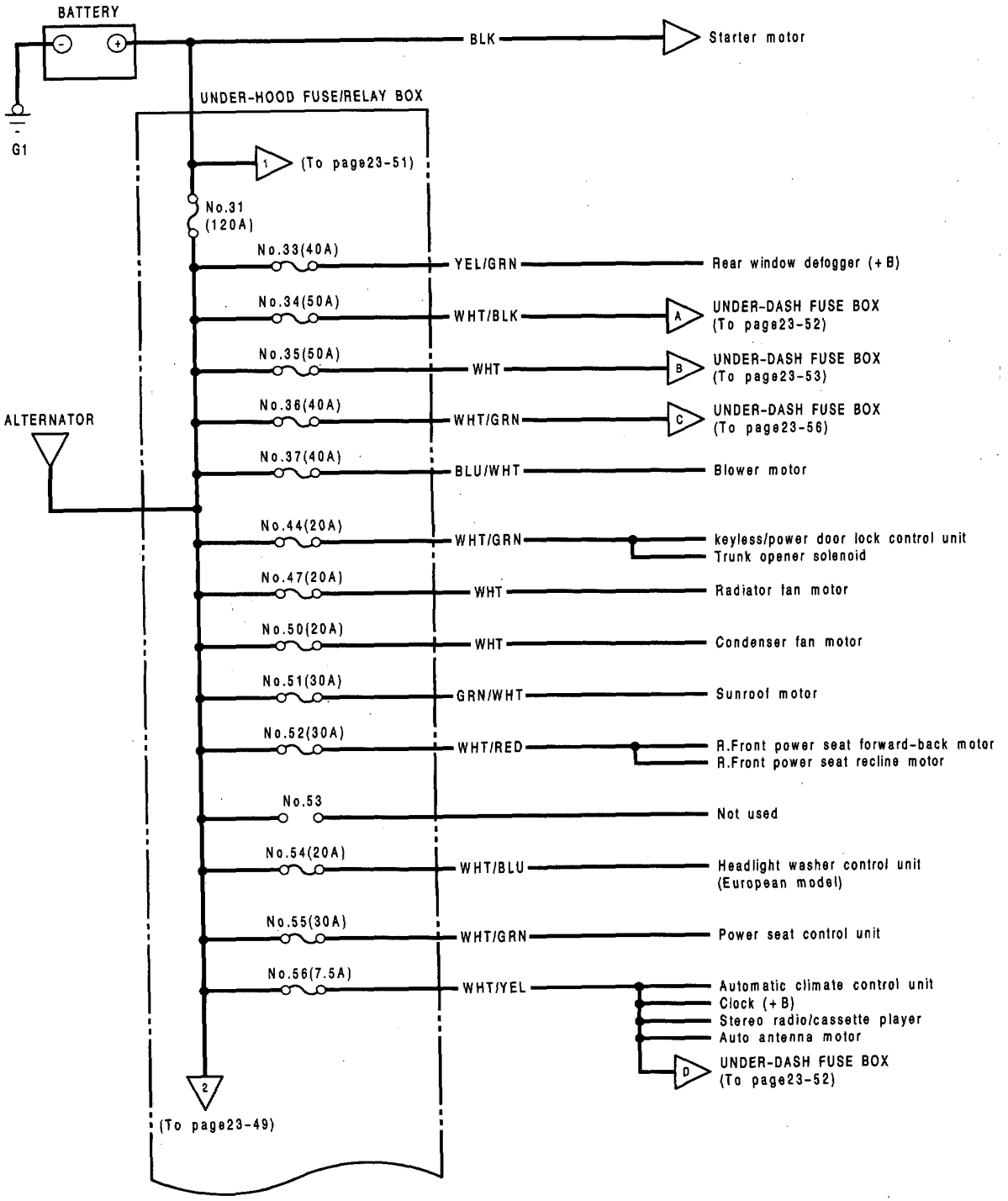

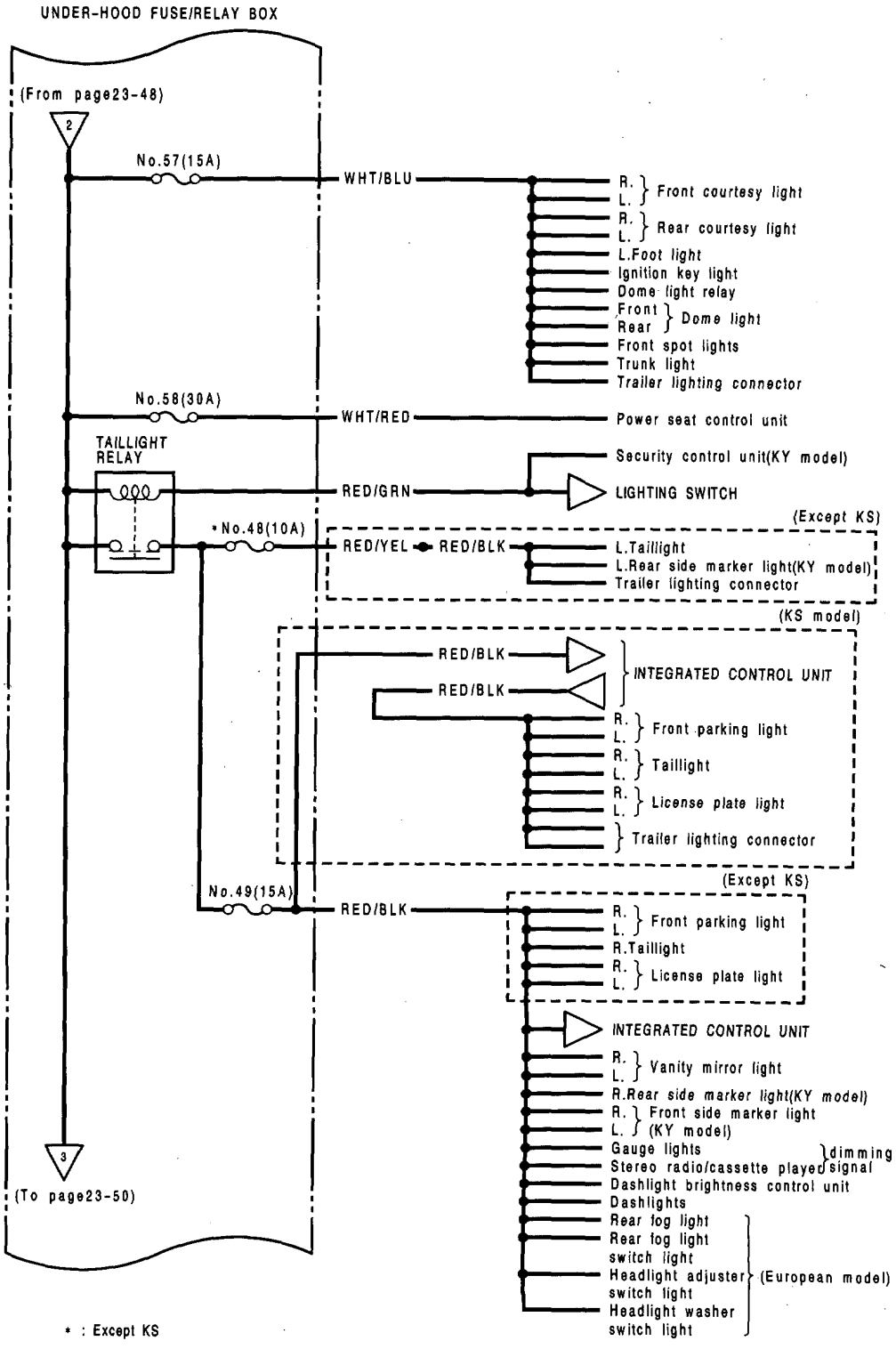
UNDER-HOOD FUSE/RELAY BOX
(From page23-48)
2
No.57(15A)
WHT/BLU
R.
L.
Front courtesy light
R.
L.
Rear courtesy light
L.Foot light
Ignition key light
Dome light relay
Front
Rear
Dome light
Front spot lights
Trunk light
Trailer lighting connector
No.58(30A)
WHT/RED
Power seat control unit
TAILLIGHT RELAY
Security control unit(KY model)
RED/GRN
LIGHTING SWITCH
(Except KS)
*No.48(10A)
RED/YEL
RED/BLK
L.Taillight
L.Rear side marker light(KY model)
Trailer lighting connector
(KS model)
RED/BLK
RED/BLK
INTEGRATED CONTROL UNIT
R.
L.
Front parking light
R.
L.
Taillight
R.
L.
License plate light
Trailer lighting connector
(Except KS)
No.49(15A)
RED/BLK
R.
L.
Front parking light
R.Taillight
R.
L.
License plate light
INTEGRATED CONTROL UNIT
R.
L.
Vanity mirror light
R.Rear side marker light(KY model)
R.
L.
Front side marker light (KY model)
Gauge lights
Stereo radio/cassette player
dimming signal
Dashlight brightness control unit
Dashlights
Rear fog light
Rear fog light switch light
Headlight adjuster switch light
Headlight washer switch light
(European model)
3
(To page23-50)
* : Except KS

(cont'd)

Power Distribution (LHD)

Circuit Identification (cont'd)

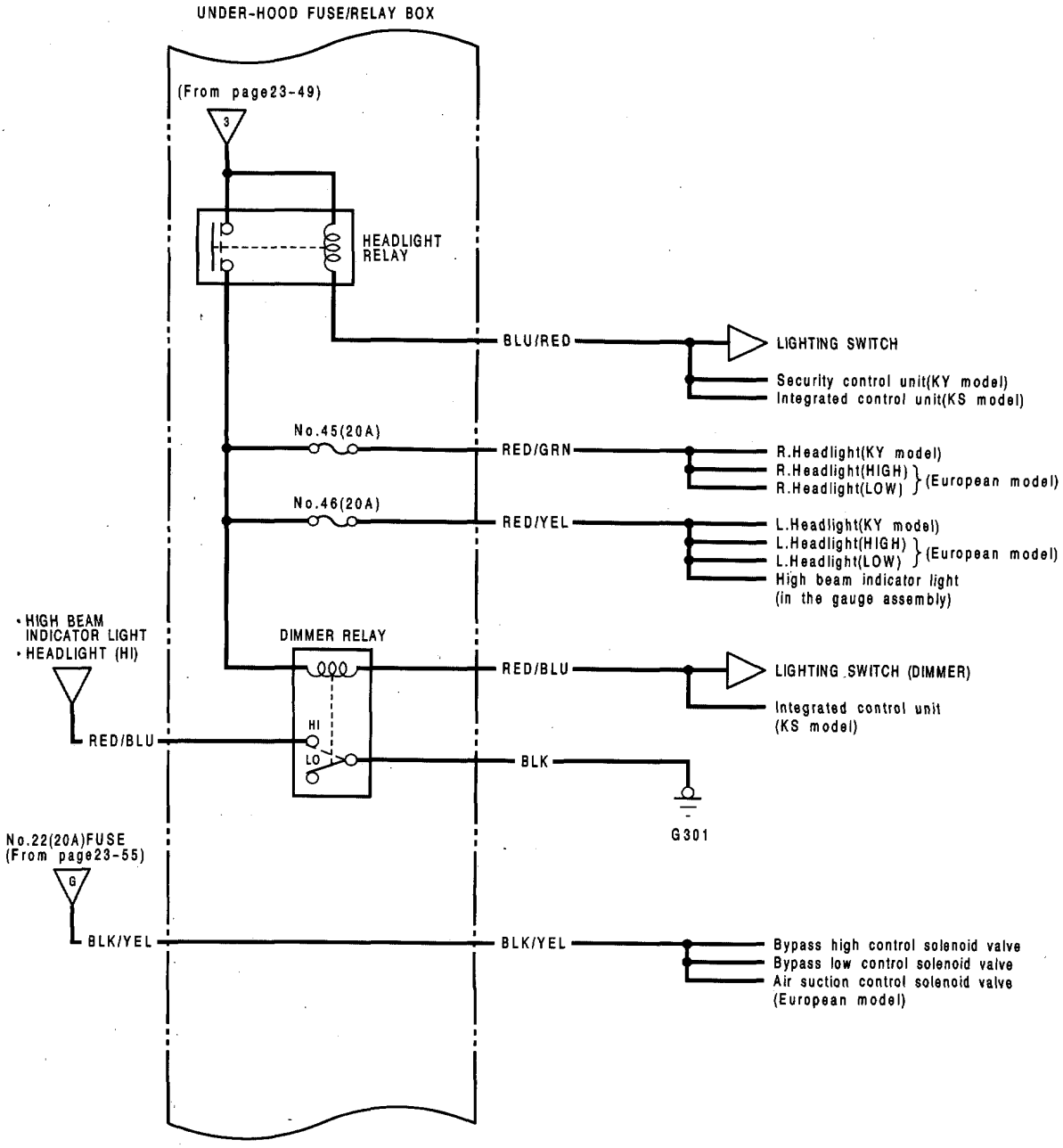

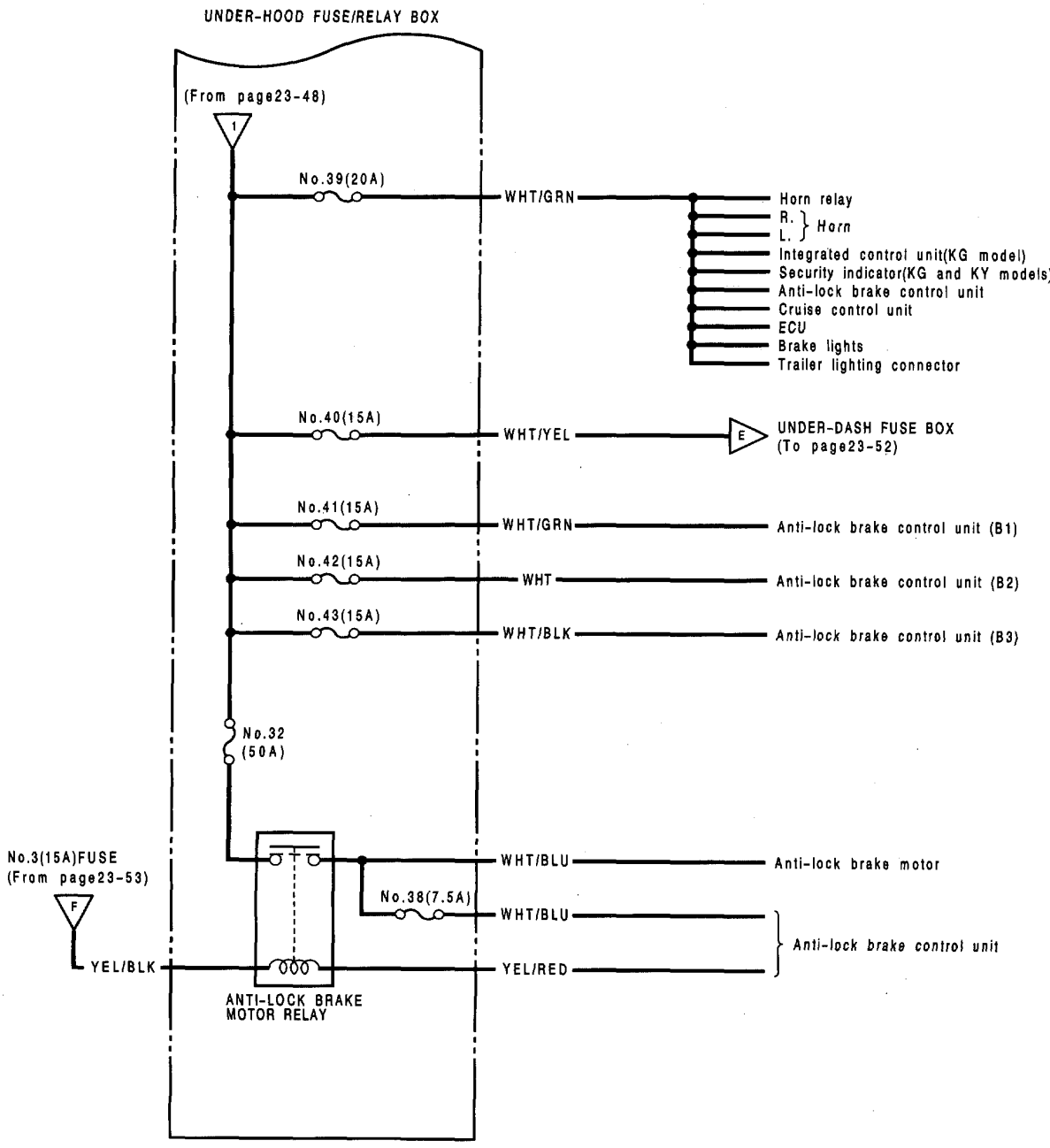
UNDER-HOOD FUSE/RELAY BOX
(From page23-48)
1
No.39(20A)
WHT/GRN
Horn relay
R.
L.
Horn
Integrated control unit(KG model)
Security indicator(KG and KY models)
Anti-lock brake control unit
Cruise control unit
ECU
Brake lights
Trailer lighting connector
No.40(15A)
WHT/YEL
E
UNDER-DASH FUSE BOX
(To page23-52)
No.41(15A)
WHT/GRN
Anti-lock brake control unit (B1)
No.42(15A)
WHT
Anti-lock brake control unit (B2)
No.43(15A)
WHT/BLK
Anti-lock brake control unit (B3)
No.32
(50A)
No.3(15A)FUSE
(From page23-53)
F
YEL/BLK
WHT/BLU
Anti-lock brake motor
No.38(7.5A)
WHT/BLU
YEL/RED
Anti-lock brake control unit
ANTI-LOCK BRAKE
MOTOR RELAY

(cont'd)

Power Distribution (LHD)

Circuit Identification (cont'd)

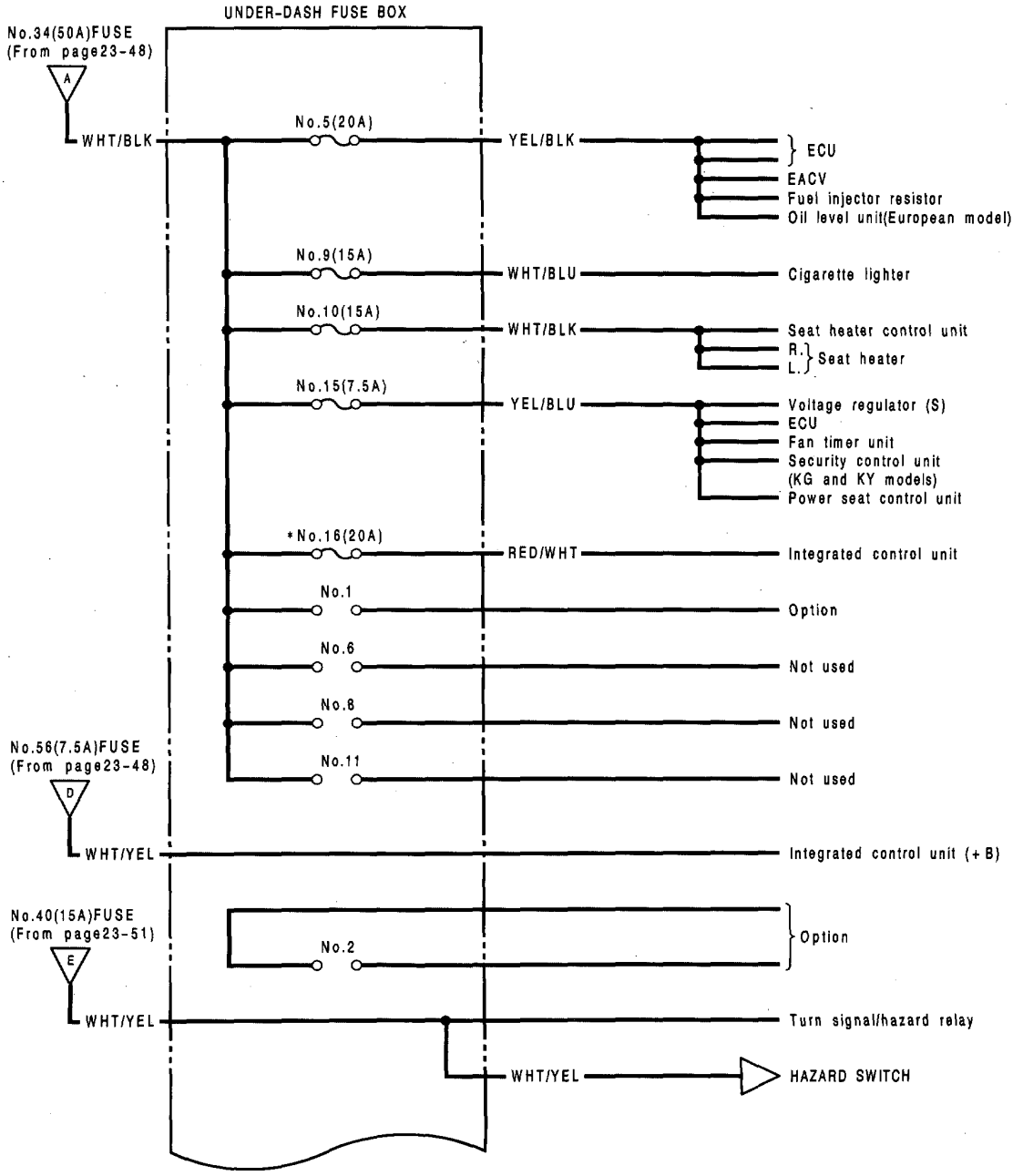

* : KS model

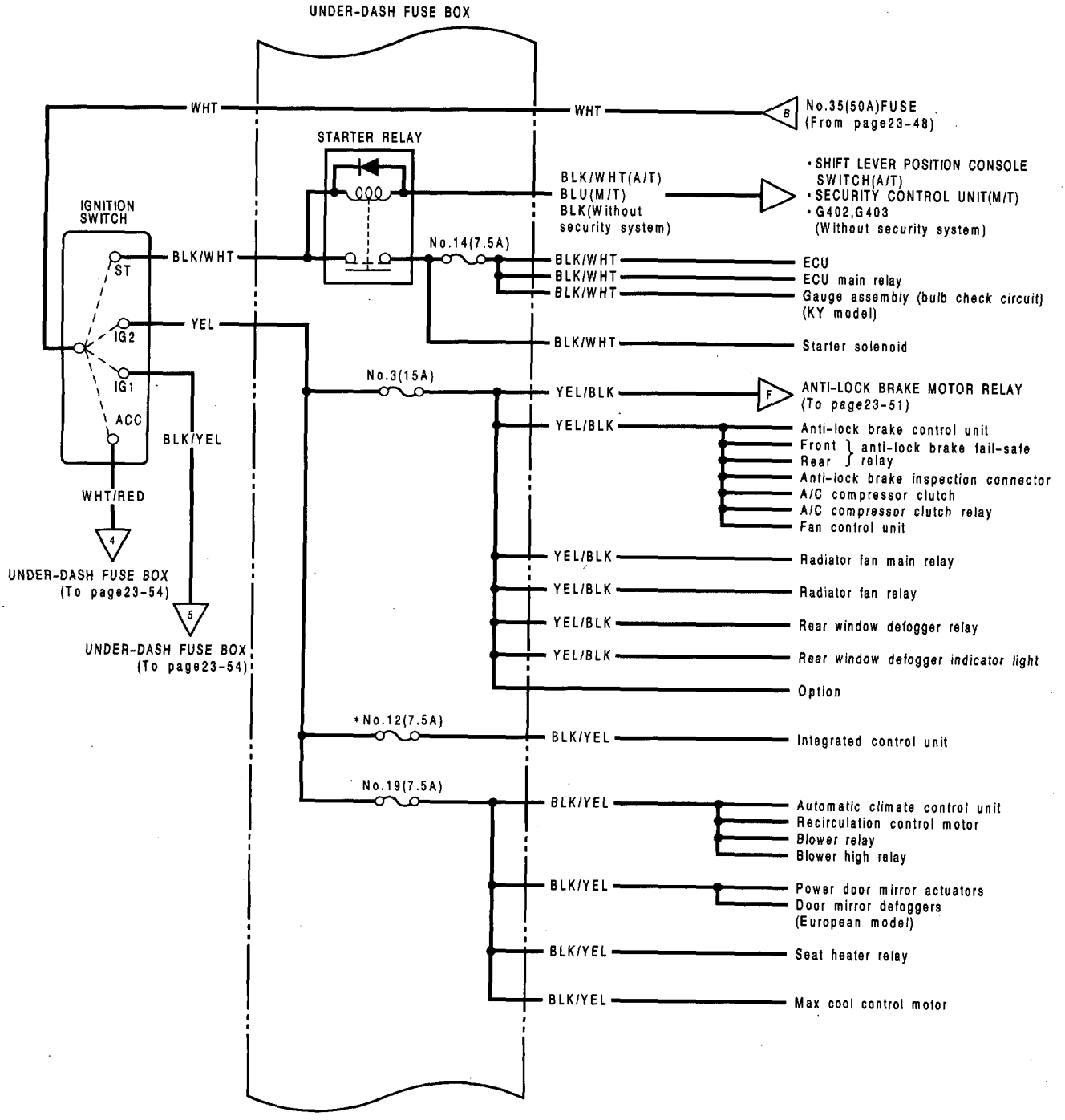

* : KS model

(cont'd)

Power Distribution (LHD)

Circuit Identification (cont'd)

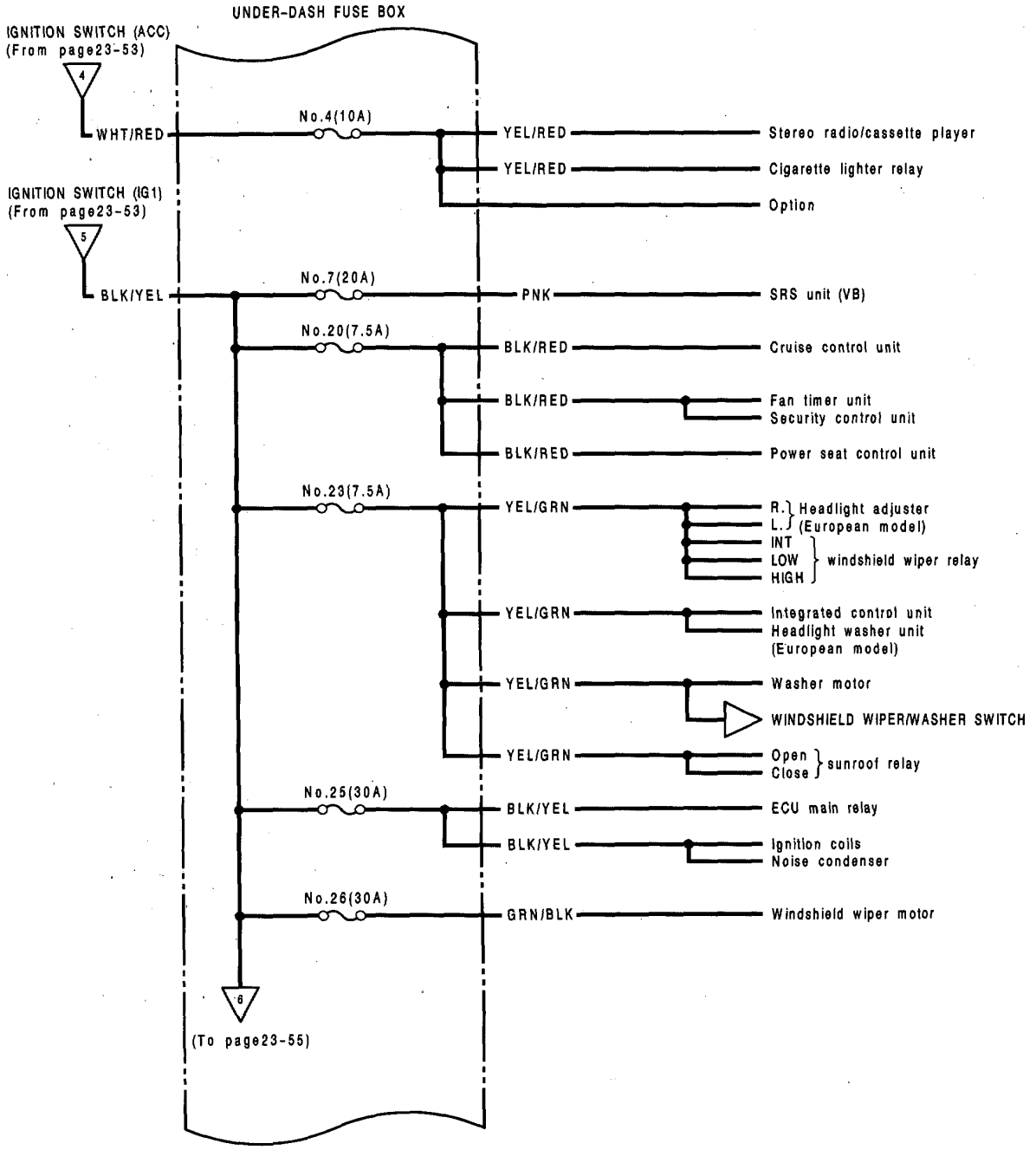

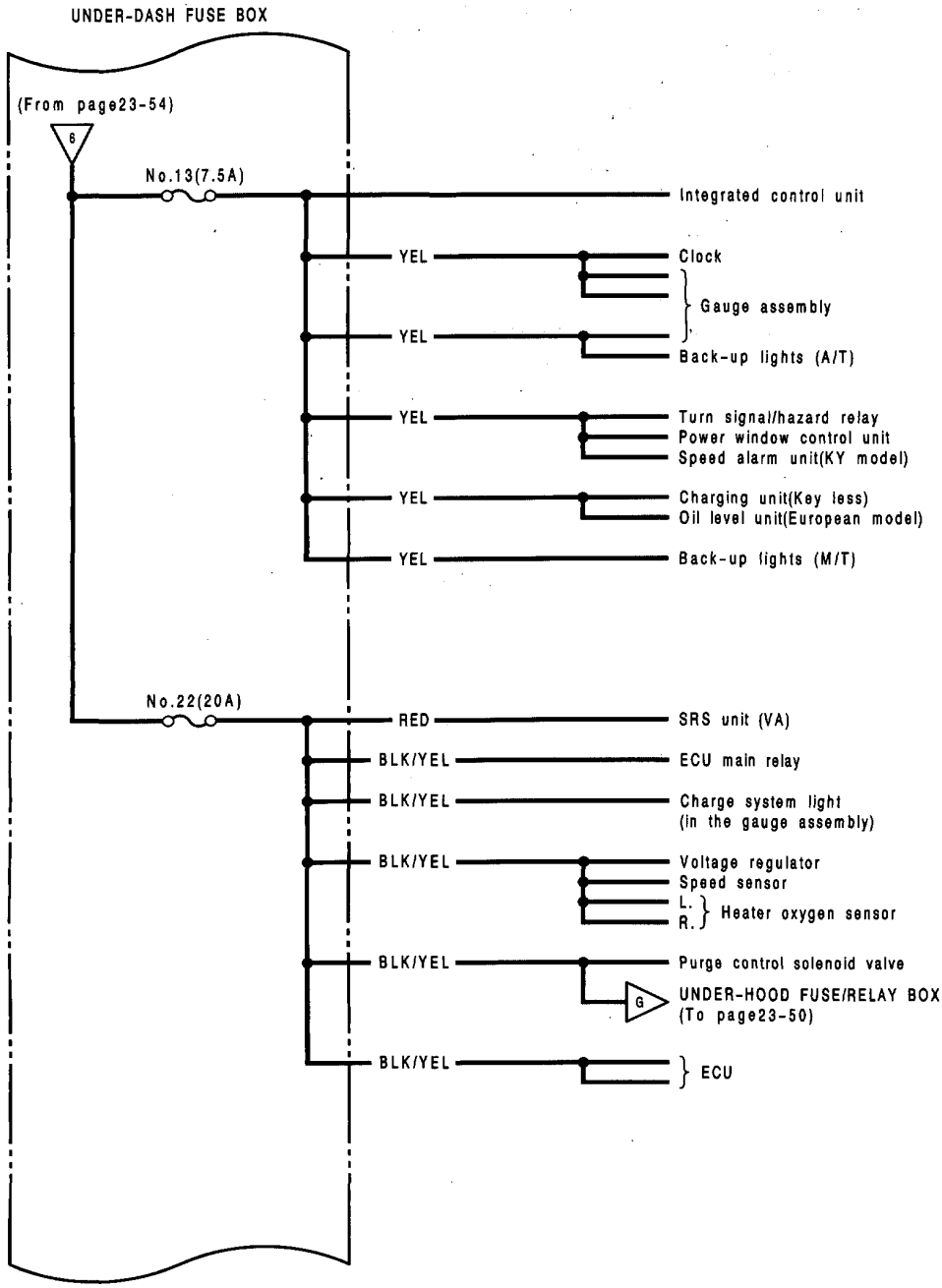
UNDER-DASH FUSE BOX
(From page23-54)
6
No.13(7.5A)
Integrated control unit
YEL
Clock
Gauge assembly
YEL
Back-up lights (A/T)
YEL
Turn signal/hazard relay
Power window control unit
Speed alarm unit(KY model)
YEL
Charging unit(Key less)
Oil level unit(European model)
YEL
Back-up lights (M/T)
No.22(20A)
RED
SRS unit (VA)
BLK/YEL
ECU main relay
BLK/YEL
Charge system light
(in the gauge assembly)
BLK/YEL
Voltage regulator
Speed sensor
L.
R.
Heater oxygen sensor
BLK/YEL
Purge control solenoid valve
G
UNDER-HOOD FUSE/RELAY BOX
(To page23-50)
BLK/YEL
ECU

(cont'd)

Power Distribution (LHD)

Circuit Identification (cont'd)

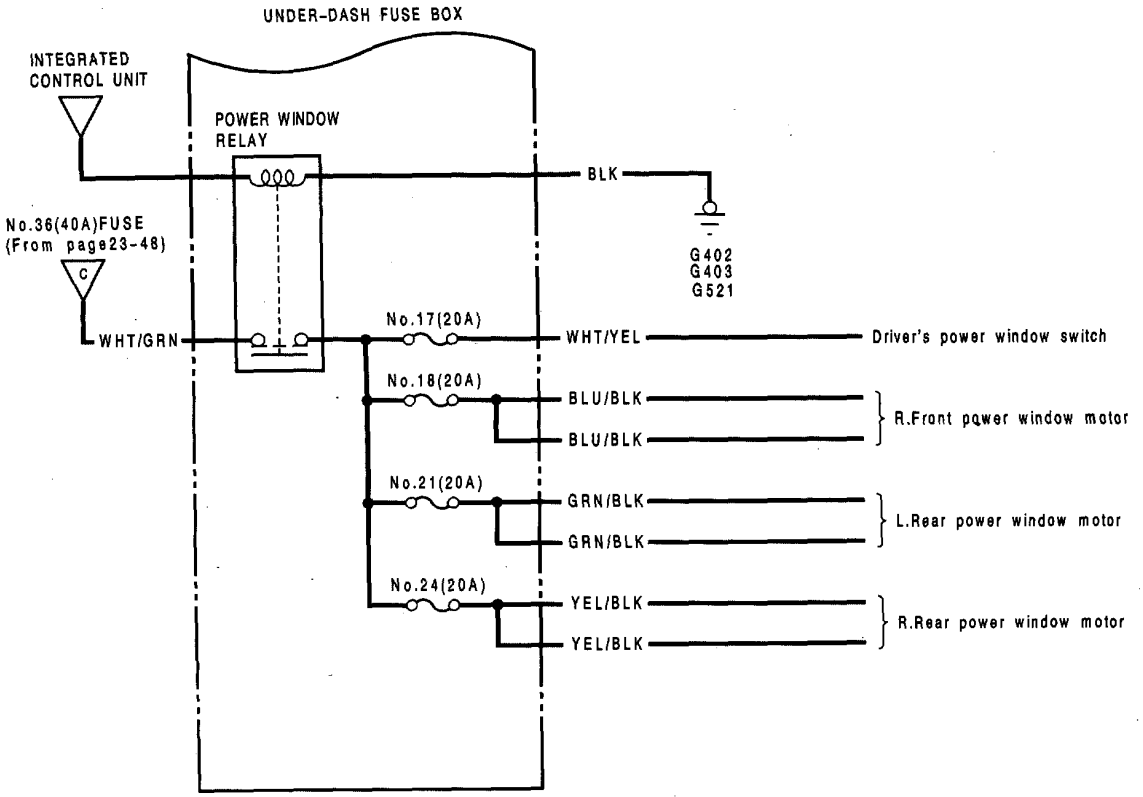

Power Distribution (RHD)

Circuit Identification

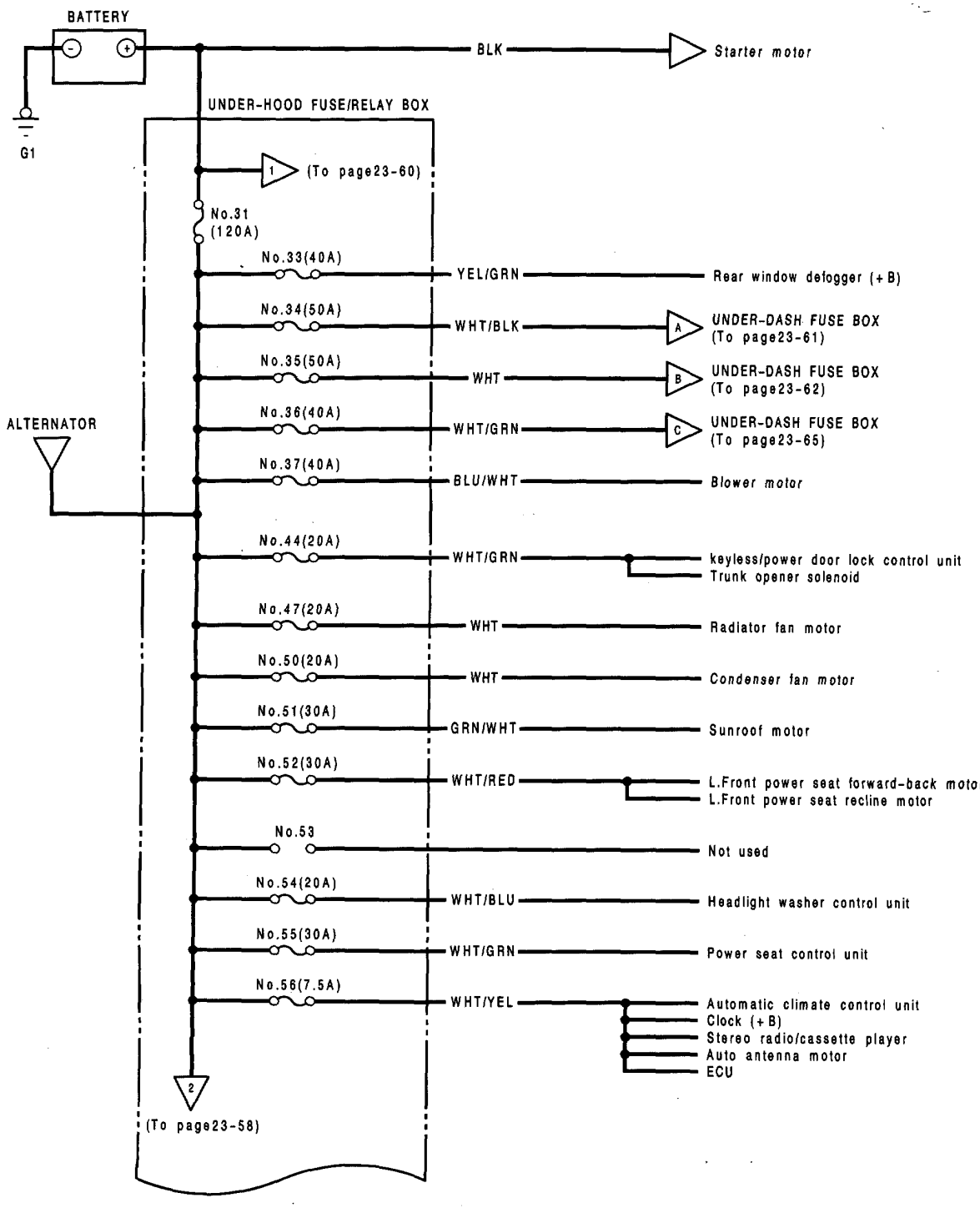

(cont'd)

Power Distribution (RHD)

Circuit Identification (cont'd)

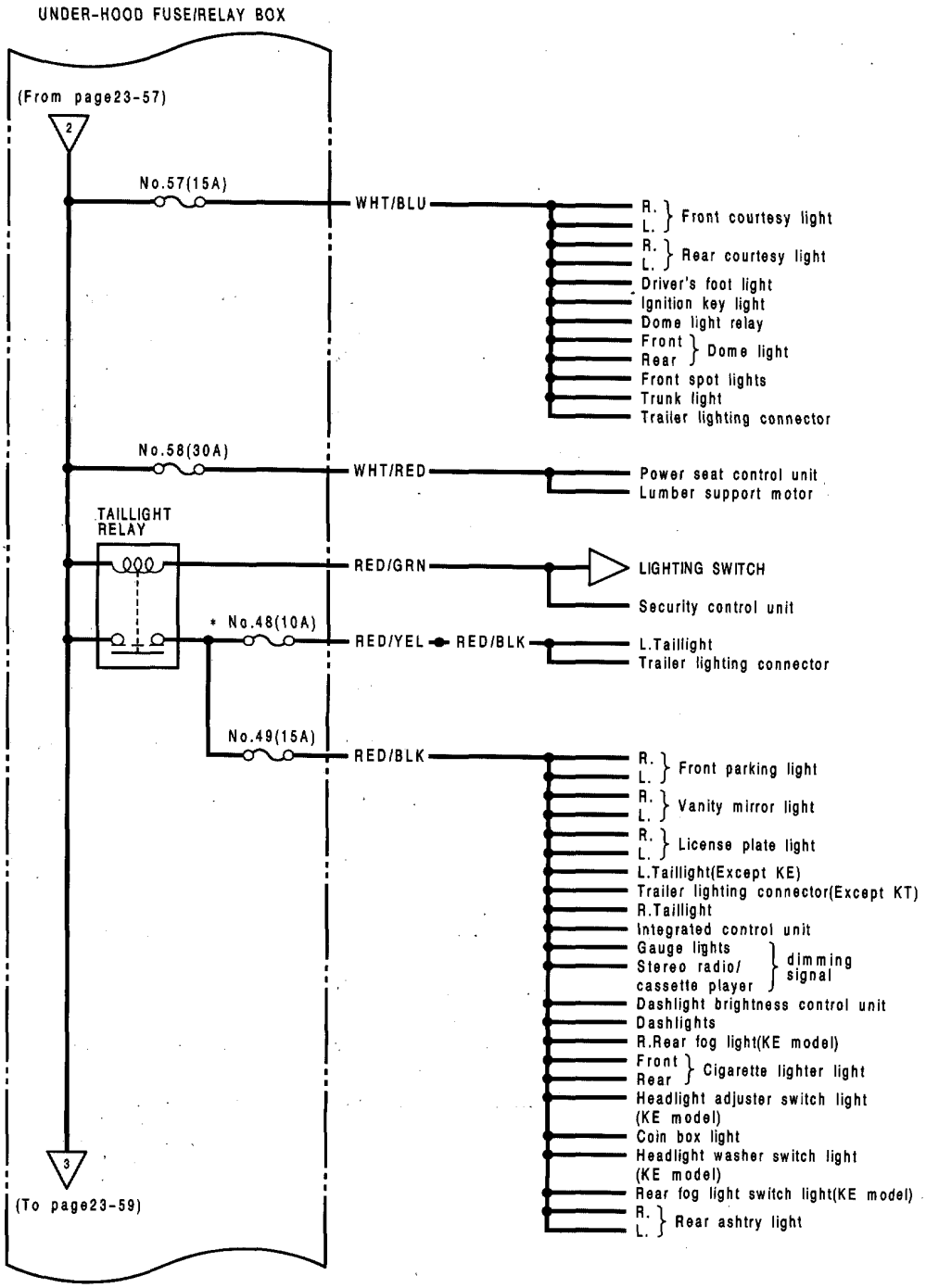

* : KE model

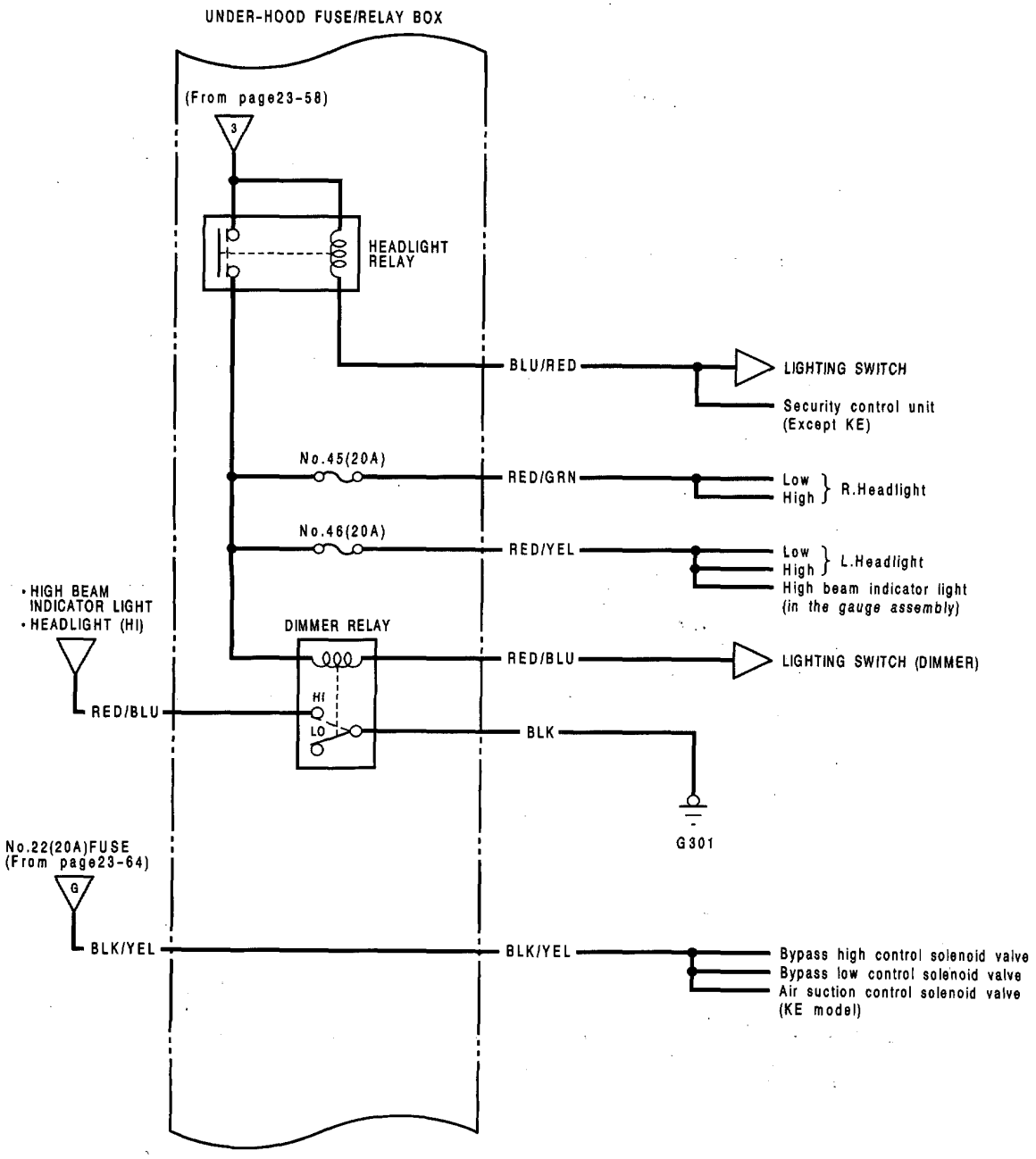
UNDER-HOOD FUSE/RELAY BOX
(From page23-58)
3
HEADLIGHT RELAY
BLU/RED
LIGHTING SWITCH
Security control unit (Except KE)
No.45(20A)
RED/GRN
Low
High
R.Headlight
No.46(20A)
RED/YEL
Low
High
L.Headlight
High beam indicator light (in the gauge assembly)
• HIGH BEAM INDICATOR LIGHT
• HEADLIGHT (HI)
DIMMER RELAY
RED/BLU
LIGHTING SWITCH (DIMMER)
HI
LO
RED/BLU
BLK
G301
No.22(20A)FUSE (From page23-64)
G
BLK/YEL
BLK/YEL
Bypass high control solenoid valve
Bypass low control solenoid valve
Air suction control solenoid valve (KE model)

(cont'd)

Power Distribution (RHD)

Circuit Identification (cont'd)

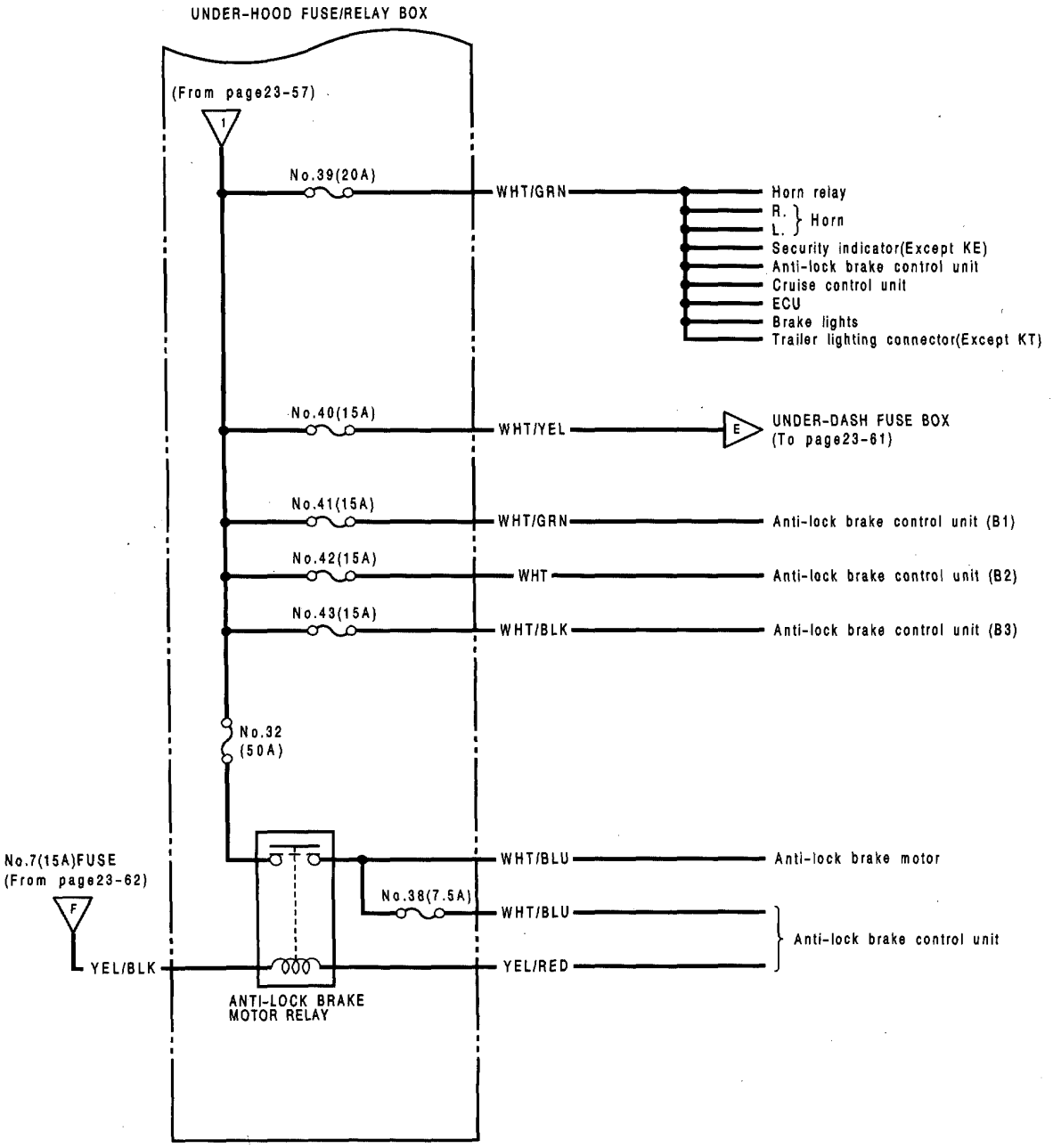

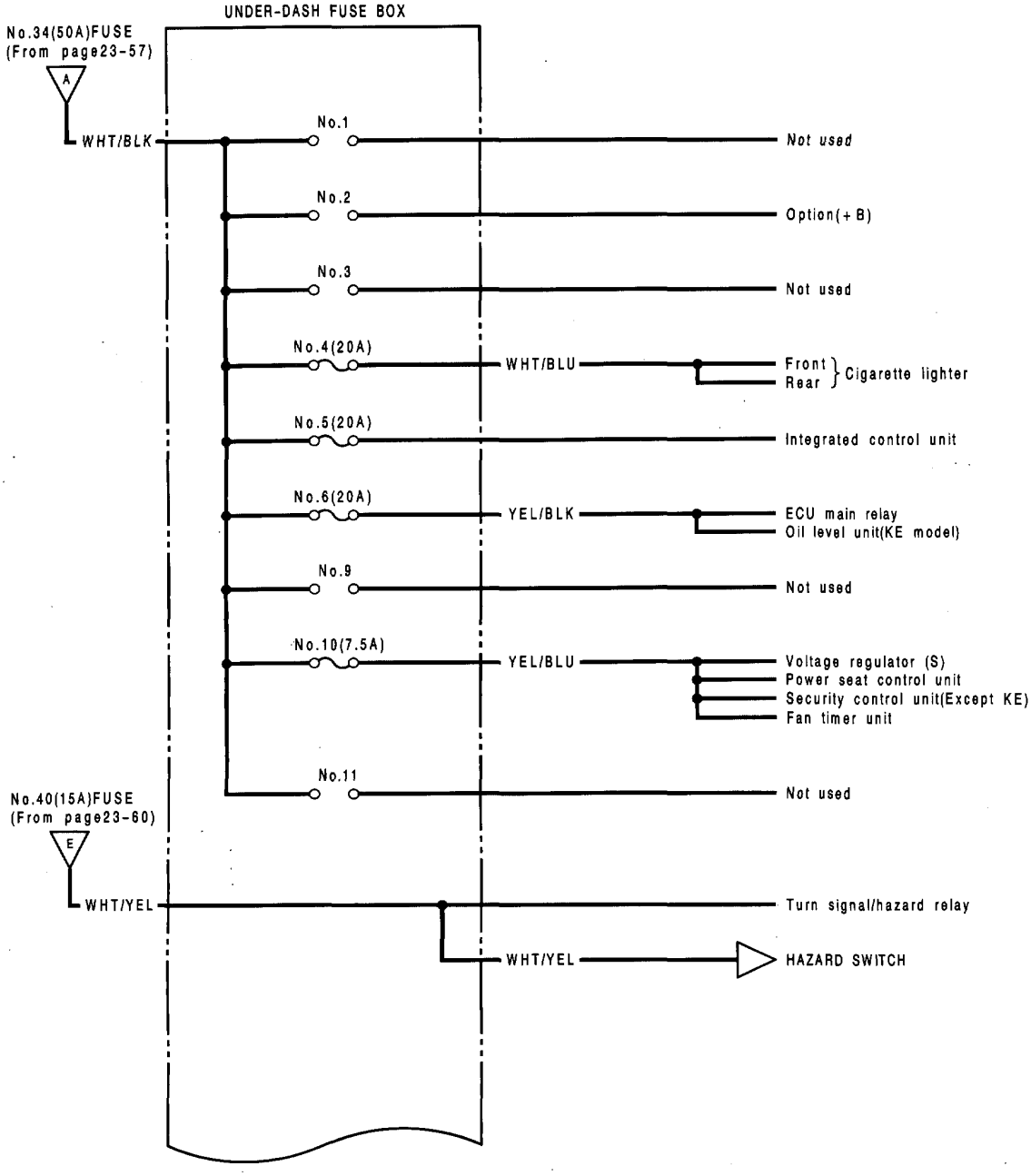
UNDER-DASH FUSE BOX
No.34(50A)FUSE
(From page23-57)
A
WHT/BLK
No.1
Not used
No.2
Option(+B)
No.3
Not used
No.4(20A)
WHT/BLU
Front
Rear
Cigarette lighter
No.5(20A)
Integrated control unit
No.6(20A)
YEL/BLK
ECU main relay
Oil level unit(KE model)
No.9
Not used
No.10(7.5A)
YEL/BLU
Voltage regulator (S)
Power seat control unit
Security control unit(Except KE)
Fan timer unit
No.11
Not used
No.40(15A)FUSE
(From page23-60)
E
WHT/YEL
Turn signal/hazard relay
WHT/YEL
HAZARD SWITCH

(cont'd)

Power Distribution (RHD)

Circuit Identification (cont'd)

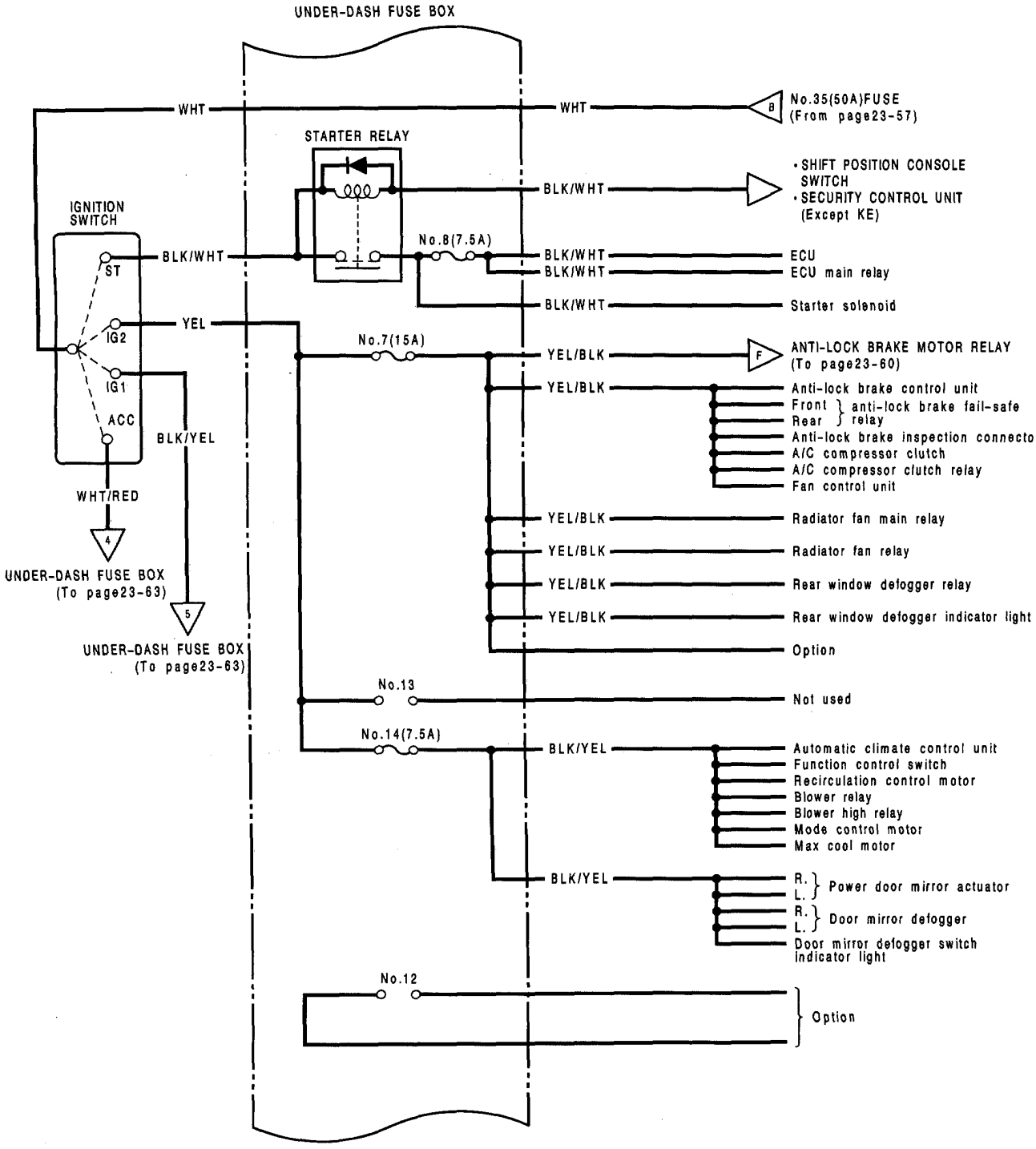

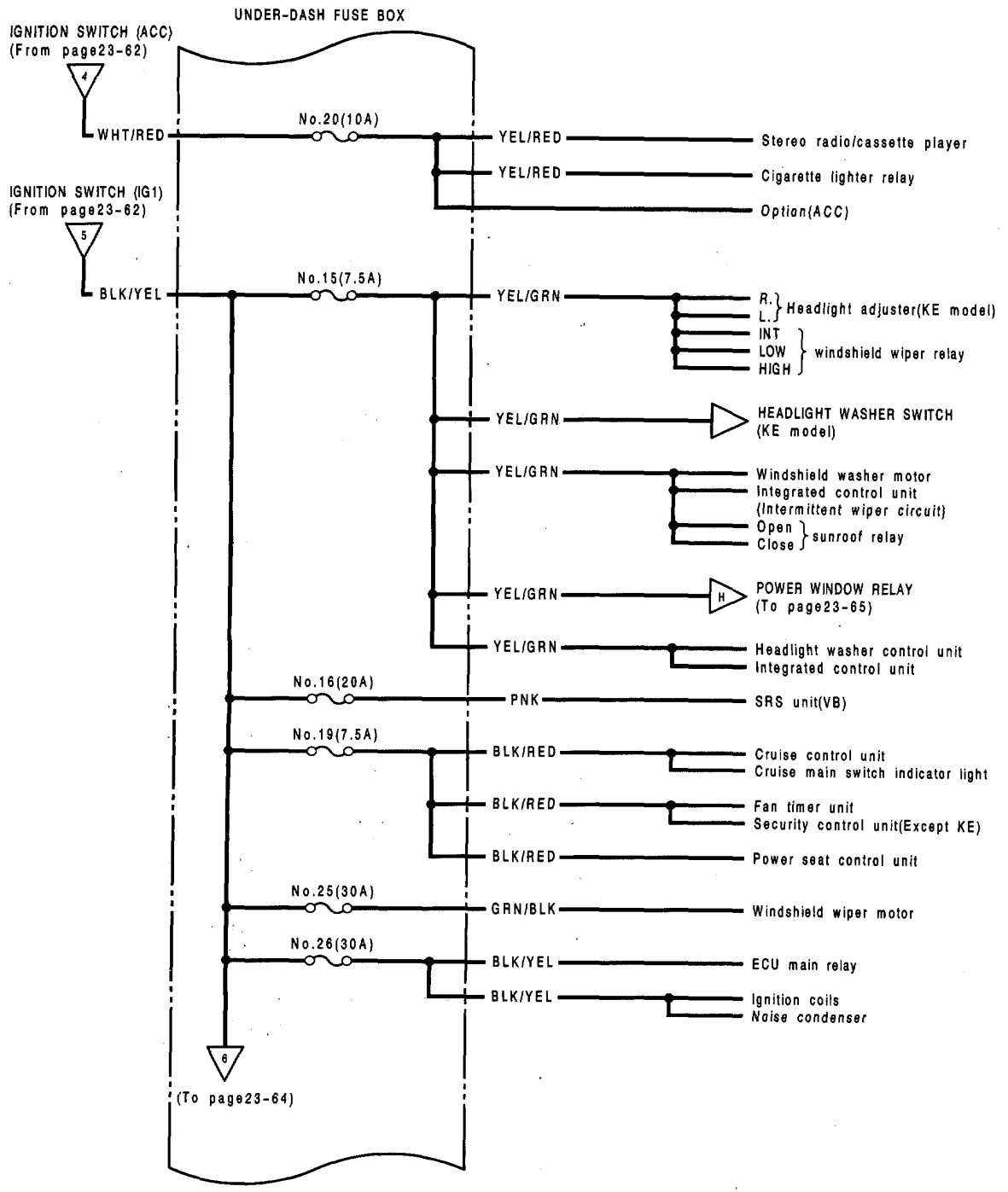
UNDER-DASH FUSE BOX
IGNITION SWITCH (ACC)
(From page23-62)
4
WHT/RED
No.20(10A)
YEL/RED
Stereo radio/cassette player
YEL/RED
Cigarette lighter relay
Option(ACC)
IGNITION SWITCH (IG1)
(From page23-62)
5
BLK/YEL
No.15(7.5A)
YEL/GRN
R.
L.
Headlight adjuster(KE model)
INT
LOW
HIGH
windshield wiper relay
YEL/GRN
HEADLIGHT WASHER SWITCH
(KE model)
YEL/GRN
Windshield washer motor
Integrated control unit
(Intermittent wiper circuit)
Open
Close
sunroof relay
YEL/GRN
H
POWER WINDOW RELAY
(To page23-65)
YEL/GRN
Headlight washer control unit
Integrated control unit
No.16(20A)
PNK
SRS unit(VB)
No.19(7.5A)
BLK/RED
Cruise control unit
Cruise main switch indicator light
BLK/RED
Fan timer unit
Security control unit(Except KE)
BLK/RED
Power seat control unit
No.25(30A)
GRN/BLK
Windshield wiper motor
No.26(30A)
BLK/YEL
ECU main relay
BLK/YEL
Ignition coils
Noise condenser
6
(To page23-64)

(cont'd)

Power Distribution (RHD)

Circuit Identification (cont'd)

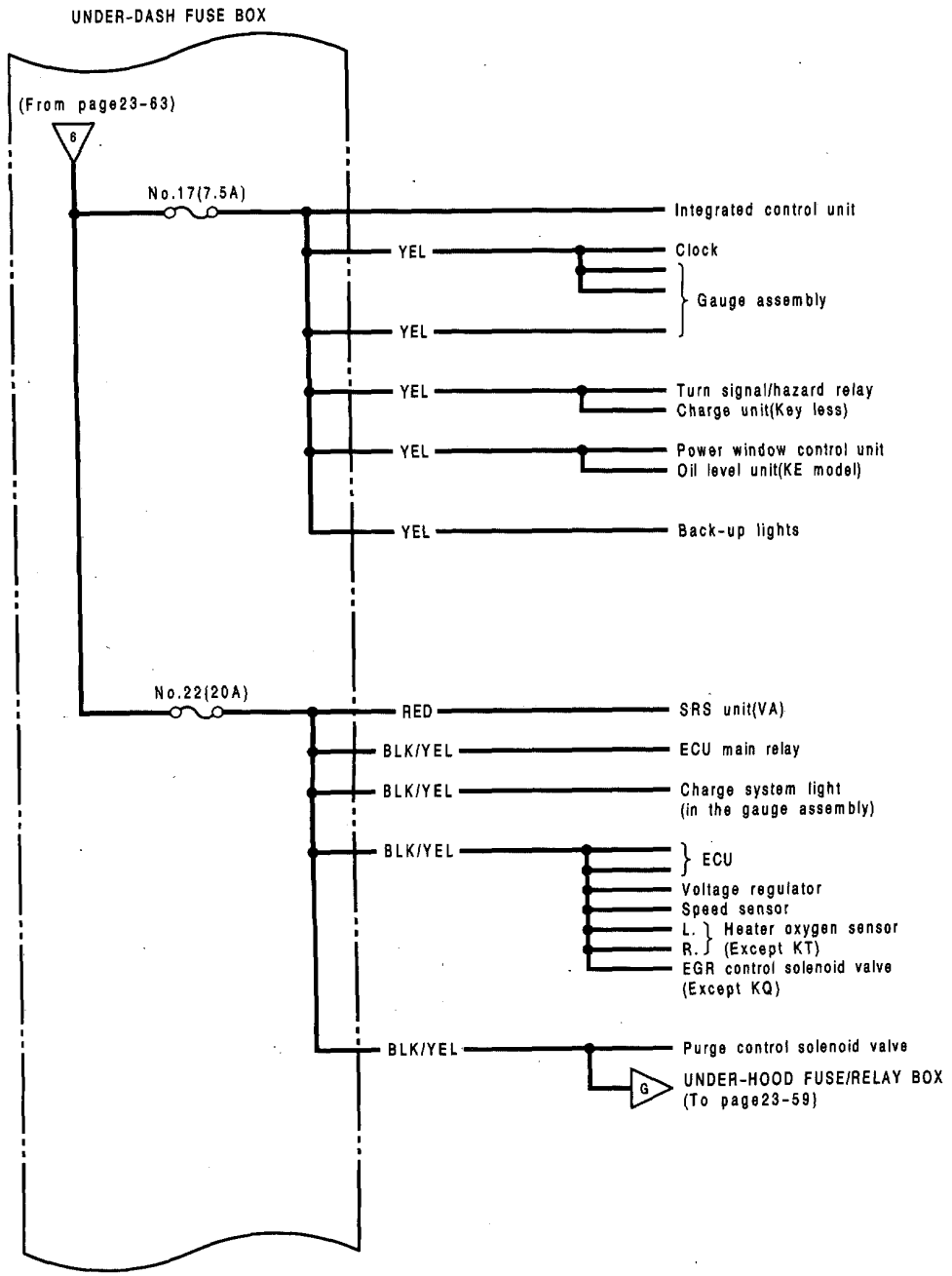

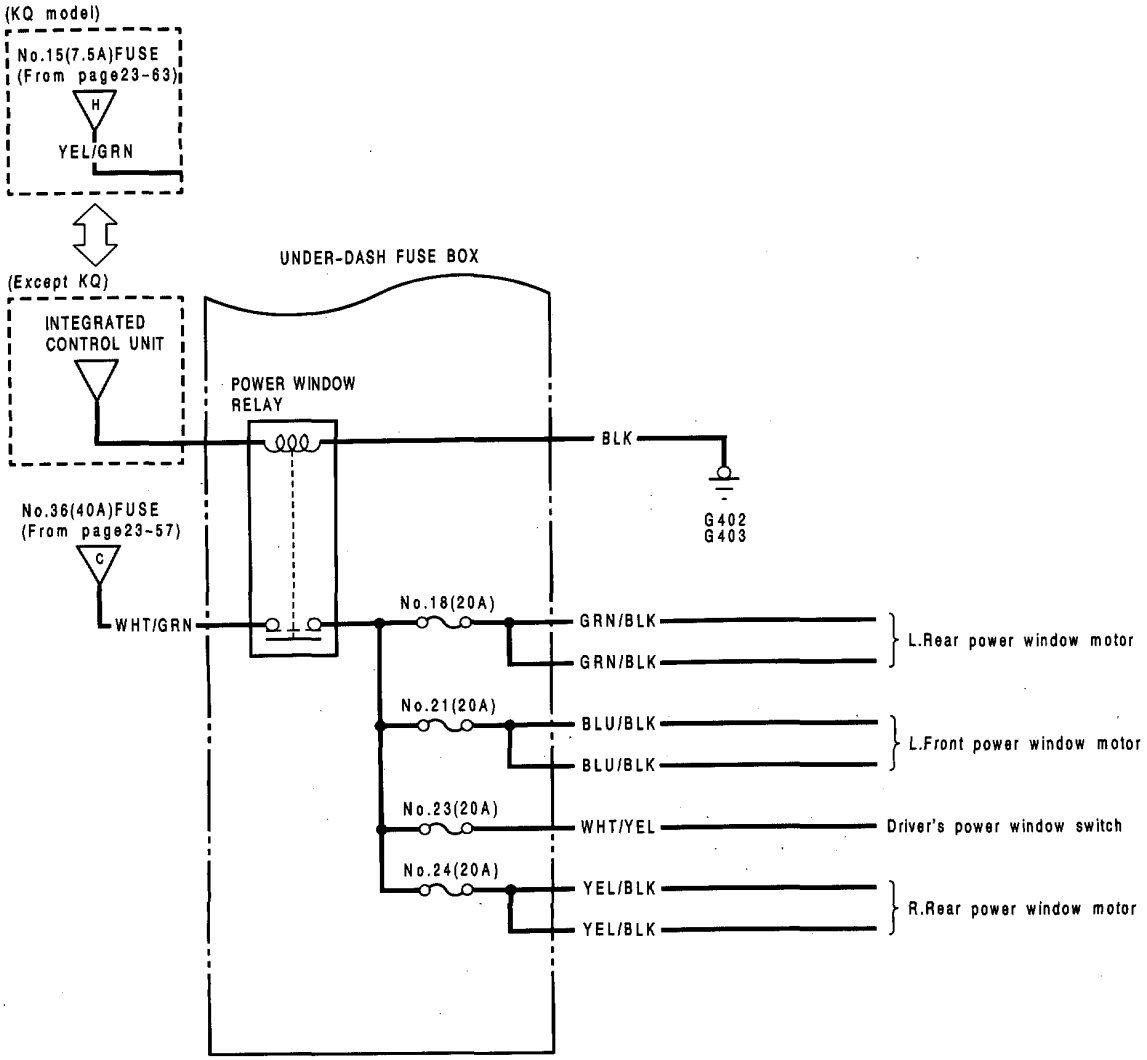
(KQ model)
No.15(7.5A)FUSE
(From page23-63)
H
YEL/GRN
(Except KQ)
INTEGRATED
CONTROL UNIT
UNDER-DASH FUSE BOX
POWER WINDOW
RELAY
BLK
G402
G403
No.36(40A)FUSE
(From page23-57)
C
WHT/GRN
No.18(20A)
GRN/BLK
GRN/BLK
L.Rear power window motor
No.21(20A)
BLU/BLK
BLU/BLK
L.Front power window motor
No.23(20A)
WHT/YEL
Driver's power window switch
No.24(20A)
YEL/BLK
YEL/BLK
R.Rear power window motor

Ground Distribution (LHD)

Circuit Identification

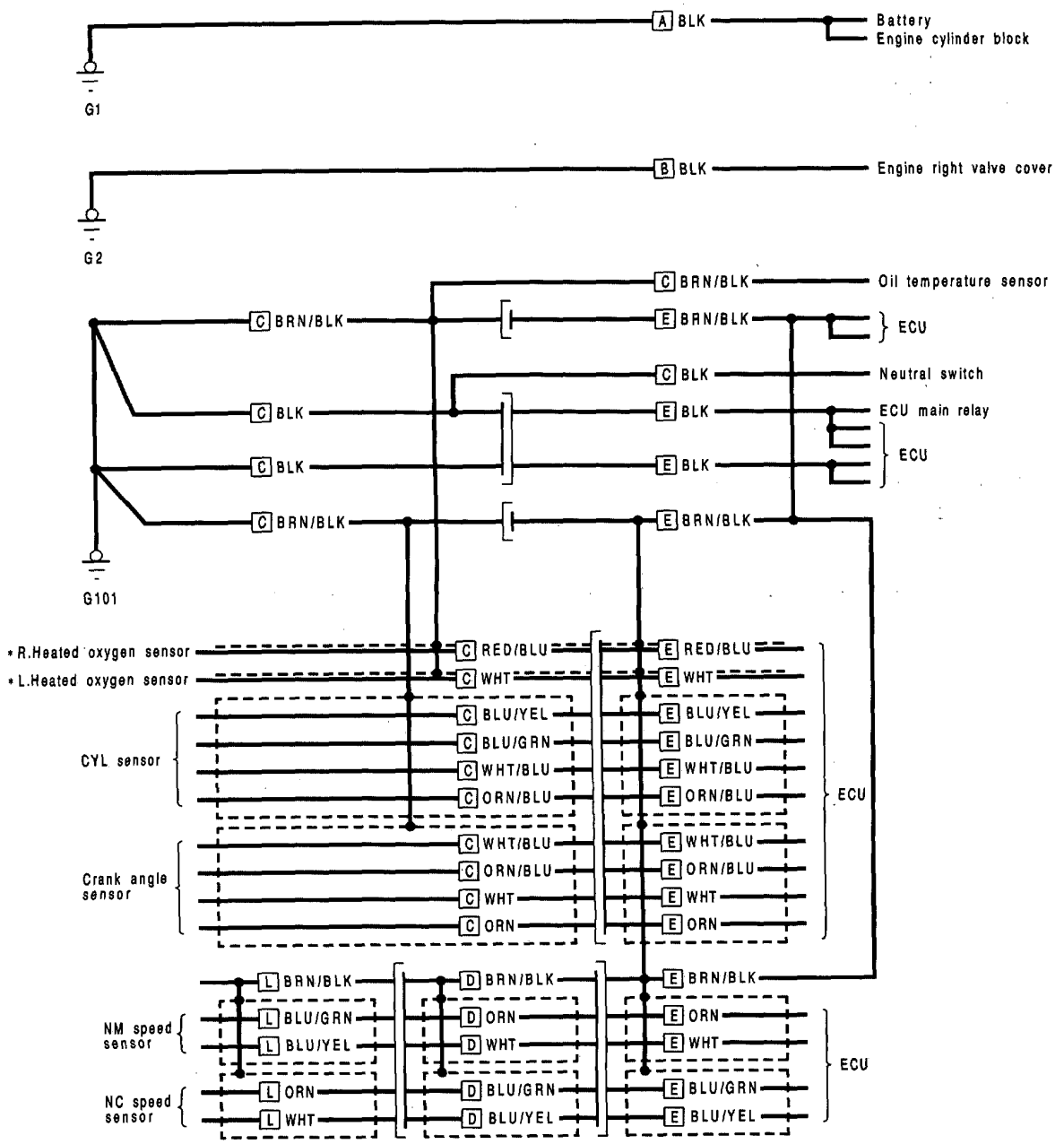

A : Battery ground cables
B : Engine ground wire
C : Engine wire harness
D : Engine compartment wire harness
E : Main wire harness
L : A/T sub wire harness
- - - - - - - - :Shielded wire
*: European model

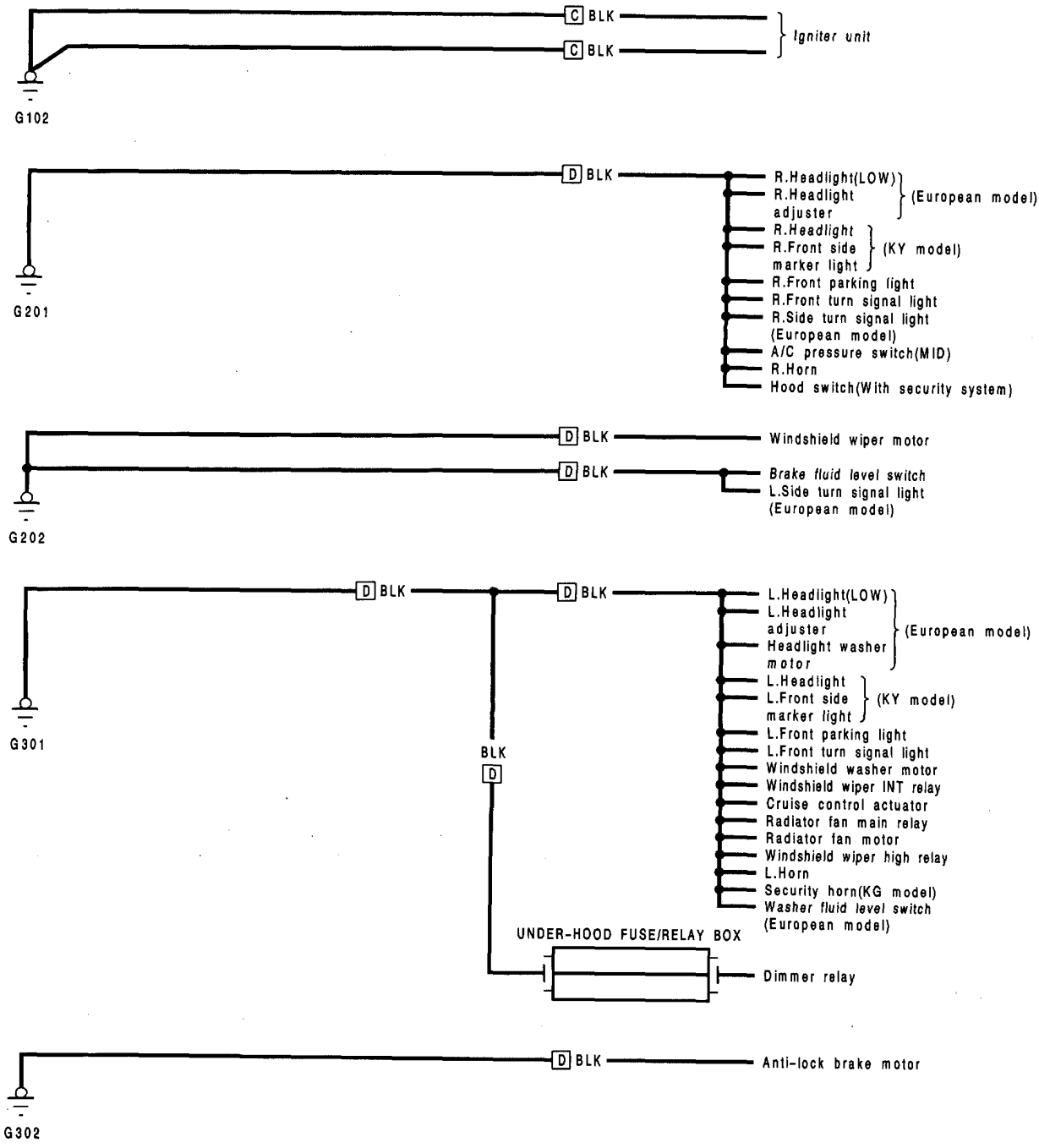

C : Engine wire harness
D : Engine compartment wire harness

(cont'd)

Ground Distribution (LHD)

Circuit Identification (cont'd)

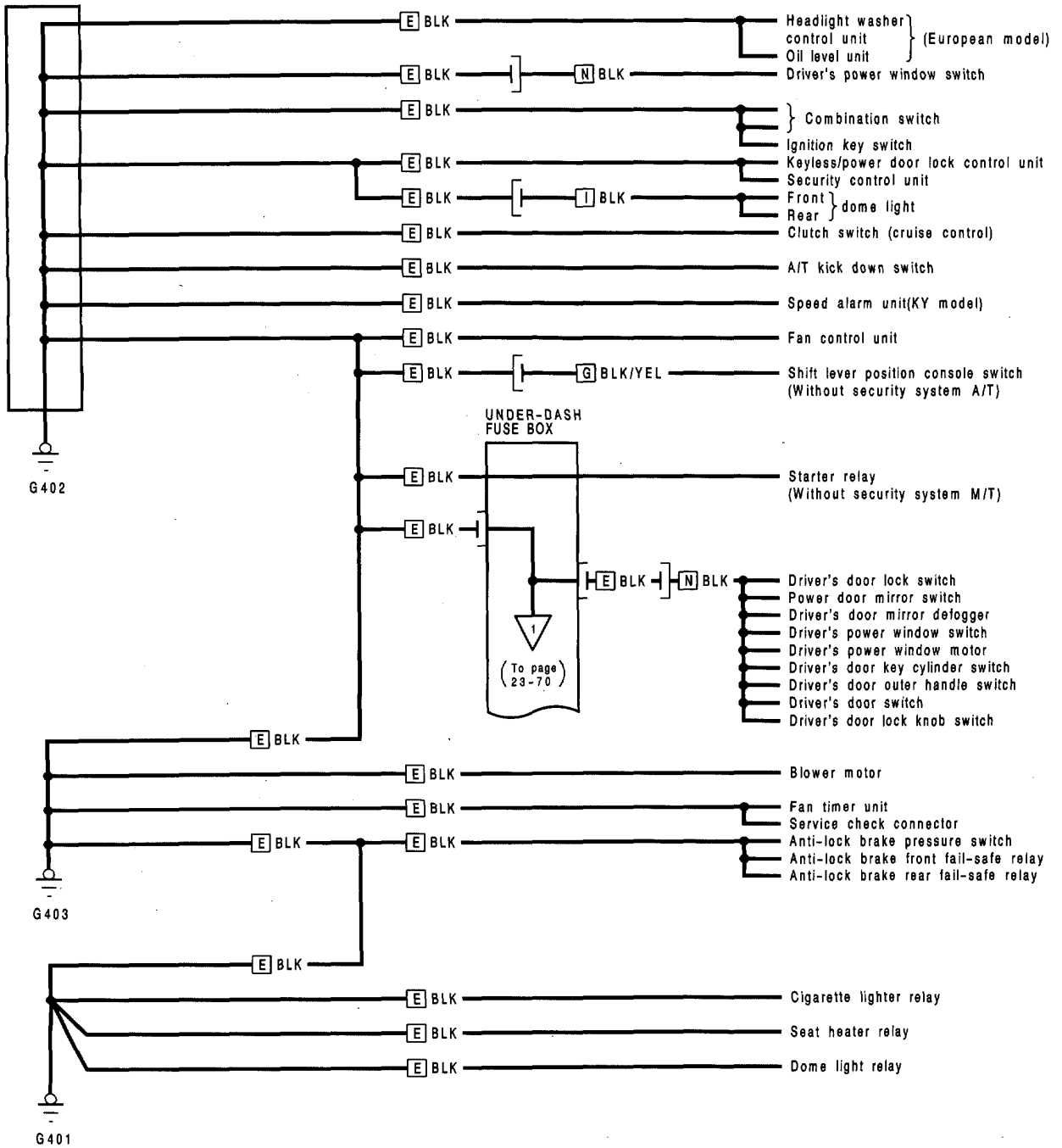

E : Main wire harness
G : Dashboard wire harness
I : Roof wires
N : Driver's door wire harness

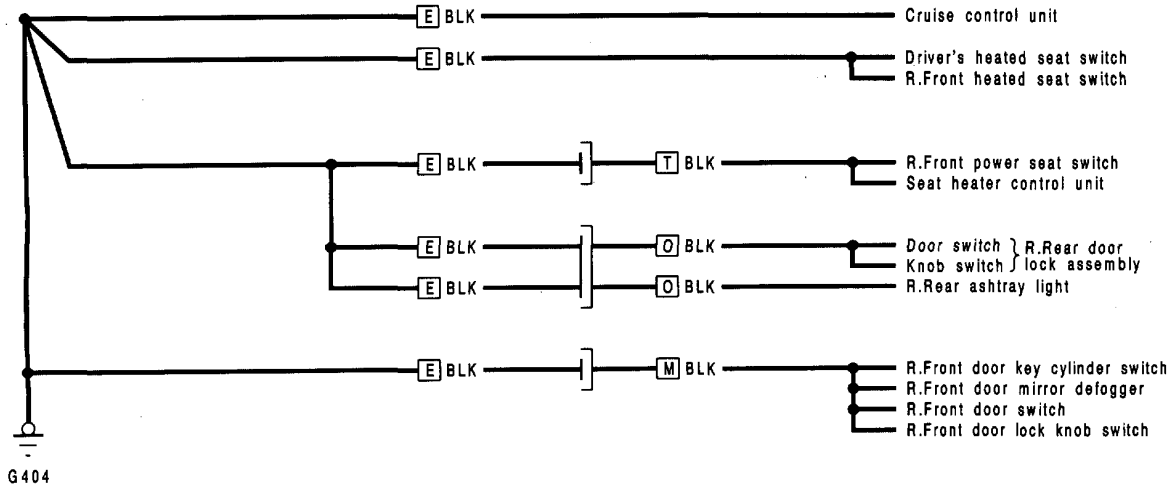

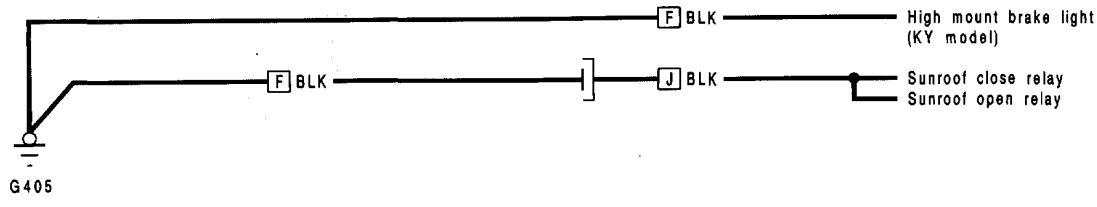

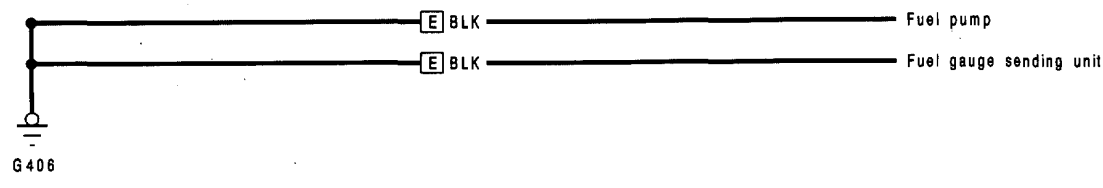

E : Main wire harness
F : Left side wire harness
J : Sunroof wires
M : R.Front door wire harness
O : R.Rear door wire harness
T : R.Front power seat wire harness

(cont'd)

Ground Distribution (LHD)

Circuit Identification (cont'd)

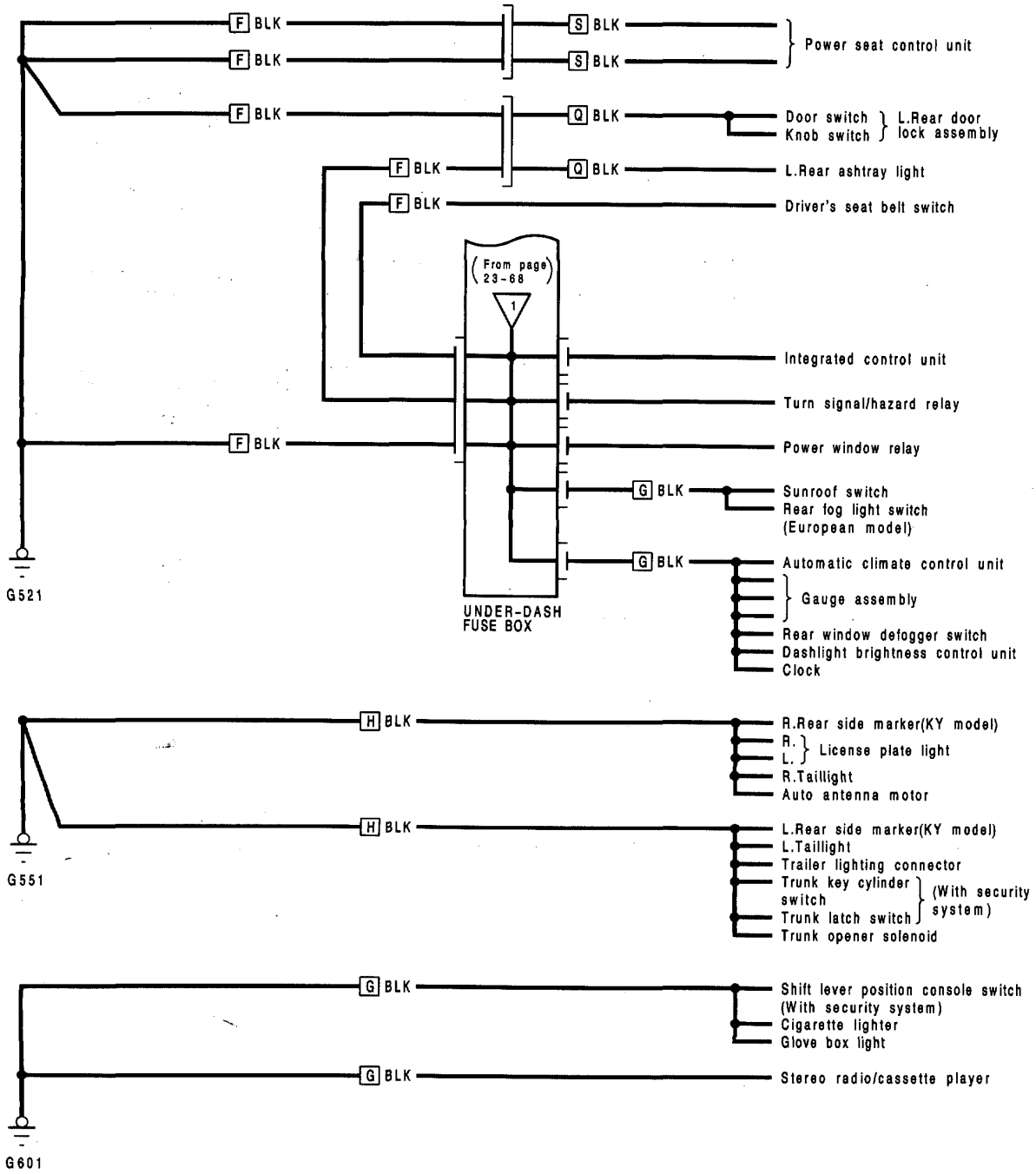

F : Left side wire harness
G : Dashboard wire harness
H : Rear wire harness
Q : L.Rear door wire harness
S : Driver's power seat wire harness

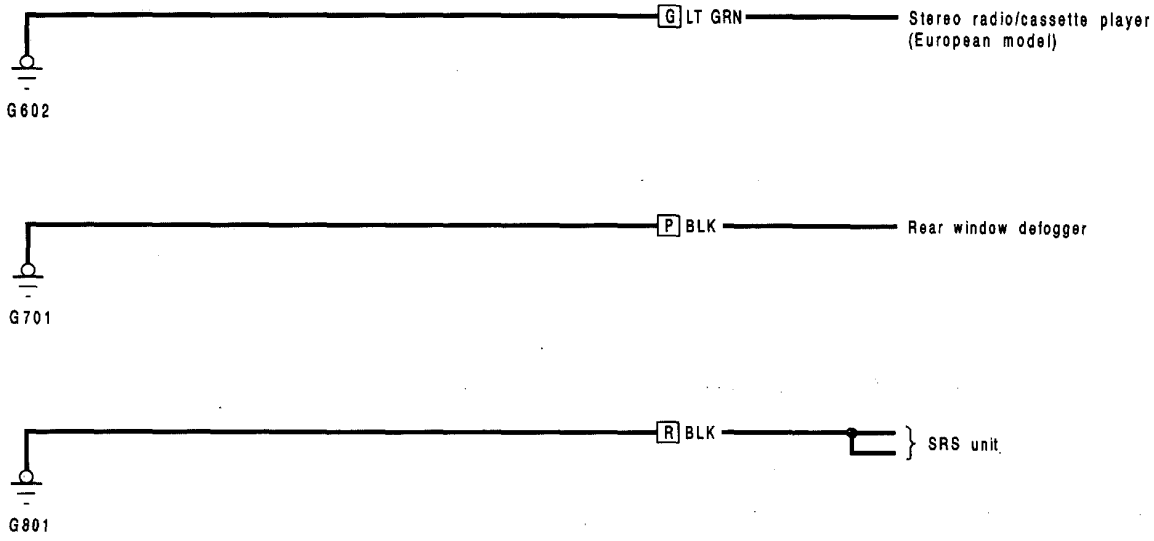

G : Dashboard wire harness
P : Rear defogger ground wire
R : SRS main wire harness

Ground Distribution (RHD)

Circuit Identification

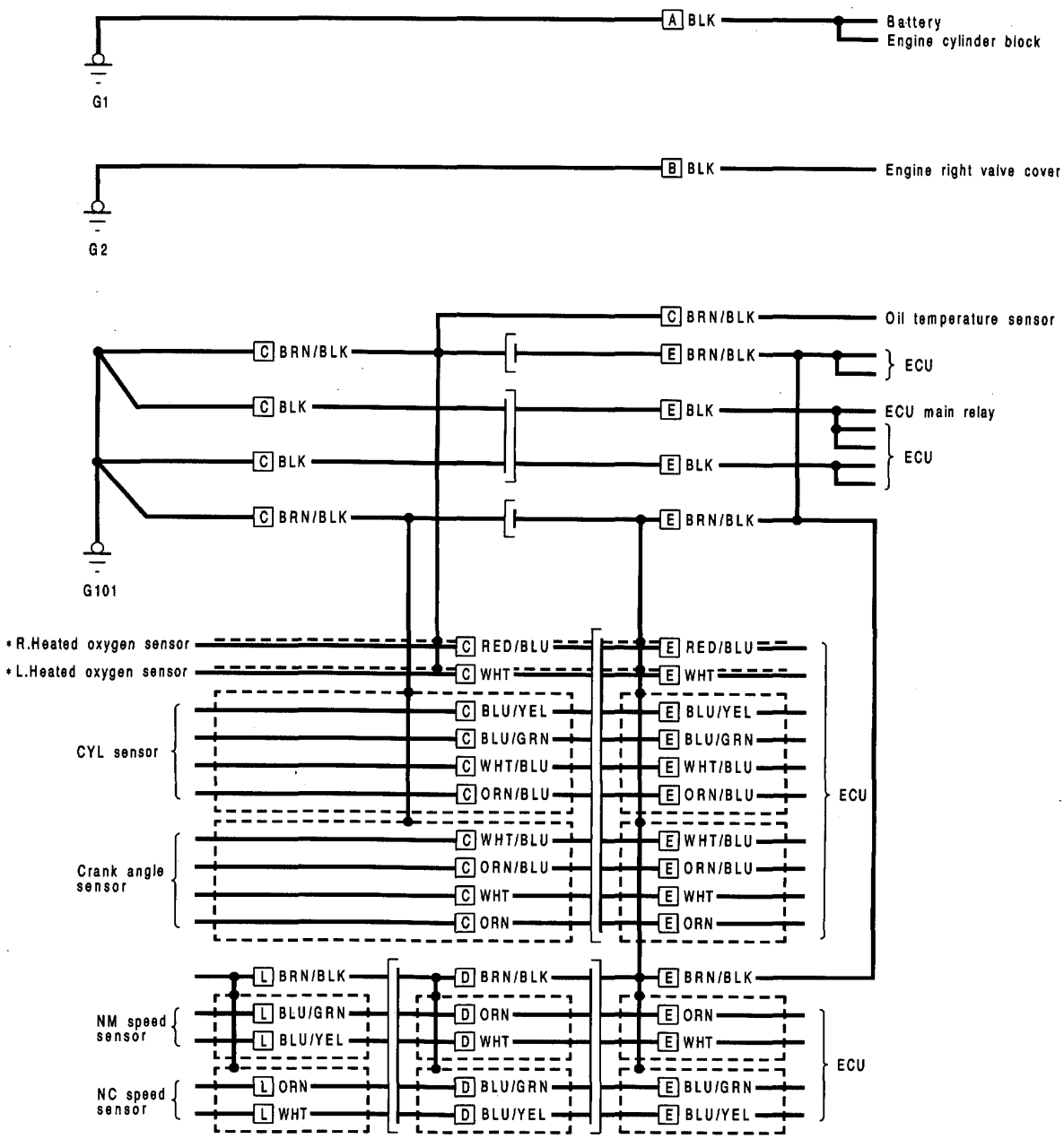

A : Battery ground cables
B : Engine ground wire
C : Engine wire harness
D : Engine compartment wire harness
E : Main wire harness
L : A/T sub wire harness
- - - - - - - - :Shielded wire
*: Except KT

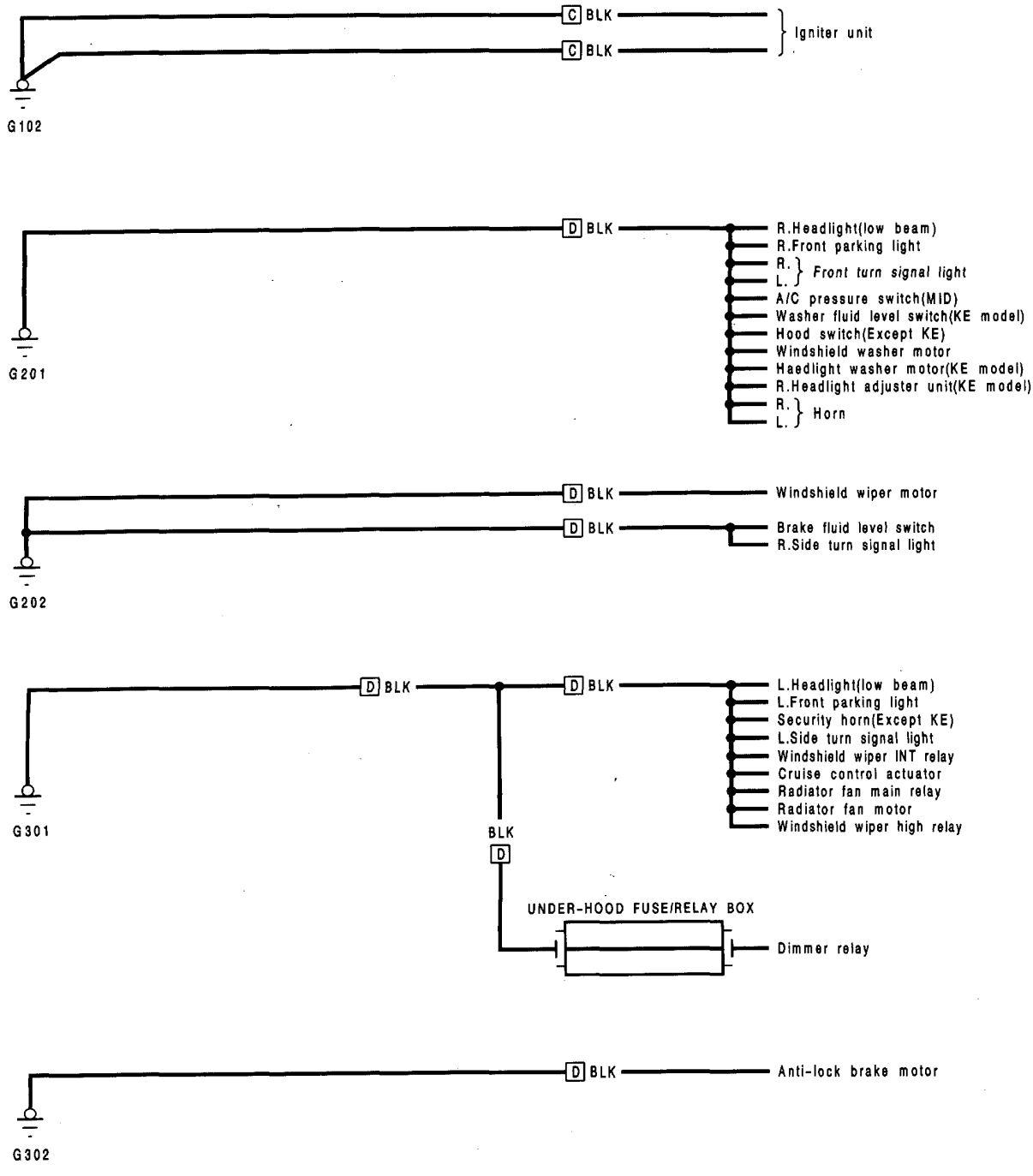

C : Engine wire harness
D : Engine compartment wire harness

(cont'd)

Ground Distribution (RHD)

Circuit Identification (cont'd)

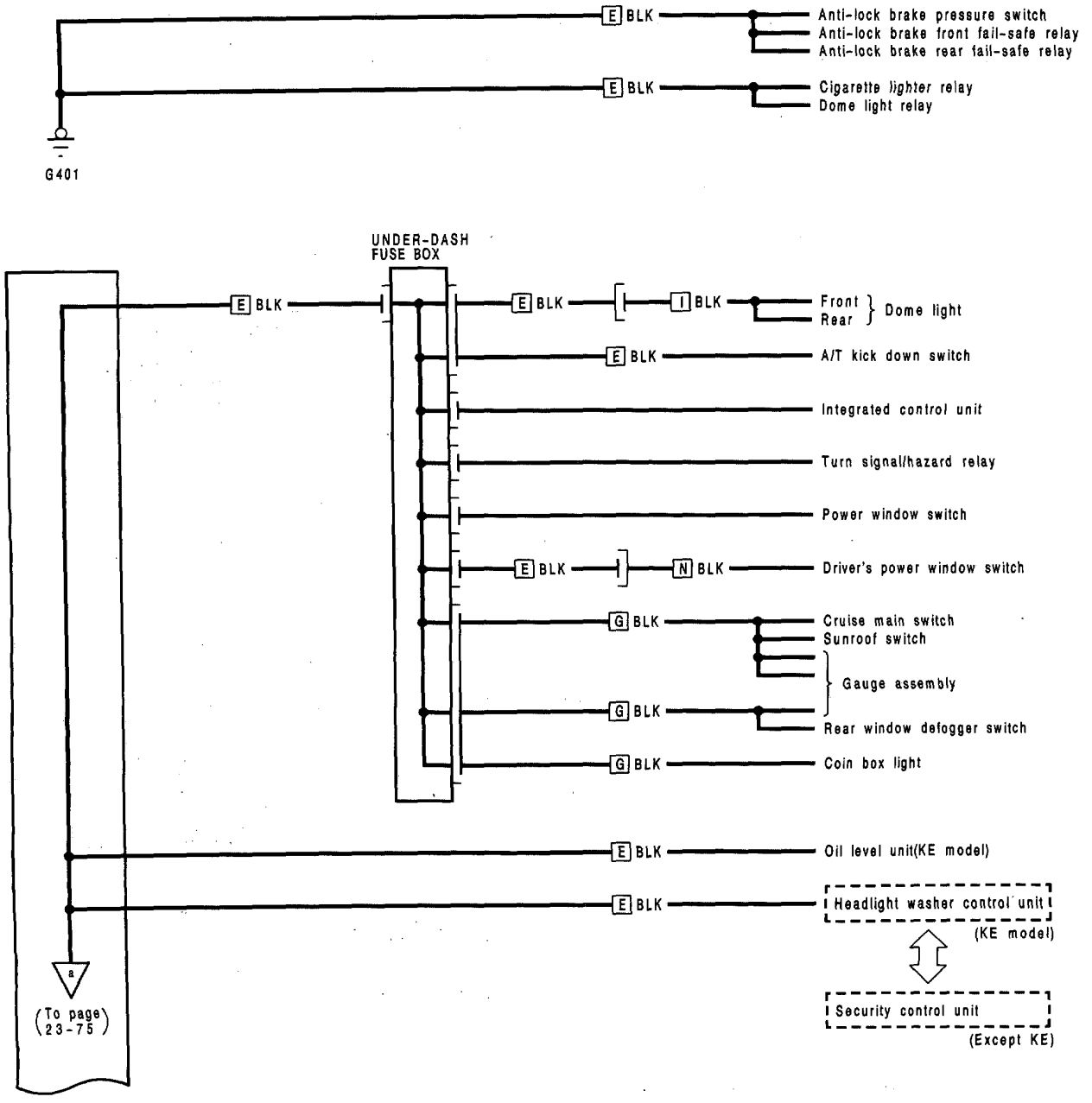

E : Main wire harness
I : Roof wires
G : Dashboard wire harness
N : Driver's door wire harness

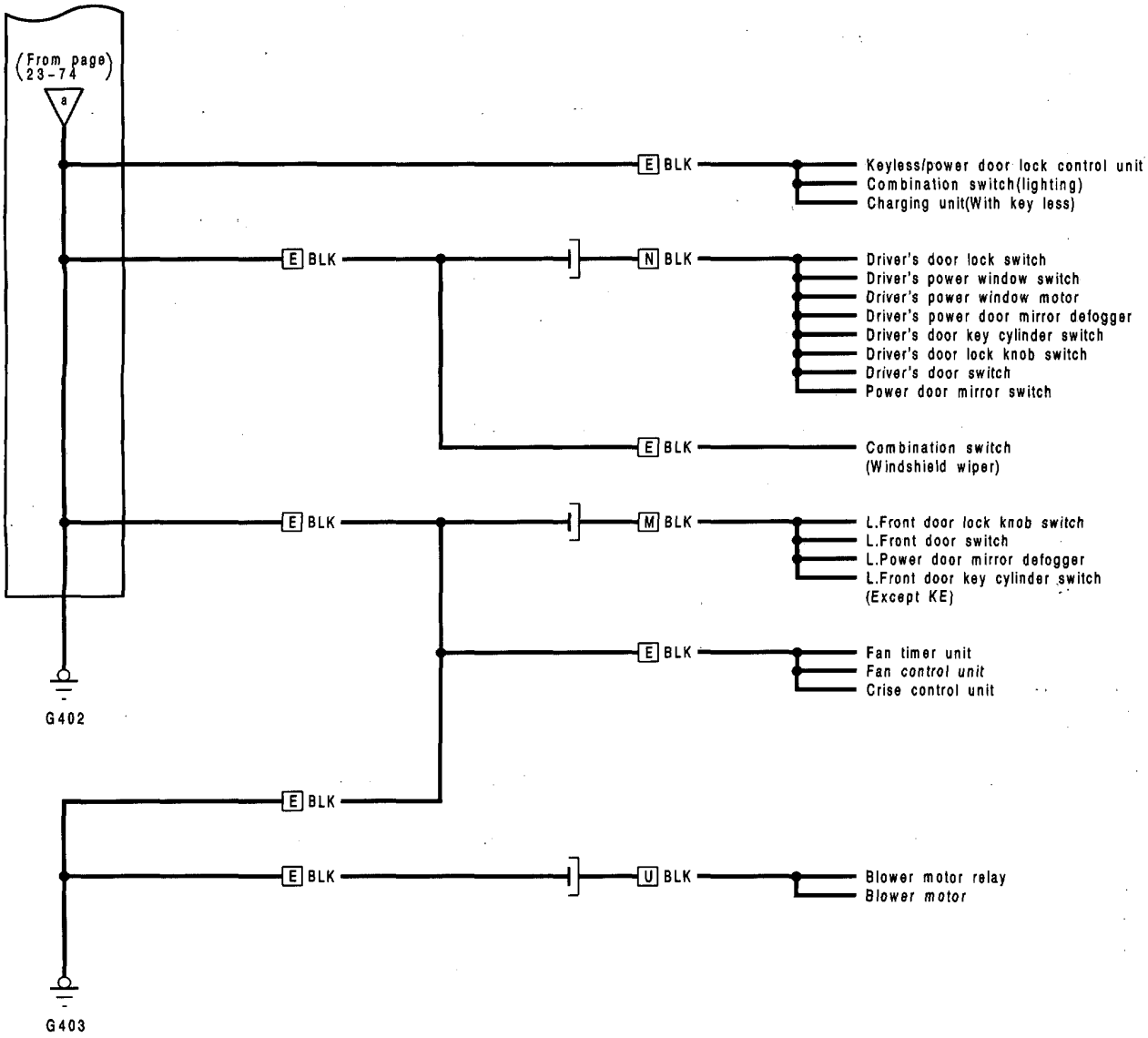

E : Main wire harness
M : L.Front door wire harness
N : Driver's door wire harness
U : Blower sub wire harness

(cont'd)

Ground Distribution (RHD)

Circuit Identification (cont'd)

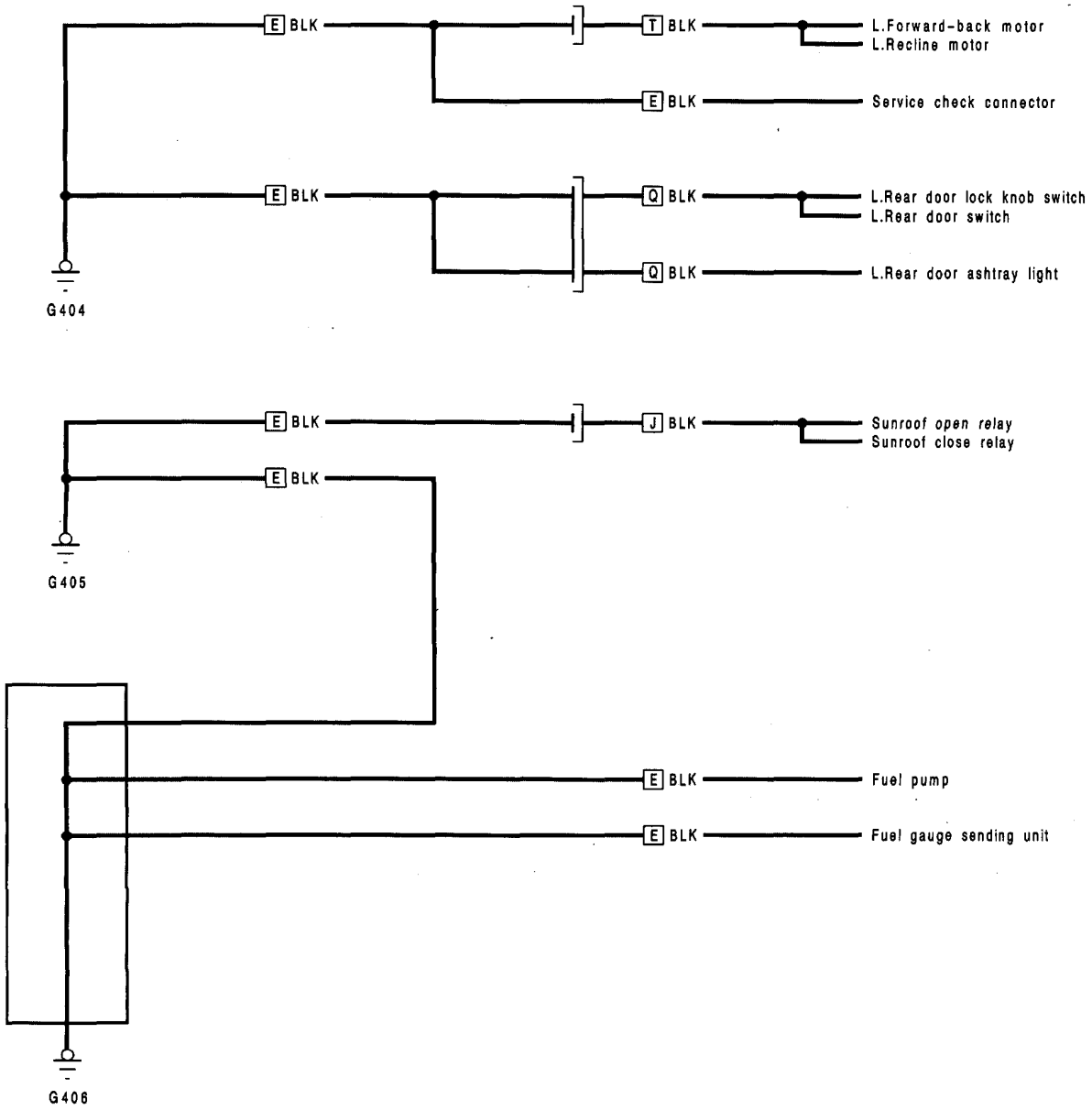

E : Main wire harness
J : Sunroof wire harness
Q : L.Rear door wire harness
T : L.Front power seat wire harness

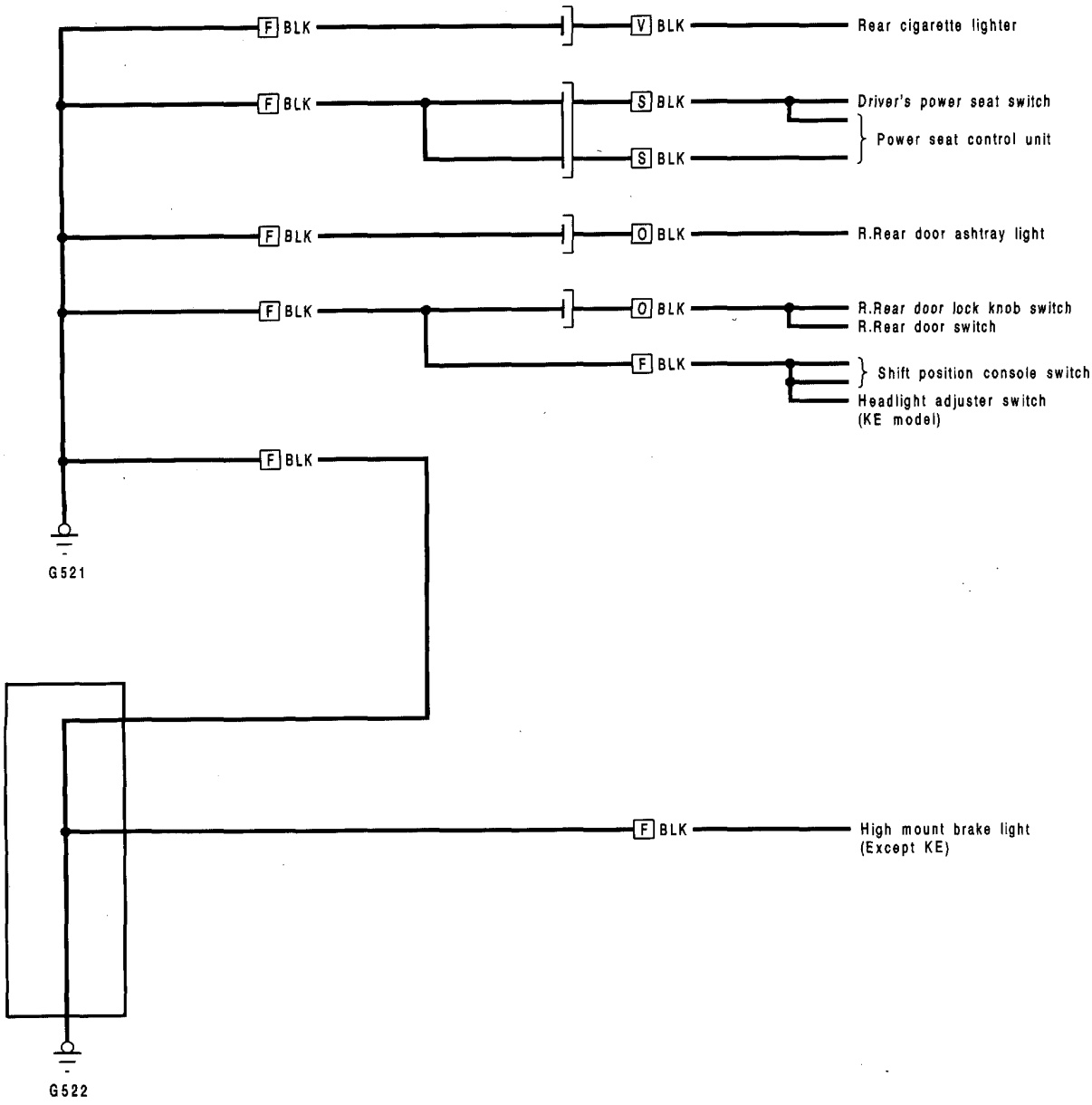

F : R.Side wire harness
O : R.Rear door wire harness
S : Driver's power seat wire harness
V : Floor sub wire

(cont'd)

Ground Distribution (RHD)

Circuit Identification (cont'd)

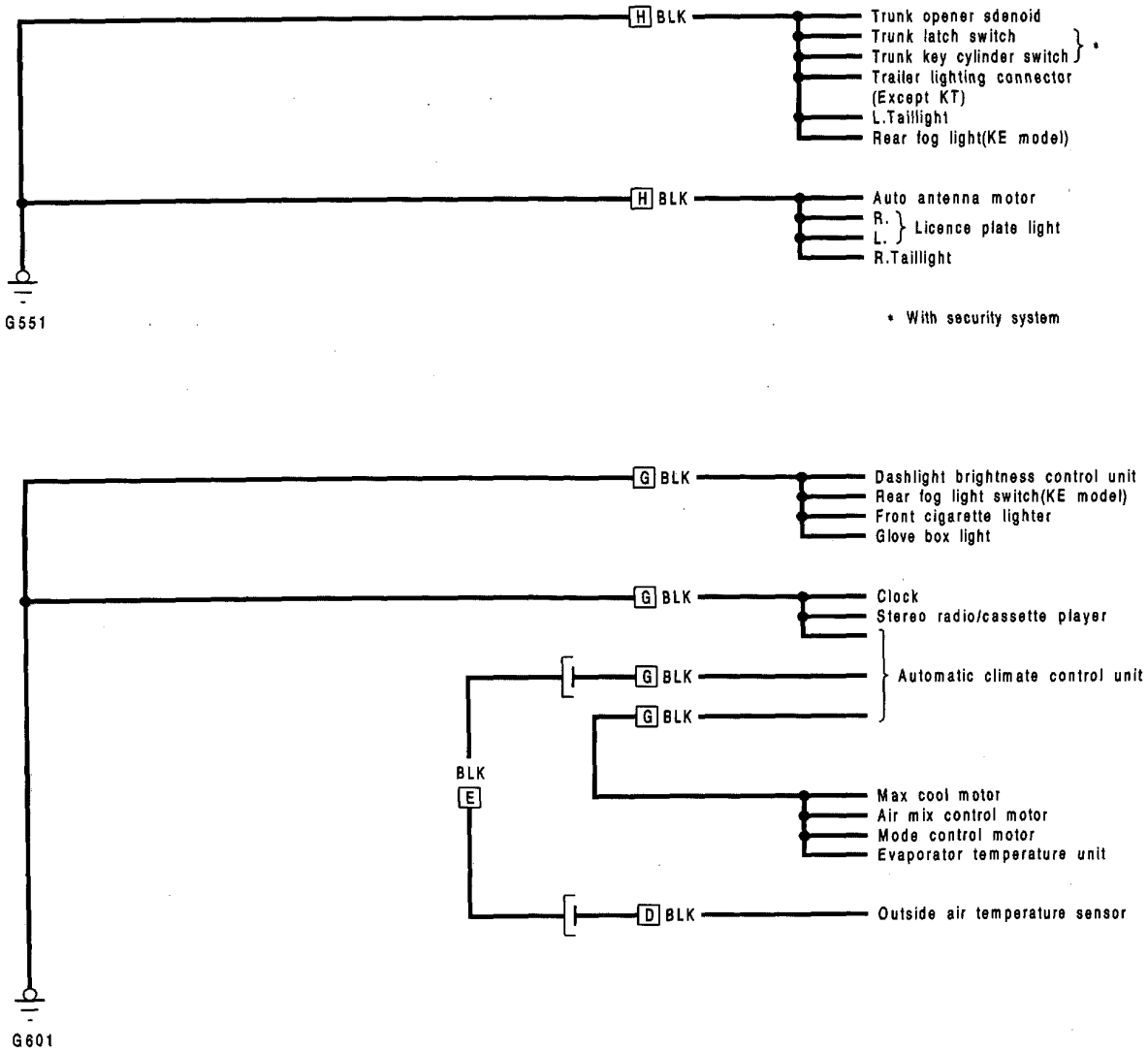

D : Engine compartment wire harness
E : Main wire harness
G : Dashboad wire harness
H : Rear wire harness

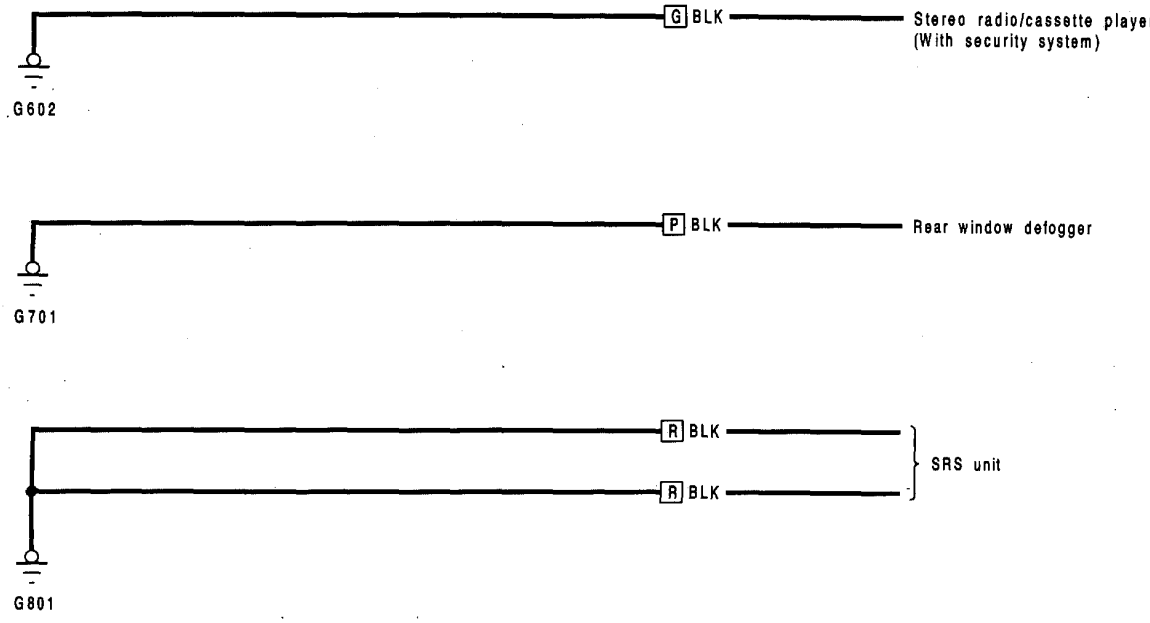

G : Dashboard wire harness
P : Rear defogger ground wire
R : SRS main wire harness

Test

⚠WARNING

- **Battery fluid (electrolyte) contains sulfuric acid. It may cause severe burns if it gets on your skin or in your eyes.**
  Wear protective clothing and a face shield.
  —If electrolyte gets on your skin or clothes, rinse it off with water immediately.
  —If electrolyte gets in your eyes, flush it out by splashing water in your eyes for at least 15 minutes; call a physician immediately.

- **A battery gives of hydrogen gas. If ignited, the hydrogen will explode and could crack the battery case and splatter acid on you. Keep sparks, flames, and cigarettes away from the battery.**

- **Overcharging will raise the temperature of the electrolyte. This may force electrolyte to spray out of the battery vents. Follow the charger manufacturer's instructions and charge the battery at a proper rate.**

NOTE: To get accurate results, the temperature of the electrolyte must be between 15 and 38°C (59 and 100°F) before testing.

Test Equipment Required:

- Battery tester with:
  Voltmeter with 0—18 V scale, Ammeter with 0—100 A and 0—500 A scales, and a carbon pile with 0—300 W.

- 12 V Battery Charger:
  Fast charge capability of 50 A and slow charge capability of 5 A.

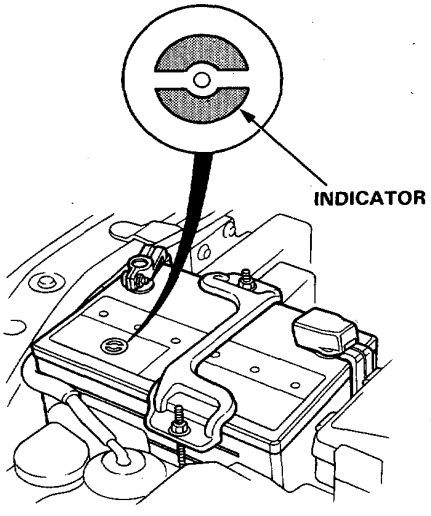

Test Procedure:

1. Check for damage: If the case is cracked or the posts are loose, replace the battery.

2. Check indicator (for basic charge condition): Blue or Green is OK. If the indicator is red, peel the tape off, remove the caps, and add distilled water; then reinstall the caps and tape. If the indicator is clear, go to step 3.

3. Test battery load capacity by connecting a battery tester, and applying a load of 3 times the battery ampere hour rating.
   When the load has been applied for exactly 15 seconds, the battery voltage reading should stay above 9.6 V.
   - If the reading stays above 9.6 V, the battery is OK; clean its terminals and case, and reinstall it.
   - If the reading is between 6.5 and 9.6 V, fast charge the battery by connecting a battery charger, for 3 minutes at an initial rate of 40 amps.

   CAUTION: Amperage will drop as voltage increases; do not increase the amperage to compensate or you may damage the battery.

   Watch the battery voltage during the entire 3 minutes; the highest reading should stay below 15.5 V.

   — If the reading stays below 15.5 V, the battery is OK; clean its terminals and case, and reinstall it.

   — If the reading exceeds 15.5 V any time during the 3 minutes of fast charge, the battery is not good; replace it.

   - If the reading drops below 6.5 V, slow charge the battery by connecting a battery and charge, at 5 amps for no more than 24 hours, (or until the indicator shows full charge, or the specific gravity of the electrolyte is at least 1.250).
     Then test load capacity again.

     — If the voltage stays above 9.6 V, the battery is OK; clean its terminals and case, and reinstall it.

     — If the voltage still drops below 6.5 V, the battery is not good; replace it.

Dash Fuse Box

Removal/Installation

CAUTION:

- **All SRS electrical wiring harnesses are covered with yellow outer insulation.**
- **When disconnecting the SRS wire harness, install the short connector on the airbag then disconnect the wire harness (See page 23-412).**

NOTE: LHD type is shown. RHD type is symmetrical to LHD type.

Removal:

1. Remove the driver's foot rest.

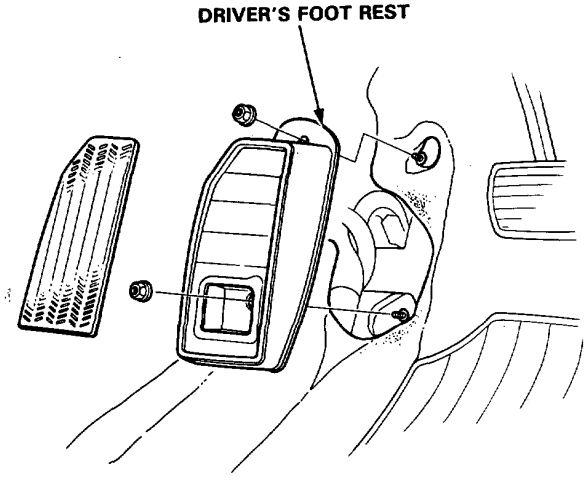

2. Remove the door sill molding and left kick panel trim piece.

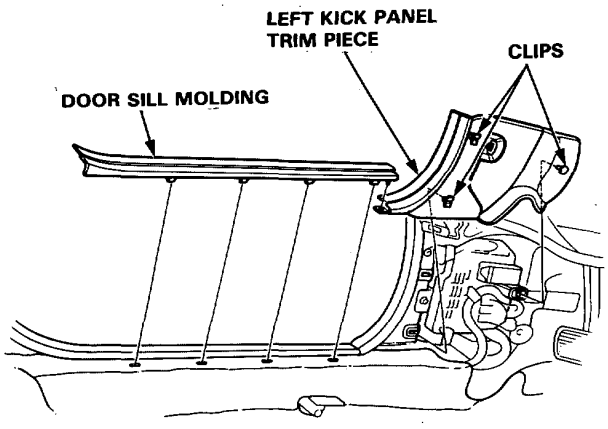

3. Remove the mounting bolt and nut.

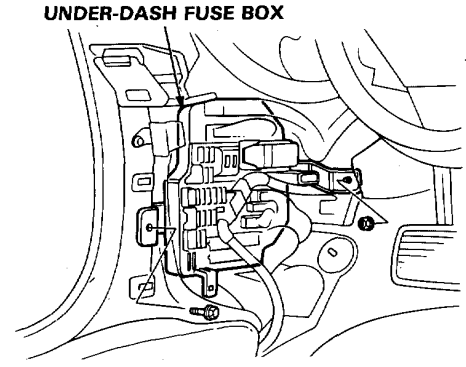

4. Disconnect the fuse box connectors and take out the fuse box.

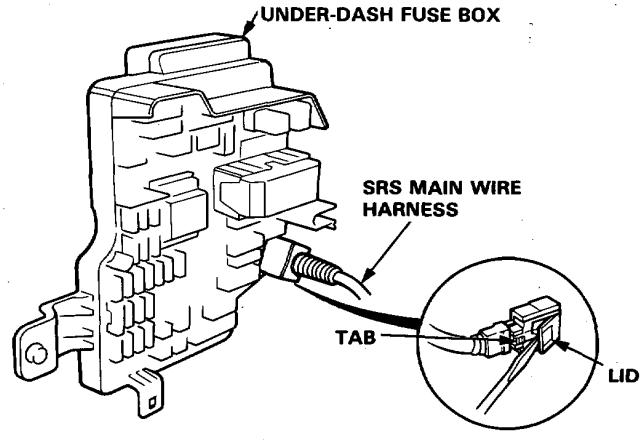

NOTE: The SRS main wire harness connector is *double-locked. To remove it, first lift the connector* lid, then press the connector tab down and pull the connector out.

Installation:

1. Connect the connectors to fuse box.

   NOTE: To reinstall the SRS main wire harness connector, push it into position until it clicks, then close the connector lid.

2. Install the under-dash fuse box.

3. Put back the left front carpet, ana install the foot rest.

4. *Install the kick panel trim pieces and door sill* molding.

   NOTE: After installing the dash fuse box, confirm that all systems work properly.

Power Relays

Relay Test

A-Type:

1. Remove the power relay from its socket.
2. There should be continuity between the C and D terminals.
3. There should be continuity between the A and B terminals when the battery is connected to the C and D terminals. There should be no continuity when the battery is disconnected.

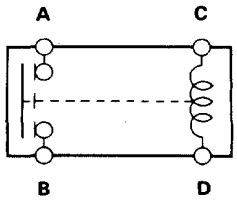

- Condenser fan relay
- Radiator fan relay
- A/C compressor clutch relay
- Horn relay
- Cigarette lighter relay
- Power window relay
- Windshield wiper high relay
- Seat heater relay
- Dome light relay
- Anti-lock brake front fall-safe relay
- Anti-lock brake rear fail-safe relay

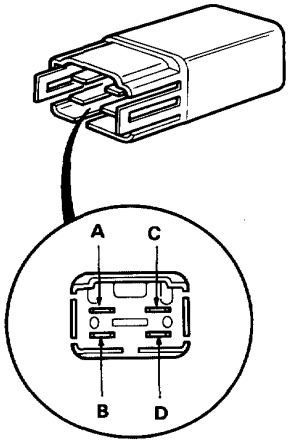

- Taillight relay

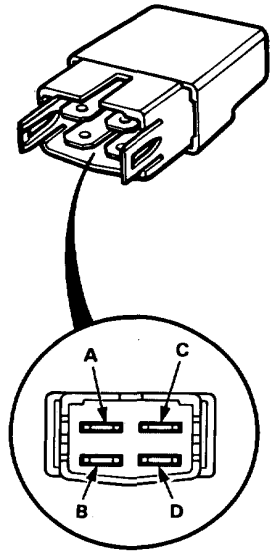

- Blower relay
- Blower high relay

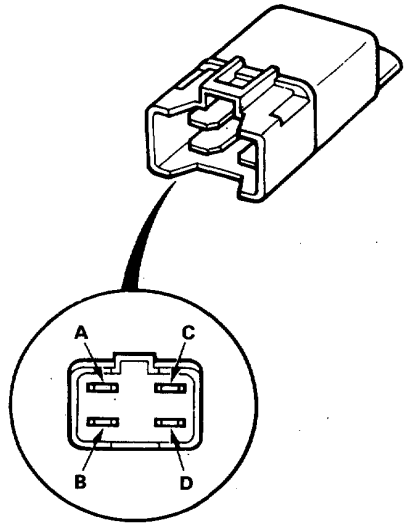

- Headlight relay
- Rear window defogger relay
- Anti-lock brake motor relay

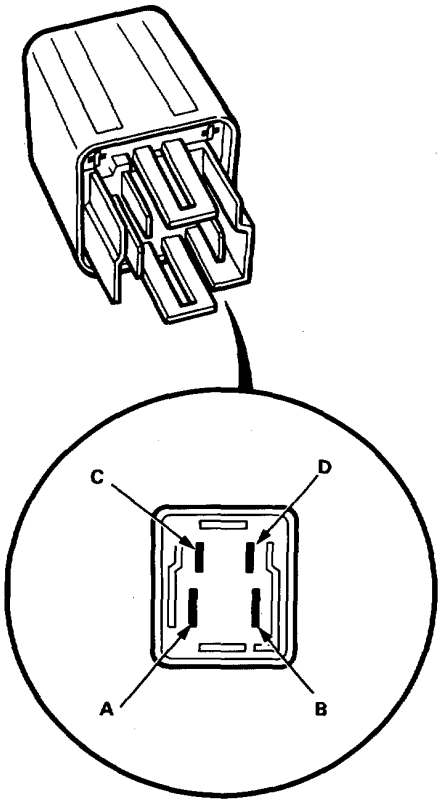

B-Type:

1. Remove the windshield wiper low relay from relay box B.

2. There should be no continuity between the A and B terminals when the battery is connected to the C and D terminals.
   There should be continuity when the battery is disconnected.

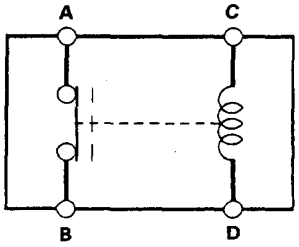

- Windshield wiper low relay

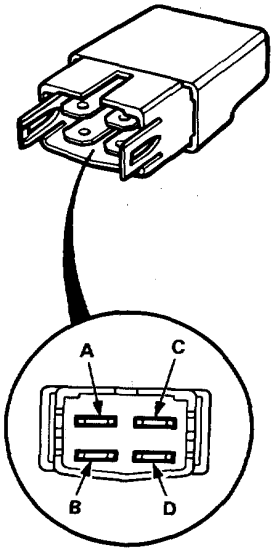

(cont'd)

Relay Test (cont'd)

C-Type:

1. Remove the power relays from its socket.

2. There should be continuity between the A and C terminals when the battery is connected to the D and E terminals.

   There should be continuity between the B and C terminals when the battery is disconnected.

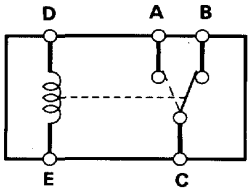

- Windshield wiper intermittent relay
- Dimmer relay
- Radiator fan main relay

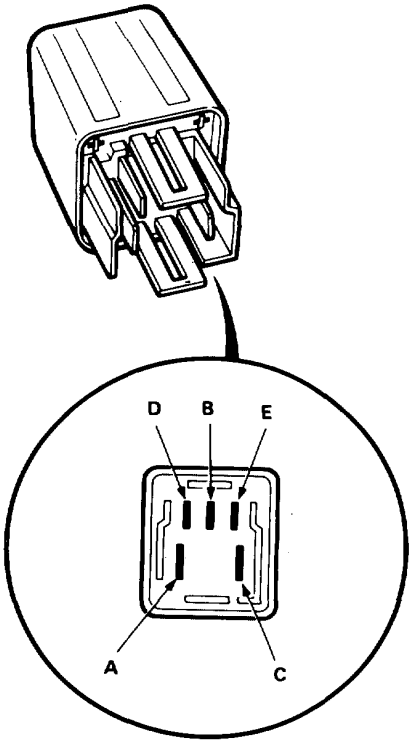

- Sunroof open relay
- Sunroof close relay

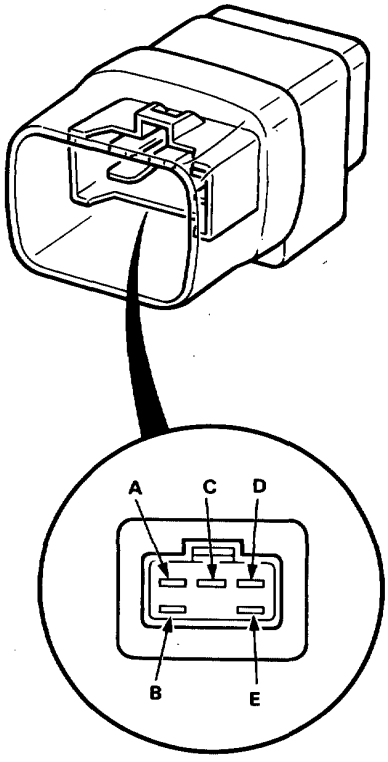

D-Type:

1. Remove the starter relay from the under-dash fuse box.

2. There should be continuity between the C (+) and D (−) terminals.

3. There should be continuity between the A and B terminals when the battery is connected to the C(+) and D(−) terminals.
   There should be no continuity when the battery is disconnected.

   NOTE: Do not connect the battery terminals to wrong polarities because a diode is inside the solenoid.

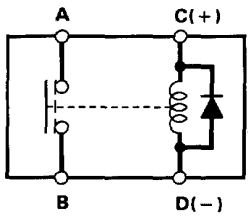

- Starter relay

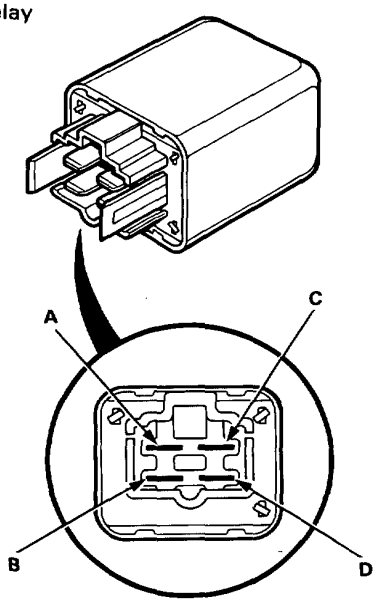

Ignition Switch

Test

1. Remove the dashboard lower panel. (See page 23-87).
2. Disconnect the 7-P connector from the under-dash fuse box.

   NOTE: The illustration shows LHD.

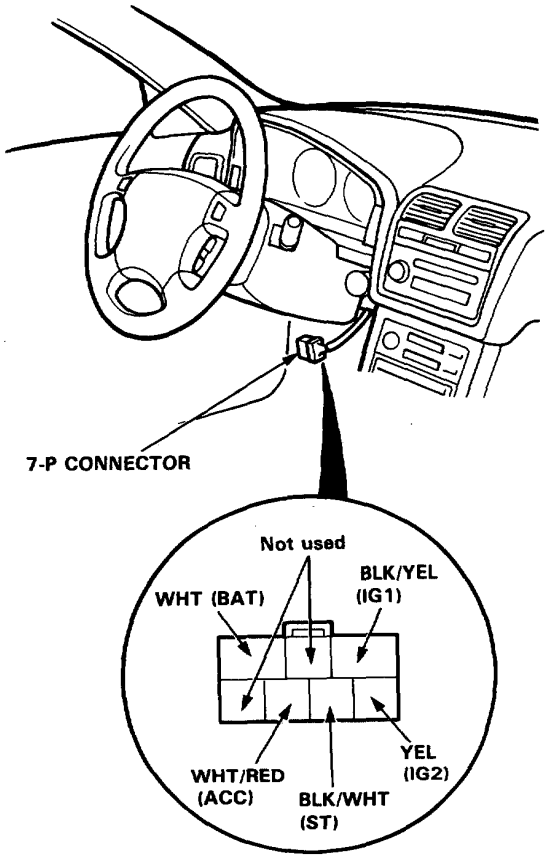

View from wire side

3. Check for continuity between the terminals in each switch position according to the table.

Terminal / Position	WHT/ RED (ACC)	WHT (BAT)	BLK/ YEL (IG1)	YEL (IG2)	BLK/ WHT (ST)
0					
I	○——	——○			
II	○——	——○——	○——	——○	
III		○——	——○——	———	——○

Electrical Switch Replacement

1. Remove the dashboard lower panel (See page 23-87).
2. Disconnect the 7-P connector from the under-dash fuse box.
3. Insert the key and turn it to "0".
4. Remove the 2 screws and replace the switch.

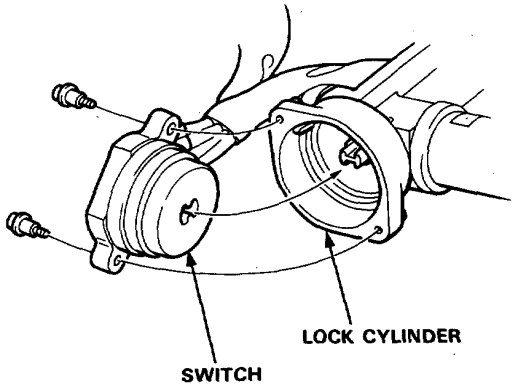

Steering Lock Replacement

CAUTION:

- **All SRS electrical wiring harnesses are covered with yellow outer insulation.**
- **When disconnecting the SRS wire harness, install the short connector on the airbag then disconnect the wire harness (See page 23-412).**
- ***Replace the entire affected SRS harness assembly if there is an open circuit or damage to the wiring.***

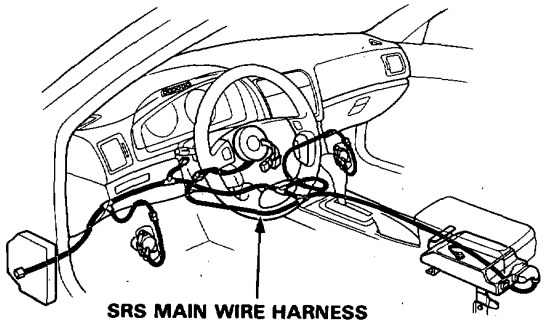

1. Remove the switches from the dashboard lower panel.

   NOTE: Be careful not to damage the switches and lower panel.

LHD:

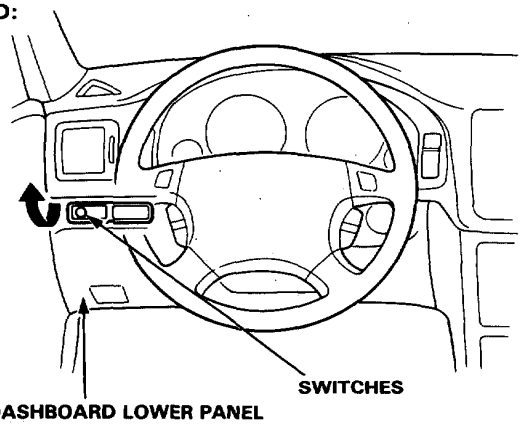

RHD:

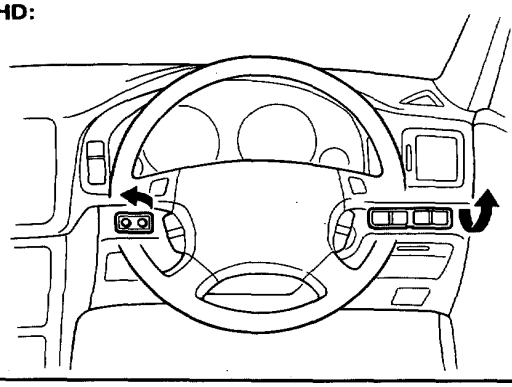

2. Remove the dashboard lower panel.

3. Disconnect the 8-P connector from the main wire harness.

4. Disconnect the 7-P connector from the under-dash fuse box.

LHD:

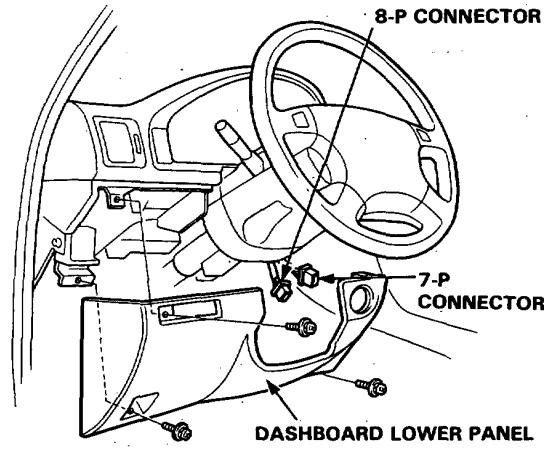

RHD:

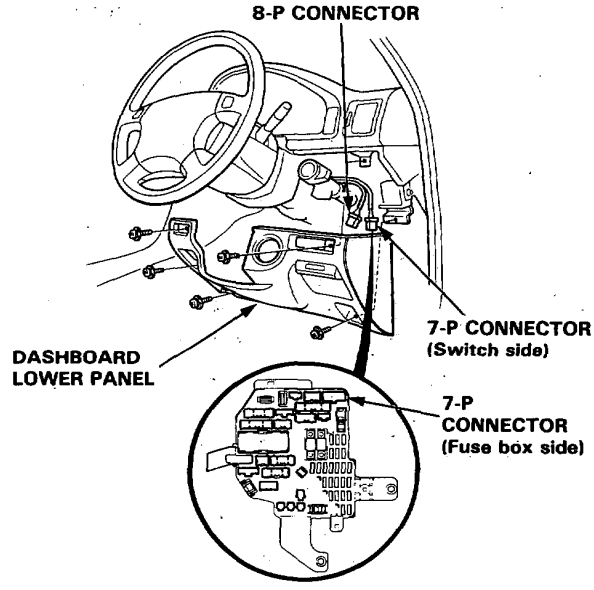

(cont'd)

Steering Lock Replacement (cont'd)

5. Remove the column holder mount bolts and mounting nuts.

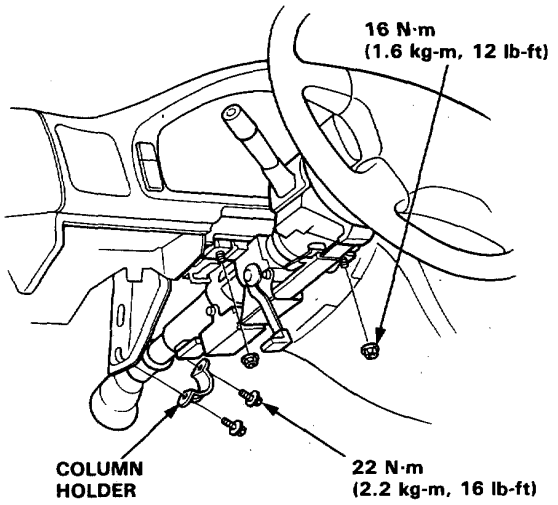

6. Lower the steering column assembly.
7. With a file, cut a notch in the edge of the shear bolt head.
   Using a chisel or screwdriver in the notch, tap the bolt clockwise until it is loose.

   CAUTION: Do not damage the switch body.

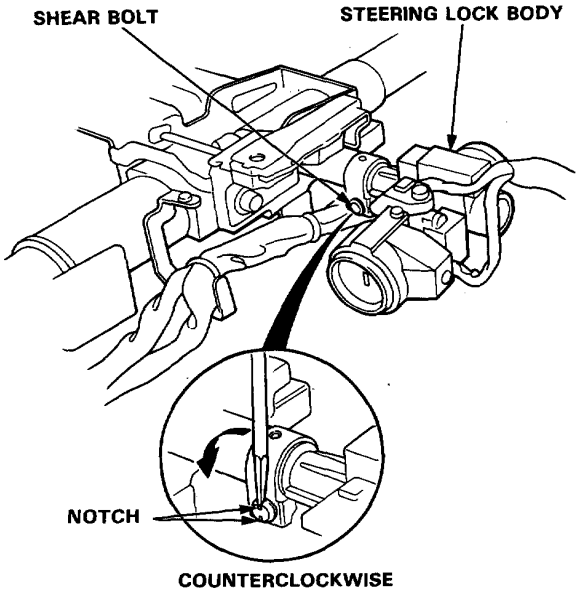

8. Remove the shear bolt from the switch body.

9. Insert the key and turn it to "I".

   NOTE: The illustration shows M/T.

10. Push the lock pin down.

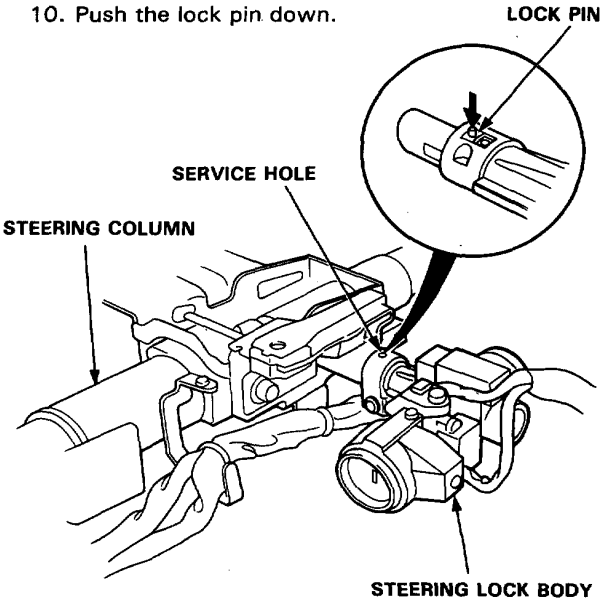

11. Pull out the steering lock body.

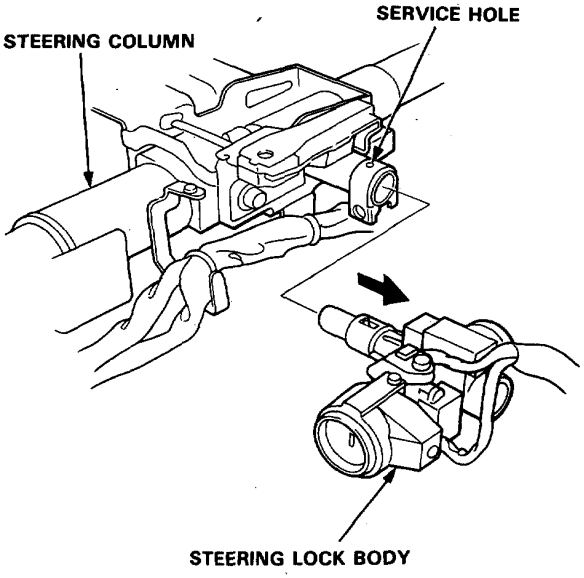

12. Turn the key to the "I", push the lock pin down, and insert the steering lock assembly into the steering column until it clicks into place.

13. Loosely tighten the new shear bolt against the knee bolster bracket.

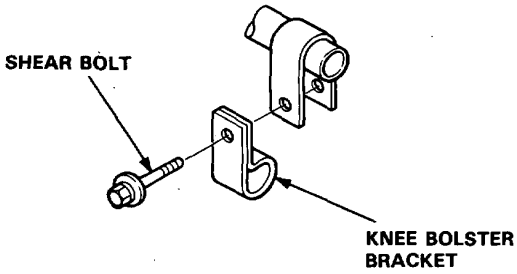

NOTE: Make sure the projection on the ignition switch is aligned with the hole in the steering column.

14. Insert the ignition key and check for proper operation of the steering wheel lock and that the ignition key turns freely.

15. Fit the steering lock body in the lower panel.

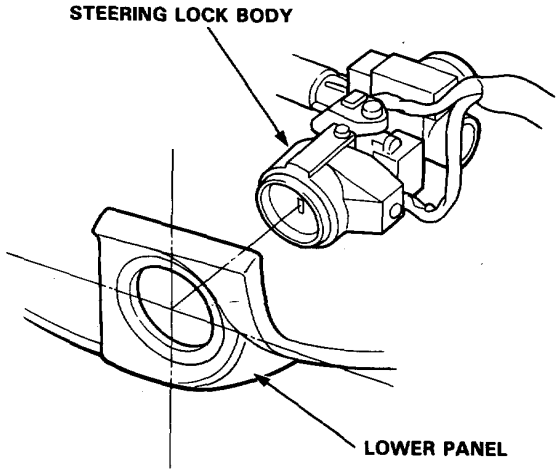

16. Tighten the shear bolt until the hex head twists off.

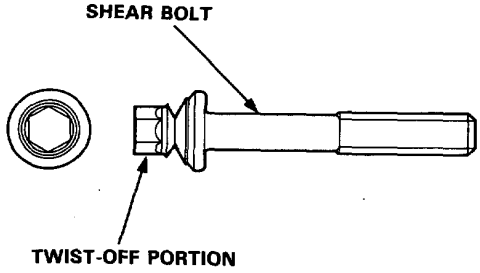

Component Location Index (LHD)

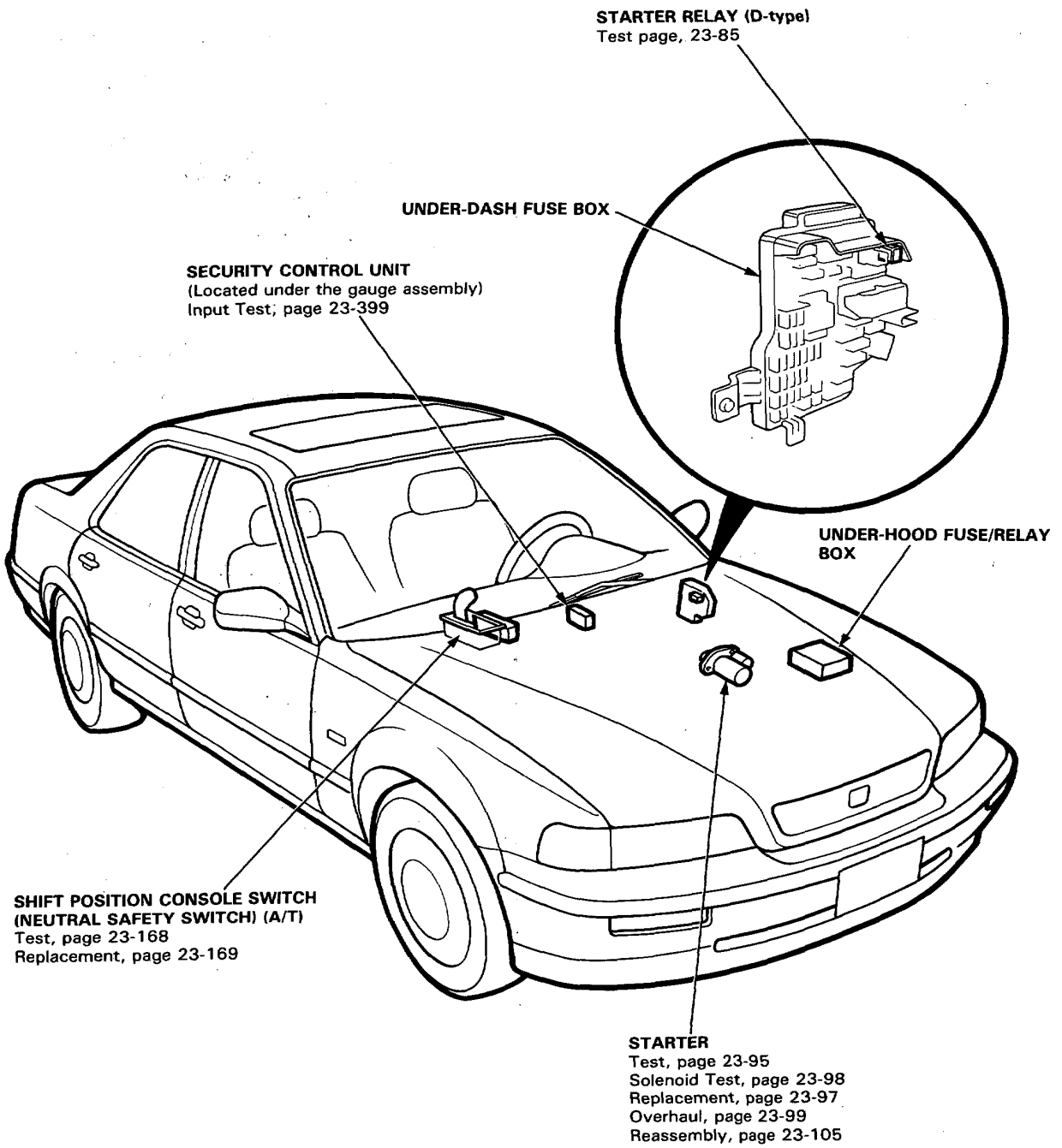

Component Location Index (RHD)

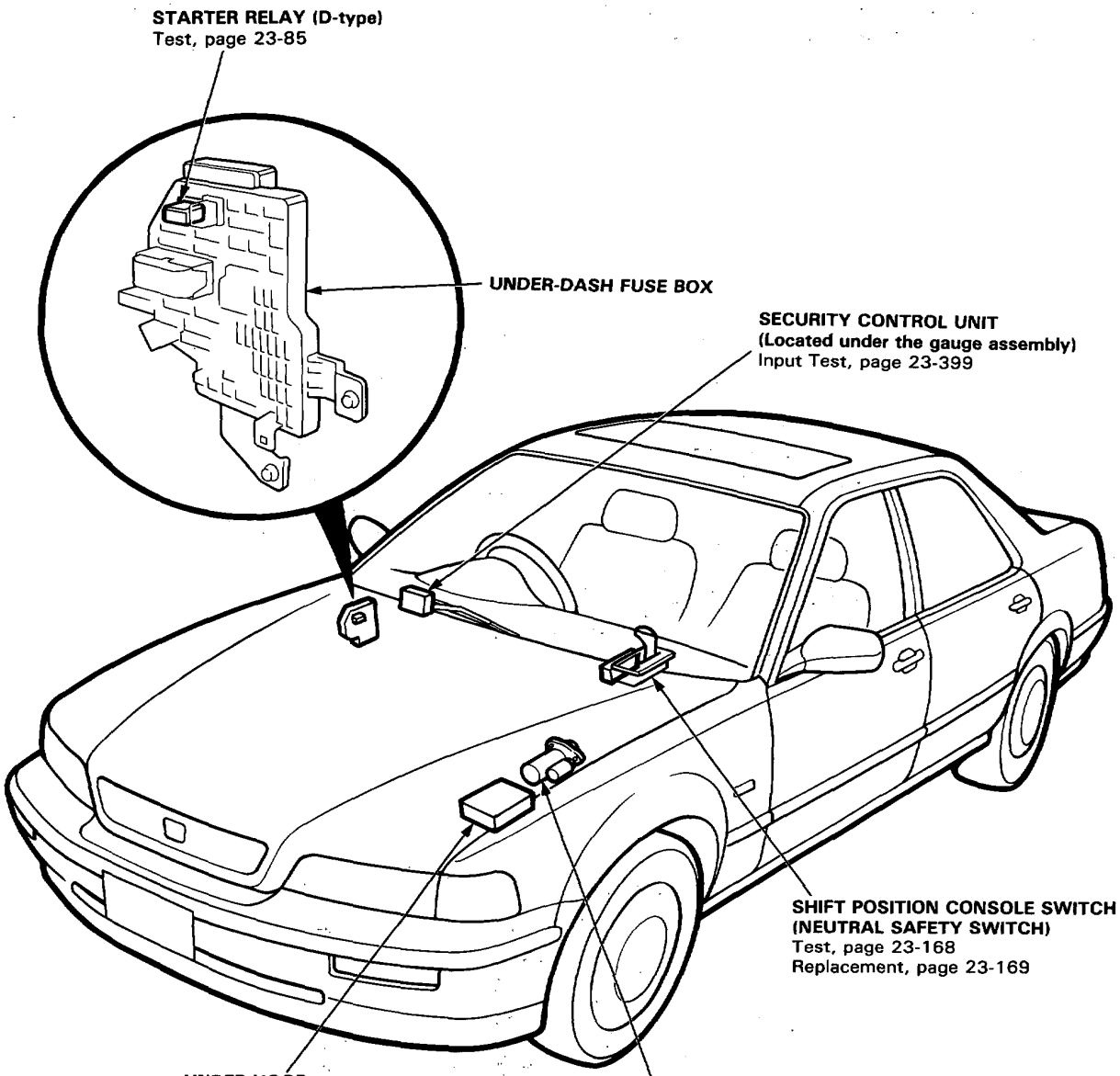

Description

This reduction starter employs a planetary gear type vernier mechanism to improve the mounting versatility and reduce gear noise.

The vernier mechanism has a sun gear consisting of an internal gear, three planetary gears and an armature shaft. When the armature shaft rotates 4.38 turns, the pinion gear rotates one turn in the same direction and the output torque becomes 4.38 times greater than the motor torque.

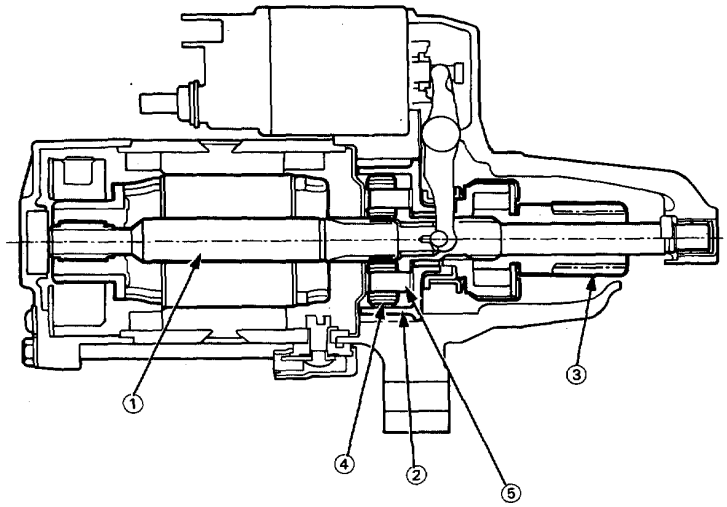

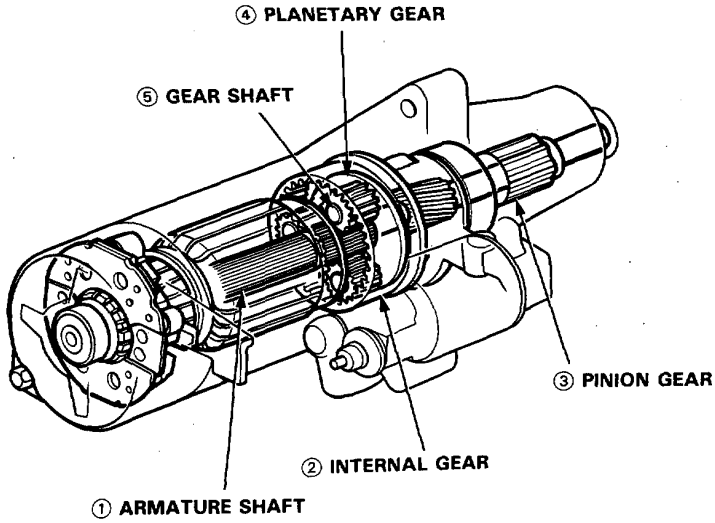

Circuit Diagram (LHD)

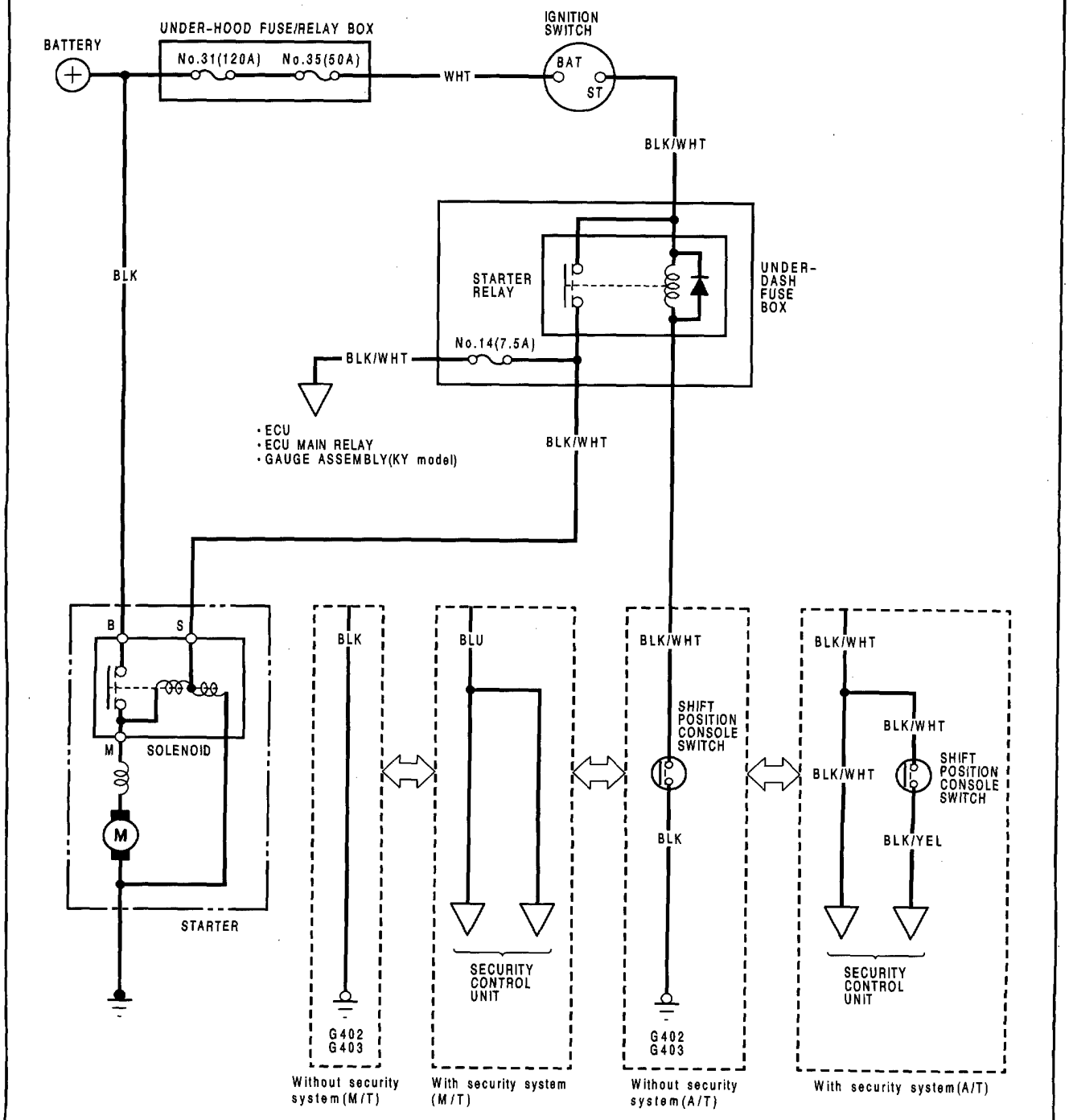

Starting System

Circuit Diagram (RHD)

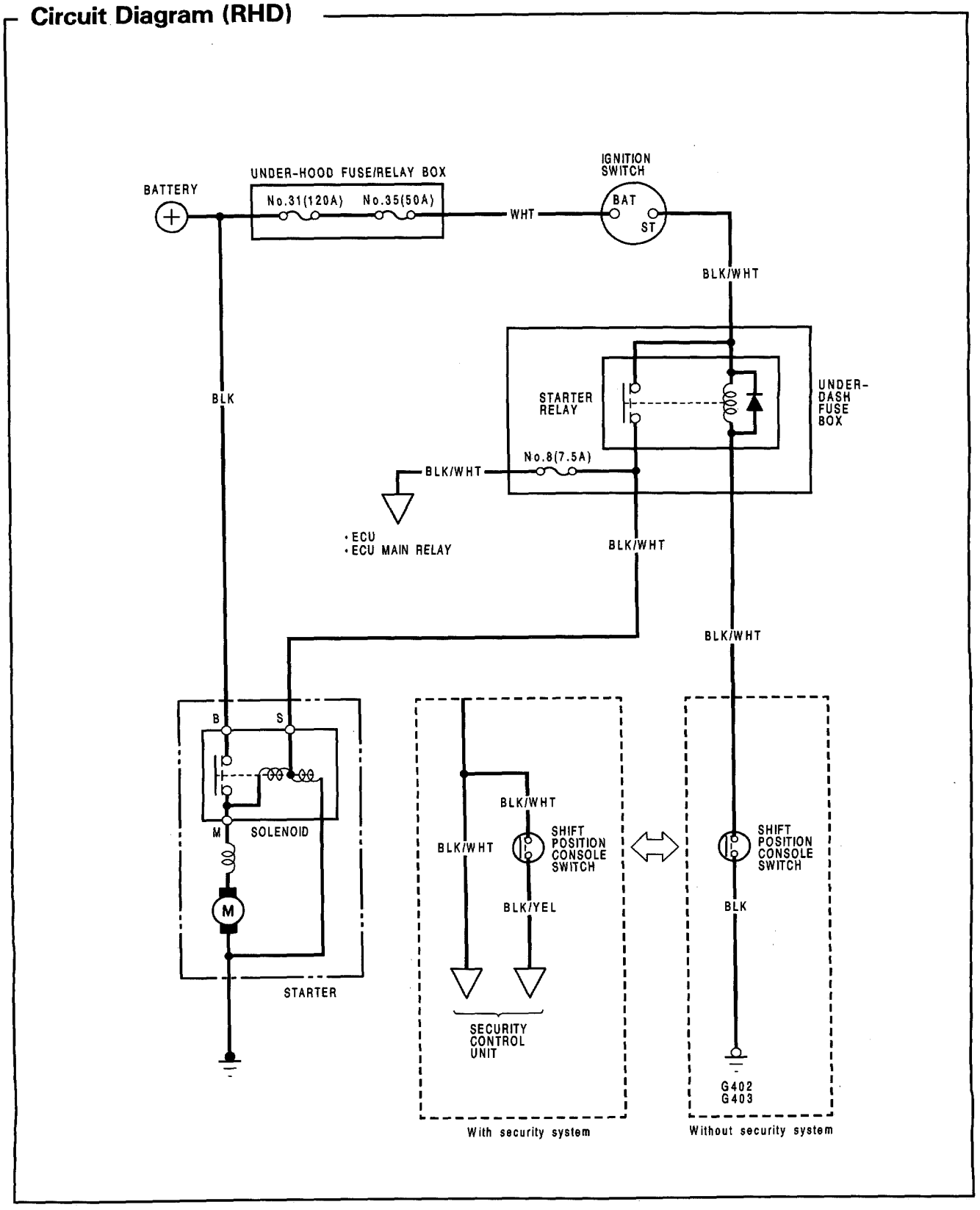

Starter Test

NOTE: The air temperature must be between 15 and 38°C (59 and 100°F) before testing.

Recommended Procedure:

Use a starter system tester.
Connect and operate the equipment in accordance with manufacturer's instructions.
Test and troubleshoot as described.

Alternate Procedure:

- Use the following equipment:
  - Ammeter, 0—400A
  - Voltmeter, 0—20 V (accurate within 0.1 volt)
  - Tachometer, 0—1200 rpm
- Hook up voltmeter and ammeter as shown.

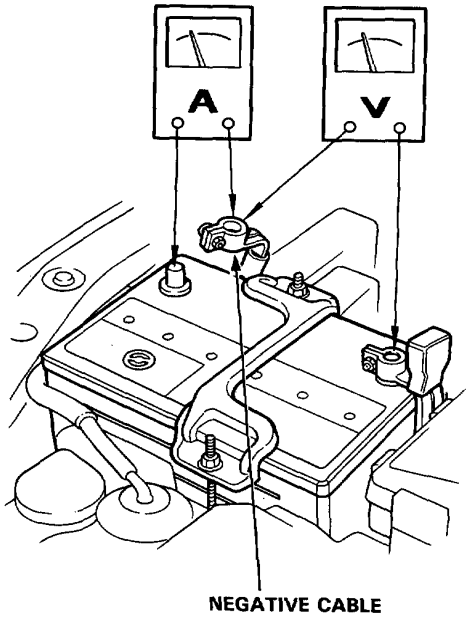

1. Disconnect the 8-P and 6-P connectors from the Igniter unit.

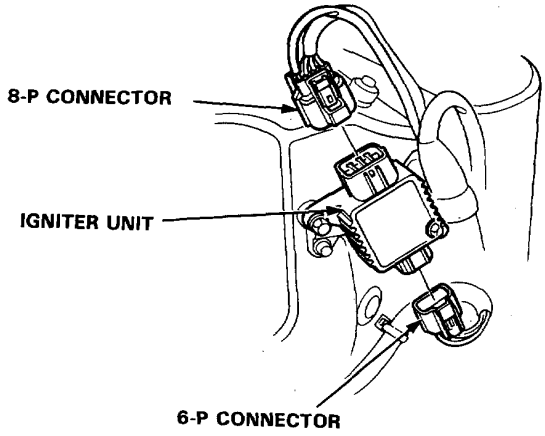

2. Check the starter engagement:
   Turn the ignition switch to "Start." The starter should crank the engine.
   - If the starter does not crank the engine, check the battery, battery positive cable, ground and the wire connections for looseness and corrosion.
   - Test again.
     If the starter still does not crank the engine, bypass the ignition switch circuit as follows: Unplug the connector (BLK/WHT wire) from the starter. Connect a jumper wire from the battery positive (+) terminal to the solenoid terminal. The starter should crank the engine.

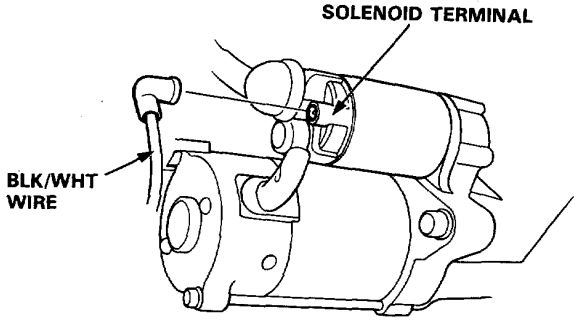

(cont'd)

Starter Test (cont'd)

– If the starter still does not crank the engine, remove the starter and diagnose its internal problems.

– If the starter cranks the engine, check for an open in the BLK/WHT wire circuit between the starter and ignition switch, and connectors. Check the ignition switch.
On cars with automatic transmission, check the shift position console switch (neutral safety switch) and connector.
On cars with manual transmission, check the starter relay, and connectors.

NOTE: Check the No. 35 (50A) fuse and the starter relay, and investigate the security alarm system.

3. Check for wear or damage:
The starter should crank the engine smoothly and steadily.

If the starter engages, but cranks the engine erratically, remove the starter motor. Inspect the starter, drive gear and flywheel ring gear for damage. Check the drive gear overrunning clutch for binding or slipping when the armature is rotated with the drive gear held. Replace the gears if damaged.

4. Check cranking voltage and current draw:
Voltage should be no less than 8.5 volts.
Current should be no more than 350 amperes.

If voltage is too low, or current draw too high, check for:

- Battery fully charged.
- Open circuit in starter armature commutator segments.
- Starter armature dragging.
- Shorted armature winding.
- Excessive drag in engine.

5. Check cranking rpm:
Engine speed during cranking should be above 100 rpm.

If speed is too low, check for:

- Loose battery or starter terminals.
- Excessively worn starter brushes.
- Open circuit in commutator segments.
- Dirty or damaged helical spline or drive gear.
- Defective drive gear overrunning clutch.

6. Check the starter disengagement:
Turn the ignition switch to "III" and release to "II"
The starter drive gear should disengage from the flywheel ring gear.

If the drive gear hangs up on the flywheel ring gear, check for:

- Solenoid plunger and switch malfunction.
- Dirty drive gear assembly or damaged overrunning clutch.

Starter Replacement

1. Disconnect the battery negative (−) cable.
2. Remove the starter cable from the harness clip on the starter motor bracket.
3. Disconnect the starter cable from the B terminal on the solenoid, and the BLK/WHT wire from the S terminal.
4. Remove the starter motor bracket.
5. Remove the exhaust pipe A (See section 13).
6. Remove the 2 bolts holding the starter, and remove the starter.

   NOTE: While rotating the starter 180 degrees back and forth, draw it downward from between the upper arm and the drive shaft. Take care not to damage the drive shaft boot.

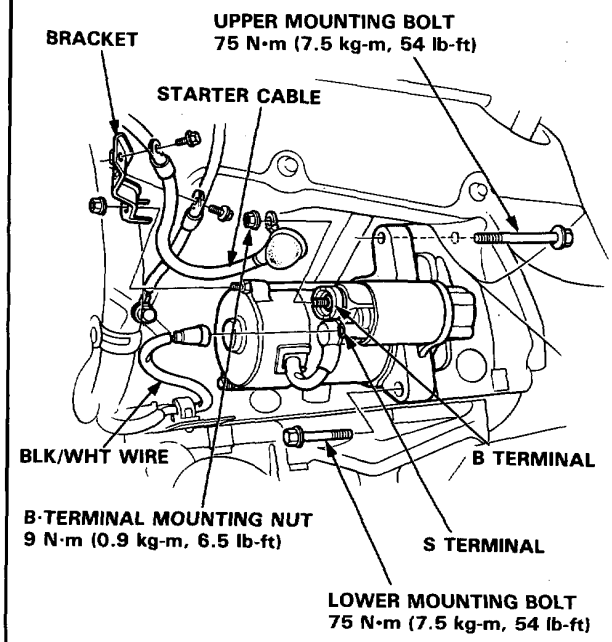

Starter Solenoid Test

1. Remove the starter solenoid from the gear housing cover.

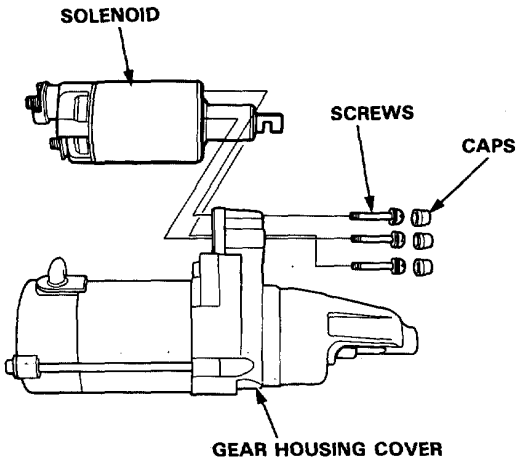

2. Check for continuity between the terminals in each solenoid plunger position according to the table.

Terminal / Position	B	M	S	GROUND
RELEASED		○—○	○—○	○—○
PUSHED	○—○	○—○	○—○	○—○

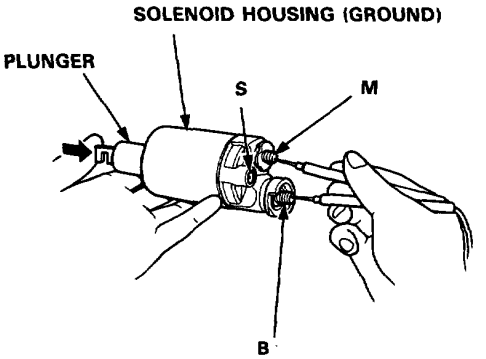

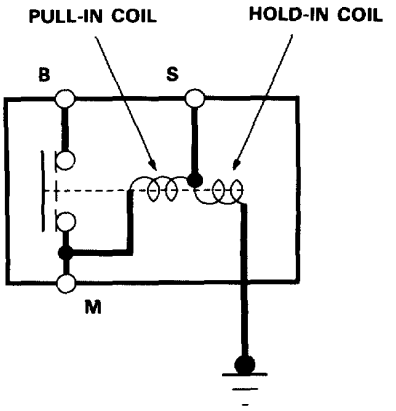

Starter Overhaul

CAUTION: Disconnect the battery cable before removing the starter.

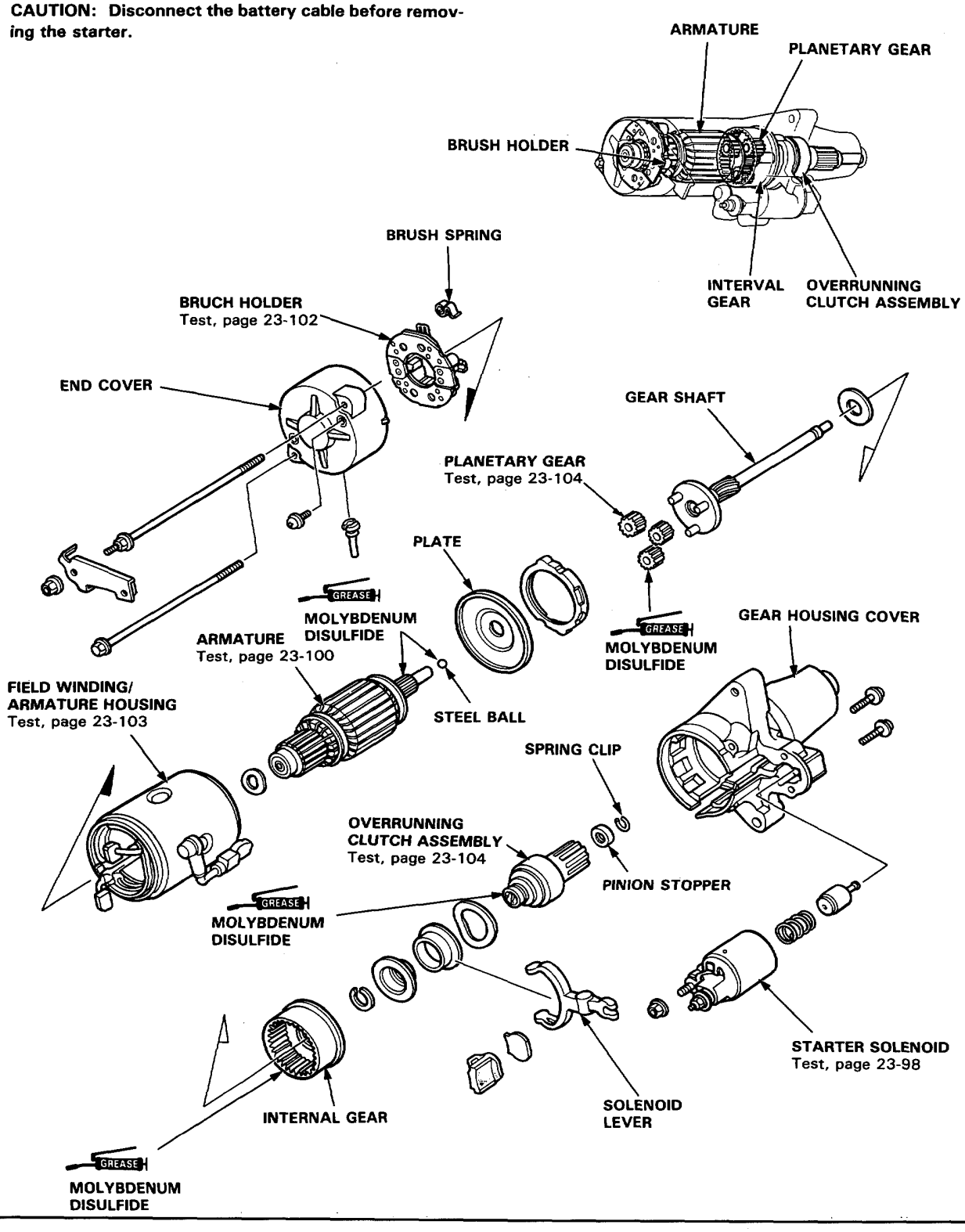

Armature Inspection and Test

1. Inspect the armature for wear or damage due to contact with the field coil magnets.

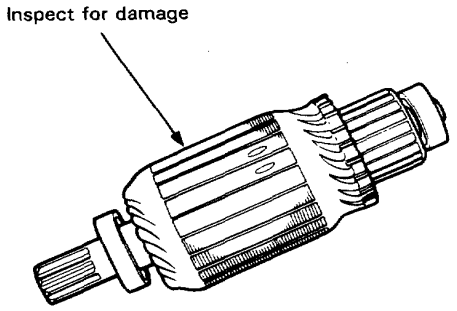

2. A dirty or burnt commutator surface may be resurfaced with emery cloth or a lathe within the following specifications.

Commutator Diameter

Standard (New): 31.9–32.1 mm (1.256–1.263 in)
Service Limit : 31.5 mm (1.24 in)

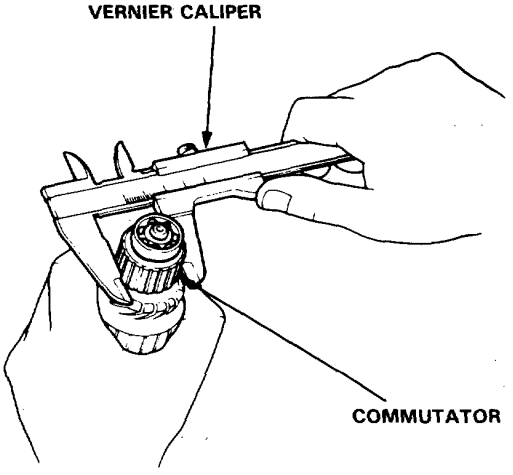

Commutator Runout

Standard (New): 0–0.05 mm (0.002 in)
Service Limit : 0.1 mm (0.004 in)

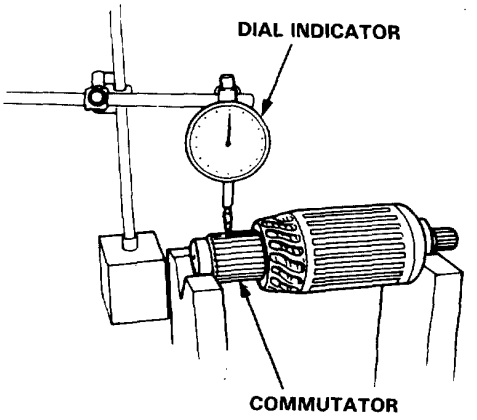

3. If the commutator runout and diameter are within limits, check the commutator for damage or for carbon dust or brass chips between the segments.

4. If surface is dirty, recondition it with a #500 or #600 sandpaper. Then, check mica depth. If necessary, undercut mica with a hacksaw blade to achieve proper depth.

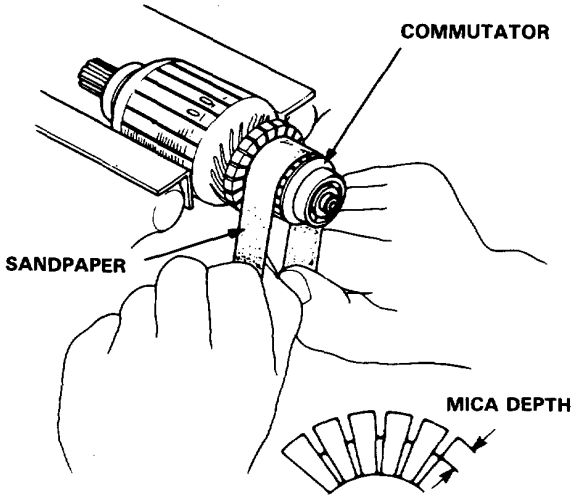

Commutator Mica Depth

Standard (New): 0.5—0.8 mm (0.02—0.03 in)
Service Limit: 0.2 mm (0.008 in)

5. Check for continuity between each segment of the commutator. If an open circuit exists between any segment, replace the armature.

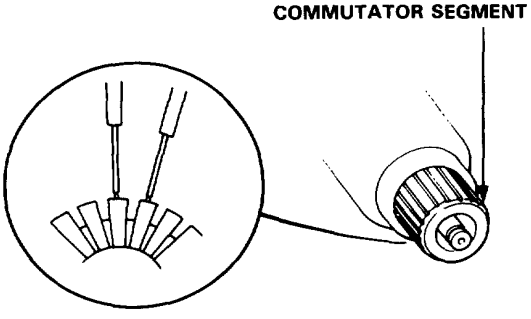

6. Place the armature on an armature tester. Hold a hacksaw blade on the armature core.

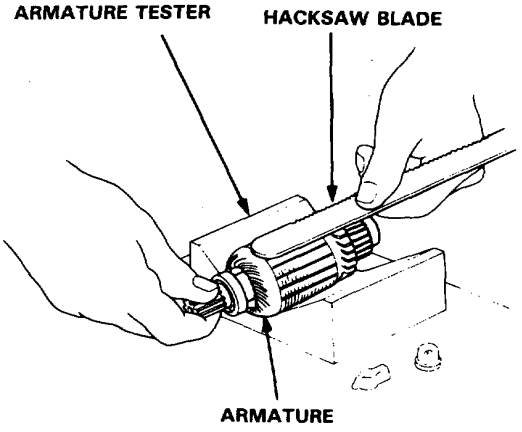

If the blade is attracted to the core or vibrates while core is turned, the armature is shorted. Replace the armature.

7. With an ohmmeter, check that no continuity exists between the commutator and armature coil core, and between the commutator and armature shaft. If continuity exists, replace the armature.

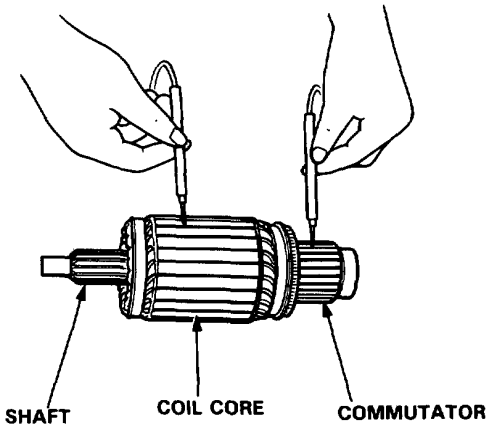

Starter Brush Holder Test

1. Check that there is no continuity between the ⊕ and ⊖ brush holders.
   If continuity exists, replace the brush holder assembly.

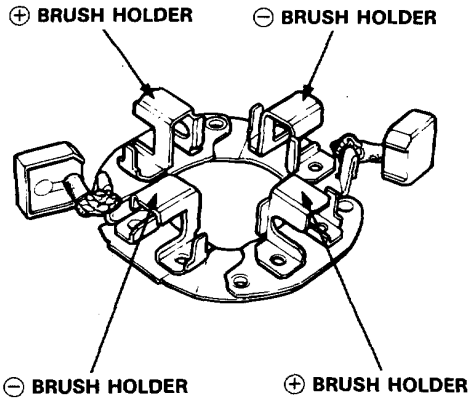

2. Insert the brush into the brush holder, and bring the brush into contact with commutator, then attach a spring scale to the spring. Measure the spring tension at the moment the spring lifts off the brush.

Spring Tension: 29.7–36.3 N (2.97–3.63 kg, 6.55–8.00 lb)

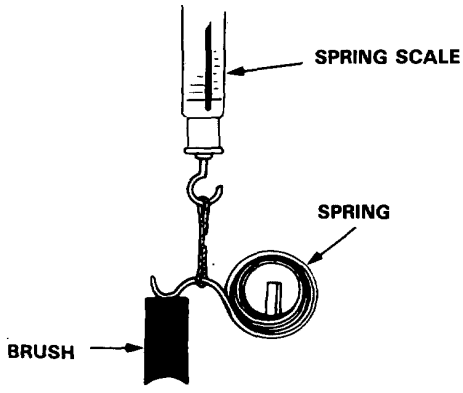

Starter Brush Inspection

Measure the brush length. If not within the service limit, replace the armature housing and brush holder assembly.

Brush Length

Standard (New): 18 mm (0.71 in)
Service Limit : 11 mm (0.43 in)

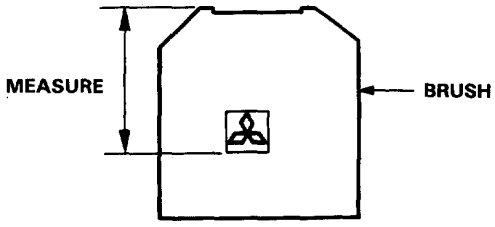

NOTE: To seat new brushes after installing them in their holders, slip a strip of #500 or #600 sandpaper, with the grit side up, over the commutator and smoothly rotate the armature. The contact surface of the brushes will be sanded to the same contour as the commutator.

Starter Field Winding Test

1. Check for continuity between the brushes. If there's no continuity, replace the armature housing.
2. Check for continuity between each brush and the armature housing (ground).
   If continuity exists, replace the armature housing.

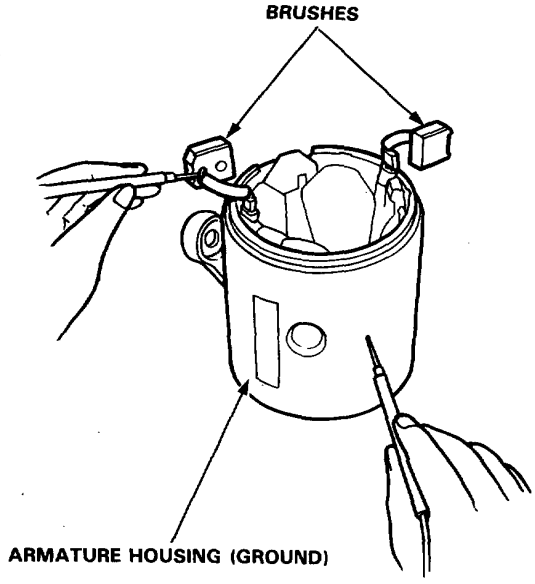

Planetary Gear Inspection

1. Check if the planetary gear is worn or damaged.
2. If the planetary gear is worn or damaged, check condition of the armature shaft gear, and internal gear.

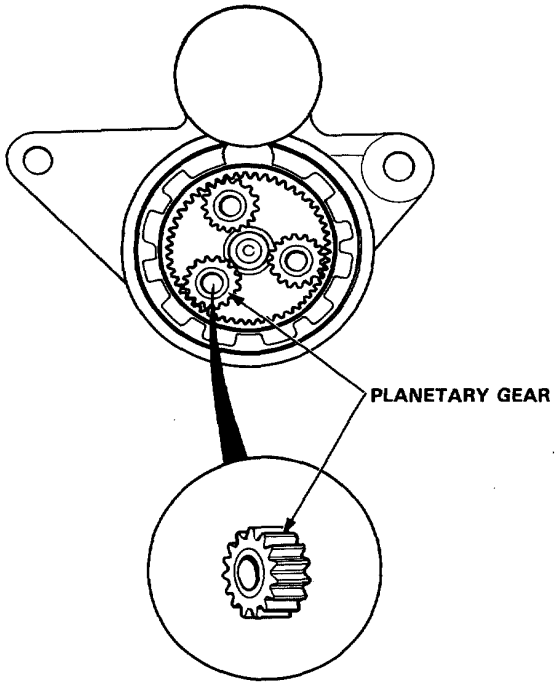

Overrunning Clutch Inspection

1. Check if the overrunning clutch moves along the shaft freely. If not, replace the overrunning clutch assembly.
2. Check if the overrunning clutch locks in one direction and rotates smoothly in reverse. If it does not lock in either direction or it locks in both directions, replace the overrunning clutch assembly.

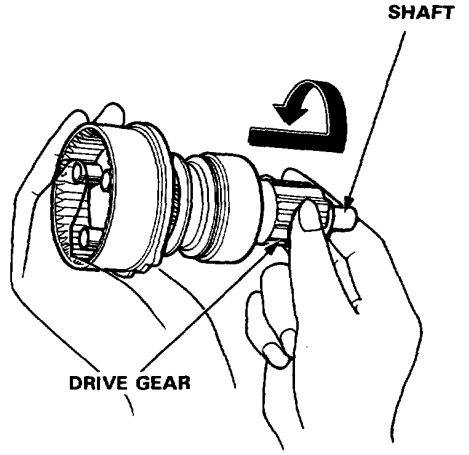

3. Check if the starter drive gear is worn or damaged. If the gear is worn or damaged, replace the overrunning clutch assembly; the gear is not available separately.
4. Check condition of the flywheel or torque converter ring gear if the starter drive gear teeth are damaged.

Overrunning Clutch Removal

1. Put the end of a pipe (inner diameter 13 mm (0.51 in)) against the stop and strike the pipe to dismount the stop from the ring.

A: 13 mm (0.51 in)

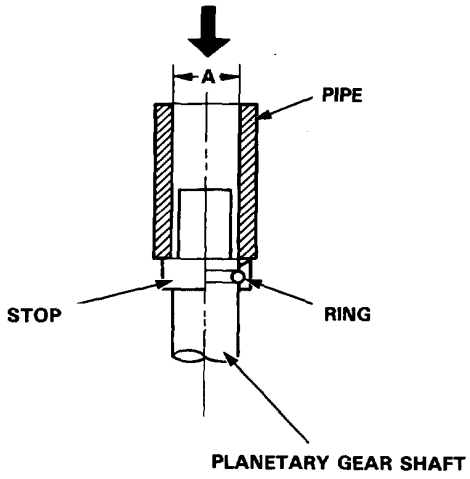

2. Remove the ring then pull the stop and overrunning clutch off the shaft.

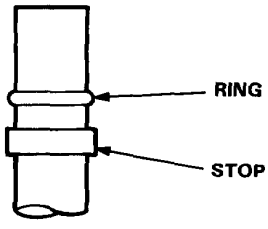

Starter Reassembly

Reassemble the starter in the reverse order of disassembly.

1. Pry back each brush spring with a screwdriver, then position the brush about halfway out of its holder, and release the spring to hold it there.

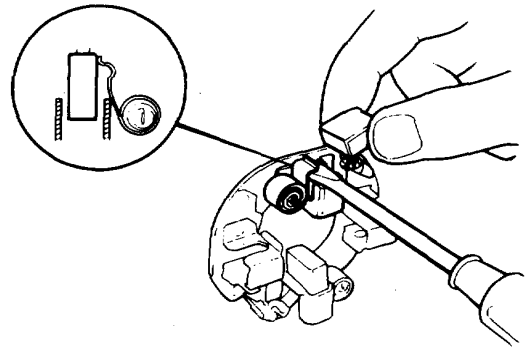

2. Install the armature in the housing. Next pry back each brush spring again and push the brush down until it seats against the commutator, then release the spring against the end of the brush.

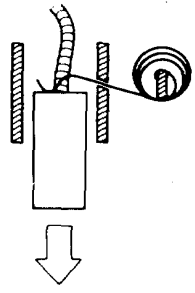

3. Install the end cover on the brush holder.

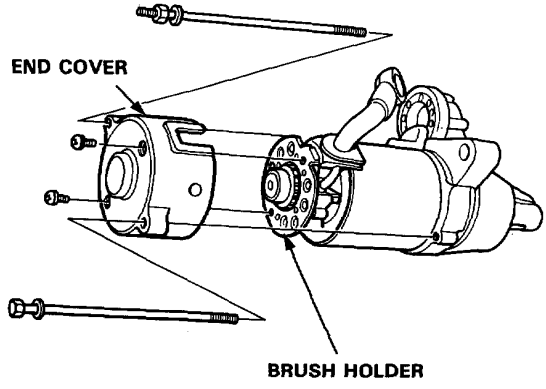

Performance Test

NOTE: Before starting the following checks, disconnect the wire from terminal **M**, and make a connection as described below using as heavy a wire as possible (preferably equivalent to the wire used for the vehicle).

Pull-in Coil Test:

Connect the battery between terminals **S** and **M** on the solenoid. If the pinion protrudes, it is working properly. properly.

NOTE: Do not leave the battery connected for more than 10 seconds.

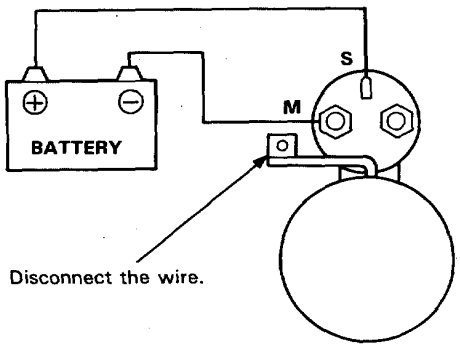

Holding Coil Test:

Connect the battery between terminal **S** on the solenoid and the body. Manually pull out the pinion until it reaches the pinion stop. If the pinion does not snap back when it is released, the holding coil is working properly.

NOTE: Do not leave the battery connected for more than 10 seconds.

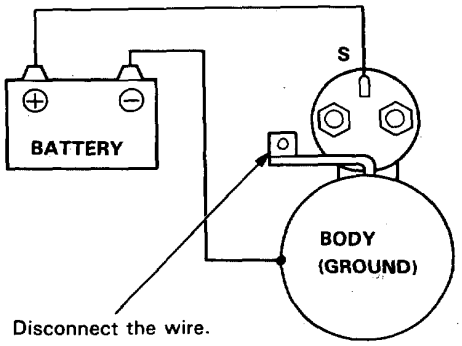

Retracting Test:

Connect the battery between terminal **M** on the solenoid and the body. Manually *pull out* the pinion until it reaches the pinion stop.
If the pinion retracts immediately when it is released, it is working properly.

NOTE: Do not leave the battery connected for more than 10 seconds.

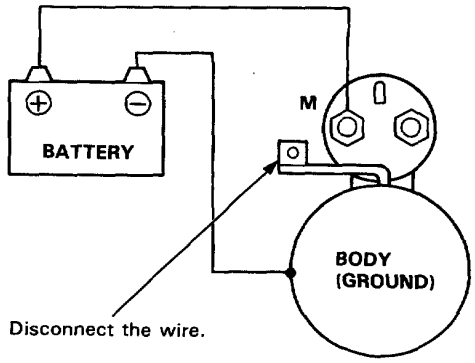

Pinion Gap Check:

1. Disconnect the wire from terminal **M**.
2. When the battery is connected between terminals **S** and **M**, the pinion protrudes and stops. Keep the pinion in this position and measure the gap between the pinion and the stop.

   NOTE: *Do not leave the battery connected for* more than 10 seconds.

Specification:
Pinion Gap: 0.5—2 mm (0.02—0.08 in)

3. If the pinion gap is out of the specified range, adjust the gap by increasing or decreasing the number of washers between the magnetic switch and the housing cover. When the number of washers is increased, the gap becomes smaller.

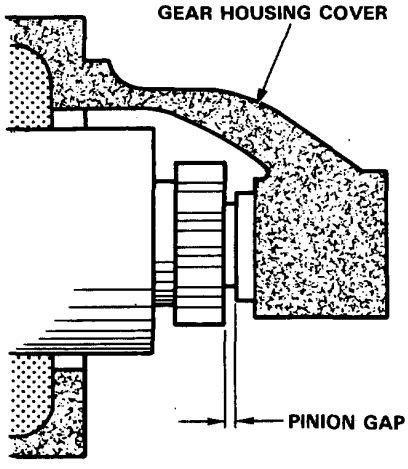

Starter No-Load Test:

1. Clamp the starter firmly in a vise.
2. Connect the starter to the battery as described in the diagram below and confirm that the motor starts and keeps rotating.
3. If the electric current and motor speed meet the specifications when the battery voltage is at 11 V, it is working properly.

Specifications: 140A or less (Electric current), 3,800rpm or more (Motor speed)

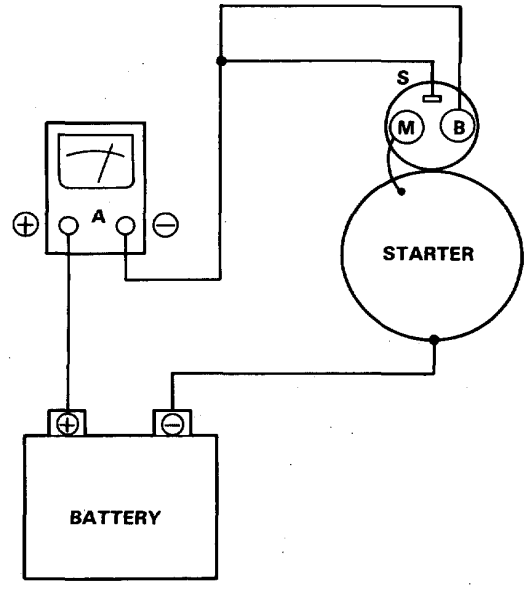

Ignition System

Component Location Index (LHD)

IGNITION TIMING CONTROL SYSTEM
- Troubleshooting, section 11
- Inspection and setting, page 23-112
- Description, page 23-110

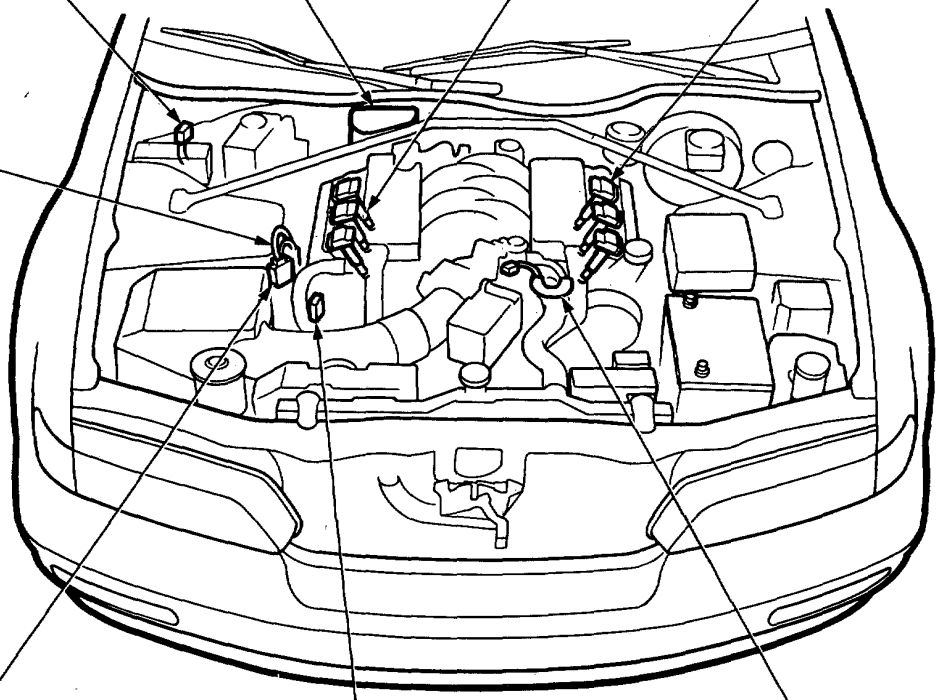

Component Location Index (RHD)

IGNITION TIMING CONTROL SYSTEM
- Description, page 23-110
- Inspection and setting, page 23-112
- Troubleshooting, section 11

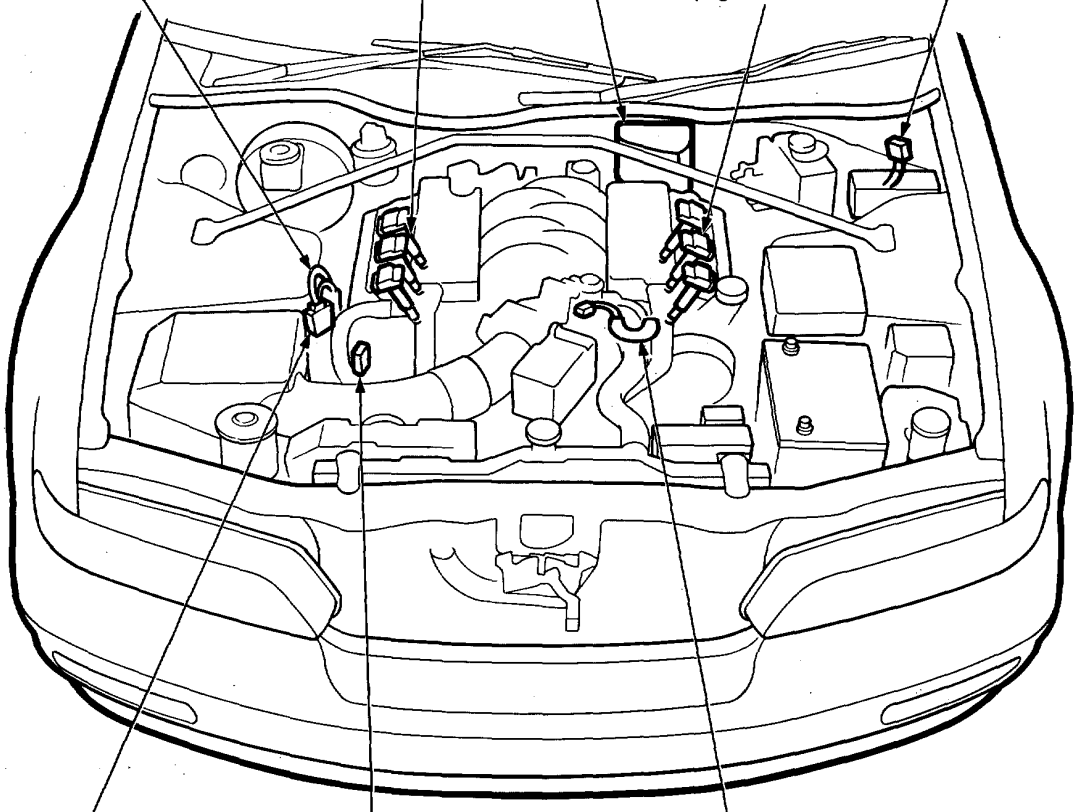

Ignition System

Description

Ignition Timing Control:
The programmed ignition system on this engine use a microcomputer (ECU) to determine optimum ignition timing based on continuous inputs from a CRANK/CYL sensor, throttle angle sensor, coolant temperature sensor and MAP (manifold absolute pressure) sensor. This system, not dependent on a governor or vacuum diaphragm, is capable of providing ignition advance characteristics which cannot be provided by conventional timing controls.

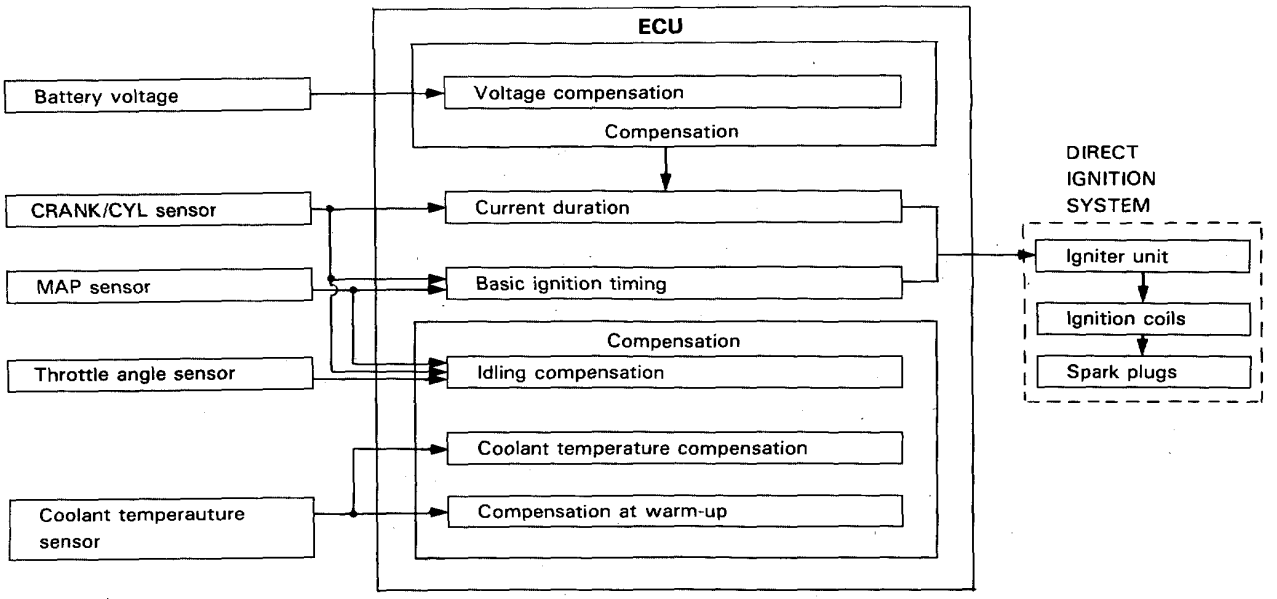

Basic Control
Determination of ignition timing/current duration:
The control unit has stored within it the basic ignition timing for operating conditions based upon engine speed and intake manifold pressure. With the input signals from sensors, the system determines optimum timing for present conditions and sends voltage pulses to the igniter unit.

Compensation of ignition timing:

Compensation Item	Related Sensor and Information	Description
Idling	CRANK/CYL sensor MAP sensor	Ignition timing is controlled to the target speed with compensation according to the idling speed.
Compensation at warm-up	Coolant temperature sensor	Timing is adjusted in accordance with the warming up conditions to bring about a good balance between operating performance and exhaust gas level.
Coolant temperature compensation	Coolant temperature sensor	Compensation for timing at low and high coolant temperatures.

Circuit Diagram

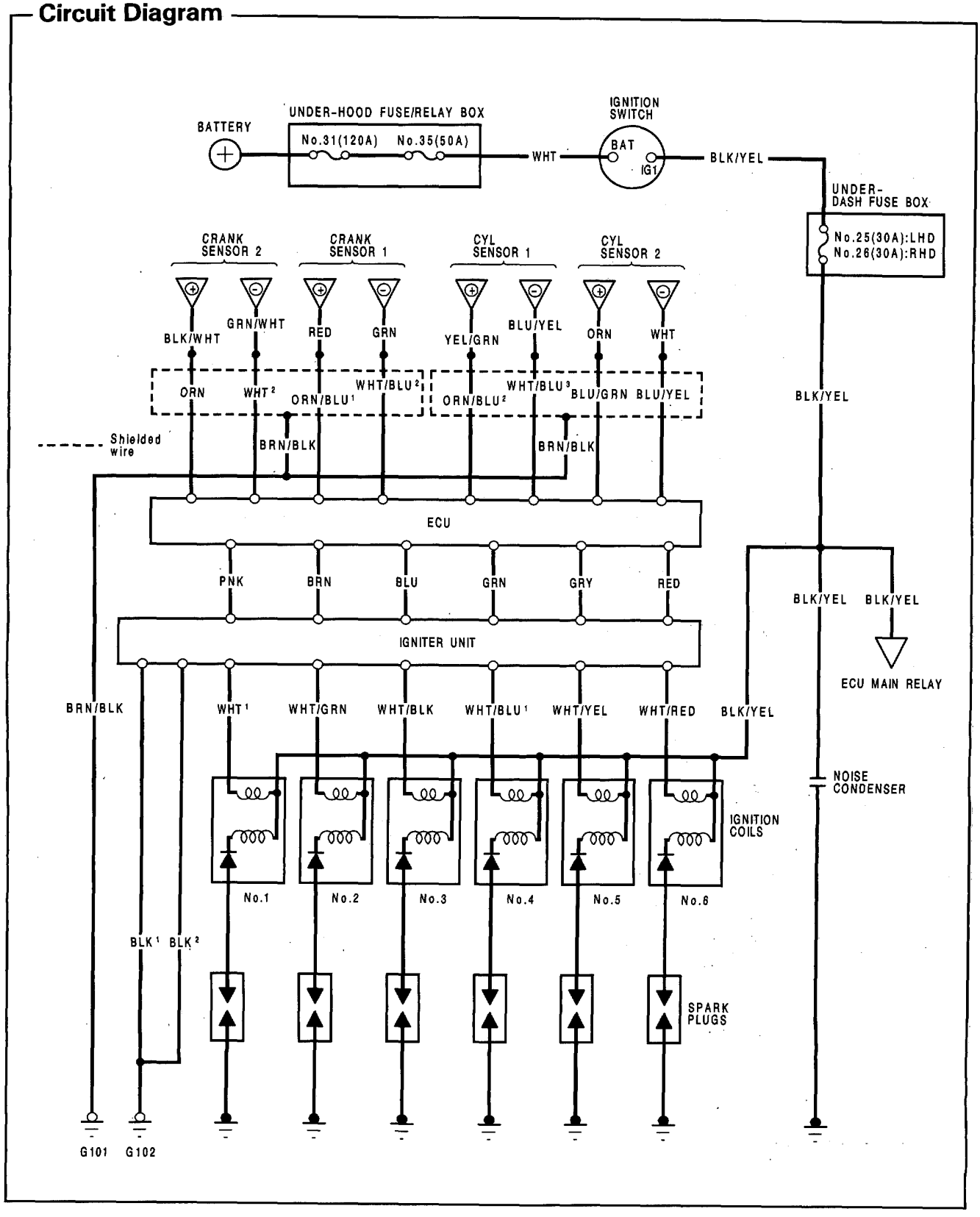

Ignition Timing Inspection and Setting

1. Start the engine and allow it to warm up (cooling fan comes on).

2. Pull out the ignition timing adjusting connector located under the dash on the right side. Connect the WHT and BLK terminals with a jumper wire.

   NOTE: RHD type is symmetrical to LHD type.

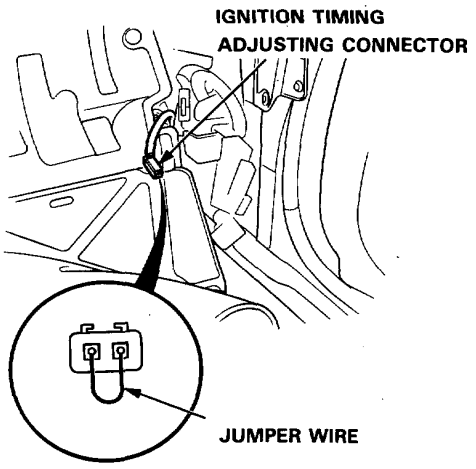

3. Connect a timing light to the service loop; while the engine idles, point the light toward the pointer on the timing belt cover.

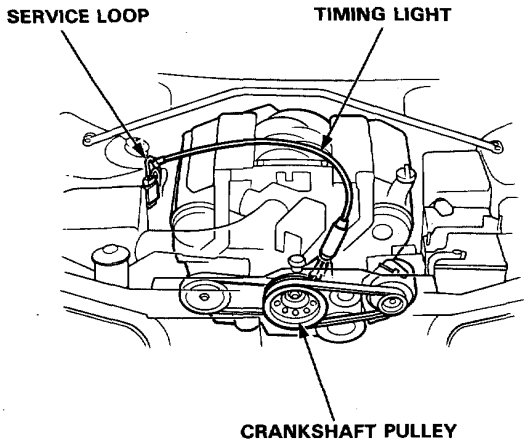

4. Check the idle speed (See page 23-113).

   NOTE: Adjust the idle speed, if necessary, by turning the idle adjusting screw (See section 11).

5. Inspect ignition timing at idle.

   Ignition Timing: 15° ± 2° BTDC (RED)

   - **Manual Transmission (at 650 ± 50 min^{-1} (rpm) in neutral)**
   - **Automatic Transmission (at 600 ± 50 min^{-1} (rpm) in neutral)**

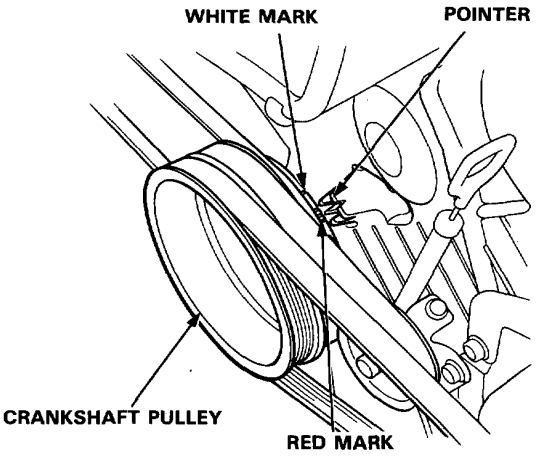

6. If necessary to adjust the ignition timing, remove the control box cover. Be careful not to damage the vacuum hose when removing the control box cover.

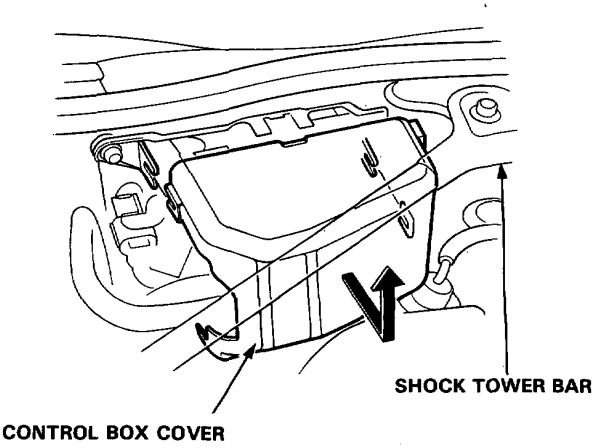

7. Drill the 2 rivets off with a 3/16 in. drill bit, then separate the cover from the adjuster.

   CAUTION: Do not damage the adjuster when *removing the rivets.*

8. Adjust the ignition timing by turning the adjusting screw on the ignition timing adjuster.

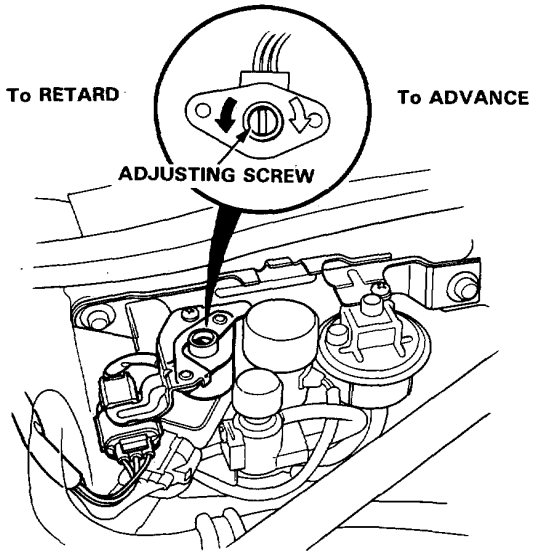

9. Remove the jumper wire from the timing adjusting connector.

10. After adjusting, reinstall the cover on the ignition timing adjuster with new rivets, then reinstall the adjuster on the control box.

Idle Speed Inspection

1. Start the engine and allow it to warm up (cooling fan comes on).

2. Connect a tachometer to the tachometer connector.

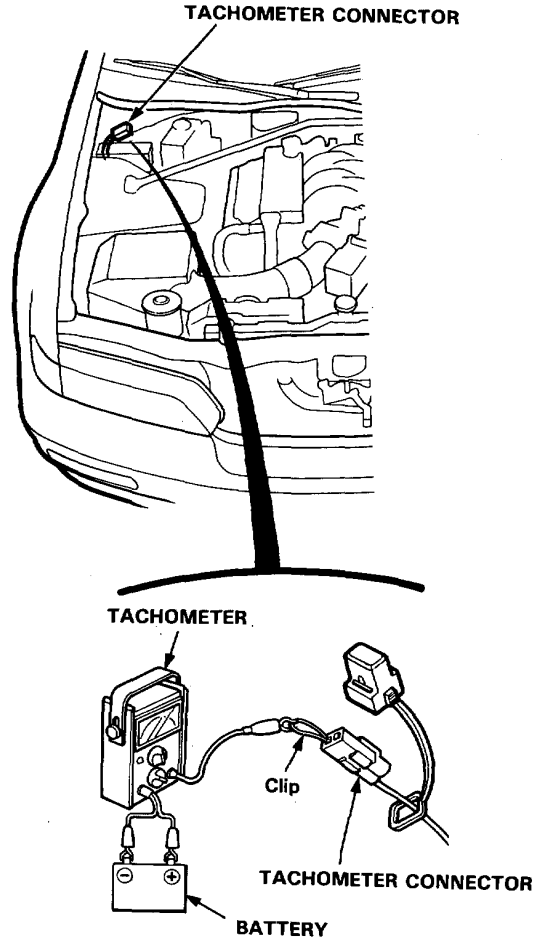

Idle speed:
M/T: 650 ± 50 min^{-1} (rpm) in neutral
A/T: 600 ± 50 min^{-1} (rpm) in neutral

3. Adjust the idle speed, if necessary (See section 11).

Igniter Unit Input Test

Disconnect the 8-P connector from the igniter unit.
Make the following input tests at the harness pins.
If all tests prove OK, yet the system still fails to work, replace the igniter unit.

NOTE:
- See section 11 when self-diagnostic indicator blinks.
- Perform an input test on the igniter unit after finishing the fundamental tests for the ignition system and fuel emission system.
- The tachometer should operate normally.

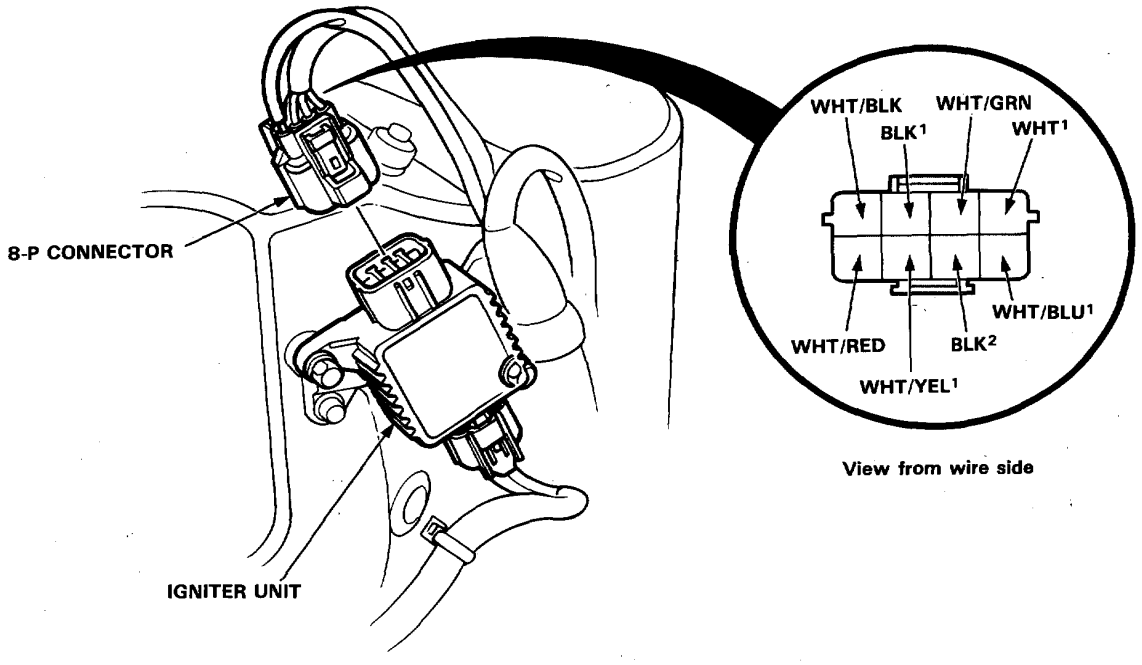

No.	Wire	Test condition	Test: desired result	Possible cause (if result is not obtained)
1	BLK[1]	Under all conditions.	Check for continuity to ground: There should be continuity.	• Poor ground (G102). • An open in the wire.
2	BLK[2]			
3	WHT[1]	Ignition switch ON.	Check for voltage to ground: There should be battery voltage.	• Blown * (30A) fuse. • Faulty ignition coil. • An open in the wire.
4	WHT/GRN			
5	WHT/BLK			
6	WHT/BLU			
7	WHT/YEL			
8	WHT/RED			

* { No. 25 (30A): LHD
No. 26 (30A): RHD

Ignition Coil Test

1. With the Ignition switch OFF, remove the ignition coil.

2. Using an ohmmeter, measure resistance between the terminals.

   NOTE: Resistance will vary with the coil temperature; specification is at 25°C (77°F).

   Primary Winding Resistance (between the A and B terminals):
   0.9—1.1 ohms

   - If the resistance is not within specification, replace the coil.
   - If the resistance is OK, but other troubleshooting doesn't reveal the cause of the problem, substitute a known-good ignition coil and check engine operation again.
     If the engine then runs OK, replace the original coil.

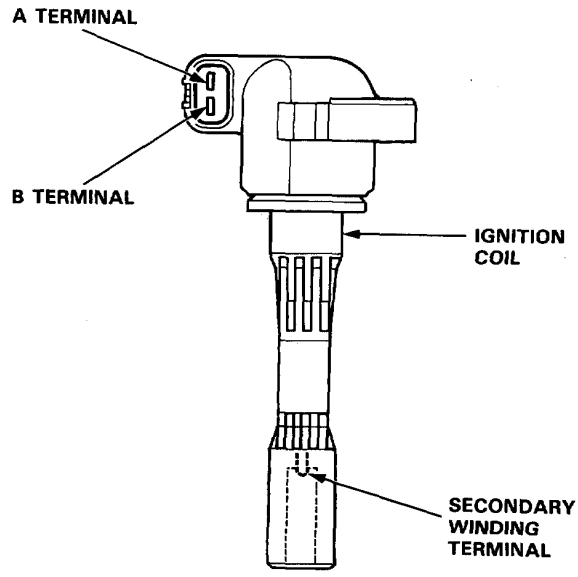

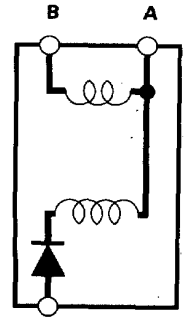

Spark Plug Inspection

1. Inspect the electrodes and ceramic insulator for:

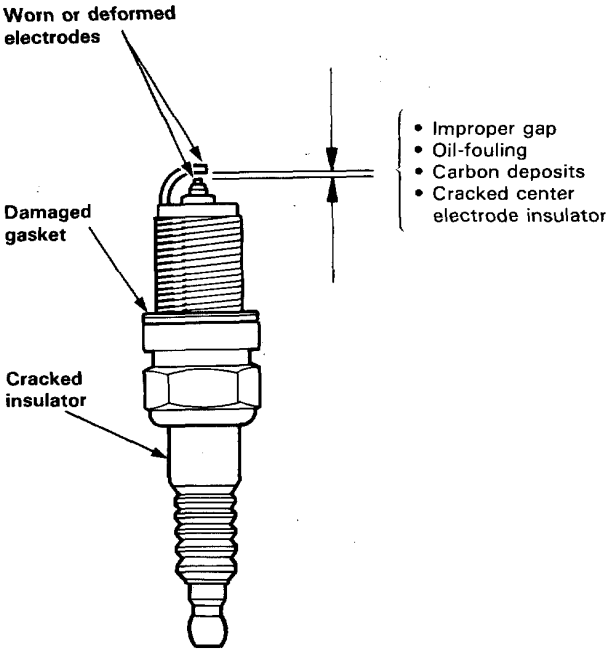

Burned or worn electrodes may be caused by:
- Advanced ignition timing
- Loose spark plug
- Plug heat range too low
- Insufficient cooling

Fouled plug may be caused by:
- Retarded ignition timing
- Oil in combustion chamber
- Incorrect spark plug gap
- Plug heat range too high
- Excessive idling/low speed running
- Clogged air cleaner element
- Deteriorated ignition coil

2. Make sure that the 1.3 mm (0.051 in.) plug gauge does not fit into the gap of the platinum tip plug. If the gauge fits into the gap, do not attempt to adjust. Replace the plug with new one.

Electrode Gap: 1.00—1.10 mm (0.039—0.043 in)

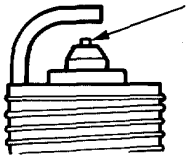

Platinum tip plug: Check and confirm that the 1.3 mm (0.051 in) plug gauge does not go into the gap.

3. Replace the plug at the specified interval, or if the center electrode is rounded as shown below:

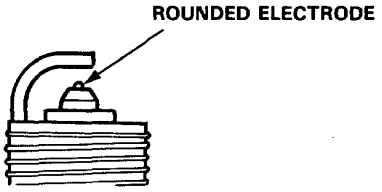

NOTE: Do not use spark plugs other than those listed below, because these plugs are a new type (ISO standard).

This symbol is on the air cleaner cover.

Spark plug:

PFR6G-11 (NGK) PK20PR-L11 (ND)	For all normal driving.
PFR7G-11 (NGK) PK22PR-L11 (ND)	For hot climates or continuous high speed driving.
PFR5G-11 (NGK) PK 16PR-L11 (ND)	For cold climate driving.

4. Screw the plugs into the cylinder head finger tight, then torque them to 18 N·m (1.8 kg-m, 13 lb-ft).

Noise Condenser Capacity Test

1. Use a commercially available condenser tester. Connect the tester probes and measure the condenser capacity.

   Condenser capacity: 0.47 ± 0.09 microfarads (μF)

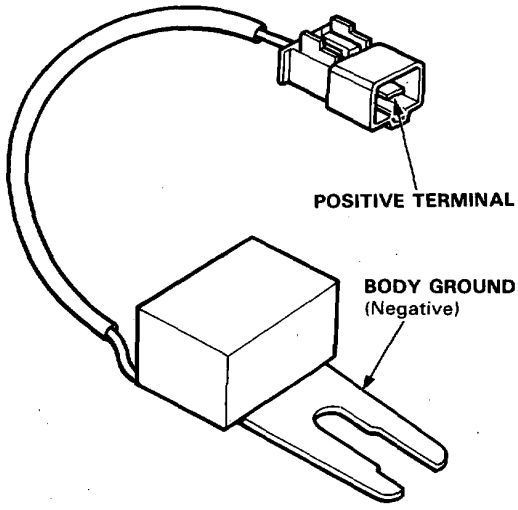

   NOTE: The noise condenser is intended to reduce ignition noise in the radio. However, condenser failure may cause the engine to stop running.

2. If not within the specification, replace the noise condenser.

Charging System

Component Location Index

NOTE: LHD type is shown. RHD type is similar.

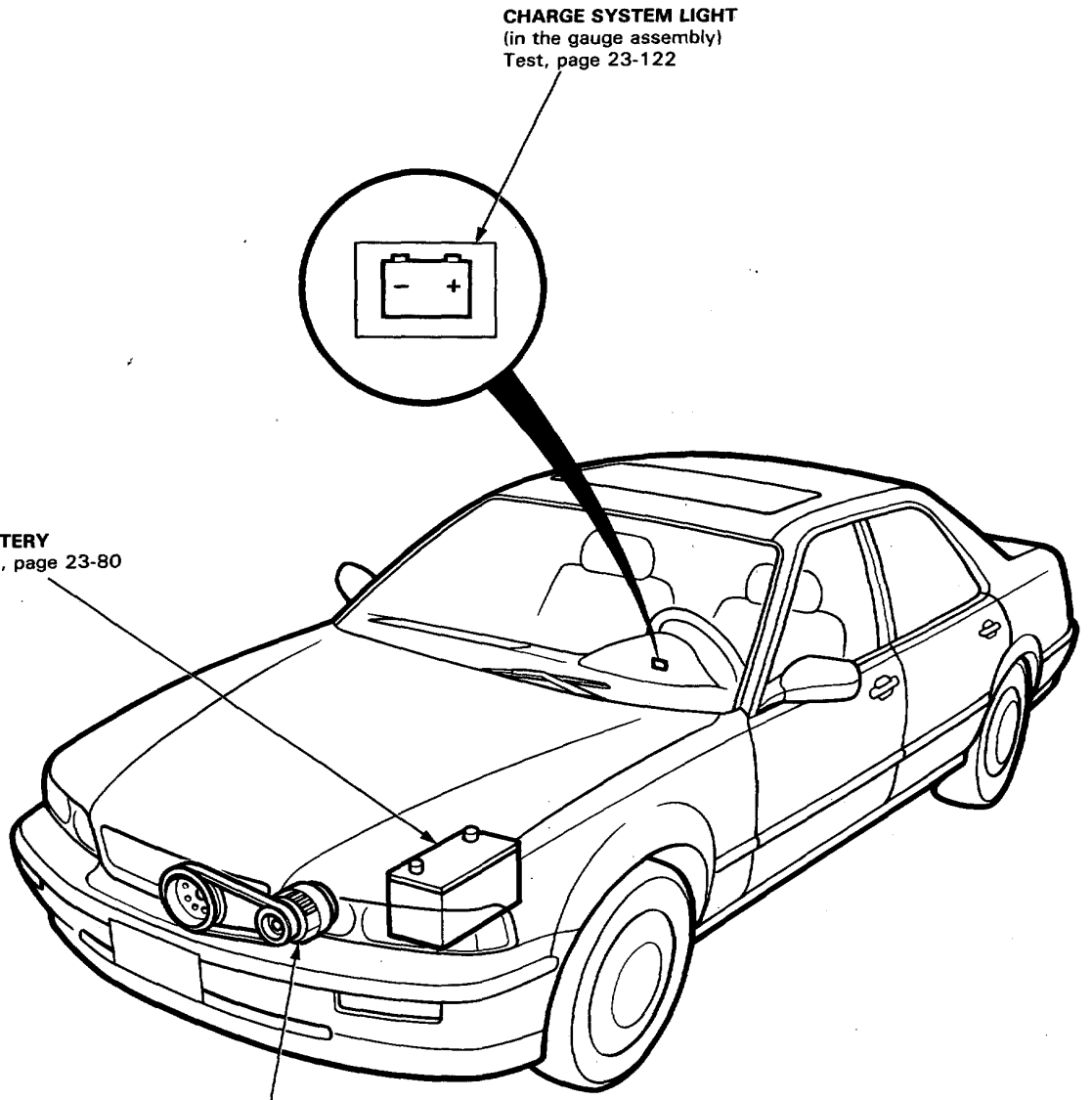

Circuit Diagram

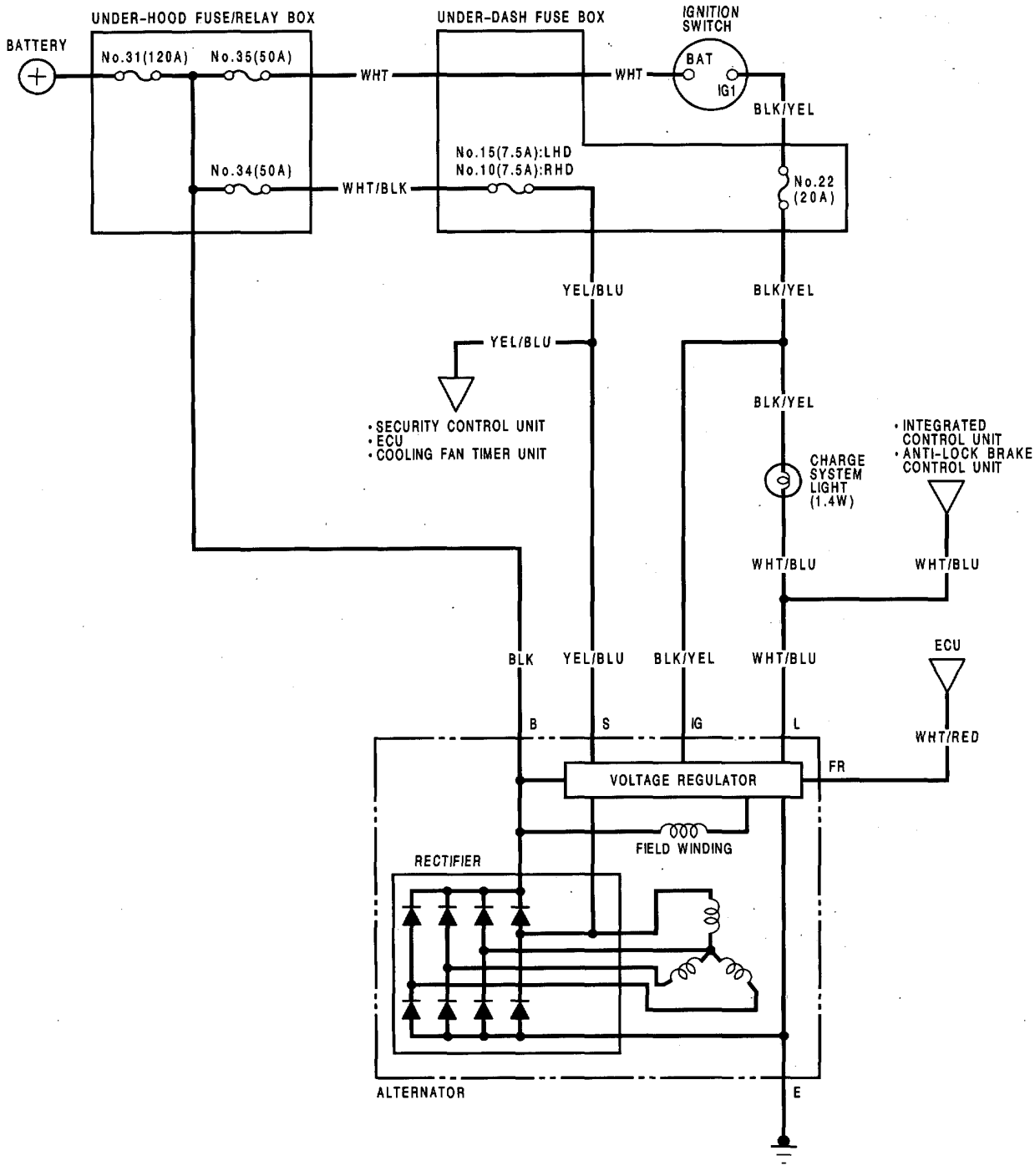

Alternator and Regulator Test

1. Verify battery condition, and that the alternator belt is tight and in good condition. Check the connections at the alternator and under-hood fuse/relay box. Check the No. 15: LHD or No. 10: RHD (7.5A) fuse (if blown, the charge system light will come on even if the system's working properly) and No. 22 (20A) fuse in the under-dash fuse box.

2. Disconnect the 4-P connector from the alternator. With the ignition switch on, there should be battery voltage between the IG (BLK/YEL) terminal and body ground, and between the S (YEL/BLU) terminal and body ground.

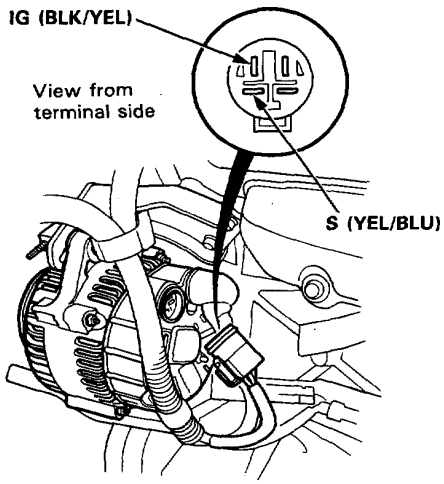

- If there is no voltage, check for:
  - An open in the BLK/YEL wire between the under-dash fuse box and the voltage regulator, or the YEL/BLU wire between the under-dash fuse box and the voltage regulator.
- If there is battery voltage, go to step 3.

3. If these check OK, connect a voltmeter between the alternator terminal B and body ground, and an ammeter (100 amp capacity or higher) between the alternator terminal B and the BLK wire as shown (An inductive pick up can be used instead of disconnecting the BLK wire).

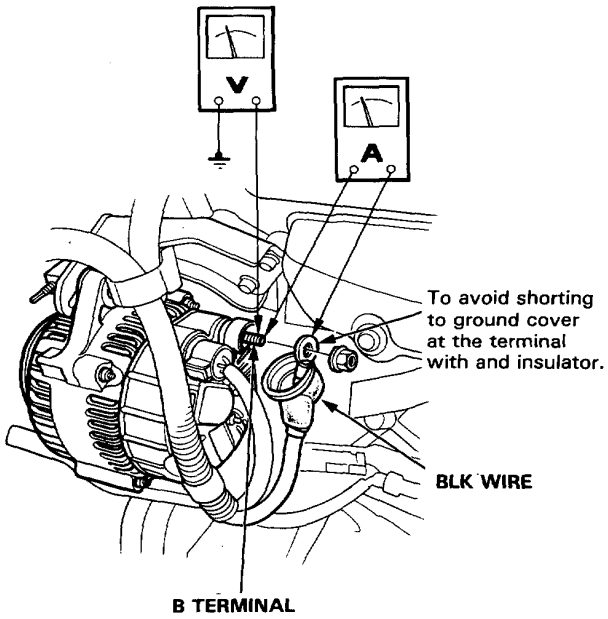

4. Start the engine. Turn off all accessories, raise engine speed to 2,000 rpm and hold (make sure cooling fans are off). Check the reading on the ammeter and voltmeter.

   Standard amperage: 10 A or less
   Standard voltage: 13.5 V—15.1 V at 25°C (77°F)

   - If the voltage is between 13.5 V and 15.1 V the voltage regulator is OK, go to step 6.
   - If the voltage is less than standard voltage go to step 5. If the voltage is more standard voltage replace the voltage regulator.

5. Stop the engine. Perform full field test:
   Insert a short screwdriver into the full field access hole at the back of the alternator.
   While grounding the screwdriver, start the engine and check the voltage reading.

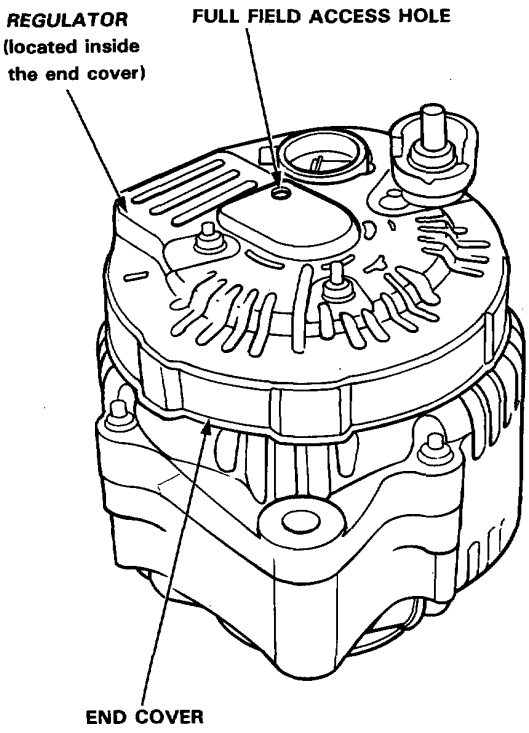

NOTE: As an alternative, use a screwdriver and an ammeter to full field the alternator.

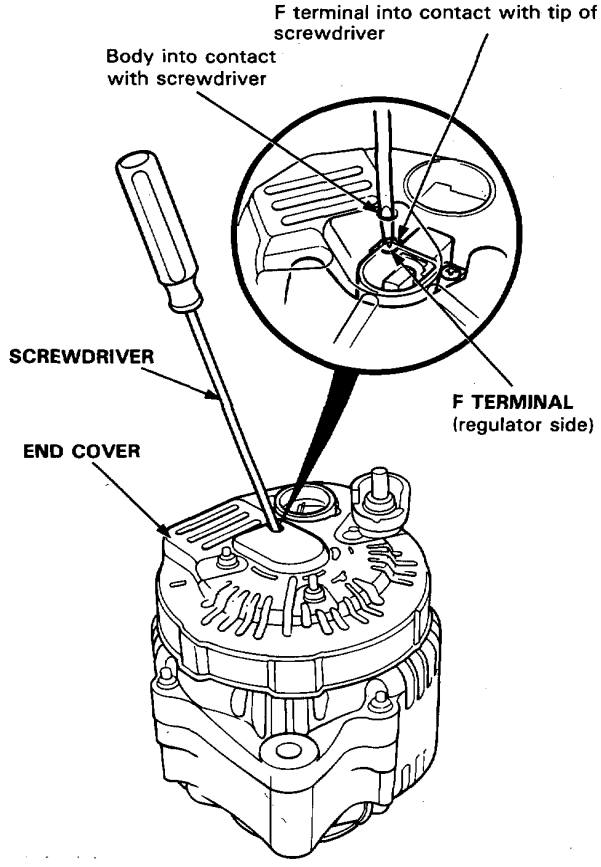

CAUTION: The voltage will rise quickly when the alternator is full fielded. Do not allow the voltage to exceed 18 volts or damage to the electrical system may result.

- If the amperage is within specification, replace the regulator.
- If the amperage is not within specification, replace the alternator.

6. Start the engine, and turn on the headlights, blower motor, rear window defogger, etc.

7. Raise engine speed to 2,000 rpm and hold. Check the reading on the ammeter.

   Standard amperage: 30 A or more

   NOTE: If the battery is fully charged, the indication will sometimes be less that standard amperage.

   - If the amperage is less than standard amperage replace the alternator.

Charge System Light Test

NOTE: Before testing, check the wire harness connection, alternator belt tension, No. 22 (20 A) fuse and No. 15: LHD or No. 10: RHD (7.5 A) fuse in the under-hood fuse/relay box.

1. Turn the ignition switch on. The charge system light should come on.
   If it does not come on, disconnect the alternator connector and short the pin of the L (WHT/BLU) terminal to ground.

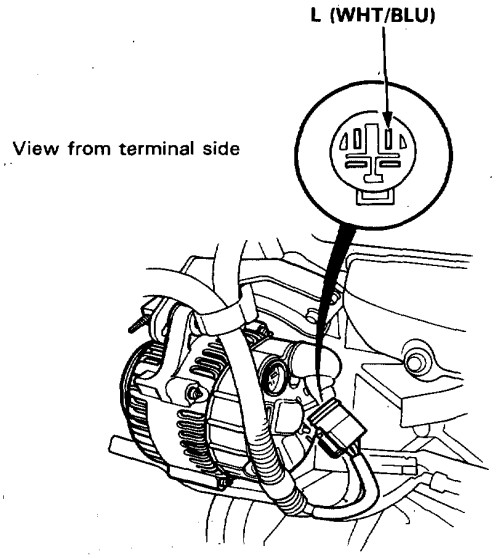

- If the light still does not come on, check for:
  - Bad bulb.
  - An open in the WHT/BLU wire between the light and voltage regulator.
  - An open in the BLK/YEL wire between the light and the under-dash fuse box, or the under-dash fuse box and the ignition switch.
- If the light comes on, check the alternator and regulator (See page 23-120).

2. Start the engine and let it idle. The charge system light should go off.
   If it stays on, check the YEL/BLU wire between the under-hood fuse/relay box and the alternator.
   If the fuse and wire are OK, check the alternator and regulator (See page 23-120).
   If the system is charging, proceed as follows.

3. Remove the door sill molding and kick panel lining pieces.

4. Remove the foot rest, and pull the carpet back.

5. Remove the under-dash fuse box mounting bolt and nut.

6. Disconnect the 22-P connector from the integrated control unit behind the under-dash fuse box.
   Do not disconnect all of the connectors from the under-dash fuse box.

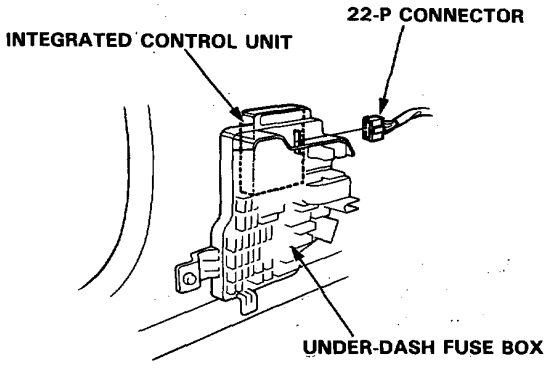

- If the light goes off, there is a short in the integrated control unit.

- If the light does not go off, remove the rear seat (See section 20) and disconnect the 18-P connector from the anti-lock brake control unit.

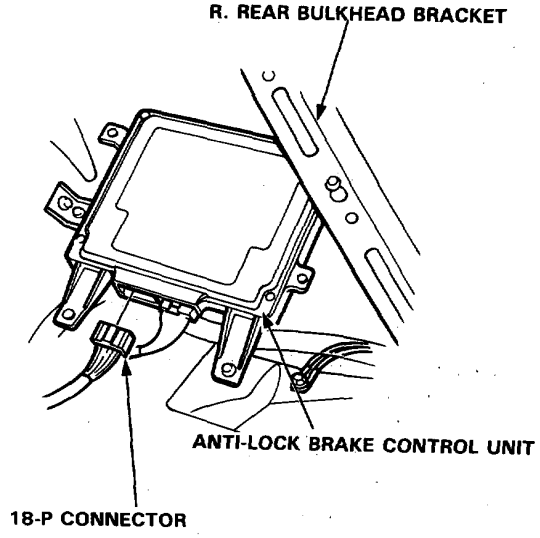

— If the light goes off, there is a short in the anti-lock brake control unit.

— If the light does not go off, there is a short to ground in the WHT/BLU wire.

Alternator Replacement

1. Disconnect both the negative cable and positive cable from the battery.
2. Remove the battery, then remove the battery base.
3. Remove the lower mounting bolt, adjusting lock bolt and adjusting rod, then remove the belt from the pulley.

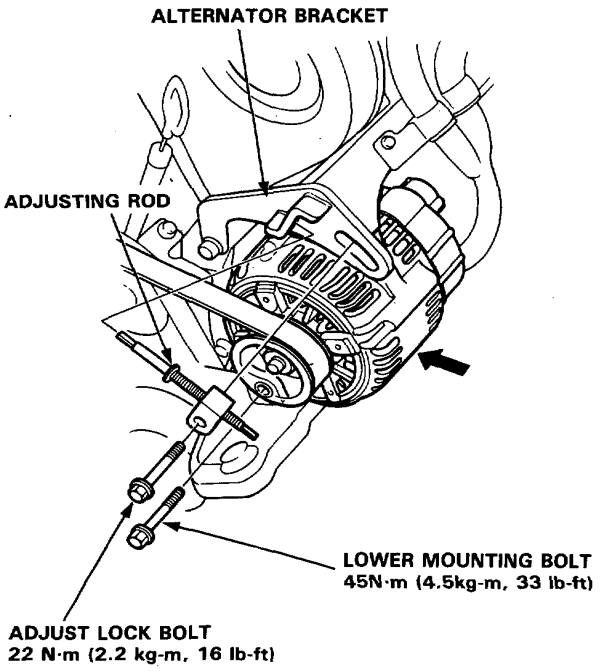

4. As shown in the illustration, rotate the alternator 90 degrees in a counterclockwise direction and lift it toward you.

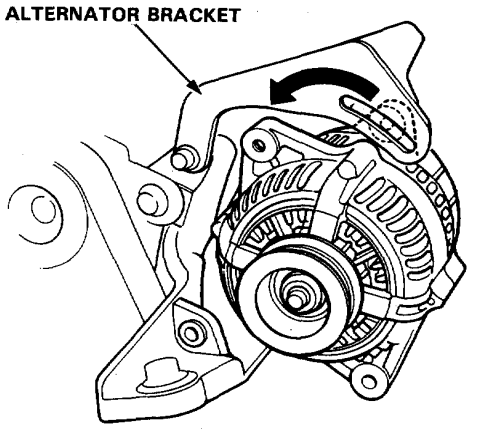

5. Disconnect the 4-P connector and harness clamp, then remove the terminal nut and the BLK wire from the B terminal. Take out the alternator.

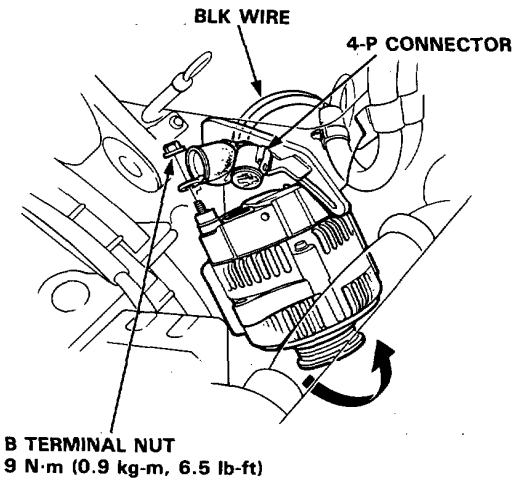

6. Alternator installation is the reverse order of removal. Adjust belt tension after installing the alternator (See page 23-129).

Alternator Overhaul

NOTE: It is only necessary to separate the pulley, drive end housing and rotor when the front bearing needs replacement.

To remove the pulley and rotor, use 10 mm and 22 mm box wrenches to loosen the pulley locknut. Use an impact wrench to remove the nut if necessary.

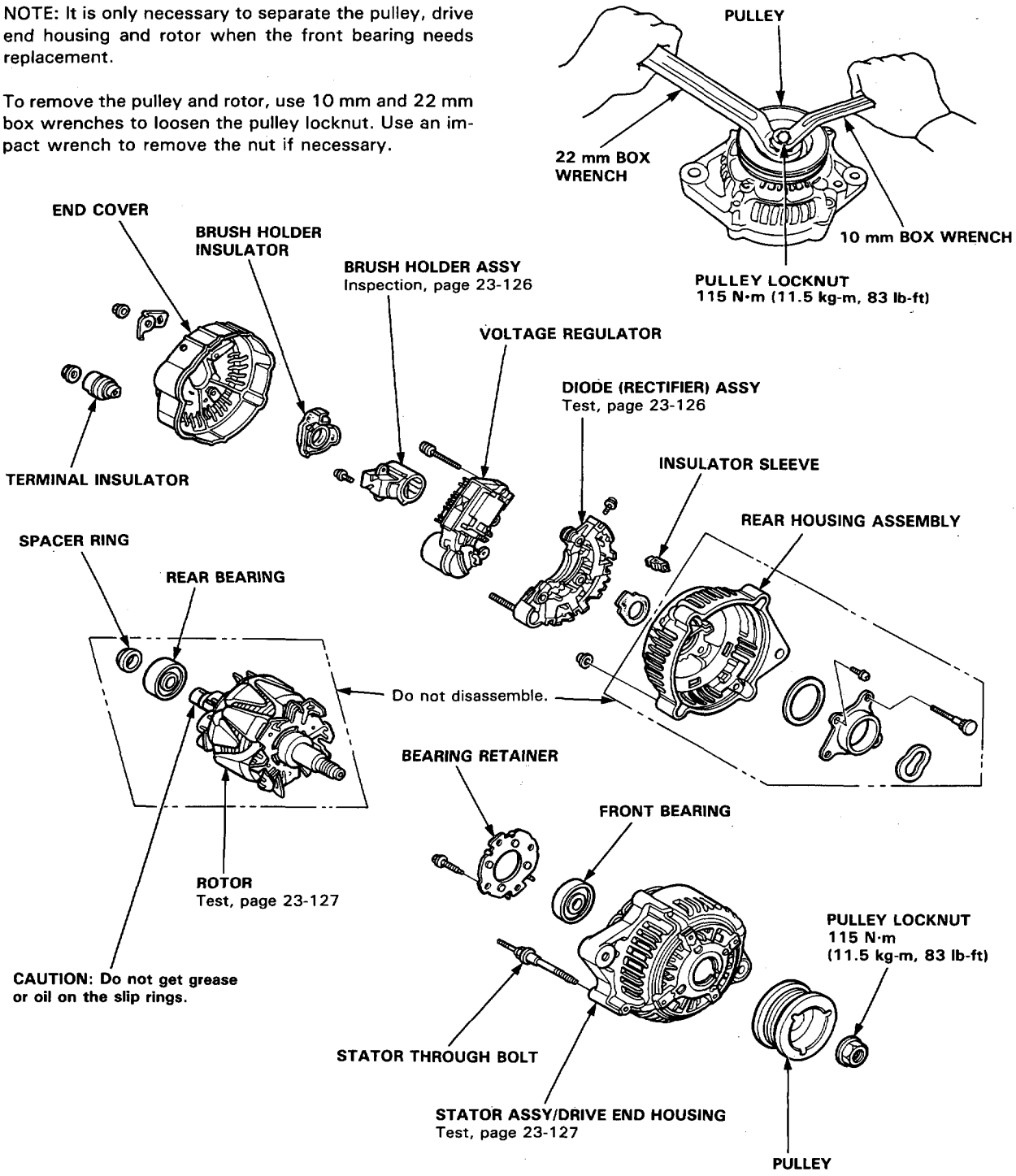

Rectifier Test

NOTE:
- The diodes are designed to pass current in one direction and block current in the opposite direction. Since the alternator rectifier is made up of eight diodes (4 pairs), each diode must be tested for continuity in both directions; a total of 16 checks.
- Use an ohmeter capable of checking diodes.

1. Check for continuity in each direction between the B and P (of each diode pair) terminals, and between the E (ground) and P (of each diode pair) terminals. All diodes should have continuity in only one direction.

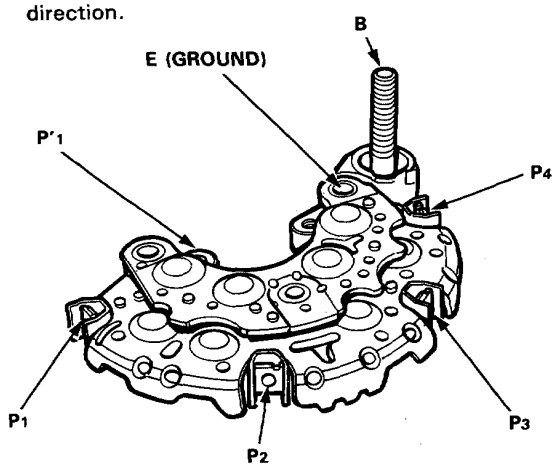

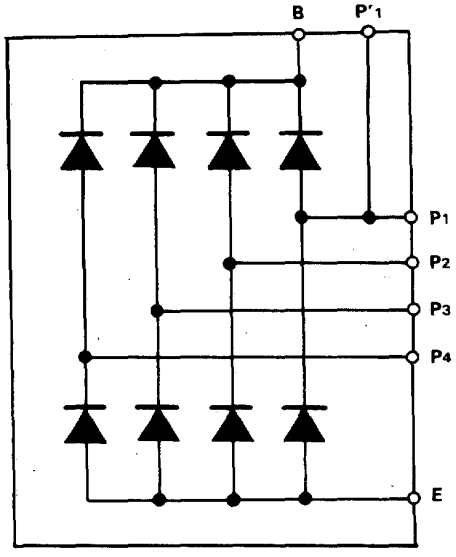

2. If any of the 8 diodes test bad, replace the rectifier assembly (diodes are not available separately.).

Alternator Brush Inspection

1. Remove the end cover, then take out the brush holder by removing its 2 screws.

2. Measure length of the brushes with a vernier caliper.

Alternator Brush Length:
Standard : 10.5 mm (0.41 in)
Service Limit : 1.5 mm (0.06 in)

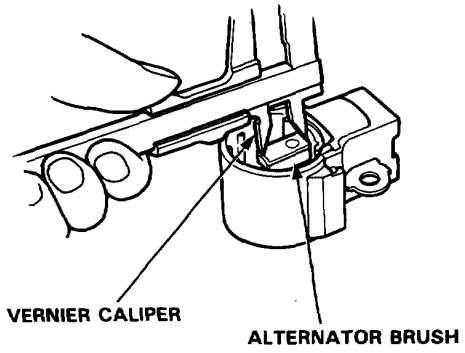

If the brushes are less than the service limit, replace the brush holder assembly.

Rotor Slip Ring Test

1. Check that there is continuity between the slip rings.
2. Check that there is no continuity between the rings and the rotor or rotor shaft.

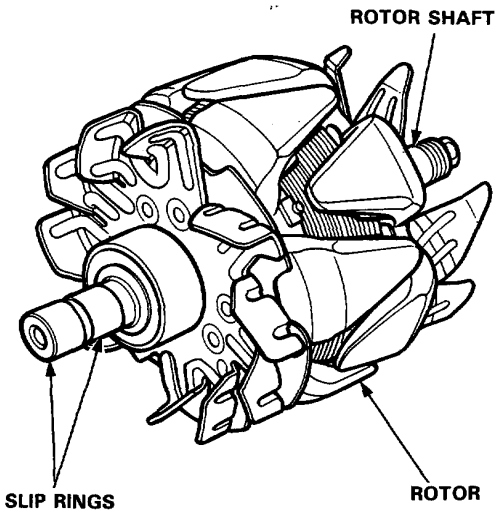

3. If the rotor fails either continuity check, replace it.

Stator Test

1. Check that there is continuity between each pair of leads.
2. Check that there is no continuity between each lead and the coil core.

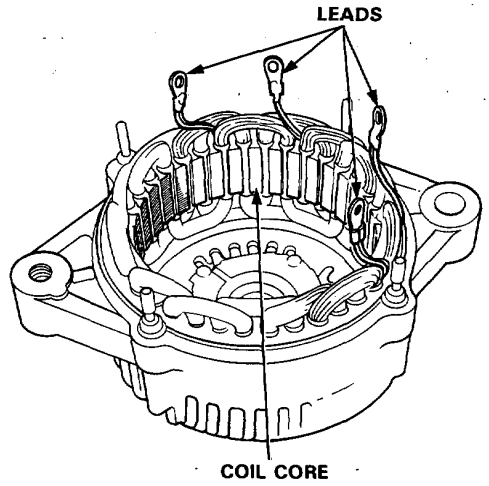

3. If the coil fails either continuity check, replace the stator.

Alternator Belt Adjustment

Deflection method:

Apply a force of 100 N (10 kg, 22 lb) and measure the deflection between the alternator and crankshaft pulley.

Deflection: 9.5 – 11.5 mm (0.37 – 0.55 in)

NOTE:
- On a brand-new belt, the deflection should be 5.5 – 7.5 mm (0.21 – 0.30 in) when first measured.
- If there are cracks or any damage evident in the belt, replace it with a new one.

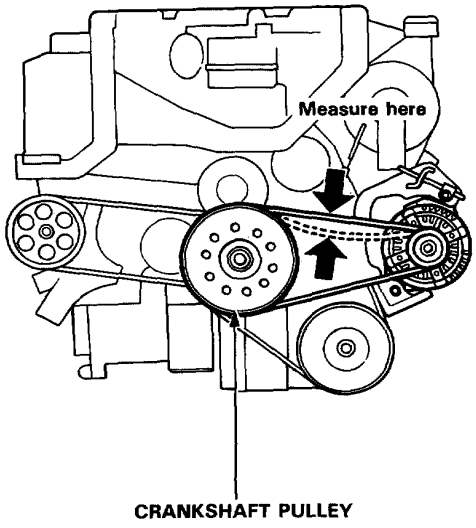

Tension gauge method:

Attach the belt tension gauge to the belt and measure the tension of the belt.

Tension: 392 – 588 N (40 – 60 kg, 88 – 132 lb)

NOTE:
- On a brand-new belt, the tension should be 784 – 980 N (80 – 100 kg, 176 – 220 lb) when first measured.
- See the instructions for the belt tension gauge.
- If there are cracks or any damage evident in the belt, replace it with a new one.

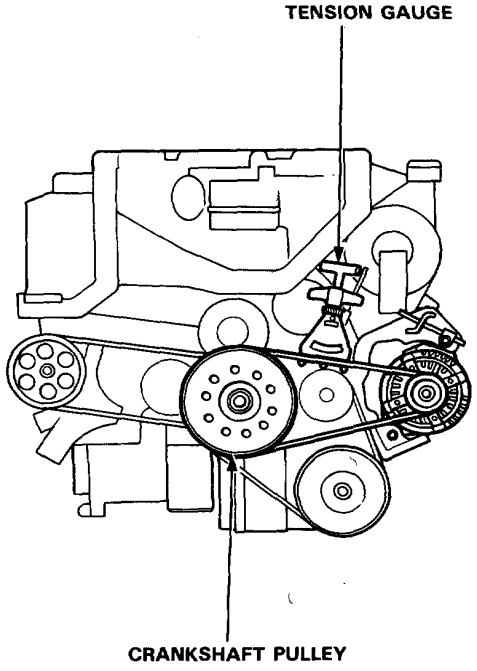

If adjustment is necessary:

1. Loosen the lower mounting bolt and adjust lock bolt.
2. Move the alternator by turning the adjusting rod to obtain the proper belt tension, then retighten the bolts.
3. Recheck the deflection of the belt.

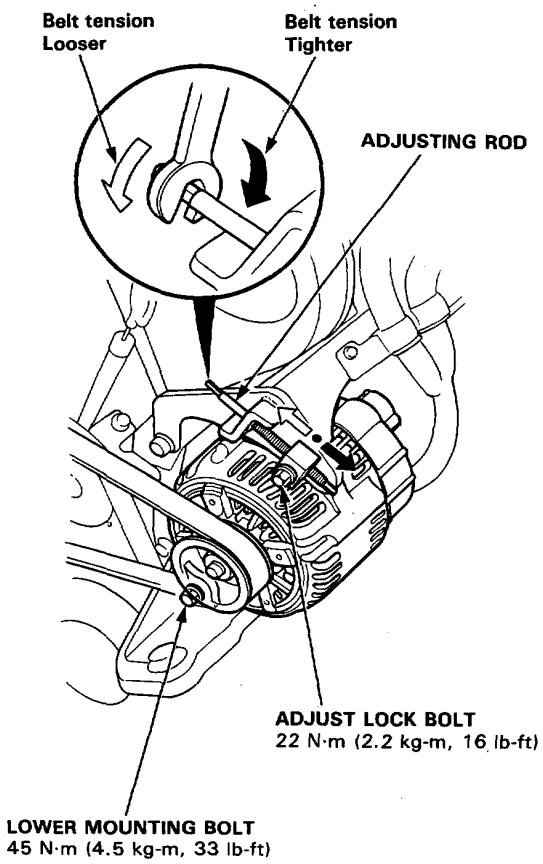

Radiator and Condenser Fan Controls

Component Location Index

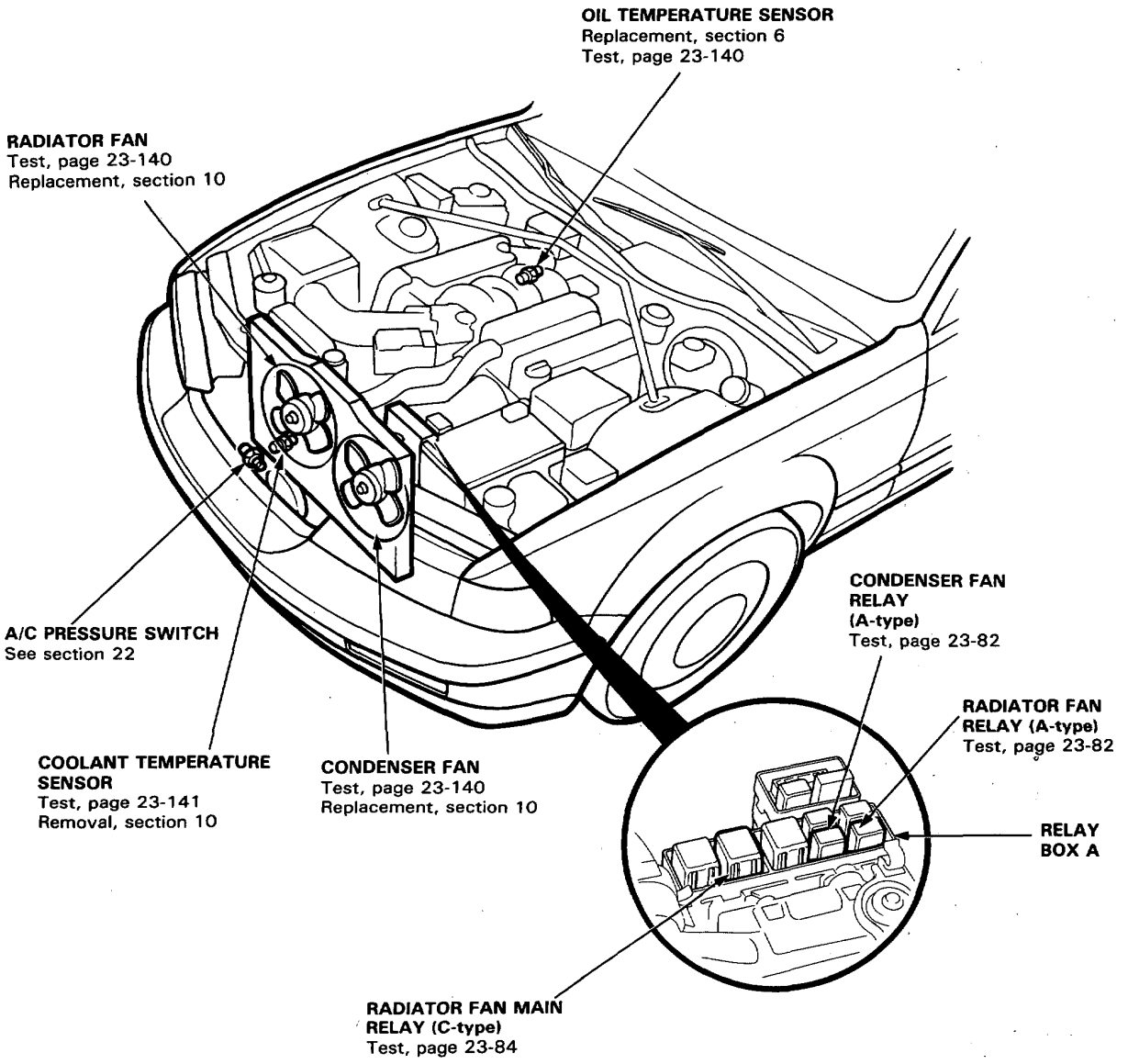

Component Location Index (LHD)

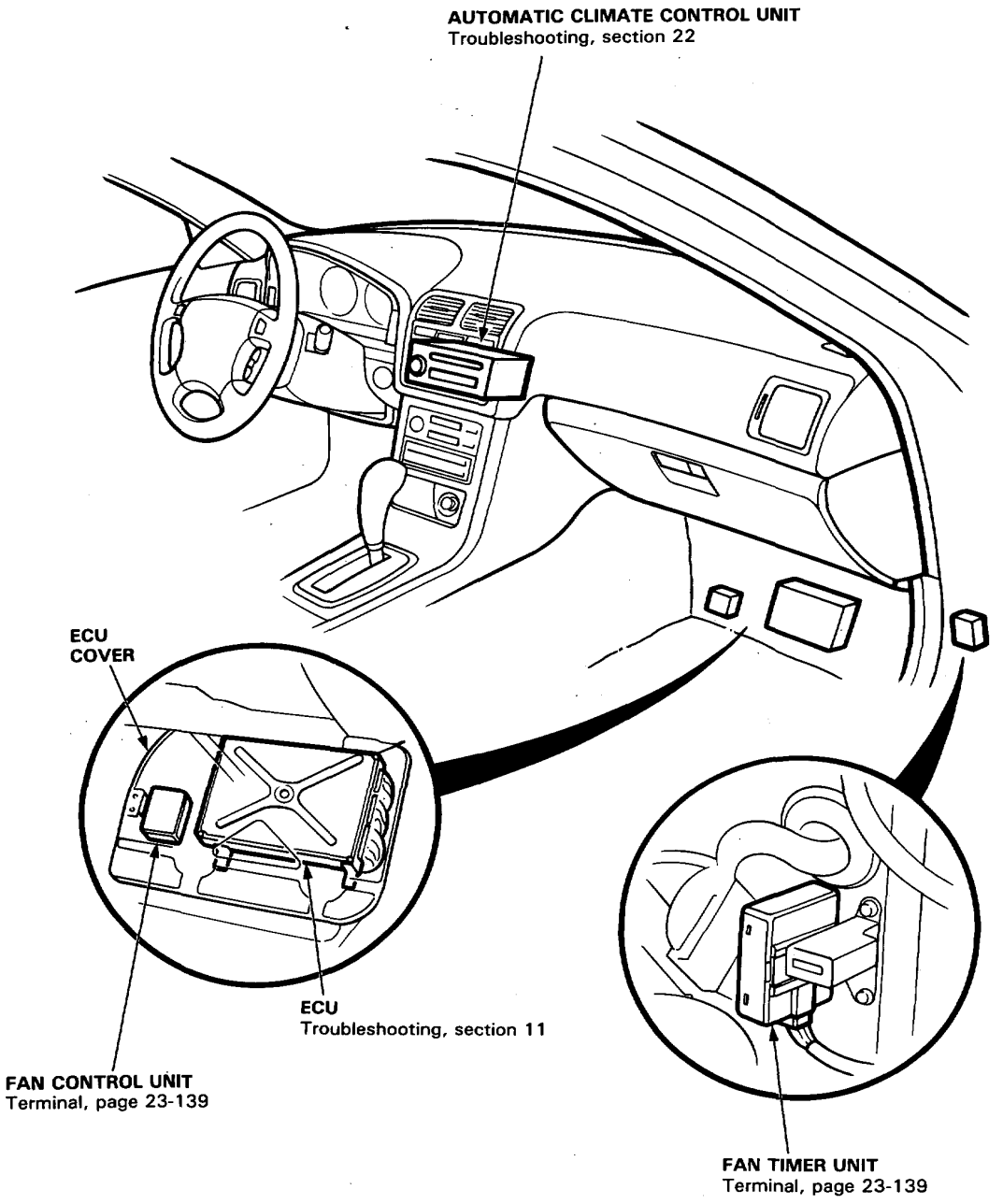

Radiator and Condenser Fan Controls

Component Location Index (RHD)

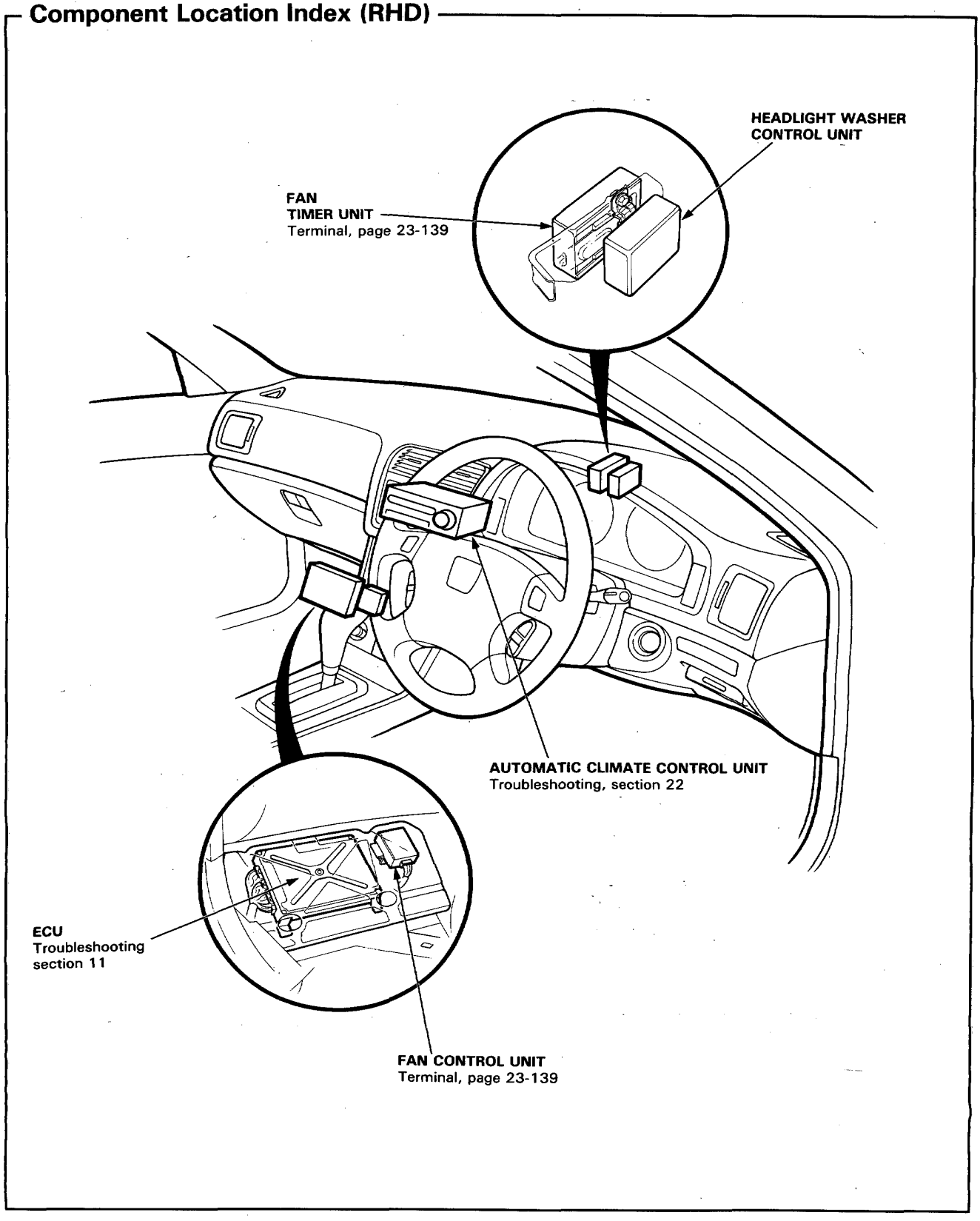

Description

Fan Control system:
The fan control unit controls the operation of the radiator fan and condenser fan.
It uses inputs from the coolant temperature sensor and A/C pressure switch (A and B) on the A/C system to determine when the fans should run and at what speed.
Additionally the temperature switch shuts down the A/C system if the coolant temperature exceeds 109°C (228°F).
If the pressure in the A/C system is higher than normal, pressure switch A closes and the fans run at high speed only.
See the A/C section for description and specification of that function.

Function / Operating Condition	ON	OFF
At low speed	84°C (183°F)	78°C (172°F)
At high speed	90°C (194°F)	84°C (183°F)
A/C cut	109°C (228°F)	107°C (225°F)

Fan Timer System:
When the engine oil temperature is above approx. 92°C (198°F) after the engine is stopped, the radiator fan and condenser fan goes on to cool the engine for a maximum of 15 minutes.
When the temperature falls below approx. 77°C (171°F), the fan stops.
The fan motor runs at low speed to decrease operating noise.
The oil temperature switch is located on the right valve cover and the fan timer unit is located on the right kick panel.

Radiator and Condenser Fan Controls

Circuit Diagram (LHD)

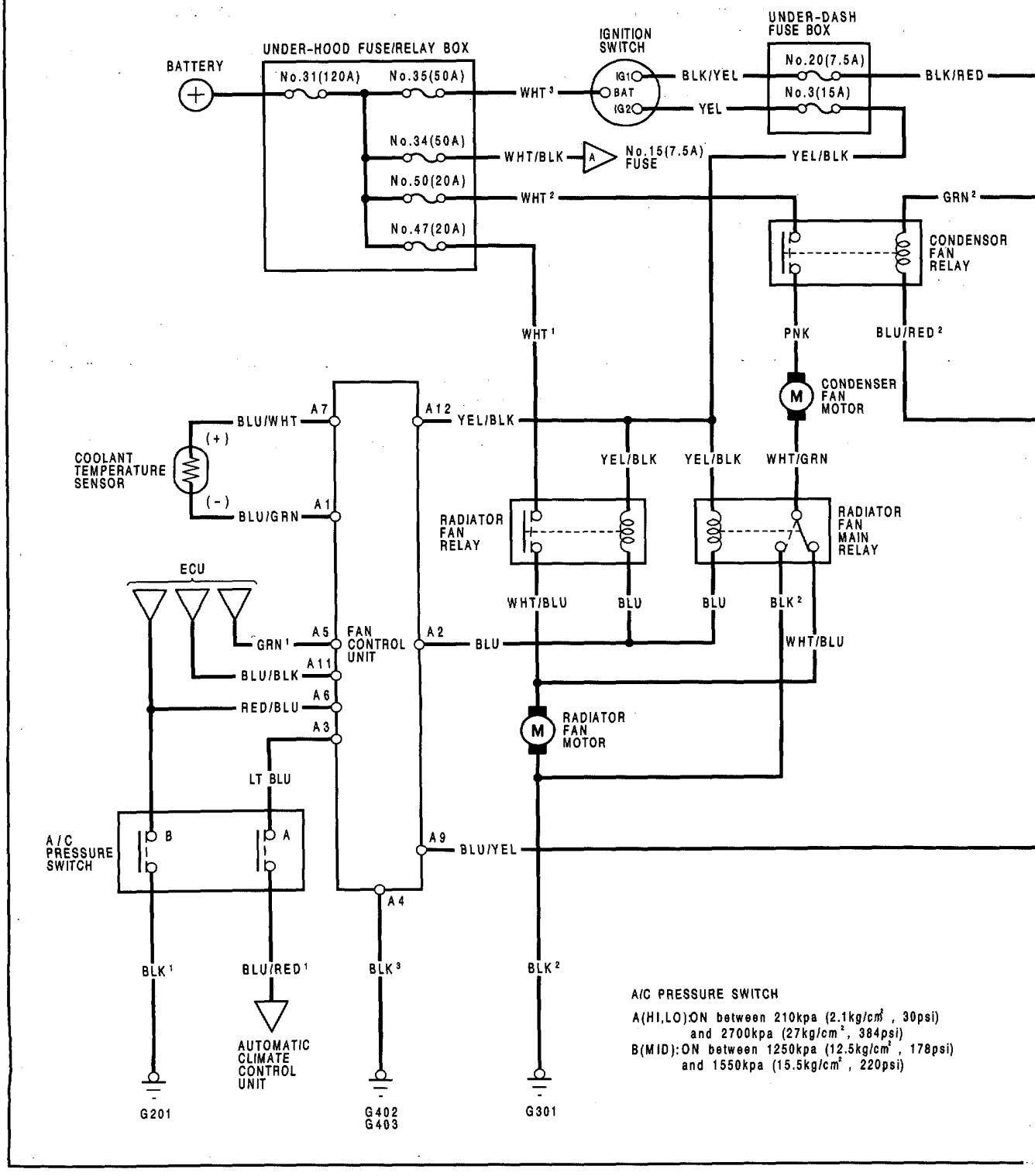

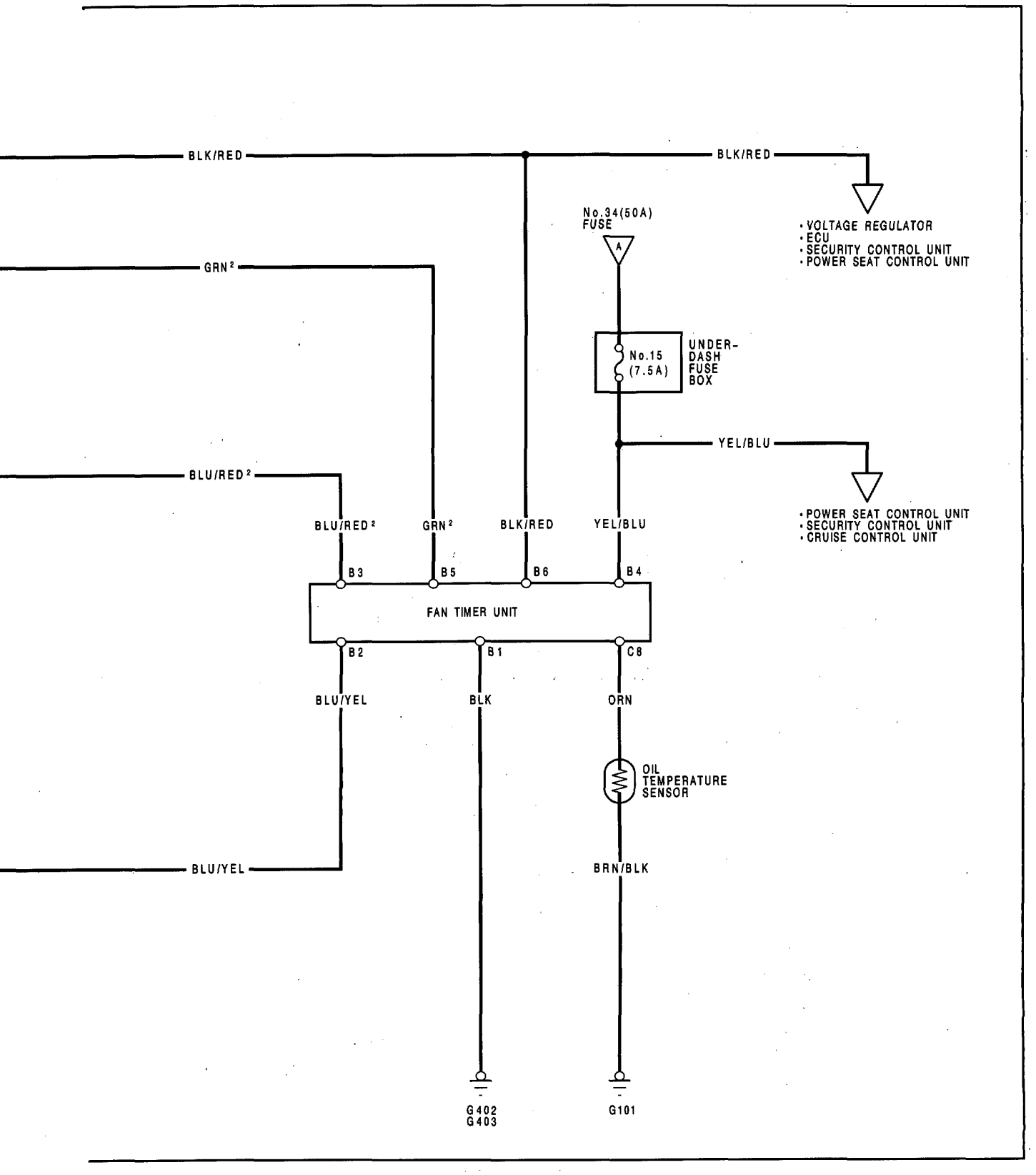
BLK/RED
BLK/RED
• VOLTAGE REGULATOR
• ECU
• SECURITY CONTROL UNIT
• POWER SEAT CONTROL UNIT
No.34(50A)
FUSE
A
GRN 2
No.15
(7.5A)
UNDER-
DASH
FUSE
BOX
YEL/BLU
BLU/RED 2
• POWER SEAT CONTROL UNIT
• SECURITY CONTROL UNIT
• CRUISE CONTROL UNIT
BLU/RED 2
GRN 2
BLK/RED
YEL/BLU
B3
B5
B6
B4
FAN TIMER UNIT
B2
B1
C8
BLU/YEL
BLK
ORN
OIL
TEMPERATURE
SENSOR
BLU/YEL
BRN/BLK
G402
G403
G101

Radiator and Condenser Fan Controls

Circuit Diagram (RHD)

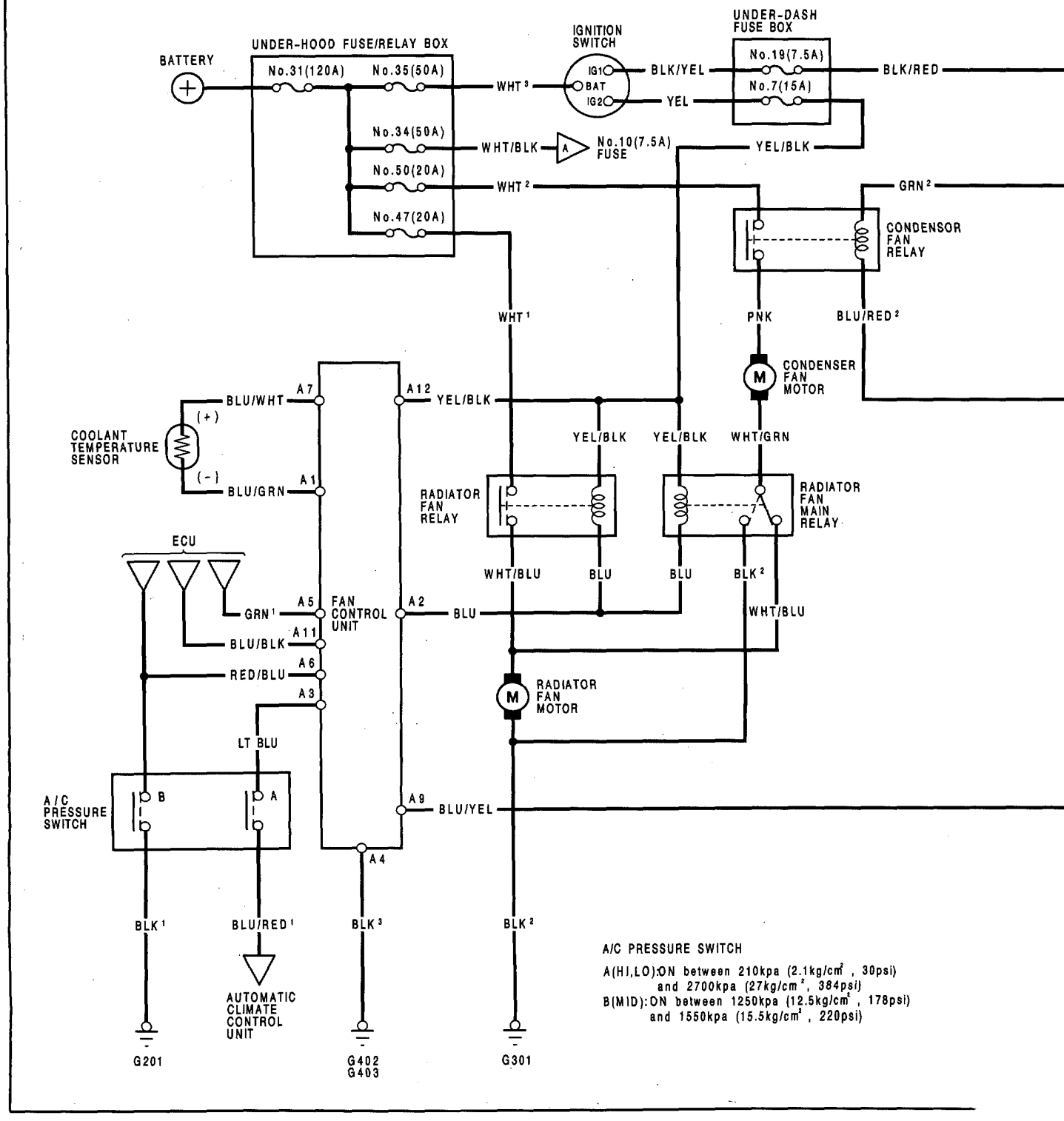

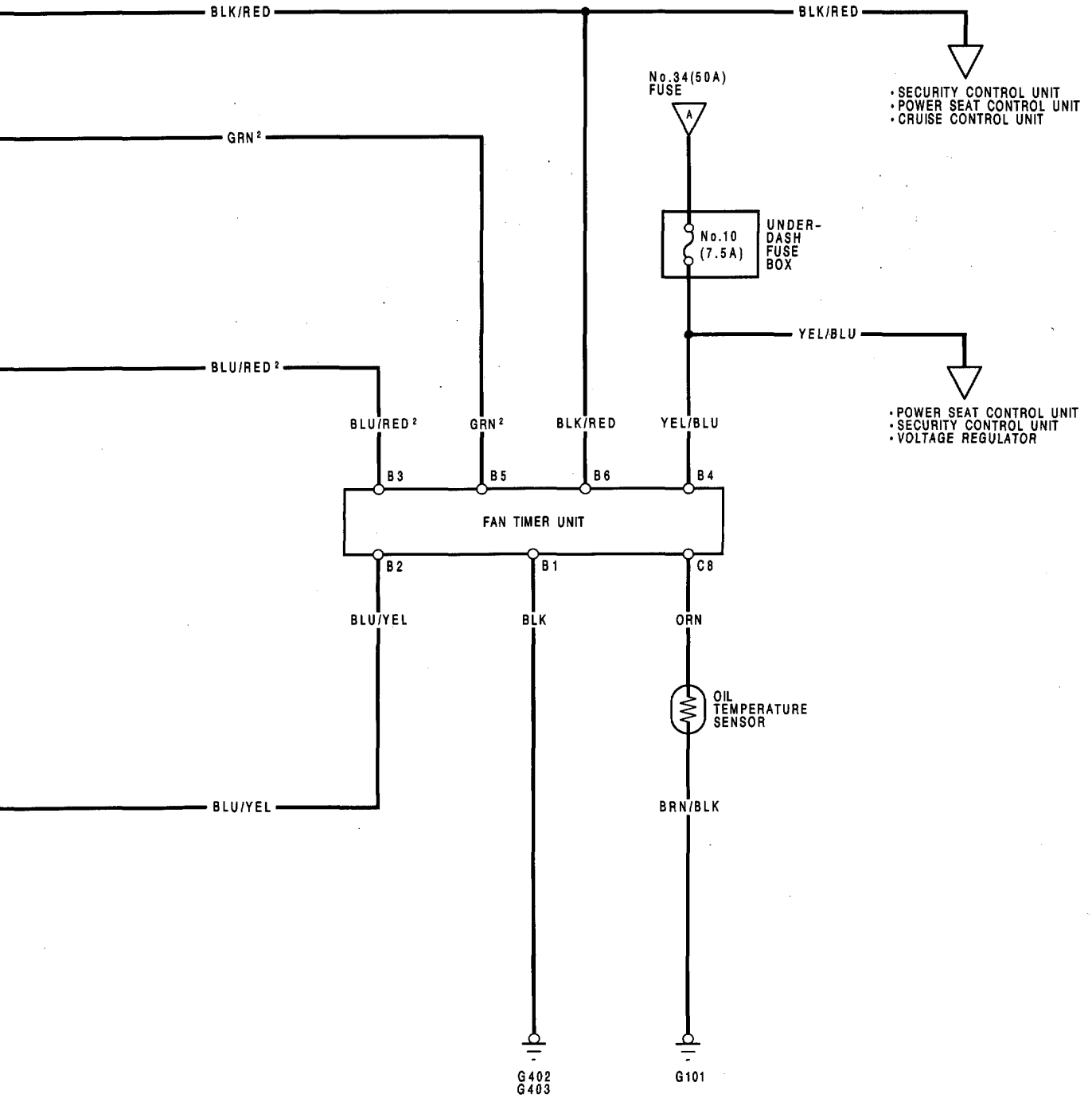
BLK/RED
BLK/RED
• SECURITY CONTROL UNIT
• POWER SEAT CONTROL UNIT
• CRUISE CONTROL UNIT
No.34(50A) FUSE
A
GRN 2
No.10 (7.5A)
UNDER-DASH FUSE BOX
YEL/BLU
BLU/RED 2
• POWER SEAT CONTROL UNIT
• SECURITY CONTROL UNIT
• VOLTAGE REGULATOR
BLU/RED 2
GRN 2
BLK/RED
YEL/BLU
B3
B5
B6
B4
FAN TIMER UNIT
B2
B1
C8
BLU/YEL
BLK
ORN
OIL TEMPERATURE SENSOR
BLU/YEL
BRN/BLK
G402
G403
G101

Radiator and Condenser Fan Controls

Troubleshooting

NOTE: The numbers in the table show the troubleshooting sequence.

Symptom \ Item to be inspected		Blown No. 47 (20A) or No. 50 (20A) fuse (in the under-hood fuse/relay box)	Blown * 1 (15A) fuse (in the under-dash fuse box)	Blown * 2 (7.5A) fuse (in the under-dash fuse box)	Blown * 3 (7.5A) fuse (in the under-dash fuse box)	Relay	Coolant temperature sensor	Radiator fan or condenser fan motor	Faulty cooling fan control unit	Faulty cooling fan timer unit	* A/C and ECU systems	Faulty A/C pressure switch or oil temperature sensor	Poor ground	Open circuit in wires or disconnected terminals
Only one fan operates (with engine and A/C ON).		1				2	3							WHT[1], WHT[2], PNK, WHT/GRN, WHT/BLU, GRN[2] or BLU/RED
Fans do not operate.	Under all conditions.		1				2		3				G301, G402 G403	YEL/BLK, BLU/WHT or BLU/GRN
	At low speed.			1	2	3	4		5				G301 G402 G403	BLK/RED, YEL/BLU, GRN[2], BLU/RED, BLU/WHT, BLU/GRN, YEL/BLK or BLU
	At high speed.		1			2	3		4				G301 G402 G403	YEL/BLK, BLU, WHT/GRN, WHT/BLU, BLU/WHT or BLU/GRN
Compressor clutch does not engage.									3		1	2	G402 G403	GRN, BLU/BLK, RED/BLU or LT BLU
Fan timer unit fails to function properly.				1	2					4		3	G101 G402 G403	ORN, YEL/BLU, BLU/RED[2] or GRN[2]

*: Refer to section 22 for pressure inspection of the A/C system.

*1 {No. 3 (15 A) fuse: LHD / No. 7 (15 A) fuse: RHD}

*2 {No. 15 (7.5 A) fuse: LHD / No. 10 (7.5 A) fuse: RHD}

*3 {No. 20 (7.5 A) fuse: LHD / No. 19 (7.5 A) fuse: RHD}

Control Unit Terminals

NOTE: The illustration shows LHD.

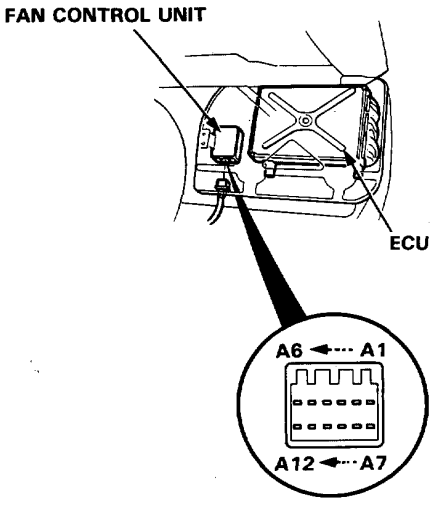

Terminal	Wire	Destination
A1	BLU/GRN	Coolant temperature sensor ⊖
A2	BLU	Radiator fan relays (coil ⊖)
A3	LT BLU	A/C pressure switch A
A4	BLK	Ground (G402, G403)
A5	GRN	ECU
A6	RED/BLU	A/C pressure switch B
A7	BLU/WHT	Coolant temperature sensor ⊕
A8		Not used
A9	BLU/YEL	Timer unit
A10		Not used
A11	BLU/BLK	ECU (ACS)
A12	YEL/BLK	IG2 (Main power supply)

Timer Unit Terminals

NOTE: The illustration shows LHD.

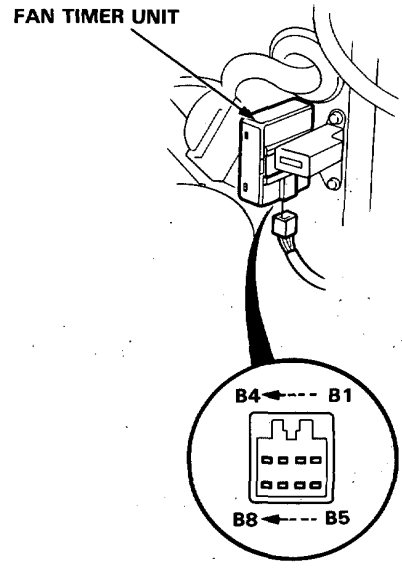

Terminal	Wire	Destination
B1	BLK	Ground (G402, G403)
B2	BLU/YEL	Fan control unit
B3	BLU/RED	Condenser fan relay ⊖
B4	YEL/BLU	Power supply (For condenser fan relay with ignition switch ON)
B5	GRN	Condenser fan relay ⊕
B6	BLK/RED	Power supply (for condenser fan relay with ignition switch OFF)
B7		Not used
B8	ORN	Oil temperature sensor

Radiator and Condenser Fan Controls

Fan Motor Test

1. Disconnect the 2-P connector from each fan motor.
2. Test motor operation by connecting battery positive to the A terminal, and negative to the B terminal.
3. If the motor fails to run smoothly, replace it.

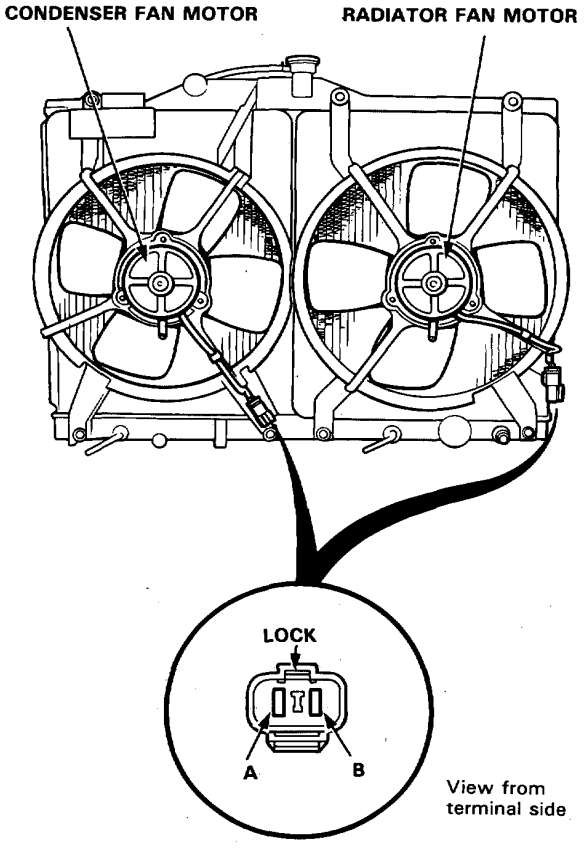

Oil Temperature Sensor Test

1. Remove the oil temperature sensor from the cylinder head.
2. Suspend the oil temperature sensor in a container of coolant as shown.

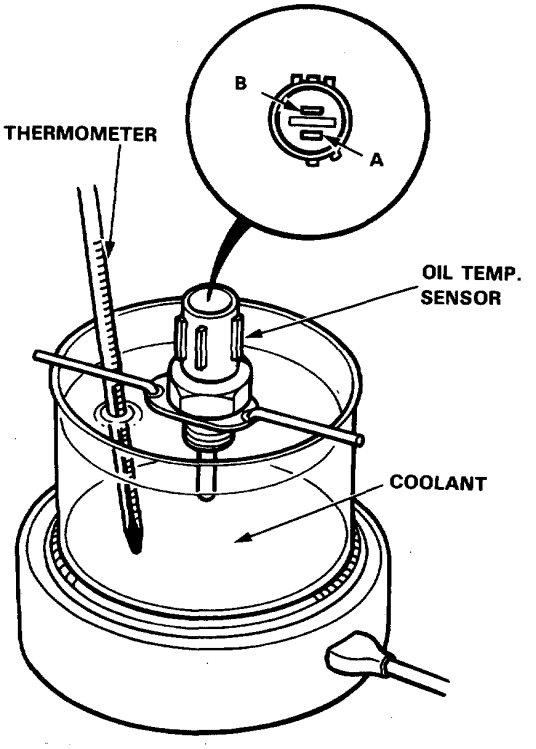

3. Heat the coolant and check coolant temperature with a thermometer (see table below).
4. Check for continuity between the A and B terminals according to the table.

Temperature \ Terminal		A	B
Above	89–95°C (192–203°F)	○	○
Below	69–85°C (156–185°F)		

Coolant Temperature Sensor Test

CAUTION: Do not remove the radiator cap when engine is hot. The coolant is under pressure and may blow out and scald you. Open the cap slowly when the engine is cool.

NOTE: Bleed air out of the cooling system after installing the coolant temperature sensor (See section 10).

CAUTION: *Failure to comply with the bleeding procedure could cause imperfect bleeding, which may result in severe engine damage.*

1. Remove the coolant temperature sensor from the thermostat housing.
2. Suspend the coolant temperature sensor in a container of coolant as shown.

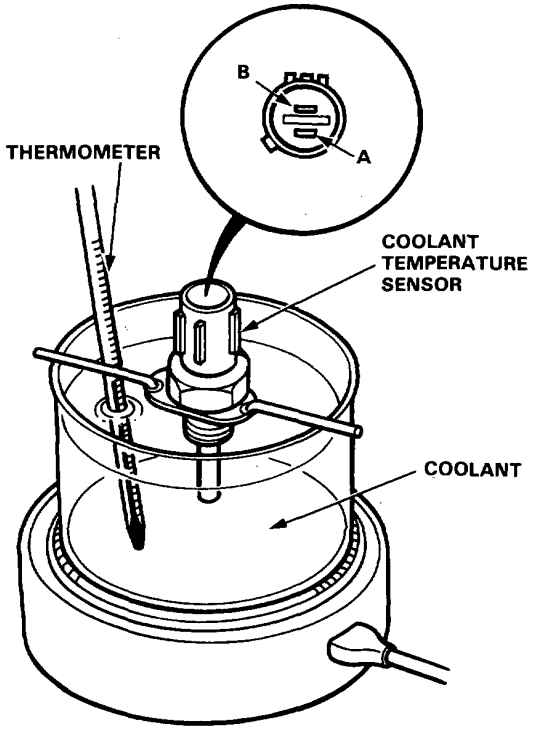

3. Heat the coolant and check coolant temperature with a thermometer (See table below).
4. Measure the resistance between the A and B terminals according to the table.

Temperature	84° (183°F)	90° (194°F)	108° (226°F)	110° (230°F)
Resistance (KΩ)	1.047–1.255	0.872–1.024	0.519–0.573	0.489–0.541

5. If unable to obtain the above readings, replace the temperature sensor.

Gauge Assembly

Circuit Diagram

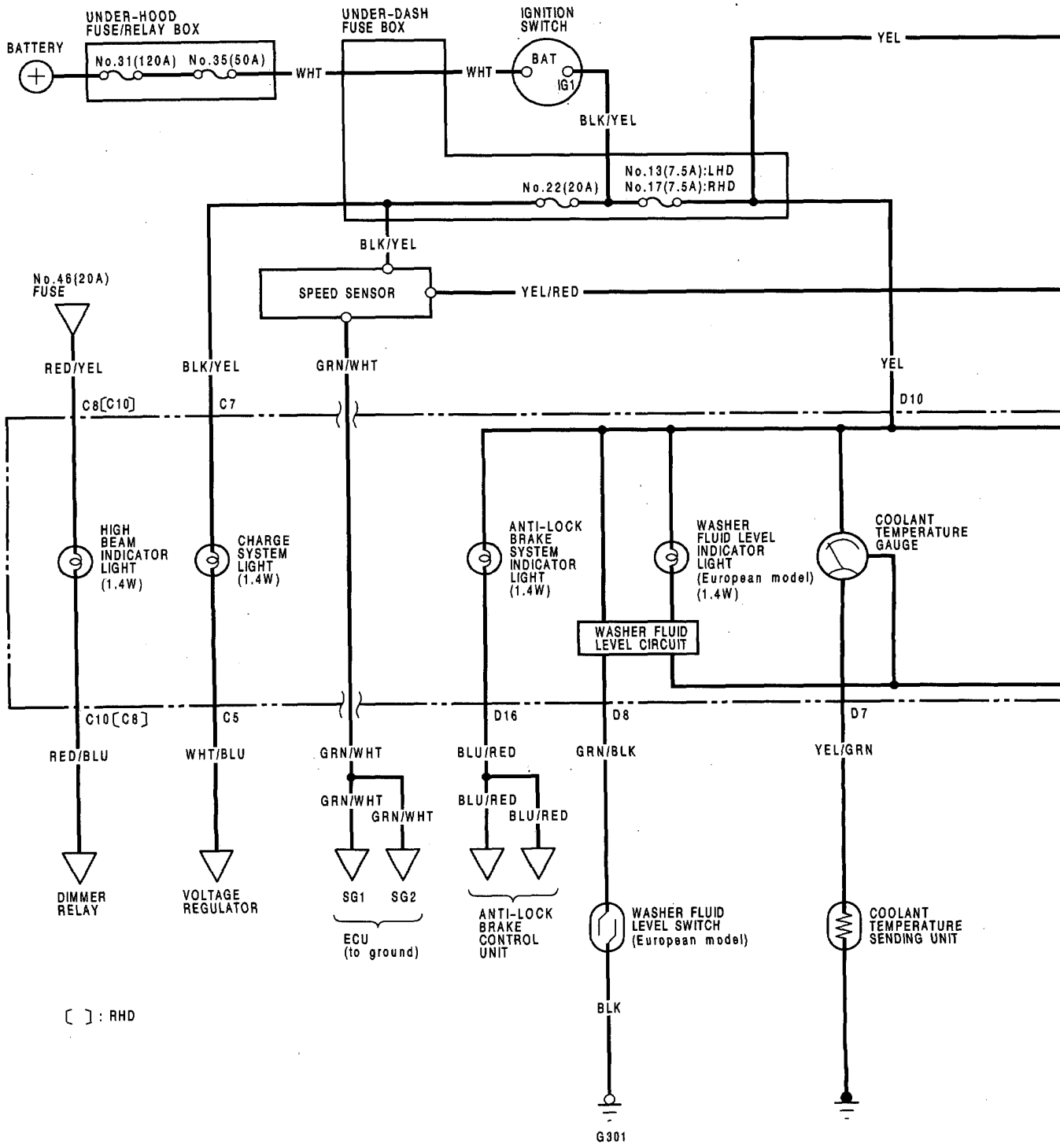

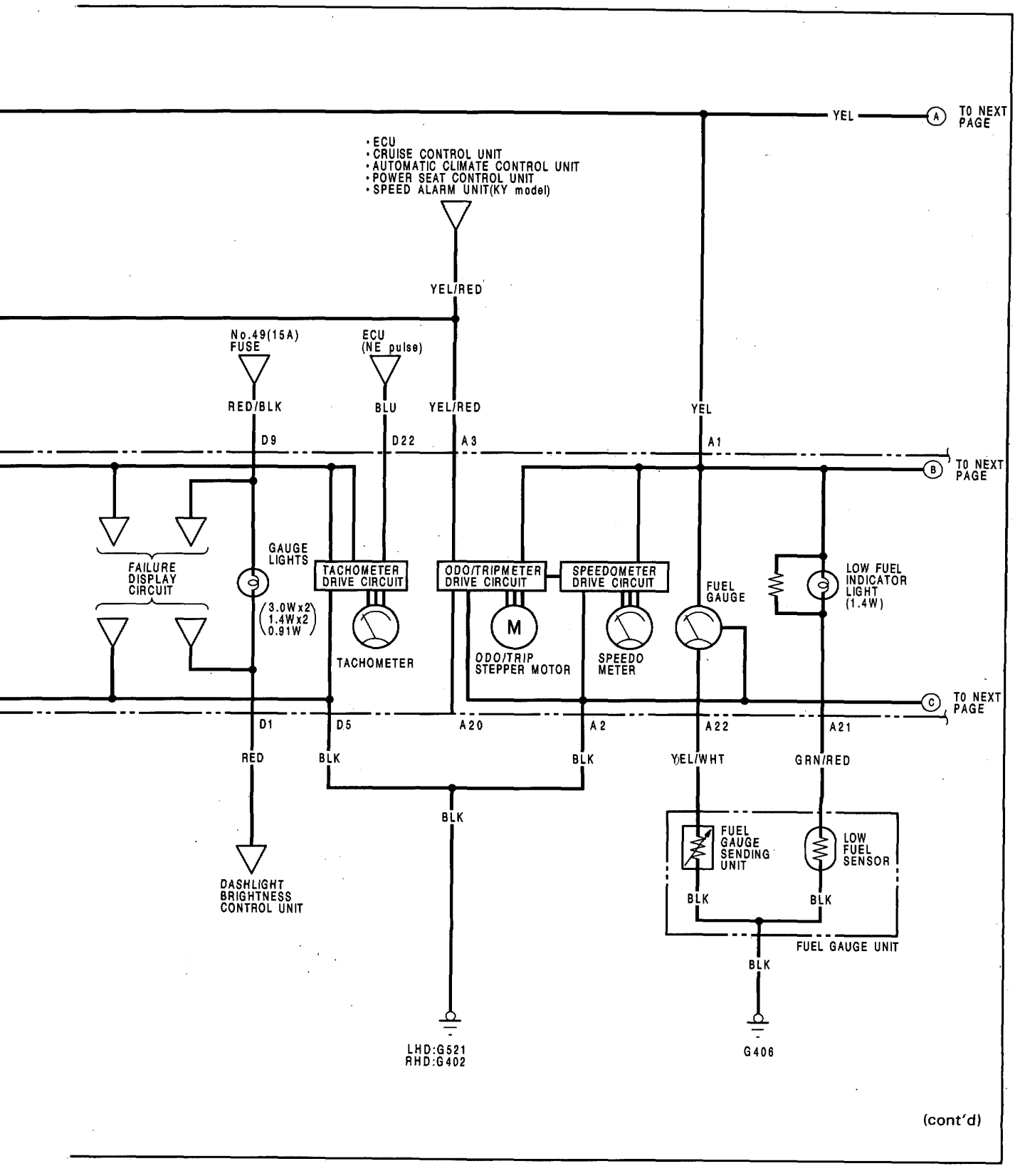
YEL
A
TO NEXT PAGE
• ECU
• CRUISE CONTROL UNIT
• AUTOMATIC CLIMATE CONTROL UNIT
• POWER SEAT CONTROL UNIT
• SPEED ALARM UNIT(KY model)
YEL/RED
No.49(15A) FUSE
ECU (NE pulse)
RED/BLK
BLU
YEL/RED
YEL
D9
D22
A3
A1
B
TO NEXT PAGE
FAILURE DISPLAY CIRCUIT
GAUGE LIGHTS
(3.0W x2 1.4W x2 0.91W)
TACHOMETER DRIVE CIRCUIT
ODO/TRIPMETER DRIVE CIRCUIT
SPEEDOMETER DRIVE CIRCUIT
FUEL GAUGE
LOW FUEL INDICATOR LIGHT (1.4W)
TACHOMETER
M
ODO/TRIP STEPPER MOTOR
SPEEDO METER
C
TO NEXT PAGE
D1
D5
A20
A2
A22
A21
RED
BLK
BLK
YEL/WHT
GRN/RED
BLK
FUEL GAUGE SENDING UNIT
LOW FUEL SENSOR
DASHLIGHT BRIGHTNESS CONTROL UNIT
BLK
BLK
FUEL GAUGE UNIT
BLK
LHD:G521
RHD:G402
G406

(cont'd)

Gauge Assembly

Circuit Diagram (cont'd)

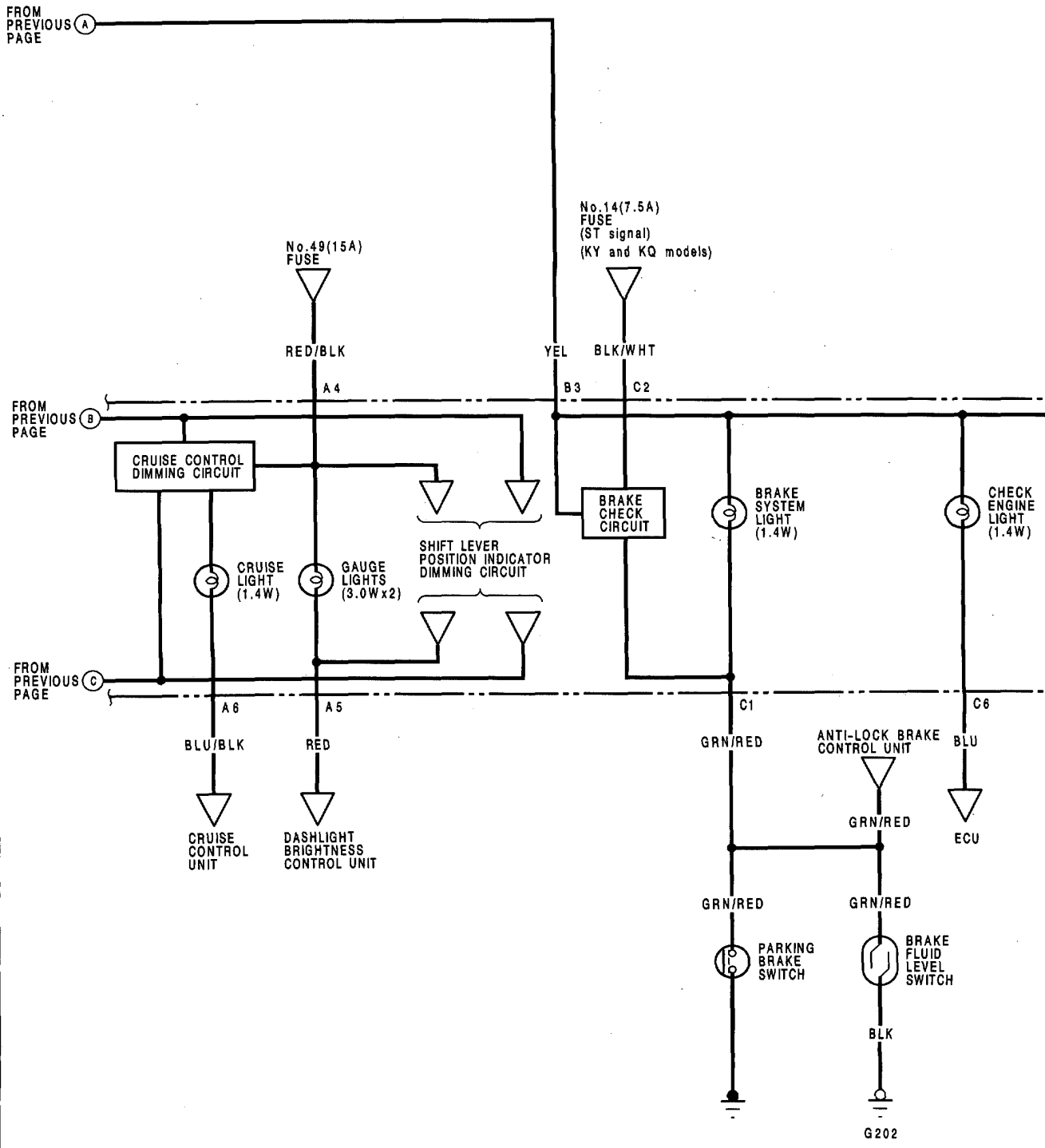

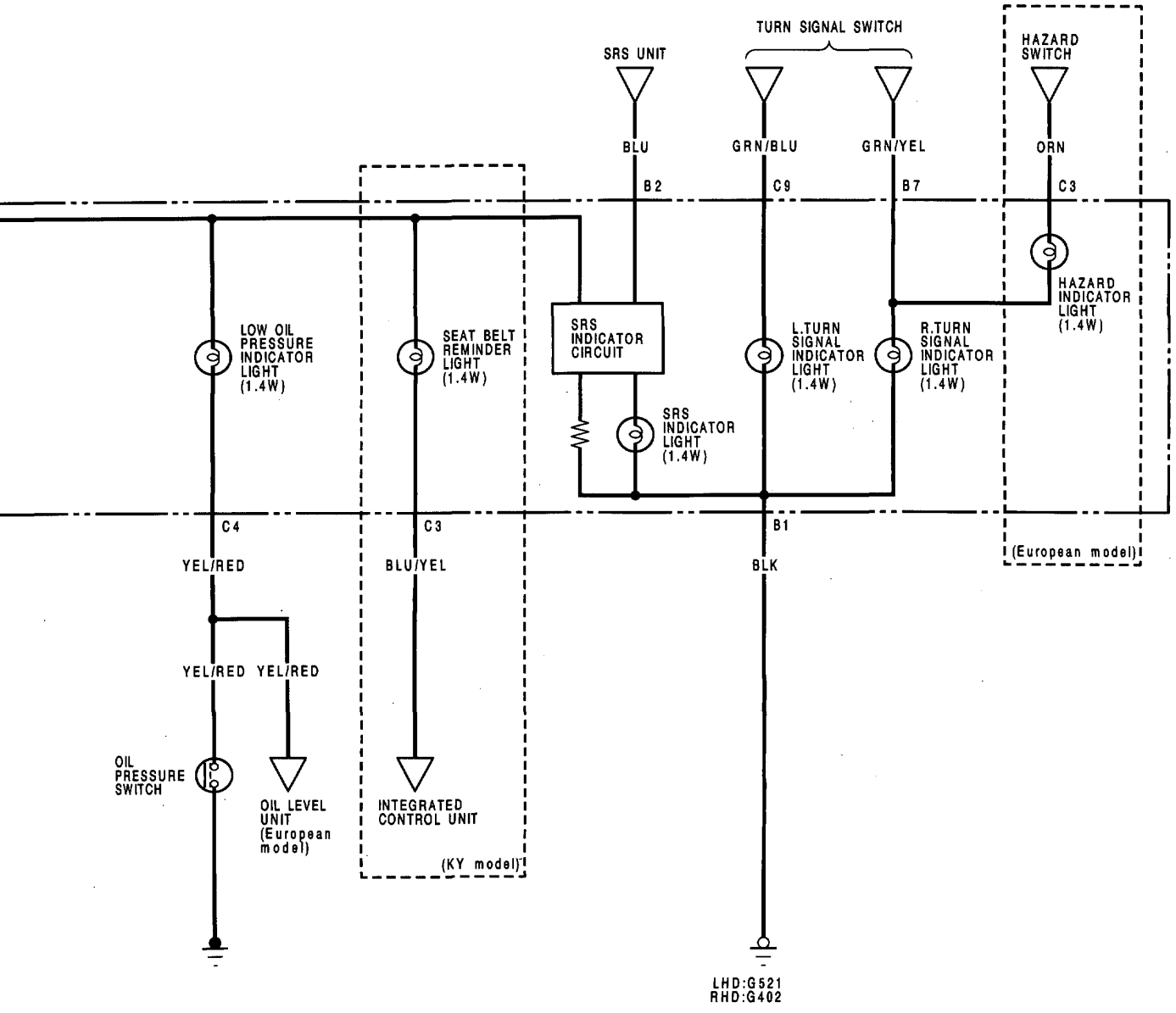
TURN SIGNAL SWITCH
SRS UNIT
HAZARD SWITCH
BLU
GRN/BLU
GRN/YEL
ORN
B2
C9
B7
C3
HAZARD INDICATOR LIGHT (1.4W)
LOW OIL PRESSURE INDICATOR LIGHT (1.4W)
SEAT BELT REMINDER LIGHT (1.4W)
SRS INDICATOR CIRCUIT
L.TURN SIGNAL INDICATOR LIGHT (1.4W)
R.TURN SIGNAL INDICATOR LIGHT (1.4W)
SRS INDICATOR LIGHT (1.4W)
C4
C3
B1
YEL/RED
BLU/YEL
BLK
(European model)
YEL/RED
YEL/RED
OIL PRESSURE SWITCH
OIL LEVEL UNIT (European model)
INTEGRATED CONTROL UNIT
(KY model)
LHD:G521
RHD:G402

Gauge Assembly

Gauge/Indicator Location Index

CAUTION:

- **All SRS electrical wiring harnesses are covered with yellow outer insulation.**
- **When disconnecting the SRS wire harness, install the short connector on the airbag then disconnect the wire harness (See page 23-412).**
- **Replace the entire affected SRS harness assembly if there is an open circuit or damage to the wiring.**
- **After installation of the gauge assembly, recheck the operation of the SRS indicator light.**

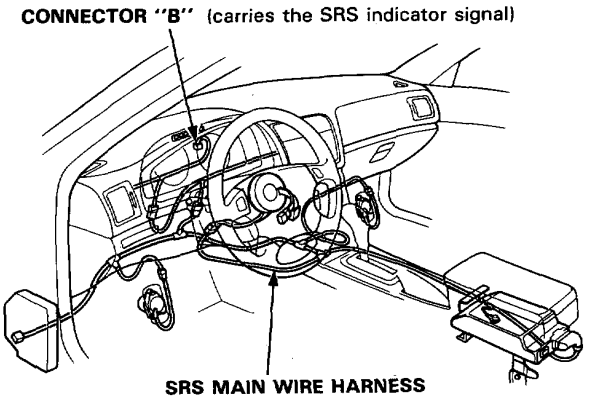

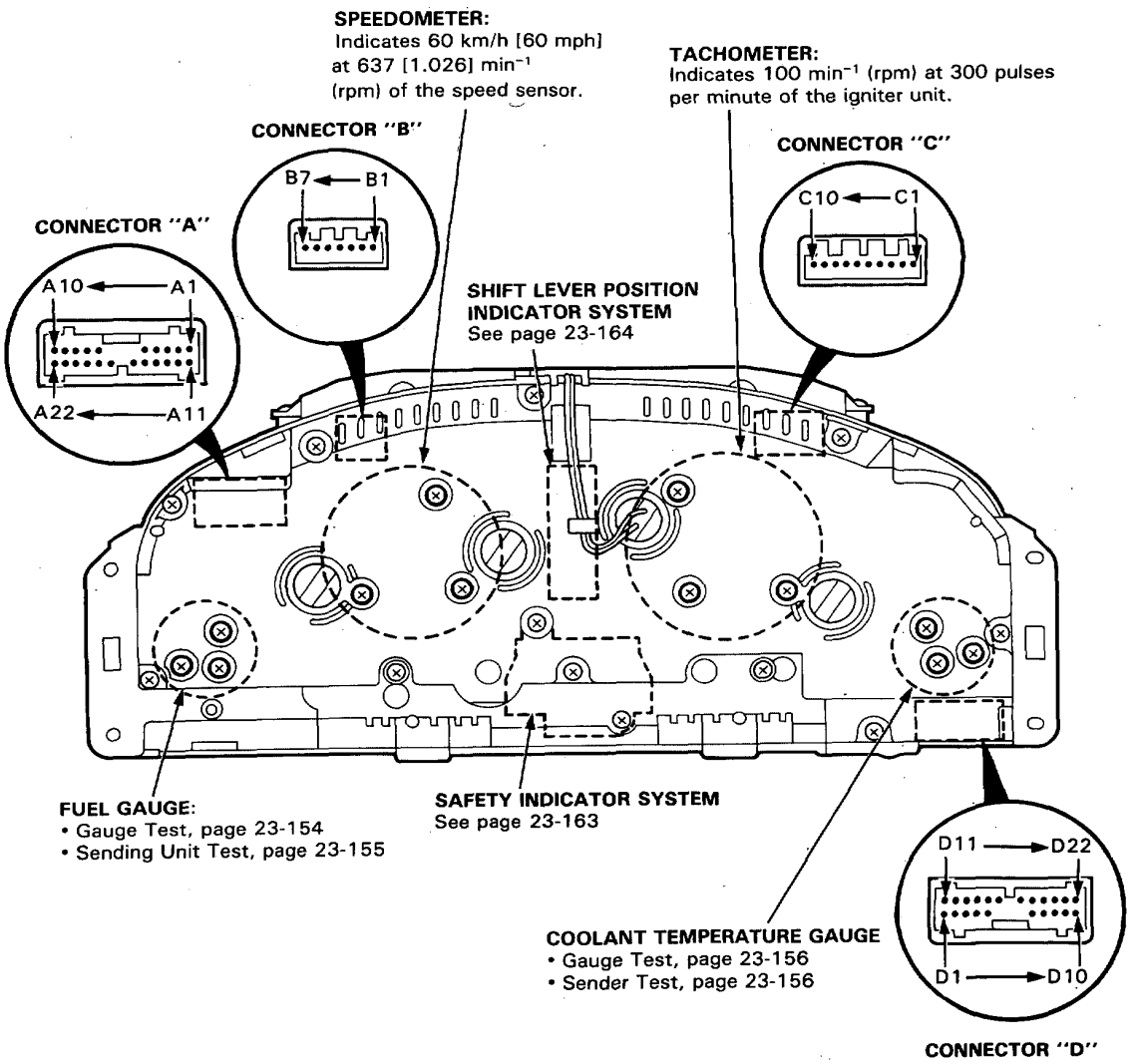

Bulb Location

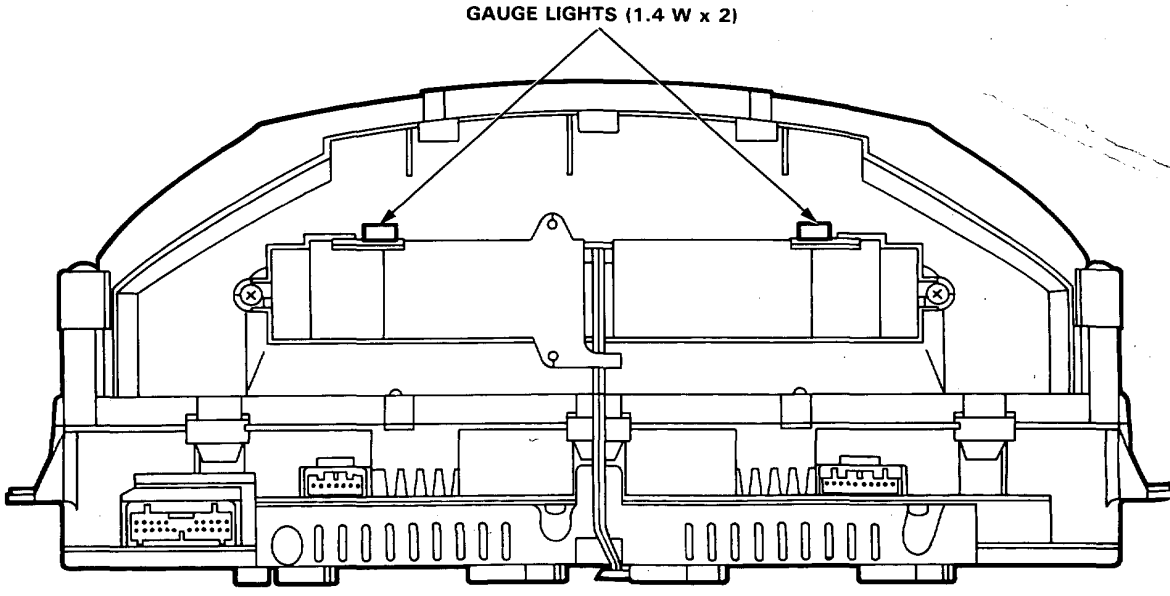

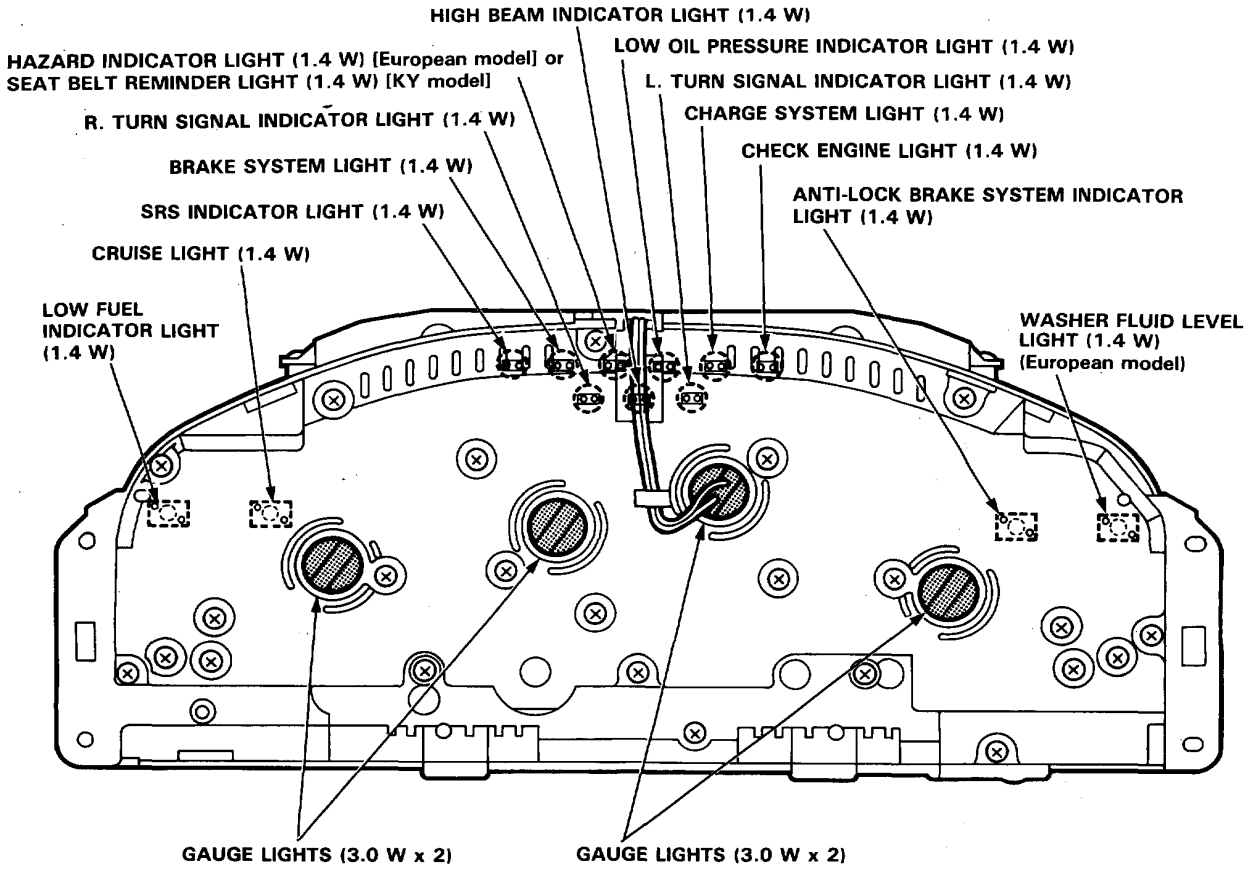

Gauge Assembly

Removal

CAUTION:

- **All SRS electrical wiring harnesses are covered with yellow outer insulation.**
- **When disconnecting the SRS wire harness, install the short connector on the airbag then disconnect the wire harness (See page 23-412).**
- **Replace the entire affected SRS harness assembly if there is an open circuit or damage to the wiring.**
- **After installation of the gauge assembly, recheck the operation of the SRS indicator light.**

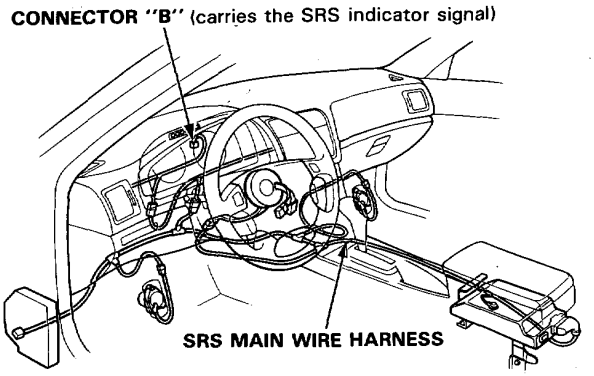

1. Remove the dashboard lower panel.

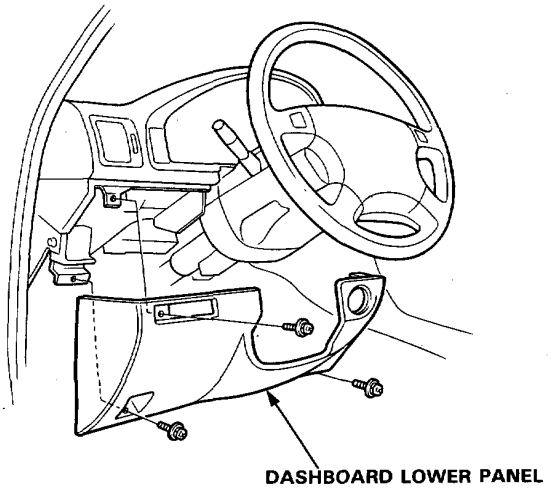

2. Remove the upper and lower column covers.

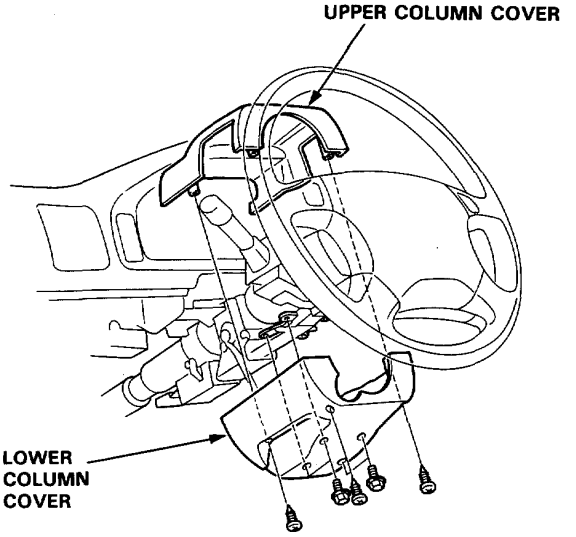

3. Remove the 2 screws, then disconnect the switch connectors and remove the instrument panel.

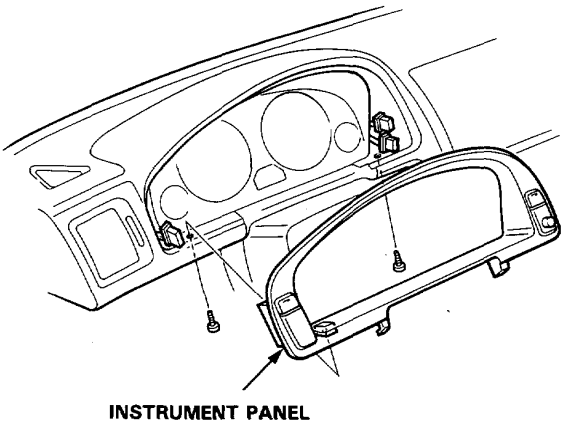

4. Place a protective cloth over the combination switch to prevent scratching the gauge assembly.

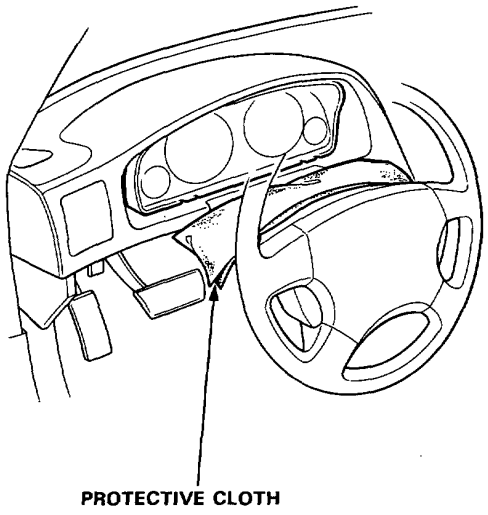

5. Remove the 4 screws from the gauge assembly.

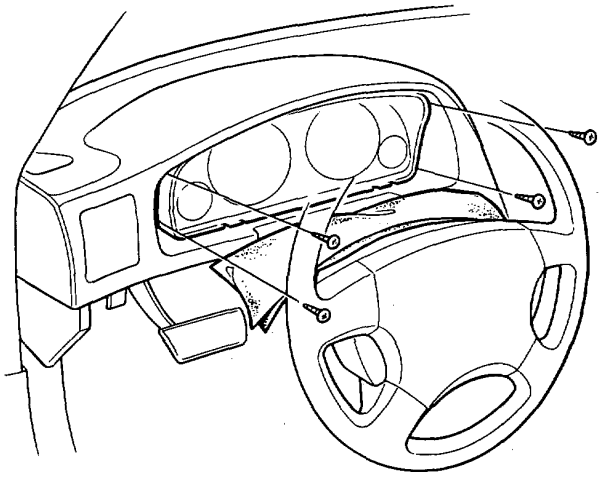

6. Disconnect the connectors from the gauge assembly.

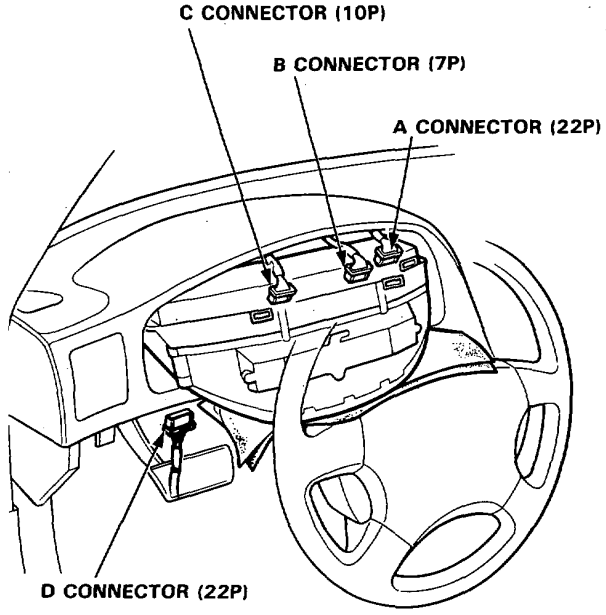

7. Take out the gauge assembly as shown.

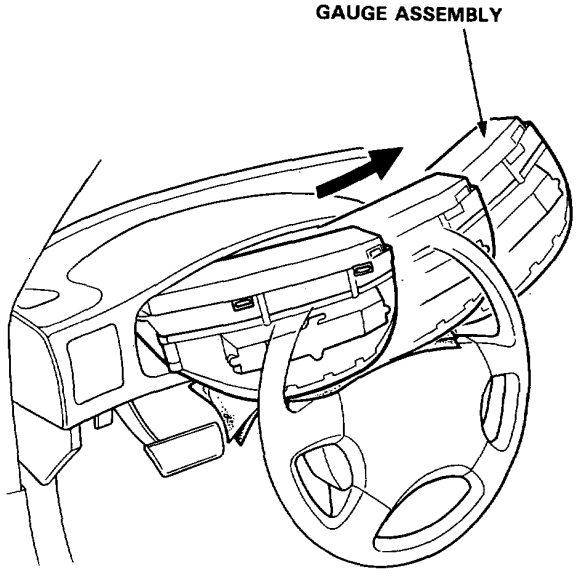

Gauge Assembly

Disassembly

NOTE:
- Handle the terminals and printed circuit boards carefully to avoid damaging them.
- If replacement is required, replace the odometer and tripmeter as a unit.

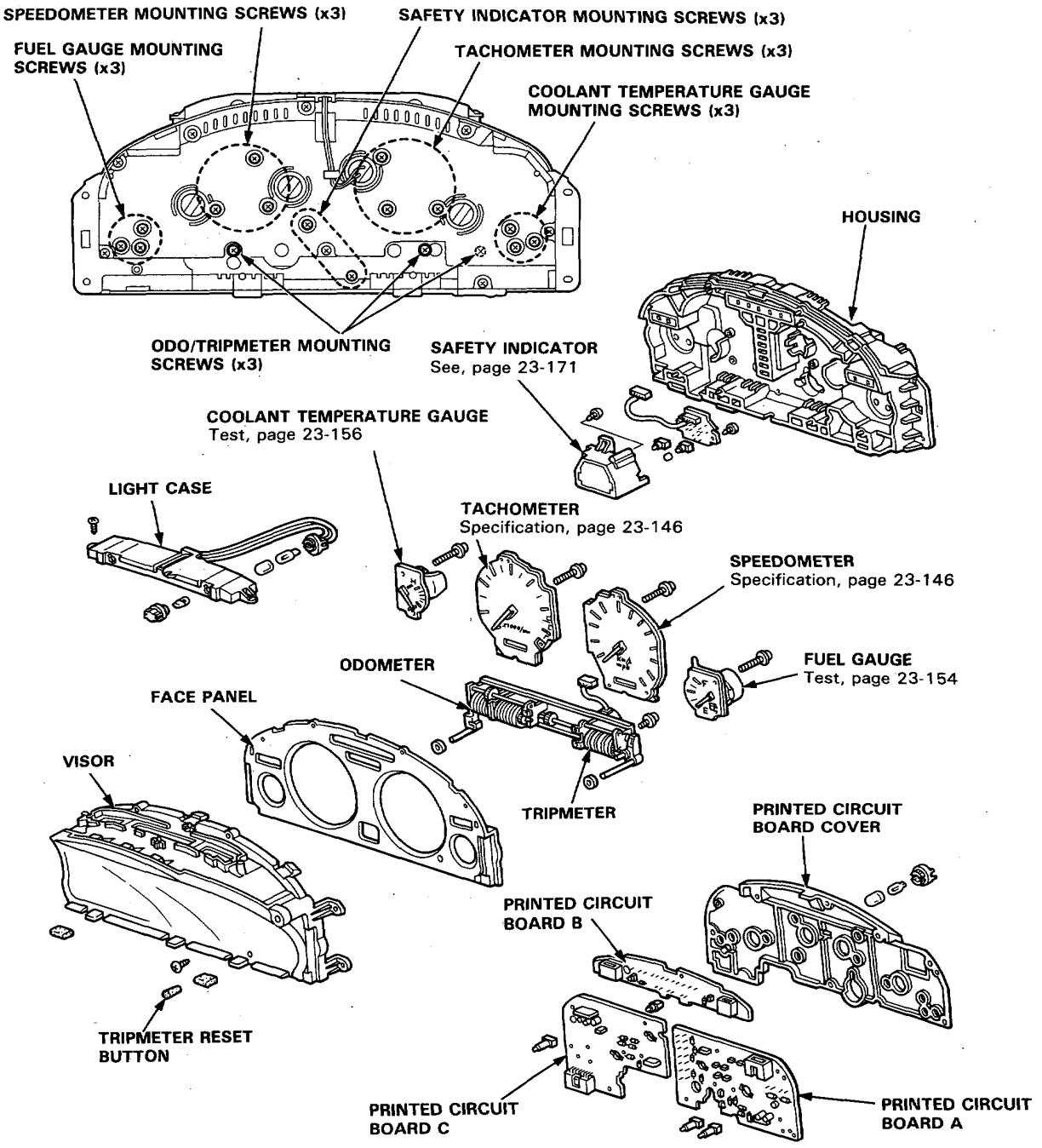

Troubleshooting

NOTE: The numbers in the table show the troubleshooting sequence.

Symptom \ Item to be inspected	Blown * (15A) fuse (in the under-dash fuse box)	Speedometer	Odo/tripmeter	Printed circuit board A	Speed sensor input test	Speed sensor is not installed correctly	Poor ground	Open circuit in wires or loose or disconnected terminals
Speedometer operates, but reads wrong.				2		1		
Odo/tripmeter operates, but registers wrong.				2		1		
Odometer and tripmeter operate, but speedometer does not operate.		1		2				
Speedometer operates, but odometer and tripmeter do not operate.			1	2				
Speedometer, odometer and tripmeter do not operate.	1			3	2		G521: LHD G402: RHD	GRN/WHT YEL

NOTE: Speed sensor ground is via ECU (G101).

*: { No. 13 (7.5A): LHD
No. 17 (7.5A): RHD

(cont'd)

Troubleshooting (cont'd)

Speedometer does not operate.

Inspect No. 22 (20A) fuse in under-dash fuse box before testing.

Disconnect 3-P connector at speed sensor.

Check for continuity between the GRN/WHT terminal and body ground.

Is there continuity?

NO → **Repair open between speed sensor and ground G101 (via ECU)**

YES

Turn the ignition switch ON.

Measure voltage between the BLK/YEL wire terminal and body ground.

A

(To next page)

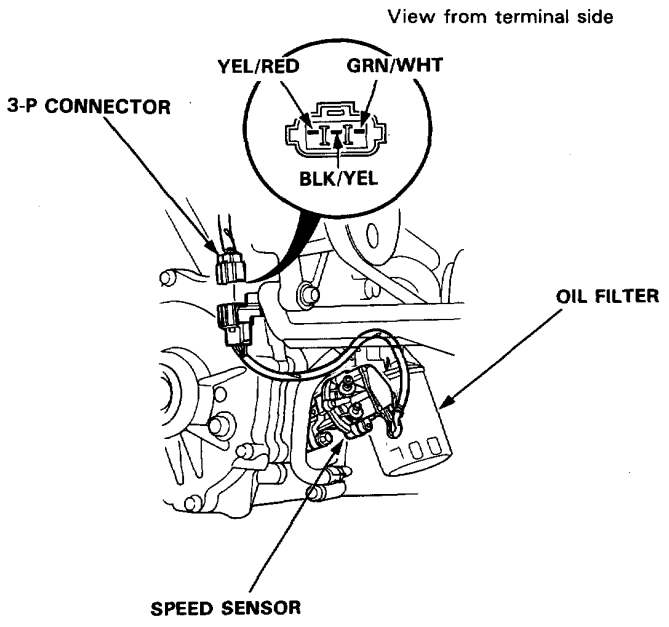

(From previous page)
A

Is there battery voltage?

NO → **Repair open BLK/YEL wire, between speed sensor and under-dash fuse box.**

YES

Measure voltage between the YEL/RED wire terminal and body ground.

Is there approx. 5 V?

NO → **Repair YEL/RED wire or short to body ground.**

YES

Reconnect 3-P connector at speed sensor.

Raise front of car and support it with stands.

Back-probe the YEL/RED wire and connect it to body ground through a voltmeter.

Put car in neutral, key ON.

Slowly rotate one wheel with other wheel blocked.

Does voltage pulse 0 to approx 5 V?

NO → **Replace speed sensor**

YES

Replace speedometer

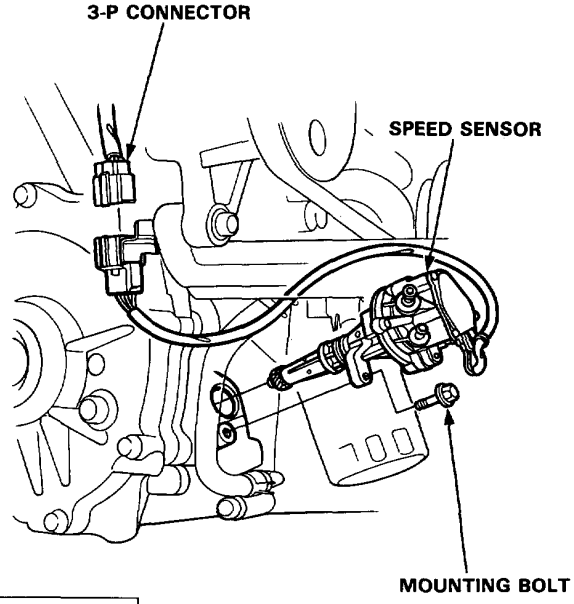

Gauge Test

NOTE: Refer to page 23-143 for the fuel gauge system circuit.

1. Check the No. 13: LHD or No. 17: RHD (7.5 A) fuse in the under-dash fuse box before testing.

2. Remove the access panel.

3. Disconnect the 3-P connector from the fuel gauge sending unit.

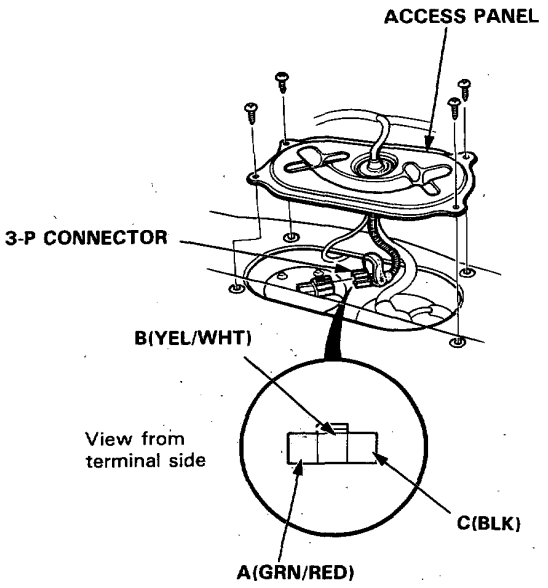

4. Connect the voltmeter positive probe to the B (YEL/WHT) terminal and the negative probe to the C (BLK) terminal, then turn the ignition switch ON. There should be between 5 and 8V.

   - If the voltage is as specified, go to step 4.
   - If the voltage is not as specified, check for:
     - An open in the YEL, YEL/WHT or BLK wire.
     - Poor ground (G406).

5. Turn the ignition switch OFF. Attach a jumper wire between the B (YEL/WHT) and C (BLK) terminals.

   Turn the ignition switch ON.
   Check that the pointer of the fuel gauge starts moving toward "F" mark.

   CAUTION: Turn the ignition switch OFF before the pointer reaches "F" on the gauge dial. Failure to turn the ignition switch OFF before the pointer reaches the "F" mark may cause damage to the fuel gauge.

   NOTE: The fuel gauge is a bobbin (cross coil) type, hence the fuel level is continuously indicated even when the ignition switch is OFF, and the pointer moves more slowly than that of a bimetal type.

   - If the pointer of the fuel gauge does not move at all, replace the gauge.
   - If the gauge is OK, inspect the fuel gauge sending unit.

Sending Unit Test

⚠WARNING Do not smoke while working on fuel system. Keep open flame away from work area.

1. Remove the maintenance access cover.
2. With the ignition switch OFF, disconnect the 3-P connector from the fuel gauge sending unit.
3. Remove the 5 nuts, then take out the fuel gauge sending unit assembly from the fuel tank.

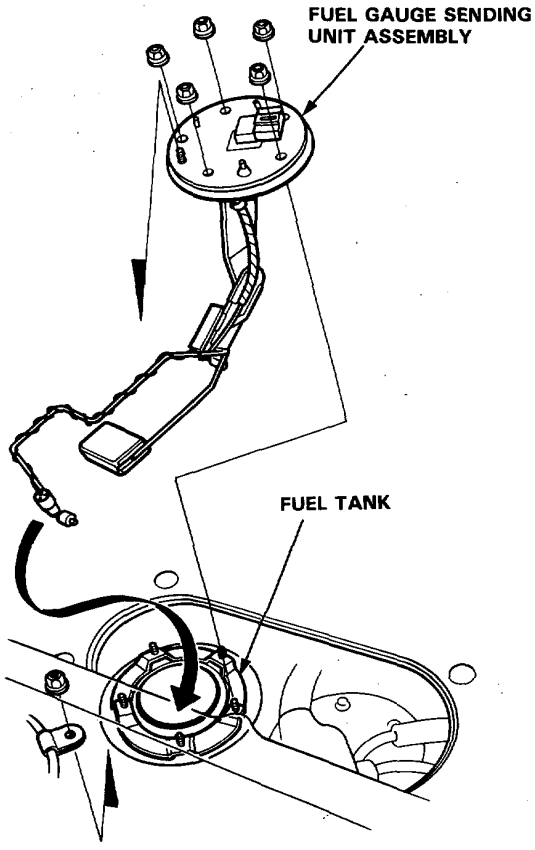

4. Measure the resistance between the A and B terminals at E (EMPTY), 1/2 (HALF FULL) and F (FULL) by moving the float.

Float Position	E	1/2	F
Resistance (Ω)	105–110	25.5–39.5	2–5

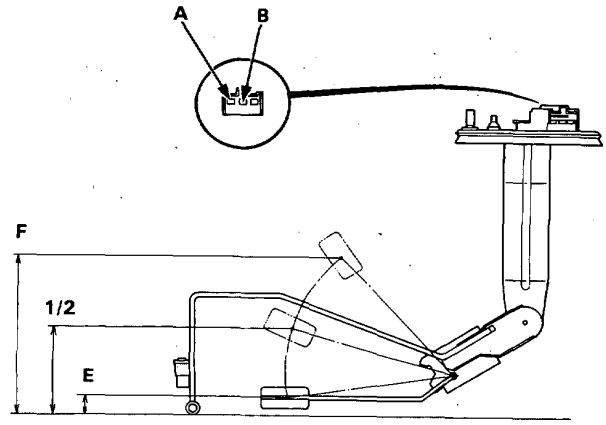

(bottom of the fuel tank)

E	1/2	F
15.2mm (0.60in)	72.8mm (2.87in)	136.2mm (5.36in)

5. If unable to obtain the above readings, replace the fuel gauge sending unit.

Coolant Temperature Gauge

Gauge Test

NOTE: Refer to page 23-142 for wiring description of the coolant temperature gauge circuit diagram.

1. Check the No. 13: LHD or No. 17: RHD (7.5 A) fuse in the under-dash fuse box before testing.

2. Make sure ignition switch is OFF, then disconnect the YEL/GRN wire from the temperature gauge sending unit and ground it with a jumper wire.

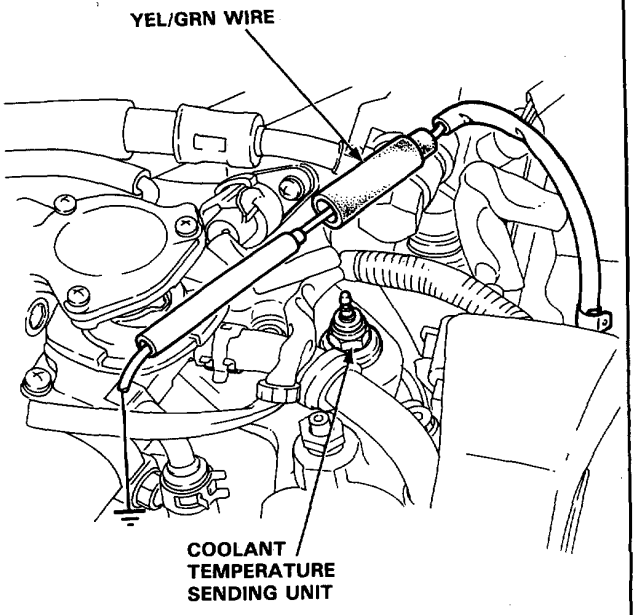

3. Turn the ignition switch ON.
   Check that the pointer of the temperature gauge starts moving toward the "H" mark.

   CAUTION: Turn the ignition switch OFF before the pointer reaches "H" on the gauge dial. Failure to turn the ignition OFF quickly enough may cause damage to the gauge.

   - If the pointer of the gauge does not move at all, check for:

     — An open in the YEL or YEL/GRN wire.

     If the wires are OK, replace the coolant temperature gauge.

   - If the gauge works, inspect the sending unit.

Sending Unit Test

1. Disconnect the YEL/GRN wire from the sender.

2. With the engine cold, use an ohmmeter to measure resistance between the positive terminal and the engine (ground).

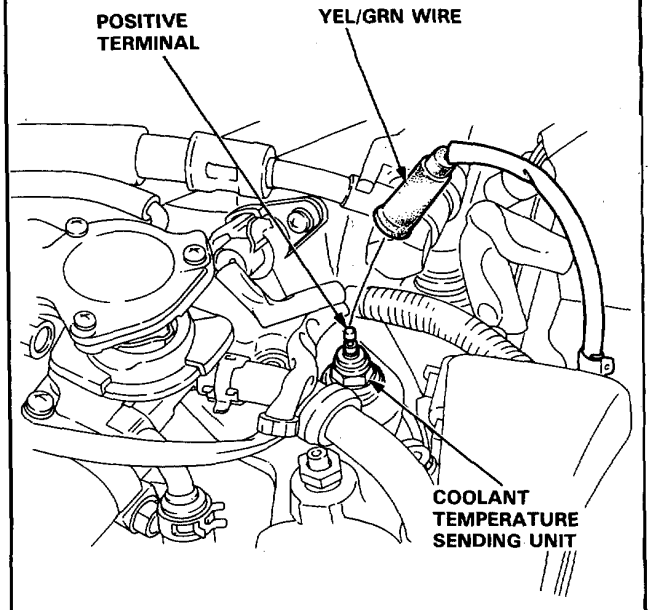

3. Check the temperature of the coolant.

4. Run the engine and measure the change in resistance with the engine at operating temperature (Cooling fan comes on).

Temperature	56°C (133°F) ["C" mark]	85°C (185°F)–100°C (212°F)
Resistance (Ω)	142	49–32

5. If obtained readings are substantially different from specifications above, replace the sending unit.

Parking Brake Switch Test

LEVER TYPE:

1. Remove the center console and disconnect the connector from the switch.
2. There should be continuity between the positive terminal and body ground with the brake lever up. There should be no continuity with the parking brake lever down.

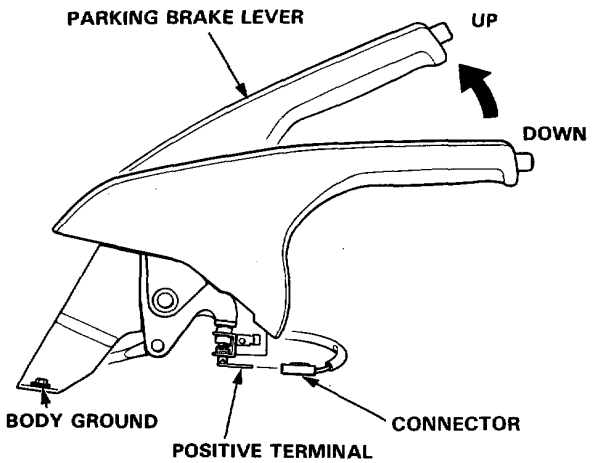

PEDAL TYPE:

1. Remove the dashboard lower panel and disconnect the connector from the switch.
2. There should be continuity between the positive terminal and body ground with the parking brake pedal step on.
   There should be no continuity with the parking brake pedal release.

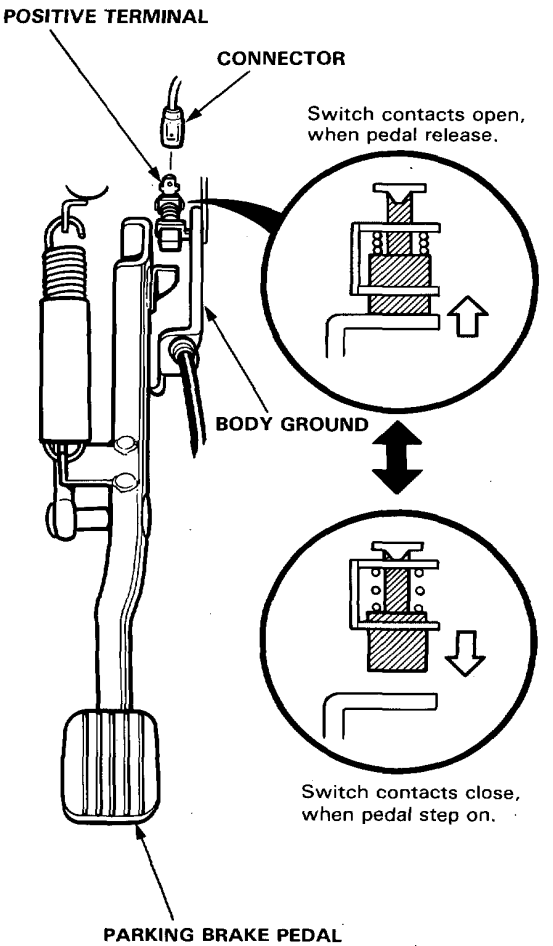

Brake Warning System

Brake Fluid Level Switch Test

1. Remove the reservoir cap. Check that the float moves up and down freely.
   Replace the reservoir cap assembly if the float does not move freely.

2. Check for continuity between the terminals with the float up and down.
   There should be continuity with the float down and no continuity with the float up.
   Replace the reservoir cap assembly if necessary.

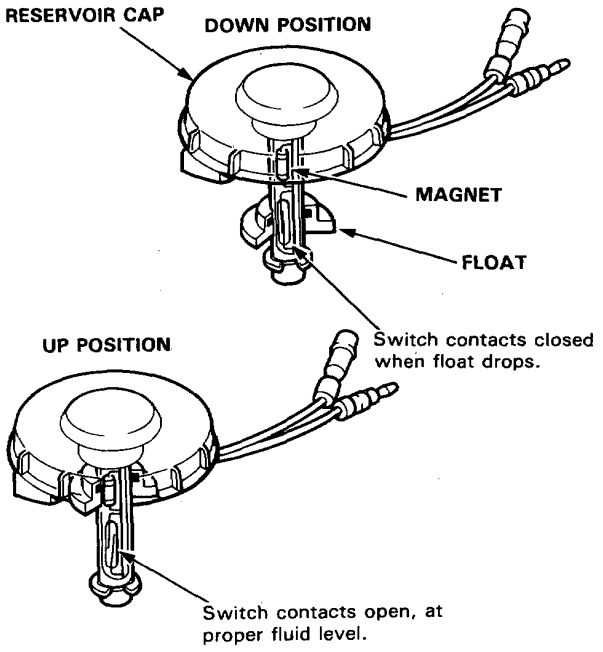

Low Fuel Indicator

Indicator Light Test

NOTE: Refer to page 23-143 for wiring description of the low fuel Indicator circuit.

1. Park car on level ground.

   ⚠ WARNING Do not smoke while working on fuel stystem. Keep open flame away from work area. Drain fuel only into an approved container.

2. Drain fuel tank into an approved container.
   Then install the drain bolt with a new washer.

3. Add less than 11 ℓ (2.9 U.S. Gal, 2.4 Imp. Gal) of fuel and turn the ignition switch on.
   The low fuel Indicator light should come on within 4 minutes.

4. Then add approx. 4 ℓ (1.1 U.S. Gal, 0.9 Imp. Gal) of fuel.
   The light should go out within 4 minutes.

   - If the light did not come on in step 3, remove the access panel and disconnect the 3-P connector from the fuel gauge sending unit. Connect the A (GRN/RED) terminal to the C (BLK) terminal with a jumper wire.
     - If the light comes on, the problem is either the sending unit or its ground.
     - If the light does not come on, the problem is an open in the GRN/RED wire to the gauge assembly, or no power to the gauge or a bad bulb.

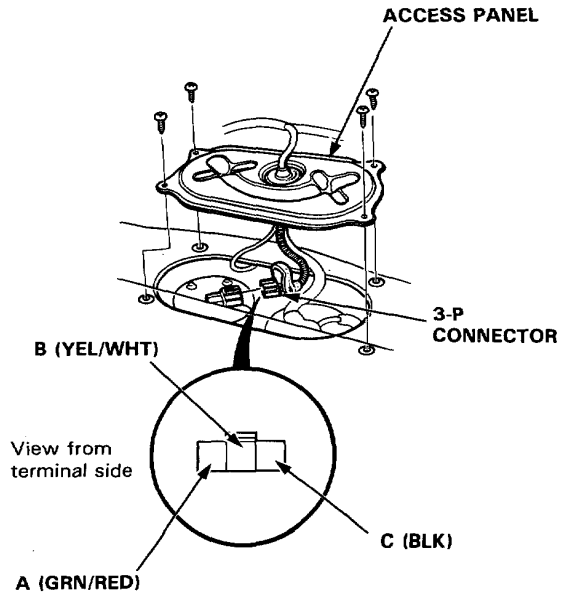

Seat Belt Reminder (KY model)

Seat Belt Switch Test

1. Slide the driver's seat forward until the seat belt center anchor bolt is accessible, then disconnect the 3-P connector from the seat belt switch under the driver's seat.

2. There should be continuity between the A and B terminals when the driver's seat belt is not buckled. There should be no continuity when the driver's seat belt is buckled.

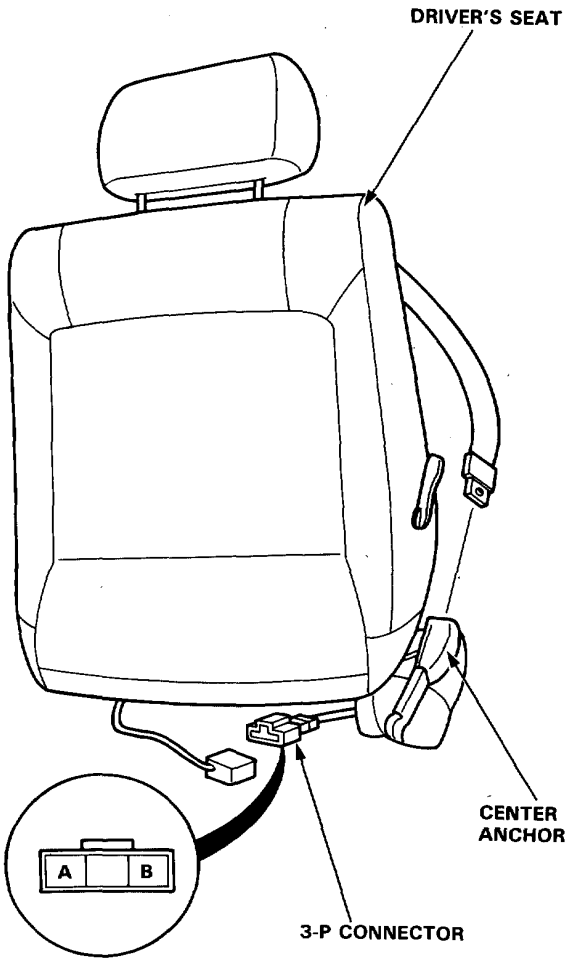

Lights-on Reminder (KY model)

Chime Test

NOTE: Refer to page 23-191 for wiring description of the lights-on reminder circuit, and page 23-193 for the input test of the circuit.

When the ignition key is turned to "O" position and removed, with the lights on, voltage is applied to the reminder circuit on the integrated control unit. When you open the driver's door, the circuit senses ground through the closed door switch.
with voltage at the "A6" terminal, ground at the "A7" terminal and no voltage at the "A2" terminal, the chime is activated to remind the driver to turn off the lights.

NOTE: Chime is located near the brake light switch.

1. Remove the dashboard lower panel.

2. Disconnect the 2-P connector from the main wire harness.

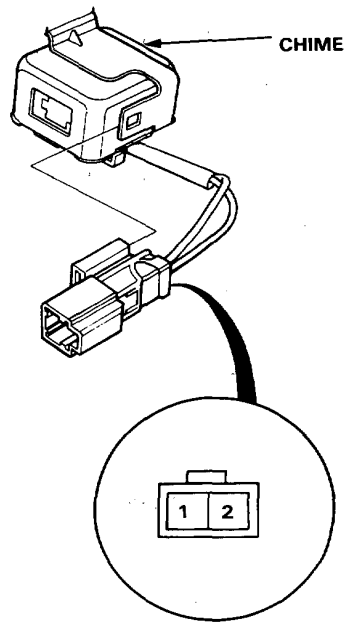

3. Test chime operation by connecting battery power to No. 2 terminal, grounding No. 1 terminal, and cycling the power on-off repeatedly.

4. If the chime fails to sound every time power is cycled, replace it.

Oil Pressure/Oil Level Warning System (European model)

Circuit Diagram

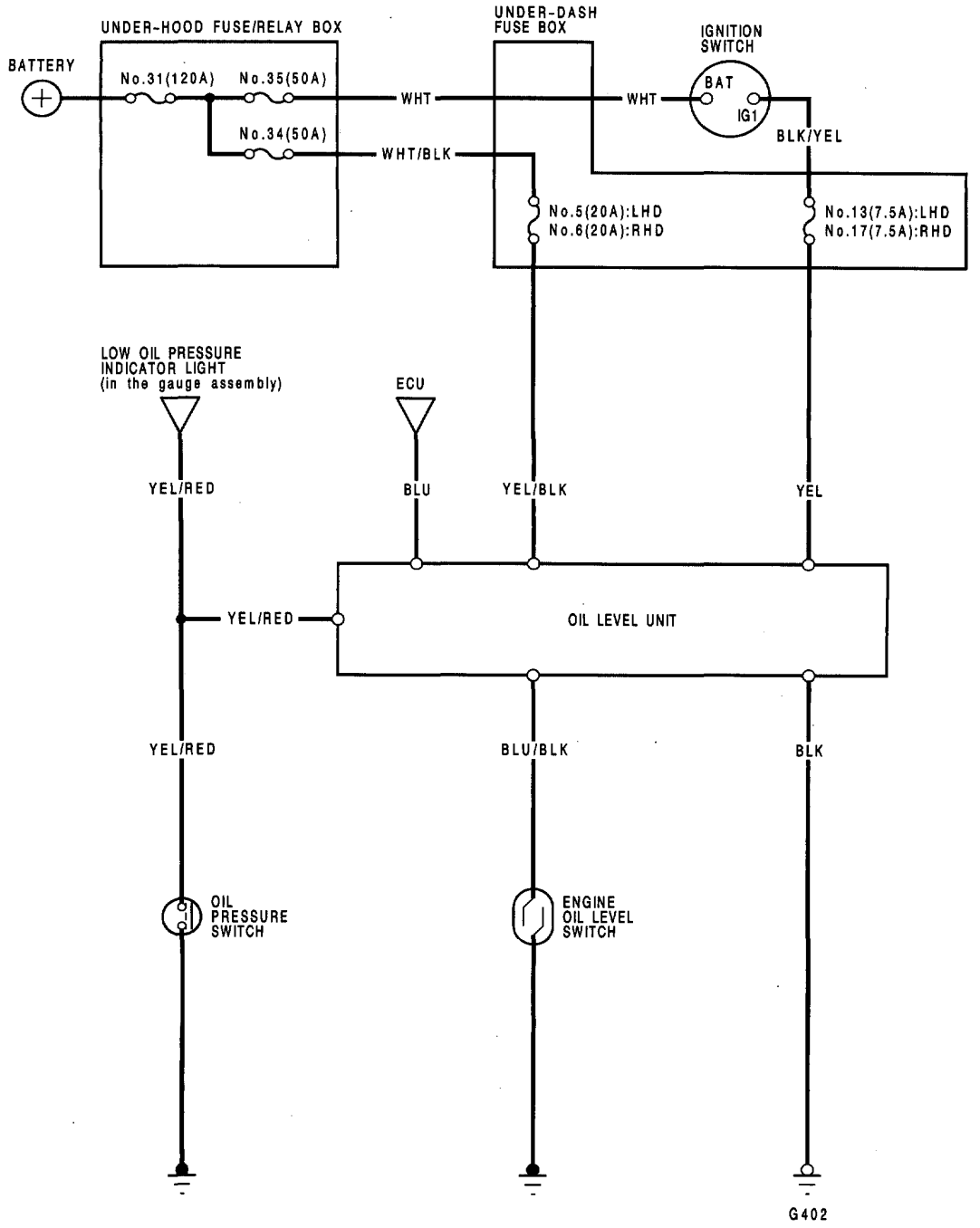

Unit Input Test

Remove the dashboard lower panel, then disconnect the 6-P connector from the control unit. Make the following tests at connector terminals.

NOTE: Recheck the connections between the 6-P connector and the control unit, then replace the control unit if all input tests prove OK.

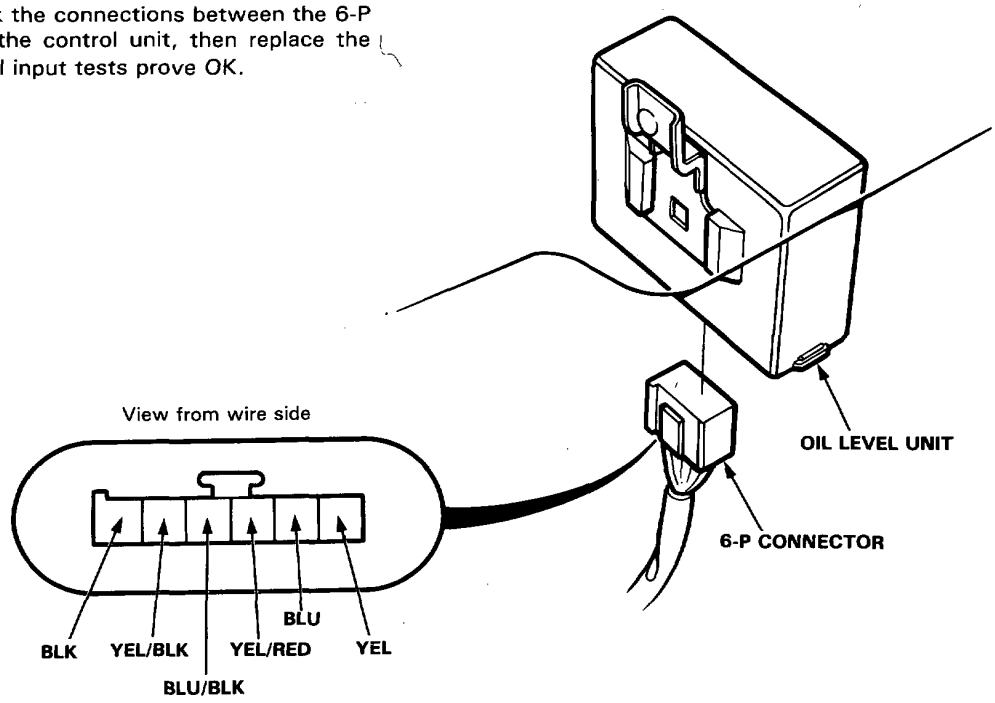

No.	Wire	Test condition	Test: desired result	Possible cause (if result is not obtained)
1	YEL/BLK	Under all conditions.	Check for voltage to ground: should be battery voltage.	• Blown *1 (20A) fuse. • An open in the YEL/BLK wire.
2	YEL	Ignition switch ON.	Check for voltage to ground: should be battery voltage.	• Blown *2 (7.5A) fuse. • An open in the YEL wire.
3	BLK	Under all conditions.	Check for continuity to ground: should be continuity.	• Poor ground (G402). • An open in the BLK wire.
4	BLU	Start the engine.	Check for voltage to ground: should be about 5 V.	• Faulty ECU. • An open in the BLU wire.
5	YEL/RED	Stop the engine.	Check for continuity to ground: should be continuity.	• Faulty oil pressure switch. • An open in the YEL/RED wire.
6	BLU/BLK	Proper engine oil level.	Check for continuity to ground: should be continuity.	• Faulty engine oil level switch. • An open in the BLU/BLK wire.

*1 { No. 5 (20A): LHD
No. 6 (20A): RHD

*2 { No. 13 (7.5A): LHD
No. 17 (7.5A): RHD

Oil Pressure/Oil Level Warning System (European model)

Oil Pressure Switch Test

1. Remove the YEL/RED wire from the oil pressure switch.

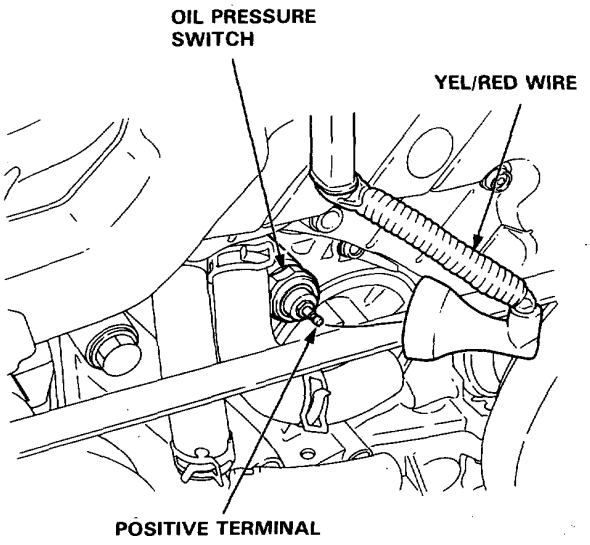

2. There should be continuity between the positive terminal and the engine (ground) with the engine stopped. There should be no continuity when the engine runs.

3. If the switch fails to operate, check the engine oil level.
   If the oil level is correct, check oil pump pressure (See section 8).

Engine Oil Level Switch

1. Disconnect the BLU/BLK wire from the positive terminal of the engine oil level switch.

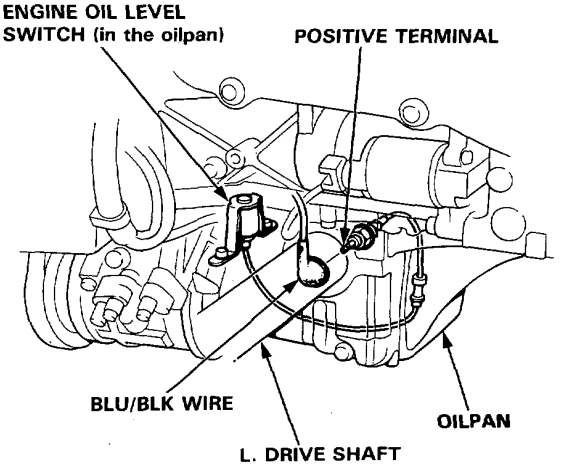

2. There should be continuity between the positive terminal and the engine (ground) with proper engine oil level.
   There should be no continuity when no engine oil is left in the oilpan.

3. If the switch fails to operate, remove the oilpan and check for disconnected wire between the positive terminal and the switch, then replace the switch if necessary.

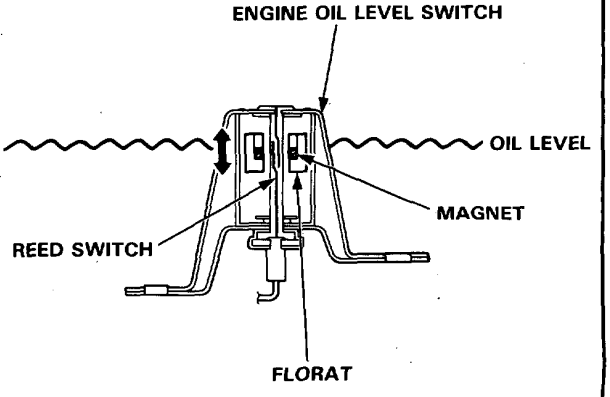

Speed Alarm Unit Test

NOTE: Check for the NO. 13 (7.5A) fuse in the under-dash fuse box, before testing.

1. Remove the dashboard lower panel, then disconnect the 6-P connector from the speed alarm unit.

   NOTE: Speed alarm unit is located near the brake light switch.

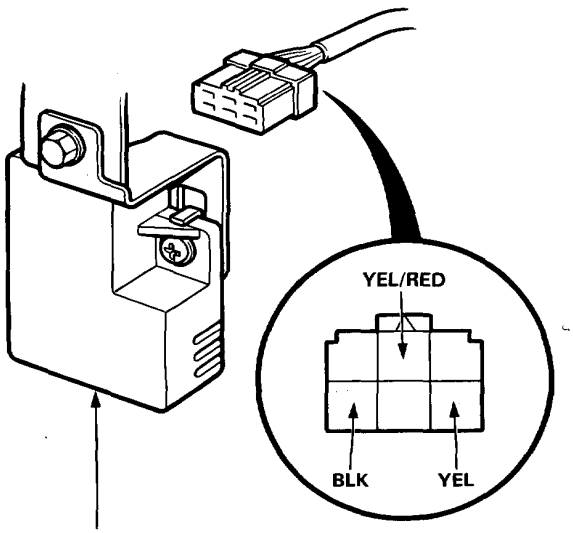

View from wire side

2. Check for continuity between the BLK terminal and the body ground.
   There should be continuity.
   - If there is no continuity, check for:
     - An open in the BLK wire.
     - Poor ground (G402).

3. Check for voltage between the YEL terminal and the body ground with the ignition switch ON.
   There should be battery voltage.
   - If there is no voltage, check for an open in the YEL wire.
   - If there is battery voltage, go to step 4.

4. Ignition switch OFF, reconnect the 6-P connector to the speed alarm unit, and connect the voltmeter to the YEL/RED terminal.

5. Raise the car and place safety stands in the proper locations (See section 1).

6. Turn the ignition switch on again and rotate the front wheel slowly, then check to see the voltmeter indicator moves from 0 V to 5 V and then from 5 V to 0 V alternately.

   - If there is no voltage, check for:
     - Defective speed sensor (See page 23-152).
     - An open in the YEL/RED wire.

7. Replace the speed alarm unit if the speed sensor is normal.

Shift Lever Position Indicator

Component Location Index

CAUTION:

- **All SRS electrical wiring harnesses are covered with yellow outer insulation.**
- **When disconnecting the SRS wire harness, install short connector on the airbag then disconnect the wire harness (See page 23-412).**
- **Replace the entire affected SRS harness assembly if there is an open circuit or damage to the wiring.**
- **After installation of the gauge assembly, recheck the operation of the SRS indicator light.**

NOTE: RHD type is symmetrical to LHD type.

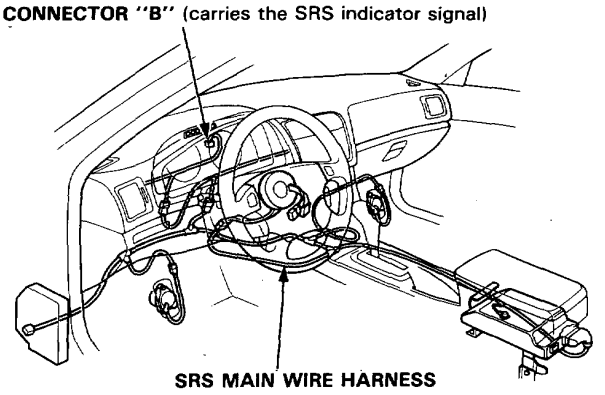

• **GAUGE ASSEMBLY**
Removal, page 23-148
Disassembly, pages 23-150

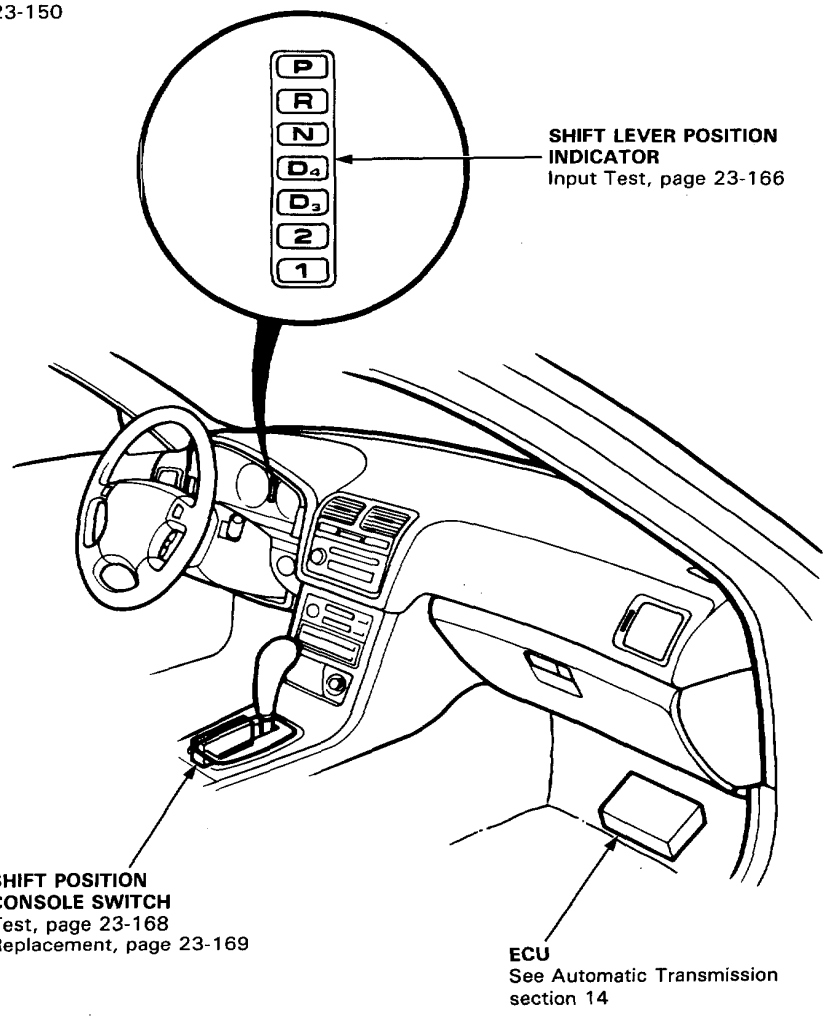

Circuit Diagram

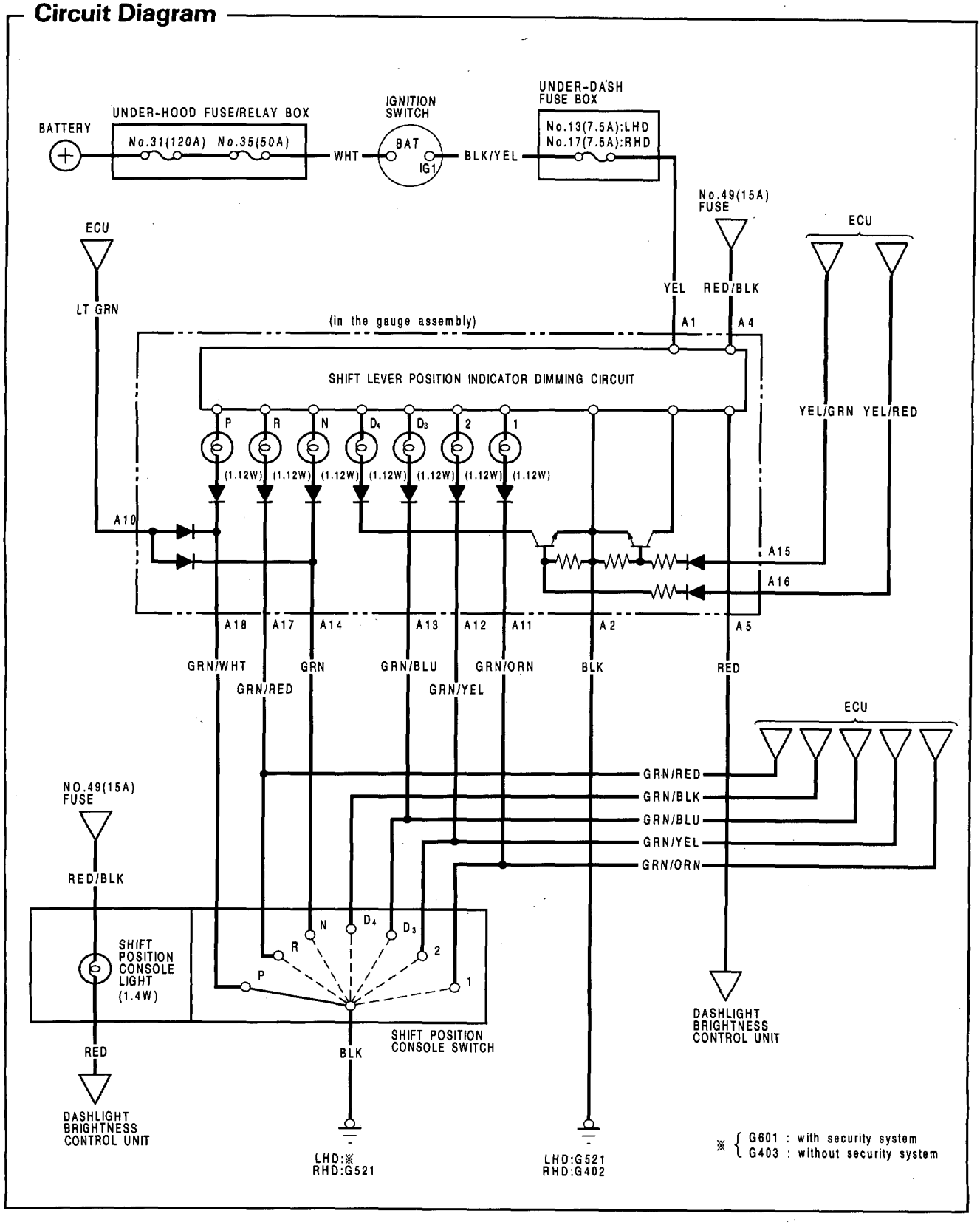

Shift Lever Position Indicator

Indicator Input Test

CAUTION:

- **All SRS electrical wiring harnesses are covered with yellow outer insulation.**
- **When disconnecting the SRS wire harness, install the short connector on the airbag then disconnect the wire harness (See page 23-412).**
- **Replace the entire affected SRS harness assembly if there is an open circuit or damage to the wiring.**
- **After installation of the gauge assembly, recheck the operation of the SRS indicator light.**

Remove the gauge assembly from the dashboard and disconnect the 22-P connector from the gauge assembly. Make the following input tests at the harness pins. If all tests prove OK, yet the indicator still fails to work, replace printed circuit board C.

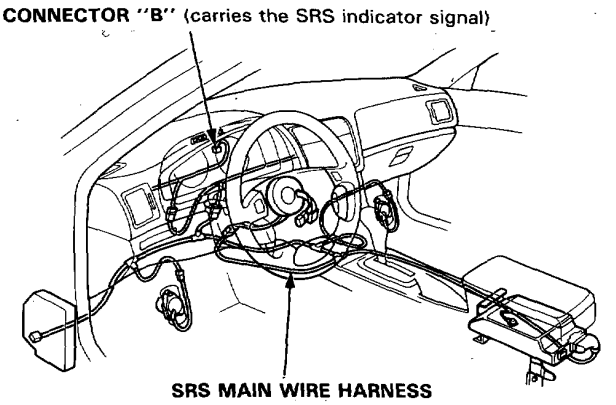

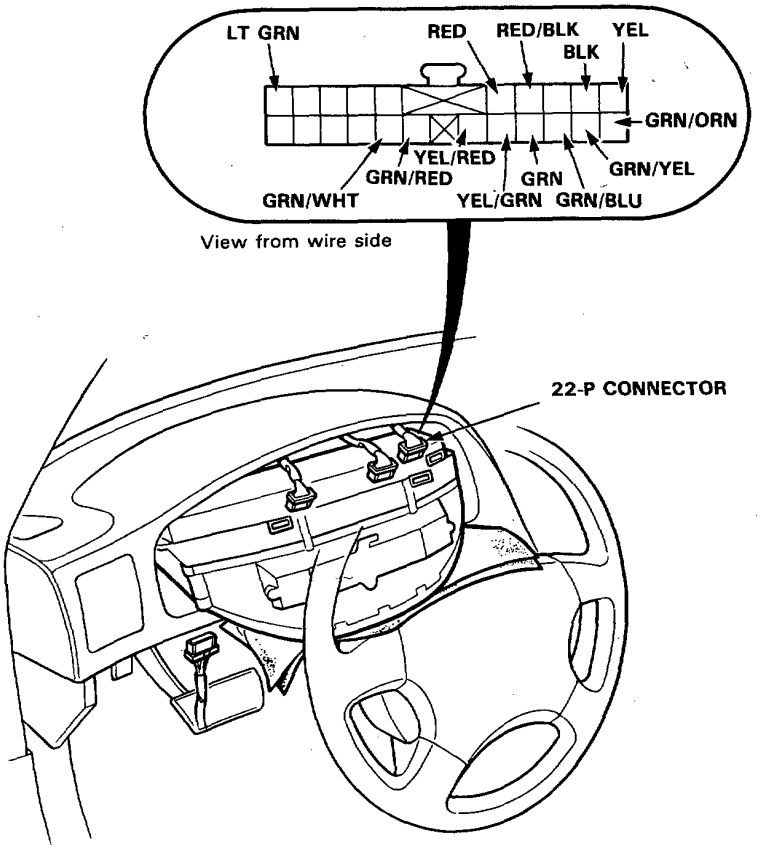

No.	Wire	Test condition	Test: desired result	Possible cause (if result is not obtained)
1	BLK	Under all conditions.	Check for continuity to ground: should be continuity.	• Poor ground (G521: LHD or G402: RHD). • An open in the wire.
2	YEL	Ignition switch ON.	Check for voltage to ground: should be battery voltage.	• Blown No. 13: LHD or No. 17: RHD (7.5 A) fuse. • An open in the wire.
3	GRN/WHT	Shift lever position in P.	Check for continuity to ground: should be continuity.	• Faulty shift position console switch. • Poor ground (G601, G403: LHD or G521: RHD). • An open in the wire.
	GRN/RED	Shift lever position in R.		
	GRN	Shift lever position in N.		
	GRN/BLU	Shift lever position in D_3.		
	GRN/YEL	Shift lever positon in 2.		
	GRN/ORN	Shift lever position in 1.		
4	YEL/RED	Ignition switch ON and shift lever position in D_4.	Check for voltage to ground: should be battery voltage.	• Faulty shift position console switch. • Faulty ECU. • Poor ground (G601, G403: LHD or G521: RHD). • An open in the wire.
5	RED/BLK and RED	Lighting switch ON and dashlight brightness control dial on full bright.	Check for voltage between RED/BLK and RED terminals: should be battery voltage.	• Faulty dashlight brightness control system. • An open in the wire.
6	YEL/RED	Ignition switch ON and shift lever in any position except D_4.	Check for voltage to ground: should be less than 1V for two seconds after the ignition switch is turned ON and more than battery voltage two seconds later.	• Faulty ECU. • An open in the wire.
7	YEL/GRN	Ignition switch ON, and shift lever in any position except D_4.	Check for voltage to ground: should be less than 1V for two seconds after the ignition switch is turned ON and more than 5V two seconds later.	• Faulty ECU. • An open in the wire.
8	LT GRN	Ignition switch ON.	Check for voltage to ground: should be about 5 V.	• Faulty ECU. • An open in the wire.

Shift Lever Position Indicator

Shift Position Console Switch Test

1. Remove the console, then disconnect the 14-P connector from the console switch.
2. Check for continuity between the terminals in each switch position according to the table.
   - Move the lever back and forth without touching the push button at each switch position, and check for continuity within the range of free play of the shift lever.
   - If there's no continuity within the range of free play, adjust the position of the console switch.

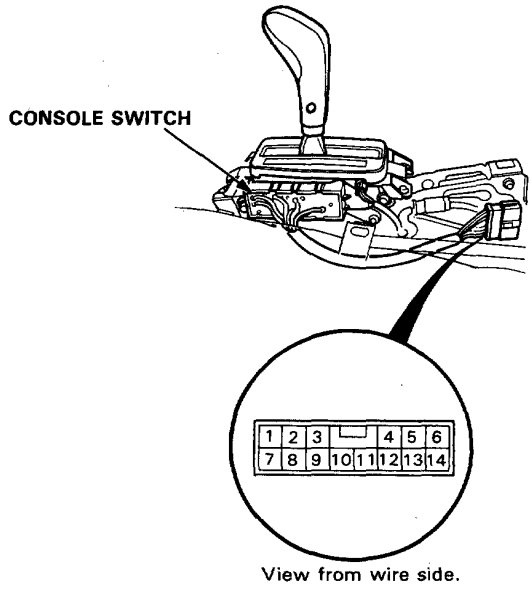

Shift Position Console Switch

Position \ Terminal	9	1	2	3	4	5	7	8	12	10	11	6	14
										Back-up Light Switch		Neutral Safety Switch	
1	○	—	—	—	○								
2	○	—	—	○	—	○							
3	○	—	○	—	—	○							
D	○	○	—	—	—	○							
N	○	—	—	—	—	—	○					○	○
R	○	—	—	—	—	—	—	○		○	○		
P	○	—	—	—	—	—	—	—	○			○	○

Adjustment:

1. Shift to the "P" position, then loosen the bolts.
2. Slide the switch in the direction of D position [within 2.0 mm (0.079 in)] so that there is continuity between No. 9 and No. 12 terminals (within the range of free play of the shift lever).
3. Recheck for continuity between each of the terminals.

   NOTE:
   - If adjustment is not possible, check for damage to the shift lever detent and/or bracket.
     If there is no damage, replace the console switch.
   - The engine should start when the shift lever is in N position (within the range of free play).

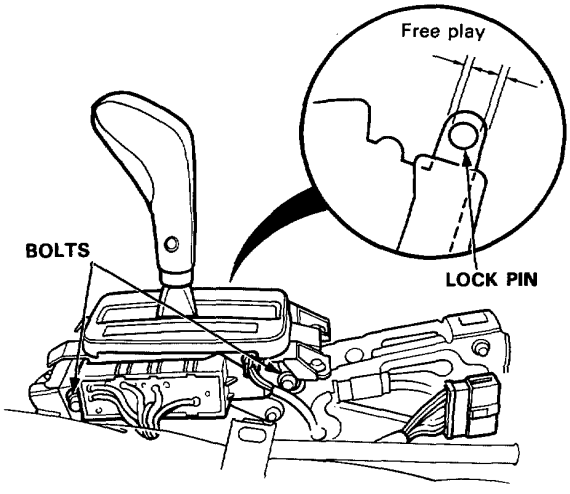

Shift Position Console Switch Replacement

1. Remove the console, then disconnect the 14-P connector from the console switch.

2. Remove the 2 console switch mounting bolts.

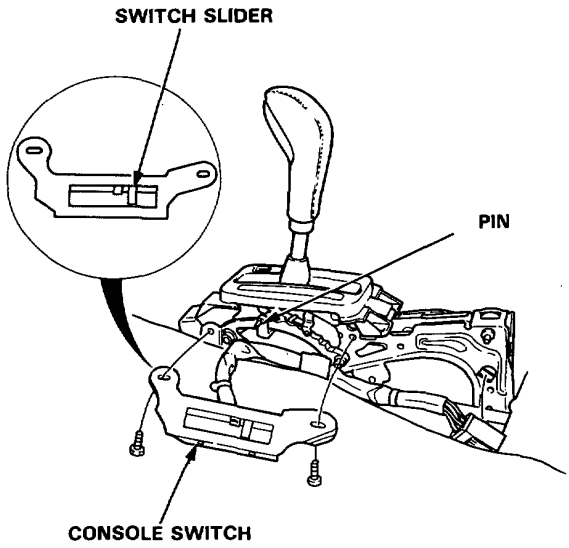

3. Position the switch slider to "Neutral" (N).

4. Shift the select lever to "Neutral", then slip the console switch into position.

5. Attach the switch with the 2 bolts.

6. Test the console switch in the P and N positions (see page 23-168).

   NOTE: The engine should start when the shift lever is in the N position (within the range of free play).

7. Connect the 14-P connector, clamp the harness and install the console.

Shift Lever Position Indicator

Bulb Replacement

CAUTION:

- **All SRS electrical wiring harnesses are covered with yellow outer insulation.**
- **When disconnecting the SRS wire harness, install the short connector on the airbag then disconnect the wire harness (See page 23-412).**
- **Replace the entire affected SRS harness assembly, if there is an open circuit or damage to the wiring.**
- **After installation of the gauge assembly, recheck the operation of the SRS indicator light.**

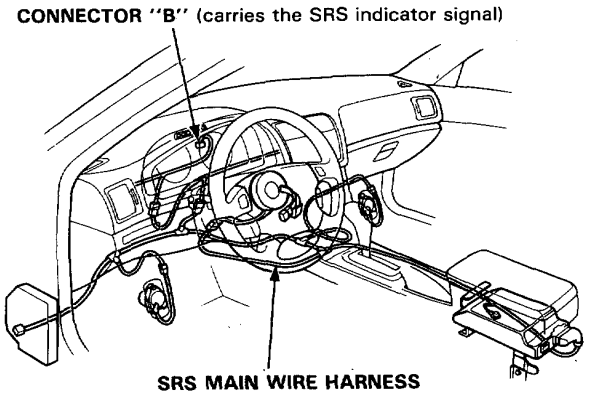

1. Remove the gauge assembly (See page 23-148).
2. Disassemble the gauge assembly (See page 23-150).
3. Remove the bulb.

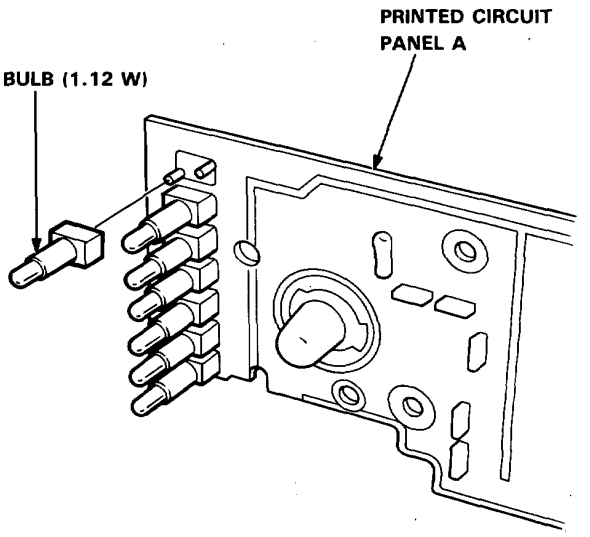

4. Installation is in the reverse order of removal.

Safety Indicator

Component Location Index

CAUTION:

- **All SRS electrical wiring harnesses are covered with yellow outer insulation.**
- **When disconnecting the SRS wire harness, install *the short connector on the airbag then disconnect* the wire harness (See page 23-412).**
- **Replace the entire affected SRS harness assembly if there is an open circuit or damage to the wiring.**
- **After installation of the gauge assembly, recheck the operation of the SRS indicator light.**

NOTE: RHD type is symmetrical to LHD type.

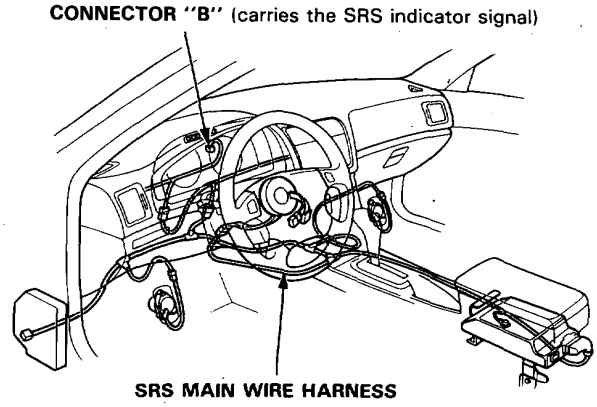

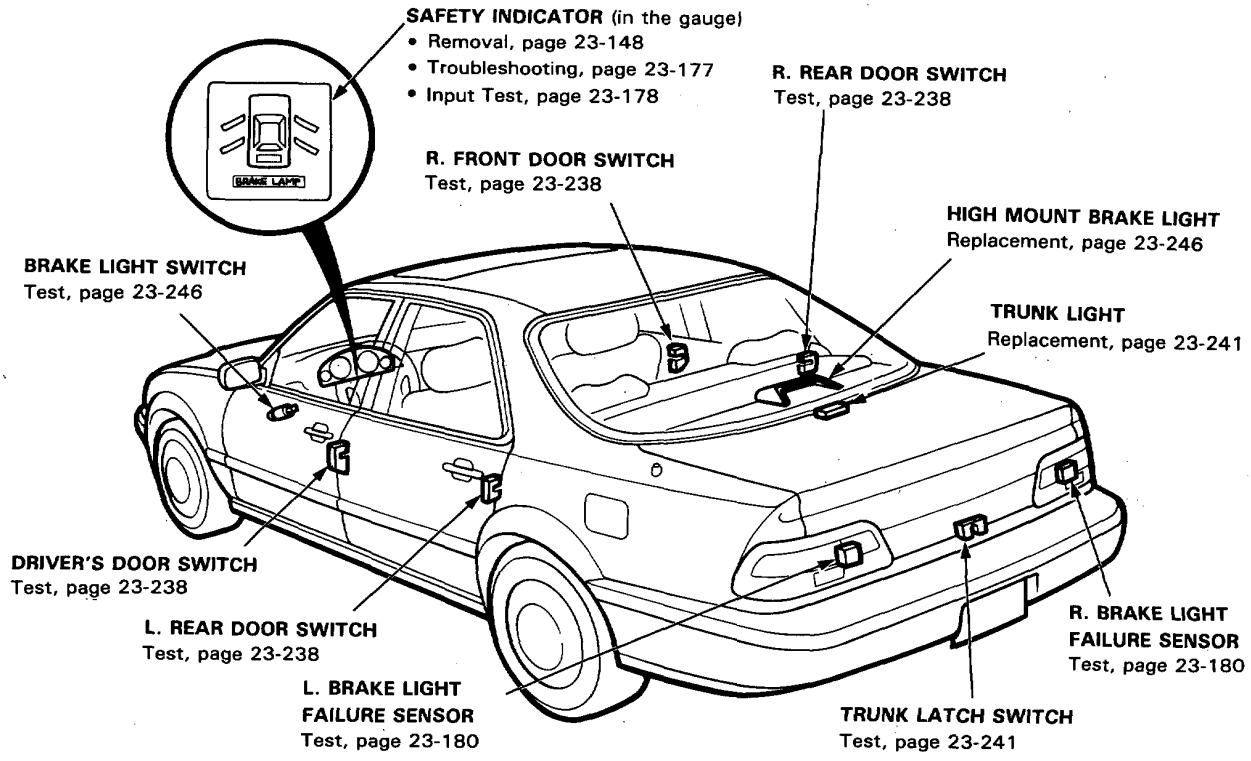

Safety Indicator

Circuit Diagram

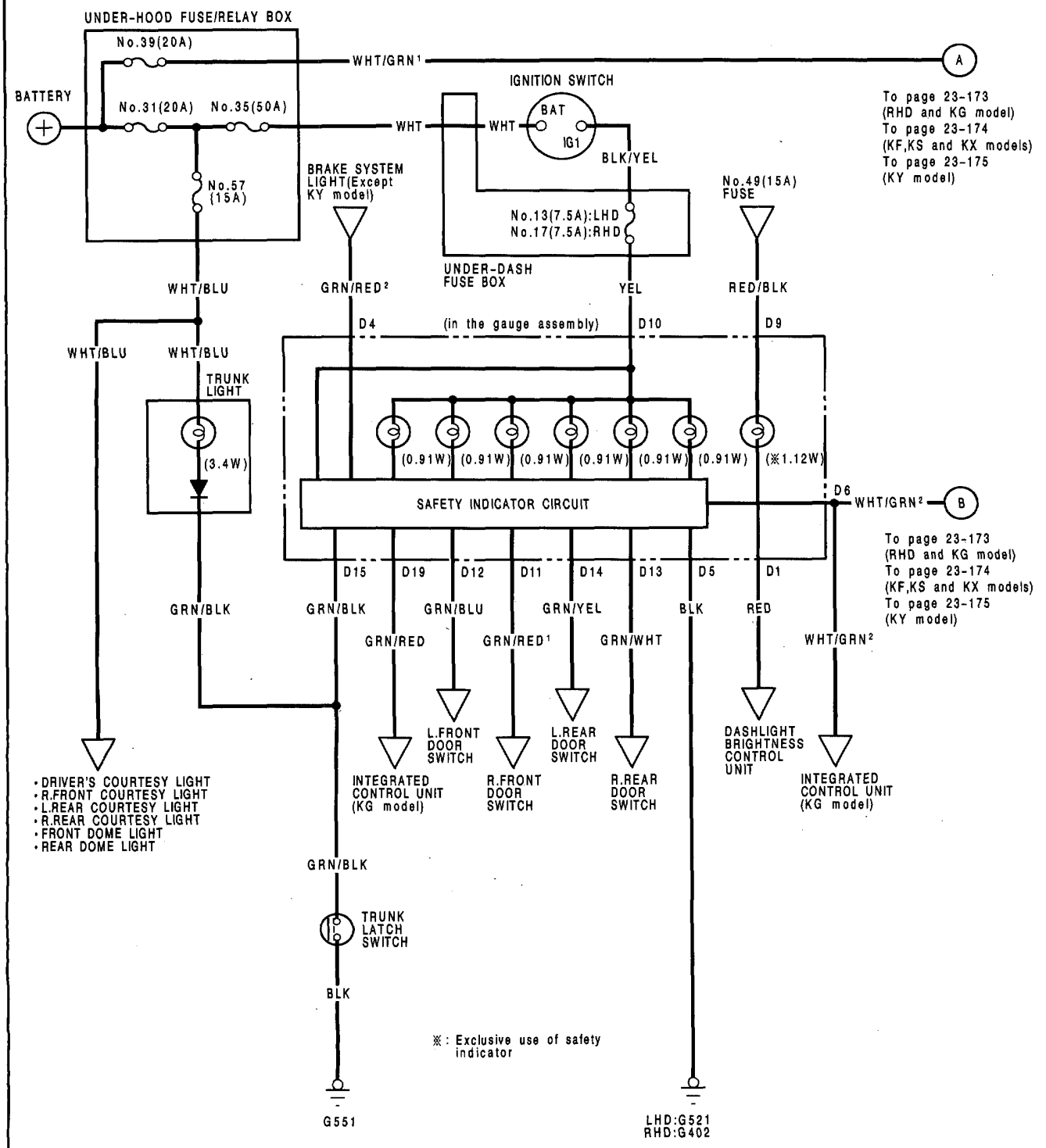

RHD and KG model:

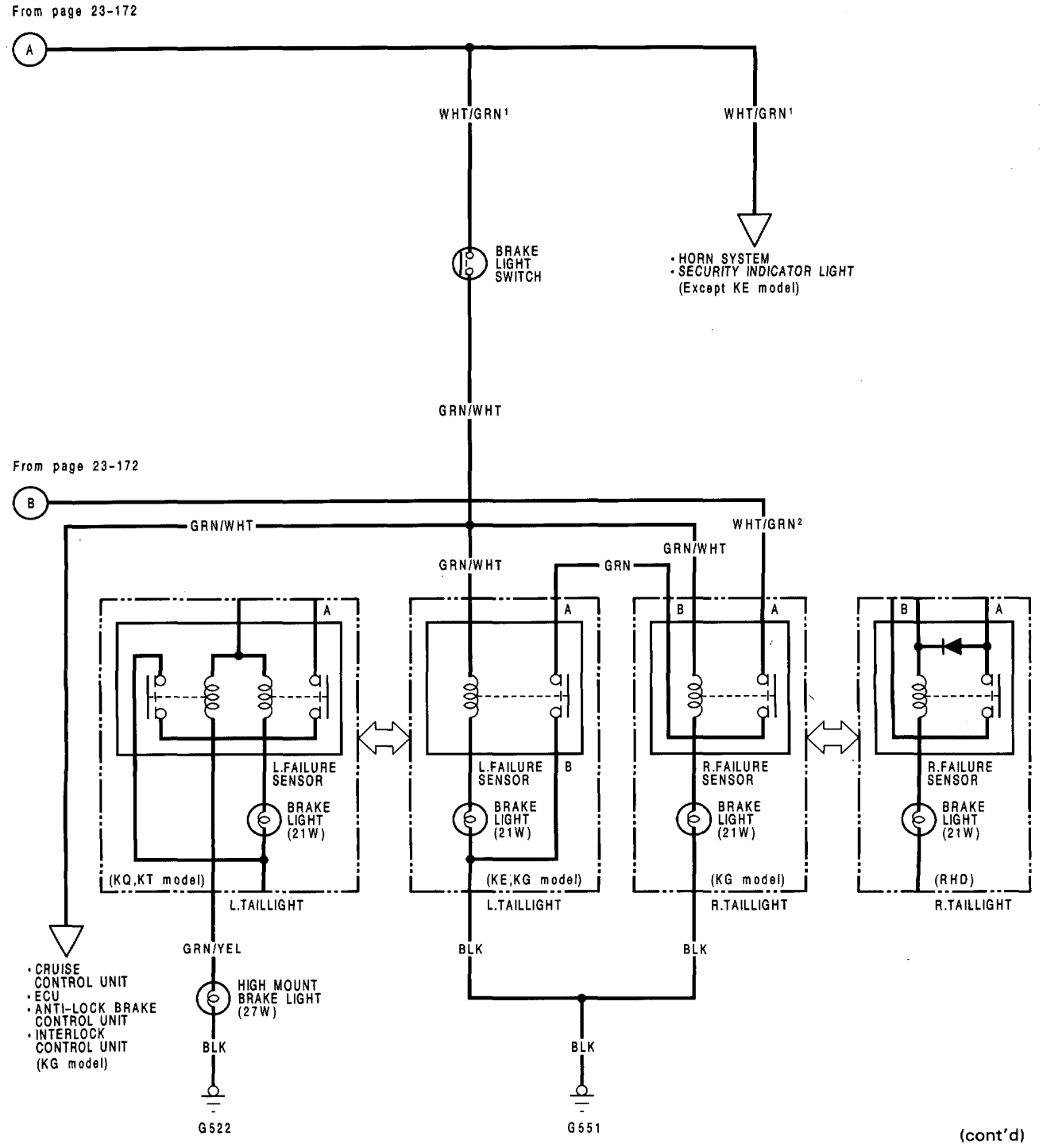

(cont'd)

Circuit Diagram (cont'd)

LHD (Except KG, KY model):

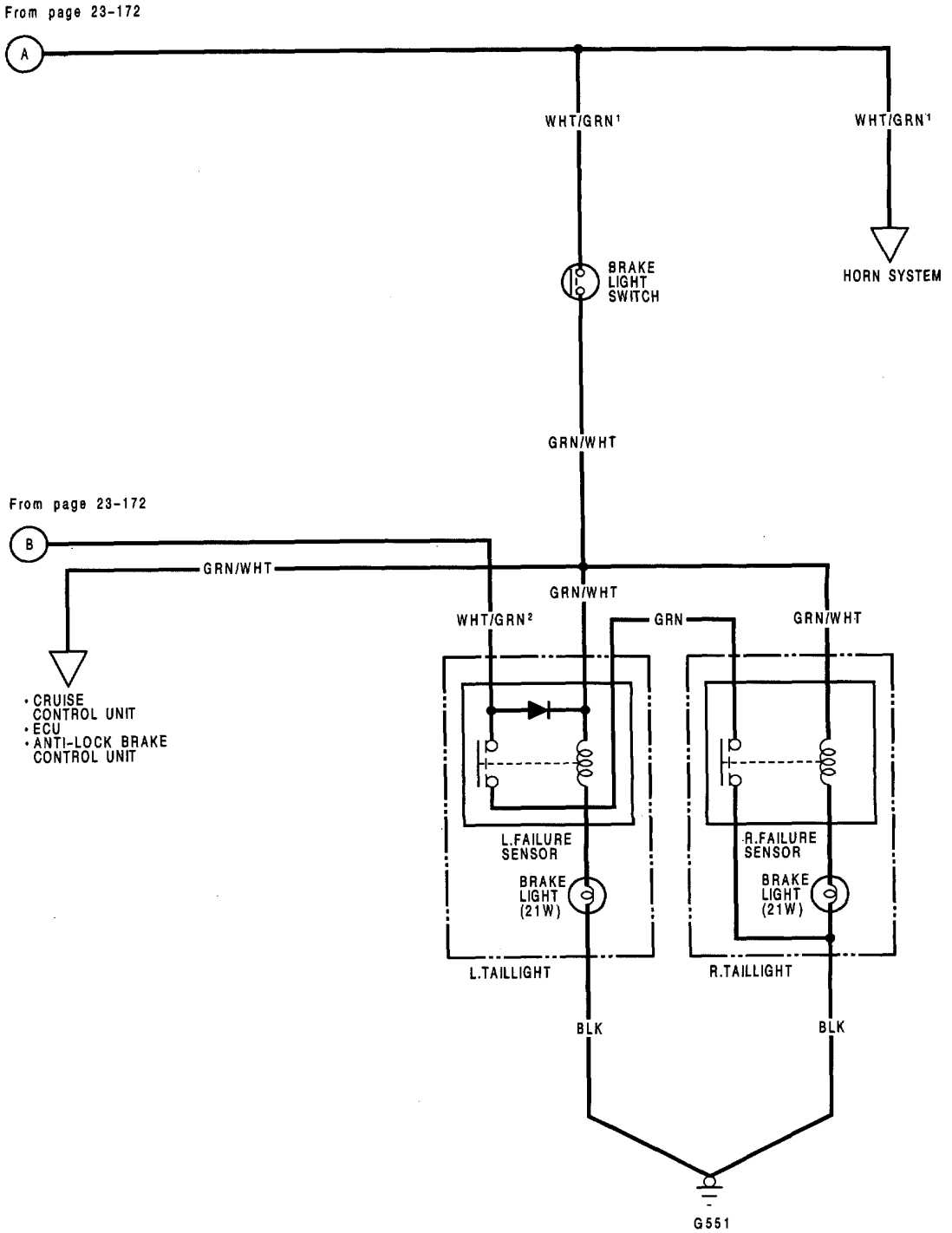

KY model:

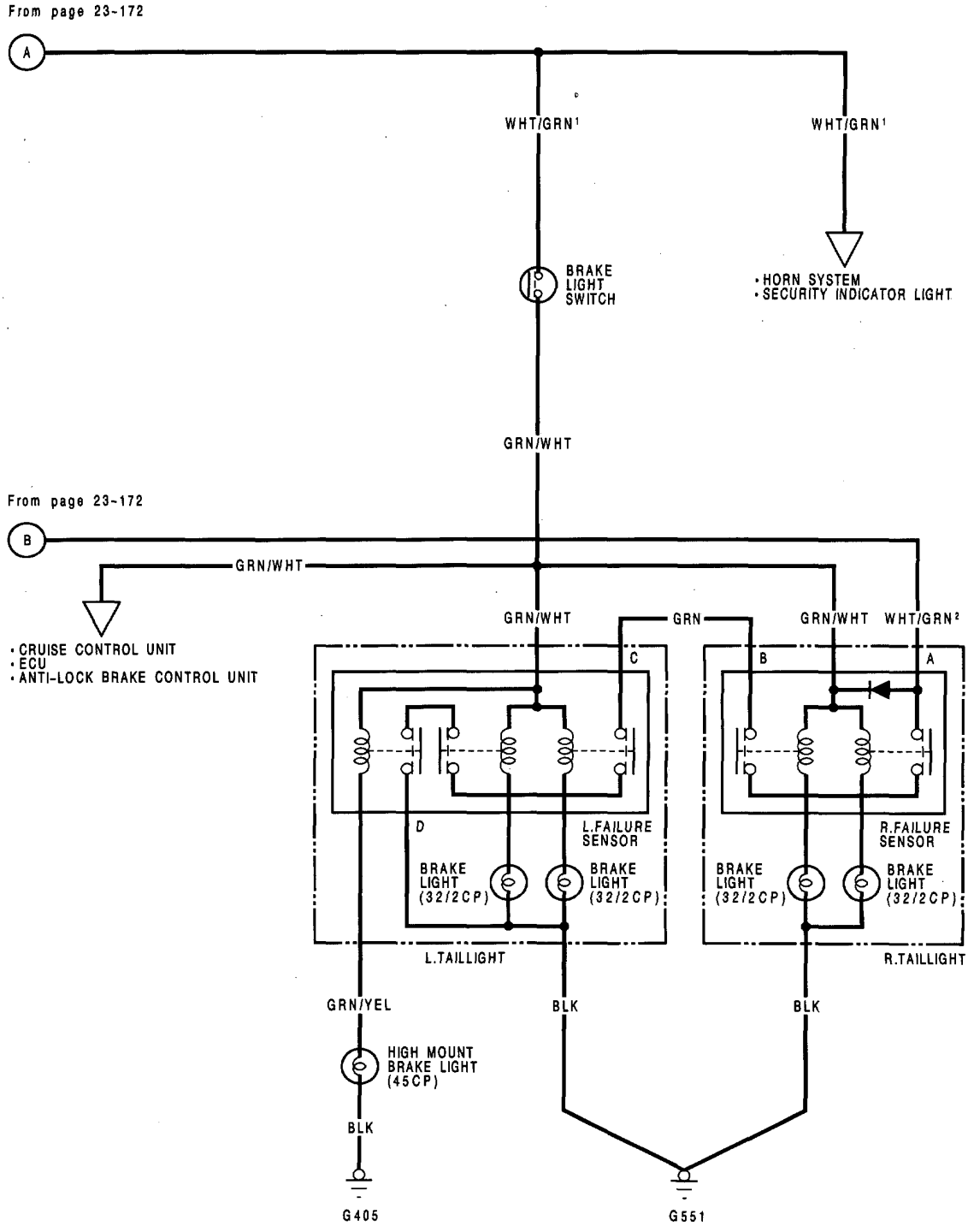
From page 23-172
A
WHT/GRN¹
WHT/GRN¹
BRAKE LIGHT SWITCH
• HORN SYSTEM
• SECURITY INDICATOR LIGHT
GRN/WHT
From page 23-172
B
GRN/WHT
• CRUISE CONTROL UNIT
• ECU
• ANTI-LOCK BRAKE CONTROL UNIT
GRN/WHT
GRN
GRN/WHT
WHT/GRN²
C
B
A
D
L.FAILURE SENSOR
R.FAILURE SENSOR
BRAKE LIGHT (32/2CP)
BRAKE LIGHT (32/2CP)
BRAKE LIGHT (32/2CP)
BRAKE LIGHT (32/2CP)
L.TAILLIGHT
R.TAILLIGHT
GRN/YEL
BLK
BLK
HIGH MOUNT BRAKE LIGHT (45CP)
BLK
G405
G551

Safety Indicator

Description

Safety Indicator System:
Bulbs are used to indicator when the trunk lid or a door is not fully closed, or when a brake lights is faulty, the bulbs will remain ON for about 2 seconds after the ignition switch has been turned ON to show that the system circuit is functioning.

Brake Light Bulb Failure Indicator: European model
If all brake light bulbs are OK, the indicator light stays off because the WHT/GRN wire is constantly being grounded by the two brake light failure sensors connected in series. With the brake light off, the ground is provided through the diode, the failure sensor relay coil and bulb filaments to ground. With the brake light on, all 2 relays, (1 in the left sensor, 1 in the right sensor) connected in series, supply ground. If any of the 2 bulbs is not working, the chain is broken and the WHT/GRN wire is not being grounded. The indicator light comes on.

Brake light Bulb Failure Indicator: KQ, KT models
If all brake light bulbs are OK, the indicator light stays off because the WHT/GRN wire is constantly being grounded by the two brake light failure sensors connected in series. With the brake light off, the ground is provided through the diode, the failure sensor relay coil and bulb filaments to ground. With the brake light on, all 3 relays, (2 in the left sensor, 1 in the right sensor) connected in series, supply ground. If any of the 3 bulbs is not working, the chain is broken and the WHT/GRN wire is not being grounded. The indicator light comes on.

Brake Light Bulb Failure Indicator: KY model
If all brake light bulbs are OK, the indicator light stays off because the WHT/GRN wire is constantly being grounded by the two brake light failure sensors connected in series. With the brake light off, the ground is provided through the diode, the failure sensor relay coil and bulb filaments to ground. With the brake light on, all 5 relays, (3 in the left sensor, 2 in the right sensor) connected in series, supply ground. If any of the 5 bulbs is not working, the chain is broken and the WHT/GRN wire is not being grounded. The indicator light comes on.

Brake Light Circuit Failure Indicator: KG model
When the ignition switch is turned ON, the brake system light stays on.
When the brake pedal is depressed once, the brake system light should go out. If there is defect in the brake system (blown fuse, faulty brake light switch, open or short circuit and blown bulbs), the brake system light stays on with the brake pedal operated.

Safety Indicator

Troubleshooting

NOTE: The numbers in the table show the troubleshooting sequence.

Symptom \ Item to be inspected	Blown * (7.5 A) fuse (in the under-dash fuse box)	Blown No. 57 (15 A) fuse (in the under-hood fuse/relay box)	Safety indicator input test	Blown bulb	Brake light failure sensor	Door switch	Trunk latch switch	Poor ground	Open circuit in wires or loose or disconnected terminals
No indicators operate.	1		2					G521 [G402]	YEL
Indicator panel illumination not lit with lighting switch ON.				1					RED/BLK or RED
Indicator lights fail to come on when ignition switch is turned to ON.			1						
Door warning lights not on with doors open.			2			1			GRN/BLU GRN/RED[1] GRN/YEL or GRN/WHT
Trunk warning light not on with trunk lid open.		1	3				2		GRN/BLK
Brake Indicator light not on with blown brake light bulb.			1						WHT/GRN or GRN
Brake Indicator light remains on with good brake light bulbs.			2		1			G551	

* { No. 13 (7.5 A): LHD [ ]: RHD
  No. 17 (7.5 A): RHD

Bulb Replacement

Remove the safety indicator assembly from the gauge housing (see page 23-150).

Remove the 2 screws, then replace the bad bulb.

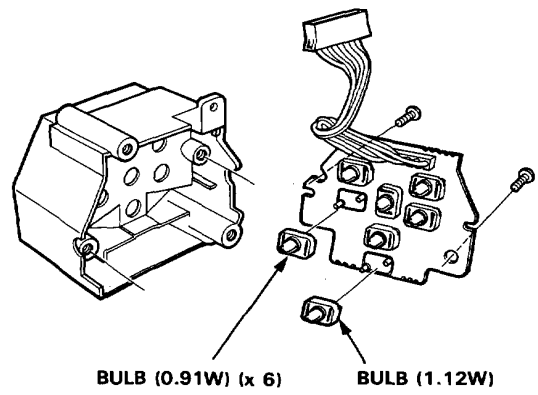

Safety Indicator

Indicator Input Test

CAUTION:

- **All SRS electrical wiring harnesses are covered with yellow outer insulation.**
- **When disconnecting the SRS wire harness, install the short connector on the airbag then disconnect the wire harness (See page 23-412).**
- **Replace the entire affected SRS harness assembly if there is an opencircuit or damage to the wiring.**
- **After installation of the gauge assembly, recheck the operation of the SRS indicator light.**

Remove the dashboard lower panel. Disconnect the D connector (22-P) from the gauge assembly (See page 23-148). Make the following input tests at the harness pins. If all tests prove OK, yet the indicator still fails to work, replace the safety indicator assembly.

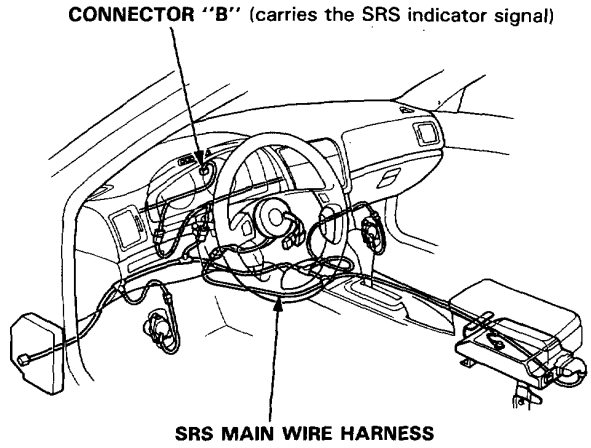

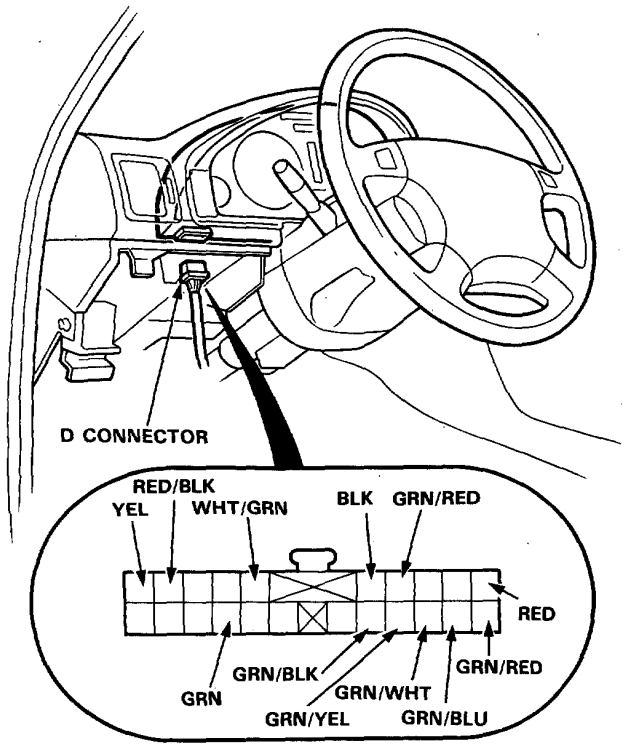

View from wire side

No.	Wire	Test condition	Test: desired result	Possible cause (if result is not obtained)
1	BLK	Under all conditions.	Check for continuity to ground: should be continuity.	• Poor gound (G251, 301, 302) • An open in the wire.
2	YEL	Ignition switch ON.	Check for voltage to ground: should be battery voltage.	• Blown No. 13 (15 A) fuse. • An open in the wire.
3	WHT/GRN	Brake pedal pushed.	Check for continuity to ground: should be continuity with the pedal pushed.	• Blown No. 39 (20 A) fuse. • Faulty brake light switch. • Blown brake light bulbs. • Faulty brake light failure sensors. • Poor ground (G452). • An open in the WHT/GRN or GRN/WHT wire.
4	GRN/BLK	Trunk lid opened.	Check for continuity to ground: should be continuity. NOTE: before testing, remove No. 57 (15 A) fuse.	• Faulty trunk latch switch. • An open in the wire.
5	RED/BLK and RED	Lighting switch ON and dashlight brightness control dial in full bright.	Check for voltage between RED/BLK (+) and RED (−) terminals: should be battery voltage.	• Faulty dashlight brightness control system. • An open in the wire.
6	GRN/BLU	Driver's door open.	Check for continuity to ground: should be continuity. NOTE: Before testing, remove No. 57 (15 A) fuse.	• Faulty door switch. • An open in the wire.
	GRN/RED[1]	R. Front door open.		
	GRN/YEL	L. Rear door open.		
	GRN/WHT	R. Rear door open		
7	GRN/RED[2]	Ignition switch ON.	Attach to ground: brake system light in the gauge should come on.	• Faulty safety indicator circuit. • Blown bulb. • An open in the wire.

KG model:

8	GRN	With brake pedal released, ignition switch OFF to ON.	Check for continuity in both directions between the GRN and BLK terminals: should be continuity in only one direction as the ignition switch is turned ON, then no continuity in both directions with brake pedal pushed.	• Faulty brake light circuit failure sensor.

Brake Light Failure Sensor Test (KE and KG models)

1. First make sure the brake lights come on when the brake pedal is pressed.
   - If all the brake lights come on, go to step 2.
   - If one of the brake lights does not come on, check whether the bulb is blown. If the bulb is OK, go to step 2.
   - If none of the brake lights come on, check the brake light circuit (See page 23-243).
2. Open the trunk lid and remove the access panel to the right taillight. Remove the screw, then open the bulb base panel. Make sure the BRAKE LAMP of the safety indicator does not come on when the **A**(WHT/GRN) wire of the 4-P connector is grounded and the ignition switch is turned from OFF to ON.

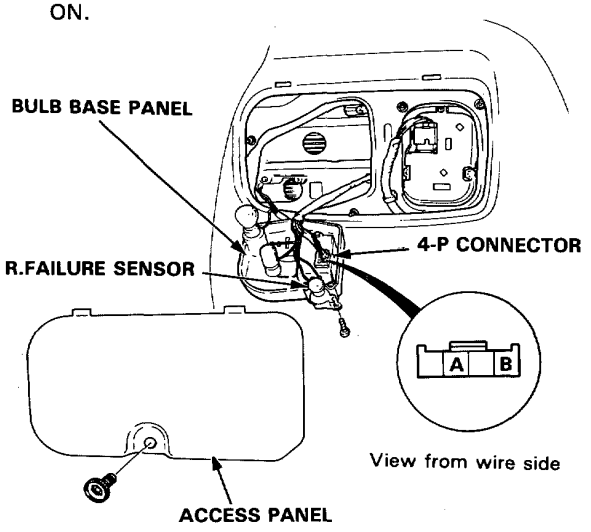

   - If the BRAKE LAMP comes on, check for an open in the **A**(WHT/GRN) wire between the safety indicator and the right failure sensor.
   - If the BRAKE LAMP does not come on, go to step 3.
3. Make sure the BRAKE LAMP does not come on when the ignition switch is turned from OFF to ON with the **B**(GRN) wire of the 4-P connector grounded and the brake pedal pressed.
   - If the BRAKE LAMP comes on, replace the right failure sensor.
   - If the BRAKE LAMP does not come on, go to step 4.
4. Remove the access panel to the left taillight. Remove the screw, then open the bulb base panel. Make sure the BRAKE LAMP does not come on when the ignition switch is turned from OFF to ON with the **C**(GRN) wire of the 4-P connector grounded and the brake pedal pressed.

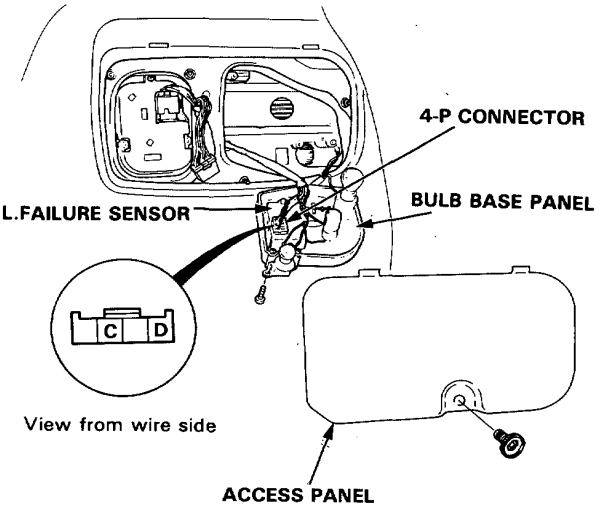

   - If the BRAKE LAMP comes on, there is an open in the **C**(GRN) wire between the left failure sensor and the right failure sensor.
   - If the BRAKE LAMP does not come on, go to step 5.
5. Make sure the BRAKE LAMP does not come on when the ignition switch is turned from OFF to ON with the **D**(BLK) wire of the 4-P connector grounded and the brake pedal pressed.
   - If the BRAKE LAMP comes on, replace the left failure sensor.
   - If the BRAKE LAMP does not come on, check for an open in the **D**(BLK) wire between the left failure sensor and ground, and check for a poor ground at G551.

Brake Light Failure Sensor Test (KF, KS and KX models)

1. First make sure the brake lights come on when the brake pedal is pressed.

   - If all the brake lights come on, go to step 2.
   - If one of the brake lights does not come on, check whether the bulb is blown. If the bulb is OK, go to step 2.
   - If none of the brake lights come on, check the brake light circuit (See page 23-244).

2. Open the trunk lid and remove the access panel to the left taillight. Remove the screw, then open the bulb base panel. Make sure the BRAKE LAMP of the safety indicator does not come on when the **A**(WHT/GRN) wire of the 4-P connector is grounded and the ignition switch is turned from OFF to ON.

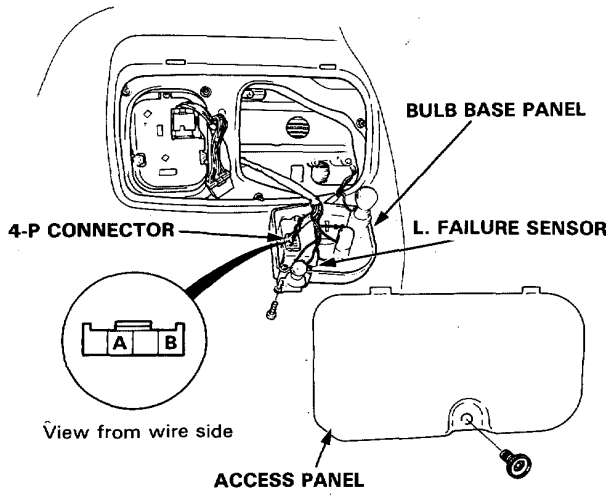

   - If the BRAKE LAMP comes on, check for an open in the **A**(WHT/GRN) wire between the safety indicator and the left failure sensor.
   - If the BRAKE LAMP does not come on, go to step 3.

3. Make sure the BRAKE LAMP does not come on when the ignition switch is turned from OFF to ON with the **B**(GRN) wire of the 4-P connector grounded and the brake pedal pressed.

   - If the BRAKE LAMP comes on, replace the left failure sensor.
   - If the BRAKE LAMP does not come on, go to step 4.

4. Remove the access panel to the right taillight. Remove the screw, then open the bulb base panel. Make sure the BRAKE LAMP does not come on when the ignition switch is turned from OFF to ON with the **C**(GRN) wire of the 4-P connector grounded and the brake pedal pressed.

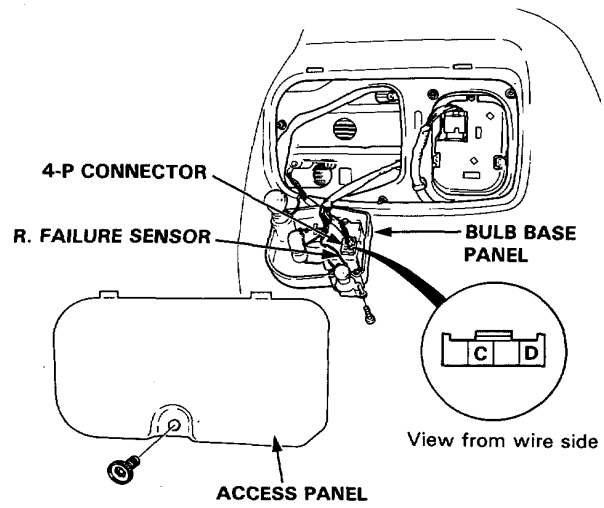

   - If the BRAKE LAMP comes on, there is an open in the **C**(GRN) wire between the right failure sensor and the right failure sensor.
   - If the BRAKE LAMP does not come on, go to step 5.

5. Make sure the BRAKE LAMP does not come on when the ignition switch is turned from OFF to ON with the **D**(BLK) wire of the 4-P connector grounded and the brake pedal pressed.

   - If the BRAKE LAMP comes on, replace the right failure sensor.
   - If the BRAKE LAMP does not come on, check for an open in the **D**(BLK) wire between the left failure sensor and ground, and check for a poor ground at G551.

Safety Indicator

Brake Light Failure Sensor Test (KY model)

1. First make sure the brake lights come on when the brake pedal is pressed.

   - If all the brake lights come on, go to step 2.
   - If one of the brake lights does not come on, check whether the bulb is blown. If the bulb is OK, go to step 2.
   - If none of the brake lights come on, check the brake light circuit (See page 23-245).

2. Open the trunk lid and remove the access panel to the right taillight. Remove the screw, then open the bulb base panel. Make sure the BRAKE LAMP of the safety indicator does not come on when the **A**(WHT/GRN) wire of the 6-P connector is grounded and the ignition switch is turned from OFF to ON.

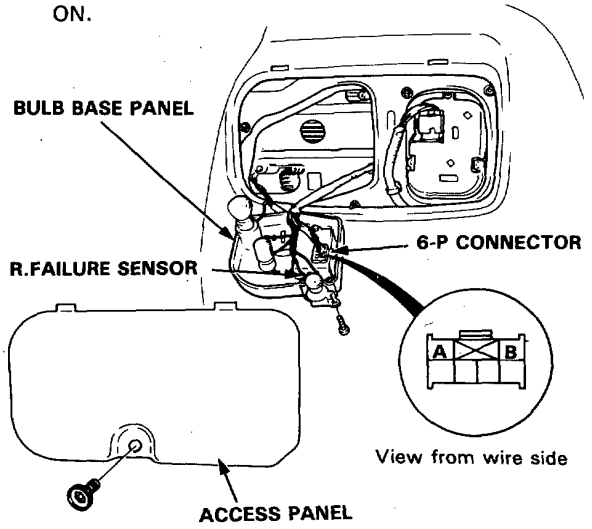

   - If the BRAKE LAMP comes on, check for an open in the **A**(WHT/GRN) wire between the safety indicator and the right failure sensor.
   - If the BRAKE LAMP does not come on, go to step 3.

3. Make sure the BRAKE LAMP does not come on when the ignition switch is turned from OFF to ON with the **B**(GRN) wire of the 6-P connector grounded and the brake pedal pressed.

   - If the BRAKE LAMP comes on, replace the right failure sensor.
   - If the BRAKE LAMP does not come on, go to step 4.

4. Remove the access panel to the left taillight. Remove the screw, then open the bulb base panel. Make sure the BRAKE LAMP does not come on when the ignition switch is turned from OFF to ON with the **C**(GRN) wire of the 6-P connector grounded and the brake pedal pressed.

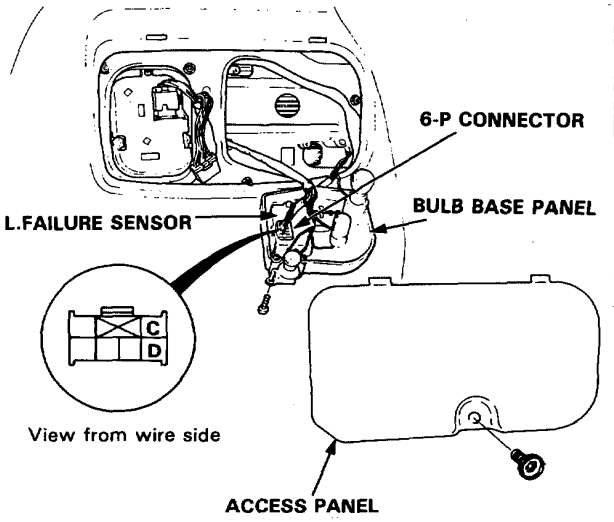

   - If the BRAKE LAMP comes on, there is an open in the **C**(GRN) wire between the left failure sensor and the right failure sensor.
   - If the BRAKE LAMP does not come on, go to step 5.

5. Make sure the BRAKE LAMP does not come on when the ignition switch is turned from OFF to ON with the **D**(BLK) wire of the 6-P connector grounded and the brake pedal pressed.

   - If the BRAKE LAMP comes on, replace the left failure sensor.
   - If the BRAKE LAMP does not come on, check for an open in the **D**(BLK) wire between the left failure sensor and ground, and check for a poor ground at G551.

Brake Light Failure Sensor Test (KQ and KT models)

1. First make sure the brake lights come on when the brake pedal is pressed.

   - If all the brake lights come on, go to step 2.
   - If one of the brake lights does not come on, check whether the bulb is blown. If the bulb is OK, go to step 2.
   - If none of the brake lights come on, check the brake light circuit (See page 23-243).

2. Open the trunk lid and remove the access panel to the right taillight. Remove the screw, then open the bulb base panel. Make sure the BRAKE LAMP of the safety indicator does not come on when the **A**(WHT/GRN) wire of the 4-P connector is grounded and the ignition switch is turned from OFF to ON.

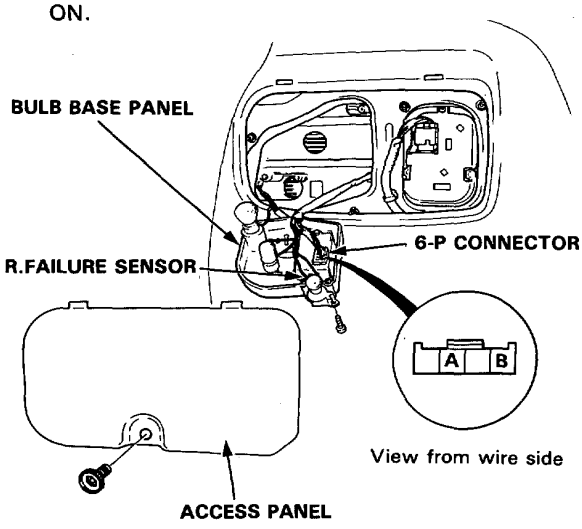

   - If the BRAKE LAMP comes on, check for an open in the **A**(WHT/GRN) wire between the safety indicator and the right failure sensor.
   - If the BRAKE LAMP does not come on, go to step 3.

3. Make sure the BRAKE LAMP does not come on when the ignition switch is turned from OFF to ON with the **B**(GRN) wire of the 4-P connector grounded and the brake pedal pressed.

   - If the BRAKE LAMP comes on, replace the right failure sensor.
   - If the BRAKE LAMP does not come on, go to step 4.

4. Remove the access panel to the left taillight. Remove the screw, then open the bulb base panel. Make sure the BRAKE LAMP does not come on when the ignition switch is turned from OFF to ON with the **C**(GRN) wire of the 6-P connector grounded and the brake pedal pressed.

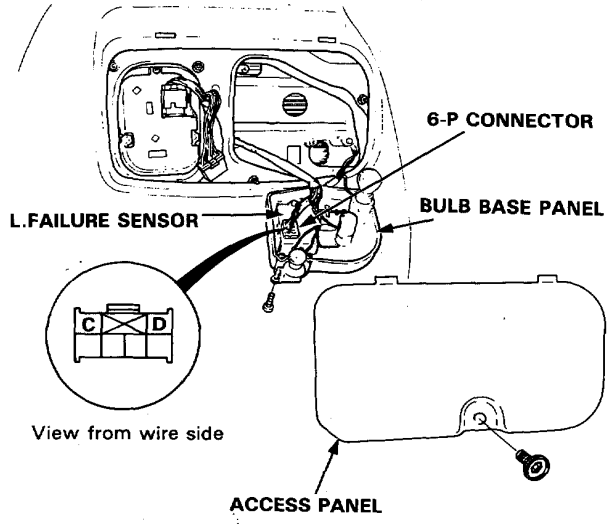

   - If the BRAKE LAMP comes on, there is an open in the **C**(GRN) wire between the left failure sensor and the right failure sensor.
   - If the BRAKE LAMP does not come on, go to step 5.

5. Make sure the BRAKE LAMP does not come on when the ignition switch is turned from OFF to ON with the **D**(BLK) wire of the 6-P connector grounded and the brake pedal pressed.

   - If the BRAKE LAMP comes on, replace the left failure sensor.
   - If the BRAKE LAMP does not come on, check for an open in the **D**(BLK) wire between the left failure sensor and ground, and check for a poor ground at G551.

Integrated Control Unit (LHD)

Circuit Diagram (European model)

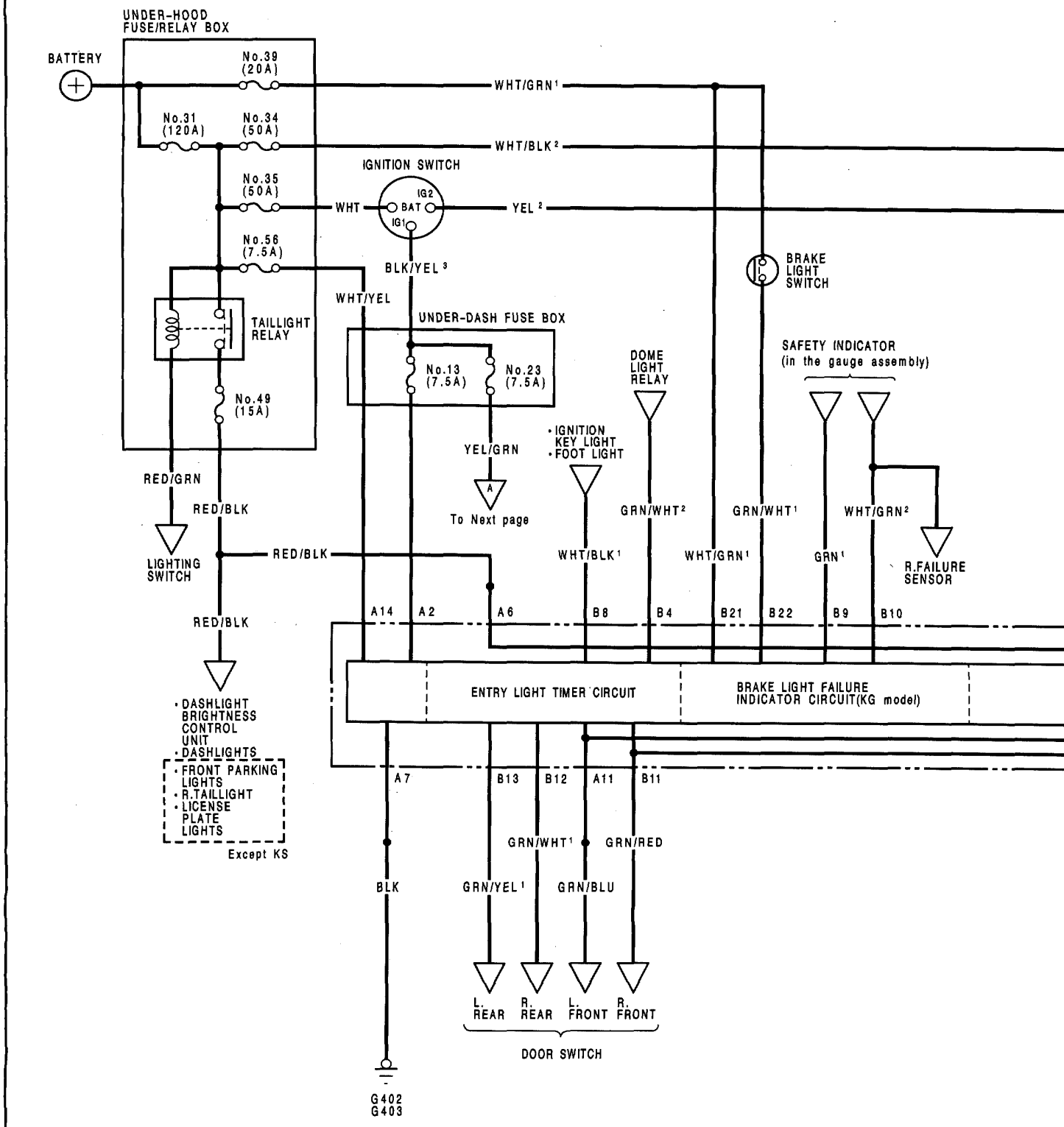

Description:

A multi-function control unit located on the left side kick panel integrates the functions of the entry light timer, brake light failure indicator (KG model), daytime running light control (KS model), lights-on reminder, power window key-off timer and intermittent wiper onto one circuit board, sharing common circuit functions.

NOTE: Several different wires have the same color. They have been given a number suffix to distinguish then (for example GRN/YEL[1] and GRN/YEL[2] are not the same).

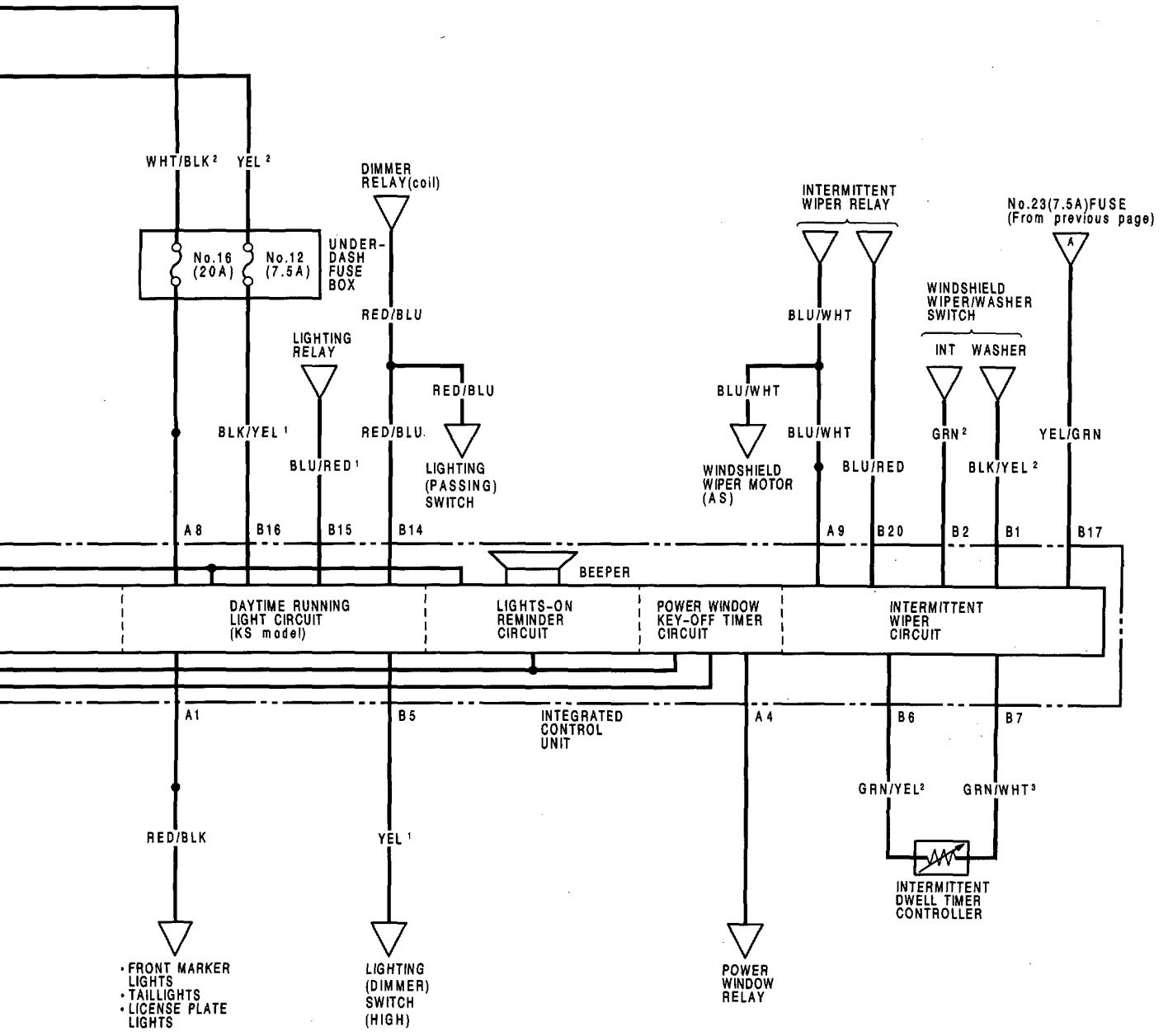

Integrated Control Unit (LHD)

Input Test (European model)

CAUTION:

- **All SRS electrical wiring harnesses are covered with yellow outer insulation.**
- **When disconnecting the SRS wire harness, install the short connector on airbag then disconnect the wire harness (See page 23-412).**
- **Replace the entire affected SRS harness assembly if there is an open circuit or damage to the wiring.**

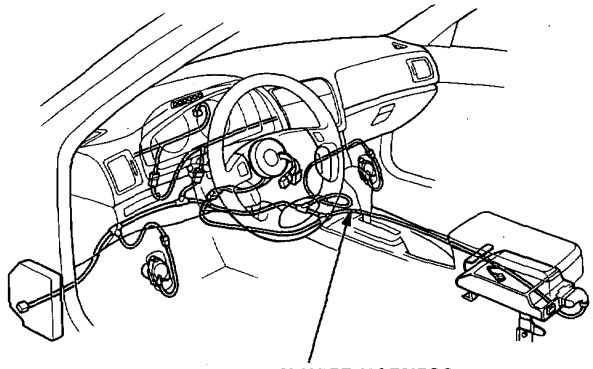

Remove the left kick panel cover, and under-dash fuse box, then disconnect the 22-P connector from the integrated control unit.
Remove the integrated control unit from the under-dash fuse box.

Make the following input tests at the connector terminals. If all tests prove OK, yet the system still falls to work, replace the control unit.

NOTE: Several different wires have the same color. They have been given a number suffix to distinguish them (for example WHT/BLK[1] and WHT/BLK[2] are not the same).

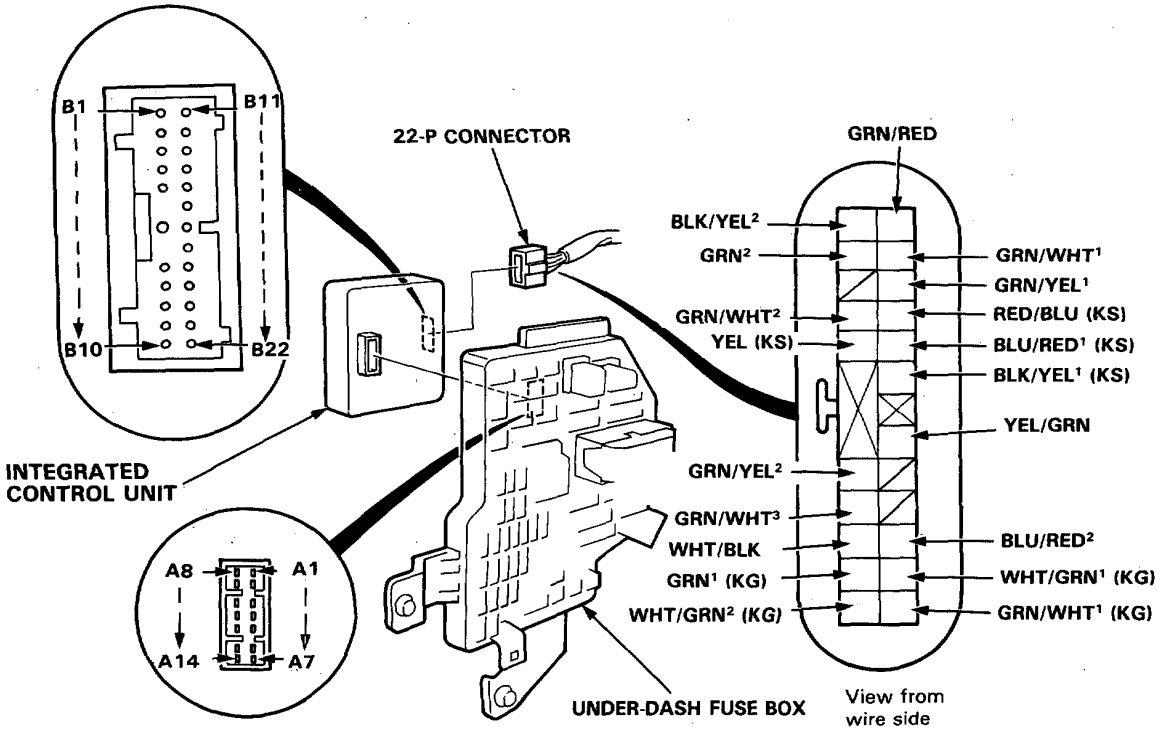

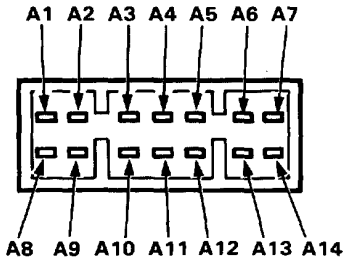

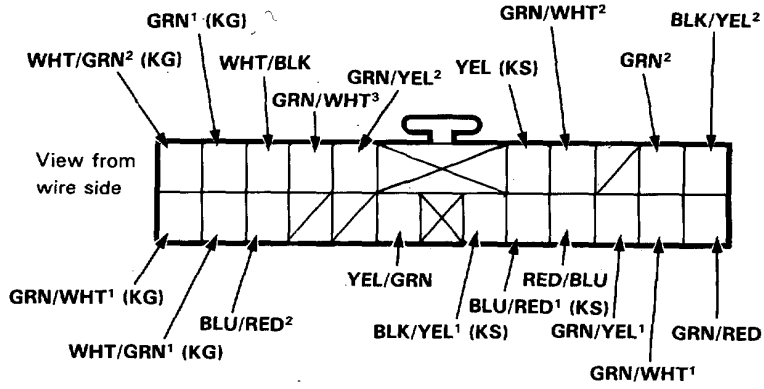

All Systems:

No.	Terminal	Test condition	Test: desired result	Possible cause (if result is not obtained)
1	A7	Under all conditions.	Check for continuity to ground: should be continuity.	• Poor ground (G402, G403). • An open in the wire.
2	A14	Under all conditions.	Check for voltage to ground: should be battery voltage.	• Blown No. 56 (7.5A) fuse. • An open in the wire.
3	A2	Ignition switch ON.	Check for voltage to ground: should be battery voltage.	• Blown bulb or No. 13 (7.5A) fuse. • An open in the wire.

Entry Light Timer System:

No.	Terminal	Test condition	Test: desired result	Possible cause (if result is not obtained)
1	A11	Driver's door opened.	Check for continuity to ground: should be continuity. NOTE: Before testing, remove No. 57 (15A) fuse.	• Faulty left door switch. • An open in the wire.
	GRN/RED	R. Front door opened.		
	GRN/YEL¹	L. Rear door opened.		
	GRN/WHT¹	R. Rear door opened.		
2	WHT/BLK¹	Under all conditions.	Connect to ground: foot light and ignition key light should come on.	• Blown bulb. • An open in the wire.
3	GRN/WHT²	Dome light switch at MIDDLE position.	Connect to ground: dome lights, front and rear courtesy lights should come on.	• Blown bulb. • Faulty dome light relay. • An open in the wire.

Lights on Reminder System:

No.	Terminal	Test condition	Test: desired result	Possible cause (if result is not obtained)
1	A11	Driver's door opened.	Check for continuity to ground: should be continuity. NOTE: Before testing, remove No. 57 (15A) fuse.	• Faulty left door switch. • An open in the wire.
2	A6	Lighting switch ON.	Check for voltage to ground: should be battery voltage.	• Blown No. 49 (15A) fuse. • Faulty lighting switch. • An open in the wire. • Faulty taillight relay.

(cont'd)

Integrated Control unit (LHD)

Input Test (European model, cont'd)

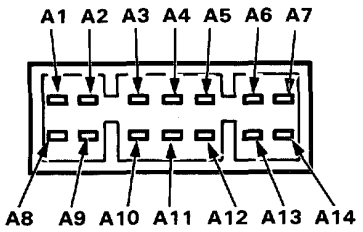

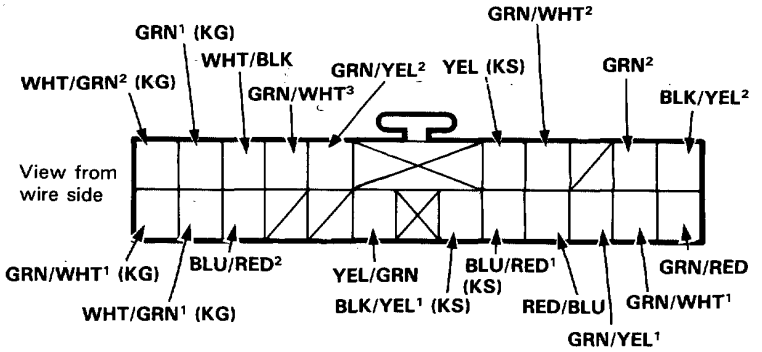

Brake Light Failure Indicator System (KG model):

No.	Terminal	Test condition	Test: desired result	Possible cause (if result is not obtained)
1	WHT/GRN¹	Under all conditions.	Check for voltage to ground: should be battery voltage.	• Blown No. 39 (20 A) fuse. • An open in the wire.
2	WHT/GRN²	Brake pedal pushed.	Check for continuity to ground: should be continuity.	• Faulty failure sensor. • An open in the wire. • Poor ground (G551).
3	GRN¹	Ignition Switch ON.	Attach to ground: brake indicator light in the safety indicator should come on.	• Faulty safety indicator (in the gauge assembly). • An open in the wire.
4	GRN/WHT¹	Brake pedal pushed.	Check for voltage to ground: should be battery voltage.	• Faulty brake light switch. • An open in the wire.
		Brake pedal released.	Check for continuity to ground: should be continuity.	• Poor ground (G551). • An open in the wire.

Wiper System:

No.	Terminal	Test condition	Test: desired result	Possible cause (if result is not obtained)
1	YEL/GRN BLU/RED	Ignition switch ON.	Check for voltage to ground: should be battery voltage.	• Blown No. 23 (7.5A) fuse. • Faulty intermittent relay. • An open in the wire.
2	GRN²	Ignition switch ON. and wiper switch INT.	Check for voltage to ground: should be battery voltage.	• Blown No. 23 (7.5 A) fuse. • Faulty wiper switch. • An open in the wire.
3	BLK/YEL²	Ignition switch ON and washer switch ON.	Check for voltage to ground: should be battery voltage.	• Blown No. 23 (7.5A) fuse. • Faulty washer switch. • An open in the wire.
4	GRN/YEL² GRN/WHT³	Intermittent dwell time control ring turned.	Check for resistance between the terminals: should vary from 0 to 30,000 ohms as the ring is turned.	• Faulty intermittent dwell time controller. • An open in the wire.
5	A9	Ignition switch ON, wiper switch OFF.	Check for voltage to ground: should be battery voltage.	• Faulty wiper motor (automatic-stop circuit). • An open in the wire.

Power Window Key-off Timer System:

No.	Terminal	Test condition	Test: desired result	Possible cause (if result is not obtained)
1	A11	Driver's door opened.	Check for continuity to ground: should be continuity. NOTE: Before testing, remove No. 57 (15A) fuse.	• Faulty door switch. • An open in the wire.
	GRN/RED	Front passenger's door opened.		
2	A4	Connect the A4 terminal to the A14 terminal.	Check window operation: Power windows should operate.	• Faulty power window relay. • Poor ground (G402, G403). • An open in the wire.

Daytime Running Light System (KS model):

No.	Terminal	Test condition	Test: desired result	Possible cause (if result is not obtained)
1	A8	Under all conditions.	Check for voltage to ground: should be battery voltage.	• Blown No. 16 (20 A) fuse. • An open in the wire.
2	BLK/YEL[1]	Ignition switch ON.	Check for voltage to ground: should be battery voltage.	• Blown No. 12. (7.5 A) fuse. • An open in the wire.
3	YEL	Dimmer switch HI.	Check for continuity to ground: should be continuity.	• Faulty lighting switch. • An open in the wire. • Poor ground (G402, G403).
4	BLU/RED[1]	Under all conditions.	Check for voltage to ground: should be battery voltage.	• Faulty headlight relay. • An open in the wire.
		Lighting switch ≡D.	Headlights (LO) should come on.	• Faulty lighting switch and relay. • Blown bulb.
5	RED/BLU	Lighting switch ≡D.	Check for voltage to ground: should be battery voltage.	• Faulty dimmer relay. • An open in the wire.
		Lighting switch ≡D and passing switch ON.	Headlights (HI) should come on.	• Faulty lighting switch. • An open in the wire.
6	A6	Lighting switch ≡D or ≡DO≡.	Check for voltage to ground: should be battery voltage.	• Blown No. 49 (15 A) fuse. • Faulty taillight relay. • An open in the wire.
7	A1	Connect the A1 terminal to the A8 terminal.	Parking lights, taillights and license plate lights should come on.	• Blown bulbs. • An open in the wire.

Integrated Control unit (LHD)

Circuit Diagram (KY model)

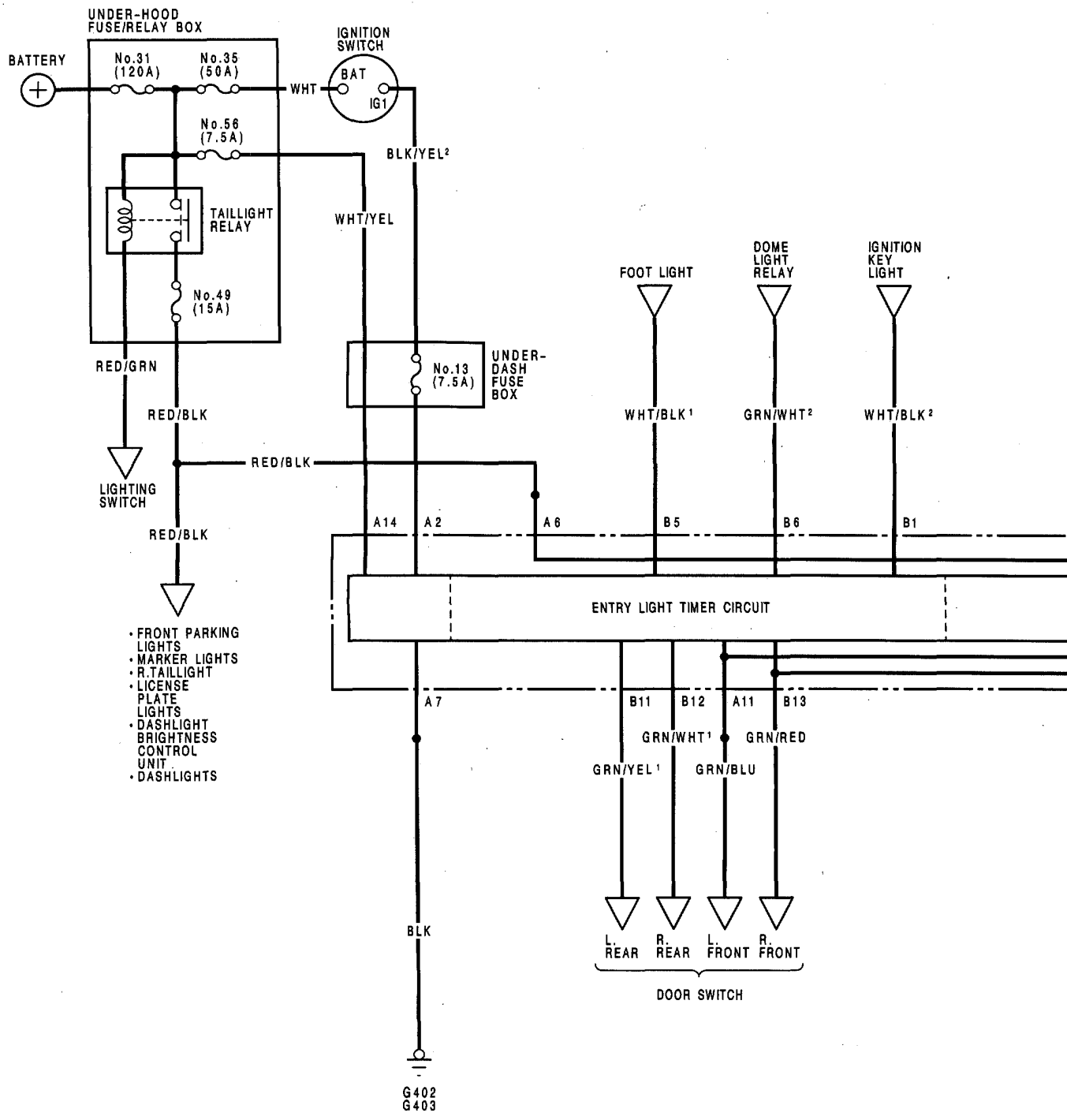

Description:
A multi-function control unit located on the left side kick panel integrates the functions of the entry light timer, lights-on reminder, seat belt reminder, power window key-off timer and intermittent wiper onto one circuit board, sharing common circuit functions.

NOTE: Several different wires have the same color. They have been given a number suffix to distinguish then (for example GRN/YEL[1] and GRN/YEL[2] are not the same).

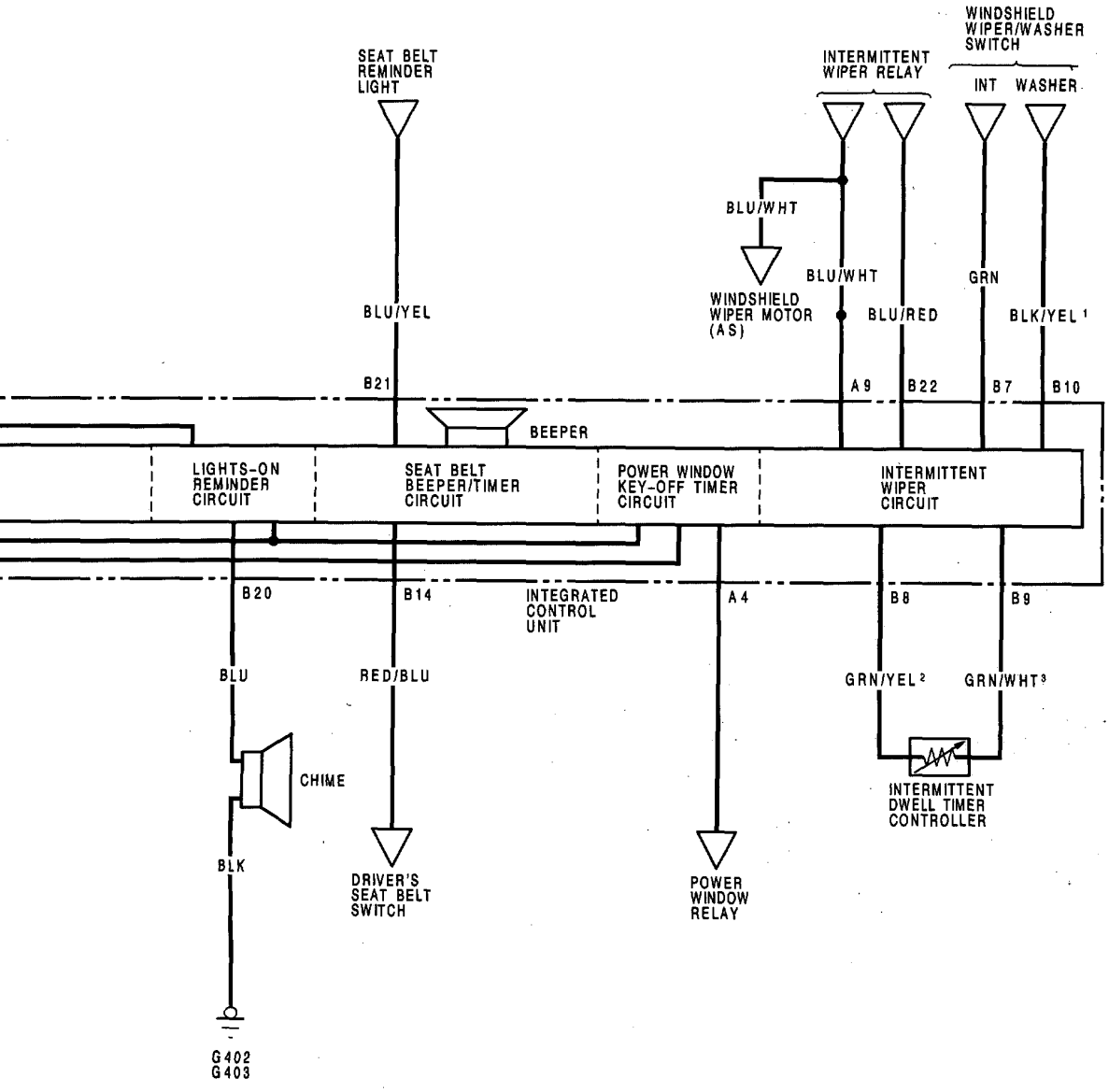

Integrated Control Unit (LHD)

Input Test (KY model)

CAUTION:

- **All SRS electrical wiring harnesses are covered with yellow outer insulation.**
- **When disconnecting the SRS wire harness, install the short connector on airbag then disconnect the wire harness (See page 23-412).**
- **Replace the entire affected SRS harness assembly if there is an open circuit or damage to the wiring.**

Remove the left kick panel cover, and under-dash fuse box, then disconnect the 22-P connector from the integrated control unit.
Remove the integrated control unit from the under-dash fuse box.

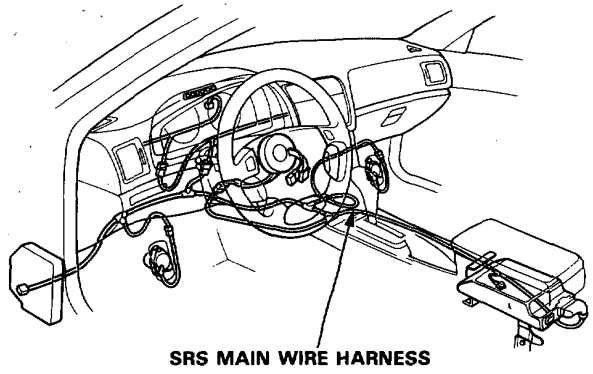

Make the following input tests at the harness pins. If all tests prove OK, yet the system still falls to work, replace the control unit.

NOTE: Several different wires have the same color. They have been given a number suffix to distinguish them (for example WHT/BLK[1] and WHT/BLK[2] are not the same).

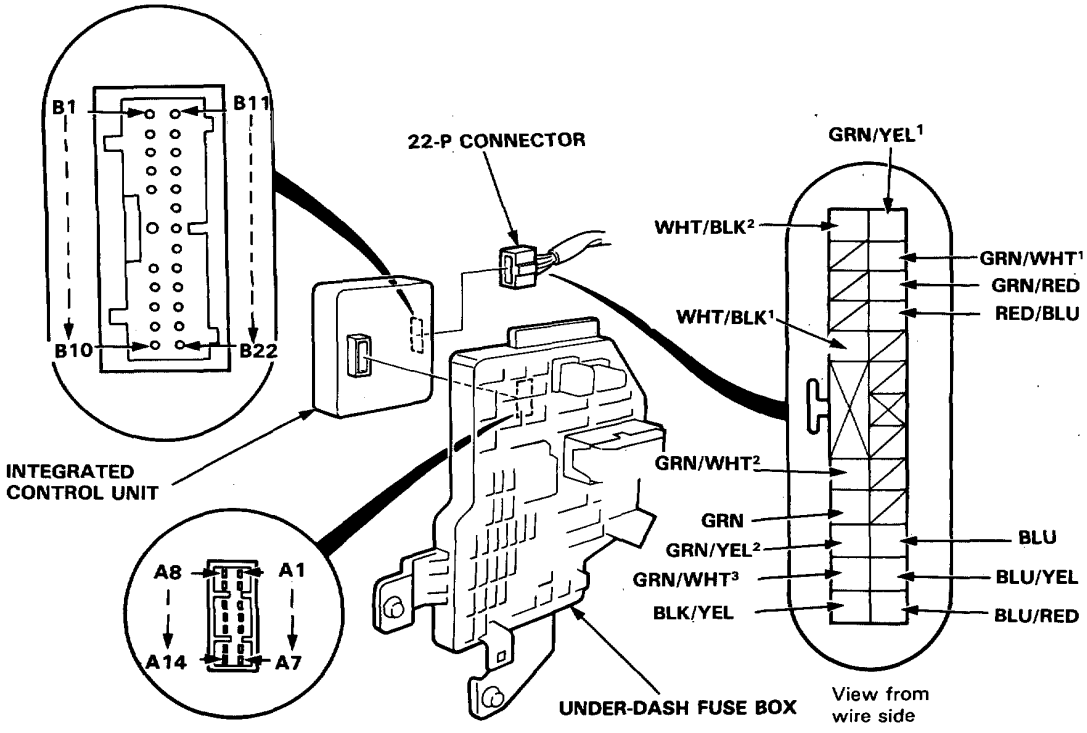

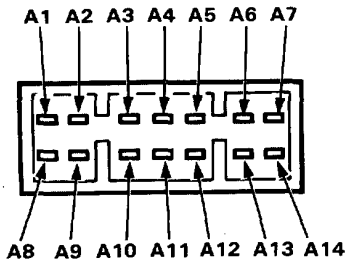

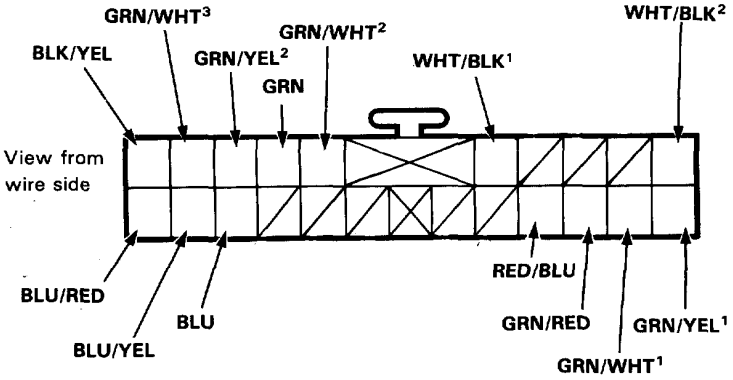

All Systems:

No.	Terminal	Test condition	Test: desired result	Possible cause (if result is not obtained)
1	A7	Under all conditions.	Check for continuity to ground: should be continuity.	• Poor ground (G402, G403). • An open in the wire.
2	A14	Under all conditions.	Check for voltage to ground: should be battery voltage.	• Blown No. 56 (7.5A) fuse. • An open in the wire.
3	A2	Ignition switch ON.	Check for voltage to ground: should be battery voltage.	• Blown bulb or No. 13 (7.5A) fuse. • An open in the wire.

Lights-on Reminder System:

No.	Terminal	Test condition	Test: desired result	Possible cause (if result is not obtained)
1	A11	Driver's door opened.	Check for continuity to ground: should be continuity. NOTE: Before testing, remove No. 57 (15A) fuse.	• Faulty left door switch. • An open in the wire.
2	A6	Lighting switch ON.	Check for voltage to ground: should be battery voltage.	• Blown No. 49 (15) fuse. • Faulty lighting switch. • An open in the wire. • Faulty taillight relay.
3	BLU	Connect the A14 terminal to the BLU terminal.	Check chime operation: Chime should activate each time the battery is connected.	• Faulty chime. • An open in the wire.

(cont'd)

Integrated Control Unit (LHD)

Input Test (KY model, cont'd)

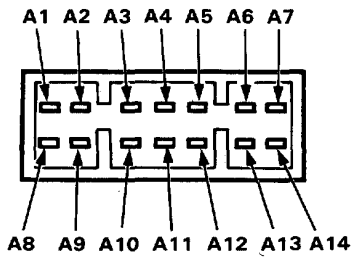

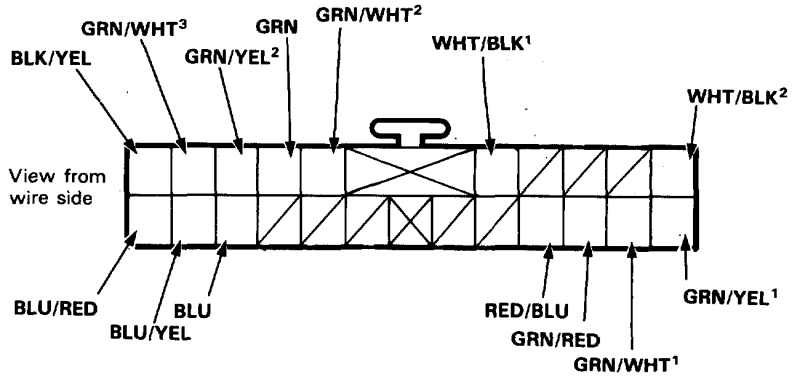

Seat Belt Reminder System:

No.	Terminal	Test condition	Test: desired result	Possible cause (if result is not obtained)
1	BLU/YEL	Ignition switch ON.	Connect to ground: seat belt reminder light should come on.	• Blown No. 13 (7.5A) fuse. • Blown bulb. • An open in the wire.
2	RED/BLU	Driver's seat belt not buckled.	Check for continuity to ground: should be continuity.	• Faulty seat belt switch. • Poor ground (G521). • An open in the wire.

Engry Light Control System:

No.	Terminal	Test condition	Test: desired result	Possible cause (if result is not obtained)
1	A11	Driver's door opened.	Check for continuity to ground: should be continuity. NOTE: Before testing, remove No. 57 (15A) fuse.	• Faulty left door switch. • An open in the wire.
	GRN/RED	R. Front door opened.		
	GRN/YEL1	L. Rear door opened.		
	GRN/WHT1	R. Rear door opened.		
2	WHT/BLK1	Under all conditions.	Connect to ground: foot light should come on.	• Blown bulb. • An open in the wire.
3	WHT/BLK2	Under all conditions.	Connect to ground: ignition key light should come on.	• Blown bulb. • An open in the wire.
4	GRN/WHT2	Dome light switch at MIDDLE position.	Connect to ground: dome lights, front and rear courtesy lights should come on.	• Blown bulb. • Faulty dome light relay. • An open in the wire.

Power Window Key-off Timer System:

No.	Terminal	Test condition	Test: desired result	Possible cause (if result is not obtained)
1	A11	Driver's door opened.	Check for continuity to ground: should be continuity. NOTE: Before testing, remove No. 57 (15A) fuse.	• Faulty door switch. • An open in the wire.
	GRN/RED	Front passenger's door opened.		
2	A4	Connect the A4 terminal to the A14 terminal.	Check window operation: Power windows should operate.	• Faulty power window relay. • Poor ground (G402, G403). • An open in the wire.

Wiper System:

No.	Terminal	Test condition	Test: desired result	Possible cause (if result is not obtained)
1	BLU/RED	Ignition switch ON.	Check for voltage to ground: should be battery voltage.	• Blown No. 23 (7.5A) fuse. • Faulty intermittent relay. • An open in the wire.
2	GRN	Ignition switch ON. and wiper switch at INT position.	Check for voltage to ground: should be battery voltage.	• Blown No. 23 (7.5 A) fuse. • Faulty wiper switch. • An open in the wire.
3	BLK/YEL	Ignition switch ON and washer switch ON.	Check for voltage to ground: should be battery voltage.	• Blown No. 23 (7.5A) fuse. • Faulty washer switch. • An open in the wire.
4	GRN/YEL[2]	Intermittent dwell time control ring turned.	Check for resistance between the terminals: should vary from 0 to 30,000 ohms as the ring is turned.	• Faulty intermittent dwell time controller. • An open in the wire.
	GRN/WHT[3]			
5	A9	Ignition switch ON, wiper switch OFF	Check for voltage to ground: should be battery voltage.	• Faulty wiper motor (automatic-stop circuit). • An open in the wire.

Integrated Control Unit (RHD)

Circuit Diagram

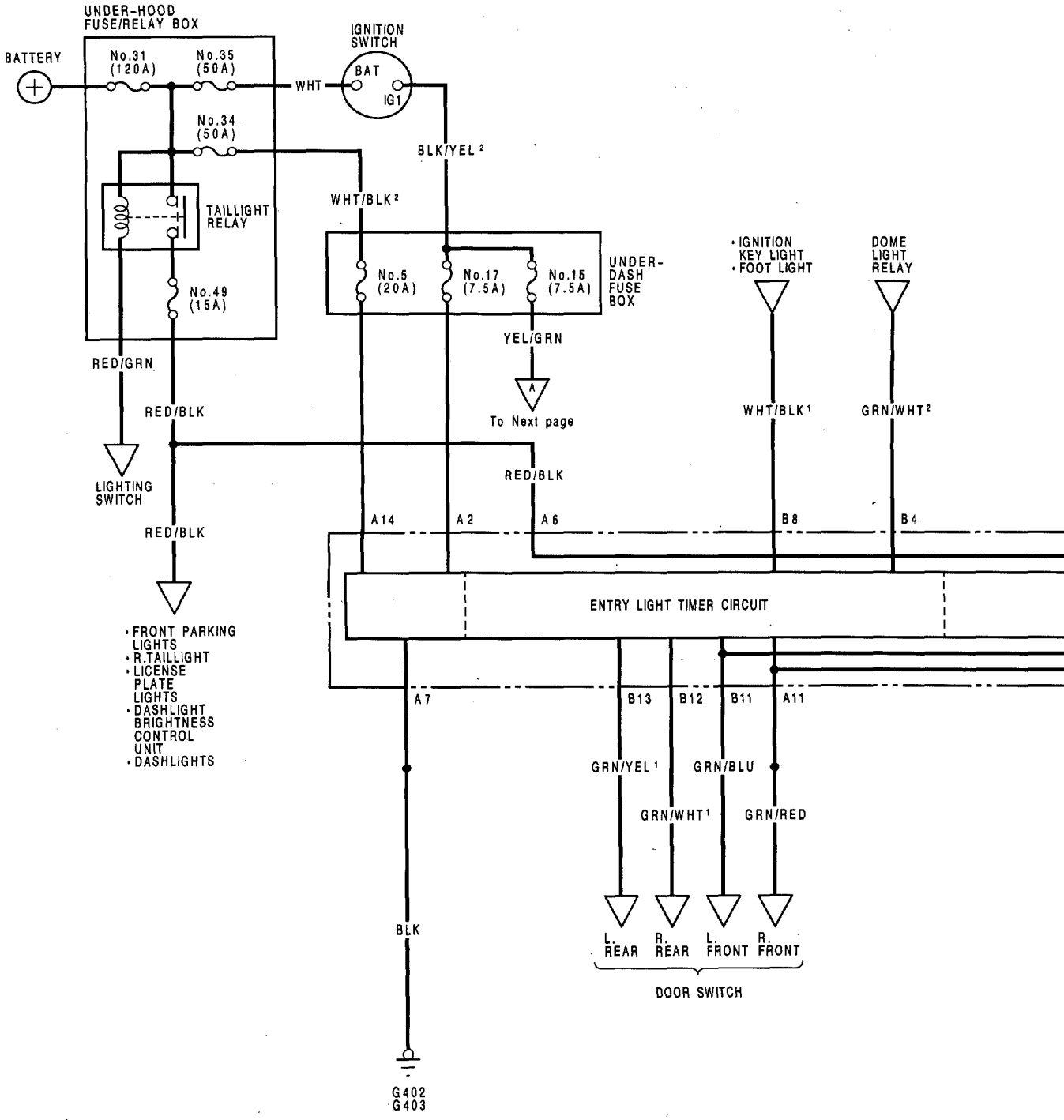

Description

A multi-function control unit located on the left side kick panel integrates the functions of the entry light timer, lights-on reminder, power window key-off timer and intermittent wiper onto one circuit board, sharing common circuit functions.

NOTE: Several different wires have the same color. They have been given a number suffix to distinguish then (for example GRN/YEL[1] and GRN/YEL[2] are not the same).

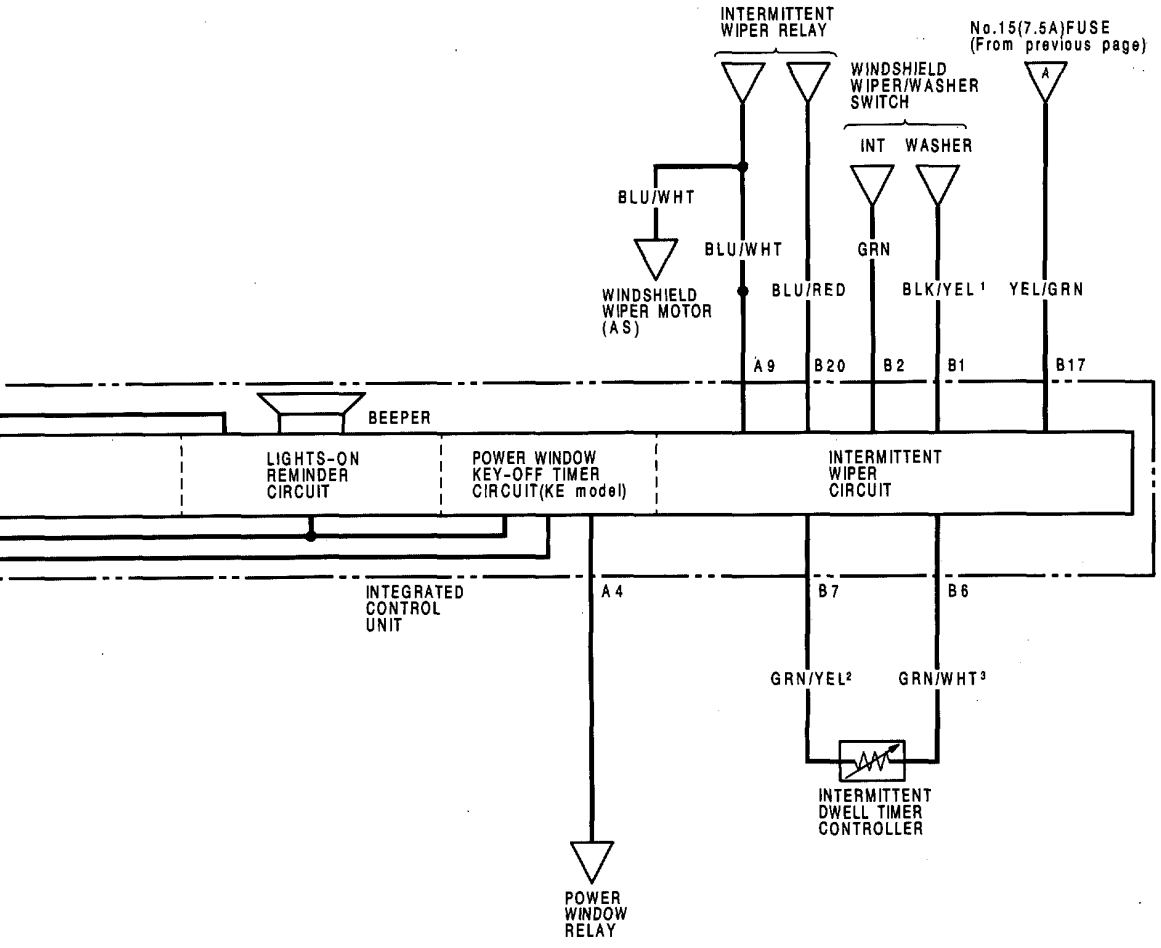

Integrated Control Unit (RHD)

Input Test

CAUTION:

- **All SRS electrical wiring harnesses are covered with yellow outer insulation.**
- **When disconnecting the SRS wire harness, install the short connector on airbag then disconnect the wire harness (See page 23-412).**
- **Replace the entire affected SRS harness assembly if there is an open circuit or damage to the wiring.**

Remove the right kick panel cover, and under-dash fuse box, then disconnect the 22-P connector from the integrated control unit.
Remove the integrated control unit from the under-dash fuse box.

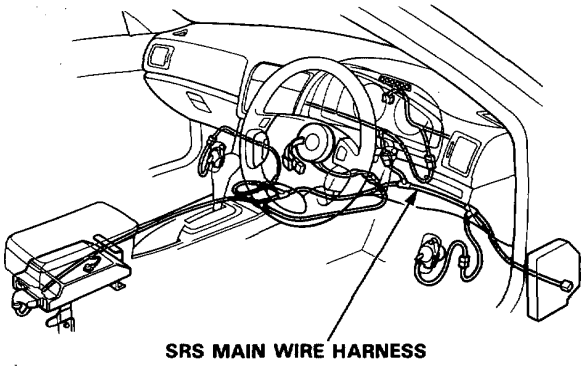

Make the following input tests at the harness pins. If all tests prove OK, yet the system still falls to work, replace the control unit.

NOTE: Several different wires have the same color. They have been given a number suffix to distinguish them (for example WHT/BLK[1] and WHT/BLK[2] are not the same).

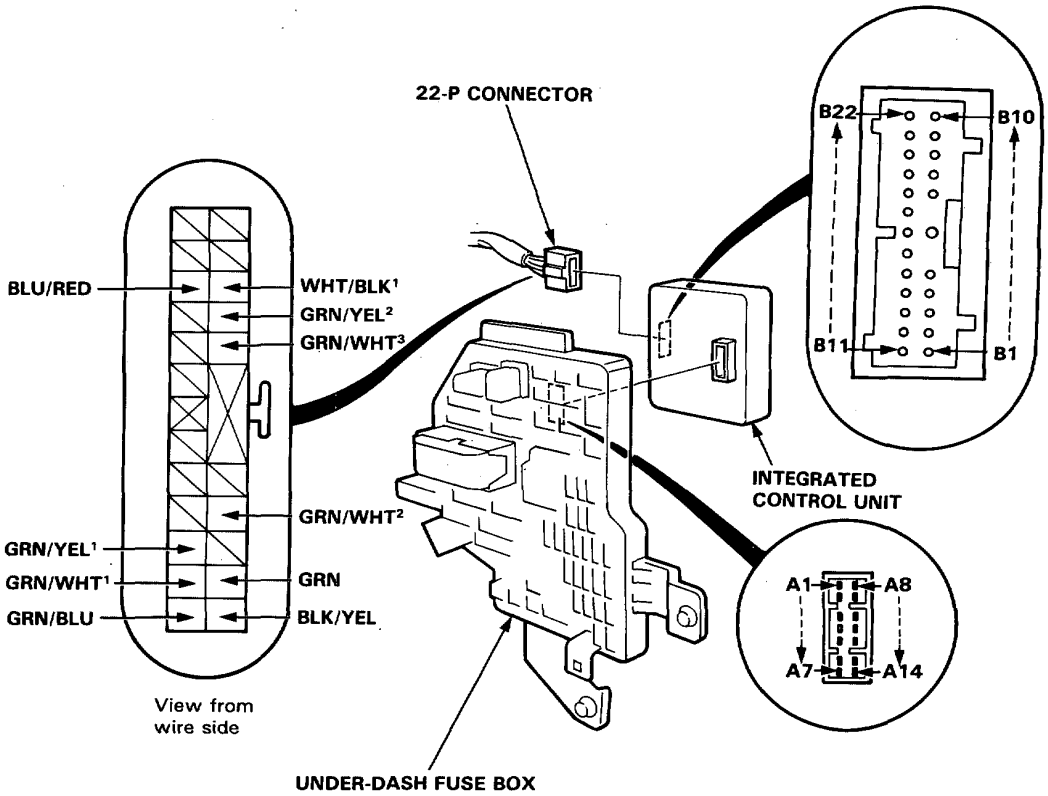

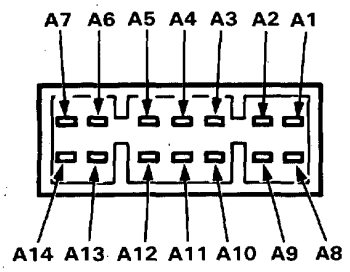

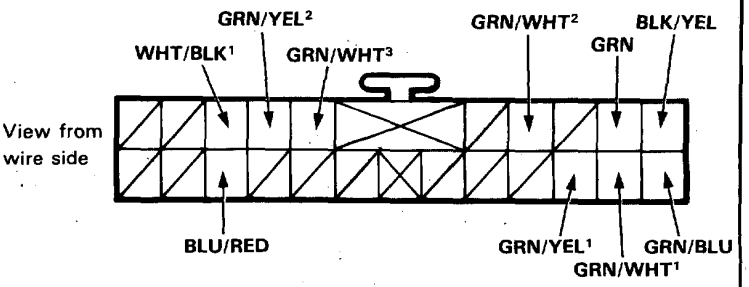

All Systems:

No.	Terminal	Test condition	Test: desired result	Possible cause (if result is not obtained)
1	A7	Under all conditions.	Check for continuity to ground: should be continuity.	• Poor ground (G402, G403). • An open in the wire.
2	A14	Under all conditions.	Check for voltage to ground: should be battery voltage.	• Blown No. 5 (20A) fuse. • An open in the wire.
3	A2	Ignition switch ON.	Check for voltage to ground: should be battery voltage.	• Blown bulb or No. 17 (7.5A) fuse. • An open in the wire.

Entry Light Timer System:

No.	Terminal	Test condition	Test: desired result	Possible cause (if result is not obtained)
1	A11	Driver's door opened.	Check for continuity to ground: should be cotinuity. NOTE: Before testing, remove No. 57 (15A) fuse.	• Faulty left door switch. • An open in the wire.
	GRN/BLU	L. Front door opened.		
	GRN/YEL1	L. Rear door opened.		
	GRN/WHT1	R. Rear door opened.		
2	WHT/BLK1	Under all conditions.	Connect to ground: foot light and ignition key light should come on.	• Blown bulb. • An open in the wire.
3	GRN/WHT2	Dome light switch at MIDDLE position.	Connect to ground: dome lights, front and rear courtesy lights should come on.	• Blown bulb. • Faulty dome light relay. • An open in the wire.

Lights-on Reminder System:

No.	Terminal	Test condition	Test: desired result	Possible cause (if result is not obtained)
1	A11	Driver's door opened.	Check for continuity to ground: should be continuity. NOTE: Before testing, remove No. 57 (15A) fuse.	• Faulty left door switch. • An open in the wire.
2	A6	Lighting switch ON.	Check for voltage to ground: should be battery voltage.	• Blown No. 49 (15A) fuse. • Faulty lighting switch. • An open in the wire. • Faulty taillight relay.

(cont'd)

Input Test (cont'd)

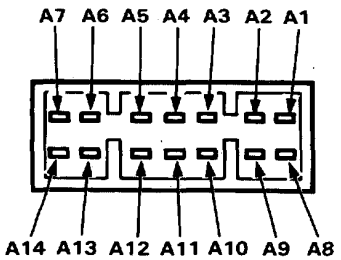

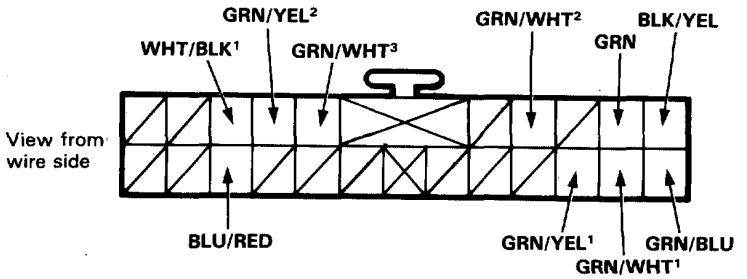

Power Window Key-off Timer System:

No.	Terminal	Test condition	Test: desired result	Possible cause (if result is not obtained)
1	A11	Driver's door opened.	Check for continuity to ground: should be continuity. NOTE: Before testing, remove No. 57 (15A) fuse.	• Faulty door switch. • An open in the wire.
	GRN/BLU	Front passenger's door opened.		
2	A4	Connect the A4 terminal to the A14 terminal.	Check window operation: Power windows should operate.	• Faulty power window relay. • Poor ground (G402, G403). • An open in the wire.

Wiper System:

No.	Terminal	Test condition	Test: desired result	Possible cause (if result is not obtained)
1	YEL/GRN	Ignition switch ON.	Check for voltage to ground: should be battery voltage.	• Blown No. 23 (7.5A) fuse. • Faulty intermittent relay. • An open in the wire.
	BLU/RED			
2	GRN	Ignition switch ON. and wiper switch INT.	Check for voltage to ground: should be battery voltage.	• Blown No. 23 (7.5 A) fuse. • Faulty wiper switch. • An open in the wire.
3	BLK/YEL	Ignition switch ON and washer switch ON.	Check for voltage to ground: should be battery voltage.	• Blown No. 23 (7.5A) fuse. • Faulty washer switch. • An open in the wire.
4	GRN/YEL²	Intermittent dwell time control ring turned.	Check for resistance between the terminals: should vary from 0 to 30,000 ohms as the ring is turned.	• Faulty intermittent dwell time controller. • An open in the wire.
	GRN/WHT³			
5	A9	Ignition switch ON, wiper switch OFF.	Check for voltage to ground: should be battery voltage.	• Faulty wiper motor (automatic-stop circuit). • An open in the wire.

Lighting System

Component Location Index (LHD)

CAUTION:

- **All SRS electrical wiring harnesses are covered with yellow outer insulation.**
- **When disconnecting the SRS wire harness, install the short connector on the airbag then disconnect the wire harness (See page 23-412).**
- **Replace the entire affected SRS harness assembly if there is an open circuit or damage to the wiring.**

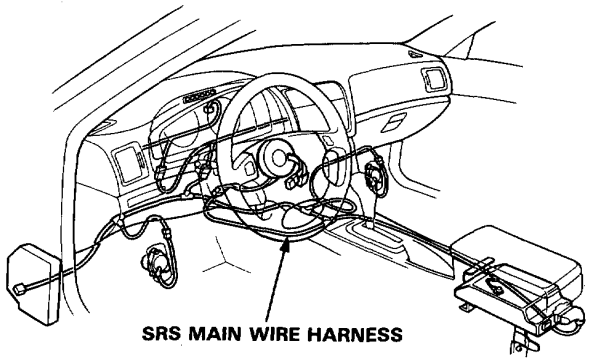

HIGH BEAM INDICATOR LIGHT
(in the gauge assembly)
Gauge assembly, page 23-146

SECURITY CONTROL UNIT
Input Test, page 23-399

REAR FOG
LIGHT SWITCH (European model)
- Removal, page 23-216
- Test, page 23-216

LIGHTING SWITCH
Test, page 23-212
Replacement, page 23-214

HEADLIGHT ADJUSTER
SWITCH (European model)
- Removal, page 23-217
- Test, page 23-217

DAYTIME RUNNING LIGHT CIRCUIT
(in the integrated control unit) (KS model)
Input Test, page 23-188

Component Location Index (RHD)

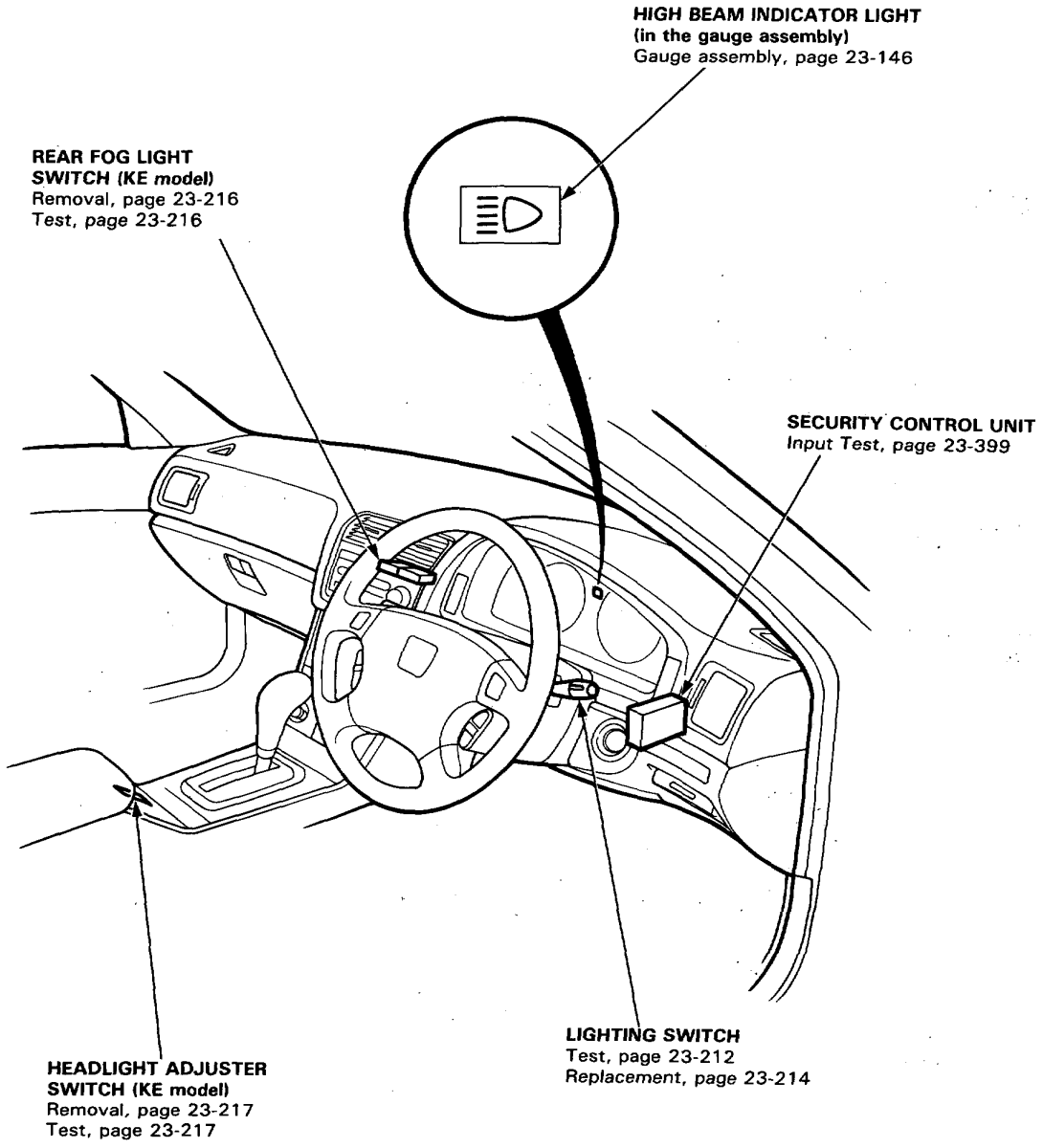

Component Location Index (European model)

NOTE: The illustration shows LHD.

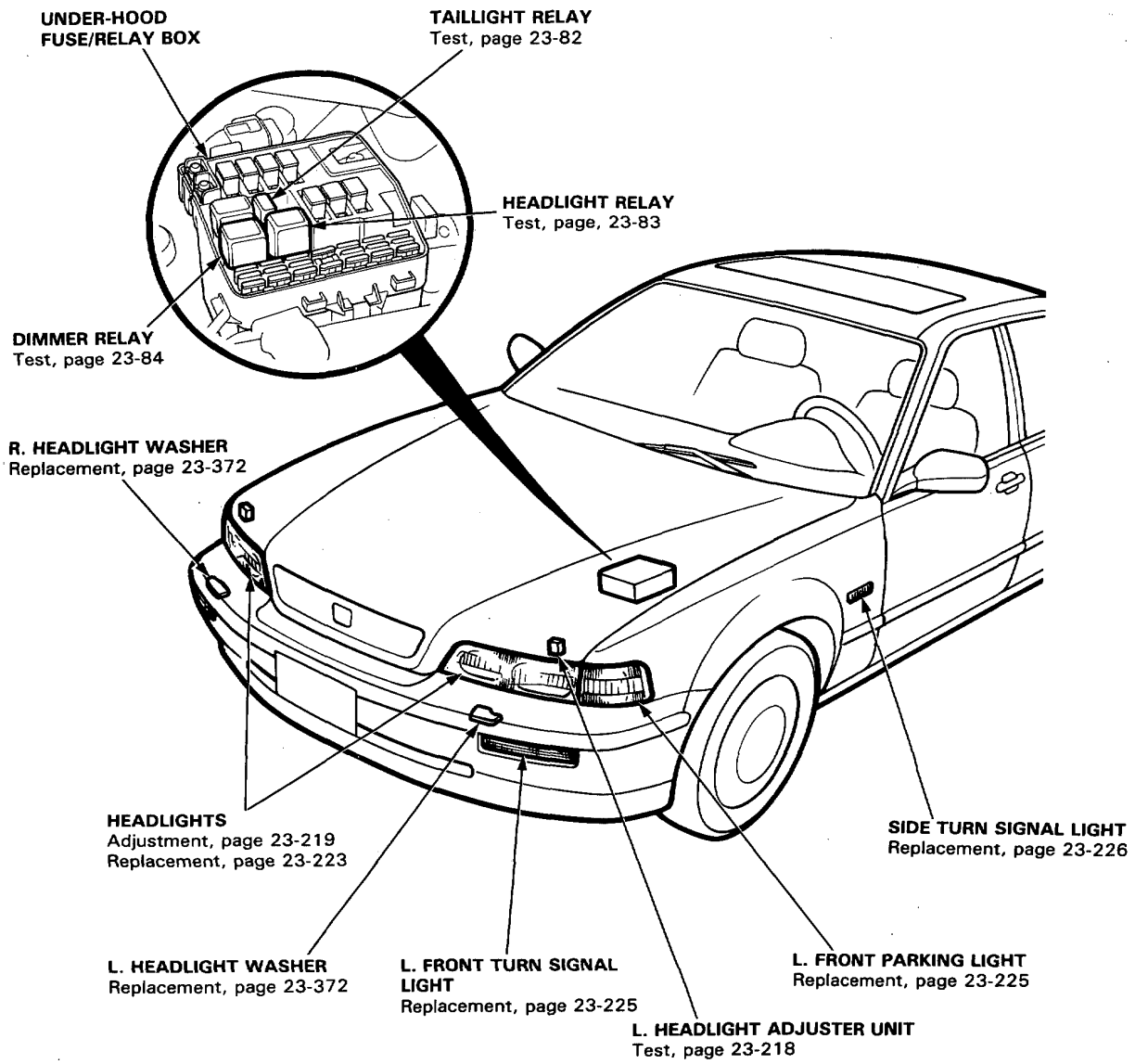

Component Location Index (KQ, KT and KY models)

NOTE: The illustration shows LHD.

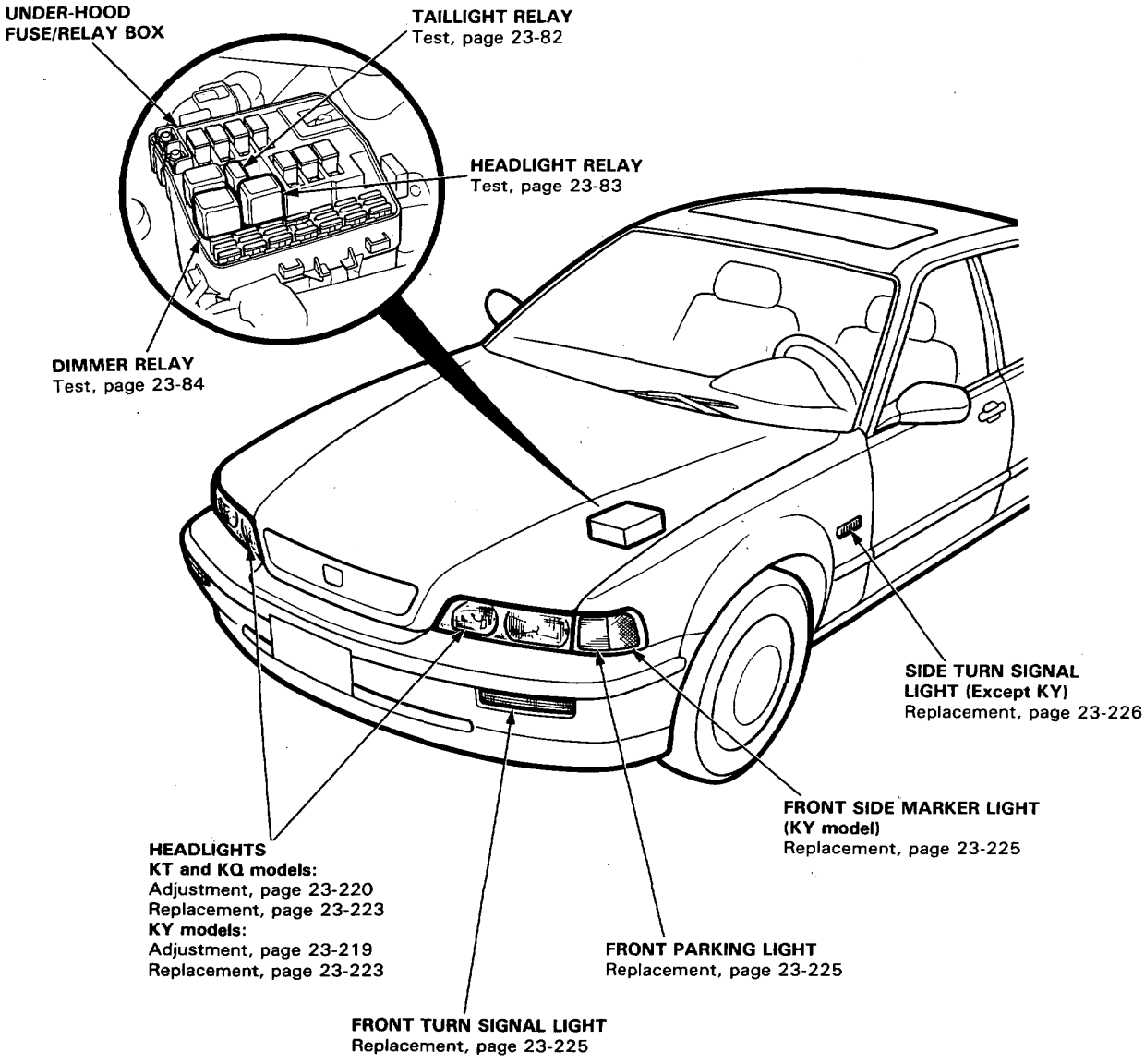

Component Location Index

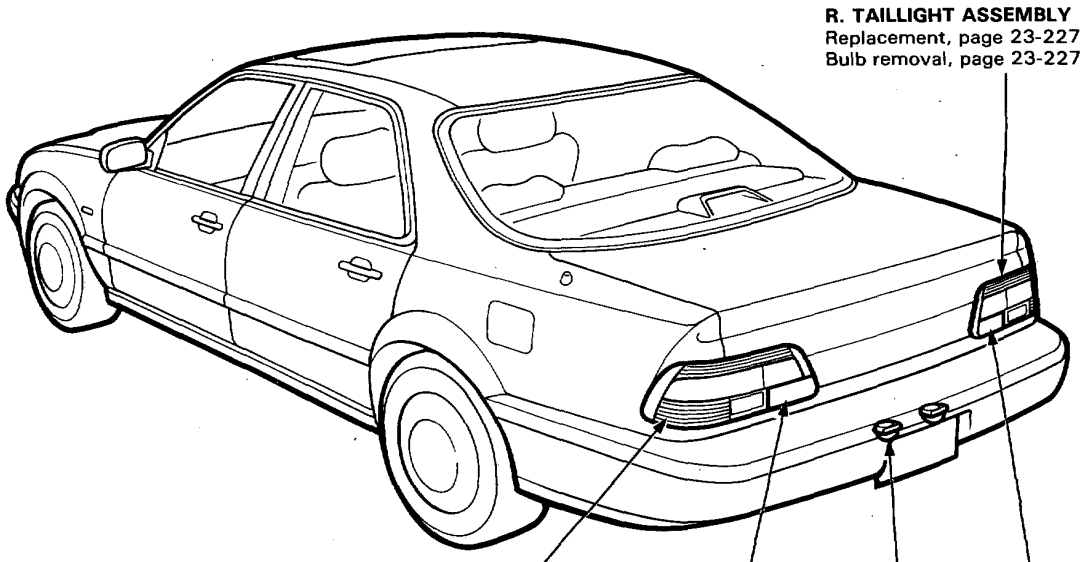

Circuit Diagram (KQ, KT and KY models)

NOTE: Several different wires have the same color. They have been given a number suffix to distinguish them (for example RED/YEL[1] and RED/YEL[2] are not the same).

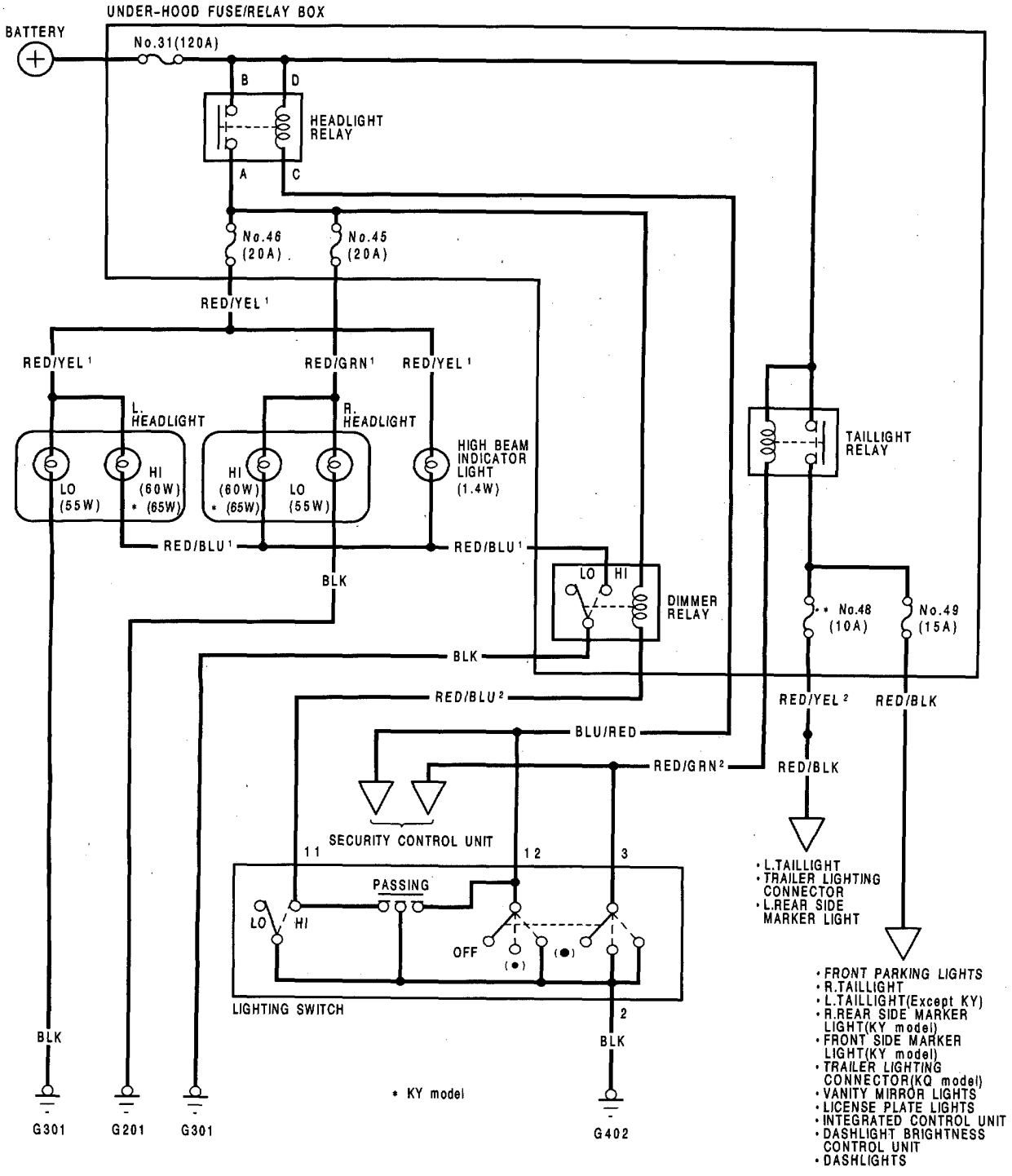

Circuit Diagram (KS and KF models)

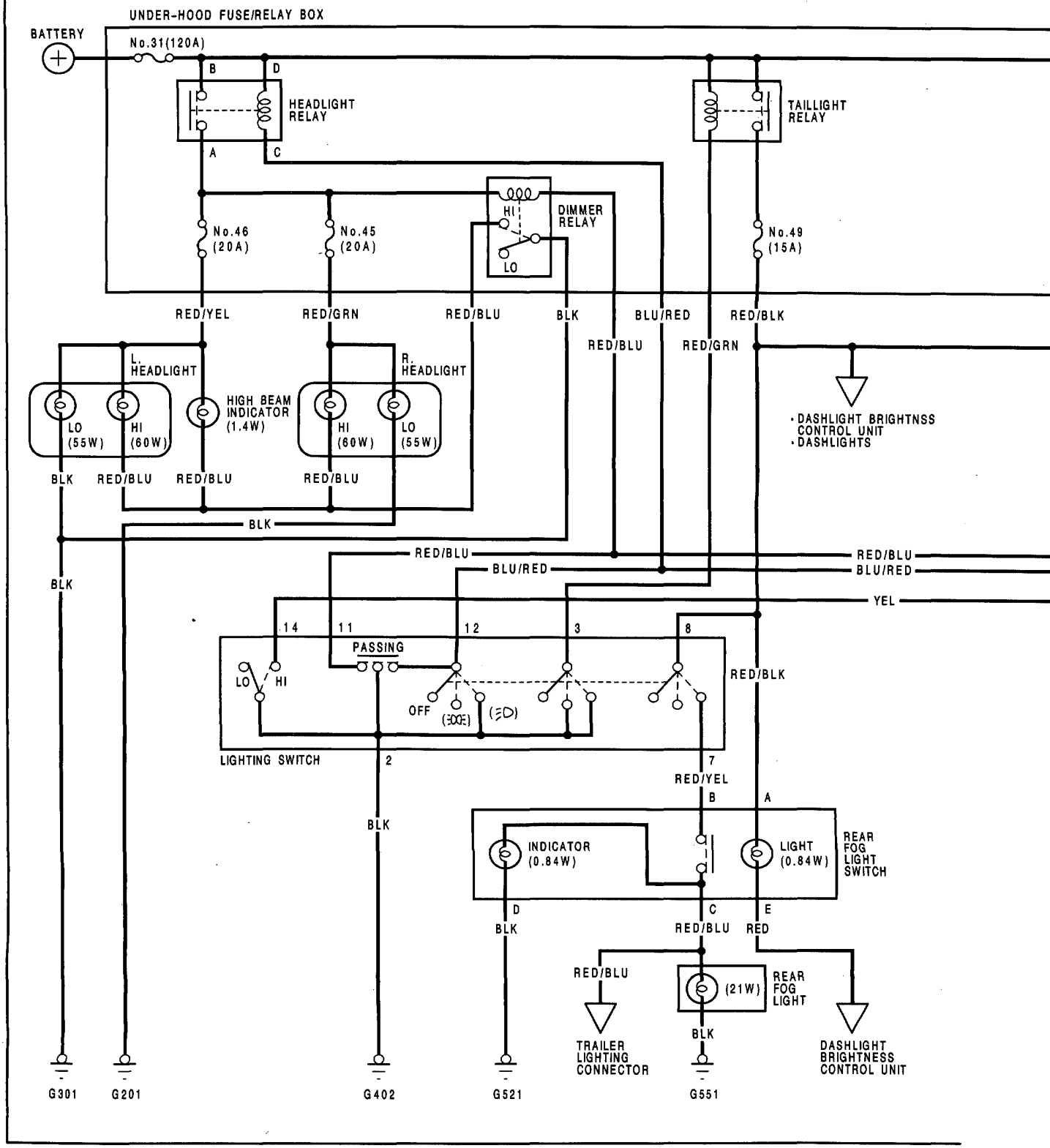

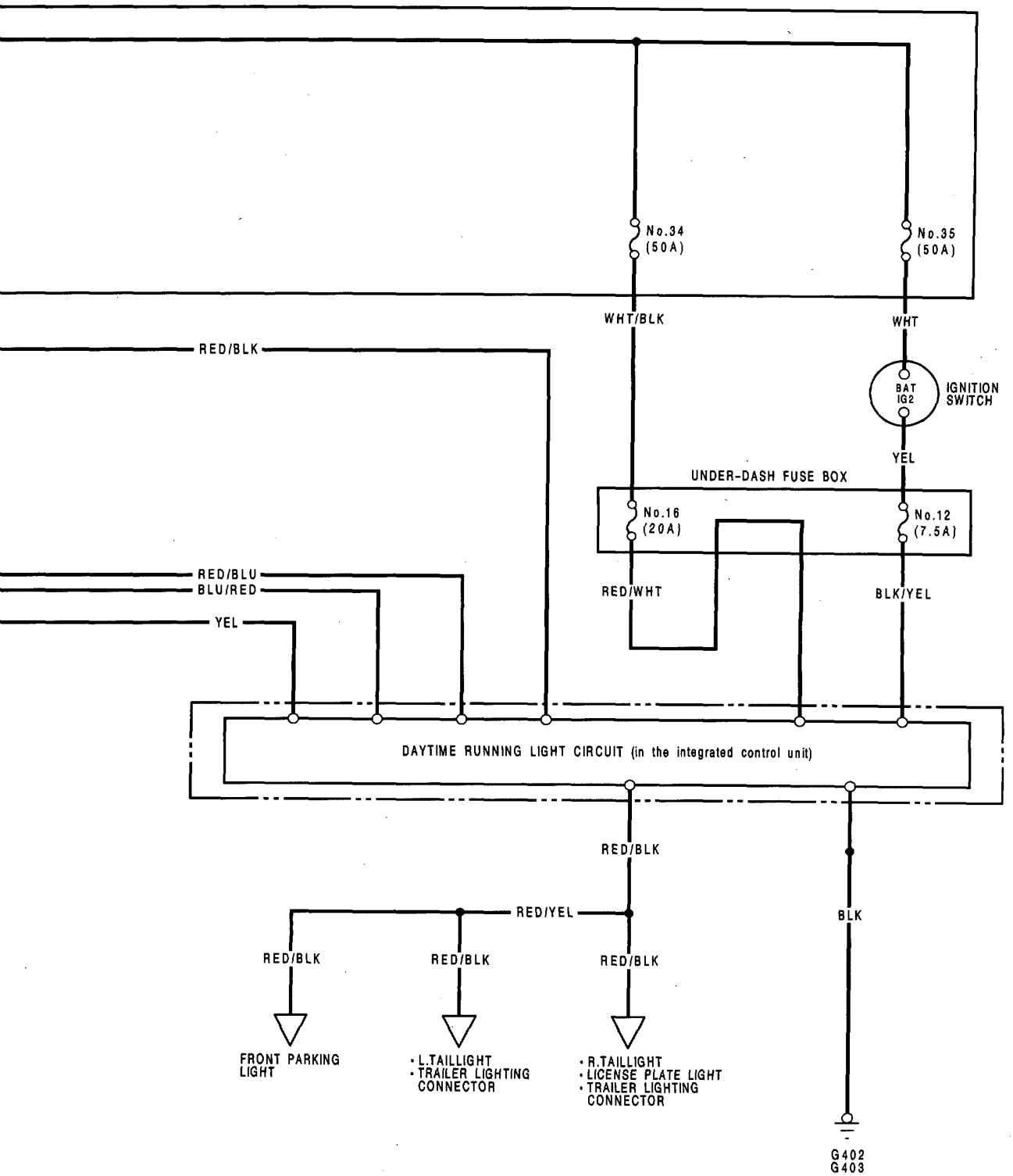
No.34
(50A)
No.35
(50A)
WHT/BLK
WHT
RED/BLK
BAT
IG2
IGNITION
SWITCH
YEL
UNDER-DASH FUSE BOX
No.16
(20A)
No.12
(7.5A)
RED/BLU
BLU/RED
YEL
RED/WHT
BLK/YEL
DAYTIME RUNNING LIGHT CIRCUIT (in the integrated control unit)
RED/BLK
RED/YEL
BLK
RED/BLK
RED/BLK
RED/BLK
FRONT PARKING
LIGHT
• L.TAILLIGHT
• TRAILER LIGHTING
CONNECTOR
• R.TAILLIGHT
• LICENSE PLATE LIGHT
• TRAILER LIGHTING
CONNECTOR
G402
G403

Lighting System

Circuit Diagram (Except KS, KW European models)

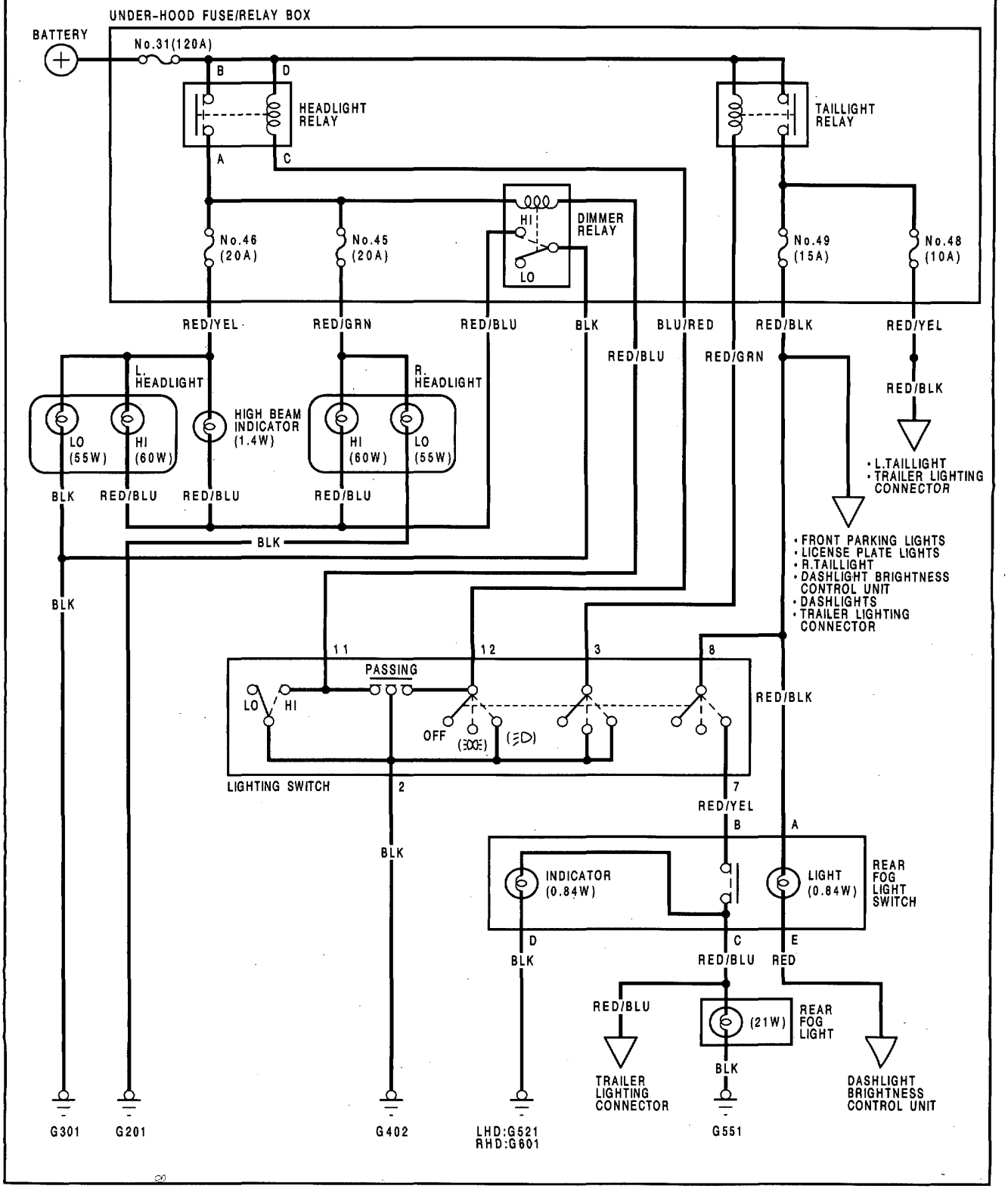

Circuit Diagram (European models)

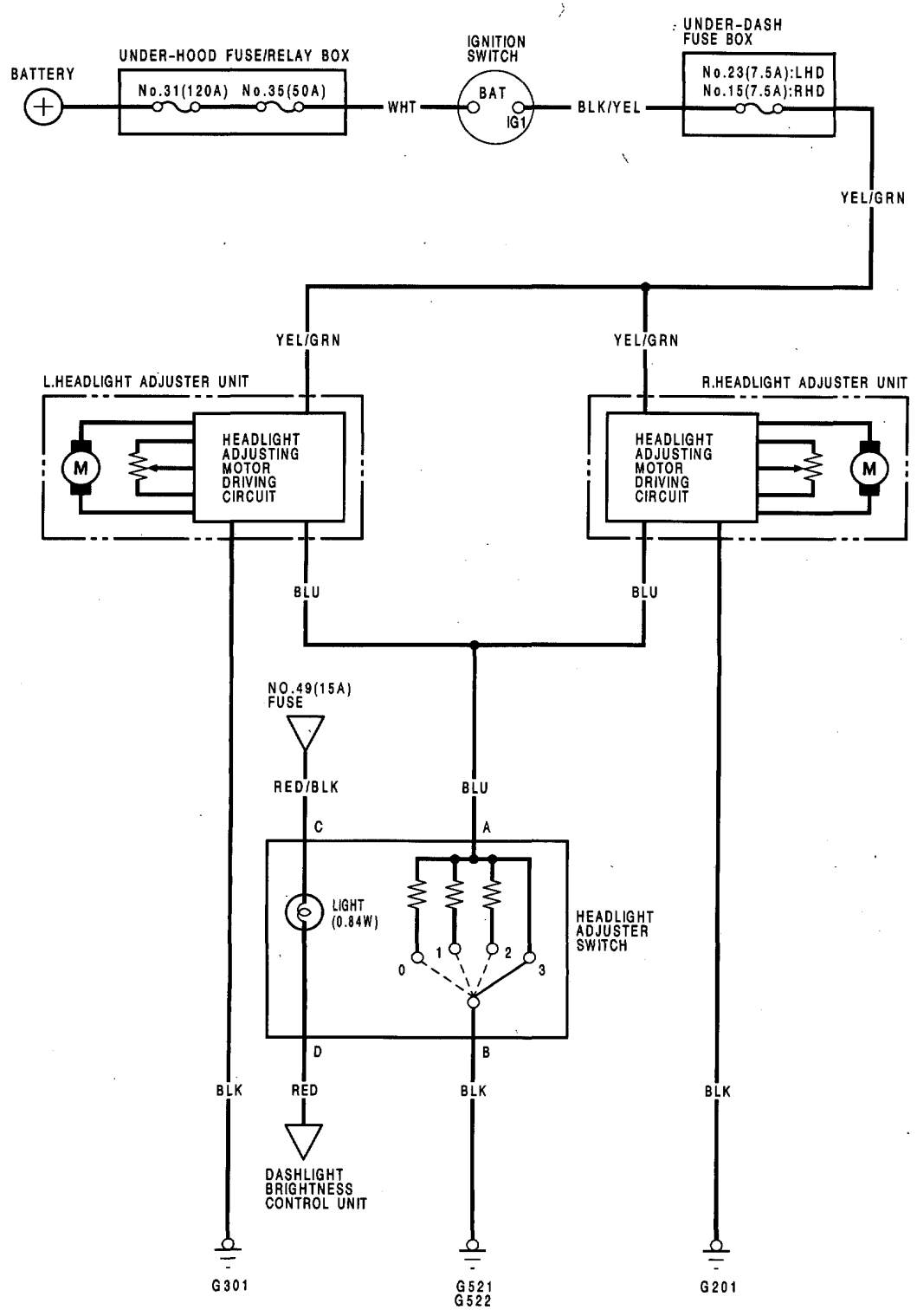

Lighting/Turn Signal Switch Test

CAUTION:

- **All SRS electrical wiring harnesses are covered with yellow outer insulation.**
- **When disconnecting the SRS wire harness, install the short connector on the airbag then disconnect the wire harness (See page 23-412).**
- **Replace the entire affected SRS harness assembly if there is an open circuit or damage to the wiring.**

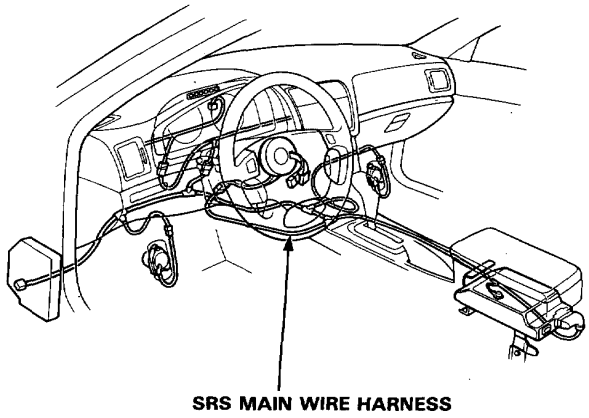

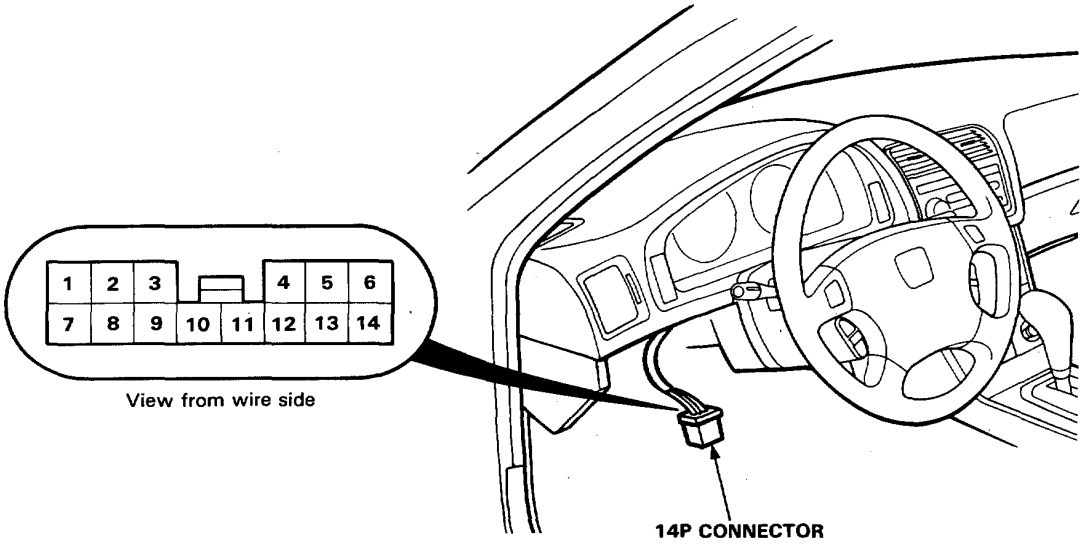

Lighting/Dimmer/Passing Switch (KQ, KT and KY models)

Position \ Terminal		2	3	11	12
Lighting Switch	OFF				
	•	○	○		
	●	○	○		○
Dimmer Switch	LOW				
	HIGH	○		○	
Passing Switch	OFF				
	ON	○		○	○

Ligting/Dimmer/Passing Switch (Except KS, KF)

Position \ Terminal		2	3	8	9	11	12
Lighting Switch	OFF						
	≡DO≡	○	○				
	≡D	○	○	○	○		○
Dimmer Switch	LOW						
	HIGH	○				○	
Passing Switch	OFF						
	ON	○				○	○

Ligting/Dimmer/Passing Switch (KS and KF models)

Position \ Terminal		2	3	8	9	11	12	13
Lighting Switch	OFF							
	≡DO≡	○	○					
	≡D	○	○	○	○		○	
Dimmer Switch	LOW							
	HIGH	○						○
Passing Switch	OFF							
	ON	○				○	○	

Turn Signal Switch:

Position \ Terminal	4	5		6
R	○		◀	○
NEUTRAL				
L		○	◀	○

Lighting Switch Replacement

CAUTION:

- **All SRS electrical wiring harnesses are covered with yellow outer insulation.**
- **When disconnecting the SRS wire harness, install the short connector on the airbag then disconnect the wire harness (See page 23-412).**
- **Replace the entire affected SRS harness assembly if there is an open circuit or damage to the wiring.**

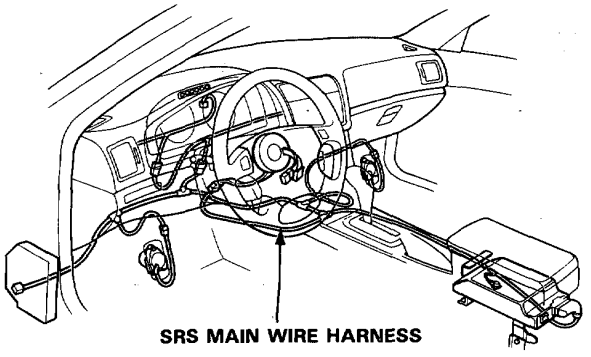

1. Remove the switches from the dashboard lower panel.

LHD:

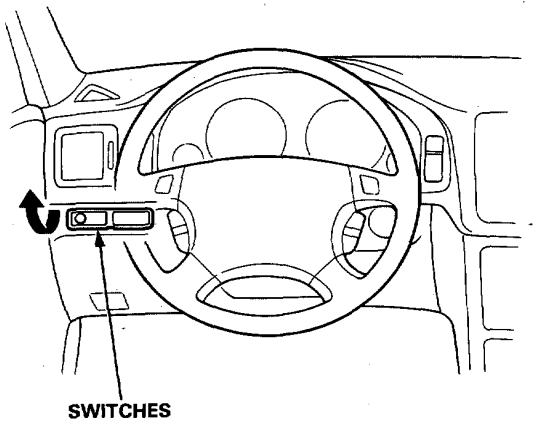

RHD:

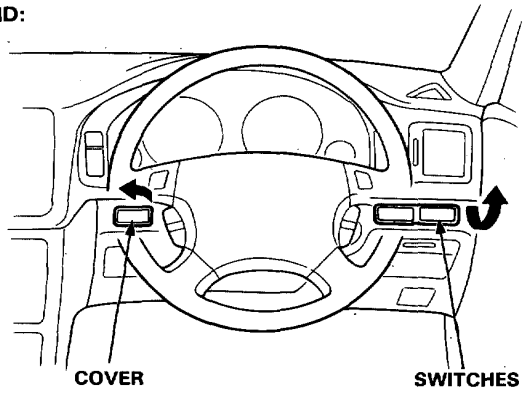

2. Remove the dashboard lower panel.

LHD:

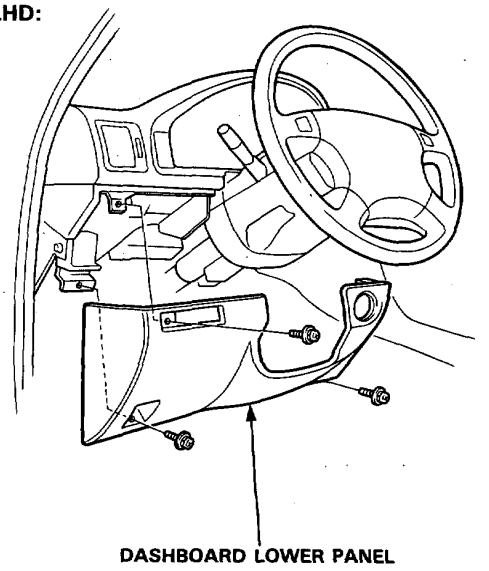

RHD:

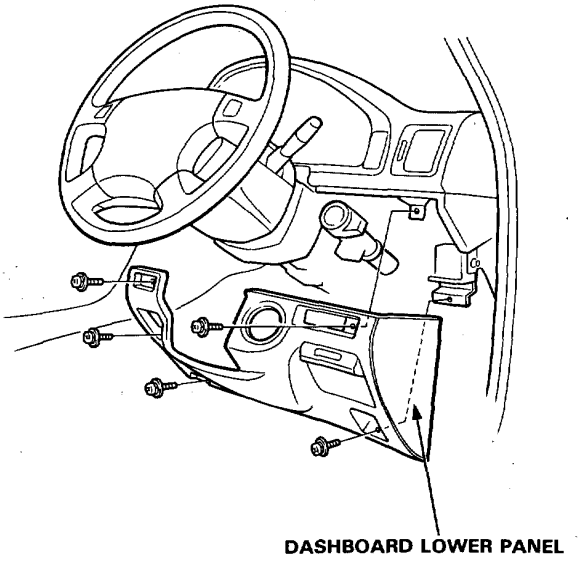

3. Remove the tilt lower cover.

LHD:

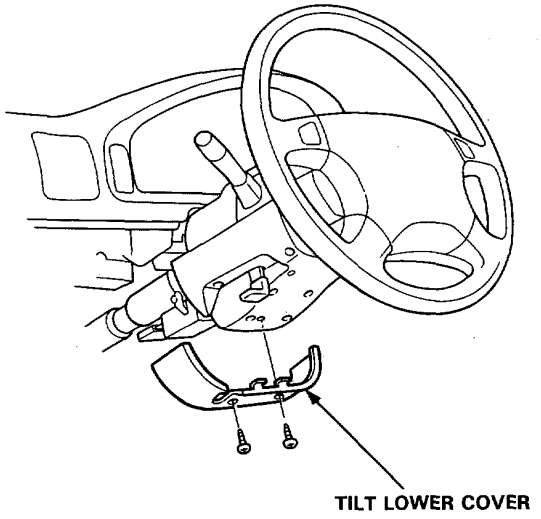

RHD:

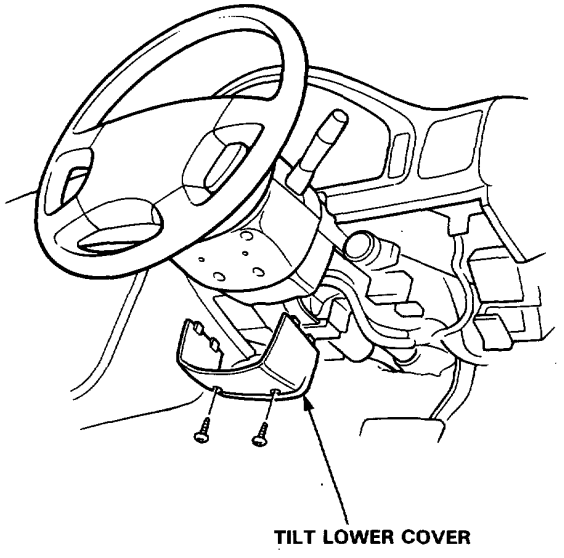

4. Remove the steering column lower cover and upper cover.

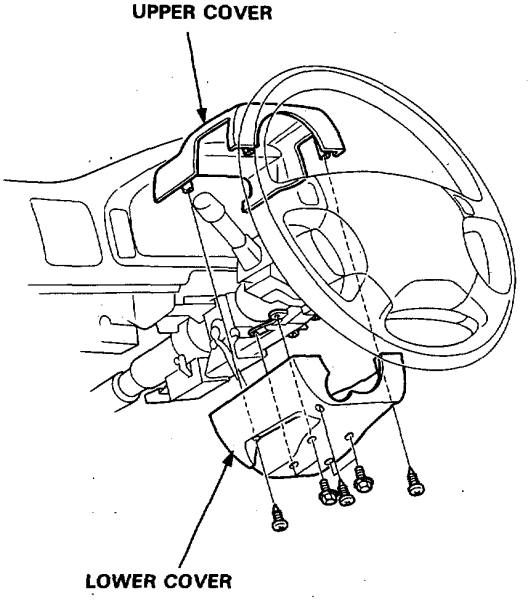

5. Disconnect the 14-P connector from the lighting switch.

6. Disconnect the 5-P connector from the steering column (without SRS).

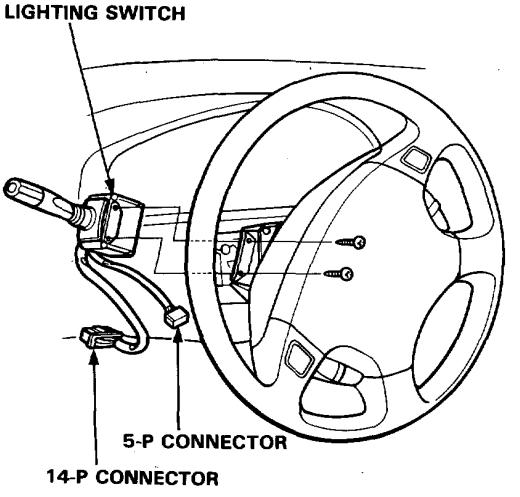

7. Remove the lighting switch.

Rear Fog Light Switch Removal (European model)

CAUTION: Be careful not to damage the center instrument panel.

1. Remove the center instrument panel.
2. Remove the clock and rear fog light switch from the climate control unit.
3. Remove the rear fog switch from the clock.

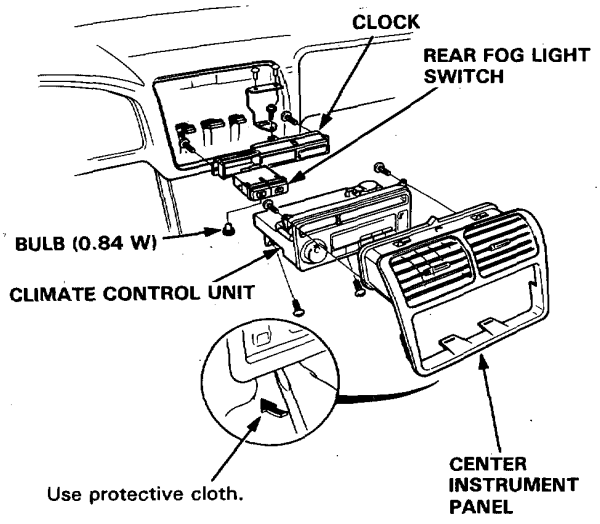

4. Turn the bulb socket 45° counterclockwise to remove it.

Rear Fog Light Switch Test (European model)

CAUTION: Be careful not to damage the center instrument panel.

1. Remove the rear fog light switch from the center instrument panel.
2. Check for continuity between the terminals in switch position according to the table.

Terminal / Position	B	C		D	A		E
ON	○	○	○	○	○	○	○
OFF		○	○	○			

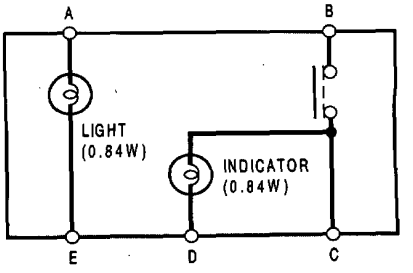

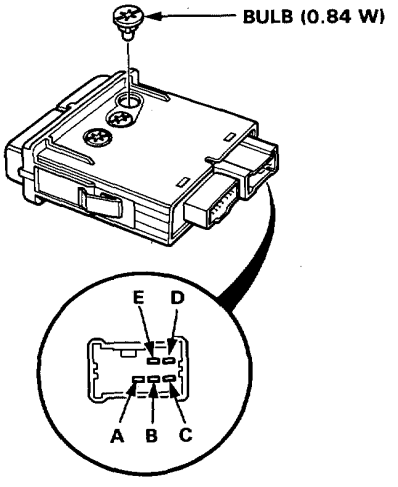

Headlight Adjuster Switch Removal (European model)

1. Open the center armrest lid.
2. Remove the switch from the center armrest.

   NOTE: The illustration shows LHD.

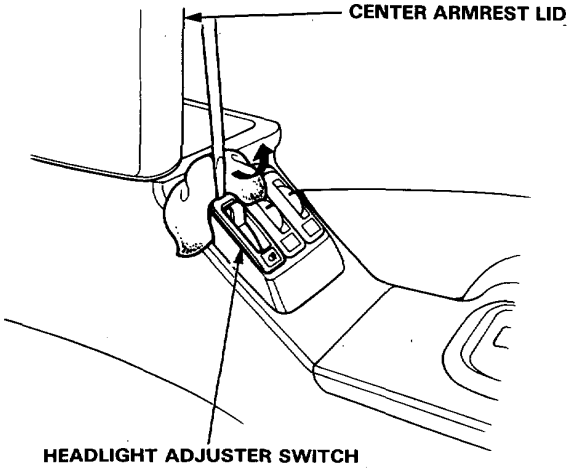

3. Disconnect the 5-P connector from the switch.

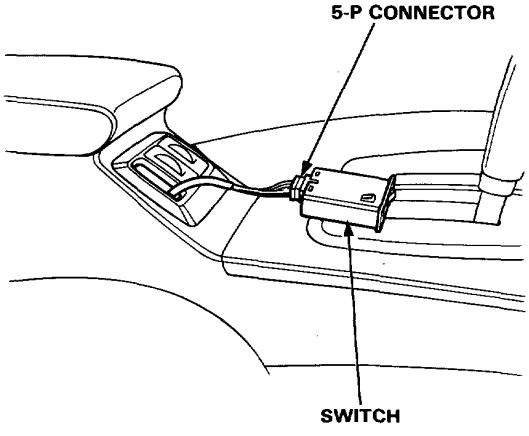

Headlight Adjuster Switch Test (European model)

1. Remove the switch from the center armrest.
2. Measure the resistance between the A and D terminals at 0, 1, 2 and 3 positions by moving the knob.
   Replace the switch if the resistance is not within specifications.

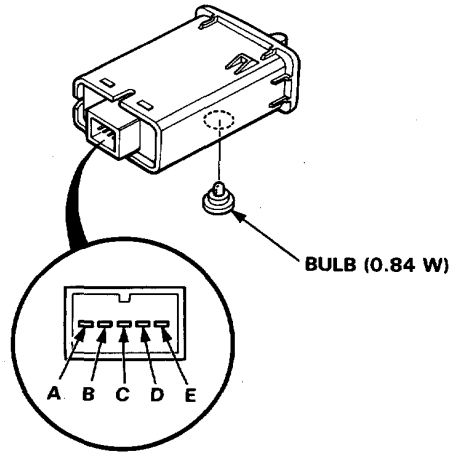

Knob Position	0	1	2	3
Resistance [Approx. (Ω)]	432	191	95.3	0

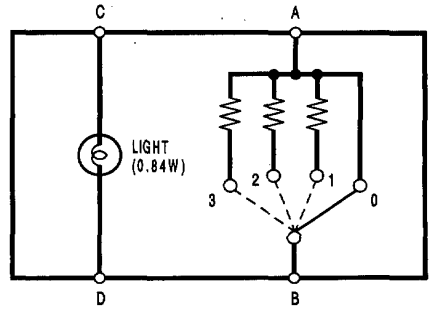

Headlight Adjuster Unit Input Test (European model)

NOTE: Before testing, check the wire harness connection and No. 23: LHD or No. 15: RHD (7.5 A) fuse in the under-dash fuse box.

1. Disconnect the 3-P connector for the right and left headlight adjuster units.

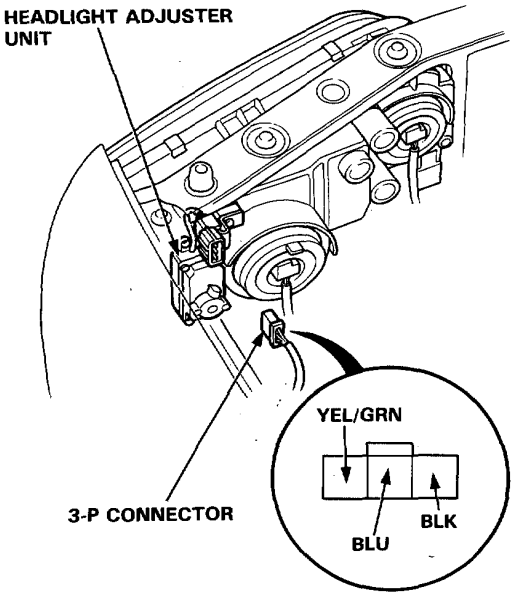

View from wire side

2. Check for continuity between the BLK terminal and body ground.
   There should be continuity.
   - If there is no continuity, check for
     - An open in the BLK wire.
     - Poor ground (G201 or G301).
   - If there is continuity, go to step 3.

3. Check for voltage between the YEL/GRN terminal and body ground with the ignition switch ON.
   There should be battery voltage.
   - If there is no voltage, check for an open in the YEL/ GRN wire.
   - If there is battery voltage, go to step 4.

4. Using an ohmmeter, measure resistance between the BLU terminal and body ground in "0" position of headlight adjuster switch. There should be approximately 432 Ω.
   - If resistance is not within specification, check for
     - An open in the BLU wire.
     - Faulty headlight adjuster switch.
   - If resistance is within specification, go to step 5.

5. If all tests are normal, but the headlight adjuster unit does not operate. Check for frozen, stuck or improperly installed the headlight adjuster unit. If mechanical check is OK, replace the headlight adjuster unit.

   NOTE: Check for connection of 3-P connectors after test. For example, malfunction of headlight adjuster is occurred by improper connection of one side.

Adjustment (Except KY)

Outside Headlight Adjustment:
Adjust the points A and B.

(KG model)
1. Adjust the outside headlight with "0" position of headlight adjuster switch.

2. Check the dip of beam in each position of the headlight adjuster switch, after outside headlight adjustment.

Inside Headlight Adjustment:
Adjust the points C and D.

NOTE: Adjust the headlights to local requirements.

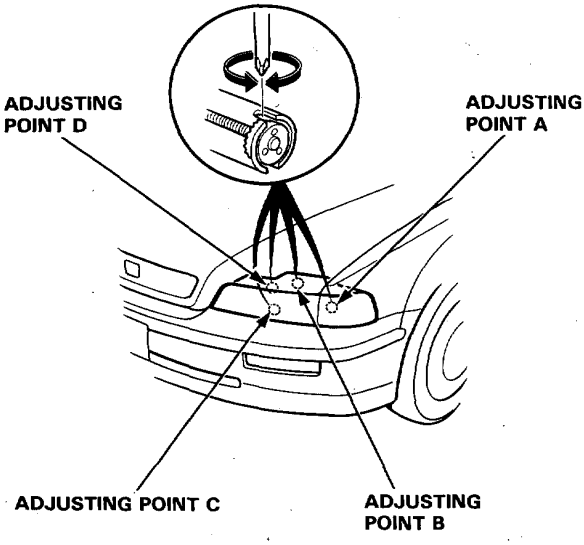

Outside headlight:
(KQ and KT model)

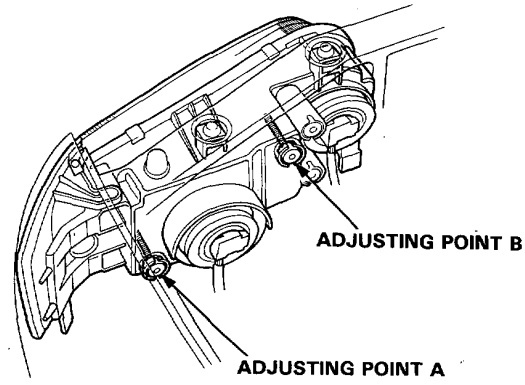

(European model)

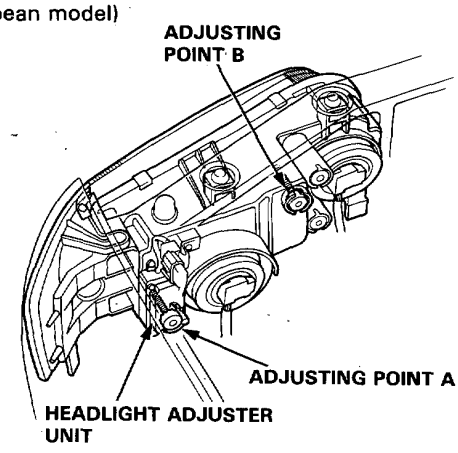

Inside headlight:

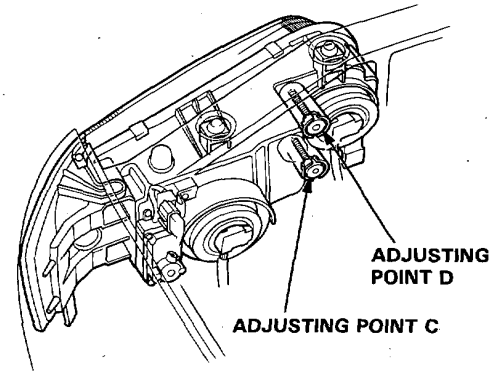

Adjustment (KY model)

Before checking the adjustment:

- Make sure the fuel tank is full. Park the car on level ground.
- The driver or someone who weighs the same should be sitting in the driver's seat for all checks and adjustments. Load the trunk with items you normally carry. Push down on the front and rear bumpers several times to make sure the car is sitting normally.

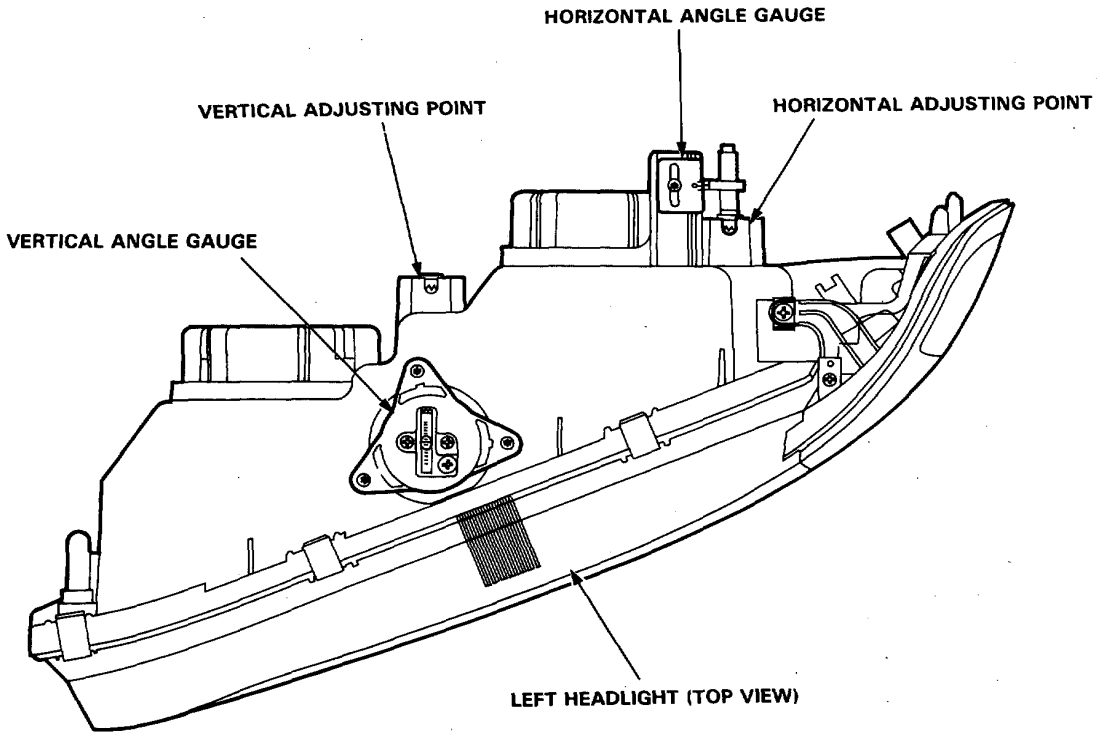

Adjustment after headlight assembly replacement:
If the car has had front body repair, or if the headlight assembly has been replaced for any other reason, the horizontal and vertical aiming must be checked using conventional methods. Use the aiming charts on page 23-222.

If the horizontal angle gauge does not read "0" after aiming by the charts on page 23-222, the gauge must be re-calibrated.

1. Loosen the Torx® retaining screw (Step 2, next page).
2. Move the gauge scale until the "0" aligns with the indicator line.
3. Tighten the Torx® screw.

   NOTE: The vertical angle bubble gauge does not need to be re-calibrated as long as the bubble is centered on the "0" mark (Step 3, next page).

1. Open the hood.

2. Check the horizontal adjustment indicator. The line on the adjustment screw indicator should line up with the "0" mark on the gauge.

   NOTE: The illustration shows right side.

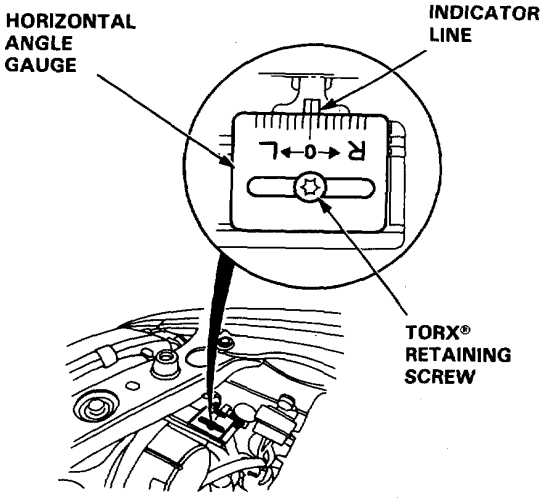

3. Check the vertical adjustment indicator. The bubble should be centered underneath the longest scribe mark on the gauge.

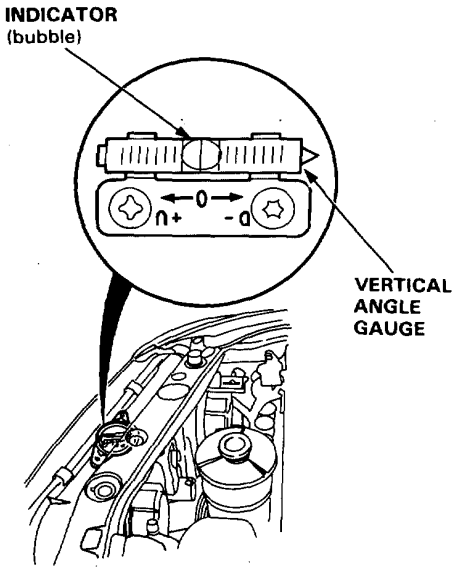

4. If the horizontal indicator is not aligned with its "0" mark as described above an adjustment can be made using a Phillips screwdriver to realign it with the "0" mark.

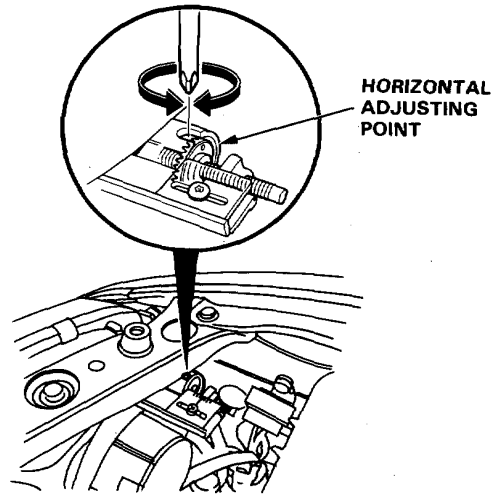

5. If the vertical indicator line is not aligned with its "0" mark as described above, an adjustment can be made using a Phillips screwdriver to realign it with the "0" mark.

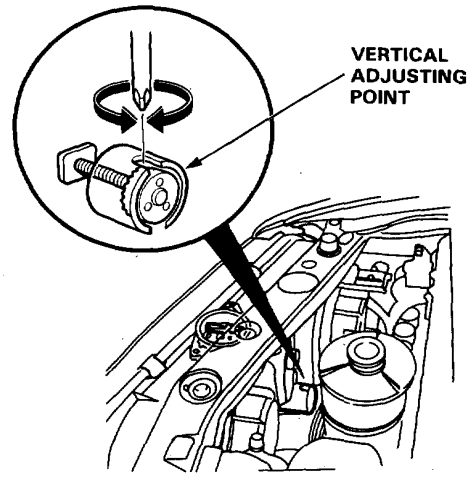

(cont'd)

Adjustment (KY model, cont'd)

Before checking the adjustment:

- Make sure the fuel tank is full. Park the car on level ground.
- The driver or someone who weighs the same should be sitting in the driver's seat for all checks and adjustments.
  Load the trunk with the items you normally carry.
  Push down on the front and rear bumpers several times to make sure the car is sitting normally.

NOTE: To accurately locate the middle of the screen or wall, put a piece of adhesive tape on the windshield at the center line of the interior mirror and put another piece of adhesive tape on the rear window *centered* on the HONDA logo on the trunk. Looking from the rear of the car, align the two pieces of tape to locate the middle of the screen.

A : 9 ft 10 in. (3000 mm)
B : 24.8 in. (630 mm)

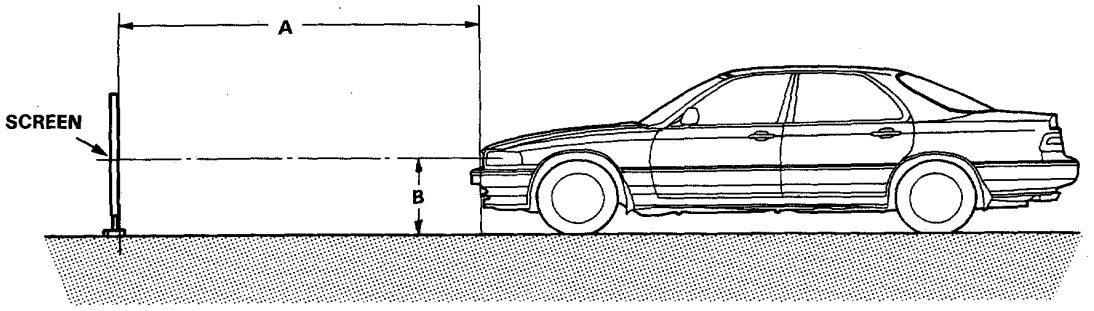

Headlight aiming (low beam):

C : 12.4 in. (314 mm)
D : 74.8 in. (1900 mm)
E : 35.4 in. (899 mm)
F : 16.9 in. (429 mm)
G: 2.0 in. (52 mm)
H: 1.7 in. (42 mm)

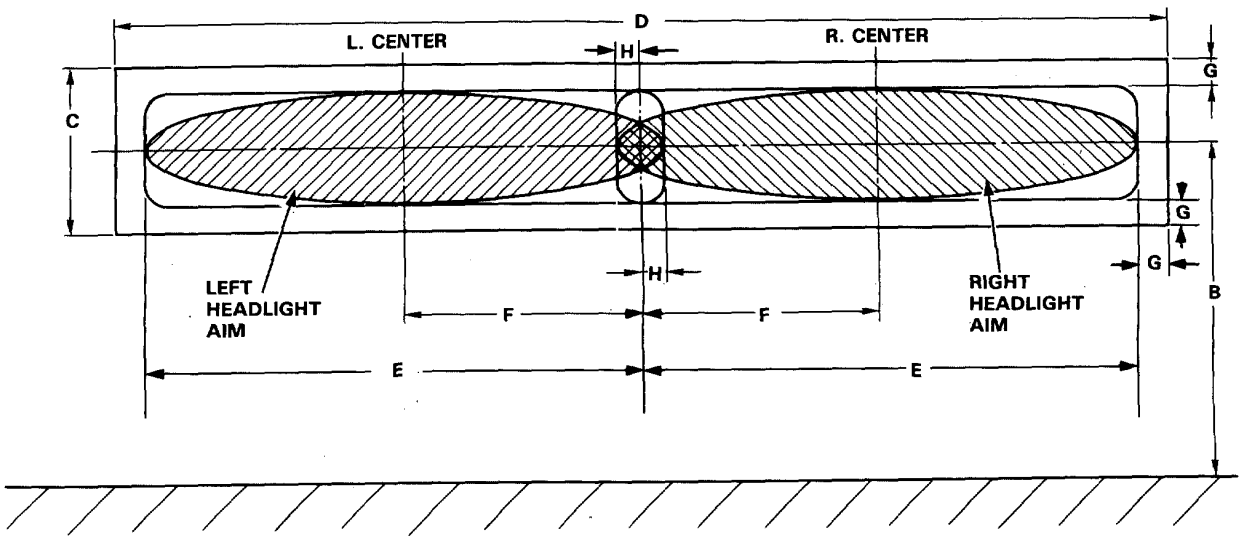

Headlight Assembly Replacement (Except KY)

1. Remove the covers from front bumper.
2. Remove the front turn signal lights.
3. Remove the front bumper.

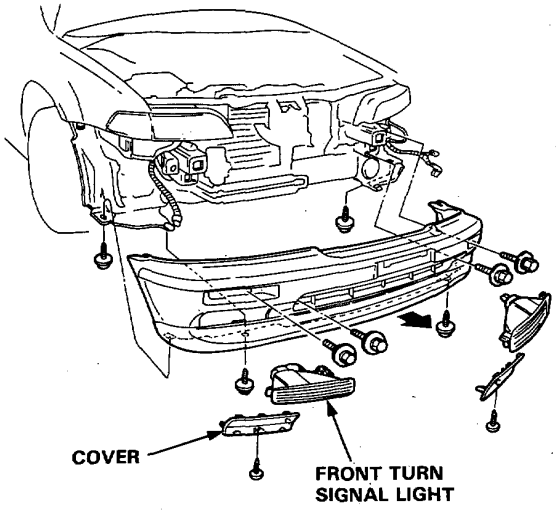

4. Remove the 5 headlight mounting bolts then pull off and disconnect the each connector from headlight.

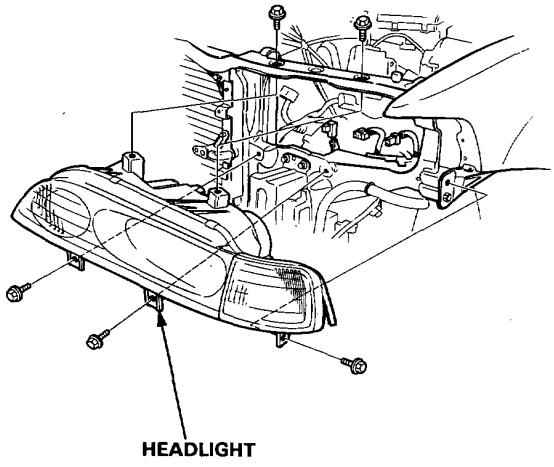

5. After installing the unit, adjust the headlights to local requirement's.

Headlight Assembly Replacement (KY model)

1. Remove the covers from front bumper.
2. Remove the front turn signal lights.
3. Remove the front bumper.
4. Remove the front side marker/parking light. Remove the mounting screw and pull the light out. Disconnect the 2-P connectors.

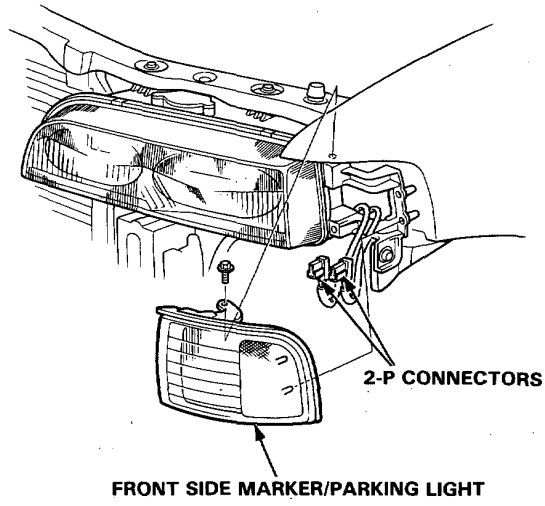

5. Remove the 5 headlight mounting bolts then pull off and disconnect the 4-P connector from the headlight.

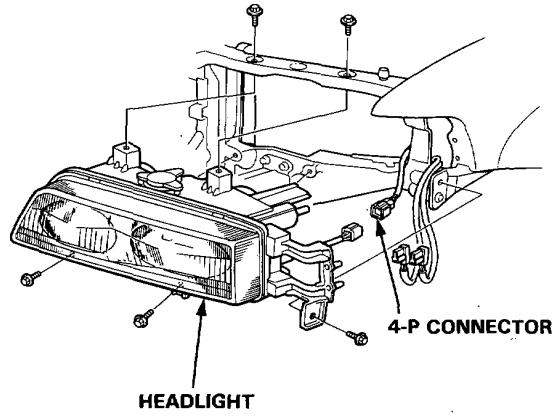

6. After installing the unit, check the headlight horizontal and vertical aiming (See page 23-220 thru 222).

Headlights

Bulb Replacement (Except KY)

CAUTION:

- **Halogen headlights can become very hot in use: do not touch them or the attaching hardware immediately after they have been turned off.**
- **Do not try replace or clean the headlights with the lights on.**

NOTE: To replace the left bulb, the radiator reservoir tank and the inlet of the washer tank should be dislocated.

1. Disconnect the 3-P connectors, then remove the retaining and bulb.

NOTE: KF model is YELLOW bulbs.

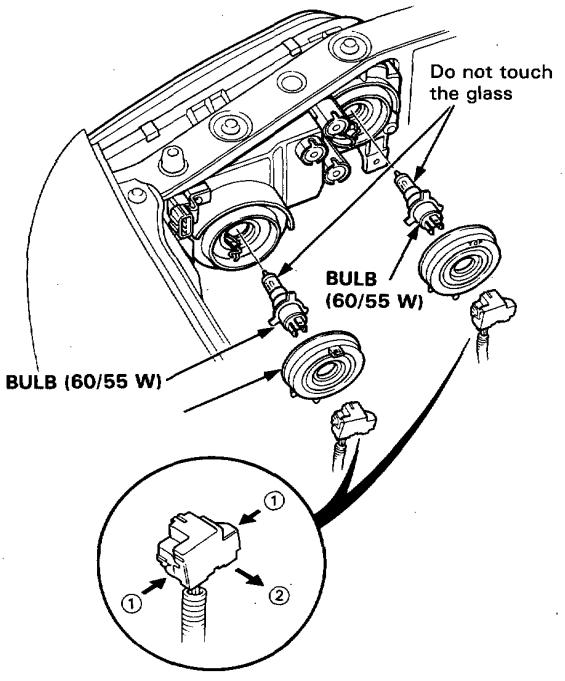

Bulb Replacement (KY model)

CAUTION:

- **Halogen headlights can become very hot in use; do not touch them or the attaching hardware immediately after they have been turned off.**
- **Do not try to replace or clean the headlights with the lights on.**

NOTE: To replace the left bulb, the radiator reservoir tank and the inlet of the washer tank should be dislocated.

1. Remove the cover cap.
2. Disconnect the 2-P connector, then remove the retaining spring and bulb.

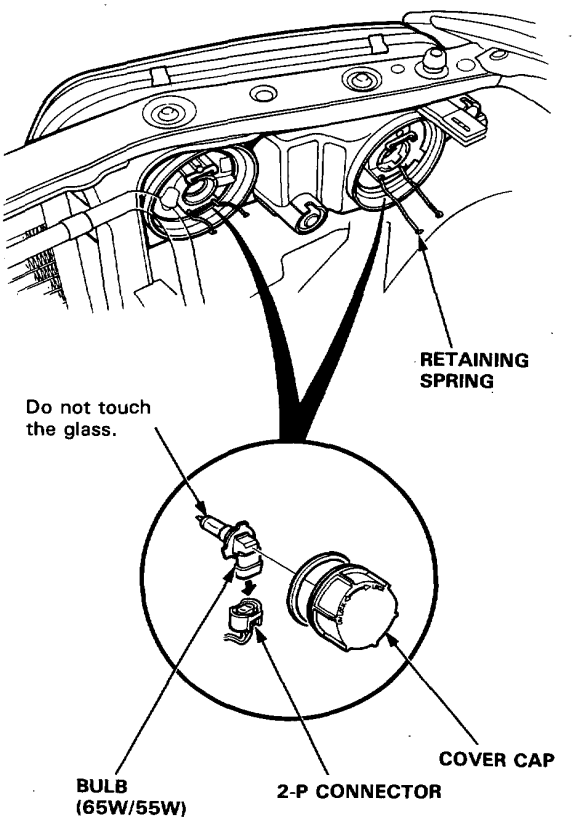

Front Turn Signal Lights

Replacement

1. Remove the cover.

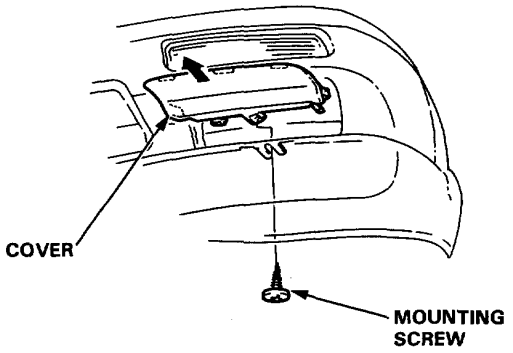

2. Remove the mounting screw. Pull the light out and disconnect the connector.

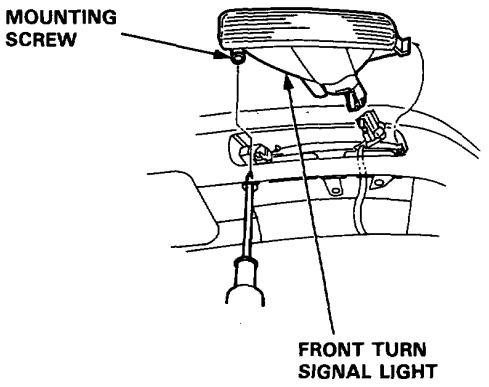

3. Remove the bulb from the front turn signal light by turning the bulb 45°.

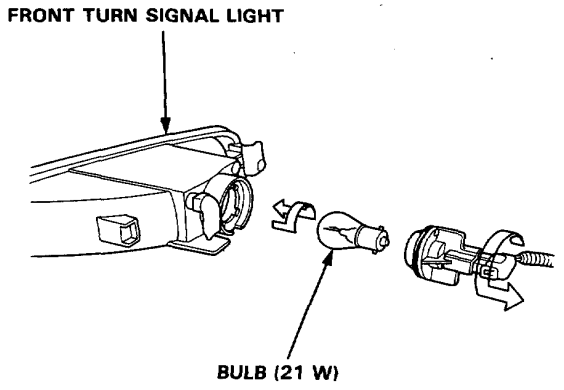

Front Side Marker/ Parking Lights

Replacement

1. Loosen the mounting screw. Pull the light out and disconnect the 2-P connectors or 2-P connector.

   NOTE: The illustration shows KY model.

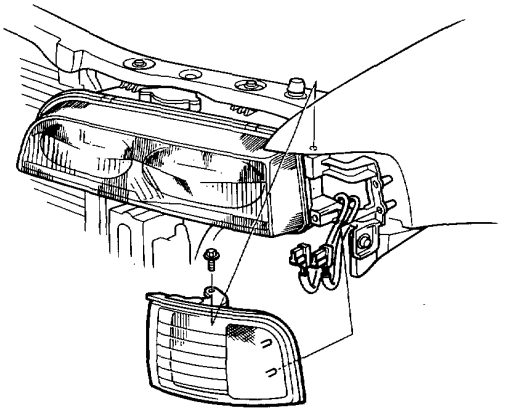

2. Remove the bulb from the housing by turning the bulb 45°.

Except KY:

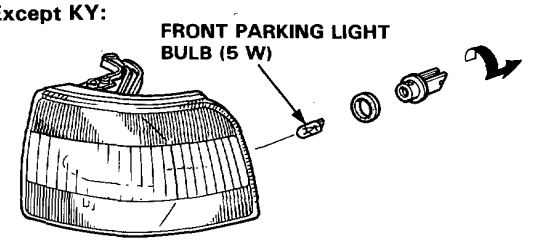

KY model:

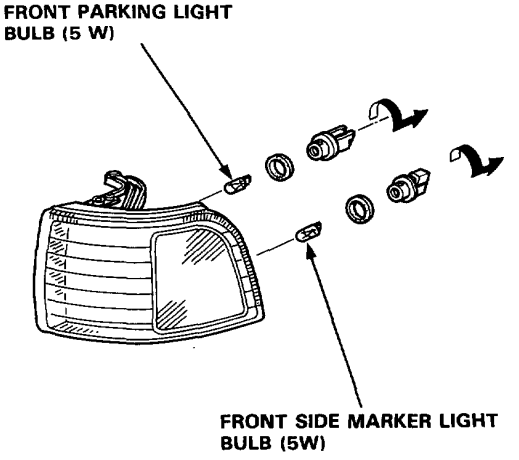

Front Side Turn Signal Lights

Replacement

1. Carefully pry out the front side turn signal light from the front fender.

   NOTE: Be carefully not to damage the front side turn signal light or the front fender when prying out the front turn signal light.

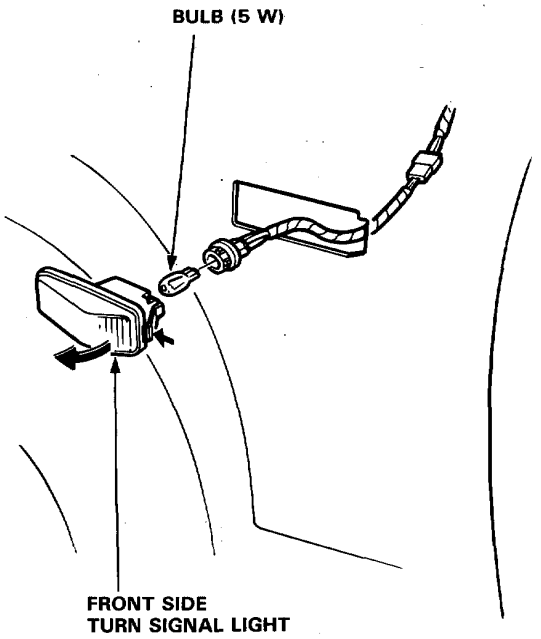

License Plate Lights

Replacement

1. Remove the 4 screws (for one light) and disconnect the 4-P connector.

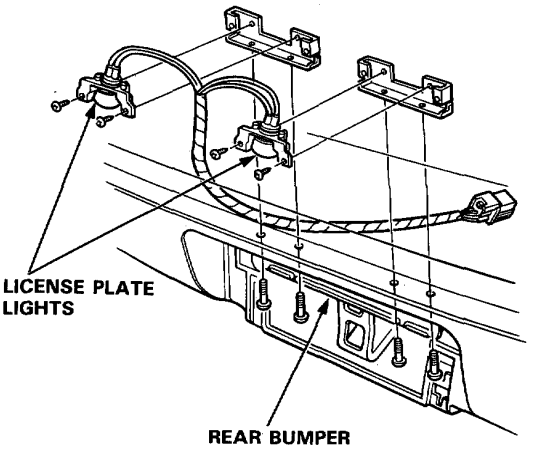

2. Turn the bulb socket 45° counterclockwise to remove it from the housing.

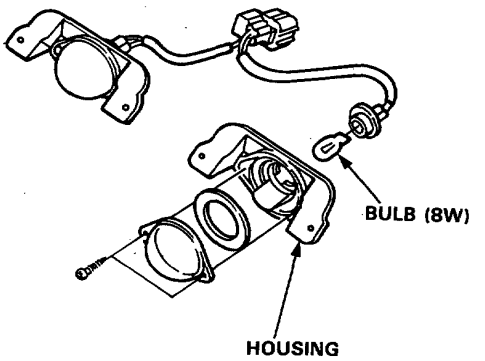

3. If necessary, separate the lens from the housing by removing the 2 screws.

Taillights

Replacement

1. Remove the taillight access panel.
2. Remove the rear trim panel.

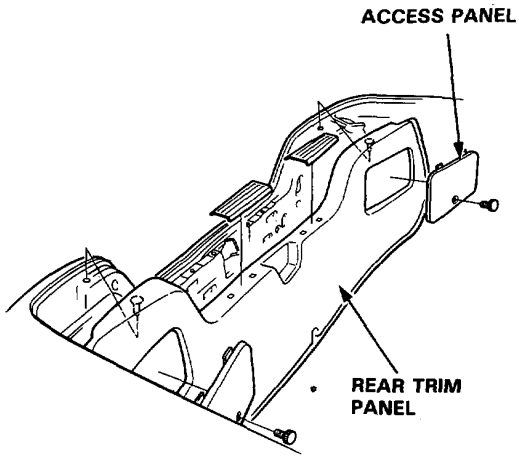

3. Disconnect the 8-P connector.
4. Remove the 6 mounting nuts from the taillight.

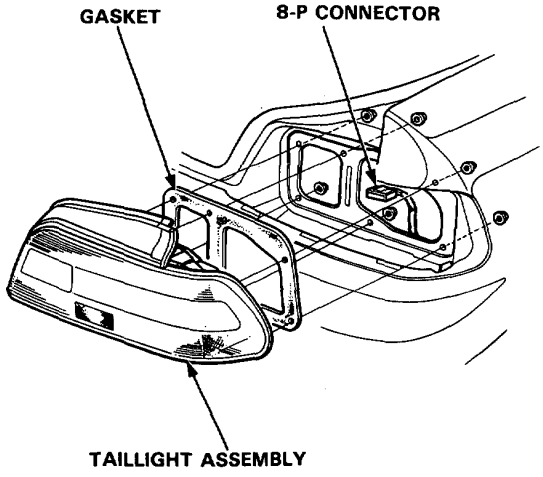

NOTE:
- Inspect the gasket; replace if it is distorted or stays compressed.
- After installation, run water over the lights to make sure they won't leak.

Bulb Replacement (KY model)

1. Open the trunk lid.
2. Remove the taillight access panel.
3. Remove the bulb socket housing.

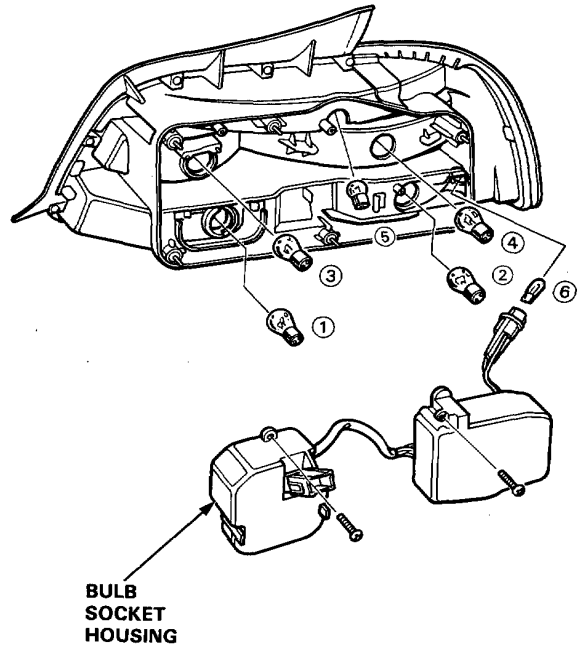

4. Remove the bulb from the socket.

① } BRAKE LIGHT/TALIILIGHT
② } BULBS (32CP/2CP)
③ : BACK-UP LIGHT BULB (32CP)
④ : TURN SIGNAL LIGHT BULB (45CP)
⑤ : TAILLIGHT BULB (3CP)
⑥ : REAR SIDE MARKER LIGHT BULB (4CP)

Taillights

Bulb Replacement (Except KY)

1. Open the trunk lid.
2. Remove the taillight access panel.
3. Remove the bulb socket housing.
4. Remove the bulb from the socket housing.

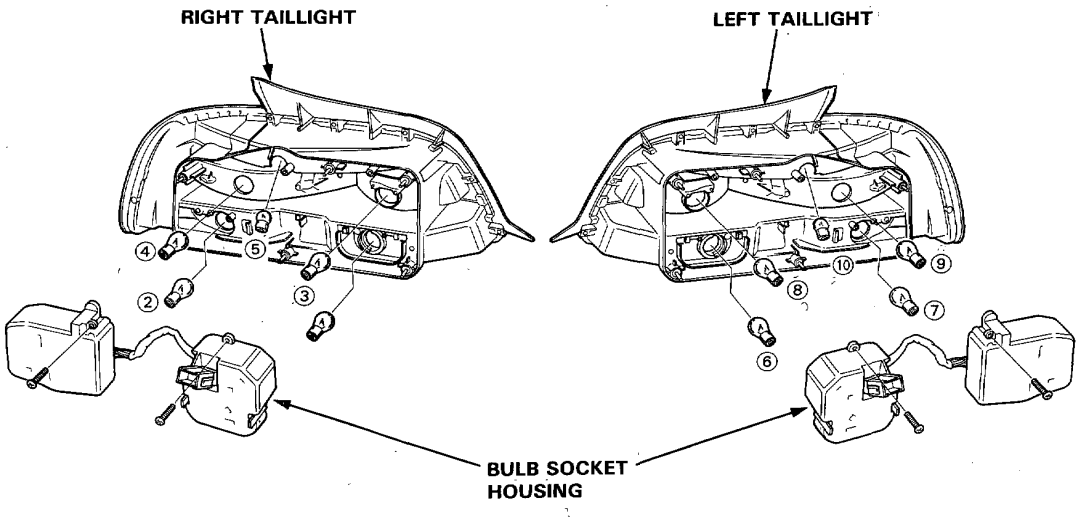

① REAR FOG LIGHT BULB (21W): KE model
②⑦ BRAKE LIGHT BULBS (21W)
③⑧ BACK-UP LIGHT BULBS (21W)
④⑨ TURN SIGNAL LIGHT BULBS (21W)
⑤⑩ TAILLIGHT BULBS (5W)
⑥ REAR FOG LIGHT BULB (21W): Except KE european model

Dashlight Brightness Control

Component Location Index

CAUTION:

- **All SRS electrical wiring harnesses are covered with yellow outer insulation.**
- **When disconnecting the SRS wire harness, install the short connector on the airbag then disconnect the wire harness (See page 23-412).**
- **Replace the entire affected SRS harness assembly if there is an open circuit or damage to the wiring.**
- **After installation of the gauge assembly, recheck the operation of the SRS indicator light.**

NOTE: RHD type is symmetrical to LHD type.

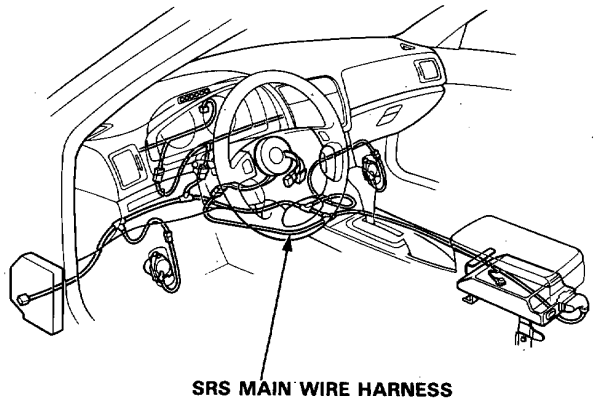

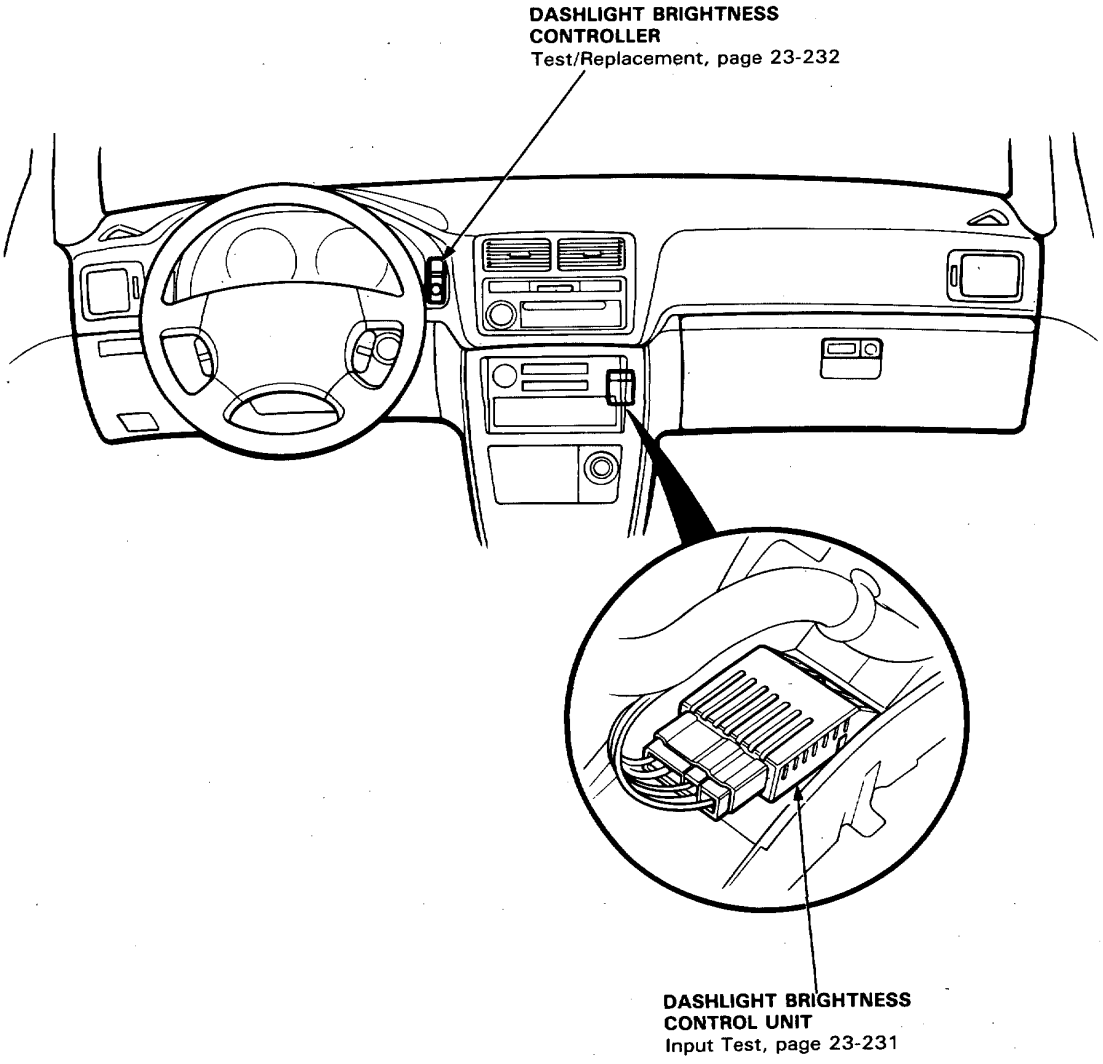

Dashlight Brightness Control

Circuit Diagram

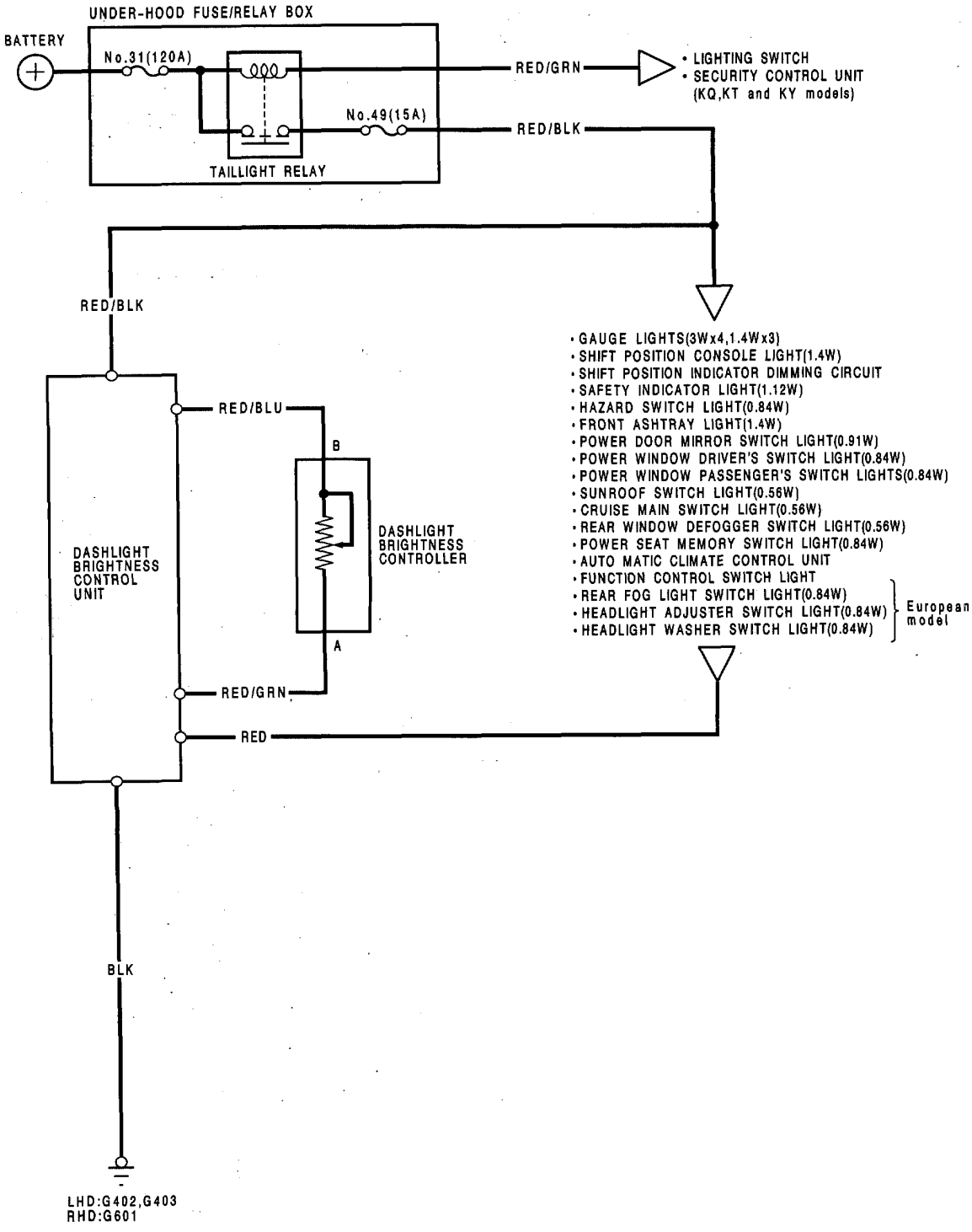

Control Unit Input Test

Disconnect the 7-P connector from the control unit.
Make the following input tests at the harness pins.
If all tests prove OK, yet the dashlights still cannot be controlled, check the connector for a good connection.
If OK, substitute a known-good control unit and recheck.

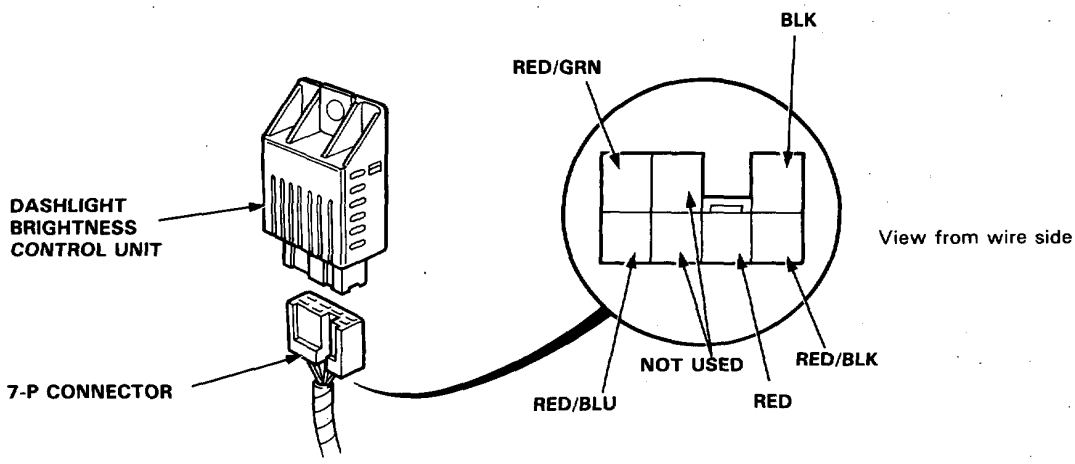

No.	Terminal	Test condition	Test: desired result	Possible cause (if result is not obtained)
1	BLK	Under all conditions.	Check for continuity to ground: should be continuity.	• Poor ground (LHD: G402, G403 RHD: G601). • An open in the wire.
2	RED/BLK	Lighting switch ON.	Check for voltage to ground: should be battery voltage.	• Blown No. 49 (15A) fuse. • Faulty taillight relay. • Faulty lighting switch. • An open in the wire.
3	RED	Lighting switch ON.	Attach to ground: dashlights should come on full bright.	• An open in the RED/BLK or RED wire.
4	RED/GRN and RED/BLU	Adjusting dial rotated.	Check for resistance between the RED/GRN and RED/BLU terminals: should vary from 0 to 24,000 ohms as the dial is rotated.	• Faulty controller. • An open in the wire.

Dashlight Brightness Control

Controller Test/Replacement

1. Remove the 2 screws, then disconnect each switch connector and remove the instrument panel.

   NOTE: The illustration shows LHD.

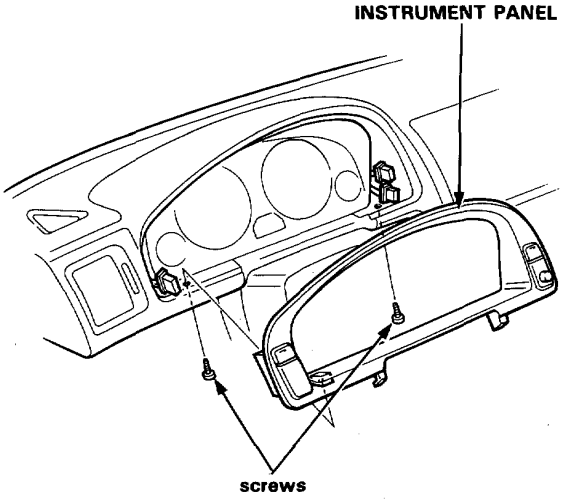

2. Remove the dashlight brightness controller from the instrument panel.

3. Measure resistance between A and B terminals while rotating the adjusting dial.

   Resistance should vary from 0 to 24,000 ohms as the dial is rotated.

   NOTE: Resistance will vary slightly with temperature.

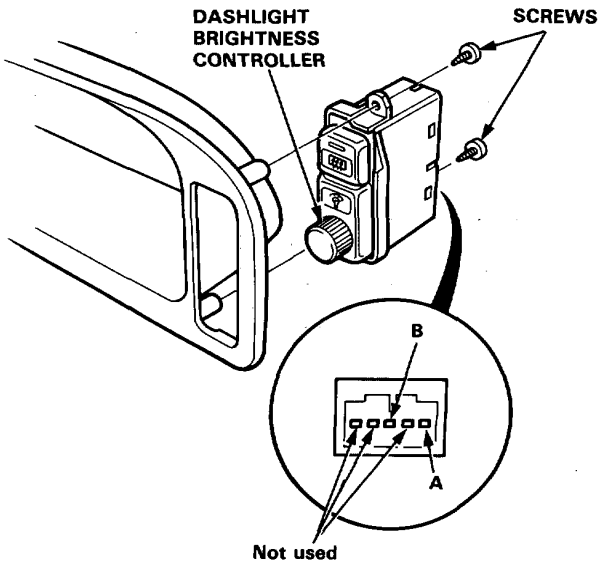

Dashlight brightness controller circuit:

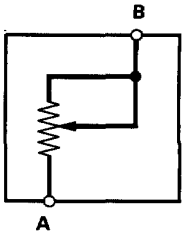

Entry Light Timer System

Component Location Index

CAUTION:

- **All SRS electrical wiring harnesses are covered with yellow outer insulation.**
- **When disconnecting the SRS wire harness, install the short connector on the airbag then disconnect the wire harness (See page 23-412).**
- **Replace the entire affected SRS harness assembly if there is an open circuit or damage to the wiring.**

NOTE: RHD type is symmetrical to LHD type.

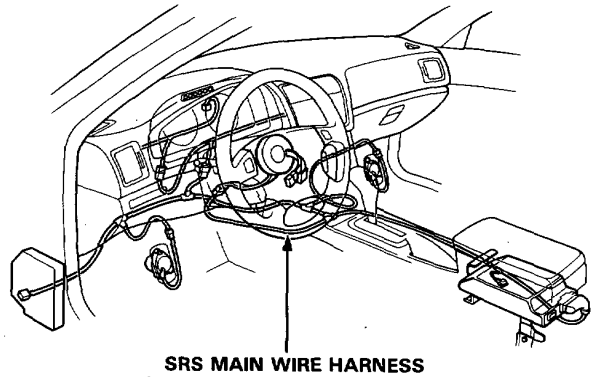

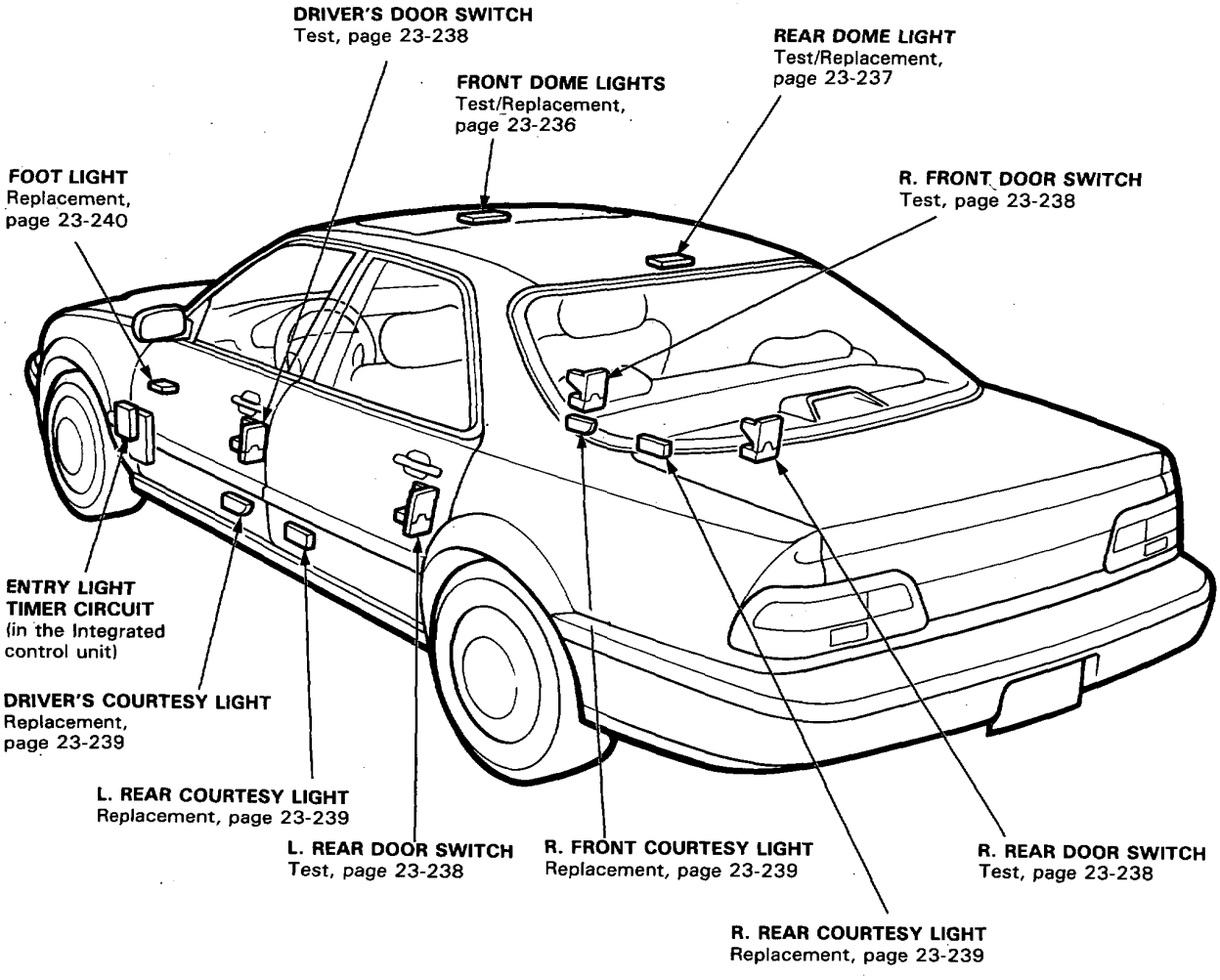

Entry Light Timer System

Circuit Diagram (LHD)

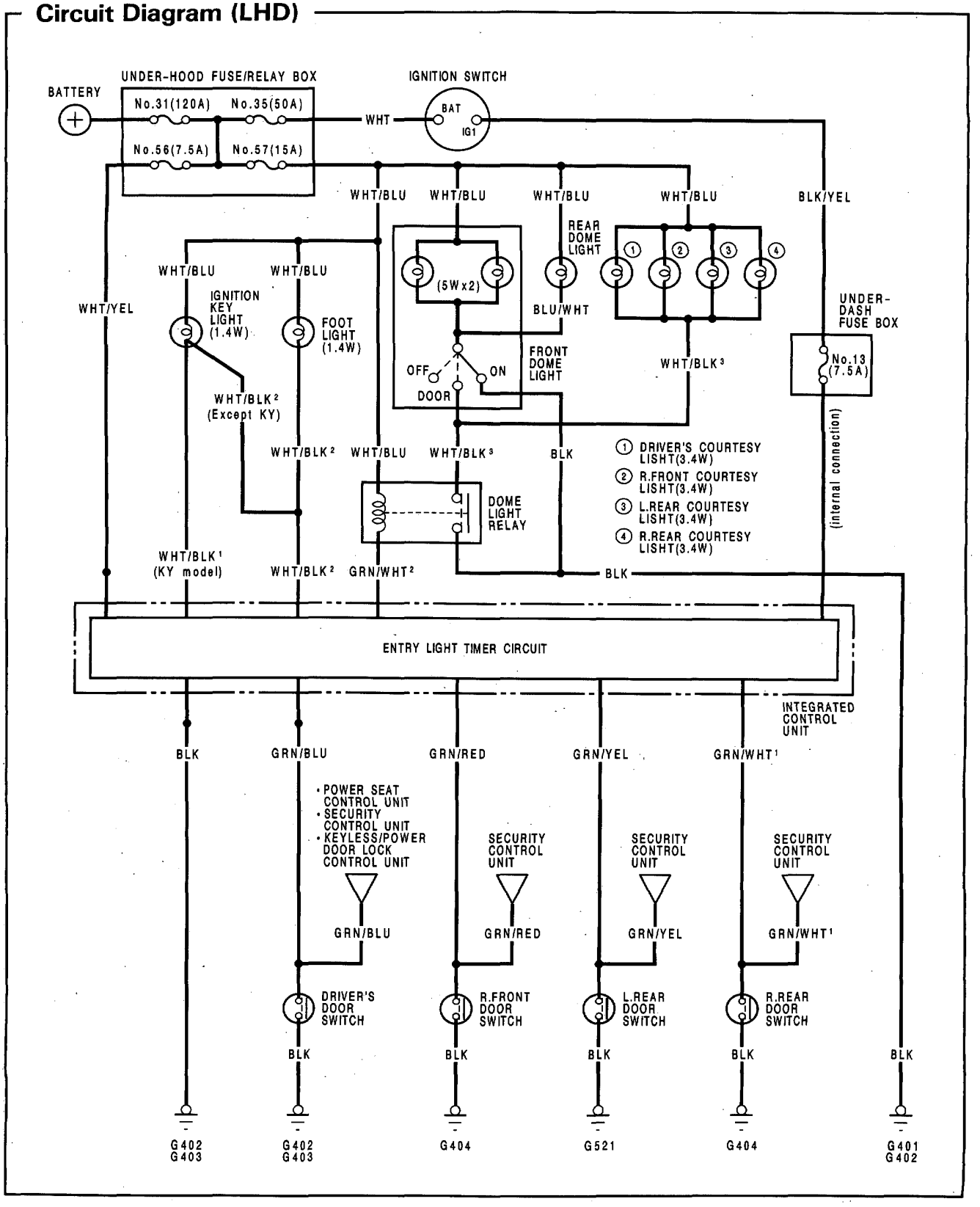

Circuit Diagram (RHD)

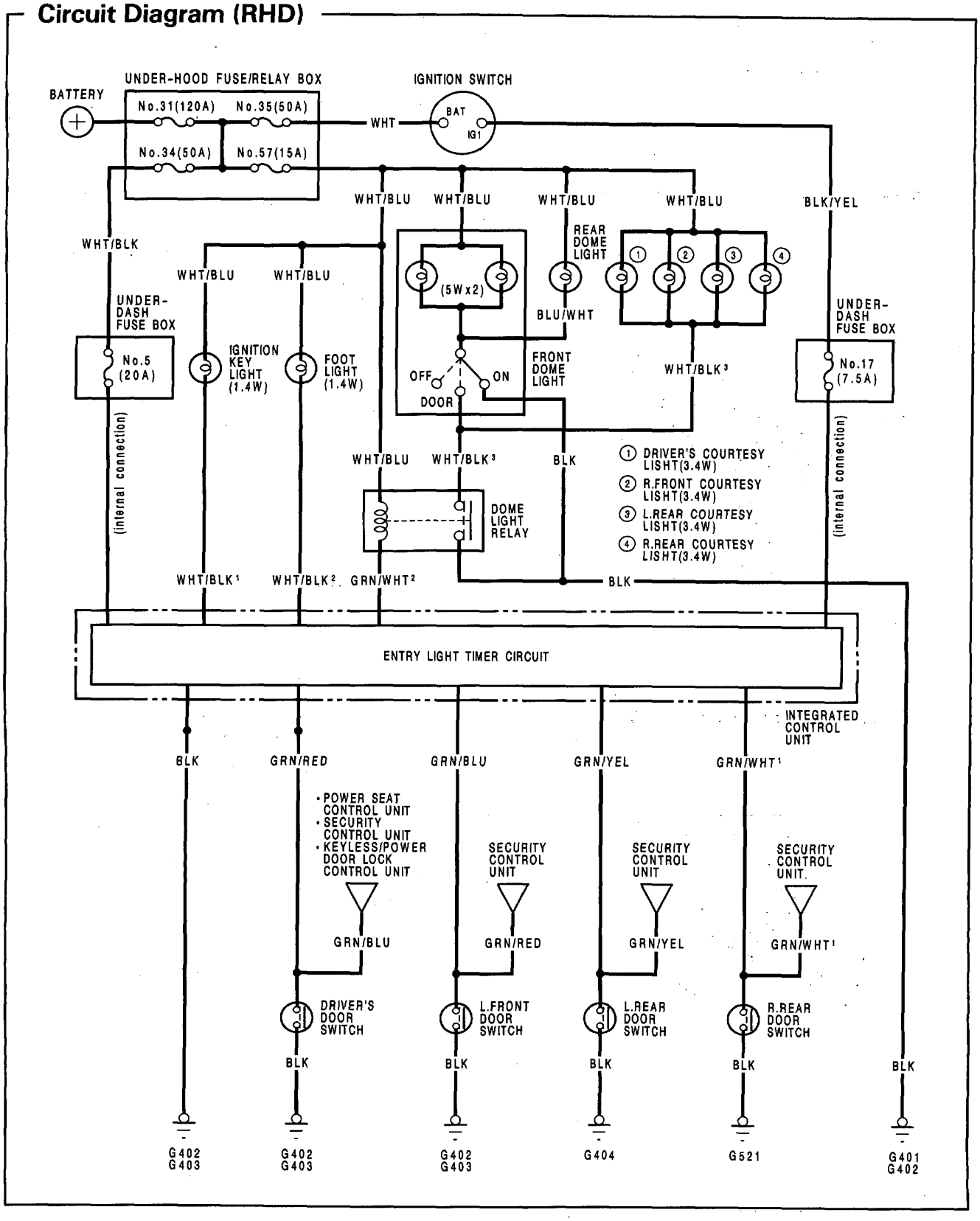

Entry Light Timer System

Front Dome Light Test/Replacement

1. Turn the dome light switch OFF.
2. Pry off the lens.
3. Remove the 2 bolts and the housing.
4. Disconnect the 4-P connector from the housing.

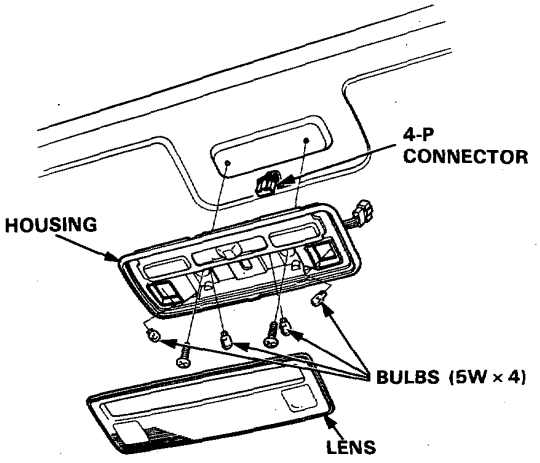

5. Check for continuity between the terminals in each switch position according to the table.

Position \ Terminal		D		E	F	G
OFF		○	⊗			○
MIDDLE		○	⊗	○		○
ON		○	⊗		○	○
SW1	ON	○	⊗		○	
	OFF					
SW2	ON	○	⊗		○	
	OFF					

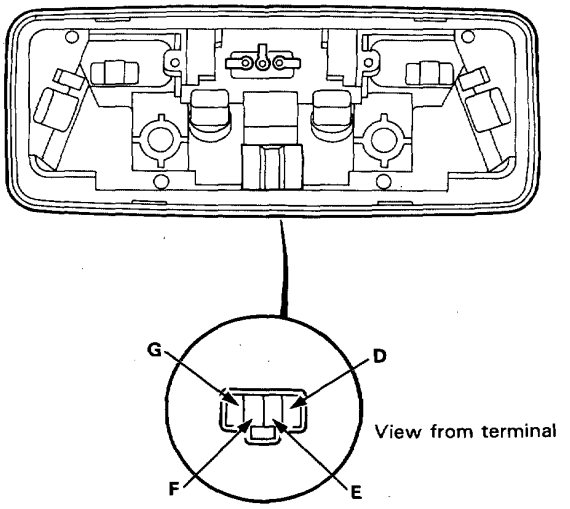

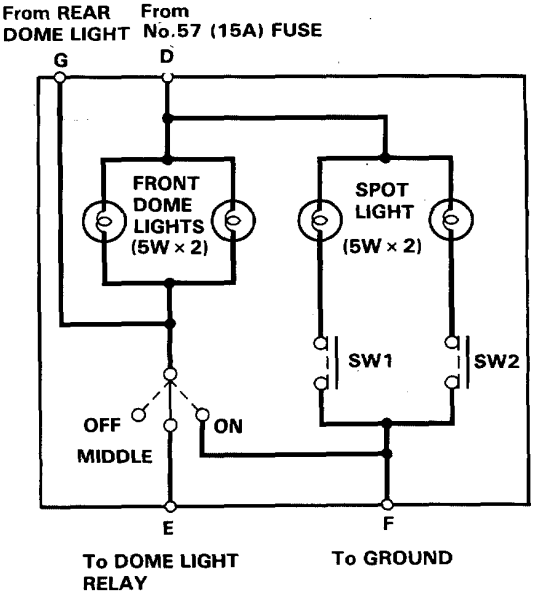

Rear Dome Light Test/Replacement

1. Turn front dome light switch OFF.
2. Pry off the lens.
3. Remove the 2 bolts and the housing.
4. Disconnect the 4-P connector from the housing.

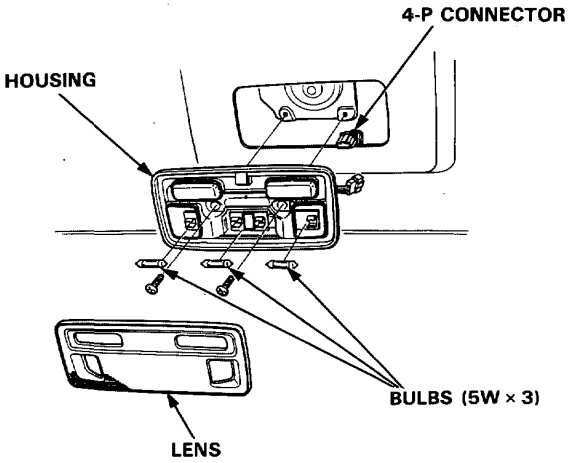

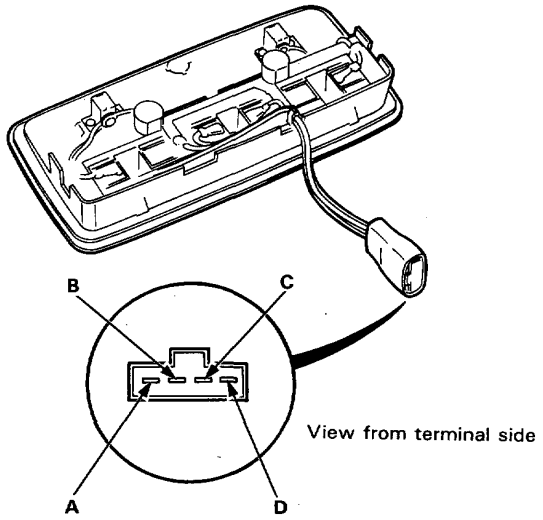

5. Check for continuity between the terminals in each switch position according to the table.

Position \ Terminal		A		B	C		D
Under all conditions		○	○	○			
SW1	ON				○	○	○
	OFF						
SW2	ON				○	○	○
	OFF						

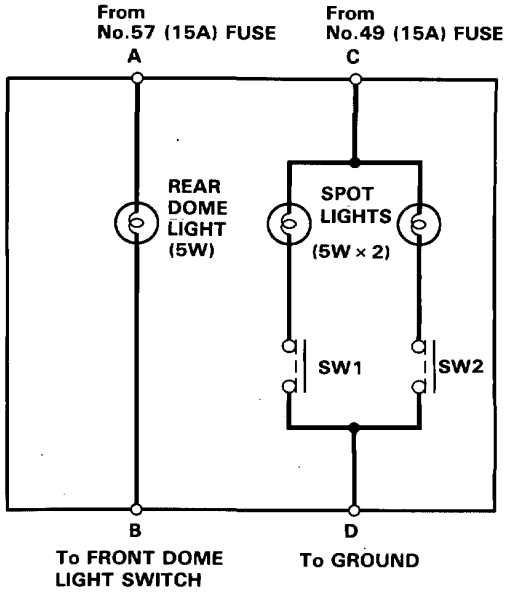

Door Switch Test

NOTE: Be careful not to damage the door trim panel when removing it.

FRONT DOOR SWITCH:

1. Remove the door trim panel.
2. Disconnect the 8-P connector from the door switch.

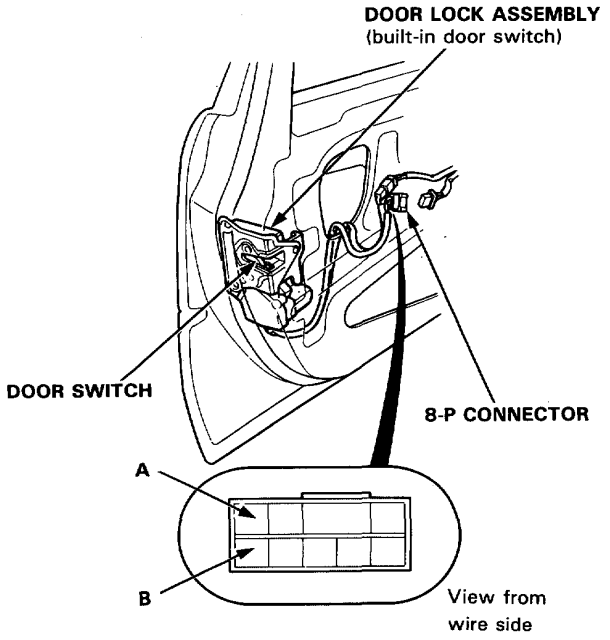

3. There should be continuity between the A terminal and B terminal with the switch released (door open).
4. There should be no continuity with the switch pushed (door closed).

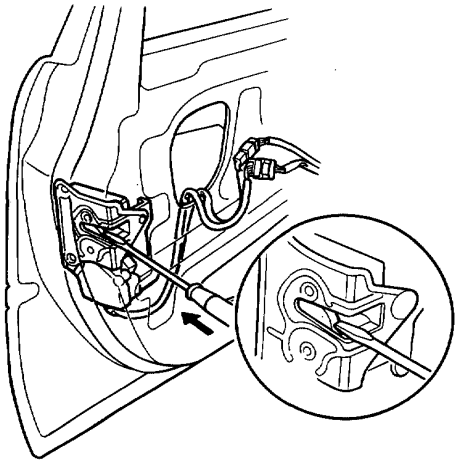

REAR DOOR SWITCH:

5. Remove the rear door trim panel.
6. Disconnect the 6-P connector from the door switch.

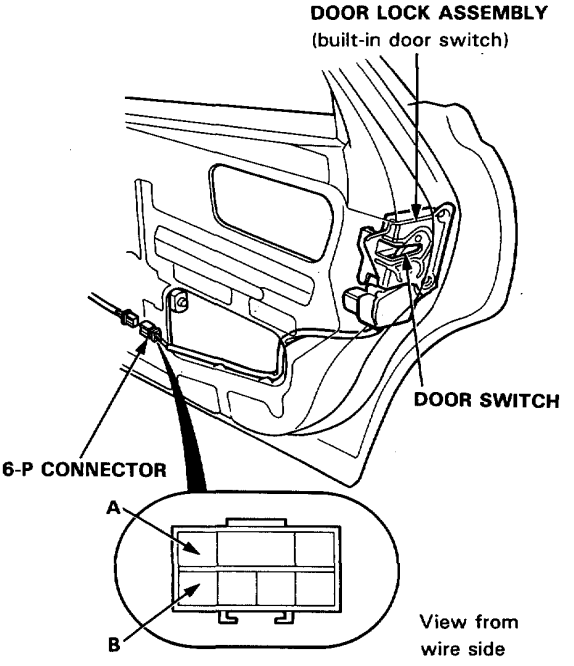

7. There should be continuity between the A terminal and B terminal with the switch released (door open).
8. There should be no continuity with the switch pushed (door closed).

Courtesy Light Replacement

NOTE: The bulb or lens alone can be replaced without removing the door trim panel.

1. Remove the door trim panel.
2. Remove the 2 screws and the retainer plate to remove the light housing from the door trim panel.

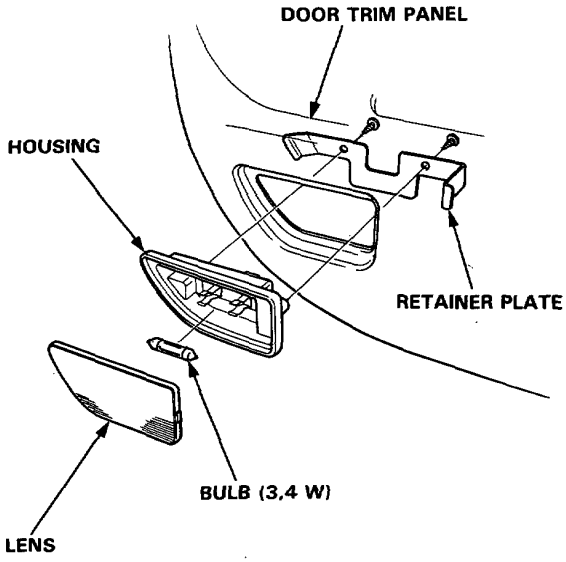

Ignition Key Light Replacement

1. Remove the dashboard lower panel.
2. Remove the dashboard center panel.
3. Remove the bulb/socket from the key light housing by turning the socket 45°.

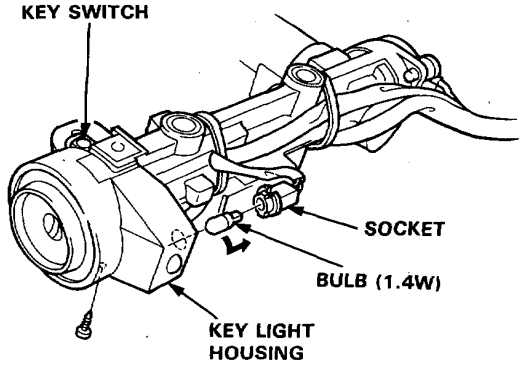

4. Remove the key light housing from the key cylinder by removing the attaching screw.

Entry Light Timer System

Foot Light Replacement

NOTE: The bulb or lens alone can be replaced without removing the dashboard lower panel.

1. Remove the dashboard lower panel.
2. Disconnect the 2-P connector from the foot light.
3. Remove the bulb/socket from the foot light bracket.

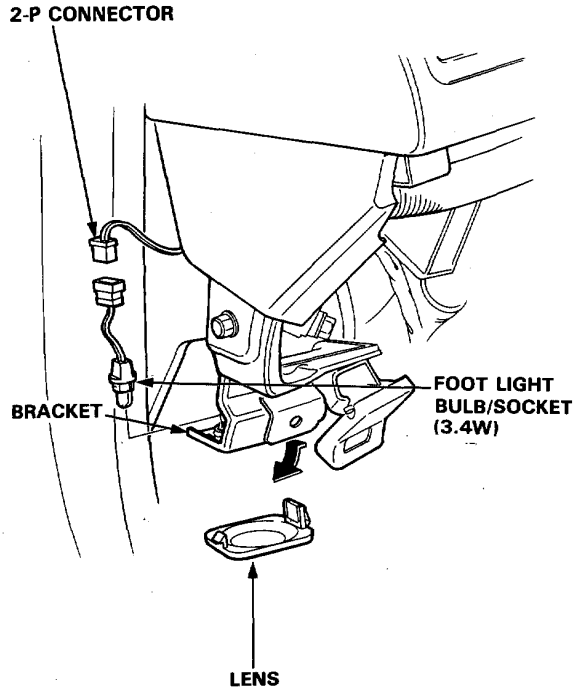

Trunk Light and Latch Switch

Trunk Light Replacement

1. Pry the trunk light lens off the housing.
2. Pry out the light assembly.
3. Disconnect the 3-P connector from the housing.

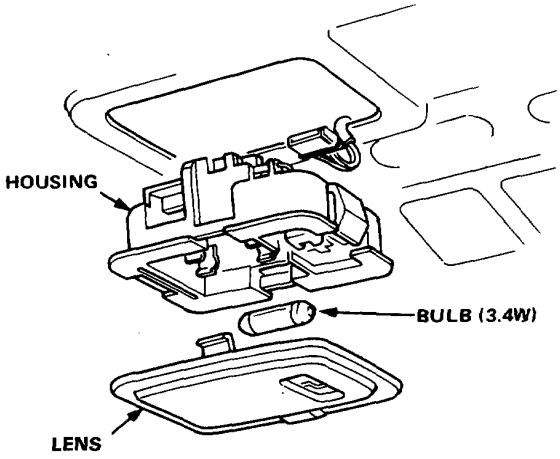

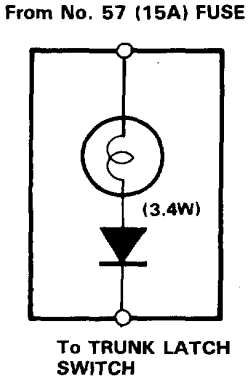

Latch Switch Test/Replacement

1. Open the trunk lid and remove the trunk rear trim panel.
2. Disconnect the 6-P connector from the trunk latch.
3. There should be continuity between the A terminal and body ground when the latch is in the open position.

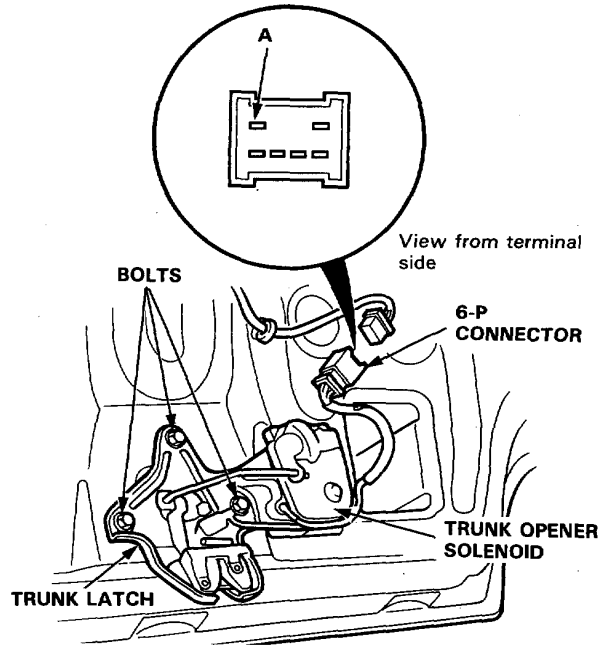

4. If necessary, remove the 3 bolts from the trunk lid, then remove the trunk latch assembly.
   The switch cannot be replaced separately.

Glove Box Light

Test

1. Open the glove box.
2. Disconnect the 2-P connector from the glove box light.

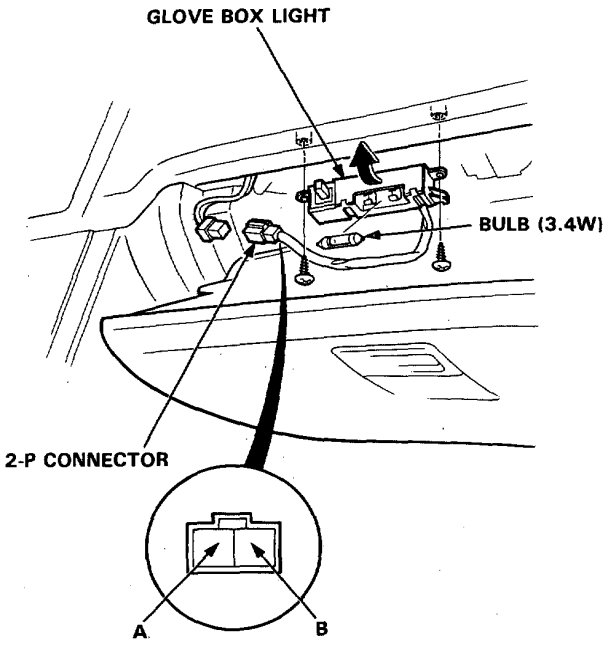

3. There should be continuity between the A terminal and B terminal with a bulb installed. There should be no continuity when the switch is pushed.

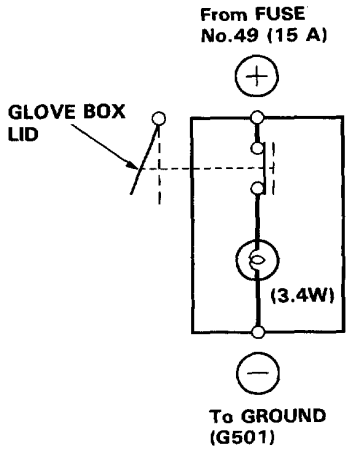

Vanity Mirror Light

Test

1. Remove the 2 screws from the sunvisor bracket.
2. Disconnect the connector and remove the sunvisor.

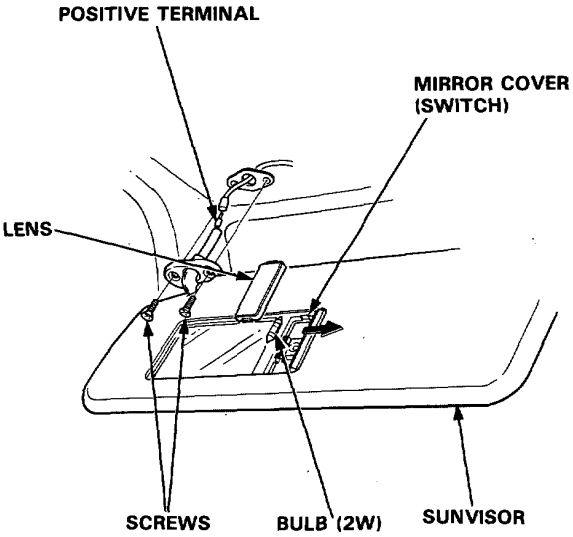

3. If necessary, pry off the lens and replace the bulb.
4. There should be continuity between the positive terminal and mount base (ground) with the mirror cover open, and a bulb installed.
   There should be no continuity when the cover is closed.

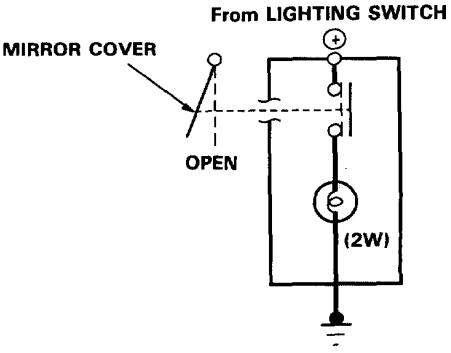

Brake Lights

Circuit Diagram (RHD and KG model)

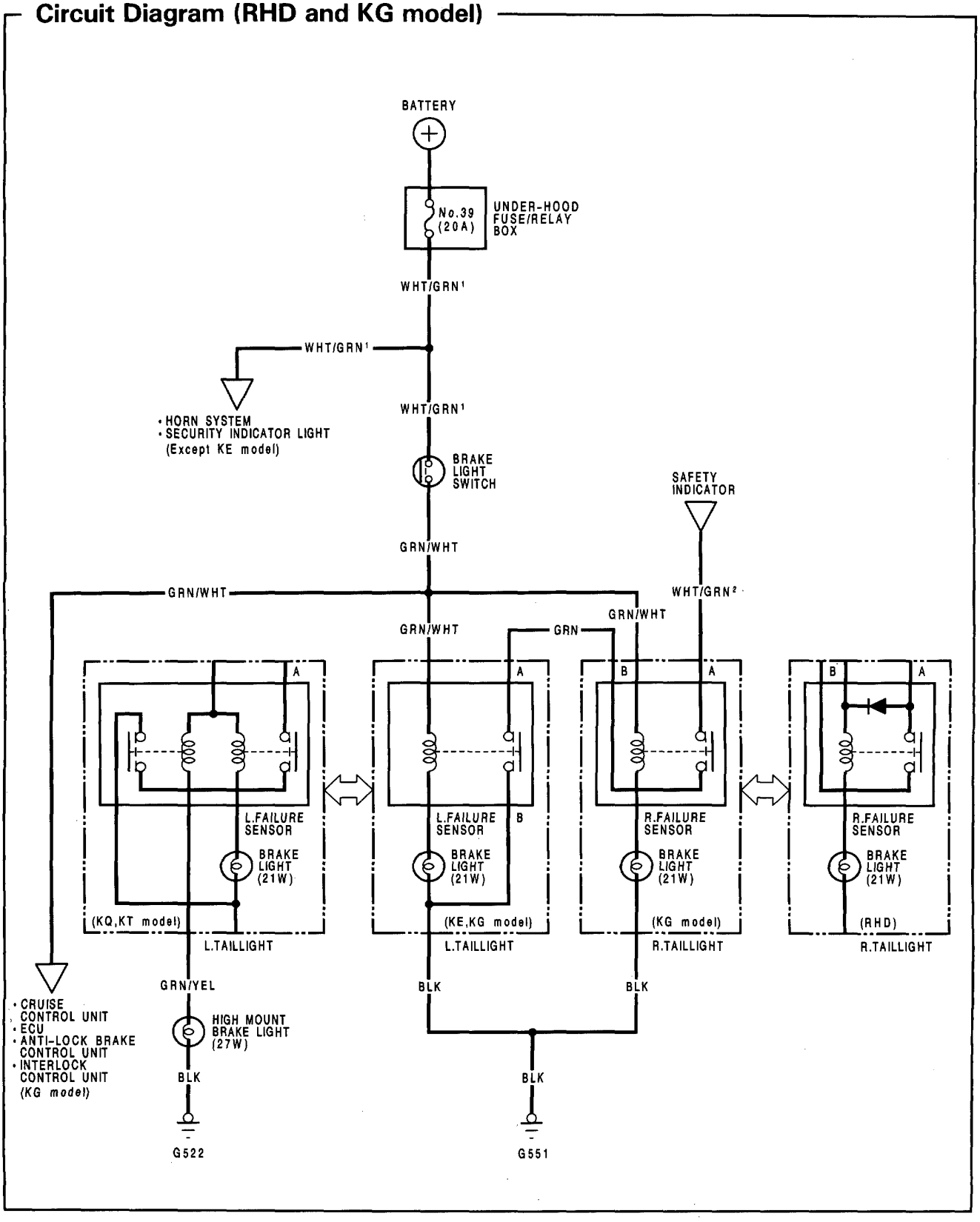

Brake Lights

Circuit Diagram (LHD: Except KG, KY models)

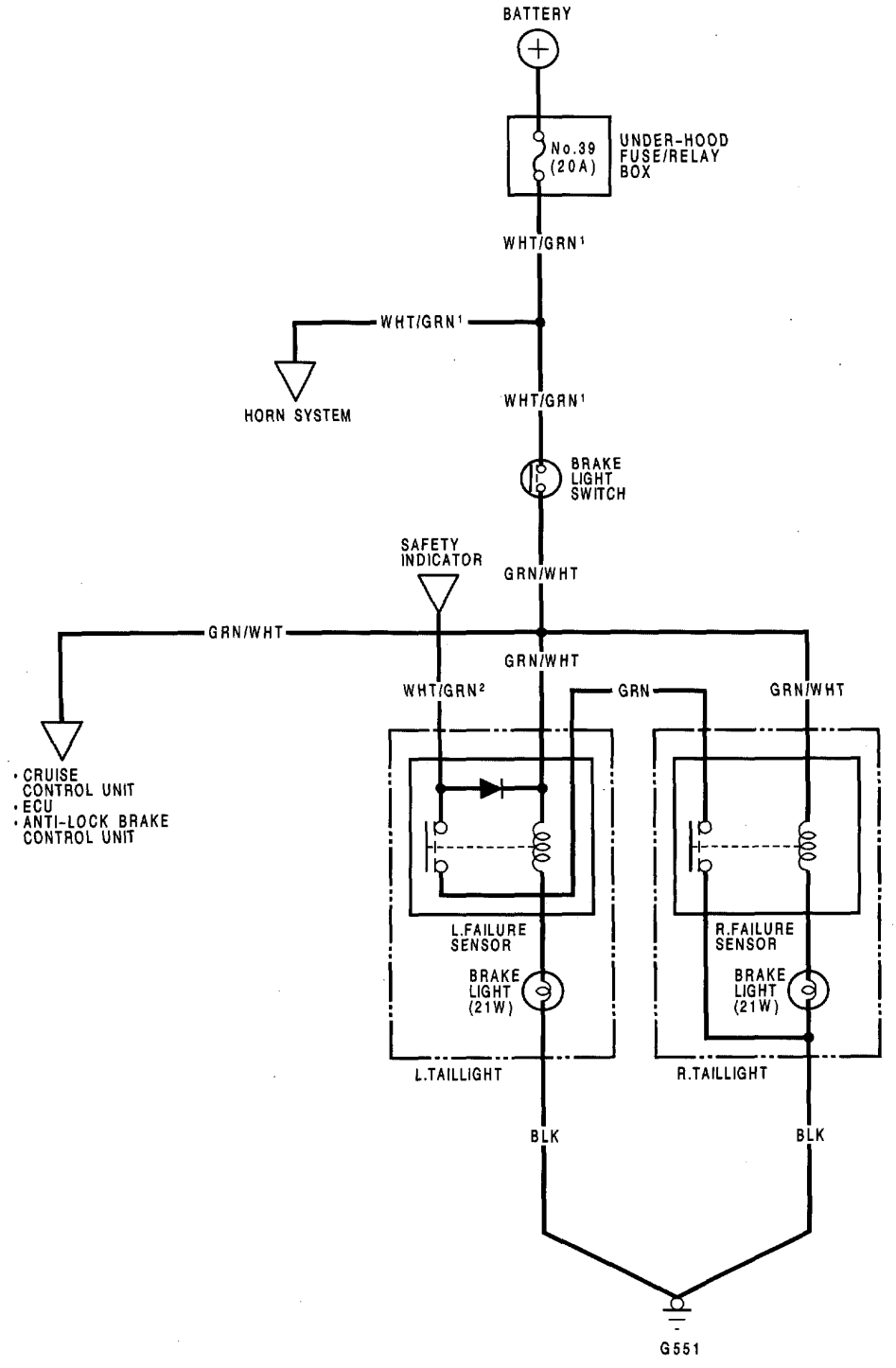

Circuit Diagram (KY model)

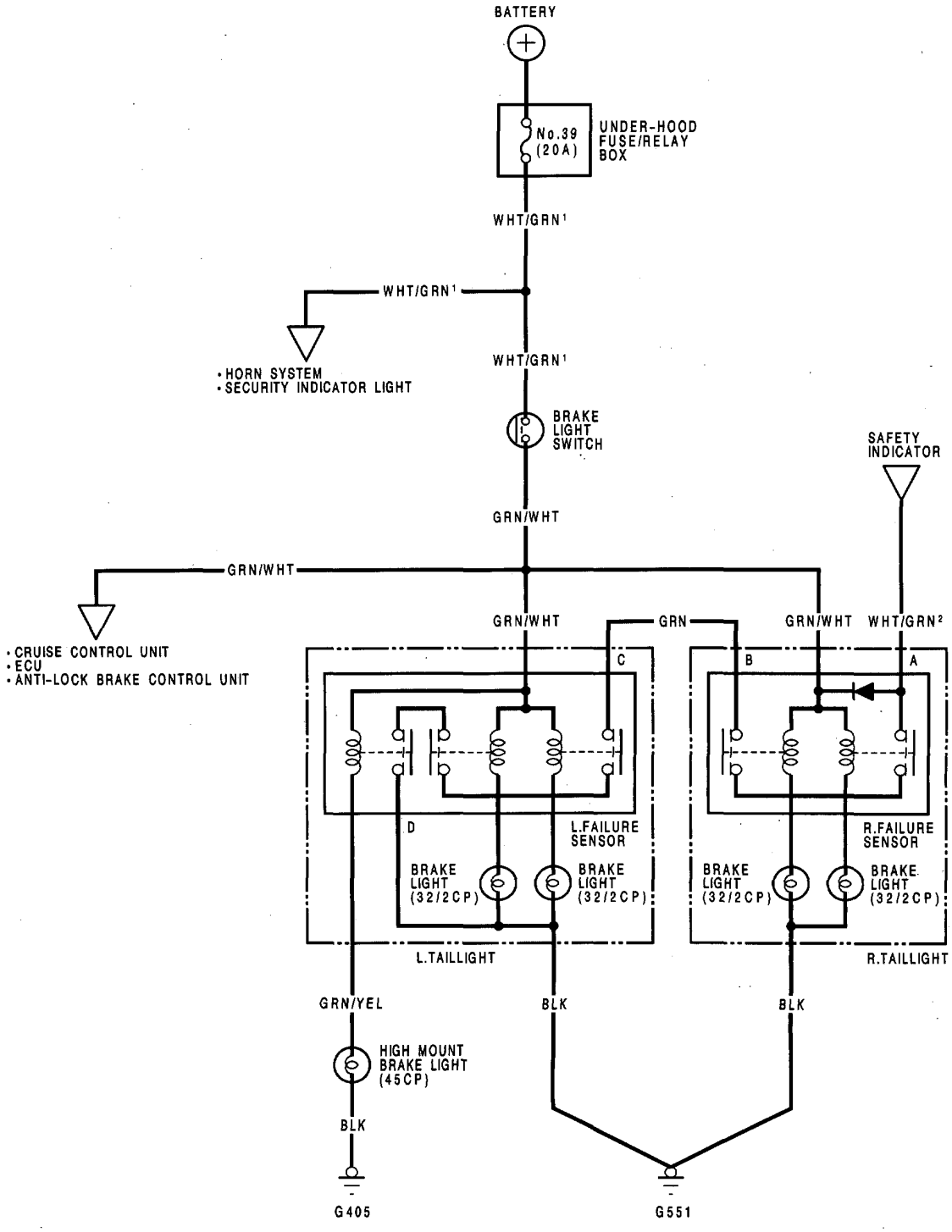

Brake Lights

Brake Light Switch Test

1. If the brake lights do not go on, check the No. 39 (20A) fuse in the under-hood fuse/relay box, and the brake light bulbs in the tailight assembly and high mount brake light.

2. If the fuse and bulbs are OK, disconnect the 4-P connector from the brake light switch.

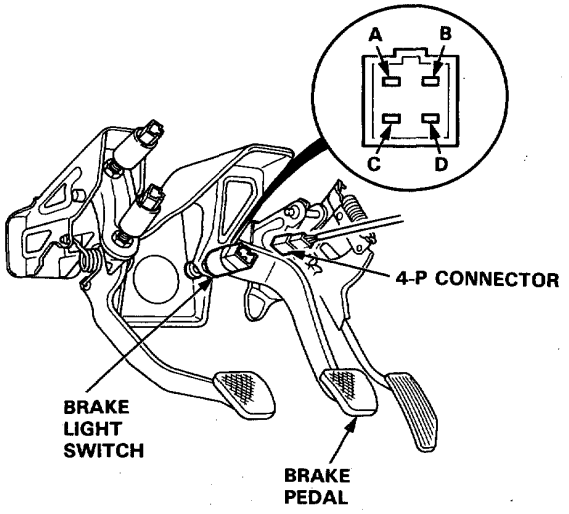

3. Check for continuity between the B and C terminals. There should be continuity with the brake pedal pushed.

   - If there is no continuity, replace the switch or adjust pedal height (See section 19).

   - If there is continuity, but the brake lights do not go on, inspect for:

   — Poor ground (G551, G522).
   — An open in the WHT/GRN[1] or GRN/WHT wire.
   — Faulty brake light failure sensors (see page 23-180).

High Mount Brake Light Replacement

1. Remove the rear shelf panel (See section 20).

2. Open the trunk lid and disconnect the 2-P connector from the high mount brake light.

3. Remove the 2 nuts, then remove the high mount brake light on the rear shelf.

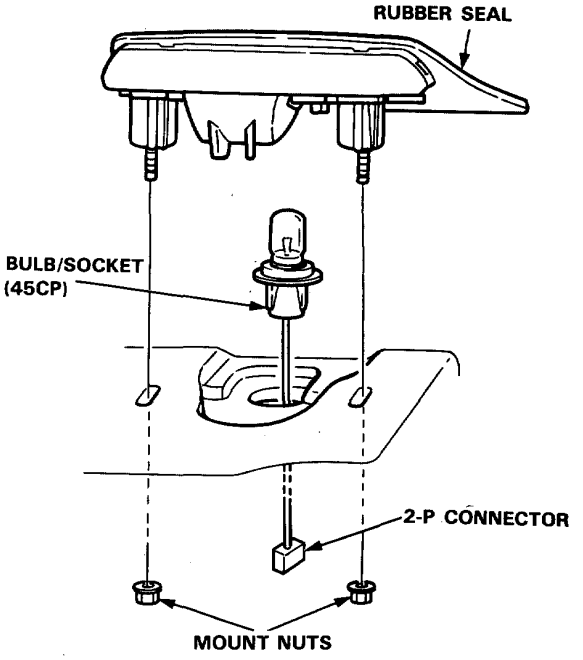

4. Install the high mount brake light in the reverse order of removal. Clean the rear window glass before installing.

   NOTE: When installing the high mount brake light, make sure the rubber seal is touching the glass all the way around.

Back-up Lights

Circuit Diagram

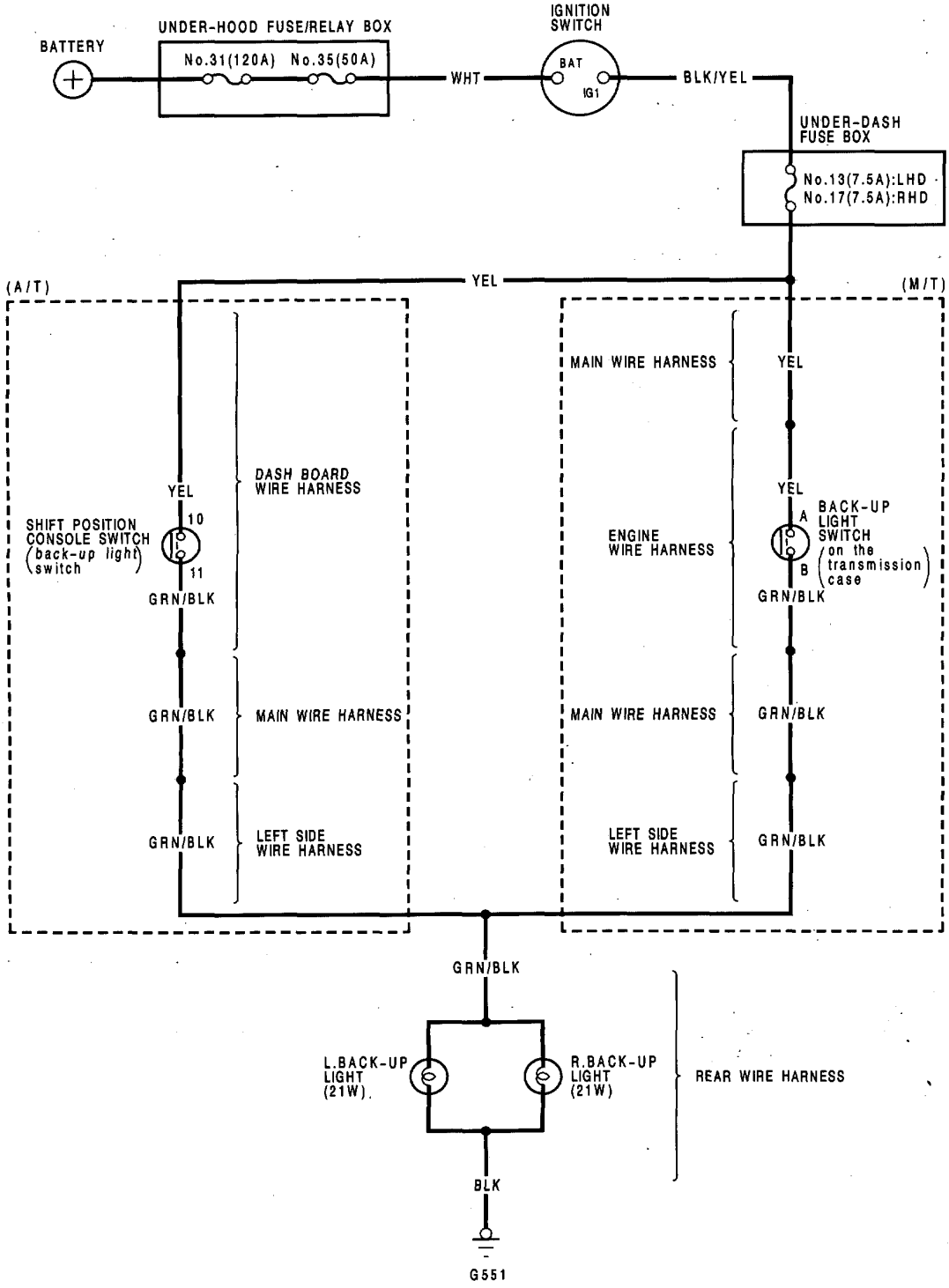

Back-up Lights

Test

Manual Transmission:

NOTE: Check the No. 13: LHD or No. 17: RHD (7.5 A) fuse in the under-dash fuse box before testing.

1. Test the back-up light switch by placing the shift lever in reverse and turning the ignition switch to ON.
2. If the back-up lights do not go on, check the back-up light bulbs in the taillight assembly.
3. If the fuse and bulbs are OK, disconnect the connector from the back-up light switch.

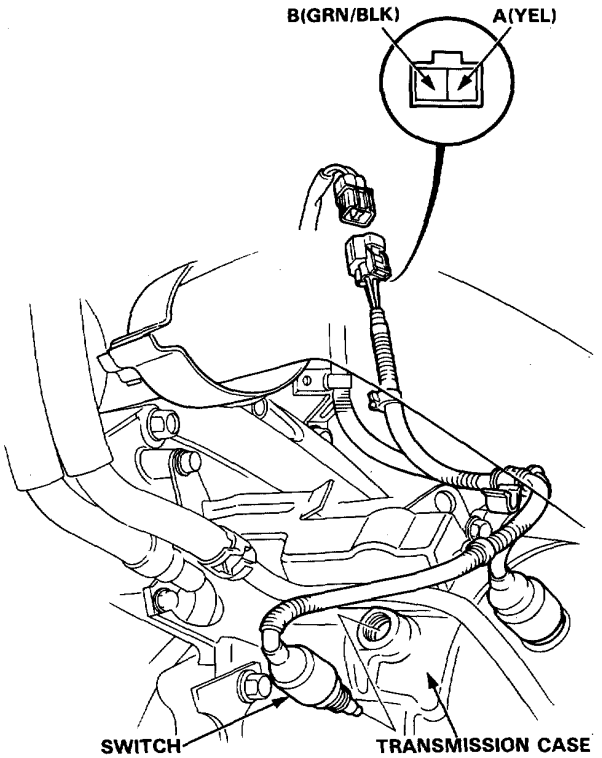

4. Check for continuity between the A and B wires with the switch installed. There should be continuity as the shift lever engages "R".
   - If there is no continuity, replace the switch.
   - If there is continuity, but the back-up lights do not go on, inspect for:

   – Poor ground (G551).
   – Open in the YEL or GRN/BLK wire.

Automatic Transmission:

NOTE: Check the No. 13: LHD or No. 17: RHD (7.5 A) fuse in the under-dash fuse box before testing.

1. Test the back-up light switch by shifting the select lever to "R" and turning the ignition switch ON.
2. If the back-up lights do not go on, check the back-up light bulbs in the taillight assembly.
3. If the fuse and bulbs are OK, remove the center console, then disconnect the 14-P connector from the shift position console switch (back-up light switch).

   CAUTION: Do not damage the yellow-covered SRS wiring.

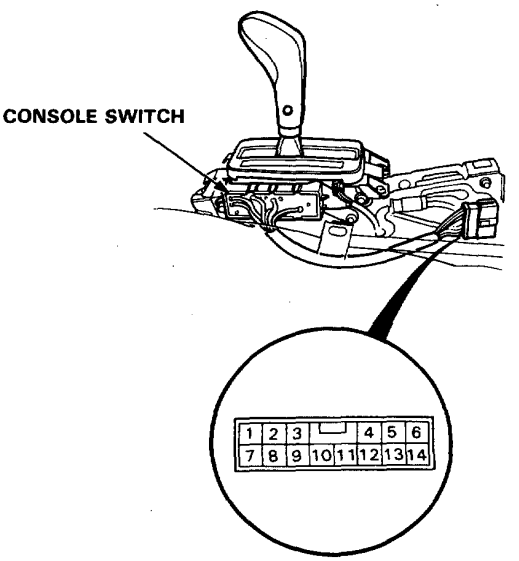

View from wire side

4. Check for continuity between No.10 and No.11 terminals. Move the lever back and forth without touching the push button at the "R" position, and check for continuity within the range of free play of the shift lever.
   - If there is no continuity, adjust the position of the console switch (See page 23-168).
   - If there is continuity, but the back-up lights do not go on, inspect for an open in the YEL or GRN/BLK wire.

Turn Signal/Hazard Flasher System

Component Location (LHD)

CAUTION:

- ***All SRS electrical wiring harnesses are covered with yellow outer insulation.***
- **When disconnecting the SRS wire harness, install the short connector on the airbag then disconnect the wire harness (See page 23-412).**
- ***Replace the entire affected SRS harness assembly if there is an open circuit or damage to the wiring.***

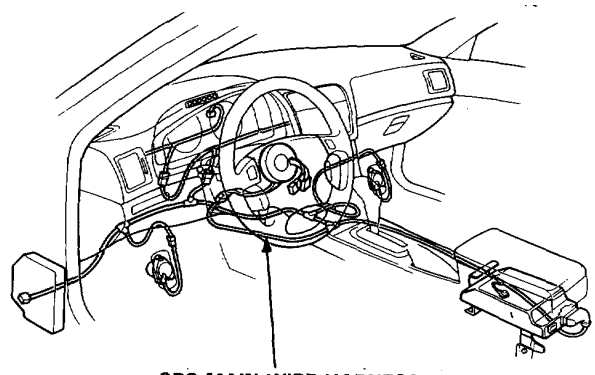

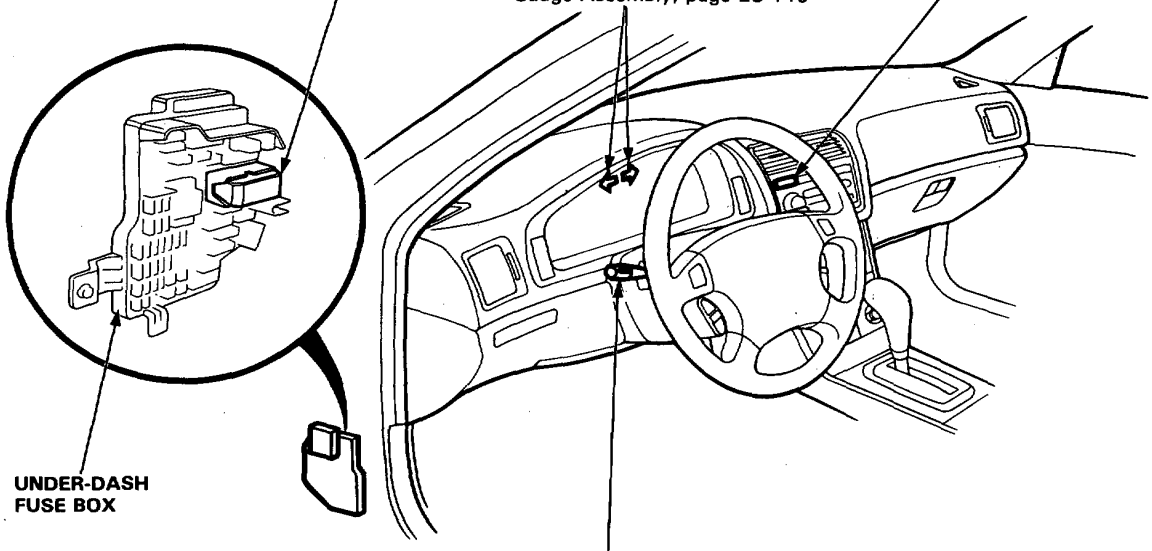

Turn Signal/Hazard Flasher System

Component Location (RHD)

CAUTION:

- **All SRS electrical wiring harnesses are covered with yellow outer insulation.**
- **When disconnecting the SRS wire harness, install the short connector on the airbag then disconnect the wire harness (See page 23-412).**
- **Replace the entire affected SRS harness assembly if there is an open circuit or damage to the wiring.**

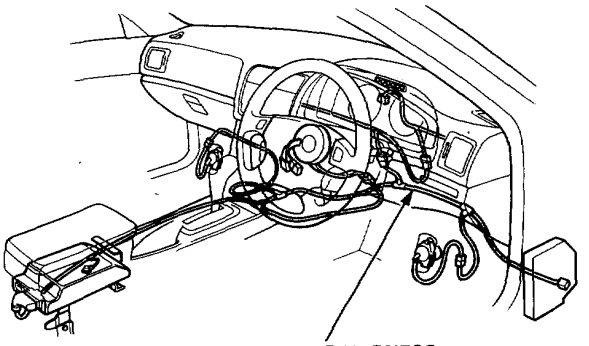

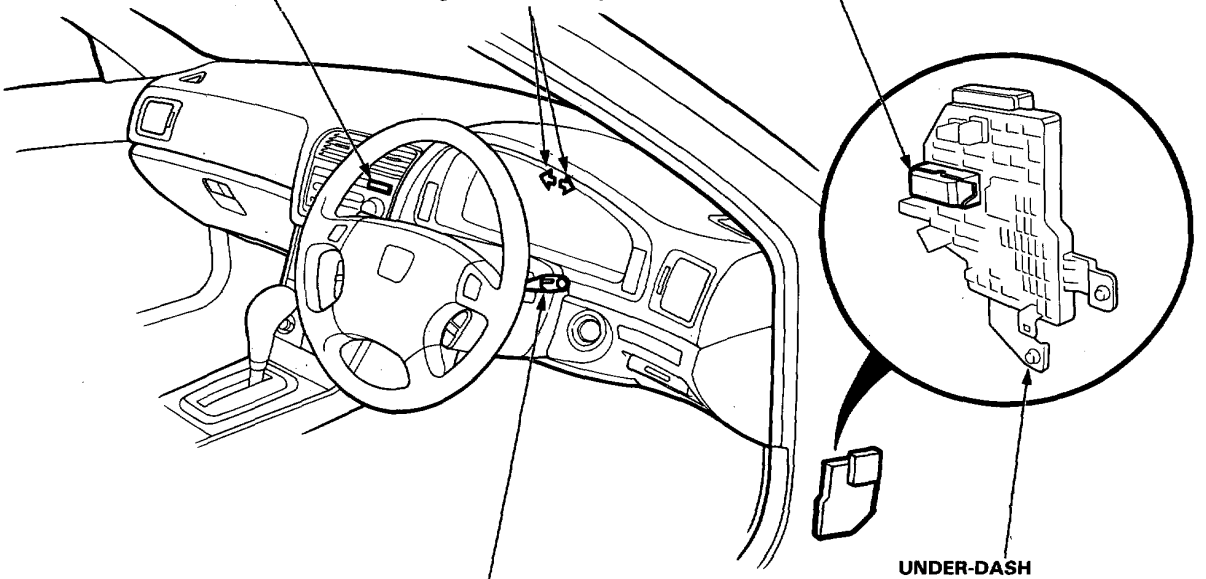

Circuit Diagram

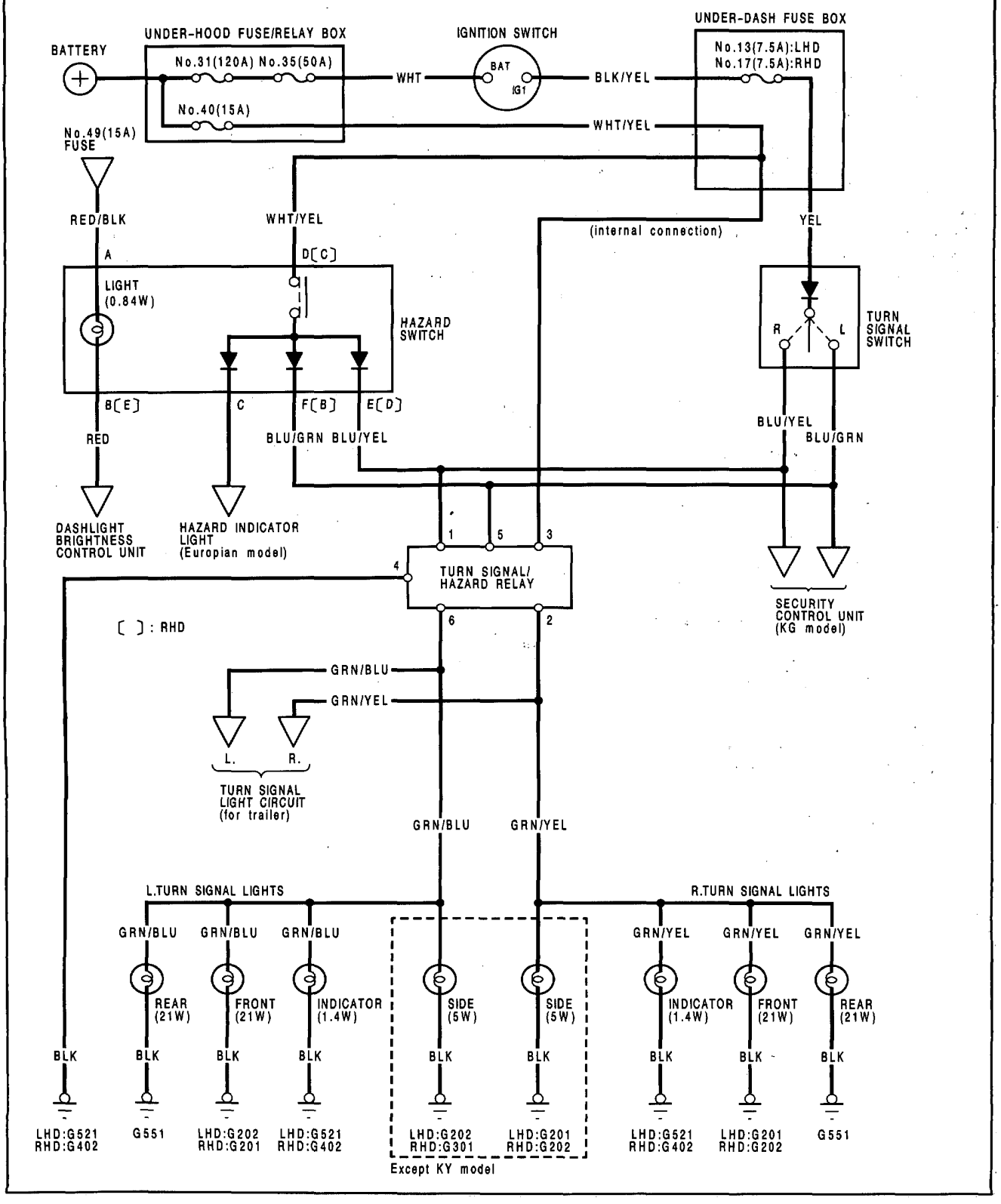

Turn Signal/Hazard Relay Input Test

CAUTION:

- **All SRS electrical wiring harnesses are covered with yellow outer insulation.**
- **When disconnecting the SRS wire harness, install the short connector on the airbag then disconnect the wire harness (See page 23-412).**
- **Replace the entire affected SRS harness assembly if there is an open circuit or damage to the wiring.**

Remove the driver's side kick panel, then remove the turn signal/hazard relay from the under-dash fuse box.
Make the following input tests at the relay holder terminals.
If all tests prove OK but the relay fails to work, replace it.

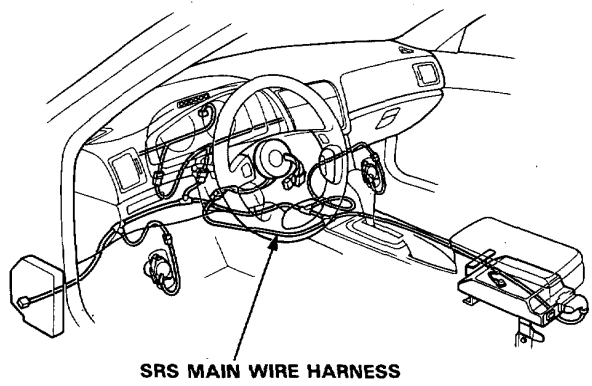

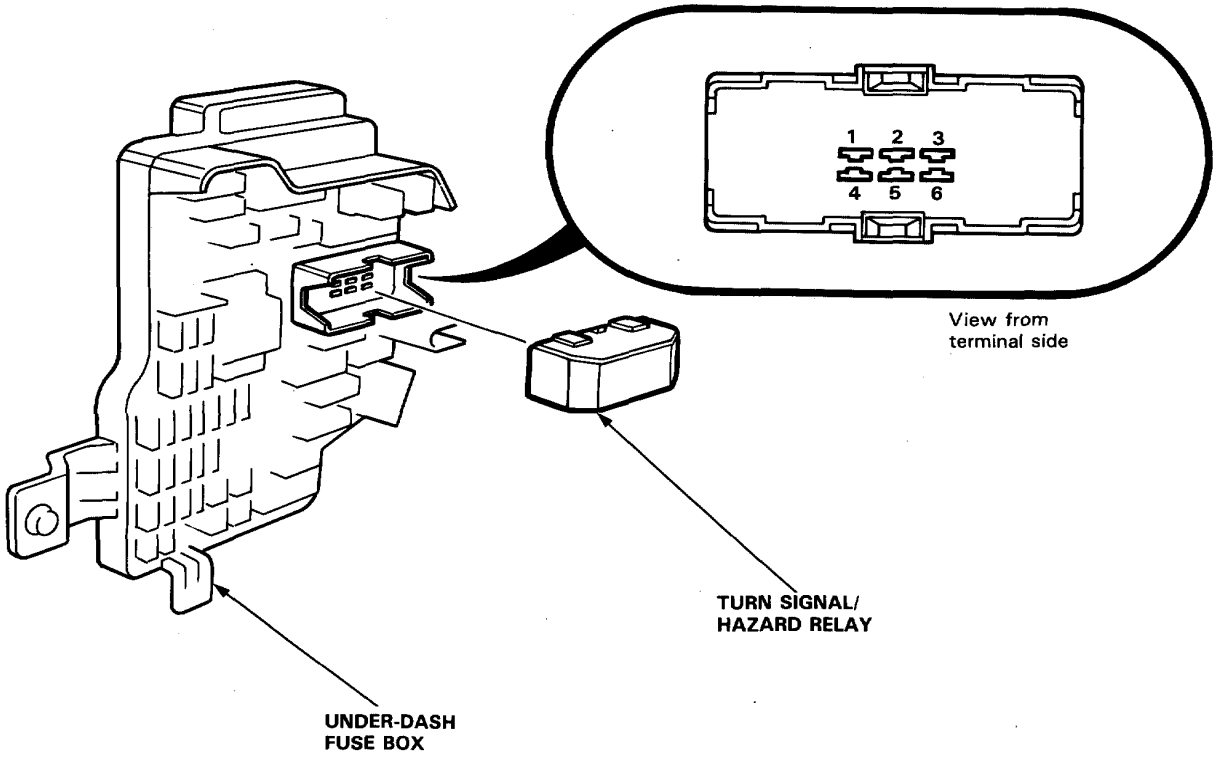

No.	Terminal	Test condition	Test: desired result	Possible cause (if result is not obtained)
1	4	Under all conditions.	Check for continuity to ground: should be continuity.	• Poor ground (G521 [402]). • An open in the BLK wire.
2	3	Under all conditions.	Check for voltage to ground: should be battery voltage.	• Blown No. 40 (15 A) fuse. • An open in the WHT/YEL wire.
3	1	Hazard switch ON.	Check for voltage to ground: should be battery voltage.	• Faulty hazard switch. • An open in the BLU/YEL.
		Ignition switch ON and turn signal switch to R.		• Faulty turn signal switch. • An open in the BLU/YEL.
4	5	Hazard swith ON	Check for voltage to ground: should have battery voltage.	• Faulty hazard switch. • An open in the BLU/GRN.
		Ignition switch ON and turn signal switch to L.		• Faulty turn signal switch. • An open in the BLU/GRN.
5	3 • 6	Connect the 3 terminal to the 6 terminal	L. Turn signal lights should come on as the battery is connected.	• Blown bulb. • Poor ground (G201, G202, G301, G551, G521). • An open in the GRN/BLU wire.
6	3 • 2	Connect the 3 terminal to the 2 terminal.	R. Turn signal lights should come on as the battery is connected.	• Blown bulb. • Poor ground (G201, G202, G301, G551, G521). • An open the GRN/YEL wire.

[ ]: RHD

Turn Signal/Hazard Flasher System

Hazard Switch Removal

CAUTION: Be careful not to damage the center instrument panel.

1. Remove the center instrument panel assembly.
2. Remove the stereo radio/cassette player (See page 23-257).
3. Remove the clock and hazard switch from the climate control panel.
4. Remove the hazard switch from the clock.

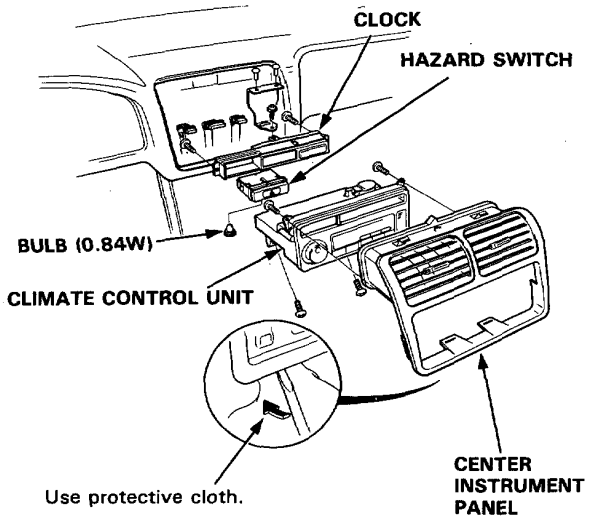

5. Turn the bulb socket 45° counterclockwise to remove it.

Hazard Switch Test

1. Remove the hazard switch from the center instrument panel.
2. Check for continuity between the terminals in each switch position according to the table.

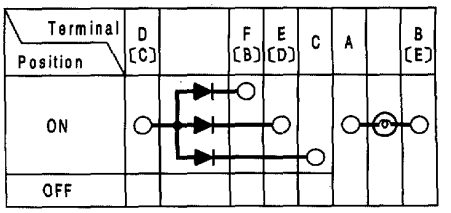

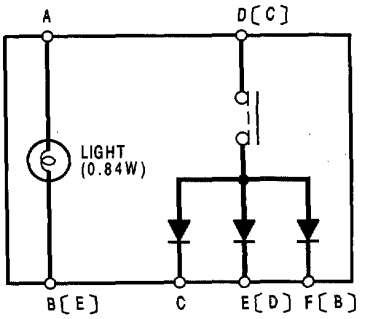

[ ]: Execpt european model.

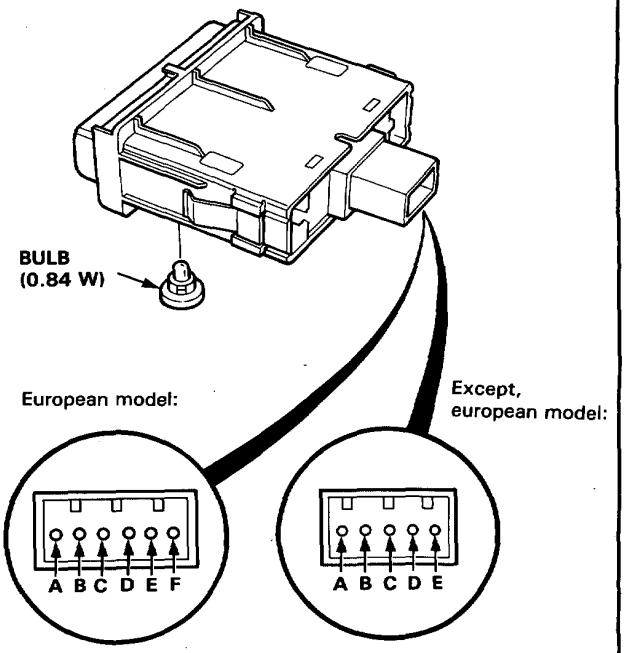

Component Location Index

CAUTION:

- **All SRS electrical wiring harnesses are covered with yellow outer insulation.**
- **When disconnecting the SRS wire harness, install the short connector on the airbag then disconnect the wire harness (See page 23-412).**
- **Replace the entire affected SRS harness assembly if there is an open circuit or damage to the wiring.**

NOTE: RHD type is symmetrical to LHD type.

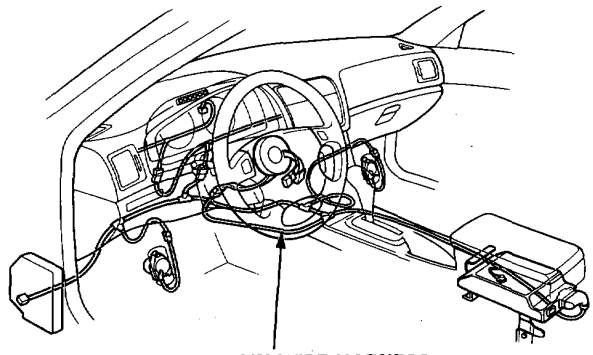

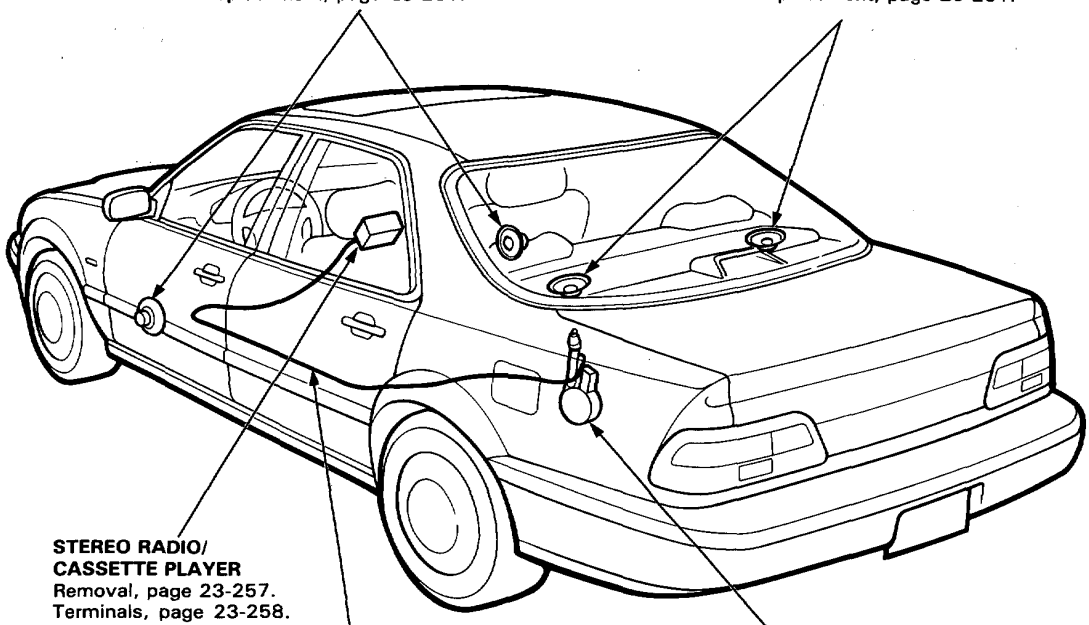

Stereo Sound System

Circuit Diagram

NOTE: Several different wires have the same color. They have been given a number suffix to distinguish them (for example BLK[1] and BLK[2] are not the same).

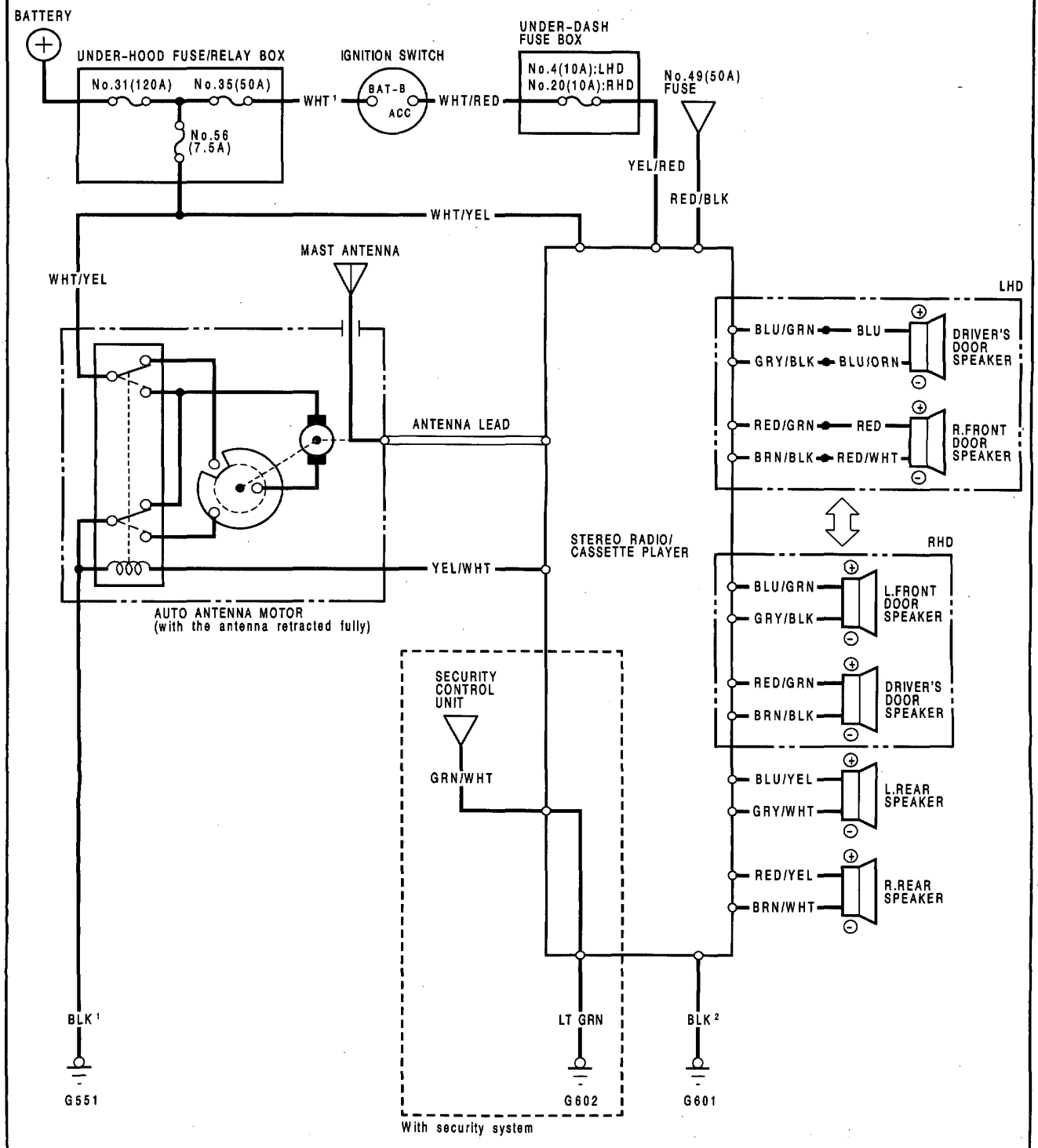

Unit Removal

CAUTION:

- **All SRS electrical wiring harnesses are covered with yellow outer insulation.**
- **When disconnecting the SRS wire harness, install the short connector on the airbag then disconnect the wire harness (See page 23-412).**
- **Replace the entire affected SRS harness assembly if there is an open circuit or damage to the wiring.**

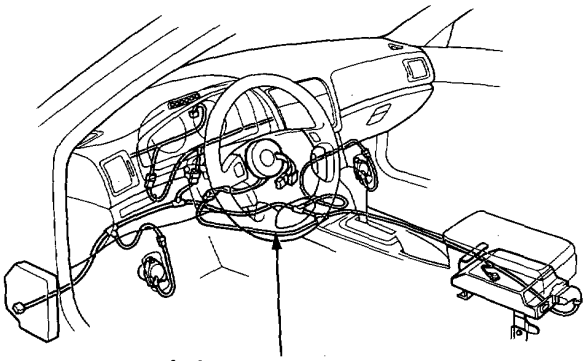

NOTE: Disconnect the battery negative cable before removing the unit.

1. Remove the center armrest and center console panel.

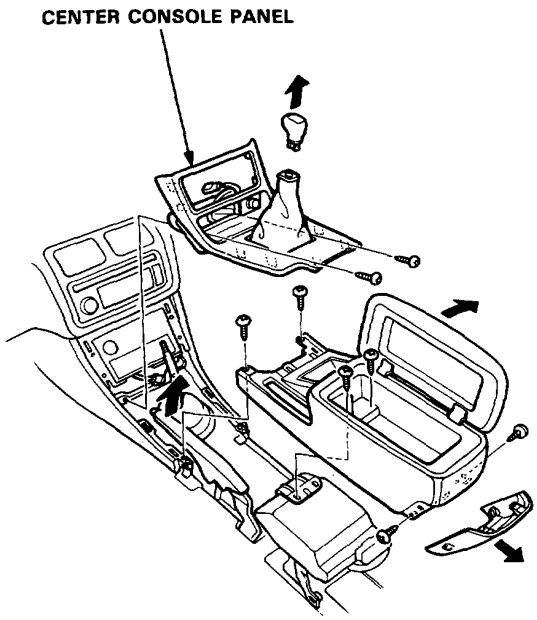

2. Remove the 2 mounting bolts, then disconnect the ground cable.
   Pull the stereo radio/cassette player out part of the way.

3. Disconnect the 16-P connector and mast antenna lead.

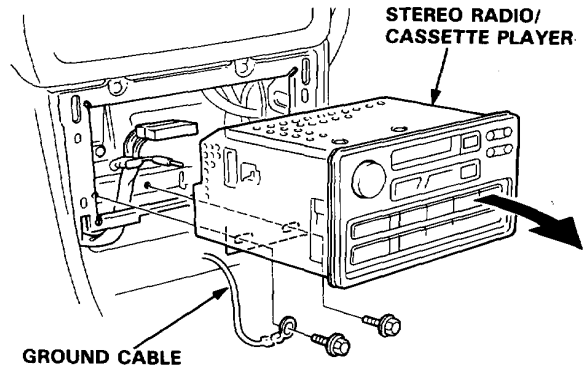

4. Installation is the reverse order of removal.

NOTE: Before tightening the mounting bolts, make sure the harnesses are not pinched.

Stereo Sound System

Radio/Cassette Unit Terminals

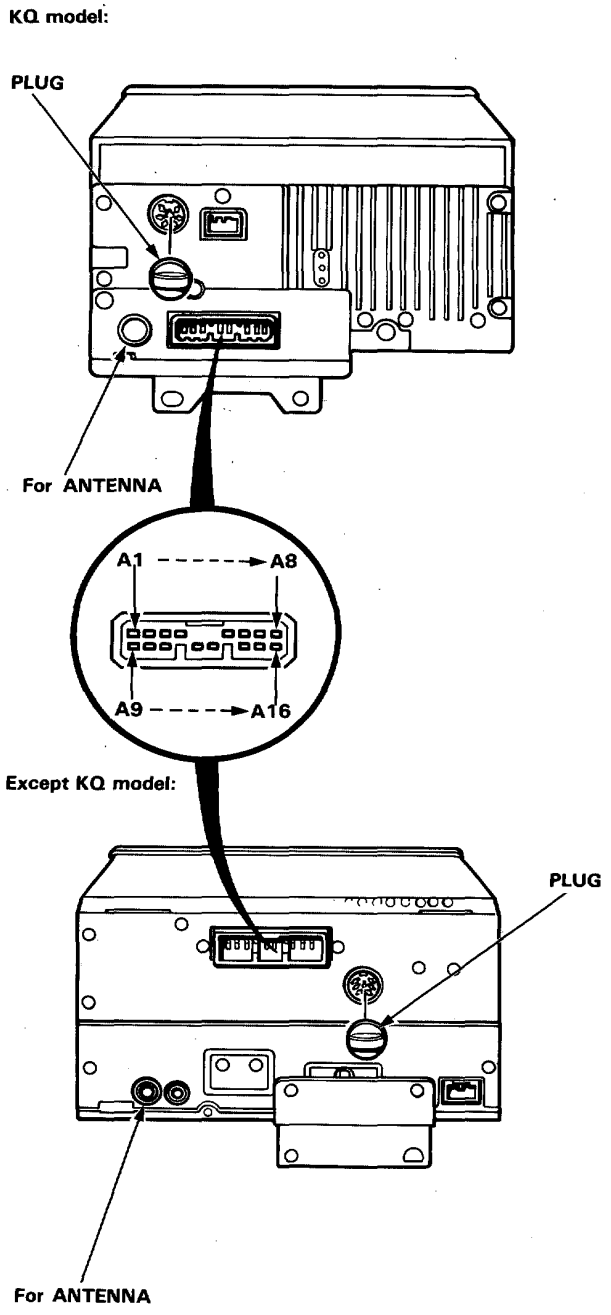

Terminal	Wire	Destination
A1	RED/GRN	Right front door speaker ⊕
A2	BLU/GRN	Left front door speaker ⊕
A3	RED/BLK	Light-on signal
A4	WHT/YEL	Constant power (Tuning memory)
A5	YEL/RED	ACC (Main stereo power supply)
A6	YEL/WHT	Radio switched power (To antenna)
A7	BLU/YEL	Left rear speaker⊕
A8	RED/YEL	Right rear speaker⊕
A9	BRN/BLK	Right front door speaker⊖
A10	GRY/BLK	Left front door speaker⊖
A11	BRN	Telephone mute signal
A12	GRN/WHT	Security (IN)
A13	LT GRN	Security (OUT)
A14	BLK	Ground (G501)
A15	GRN/WHT	Left rear speaker ⊖
A16	BRN/WHT	Right rear speaker ⊖

Auto Antenna Motor Test

1. Remove the trunk side trim panel.

2. Disconnect the 4-P connector from the motor and remove the connector from its clamp.

3. First check power to the motor at the harness pins: There should be battery voltage between the WHT/YEL (+) and BLK (−) terminals all the time. There should be battery voltage between the YEL/WHT (+) and BLK (−) terminals only with the ignition and radio switched ON.

4. Test motor operation:

   FULL EXTEND: Connect battery power to the No. 1 and No. 2 terminals and ground the No. 3 terminal.

   RETRACTED: Then disconnect battery power from the No. 2 terminal.

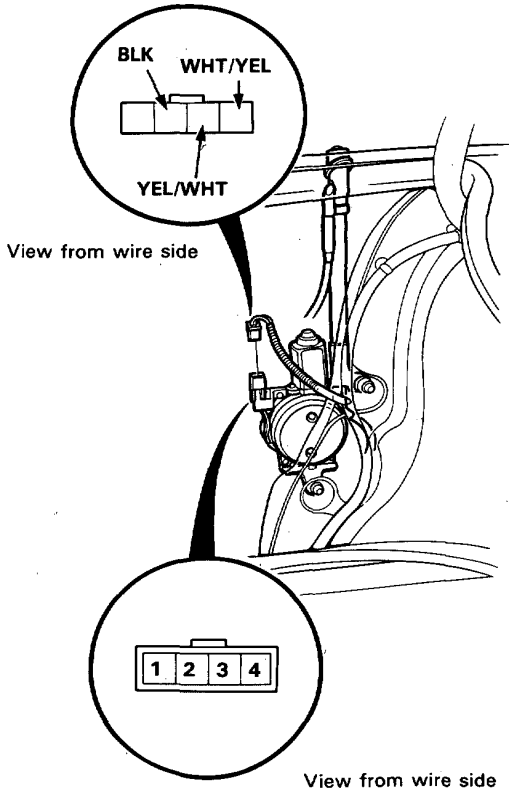

5. If the motor fails to operate properly, replace it.

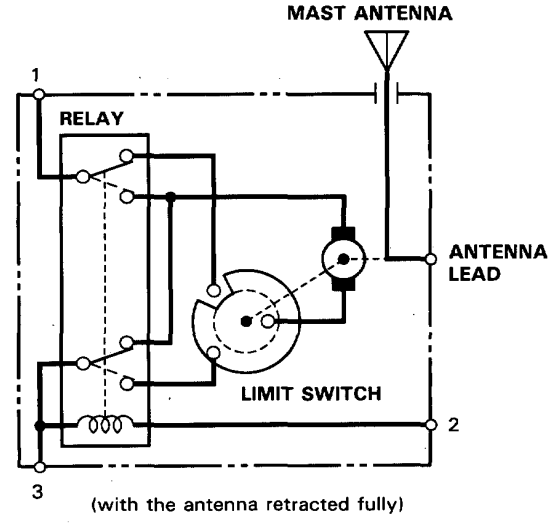

Sticking Antenna:
The antenna sticks in either the up or down position.

1. Remove the special nut, spacer, and bushing (See page 23-260).

2. Clean the antenna mast housing threads and reinstall the spacer and bushing.

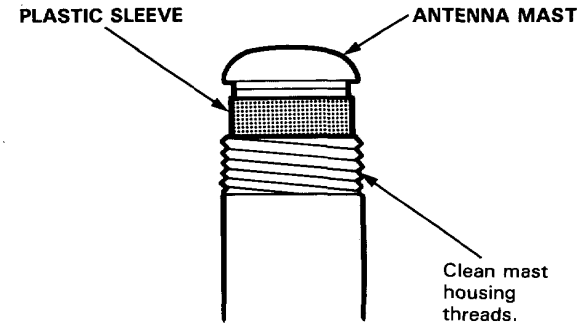

Mast Antenna Replacement

Removal

NOTE: The antenna mast alone can be replaced without having to remove the power antenna motor unit.

1. Remove the special nut, spacer and bushing.
2. Carefully withdraw the antenna mast while extending it by turning the radio switch ON.

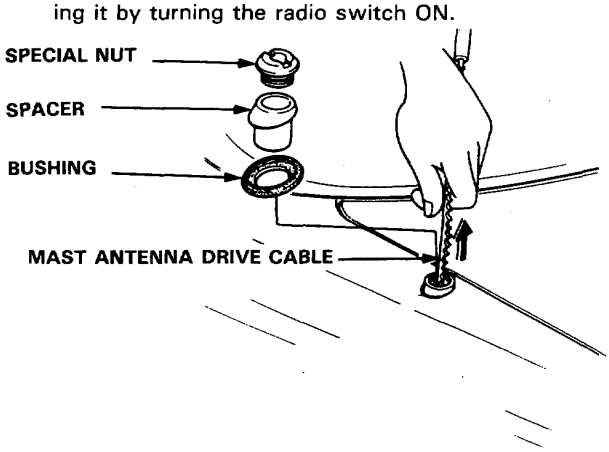

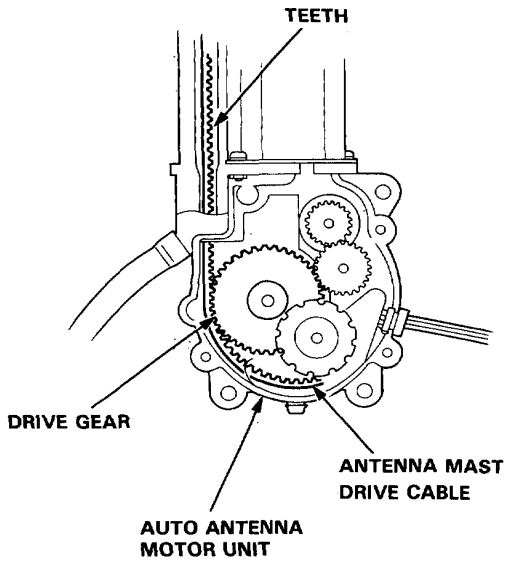

Installation

1. Hold the antenna so the teeth on the drive cable face in the direction shown, and insert the drive cable into the antenna housing.

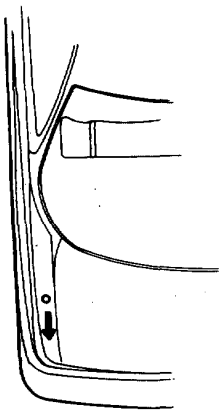

Direction of the teeth.

2. Check for engagement of the cable teeth to the drive gear by carefully moving the cable up and down.
3. Turn the radio switch "OFF", and let the motor pull the drive cable inside the antenna housing.
4. Clean the antenna mast housing threads and insert the antenna mast into the antenna housing. Install the bushing and spacer; tighten the special nut.
5. Check that the antenna mast retracts and extends fully when the radio switch is turned ON and OFF repeatedly.

Auto Antenna Motor Replacement

1. Remove the trunk side trim panel.
2. Disconnect the 4-P connector and antenna lead from the motor, then remove the special nut and 2 mount nuts to take out the motor with the mast antenna.

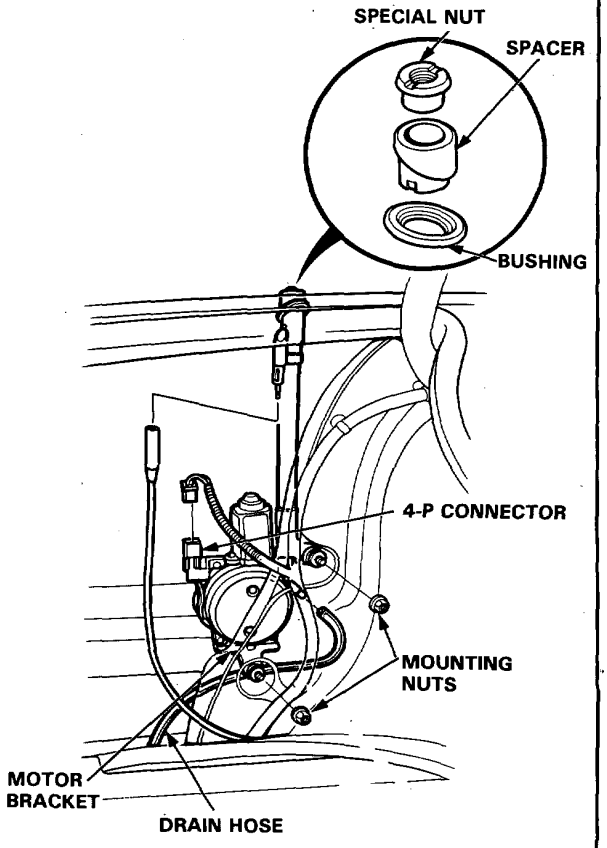

3. Install in reverse order of removal.

   NOTE: Tighten the special nut, then tighten 2 mount nuts to motor bracket.

Front Speaker Replacement

1. Remove the door trim panel.
2. Remove the 3 screws, then disconnect the connector from the speaker.

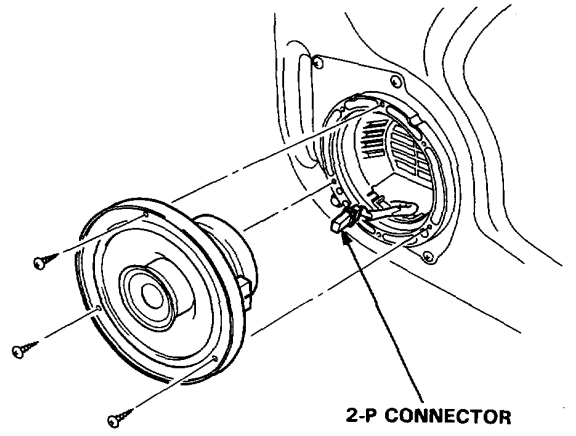

Rear Speaker Replacement

1. Remove the speaker grille.
2. Remove the 4 screws, then disconnect the connector from the speaker.
3. Take out the speaker from the speaker box.

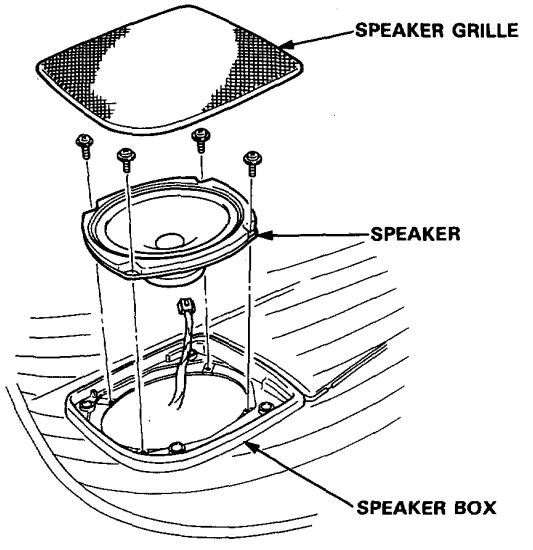

Component Location Index

CAUTION:

- **All SRS electrical wiring harnesses are covered with yellow outer insulation.**
- **When disconnecting the SRS wire harness, install the short conenctor on the airbag then disconnect the wire harness (See page 23-412).**
- **Replace the entire affected SRS harness assembly if there is an open circuit or damage to the wiring.**

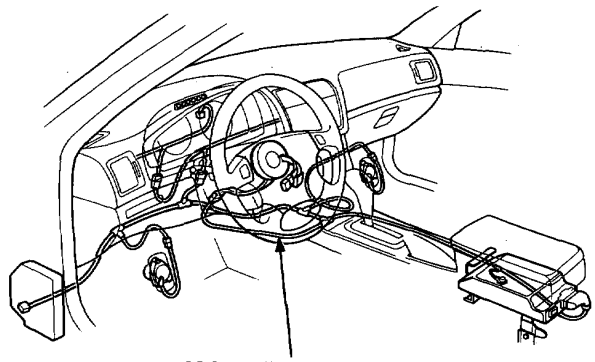

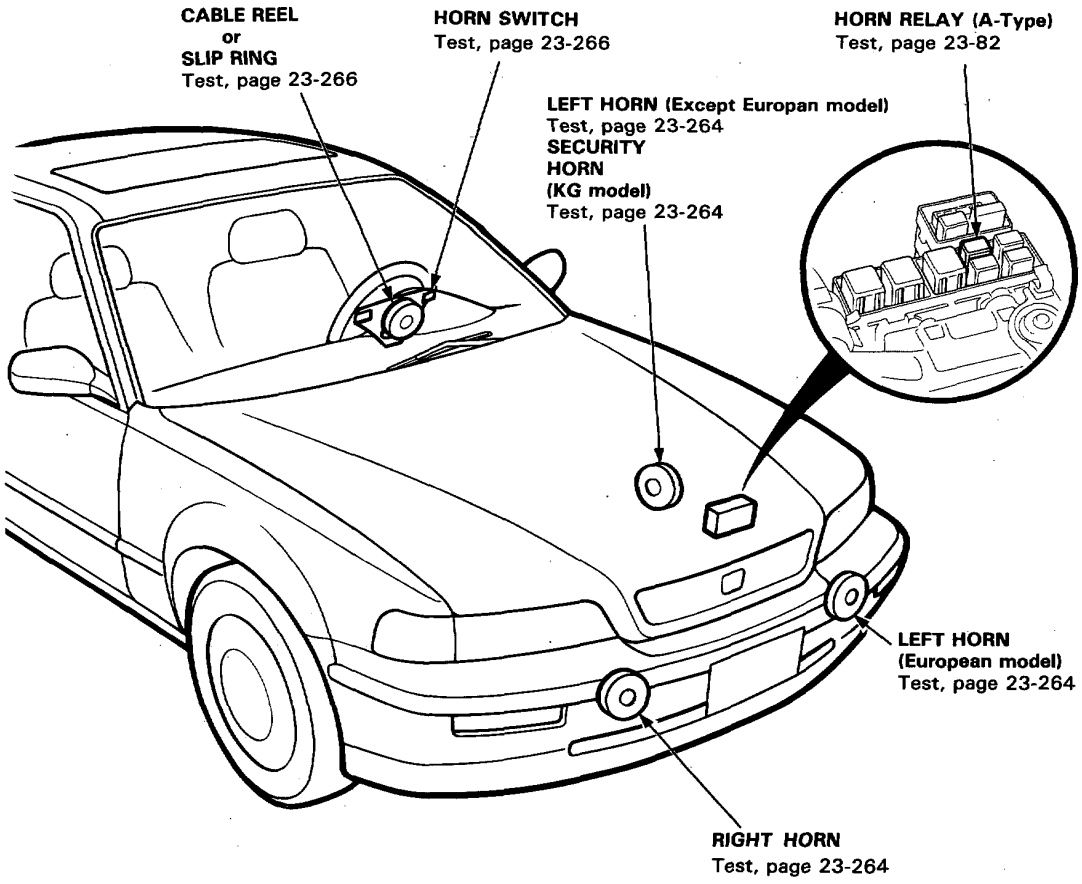

Circuit Diagram

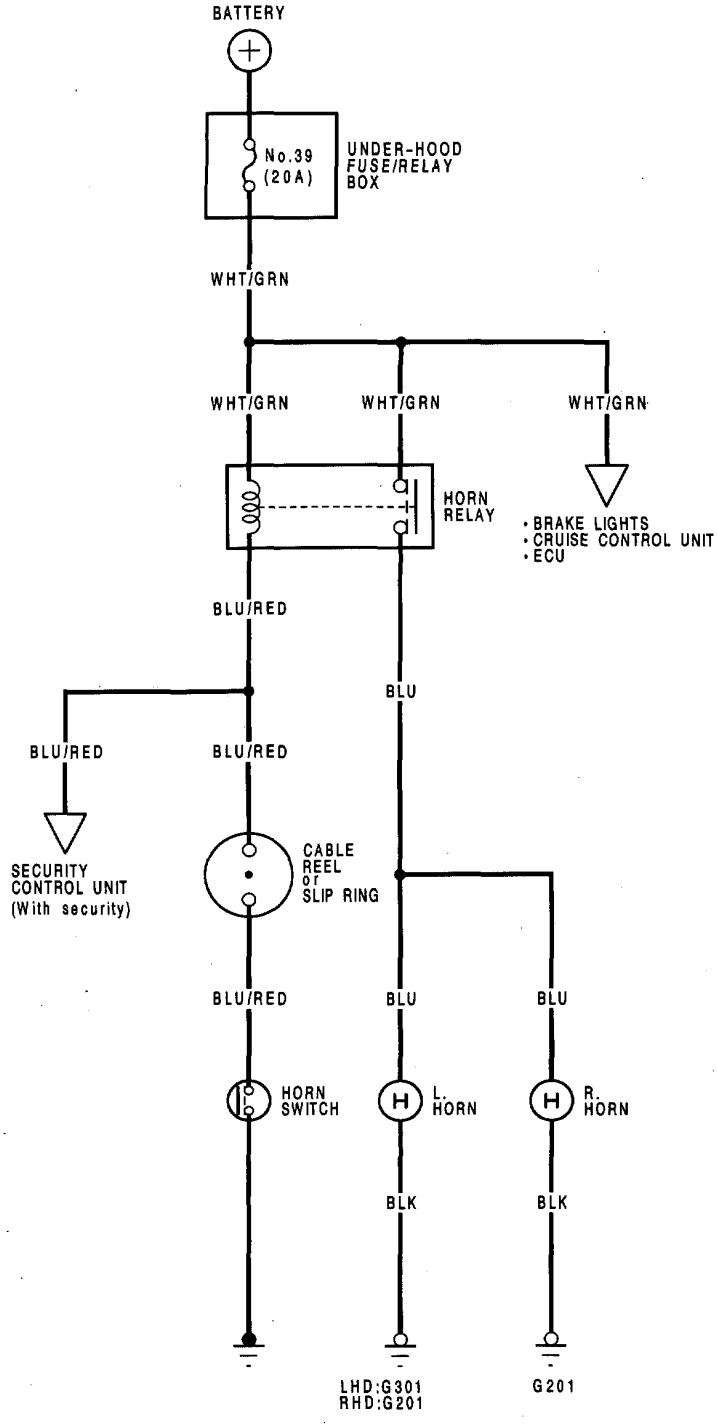

Horn Test

1. Disconnect the 2P connector from the horn.
2. Remove the right and left horns.

Right horn:

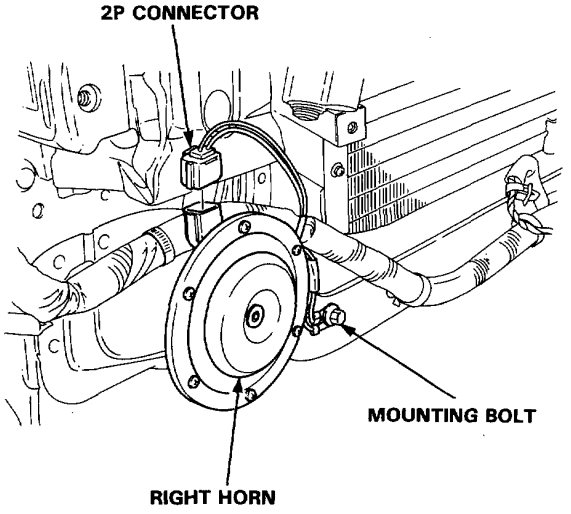

Left horn:
- **Europan model**

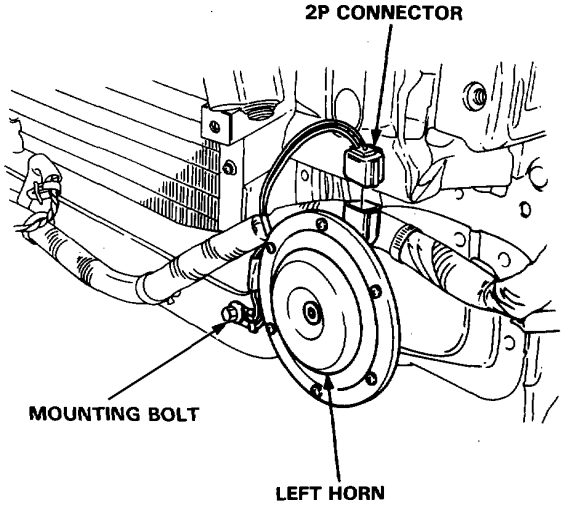

- **General export model and KG model (with Security system)**

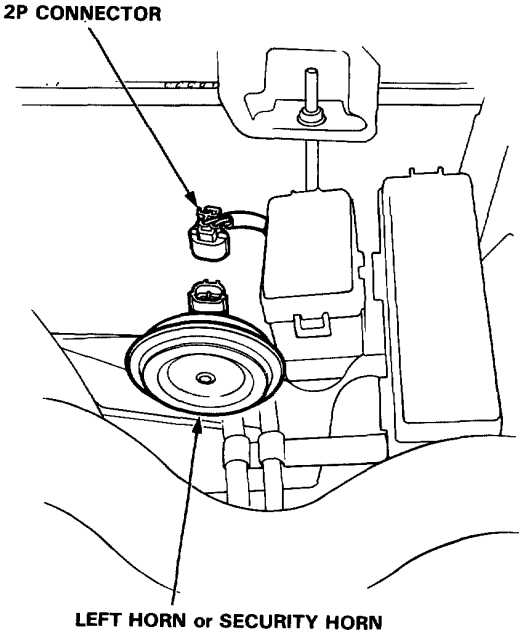

3. Test the horn by connecting battery power to one terminal and grounding the other. The horn should sound.

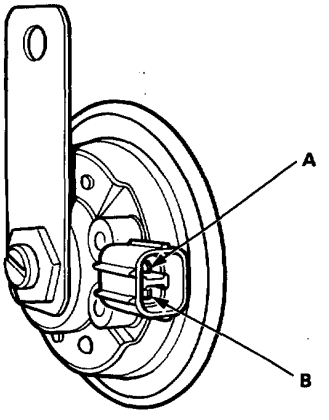

4. Replace the horn if it fails to sound.

Switch Test (without SRS)

1. Remove the dashboard lower panel.
2. Disconnect the 14-P connector from the main wire harness.
3. Check for continuity between the No. 10 terminal and body ground with the horn switch pressed. There should be continuty.
   - If there is continuity, the horn switch is OK.
   - If there is no continuity, go to step 4.

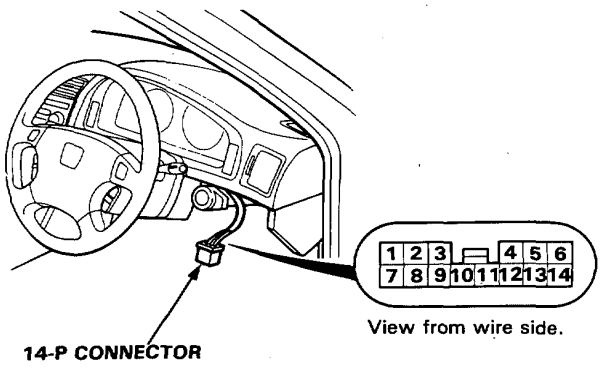

4. Remove the steering wheel, then turn it over.
5. Check for continuity between the hub core and the hub core and C terminal with the horn switch pressed. There should be continuity.
   - If there is continuity, check for slip ling and combination switch.
   - If there is no continuity, repair the horn switch.

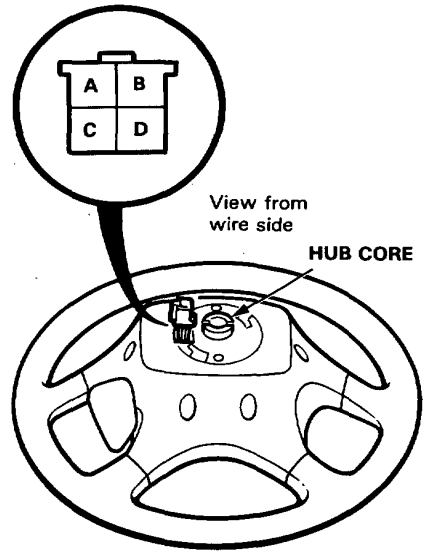

Switch Test (with SRS)

⚠ WARNING Store a removed airbag assembly with the pad surface up. If the airbag is improperly stored face down, accidental deployment could propel the unit with enough force to cause serious injury.

CAUTION:

- **Carefully inspect the airbag assembly before installing. Do not install an airbag assembly that shows signs of being dropped or improperly handled, such as dents, cracks or deformation.**
- **Always keep the short connector on the airbag connector when the harness is disconencted.**
- **Do not disassemble or tamper with the airbag assembly.**

1. Disconnect the battery negative cable, then disconnect the positive cable.
2. Make sure the wheels are aligned straight ahead.
3. Remove the dashboard lower panel.
4. Connect the short connector on the airbag connector.

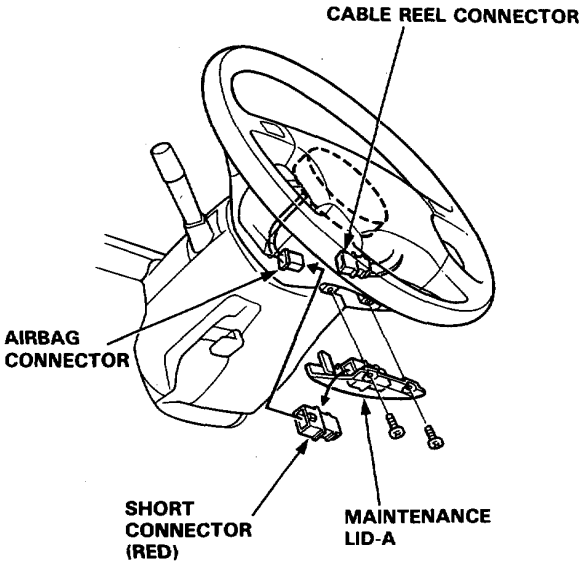

5. Disconnect the cable reel harness and main harness's 7-P connector, and connect Test Harness C only to the cable reel harness side of the connector.

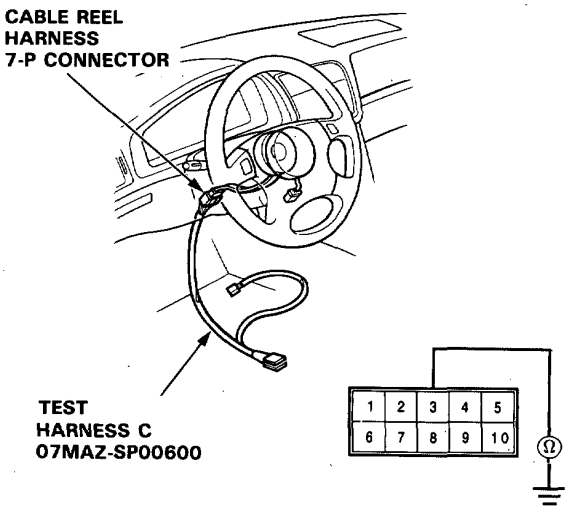

6. Check for continuity between the No. 3 teminal and body ground with the horn switch pressed. There should be continuity.
   - If there is continuity, the horn switch is OK.
   - If there is no continuity, go to step 7.
7. Remove the 2 TORX® bolts using a TORX® T30 bit, then remove the airbag assembly.

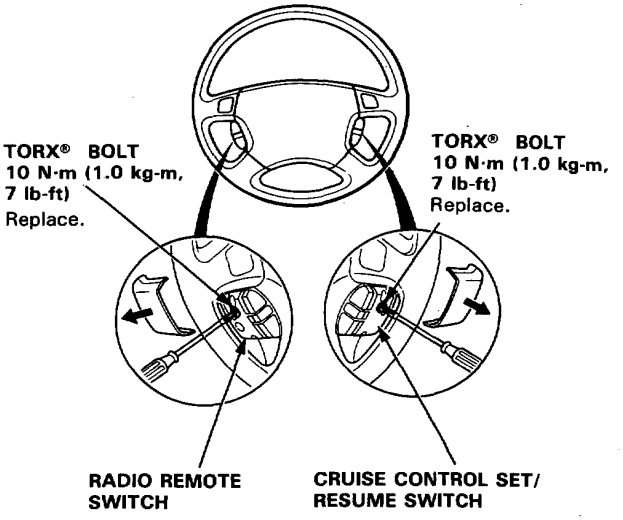

8. Check for continuity between the horn positive terminal and the steering column shaft with the horn switch pressed. *There should be continuity.*

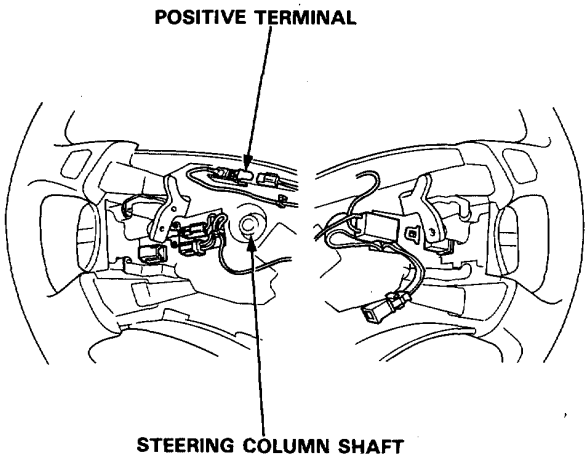

- If there is continuity, replace the cable reel.
- If there is no continuity, remove the nut and the 4 screws then remove the steering wheel cover. Repair the horn switch.

9. Reinstall the steering wheel (Section 17).

Trunk Opener

Component Location Index

CAUTION:

- **All SRS electrical wiring harnesses are covered with yellow outer insulation.**
- **When disconnecting the SRS wire harness, install the short connector on the airbag then disconnect the wire harness (See page 23-412).**
- **Replace the entire affected SRS harness assembly if there is an open circuit or damage to the wiring.**

NOTE: RHD type is symmetrical to LHD type.

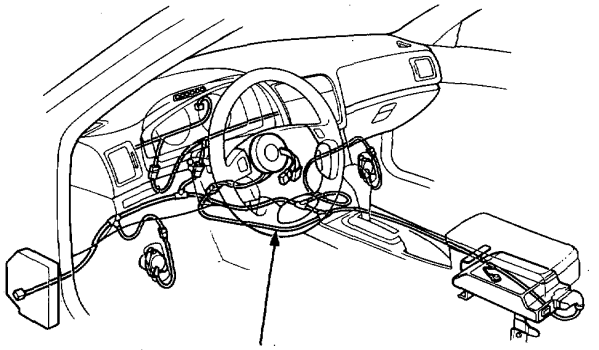

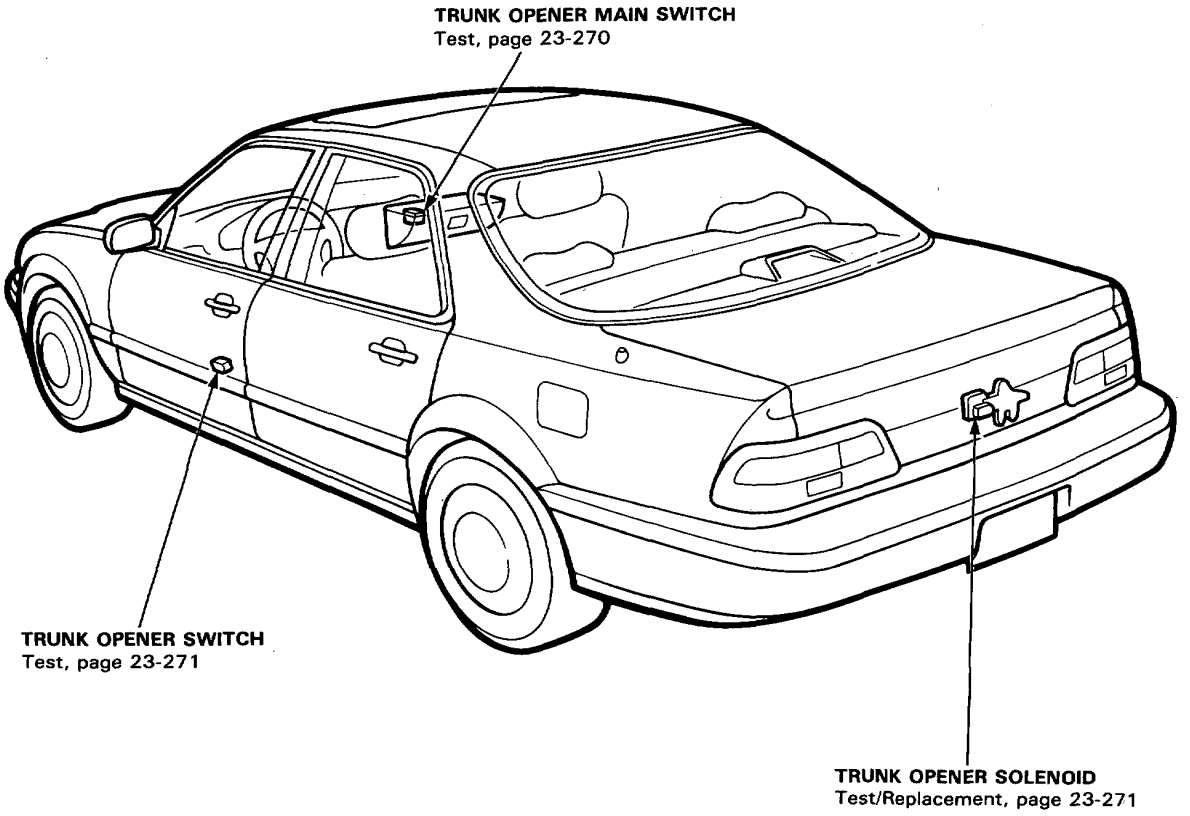

Circuit Diagram

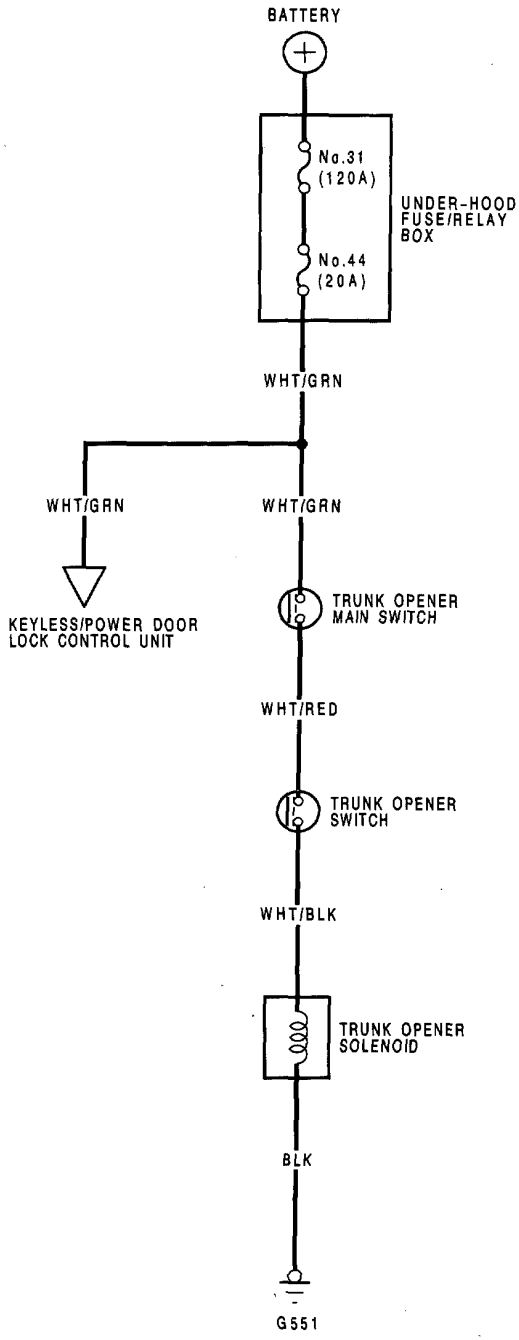

Main Switch Test

CAUTION:
- **All SRS electrical wiring harnesses are covered with yellow outer insulation.**
- **When disconnecting the SRS wire harness, install the short connector on the airbag then disconnect the wire harness (See page 23-412).**
- **Replace the entire affected SRS harness assembly if there is an open circuit or damage to the wiring.**

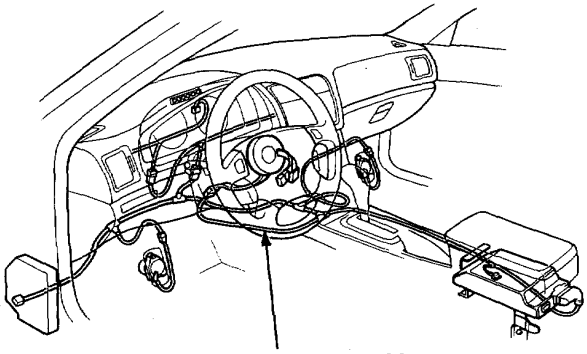

1. Remove the glove box lower panel, then remove the glove box.

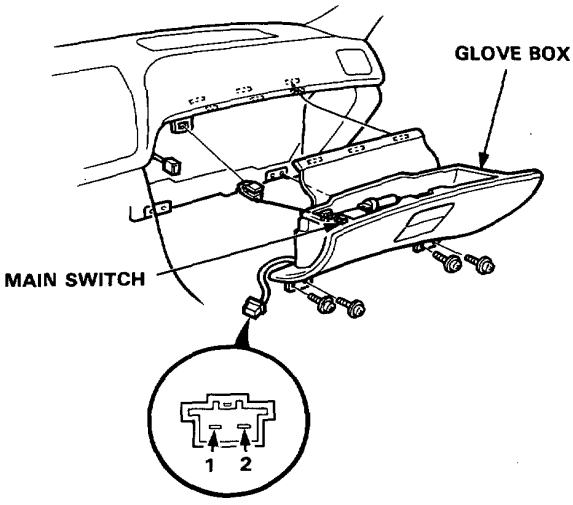

View from terminal side

2. Disconnect the 2P connector from the switch.

3. There should be continuity between the No. 1 terminal and No. 2 terminal with the main switch ON. There should be no continuity with the main switch OFF.

4. If necessary, replace the switch.

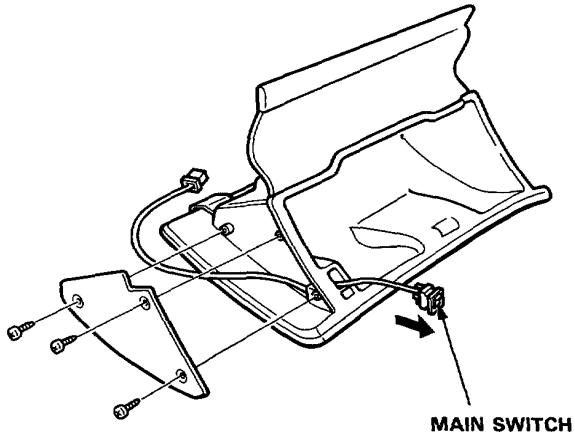

Opener Switch Test

1. Remove the driver's door trim panel (See section 20).
2. Remove the 2 screws, then remove the opener switch from the door trim panel.

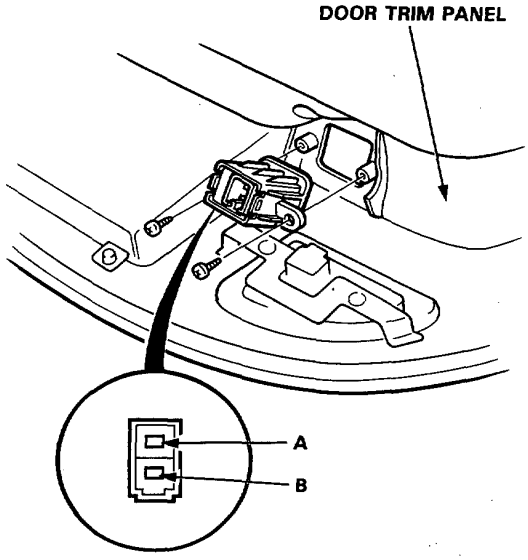

3. There should be continuity between the A and B terminals when the switch is pushed.
   There should be no continuity when the switch is released.
4. If necessary, replace the switch.

Solenoid Test/Replacement

1. Open the trunk lid and remove the trunk lid inner trim panel (See section 20).
2. Disconnect the 6-P connector from the solenoid.
3. Test the solenoid operation by momentarily connecting battery power to the C terminal and grounding to the D terminal.

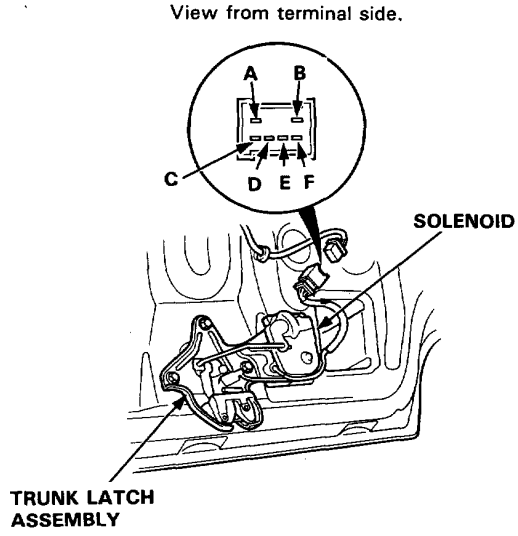

4. If necessary, remove the 3 bolts, then remove the trunk latch assembly from the trunk lid.

Clock

Circuit Diagram

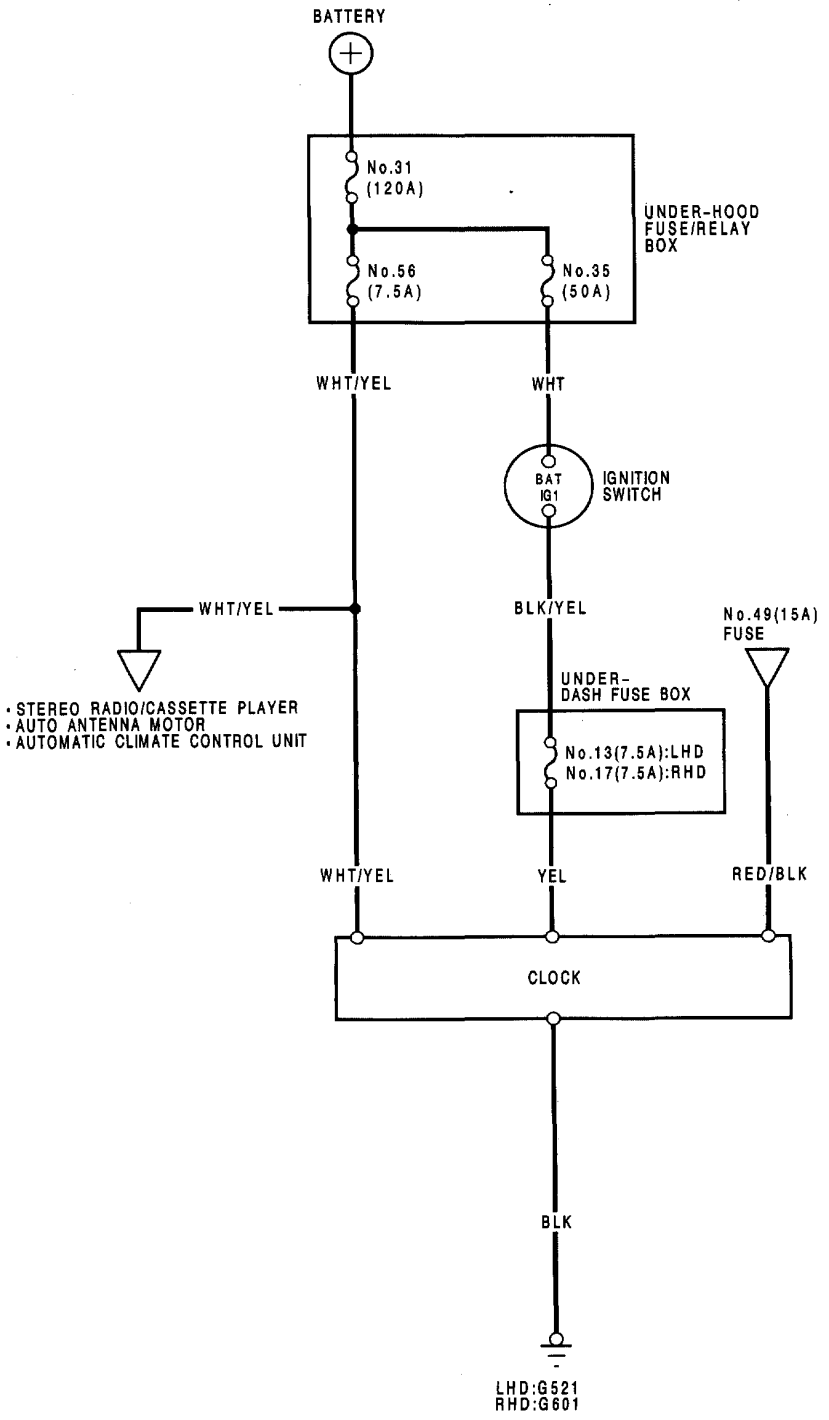

Replacement

CAUTION: Be careful not to damage the center instrument panel.

1. Remove the center instrument panel assembly.
2. Remove the stereo radio/cassette player (See page 23-257).
3. Remove the clock and hazard switch from the climate control panel.
4. Remove the hazard switch from the clock.
5. Install the clock in the reverse order of removal.

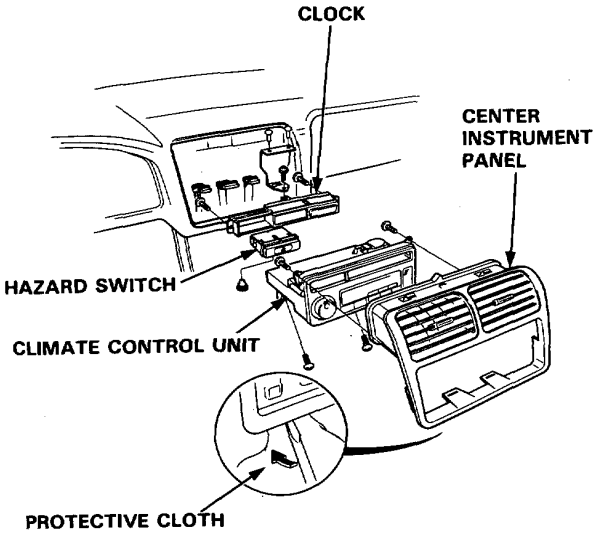

Terminals

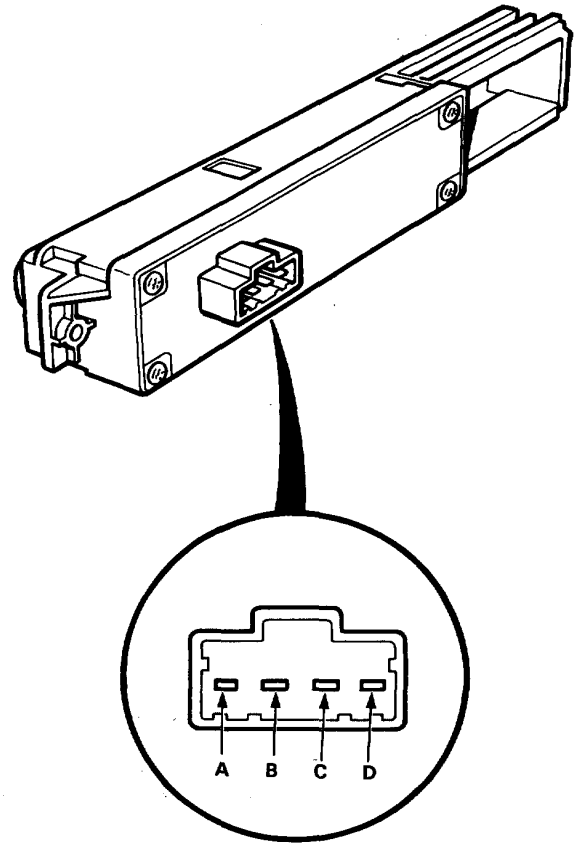

Terminal	Wire	Destination
A	BLK	Ground
B	RED/BLK	Light-on signal
C	WHT/YEL	Constant power (Time memory)
D	YEL	IGI (Main clock power supply)

Cigarette Lighter

Component Location Index

CAUTION:

- **All SRS electrical wiring harnesses are covered with yellow outer insulation.**
- **When disconnecting the SRS wire harness, install the short connector on the airbag then disconnect the wire harness (See page 23-412).**
- **Replace the entire affected SRS harness assembly if there is an open circuit or damage to the wiring.**

NOTE: LHD type is symmetrical to RHD type.

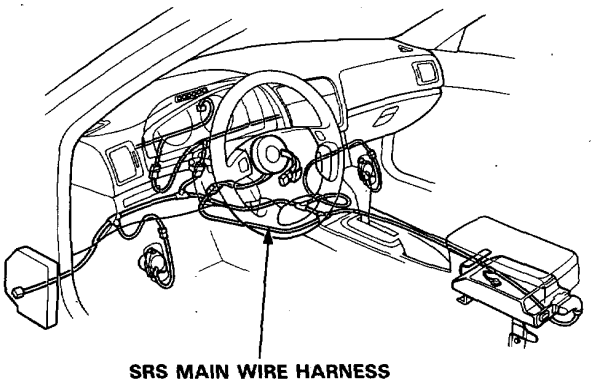

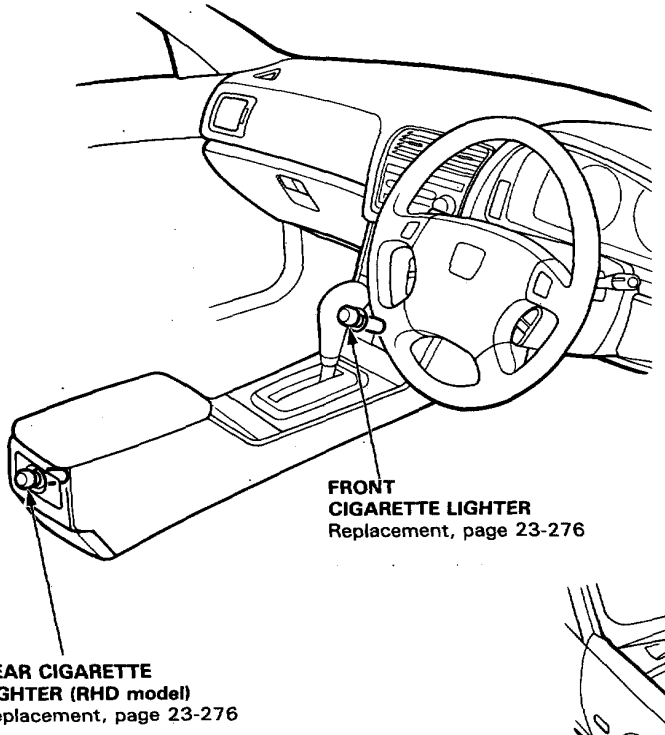

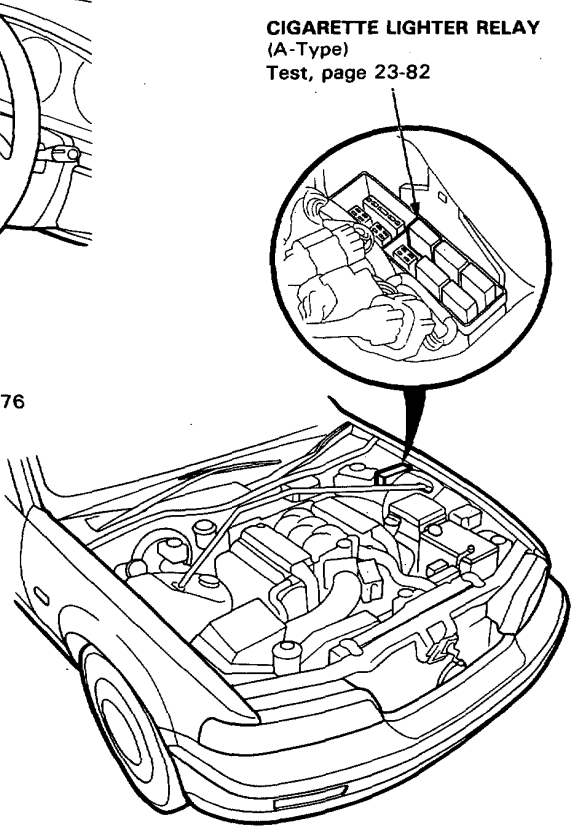

Circuit Diagram

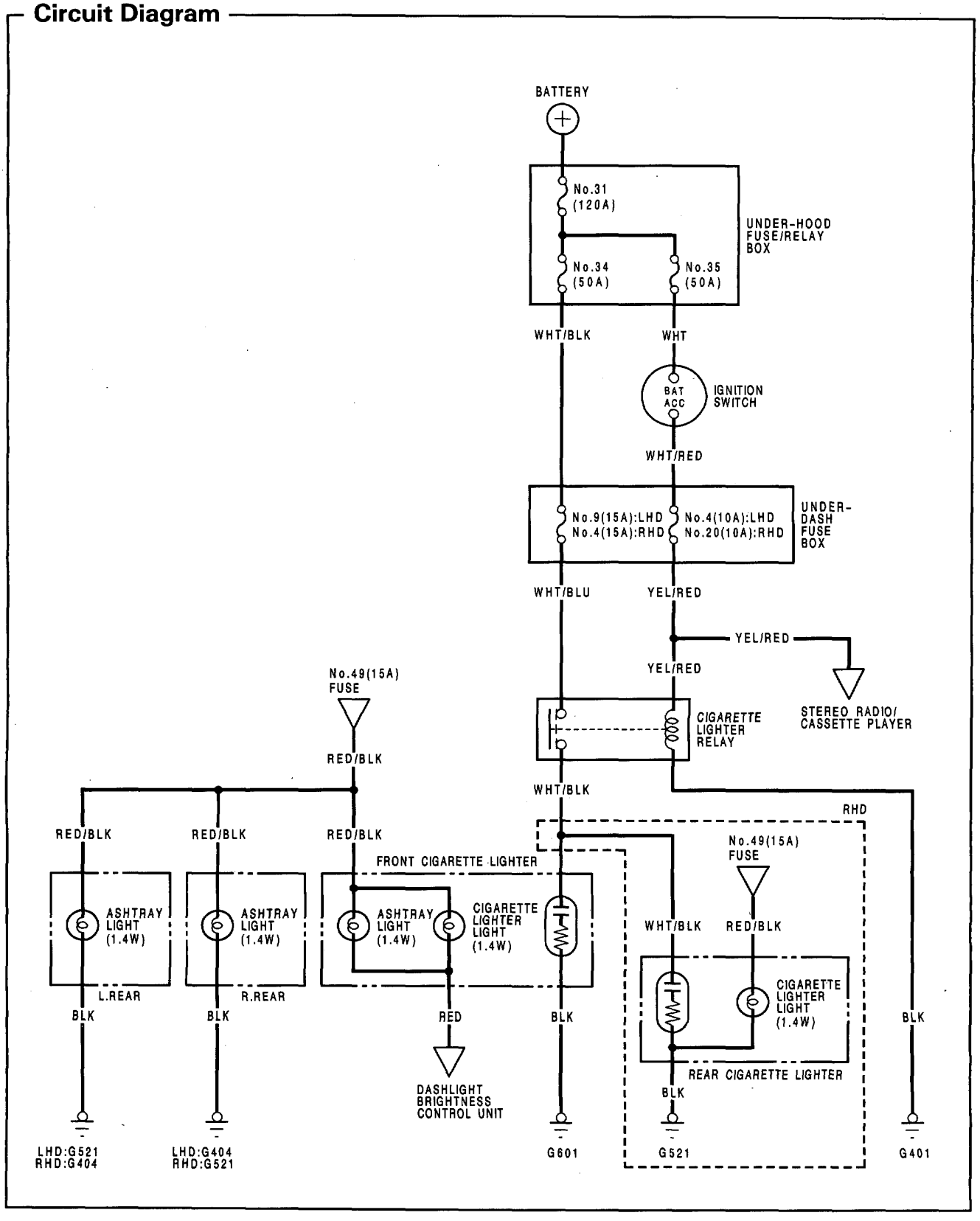

Cigarette Lighter

Replacement

CAUTION:

- **All SRS electricla wiring harnesses are covered with yellow outer insulation.**
- **When disconnecting the SRS wire harness, install on the airbag the short connector then disconnect the wire harness (See page 23-412).**

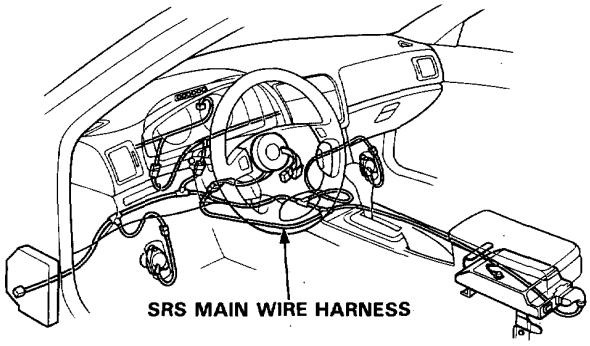

Front Cigarette Lighter:

1. Remove the center console panel. (See section 20).
2. Disconnect the thermofuse case from the socket end.
3. Remove the ring nut and separate the cigarette lighter socket from the thermal protector.
4. When installing the cigarette lighter, align each lug on the face panel, illumination ring and cigarette lighter socket with the groove of the hole, then position the bulb case on the thermal protector between the stoppers of the center console panel.
5. Make sure that the ground wire, bulb socket and thermo fuse case are seated to the cigarette lighter assembly.

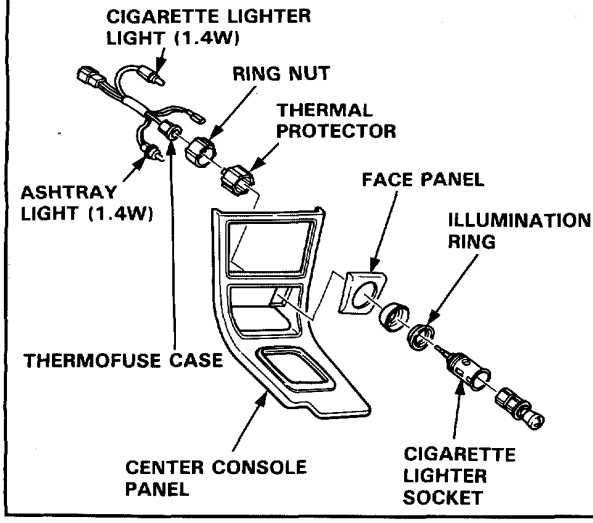

Rear Cigarette Lighter:

1. Remove the center armrest (See section 20).
2. Disconnect the thermofuse case from the socket end.
3. Remove the ring nut and separate the cigarette lighter socket from the thermal protector.
4. When installing the cigarette lighter, align each lug on the face panel, illumination ring and cigarette lighter socket with the groove in the hole, then position the bulb case on the thermal protector between the stops in the center armrest.
5. Make sure that the ground wire, bulb socket and thermo fuse case are seated to the cigarette lighter assembly.

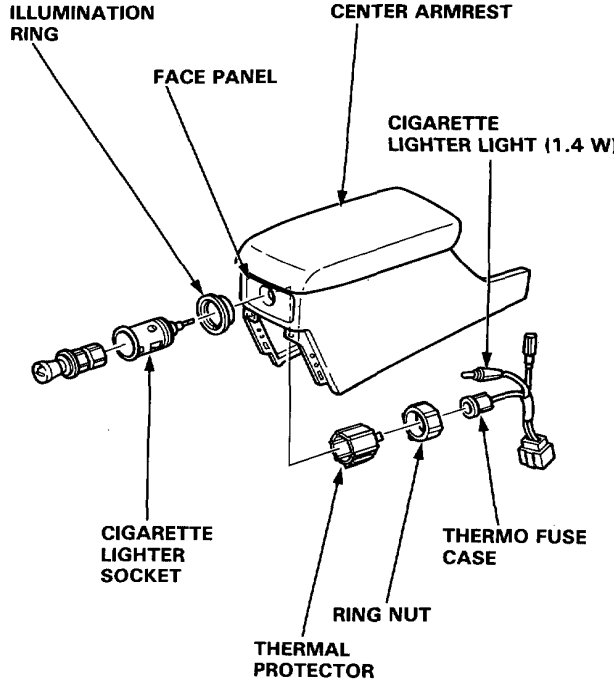

Rear Window Defogger

Component Location Index

CAUTION:

- ***All SRS electrical wiring harnesses are covered with yellow outer insulation.***
- **When disconnecting the SRS wire harness, install the short connector on the airbag then disconnect the wire harness (See page 23-412).**
- **Replace the entire affected SRS harness assembly if there is an open circuit or damage to the wiring.**

NOTE: RHD type is symmetrical to LHD type.

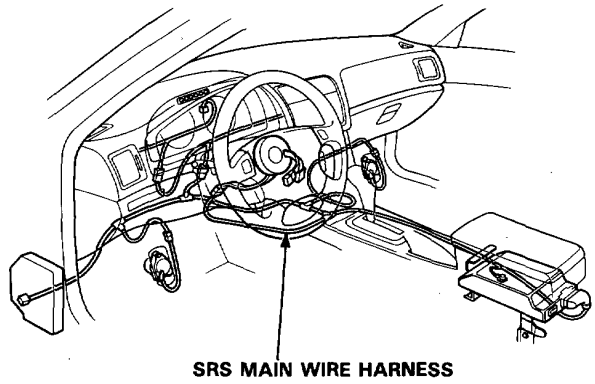

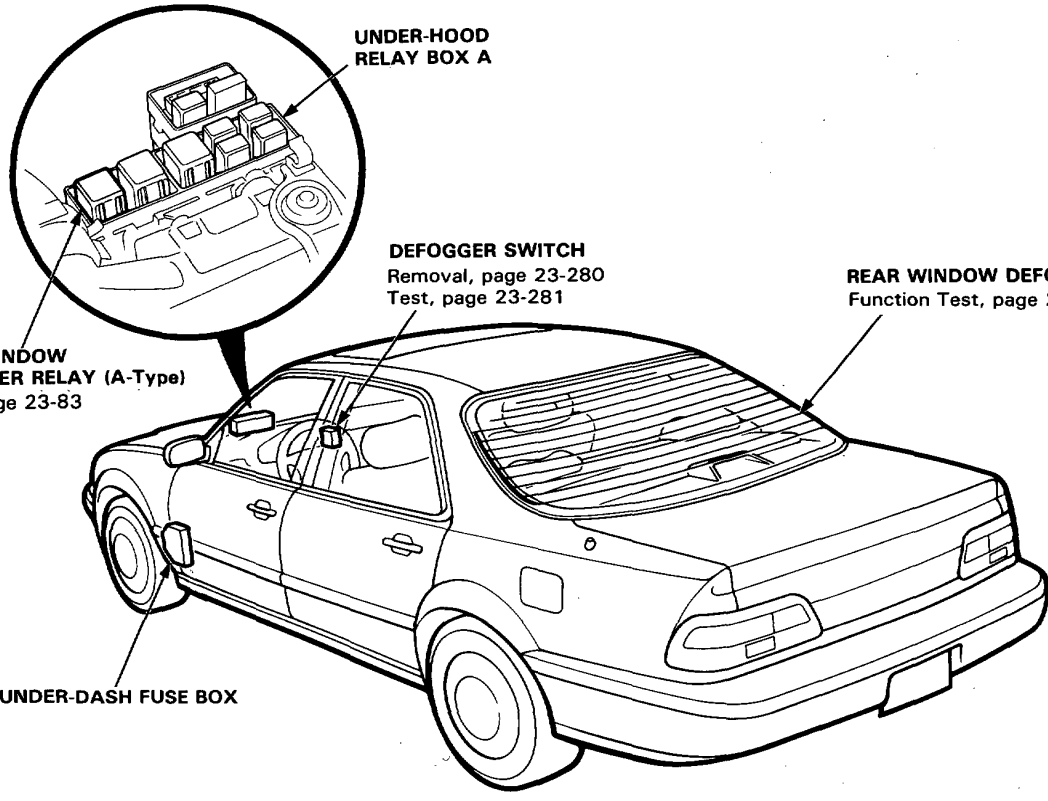

Rear Window Defogger

Circuit Diagram

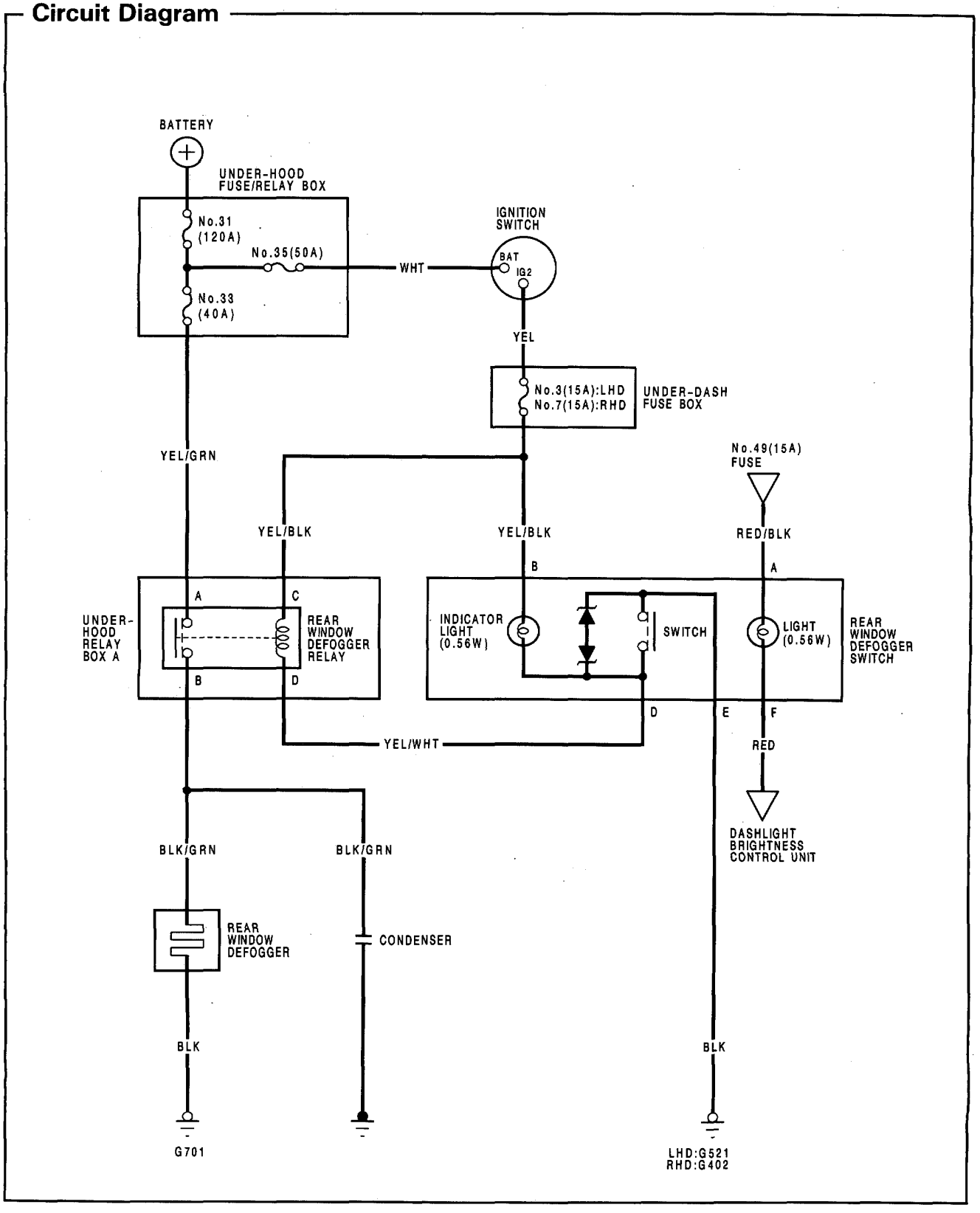

Troubleshooting

NOTE: The numbers in the table show the troubleshooting sequence.

Symptom \ Item to be inspected	Blown indicator light bulb	Blown *1 (15A) fuse (in the under-dash fuse box)	Blown No. 33 (40A) fuse (in the under-hood fuse/relay box)	Function test	Defogger relay	Defogger switch	Poor ground	Open circuit in wires or loose or disconnected terminals
Defogger operates, but indicator light does not go on.	1							YEL/BLK
Defogger does not operate and indicator light does not go on.		1				2	G521 [G402]	YEL, YEL/WHT or YEL/BLK
Defogger does not operate, but indicator light goes on.			1	3	2	4	G701	YEL/WHT, YEL/BLK or BLK/GRN

[ ]: RHD

*1: { NO. 3: LHD / NO. 7: RHD }

Rear Window Defogger

Switch Removal

CAUTION:

- **All SRS electrical wiring harnesses are covered with yellow outer insulation.**
- **When disconnecting the SRS wire harness, install the short connector on the airbag then disconnect the wire harness (See page 23-412).**
- **Replace the entire affected SRS harness assembly if there is an open circuit or damage to the wiring.**

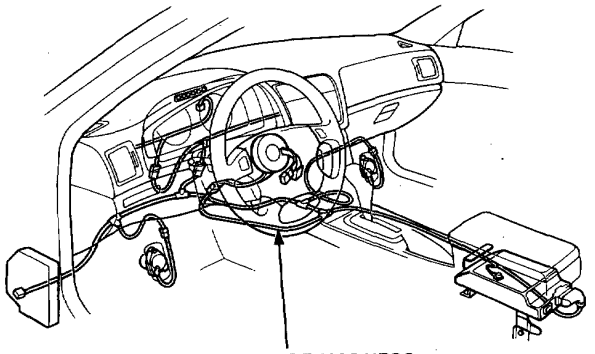

1. Remove the dashboard lower panel.

2. Remove the 2 screws, then remove the instrument panel from the dashboard.

   NOTE: Be careful not to damage the dashboard and steering column cover.

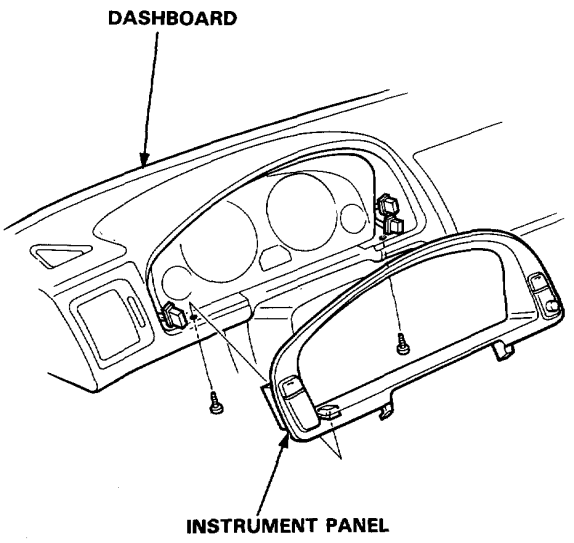

3. Disconnect all the connectors from the instrument panel.

4. Remove the 2 screws from the rear of the instrument panel, then remove the rear window defogger switch.

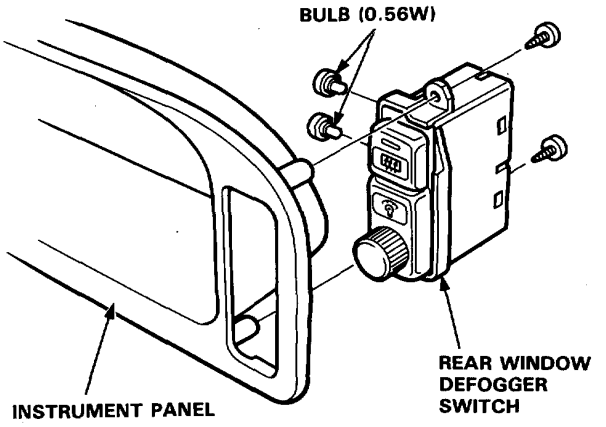

5. Turn the socket 45° counterclockwise to remove either bulb.

Switch Test

1. Remove the dashboard lower panel.
2. Remove the instrument panel.
3. Remove the rear window defogger switch.
4. Check for continuity between the terminal in each switch position according to the table.

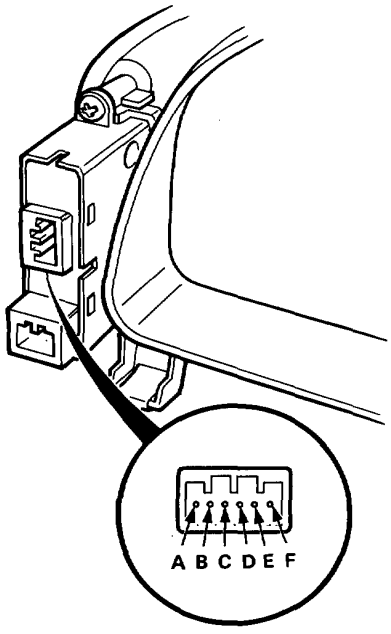

Terminal / Position	E	D		B	A		F
PUSHED	○	○	⊗	○	○	⊗	○
RELEASED		○	⊗	○			

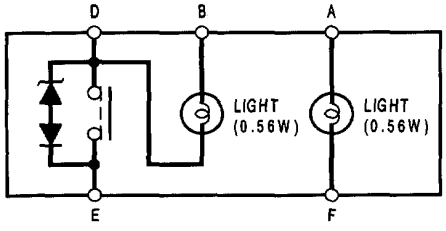

Function Test

CAUTION: Be careful not to scratch or damage the defogger wires with the tester probe.

1. Check for voltage between the positive terminal and body ground with the ignition switch and the defogger switch ON.
   There should be battery voltage.
   - If there is no voltage, check for:
     - Faulty defogger relay.
     - Faulty defogger switch
     - Faulty integrated control unit.
     - An open in the BLK/GRN wire.
   - If there is battery voltage, go to step 2.

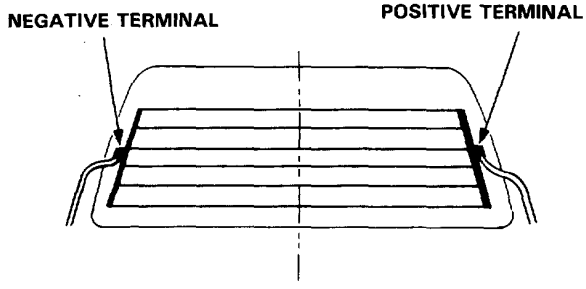

2. Check for continuity between the negative terminal and body ground.
   If no continuity, check for open in the defogger ground wire.
3. Connect the voltmeter positive probe to the middle of each defogger wire, and the negative probe to the negative terminal.
   The should be approximately 6 V with the ignition switch and the defogger switch ON.
   - If the voltage is as specified, the defogger wire is OK.
   - If there is battery voltage, the defogger wire is broken on the negative side.
   - If there is no voltage the defogger wire is broken on the positive side.

Power Door Mirrors

Circuit Diagram

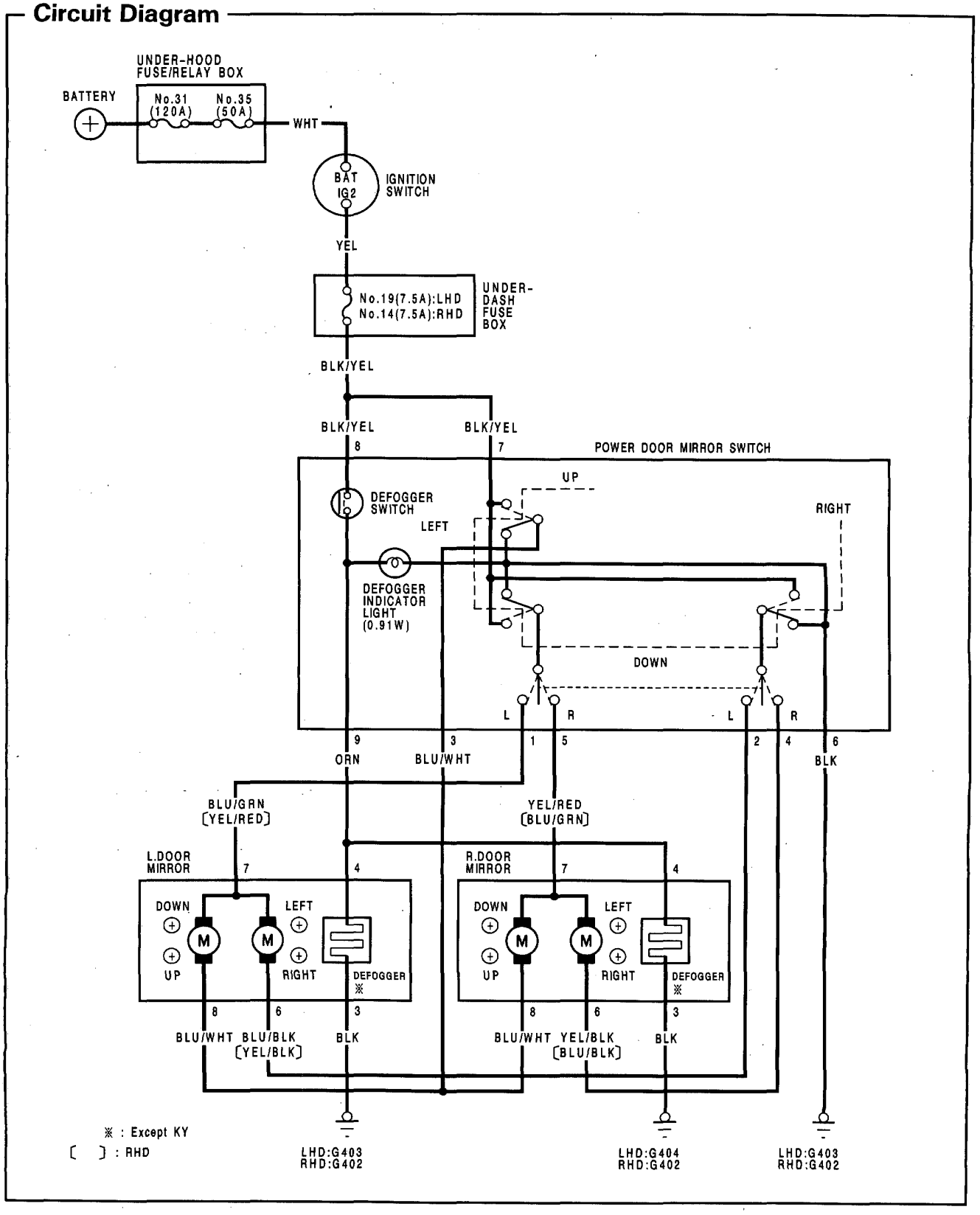

Function Test

NOTE: Before testing,
remove the driver's door trim panel and all connectors, then remove the switch from the arm rest.

[ ]: RHD

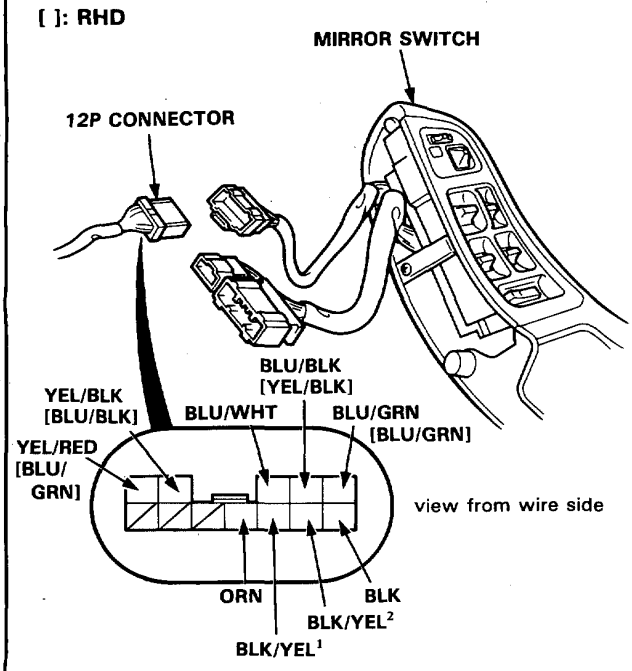

Mirror Test

One or both inoperative:

1. Check for voltage between the BLK/YEL² terminal and body ground with the ignition switch ON.
   There should be battery voltage.
   - If there is no voltage, check for
     - Blown No. 19: LHD or No. 14: RHD (7.5A) fuse in the dash fuse box.
     - An open in the BLK/YEL² wire.
   - If there is battery voltage, go to step 2.

2. Check for continuity between the BLK terminal and body ground.
   There should be continuity.
   - If there is no continuity, check for
     - An open in the BLK wire.
     - Poor ground (G403 [G402]).

Left [Right] inoperative:

Connect the BLK/YEL² terminal of the 12-P connector to the BLU/GRN [YEL/RED] terminal and the BLU/WHT (or BLU/BLK [YEL/BLK]) terminal to body ground with jumper wires.
The left [right] mirror should tilt down (or swing left) when the ignition switch is turned ON.

- If the mirror does not tilt down (or does not swing left), remove the left [right] door trim panel and check for an open in the BLU/WHT (or BLU/BLK [YEL/BLK]) *wire between the left* [right] door mirror and the switch.
  If the wire is OK, check the left [right] door mirror motor.

- If the mirror neither tilts down nor swings left, repair an open in the BLU/GRN [YEL/RED] wire.

- If the mirror operates properly, check the mirror switch.

Right [Left] inoperative:

Connect the BLK/YEL² terminal of the 12-P connector to the YEL/RED [BLU/GRN] terminal and the BLU/WHT (or YEL/BLK [BLU/BLK]) terminal to body ground with jumper wires.
The right [left] mirror should tilt down (or swing left) when the ignition switch is turned ON.

- If the mirror does not tilt down (or does not swing left), remove the right [left] door trim panel and check for an open in the BLU/WHT (or YEL/BLK [BLU/BLK] wire between the right [left] door mirror and the switch.
  If the wire is OK, check the right [left] door mirror motor.

- If the mirror neither tilts down nor swings left, repair an open in the YEL/RED [BLU/GRN] wire.

- If the mirror operates properly, check the mirror switch.

Defogger test (Except KY)

1. Check for voltage between the BLK/YEL¹ terminal of the 12-P connector and body ground with the ignition switch ON.
   There should be battery voltage.

   - If there is no voltage, check for an open in the BLK/YEL¹ wire between the dash fuse box and the defogger switch.

   - If there is battery voltage, go to step 2.

2. Connect the BLK/YEL¹ terminal of the 12-P connector to the ORN terminal with a jumper wire.
   Both the right and left mirrors should gradually warm up when the ignition switch is turned ON.

   - If neither warms up, repair the ORN wire.

   - If only one fails to warm up, check its mirror defogger element (See page 23-285).

   - If both warm up, check the switch.

Power Door Mirrors

Switch Test

1. Remove the driver's door trim panel and all connectors, then remove the switch from the arm rest.

2. Check for continuity between the terminals in each switch position according to the table.

Mirror Switch

	Position \ Terminal	4	2	3	5	1	7	6
R	OFF	○		○	○			○
	UP			○			○	
	DOWN	○			○		○	
	LEFT			○	○		○	
	RIGHT	○					○	
L	OFF		○	○		○		○
	UP			○			○	
	DOWN		○			○	○	
	LEFT			○		○	○	
	RIGHT		○				○	

Defogger Switch [Except KY]

Position \ Terminal	9	8		6
ON	○	○	⊗	○
OFF	○		⊗	○

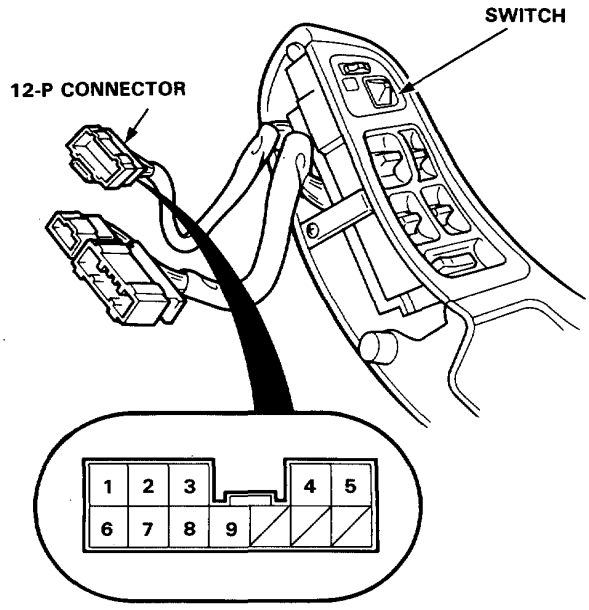

view from wire side

NOTE: LHD type is shown. RHD type is similar.

Circuit

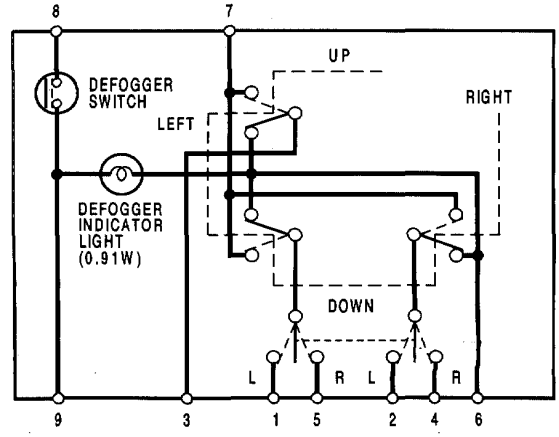

Door Mirror Test

1. Remove the cover panel, then disconnect the 8-P connector from the mirror.

2. Test actuator operation:
   TILT UP: Connect battery power to the No. 8 terminal and ground to the No. 7 terminal.
   TILT DOWN: Connect battery power to the No. 7 terminal and ground to the No. 8 terminal.
   SWING LEFT: Connect battery power to the No. 8 terminal and ground to the No. 6 terminal.
   SWING RIGHT: Connect battery power to the No. 6 terminal and ground to the No. 8 terminal.

3. If the mirror fails to operate properly, replace it.

4. Check for continuity between the No. 3 and No. 4 terminals (R x 10^3 scale).
   There should be continuity (Except KY).

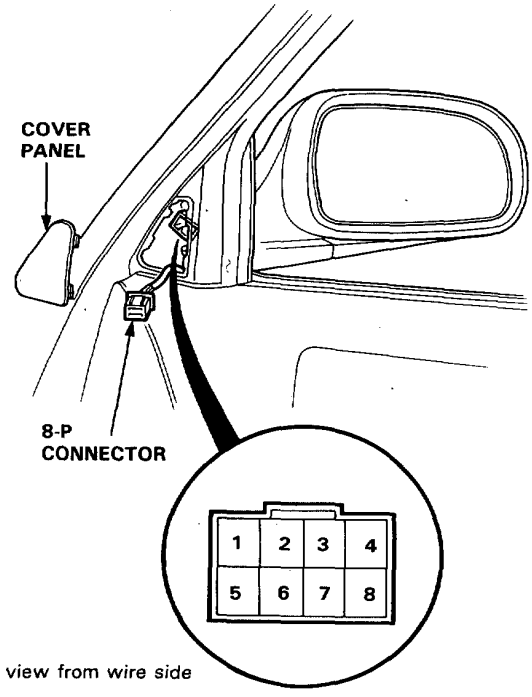

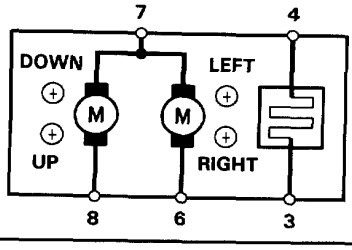

Door Mirror Replacement

1. Carefully pry out the cover panel with a flat tip screwdriver.

2. Disconnect the 8-P connector from the mirror.

3. While holding the mirror with one hand, remove its mount screws with the other.

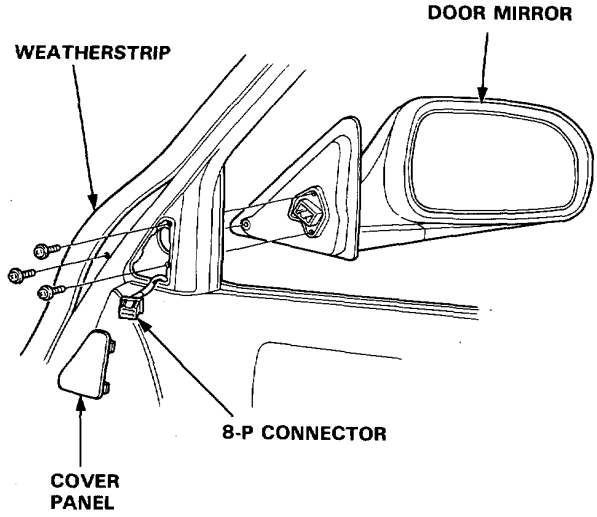

Component Location Index

NOTE: LHD type is shown. RHD type is similar.

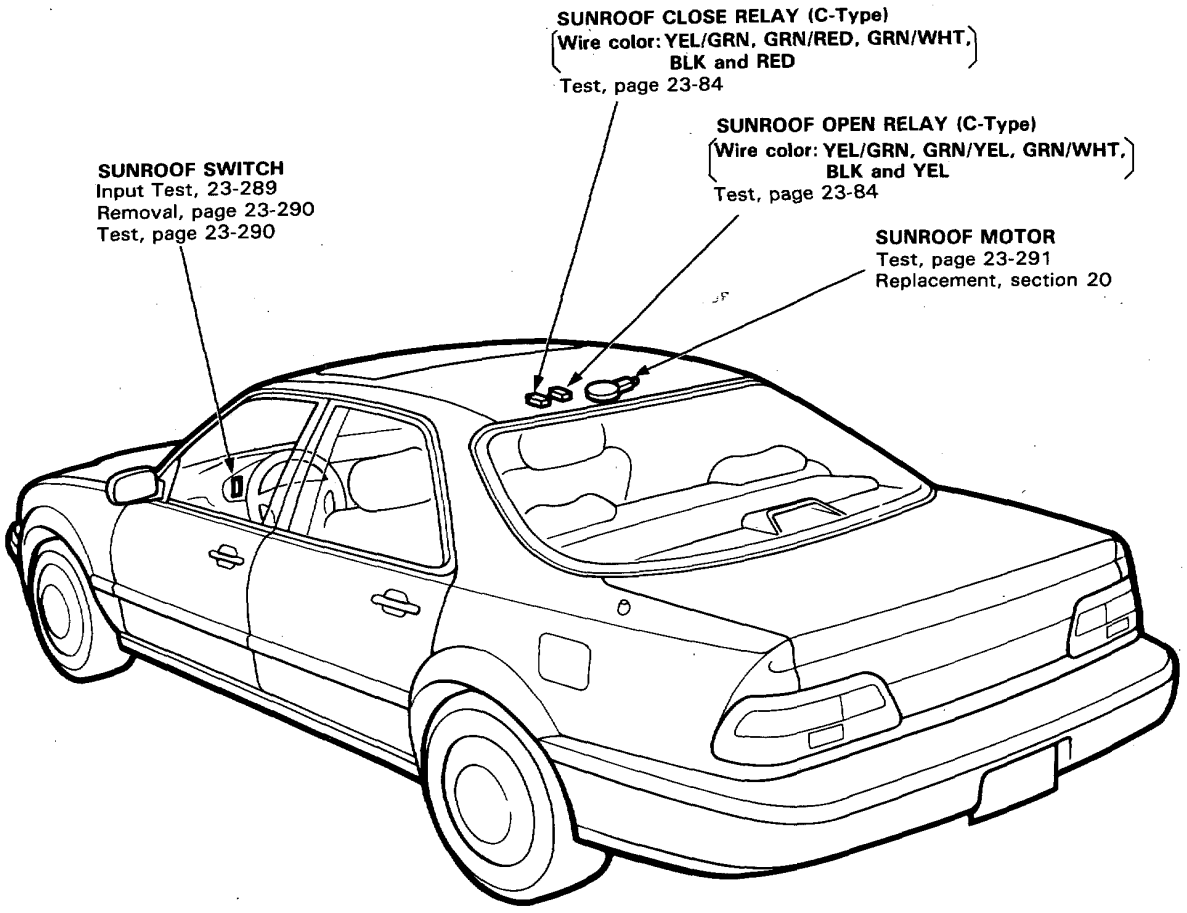

Circuit Diagram

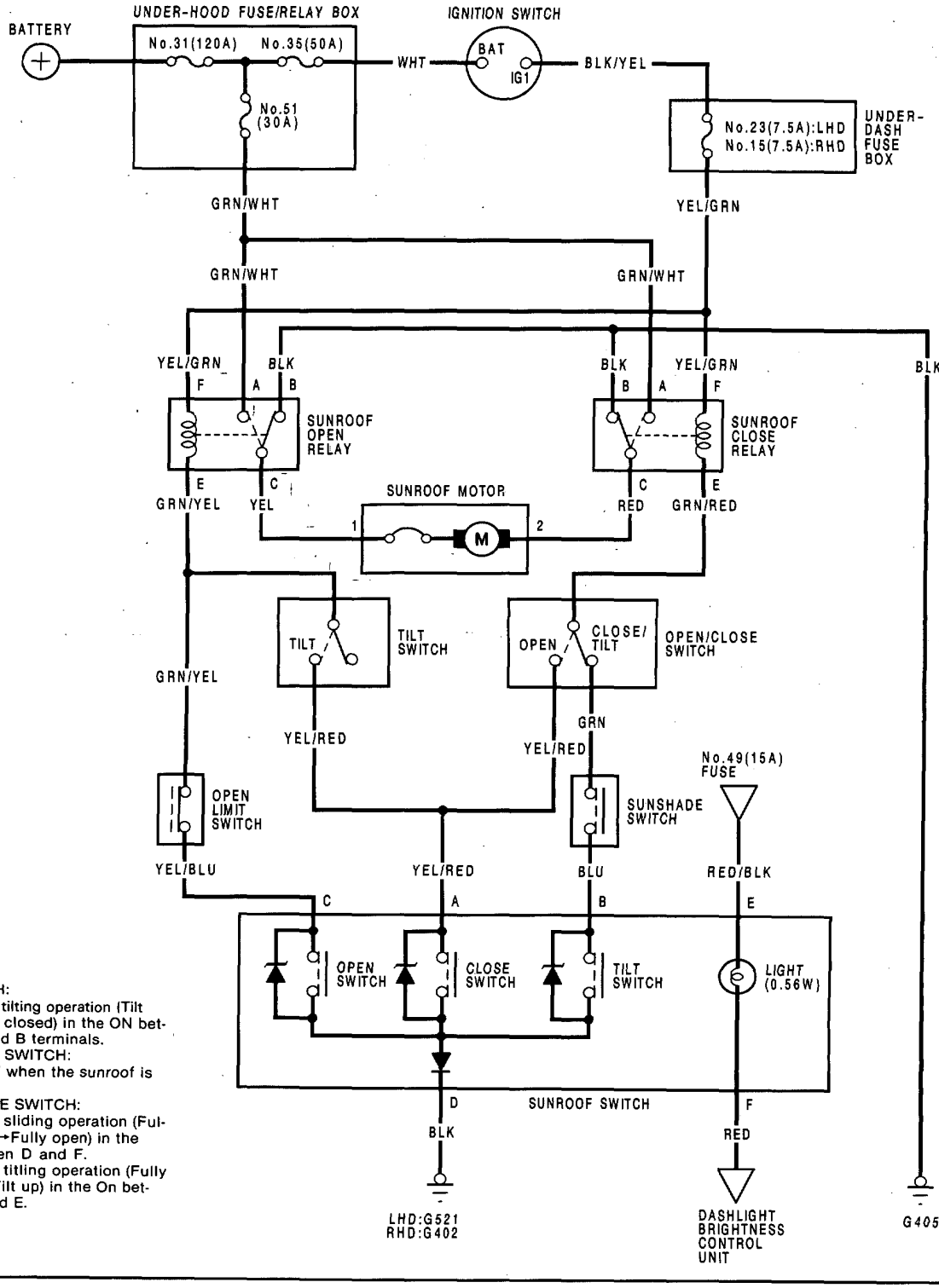

TILT SWITCH:
- During the tilting operation (Tilt up←→Fully closed) in the ON between A and B terminals.

OPEN LIMIT SWITCH:
- In the OFF when the sunroof is fully open.

OPEN/CLOSE SWITCH:
- During the sliding operation (Fully closed←→Fully open) in the ON between D and F.
- During the titling operation (Fully closed←→Tilt up) in the On between D and E.

Electrical Troubleshooting

NOTE: The numbers in the table show the troubleshooting sequence.

Symptom	Item to be inspected	Clutch out of adjustment, foreign matter stuck between guide rail and sunroof, or outer cable not attached properly.	Blown No. 51 (30 A) fuse (in the under-hood fuse/relay box)	Blown *1 (7.5 A) fuse (in the under-dash fuse box)	Sunroof switch input test	Open relay	Close relay	Sunroof motor	Sunroof switch	Poor ground	Open circuit in wires or loose or disconnected terminals.
Sunroof does not move, but motor turns.		1									
Sunroof does not move and motor does not turn (sunroof can be moved with sunroof wrench).	With all switches		1	2	3			5	4	G521 [G402] or G405	GRN/WHT, YEL/GRN, YEL, or RED
	With OPEN switch				4	1	2		3		GRN/YEL or YEL/BLU
	With CLOSE switch				4	2	1		3		GRN/RED or YEL/RED
	With TILT switch				4	2	1		3		GRN/RED or BLU

[ ]: RHD
*1 {No. 23: LHD
{No. 15: RHD

Switch Input Test

Remove the 4 screws, then remove the instrument panel from the dashboard.

Make the following input tests at the connector terminals.

NOTE: Before testing remove the No. 51 (30 A) fuse.

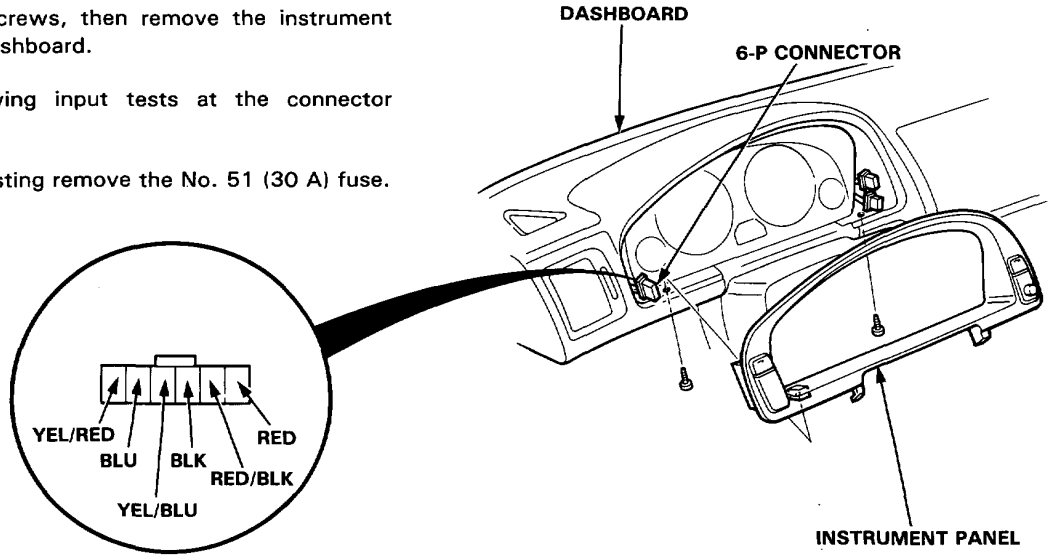

View from wire side.

No.	Wire	Test condition	Test: desired result	Possible cause (if result is not obtained)
1	BLK	Under all conditions.	Check for continuity to ground: should be continuity.	• Poor ground (G521 [G402]). • An open in the wire.
2	YEL/BLU	Ignition switch ON and fully close or open using the sunroof wrench.	Check for voltage to ground: should be battery voltage (close←→open).	• Faulty slide open switch. • An open in the wire.
3	YEL/RED	Ignition switch ON and fully close or tilt up using the sunroof wrench.	Check for voltage to ground: should be battery voltage.	• Faulty tilt switch. • An open in the wire.
		Ignition switch ON and fully close or fully open using the sunroof wrench.	Check for voltage to ground: should be battery voltage.	• Faulty open limit switch (open). • An open in the wire.
4	BLU	Ignition switch ON and fully close using the sunroof wrench, then sunshade fully close.	Check for voltage to ground: should be battery voltage.	• Faulty open/close switch. (close/tilt). • Faulty sunshade switch. • An open in the wire.

[ ]: RHD

Sunroof

Switch Removal

1. Remove the dashboard lower panel.
2. Remove the 2 screws, then remove the instrument panel from the dashboard.

   NOTE: Be careful not to damage the dashboard and steering column cover.

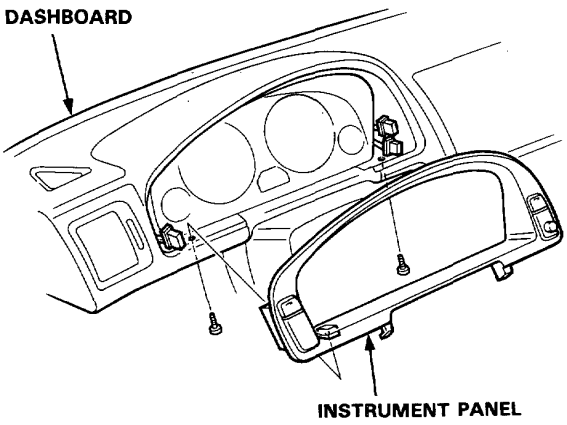

3. Disconnect the connectors from the instrument panel.
4. Remove the 2 screws from the rear of the instrument panel, then remove the sunroof switch.

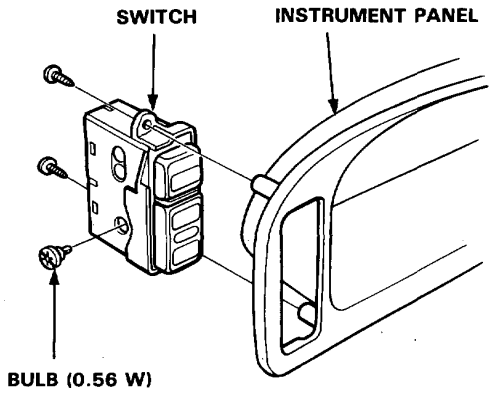

5. Turn the socket 45° counterclockwise to remove the bulb.

Switch Test

1. Remove the dashboard lower panel.
2. Remove the instrument panel from the dashboard.
3. Check for continuity between the terminals in each switch position according to the table.

Switch

Terminal / Position	C		D		A		B
OFF							
OPEN	○	▶	○				
CLOSE			○	◀	○		
TILT			○			◀	○

Switch light

	E		F
	○	⊖	○

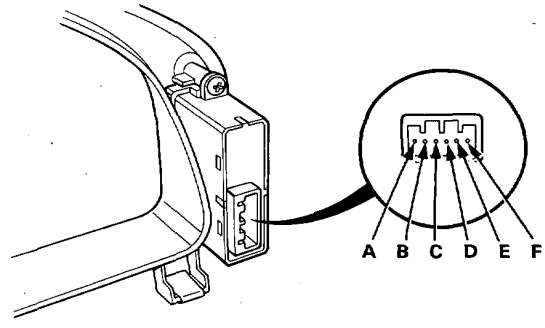

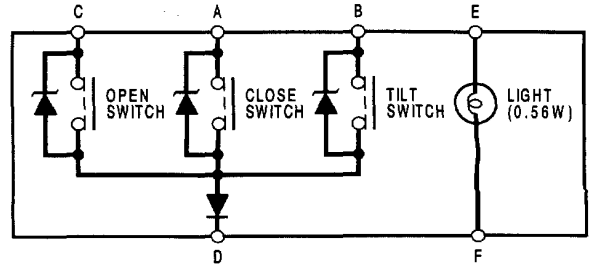

Motor Test

1. Remove the headliner.

2. Disconnect the 2-P connector from the sunroof motor.

3. Test motor operation by connecting the battery power to the No. 1 terminal and grounding the No. 2 terminal. Test the motor in each direction by switching the leads.

4. If the motor does not run, replace it.

   NOTE: See closing force check in section 20 for motor clutch test.

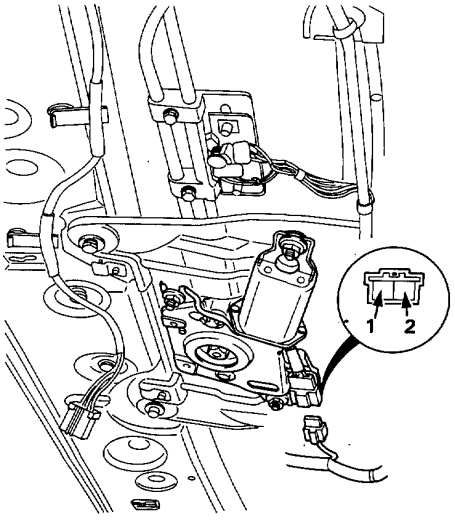

Power Windows

Component Location Index

CAUTION:

- **All SRS electrical wiring harnesses are covered with yellow outer insulation.**
- **When disconnecting the SRS wire harness, install the short connector on the airbag then disconnect the wire harness (See page 23-412).**
- **Replace the entire affected SRS harness assembly if there is an open circuit or damage to the wiring.**

NOTE: RHD type is symmetrical to LHD type.

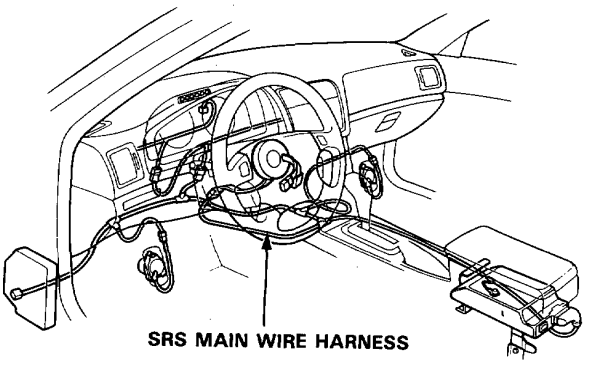

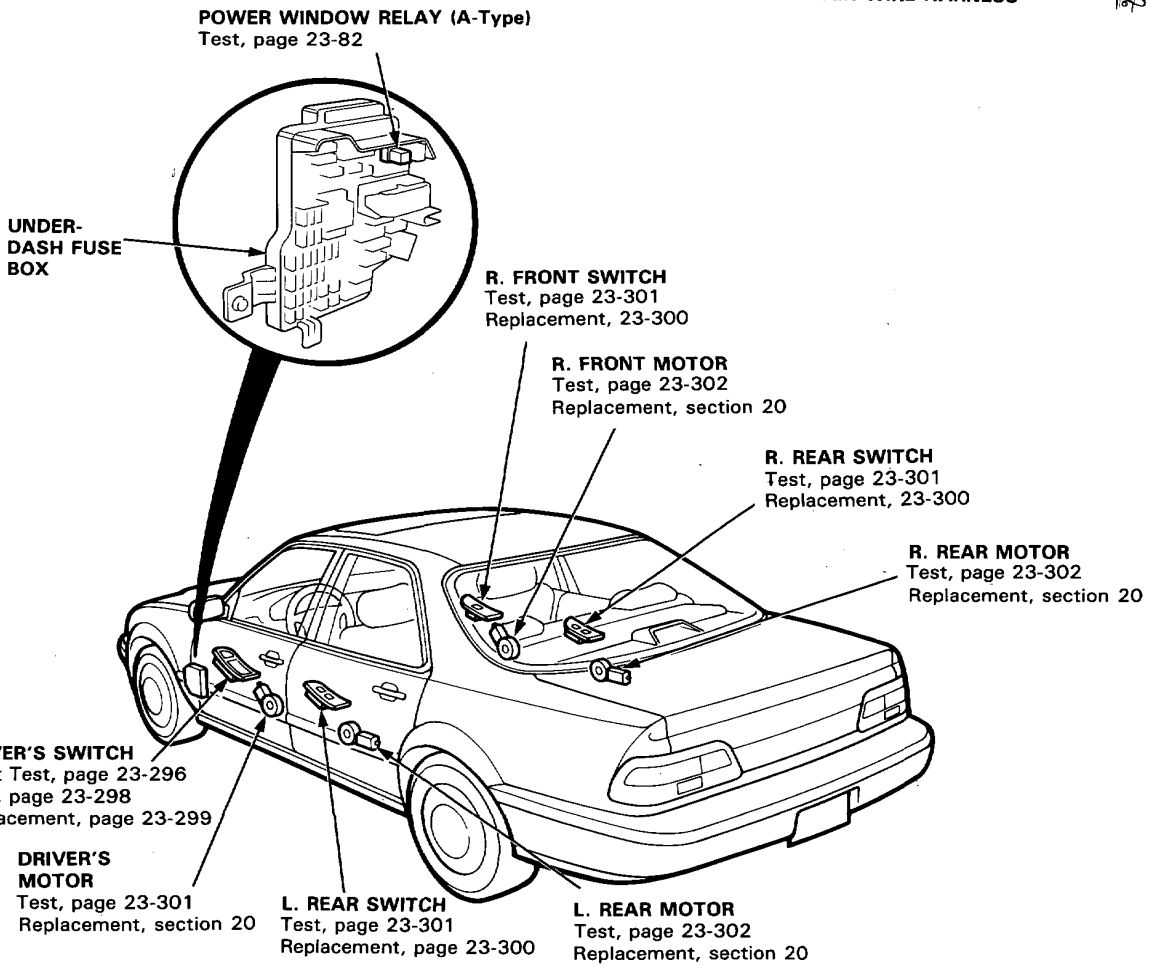

Description

Power Window Key-off Operation (Except KQ):
The power windows can still be operated for about 10 minutes after the ignition switch is turned from the "II" to the I" or "O" position as long as neither of the doors has been opened. This provides a convenience to parked occupants while offering a degree of security against unwanted or accidental window operation.

Circuit Diagram (KQ model)

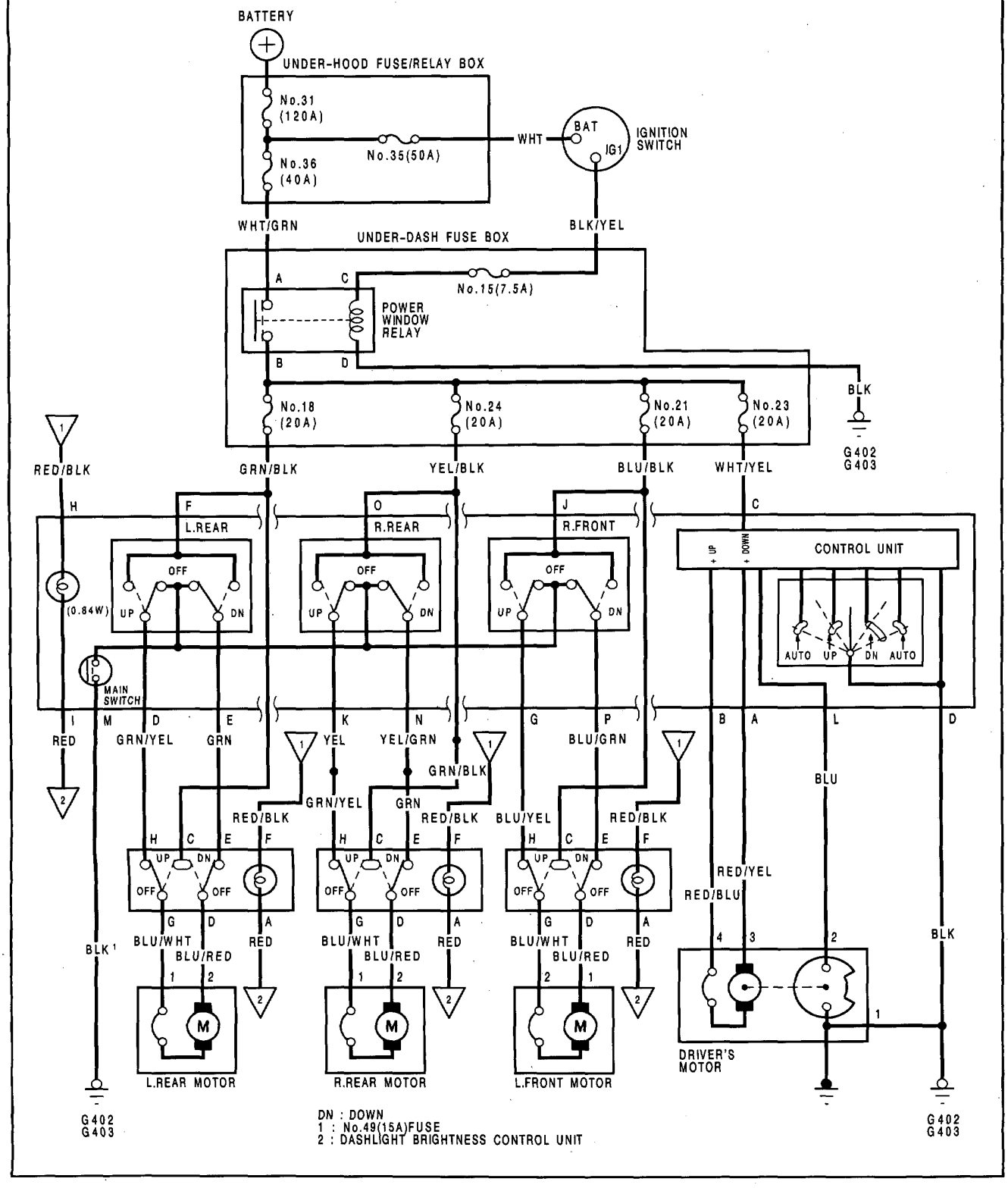

Power Windows

Circuit Diagram (Except KQ)

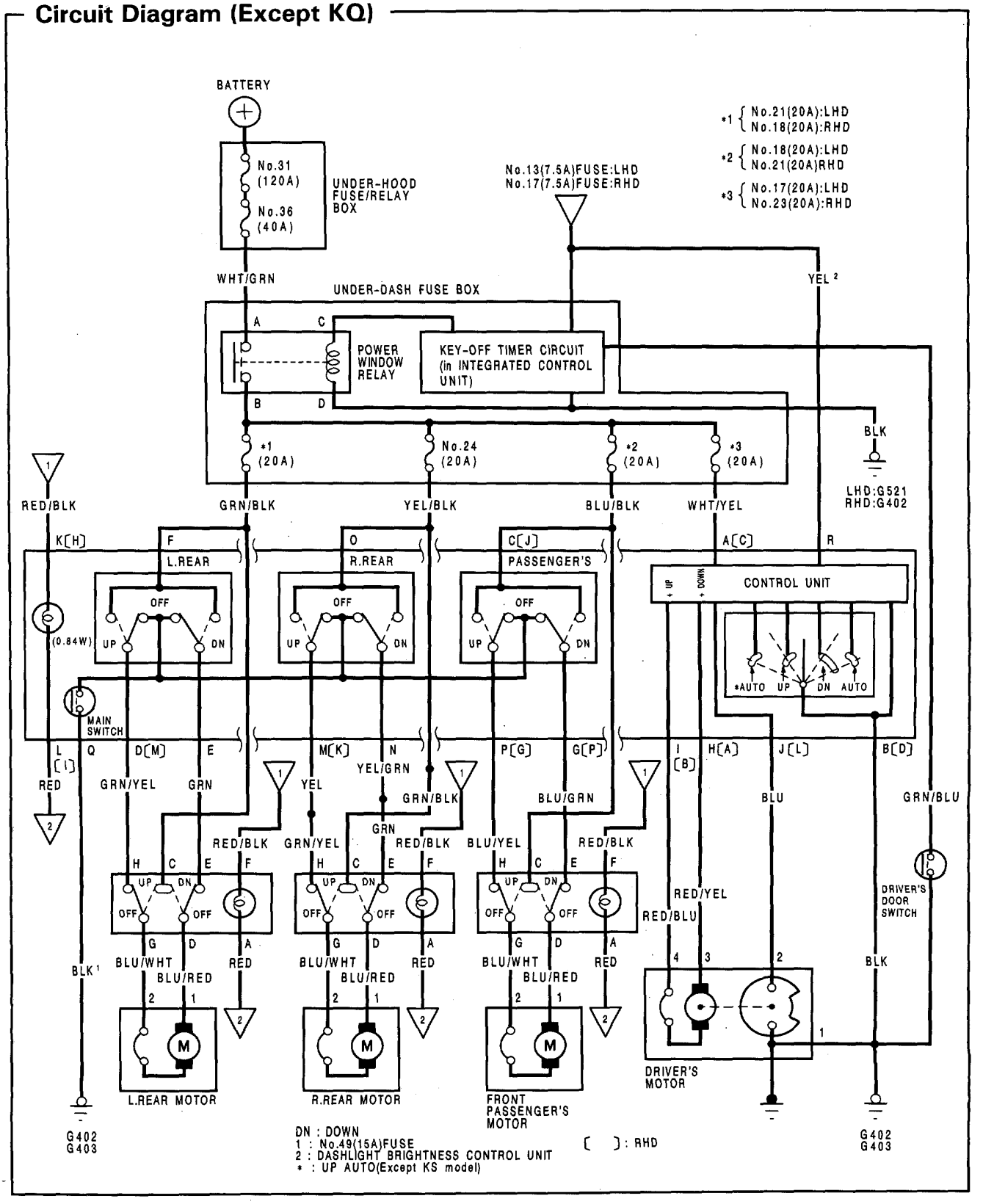

Troubleshooting

NOTE: The numbers in the table show the troubleshooting sequence.

Symptom \ Item to be inspected		Blown No. 36 (40 A) fuse (in the under-hood fuse/relay box)	Blown *1 (7.5 A) fuse (in the under-dash fuse box) *5	Power window relay	Blown *4 (20 A) fuse (in the under-dash fuse box)	Blown *3 (20 A) fuse (in the under-dash fuse box)	Blown *2 (20 A) fuse (in the under-dash fuse box)	Blown No. 24 (20 A) fuse (in the under-dash fuse box)	Driver's door switch	Passenger's switch	Driver's motor	Pulser (in driver's motor)	Passenger's motor	Window regulator	Driver's switch input	Door switches	Key-off timer circuit (in the integrated control unit) *5	Poor ground	Open circuit in wires or loose or disconnected terminals
All windows do not operate.		1	3	2													4	G403 [G402]	WHT/YEL or WHT/GRN
Driver's window does not operate.					1						2			3	4			G403 [G402]	WHT/YEL
Driver's window does not operate in AUTO												1			2				BLU
Passenger's windows do not operate	L[R]. front					1			2	3			4	5					BLU/BLK
	Left rear							1	2	3			4	5					GRN/BLK
	Right rear						1		2	3			4	5					YEL/BLK
All windows do not operate within 10 minutes after the ignition switch is OFF *5			1													2	3		

[ ]: RHD

*1 {NO. 13: LHD / NO. 17: RHD}
*2 {NO. 21: LHD / NO. 18: RHD}
*3 {NO. 18: LHD / NO. 21: RHD}
*4 {NO. 17: LHD / NO. 23: RHD}
*5: With key-off timer system

Driver's Switch Input Test

NOTE: The control unit is built into the driver's switch, and only controls driver's door window operation.

Remove the driver's door trim panel and disconnect the 16-P and 2-P connectors from the driver's switch. Make the following input tests at the connector terminals.

NOTE: Recheck the connections between the 16-P and 2-P connectors and the driver's switch, then replace the driver's switch if all input tests prove OK.

LHD:

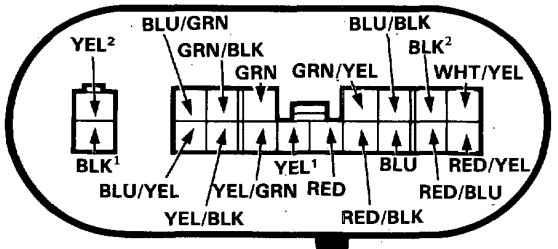

View from wire side.

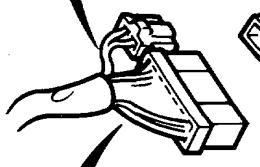

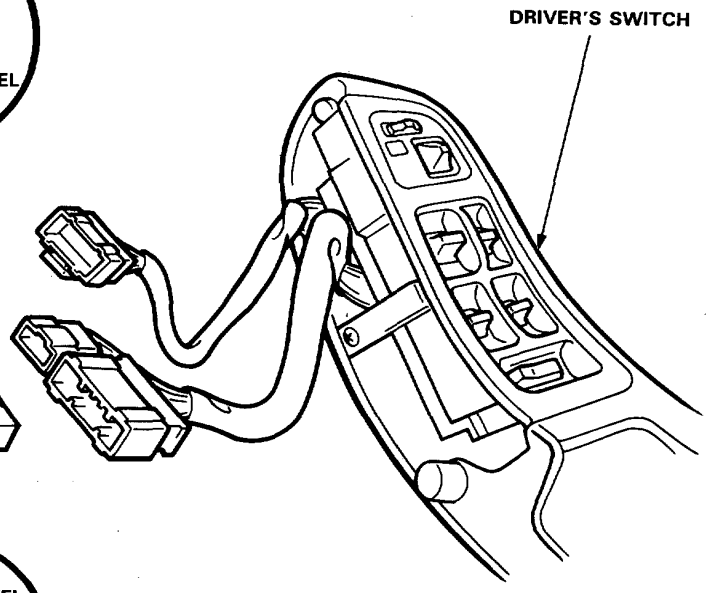

RHD:

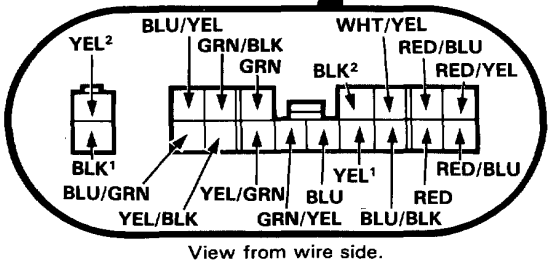

View from wire side.

No.	Wire	Test condition	Test: desired result	Possible cause (if result is not obtained)
1	BLK[1] and BLK[2]	Under all conditions.	Check for continuity to ground: *should be continuity*	• Poor ground (G402, G403). • An open in the wire.
2	WHT/YEL BLU/BLK YEL/BLK GRN/BLK	Ignition switch ON.	Check for voltage to ground: should be battery voltage.	• Blown No. 17, 18, 21 and 24. (20 A) fuse. • Faulty power window relay. • Faulty key-off timer circuit. • An open in the wire.
3	YEL[2]	Ignition switch ON.	Check for voltage to ground: should be battery voltage.	• Blown No. 13 (7.5 A) fuse (LHD), No. 17 (7.5 A) fuse (RHD). • An open in the wire.
4	RED/BLU and RED/YEL	Connect the WHT/YEL terminal to the RED/BLU terminal, and the RED/YEL terminal to the BLK[1] terminal, then ignition switch ON.	Check the driver's motor operation: should run.	• Faulty driver's motor.
5	BLU/YEL and BLU/GRN	Connect the BLU/BLK terminal to the BLU/YEL terminal, and the BLU/GRN terminal to the BLK[1] terminal, then ignition switch ON.	Check the front passenger's motor operation: should run.	• Faulty front passenger's motor. • Faulty front passenger's switch. • An open in the wire.
6	YEL[1] and YEL/GRN	Connect the YEL/BLK terminal to the YEL terminal, and the YEL/GRN terminal to the BLK[1] terminal then ignition switch ON.	Check the right rear motor operation: should run.	• Faulty R. rear motor. • Faulty R. rear switch. • An open in the wire.
7	GRN/YEL and GRN	Connect the GRN/BLK terminal to the GRN/YEL terminal, and the GRN terminal to the BLK[1] terminal, then ignition switch ON.	Check the left rear motor operation: should run.	• Faulty L. rear motor. • Faulty L. rear switch. • An open in the wire.
8	BLU and BLK[2]	Connect the WHT/YEL terminal to the RED/YEL terminal, and the BLK[2] terminal to the RED/BLU terminal, then ignition switch ON.	Check for needle movement on analog ohmmeter connected between BLU and BLK[2] while the window is moving.	• Faulty pulser. • Faulty driver's motor. • An open in the wire.
9	RED/BLK and RED	Lighting switch ON. Dashlight brightness controller dial rotated, dashlights should come on full bright.	Check for voltage between RED/BLK (+) and RED (−) terminals: should be battery voltage.	• Faulty dashlight brightness control system. • An open in the wire.

Driver's Switch Test

1. Remove the door trim panel.
2. Remove the driver's switch from the arm rest.
3. Check for continuity between the terminals in each switch position according to the tables.

NOTE: LHD type is shown. RHD type is similar.

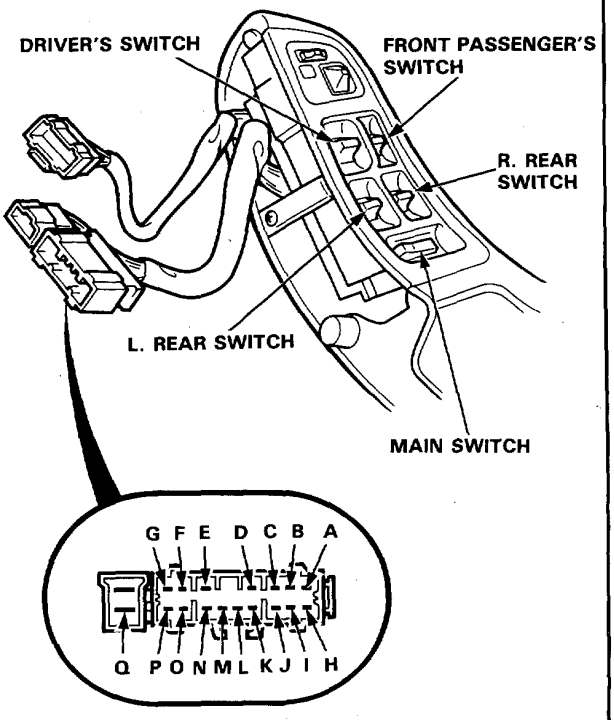

View from terminal side

Driver's Switch
The driver's switch is assembled with the control unit as a single-unit assembly, therefore, you cannot check the driver's switch only. Perform input test procedures No. 1, 2, 3, 4 and 8. If there are normal, the driver's switch assembly is defective.

Front Passenger's Switch

Position	Main switch \ Terminal	C [J]	G [P]	P [G]	Q
OFF	ON		○—○	○—○	○
	OFF		○—○		
UP	ON	○—○	○—○		○
	OFF	○—○			
DOWN	ON	○—○		○—○	
	OFF	○—○			

R. Rear Switch

Position	Main switch \ Terminal	O	M [K]	N	Q
OFF	ON		○—○	○—○	○
	OFF		○—○		
UP	ON	○—○		○—○	
	OFF	○—○			
DOWN	ON	○—○	○—○		○
	OFF	○—○			

L. Rear Switch

Position	Main switch \ Terminal	F	E	D [M]	Q
OFF	ON		○—○	○—○	○
	OFF		○—○		
UP	ON	○—○	○—○		○
	OFF	○—○			
DOWN	ON	○—○		○—○	
	OFF	○—○			

Switch Light

K [H]		L [I]
○	⊗	○

[ ]: RHD

Driver's Switch Replacement

1. Remove the driver's door trim panel, then disconnect all of the connectors from the door trim panel.
2. Remove the arm rest from the door trim panel by removing the screws.

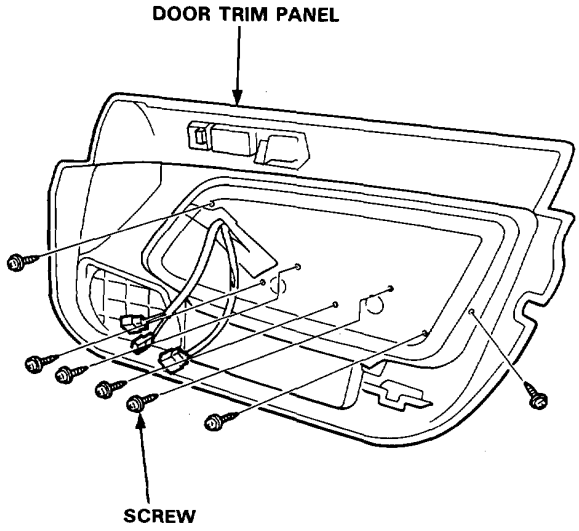

3. Remove the power window master switch assembly from the arm rest by removing 3 screws.

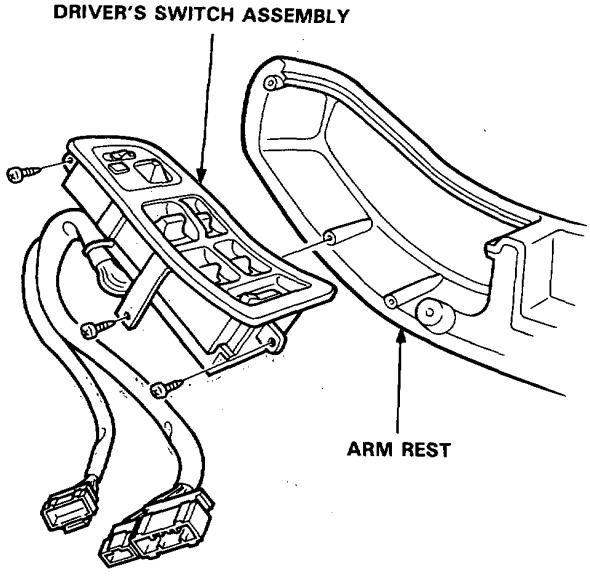

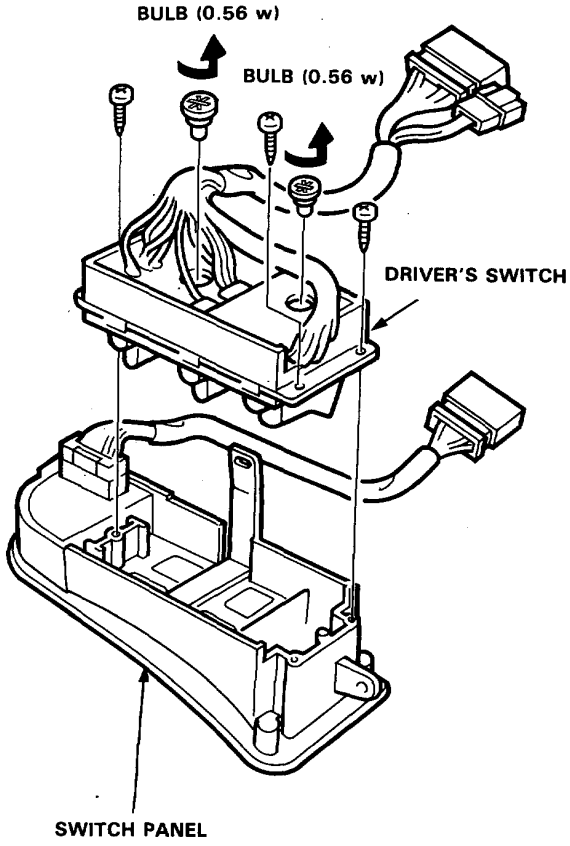

Passenger's Switch Replacement

Front Passenger's Switch:

1. Remove the door trim panel, then disconnect all of the connectors from the door trim panel.
2. Remove the arm rest from the door trim panel by removing the screws.

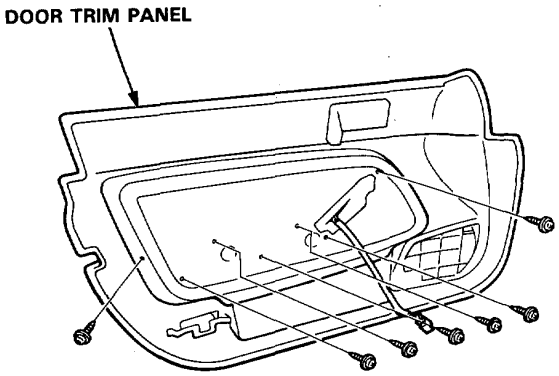

3. Remove the power window switch from the arm rest by removing 3 screws.

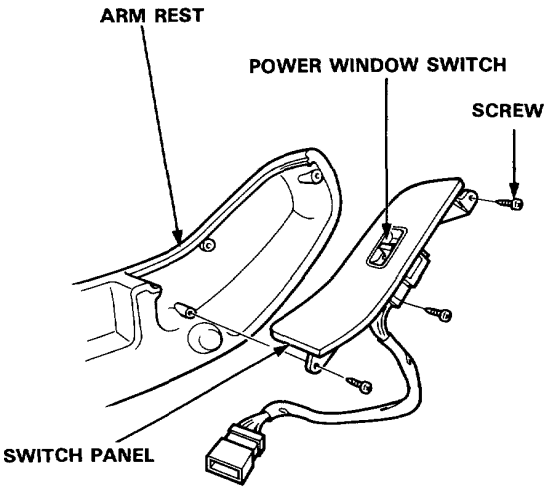

Rear Passenger's Switches:

1. Remove the door trim panel, then disconnect all of the connectors from the door trim panel.
2. Remove the arm rest from the door trim panel by removing the screws.

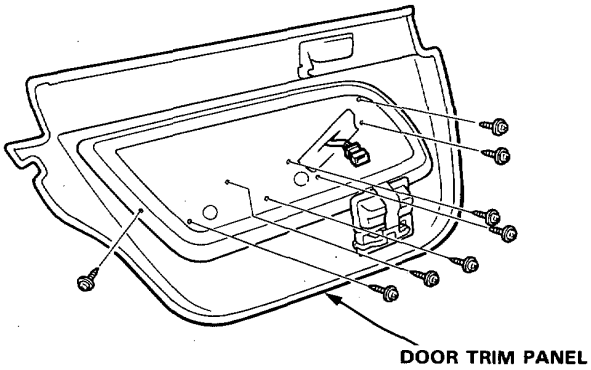

3. Remove the power window switch from the arm rest by removing 3 screws.

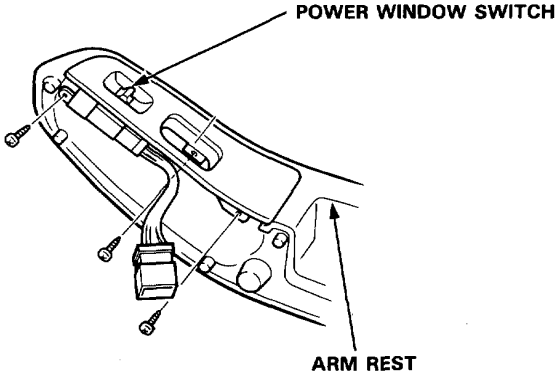

4. Remove the power window switch from the switch panel by removing 2 screws.

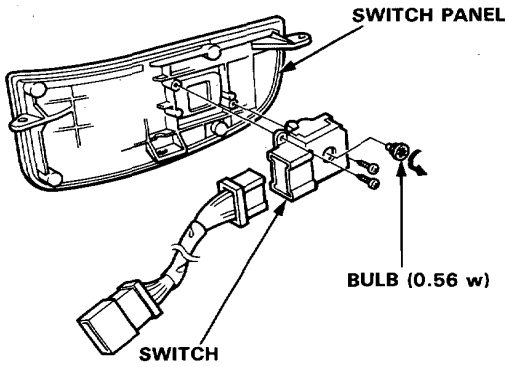

Passenger's Switch Test

1. Remove the switch from the arm rest, then disconnect the 8-P connector.

2. Check for continuity between the terminals in each switch position according to the table.

   NOTE: Front switch is shown. Rear switches are similar.

Terminal / Position	C	D	E	G	H	A		F
UP	○	○	○	○				
OFF		○	○	○	○	○	○	○
DOWN	○	○		○	○			

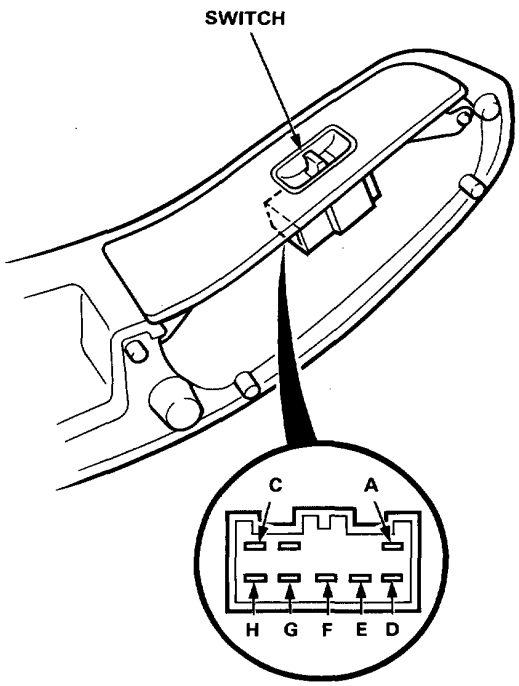

View from terminal side

Driver's Motor Test

Motor Test:

1. Remove the door trim panel.

2. Disconnect the 4-P connector from the door wire harness.

3. Test motor operation by connecting battery voltage to the No. 3 terminal and grounding the No. 4 terminal.
   Test the motor in each direction by switching the leads from the battery.

4. If the motor does not run, replace it.

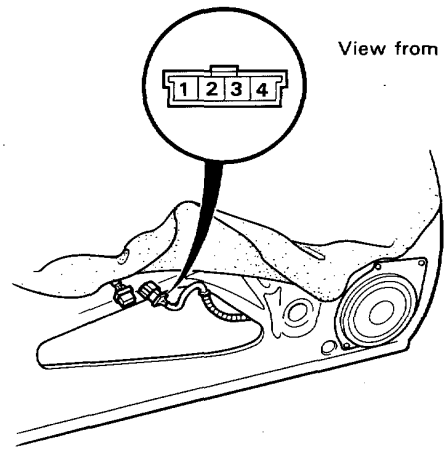

View from wire side

Pulser Test:
Using an analog ohmmeter, run the motor by connecting battery voltage to the No. 3 and No. 4 terminals. Check for needle movement with the test leads connected to the No. 1 and 2 terminals.
The analog ohmmeter needle should move back and forth.

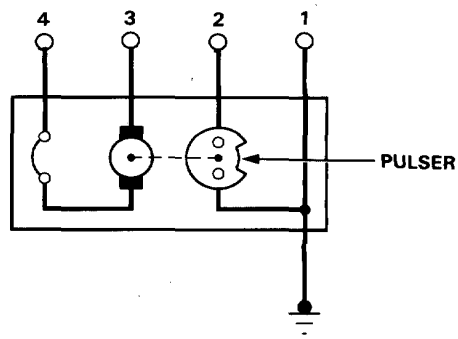

Passenger's Motor Test

1. Remove the door trim panel.
2. Disconnect the 2-P connector from the motor
3. Test motor operation by applying battery voltage to the No. 1 and No. 2 terminals.
   Test the motor in each direction by switching the leads from the battery.
4. If the motor does not run, replace it.

   NOTE: Front motor is shown, rear motors similar.

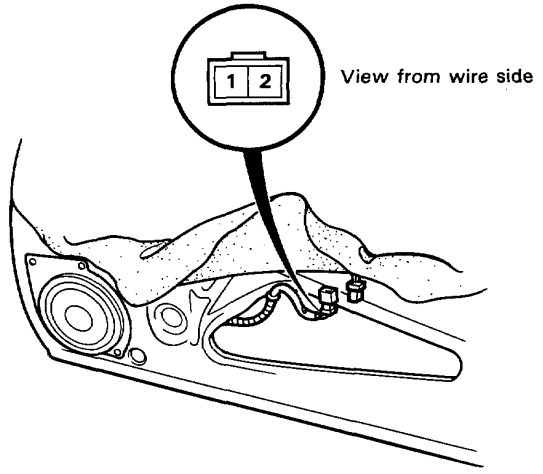

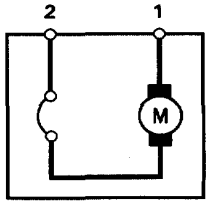

Keyless/Power Door Locks

Component Location Index

CAUTION:

- **All SRS electrical wiring harnesses are covered with yellow outer insulation.**
- **When disconnecting the SRS wire harness, install the short connector on the airbag then disconnect the wire harness (See page 23-412).**
- **Replace the entire affected SRS harness assembly if there is an open circuit or damage to the wiring.**

NOTE: RHD type is symmetrical to LHD type.

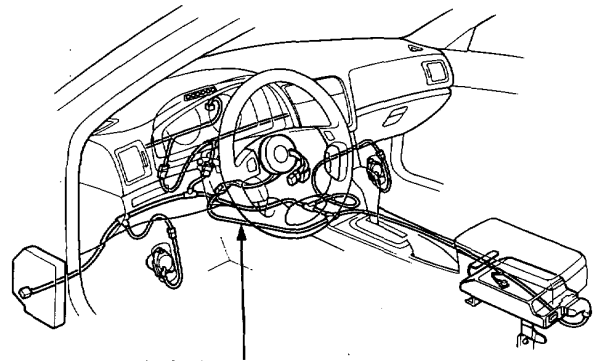

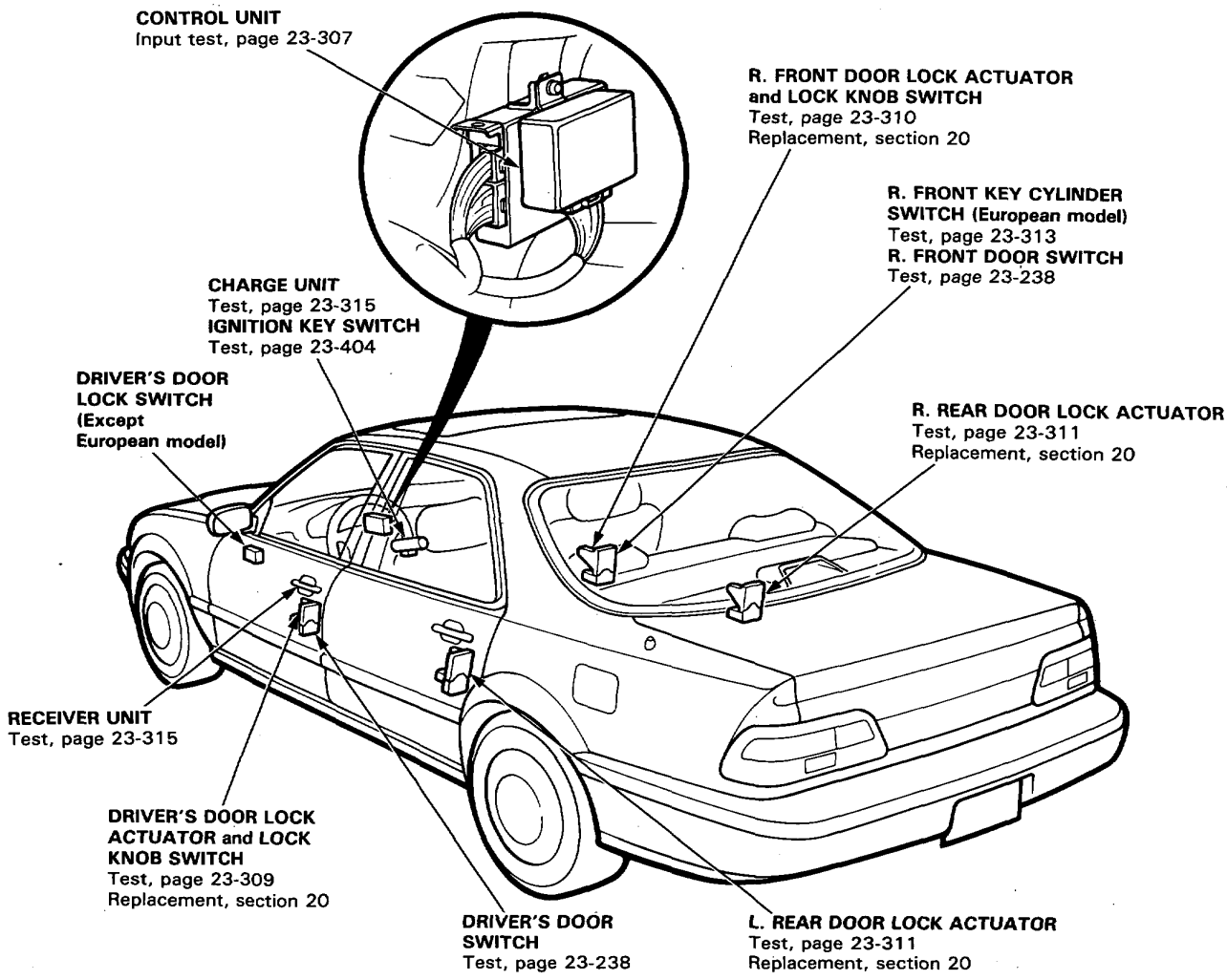

Keyless/Power Door Locks

Circuit Diagram

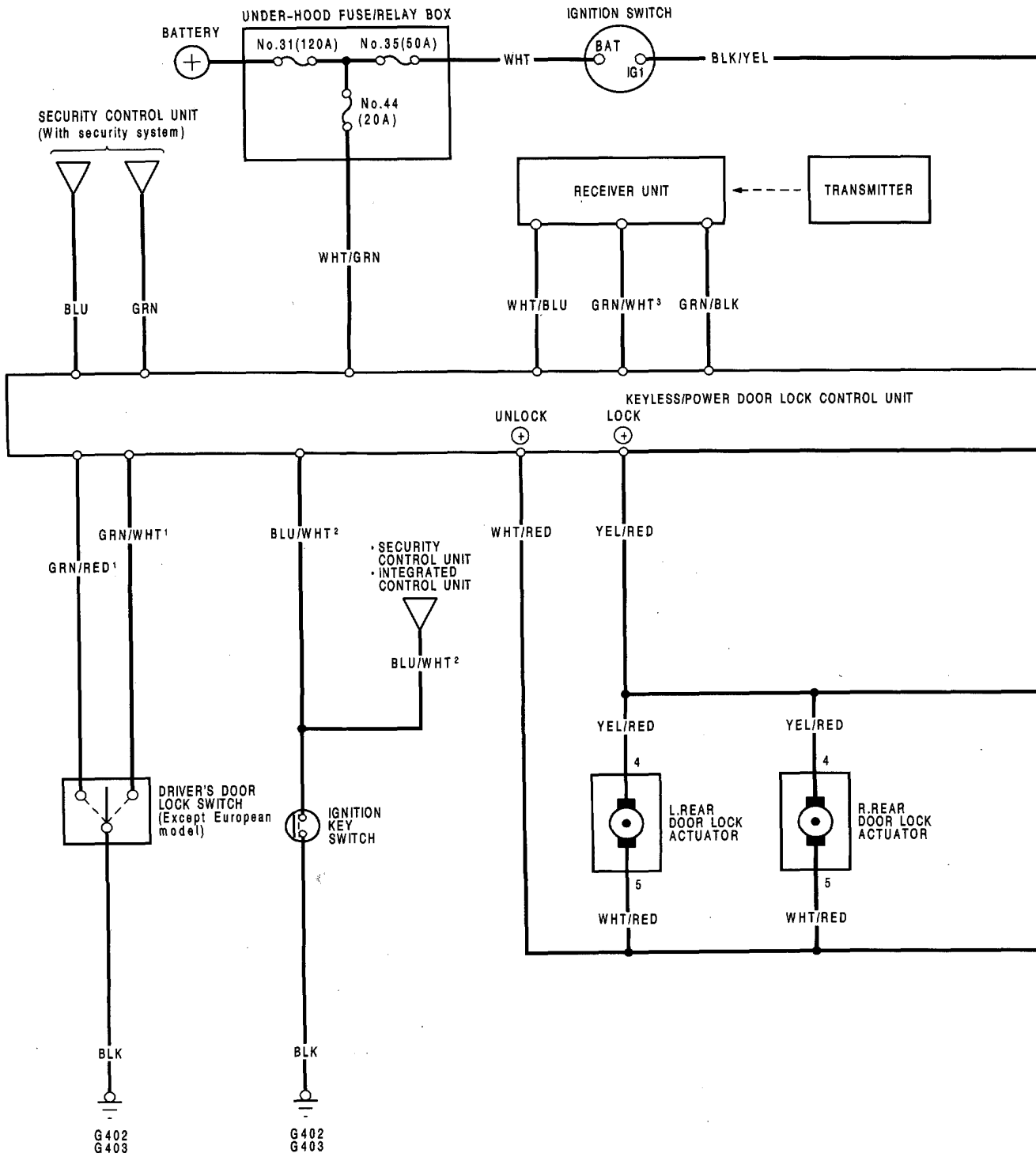

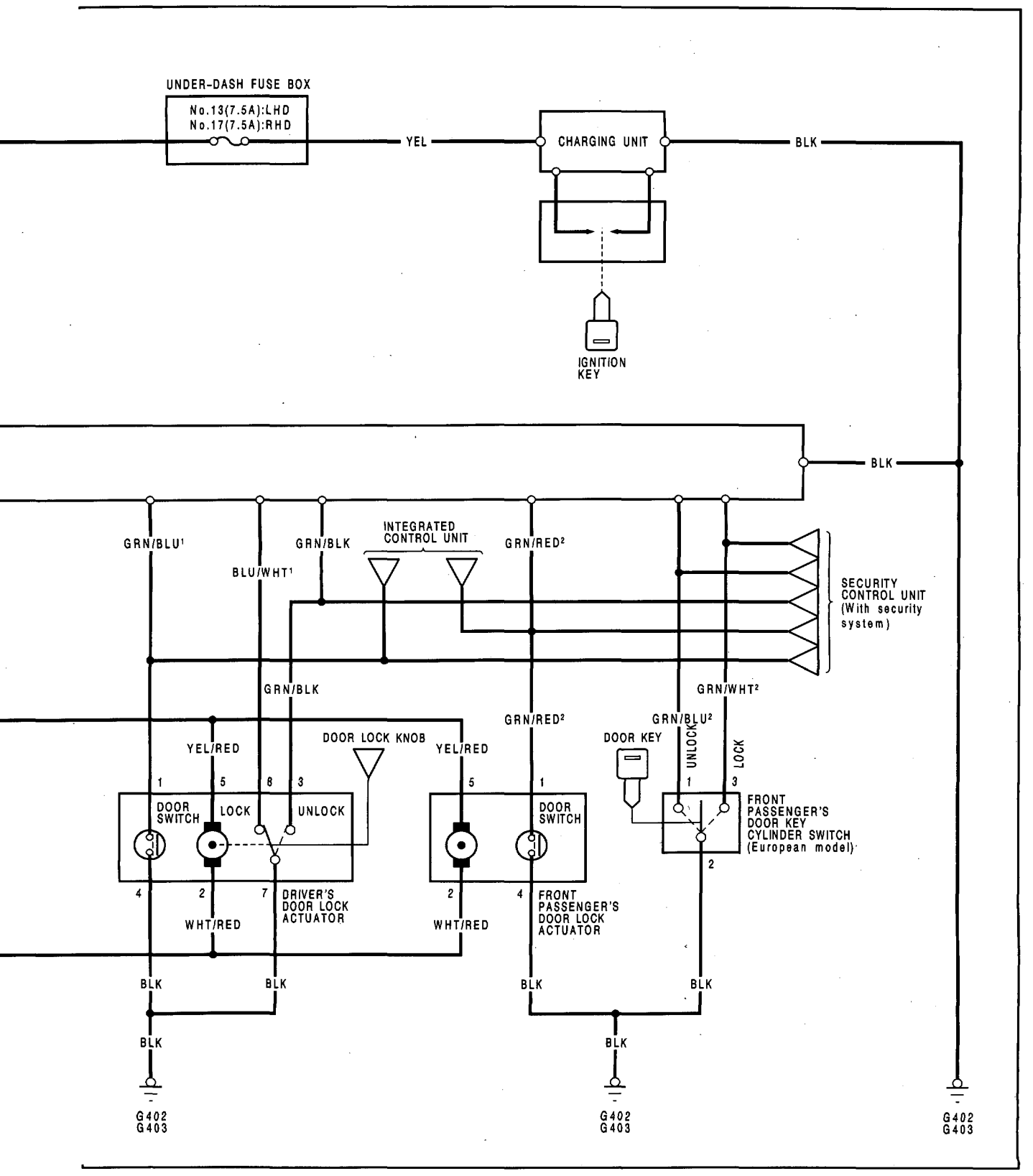
UNDER-DASH FUSE BOX
No.13(7.5A):LHD
No.17(7.5A):RHD
YEL
CHARGING UNIT
BLK
IGNITION KEY
BLK
GRN/BLU¹
BLU/WHT¹
GRN/BLK
INTEGRATED CONTROL UNIT
GRN/RED²
SECURITY CONTROL UNIT (With security system)
GRN/BLK
GRN/WHT²
GRN/RED²
GRN/BLU²
UNLOCK
LOCK
YEL/RED
DOOR LOCK KNOB
YEL/RED
DOOR KEY
1
5
8
3
5
1
1
3
DOOR SWITCH
LOCK
UNLOCK
DOOR SWITCH
FRONT PASSENGER'S DOOR KEY CYLINDER SWITCH (European model)
2
4
2
7
DRIVER'S DOOR LOCK ACTUATOR
2
4
FRONT PASSENGER'S DOOR LOCK ACTUATOR
WHT/RED
WHT/RED
BLK
BLK
BLK
BLK
BLK
BLK
G402
G403
G402
G403
G402
G403

Keyless/Power Door Locks

Troubleshooting

NOTE: The numbers in the table show the troubleshooting sequence.

Symptom		Blown No. 44 (20 A) fuse (in the under-hood fuse/relay box)	Disconnected or obstructed door lock rod/linkage	Driver's door lock knob switch (in the door lock actuator)	Driver's door lock actuator	Passenger's door lock actuator	Driver's door lock switch	Passenger's door key cylinder switch (in the door lock actuator)	Driver's door switch	Passenger's door switch	Ignition key switch	Control unit input test	Keyless entry system test	Poor ground	Open circuit in wires or loose or disconnected terminals
Power door lock system doesn't operate at all.		1										2		G402	WHT/GRN
Doors don't lock or unlock with the driver's power door lock switch. *1	All doors						1					2		G402, G403	GRN/RED or GRN/WHT
	One or more doors		1		2										
Doors don't lock or unlock with the driver's power door lock knob.	All doors			1								2		G402, G403	BLU/WHT or GRN/BLK
	One or more doors		1		2										
Doors don't lock with the passenger's door key. *2	All doors							1				2		G402, G403	GRN/BLU or GRN/WHT
	One or more doors		1		2										
The door is not supposed to be locked, but it is locked. (Remains locked after the ignition key has been inserted and the door opened.)									2		1	3		G402	BLU/WHT
The power door lock system operate properly but the Keyless entry system doesn't operate.												2	1	G402	WHT/BLU, GRN/WHT, GRN/BLK or YEL

*1: Except european model
*2: European model

Control Unit Input Test

CAUTION:

- **All SRS electrical wiring harnesses are covered with yellow outer insulation.**
- **When disconnecting the SRS wire harness, install the short connector on the airbag then disconnect the wire harness (See page 23-412).**
- **Replace the entire affected SRS harness assembly if there is an open circuit or damage to the wiring.**

Remove the dashboard lower panel, then disconnect the 14-P and 10-P connector from the control unit. Make the following input tests at the harness pins.

NOTE:

- Recheck the connections between the 14-P and 10-P connector and the control unit, then replace the control unit if all input tests prove OK.
- Several different wires have the same color. They have been given a number suffix to distinguish them (for example GRN/RED[1] and GRN/RED[2] are not the same).
- The illustration is LHD type.

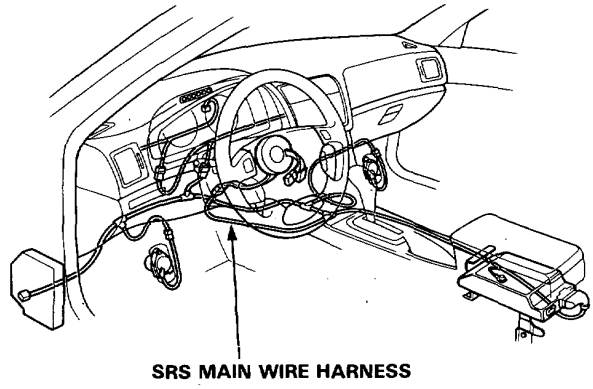

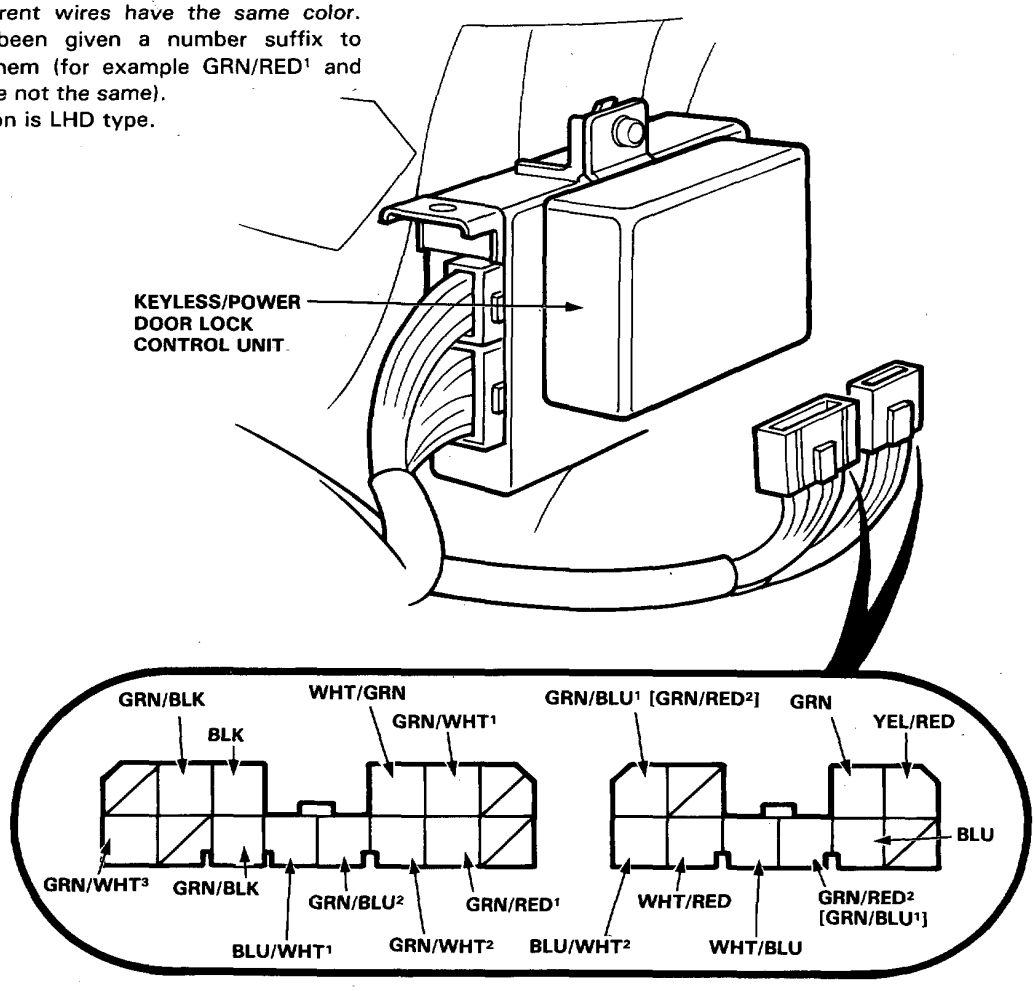

View from wire side. [ ]: RHD

(cont'd)

Control Unit Input Test (cont'd)

No.	Wire	Test condition	Test: desired result	Possible cause (if result is not obtained)
1	BLK	Under all conditions.	Check for continuity to ground: should be continuity.	• Poor ground (G402, G403). • An open in the wire.
2	WHT/GRN	Under all conditions.	Check for voltage to ground: should be battery voltage.	• Blown No. 44 (20 A) fuse. • An open in the wire.
3 *1	GRN/WHT[1]	Driver's door lock switch in LOCK.	Check for voltage to ground: should be 1 V or less.	• Faulty driver's door lock switch. • Poor ground (G402, G403). • An open in the wire.
	GRN/RED[1]	Driver's door lock switch in UNLOCK.		
4	BLU/WHT[1]	Driver's door lock knob in LOCK.	Check for voltage to ground: 1 V or less.	• Faulty driver's door lock actuator. • Poor ground (G402, G403). • An open in the wire.
	GRN/BLK	Driver's door lock knob in UNLOCK.		
5	GRN/BLU[1]	Driver's door opened.	Check for voltage to ground: should be 1 V or less. NOTE: Before testing, remove No. 56 (7.5 A) fuse.	• Faulty left door switch. • Poor ground (G402, G403). • An open in the wire.
	GRN/RED[2]	Right [Left] door opened.		
6	BLU/WHT[2]	Ignition key is inserted into the ignition switch.	Check for voltage to ground: should be 1 V or less.	• Faulty ignition key switch. • Poor ground (G402, G403). • An open in the wire.
7 *2	GRN/WHT[2]	Passenger's door key cylinder in LOCK.	Check for voltage to ground: should be 1 V or less as the switch is turned.	• Faulty door key cylinder. • Poor grond (G402, G403). • An open in the wire.
	GRN/BLU[2]	Passenger's door key cylinder in UNLOCK.		
8	WHT/RED and YEL/RED	Connect the YEL/RED terminal to the WHT/GRN terminal, and the WHT/RED terminal to the BLK terminal momentarily.	Check door lock operation: All doors should unlock as the battery is connected momentarily.	• Faulty actuator. • An open in the wire.
		Connect the WHT/RED terminal to the WHT/GRN terminal, and the YEL/RED terminal to the BLK terminal momentarily.	Check door lock operation: All doors should lock as the battery is connected momentarily.	
9	GRN	Under all conditions.	Check for voltage to ground: should be battery voltage.	• Faulty security control unit. • An open in the wire.
10	BLU	Under all conditions.	Check for voltage to ground: should be battery voltage.	• Fauly security control unit. • An open in the wire.

*1: Except european model.
*2: European model.

Driver's Door Actuator Test

1. Remove the door trim panel.

2. Disconnect the 8-P connector from the actuator.

3. Test actuator operation:

   LOCK: With battery power connected to the No. 2 terminal, grounding to the No. 5 terminal momentarily.

   UNLOCK: With battery power connected to the No. 5 terminal, grounding to the No. 2 terminal momentarily.

   CAUTION: To prevent damage to the motor, only apply battery voltage momentarily.

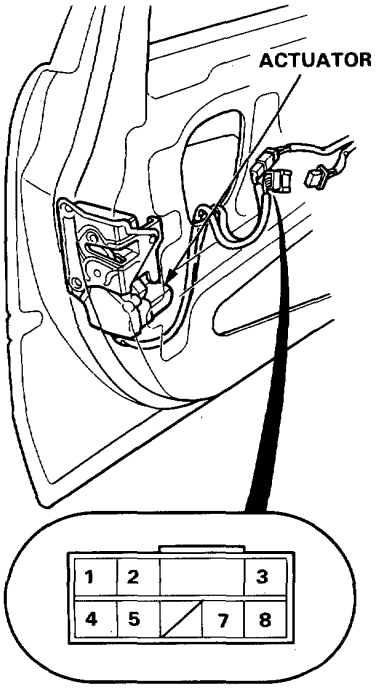

View from wire side

4. If the actuator fails to operate properly, replace it

5. Check for continuity between the terminals in each switch position according to the table.

Terminal / Position	8	7	3
LOCK	○———	———○	
UNLOCK		○———	———○

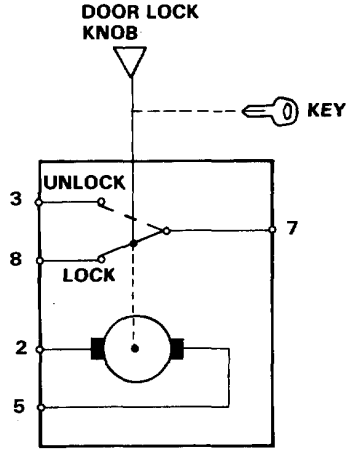

Passenger Door Actuator Test

Front Passenger's Door:

1. Remove the door trim panel.
2. Disconnect the 8-P connector from the actuator.
3. Test actuator operation:

   LOCK: With battery power connected to the No. 2 terminal, grounding to the No. 5 terminal momentarily.

   UNLOCK: With battery power connected to the No. 5 terminal, grounding to the No. 2 terminal momentarily.

   CAUTION: To prevent damage to the motor, only apply battery voltage momentarily.

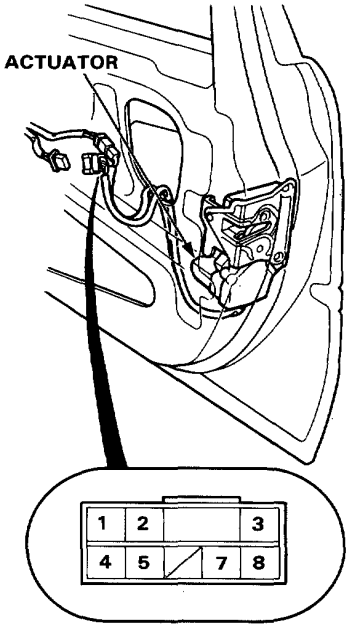

View from wire side

4. If the actuator fails to operate properly, replace it.

5. Check for continuity between the terminals in each switch position according to the table.

Terminal / Position	7	3
LOCK		
UNLOCK	○	○

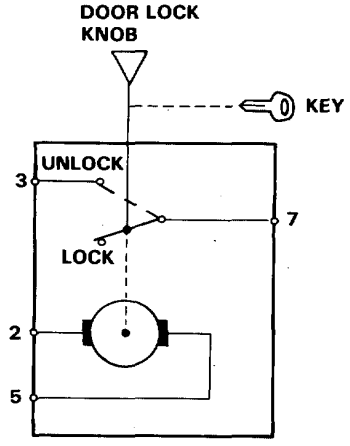

Left/Right Rear Door:

1. Remove the door trim panel.

2. Disconnect the 8-P connector from the actuator.

3. Test actuator operation:

   LOCK: With battery power connected to the No. 5 terminal, grounding to the No. 4 terminal momentarily.

   UNLOCK: With battery power connected to the No. 4 terminal, grounding to the No. 5 terminal momentarily.

   CAUTION: To prevent damage to the motor, only apply battery voltage momentarily.

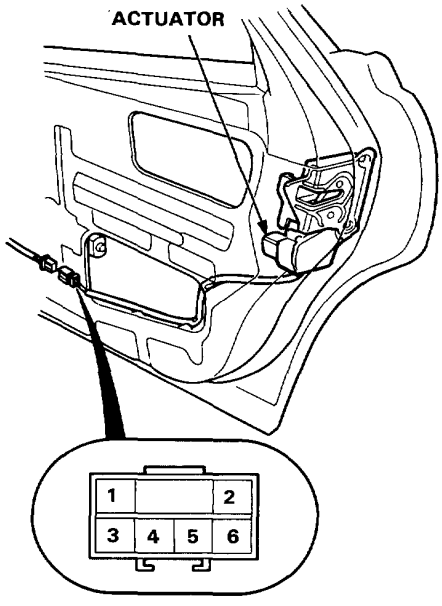

View from wire side

4. If the actuator fails to operate properly, replace it.

5. Check for continuity between the terminals in each switch position according to the table.

Terminal / Position	2	6
LOCK		
UNLOCK	○———	———○

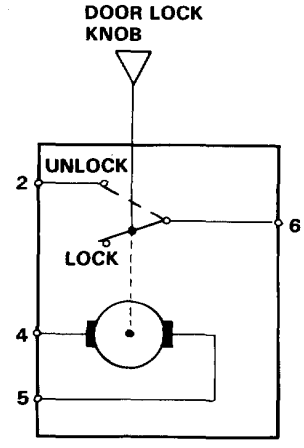

Door Lock Switch Test

Except European model:

1. Remove the door trim panel.
2. Disconnect the 3-P connector from the switch.
3. Check for continuity between the terminals in each switch position according to the tables.

Terminal / Position	1	2	3
UNLOCK		○———	———○
OFF			
LOCK	○———	———○	

NOTE: RHD type is shown. LHD type is similar.

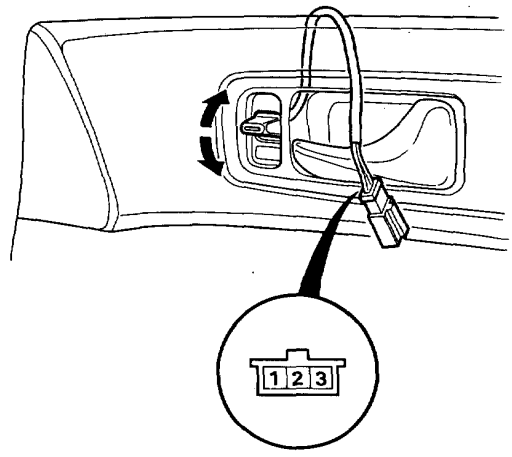

View from wire side

Key Cylinder Switch Test

European model:

1. Remove the door trim panel.
2. Disconnect the 3-P connector from the actuator.
3. Check for continuity between the terminals in each switch position according to the tables.

Terminal / Position	1	2	3
LOCK		○———	———○
UNLOCK	○———	———○	

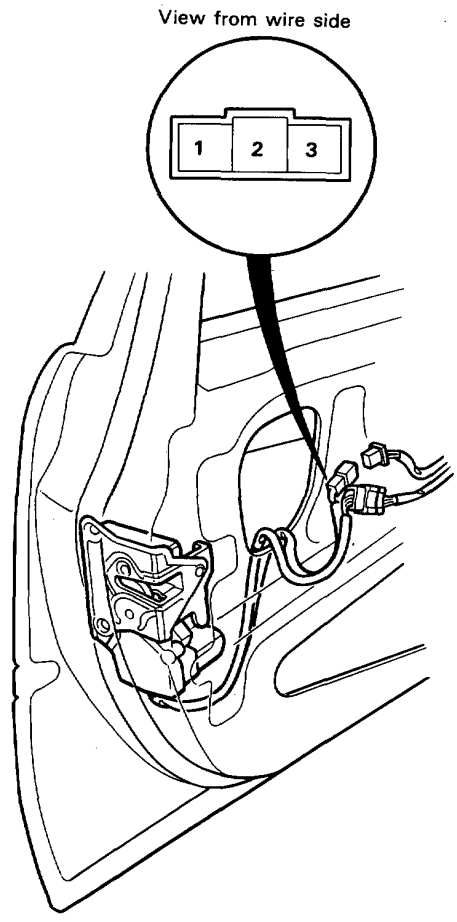

NOTE: RHD type is shown. LHD type is similar.

Keyless Entry System Test

NOTE: Befor proceeding to testing, make sure that the door lock system is functioning properly.

1. Turn the voltage select switch, then connect the Keyless Entry Checker to AC power outlet and check the power indicator light go on.

2. Place the ignition key (transmitter) within 500 mm (19.7 in) from the front of the infrared ray window and press the transmit button ON the ignition key (transmitter). Check the ray indicator light go on.

   - If ray indicator light go on, go to step 4.

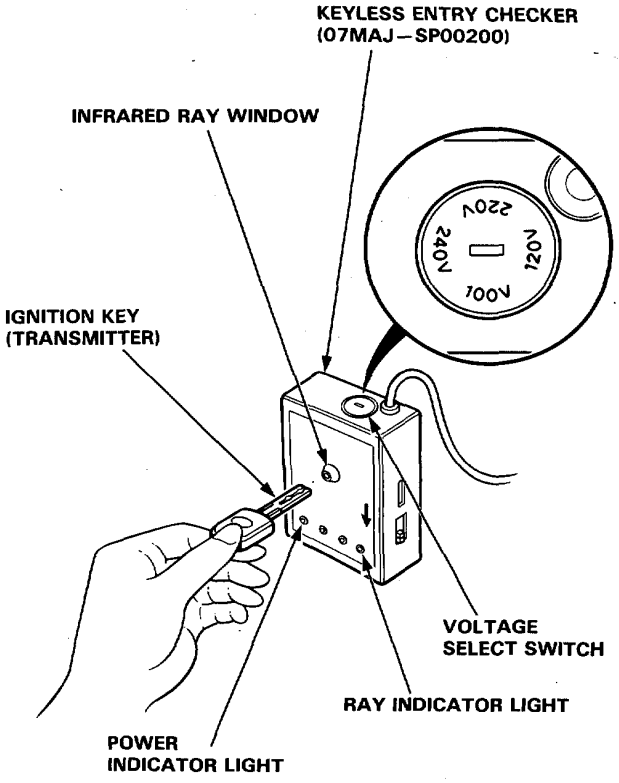

3. The ray indicator light dose not go on, insent the ignition key in to the keyless checker (the charge indicator light go on), then check again.

   NOTE: If the short circuit indicator light go on, pull out the ignition key once and reinsert.

   - If ray indicator light go on, go to step 5.
   - If not illuminating, check for contaminated or deformed ignition key tip.
     If it is not contaminated or deformed the ignition key (transmitter) itselt is faulty.

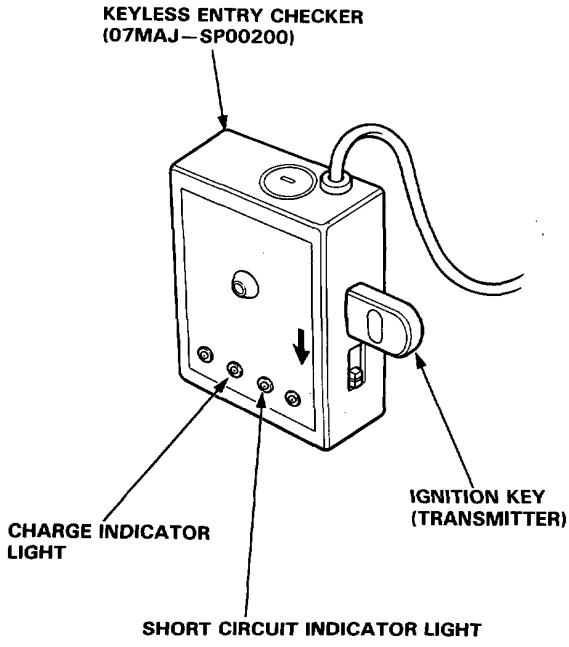

4. Remove the driver's door trim panel and check the receiver output level varies when the transmit button ON the transmitter is pressed.

   NOTE: Connect the positive (+) probe of the digital multimeter to the GRN/WHT terminal and the negative (−) probe to the GRN/BLK terminal.

   - Keep the 4-P connector connected.
   - Use a digital multimeter (DC range).
     - If the output voltage momentarily varies to the range of approx 3.5 mV −1 V, go to step 5.
     - If there is no voltage, check for contaminated sensor on the receiver and external damage. If sensor is not contaminated and no external damage, the receiver is faulty.

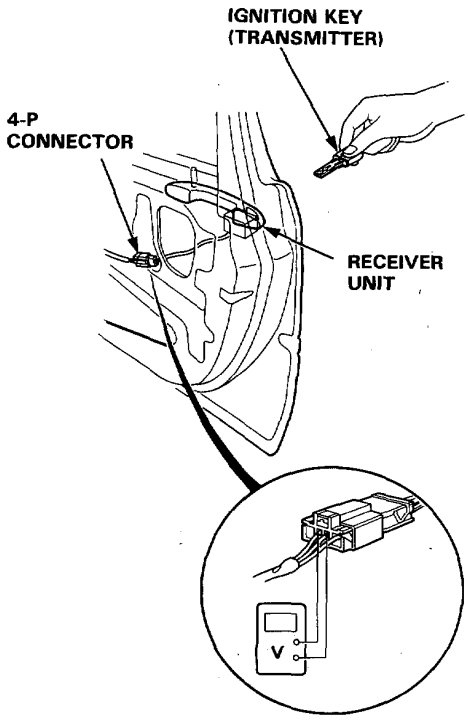

LHD type is symmetrical to RHD type.

5. Insert the ignition key (transmitter) into the ignition switch and turn to the ON, then check whether there is charged voltage of 8−10 V between the key terminals.

   NOTE: Take care not to short circuit between the key terminals or between the terminals and vehicle body during voltage measurement.

   - If there is proper voltage, check for contaminated sensor on the receiver and external damage.
   - If the voltage level is out of the proper range, the charging unit is faulty.

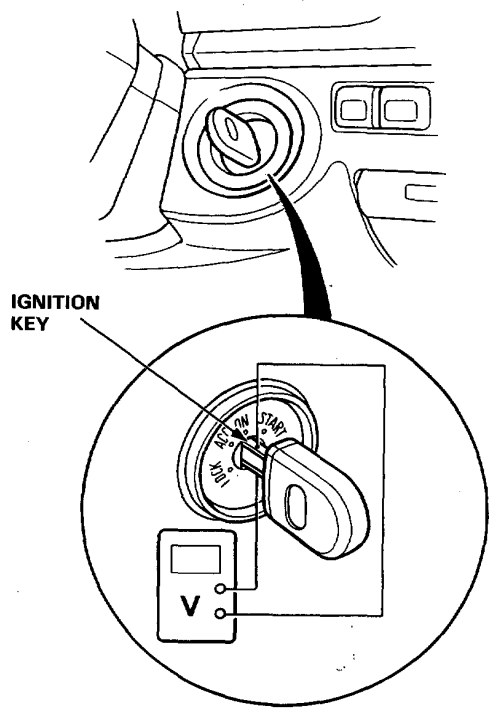

Power Driver's Seat

Component Location Index (LHD)

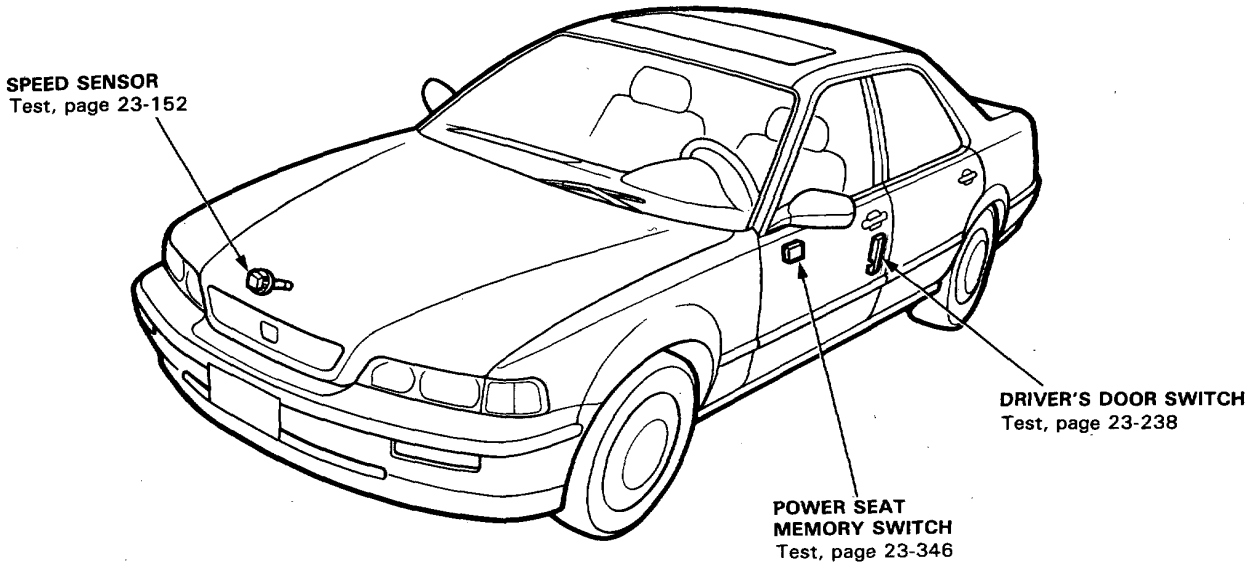

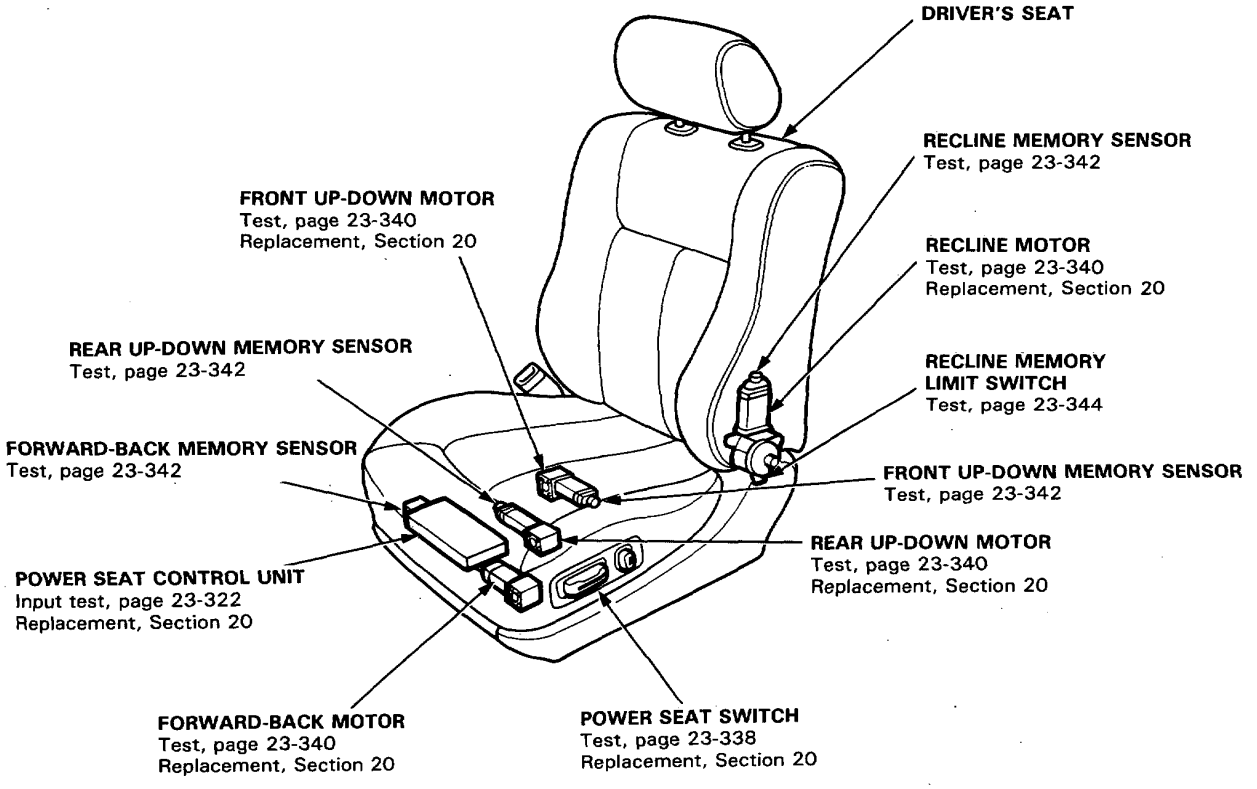

Component Location Index (RHD)

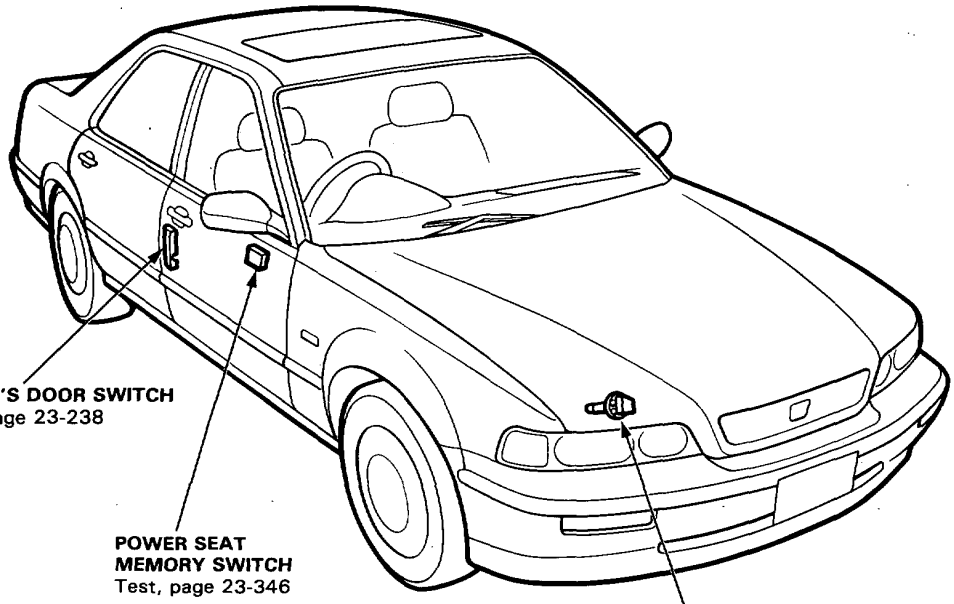

DRIVER'S DOOR SWITCH
Test, page 23-238

POWER SEAT MEMORY SWITCH
Test, page 23-346

SPEED SENSOR
Test, page 23-152

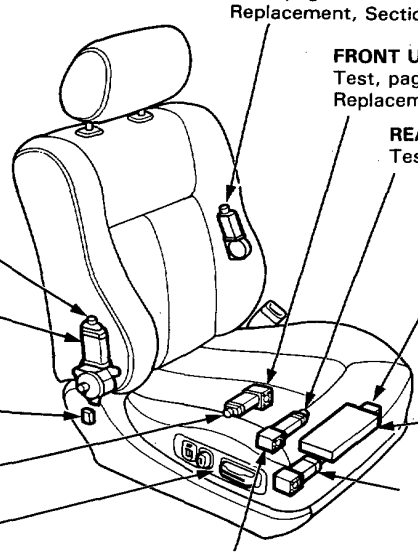

LUMBAR SUPPORT MOTOR
Test, page 23-341
Replacement, Section 20

FRONT UP-DOWN MOTOR
Test, page 23-341
Replacement, Section 20

REAR UP-DOWN MEMORY SENSOR
Test, page 23-343

FORWARD-BACK MEMORY SENSOR
Test, page 23-343

RECLINE MEMORY SENSOR
Test, page 23-343

RECLINE MOTOR
Test, page 23-341
Replacement, Section 20

RECLINE MEMORY LIMIT SWITCH
Test, page 23-345

FRONT UP-DOWN MEMORY SENSOR
Test, page 23-343

POWER SEAT SWITCH
Test, page 23-339
Replacement, Section 20

REAR UP-DOWN MOTOR
Test, page 23-341
Replacement, Section 20

POWER SEAT CONTROL UNIT
Input test, page 23-322
Replacement, Section 20

FORWARD-BACK MOTOR
Test, page 23-341
Replacement, Section 20

Power Driver's Seat

Circuit Diagram (LHD)

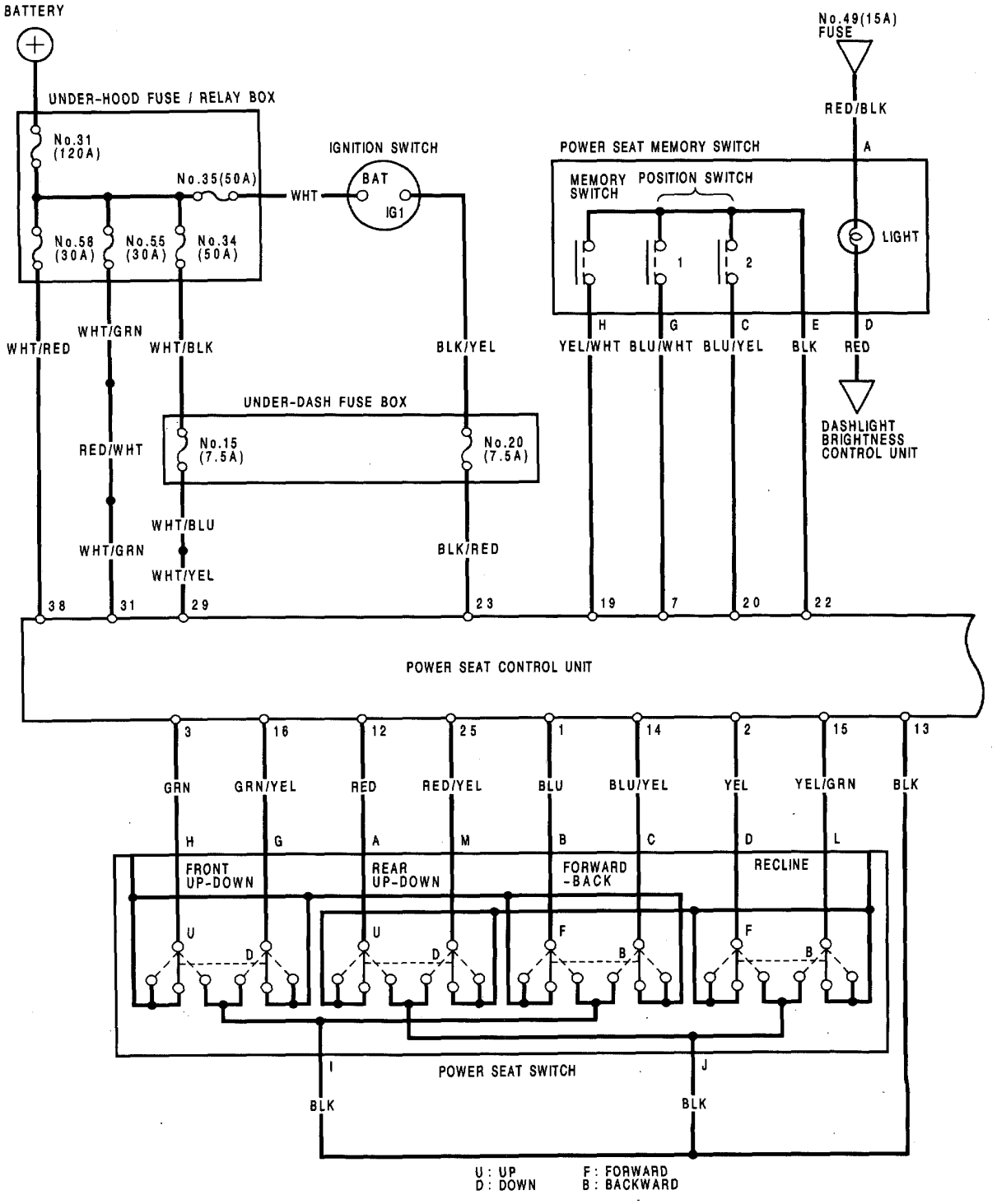

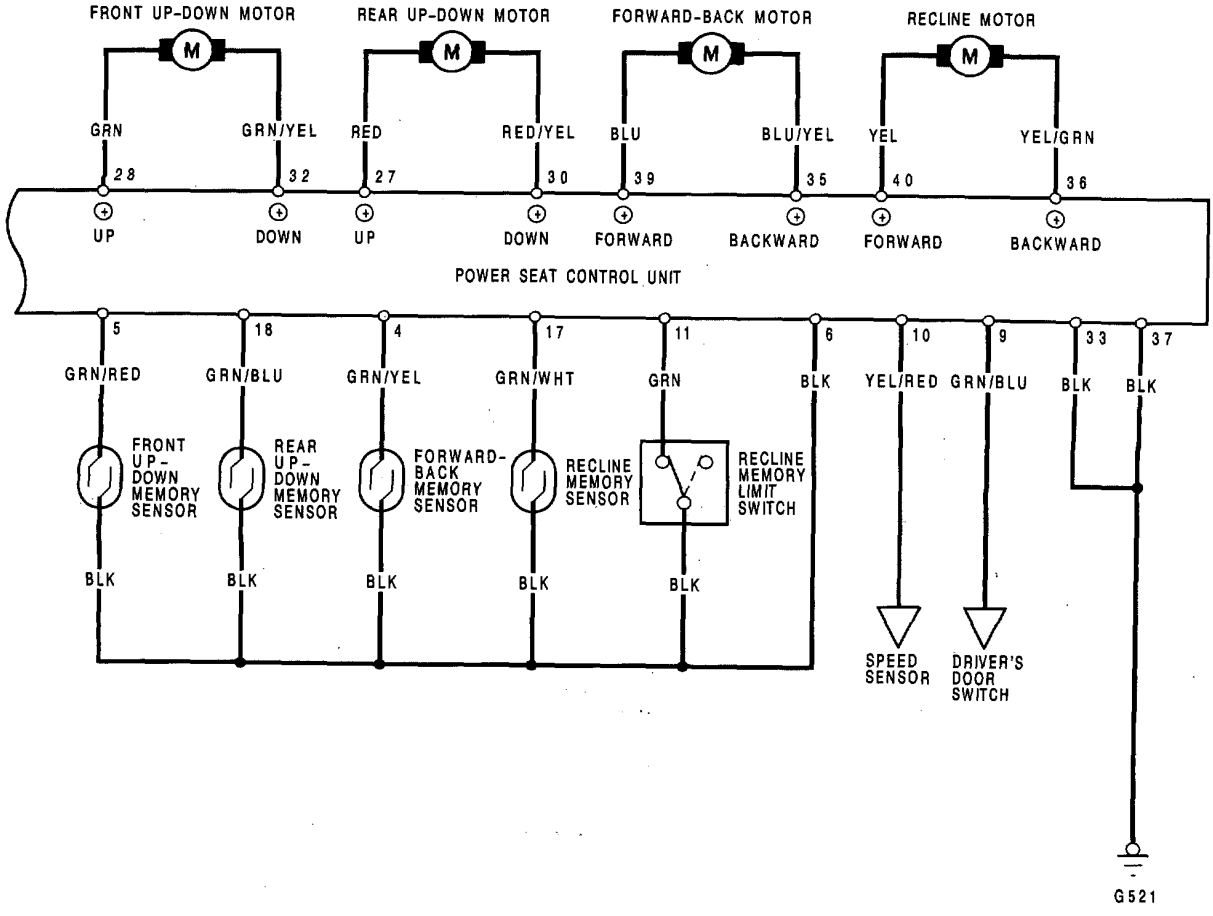
FRONT UP-DOWN MOTOR
REAR UP-DOWN MOTOR
FORWARD-BACK MOTOR
RECLINE MOTOR
M
GRN
GRN/YEL
RED
RED/YEL
BLU
BLU/YEL
YEL
YEL/GRN
28
32
27
30
39
35
40
36
UP
DOWN
UP
DOWN
FORWARD
BACKWARD
FORWARD
BACKWARD
POWER SEAT CONTROL UNIT
5
18
4
17
11
6
10
9
33
37
GRN/RED
GRN/BLU
GRN/YEL
GRN/WHT
GRN
BLK
YEL/RED
GRN/BLU
BLK
BLK
FRONT UP-DOWN MEMORY SENSOR
REAR UP-DOWN MEMORY SENSOR
FORWARD-BACK MEMORY SENSOR
RECLINE MEMORY SENSOR
RECLINE MEMORY LIMIT SWITCH
BLK
BLK
BLK
BLK
BLK
SPEED SENSOR
DRIVER'S DOOR SWITCH
G521

Power Driver's Seat

Circuit Diagram (RHD)

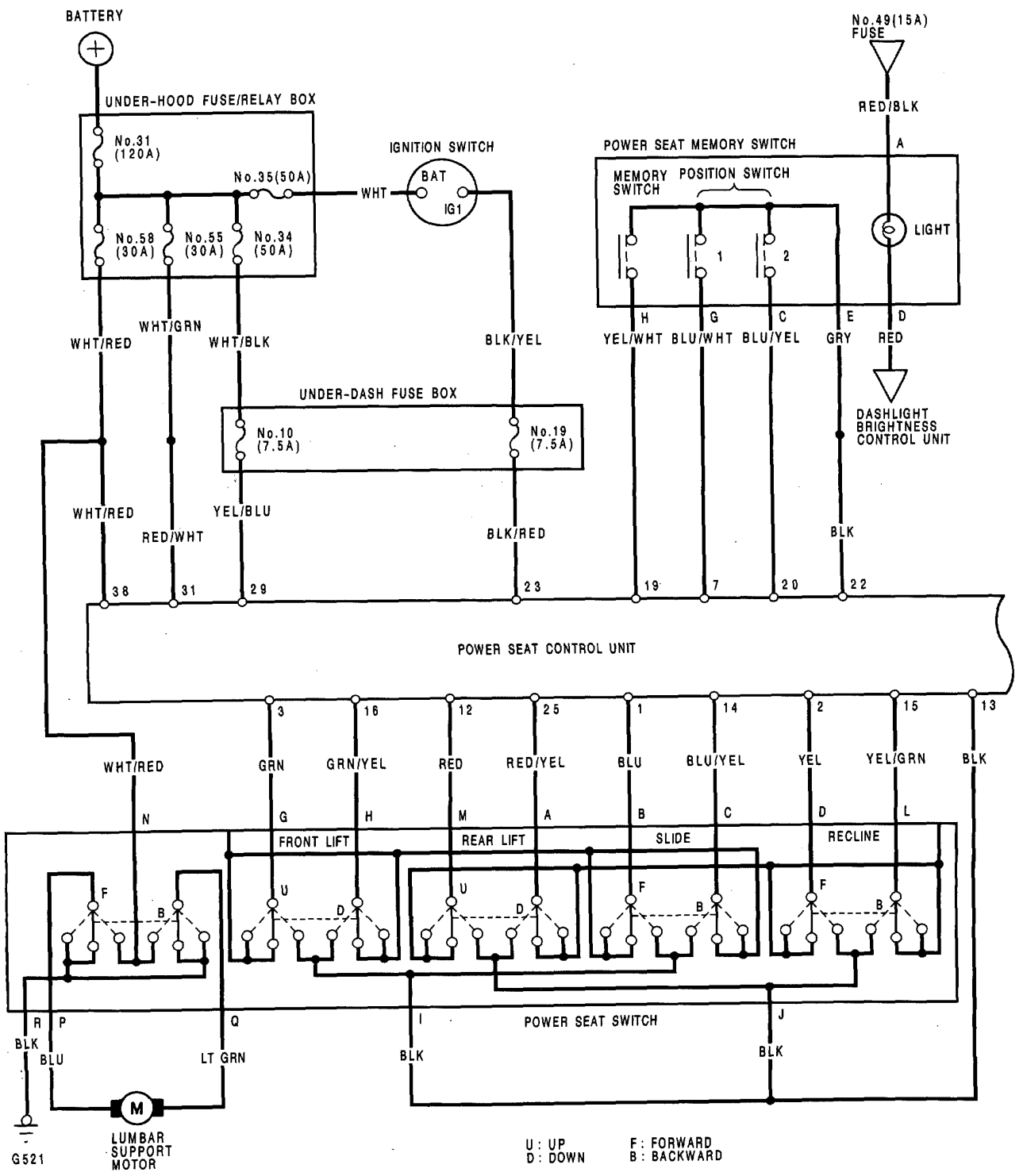

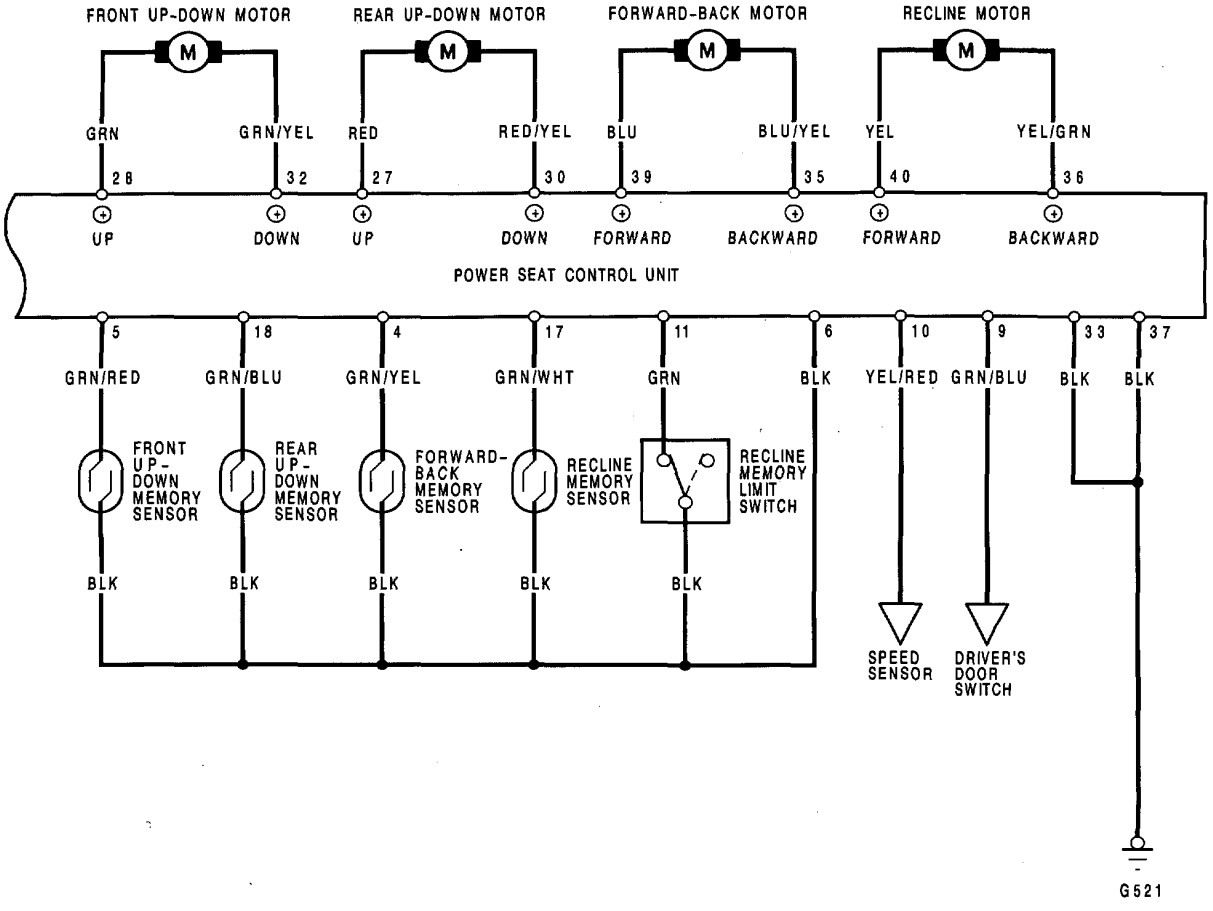
FRONT UP-DOWN MOTOR
REAR UP-DOWN MOTOR
FORWARD-BACK MOTOR
RECLINE MOTOR
M
GRN
GRN/YEL
RED
RED/YEL
BLU
BLU/YEL
YEL
YEL/GRN
28
32
27
30
39
35
40
36
UP
DOWN
UP
DOWN
FORWARD
BACKWARD
FORWARD
BACKWARD
POWER SEAT CONTROL UNIT
5
18
4
17
11
6
10
9
33
37
GRN/RED
GRN/BLU
GRN/YEL
GRN/WHT
GRN
BLK
YEL/RED
GRN/BLU
BLK
BLK
FRONT UP-DOWN MEMORY SENSOR
REAR UP-DOWN MEMORY SENSOR
FORWARD-BACK MEMORY SENSOR
RECLINE MEMORY SENSOR
RECLINE MEMORY LIMIT SWITCH
BLK
BLK
BLK
BLK
BLK
SPEED SENSOR
DRIVER'S DOOR SWITCH
G521

Power Seat Control Unit Input Test

NOTES:
- All views from the wire side.
- Several different wires have the same color. They have been given a number suffix to distinguish them (for example BLU/YEL[1] and BLU/YEL[2] are not the same).

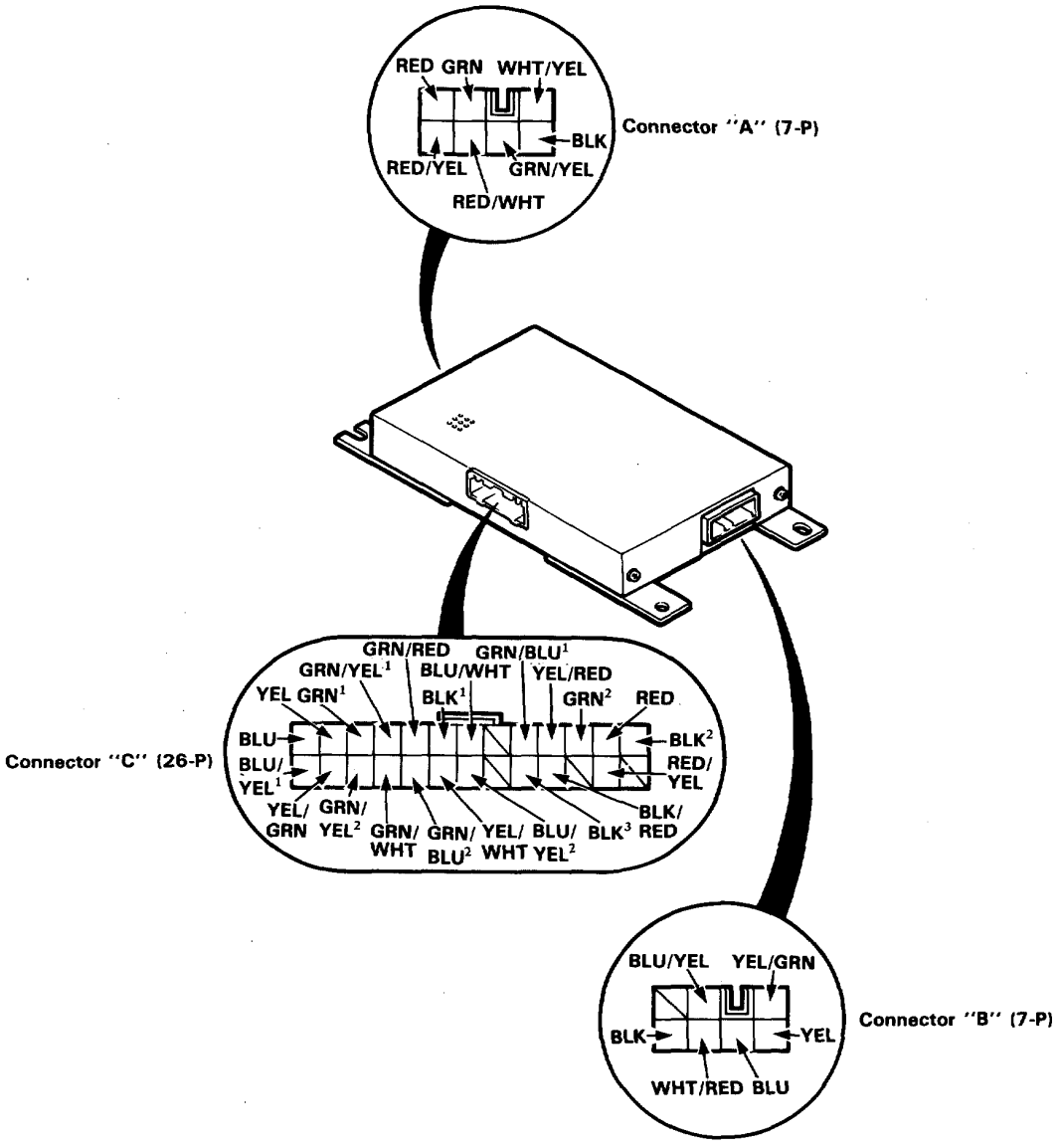

Test	Connector	Wire	Test Condition	Desired Result	Possible Cause if Results not Obtained.
1	A	BLK	Check for continuity to ground.	Should be continuity.	Open between connector A and G251.
2	B	BLK	Check for continuity to ground.	Should be continuity.	Open between connector B and G251.
3	B	WHT/RED	Check for battery voltage.	Should be battery voltage.	Blown No. 58 (30A) fuse in the under-hood fuse/relay box, or open in the wire.
4	A	RED/WHT	Check for battery voltage.	Should be battery voltage.	Blown No. 55 (30A) fuse in the under-hood fuse/relay box, or open in the wire.
5	A	WHT/YEL	Check for battery voltage.	Should be battery voltage.	Blown No. 34 (50 A) fuse in the under-hood fuse/realy box, *1 (7.5 A) fuse in the under-dash fuse box, or an open in the wire.
6	C	BLK/RED	Check for battery voltage with ignition switch OFF and ON.	Should be battery voltage only with ignition switch ON.	Blown *2 (7.5 A) fuse in the under-dash fuse box, or open in the BLK/RED wire.
7	C	GRN/BLU[1]	Driver's door open: Check for continuity to ground.	Should be continuity to ground.	Open in wire, or fault in door switch.
			Driver's door closed: Check for continuity to ground.	Should be no continuity to ground.	Wire shorted to ground, or fault in door switch.

*1 { No. 15 (7.5 A): LHD
No. 10 (7.5 A): RHD

*2 { No. 20 (7.5 A): LHD
No. 19 (7.5 A): RHD

(cont'd)

Power Seat Control Unit Input Test (cont'd)

Test	Connector	Wire	Test Condition	Desired Result	Possible Cause if Results not Obtained.
8	C	YEL/RED	Ignition switch ON; use an analog voltmeter: Connect ⊕ probe to BLK/RED, and ⊖ probe to YEL/RED, then rotate the front wheels.	Voltmeter should indicate 0-12V-0-12V repeatedly.	Open or short in YEL/RED wire, or fault in speed sensor.
9	C	YEL/WHT	Memory switch in neutral position: Check for continuity between YEL/WHT and BLK[3] wires.	Should be no continuity.	Short in wiring, or fault in memory switch.
			Memory switch depressed: Check for continuity between YEL/WHT and BLK[3] wire terminals.	Should be continuity.	Open in wiring, or fault in memory switch.
10	C	BLU/WHT	Memory switch No. 1 position in neutral: Check for continuity between BLU/WHT and BLK[3] wire terminals.	Should be no continuity.	Short in wiring, or fault in memory.
			Memory switch No. 1 position depressed: Check for continuity between BLU/WHT and BLK[3] wire terminals.	Should be continuity.	Open in wiring, or fault in memory switch.

Test	Connector	Wire	Test Condition	Desired Result	Possible Cause if Results not Obtained.
11	C	BLU/YEL[2]	Memory switch No. 2 position in neutral: Check for continuity between BLU/YEL and BLK[3] wire terminals.	Should be no continuity.	Short in wiring, or fault in memory switch.
			Memory switch No. 2 position depressed: Check for continuity between BLU/YEL and BLK[3] wire terminals.	Should be continuity.	Open in wiring, or fault in memory switch.
12	C	GRN[1]	Front up-down switch in neutral: Check for continuity between GRN[1] and BLK[2] wire terminals.	Should be no continuity.	Short in wiring, or fault in memory switch.
			Front up-down switch pushed up: Check for continuity between GRN[1] and BLK[2] wire terminals.	Should be continuity.	Open in wiring, or fault in memory switch.
13	C	GRN/YEL[2]	Front up-down switch in neutral: Check for continuity between GRN/YEL and BLK[2] wire terminals.	Should be no continuity.	Short in wiring, or fault in memory switch.
			Front up-down switch pushed down: Check for continuity between GRN/YEL and BLK[2] wire terminals.	Should be continuity.	Open in wiring, or fault in memory switch.

(cont'd)

Power Seat Control Unit Input Test (cont'd)

Test	Connector	Wire	Test Condition	Desired Result	Possible Cause if Results not Obtained.
14	C	RED	Rear up-down switch in neutral: Check for continuity between RED and BLK[2] wire terminals.	Should be no continuity.	Short in wiring, or fault in memory switch.
			Rear up-down switch pushed up: Check for continuity between RED and BLK[2] wire terminals.	Should be continuity.	Open in wiring, or fault in memory switch.
15	C	RED/YEL	Rear up-down switch in neutral: Check for continuity between RED/YEL and BLK[2] wire terminals.	Should be no continuity.	Short in wiring, or fault in memory switch.
			Rear up-down switch pushed down: Check for continuity between RED/YEL and BLK[2] wire terminals.	Should be continuity.	Open in wiring, or fault in memory switch.
16	C	BLU	Forward-back switch in neutral: Check for continuity between BLU and BLK[2] wire terminals.	Should be no continuity.	Short in wiring, or fault in memory switch.
			Forward-back switch pushed forward: Check for continuity between BLU and BLK[2] wire terminals.	Should be continuity.	Open in wiring, or fault in memory switch.

Test	Connector	Wire	Test Condition	Desired Result	Possible Cause if Results not Obtained.
17	C	BLU/YEL[1]	Forward-back switch in neutral: Check for continuity between BLU/YEL and BLK[2] wire terminals.	Should be no continuity.	Short in wiring, or fault in memory switch.
			Forward-back switch pushed forward: Check for continuity between BLU/YEL and BLK[2] wire terminals.	Should be continuity.	Open in wiring, or fault in memory switch.
18	C	YEL	Recline switch in neutral: Check for continuity between YEL and BLK[2] wire terminals.	Should be no continuity.	Short in wiring, or fault in memory switch.
			Recline switch pushed forward: Check for continuity between YEL and BLK[2] wire terminals.	Should be continuity.	Open in wiring, or fault in memory switch.
19	C	YEL/GRN	Recline switch in neutral: Check for continuity between YEL/GRN and BLK[2] wire terminals.	Should be no continuity.	Short in wiring, or fault in memory switch.
			Recline switch pushed back: Check for continuity between YEL/GRN and BLK[2] wire terminals.	Shoud be continuity.	Open in wiring, or fault in memory switch.
20	C	GRN[2]	Refer to seat back picture on page 23-344, 345. Check for continuity between the GRN[2] and BLK[1] wire terminals.	When seat back is in range A, there should be continuity; when in range B, no continuity.	Open or short in wiring, or fault in recline limit switch.

(cont'd)

Power Seat Control Unit Input Test (cont'd)

Test	Connector	Wire	Test Condition	Desired Result	Possible Cause if Results not Obtained.
21	2-P connector at front up-down motor.	GRN/RED	All connectors connected; use an analog voltmeter. With the up-down motor running, backprobe the connector: ⊕ to GRN/RED, ⊖ to BLK.	Voltmeter should read 0-5V-0-5V repeatedly	Open or short in wiring, or fault in the sensor.
22	2-P connector at rear up-down motor.	GRN/BLU	All connectors connected; use an analog voltmeter. With the up-down motor running, backprobe the connector: ⊕ to GRN/BLU, ⊖ to BLK.	Voltmeter should read 0-5V-0-5V repeatedly	Open or short in wiring, or fault in the sensor.
23	2-P connector at forward-back motor.	GRN/YEL	All connectors connected; use an analog voltmeter. With the forwardback motor running, backprobe the connector: ⊕ to GRN/BLU, ⊖ to BLK.	Voltmeter should read 0-5V-0-5V repeatedly	Open or short in wiring, or fault in the sensor.
24	2-P connector at recline motor.	GRN/WHT	All connectors connected; use an analog voltmeter. With the recline motor running, backprobe the connector: ⊕ to GRN/WHT, ⊖ to BLK.	Voltmeter should read 0-5V-0-5V repeatedly	Open or short in wiring, or fault in the sensor.
25	A	GRN and GRN/YEL	Jumper GRN to RED/WHT, and GRN/YEL to BLK.	Front up-down motor should run.	Open or short in wiring, or fault in motor.
			Reverse jumper leads.	Motor should run the other way.	

Test	Connector	Wire	Test Condition	Desired Result	Possible Cause if Results not Obtained.
26	A	RED and RED/YEL	Jumper RED to RED/WHT, and RED/YEL to BLK.	Rear up-down motor should run.	Open or short in wiring, or fault in motor.
			Reverse jumper leads.	Motor should run the other way.	
27	B	BLU and BLU/YEL	Jumper BLU to WHT/RED, and BLU/YEL[1] to BLK.	Forward-back motor should run.	Open or short in wiring, or fault in motor.
			Reverse jumper leads.	Motor should run the other way.	
28	B	YEL and YEL/GRN	Jumper YEL to WHT/RED, and YEL/GRN to BLK.	Recline motor should run.	Open or short in wiring, or fault in motor.
			Reverse jumper leads.	Motor should run the other way.	

Troubleshooting Flowchart

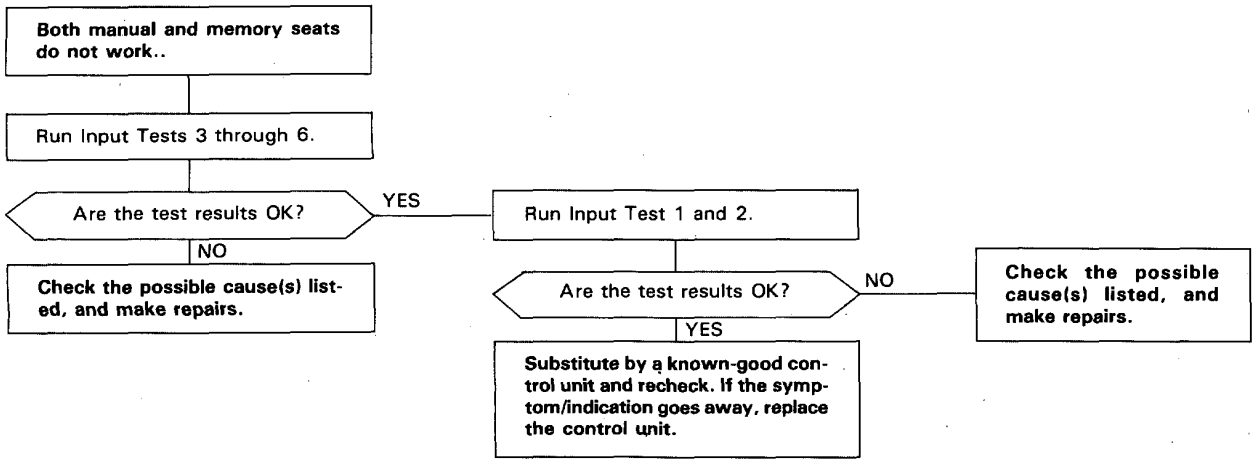

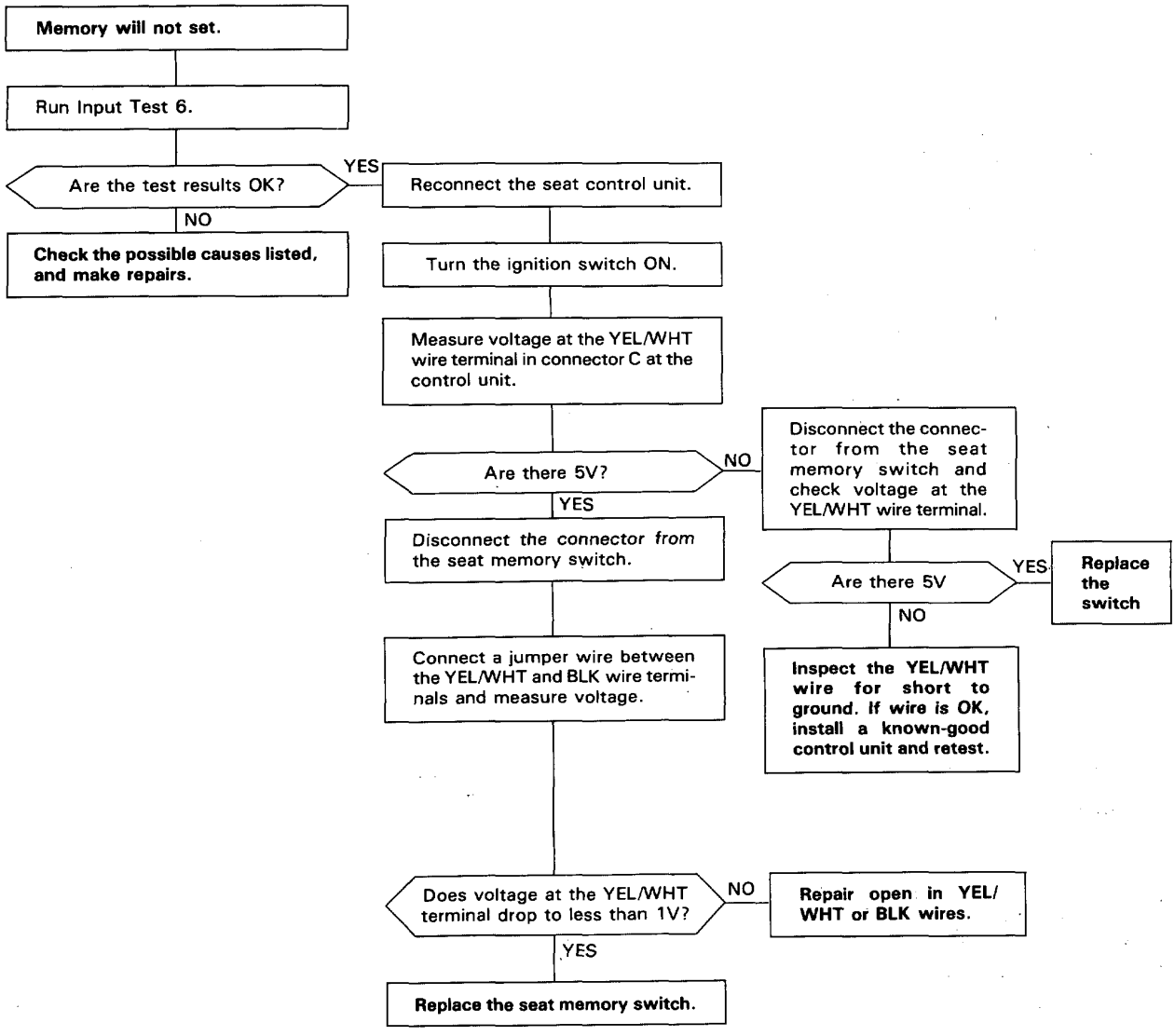
Memory will not set.
Run Input Test 6.
Are the test results OK?
YES
Reconnect the seat control unit.
NO
Check the possible causes listed, and make repairs.
Turn the ignition switch ON.
Measure voltage at the YEL/WHT wire terminal in connector C at the control unit.
Are there 5V?
NO
Disconnect the connector from the seat memory switch and check voltage at the YEL/WHT wire terminal.
YES
Disconnect the connector from the seat memory switch.
Are there 5V
YES
Replace the switch
NO
Connect a jumper wire between the YEL/WHT and BLK wire terminals and measure voltage.
Inspect the YEL/WHT wire for short to ground. If wire is OK, install a known-good control unit and retest.
Does voltage at the YEL/WHT terminal drop to less than 1V?
NO
Repair open in YEL/WHT or BLK wires.
YES
Replace the seat memory switch.

(cont'd)

Troubleshooting Flowchart (cont'd)

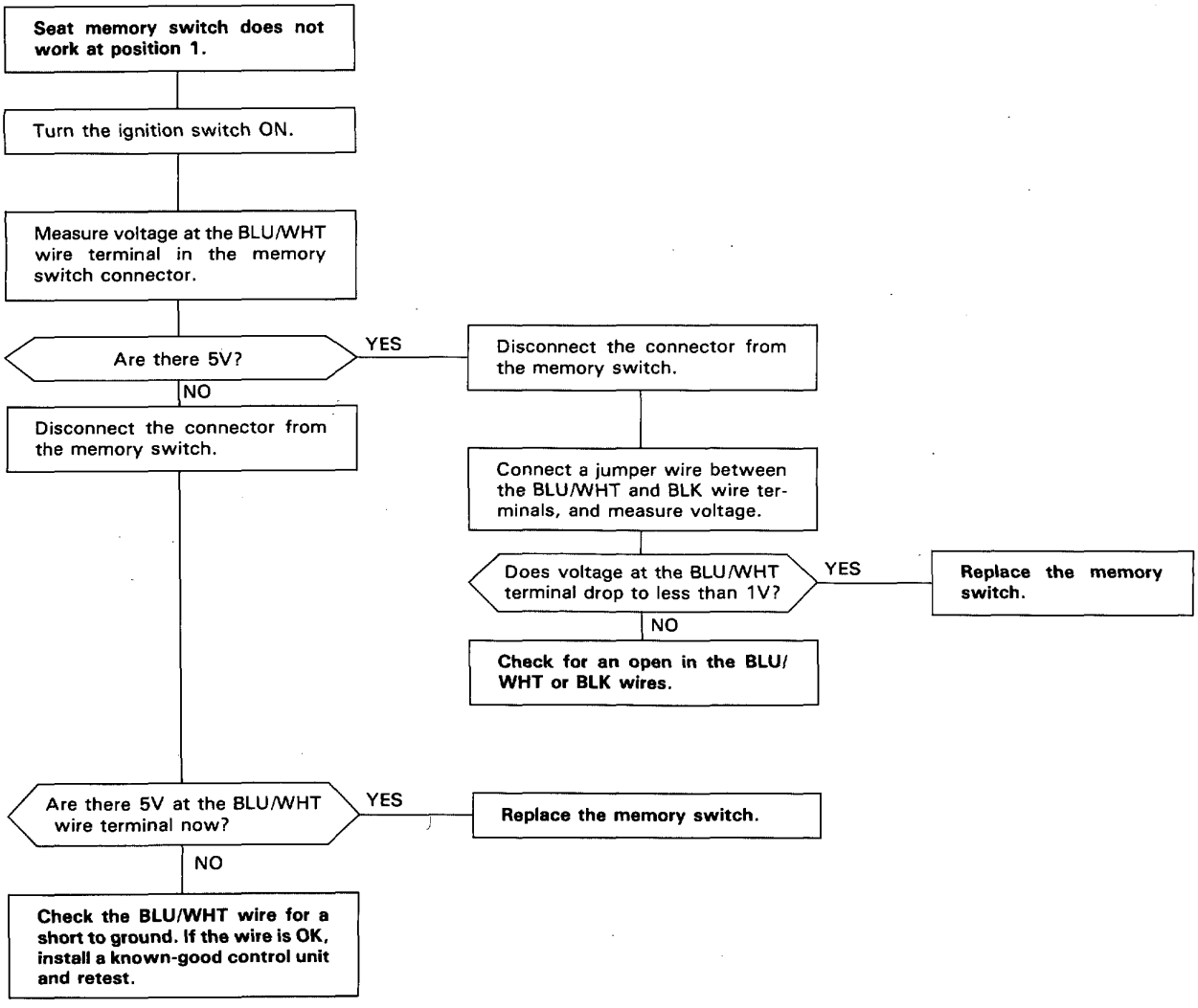

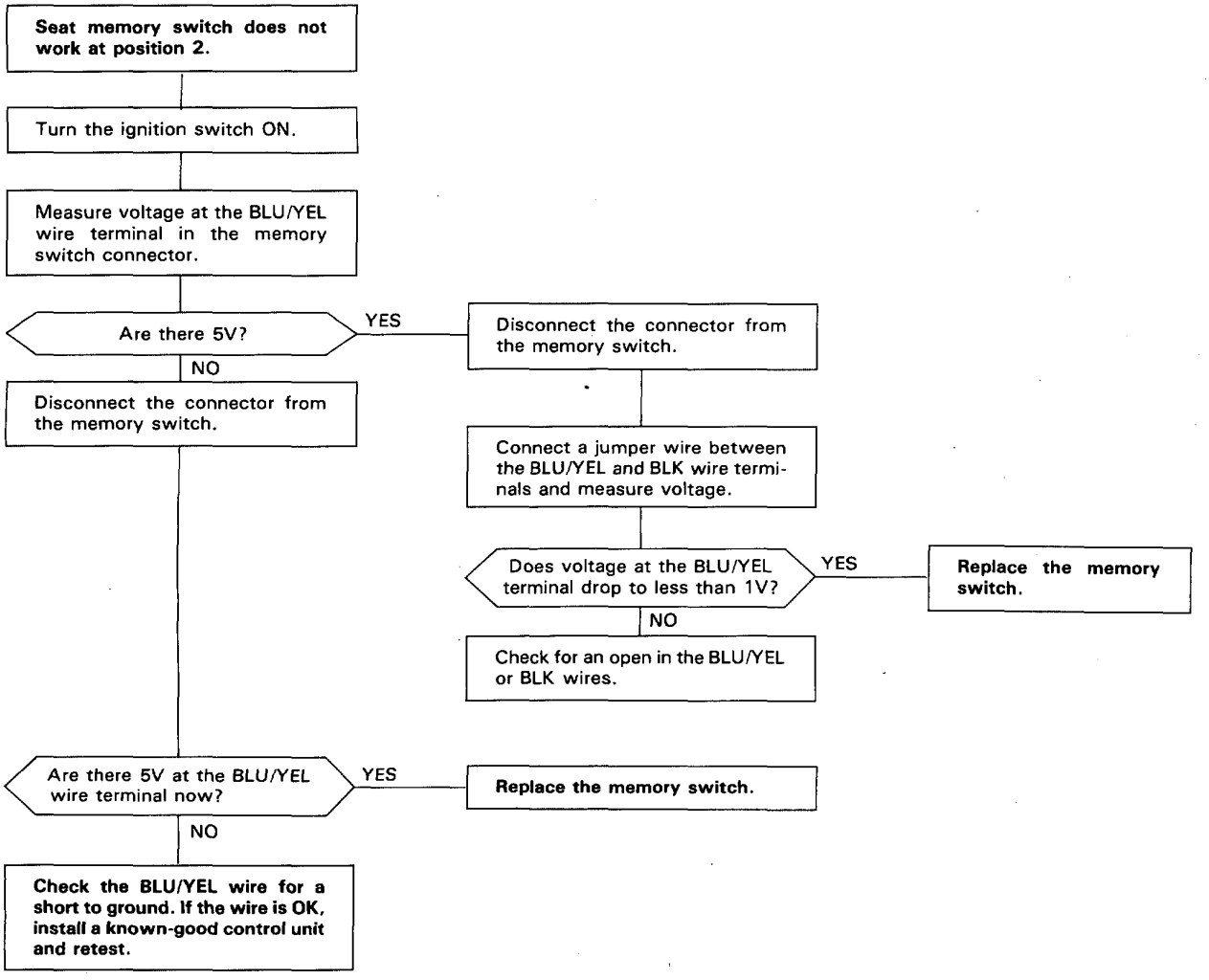
Seat memory switch does not work at position 2.
Turn the ignition switch ON.
Measure voltage at the BLU/YEL wire terminal in the memory switch connector.
Are there 5V?
YES
Disconnect the connector from the memory switch.
Connect a jumper wire between the BLU/YEL and BLK wire terminals and measure voltage.
Does voltage at the BLU/YEL terminal drop to less than 1V?
YES
Replace the memory switch.
NO
Check for an open in the BLU/YEL or BLK wires.
NO
Disconnect the connector from the memory switch.
Are there 5V at the BLU/YEL wire terminal now?
YES
Replace the memory switch.
NO
Check the BLU/YEL wire for a short to ground. If the wire is OK, install a known-good control unit and retest.

(cont'd)

Troubleshooting Flowchart (cont'd)

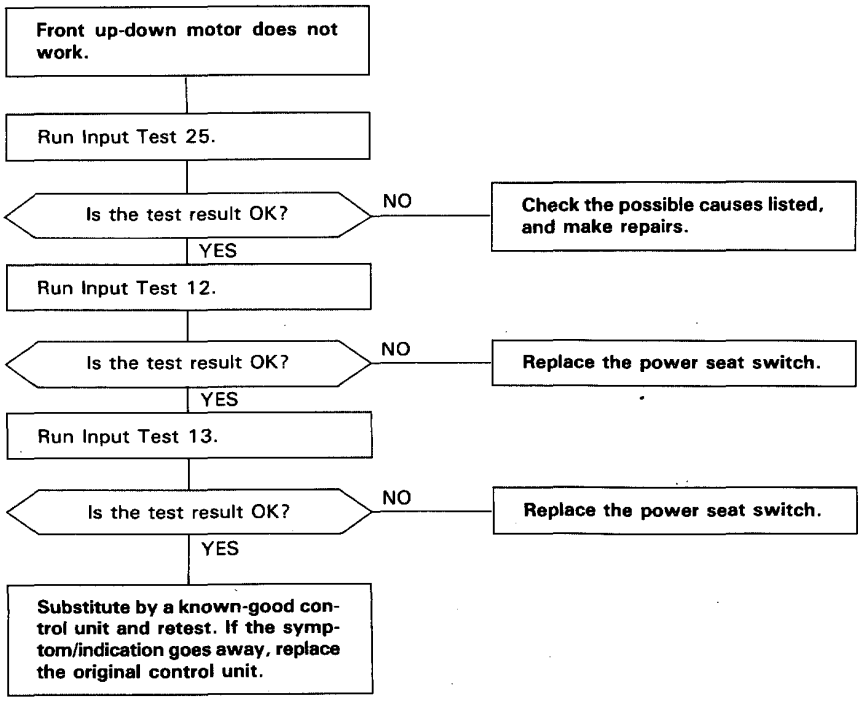

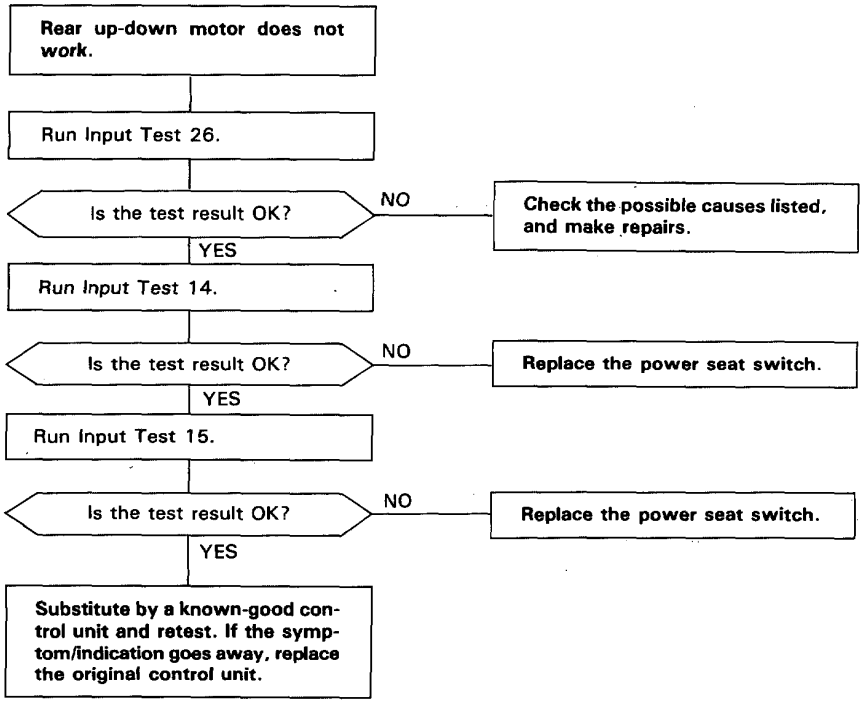
Rear up-down motor does not work.
Run Input Test 26.
Is the test result OK?
NO
Check the possible causes listed, and make repairs.
YES
Run Input Test 14.
Is the test result OK?
NO
Replace the power seat switch.
YES
Run Input Test 15.
Is the test result OK?
NO
Replace the power seat switch.
YES
Substitute by a known-good control unit and retest. If the symptom/indication goes away, replace the original control unit.

(cont'd)

Troubleshooting Flowchart (cont'd)

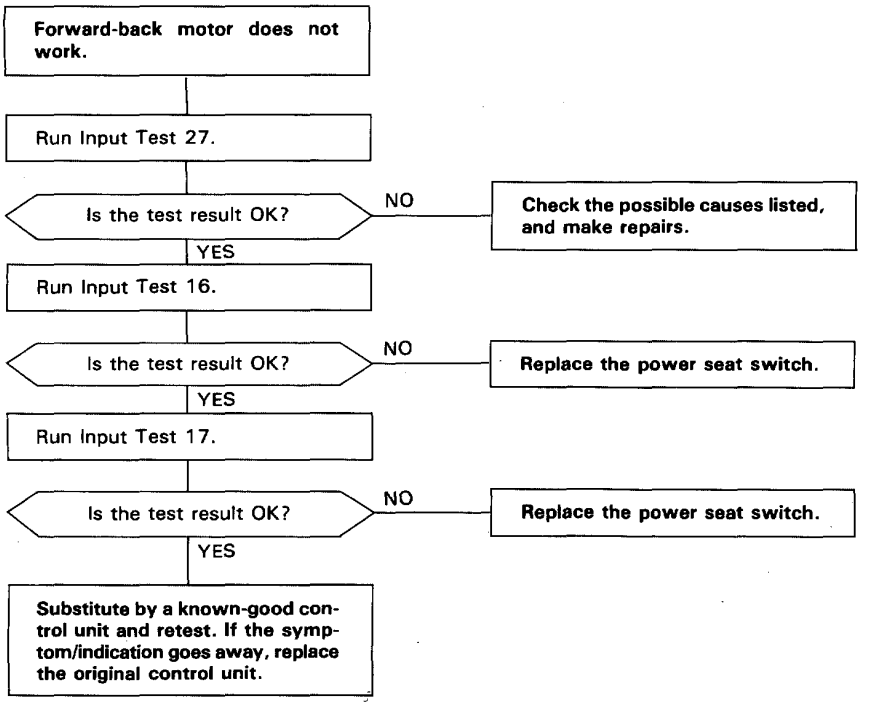

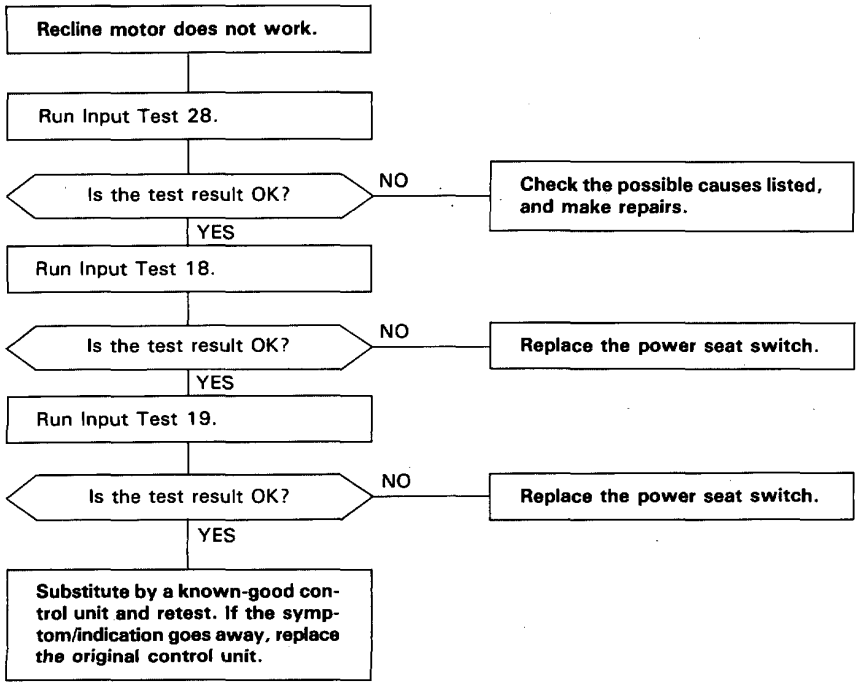
Recline motor does not work.
Run Input Test 28.
Is the test result OK?
NO
Check the possible causes listed, and make repairs.
YES
Run Input Test 18.
Is the test result OK?
NO
Replace the power seat switch.
YES
Run Input Test 19.
Is the test result OK?
NO
Replace the power seat switch.
YES
Substitute by a known-good control unit and retest. If the symptom/indication goes away, replace the original control unit.

Power Driver's Seat

Power Seat Switch Test (LHD)

CAUTION: Be careful not to damage the seat, the interior trim or the body.

1. Remove the driver's seat, then remove the power seat switch.
2. Check for continuity between the terminals in each switch position according to the table.

Position \ Terminal		A	B	C	D	E	F	G	H	I	J	K	L	M	N	O	P	Q	R
FORWARD-BACK	FORWARD		○							○									
	NEUTRAL		○	○				○	○										
	BACKWARD			○						○									
RECLINE	FORWARD				○						○								
	NEUTRAL	○			○								○	○					
	BACKWARD										○		○						
FRONT UP-DOWN	UP								○	○									
	NEUTRAL		○	○				○	○										
	DOWN							○		○									
REAR UP-DOWN	UP	○									○								
	NEUTRAL	○			○								○	○					
	DOWN										○			○					

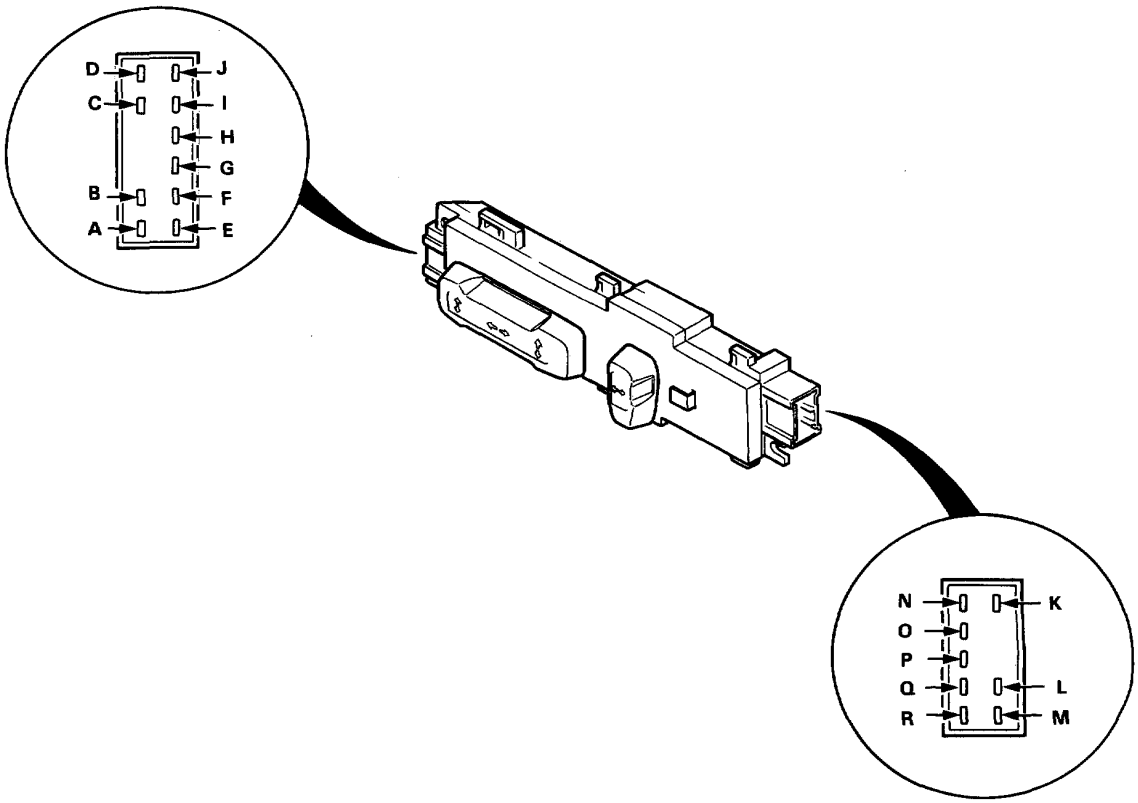

Power Seat Switch Test (RHD)

CAUTION: Be careful not to damage the seat, the interior trim or the body.

1. Remove the driver's seat, then remove the power seat switch.
2. Check for continuity between the terminals in each switch position according to the table.

Position \ Terminal		A	B	C	D	E	F	G	H	I	J	K	L	M	N	O	P	Q	R
FORWARD-BACK	FORWARD		○							○									
	NEUTRAL		○	○				○	○										
	BACKWARD			○						○									
RECLINE	FORWARD				○						○								
	NEUTRAL	○			○								○	○					
	BACKWARD										○		○						
FRONT UP-DOWN	UP							○		○									
	NEUTRAL		○	○				○	○										
	DOWN								○	○									
REAR UP-DOWN	UP										○			○					
	NEUTRAL	○			○								○	○					
	DOWN	○									○								
LUMBAR SUPPORT	FORWARD														○		○	○	○
	NEUTRAL																○	○	○
	DOWN														○		○		○

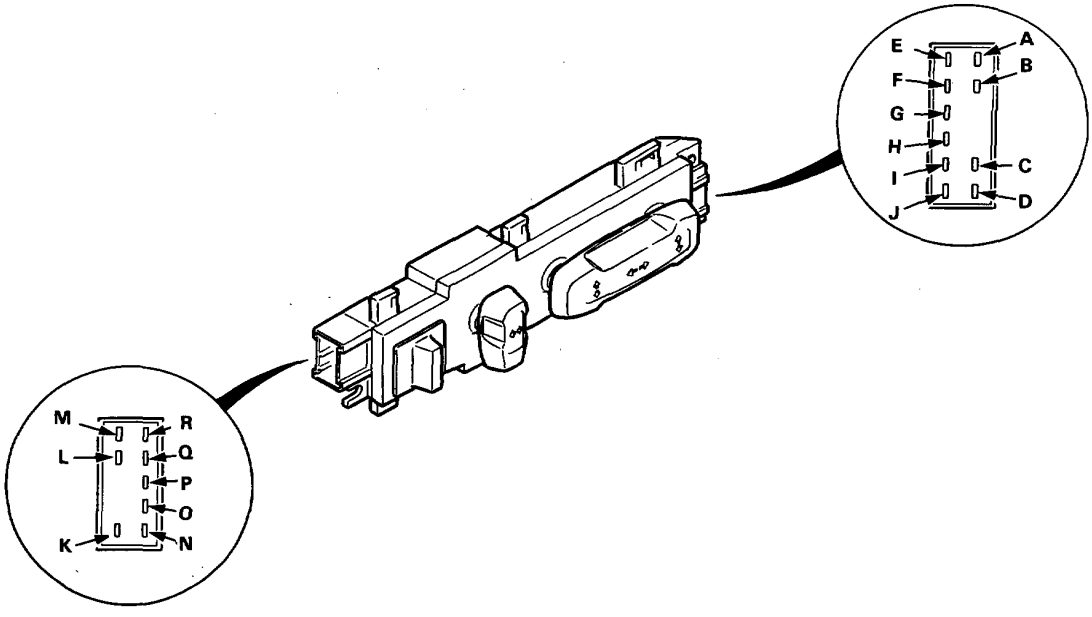

Motor Test (LHD)

CAUTION: Be careful not to damage the seats, the interior trim or the body.

1. Remove the driver's seat, then disconnect the connectors from each motor.

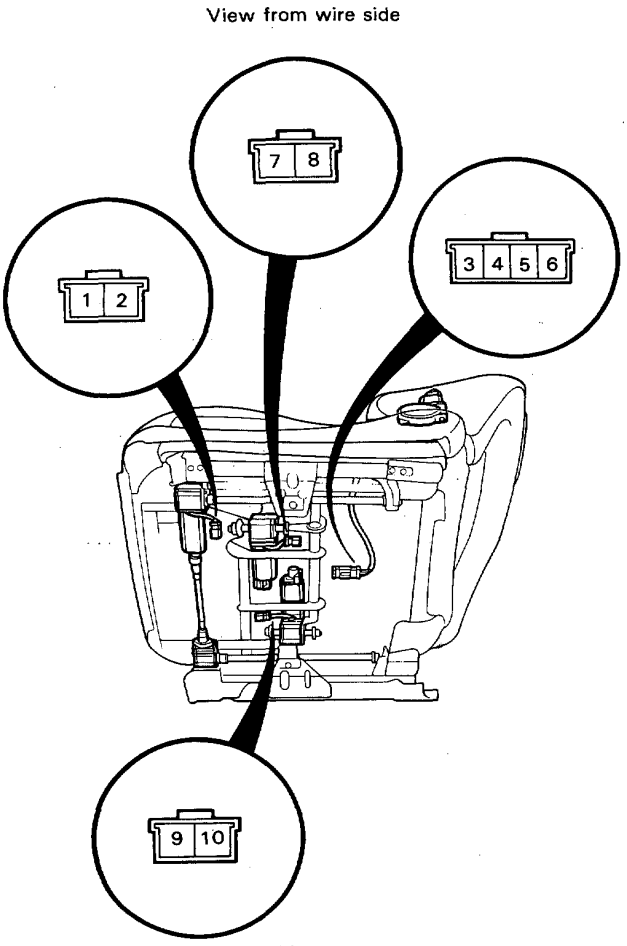

2. Test motor operation.

CAUTION: When a motor stops running, disconnect the battery immediately.

WHOLE SEAT FORWARD:	Connect battery power to the No. 1 terminal and ground to the No. 2 terminal.
WHOLE SEAT BACKWARD:	Connect battery power to the No. 2 terminal and ground to the No. 1 terminal.
SEAT BACK FORWARD:	Connect battery power to the No. 3 terminal and ground to the No. 4 terminal.
SEAT BACK RECLINE:	Connect battery power to the No. 4 terminal and ground to the No. 3 terminal.
SEAT BOTTOM FRONT UP:	Connect battery power to the No. 9 terminal and ground to the No. 10 terminal.
SEAT BOTTOM FRONT DOWN:	Connect battery power to the No. 10 terminal and ground to the No. 9 terminal.
SEAT BOTTOM REAR UP:	Connect battery power to the No. 8 terminal and ground to the No. 7 terminal.
SEAT BOTTOM REAR DOWN:	Connect battery positive to the No. 7 terminal and negative to the No. 8 terminal.

NOTE: When a motor does not run, reverse the connections. If the motor still does not run, replace it.

Motor Test (RHD)

CAUTION: Be careful not to damage the seats, the interior trim or the body.

1. Remove the driver's seat, then disconnect the connectors from each motor.

View from wire side

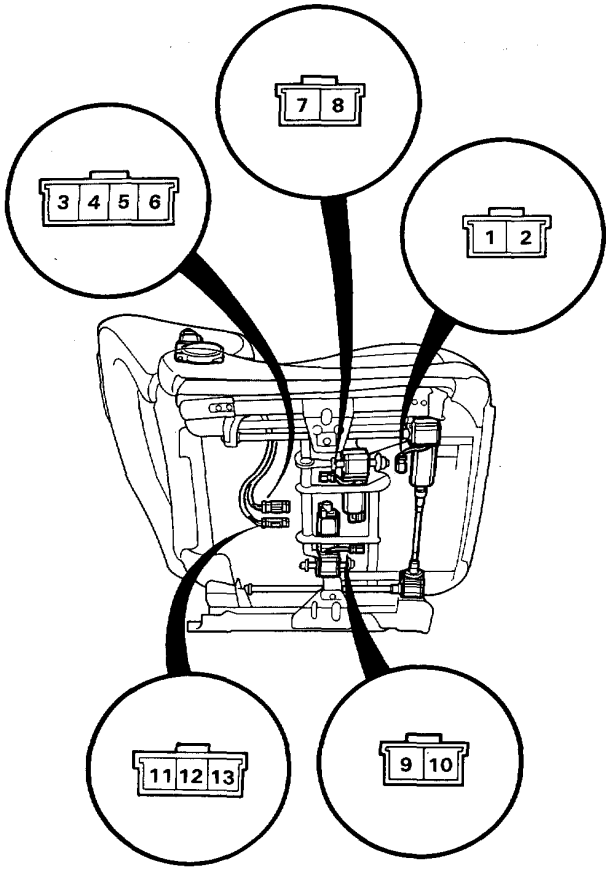

View from wire side

2. Test motor operation.

CAUTION: When a motor stops running, disconnect the battery immediately.

WHOLE SEAT FORWARD: Connect battery power to the No. 2 terminal and ground to the No. 1 terminal.

WHOLE SEAT BACKWARD: Connect battery power to the No. 1 terminal and ground to the No. 2 terminal.

SEAT BACK FORWARD: Connect battery power to the No. 3 terminal and ground to the No. 4 terminal.

SEAT BACK RECLINE: Connect battery power to the No. 4 terminal and ground to the No. 3 terminal.

SEAT BOTTOM FRONT UP: Connect battery power to the No. 9 terminal and ground to the No. 10 terminal.

SEAT BOTTOM FRONT DOWN: Connect battery power to the No. 10 terminal and ground to the No. 9 terminal.

SEAT BOTTOM REAR UP: Connect battery power to the No. 8 terminal and ground to the No. 7 terminal.

SEAT BOTTOM REAR DOWN: Connect battery power to the No. 7 terminal and ground to the No. 8 terminal.

LUMBAR SUPPORT FORWARD: Connect battery power to the No. 11 terminal and ground to the No. 13 terminal.

LUMBAR SUPPORT BACKWARD: Connect battery power to the No. 13 terminal and ground to the No. 11 terminal.

NOTE: When a motor does not run, reverse the connections. If the motor still does not run, replace it.

Memory Sensor Test (LHD)

CAUTION: Be careful not to damage the seats, the interior trim or the body.

1. Remove the driver's seat, then disconnect the connectors from each memory sensor and each motor.

2. Connect the battery terminals and ohmmeter test leads to each terminal according to the table on the right.

   NOTE: When a battery is connected, motors will run.

   CAUTION: When a motor stops running, disconnect the battery immediately.

View from wire side

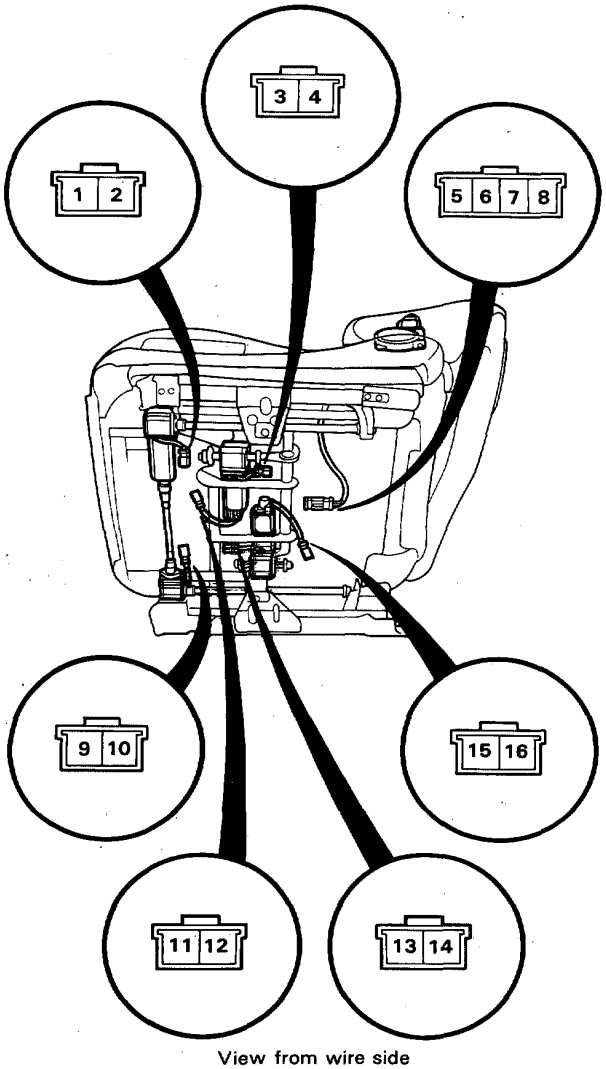

View from wire side

Sensor	Connect these terminals to Power and ground		Connect these terminals to ohmmeter	
Forward-back	1	2	9	10
Recline	5	6	7	8
Front up-down	13	14	15	16
Rear up-down	3	4	11	12

3. Check that the needle in the ohmmeter moves from left-to-right.

   NOTE: When a motor does not run, reverse the connections. If the motor still does not run, replace it.

Memory Sensor Test (RHD)

CAUTION: Be careful not to damage the seats, the interior trim or the body.

1. Remove the driver's seat, then disconnect the connectors from each memory sensor and each motor.

2. Connect the battery terminals and ohmmeter test leads to each terminal according to the table on the right.

   NOTE: When a battery is connected, motors will run.

   CAUTION: When a motor stops running, disconnect the battery immediately.

View from wire side

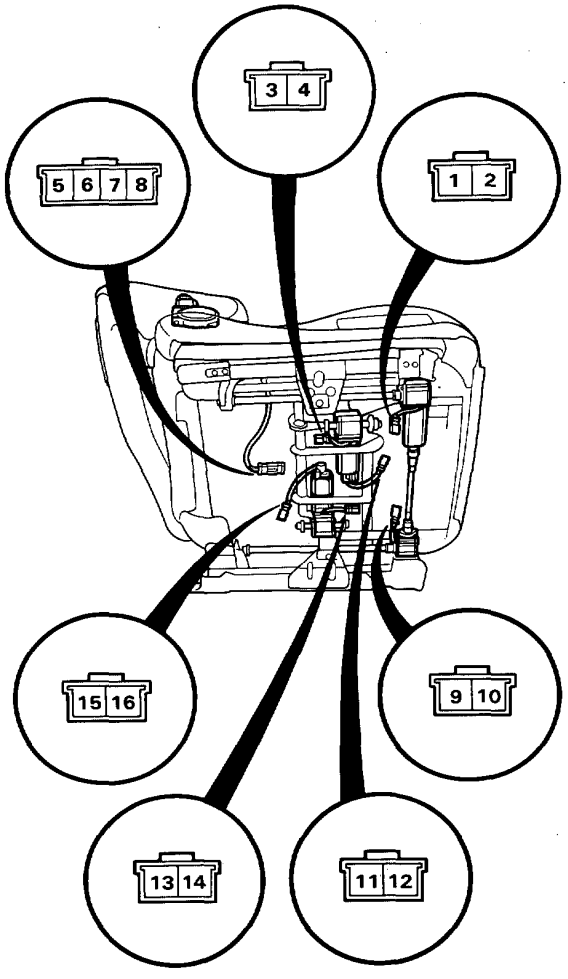

View from wire side

Sensor	Connect these terminals to Power and ground		Connect these terminals to ohmeter	
Forward-back	1	2	9	10
Recline	5	6	7	8
Front up-down	13	14	15	16
Rear up-down	3	4	11	12

3. Check that the needle in the ohmmeter moves from left-to-right.

   NOTE: When a motor does not run, reverse the connections. If the motor still does not run, replace it.

Recline Memory Limit Switch Test (LHD)

CAUTION: Be careful not to damage the seats, the interior trim or the body.

1. Remove the driver's seat, then disconnect the connector from the recline memory limit switch and recline motor.

2. Check for continuity between the terminals according to the table.

Terminal / Seat Back Angle	5	6
A area	○	○
B area		

NOTE: When a battery is connected to terminals (No. 1 and No. 2), the recline motor will run.

CAUTION: When a motor stops running, disconnect the battery immediately.

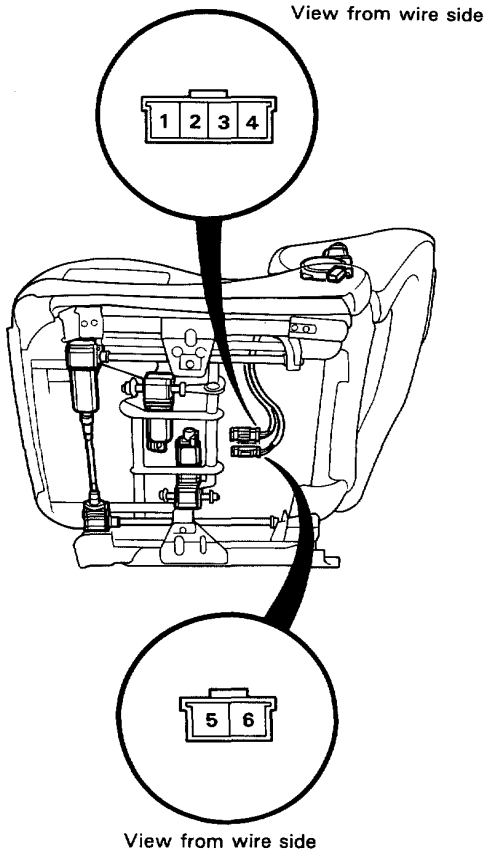

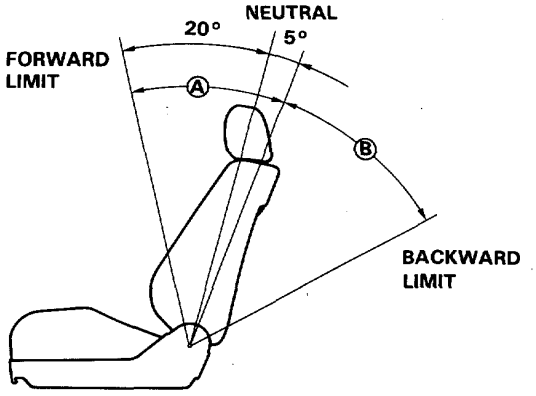

NOTE: When a motor does not run, reverse the connections. If the motor still does not run, replace it.

Recline Memory Limit Switch Test (RHD)

CAUTION: Be careful not to damage the seats, the interior trim or the body.

1. Remove the driver's seat, then disconnect the connector from the recline memory limit switch and recline motor.

2. Check for continuity between the terminals according to the table.

Terminal / Seat Back Angle	5	6
A area	○	○
B area		

NOTE: When a battery is connected to terminals (No. 1 and No. 2), the recline motor will run.

CAUTION: When a motor stops running, disconnect the battery immediately.

View from wire side

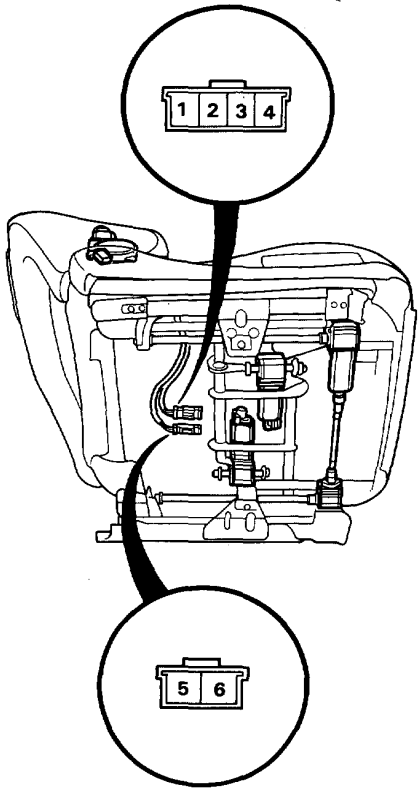

View from wire side

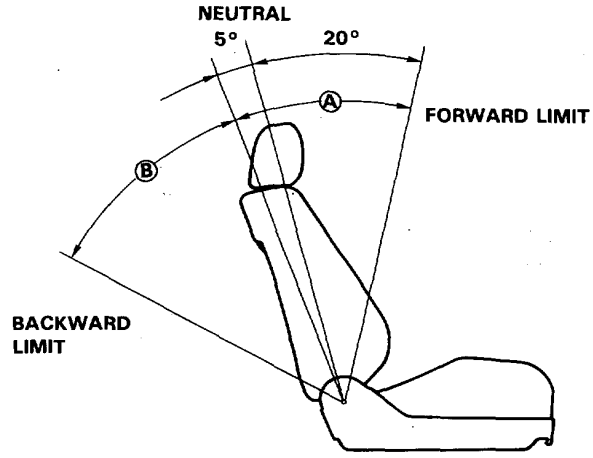

NOTE: When a motor does not run, reverse the connections. If the motor still does not run, replace it.

Power Driver's Seat

Memory Switch Test

1. Remove the driver's door trim panel, then disconnect the 8-P connector from the power seat memory switch.

2. Remove the memory switch, then check for continuity between the terminals in each switch position according to the table.

Position \ Terminal		A	B	C	D	E	F	G	H
MEMORY SWITCH	ON					○	—	—	○
	OFF								
POSITION SWITCH 1	ON					○	—	○	
	OFF								
POSITION SWITCH 2	ON			○	—	○			
	OFF								
ILLUMINATION		○	—	◎	—	○			

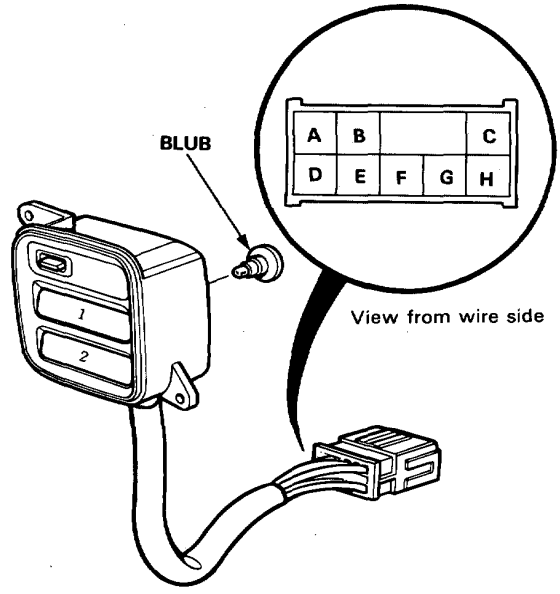

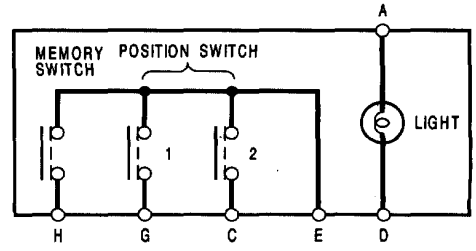

Power Front Passenger's Seat

Component Location Index (LHD)

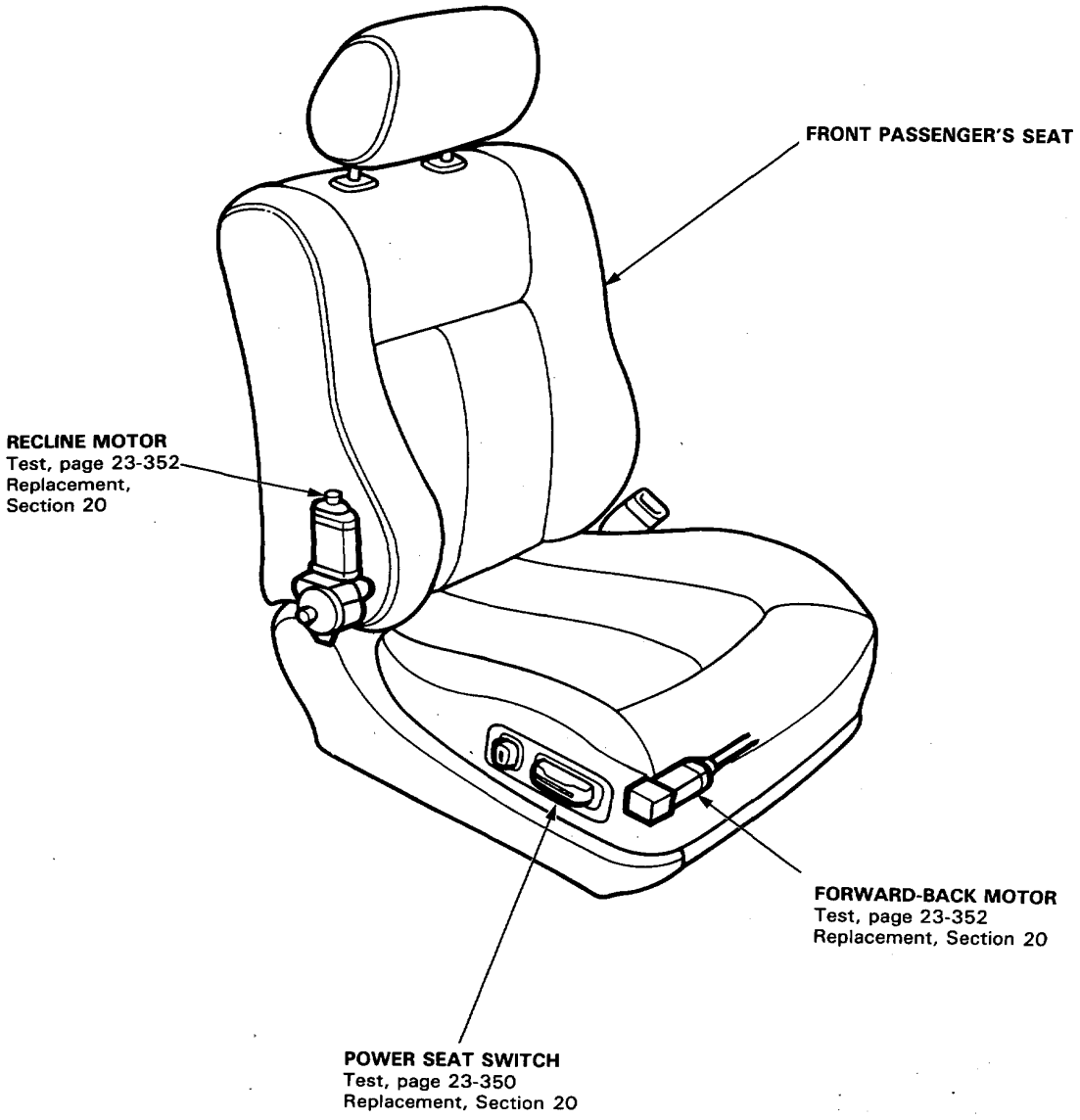

Power Front Passenger's Seat

Component Location Index (RHD)

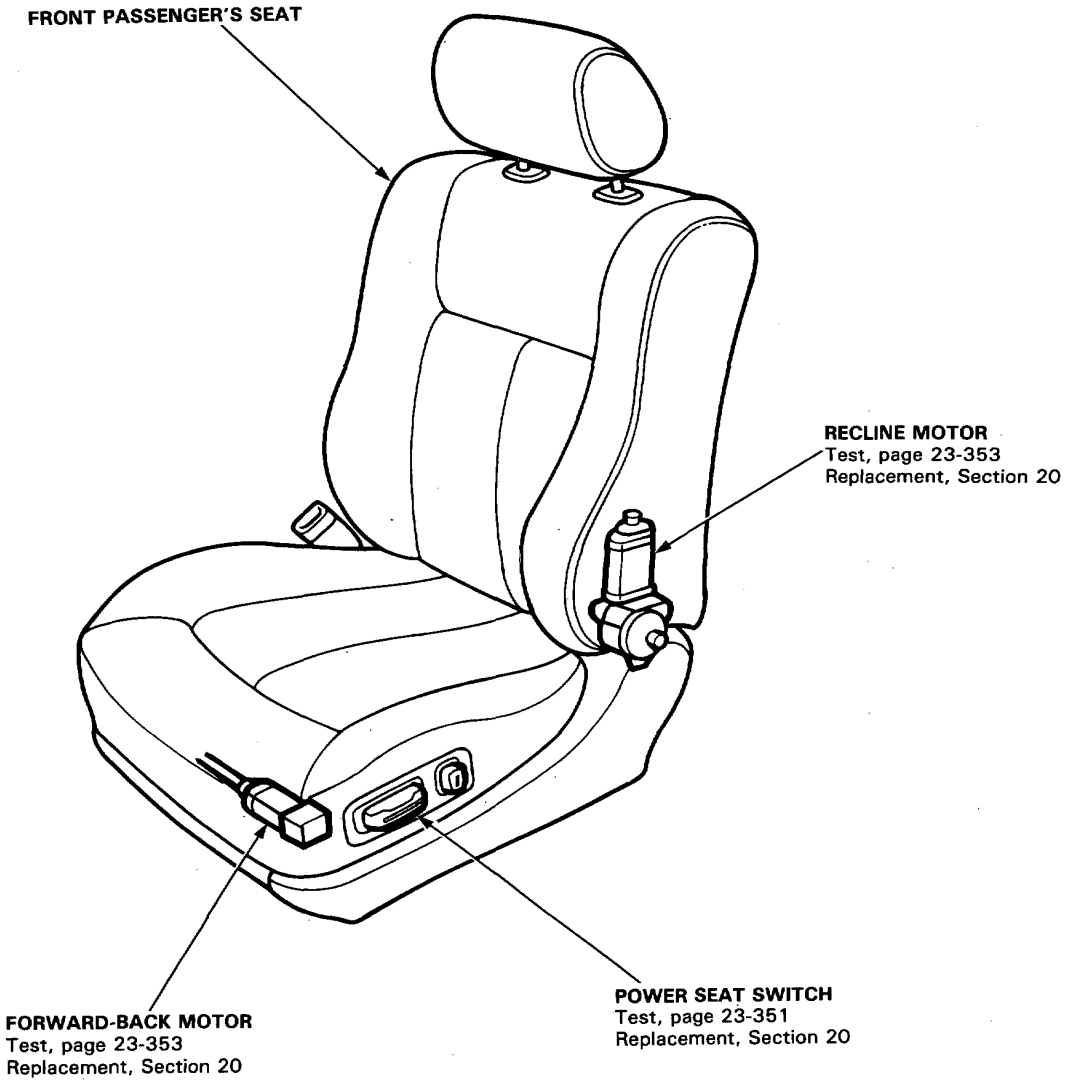

Circuit Diagram

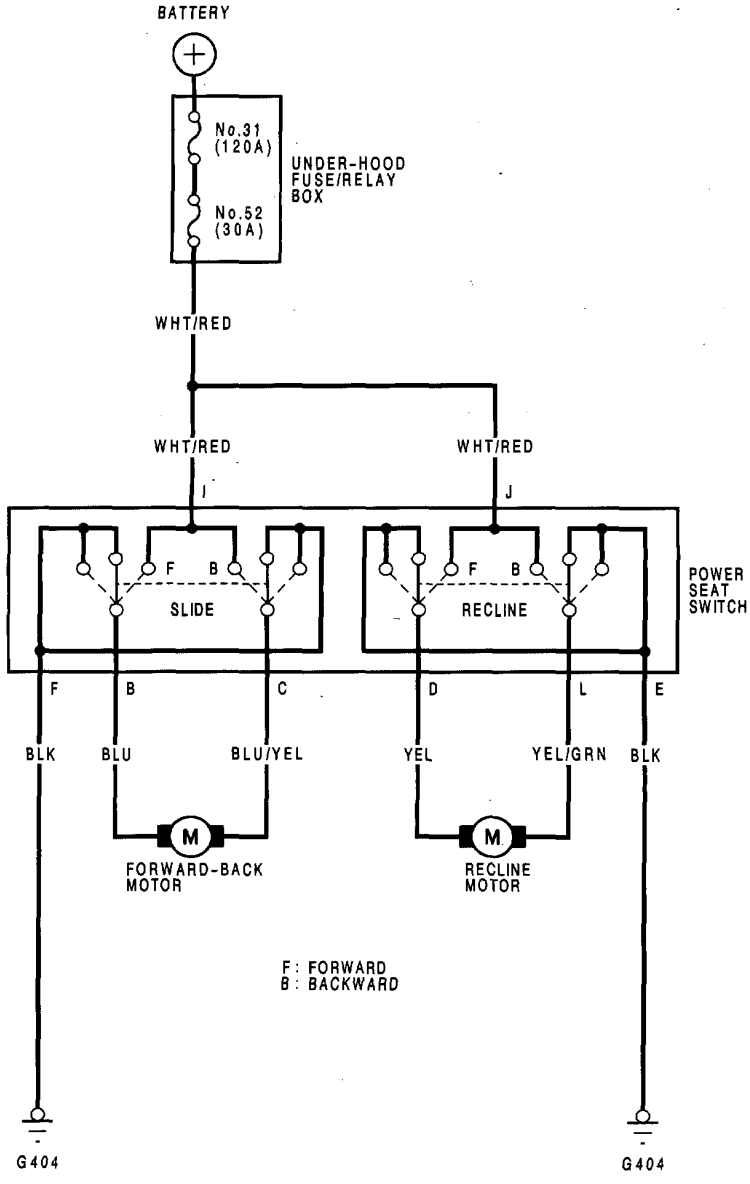

Power Front Passenger's Seat

Power Seat Switch Test (LHD)

CAUTION: Be careful not to damage the seat, the interior trim or the body.

1. Remove the front passenger's seat, then remove the power seat switch.
2. Check for continuity between the terminals in each switch position according to the table.

Position \ Terminal		A	B	C	D	E	F	G	H	I	J	K	L	M	N	O	P	Q	R
FORWARD-BACK	FORWARD		○							○									
				○			○												
	NEUTRAL		○	○			○												
	BACKWARD			○						○									
			○				○												
RECLINE	FORWARD				○						○								
						○							○						
	NEUTRAL				○	○							○						
	BACKWARD										○		○						
					○	○													

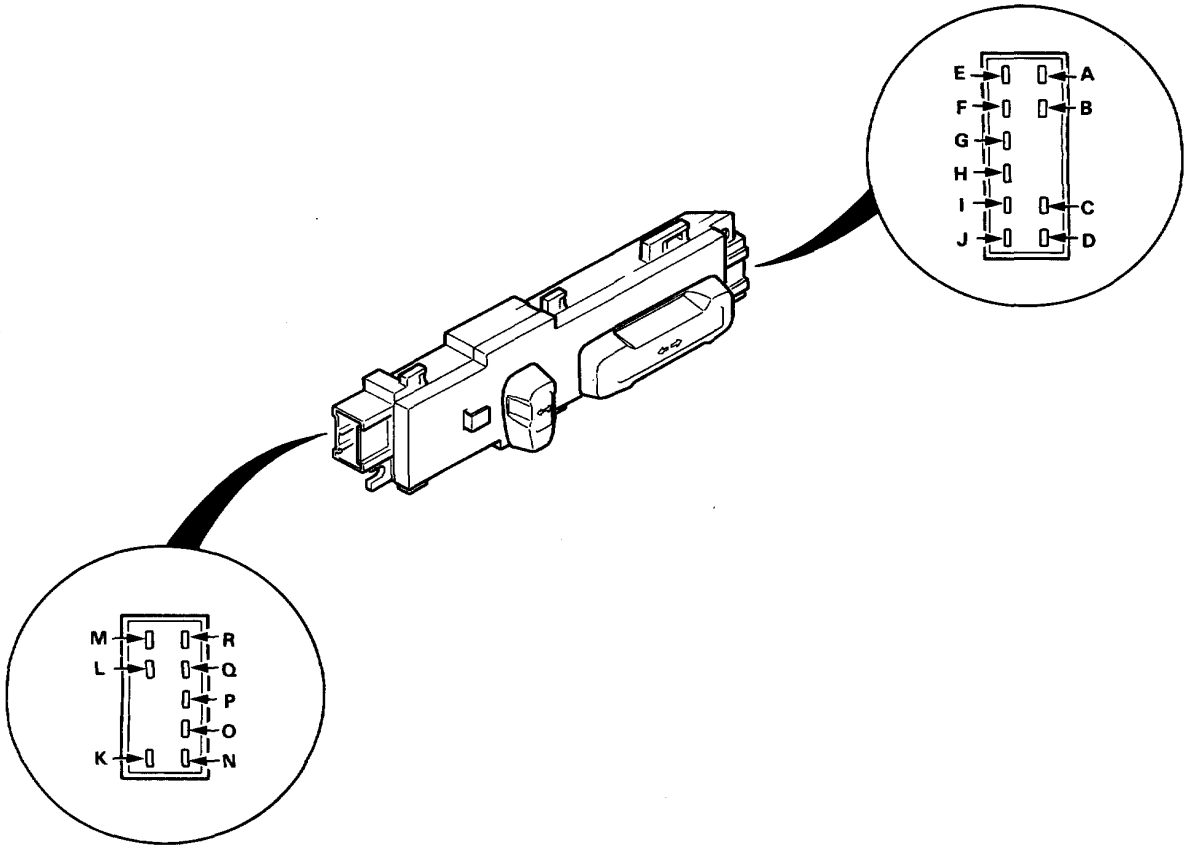

Power Seat Switch Test (RHD)

CAUTION: Be careful not to damage the seat, the interior trim or the body.

1. Remove the front passenger's seat, then remove the power seat switch.
2. Check for continuity between the terminals in each switch position according to the table.

Position \ Terminal		A	B	C	D	E	F	G	H	I	J	K	L	M	N	O	P	Q	R
FORWARD-BACK	FORWARD		○							○									
				○			○												
	NEUTRAL		○	○			○												
	BACKWARD			○						○									
			○				○												
RECLINE	FORWARD				○						○								
						○							○						
	NEUTRAL				○	○							○						
	BACKWARD										○		○						
					○	○													

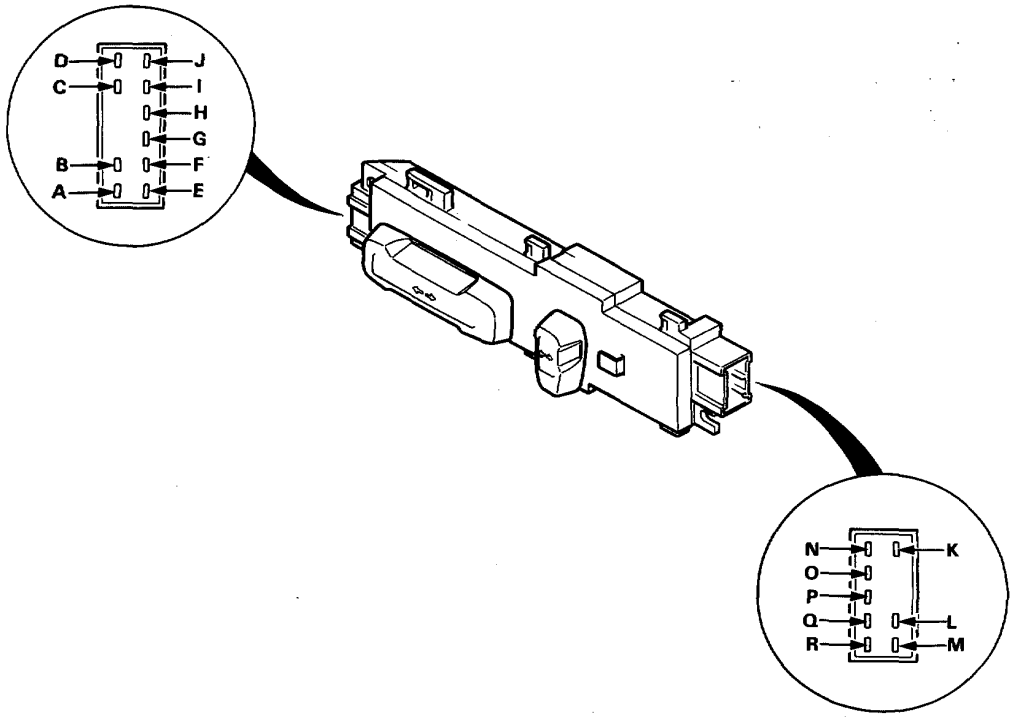

Power Front Passenger's Seat

Motor Test (LHD)

CAUTION: Be careful not to damage the seats, the interior trim or the body.

1. Remove the front passenger's seat, then disconnect the connectors from each motor.

View from wire side.

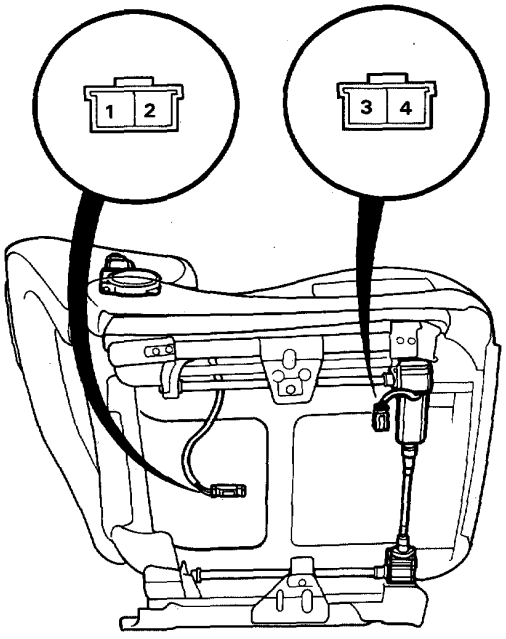

2. Test motor operation.

CAUTION: When a motor stops running, disconnect the battery immediately.

WHOLE SEAT FORWARD:	Connect battery power to the No. 4 terminal and ground to the No. 3 terminal.
WHOLE SEAT BACKWARD:	Connect battery power to the No. 3 terminal and ground to the No. 4 terminal.
SEAT BACK FORWARD:	Connect battery power to the No. 1 terminal and ground to the No. 2 terminal.
SEAT BACK RECLINE:	Connect battery power to the No. 2 terminal and ground to the No. 1 terminal.

NOTE: When a motor does not run, reverse the battery connections. If the motor still does not run, replace it.

Motor Test (RHD)

CAUTION: Be careful not to damage the seats, the interior trim or the body.

1. Remove the front passenger's seat, then disconnect the connectors from each motor.

View from wire side.

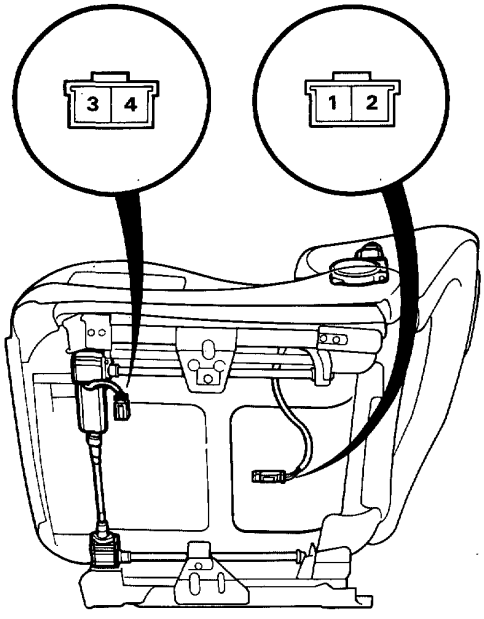

2. Test motor operation.

CAUTION: When a motor stops running, disconnect the battery immediately.

WHOLE SEAT FORWARD: Connect battery power to the No. 3 terminal and ground to the No. 4 terminal.

WHOLE SEAT BACKWARD: Connect battery power to the No. 4 terminal and ground to the No. 3 terminal.

SEAT BACK FORWARD: Connect battery power to the No. 1 terminal and ground to the No. 2 terminal.

SEAT BACK RECLINE: Connect battery power to the No. 2 terminal and ground to the No. 1 terminal.

NOTE: When a motor does not run, reverse the battery connections. If the motor still does not run, replace it.

Seat Heaters

Component Location Index

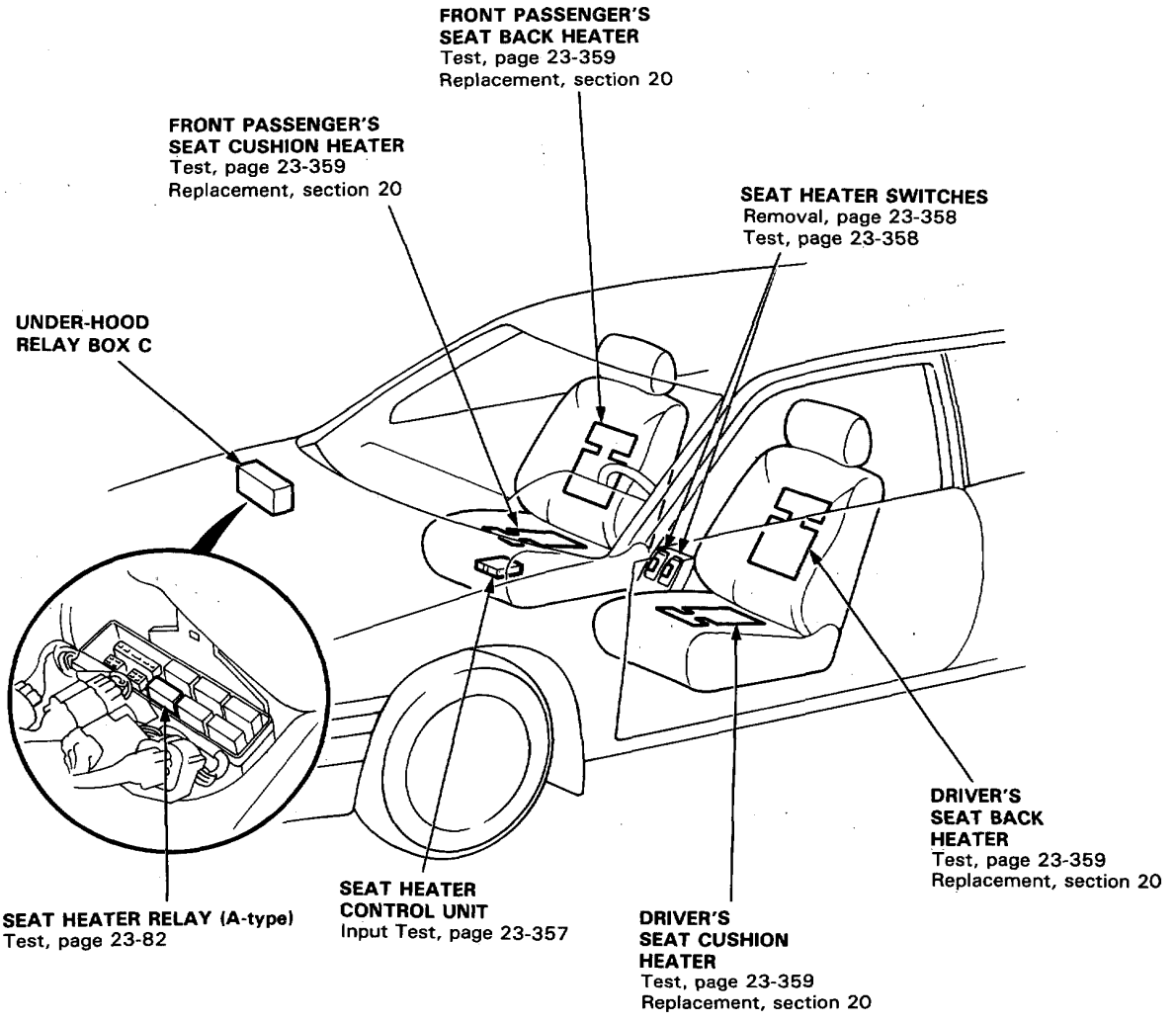

Description

Two heaters are provided in each front seat; one in the seat cushion and one in the seat back. Each heater allows any desired temperature between 29°C and 34°C (84°F and 93°F) by rotating the adjusting dial located on the center console. The heater in the seat cushion uses a temperature-dependent diode (thermistor) to measure differences in the seat temperatures. The use of the thermistor and transistors in the control unit combine to give accurate temperature control.

Circuit Diagram

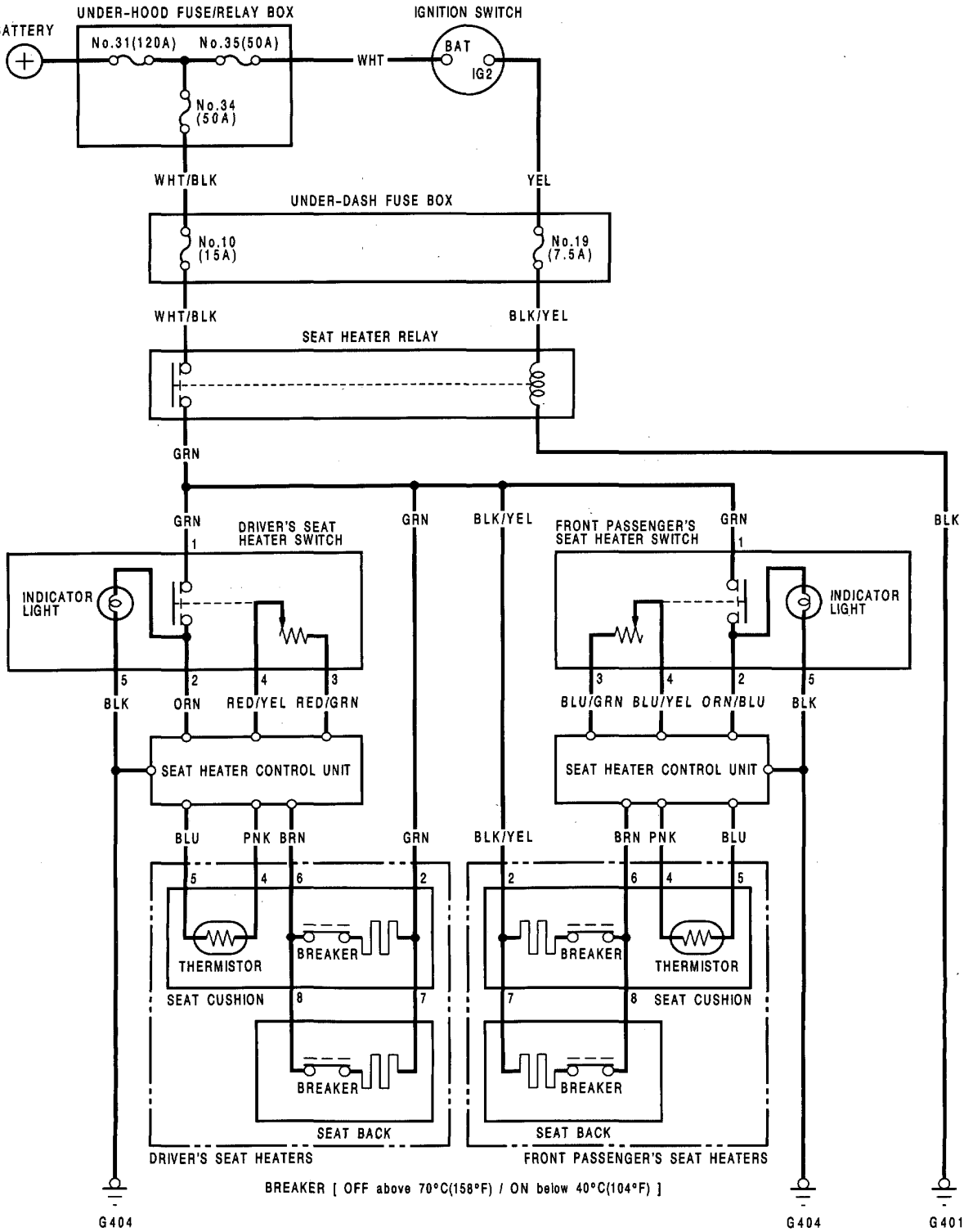

Seat Heaters

Troubleshooting

NOTE: The numbers in the table show the troubleshooting sequence.

Symptom \ Item to be inspected		Blown No. 10 (15A) fuse (in the under-dash fuse box)	Blown No. 19 (7.5A) fuse (in the under-dash fuse box)	Blown indicator light bulb	Seat heater switch	Seat heater	Thermistor (in the seat cushion heater)	Seat heater relay input	Seat heater contol unit	Poor ground	Open circuit in wires or loose or disconnected terminals
Seat heaters operate, but indicator light does not go on.				1							
Seat heaters do not operate and indicator light does not go on.		1			3			2		G401 G404	WHT/BLK or BLK/YEL
Seat heaters do not operate, but indicator light goes on.	Driver's seat								1		GRN, BRN or ORN
	Front passenger's seat								1		BLK/YEL, BRN or ORN/BLU
Seat cushion heater or seat back heater does not operate, but indicator light goes on.						1					
Seat heater cannot be adjusted.	Driver's seat				1		2		3		RED/YEL, RED/GRN, BLU or PNK
	Front passenger's seat				1		2		3		BLU/YEL, BLU/GRN, BLU or PNK

Control Unit Input Test

Remove the front passenger's seat, then disconnect the 14-P connectors from the seat heater control unit. Make the following input tests at the connector terminals.

NOTE: Recheck the connections between the 14-P connector and the seat heater control unit, and between the 6-P connector and the seat heaters, then replace the seat heater control unit if all input tests and heater test prove OK.

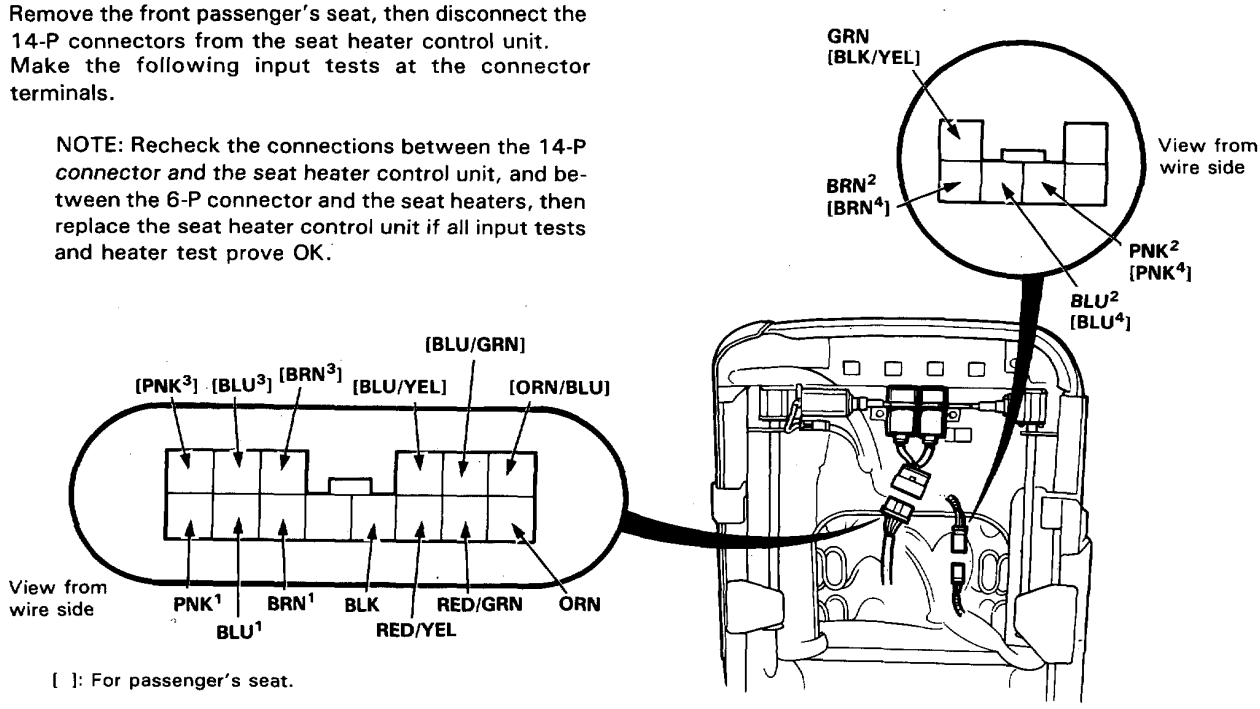

[ ]: For passenger's seat.

No.	Wire	Test condition	Test: desired result	Possible cause (if result is not obtained)
1	BLK	Under all conditions.	Check for continuity to ground: should be continuity.	• Poor ground (G404). • An open in the wire.
2	ORN [ORN/BLU]	Ignition switch ON and seat heater switch ON.	Check for voltage to ground: should be battery voltage.	• Blown No. 10 (15A) fuse. • Blown No. 19 (7.5A) fuse. • Faulty seat heater relay. • Poor ground (G401). • Faulty seat heater (ON/OFF) switch. • An open in the wire.
3	RED/YEL and RED/GRN BLU/YEL and BLU/GRN	Adjusting dial rotated.	Check for resistance between the RED/YEL [BLU/YEL] and RED/GRN [BLU/GRN] terminals. Should vary from 10,000 to 0 ohms as the dial is rotated.	• Faulty seat heater (variable) switch. • An open in the wire.
4	PNK [PNK] • BLU [BLU] • BRN [BRN]	Under all conditions.	Check for continuity between the terminals. There should be continuity: • Between the PNK1 [PNK3] and PNK2 [PNK4] terminals. • Between the BLU1 [BLU3] and BLU2 [BLU4] terminals. • Between the BRN1 [BRN3] and BRN2 [BRN4] terminals.	• An open in the wire.
	Test the seat heaters (see page 23-316)			

Seat Heaters

Switch Removal

1. Remove the center console (See section 20).
2. Disconnect the 6-P connector to remove the switch, then push the switch out of the console.

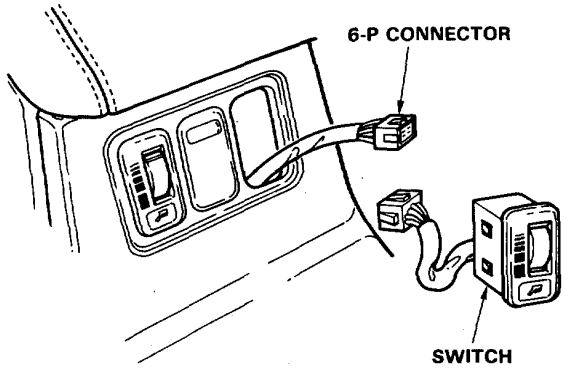

Switch Test

1. Remove the seat heater switch from the center console.
2. There should be continuity between the No. 1 and No. 2 terminals when the switch is ON. There should be no continuity when the switch is OFF.

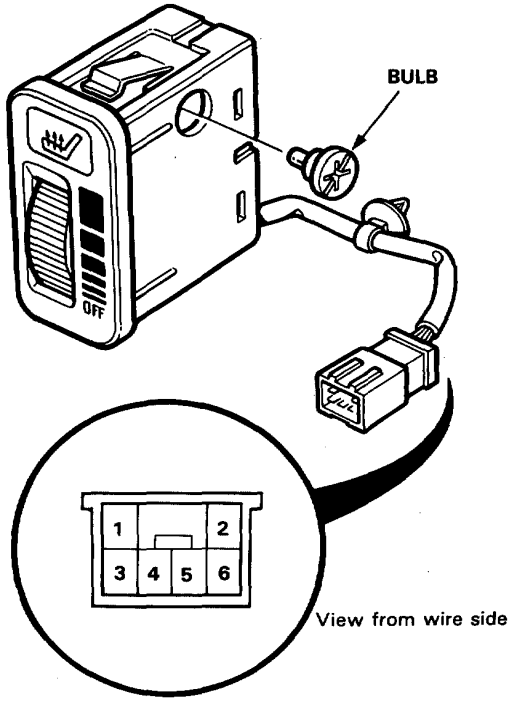

3. Measure resistance between the No. 3 and No. 4 terminals while rotating the adjusting dial. Resistance should vary from 10,000 to 0 ohms as the dial is rotated.

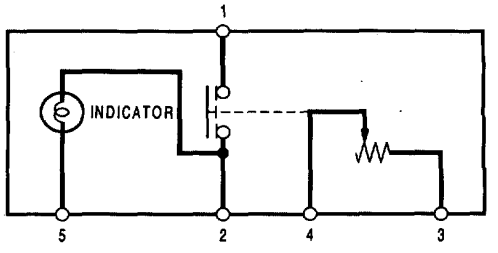

Heater test

1. Remove the front seats, then disconnect the 6-P connector from the seat cushion heater, and the 2-P connector from the seat back heater.

   NOTE: Left front seat shown, right front seat similar.

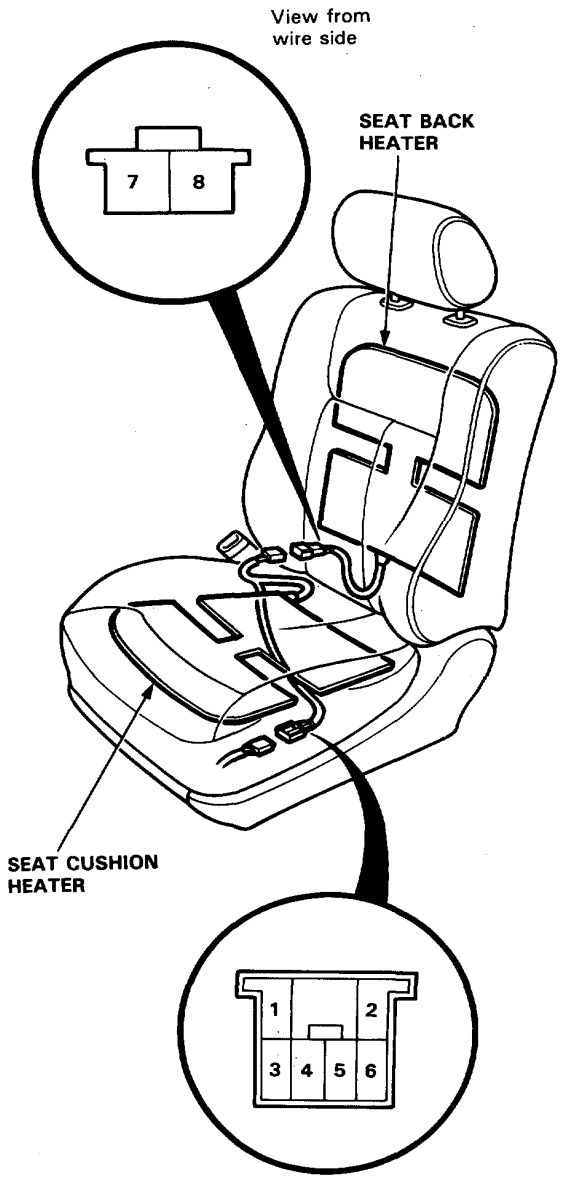

2. Check for continuity between the No. 2 and No. 6 terminals, and between the No. 7 and No. 8 terminals. (RX10^3 scale)
   There should be continuity.

3. Using an ohmmeter (RX10^3 scale), measure resistance between the No. 4 and No. 5 terminals. Replace the seat cushion heater if the resistance is not within specifications.

   NOTE: Resistance will vary with the thermistor temperature; specifications are at 25°C (77°F) or more.

   Thermistor Resistance: 8 kΩ or less.

Component Location Index

CAUTION:
- **All SRS electrical wiring harnesses are covered with yellow outer insulation.**
- **When disconnecting the SRS wire harness, install the short connector on the airbag then disconnect the wire harness (See page 23-412).**
- **Replace the entire affected SRS harness assembly if there is an open circuit or damage to the wiring.**

NOTE: RHD type is symmetrical to LHD type.

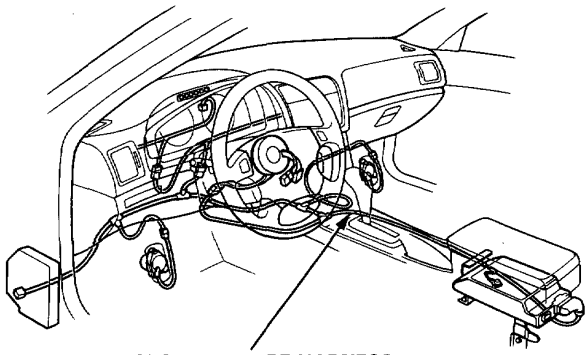

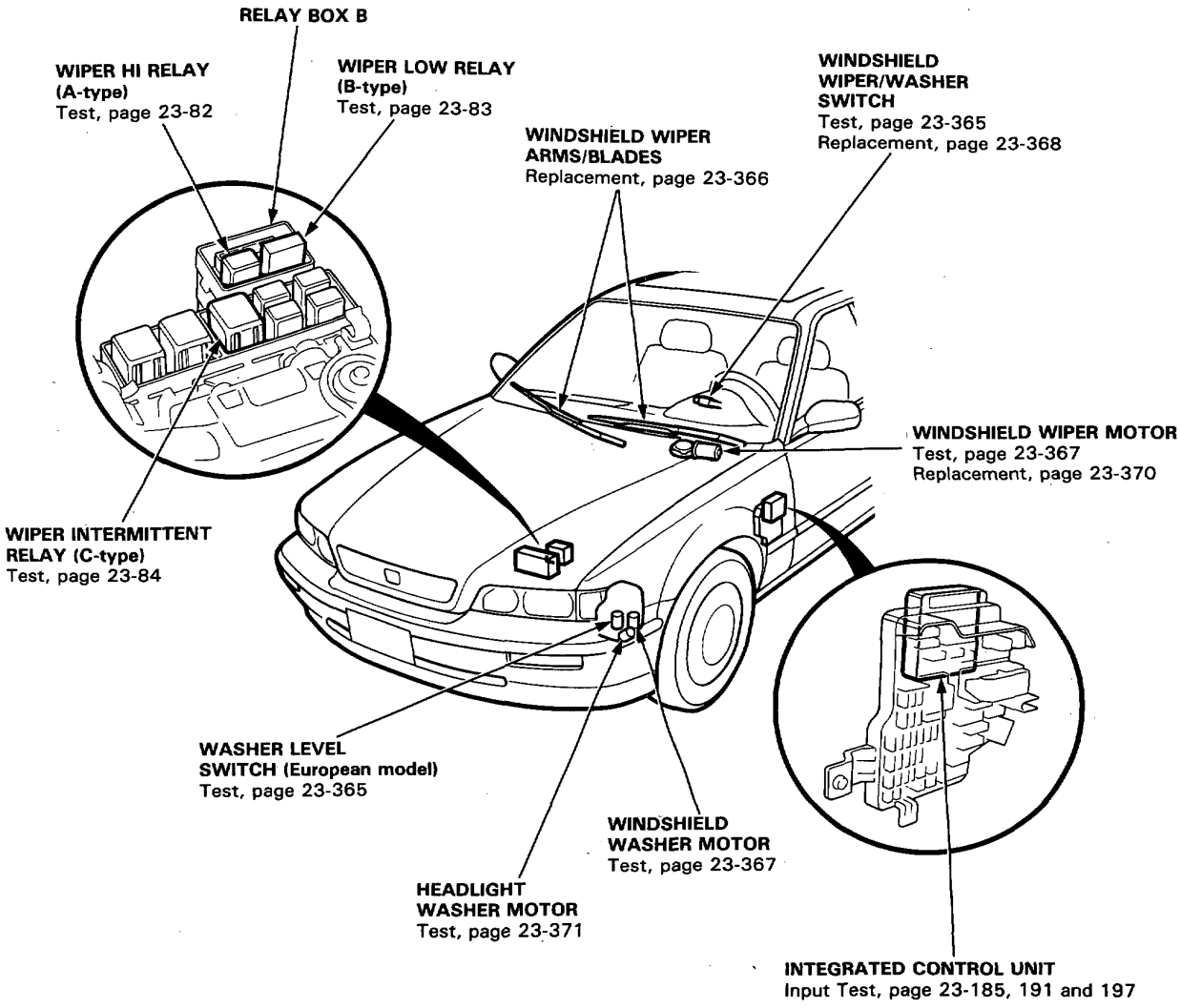

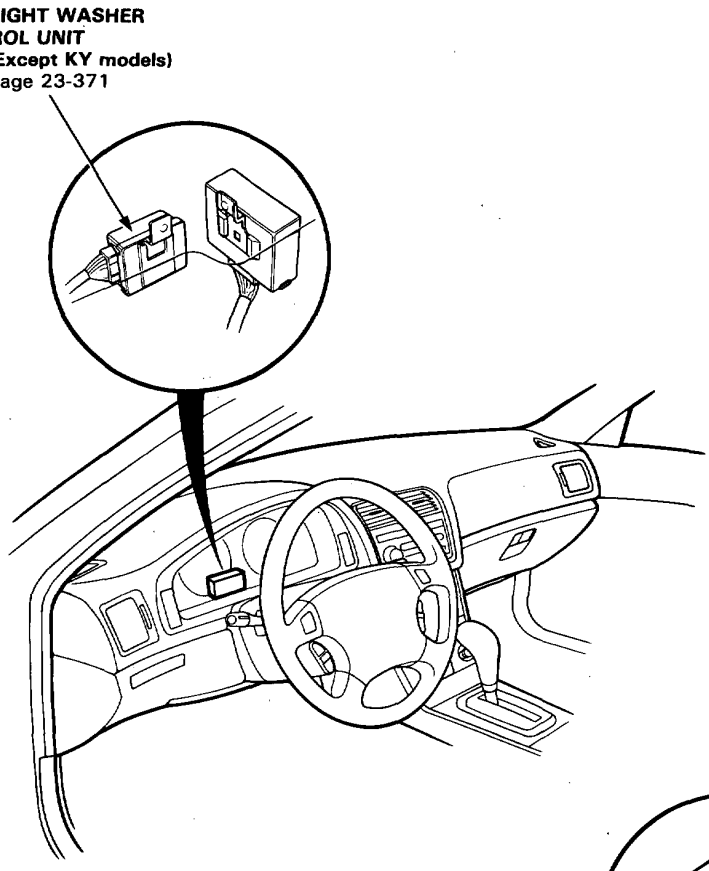
HEADLIGHT WASHER
CONTROL UNIT
(LHD: Except KY models)
Test, page 23-371

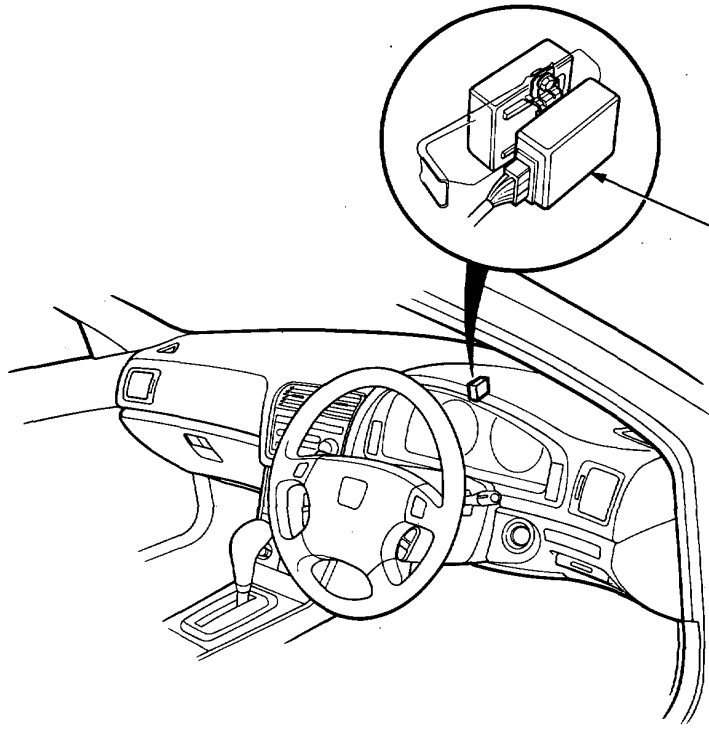
HEADLIGHT
WASHER
CONTROL
UNIT
(KE model)
Test, page 23-371

Circuit Diagram

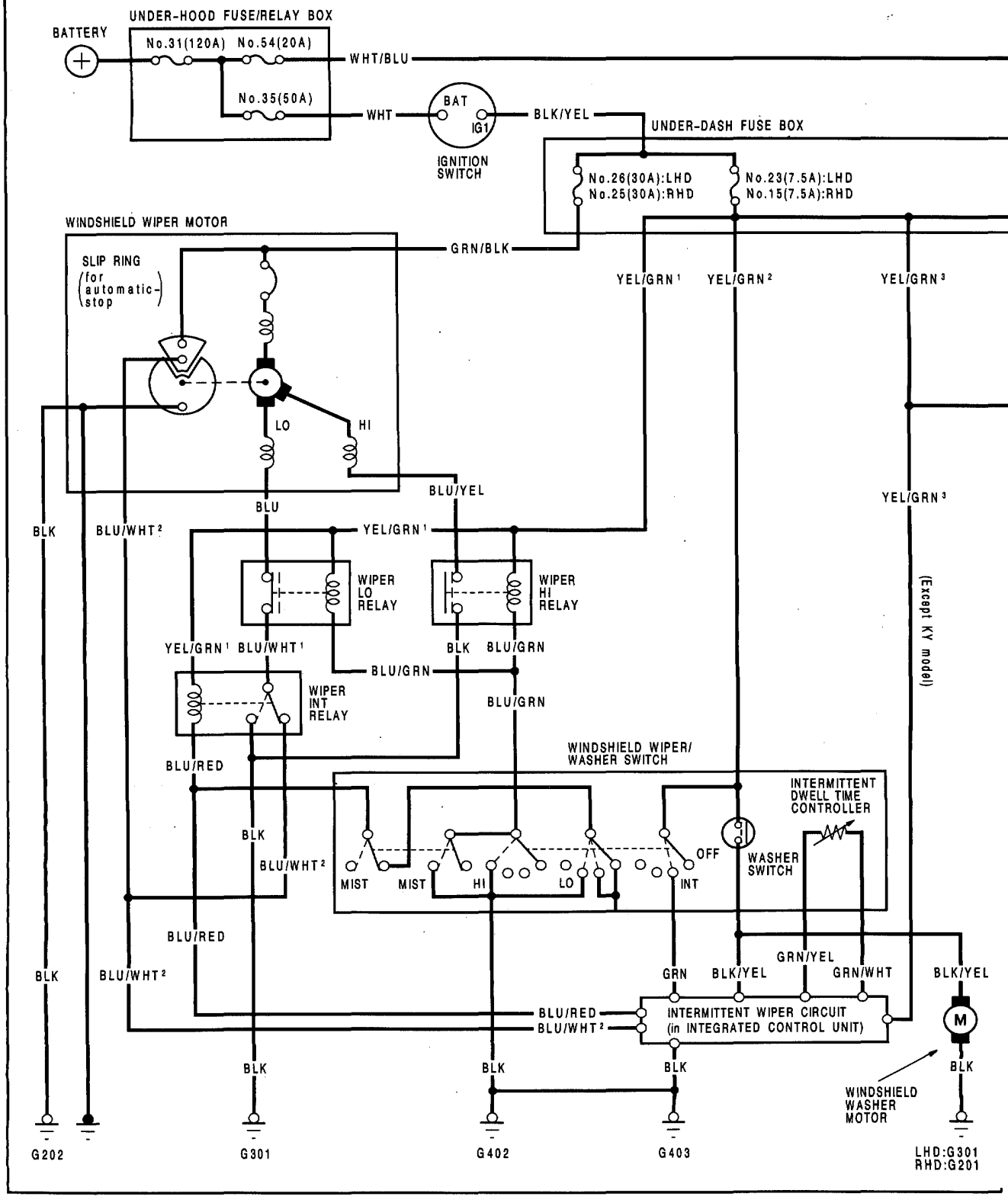

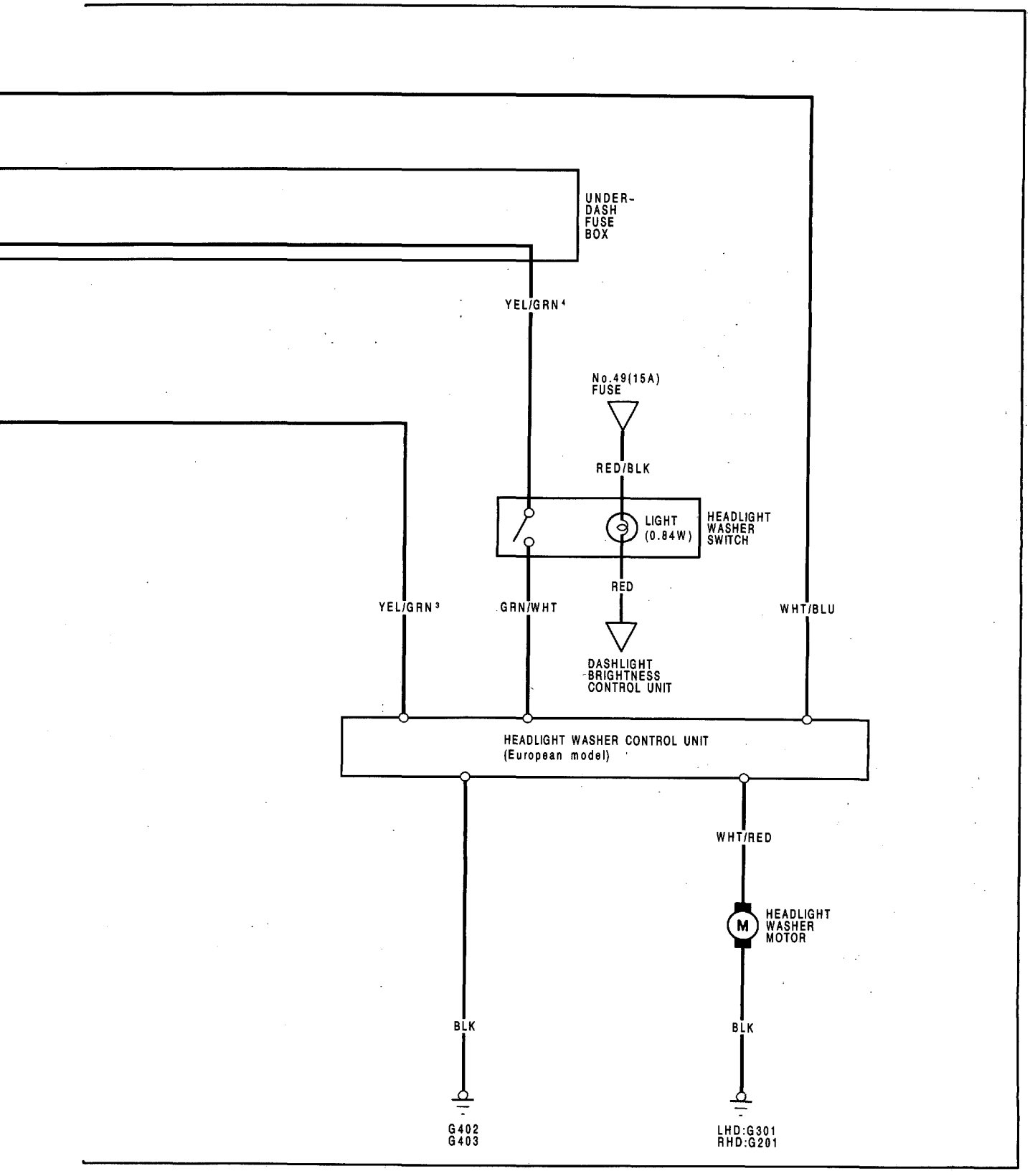
UNDER-
DASH
FUSE
BOX
YEL/GRN 4
No.49(15A)
FUSE
RED/BLK
LIGHT
(0.84W)
HEADLIGHT
WASHER
SWITCH
RED
YEL/GRN 3
GRN/WHT
WHT/BLU
DASHLIGHT
BRIGHTNESS
CONTROL UNIT
HEADLIGHT WASHER CONTROL UNIT
(European model)
WHT/RED
M
HEADLIGHT
WASHER
MOTOR
BLK
BLK
G402
G403
LHD:G301
RHD:G201

Troubleshooting

NOTE: The numbers in the table show the troubleshooting sequence.

Symptom	Item to be inspected	Blown *1 (30 A) fuse (in the under-dash fuse box)	Blown No. 54 (20 A) fuse (in the under-hood fuse/relay box)	Blown *2 (7.5 A) fuse (in the under-dash fuse box)	Wiper switch	Mist switch	Wiper motor assembly	Washer switch	Washer motor	Intermittent wiper relay	Wiper low relay	Wiper high relay	Intermittent wiper circuit (in the integrated control unit)	Combined operation with wiper/washer (in the integrated control unit)	Insufficient washer fluid in reservoir	Disconnected blocked washer hose or clogged outlet	Disconnected wiper linkages	Intermittent dwell time controller	Headlight washer control unit	Poor ground	Open circuit in wires or loose or disconnected terminals
Wipers do not operate	In all positions	1			4		2										3			G202	GRN/BLK
	In INT				1		4			2	3		5							G202 G301 G401 G402 G403	YEL/GRN[2] GRN BLU/WHT[2]
	In LO				1		4			2	3		5							G401 G402 G403	YEL/GRN[1] BLU/RED BLU BLU/WHT[1]
	In HI				1		3					2								G301 G401 G402 G403	BLU/GRN YEL
	In MIST					1						2								G301 G401 G402 G403	BLU/GRN YEL
Blades do not return to park position when wipers are turned OFF.					2		1			3	4										BLU/WHT[2]
Erratic intermittent cycle or wipers do not operate intermittently.										1			3					2			BLU/RED, GRN/YEL or GRN/WHT
Little or no windshield washer fluid is pumped.				2				5	4						1	3				G301 [G201]	BLK/YEL
Wipers do not operate simultaneously with windshield washer.														1							BLU/RED
Little or no headlight washer fluid is pumped.			2					5	4						1	3			6		WHT/RED

*1 { No. 26 (30 A): LHD
No. 25 (30 A): RHD }

*2 { No. 23 (7.5 A): LHD
No. 15 (7.5 A): RHD }

[ ]: RHD

Wiper/Washer Switch Test

1. Remove the dashboard lower panel (See section 20).
2. Disconnect the 10-P connector from the floor wire harness.
3. Check for continuity between the terminals in each switch position according to the table.

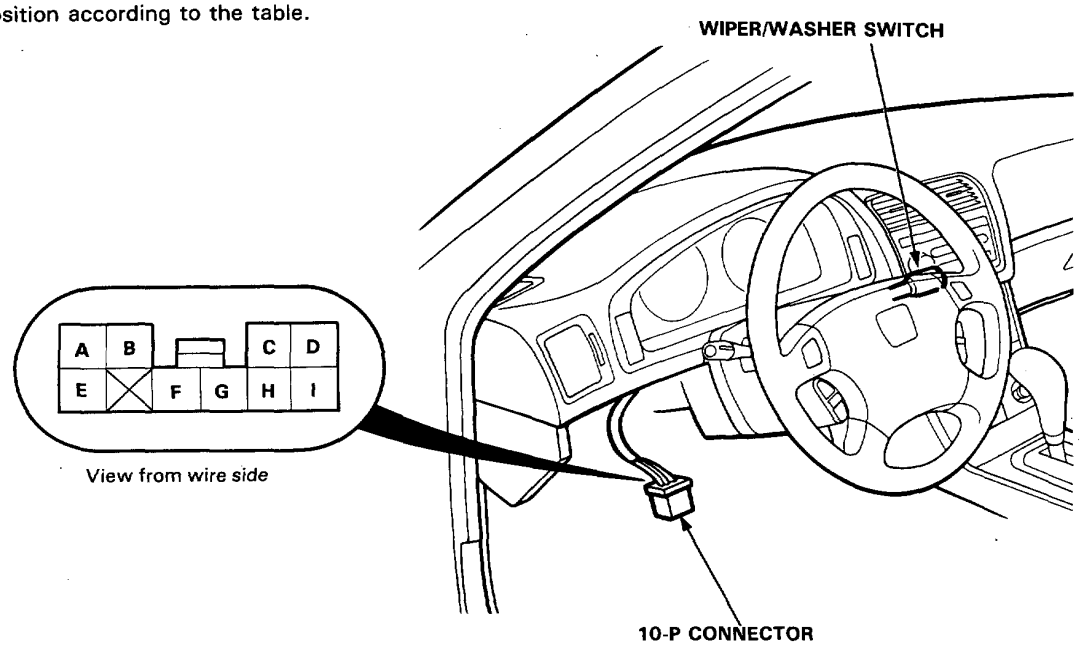

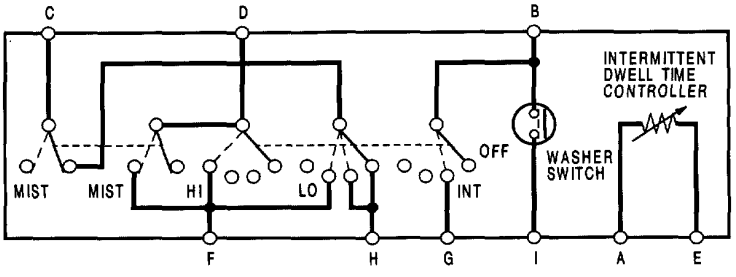

Position \ Terminal	A	B		C	D	E	F	G	H	I
INT		○	———	———	———	———	———	○		
LO				○	———	———	○			
HI					○	———	○			
Mist switch "ON"					○	———	○			
Washer switch "ON"		○	———	———	———	———	———	———	———	○
Intermittent controller turned	○	———	0-30KΩ	———	———	○				

Windshield Wiper Motor Test

1. Open the hood and remove the cap nuts and the wiper arms.
   NOTE: Carefully remove the wiper arms so that they do not touch the hood.

2. Remove the windshield lower molding, hood seal and air scoop by prying off the trim clips and removing the screws.

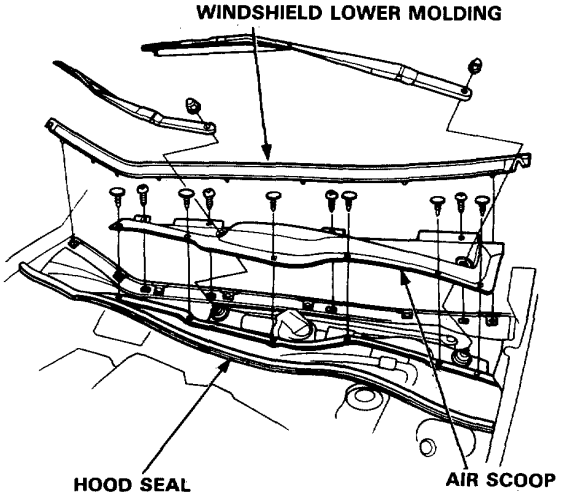

3. Disconnect the 5-P connector from the wiper motor assembly.

4. Test motor operation:

   LOW SPEED: Connect battery power to the B (GRN/BLK) terminal and ground to the Lo (BLU) terminal.
   HIGH SPEED: Connect battery power to the B (GRN/BLK) terminal and ground to the Hi (BLU/YEL) terminal.

5. If the motor fails to run smoothly, replace it.

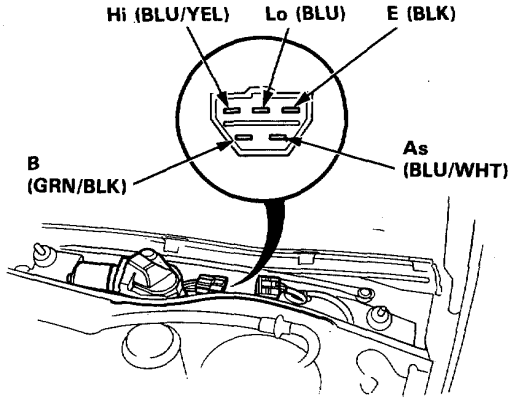

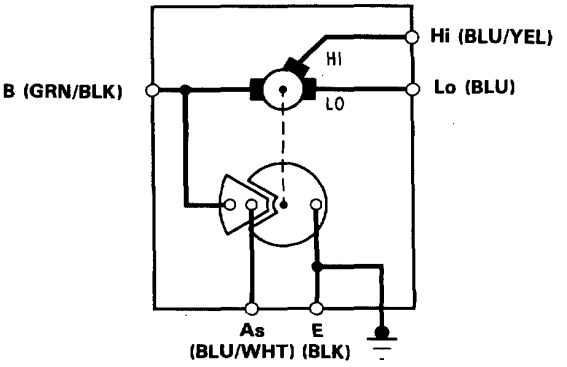

6. Reconnect the 5-P connector to the wiper motor assembly.

7. Connect an analog voltmeter, between the As (BLU/WHT) and the E (BLK) terminals. Run the motor by turning the wiper switch ON (Lo or Hi position).

   Voltmeter should indicate 0 V to more than 4 V alternately.

Washer Motor Test

1. Remove the inner fender.

2. Disconnect the 2-P connector from the washer motor.

3. Test the washer motor operation by connecting battery power to the ⊕ terminal and grounding to the ⊖ terminal.

   - If the motor fails to run smoothly, replace it.
   - If the motor runs smoothly but little or no washer fluid is pumped, check for a disconnected or blocked washer hose, or a clogged pump outlet in the motor.

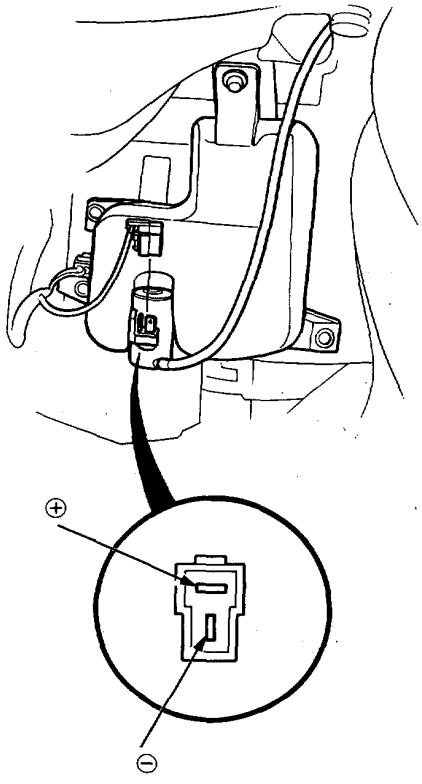

Washer Level Switch Test (European model)

1. Remove the inner fender.

2. Disconnect the 2-P connector, then pull the switch out of the reservoir.

3. Check that the float moves up and down freely. Replace the switch if the float does not move freely.

4. Check for continuity between the terminals with the float up and down.
   There should be continuity with the float down, and no continuity with the float up.
   Replace the switch if necessary.

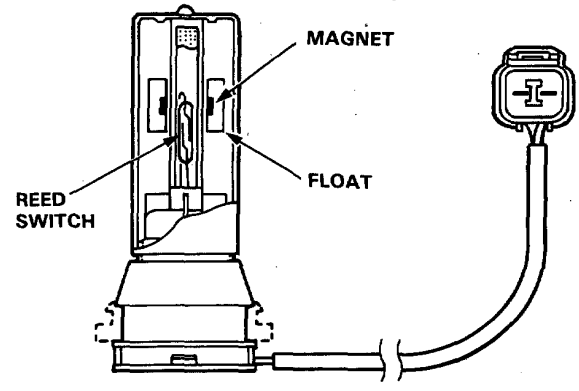

Wiper/Washer Switch Replacement

CAUTION:

- **All SRS electrical wiring harnesses are covered with yellow outer insulation.**
- **When disconnecting the SRS wire harness, install the short connector on the airbag then disconnect the wire harness (See page 23-412).**
- **Replace the entire affected SRS harness assembly if there is an open circuit or damage to the wiring.**

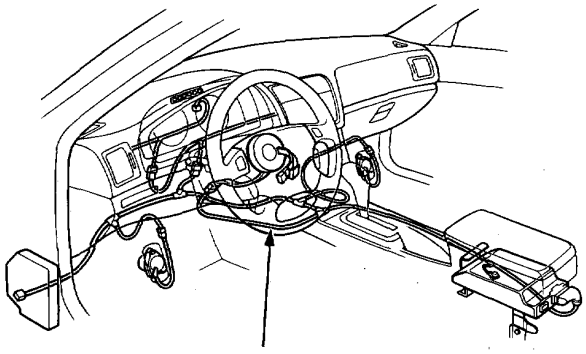

1. Carefully pry the switches out of the dashboard lower panel.

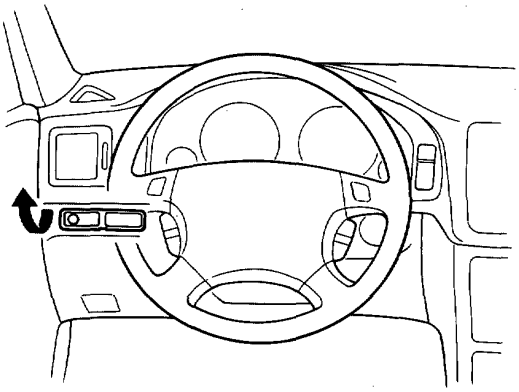

2. Disconnect the connectors, then remove the switches.
3. Remove the dashboard lower panel.

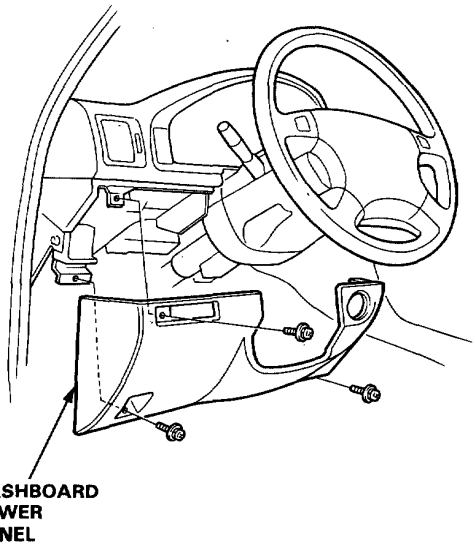

4. Remove the tilt cover.

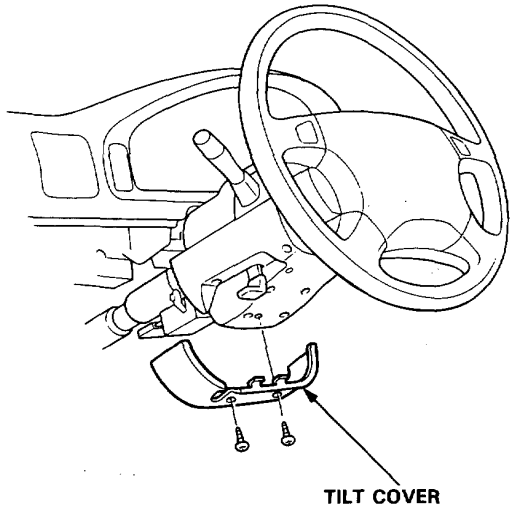

5. Remove the steering column upper and lower covers.

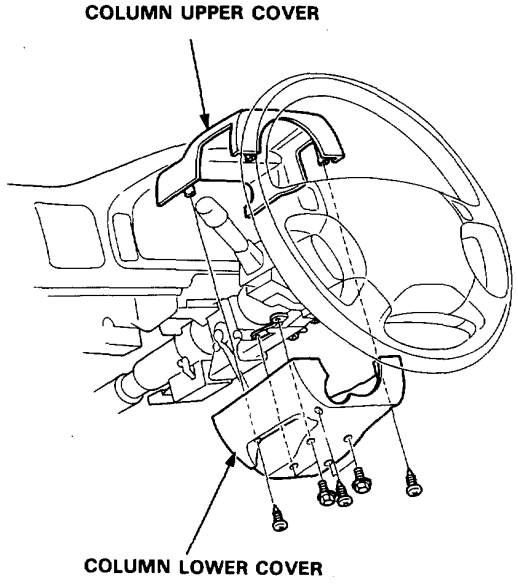

6. Disconnect the 10-P connector, then remove the wiper/washer switch.

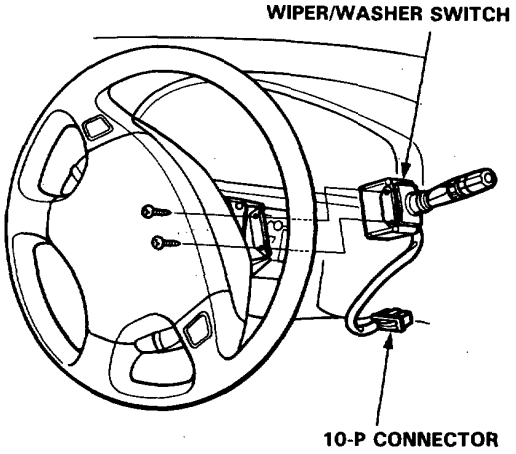

Windshield Wiper Motor Replacement

1. Open the hood and remove the cap nuts and the wiper arms.

   NOTE: Carefully remove the wiper arms so that they do not touch the hood.

2. Remove the windshield lower molding, hood seal and air scoop by prying off the trim clips and removing the screws (See page 23-366).

3. Disconnect the 5-P connector from the wiper motor, then remove the wiper harness from the wiper linkage.

4. Remove the wiper linkage assembly by removing the 3 mounting bolts.

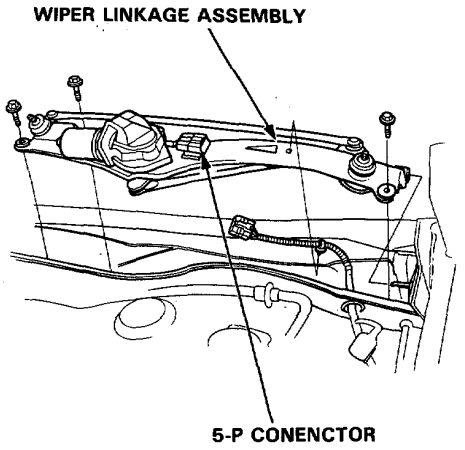

5. Remove the 3 mounting bolts and 1 nut from the wiper linkage to remove the wiper motor.

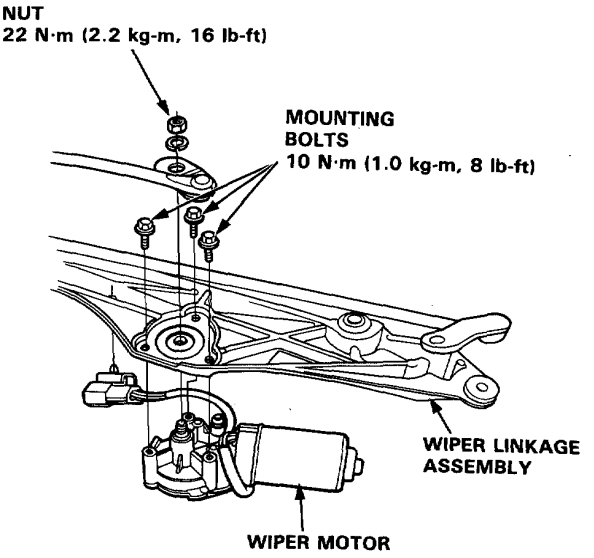

6. Install the wiper motor in the reverse order of removal.

Headlight Washer Control Unit Test

Remove the glove box lower panel and glove box (LHD).
Remove the bulkhead panels (KE model).
Disconnect the 6-P connector from control unit.
Make the following input tests at the harness pins.
If all tests prove OK, yet the headlight washer still fails to work, replace the control unit.

NOTE: Before testing, check the No. 54 (20 A) fuse in the main relay box and No. 23: LHD or No. 15: RHD (7.5 A) fuse in the dash fuse box.

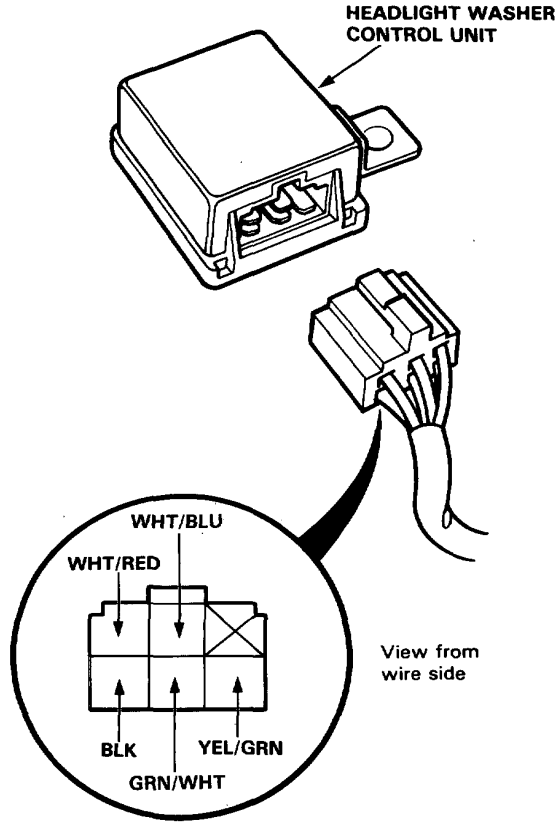

No.	Wire	Test condition	Test: desired result	Possible cause (if result is not obtained)
1	BLK	Under all conditions.	Check for continuity to ground: should be continuity.	• Poor ground (G402, G403). • An open in the wire.
2	WHT/BLU	Under all conditions.	Check for voltage to ground: should be battery voltage.	• Blown No. 54 (20 A) fuse. • An open in the wire.
3	GRN/WHT	Ignition switch and headlight washer switch ON.	Check for voltage to ground: should be battery voltage.	• Blown No. 23 or No. 15 (7.5 A) fuse. • Faulty headlight washer switch. • An open in the wire.
4	WHT/RED	Connect the LT GRN terminal to the WHT/RED terminal with jumper wire.	Check pump operation: Pump should run.	• Faulty headlight washer pump. • An open in the wire. • Poor ground (G301 or G201).
5	YEL/GRN	Ignition switch ON.	Check for voltage to ground: should be battery voltage.	• Blown No. 23: LHD or No. 15: RHD (7.5 A) fuse. • An open in the wire.

Washer Replacement

1. Remove the washer filler assembly.
2. Remove the inner fender.
3. Disconnect the hose and the 2-P connectors from the windshield washer motor, headlight washer motor and washer level sensor (EUROPEAN MODEL).
4. Remove the washer reservoir by removing the 3 mounting bolts.
5. Remove the windshield washer moter, headlight washer motor and washer level switch from the washer reservoir.
6. Remove the windshield washer nozzles and washer hose.
7. Remove the front bumper, then the upper bumper molding and front bumper beam.
8. Remove the headlight washer nozzle by releasing the retaining pawl and pushing them out from the inside of the bumper.

NOTE:
- Clamp the hose at the front harness.
- Take care not to pinch hoses during reinstallation.
- Install the grommets firmly.
- After installation, adjust the aim of the washer nozzles.

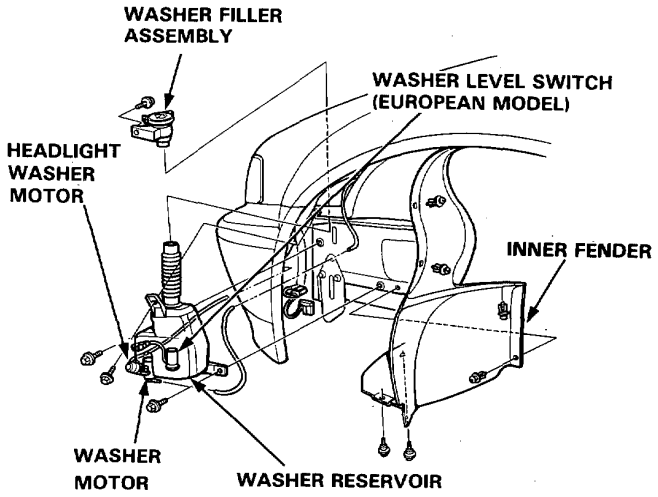

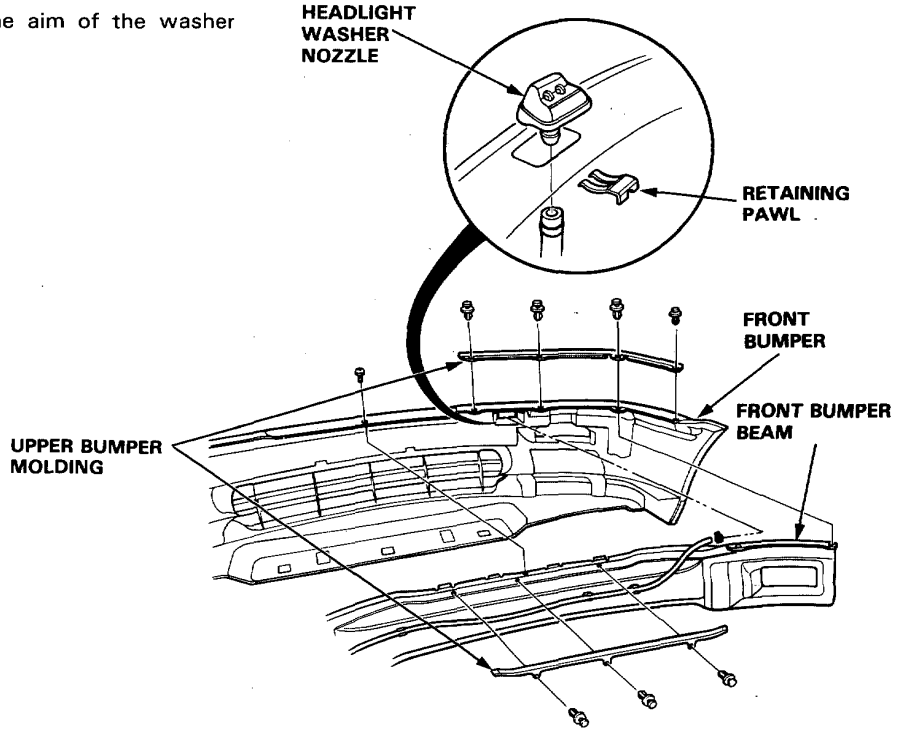

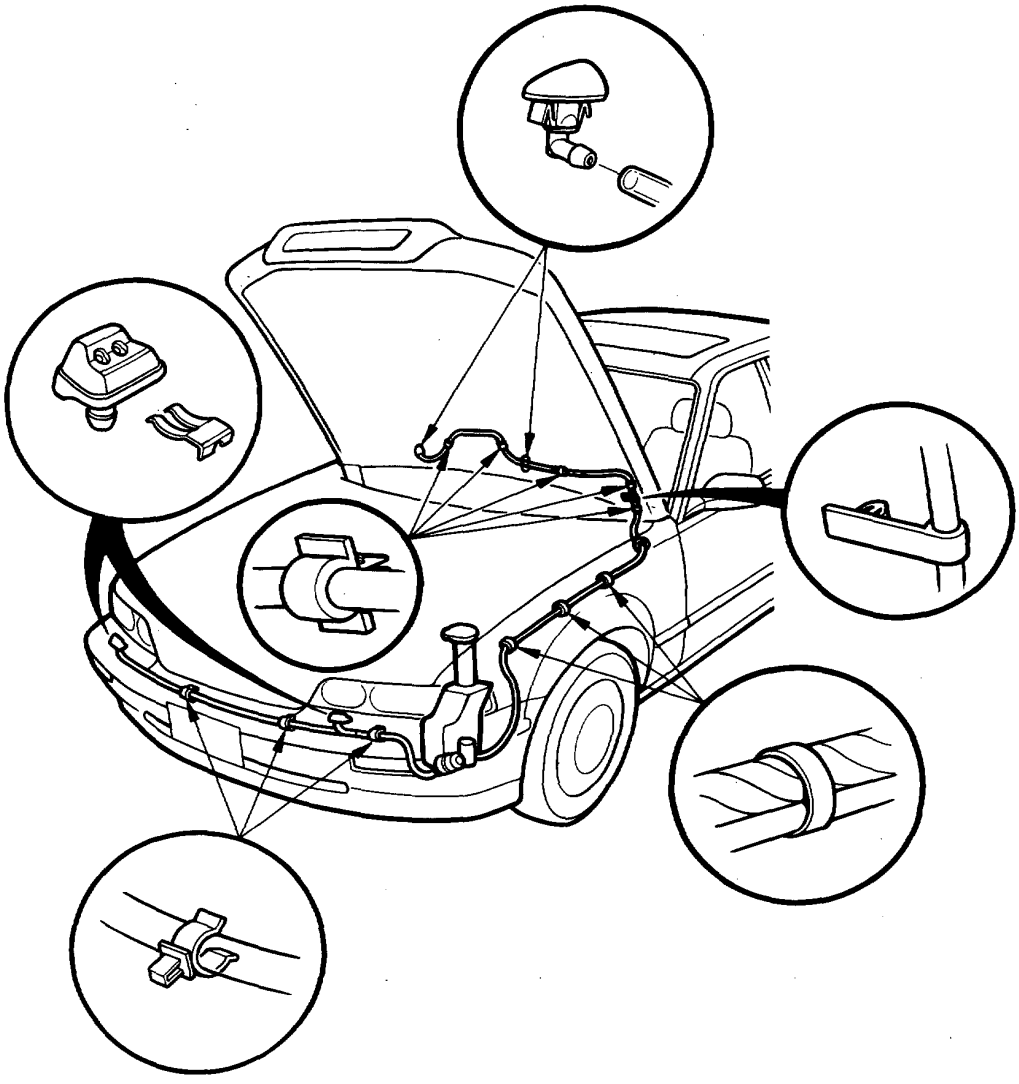

Headlight Washer Switch Test

1. Pry out the switch from the floor console, then disconnect the 6-P connector from the switch.

2. Check for continuity between the terminals according to the table.

   NOTE: Be careful not to damage the switch or the instrument panel when prying out the switch.

Terminal / Position	C	D	A		B
OFF					
ON	○—○		○	—(0)—	○

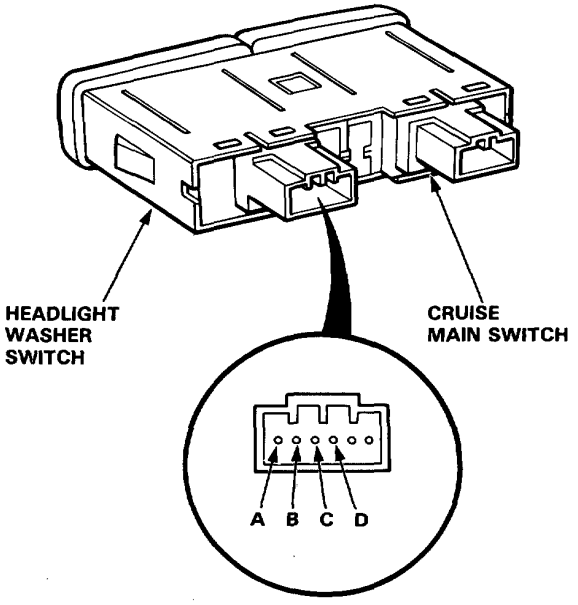

Headlight Washer Motor Test

1. Remove the front bumper and disconnect the 2-P connector from the washer motor.

2. Test washer motor operation by connecting battery positive to the ⊕ terminal and negative to the ⊖ terminal.

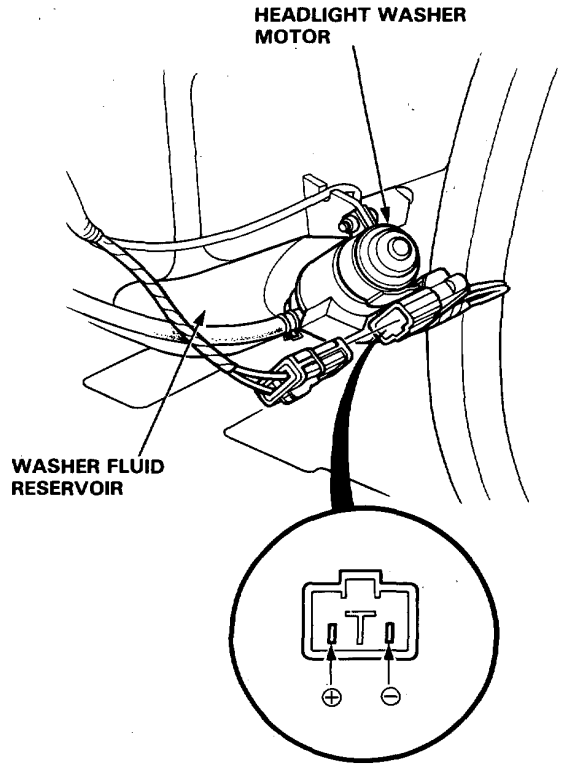

Cruise Control

Component Location Index

CAUTION:

- **All SRS electrical wiring harnesses are covered with yellow outer insulation.**
- **When disconnecting the SRS wire harness, install the short connectors on the airbag then disconnect the wire harness (See page 23-412).**
- **Replace the entire affected SRS harness assembly if there is an open circuit or damage to the wiring.**

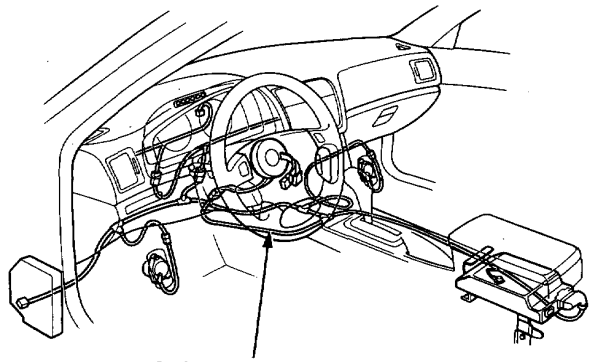

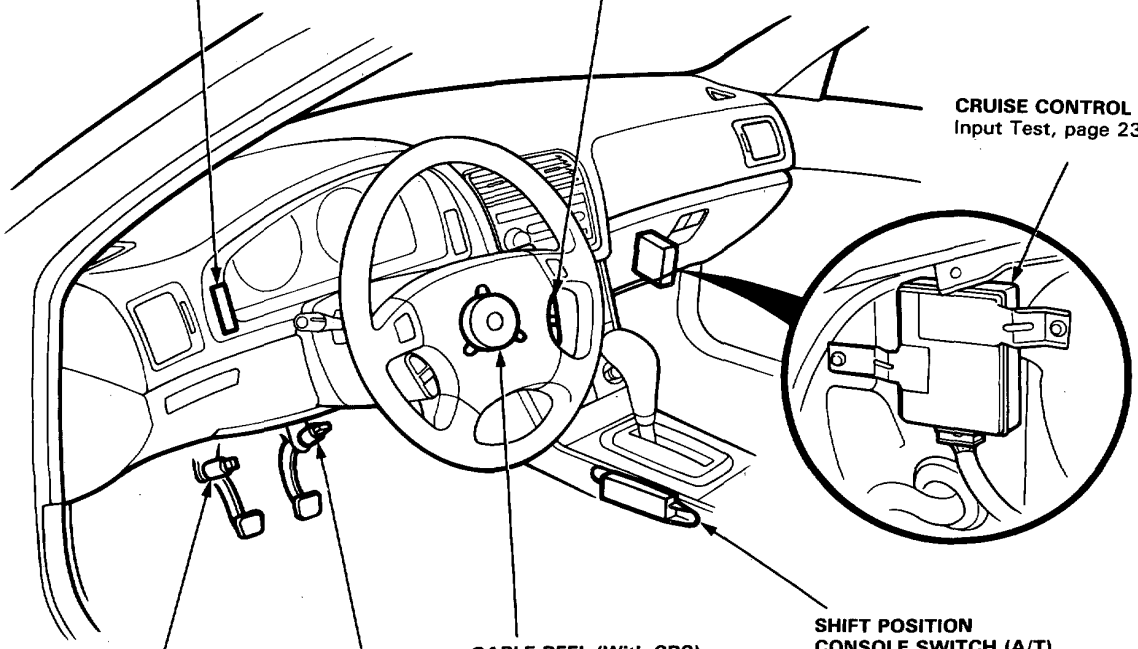

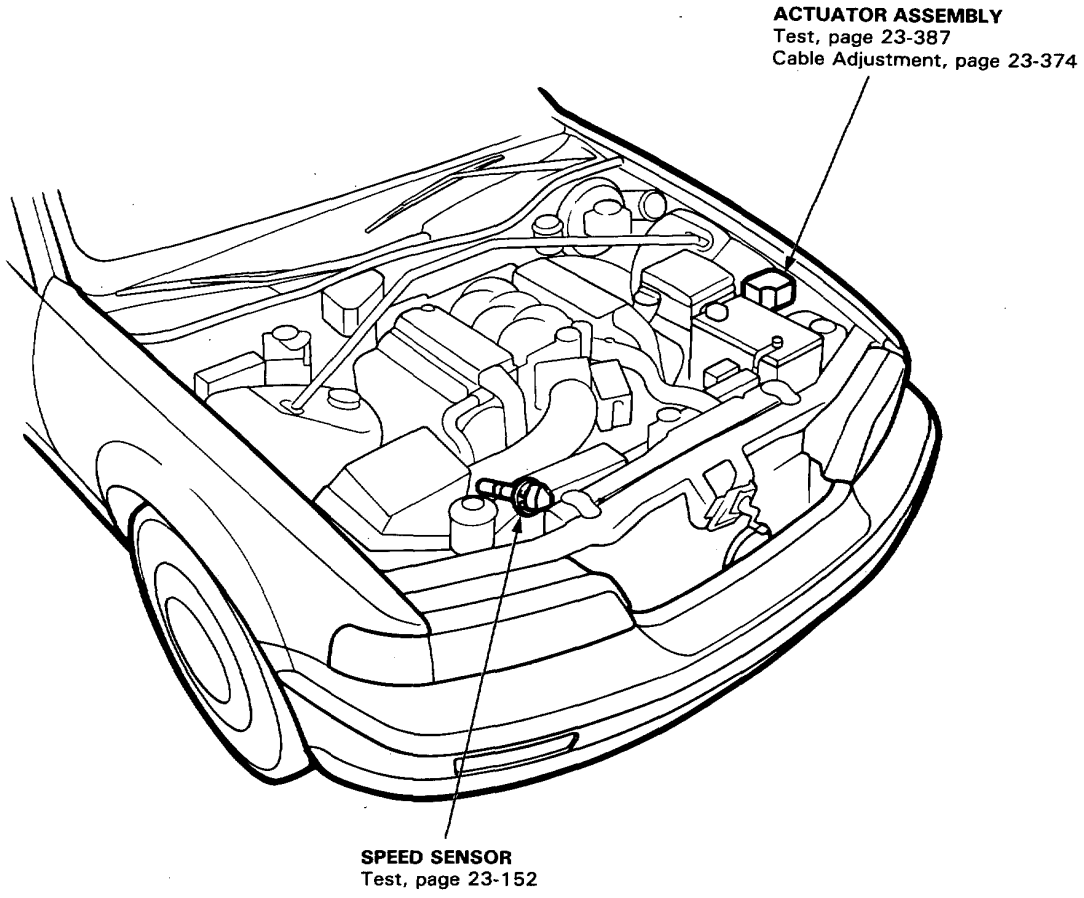
ACTUATOR ASSEMBLY
Test, page 23-387
Cable Adjustment, page 23-374
SPEED SENSOR
Test, page 23-152

Cruise Control

Circuit Diagram

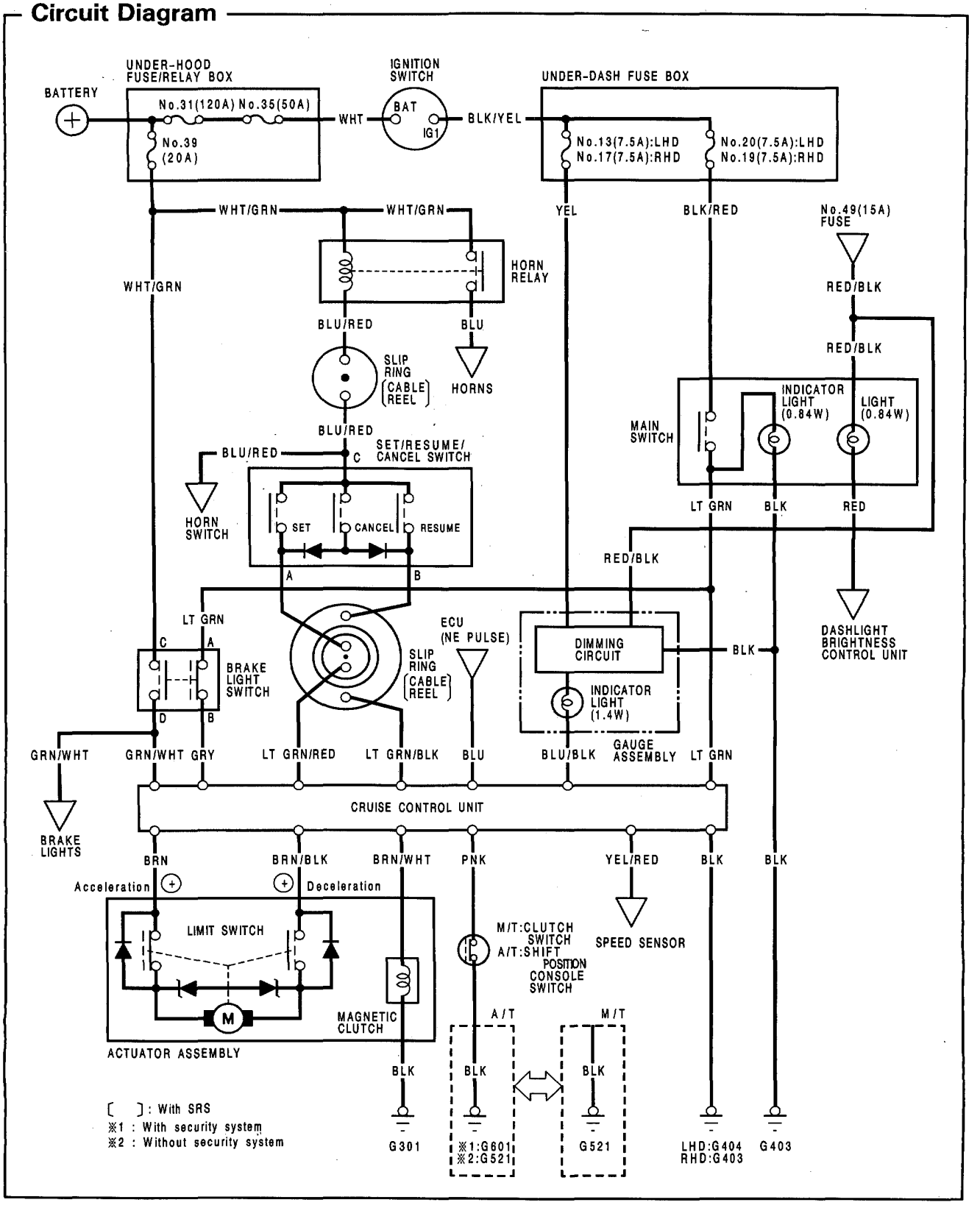

Troubleshooting

NOTE:

- The numbers in the table show the troubleshooting sequence.
- Before troubleshooting.
  - Check the No. 20: LHD or No. 19: RHD (7.5A) fuse in the under-dash fuse box, and the No. 35 (50A), No. 39 (20A) fuses in the under-hood fuse/relay box.
  - Check that the horns sound.
  - Check the tachometer for proper operation.

Items to be inspected. / Symptom	Main switch	SET/RESUME switch	Brake light switch/adjustment	Clutch switch/adjustment (M/T)	Shift lever position switch (A/T)	ECU (NE PULSE)	Dimming circuit in gauges	Actuator and cable deflection	Control unit	Poor ground	Open circuit in wires or loose or disconnected terminals
Cruise control can't be set.	2	3	4	5					1	G301 G403 G404 G521 G601	BLU/RED, LT GRN/RED, BLU, YEL, BLK/RED, LT GRN, GRY, BRN, BRN/BLK, BRN/WHT, PNK or YEL/RED
Cruise control can be set, but indicator light does not go on.							2		1	G402 G403	YEL or BLU/BLK
Cruise speed noticeably higher or lower than what was set.						1		2	3		
Excessive overshooting and/or undershooting when trying to set speed.						2		1	3		
Steady speed not held even on a flat road with cruise control set.						1		2	3		
Car does not decelerate or accelerate accordingly when SET or RESUME button is pushed.		1							2		LT GRN/BLK LT GRN/RED
Set speed not cancelled when clutch pedal is pushed (M/T).				1					2		
Set speed not cancelled when shift lever is moved to N (A/T).					1				2		
Set speed not cancelled when brake pedal is pushed.			1						2		
Set speed not cancelled when main switch is pushed OFF.	1								2		
Set speed not resumed when RESUME button is pushed (with main switch on, but set speed temporarily cancelled).		1							2		

Control Unit Input Test

CAUTION:

- **All SRS electrical wiring harnesses are covered with yellow outer insulation.**
- **When disconnecting the SRS wire harness, install the short connectors on the airbag then disconnect the wire harness (See page 23-412).**
- **Replace the entire affected SRS harness assembly if there is an open circuit or damage to the wiring.**

Remove the glove box, then disconnect the 14-P connector from the control unit. Make the following tests at connector terminals:

NOTE: Recheck the connections between the 14-P connector and the control unit, then replace the control unit if all input tests prove OK.

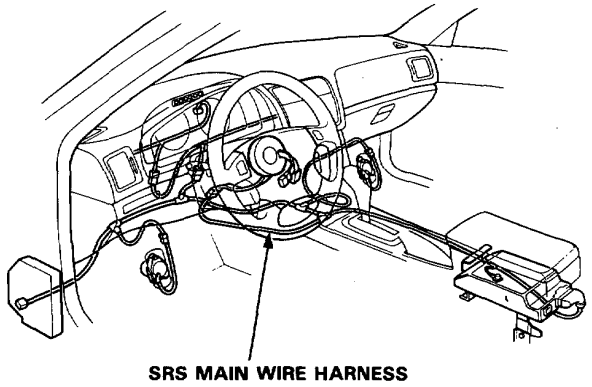

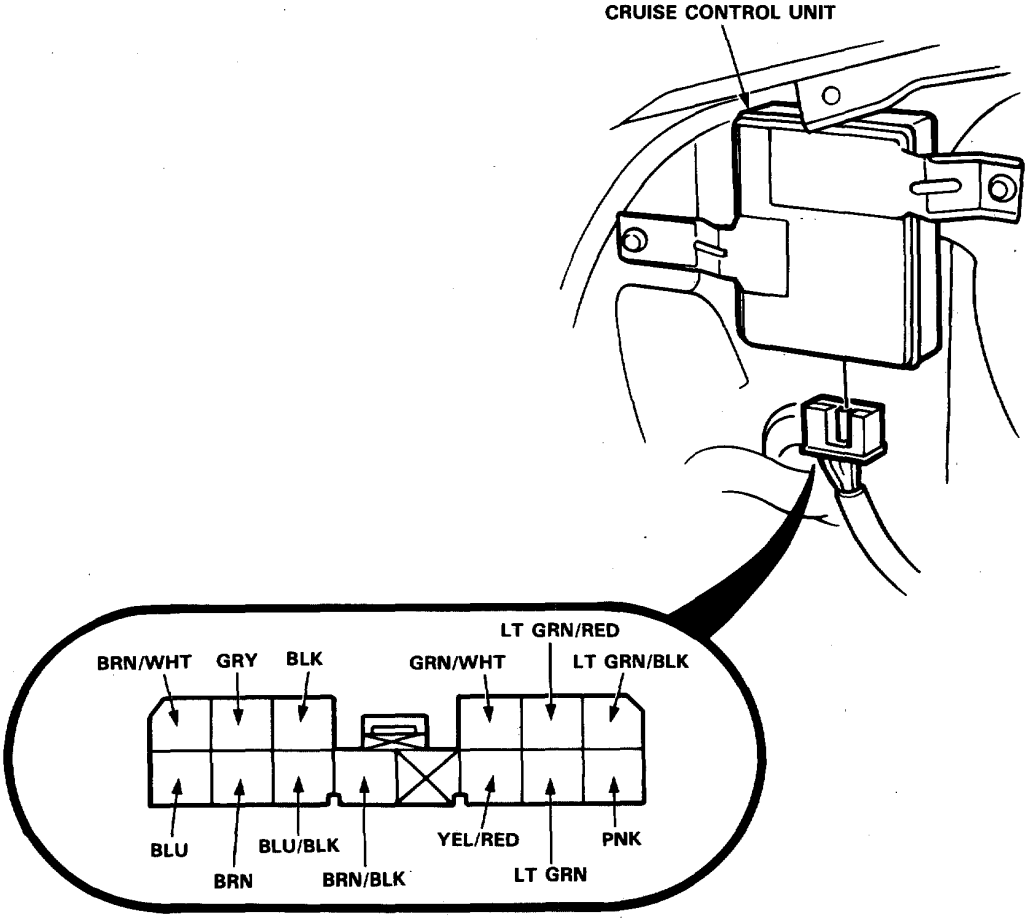

View from wire side

No.	Wire	Test condition	Test: desired result	Possible cause (if result is not obtained)
1	BLK	Under all conditions.	Check for continuity to ground: should be continuity.	• Poor ground G404 ([G402, G403]). • An open in the wire.
2	LT GRN	Ignition switch ON and main switch ON.	Check for voltage to ground: should be battery voltage.	• Blown No. 20 (7.5A) [No. 19 (7.5A)] fuse. • Faulty main switch. • An open in the LT GRN or YEL wire.
3	LT GRN/BLK	RESUME button pushed.	Ground each terminal: Horns should sound as the switch is pushed.	• Blown No. 39 (20A) fuse. • Faulty SET/RESUME switch. • Faulty cable reel. • An open in the WHT/GRN, BLU/RED, LT GRN/BLK or LT GRN/RED wire.
4	LT GRN/RED	SET button pushed.		
5	PNK	M/T: Clutch pedal pushed. A/T: Shift lever in 2, D[3] or D[4].	Check for continuity to ground: should be continuity.	• Faulty or misadjusted clutch switch (M/T). • Faulty shift position console switch (A/T). • Poor ground (G521 or G601). • An open in the wire.
6	BLU	Start the engine.	Check for voltage to ground: should be battery voltage.	• Faulty ignition system or PGM-FI ECU. • An open in the wire.
7	YEL/RED	Ignition switch ON and main switch ON. Raise the front of the car rotate one wheel slowly.	Check for voltage between the LT GRN ⊕ and YEL/RED ⊖ terminals: should be 0—5—0—5 V repeatedly.	• Faulty speed sensor. • An open in the wire.
8	GRY	Ignition switch ON, main switch ON and brake pedal pushed, then released.	Check for voltage to ground: should be 0 V with the pedal pushed and battery voltage with the pedal released.	• Faulty brake light switch. • An open in the GRY or LT GRN wire.
9	GRN/WHT	Brake pedal pushed, then relelased.	Check for voltage to ground: should be battery voltage with the pedal pushed, and 0 V with the pedal released.	• Faulty brake light switch. • An open in the wire.
10	BLU/BLK	Ignition switch ON.	Attach to ground: Indicator light in the gauge assembly comes on.	• Blown bulb. • Blown No. 20 (7.5A) [No. 19 (7.5A)] fuse. • Faulty dimming circuit in the gauge assembly. • An open in the wire.
11	BRN	Connect battery power to the BRN terminal and ground to the BRN/BLK terminal.	Check the operation of the actuator motor: should be able to hear motor.	• Faulty actuator. • An open in the wire
12	BRN/BLK			
13	BRN/WHT	Connect battery power to the BRN/WHT terminal.	Check the operation of the magnetic clutch: clutch should click and output link should be locked.	• Faulty actuator. • An open in the wire. • Poor ground (G301).

[ ]: RHD

Main Switch Test

CAUTION:

- **All SRS electrical wiring harnesses are covered with yellow outer insulation.**
- **When disconnecting SRS wire harness, install the short connectors on the airbag then disconnect the wire harness (See page 23-412).**
- **Replace the entire affected SRS harness assembly if there is an open circuit or damage to the wiring.**

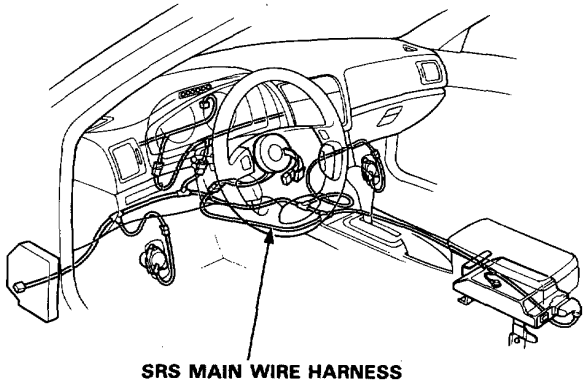

1. Remove the instrument panel, then remove the cruise main switch from it.

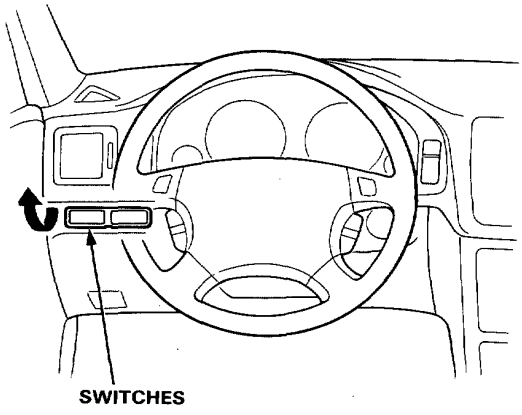

2. Check for continuity between the terminals in each switch position according to the table.

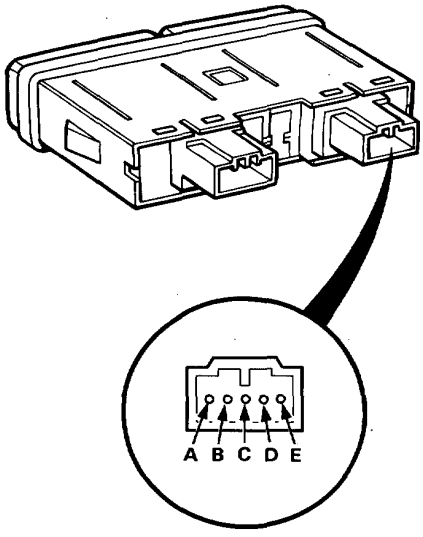

Terminal / Position	C	D		E	A		B
OFF		○	—⊗—	○	○	—⊗—	○
ON	○	○	—⊗—	○	○	—⊗—	○

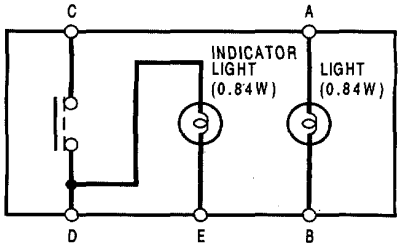

SET/RESUME/CANCEL Switch Test

With SRS:

CAUTION: Disconnect both the negative and positive battery cables install the red short connectors on the airbag (See page 23-412).

1. Disconnect the cable reel harness and main harness 7-P connector, and connect Test Harness C only to the cable reel harness side 7-P connector.

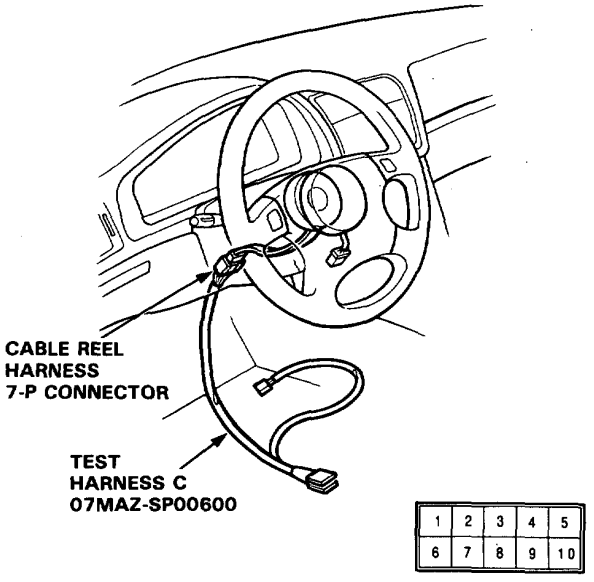

2. *Check for continuity between the terminals in each* switch position according to the table.

Terminal / Position	3 (BLU/RED)		2 (LT GRN/RED)	1 (LT GRN/BLK)
SET (ON)	○	———	○	
RESUME (ON)	○	———	———	○
CANCEL (ON)	○	▶|———	○	
		▶|———	———	○

3. Remove the cover from the SET/RESUME/CANCEL switch, then remove the SET/RESUME/CANCEL switch by removing the 2 screws.

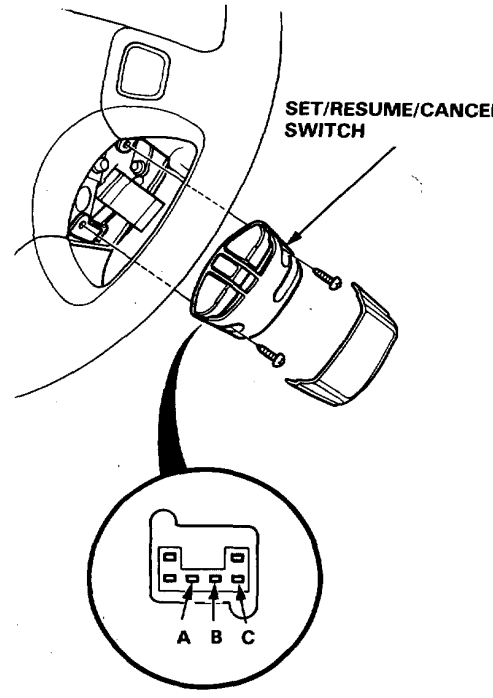

4. Check for continuity between the terminals in each switch position according to the tables.

Terminal / Position	C		B	A
SET (ON)	○	———	○	
RESUME (ON)	○	———	———	○
CANCEL (ON)	○	▶|———	○	
		▶|———	———	○

SET/RESUME/CANCEL Switch Test

Without SRS:

1. Remove the dashboard lower panel and disconnect the 14-P connector from the main wire harness.

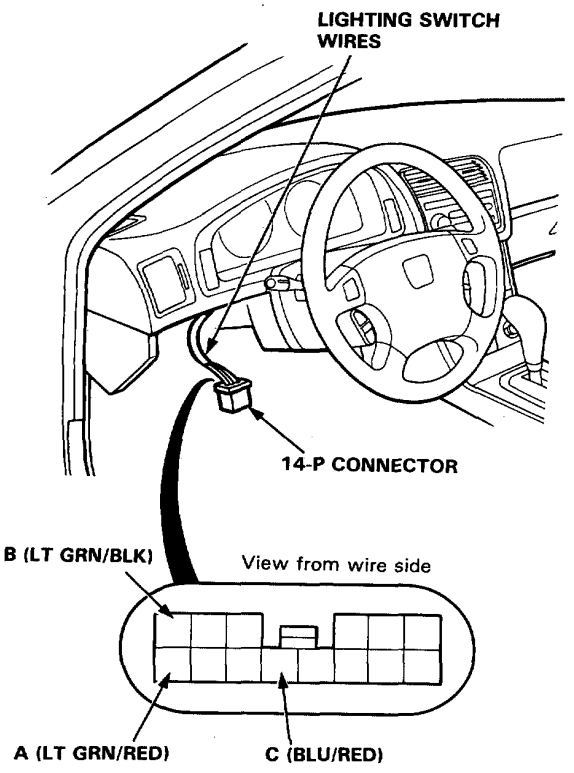

2. Check for continuity between the terminals in each switch position according to the table.

Terminal / Position	C		B	A
SET (ON)	○	———	○	
RESUME (ON)	○	———	———	○
CANCEL (ON)	○	▶ ▶	○	○

- If all of the continuity check is OK, the SET/RESUME/CANCEL switch is OK.
- If there is no continuity, remove the steering wheel, then turn it over and go to step 3.

3. Repeat step 2, but this time tests at the 4-P connector of the steering wheel.

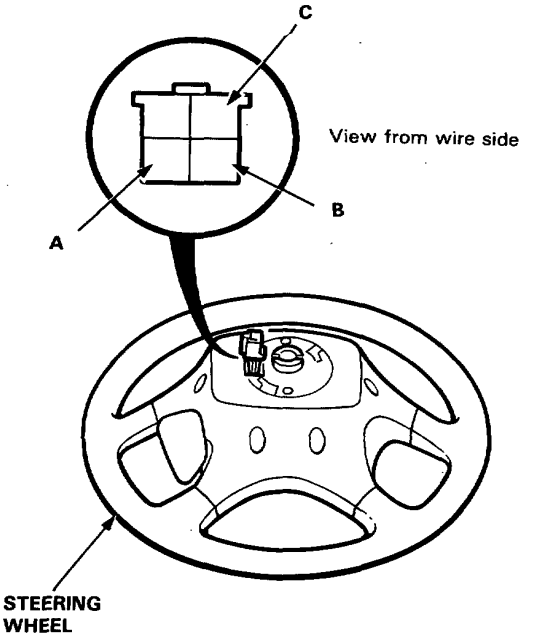

- If there is no continuity, replace the switch.
- If all of the continuity check is OK, remove the steering column lower cover and disconnect the 4-P connector from the slip ring, then check for open in the lighting switch wires (BLU/RED, LT GRN/BLK and LT GRN/RED).
  If the wires are OK, check the slip ring.

Slip Ring Test/Replacement (Without SRS)

1. Remove the steering column upper and lower covers.

2. There should be continuity between the No. 1 and C terminals, the No. 2 and B terminals, and the No. 3 and C terminals, as you turn the slip ring.

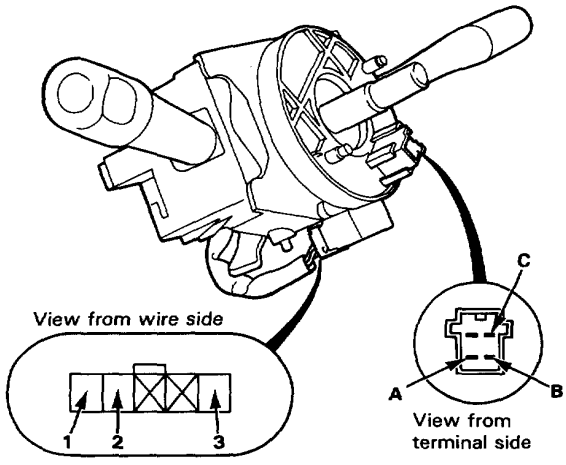

3. If necessary, remove the 4 screws and disconnect the 5-P connector to remove the slip ring from the combination switch. Replace the slip ring.

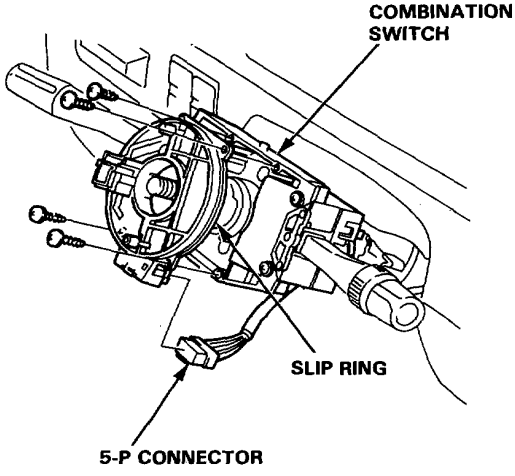

SET/RESUME/CANCEL Switch Replacement (Without SRS)

1. Remove the steering wheel.

2. Remove the screw cover, the 2 screws and the SET/RESUME/CANCEL switch from the steering wheel.

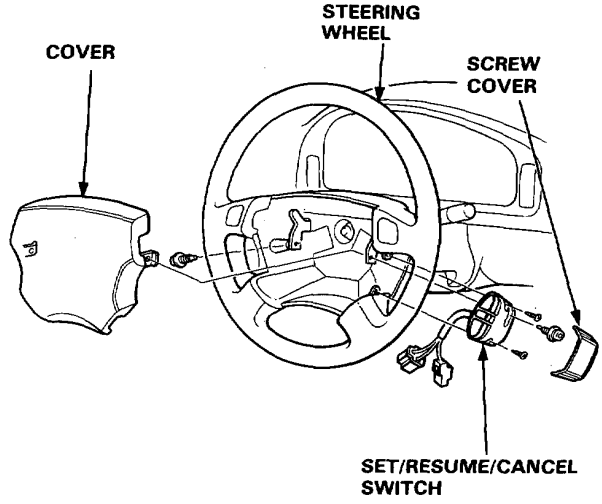

Brake Light Switch Test

1. Disconnect the 4-P connector from the switch.

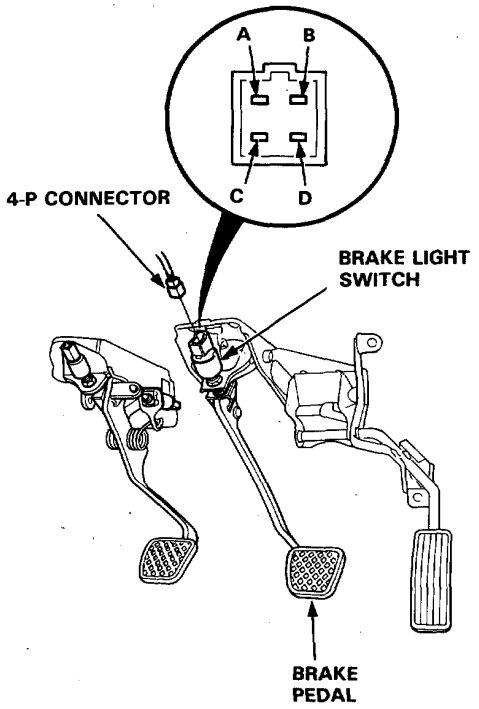

2. Check for continuity between the terminals according to the table.

Terminal / Brake pedal	A	B	C	D
RELEASED	○			○
PUSHED		○	○	

3. If necessary, replace the switch or adjust pedal height (See section 12).

Clutch Switch Test

1. Disconnect the 2-P connector from the switch.

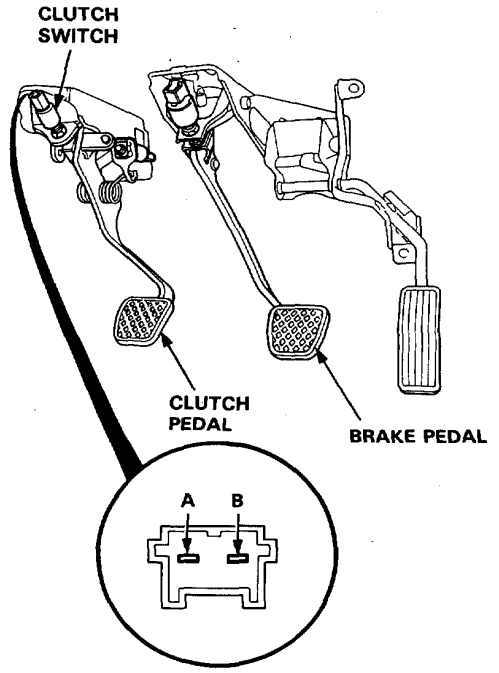

2. Check for continuity between the terminals according to the table.

Terminal / Clutch pedal	A	B
RELEASED	○	○
PUSHED		

3. If necessary, replace the switch or adjust pedal height (See section 12).

Shift Position Console Switch Test

1. Remove the front console, then disconnect the 14-P connector from the console switch.

2. Check for continuity between the terminals in each switch position according to the table.

   NOTE:
   - Move the lever back and forth without touching the push button at each position, and check for continuity within the range of free play of the shift lever.
   - If there is no continuity within the range of free play, adjust the position of the console switch sole switch (See page 23-168).

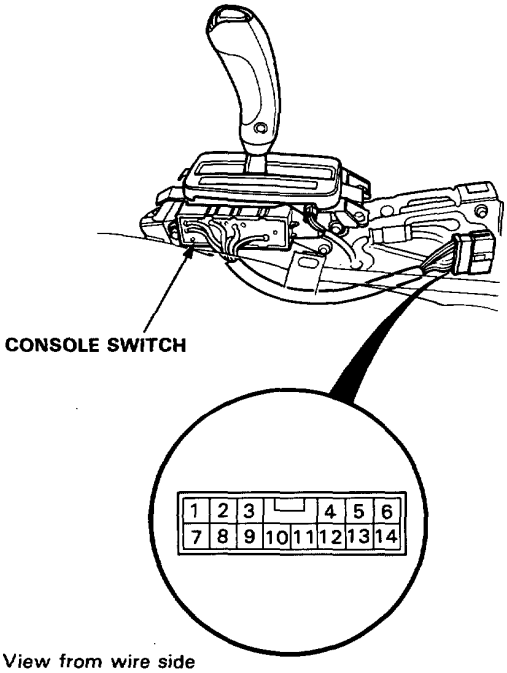

View from wire side

Shift Position Switch (for cruise control)

Position \ Terminal	5	9
1		
2	○———	———○
D_3	○———	———○
D_4	○———	———○
N		
R		
P		

Actuator Assembly Test

1. Disconnect 4-P connector from the actuator.

2. Check that the output linkage moves smoothly.

3. Connect battery power to the D terminal and ground to the A terminal.

4. Check for a clicking sound from the magnetic clutch and that the output linkage is locked.
   You should be able to hear the motor.

5. If the output linkage is not locked, replace the actuator assembly.

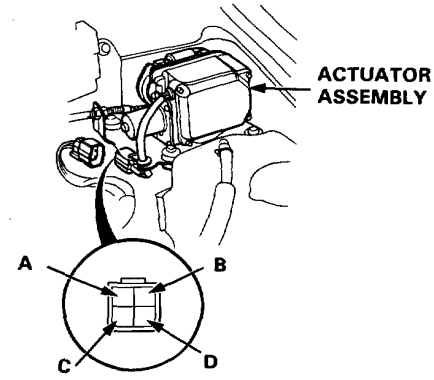

6. Check the operation of the actuator motor in each output linkage position according to the table.
   You should be able to hear the motor.

Connect to battery power	Connect to ground	Output linkage position		
⊕	⊖	FULL CLOSE	MIDDLE POSITION	FULL OPEN
C Terminal	B Terminal	The motor operates	The motor operates	The motor stops
B Terminal	C Terminal	The motor stops	The motor operates	The motor operates

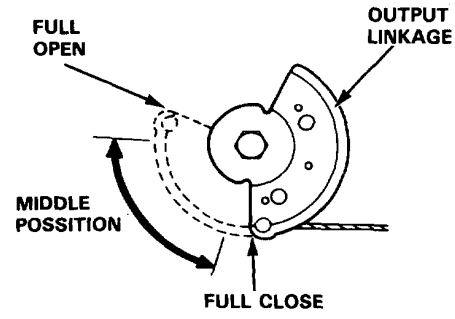

Actuator Cable Adjustment

1. Check that the actuator cable operates smoothly with no binding or sticking.

2. Start the engine and warm it up to normal operating temperature (the cooling fan comes on twice).

3. Measure the amount of movement of the output linkage until the engine speed starts to increase. At first, the output linkage should be located at the fully closed position. Free play should be 5 ± 1.5 mm (0.20 ± 0.06 in.)

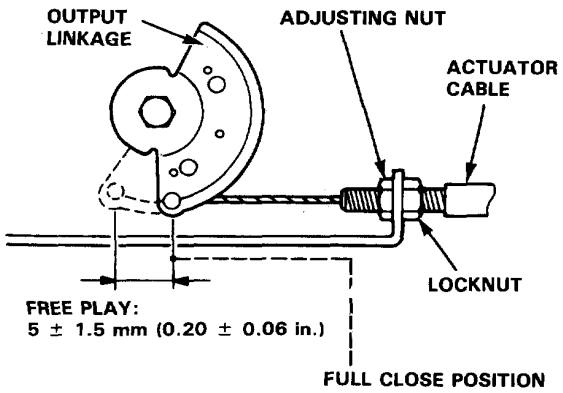

4. If the free play is not within specs, loosen the locknut and turn the adjusting nut as required.

   NOTE: If necessary, check the throttle control system (Section 11), then recheck the output linkage free play.

5. Retighten the locknut and recheck the free play.

Security Alarm System

Wiring Location

CAUTION:
- All SRS electrical wiring harnesses are covered with yellow outer insulation.
- When disconnecting the SRS wire harness, install the short connector on the airbag then disconnect the wire harness (See page 23-412).
- Replace the entire affected SRS harness assembly if there is an open circuit or damage to the wiring.

NOTE: LHD type is shown. RHD type is similar.

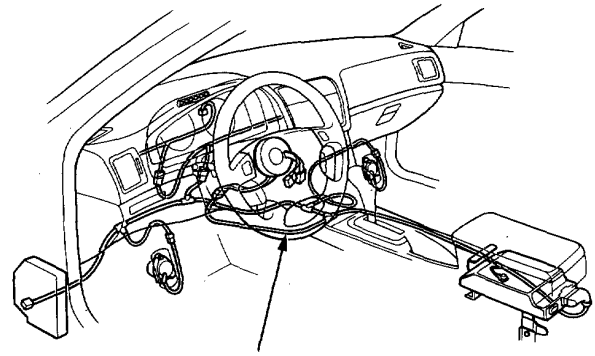

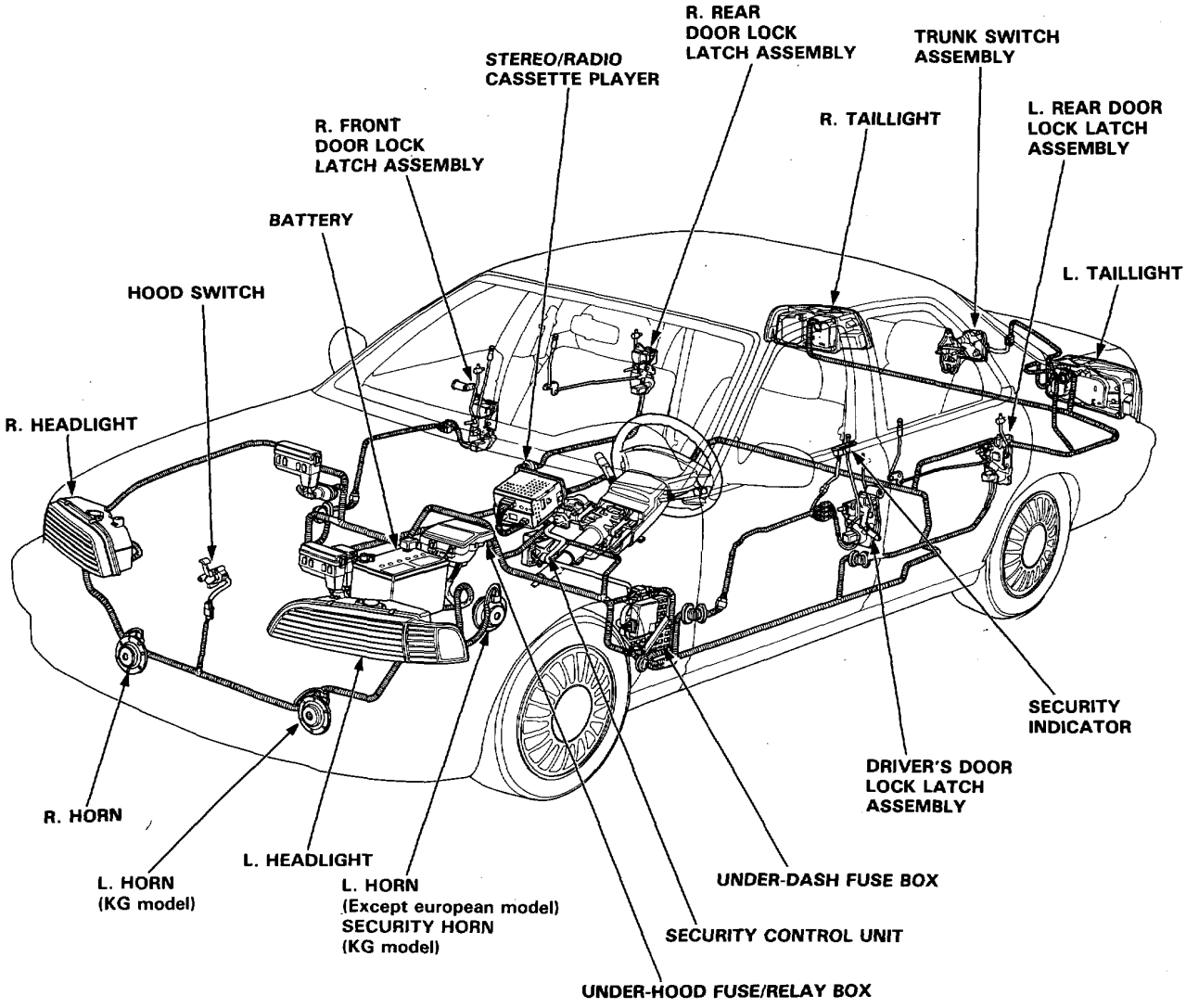

Security Alarm System

Component Location Index

NOTE:
- LHD type is shown. RHD type is similar.
- Security indicator of RHD, located on the dashboard lower panel.

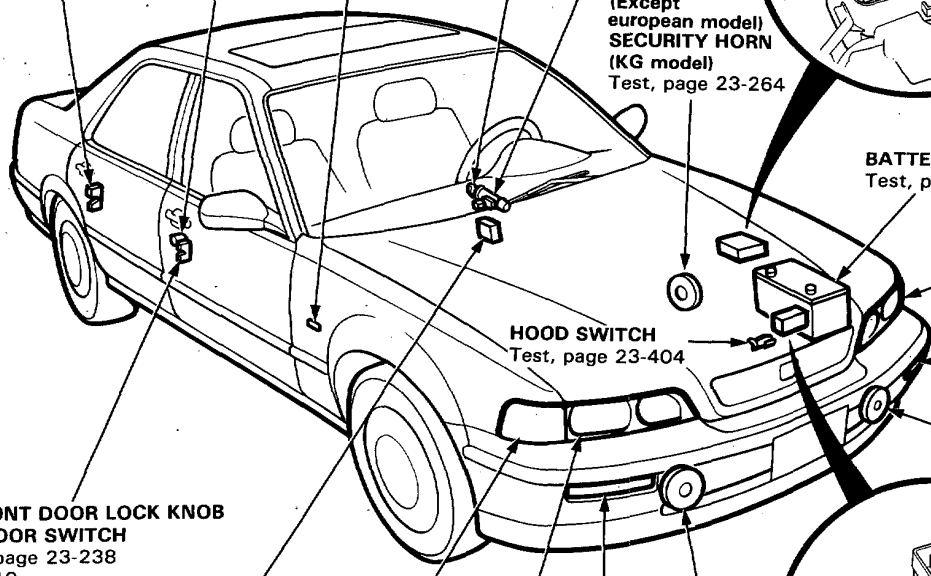

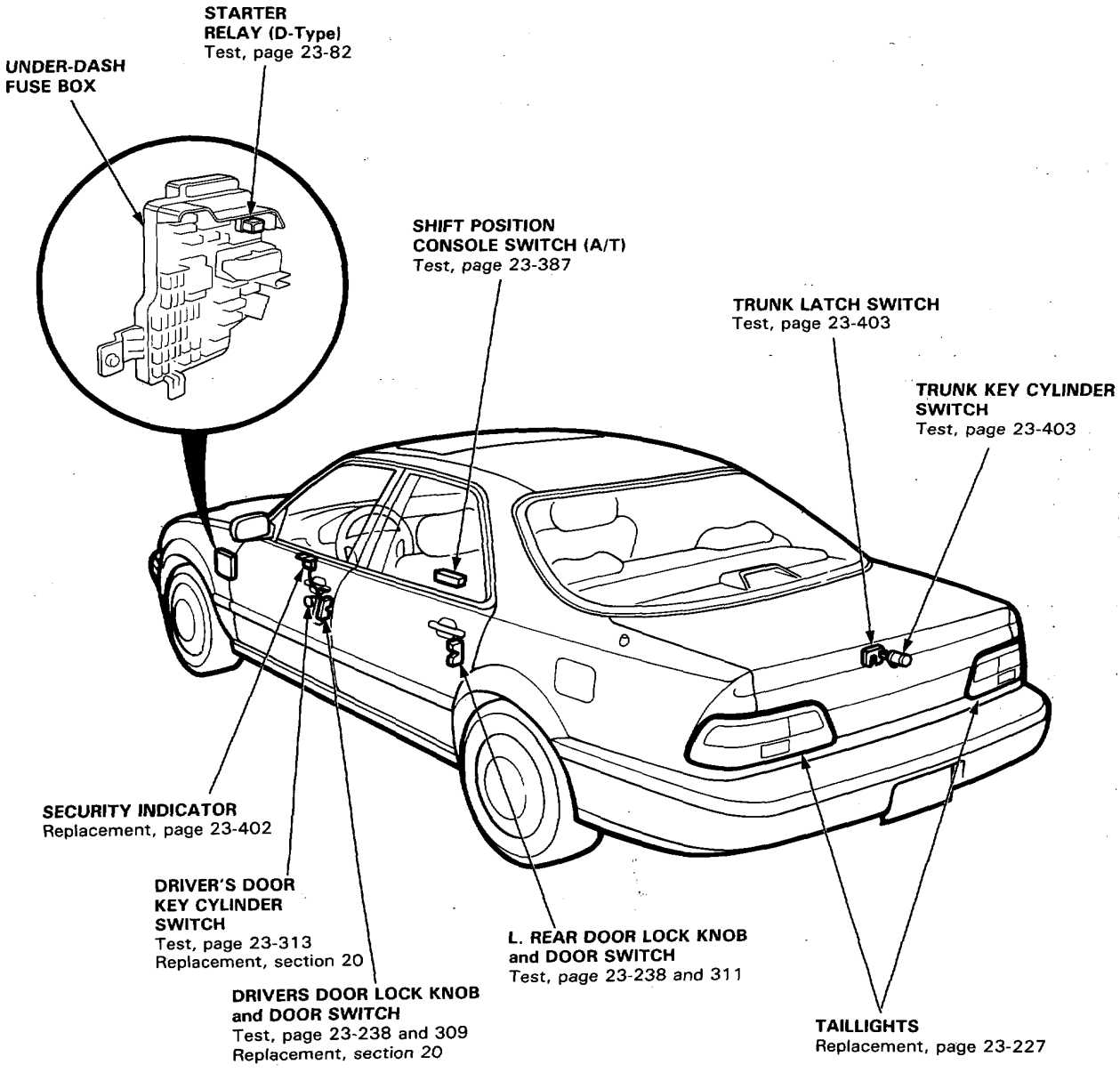
STARTER
RELAY (D-Type)
Test, page 23-82
UNDER-DASH
FUSE BOX
SHIFT POSITION
CONSOLE SWITCH (A/T)
Test, page 23-387
TRUNK LATCH SWITCH
Test, page 23-403
TRUNK KEY CYLINDER
SWITCH
Test, page 23-403
SECURITY INDICATOR
Replacement, page 23-402
DRIVER'S DOOR
KEY CYLINDER
SWITCH
Test, page 23-313
Replacement, section 20
DRIVERS DOOR LOCK KNOB
and DOOR SWITCH
Test, page 23-238 and 309
Replacement, section 20
L. REAR DOOR LOCK KNOB
and DOOR SWITCH
Test, page 23-238 and 311
TAILLIGHTS
Replacement, page 23-227

Security Alarm System

Description

This system is activated automatically 15 seconds after everything has been closed and locked. The security alarm system indicator light located on the driver's side door trim panel (LHD) or dashboard lower panel (RHD) will flash after the doors are properly locked.
If any of the following conditions occur, the horns will sound, the headlights will flash, parking lights and taillights will flash (KQ, KT and KY models) or the horn will sound, turn signal lights will flash (KG model) for about 2 minutes, or until the system is disarmed by unlocking either door from the outside keylock with the key.

① Door is opened forcibly.
② Trunk lid is opened without using the key.
③ Hood is opened.
④ Battery terminal(s) are removed and reconnected.
⑤ Engine starter circuit and battery circuit are bypassed by breaking the ignition switch.
⑥ Hood/trunk lid opener in the vehicle is operated.

Flowchart of the security alarm system operation:

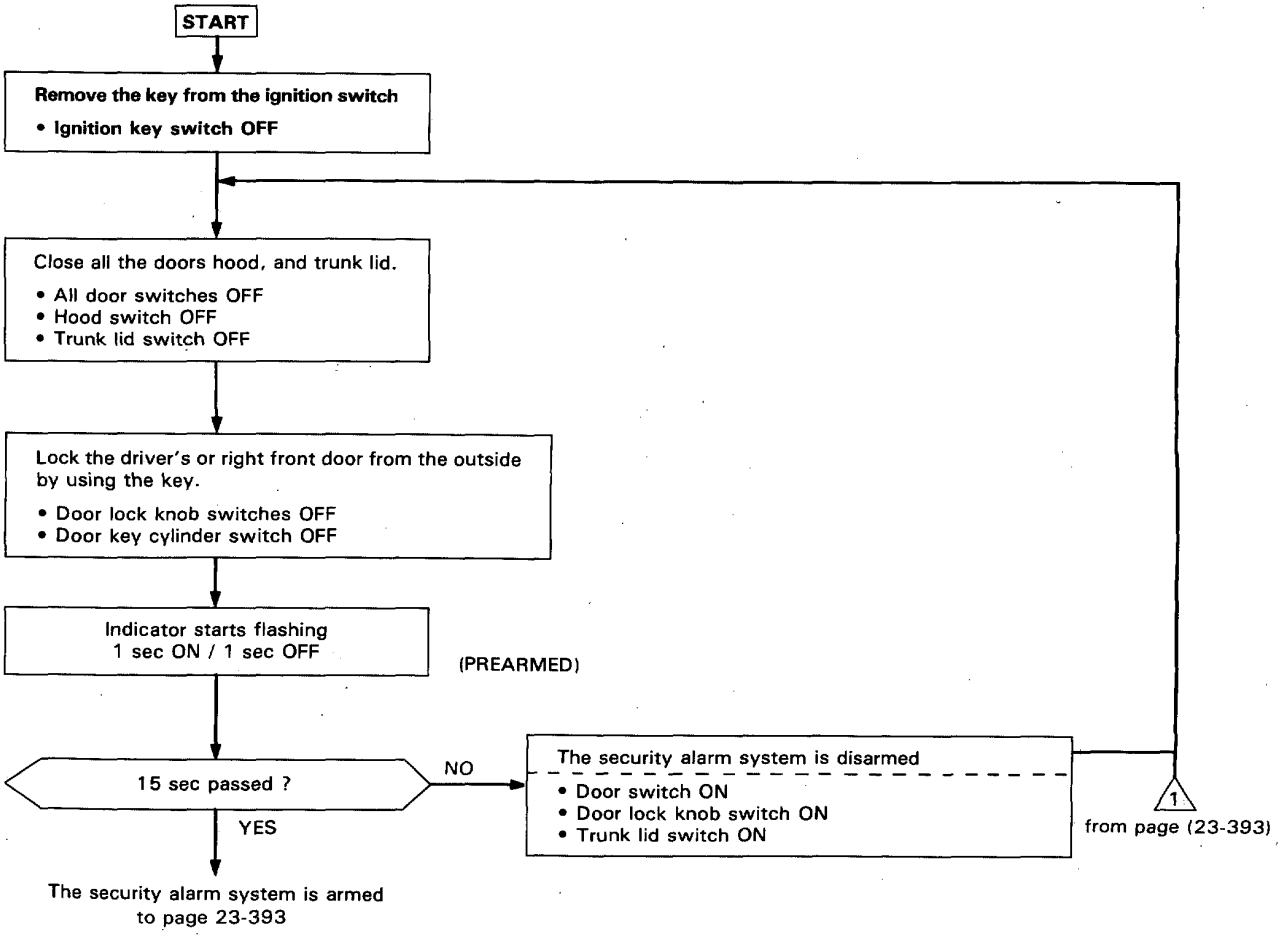

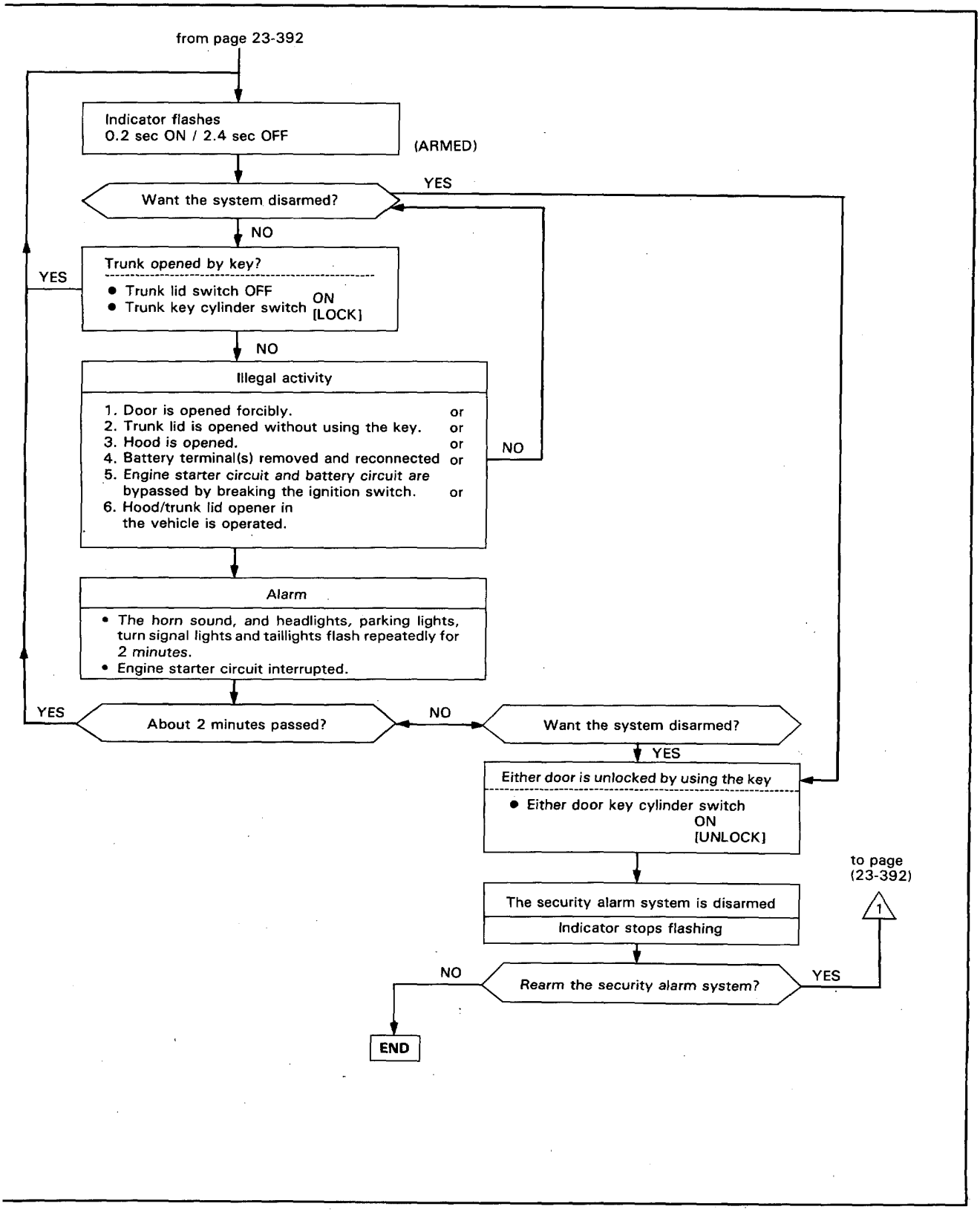
from page 23-392
Indicator flashes
0.2 sec ON / 2.4 sec OFF
(ARMED)
Want the system disarmed?
YES
NO
Trunk opened by key?
YES
• Trunk lid switch OFF
• Trunk key cylinder switch ON [LOCK]
NO
Illegal activity
1. Door is opened forcibly. or
2. Trunk lid is opened without using the key. or
3. Hood is opened. or
4. Battery terminal(s) removed and reconnected or
5. Engine starter circuit and battery circuit are bypassed by breaking the ignition switch. or
6. Hood/trunk lid opener in the vehicle is operated.
NO
Alarm
• The horn sound, and headlights, parking lights, turn signal lights and taillights flash repeatedly for 2 minutes.
• Engine starter circuit interrupted.
YES
About 2 minutes passed?
NO
Want the system disarmed?
YES
Either door is unlocked by using the key
• Either door key cylinder switch ON [UNLOCK]
The security alarm system is disarmed
Indicator stops flashing
to page (23-392)
1
NO
Rearm the security alarm system?
YES
END

Security Alarm System

Circuit Diagram (KQ. KT and KY models)

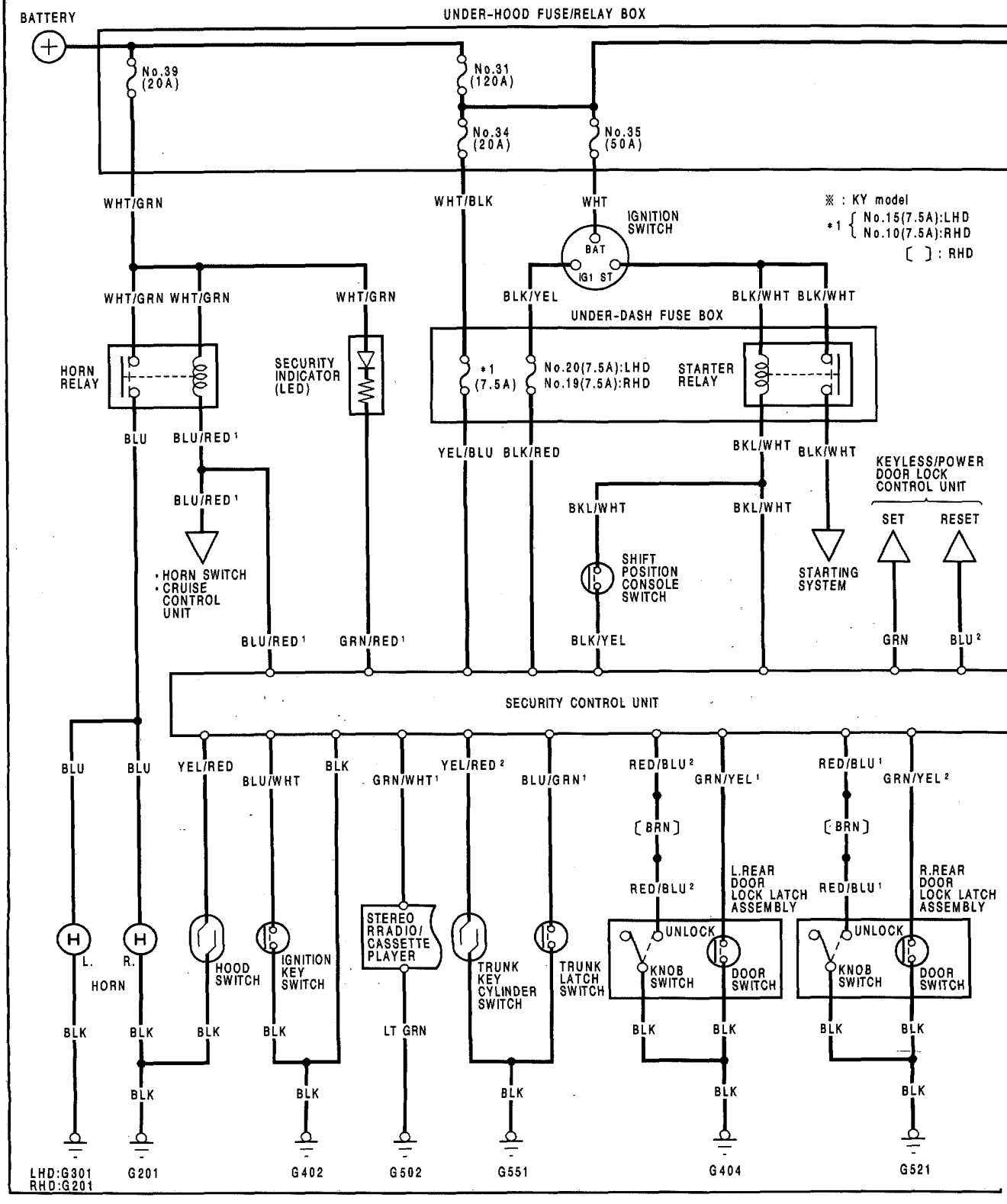

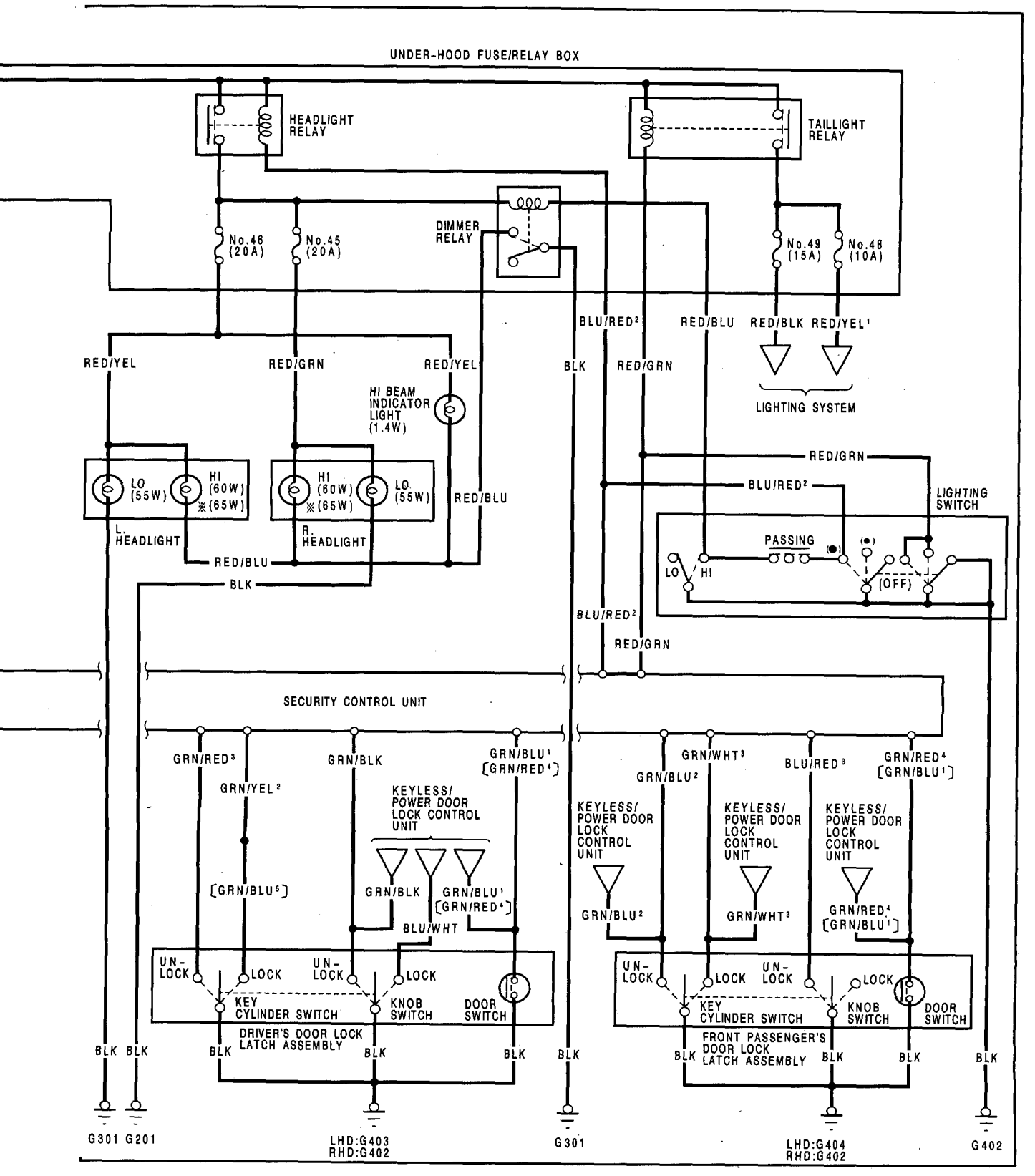
UNDER-HOOD FUSE/RELAY BOX
HEADLIGHT RELAY
TAILLIGHT RELAY
DIMMER RELAY
No.46 (20A)
No.45 (20A)
No.49 (15A)
No.48 (10A)
BLU/RED²
RED/BLU
RED/BLK
RED/YEL¹
LIGHTING SYSTEM
RED/YEL
RED/GRN
RED/YEL
BLK
RED/GRN
HI BEAM INDICATOR LIGHT (1.4W)
LO (55W)
HI (60W) ※(65W)
HI (60W) ※(65W)
LO (55W)
L. HEADLIGHT
R. HEADLIGHT
RED/BLU
BLK
RED/GRN
BLU/RED²
LIGHTING SWITCH
PASSING
LO
HI
(OFF)
BLU/RED²
RED/GRN
SECURITY CONTROL UNIT
GRN/RED³
GRN/YEL²
[GRN/BLU⁵]
GRN/BLK
GRN/BLU¹ [GRN/RED⁴]
KEYLESS/ POWER DOOR LOCK CONTROL UNIT
GRN/BLK
GRN/BLU¹ [GRN/RED⁴]
BLU/WHT
UN-LOCK
LOCK
KEY CYLINDER SWITCH
KNOB SWITCH
DOOR SWITCH
DRIVER'S DOOR LOCK LATCH ASSEMBLY
GRN/BLU²
GRN/WHT³
BLU/RED³
GRN/RED⁴ [GRN/BLU¹]
KEYLESS/ POWER DOOR LOCK CONTROL UNIT
GRN/BLU²
GRN/WHT³
GRN/RED⁴ [GRN/BLU¹]
FRONT PASSENGER'S DOOR LOCK LATCH ASSEMBLY
BLK
G301
G201
LHD:G403 RHD:G402
G301
LHD:G404 RHD:G402
G402

Security Alarm System

Circuit Diagram (KG model)

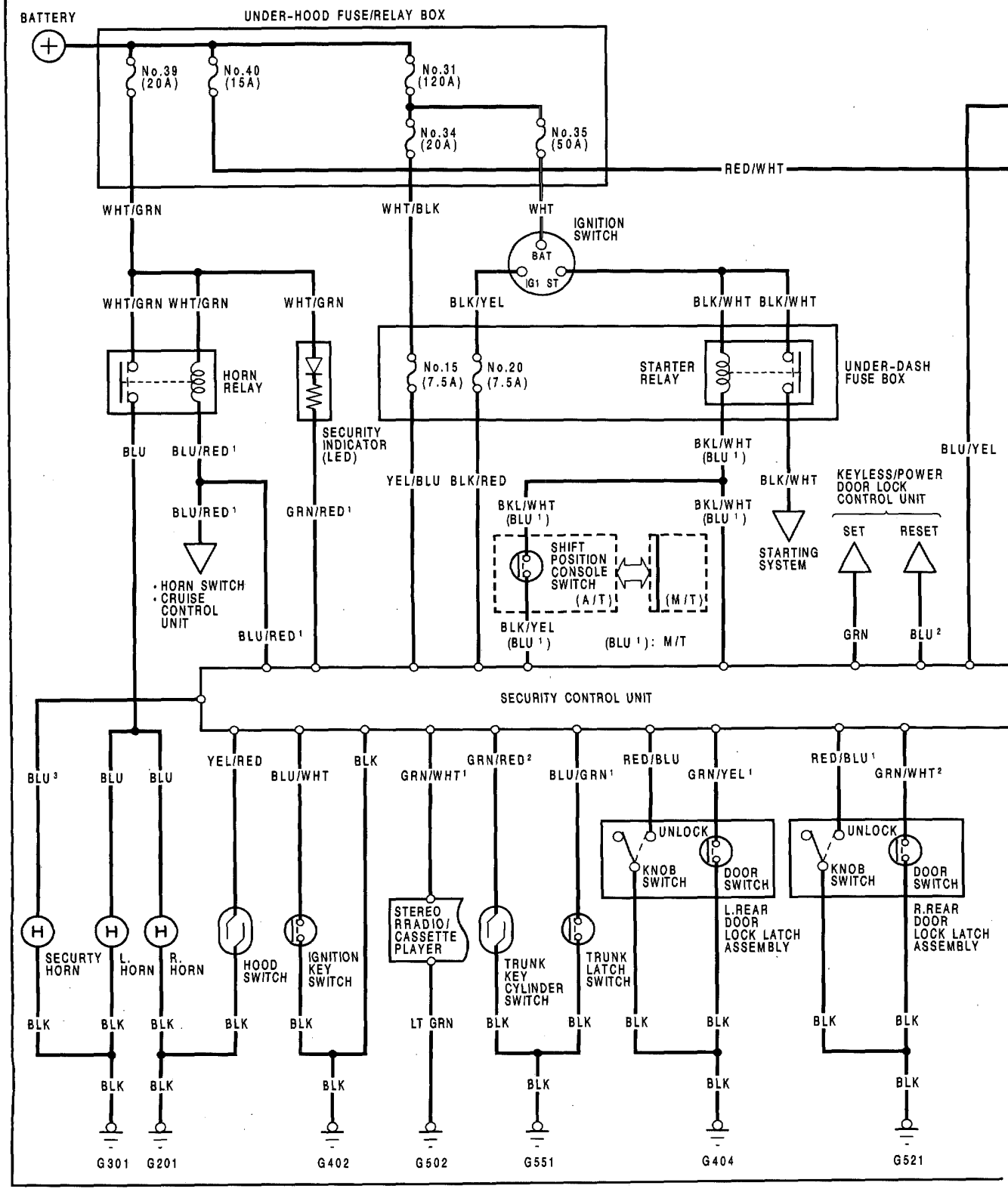

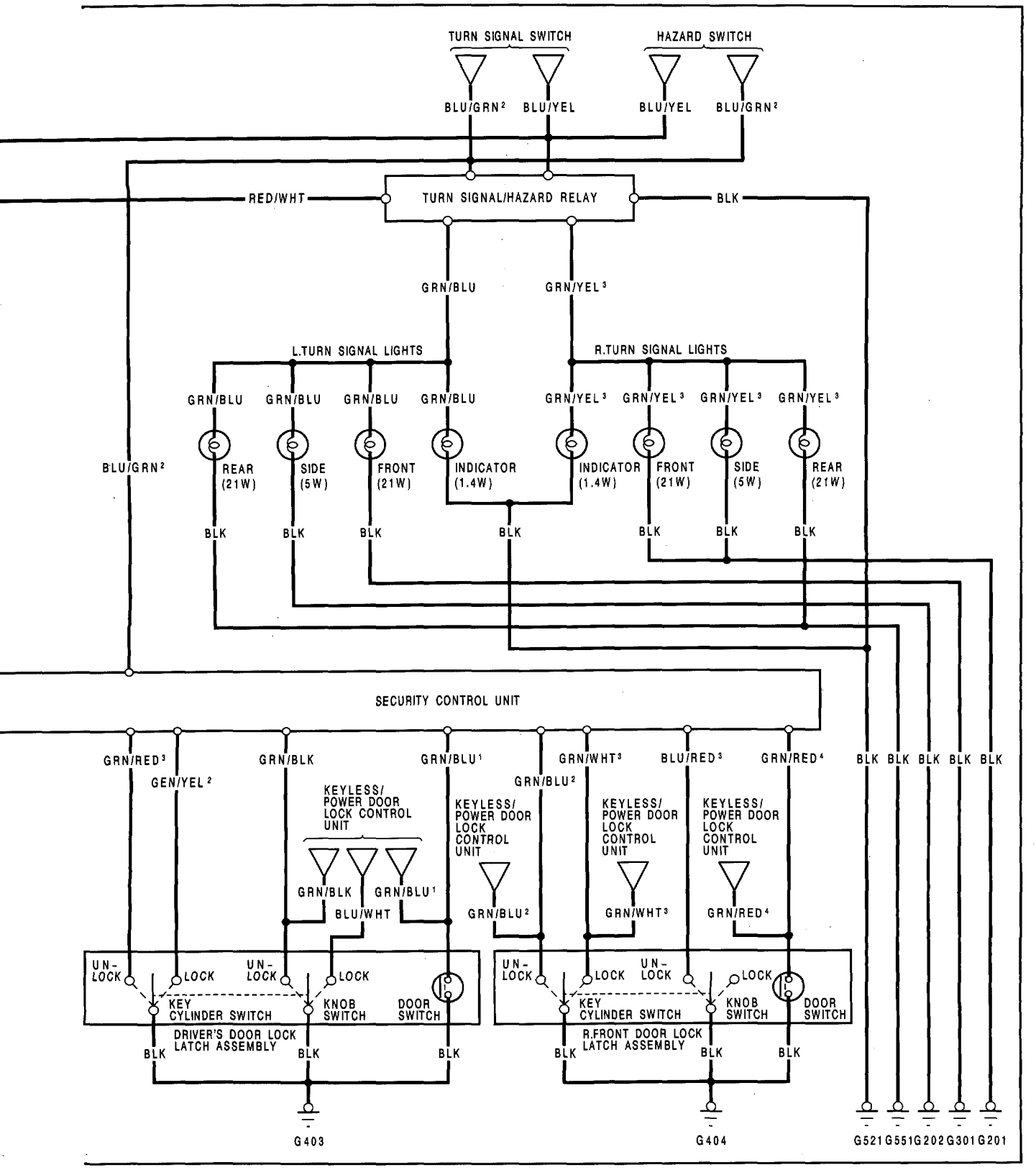
TURN SIGNAL SWITCH
HAZARD SWITCH
BLU/GRN 2
BLU/YEL
BLU/YEL
BLU/GRN 2
RED/WHT
TURN SIGNAL/HAZARD RELAY
BLK
GRN/BLU
GRN/YEL 3
L.TURN SIGNAL LIGHTS
R.TURN SIGNAL LIGHTS
GRN/BLU
GRN/BLU
GRN/BLU
GRN/BLU
GRN/YEL 3
GRN/YEL 3
GRN/YEL 3
GRN/YEL 3
BLU/GRN 2
REAR (21W)
SIDE (5W)
FRONT (21W)
INDICATOR (1.4W)
INDICATOR (1.4W)
FRONT (21W)
SIDE (5W)
REAR (21W)
BLK
BLK
BLK
BLK
BLK
BLK
BLK
SECURITY CONTROL UNIT
GRN/RED 3
GEN/YEL 2
GRN/BLK
GRN/BLU 1
GRN/BLU 2
GRN/WHT 3
BLU/RED 3
GRN/RED 4
BLK BLK BLK BLK BLK
KEYLESS/ POWER DOOR LOCK CONTROL UNIT
KEYLESS/ POWER DOOR LOCK CONTROL UNIT
KEYLESS/ POWER DOOR LOCK CONTROL UNIT
KEYLESS/ POWER DOOR LOCK CONTROL UNIT
GRN/BLK
GRN/BLU 1
BLU/WHT
GRN/BLU 2
GRN/WHT 3
GRN/RED 4
UN-LOCK
LOCK
UN-LOCK
LOCK
KEY CYLINDER SWITCH
KNOB SWITCH
DOOR SWITCH
DRIVER'S DOOR LOCK LATCH ASSEMBLY
BLK
BLK
BLK
UN-LOCK
LOCK
UN-LOCK
LOCK
KEY CYLINDER SWITCH
KNOB SWITCH
DOOR SWITCH
R.FRONT DOOR LOCK LATCH ASSEMBLY
BLK
BLK
BLK
G403
G404
G521 G551 G202 G301 G201

Security Alarm System

Troubleshooting

NOTE: The numbers in the table show the troubleshooting sequence.

Symptom \ Item to be inspected		in the under-hood fuse/relay box: Blown *1 (7.5A) fuse	in the under-hood fuse/relay box: Blown *2 (7.5A) fuse	in the under-dash fuse box: Blown No. 39 (20A) fuse	Faulty indicator light (LED)	Horn circuit	Starting system	Turn signal/hazard system	A/T: Shift position console switch M/T: Clutch interlock switch	Lighting system	Door key switch	Ignition key switch	Trunk key switch	Trunk latch switch	Hood switch	Door switch	Control unit input	Poor ground	Open circuit in wires, loose or disconnected terminals
Security alarm can't be set (and indicator light does not flash).		1	2	3	4							5						G301 G302	YEL/BLU, YEL, WHT/GRN, GRN/RED or BLU/WHT
Starting system does not operate.							1		2								3	G301 G302	BLK/WHT, BLK/GRN (BLU) or BLK/YEL (BLU): M/T
Security alarm can be set, but alarm does not operate when the trunk, hood or either door is unlocked without the key.	Horn alarm			1		2											3		WHT/GRN, BLU, or BLU/RED
	*3 Headlight alarm									1							2		BLU/RED[2] or RED/GRN
	*4 Hazard light alarm							1									2		RED/WHT, BLU/YEL, or BLU/GRN[2]
	Both alarms																1		
Alarm not cancelled when the door is opened with the key.											1						2	G301 G302 G304	GRN/RED[2], GRN/BLU[2], GRN/BLK or BLU/RED[3]
Alarm not cancelled when the key is inserted in the ignition switch.			1									2					3		BLK/RED or BLU/WHT
Alarm not cancelled when the trunk lid is opened with the key.													1	2			3	G501	GRN/RED[1] or BLU/GRN
Alarm does not operate when the hood is opened.															1		2	G301	YEL/RED
Alarm does not operate when the door is opened.																1	2	G301 G302 G304 G251	GRN/BLU, GRN/RED, GRN/YEL or GRN/WHT

*1 { No. 15 (7.5A): LHD; No. 10 (7.5A): RHD }

*2 { No. 20 (7.5A): LHD; No. 19 (7.5A): RHD }

*3: KQ, KT and KY models

*4: KG model

Control Unit Input Test

Remove the dashboard lower panel.
Disconnect the 22-P and 16-P connectors from the control unit.
Make the following input tests at the connector terminals.

NOTE:
- Recheck the connections between the 22-P connector and the control unit, the 16-P connector and the control unit, then replace the control unit if all input tests prove OK.
- Several different wires have the same color. They have been given a number suffix to distinguish them (for example YEL/GRN[1] and YEL/GRN[2] are not the same).
- The illustration is the LHD type.

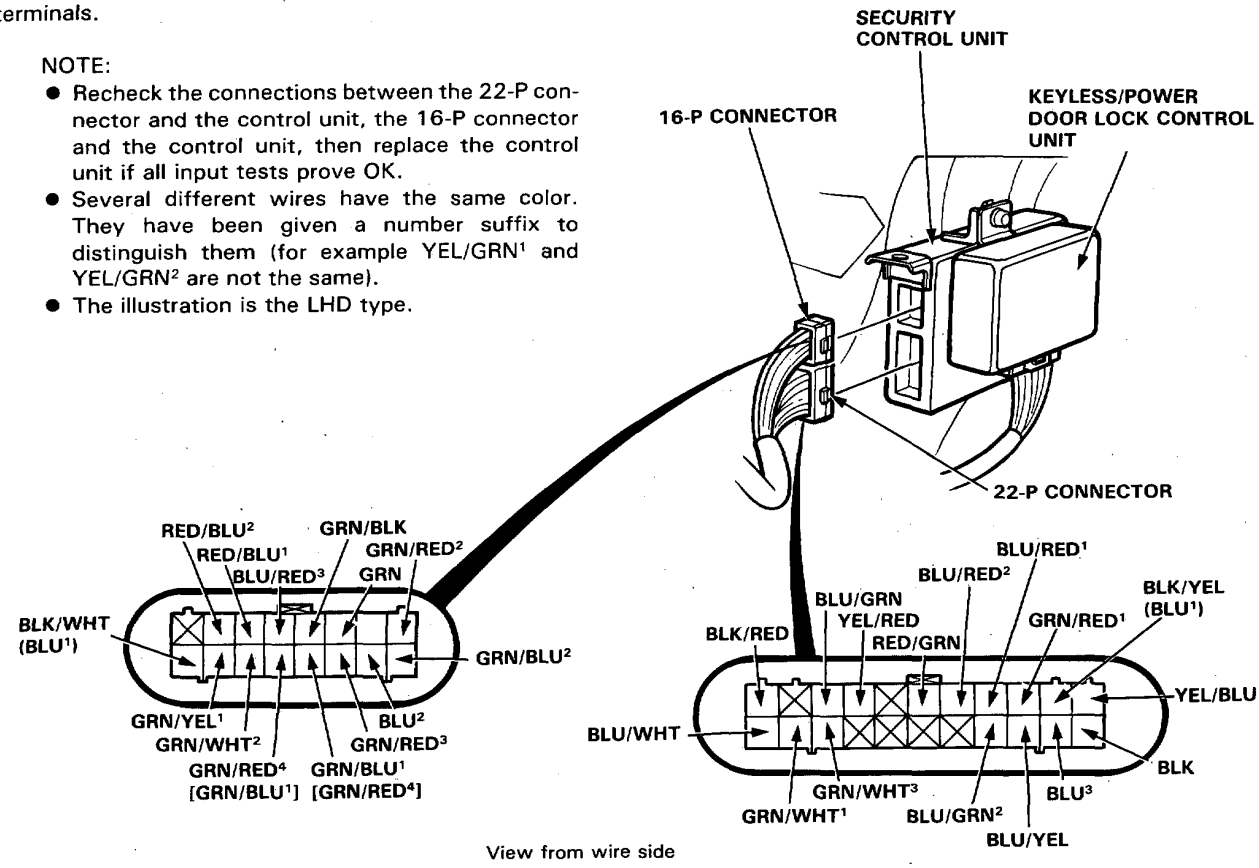

No.	Wire	Test condition	Test: desired result	Possible cause (if result is not obtained)
1	BLK	Under all conditions.	Check for continuity to ground: should be continuity.	• Poor ground (G402). • An open in the wire.
2	YEL/BLU	Under all conditions.	Check for voltage to ground: should be battery voltage.	• Blown No. *1 (7.5A) fuse. • An open in the wire.
3	GRN/RED[1]	Under all conditions.	Connect to ground: security indicator should come on.	• Blown No. 39 (20A) fuse. • Faulty security indicator. • An open in the wire.
4	BLK/RED	Ignition switch ON.	Check for voltage to ground: should be battery voltage.	• Blown No. *2 (7.5A) fuse. • An open in the wire.
5	BLU/WHT (BLU[1])	Ignition switch at START.	Check for voltage to ground: should be battery voltage.	• Faulty starter relay. • An open in the wire.

(BLU[1]): M/T
[ ]: RHD

(cont'd)

Control/Unit Input Test (cont'd)

No.	Wire	Test condition	Test: desired result	Possible cause (if result is not obtained)
6	BLK/YEL (BLU[1])	Ignition switch at START and; (A/T): shift position in "P".	Connect to ground: Starter should crank the engine.	• Blown No. 39 (50A) fuse. • Faulty starting system. • Faulty starter relay. • Faulty shift position switch (A/T). • An open in the wire.
7	BLU/RED[1]	Under all conditions.	Connect to ground: Left and right horns should sound.	• Blown No. 45 (20A) fuse. • Faulty horn relay. • Either horn faulty. • Poor ground (g152, G153). • An open in the wire.
8	*1 BLU[3]	Connect the battery voltage to the BLU[3] terminal.	Security horn should sound as the battery is connected.	• Faulty security horn. • Poor ground (G301). • An open in the wire.
9	*2 BLU/RED[2]	Under all conditions.	Connect to ground: headlights should come on.	• Faulty lighting relay. • Faulty lighting system. • An open in the wire.
10	*2 RED/GRN	Under all conditions.	Connect to ground: Taillights should come on.	• Faulty taillight relay. • Faulty taillight system. • An open in the wire.
11	*1 BLU/YEL	Connect the battery voltage to the BLU/YEL terminal.	R. Turn signal lights should come on as the battery is connected.	• Faulty turn signal/hazard relay system. • Poor ground (G201, G202, G301, G521, or G551). • An open in the wire.
12	*1 BLU/GRN[2]	Connect the battery voltage to the BLU/GRN[2] terminal.	L. Turn signal lights should come on as the battery is connected.	

Reconnect the 22-P and 16-P connectors to the control unit.

No.	Wire	Test condition	Test: desired result	Possible cause (if result is not obtained)
13	YEL/RED	Hood open.	Check for voltage to ground: should be 1 V or less.	• Faulty hood switch. Misadjusted hood switch. • Poor ground (G201). • An open in the wire.
		Hood closed.	Check for voltage to ground: should be 5 V or more.	
14	BLU/WHT	Ignition key is inserted into the ignition switch.	Check for voltage to ground: should be 1 V or less.	• Faulty ignition key switch. • Poor ground (G402). • An open in the wire.
		Ignition key is removed from the ignition switch.	Check for voltage to ground: should be 5 V or more.	
15	GRN/WHT[1]	Under all conditions.	Check for voltage to ground: should be 1 V or less.	• Poor ground (G502). • An open in the wire.
16	GRN/RED[2]	Trunk key in UNLOCK.	Check for voltage to ground: should be 1 V or less.	• Faulty trunk key. • Poor ground (G551). • An open in the wire.
17	BLU/GRN[1]	Trunk lid open.	Check for voltage to ground: should be 1 V or less.	• Faulty trunk latch switch. Misadjusted trunk latch switch. • Poor ground (G551). • An open in the wire.
		Trunk lid closed.	Check for voltage to ground: should be 5 V or more.	
18	GRN/BLU[1] [GRN/RED[4]]	Driver's door opened.	Check for voltage to ground: when the door is opened, there should be 1 V or less, and when the door is closed, there should be 5 V or more.	• Faulty driver's door or right front door switches. • Poor ground (LHD: G403, G404 or RHD: G402). • An open in the wire.
		Driver's door closed.		
19	GRN/RED[4] [GRN/BLU[1]]	R. Front door opened.		
		R. front door closed.		

No.	Wire	Test condition	Test: desired result	Possible cause (if result is not obtained)
20	GRN/YEL[1]	L. Rear door opened.	Check for voltage to ground: when the door is opened, there should be 1 V or less, and when the door is closed, there should be 5 V or more.	• Faulty left rear door or right rear door switches. • Poor ground (G404, G521). • An open in the wire.
		L. Rear door closed.		
21	GRN/WHT[2]	R. Rear door opened.		
		R. Rear door closed.		
22	GRN/RED[3]	Driver's door key in UNLOCK.	Check for voltage to ground: should be 1 V or less.	• Faulty driver's door or right front door key switches. • Poor ground (LHD: G403, G404 or RHD: G402). • An open in the wire.
23	GRN/BLU[2]	R. Front door key in UNLOCK.		
24	GRN/YEL[2]	Driver's door key in LOCK.	Check for voltage to ground: should be 1 V or less, as the door keylock is turned in LOCK.	• Faulty driver'd door or right front door key switches. • Poor ground (LHD: G403, G404 or RHD: G402). • An open in the wire.
25	GRN/WHT[3]	R. front door key in LOCK.		
26	GRN/BLK	Driver's door lock knob in UNLOCK	Check for voltage to ground: should be 1 V or less.	• Faulty driver's door lock knob switch (built in the actuator). • Poor ground (LHD: G403 or RHD: G402). • An open in the wire.
27	BLU/RED[3]	R. Front door lock knob in UNLOCK.	Check for voltage to ground: should be 1 V or less.	• Faulty right front door lock knob switch (built in the actuator). • Poor ground (G304). • An open in the wire.
28	RED/BLU	L. Rear door lock knob in UNLOCK.	Check for voltage to ground: should be 1 V or less.	• Faulty right rear door lock knob switch (built in the actuator). • Poor ground G404). • An open in the wire.
29	RED/BLU[1]	R. Rear door lock knob in UNLOCK.	Check for voltage to ground: should be 1 V or less.	• Faulty right rear door lock knob switch (built in the actuator). • Poor ground (G521). • An open in the wire.
30	GRN • BLU	Remove the ignition key. Close the all door, hood and trunk lid. All door lock knob in lock.	Connect the GRN terminal to ground: security indicator starts flashing. While the security indicator is flashing, connect the BLU terminal to ground: security indicator should goes off. *3	• Faulty keyless/power door lock control unit (See page 23-308). • An open in the wire.

*1: KG model
*2: KQ, KT and KY models
*3: When the security indicator does not operate, substitute a known-good security control unit and recheck. If the security indicator operate, replace the original security control unit.

Indicator Replacement

LHD:

1. Remove the door trim panel (See section 20).
2. Remove the 2 screws from the indicator.
3. Remove the indicator from the door trim panel.

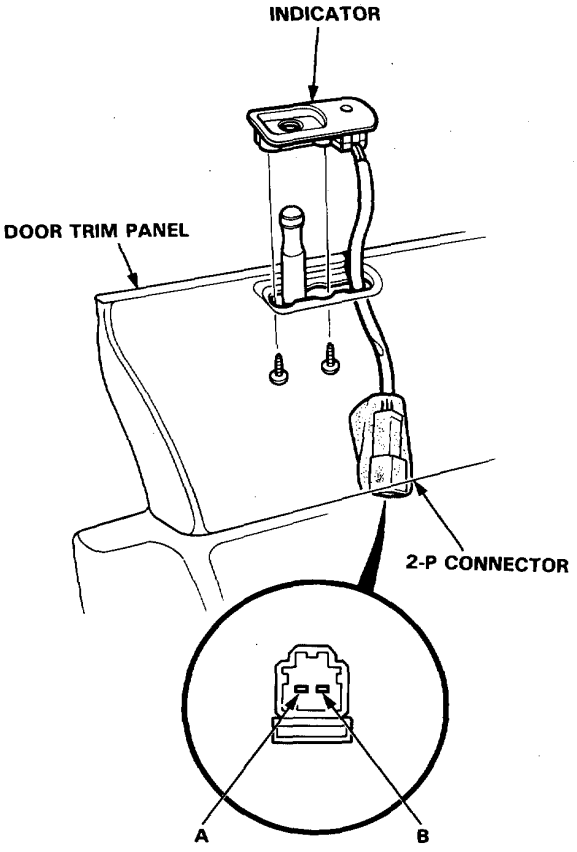

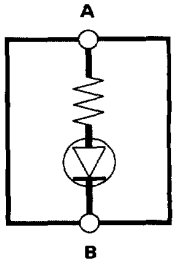

RHD:

1. Pry off the cruise main switch/security indicator from the dash board lower panel. And disconnect the 6-P connectors.

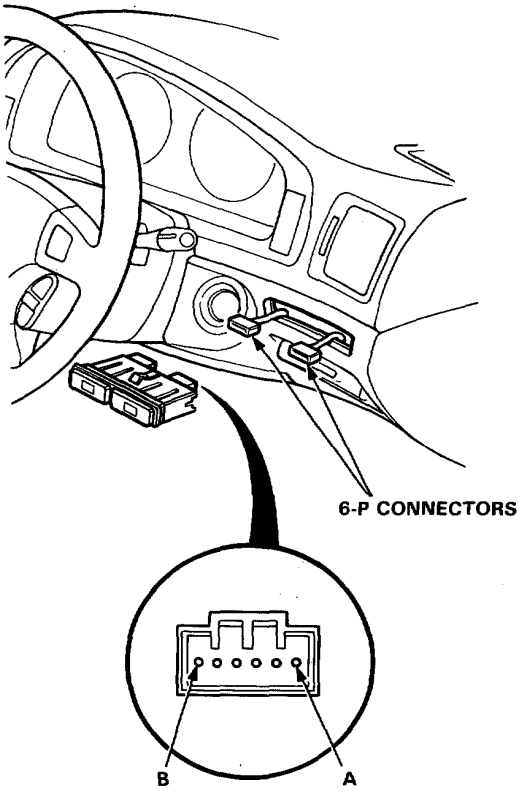

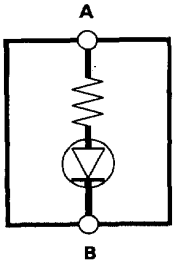

Trunk Latch Switch Test

1. Open the trunk lid and remove the trunk rear trim panel.
2. Disconnect the 6-P connector from the trunk latch.
3. There should be continuity between the A and B terminals with the trunk lid opened.

View from terminal side.

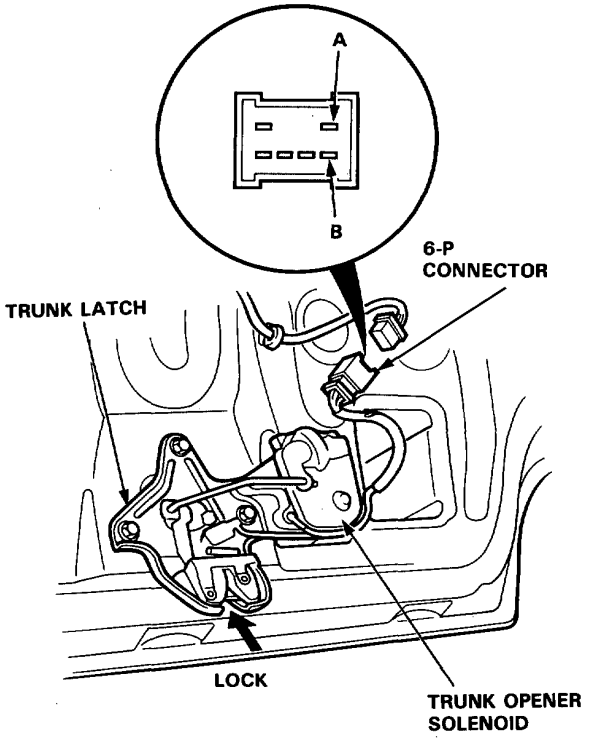

4. There should be no continuity with the trunk latch in LOCK (trunk lid closed) position.

Trunk Key Cylinder Switch Test

1. Open the trunk lid and remove the trunk rear trim panel.
2. Disconnect the 2-P connector from the trunk key cylinder switch.
3. There should be continuity between the A and B terminals when the trunk keylock is turned to UNLOCK with the key.
   There should be no continuity when the keylock is released.

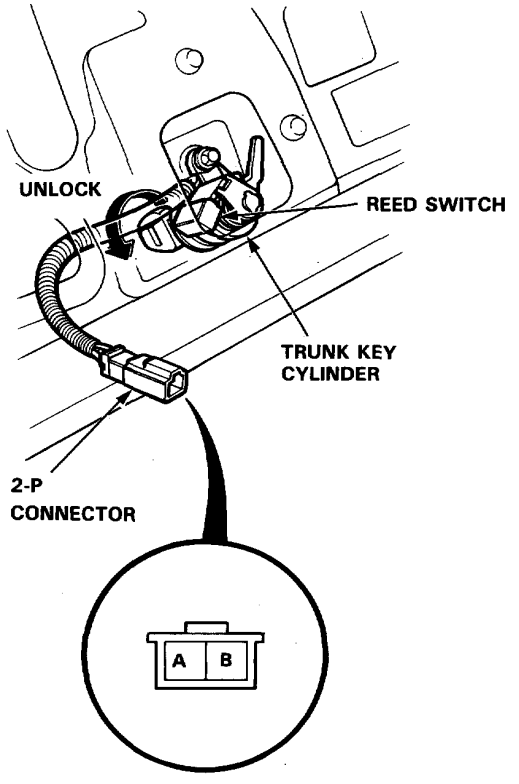

View from wire side.

Ignition Key Switch Test

1. Remove the dashboard lower panel.
2. Disconnect the 8-P connector from the main wire harness.
3. There should be continuity between the No. 2 and No. 7 terminal when the ignition key is inserted into the ignition key cylinder.
   There should be no continuity when the ignition key is removed.

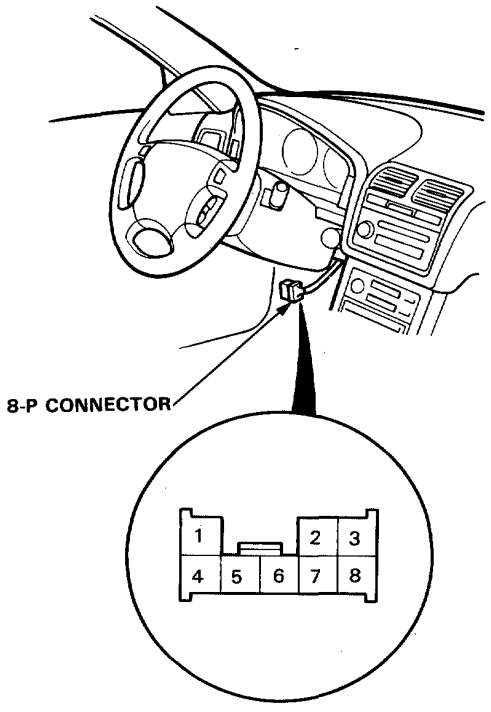

View from wire side

Hood Switch Test/Replacement

1. Open the hood.
2. Disconnect the 2-P connector from the hood switch.
3. There should be continuity between the A and B terminals with the lever released (hood opened).
   There should be no continuity with the lever pushed down (hood closed).

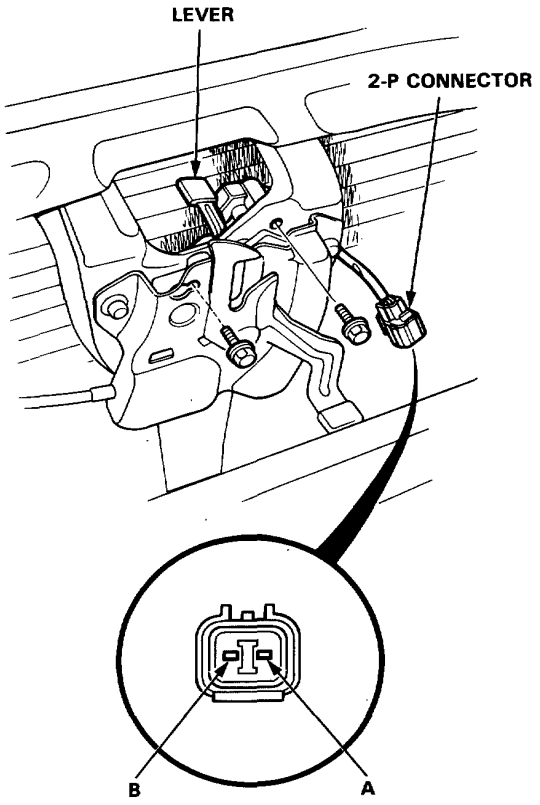

Supplemental Restraint System (SRS)

Component Location Index 23-406
Description 23-408
Circuit Diagram 23-409
Wiring Locations 23-410
Troubleshooting 23-412
Airbag Assembly
  Removal 23-426
  Installation 23-427
  Disposal 23-428
Cable Reel
  Removal 23-430
  Installation 23-432
Dash Sensor
  Removal 23-434
  Installation 23-435
SRS Unit
  Removal 23-436
  Installation 23-437

Component Location Index (LHD)

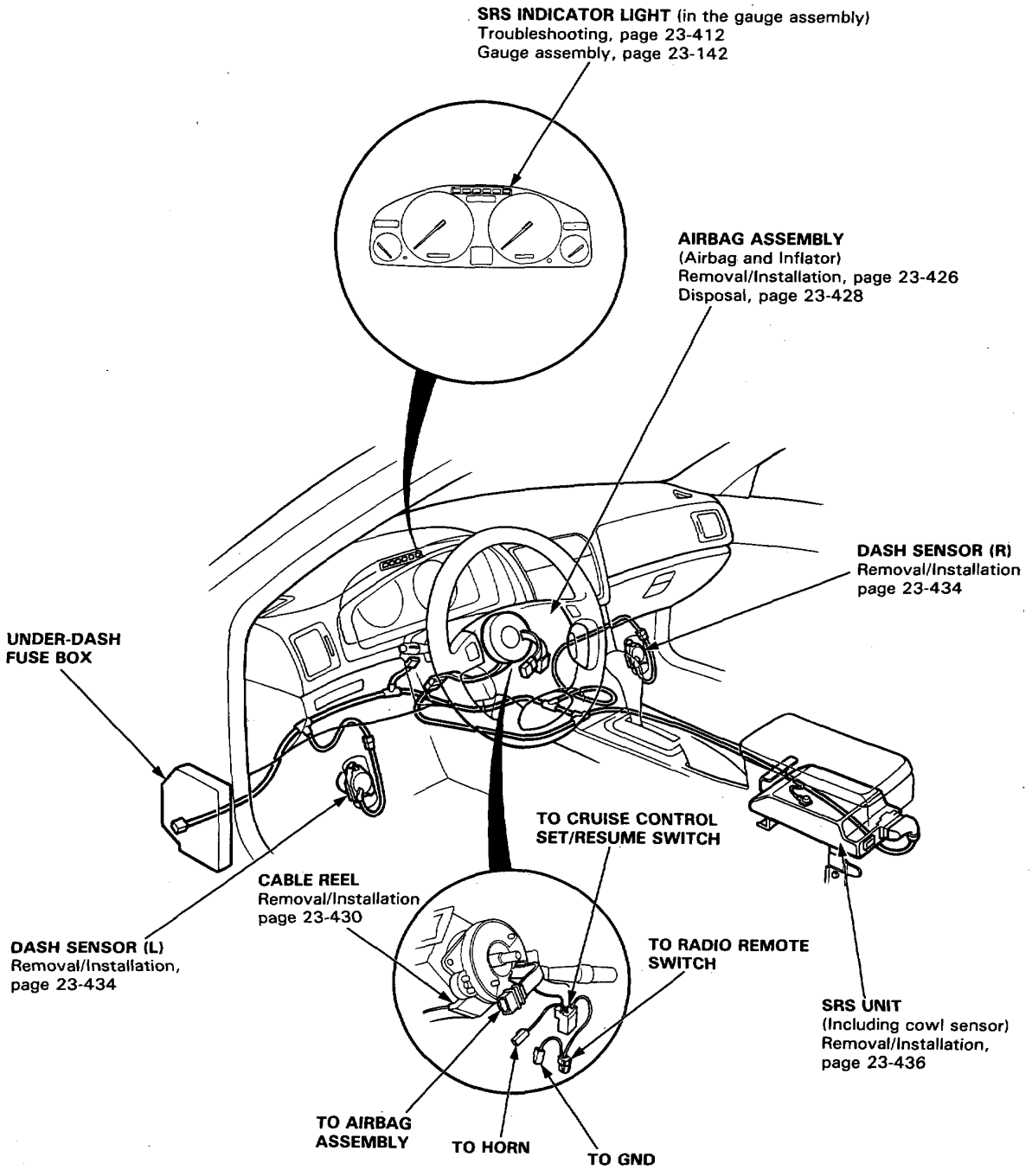

Component Location Index (RHD)

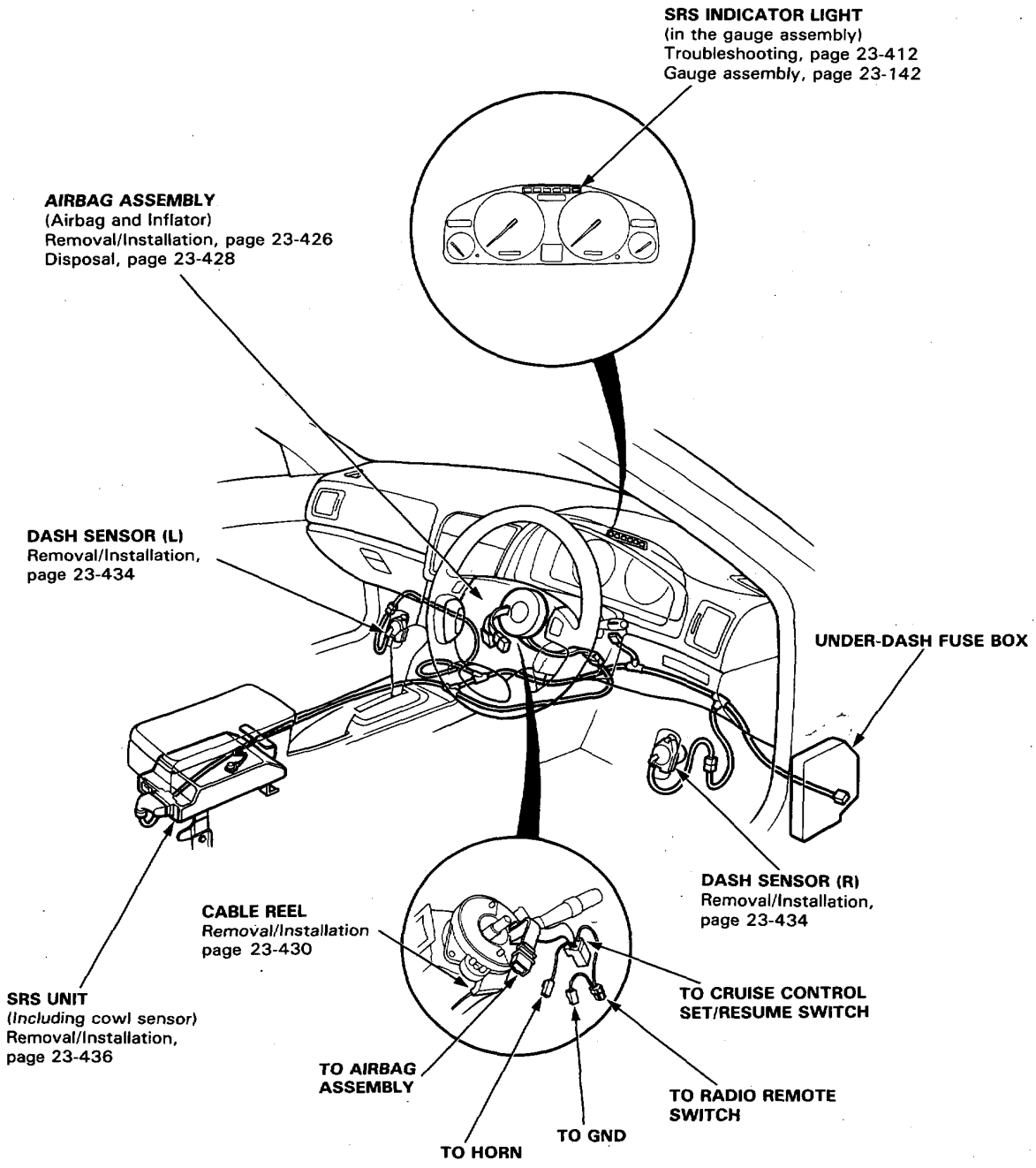

Supplemental Restraint System (SRS)

Description

The SRS is a safety device which, when used in conjunction with the seat belt, is designed to protect the driver by operating only when the car receives a frontal impact exceeding a certain set limit.
The system is composed of left and right dash sensors, the SRS unit (includes cowl sensor), the cable reel and airbag assembly.

LHD:

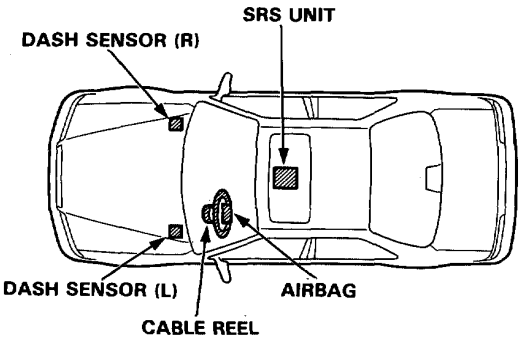

RHD:

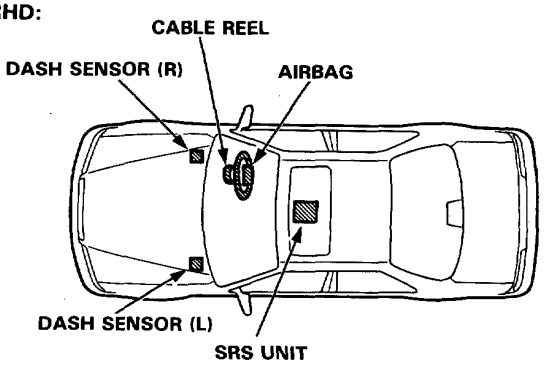

Operation
As shown in the diagram below, the left and right dash sensors are connected in parallel. The parallel sets of sensors are connected in series by the airbag inflator circuit and the car battery. In addition, a backup power unit is connected in parallel with the car battery. The back-up power unit and the cowl sensor are located inside the SRS unit.

The SRS operational sequence is as follows:
(1) Cowl sensor activates and one or both dash sensors activate.
(2) Electrical energy is supplied to the airbag inflator by the battery, or the back-up power unit if the battery voltage is too low.
(3) Airbag deployment.

At least the cowl and one dash sensor must be activated simultaneously for at least 0.015 seconds in order for the airbag to be deployed.

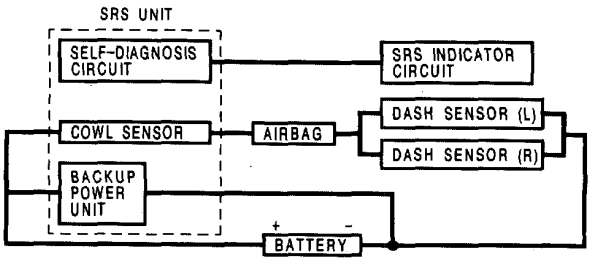

Self-diagnosis system
A self-diagnosis circuit is built into the SRS unit; when the ignition switch is turned ON, the SRS indicator light comes on and goes out after about 6 seconds if the system is operating normally. If the light does not light, or does not go out after 6 seconds, or if it comes on while dirving, this indicates an abnormality in the system. It must be inspected and repaired as soon as possible.

Circuit Diagram

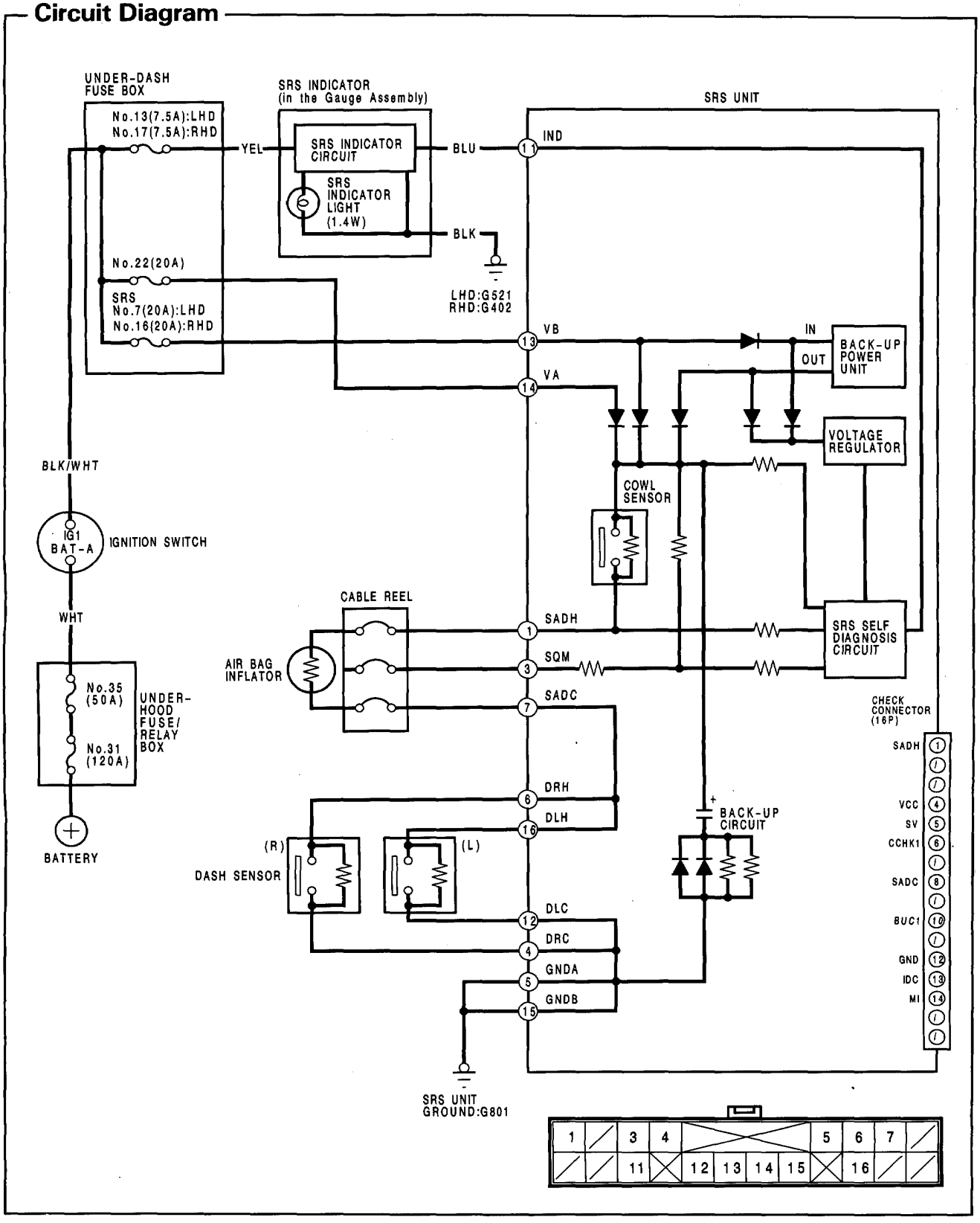

Supplemental Restraint System (SRS)

Wiring Locations (LHD)

CAUTION:

- **Make sure all SRS ground locations are clean and grounds are securely attached.**
- **All SRS electrical wiring harnesses are covered with yellow outer insulation.**
- **Replace the entire affected SRS harness assembly if there is an open circuit or damage to the wiring.**

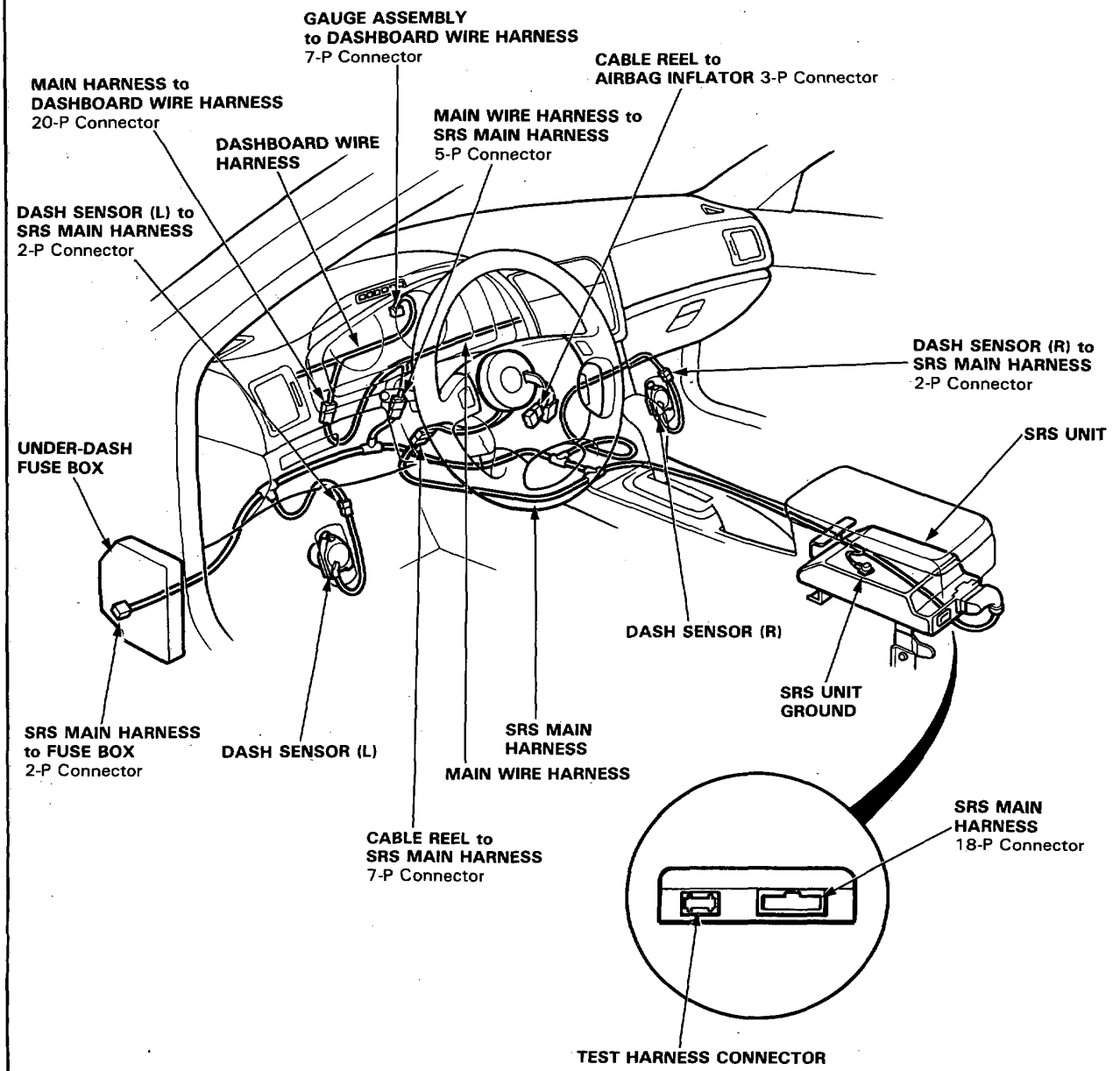

Wiring Locations (RHD)

CAUTION:

- **Make sure all SRS ground locations are clean and grounds are securely attached.**
- **All SRS electrical wiring harnesses are covered with yellow outer insulation.**
- **Replace the entire affected SRS harness assembly if there is an open circuit or damage to the wiring.**

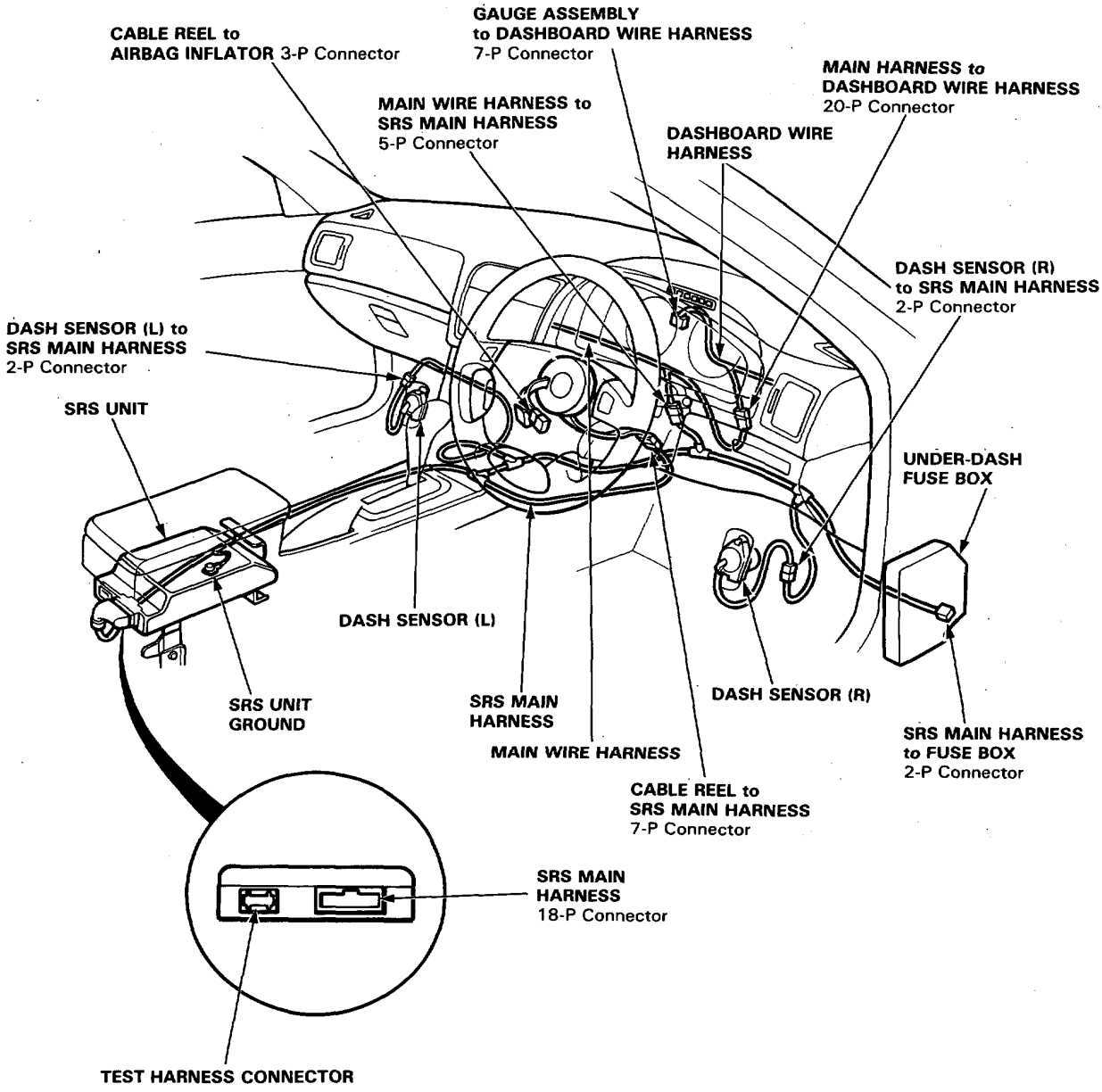

Troubleshooting

Self-diagnosis Function

The SRS unit includes a self-diagnosis function. If there is a failure in the sensors, SRS unit, inflator, or their circuits, the SRS light in the instrument panel goes ON.

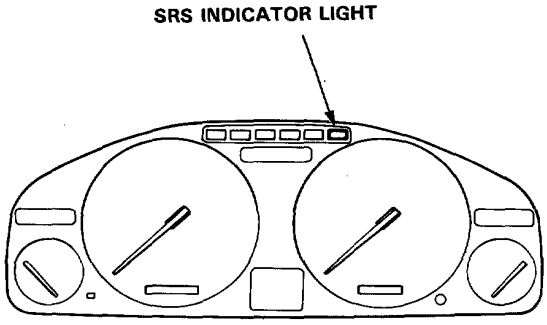

As a system check the SRS light also comes on when the ignition is first turned to the II position. If the light goes off after approximately 6 seconds the system is OK.

If the SRS light remains on (or fails to come on in the system check mode) one of the SRS components (or the wiring/connectors in-between) is faulty.

Troubleshooting precautions

- **Always use the test harness. Do not use test probes directly on component connector terminal or wires; you may damage them or the control unit.**
- **When attaching any of the test harnesses, push the connectors straight-in until they are secure; do not bend the connector pins.**
- **Always keep short connector on the airbag connector when the harness is disconnected.**

SRS Indicator Light Troubleshooting

Possible conditions:

1. SRS light does not come on at all — see page 23-414.
2. SRS light stays on continuously—see page 23-418.
3. SRS light comes on in combination with a failure of another electrical system (brake indicator, engine check light etc.). Check for damage/corrosion at the dash fuse box.

NOTE:

- Before starting the applicable troubleshooting, check the condition of all SRS connectors and ground points.
- If the fault is not found after completing the applicable troubleshooting, substitute a known-good SRS unit and check whether the light indication goes away.

CAUTION: Disconnect both the negative and positive battery cables. Connect short connector to the airbag connector.

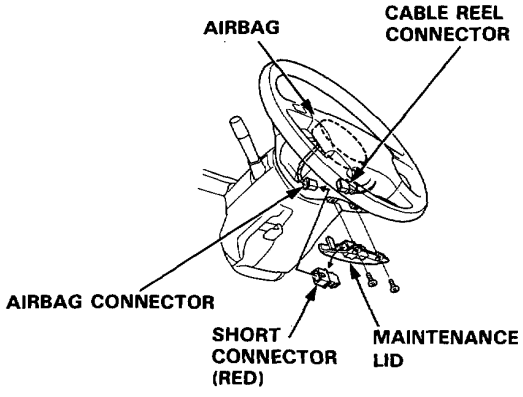

Test Harnesses and Attachment Points

Test Harness A

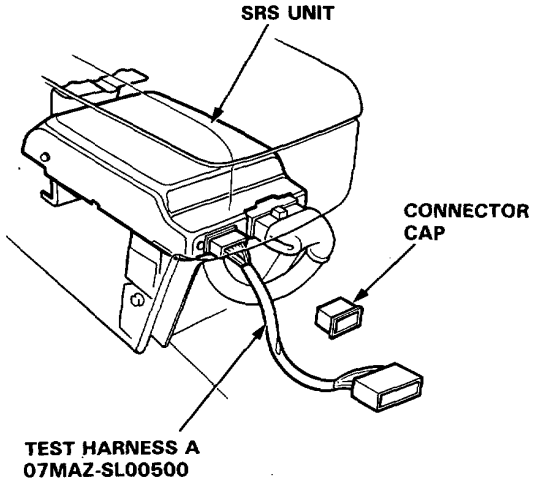

1	2	3	4	5	6	7	8
9	10	11	12	13	14	15	16

Test Harness C

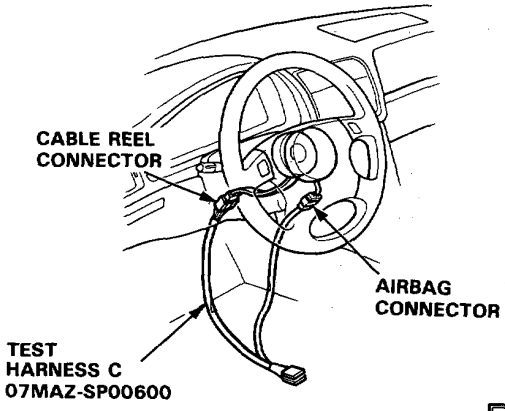

1	2	3	4	5
6	7	8	9	10

Test Harness B

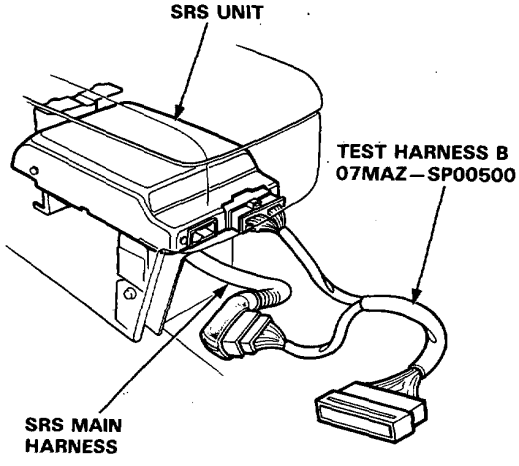

Test Harness D

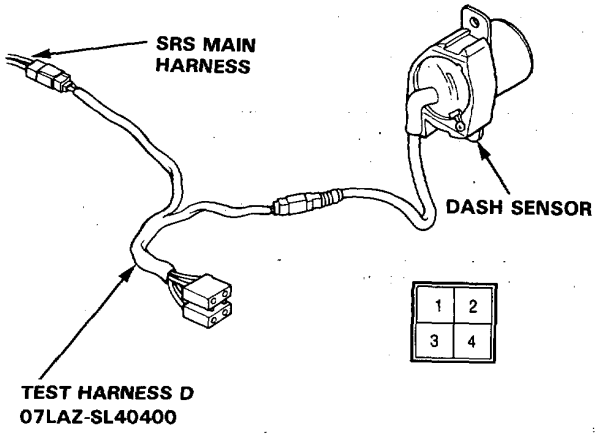

1	2
3	4

A-SIDE (SRS UNIT SIDE)

A	1	2	3	4	5	6	7	8	9	10	11	12	13	14	15	16	17	18
B	1	2	3	4	5	6	7	8	9	10	11	12	13	14	15	16	17	18

B-SIDE (WIRE HARNESS SIDE)

Troubleshooting

The SRS Indicator Does Not Light

CAUTION:
- **Use only a digital circuit tester to check the system.**

Disconnect the battery negative cable and then disconnect the positive cable.
Install the short connector on air-bag (see page 23-412).

Connect the battery positive cable and then connect the negative cable.

Turn the ignition switch ON.

Are any other indicator lights (ALB etc.) ON (in the dash panel)?

NO → Inpsect No. 13: LHD or No. 17: RHD fuse

Is No. 13: LHD or No. 17: RHD OK?

NO → **Replace fuse.**

YES → **Repair open in dashboard wire harness between the No. 13: LHD or No. 17: RHD fuse and gauge assembly.**

YES → Turn the ignition switch OFF

Disconnect the SRS main harness 18-P connector from the SRS unit.

Turn the ignition switch ON.

Does the SRS indicator light come on?

YES → **The SRS unit is faulty.**

NO → Turn the ignition switch OFF

(To page 23-415)

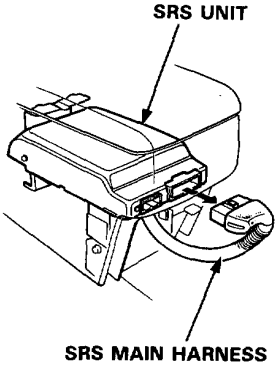

(From page 23-414)

Disconnect the dashboard wire harness 20-P connector from the main wire harness.

Turn the ignition switch ON.

LHD:

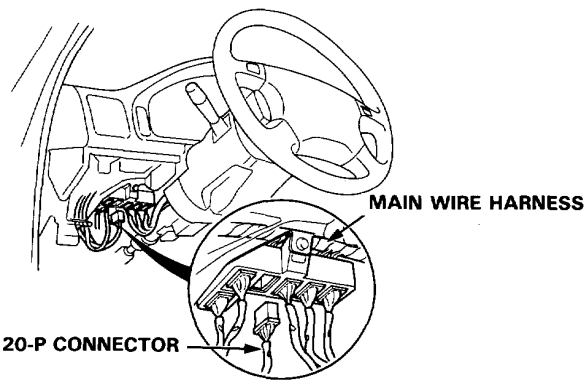

RHD:

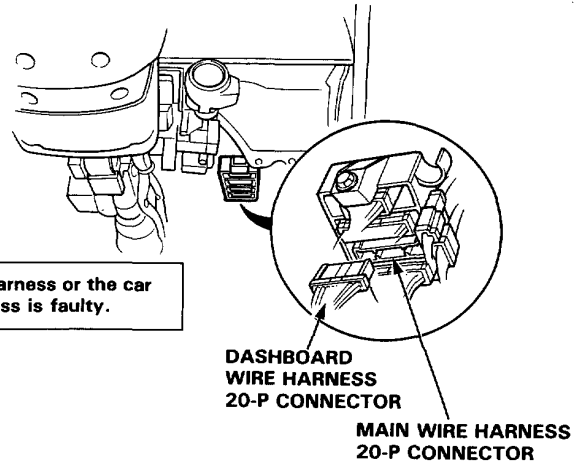

Is SRS indicator light ON?

YES → **The SRS main harness or the car main wire harness is faulty.**

NO

Turn the ignition switch OFF.

Remove the gauge assembly then inspect the SRS indicator light bulb.

Is the SRS indicator light bulb OK?

NO → **Replace the indicator light bulb.**

YES

Connect a voltmeter between the No. 2 terminal of the 7-P connector and body ground.

Turn the ignition switch ON.

Measure the voltage between the No. 2 terminal and body ground.

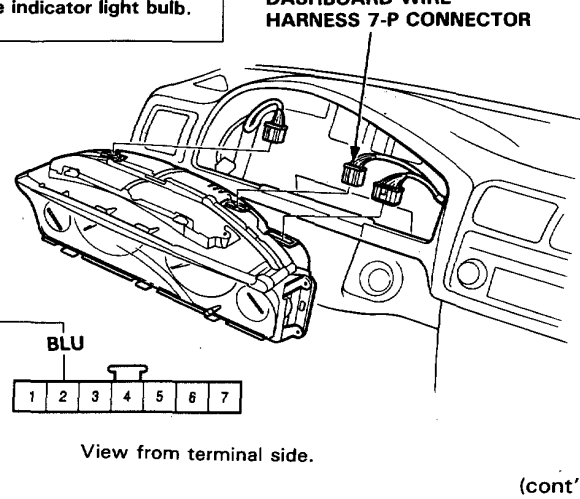

(To page 23-416)

(cont'd)

Troubleshooting (cont'd)

(From page 23-415)

Is there less than 8.5V with ignition switch ON?

NO → **Repaire short in No. 2 terminal (BLU wire) of the dashboard wire harness.**

YES

Turn the ignition switch OFF.

Connect the voltmeter between the No. 3 terminal (+) and the No. 1 terminal (−) of the dashboard wire harness 7-P connector.

Turn the ignition switch ON.

Measure the voltage between the No. 3 terminal and the No. 1 terminal.

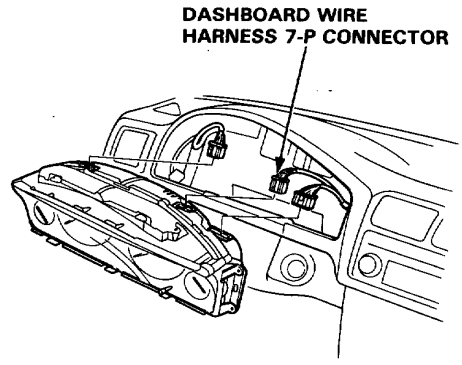

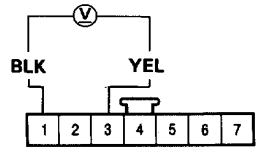

View from terminal side

Is there battery voltage?

NO → Check for continuity between the No. 1 terminal and body ground.

Does continuity exist?

NO → **Repair open in the No. 1 terminal (BLK wire) between the gauge assembly and body ground or look for a poor ground [G521: LHD, G402: RHD].**

YES → **Repair open in the No. 3 terminal (YEL wire) of the dashboard wire harness.**

YES

Turn the ignition switch OFF.

(To page 23-417)

(From page 23-416)

NOTE: Make sure you reinstall the cap in the SRS unit after testing.

Reconnect each connector to the gauge assembly and SRS unit then connect Test Harness A to the SRS unit.

Measure the voltage between the No. 13 terminal and body ground for 6 seconds after ignition is first turned on.

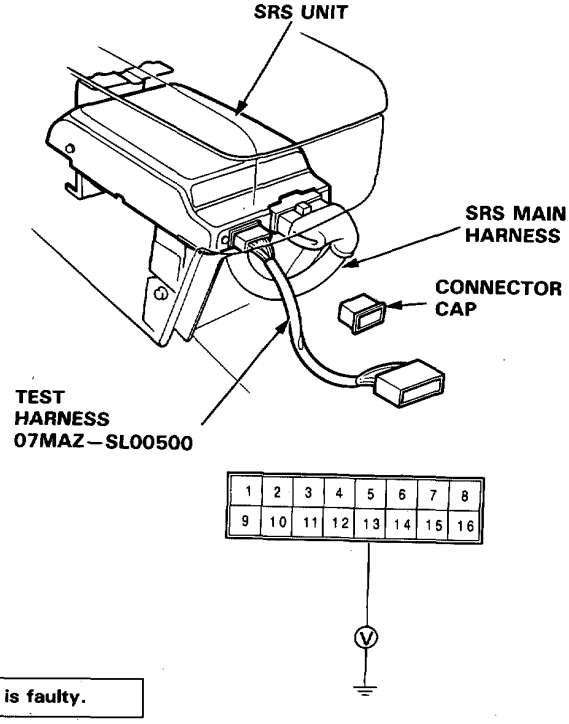

Is there more than 8.5 V?

NO → **SRS indicator unit is faulty.**

YES → **SRS unit is faulty.**

(cont'd)

Troubleshooting (cont'd)

SRS Indicator Light Stays On Continuously

1. Make a photocopy of this page.
2. Connect test harness A to the SRS unit as shown.
3. Turn the ignition switch ON.
   - Voltages in the chart assume the car's "battery voltage" is about 12 volts. Less than 12 volts will result in different or possibly false readings.
   - Do not disconnect the airbag(s) from the circuit when checking SRS unit voltages.
4. Record your voltage readings, for each terminal, in the row of blank boxes across the top of the chart.
5. Compare each reading with the voltage ranges listed in the column below it. If the reading is within a range, circle that range.
   - If you circled all the Failure Mode ranges across any row, check the car for the Probable Failure Mode listed at the end of that row. (Refer to the letter for that Mode on the following pages.).
   - If you did not circle all the ranges across any row, replace the SRS control unit with a known-good unit, and re-test.

— If all your voltage readings are now Normal, replace the SRS control unit.

— If your voltage readings are still not Normal, but they don't fit within a complete row of Failure Mode ranges, check the condition of the terminals in each of the SRS connectors shown in the system diagram on page 23-409.

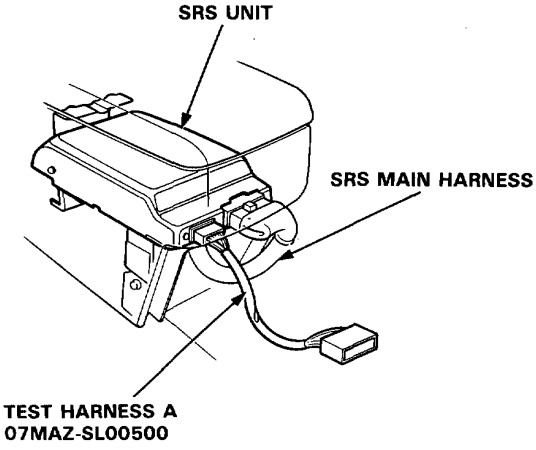

Test Connector Terminal	1 SADH	—	—	4 VCC	5 SV	6 CCHK1	—	8 SADC	—	10 BUC1	—	12 GND	13 IDC	14 MI	—	—	Probable Failure Mode
Normal Voltage	5.0 ~7.5	—	—	4.0 ~5.5	10.0 ~14.0	9.0 ~14.0	—	5.0 ~7.5	—	0 ~2.0	—	0 ~2.0	8.5 ~13.0	9.0 ~14.0	—	—	
Your Voltage Reading		—	—				—		—		—				—	—	
Failure Mode Voltage	0 ~2.0	—	—	4.0 ~5.5	10.0 ~14.0	9.0 ~14.0	—	0 ~2.0	—	0 ~2.0	—	0 ~2.0	2.0 ~8.5	9.0 ~14.0	—	—	B Open in cowl sensor or short in dash sensor.
	10.0 ~15.0	—	—	4.0 ~5.5	10.0 ~14.0	9.0 ~14.0	—	10.0 ~15.0	—	0 ~2.0	—	0 ~2.0	2.0 ~8.5	9.0 ~14.0	—	—	C Short in cowl sensor or open in dash sensor.
	6.5 ~10.0	—	—	4.0 ~5.5	10.0 ~14.0	9.0 ~14.0	—	6.5 ~10.0	—	0 ~2.0	—	0 ~2.0	2.0 ~8.5	9.0 ~14.0	—	—	D Open in one dash sensor.
	10.0 ~15.0	—	—	4.0 ~5.5	10.0 ~14.0	9.0 ~14.0	—	10.0 ~15.0	—	0 ~2.0	—	0 ~2.0	2.0 ~8.5	9.0 ~14.0	—	—	F Open in airbag inflator or cable reel.
	5.0 ~7.5	—	—	0 ~2.0	0 ~2.0	9.0 ~14.0	—	5.0 ~7.5	—	0 ~2.0	—	0 ~2.0	2.0 ~8.5	9.0 ~14.0	—	—	J Blown SRS fuse *1 or open in the wire.
	5.0 ~7.5	—	—	4.0 ~5.5	10.0 ~14.0	9.0 ~14.0	—	5.0 ~7.5	—	0 ~2.0	—	0 ~2.0	0~2.0 (8.5 ~13.0)	9.0 ~14.0	—	—	K Short (or open) in SRS indicator wire harness.
	7.0 ~16.0	—	—	7.0 ~16.0	7.0 ~16.0	7.0 ~16.0	—	7.0 ~16.0	—	7.0 ~16.0	—	7.0 ~16.0	2.0 ~8.5	7.0 ~16.0	—	—	L Poor ground at SRS unit or unit mounting bolts.

*1 No. 7 (20A): LHD
No. 16 (20A): RHD

Mode B: *Open in cowl sensor, or short in dash sensor.*

CAUTION: Disconnect the battery negative cable and then disconnect the positive cable. Install the short connector on airbag (See page 23-412).

1. Connect the Test Harness B between the SRS unit and SRS main harness 18-P conector.

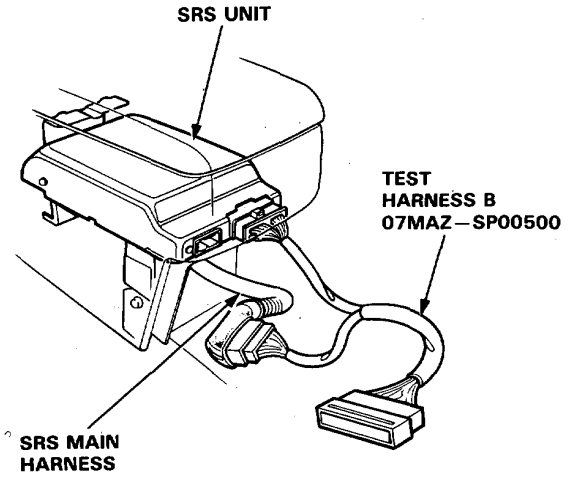

2. Reconnect the battery cables then check the resistance between the left dash sensor terminals B12 and B16, and between the right dash sensor terminals B4 and B6.

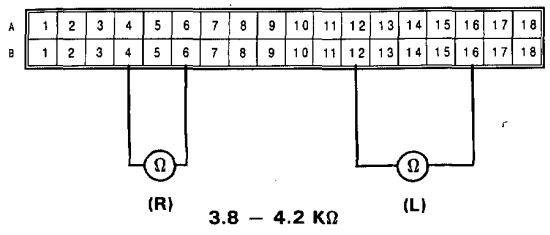

- If resistance is more than 3.8 – 4.2 KΩ for either sensor, go to step 3.
- If resistance is less than 3.8 – 4.2 KΩ for either sensor, go to step 4.

3. Check continuity between body ground and each terminal of both dash sensors.

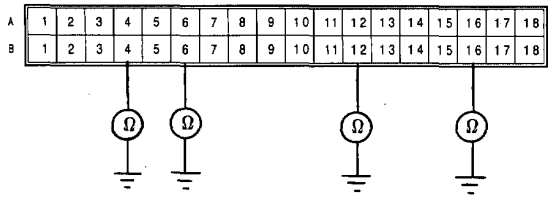

- If there is continuity at any of the terminals, go to step 5.
- If there is no continuity the SRS unit is faulty. Substitute a known-good SRS unit and recheck the voltages according to the chart on page 23-418.

(cont'd)

Troubleshooting (cont'd)

4. Connect Test Harness D between the dash sensor and SRS main harness 2-P connector. Check the resistance between the No. 1 terminal and No. 2 terminal.

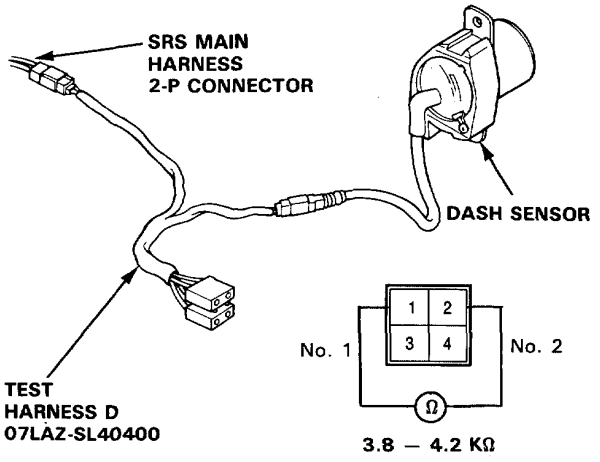

NOTE: The left and right sensors cannot be checked at the same time.

- If resistance is more than 3.8 – 4.2 KΩ, replace the SRS main wire harness and recheck the voltages according to the chart on page 23-418.
- If resistance is less than 3.8 – 4.2 KΩ the respective dash sensor is faulty. Replace the dash sensor and recheck the voltages according to the chart on page 23-418.

5. Connect Test Harness D between the dash sensor and SRS main harness 2-P connector.
Check continuity between the No. 1 terminal and body ground, and between the No. 2 terminal and body ground.

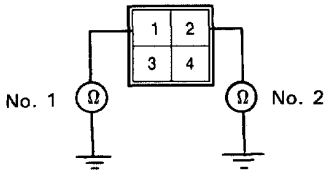

- If there is continuity, the dash sensor is faulty. Replace it and recheck the voltages according to the chart on page 23-418.
- If there is no continuity, replace the SRS main wire harness and recheck the voltages according to the chart on page 23-418.

Mode C: Short in cowl sensor, or open in dash sensor.
Mode D: Open in one dash sensor.

CAUTION: Disconnect the battery negative cable and then disconnect the positive cable. Install the short connector on airbag.

1. Connect Test Harness B between the SRS unit and SRS main harness 18-P connector.
Check the resistance between the left dash sensor terminals B12 and B16, and between the right dash sensor terminals B4 and B6.

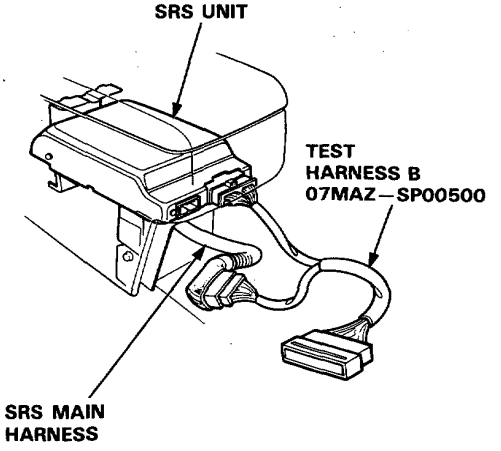

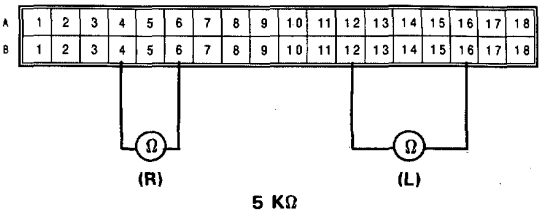

- If resistance is more than 5 KΩ, go to step 2.
- If resistance is less than 5 KΩ, the SRS unit is faulty. Substitute a known-good SRS unit and recheck the voltages according to the chart on page 23-418.

2. Connect Test Harness D between the dash sensor and SRS main harness 2-P connector.
Check the resistance between the No. 1 terminal and No. 2 terminal.

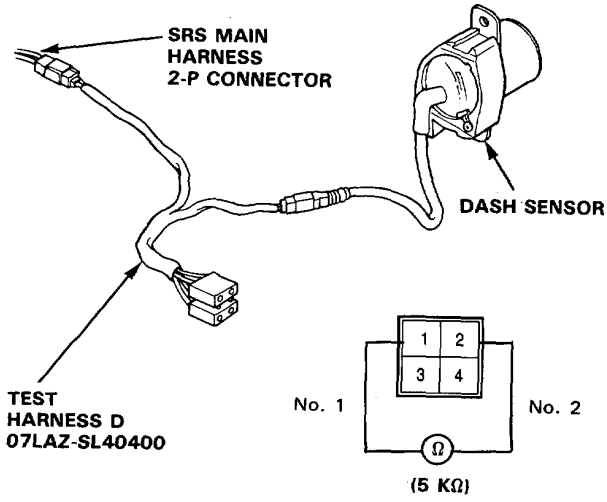

- If resistance is more than 5 KΩ, the dash sensor is faulty. Replace and recheck the voltages according to the chart on page 23-418.
- If resistance is less than 5 kΩ, the SRS main harness is faulty. Replace the SRS main harness and recheck the voltages according to the chart on page 23-418.

Mode F: Open in airbag inflator or cable reel.

1. Disconnect the battery negative cable and then disconnect the positive cable.

2. Connect Test Harness B between the SRS unit and SRS main harness's 18-P connector.
Measure the resistance between the B1 and the B7 terminals.

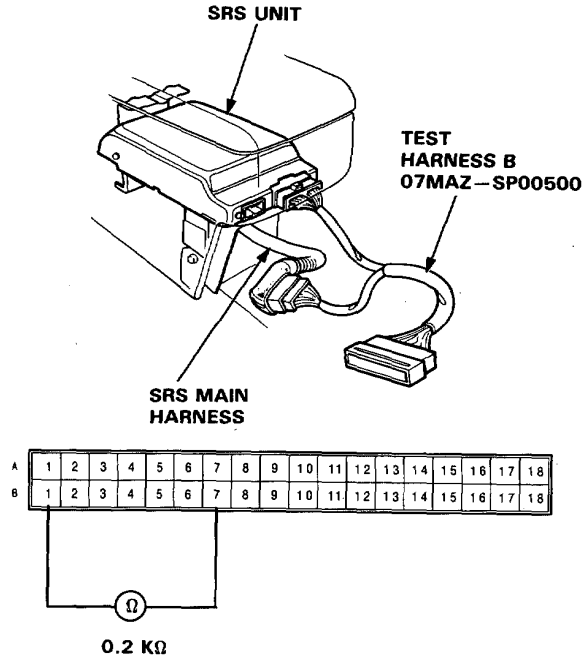

- If resistance is more than 0.2 KΩ, go to step 3.
- If resistance is less than 0.2 KΩ, the SRS unit is faulty. Substitute a known-good SRS unit and recheck the voltages according to the chart on page 23-418.

3. Disconnect the cable reel harness and main harness 7-P connector from the SRS main harness, then connect the SRS test harness C only to the cable reel harness side of the 7-P connector.

(cont'd)

Troubleshooting (cont'd)

4. Measure the resistance between the No. 4 terminal and the No. 5 terminal.

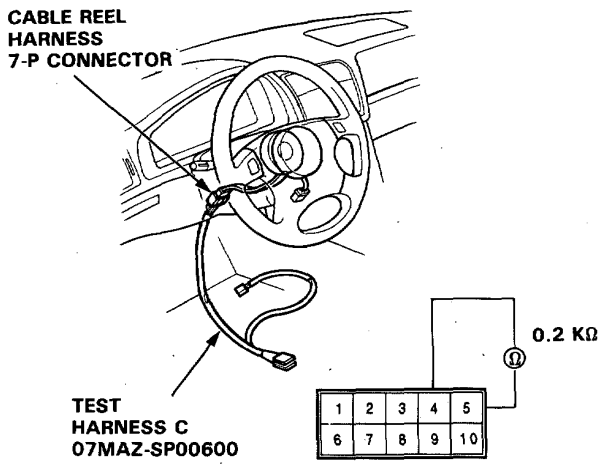

- If resistance is more than 0.2 kΩ, go to step 5.
- If resistance is less than 0.2 kΩ, the SRS main harness is faulty. Replace the SRS main harness and recheck the voltages according to the chart on page 23-418.

5. Disconnect the airbag 3-P connector from the cable reel harness, then connect the Test Harness C to the airbag 3-P connector. Meassure the resistance between the No. 9 terminal and No. 10 terminal.

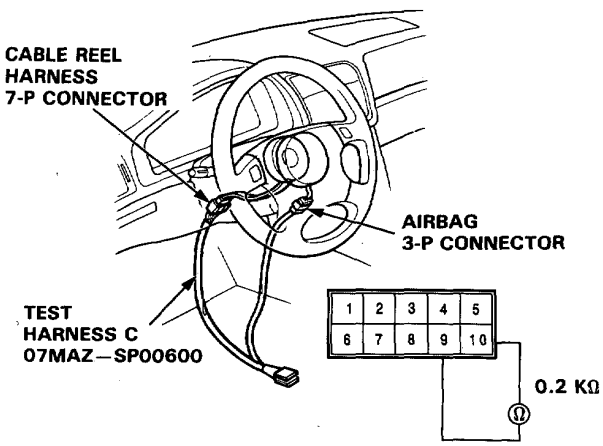

- If resistance is more than 0.2 kΩ, the inflator is faulty. Replace the airbag assembly and recheck the voltage according to the chart on page 23-418.
- If resistance is less than 0.2 kΩ, the cable reel is faulty. Replace the cable reel and recheck the voltages according to the chart on page 23-418.

Mode J: Blown SRS No. 7: LHD, No. 16: RHD (20A) fuse, or open in the wire.

1. Check the SRS No. 7: LHD, No. 16: RHD (20A) fuse in the dash fuse box. If it's OK, read the following CAUTION, then go on to step 2.
   If it's blown, replace it with a new 20A fuse, then turn the ignition switch ON:
   - If fuse doesn't blow, go on to step 2.
   - If the fuse blows, troubleshoot as necessary to find the short.

   CAUTION: Disconnect the battery negative cable, then the positive cable.

2. Connect Test Harness B between the SRS unit and SRS main harness 18-P connector.

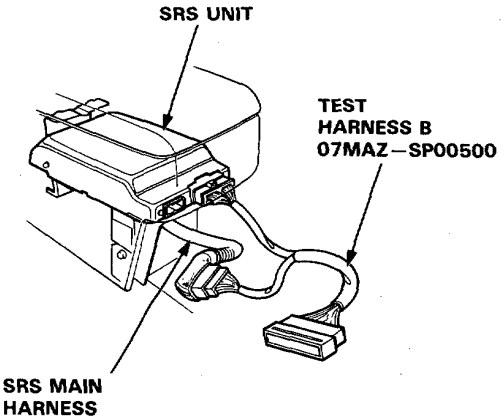

3. Measure the voltage between the B13 terminal and body ground with the ignition switch ON.

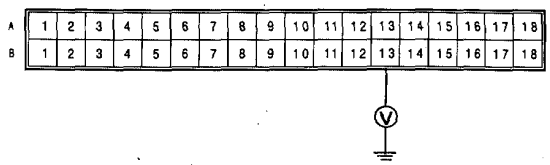

- If there is battery voltage, the SRS unit is faulty. Replace and recheck the voltages according to the chart on page 23-418.
- If less than battery voltage, the main harness is faulty. Replace the SRS main harness and recheck the voltages according to the chart on page 23-418.

Mode K: Short or open in SRS indicator wire harness

CAUTION: Disconnect the battery negative cable and then disconnect the positive cable.
Install the short connector on airbag. (See page 23-412).

1. Reconnect the battery positive cable and negative cable.

2. Disconnect the dashboard wire harness 20-P connector from the main wire harness.

3. Measure the voltage between the No. 10 terminal and body ground on the main harness side of the 20-P connector, with the ignition switch ON.

LHD:

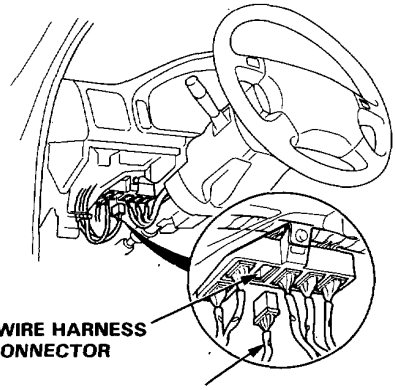

RHD:

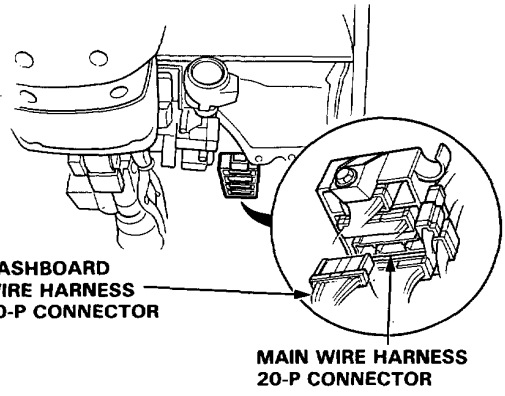

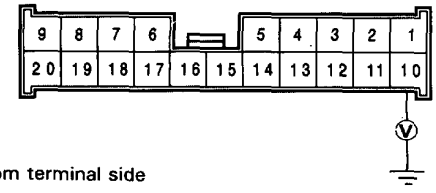

View from terminal side

- If voltage is more than 8.5 V, go to step 6.
- If voltage is less than 8.5 V, go to step 4.

4. Connect Test Harness B between the SRS unit and SRS main harness 18-P connector.
Check for continuity between the B11 terminal and body ground.

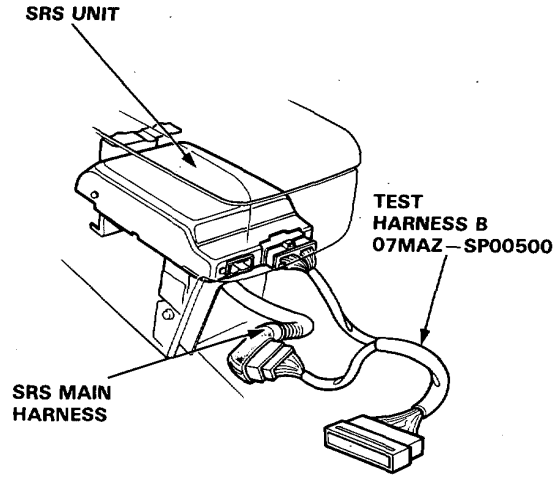

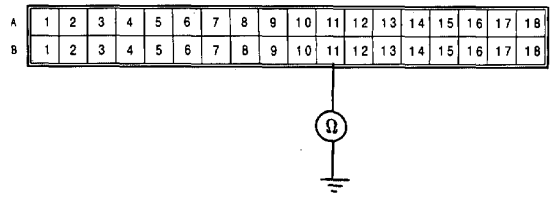

- If there is continuity, the SRS main harness (or main wire harness) is shorted. Replace the SRS main harness (or repair the BLU wire in the main wire harness) and recheck the voltages according to the chart on page 23-418.
- If there is no continuity, go to step 5.

(cont'd)

Troubleshooting (cont'd)

5. Check for continuity between the B11 terminal of Test Harness B and the No. 10 terminal of the main wire harness 20-P connector.

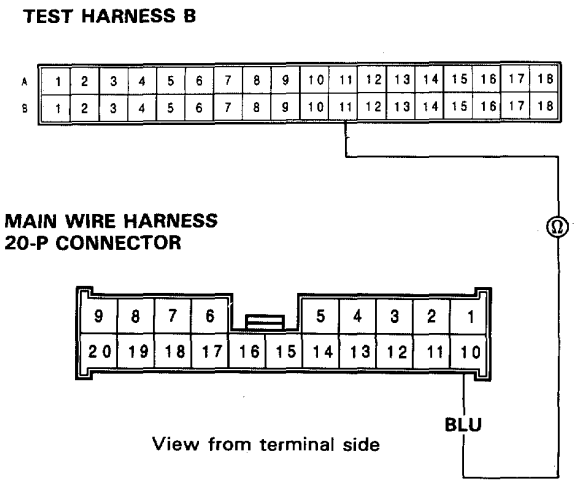

- If there is continuity, the SRS unit is faulty. Replace it and recheck the voltages according to the chart on page 23-418.
- If these is no continuity, the SRS main harness (or the car main wire harness) is open. Replace the SRS main harness (or repair the BLU wire in the car main wire harness) and recheck the voltages according to the chart on page 23-418.

6. Connect the instrument wire harness 20-P connector to the main wire harness, and connect the SRS main harness 18-P connector to the SRS unit. Disconnect the dashboard wire harness 7-P connector from the gauge assembly, and measure the voltage between the No. 2 terminal and body ground with ignition switch ON.

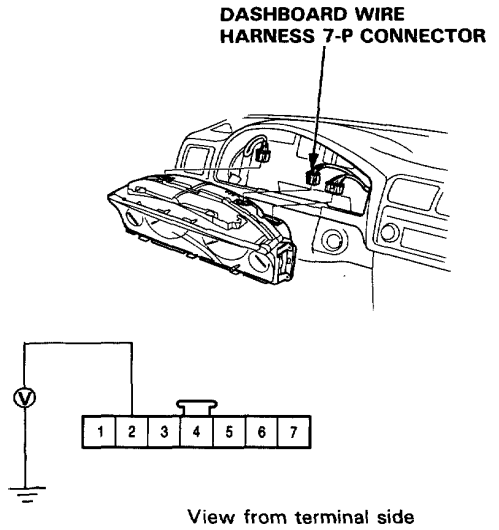

- If voltage is more than 8.5 V, the SRS indicator circuit is faulty (in the gauge assembly). Replace the gauge assembly and recheck the voltages according to the chart on page 23-418.
- If voltage is less than 8.5 V, the dashboard wire harness is faulty. Repaire the open or short in the BLU wire of the dashboard wire harness and recheck the voltages according to the chart on page 23-418.

Mode L: Poor ground at SRS unit or unit mounting bolts.

CAUTION: Disconnect the battery negative cable and then disconnect the positive cable. Install the short connector on airbag. (See page 23-412).

1. Connect Test Harness B between the SRS unit and SRS main harness 18-P connector.

2. Check for continuity between the B5, B15 terminals and body ground.

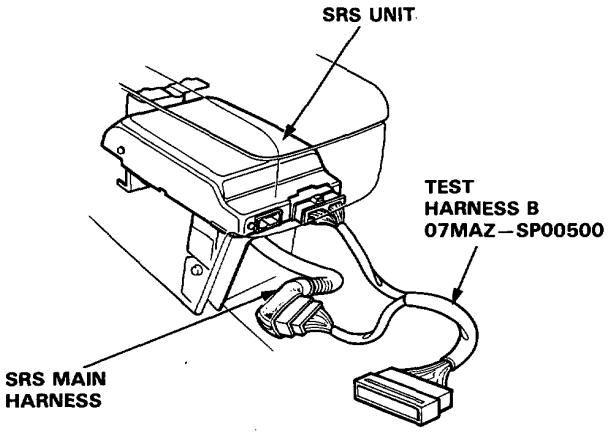

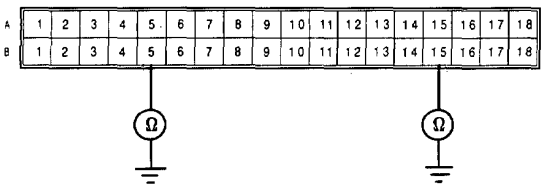

- If there is continuity, the SRS unit is faulty. *Replace it and recheck the voltages according to* the chart on page 23-418.

- If there is no continuity, the SRS unit ground, the control unit component grounds or the SRS main *harness is faulty. Check the grounds (check the* control unit ground wire and mounting bolts) and, if necessary, replace the SRS main harness. Recheck the voltages according to the chart on page 23-418.

Airbag Assembly Removal

⚠WARNING Store a removed airbag assembly with the pad surface up, if the airbag is improperly stored face down, accidental deployment could propel the unit with enough force to cause serious injury.

CAUTION:
- **Do not install used SRS parts from another car. When repairing on SRS, use only new parts.**
- **Carefully inspect the airbag assembly before installing it. Do not install an airbag assembly that shows signs of being dropped or improperly handled, such as dents, cracks or deformation.**
- **Always keep the short connector on the airbag connector when the harness is disconnected.**
- **Do not disassemble or tamper with the airbag assembly.**

1. Disconnect the battery negative cable, then disconnect the positive cable.
2. Remove the maintenance lid below the airbag, then remove the short connector from the lid.
3. Disconnect the connector between the airbag and cable reel.
4. Install the short connector on the airbag.

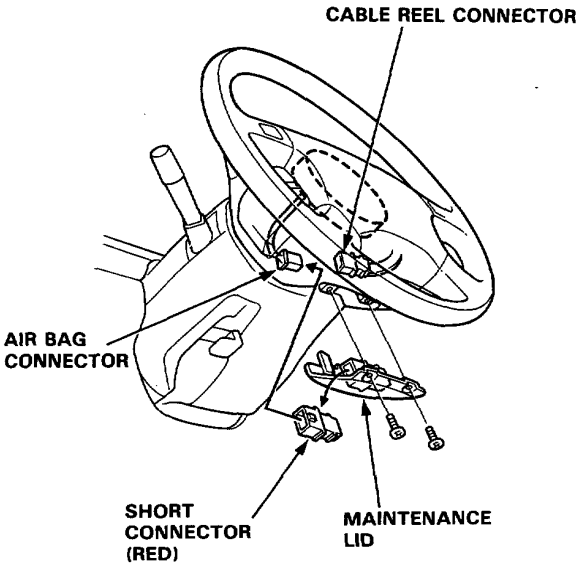

5. Remove the 2 TORX® bolts using a TORX® T30 bit, then remove the airbag assembly.

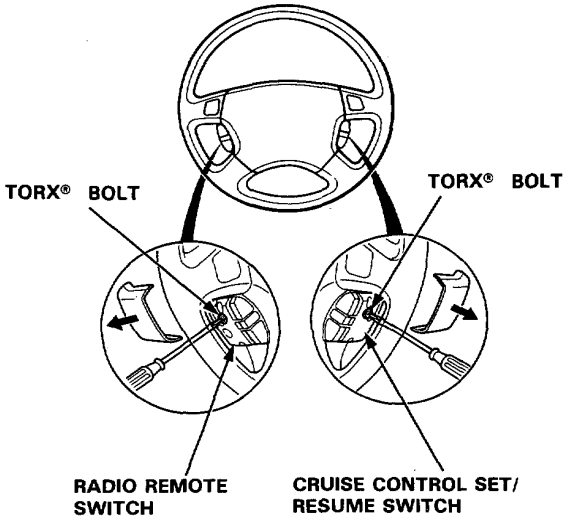

Airbag Assembly Installation

CAUTION:
- **Be sure to install the SRS wiring so that it is not pinched or interfering with other car parts.**
- **Be sure the battery cables are disconnected.**

1. Place the airbag assembly in the steering wheel, and secure it with new TORX® bolts.

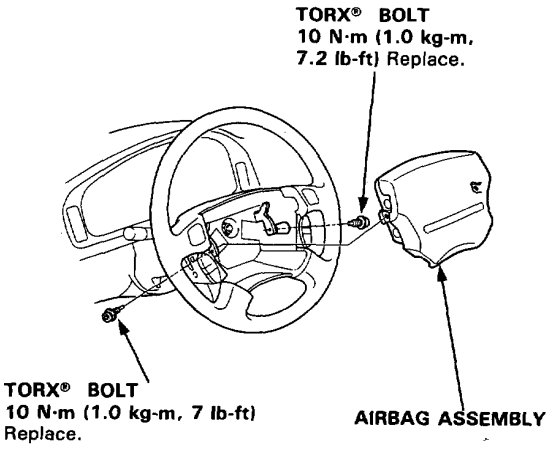

2. Remove the short connector from the airbag connector, then connect the airbag connector and cable reel connector.

3. Attach the short connector to lid, then reinstall the lid on the steering wheel.

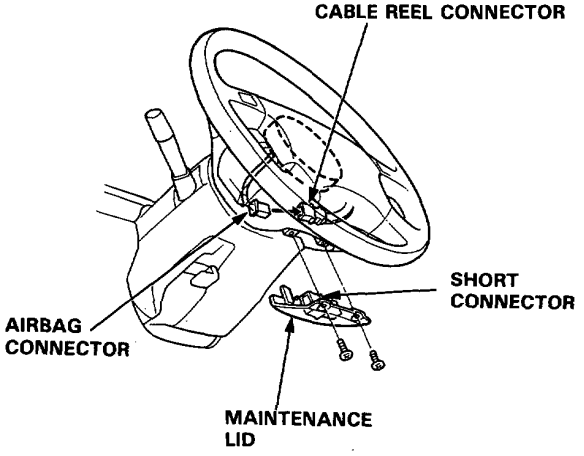

4. Reconnect the battery positive cable, then the negative cable.

5. After installing the airbag assembly, confirm proper system operation:
   - Turn the ignition to II: the instrument panel SRS indicator light should go on for about 6 seconds and then go off.
   - Confirm operation of horn buttons.
   - Confirm operation of cruise control set/resume switch.

Airbag Disposal

Before scrapping any airbag (including one in a whole car to be scrapped), the airbag must be deployed. If the car is still within the warranty period, before deploying the airbag, the Honda Motor District Service Manager must give approval and/or special instructions.
Only after an airbag is already deployed (as the result of vehicle collision, for example), can the normal scrapping procedure be done.
If the airbag appear intact (not deployed) it should be treated with extreme caution.
Follow the procedure, described below.

Deploying the Airbag: In-Car

NOTE: If an SRS car is to be entirely scrapped, its airbag should be deployed while still in the car.
An airbag should not be considered a salvageable part and should never be installed in another car.

⚠WARNING Confirm that the airbag assembly is securely mounted; otherwise.
Severe personal injury could result during deployment.

1. Disconnect both the negative cable and positive cable from the battery.
2. Confirm that the special tool is functioning properly by following the check procedure on the label of the tool set box, or on page 23-429
3. Remove the maintenance lid, then disconnect the connector between the airbag and cable reel.

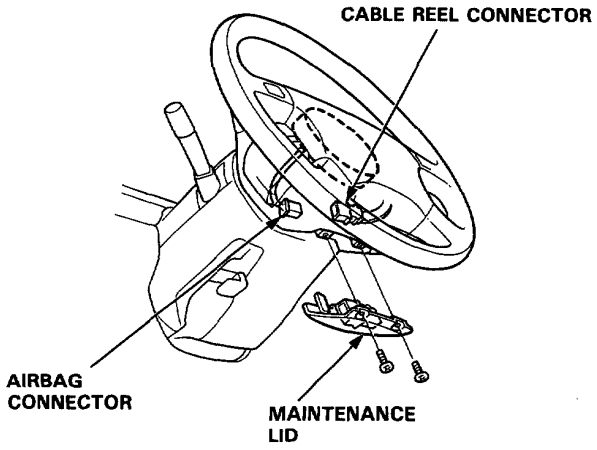

4. Cut off the airbag connector, *then* strip the wire ends and connect the special tool alligator clips to them. Place the special tool approximately thirty feet away from the airbag.

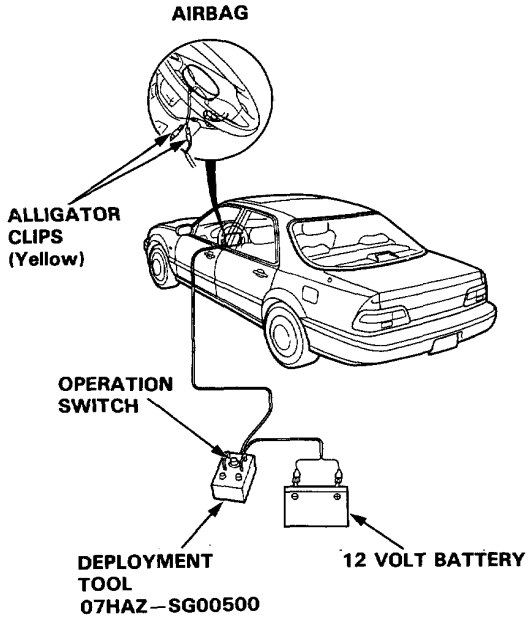

5. Connect a 12 volt battery to the tool:
   - If the green light on the tool goes on, the airbag igniter circuit is defective and cannot deploy the bag. Go to Damaged Airbag Special Procedure.
   - If the red light on the tool goes on, the airbag is ready to be deployed.

6. Push the tool's deployment switch. The airbag should deploy (deployment is both highly audible and visible — a loud noise and rapid inflation of the bag, followed by slow deflation).

   - If deployment happens and the green light on the tool goes on, continue with this procedure.
   - If the airbag doesn't deploy, yet the green light goes ON, its igniter is defective, go to Damaged Airbag Special Procedure.

   ⚠ WARNING During deployment, the airbag assembly can become hot enough to burn you. Wait thirty minutes after deployment before touching the assembly.

7. Dispose of the complete airbag assembly. No part of it can be reused.

Deploying the Airbag: Out-of-car.

NOTE: If an intact airbag assembly has been removed from a scrapped car or has been found defective or damaged during transit, storage or service, it should be deployed as follows:

⚠ WARNING *Position the airbag assembly face up,* outdoors on flat ground at least thirty feet from any obstacles or people.

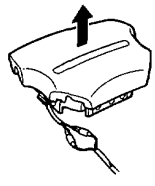

1. Confirm that the special tool is functioning properly by following the check procedure on this page or on the tool box label.
2. Remove the short connector from the airbag connector.
3. Follow steps 4, 5, 6 and 7 of the in-car deployment procedure.

Damaged Airbag Special Procedure.

⚠ WARNING If an airbag cannot be deployed, it should not be treated as normal scrap; it should still be considered a potentially explosive device that can cause serious injury.

1. If installed in a car, follow the removal procedure on page 23-360.
2. In all cases, make sure a short connector is properly installed on the airbag connector.
3. Package the airbag assembly in exactly the same packaging that the new replacement part came in.
4. Mark the outside of the box "DAMAGED AIRBAG-NOT DEPLOYED" so it does not get confused with your parts stock.
5. Contact your Honda Motor District Service Manager for how and where to return it for disposal.

Deployment Tool: Check Procedure.

1. Connect the yellow clips to both switch protector handles on the tool; connect the tool to a battery.
2. Push the operation switch: green means tool is OK; red means tool is faulty.
3. Disconnect the battery and the yellow clips.

Cable Reel Removal

⚠ WARNING **Store a removed airbag assembly with the pad surface up. If the airbag is improperly stored face down, accidental deployment could propel the unit with enough force to cause serious injury.**

CAUTION:
- **Carefully inspect the airbag assembly before installing it. Do not install an airbag assembly that shows signs of being dropped or improperly handled, such as dents, cracks or deformation.**
- **Always keep the short connector on the airbag connector when the harness is disconnected.**
- **Do not disassemble or tamper with the airbag assembly.**

1. Disconnect the battery negative cable, then disconnect the positive cable.
2. Make sure the wheels are aligned straight ahead.
3. Remove the dashboard lower panel.

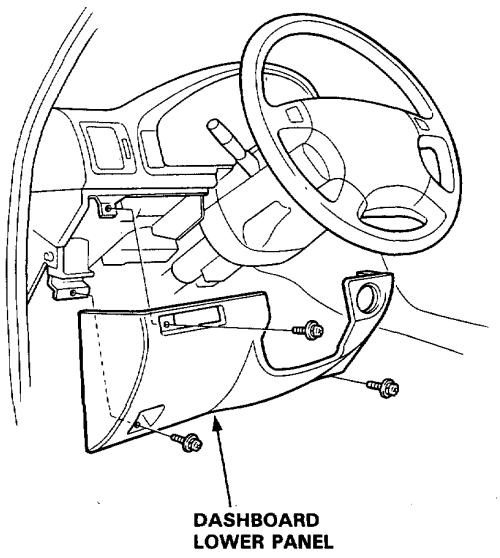

4. Install the short connector on airbag.

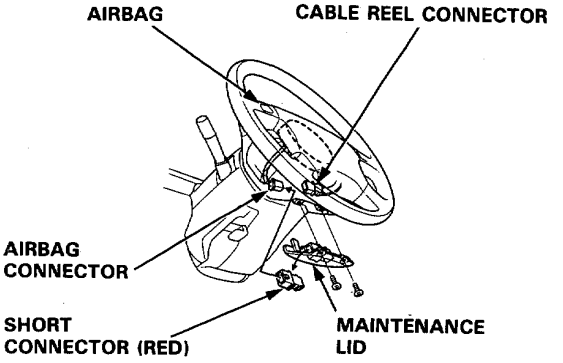

5. Remove the upper and lower column covers.

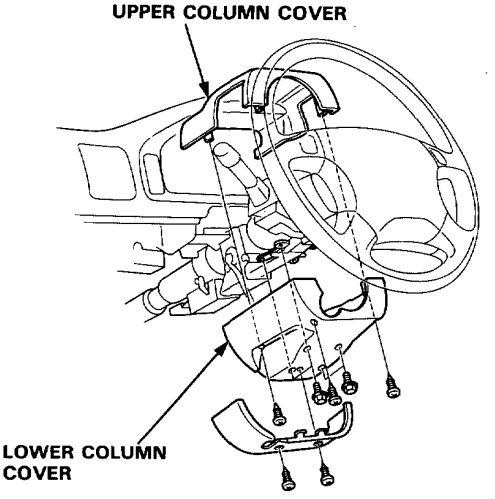

6. Disconnect the connector between the cable reel and main harness.

7. Remove the airbag assembly from the steering wheel, then remove the steering wheel nut.

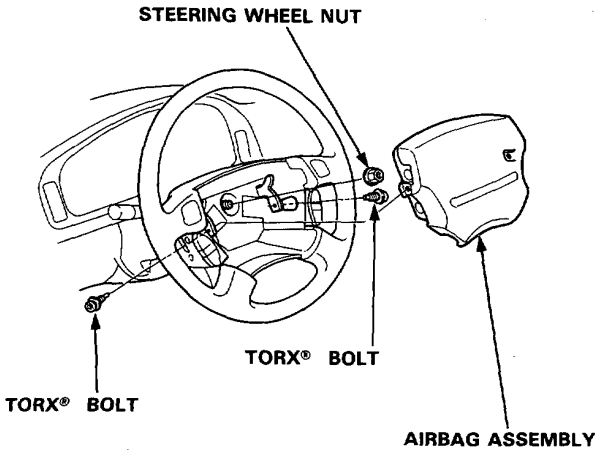

8. Disconnect the connectors from the horn, radio remote switch, ground and cruise control set/resume switches, then remove the cable reel 3-P connector from its clips.

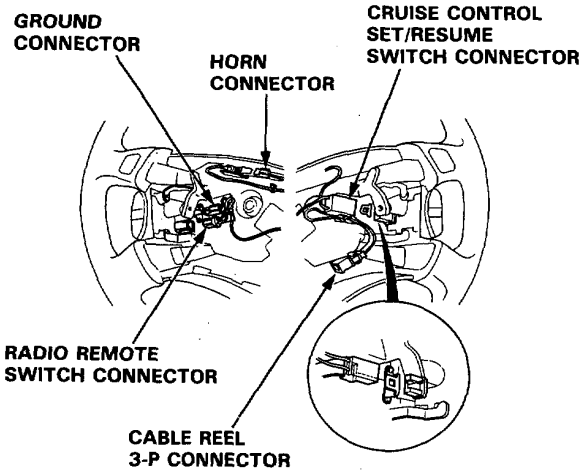

9. Remove the steering wheel from the column.

10. Remove the 4 bolts and remove the cover under the steering column.

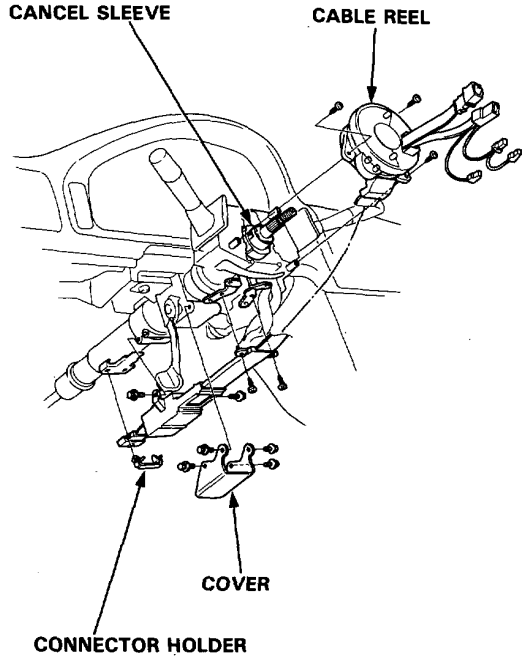

11. Remove the cable reel and cancel sleeve.

Cable Reel Installation

CAUTION:

- **Before installing the steering wheel, the front wheels should be aligned straight forward.**
- **Be sure to install the harness wires so that they are not pinched or interfering with other car parts.**
- **After reassembly, confirm that the wheels are still straight ahead and that steering wheel spoke angle is correct. If minor spoke angle adjustment is necessary do so only by adjustment of the tie rods, not by removing and repositioning the steering wheel.**

1. Align the cancel sleeve grooves with the cable reel projections.

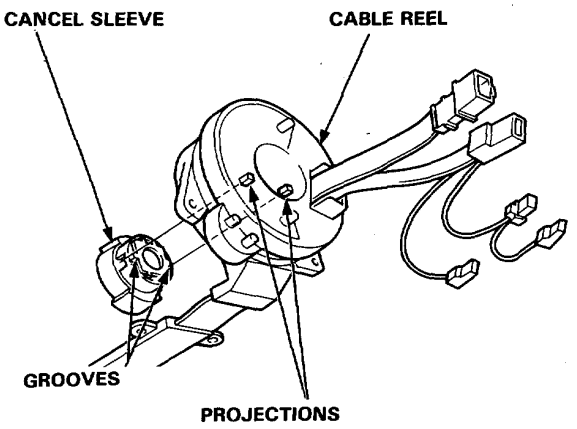

2. Carefully install the cable reel and the cancel sleeve on the steering column shaft. Reinstall the cover.

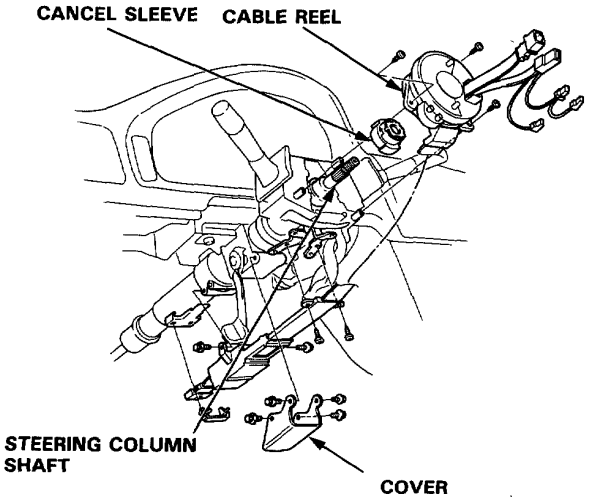

3. Install the steering column upper and lower covers.

4. Center the cable reel.
   Do this by first rotating the cable reel clockwise until it stops. Then rotate it counterclockwise (approximately two turns) until:

   - **The yellow gear tooth lines up with the mark on the cover.**
   - **The arrow on the cable reel label points straight up.**

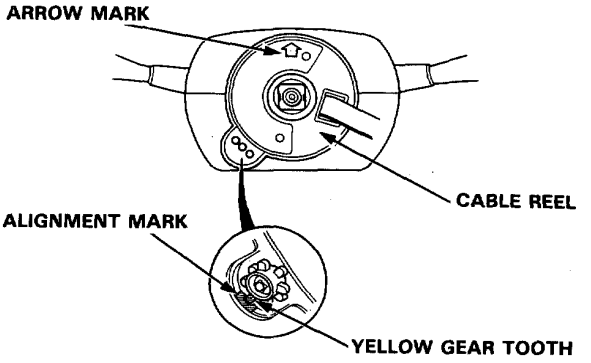

5. Install the steering wheel and attach the cruise control connector and cable reel connector to their clips.

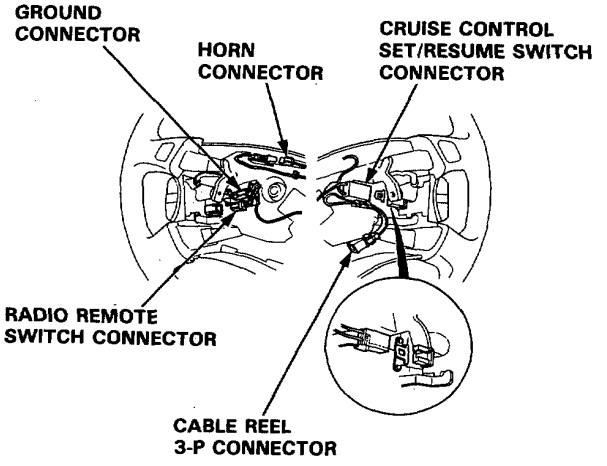

6. Connect the horn connector, radio remote switch connector and ground connector.

7. Install the steering wheel nut.

8. Install the airbag assembly.

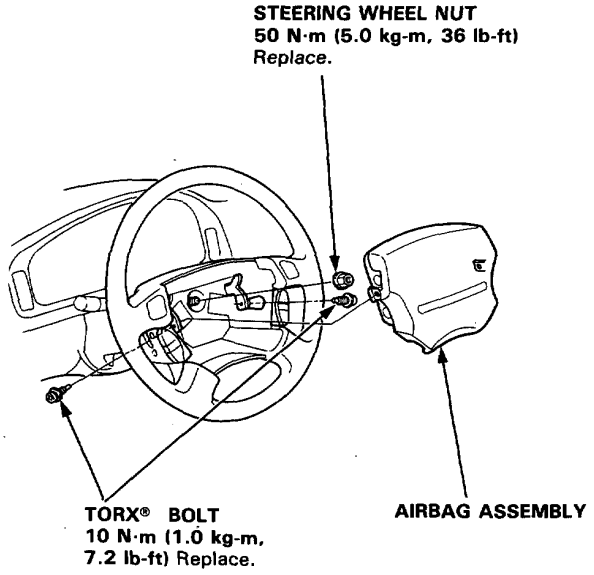

9. Connect the cable reel harness 7-P connector to the SRS main harness, then attach the connector holder to the steering column.

10. Install the dashboard lower panel.

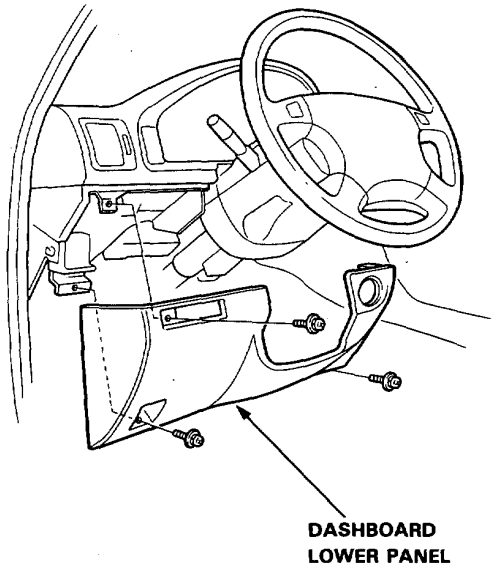

11. Disconnect the short connector from the airbag, then connect the cable reel connector to the airbag connector.

    NOTE: Attach the short connector to lid, then install the lid.

12. Reconnect the battery positive cable, then the negative cable.

13. After installing the cable reel, confirm proper system operation:
    - Turn the ignition to II; the instrument panel SRS light should go on for about 6 seconds and then go off.
    - Confirm operation of horn buttons.
    - Confirm operation of the headlight and wiper switches.
    - Confirm operation of cruise control set/resume switch.
    - Rotate the steering wheel counterclockwise to make sure the yellow gear tooth lines up with the slot on the cover.

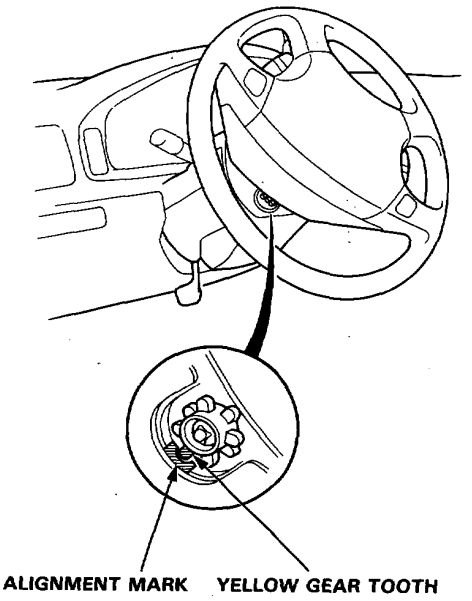

Dash Sensor Removal

CAUTION:
- **Do not damage the sensor wiring.**
- **Do not install used SRS parts from another car. When repairing: use only new SRS parts.**
- **Carefully inspect the front sensors for signs of being dropped or improperly handled, such as dents, cracks or deformation.**

NOTE: LHD type is shown. RHD type is symmetrical to LHD type.

1. Disconnect the battery negative cable, then disconnect the positive cable.

2. Install the short connector on airbag (See page 23-412).

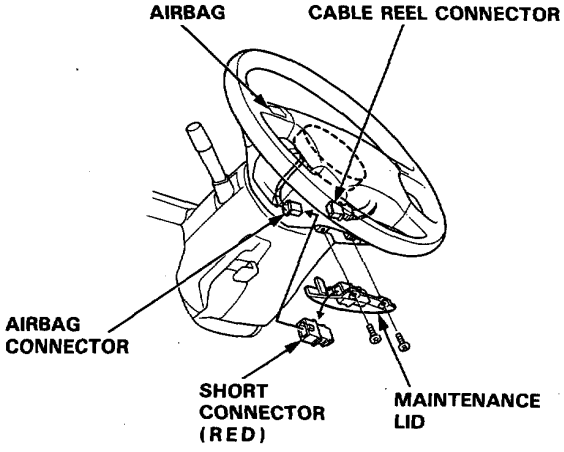

3. Remove the footrest and left door sill molding, then pull the carpet back, and remove the sensor cover.

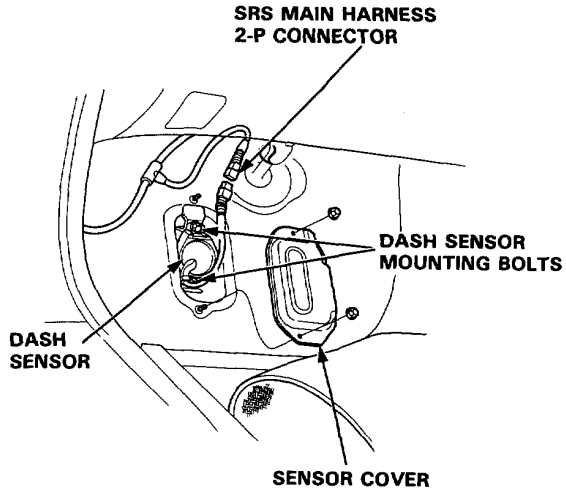

4. Remove the door sill molding and pull back the carpet. Remove the ECU.

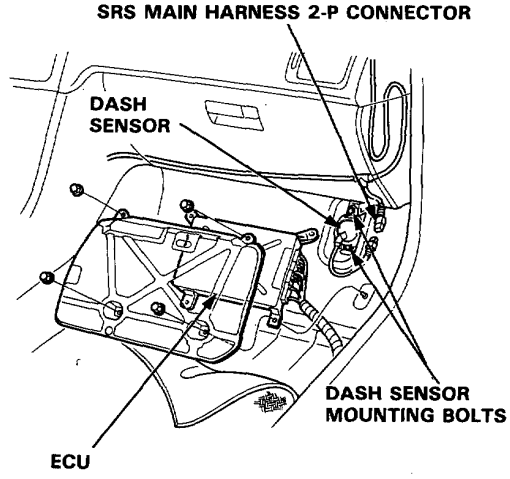

5. Remove the 2 mounting bolts, then remove the dash sensor.

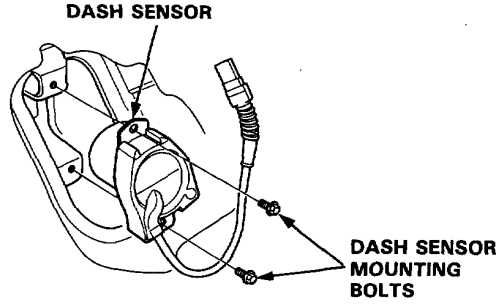

Dash Sensor Installation

CAUTION:

- **Be sure to install the harness wires so that they are not pinched or interfering with other car parts.**
- **Replace a sensor if it is dented, cracked or deformed.**
- **For the SRS to function properly, the right and left sensors must be installed on the proper sides.**

1. Be sure the battery cables are disconnected.

2. Install the sensor securely.

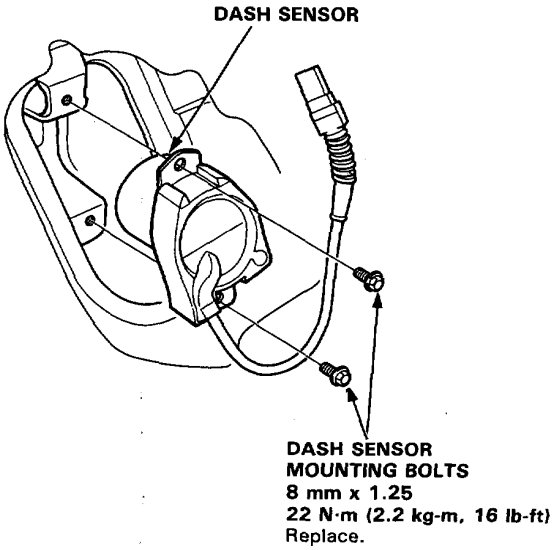

3. Reinstall the sensor cover, carpet, molding, footrest and ECU.

4. Remove the short connector from the airbag connector and connect the cable reel and airbag harness.

5. Reconnect the battery positive cable, then the negative cable.

6. After installing the dash sensor, confirm proper system operation.

   - Turn on the ignition to II: the instrument panel SRS indicator light should go on for about 6 seconds and then go off.

SRS Unit Removal

CAUTION:
- **Always keep the short connector on the airbag connector when the harness is disconnected.**
- **Do not damage the SRS unit terminal or connectors.**
- **Do not disassemble the SRS unit; it has no serviceable parts.**
- **Store the SRS unit in a clean, dry area.**
- **Do not use any SRS unit which has been subjected to water damage or shows signs of being dropped or improperly handled, such as dents, cracks or deformation.**

1. Disconnect the battery negative cable, then disconnect the positive cable.
2. Install the short connector on airbag. (See page 23-412).

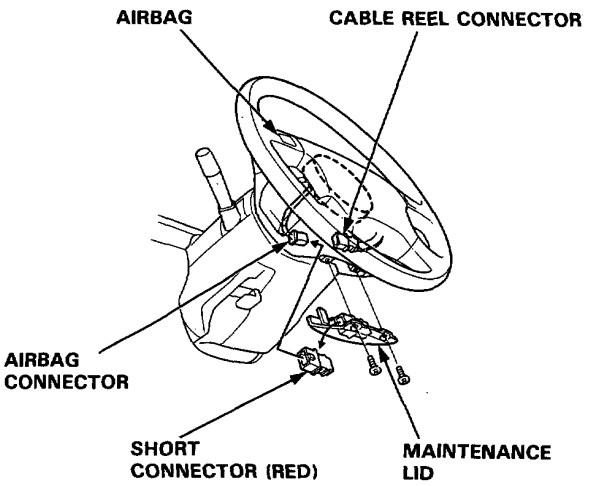

3. Remove the center armrest, then disconnect the SRS main harness 18-P connector from the SRS unit.

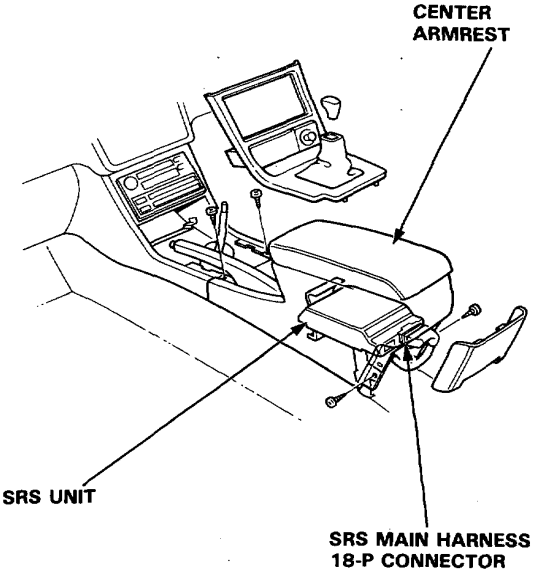

4. Remove the 4 SRS unit mounting bolts, then remove the SRS unit.

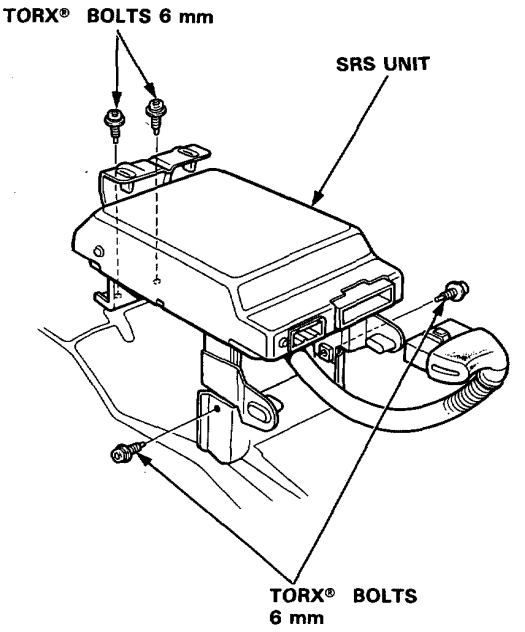

CAUTION: Be sure to install the SRS wiring so that it is not pinched or interfering with other car parts.

1. Install the SRS unit.

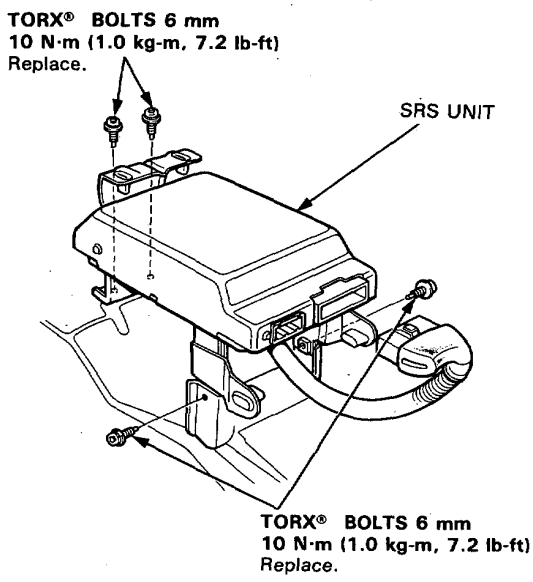

2. Connect the SRS main harness 18-P connector to the SRS unit; push it into position until it clicks.

3. Install the center armrest.

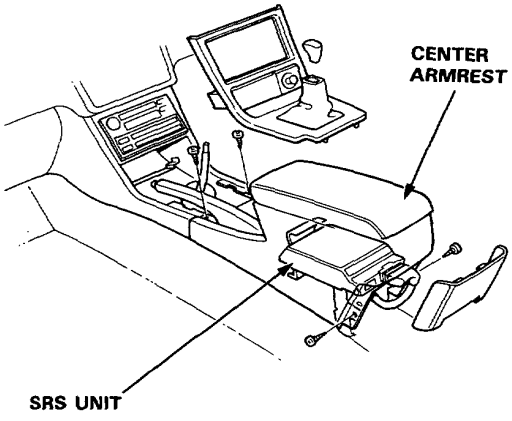

4. Remove the short connector from the airbag connector, then reconnect the cable reel connector to the airbag connector.

   NOTE: Attach the short connector to lid, then install the lid.

5. Reconnect the battery positive cable, then the negative cable.

6. After installing the SRS unit assembly, confirm proper system operation.

   - Turn the ignition to II: the instrument panel SRS indicator light should go on for about 6 seconds and then go off.

Wiring Diagrams

Index

Air Conditioner 22
Anti-lock Brake System 20
Automatic Transmission Control System .. 19
Battery 1
Blower Controls 22
Charging System 1
Cigarette Lighter 10
Clock 7
Cruise Control 14
Defogger, Rear Window 15
Fuel Injection System 18
Gauges 2, 3
Headlight Adjuster 11
Heater Control 22
Horns 10
Ignition Switch 1
Ignition System 1
Indicator
- Brake Warning 3
- Lights-on Reminder 7
- Low Fuel Indicator 3
- Oil Pressure Warning 3
- Safety Indicator 4
- Seat Belt Reminder 7
- Shift Lever Position Indicator 4
- Washer Fluid Level Indicator 2

Integrated Control Unit 6, 7
Lights, Exterior
- Back-up Lights 10
- Brake lights 5
- Front Side Marker Lights 7
- Hazard Lights 10
- Headlights 7, 8
- License Plate Lights 9
- Parking Light 9
- Rear Fog Light 8
- Rear Side Marker Lights 9
- Taillights 9
- Turn Signal Lights 10

Lights, Interior
- Ashtray Lights 10
- Coin Box Light 9
- Courtesy Lights 6
- Dashlight Brightness Control 9
- Dome Lights 6
- Entry Light Timer 6
- Foot Lights 6
- Glove Box Light 9
- Ignition Key Light 6
- Trunk Light 5
- Vanity Mirror Lights 9

Lighting System 8
Locks, Keyless/Power door 12
Mirrors, Power 13
Oil Level Warning System 4
Opener, Trunk 12
Radiator and Condenser Fan Controls 2
Seats, Heater 17
Seat, Power 16, 17
Security Alarm System 21
Speed Alarm System 4
Starting System 1
Stereo Sound System 11
Sunroof 14
Supplemental Restraint System (SRS) 17
Turn Signal/Hazard
- Flasher System 10

Washer, Headlight 15
Washer, Windshield 15
Windows, Power 13
Wipers, Windshield 15

Fuel Injected System Diagram
Fuel Injected System Connectors