KIA, THE COMPANY

Congratulations! Your selection of a Kia was a wise investment. It will give you years of driving pleasure. Now that you are the owner of a Kia vehicle, you'll probably be asked a lot of questions about your vehicle and the company like "What is a Kia?", "Who is Kia?", "What does 'Kia' mean?".

Here are some answers. First, Kia is the oldest car company in Korea. It is a company that has thousands of employees focused on building high-quality vehicles at affordable prices.

The first syllable, ***Ki***, in the word "Kia" means "to arise from to the world" or "to come up out of to the world." The second syllable, ***a***, means "Asia." So, the word ***Kia***, means "to arise from" or "to come up out of Asia to the world."

Drive safely and enjoy your Kia!

Thank you for choosing a Kia vehicle.

When you require service, remember that your dealer knows your vehicle best. Your dealer has factory-trained technicians, recommended special tools, genuine Kia replacement parts and is dedicated to your complete satisfaction.

Because subsequent owners require this important information as well, this publication should remain with the vehicle if it is sold.

This manual will familiarize you with operational, maintenance and safety information about your new vehicle. It is supplemented by a Warranty and Consumer Information manual that provides important information on all warranties regarding your vehicle.

We urge you to read these publications carefully and follow the recommendations to help assure enjoyable and safe operation of your new vehicle.

Kia offers a great variety of options, components and features for its various models.

Therefore, the equipment described in this manual, along with the various illustrations, may not all be applicable to your particular vehicle.

The information and specifications provided in this manual were accurate at the time of printing. Kia reserves the right to discontinue or change specifications or design at any time without notice and without incurring any obligation. If you have questions, always check with your Kia Dealer.

We assure you of our continuing interest in your motoring pleasure and satisfaction in your Kia vehicle.

© 2006 Kia Motors Corp.

All rights reserved. Reproduction by any means, electronic or mechanical, including photocopying, recording, or by any information storage and retrieval system or translation in whole or part is not permitted without written authorization from Kia Motors Corporation.

Printed in Korea

TABLE OF CONTENTS

Introduction	1
Your vehicle at a glance	2
Knowing your vehicle	3
Driving your vehicle	4
Driving tips	5
In case of an emergency	6
Maintenance	7
Specifications	8
Index	9

Introduction

1

How to use this manual / 1-2
Vehicle handling instructions / 1-3
Vehicle break-in process / 1-3

HOW TO USE THIS MANUAL

We want to help you get the greatest possible driving pleasure from your vehicle. Your Owner's Manual can assist you in many ways. We strongly recommend that you read the entire manual. At the very least, you must read the WARNING and CAUTION sections spread throughout the manual, which are easily recognized by their special markings. These sections have precautions that must be followed to prevent personal injury or death.

Illustrations complement the words in this manual to best explain how to enjoy your vehicle. By reading your manual, you learn about features, important safety information, and driving tips under various road conditions.

The general layout of the manual is provided in the Table of Contents. A good place to start is the index; it has an alphabetical listing of all information in your manual.

Sections: This manual has eight sections plus an index. Each section begins with a brief list of contents so you can tell at a glance if that section has the information you want.

You'll find various WARNING's, CAUTION's, and NOTICE's in this manual. These WARNING's, CAUTION's and NOTICE's were prepared to enhance your personal safety and continued satisfaction with Kia vehicle. You should carefully read and follow ALL procedures and recommendations provided in these WARNING's, CAUTION's and NOTICE's.

⚠ WARNING

A WARNING indicates a situation in which serious bodily injury or death could result if the warning is ignored.

CAUTION

A CAUTION indicates a situation in which personal injury, perhaps severe, could result if the caution is ignored.

✻ NOTICE

A NOTICE indicates a situation in which damage to your vehicle could result if the notice is ignored.

VEHICLE HANDLING INSTRUCTIONS

As with other vehicles of this type, failure to operate this vehicle correctly may result in loss of control, an accident or vehicle rollover. Specific design characteristics (higher ground clearance, track, etc.) give this vehicle a higher center of gravity than ordinary cars. They are not designed for cornering at the same speeds as conventional 2-wheel drive vehicles. Avoid sharp turns or abrupt maneuvers. Again, failure to operate this vehicle correctly may result in loss of control, an accident or vehicle rollover. **Be sure to read the "on-pavement" and "off-road" driving guidelines, Section 5 in this manual.**

VEHICLE BREAK-IN PROCESS

No special break-in period is needed. By following a few simple precautions for the first 1,000 km (600 miles) you may add to the performance, economy and life of your vehicle.

- Do not race the engine.
- Do not maintain a single speed for long periods of time, either fast or slow. Varying engine speed is needed to properly break-in the engine.
- Avoid hard stops, except in emergencies, to allow the brakes to seat properly.
- Avoid full-throttle starts.

Your vehicle at a glance

2

Instrument panel overview / 2-2
Engine compartment / 2-3

INSTRUMENT PANEL OVERVIEW

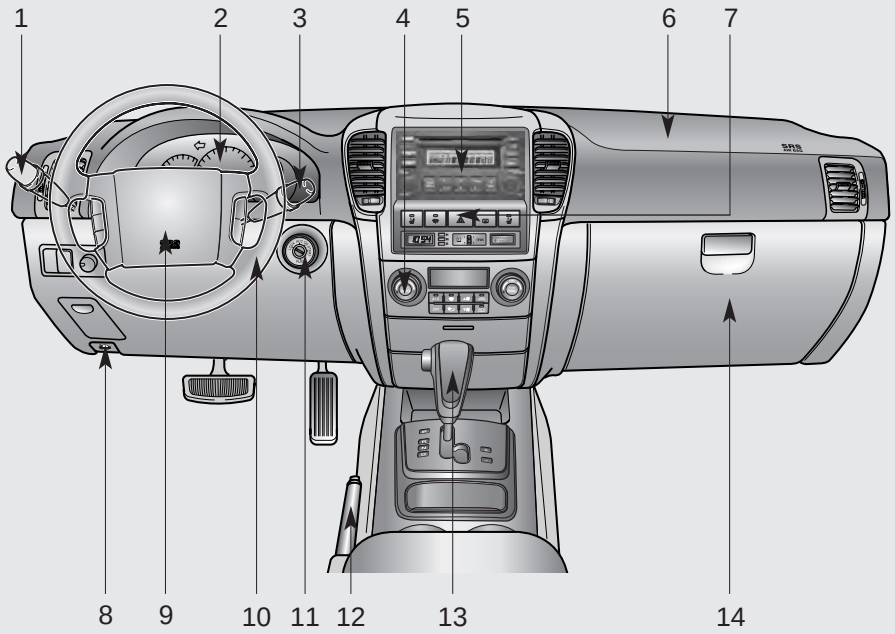

1. Light control / Turn signals.....4-51
2. Instrument cluster 4-36
3. Wiper/Washer 4-54
4. Climate control system*.....4-59/4-66
5. Audio* 3-98
6. Passenger's Air Bag*.....3-51
7. Hazard 4-58
8. Hood release lever.....3-69
9. Driver's Air Bag*.....3-50
10. Steering wheel.....4-25
11. Ignition switch 4-2
12. Parking brake lever 4-21
13. Shift lever 4-5
14. Glove box.....3-85

* : if equipped

OBL006001N

ENGINE COMPARTMENT

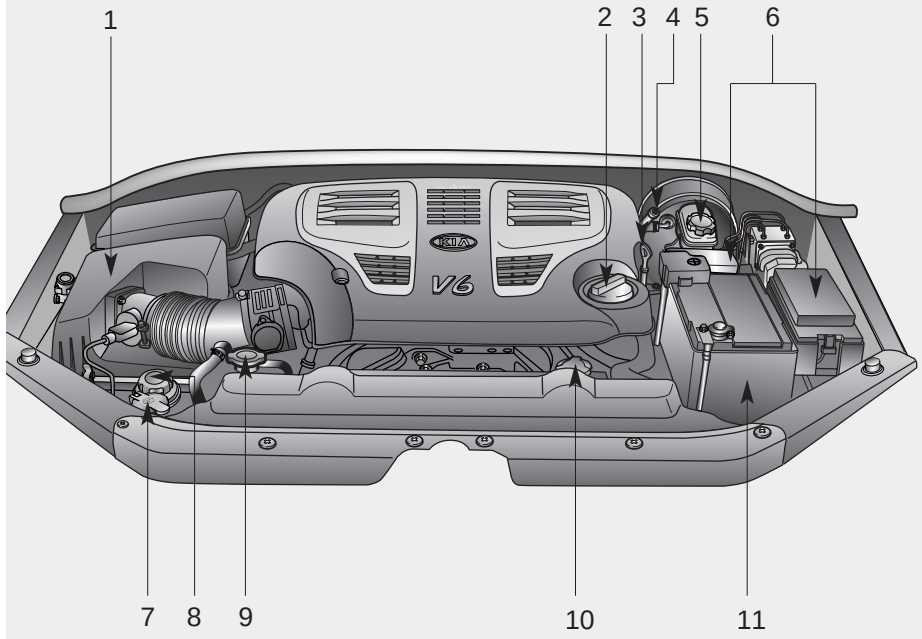

1. Air cleaner.....7-19
2. Engine oil filler cap 7-11
3. Engine oil dipstick.....7-11
4. Auto transmission fluid dipstick* 7-16
5. Brake / clutch* fluid reservoir.....7-14
6. Fuse box 6-7
7. Windshield washer fluid reservoir 7-18
8. Power steering fluid reservoir 7-15
9. Radiator cap 7-13
10. Engine coolant reservoir.....7-12
11. Battery 6-4/7-22

* : if equipped

OBL076001N

Keys / 3-2
Remote keyless entry / 3-3
Immobilizer system / 3-5
Door locks / 3-7
Window / 3-13
Seat / 3-15
Safety belts / 3-25

Knowing your vehicle

3

Air bags - advanced supplemental restraint system / 3-47
Hood / 3-69
Fuel filler lid / 3-71
Auto fuel cutoff switch / 3-74
Mirrors / 3-74
Homelink® wireless control system / 3-78
Interior lights / 3-82
Storage compartment / 3-83
Interior features / 3-86
Sunroof / 3-91
Luggage net / 3-94
Tonneau cover / 3-95
Luggage center box / 3-96
Roof rack / 3-96
Antenna / 3-98
Audio remote control / 3-99
Audio system / 3-100

KEYS

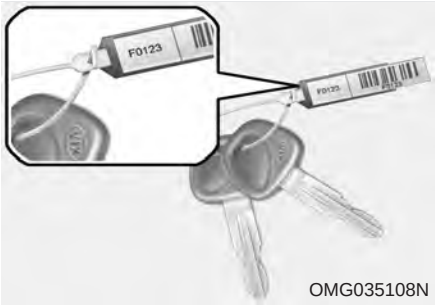

The key code number is stamped on the plate attached to the key set. Should you lose your keys, this number will enable an authorized Kia Dealer to duplicate the keys easily. Remove the plate and store it in a safe place. Also, record the code number and keep it in a safe and handy place, but not in the vehicle.

WARNING - Ignition key

Leaving children unattended in a vehicle with the ignition key is dangerous even if the key is not in the ignition. Children copy adults and they could place the key in the ignition. The ignition key would enable children to operate power windows or other controls, or even make the vehicle move, which could result in serious bodily injury or even death. Never leave the keys in your vehicle with unsupervised children.

CAUTION

Use only Kia original parts for the ignition key in your vehicle. If an aftermarket key is used, the ignition switch may not return to ON after START. If this happens, the starter will continue to operate causing damage to the starter motor and possible fire due to excessive current in the wiring.

REMOTE KEYLESS ENTRY (IF EQUIPPED)

(1) Lock button
(2) Unlock button
(3) Rear hatch window unlock button
(4) Alarm button

(1) Lock ( )

All doors are locked if the lock button is pressed.

(2) Unlock ( )

Driver's door is unlocked if the unlock button is pressed once. All doors are unlocked if the unlock button is pressed twice within 4 seconds.

After pressing this button, the doors will be locked automatically unless you open them within 30 seconds.

(3) Rear hatch window unlock ( )

If you depress (more than 0.5 second) the corresponding button on the transmitter, the rear hatch window will unlock.

(4) Alarm ( )

The horn sounds and hazard warning lights will flash for about 27 seconds if this button is pressed (more than 0.5 second). To stop the horn and lights, press any button on the transmitter.

✻ NOTICE

The transmitter will not work if any of following occur:

- **The ignition key is in ignition switch.**
- **You exceed the operating distance limit (about 10 m [30 feet]).**
- **The battery in the transmitter is weak.**
- **Other vehicles or objects may be blocking the signal.**
- **The weather is extremely cold.**
- **The transmitter is close to a radio transmitter such as a radio station or an airport which can interfere with normal operation of the transmitter.**

When the transmitter does not work correctly, open and close the door with the ignition key. If you have a problem with the transmitter, contact an authorized Kia Dealer.

CAUTION

Keep the transmitter away from water or any liquid. If the keyless entry system is inoperative due to exposure to water or liquids, it will not be covered by your manufacturer vehicle warranty.

Operational distance may vary depending upon the area the transmitter is used in. For example, if the vehicle is parked near police stations, government and public offices, broadcasting stations, military installations, airports, or transmitting towers, etc., operational distance may be lessened.

This device complies with Industry canada standard RSS-210. Operation is subject to the following two conditions:

1. This device may not cause harmful interference, and
2. This device must accept any interference including interference that may cause undesired operation of the vehicle.

⚠ WARNING

Changes or modifications not expressly approved by the party responsible for compliance could void the user's authority to operate the equipment.

OUN026002

OUN026003

Battery replacement

Transmitter uses a 3 volt lithium battery which will normally last for several years. When replacement is necessary, use the following procedure.

1. Insert a slim tool into the slot and gently pry open the transmitter center cover.
2. Replace the battery with new one. When replacing the battery, make sure the battery positive “+” symbol faces down as indicated in the illustration.
3. Install the battery in the reverse order of removal.

✻ NOTICE

The keyless entry system transmitter is designed to give you years of troublefree use, however it can malfunction if exposed to moisture or static electricity. If you are unsure how to use your transmitter or replace the battery, contact an authorized Kia dealer.

For replacement transmitters, see an Authorized Kia Dealer for reprogramming.

✻ NOTICE

- **Using the wrong battery can cause the transmitter to malfunction. Be sure to use the correct battery.**
- **To avoid damaging the transmitter, don't drop it, get it wet, or expose it to heat or sunlight.**

IMMOBILIZER SYSTEM (IF EQUIPPED)

Your vehicle is equipped with an electronic engine immobilizer system to reduce the risk of unauthorized vehicle use.

Your immobilizer system is comprised of a small transponder in the ignition key, and antenna coil in the key cylinder and Immobilizer Control Unit (or Smartra Unit).

With this system, whenever you insert your ignition key into the ignition switch and turn it to ON, the antenna coil in the ignition switch receives a signal from the transponder in the ignition key and then sends the signal to the ECU (Engine Control Unit).

The ECU checks the signal whether the ignition key is valid.

If the key is determined to be valid, the engine will start.

If the key is determined to be invalid, the engine will not start.

To deactivate the immobilizer system:

Insert the ignition key into the key cylinder and turn it to the ON position.

To activate the immobilizer system:

Turn the ignition key to the OFF position. The immobilizer system activates automatically. Without a valid ignition key for your vehicle, the engine will not start.

✻ NOTICE

When starting the engine, do not use the key with other immobilizer keys around. Otherwise the engine may not start or may stop soon after it starts. Keep each key separately not to have any malfunction after you receive your new vehicle.

Limp home (override) procedure

When you turn the ignition key to the ON position, if the IMMO indicator goes off after blinking 5 times, your transponder equipped in the ignition key is out of order. You cannot start the engine without the lime home procedure. To start the engine, you have to input your password by using the ignition switch.

The following procedure is how to input your password of “2345” as an example.

1. Turn the ignition key to the ON position. The IMMO indicator ( ) will blink 5 times and go off indicating the beginning of the limp home procedure.
2. Turn the ignition key to the ACC position.
3. To enter the first digit (in this example “2”), turn the ignition key to the ON and ACC position twice. Perform the same procedure for the next digits between 3 seconds and 10 seconds (for example, for “3”, turn the ignition ON and ACC 3 times).

4. If all of the digits have been input successfully, you have to start the engine within 30 seconds. If you attempt to start the engine after 30 seconds, the engine will not start and you will have to input your password again.

After performing the limp home procedure, you have to see an authorized Kia dealer immediately to inspect and repair your ignition key or immobilizer system.

✻ NOTICE

If you cannot start your engine in spite of limp home procedure, have your vehicle towed by an authorized Kia dealer for inspection and necessary repairs.

✻ NOTICE

The transponder in your ignition key is an important part of the immobilizer system. It is designed to give years of troublefree service, however you should avoid exposure to moisture, static electricity and rough handling. Immobilizer system malfunction could occur.

✻ NOTICE

Do not change, alter or adjust the immobilizer system because it could cause the immobilizer system to malfunction and should only be serviced by an authorized Kia dealer.
Malfunctions caused by improper alterations, adjustments or modifications to the immobilizer system are not covered by your vehicle manufacturer warranty.

This device complies with Industry Canada Standard RSS-210. Operation is subject to the following two conditions:

1. This device may not cause interference, and
2. This device must accept any interference, including interference that may cause undesired operation of the device.

⚠ WARNING

Changes or modifications not expressly approved by the party responsible for compliance could void the user's authority to operate the equipment.

DOOR LOCKS

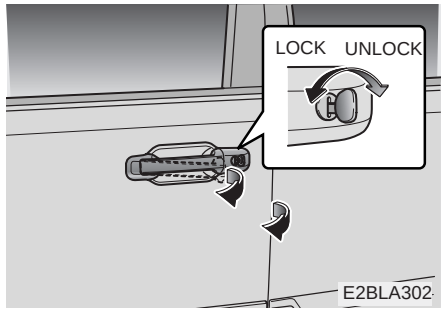

Operating door locks from outside the vehicle

- Turn the key toward rear of vehicle to unlock and toward front of vehicle to lock.
- Turn the key toward front of vehicle to lock all doors.
- Turn the key to the right once to unlock the driver's door and to the right twice within 4 seconds to unlock all doors. (if equipped)
- Doors can also be locked and unlocked with the transmitter key (if equipped).
- Once the doors are unlocked, it may be opened by pulling the door handle.
- When closing the door, push the door by hand. Make sure that doors are closed securely.

✻ NOTICE

In cold and wet climates door lock and door mechanisms may not work properly due to freezing conditions.

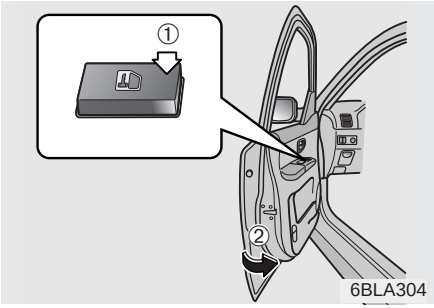

To lock a door without the key, push the inside door lock switch (①) to the "LOCK" position and close the door (②).

✻ NOTICE

Always remove the ignition key, engage the parking brake, close all windows and lock all doors when leaving your vehicle unattended.

✻ NOTICE

If the door is locked/unlocked multiple times in rapid succession with either the vehicle key or door lock switch, the system may stop operating temporarily in order to protect the circuit and prevent damage to system components.

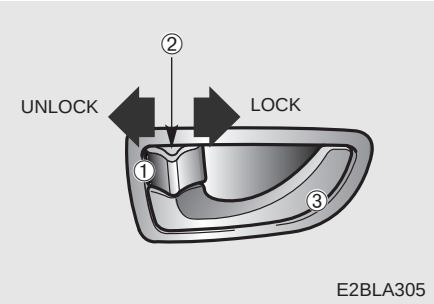

Operating door locks from inside the vehicle

With the door lock button

- To unlock a door, pull the door lock button to the “Unlock” position (the red part (②) of the button becomes visible).
- To lock a door, push the door lock button (①) to the “Lock” position. If the door is locked, red part (②) of the knob is not visible.
- To open a door, pull the door handle (③).
- If the inner door handle of driver’s side door is pulled when the door lock button is in lock position, the button is unlocked and door opens.
- Front doors cannot be locked if the ignition key is in the ignition switch and if the front door is open.

⚠ WARNING - Door lock malfunction

If a power door lock ever fails to function while you are in the vehicle, try one or more of the following techniques to exit:

- **Operate the door unlock feature repeatedly (both electronic and manual) while simultaneously pulling on the door handle.**
- **Operate the other door locks and handles, front and rear.**
- **Lower a front window and use the key to unlock the door from outside.**

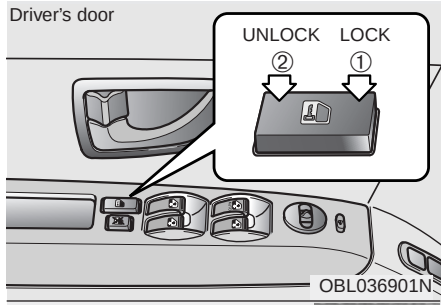

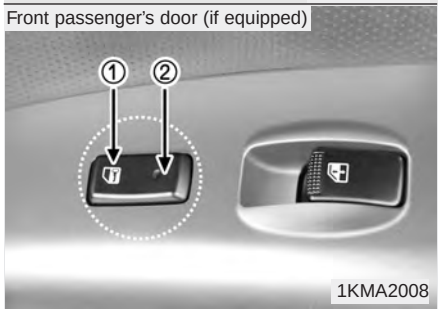

With central door lock switch

- When pushing down on the front portion of the switch, all vehicle doors will lock (①).
- When pushing down on the rear portion of the switch, all vehicle doors will unlock (②).
- However, if the key is in the ignition switch and any front door is open, the doors will not lock when the front portion of central door lock switch is pressed.

✻ NOTICE

If the door is locked/unlocked multiple times in rapid succession with either the vehicle key or door lock switch, the system may stop operating temporarily in order to protect the circuit and prevent damage to system components.

⚠ WARNING - Doors

- **The doors should always be fully closed and locked while the vehicle is in motion to prevent accidental opening of the door. Locked doors will also discourage potential intruders when the vehicle stops or slows.**
- **Be careful when opening doors and watch for vehicles, motorcycles, bicycles or pedestrians approaching the vehicle in the path of the door. Opening a door when something is approaching can cause damage or injury.**

⚠ WARNING - Unlocked vehicles

Leaving your vehicle unlocked can invite theft or possible harm to you or others from someone hiding in your vehicle while you are gone. Always remove the ignition key, engage the parking brake, close all windows and lock all doors when leaving your vehicle unattended.

⚠ WARNING - Unattended children

An enclosed vehicle can become extremely hot, causing death or severe injury to unattended children or animals who cannot escape the vehicle. Furthermore, children might operate features of the vehicle that could injure them, or they could encounter other harm, possibly from someone gaining entry to the vehicle. Never leave children or animals unattended in your vehicle.

Impact sensing door unlock system (if equipped)

All doors will be automatically unlocked when the Supplemental Restraint System (SRS) detects a collision while the ignition switch is ON.

However, the doors may not be unlocked, if electrical power in the vehicle should fail.

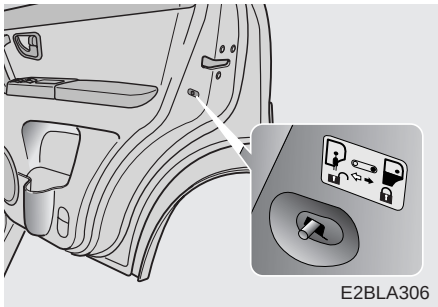

Rear door child safety lock

The child safety lock is provided to help prevent children from accidentally opening the rear doors from inside the vehicle. The rear door safety locks should be used whenever children are in the vehicle.

1. Open the rear door.
2. Push the child safety lock located on the rear edge of the door to the “lock” position. When the child safety lock is in the “lock (🔒)” position, rear door will not open when the inner door handle is pulled inside the vehicle.

3. Close the rear door.

To open the rear door, pull the outside door handle.

Even though the doors may be unlocked, the rear door will not open by pulling the inner door handle until rear door child safety lock is unlocked ( ).

WARNING - Rear door locks

If children accidentally open the rear doors while the vehicle is in motion, they could fall out and be severely injured or killed. To prevent children from opening the rear doors from the inside, the rear door safety locks should be used whenever children are in the vehicle.

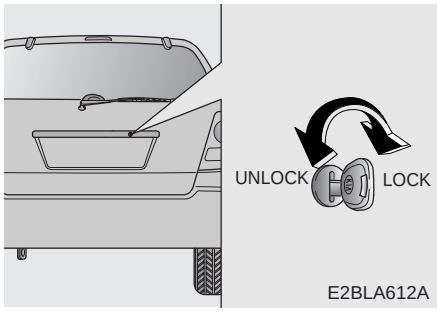

Rear hatch

Opening the rear hatch

- Rear hatch is locked or unlocked with a key.
- To open the rear hatch, insert the key into the lock, turn it to the unlock position and pull up the rear hatch by pressing the handle.

  You can also lock/unlock the latch (but not release it) with the central door lock system.
- If unlocked, the rear hatch can be opened by pressing the handle and pulling the hatch up.
- To close the rear hatch, lower and push down the rear hatch firmly. Make sure that the rear hatch is securely latched.

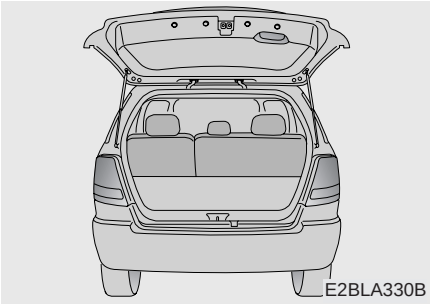

CAUTION - Rear hatch

The rear hatch/window swings upward. Make sure no objects or people are near the rear of the vehicle when opening the hatch/window.

✻ NOTICE

Make certain that you close the rear hatch/window before driving your vehicle. Possible damage may occur to the rear hatch/window lift cylinders and attaching hardware if the rear hatch/window is not closed prior to driving.

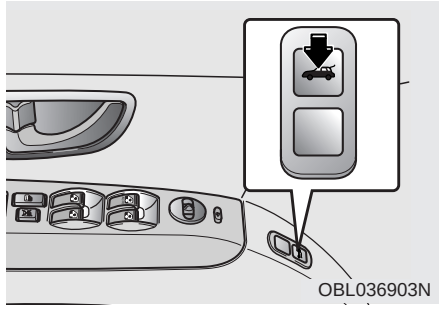

Opening the rear hatch window

To open the rear hatch window, press the rear hatch window release button and raise the rear hatch window at the rear of the vehicle.

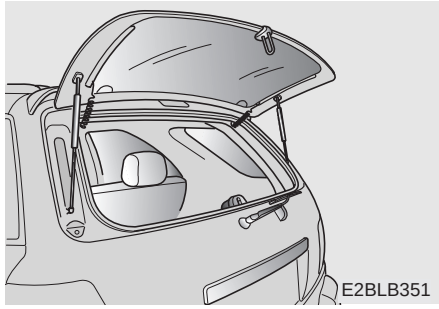

The window will raise completely by itself after it has been raised halfway.

To close the rear hatch window, lower and push down the rear hatch window firmly. Make sure that the rear hatch window is securely fastened.

- If your vehicle is not equipped with a remote keyless entry, you can also open the rear hatch window by inserting the key into the rear hatch key cylinder and turning the key to the right twice within 3 seconds and raising it.
- If your vehicle is equipped with a remote keyless entry, you can also open the rear hatch window by pressing the rear hatch window open button on the transmitter.

⚠ WARNING - Exhaust fumes

If you drive with the rear hatch /window open, you will draw dangerous exhaust fumes into your vehicle which can cause serious injury or death to vehicle occupants.

If you must drive with the rear hatch/window open, keep the air vents and all windows open so that additional outside air comes into the vehicle.

WINDOWS

Power windows

The ignition switch must be in the ON position for power windows to operate. Each door has a power window switch that controls that door's window. However, the driver has a power window lock switch which can block the operation of passenger windows.

The power windows can be operated for approximately 30 seconds after the ignition key is removed or turned to the ACC or LOCK position. However, if the front doors are opened, the power windows cannot be operated even within the 30 seconds after the ignition key removal.

✻ NOTICE

- **If you notice buffeting and pulsation (wind shock) with either side window open, you should open the opposite window slightly to reduce the condition.**
- **In cold and wet climates, power windows may not work properly due to freezing conditions.**

CAUTION

- ***To protect the power window system from the possibility of damage, do not open or close two windows at the same time. This will also ensure the longevity of the fuse.***
- ***Never try to operate the main switch on the driver's door and the individual door window switch in opposing directions at the same time. If this is done, the window will stop and cannot be opened or closed.***

⚠ WARNING - Windows

- **Always double check to make sure all arms, hands, head and other obstructions are safely out of the way before closing a window.**
- **Do not allow children to play with the power windows. Keep the driver's door power window lock switch in the LOCK position (depressed). Serious injury can result from unintentional window operation by the child.**
- **Do not extend face or arms outside through the window opening while driving.**

1KMB2012N

1KMA2013

Window opening and closing

The driver's door has a master power window switch that controls all the windows in the vehicle. To open or close a window, press down (5) or pull up (5) the front portion of the corresponding switch.

Automatic power window down (driver's window)

Depressing the power window switch momentarily to the second detent position (6) completely lowers the driver's window even when the switch is released. To stop the window at the desired position while the window is in operation, pull up the switch momentarily to the opposite direction of the window movement.

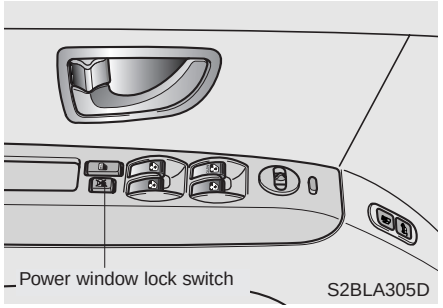

S2BLA305D

Power window lock switch

- The driver can disable the power window switches on a passenger door by depressing the power window lock switch located on the driver's door to LOCK (pressed).
- **When the power window lock switch is ON, the driver's master control cannot operate the passenger door power windows either.**

SEAT

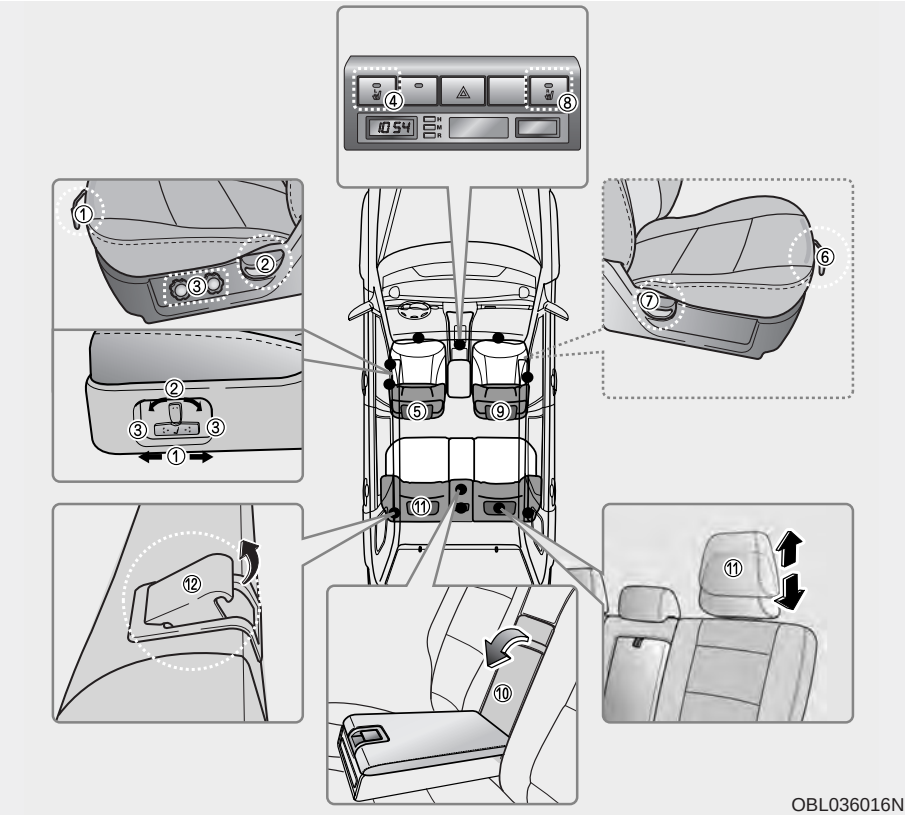

Driver's seat

① Seat adjustment, forward / backward
② Seatback recliner
③ Seat adjustment, height
④ Seat heater switch*
⑤ Headrest adjustment

Front passenger seat

⑥ Seat adjustment, forward / backward
⑦ Seatback recliner
⑧ Seat heater switch*
⑨ Headrest adjustment

Rear seat

⑩ Armrest
⑪ Headrest adjustment
⑫ Split folding rear seat

* if equipped

⚠ WARNING - Loose objects

Loose objects in the driver's foot area could interfere with the operation of the foot pedals, possibly causing an accident. Do not place anything under the front seats.

⚠ WARNING - Seating position

In order to avoid unnecessary air bag injuries including the possibility of severe injury or death, always sit as far back as possible by moving the seat far back, while still maintaining good vehicle control. Serious injury or death may be caused due to the deployment of the passenger's air bag.

⚠ WARNING - Driver's seat

- **Never attempt to adjust seat while the vehicle is moving. This could result in loss of control, and an accident causing death, serious injury, or property damage.**
- **Do not allow anything to interfere with the normal position of the seatback. Storing items against a seatback or in any other way interfering with proper locking of a seatback could result in serious or fatal injury in a sudden stop or collision.**
- **Always drive and ride with your seatback upright and the lap portion of the safety belt snug and low across the hips. This is the best position to protect you in case of an accident.**

(Continued)

(Continued)

- **In order to avoid unnecessary air bag injuries including the possibility of severe injury or death, always sit as far back as possible from the steering wheel so that your chest is at least 250 mm (10 inches) away from the steering wheel.**

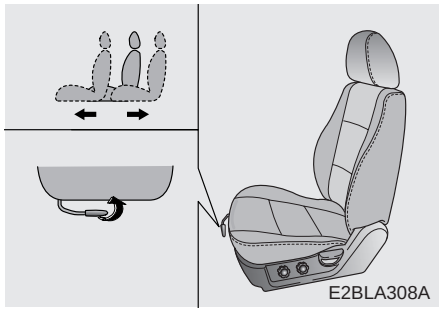

Front seat adjustment (Manual type)

Adjusting the seat forward and backward

To move the seat forward or backward:

1. Pull the seat slide adjustment lever under the front edge of the seat cushion up and hold it.
2. Slide the seat to the position you desire.
3. Release the lever and make sure the seat is locked in place.

Adjust the seat before driving, and make sure the seat is locked securely by trying to move forward and backward without using the control knob. If the seat moves, it is not locked properly.

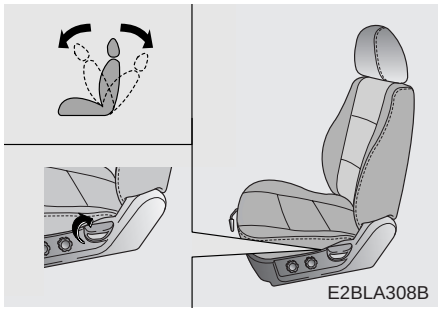

Adjusting the seatback recliner

To recline the seatback:

1. Lean forward slightly and lift up on the seatback recline lever located on the outside of the seat, at the rear.
2. Carefully lean back on the seat and adjust the seatback of the seat to the position you desire.
3. Release the lever and make sure the seatback is locked in place. (The lever MUST return to its original position for the seatback to lock.)

⚠ WARNING - Driver responsibility for front seat passenger

Riding in a vehicle with a front seatback reclined could lead to serious or fatal injury in an accident. If a front seat is reclined during an accident, the occupant's hips may slide under the lap portion of the safety belt applying great force to the unprotected abdomen or neck or a passenger may be ejected in a rollover. Serious or fatal internal injuries could result. The driver must advise the front passenger to keep the seatback in a comfortably upright position whenever the vehicle is in motion.

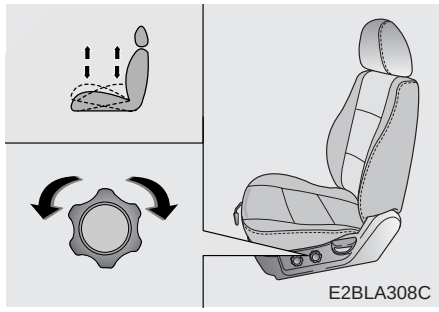

Adjusting the height of seat cushion (for driver's seat)

To change the height of the seat cushion, rotate the knob located on the outside of the seat cushion.

- To adjust the front height of the seat cushion, rotate the knob.
- To adjust the rear height of the seat cushion, rotate the knob.

Front seat adjustment (Electric type, if equipped)

✻ NOTICE

- **Power seats are driven by the electric motor. Stop operating if the adjustment is completed. Excessive operation may damage the electrical equipment.**
- **When in operation, the power seats consume large amount of electrical power. To prevent unnecessary charging system drain, don't adjust the power seats longer than necessary while the engine is not running.**
- **Do not operate two or more power seat control buttons at the same time. Doing so may result in power seat motor or electrical component malfunction.**

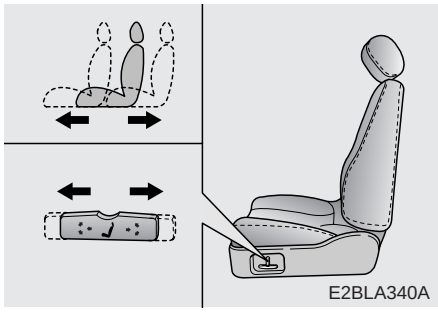

Adjusting the seat forward and backward

Push the control button forward or backward to move the seat to the desired position. Release the knob and the seat will lock in the selected position.

Adjust the seat before driving, and make sure the seat is locked securely by trying to move forward and backward without using the control knob. If the seat moves, it is not locked properly.

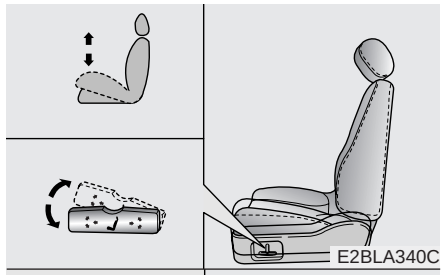

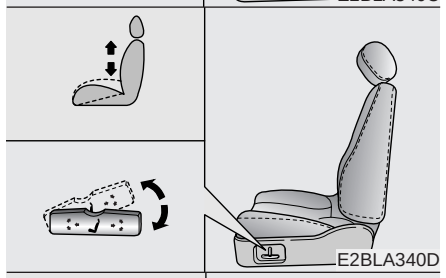

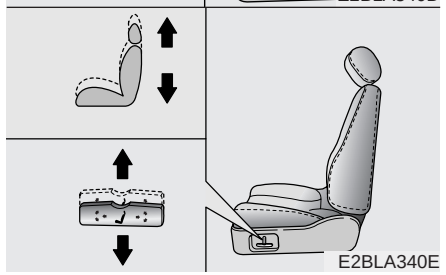

Adjusting height of the driver's seat cushion (if equipped)

Move the front portion of the control knob up to raise or down to lower the front part of the seat cushion.

Move the rear portion of the control knob up to raise or down to lower the rear part of the seat cushion.

To raise or lower the seat cushion, pull up or push down on the center of the corresponding switch. Release the knob once the seat reaches the desired position.

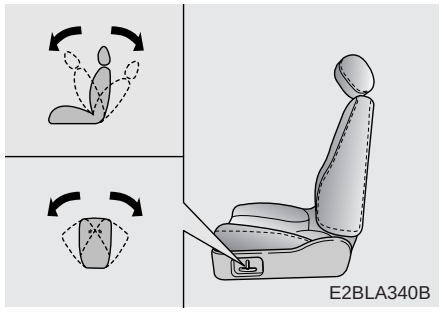

Adjusting the seatback recliner

Move the lever forward or backward to the desired angle and release the lever. If the lever is released, seatback will lock in place. After adjustment, make sure that the lever has returned to its original locked position.

⚠ WARNING - Driver responsibility for front seat passenger

Driving or riding in a vehicle with a front seatback reclined could lead to serious or fatal injury in an accident. If a front seat is reclined during an accident, the occupant's hips may slide under the lap portion of the safety belt applying great force to the unprotected abdomen or neck or a passenger may be ejected in a rollover. Serious or fatal internal injuries could result. The driver must advise the front passenger to keep the seatbacks in comfortably upright position whenever the vehicle is in motion.

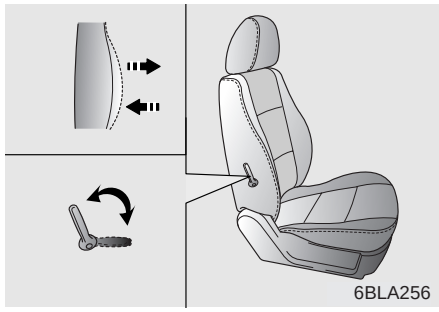

Lumbar support (For driver's seat)

You can adjust the lumbar support by moving the lever on the side of the driver's seatback.

Pivoting the lever toward the front of the vehicle increases the lumbar support.

Pivoting the lever toward the rear of the vehicle decreases the lumbar support.

Warming the front seats (if equipped)

The front seats can be electrically heated individually when the ignition switch is ON. When you depress the seat warmer switch, a thermostat regulates seat temperature. To deactivate the heating system, depress the switch once again.

✱ NOTICE

- **The seat warmer will not operate if ambient temperature is above 37±3°C (98.5±5.5°F).**
- **If the seat warmer doesn't work when the ambient temperature is below 28±3°C (82.5±5.5°F), have the system checked by an authorized dealer.**

CAUTION

- *When cleaning the seats, do not use an organic solvent such as thinner, benzene, alcohol and gasoline. Doing so may damage the surface of the heater or seats.*
- *To prevent overheating the seat warmer, do not place blankets, cushions or seat covers on the seats while the seat warmer is in operation.*
- *Do not place heavy or sharp objects on seats equipped with seat warmers. Damage to the seat warming components could occur.*

WARNING - Seat heater burns

Passengers should use extreme caution when using seat warmers due to the possibility of excess heating or burns. In particular, the driver must exercise extreme care for the following types of passengers:

1. **Infants, children, elderly or disabled persons, or hospital outpatients**
2. **Persons with sensitive skin or those that burn easily**
3. **Fatigued individuals**
4. **Intoxicated individuals**
5. **Individuals taking medication that can cause drowsiness or sleepiness (sleeping pills, cold tablets, etc.)**

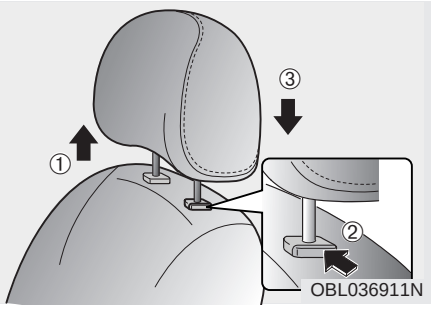

Headrest adjustment

Adjusting the height up and down

The headrest not only provides comfort for the driver and passengers, but also helps to protect the head and neck in the event of a collision.

To raise the headrest, pull it up to the desired position (①). To lower the headrest, push and hold the release button (②) on the headrest support and lower the headrest to the desired position (③). For best protection, adjust the headrest so its center is as high as your ears. Also adjust the headrest so its distance from the head is as wide as your fist.

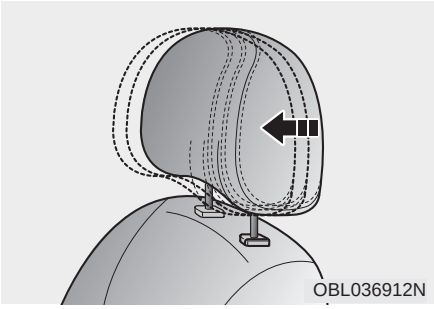

Adjusting forward and backward

The headrest may be adjusted forward to three different positions by pulling the headrest forward. To adjust the headrest backward, pull it fully forward to the farthest position and release it. Adjust the headrest so that it properly supports the head and neck.

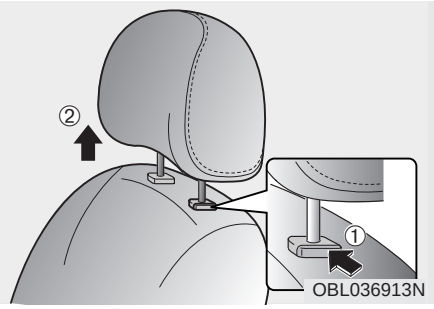

Removal

To remove the headrest, raise it as far as it can go then press the release lever (①) while pulling upward (②).

⚠ WARNING - Headrest positioning

To reduce the risk of head and neck injuries, each occupant headrest must be properly adjusted. Do not drive the vehicle with the headrest removed or improperly positioned.

Do not adjust the driver's headrest while driving, or else loss of control and an accident is possible.

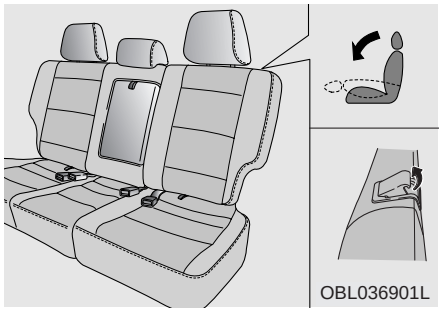

Split folding rear seat

The rear seatbacks fold forward to provide additional cargo space and to provide access to the cargo area.

- To fold the rear seatback(s) down, pull the lock release lever, then fold the seatback forward and down.
- To raise the seatback, lift and push it firmly until it clicks into place.
- When you return the seatback to its upright position, reposition the rear safety belts so that they can be used by rear seat passengers.

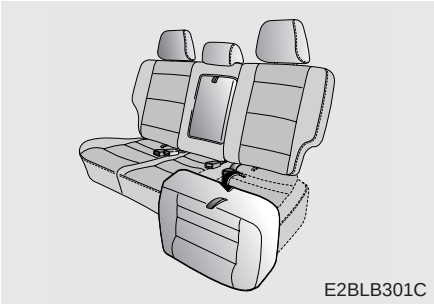

To fold the rear seat

1. Pull up the strap to lift the rear portion of the seat cushion.

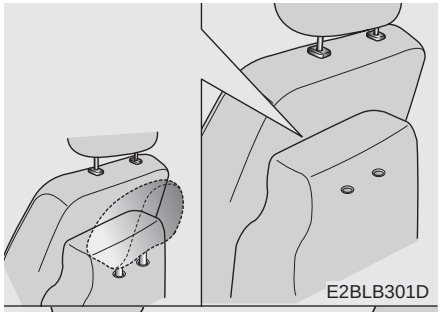

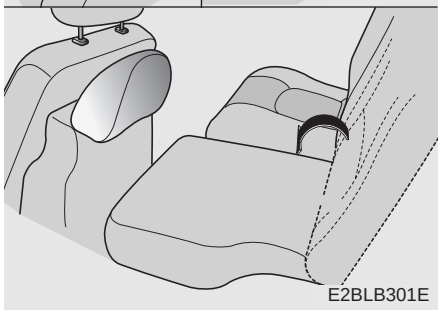

2. Remove the headrest and put the headrest poles into the holes on the rear of the seat cushion.
3. Pull the lock release lever on the seatbacks, then fold the seatback forward and down firmly.

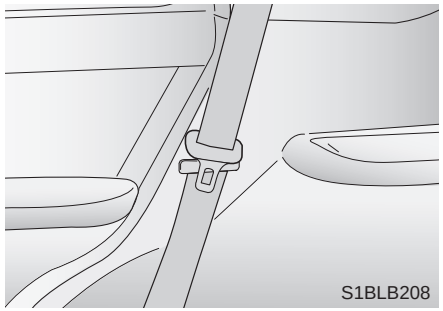

CAUTION - Rear safety belts

When returning the rear seatbacks to the upright position, remember to return the rear shoulder belts to their proper position. Routing the safety belt webbing through the rear safety belt guides will help keep the belts from being trapped behind or under the seats.

To unfold the rear seat

1. Lift and push the seatback backward firmly until it clicks into place.
2. Replace the headrest on the seatback.
3. Push the seat cushion down firmly.

CAUTION - Rear floor

Do not remove the floor carpet in your vehicle. Emission control system components in the area of the rear seats cause high exhaust temperatures under the floor.

WARNING - Cargo

Cargo should always be secured to prevent it from being thrown about the vehicle in a collision and causing injury to the vehicle occupants. Special care should be taken of objects placed in the rear seats, since those may hit the front seat occupants in a frontal collision.

CAUTION - Cargo loading

Make sure the engine is off, the transmission is in P and the parking brake is applied whenever loading or unloading cargo. Failure to take these steps may allow the vehicle to move if shift lever is inadvertently moved to another position.

Armrest

The armrest is located in the center of the rear seat. Pull the armrest down from the seatback.

SAFETY BELTS

Pre-tensioner safety belt

Your vehicle is equipped with driver's and front passenger's pre-tensioner safety belts. The purpose of the pre-tensioner is to make sure that excess slack is taken up in certain frontal collisions. The pre-tensioners may activate along with the front air bags in frontal collisions based on angle of impact, seat belt usage and impact severity.

✻ NOTICE

The pre-tensioner seat belt is installed at the front seats, and the sensor is equipped inside the buckle, where presence of passenger is sensed by the fastening of the seat belts. Therefore, pre-tensioner will not activate if the passenger is not fastened with the seat belts. Likewise, it will activate if buckled even without a passenger in the seat. Pre-tensioner seat belt is designed to activate when the seatbelt is in use. To ensure the pretensioner seatbelts activate in event of a possible seatbelt buckle switch malfunction, the system is designed to activate regardless of whether a seat belt is in use or if no seat belt use is detected within 6 seconds of turning the ignition switch ON.

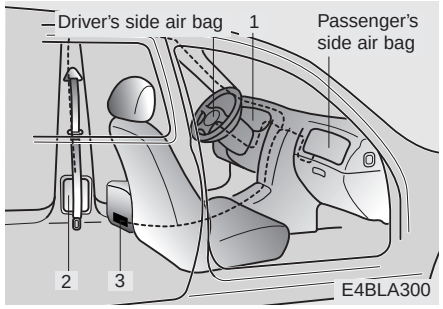

The seat belt pre-tensioner system consists mainly of the following components. Their locations are shown in the illustration.

① SRS air bag warning light
② Seatbelt pre-tensioner assembly
③ SRS air bag control module

⚠ WARNING - Safety belt adjustment

To obtain maximum benefit from a pre-tensioner seat belt:

- **The safety belt must be worn correctly.**
- **The safety belt must be adjusted to the correct position.**

Load limiter (if equipped)

When the pre-tentioner activates, if the system senses excessive seat belt tension on the driver or passenger's seat belt, the load limiter inside the pre-tensioner will release some of the pressure on the affected seat belt.

⚠ WARNING - Air bag/Pre-tensioner dust

When the air bags and pre-tensioners are activated, a loud noise may be heard and fine dust, which may appear to be smoke, may be visible in the passenger compartment. This dust is not toxic. The dust may cause skin irritation and should not be breathed for prolonged periods. Ventilate the vehicle after impact and wash your hands and face thoroughly after an accident.

⚠ WARNING - Air bag/pre-tensioner warning light

If the SRS air bag warning light does not illuminate when the ignition key is turned to "ON", or if it remains illuminated after approximately 6 seconds, or if it illuminates while the vehicle is being driven, please have an authorized Kia dealer inspect the pre-tensioner and air bag system as soon as possible.

⚠ WARNING - Hot parts

The pre-tensioner assembly mechanism become hot during activation. Do not touch the pre-tensioner seat belt assembly for several minutes after they have been activated.

⚠ WARNING - Replacing used pre-tensioners

- **Pre-tensioners are designed to operate once. After activation, pre-tensioner seat belts must be replaced. All seat belts, of any type, should always be replaced after they have been worn during a collision.**
- **Do not attempt to replace the pre-tensioners yourself. This must be done by an authorized Kia dealer.**

⚠ WARNING - Damaging the pre-tensioners

- **Do not hit or strike the pre-tensioner assemblies, especially with a tool or heavy object.**
- **Do not attempt to service or repair the pre-tensioners.**

Safety belt restraint system

⚠ WARNING - Safety belts

To minimize the risk of serious or fatal injury in an accident, the driver and all passengers should use the appropriate safety restraints for their age and size. The presence of air bags does not change the need to be properly restrained by a safety belt or size-appropriate child restraint. In fact, air bags are designed to work the best when passengers are correctly restrained in the vehicle.

- **Be sure you are familiar with the information in this section, including the information on infant and child restraints.**
- **Read the safety warnings on the sunvisors of your vehicle also.**

We strongly recommend that the driver and all passengers be properly restrained at all times by using the safety belts provided with the vehicle. Proper use of the safety belts decreases the risk of severe injury or death in accidents or sudden stops. In most states, and in Canada, the law requires their use.

All seats have lap/shoulder belts. Inertial locks in the safety belt retractors allow all of the lap/shoulder safety belts to remain unlocked during normal vehicle operation. This allows the occupants some freedom of movement and increased comfort while using the safety belts. If a force is applied to the vehicle, such as a strong stop, a sharp turn, or a collision, the safety belt retractors will automatically lock the safety belts.

Since the inertial locks do not require a collision in order to lock up, you may become aware of the safety belts locking while braking or going around sharp corners.

Always use the rear seat position(s) to install your child restraint(s).

⚠ WARNING - Child restraint in front seat

Never install a child restraint system in the front passenger position, as an inflating air bag could cause serious or fatal injury to a child in that position.

The rear safety belts use a special auto-lock feature designed to allow a child restraint to be used in these positions without an added locking clip. They normally lock only under extreme or emergency conditions (emergency lock mode). However they can be adjusted so that they remain fixed and locked when a child restraint system is placed in these positions. (Use this auto-lock mode only to secure a child restraint, never for passengers restrained by the safety belts.) Page 3-41 gives instructions on placing the safety belt in the auto lock mode.

The drivers safety belt can only operate in the emergency lock mode.

Safety belts provide the best restraint when:

- The seatback is upright.
- The occupant is sitting upright (not slouched).
- The lap belt is snug across the hips.
- The shoulder belt is snug across the chest.
- The knees are straight forward.

To help you remember to fasten your safety belt, a warning light will blink. See “Safety belt warning light and chime” on page 3-30.

⚠ WARNING - After a collision

- **Lap/shoulder belt assemblies may be stretched or damaged when subjected to the stress and forces of a collision.**
- **The entire restraint system should be inspected following any collision. All belts, retractors, anchors and hardware damaged by a collision should be replaced before the vehicle is operated again.**

⚠ WARNING - Cargo area

Passengers should never be allowed to ride in the cargo area of a vehicle. No safety belts are provided for the cargo area. Persons riding in the vehicle without a fastened safety belt are much more likely to suffer serious bodily injury or death during an accident.

⚠ WARNING - Twisted belts

A twisted or jammed safety belt cannot restrain you properly. If you cannot untwist or unjam the safety belt, have an authorized Kia dealer service it immediately. Never drive or ride with a twisted or jammed safety belt.

⚠ WARNING - Belt use

Safety belts must be used correctly to work properly in an accident. Each seating position in your vehicle has a specific safety belt assembly that includes a buckle and tongue designed to be used together.

Failure to heed these warnings and follow these instructions will increase the risk and severity of injuries and the likelihood of death in an accident.

(Continued)

(Continued)

- **Use the shoulder portion of the safety belt on the outside shoulder only. Never wear the shoulder portion under the arm.**
- **Never swing the safety belt around your neck to fit over the inside shoulder.**
- **Never wear the shoulder portion of the safety belt across the neck or face.**
- **Wear the lap portion as low as possible. Be sure that the lap belt fits snugly around the hips. Never wear a lap portion of a lap/shoulder belt over your waist; it should always go over the stronger area of your hips.**
- **Never use a single safety belt for more than one person.**
- **The front seatbacks should always remain in a comfortable, upright position when the vehicle is moving.**

⚠ WARNING - Safety belt care

- **A damaged belt may not give you the protection you need in an accident.**
- **Inspect your safety belts periodically for excessive wear or damage. Pull out each belt fully and look for fraying, cuts, burns or other damage. Pull the safety belt out and let it retract a number of times. Make sure that the lap/shoulder belts return smoothly and easily into the retractor.**
- **Check the latches to make sure they latch and release without interference or delay.**
- **Never close the doors on any part of the lap or shoulder belt.**
- **Any belt not in good condition or in good working order should be promptly replaced.**

⚠ WARNING

Never close the doors on any part of the lap or shoulder belt. It can damage the safety belt or buckle which could increase the risk of injury in case of an accident.

Safety belt warning light and chime

If the driver's safety belt is not fastened when the key is turned ON or if it is unfastened after the key is turned ON, the safety belt warning light blinks until the belt fastened.

If the driver's safety belt is not fastened when the key is turned ON or if it is unfastened after the key is ON, the safety belt warning chime will sound for approximately 6 seconds. At this time, if the safety belt is fastened, the chime will stop at once.

Lap/shoulder belt

To fasten the front lap/shoulder belt:

1. Grasp the buckle and tongue plate.
2. Slowly pull the lap/shoulder belt out from the retractor.

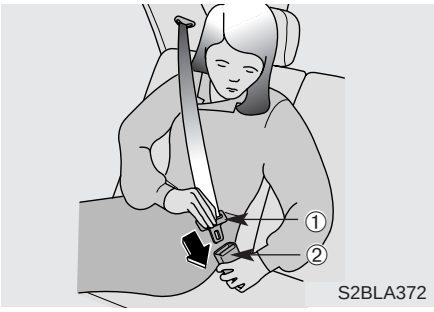

3. Insert the tongue plate (①) into the open end of the buckle (②) until an audible “click” is heard, indicating the belt is locked in the buckle.

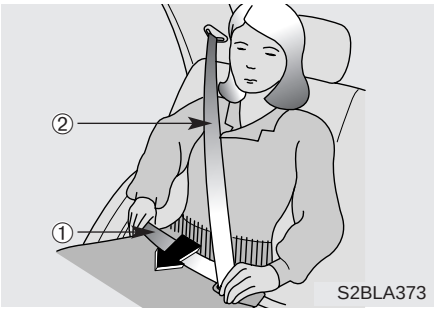

4. Position the lap portion (①) of the belt across your lap as LOW ON THE HIPS as possible to reduce the risk of sliding under it during an accident. Adjust the belt to a SNUG FIT by pulling up on the shoulder portion (②) of the safety belt. The belt retractor is designed to take up excess webbing automatically and to maintain tension on the belt. For your safety, do not put any excess slack into the safety belt at any location.

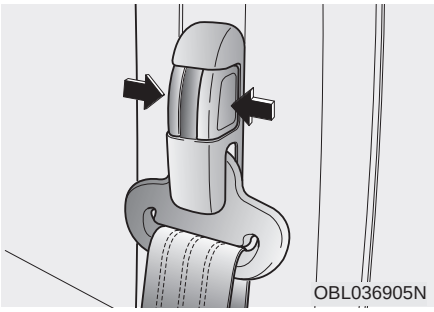

5. Adjust the shoulder anchor position to your size. To raise the anchor position, push the anchor up. To lower the anchor position, press the button and slide the anchor down. After adjustment, make sure the anchor is locked in position.

If the height of the adjusting seat belt is too near your neck, you will not be getting the most effective protection. The shoulder portion should be adjusted so that it lies across your chest and midway over your shoulder nearest the door and not your neck.

⚠ WARNING

- **The height adjuster must be in the locked position when the vehicle is moving.**
- **The misadjustment of height of the shoulder belt could reduce the effectiveness of the seat belt in a crash.**

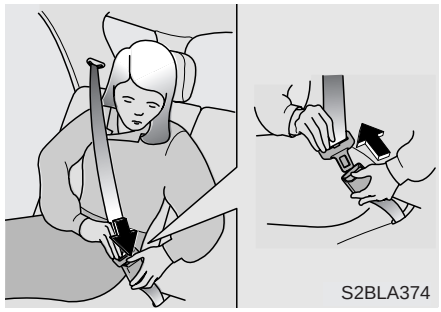

To unfasten the front lap/shoulder belt:

Press the release button on the buckle and allow the belt to slowly retract.

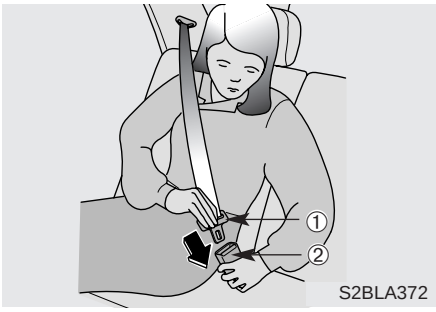

Rear lap/shoulder belt

To fasten the rear lap/shoulder belt:

1. Grasp the buckle and tongue plate.
2. Slowly pull the lap/shoulder belt out.
3. Insert the tongue plate (①) into the open end of the buckle (②) until an audible “click” is heard, indicating the belt is locked in the buckle.

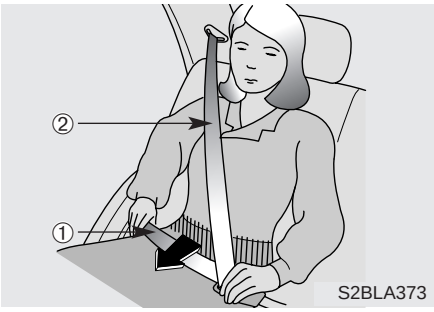

4. Position the lap portion (①) of the belt across your lap as LOW ON THE HIPS as possible to reduce the risk of sliding under it during an accident. Adjust the belt to a SNUG FIT by pulling up on the shoulder portion (②) of the safety belt. The belt retractor is designed to take up excess webbing automatically and to maintain tension on the belt. For your safety do not put any excess slack into the safety belt.

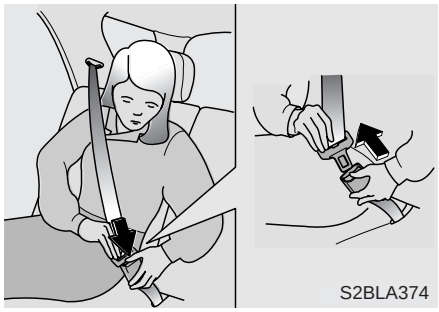

To unfasten the rear lap/shoulder belt:

Press the release button on the buckle and allow the belt to slowly retract.

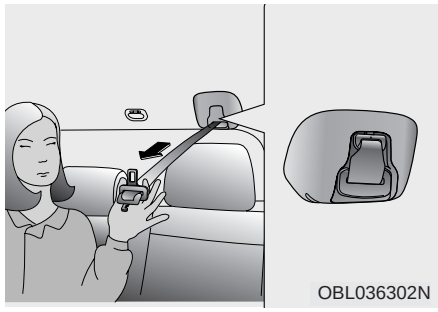

3 Point rear center belt (if equipped)

To fasten the rear center belt

1. Extract the tongue plate from the hole on the belt assembly cover and slowly pull the tongue plates out from the retractor.

CAUTION - Cargo

Be sure that the cargo is securely loaded in the rear cargo area. Loose cargo may damage the rear center safety belt in sudden stops or certain collisions.

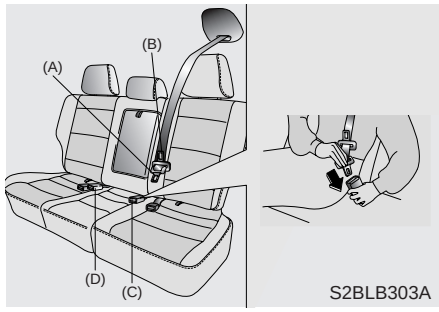

2. Insert the tongue plate (A) into the open end of the buckle (C) until an audible “click" is heard, indicating the latch is locked. Make sure the belt is not twisted.

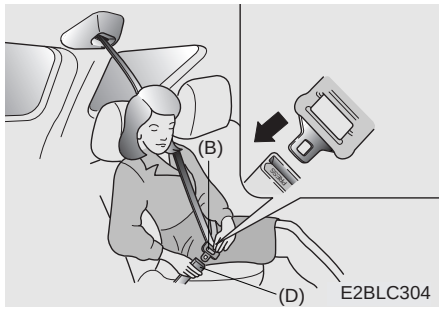

3. Pull the tongue plate (B) and insert the tongue plate (B) into the open end of the buckle (D) until an audible “click” is heard, indicating the latch is locked. Make sure the belt is not twisted.

There will be an audible “click” when the tab locks in the buckle. The safety belt automatically adjusts to the proper length only after the lap belt is adjusted manually so that it fits snugly around your hips, if you lean forward in a slow, easy motion, the belt will extend and let you move around. If there is a sudden stop or impact, the belt will lock into position. It will also lock if you try to lean forward too quickly.

⚠ WARNING

When using the rear safety center belt, you must lock all tongue plates and buckles. If any tongue plate or buckle is not locked, it will increase the chance of injury in the event of collision.

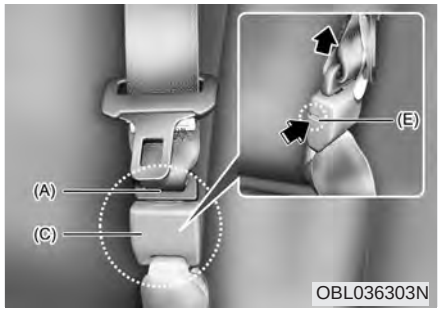

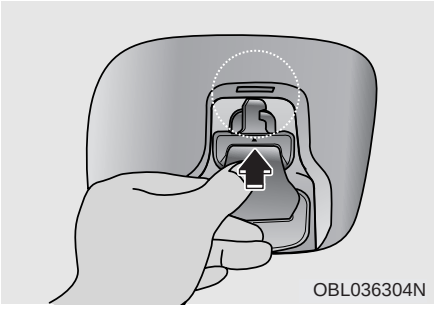

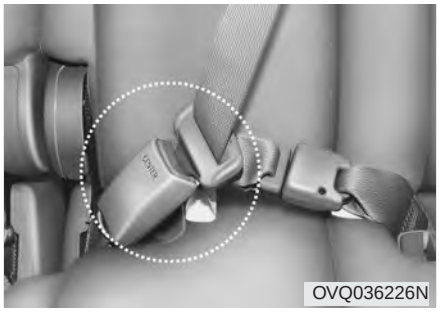

To unfasten the rear center belt

1. Press the release button on the buckle (D) and remove the tongue plate (B) from the buckle (D).
2. To retract the rear center seatbelt, insert the key or similar small rigid device into the web release button (E) on the anchor connector. Pull up on the seat belt web (A) and allow the webbing to retract automatically.
3. Insert the tongue plate into the hole on the belt assembly cover.

When using the rear center seat belt, the buckle with the “CENTER” mark must be used.

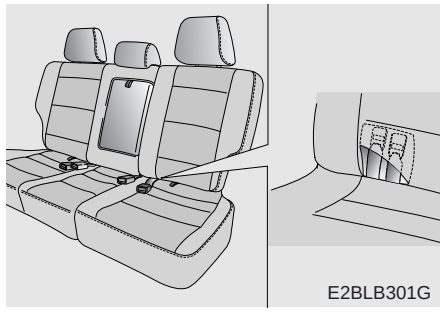

Stowing the rear safety belt

The rear safety belt buckles can be stowed in the pocket between the rear seatback and cushion when not in use.

CAUTION - Damaging rear safety buckles

When you fold the rear seatback or put luggage on the rear seat cushion, you must insert the buckle into the pocket in the seatback. Doing so can prevent the buckle from being crushed by the rear seatback or luggage.

Proper use and care of the safety belt system

To ensure that the safety belts provide the maximum protection, please follow these instructions:

- Use the belts at all times - even on short trips.
- If the safety belt is twisted, straighten it prior to use.
- Keep sharp edges and damaging objects away from the belts.
- Periodically inspect belt webbing, anchors, buckles and all other parts for signs of wear and damage. Replace damaged, excessively worn or questionable parts immediately.
- To clean the belt webbing, use a mild soap solution recommended for cleaning upholstery or carpets. Follow the instructions provided with the soap.
- Do not make modifications or additions to the safety belt.
- After wearing a safety belt, make sure it fully retracts to the stowed position. Do not allow the belt to get caught in the door when you close it.

WARNING - Belt cleaning

Do not bleach or dye the webbing because this may weaken the webbing fibers and allow them to fail when restraining an occupant in a collision.

Restraint of pregnant women

Pregnant women should wear lap/shoulder belt assemblies whenever possible according to specific recommendations by their doctors. The lap portion of the belt should be worn AS SNUGLY AND LOW AS POSSIBLE.

⚠ WARNING - Pregnant women

Pregnant women must never place the lap portion of the safety belt over the area of the abdomen where the fetus is located or above the abdomen where the belt could crush the fetus during an impact.

Restraint of infants and small children

To increase their safety, infants and young children should always be restrained by a restraint system approved for their age and size.

Never allow a child to stand or kneel on the seat of a moving vehicle. Never allow a safety belt to be placed around both a child and an adult or around two children at the same time.

It is best for children to be seated in the rear seats.

Many companies manufacture child restraint systems (often called child seats) for infants and small children. An acceptable child restraint system must always satisfy Canadian Motor Vehicle Safety Standards and your applicable state laws. Make sure that any child-restraint system you use in your vehicle is labelled as complying with Federal Safety Standards.

The child-restraint system should be chosen to fit both the size of the child and the size of the vehicle seat. Be sure to follow any instructions provided by the child-restraint system manufacturer when installing the child-restraint system.

⚠ WARNING - Children on laps

Never hold a child on your lap or in your arms in a moving vehicle.

Even a very strong person cannot hold onto a child in the event of even a minor collision.

⚠ WARNING - Hot metal parts

Safety belts and seats can become hot in a vehicle that has been closed during warm/hot weather; they could burn a child. Check seat covers and buckles before you place a child anywhere near them.

WARNING - Infants and young children

- **Infants and young children are at much greater risk of serious injury or death in an accident or sudden stop if they are unrestrained or restrained improperly. Follow all instructions in this section and the instructions that came with an approved child safety system. The child restraint must be correctly installed in the vehicle, and the child must be correctly placed in the child restraint.**
- **All children under 12 are safest in the back seat.**
- **Never install a rear facing infant seat in the front passenger position. The baby will be injured or killed by the air bag if it deploys.**
- **Never allow a child to stand or kneel on the seat of a moving vehicle.**

Restraint of larger children

As children grow, they may need to use new child-restraint systems, including larger child seats or booster seats, which are appropriate for their increased size.

A child who has outgrown available child-restraint systems should use the belts provided in the vehicle. When seated in the rear outboard seats, the child should be restrained by the lap/shoulder belt.

If the shoulder belt portion slightly touches the child's neck or face, try placing the child closer to the center of the vehicle. If the shoulder belt still touches their face or neck they need to be returned to a child restraint system. In addition, after-market devices are available from independent manufacturers which help pull the shoulder belt down and away from the child's face or neck.

WARNING - Shoulder belts on small children

- **Never allow a shoulder belt to be in contact with a child's neck or face while the vehicle is in motion.**
- **If safety belts are not properly worn and adjusted, there is a risk of death or serious injury to such a child.**

Child restraint system

For small children and babies, the use of a child seat or infant seat is strongly recommended and is required by law in almost all states. This child seat or infant seat should be of appropriate size for the child and should be installed in accordance with the manufacturer's instructions.

Children riding in the car should sit on the rear seat and must always be properly restrained to minimize the risk of injury in an accident, sudden stop or sudden maneuver. According to accident statistics, children are safer when properly restrained in the rear seats than in the front seat.

Children could be injured or killed in a crash if their restraints are not properly secured. For small children and babies, a child seat or infant seat must be used. Before buying a particular child restraint system, make sure it fits your car and seat belts, and fits your child. Follow all the instructions provided by the child seat manufacturer when installing the child restraint system.

⚠ WARNING - Child restraints

- **A child restraint system must be placed in the rear seat. Never install a child or infant seat on the front passenger's seat.**

  Should an accident occur and cause the passenger air bag to deploy, it could severely injure or kill an infant or child seated in the front seat.
- **Since a safety belt or child restraint system can become very hot if it is in a closed vehicle, be sure to check the seat cover and buckles before placing a child there.**

(Continued)

(Continued)

- **When the child restraint system is not in use, store it in the trunk or fasten it with a safety belt so that it will not be thrown forward in the case of a sudden stop or an accident.**
- **Children who are too large to be in a child restraint should sit in the rear seat and be restrained with the available lap/shoulder belts.**
- **When using the vehicles lap/shoulder safety belts, always make sure that the shoulder belt portion is positioned midway over the shoulder, never across the neck or behind the back. The lap belt portion of the lap/shoulder belt must always be positioned as low as possible on the child's hips and as snug as possible.**
- **If the vehicle's safety belt will not properly fit the child, you must use an appropriate child restraint or booster seat in the rear.**

(Continued)

(Continued)

- **Never allow a child to stand up or kneel while the vehicle is moving.**
- **Never use an infant carrier or child seat that "hooks" over a seatback. It will not provide adequate protection in an accident.**
- **Never allow a child to be held while they are in a moving vehicle, as this could result in serious injury to the child in the event of an accident or a sudden stop. Holding a child in a moving vehicle does not provide the child with any protection during an accident, even if the person holding the child is wearing a seat belt.**

Installing a child restraint system

For safety reasons, we recommend that the child restraint system be used in the rear seats.

Never place a rear-facing child restraint in the front passenger seat, because of the danger that an inflating passenger side air bag could impact the rear-facing child restraint and kill the child.

Since all passenger safety belts move freely under normal conditions and only lock under extreme or emergency conditions (emergency lock mode), you must manually change these safety belts to the auto lock mode to secure a child restraint.

⚠ WARNING - Child seat installation

- **Before installing the child restraint system, read the instructions supplied by the child restraint system manufacturer.**
- **If the safety belt does not operate as described in this section, have the system checked immediately by your authorized Kia dealer.**
- **Failure to observe this manual's instructions regarding child restraint system and the instructions provided with the child restraint system could increase the chance and/or severity of injury in an accident.**

Placing a passenger safety belt into the auto lock mode

The use of the auto lock mode will ensure that the normal movement of the child in the vehicle does not cause the safety belt to be pulled out and loosen the firmness of its hold on the child restraint system. To secure a child restraint system, use the following procedure.

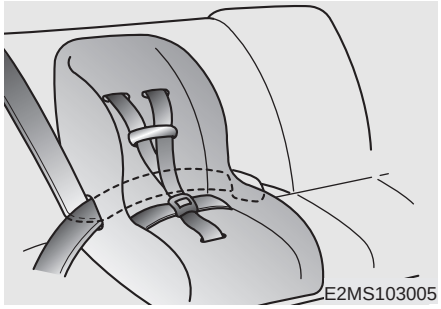

Installing a child restraint system by lap/shoulder belt

To install a child restraint system on the outboard or center rear seats, do the following:

1. Place the child restraint system in the seat and route the lap/shoulder belt around or through the restraint, following the restraint manufacturer's instructions. Be sure the safety belt webbing is not twisted.

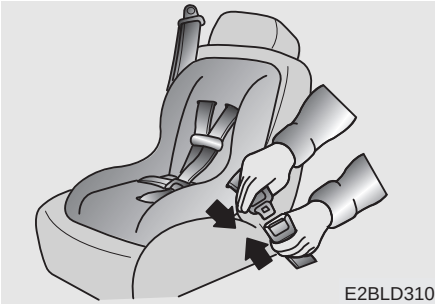

2. Fasten the lap/shoulder belt latch into the buckle. Listen for the distinct "click" sound.

Position the release button so that it is easy to access in case of an emergency.

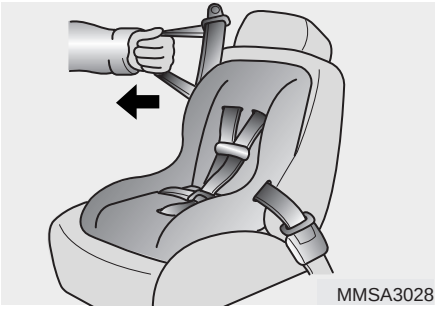

3. Pull the shoulder portion of the safety belt all the way out. When the shoulder portion of the safety belt is fully extended, it will shift the retractor to the “Auto Lock” (child restraint) mode.

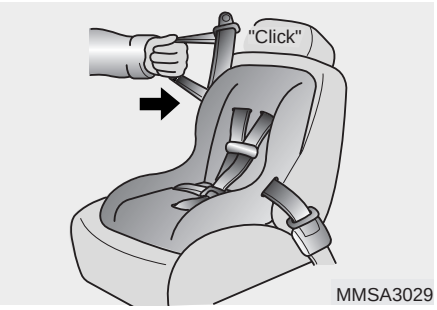

4. Slowly allow the shoulder portion of the safety belt to retract and listen for an audible “clicking” or “ratcheting” sound. This indicates that the retractor is in the “Auto Lock” mode. If no distinct sound is heard, repeat steps 3 and 4.

5. Remove as much slack from the belt as possible by pushing down on the child restraint system while feeding the shoulder belt back into the retractor.
6. Push and pull on the child restraint system to confirm that the safety belt is holding it firmly in place. If it is not, release the safety belt and repeat steps 2 through 6.

7. Double check that the retractor is in the “Auto Lock” mode by attempting to pull more of the safety belt out of the retractor. If you cannot, the retractor is in the “Auto Lock” mode.

To remove the child restraint, press the release button on the buckle and then pull the lap/shoulder belt out of the restraint and allow the safety belt to retract fully.

⚠ WARNING - Auto lock mode

The lap/shoulder belt automatically returns to the “emergency lock mode” whenever the belt is allowed to retract fully. Therefore, the preceding seven steps must be followed each time a child restraint is installed.

If the safety belt is not placed in the “Auto lock” mode, severe injury or death could occur to the child and/or other occupants in the vehicle in a collision, since the child restraint will not be effectively held in place.

When the safety belt is allowed to retract to its fully stowed position, the retractor will automatically switch from the “Auto Lock” mode to the emergency lock mode for normal adult usage.

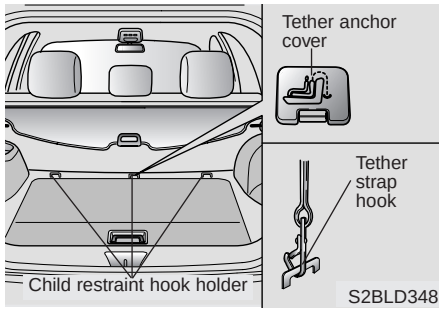

Securing a child restraint seat with “Tether Anchor” system

Child restraint hook holders are located on the floor behind the rear seats.

1. Open the tether anchor cover on the floor behind the rear seats.

2. Route the child restraint seat strap over the seatback.

   For vehicles with adjustable headrest, route the tether strap under the headrest and between the headrest posts, otherwise route the tether strap over the top of the seatback.

3. Connect the tether strap hook to the appropriate child restraint hook holder and tighten to secure the seat.

⚠ WARNING - Tether strap

If the tether strap is secured incorrectly, the child restraint seat may not be restrained properly in the event of a collision. Do not mount more than one child restraint seat to a tether anchorage, since the anchorage can then fail in a collision.

⚠ WARNING - Child restraint check

Check that the child restraint system is secure by pushing and pulling it in different directions. Incorrectly fitted child restraints may swing, twist, tip or come away causing death or injury.

⚠ WARNING - Child restraint anchorage

- **Child restraint anchorages are designed to withstand only those loads imposed by correctly fitted child restraints. Under no circumstances are they to be used for adult seat belts or harnesses or for attaching other items or equipment to the vehicle.**
- **The tether strap may not work properly if attached somewhere other than the correct tether anchor.**

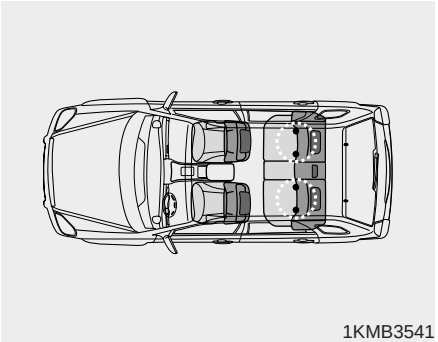
1KMB3541

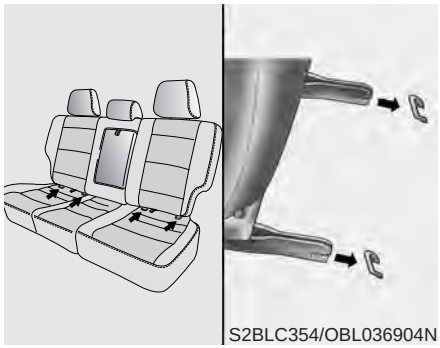
S2BLC354/OBL036904N

Child seat lower anchors

Some child seat manufacturers make child restraint seats that are labeled as LATCH or LATCH compatible. LATCH stands for "Lower Anchors and Tethers for Children". These seats include two rigid or webbing mounted attachments that connect to two LATCH anchors at specific seating positions in your vehicle. This type of child restraint seat eliminates the need to use seat belts to attach the child seat in the rear seats.

LATCH anchors have been provided in your vehicle. The LATCH anchors are located in the left and right outboard rear seating positions. Their locations are shown in the illustration. There is no LATCH anchor provided for the center rear seating position.

The LATCH anchors are located between the seatback and the seat cushion of the rear seat left and right outboard seating positions.

Follow the child seat manufacturer's instructions to properly install child restraint seats with LATCH or LATCH-compatible attachments.

Once you have installed the LATCH child restraint, assure that the seat is properly attached to the LATCH and tether anchors. Also, test the child restraint seat before you place the child in it. Tilt the seat from side to side. Also try to tug the seat forward. Check to see if the anchors hold the seat in place.

⚠ WARNING

When using the vehicle's "LATCH" system to install a child restraint system in the rear seat, all unused vehicle rear seat belt metal latch plates or tabs must be latched securely in their seat belt buckles and the seat belt webbing must be retracted behind the child restraint to prevent the child from reaching and taking hold of unretracted seat belts. Unlatched metal latch plates or tabs may allow the child to reach the unretracted seat belts which may result in strangulation and a serious injury or death to the child in the child restraint.

⚠ WARNING - LATCH Anchors

If the child restraint is not anchored properly, the risk of a child being seriously injured or killed in a collision greatly increases.

⚠ WARNING - LATCH lower anchors

LATCH lower anchors are only to be used with the left and right rear outboard seating positions. Never attempt to attach an LATCH equipped seat in the center seating position. You may damage the anchors or the anchors may fail and break in a collision.

AIR BAG - ADVANCED SUPPLEMENTAL RESTRAINT SYSTEM

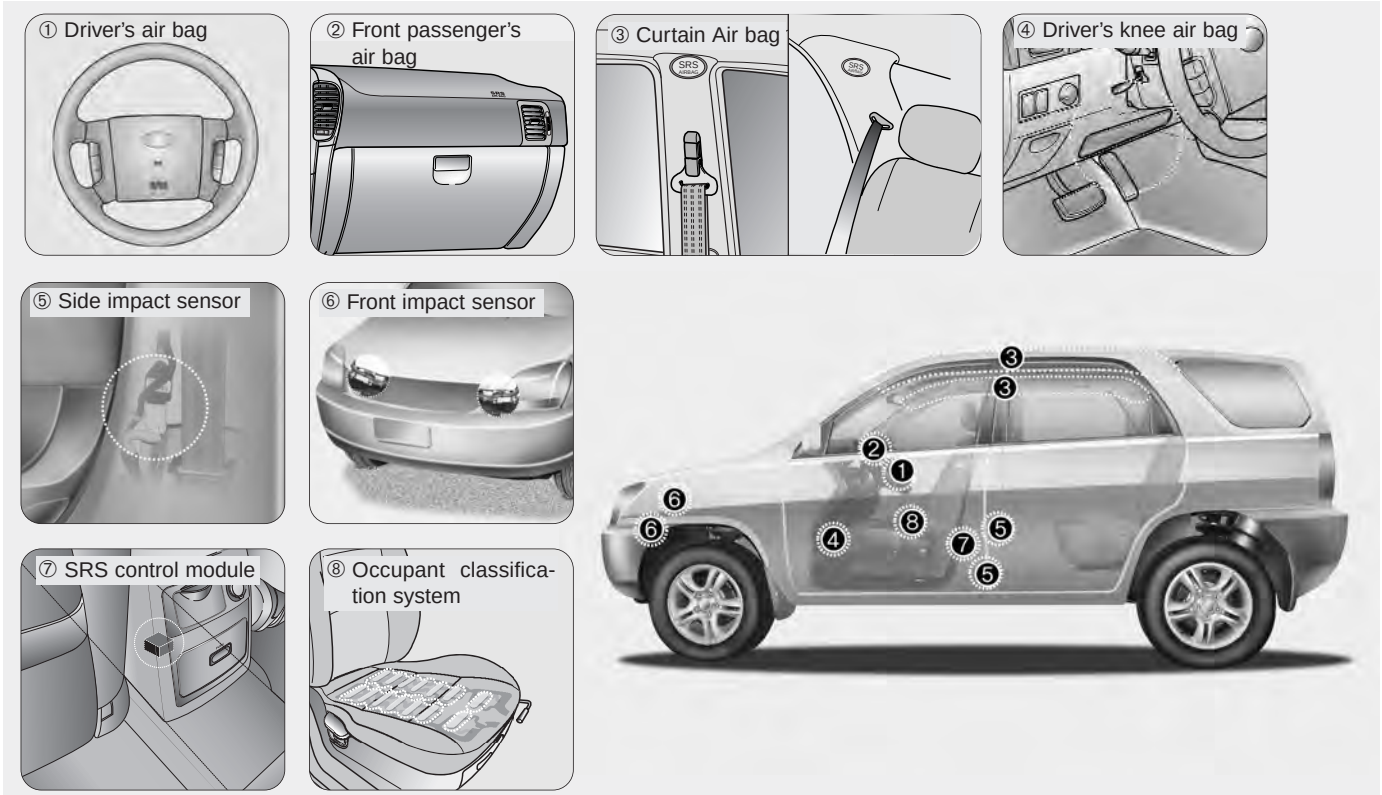

E2BLA422B/6BLA002A/S2BLD320A/E2BLA371A/OBL036702/1VQA2079/5BLA370/OBL063001/OBL036004/5BLA370/OBL063002N

What your air bag system does

Driver's air bag and front passenger's air bag are designed to supplement the protection offered by the safety belt in certain frontal collisions. Likewise, curtain air bags are designed to supplement the protection offered by the safety belt in side collisions. Safety belts are designed to reduce the injury of the driver or passengers in case of light impact or collision. However, to help reduce impact on driver or passengers in a serious collision, seat belts must also be worn correctly.

What your air bag system does not do

The air bag system is designed to supplement the protection offered by the safety belt system. IT IS NOT A SUBSTITUTE FOR THE SAFETY BELT.

The importance of using safety belts

There are four very important reasons to use safety belts even with an air bag supplemental restraint system. They:

- help keep you in the proper position (away from the air bag) when it inflates.
- reduce the risk of harm in rollover, side impact or rear impact collisions, because an air bag is not designed to inflate in such situations and even a side curtain air bag is designed to inflate only in certain side impact collisions.
- reduce the risk of harm in frontal or side collisions which are not severe enough to actuate the air bag supplemental restraint system.
- reduce the risk of being thrown from your vehicle.

⚠ WARNING - Air bags & safety belts

- **Even in vehicles with air bags, you and your passengers must always wear the safety belts provided in order to minimize the risk and severity of injury in the event of a collision or rollover.**
- **Always wear your safety belt. It can help keep you away from the air bags during heavy braking just before a collision. It may also reduce the risk of occupant ejection.**
- **If vehicle occupants are not wearing their seatbelts properly, or are not seated correctly, serious injury or death could occur.**
- **Driver's and front passenger's air bags are designed to inflate only in certain frontal collisions, and curtain air bags are designed to inflate in certain side impacts.**

(Continued)

(Continued)

They will generally not provide protection in side impacts (except curtain air bags) or rear impacts, rollovers, less severe frontal collisions. They will not provide protection from later impacts in a multi-impact collision.

- **If your vehicle has been subjected to flood conditions (e.g. soaked carpeting/standing water on the floor of the vehicle, etc.) or if your vehicle has become flood damaged in any way, do not attempt to start the vehicle or put the key in the ignition before disconnecting the battery. This may cause air bag deployment, which could result in serious personal injury or death. If your vehicle has been subjected to flooded conditions, before attempting to start the vehicle, have the vehicle towed to an authorized Kia dealer for inspection and necessary repairs.**

Air bag system components

The main components of your SRS are:

- To indicate that your vehicle is equipped with air bags, the corresponding air bag covers are marked with “SRS AIR BAG”.
  - Driver’s air bag
  - Driver’s knee air bag
  - Front passenger’s air bag
  - Curtain air bag
- A diagnostic system that continually monitors the system operation.
- An indicator light to warn you of a possible problem with the system.
- Emergency power backup in case your car’s electrical system is disconnected in a crash.

Your vehicles SRS uses a variety of sensors to monitor the driver’s and front passenger’s safety belt usage and impact severity.

The safety belt usage sensors determine if the driver and front passenger’s safety belts are fastened. These sensors provide the ability to control the SRS deployment based on whether or not the safety belts are fastened, and how severe the impact is.

The advanced SRS offers the ability to control the air bag inflation with two levels. A first stage level is provided for moderate-severity impacts. A second stage level is provided for more severe impacts.

According to the impact severity and safety belt usage, the SRSCM (SRS Control Module) controls the air bag inflation. Failure to properly wear safety belts can increase the risk or severity of injury in an accident.

Additionally, your SRS is equipped with an occupant classification system in the front passenger’s seat. The occupant classification system detects the presence of a passenger in the front passenger’s seat and will turn off the front passenger’s air bag under certain conditions. For more detail, see “Occupant Classification System” later in this section.

⚠ WARNING

- **Ignoring the SRS indictor light (air bag indicator and passenger air bag off indicator) can result in serious or fatal injury if the air bags occupant classification system or pretensioners do not work properly. Have your car checked by a dealer as soon as possible if the SRS warning light alerts you to a potential problem.**
- **Sitting improperly or out of position can result in serious or fatal injury in a crash. All occupants should sit upright in their seats with their feet on the floor until the vehicle is parked and the ignition key is removed.**

Driver's air bag

The driver's air bag is stored in the center of the steering wheel.

⚠ WARNING

- **You must always sit as far back from the steering wheel air bag as possible (chest at least 250 mm (10 inches) away from the steering wheel), while still maintaining a comfortable seating position for good vehicle control, in order to reduce the risk of injury or death in a collision.**
- **Never place objects over the air bag storage compartments or between the air bags and yourself. Due to the speed and force of the air bag inflation, such objects could hit your body at high speed and cause severe bodily injury and even death.**
- **Do not put stickers or ornaments on the steering wheel cover. These may interfere with the deployment of the air bag.**

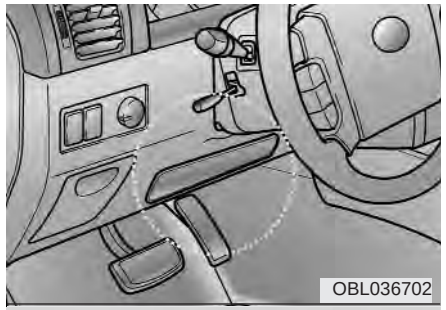

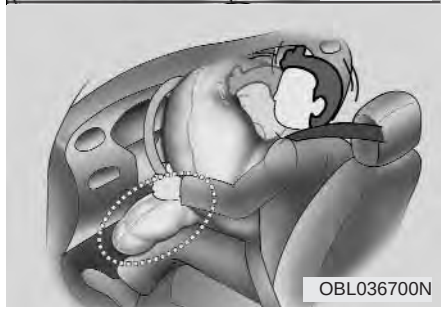

Driver's knee air bag

The driver's knee air bag is stored below the steering wheel of the instrument panel.

This works in conjunction with the frontal airbags in a certain frontal impact collision to protect the knee of the driver.

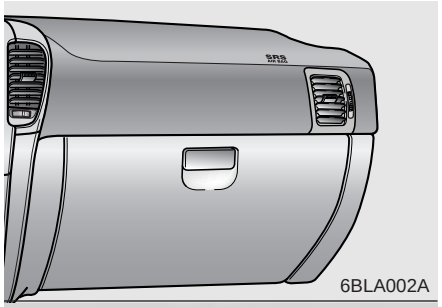

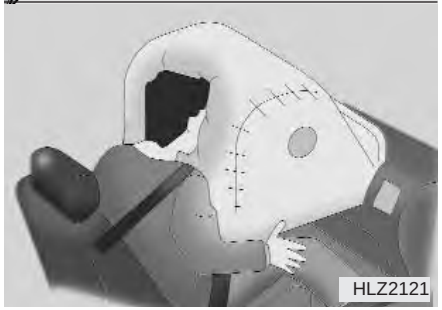

Front passenger’s air bag

The front passenger’s air bag is stored in the instrument panel, above the glove box area.

Since you cannot anticipate which air bags will deploy or from what direction, never put any objects or ornaments on the instrument panel.

Occupant classification system

The occupant classification system detects the presence of a passenger in the front passenger's seat and will turn off the front passenger's air bag under certain conditions.

The occupant classification system is designed to detect the presence of a properly-seated occupant and determine if the front passenger's air bag should be enabled (may inflate) or not.

Only the front passenger front air bag is controlled by the Occupant Classification System.

Main components of occupant classification system

- A detection device located within the front passenger seat cushion.
- Electronic system to determine whether passenger air bag system should be activated or deactivated.
- A warning light located on the instrument panel which illuminates the words "PASSENGER AIR BAG OFF" indicating the front passenger air bag system is deactivated.
- The instrument panel air bag warning light is interconnected with the occupant classification system.

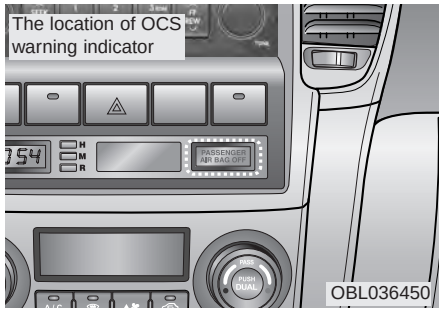

If there is no passenger in the front passenger seat or if the passenger in the front passenger seat is very light, (such as a child), the front **PASSENGER AIR BAG OFF** indicator may illuminate.

When this indicator is ON, the front passenger air bag will not deploy.

Always be sure that you and all vehicle occupants are seated and restrained properly (sitting upright with the seat in an upright position, centered on the seat cushion, with the person's legs comfortably extended, feet on the floor, and wearing the safety belt properly) for the most effective protection by the air bag and the safety belt.

- The OCS may not function properly if the passenger takes actions which can defeat the detection system. These include:

(1) Failing to sit in an upright position.
(2) Leaning against the door or center console.
(3) Sitting towards the sides or the front of the seat.
(4) Putting legs on the dashboard or resting them on other locations which reduce the passenger weight on the front seat.
(5) Improperly wearing the safety belt.
(6) Reclining the seat back.

- The "PASSENGER AIR BAG OFF" indicator illuminates after the ignition key is turned to the "ON" position or after the engine is started. If the front passenger seat is unoccupied or is occupied by very small person, or is occupied by someone who is improperly seated, the "PASSENGER AIR BAG OFF" indicator will remain illuminated and the front passenger air bag will not deploy in frontal crashes. If the front passenger seat is occupied by someone of adult size and body shape, the "PASSENGER AIR BAG OFF" indicator will turn off after 6 seconds and the front passenger's air bag will deploy in frontal crashes.
- If the "PASSENGER AIR BAG OFF" indicator illuminates, the front passenger air bag will not deploy in either a side or frontal collision.
- If the "PASSENGER AIR BAG OFF" indicator is not illuminated, the front passenger air bag may deploy in frontal collision.

Condition and operation in the front passenger occupant classification system

Condition detected by the occupant classification system	Indicator/Warning light		Devices
	"PASSENGER AIR BAG OFF" indicator light	SRS warning light	Front passenger air bag
1. Adult *1	Off	Off	Activated
2. Child*2 or child restraint system	On	Off	Deactivated
3. Unoccupied	On	Off	Deactivated

*1 The system judges a person of adult size as an adult. When a smaller adult sits in the front passenger seat, the system may recognize him/her as a child depending on his/her physique and sitting posture.

*2 When a larger child who has outgrown a child restraint system sits in the front passenger seat, the system may recognize him/her as an adult depending on his/her physique sitting posture, or objects in the lap of the occupant.

⚠ WARNING

If the "PASSENGER AIR BAG OFF" indicator illuminates or blinks continuously when a person of adult size sits in the front passenger's seat, it could be because that person isn't sitting properly in the seat. If this happens, turn the vehicle off, make sure the seat back is not reclined, have the passenger center on the seat cushion, with legs comfortably extended, and the safety belt properly positioned. Restart the vehicle and have the person remain in this position long enough to allow the system to detect the person and activate the passenger air bag.

⚠ WARNING

If the occupant classification system is not working properly, the air bag warning light (AIR BAG) on the instrument panel will illuminate. If there is a malfunction of the occupant classification system, the "PASSENGER AIR BAG OFF" indicator will illuminate and the front passenger's air bag will not deploy in frontal crashes even if there is an adult sized occupant in the front passenger seat. If the SRS air bag warning light does not illuminate when the ignition key is turned to "ON" position, if it remains illuminated after blinking for approximately six seconds, or if it illuminates while the vehicle is being driven, have an authorized Kia dealer inspect the occupant classification system with the SRS air bag system as soon as possible.

⚠ WARNING

If the front passenger seat should be modified for persons with disabilities that may affect the operation of the occupant classification system, contact an authorized Kia dealer.

⚠ WARNING

- **Even though your vehicle is equipped with the occupant classification system, children aged 12 and under should be seated in the rear seats. Do not install a child restraint system in the front passenger seat. The child could be severely injured or killed if the air bag deploys. Children are afforded the most protection in the event of an accident when they are restrained by the proper restraint system in the rear seat.**

(Continued)

(Continued)

- **If a very low weight adult is seated in the front passenger seat, the occupant classification system may or may not turn off the right front passenger air bag, depending upon the person's seating position and body type. Everyone in your vehicle should wear a safety belt properly -- whether or not there is an air bag for that person.**
- **If the front seat passenger changes their seating position (for example, by not sitting upright, by sitting on the edge of the seat, or by otherwise being out of position), the "PASSENGER AIR BAG OFF" indicator may be turned on, and the passenger air bag may not deploy in a collision. Always be sure to sit properly in the front passenger seat and wear the safety belt properly.**

(Continued)

(Continued)

- **Never put a heavy load in the front passenger seat.**

- **Never excessively recline the front passenger seatback.**

(Continued)

(Continued)

- **Never sit with hips shifted towards the front of the seat.**

- **Never lean on the center console.**
- **Never sit on one side of the front passenger seat.**

(Continued)

(Continued)

- Never place feet on the dashboard.

- Always sit in a proper seating position.

(Continued)

(Continued)

- **Do not modify or replace the front passenger's seat. Don't place or attach anything on the front passenger's seat. This can adversely affect the occupant classification system.**
- **Do not place sharp objects on the front passenger seat. These can damage the occupant classification system, if they puncture the seat cushion.**
- **Do not install accessory seat covers on the front seats, since these will interfere with proper sensor operation.**

✻ NOTICE

- **If luggage or other objects are placed on the front passenger's seat or if the temperature of the seat changes while the seat is unoccupied, the "PASSENGER AIR BAG OFF" indicator may blink. These conditions do not indicate a problem.**
- **Do not put heavy objects on the front passenger's seat. This may cause front passenger air bag deployment in the event of an accident, thus increasing your repair costs.**

⚠ WARNING

- **The front seat passenger air bag is much larger than the steering wheel air bag and inflates with considerably more force. It can seriously hurt or kill a passenger who is not in the proper position and wearing the safety belt properly. The front passengers should always move their seat as far back as practical and sit back in their seat.**
- **It is essential that the front passengers always wear their safety belts when vehicle is in motion, even when the vehicle is moving in a parking lot or up a driveway into garage.**
- **If the driver brakes the vehicle heavily prior to an impact, unbelted occupants will be thrown forward. If the front passenger is not wearing the safety belts, they will be directly in front of the air bags when deployment occurs. In that situation, serious injury or death is possible.**

(Continued)

(Continued)

- **Never allow front passenger to put their hands, feet or face on or close to the instrument panel. In the event of air bag deployment, such a mispositioned occupant would be likely to suffer severe injury or death.**
- **Never allow children/old and feeble persons/pregnant women to sit on the front passenger's seat. They may be seriously injured by the air bag inflation when air bag deploys.**
- **Do not put objects or stickers on the instrument panel. Do not apply any accessory to the front windshield. Do not install aftermarket mirrors or accessories on the factory-installed rearview mirror. Any of these could interfere with the deployment of the air bag or could hit your body at high speed and cause severe bodily injury and even death.**

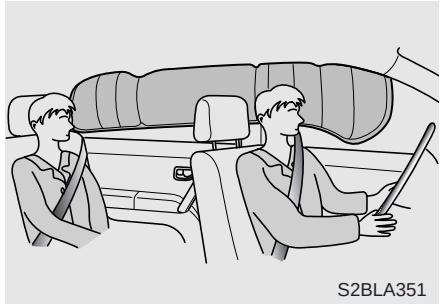

Curtain air bag

Curtain air bags are located along both sides of the roof rails above the front and rear doors.

They are designed to help protect the heads of the front seat occupants and the rear outboard seat occupants in certain side impact collisions.

- The curtain air bag deployment occurs only on the side of the vehicle affected by the impact.
- The curtain air bags are not designed to deploy during collisions from the front or rear of the vehicle or in most rollover situations.
- The curtain air bags are designed to deploy only during certain side-impact collisions, depending on the crash severity, angle, speed and impact.

⚠ WARNING

- **In order for the curtain air bags to provide its best protection, both front seat occupants and both outboard rear occupants should sit in an upright position with the safety belts properly fastened.**
- **When children are seated in the rear outboard seats, they must be seated in the proper child restraint system. Make sure to put the child restraint system as far away from the door side as possible, and secure the child restraint system in position.**

(Continued)

(Continued)

- **Do not allow the passengers to lean their heads or bodies onto doors, put their arms on the doors, stretch their arms out of the window, or place objects between the doors and passengers when they are seated on the seats where curtain air bags are equipped.**
- **Never try to open or repair any components of the curtain air bag system. This should be done only by an authorized Kia dealer.**

Failure to follow the above mentioned instructions can result in severe injury or death to the vehicle occupants in an accident.

Why didn't my air bag go off in a collision?

(Inflation and non-inflation conditions of the air bag)

There are many types of accidents in which the air bag would not be expected to provide additional protection.

These include rear impacts, second or third collisions in multiple impact accidents, as well as low speed impacts. In other words, just because your vehicle is damaged and even if it is totally unusable, don't be surprised that the air bags did not inflate.

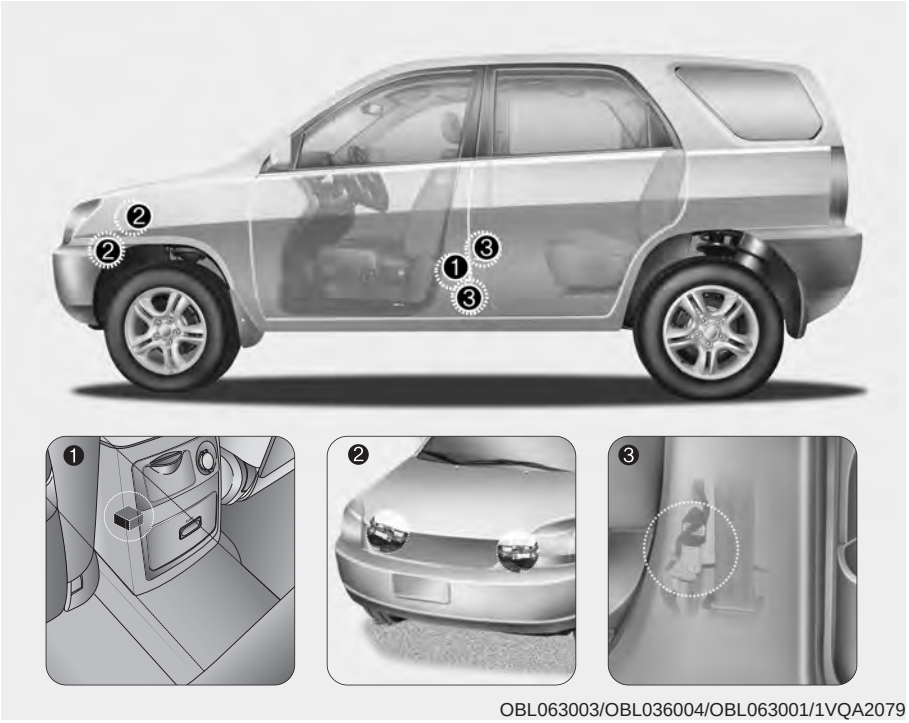

Air bag collision sensors

(1) SRS control module
(2) Front impact sensor
(3) Side impact sensor

⚠ WARNING

- **Do not hit or allow any objects to impact the locations where air bag or sensors are installed.**

  This may cause unexpected air bag deployment, which could result in severe personal injury or death.
- **If the installation location or angle of the sensors is altered in any way, the air bags may deploy when they should not or they may not deploy when they should, causing severe injury or death.**

  Therefore, do not try to perform maintenance on or around the air bag sensors. Have the vehicle checked and repaired by the authorized Kia dealer.
- **Problems may arise if the sensor installation angles are changed due to the deformation of front bumper, body or B pillar where side collision sensors are installed. Have the vehicle checked and repaired by the authorized Kia dealer.**

(Continued)

(Continued)

- **Your vehicle has been designed to absorb impact and deploy the air bag(s) in certain collisions. Installing aftermarket bumper guards or replacing a bumper with non-genuine parts may adversely affect your vehicles collision and air bag deployment performance.**

Air bag inflation condition

Front air bag

Front air bags (driver's and front passenger's air bags and driver's knee air bag) are designed to inflate when the impact is delivered to front collision sensors depending on the intensity, speed or angles of impact of the front collision - generally from an area a little to the left to a little to the right of straight ahead.

Curtain air bag

Curtain air bags are designed to inflate when the impact signal is delivered to the side collision sensors, depending on the severity, speed, and/or angle of the impact or rollover.

Although the front air bags (driver's and front passenger's air bags and driver's knee air bag) are designed to inflate only in frontal collision, it may inflate in any collision if front impact sensors detect a sufficient impact.

Curtain air bags are designed to inflate only in side impact collision, but may inflate in any collision if side impact sensors detect a sufficient impact.

If the vehicle chassis is impacted by bumps or objects on unimproved roads or sidewalks, air bags may deploy. Drive carefully on unimproved roads or on surfaces not designed for vehicle traffic to prevent unintended air bag deployment.

To protect occupants, front air bags and pre-tensioner safety belts may deploy in certain side impact collisions.

Air bag non-inflation conditions

- In collisions, the vehicle safety belts are sufficient to protect the vehicle occupants and the air bags may not deploy. In some cases, deploying air bags in low-speed collisions can cause a secondary impact to the occupants (light abrasions, cuts, burns, etc.), or loss of vehicle control.

- Air bags may not inflate in rear collisions, because occupants are moved backward by the force of the impact. In this case, the air bags do not provide protection.

- Front air bags may not inflate in side impact collision, because occupants move to the direction of the collision, and thus front air bag deployment does not provide proper protection.

  However, curtain air bags may inflate depending on the intensity, vehicle speed and angles of impact.

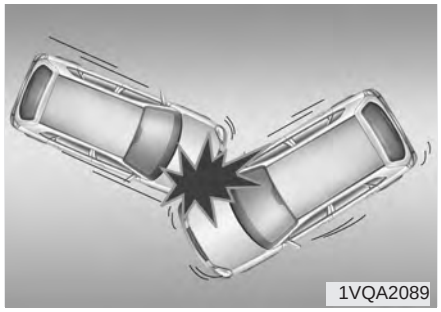

- In a slant impact or collision, the force delivered will be relatively weaker than that of frontal or side collision. So, the air bags may not inflate.

- Just before impact, drivers often brake heavily. Such heavy braking lowers the front portion of the vehicle causing it to “ride” under a vehicle with a higher ground clearance. Air bags may not inflate in this "under-ride" situation because deceleration forces that are detected by sensors may be significantly altered by such “under-ride” collisions.

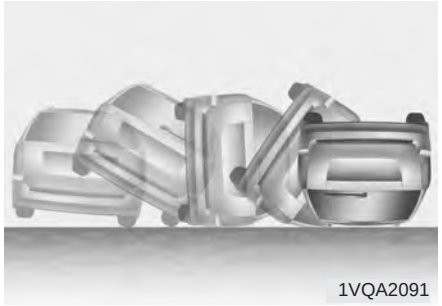

- Air bags may not inflate in rollover accidents. Air bag deployment would not provide proper protection to the occupants.

  However, curtain air bags may inflate when the vehicle is rolled over by a side impact collision.

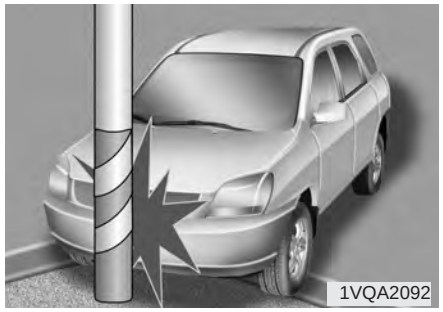

- Air bags may not inflate if the vehicle collides with objects such as utility poles or trees, where the point of impact is concentrated to one area and the full force of the impact is not delivered to the sensors.

How does the air bag system operate

- Air bag only operates when the ignition switch is turned to ON or START position.
- Air bags inflate instantly in the event of serious frontal or side collision in order to help protect the occupants from serious physical injury.
- There is no single speed at which the air bags will inflate.

  Generally, air bags are designed to inflate by the severity of a collision and its direction. These two factors determine whether the sensors send out an electronic deployment/inflation signal.
- Air bag deployment depends on a number of factors including vehicle speed, angles of impact and the density and stiffness of the vehicles or objects which your vehicle hits in the collision. Though, factors are not limited to those mentioned above.
- The front air bags will completely inflate and deflate in an instant.

  It is virtually impossible for you to see the air bags inflate during an accident. It is much more likely that you will simply see the deflated air bags hanging out of their storage compartments after the collision.
- In order to help provide protection in a severe collision, the air bags must inflate rapidly. The speed of air bag inflation has been determined by the Canadian Motor Vehicle Safety Standards (CMVSS) to reduce the likelihood of serious or life-threatening injuries and is thus a mandatory part of the air bag design.

  However, air bag inflation can also cause injuries which normally can include facial abrasions, bruises and broken bones, and sometimes more serious injuries because the inflation speed also causes the air bags to expand with a great deal of force.
- **There are even circumstances under which contact with the steering wheel air bag can cause fatal injuries, especially if the occupant is positioned excessively close to the steering wheel.**

⚠ WARNING

- **To avoid severe personal injury or death caused by deploying air bags in a collision, the driver should sit as far back from the steering wheel air bag as possible (at least 250 mm (10 inches) away). The front passenger should always move their seat as far back as possible and sit back in their seat.**
- **Air bag inflates instantly in an event of collision, passengers may be injured by the air bag expansion force if they are not in proper position.**
- **Air bag inflation may cause injuries which normally include facial or bodily abrasions, injuries by broken glass or burns by the explosives.**

Noise and smoke

When the air bags inflate, they make a loud noise and they leave smoke and powder in the air inside of the vehicle. This is normal and is a result of the ignition of the air bag inflator. After the air bag inflates, you may feel substantial discomfort in breathing due to the contact of your chest to both the safety belt and the air bag, as well as from breathing the smoke and powder. **We strongly urge you to open your doors and/or windows as soon as possible after impact in order to reduce discomfort and prevent prolonged exposure to the smoke and powder.**

Though the smoke and powder are non-toxic, they may cause irritation (eyes, nose and throat, etc.). Wash and rinse with cold water immediately and consult a doctor if symptoms persist.

⚠ WARNING

When the air bags deploy, the air bag related parts in steering wheel and/or instrument panel and/or in both sides of the roof rails above the front and rear doors are very hot. To prevent injury, do not touch the air bag storage areas internal components immediately after an air bag has inflated.

Installing a child restraint on a front passenger seat is extremely dangerous and should never be done.

Never place a rear-facing child restraint in the front passenger's seat. If the air bag deploys, it would impact the rear-facing child restraint, causing severe or fatal injuries.

In addition, do not place front-facing child restraint in the front passenger's seat either. If the front passenger air bag inflates, it may cause severe or fatal injuries to the child.

⚠ WARNING

- **Never put child restraint in the front passenger seat. If the front passenger air bag inflates, it may cause severe or fatal injuries.**
- **When children are seated in the rear outboard seats in which curtain air bags are equipped, be sure to put the child restraint system as far away from the door side as possible, and secure the child restraint system to be locked in position.**

  Inflation of curtain air bag could cause severe injury or death due to the expansion impact.

AIR BAG

Air bag warning light

The purpose of air bag warning light in your instrument panel is to alert you of a potential problem with your air bag - Supplemental Restraint System (SRS).

When the ignition switch is turned ON, the indicator light should blink or illuminate for approximately 6 seconds, then go off.

Have the system checked if:

- The light does not turn on briefly when you turn the ignition ON.
- The light stays on after the engine starts.
- The light comes on while the vehicle is in motion.

Air bag (Supplemental Restraint System) service

Your Supplemental Restraint System is virtually maintenance-free. There are no parts which you can service.

You must have the system serviced under the following circumstances:

- If an air bag ever inflates, the air bag must be replaced. Do not try to remove or discard the air bag by yourself. This must be done by an authorized Kia dealer.
- If the air bag warning indicator light alerts you to a problem, have the air bag system checked as soon as possible. Otherwise, your air bag system may be ineffective.

CAUTION

Do not modify any part of the air bag system. Modification could make the air bag system ineffective or could cause unnecessary deployment.

⚠ WARNING

- **Do not modify your steering wheel, seat or any other part of the Supplemental Restraint System. Modification could make the system inoperable.**
- **Do not work on the system's components or wiring. This could cause the air bags to inflate inadvertently, possibly seriously injuring someone. Working on the system could also disable the system so that the air bags would not deploy in a collision.**
- **Any work on the SRS system, such as removing, installing, repairing, or any work on the steering wheel must be performed by a qualified Kia technician. Improper handling of the air bag system may result in serious personal injury.**

Repairing or scrapping the vehicles

- Repairing steering wheel, instrument panel, center console or roofs, or installing car audio around center console or painting front sheet metal could disable the air bag system. Have them checked by an authorized Kia dealer.
- When leaving the vehicle at an authorized Kia dealer, inform that the vehicle is equipped with air bag system, and leave the owner's manual in the vehicle.
- Since air bag system contains explosive chemical substances, contact an authorized Kia dealer when scrapping the vehicle.

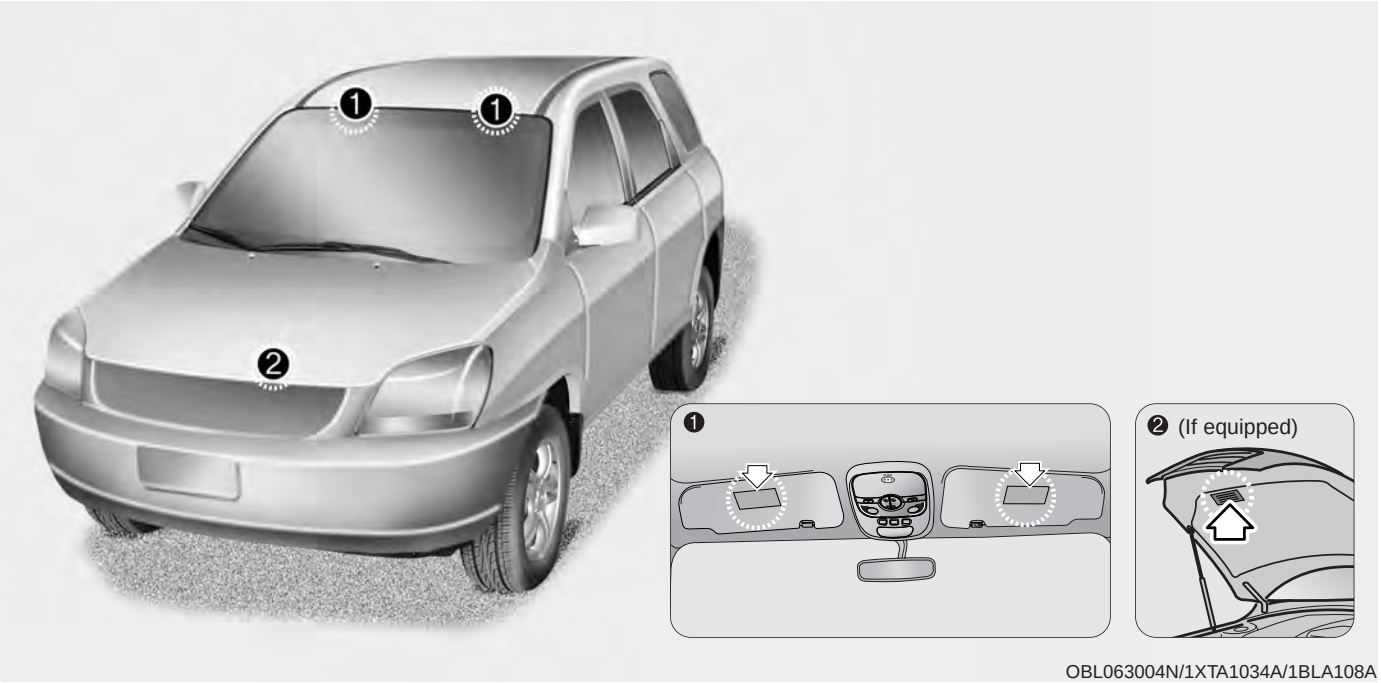

OBL063004N/1XTA1034A/1BLA108A

Air bag warning label

Air bag warning labels are attached to alert driver and passengers of potential risk of air bag system.

HOOD

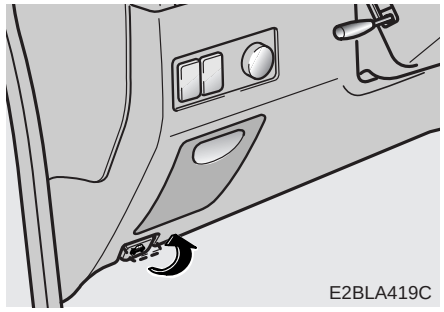

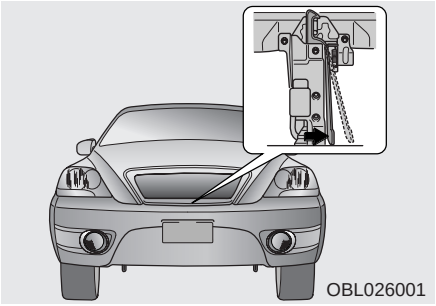

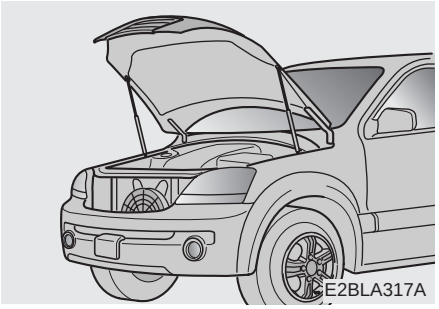

Opening the hood:

1. Pull the release lever on the lower left side of the instrument panel to unlatch the hood. The hood should pop open slightly.
2. Go to the front of the vehicle, raise the hood slightly, pull the secondary latch inside of the hood center and lift the hood.
3. Raise the hood. It will raise completely by itself after it has been raised halfway.

Closing the hood

1. Before closing the hood, check the following:
   - All filler caps in engine compartment must be correctly installed.
   - Gloves, rags or any other combustible material must be removed from the engine compartment.
2. Lower the hood halfway and push down to securely lock in place. Make sure the hood is properly locked before driving.

⚠ WARNING - Hood

- **Before closing the hood, make sure that all engine parts and tools have been removed from the engine area and that no one's hands are near the hood opening.**
- **Do not leave gloves, rags or any other combustible material in the engine compartment. Doing so may cause a heat-induced fire.**

FUEL FILLER LID

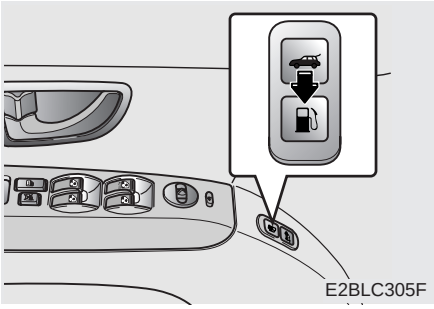

1. Stop the engine.
2. To open the fuel filler lid, push the release button located on the driver's lower door. (if equipped)

⚠ WARNING

To avoid injury from sharp edges, it is recommended that protective gloves be worn if there is a need to open the fuel filler door manually.

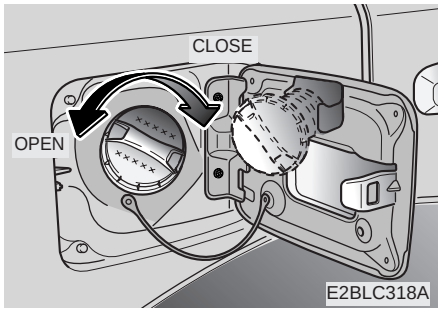

3. Pull the fuel filler lid out to open.
4. To remove the cap, turn the fuel tank cap counterclockwise.
5. Refuel as needed.
6. To install the cap, turn it clockwise until it "clicks". This indicates that the cap is securely tightened.
7. Close the fuel filler lid and push it lightly and make sure that it is securely closed.

⚠ WARNING - Refueling

- **If pressurized fuel sprays out, it can cover your clothes or skin and thus subject you to the risk of fire and burns. Always remove the fuel cap carefully and slowly. If the cap is venting fuel or if you hear a hissing sound, wait until the condition stops before completely removing the cap.**
- **Because your vehicle uses an ORVR (On-board Refuelling Vapor Recovery) system, "Top OFF" the vehicle very carefully to prevent fuel splash-back.**

⚠ WARNING - Refueling dangers

Automotive fuels are flammable materials. When refueling, please note the following guidelines carefully. Failure to follow these guidelines may result in severe personal injury, severe burns or death by fire or explosion.

- **Before refueling note the location of the Emergency Gasoline Shut-Off, if available, at the gas station facility.**

  Always heed any warnings or cautions posted at the fueling station.
- **Before touching the fuel nozzle, you should eliminate potentially dangerous static electricity discharge by touching another metal part of the vehicle, a safe distance away from the fuel filler neck, nozzle, or other gas source.**

(Continued)

(Continued)

- **Do not get back into a vehicle once you have begun refueling since you can generate static electricity by touching, rubbing or sliding against any item or fabric (polyester, satin, nylon, etc.) capable of producing static electricity. Static electricity discharge can ignite fuel vapors resulting in rapid burning. If you must re-enter the vehicle, you should once again eliminate potentially dangerous static electricity discharge by touching a metal part of the vehicle, away from the fuel filler neck, nozzle or other gasoline source.**
- **When using a portable fuel container be sure to place the container on the ground prior to refueling. Static electricity discharge from the container can ignite fuel vapors causing a fire. Once refueling has begun, contact with the vehicle should be maintained until the filling is complete.**

(Continued)

(Continued)

Use only portable plastic fuel containers designed to carry and store gasoline.

- **Do not use cellular phones while refueling. Electric current and/or electronic interference from cellular phones can potentially ignite fuel vapors causing a fire.**
- **When refueling, always shut the engine off. Sparks produced by electrical components related to the engine can ignite fuel vapors causing a fire. Once refueling is complete, check to make sure the filler cap and filler door are securely closed, before starting the engine.**

(Continued)

(Continued)

- **DO NOT use matches or a lighter and DO NOT SMOKE or leave a lit cigarette in your vehicle while at a gas station especially during refueling. Automotive fuel is highly flammable and can, when ignited, result in fire.**
- **If a fire breaks out during refueling, leave the vicinity of the vehicle, and immediately contact the manager of the gas station and then contact the local fire department or 911.**

CAUTION

- ***Make sure to refuel with unleaded fuel only.***
- ***Check to make sure the fuel filler cap is securely closed after refueling. A loose fuel filler cap may cause the "Check Engine" (Malfunction Indicator) light in the instrument panel to illuminate unnecessarily.***
- ***If the fuel filler cap requires replacement, use only a genuine Kia cap or the equivalent specified for your vehicle. An incorrect fuel filler cap can result in a serious malfunction of the fuel system or emission control system.***
- ***Do not spill fuel on the exterior surfaces of the vehicle. Any type of fuel spilled on painted surfaces may damage the paint.***

✻ NOTICE

If the fuel filler lid will not open in cold weather because the area around it is frozen, push or lightly tap the lid.

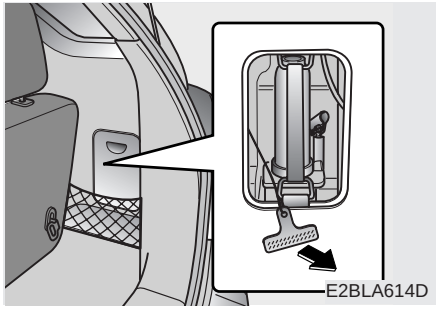

Manual fuel filler lid release (if equipped)

If the fuel filler lid is not open by using the remote button, open it by pulling out the emergency handle which is located in the right side storage in a cargo area.

AUTO FUEL CUTOFF SWITCH

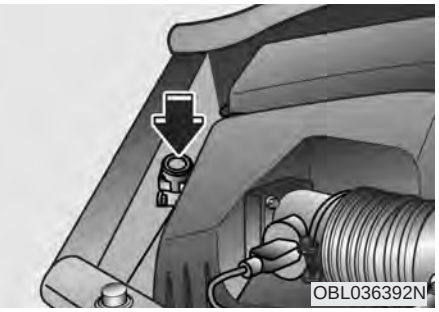

The auto fuel cutoff switch is located on the passenger's side of the engine compartment. In the event of a collision or sudden impact, the auto fuel cutoff device cuts off the fuel supply. If this device is activated, it must be reset by pressing in on the top of the switch before the engine can be restarted.

WARNING

Before resetting the auto fuel cutoff switch, the fuel line should be checked for fuel leaks.

MIRRORS

Outside rearview mirror

Be sure to adjust mirror angles before driving.

Your vehicle is equipped with both left-hand and right-hand outside rearview mirrors. The mirrors can be adjusted remotely with the control levers or remote switch, depending on the type of mirror control installed. The mirror heads can be folded back to prevent damage during an automatic car wash or when passing in a narrow street.

WARNING- Rearview mirrors

- **The right outside rearview mirror is convex. Objects seen in the mirror are closer than they appear.**
- **Use your interior rearview mirror or direct observation to determine the actual distance of following vehicles when changing lanes.**

CAUTION

Do not scrape ice off the mirror face; this may damage the surface of the glass. If ice should restrict movement of the mirror, do not force the mirror for adjustment. To remove ice, use a deicer spray, or a sponge or soft cloth with very warm water.

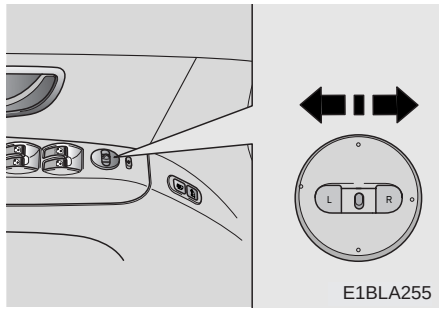

E1BLA255

Electric remote control (if equipped)

The electric remote control mirror switch allows you to adjust the position of the left and right outside rearview mirrors. To adjust the position of either mirror, move the lever to R or L to select the right side mirror or the left side mirror, then press a corresponding point on the mirror adjustment control to position the selected mirror up, down, left or right.

After adjustment, put the lever into neutral position to prevent the inadvertent adjustment.

CAUTION

- ***The mirrors stop moving when they reach the maximum adjusting angles, but the motor continues to operate while the switch is depressed. Do not depress the switch longer than necessary, the motor may be damaged.***
- ***Do not attempt to adjust the outside rearview mirror by hand. Doing so may damage the parts.***

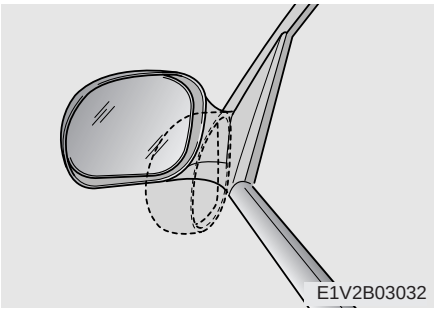
E1V2B03032

Folding the outside rearview mirror

To fold outside rearview mirror, grasp the housing of mirror and then fold it toward the rear of the vehicle.

Outside rearview mirror heater (if equipped)

The outside rearview mirror heater is actuated in connection with the rear window defroster. To heat the outside rearview mirror glass, push the button for the rear window defroster.

The rearview mirror heater (and rear window defroster) will not operate unless the engine is running.

The outside rearview mirror glass will be heated for defrosting or defogging and will give you improved rear vision in inclement weather conditions. Push the button again to turn the heater off. The outside rearview mirror heater automatically turns off after 20 minutes.

Day/night rearview mirror

Adjust the rearview mirror to center on the view through the rear window. Make this adjustment before you start driving.

⚠ WARNING - Rear visibility

Do not place objects in the rear seat or cargo area which would interfere with your vision out the rear window.

Manual type

Make this adjustment before you start driving and while the day/night lever is in the day position.

Pull the day/night lever toward you to reduce glare from the headlights of vehicles behind you during night driving.

Remember that you lose some rearview clarity in the night position.

Electric type (if equipped)

The electric day/night rearview mirror automatically controls the glare from the headlights of the car behind you in night-time or low light driving conditions. The sensor mounted in the mirror senses the light level around the vehicle, and through a chemical reaction, automatically controls the headlight glare from vehicles behind you.

When the engine is running, the glare is automatically controlled by the sensor mounted in the rearview mirror.

Whenever the shift lever is shifted into reverse (R), the mirror will automatically go to the brightest setting in order to improve the drivers view behind the vehicle.

WARNING

When backing up, we recommend the driver use the rear window rather than the rearview mirror to see objects in the road.

CAUTION

When cleaning the mirror, use a paper towel or similar material dampened with glass cleaner. Do not spray glass cleaner directly on the mirror as that may cause the liquid cleaner to enter the mirror housing.

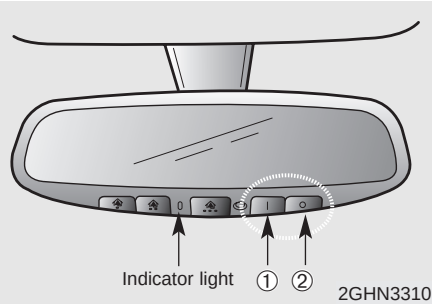

To operate the electric rearview mirror

Press the “I” button (①) to turn the automatic- dimming function on. The mirror indicator light will illuminate.

Press the “O” button (②) to turn the automatic- dimming function off. The mirror indicator light will turn off.

HOMELINK® WIRELESS CONTROL SYSTEM (IF EQUIPPED)

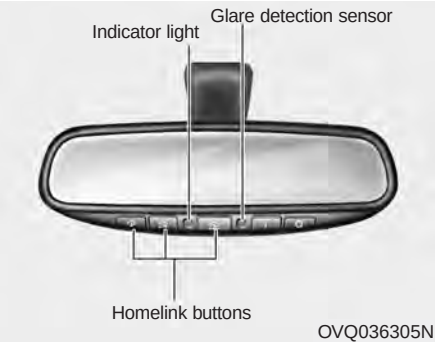

Your new mirror comes with an integrated HomeLink Universal Transceiver, which allows you to program the mirror to activate your garage door(s), estate gate, home lighting, etc. The mirror actually learns the codes from your various existing transmitters.

⚠ WARNING

- **When programming the HomeLink® Wireless Control System, you may be operating a garage door or gate operator. Make sure that people and objects are out of the way of the moving door or gate to prevent potential harm or damage.**

(Continued)

(Continued)

- **Do not use HomeLink with any garage door opener that lacks the safety stop and reverse feature as required by federal safety standards. (This includes any garage door opener model manufactured before April 1, 1982.) A garage door opener which cannot detect an object, signaling the door to stop and reverse, does not meet current federal safety standards. Using a garage door opener without these features increases risk of serious injury or death. For more information, call 1-800-355-3515 or on the internet at www.homelink.com.**
- **Retain the original transmitter for future programming procedures (i.e., new vehicle purchase). It is also suggested that upon the sale of the vehicle, the programmed HomeLink buttons be erased for security purposes (follow step 1 in the "Programming" portion of this text).**

Programming

Your vehicle may require the ignition switch to be turned to the ACC position for programming and/or operation of HomeLink. It is also recommended that a new battery be replaced in the hand-held transmitter of the device being programmed to HomeLink for quicker training and accurate transmission of the radio-frequency.

Follow these steps to train your HomeLink mirror:

1. When programming the buttons for the first time, press and hold the left and center buttons (,) simultaneously until the indicator light begins to flash after approximately 20 seconds. (This procedure erases the factory-set default codes. Do Not perform this step to program additional hand-held transmitters.)

✻ NOTICE

For non rolling code garage door openers, follow steps 2 - 3.
For rolling code garage door openers, follow steps 2 - 6.
For Canadian Programming, please follow the Canadian Programming section.
For help with determining whether your garage is non-rolling code or rolling code, please refer to the garage door openers owner's manual or contact HomeLink customer service at 1-800-355-3515.

2. Press and hold the button on the HomeLink system you wish to train and the button on the transmitter while the transmitter is approximately 1 to 3 inches away from the mirror. Do not release the buttons until step 3 has been completed.
3. The HomeLink indicator light will flash, first slowly and then rapidly. When the indicator light flashes rapidly, both buttons may be released. (The rapid flashing light indicates successful programming of the new frequency signal.)

✻ NOTICE

Some gate operators and garage door openers may require you to replace step #3 with the "cycling" procedure noted in the "Canadian Programming" section of this document.

Rolling code programming

To train a garage door opener (or other rolling code equipped devices) with the rolling code feature, follow these instructions after completing the “Programming” portion of this text. (A second person may make the following training procedures quicker & easier.)

4. Locate the “learn” or “smart” button on the device’s motor head unit. Exact location and color of the button may vary by product brand. If there is difficulty locating the “learn” or “smart” button, reference the device’s owner’s manual or contact HomeLink at 1-800-355-3515 or on the internet at www.homelink.com.
5. Press and release the “learn” or “smart” button on the device’s motor head unit. You have 30 seconds to complete step number 6.
6. Return to the vehicle and firmly press and release the programmed HomeLink button up to three times. The rolling code equipped device should now recognize the HomeLink signal and activate when the HomeLink button is pressed. The remaining two buttons may now be programmed if this has not previously been done. Refer to the “Programming” portion of this text.

Operating HomeLink

To operate, simply press the programmed HomeLink button. Activation will now occur for the trained product (garage door, security system, entry door lock, estate gate, or home or office lighting). For convenience, the hand-held transmitter of the device may also be used at any time. The HomeLink Wireless Controls System (once programmed) or the original hand-held transmitter may be used to activate the device (e.g. garage door, entry door lock, etc.). In the event that there are still programming difficulties, contact HomeLink at 1-800-355-3515 or on the internet at www.homelink.com.

Erasing programmed HomeLink buttons

To erase the three programmed buttons (individual buttons cannot be erased):

- Press and hold the left and center buttons simultaneously, until the indicator light begins to flash (approximately 20 seconds). Release both buttons. Do not hold for longer than 30 seconds.

HomeLink is now in the train (or learning) mode and can be programmed at any time.

Reprogramming a single HomeLink button

To program a device to HomeLink using a HomeLink button previously trained, follow these steps:

1. Press and hold the desired HomeLink button. Do NOT release until step 4 has been completed.
2. When the indicator light begins to flash slowly (after 20 seconds), position the hand-held transmitter 1 to 3 inches away from the HomeLink surface.
3. Press and hold the hand-held transmitter button (or press and “cycle” - as described in “Canadian Programming” above).
4. The HomeLink indicator light will flash, first slowly and then rapidly. When the indicator light begins to flash rapidly, release both buttons.

The previous device has now been erased and the new device can be activated by pushing the HomeLink button that has just been programmed. This procedure will not affect any other programmed HomeLink buttons.

Gate operator programming & canadian programming

During programming, your hand-held transmitter may automatically stop transmitting. Continue to press and hold the HomeLink button (note steps 2 through 4 in the “Programming” portion of this text) while you press and re-press (“cycle”) your handheld transmitter every two seconds until the frequency signal has been learned. The indicator light will flash slowly and then rapidly after several seconds upon successful training.

CAUTION

If programming a garage door opener or gate, it is advised to unplug the device during the “cycling” process to prevent possible motor burn-up.

Accessories

If you would like additional information on the HomeLink Wireless Control System, HomeLink compatible products, or to purchase other accessories such as the HomeLink® Lighting Package, please contact HomeLink at 1-800-355-3515 or on the internet at www.homelink.com.

This device complies with Industry Canada Standard RSS-210. Operation is subject to the following two conditions:

1. This device may not cause harmful interference, and
2. This device must accept any interference including interference that may cause undesired operation of the vehicle.

WARNING

Changes or modifications not expressly approved by the party responsible for compliance could void the user’s authority to operate the equipment.

IC: 4112104541A Gentex

MODEL/FCC ID: NZLSTDHL3

INTERIOR LIGHTS

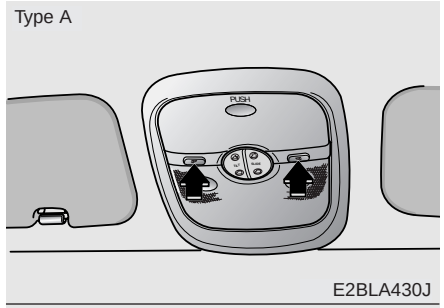

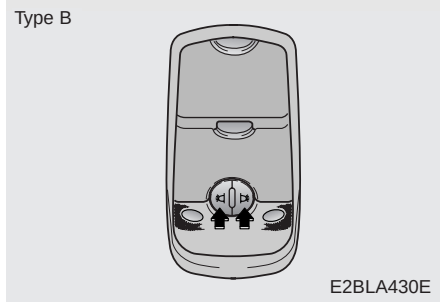

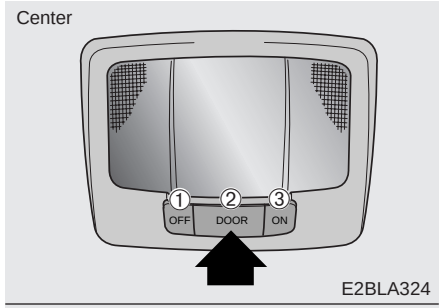

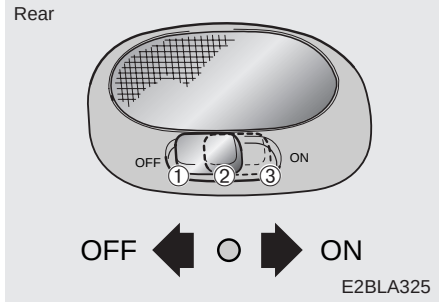

Room light

Front (map light)

The lights are turned ON or OFF by pressing the corresponding switch.

Center (dome light) / Rear cargo area light

(1) OFF

: The light stays off even when a door is open.

(2) DOOR/○

: The light turns on when a door is opened or when a door is unlocked by the transmitter (if equipped). Interior light goes out slowly after 30 seconds if the doors including the rear hatch and rear hatch window are all closed. However if the ignition switch is ON or all vehicle doors are locked when the door is closed, interior light will turn off even within 30 seconds.

(3) ON

: The light turns on and stays on even when the doors are all closed.

STORAGE COMPARTMENT

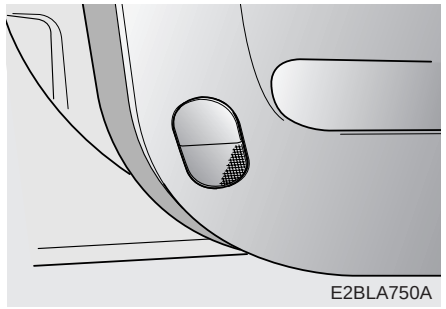

Door courtesy lamp (if equipped)

The door courtesy lamp comes ON when the door is opened to assist entering or exiting the vehicle. It also serves as a warning to passing vehicles that the vehicle door is open.

CAUTION

- ***To avoid possible theft, do not leave valuables in the storage compartment.***
- ***Always keep the storage compartment covers closed while driving. Do not attempt to place so many items in the storage compartment that the storage compartment cover can not close securely.***

WARNING - Flammable materials

Do not store cigarette lighters, propane cylinders, or other flammable/explosive materials in the vehicle. These items may catch fire and/or explode if the vehicle is exposed to hot temperatures for extended periods.

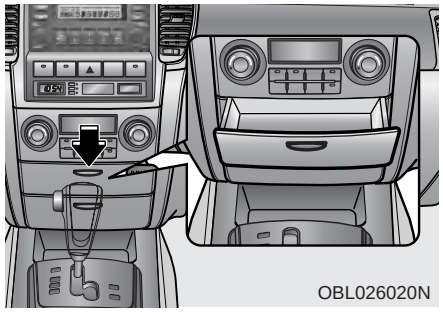

Center tray

To use the storage compartment, press the front face, and then release it to allow the storage compartment to slowly extend from the instrument panel.

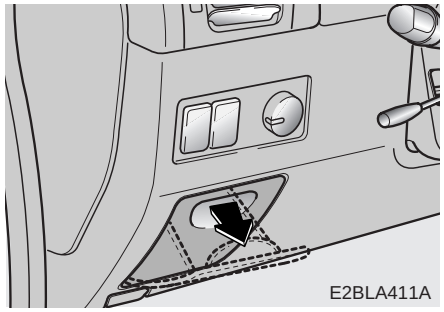

Multi Box

The multi box may be opened by pulling it out by its handle grip. It can be used for storing small items.

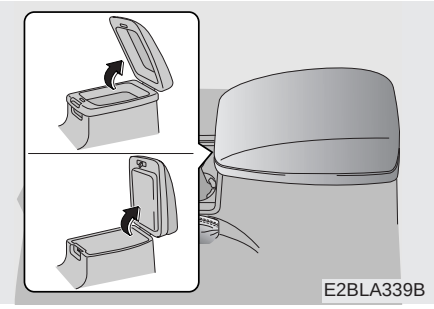

Center console storage

These compartments can be used to store small items required by the driver or front passenger.

To open the console storage compartment, pull up on the locking tab.

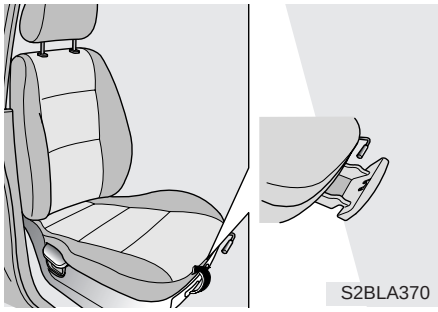

Under tray (If equipped)

The under tray is located under the front passenger's seat, and can be opened by pulling it out.

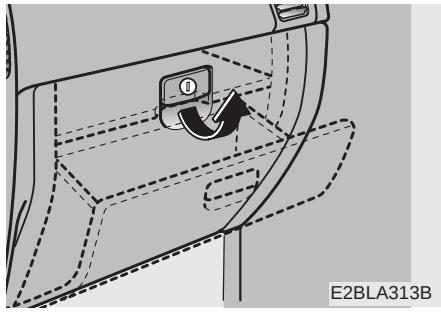

Glove box

The glove box can be locked and unlocked with a master key.

To open the glove box, make sure it is unlocked, then pull the handle and the glove box will automatically open. Close the glove box after use.

CAUTION

Since key is not fully inserted into the glove box key set, do not apply excessive force. Doing so may damage the parts.

WARNING

To reduce the risk of injury in an accident or sudden stop, always keep the glove box door closed while driving.

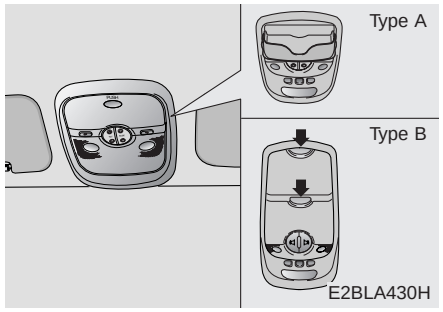

Sunglass holder

A sunglass storage compartment is provided on the overhead console. To open the sunglass holder, press the cover and the holder will slowly open. Place your sunglasses in the compartment door with the lenses facing out. Push to close.

CAUTION

Make sure the sunglass holder is closed while driving.

INTERIOR FEATURES

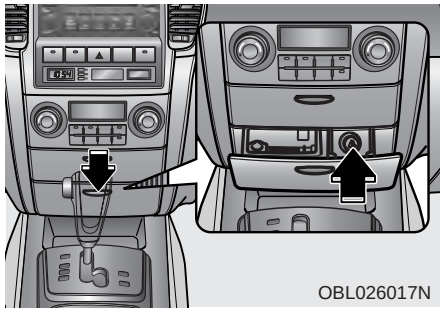

Cigarette lighter

To use the cigarette lighter, press the front face then release it to allow the cigarette lighter and ashtray to slowly extend from center panel.

To operate the cigarette lighter, press it in and release it. When it is heated, it automatically pops out ready for use.

If the engine is not running, the ignition switch must be in the ACC position for the lighter to operate.

CAUTION

- ***Do not hold the lighter in after it is already heated because it will overheat.***
- ***Only a genuine Kia lighter should be used in the cigarette lighter socket. The use of plug-in accessories (shavers, hand-held vacuums, and coffee pots, for example) may damage the socket or cause electrical failure.***
- ***If the lighter does not pop out within 30 seconds, remove it to prevent overheating.***

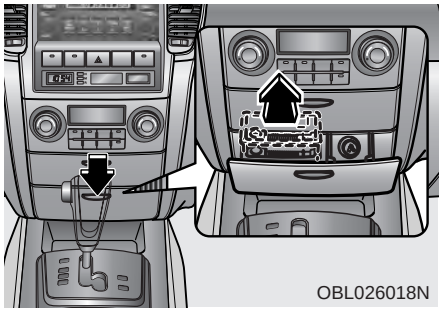

Ashtrays

Front

To use the ashtray, press the front face and release it to allow the cigarette lighter and ashtray to slowly extend from center panel.

To remove the ashtray, grasp the ashtray bucket and carefully pull it out.

⚠ WARNING - Ashtray use

- **Do not use the vehicle's ashtrays as waste receptacles.**
- **Putting lit cigarettes or matches in an ashtray with other combustible materials may cause a fire.**

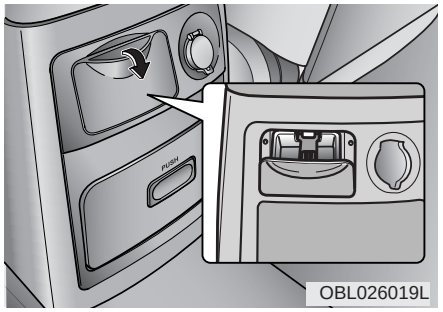

Rear

You can open the rear ashtray by pulling it out by its top edge. To remove the ashtray to empty or clean it, push the tab inside and pull it all the way out.

Cup holder

⚠ WARNING - Hot liquids

- **Do not place uncovered cups of hot liquid in the cup holder while the vehicle is in motion. If the hot liquid spills, you could be burned. Such a burn to the driver could cause a loss of control of the vehicle.**
- **To reduce the risk of personal injury in the event of sudden stop or collision, do not place uncovered or insecure bottles, glasses, cans, etc., in the cup holder while the vehicle is in motion.**

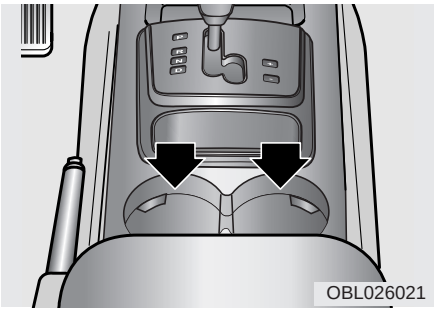

Front

Cups or small beverage cans may be placed in the cup holders.

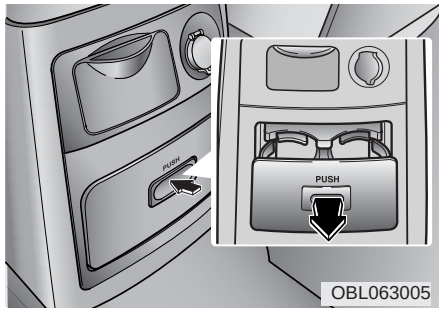

Rear

To use the rear cup holder, press the front face, release it and extend from the console box.

To return the cup holder to its closed position, push it completely into the console box. The cup holder latching mechanism will “click” when it is locked into position.

CAUTION

- ***Do not place heavy cups or cans in cup holders. Cup holders could be damaged.***
- ***Be careful not to step on the rear cup holder.***

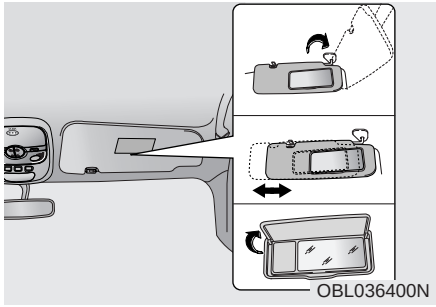

Sunvisor

Use the sunvisor to shield direct light through the front or side windows.

To use a sunvisor, pull it downward.

To use a sunvisor for a side window, pull it downward, unsnap it from the bracket and swing it to the side.

Adjust the sunvisor forward or backward.

To use the vanity mirror, pull down the visor and pull up the mirror cover.

✻ NOTICE

Close the vanity mirror cover securely and return the sunvisor to its original position after use.

Power socket

The power outlets are designed to provide power for mobile telephones or other devices designed to operate with vehicle electrical systems. The devices should draw less than 10 amps with the engine running.

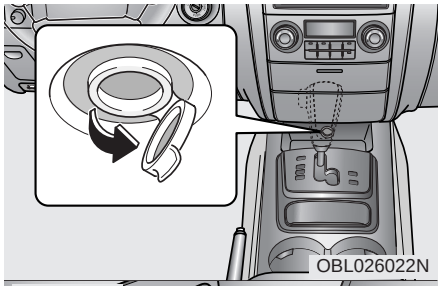

(if equipped)

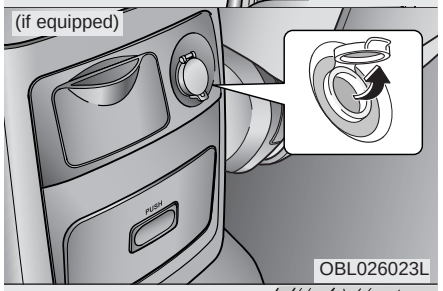

(if equipped)

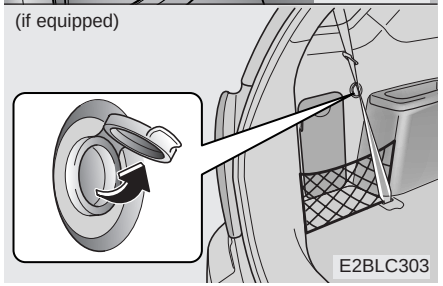

CAUTION

- ***Use when the engine is running, and remove a plug from the power outlet after using the electric appliance. Using when the engine stops or remaining the electric appliance with plugged in for many hours may cause the battery to be discharged.***
- ***Only use 12V electric appliances which are less than 10A in electric capacity.***
- ***Adjust the air-conditioner or heater to the lowest operating level when you have to use the power socket.***
- ***Close the cover when not in use.***
- ***Some electronic devices can cause electronic interference when plugged into a vehicle's power outlet. These devices may cause excessive audio static and malfunctions in other electronic systems or devices used in your vehicle.***

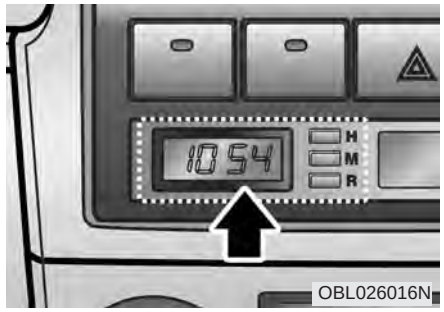

Digital clock

When the ignition switch is in the ACC or ON position, the clock buttons operates as follows:

- **HOUR:**
  Pressing the “H” button with your finger, a pencil or similar object will advance the time displayed by one hour.
- **MINUTE:**
  Pressing the “M” button with your finger, a pencil or similar object will advance the time displayed by one minute.
- **RESET:**
  To clear away minutes, press the “R” button with your finger, a pencil or similar object. Then the clock will be set precisely on the hour.
  For example, if the “R” button is pressed while the time is between 9:01 and 9:29, the display will be reset to 9:00.
  9:01 ~ 9:29 ⇛ 9:00
  9:30 ~ 9:59 ⇛ 10:00

SUNROOF (IF EQUIPPED)

If your vehicle is equipped with this feature, you can slide or tilt your sunroof with the sunroof control buttons located on the overhead console.

The sunroof can only be opened, closed, or tilted when the ignition switch is in the ON position.

CAUTION

Do not continue to press the sunroof control button(s) after the sunroof is in the fully open, closed, or tilt position(s). Damage to the motor or system components could occur.

E2BLA430C

Sliding the sunroof

The sunroof can be opened or closed when the ignition switch is in the “ON” position. To slide the sunroof, momentarily press “OPEN” ( ) on the SLIDE switch. The sunroof will slide all the way open. To stop the sunroof sliding at any point, press any sunroof switch. To close the sunroof, press “CLOSE” ( ) on the SLIDE switch and hold it until it is closed completely.

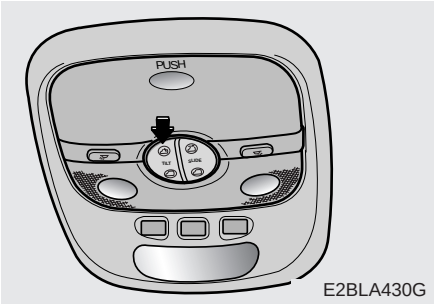

E2BLA430G

Tilting the sunroof

To tilt the sunroof, momentarily press “UP” ( ) on the TILT switch. The sunroof will tilt all the way up. To stop the sunroof tilting at any point, press any sunroof switches.

To close it, press “DOWN” ( ) on the TILT switch and hold it until it is closed completely.

✻ NOTICE

The sunroof cannot slide when it is in the tilt position nor can it be tilted while in an open or slide position.

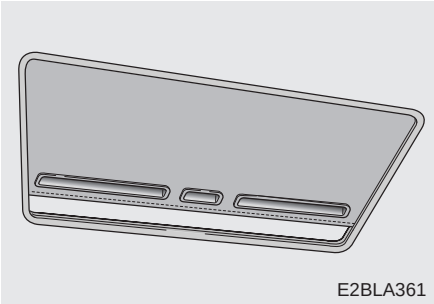
E2BLA361

Sunshade

The sunshade will be opened with the glass panel automatically when the glass panel is slid. After closing the glass panel the sunshade will only close manually.

CAUTION

- ***Do not press any sunroof control button longer than necessary. Damage to the motor or system components could occur.***
- ***Periodically remove any dirt that may accumulate on the guide rail.***
- ***If you try to open the sunroof when the temperature is below freezing or when the sunroof is covered with snow or ice, the glass or the motor could be damaged.***
- ***The sunroof is made to slide together with sunshade. Do not leave the sunshade closed while the sunroof is open.***

WARNING - Sunroof

- **Do not extend face or arms outside through the sunroof opening while driving.**
- **Make sure hand and face are safely out of the way before closing a sunroof.**

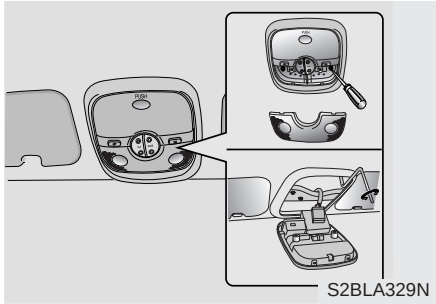
S2BLA329N

In case of an emergency

Type A (without multi-meter)

If the sunroof does not open electrically:

1. Remove the interior light lens by using a flat blade screwdriver.
2. Remove the two (2) screws, and then remove the overhead console.
3. Insert the emergency handle (provided with the vehicle) and turn the handle clockwise to open or counterclockwise to close.

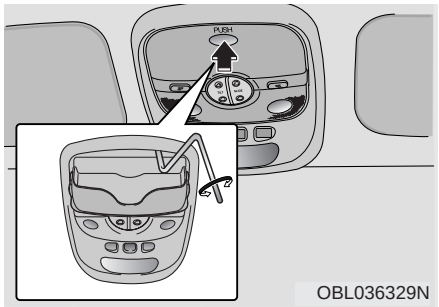

Type B (with multi-meter)

If the sunroof does not open electrically:

1. Open sunglass holder.
2. Break tab to open access hold for emergency handle.
3. Insert the emergency handle (provided with the vehicle) and turn the handle clockwise to open or counterclockwise to close.

Resetting the sunroof

Whenever the vehicle battery is disconnected or discharged, or you use the emergency handle to operate the sunroof, you have to reset your sunroof system as follows:

1. Turn the ignition key to the ON position.
2. According to the position of the sunroof, do as follows.
   1) in case that the sunroof has closed completely or been tilted :
      Press the TILT UP button until the sunroof has tilted upward completely.
   2) in case that the sunroof has slide-opened:
      Press and hold the CLOSE button for more than 5 seconds until the sunroof has closed completely. Press the TILT UP button until the sunroof has tilted upward completely.
3. Release the TILT UP button.
4. Press and hold the TILT UP button once again until the sunroof has returned to the original position of TILT UP after it is raised a little higher than the maximum TILT UP position.

When this is complete, the sunroof system is reset.

LUGGAGE NET (IF EQUIPPED)

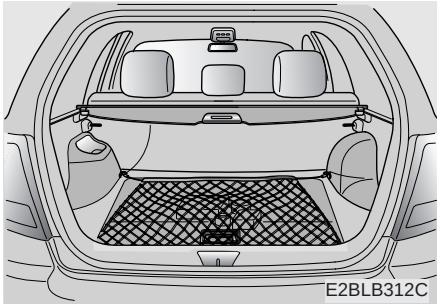

To keep items from shifting in the cargo area, you can use the four rings located in the cargo area to attach the luggage net.

CAUTION

Do not put fragile, bulky or an excessive quantity of items into luggage net. They could be damaged.

WARNING

To avoid eye injury, DO NOT overstretch the netting, allowing it to possibly snap back into your face.

DO NOT use the luggage net when the strap has visible signs of wear or damage.

TONNEAU COVER (IF EQUIPPED)

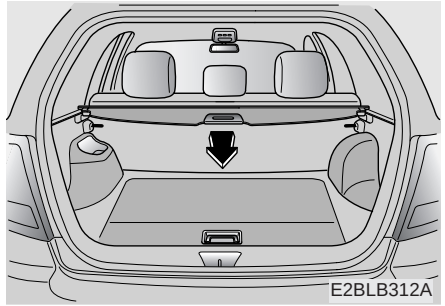

Use the tonneau cover to hide items stored in the cargo area.

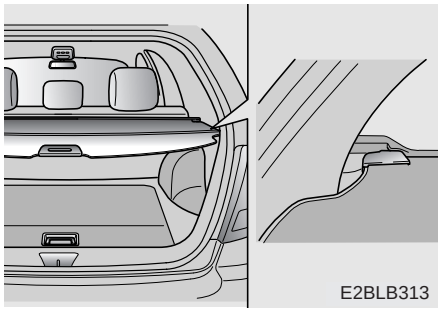

To use the rear shade of the tonneau cover, pull the handle backward and insert the edges into the slots.

WARNING

- **Do not place objects on the tonneau cover. Such objects may be thrown about inside the vehicle and possibly injure vehicle occupants during an accident or when braking.**
- **Never allow anyone to ride in the luggage compartment. It is designed for luggage only.**
- **Maintain the balance of the vehicle and locate the weight as far forward as possible.**

CAUTION

Since the tonneau cover may be damaged or malformed, do not put the luggage on it when it is used.

LUGGAGE CENTER BOX

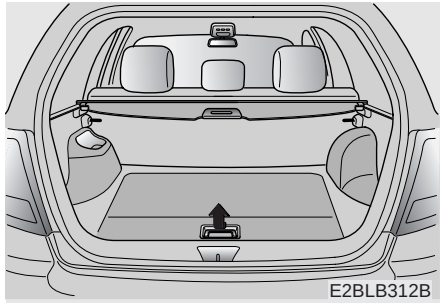

The luggage center box is located under the floor in cargo area. You can place a first aid kit, a reflector triangle, tools, etc. in the box for easy access.

1. Grasp the handle on the edge of the cover and lift it.
2. Detach the hook from the cover and hang the hook on the weather strip.

When not in use, hang the hook on the bottom of the cover.

ROOF RACK (IF EQUIPPED)

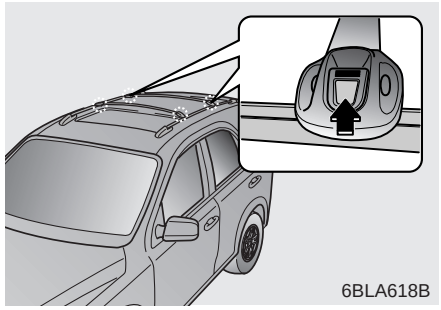

If the vehicle has a roof rack, you can load things on top of your vehicle. The two cross bars on the roof rack can be repositioned forward or rearward for conveniently loading cargo or luggage. With an assistant on the opposite side of the vehicle, press and hold the slider lock buttons on each side, then move the cross bar to the desired position. Release the buttons and lock the cross bar by moving the crossbar slightly forward or rearward.

CAUTION

- ***The crossbars should be placed in the proper load carrying positions prior to placing items onto the roof rack.***
- ***If the vehicle is equipped with a sunroof, be sure not to position cargo onto the roof rack in such a way that it could interfere with sunroof operation.***
- ***When carrying cargo on the roof rack, take the necessary precautions to make sure the cargo does not damage the roof of the vehicle.***
- ***When carrying large objects on the roof rack, make sure they do not exceed the overall roof length or width.***

WARNING

- **The following specification is the maximum weight that can be loaded onto the roof rack. Distribute the load as evenly as possible across the crossbars and roof rack and secure the load firmly.**

ROOF RACK	45 kg (100 lbs.) EVENLY DISTRIBUTED

- **The vehicle center of gravity will be higher when items are loaded onto the roof rack. Avoid sudden starts, braking, sharp turns, abrupt maneuvers or high speeds that may result in loss of vehicle control or rollover causing an accident.**

(Continued)

(Continued)

- **Always drive slowly and turn corners carefully when carrying items on the roof rack. Severe wind updrafts, caused by passing vehicles or natural causes, can cause sudden upward pressure on items loaded on the roof rack. This is especially true when carrying large, flat items such as wood panels or mattresses. This could cause the items to fall off the roof rack and cause damage to your vehicle or those around you.**
- **To prevent damage or loss of cargo while driving, check frequently before or while driving to make sure the items on the roof rack are securely fastened.**

CAUTION

- ***If the vehicle has a sunroof, do not position the roof rack loads so that they could interfere with the sunroof.***
- ***Loading cargo or luggage above specification on the roof rack may damage your vehicle.***

ANTENNA

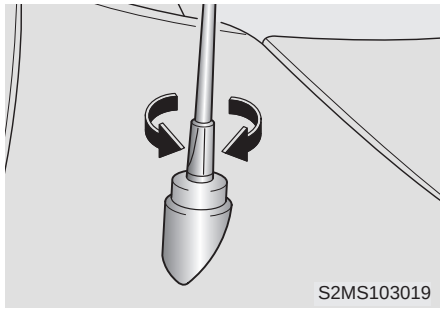

Antenna

If your vehicle has an audio system, a fixed rod antenna is installed in your vehicle.

This antenna can be removed from the vehicle when you wash your vehicle.

✻ NOTICE

- **Be sure to remove the antenna before washing the car in an automatic car wash or it may be damaged.**
- **When reinstalling your antenna, it is important that it is fully tightened to ensure proper reception.**

AUDIO REMOTE CONTROL (IF EQUIPPED)

The steering wheel audio remote control button is installed to promote safe driving.

✻ NOTICE

Do not operate audio remote control buttons simultaneously.

MODE

Press the MODE button to select Radio, CD (Compact Disc) or CDC (Compact Disc Changer, if equipped).

Each press of the button changes the display as follows:

RADIO(FM1→FM2→AM) → CD → CDC*

* : if equipped

VOLUME (▲/▼)

- Press the VOLUME (▲) button to increase volume.
- Press the VOLUME (▼) button to decease volume.

SEEK (▲/▼)

If the SEEK (▲/▼) button is pressed for 0.8 second or more, it will work as follows in each mode.

RADIO mode

It will function as the AUTO SEEK select button.

CDP mode

It will function as the FF/REW button.

CDC mode

It will function as the DISC UP/DOWN button.

If the SEEK (▲/▼) button is pressed for less than 0.8 second, it will work as follows in each mode. (if equipped)

RADIO mode

It will function as the PRESET STATION select buttons.

CDP mode

It will function as the TRACK UP/DOWN button.

CDC mode

It will function as the TRACK UP/DOWN button.

Detailed information for audio control buttons is described in the following pages in this section.

AUDIO SYSTEM

Understanding Radio Reception

Your vehicle's radio is able to receive AM and FM transmissions. To optimize the enjoyment of your vehicle's radio, you should have a basic understanding of how radio signals are transmitted and received.

Radio signals (AM and FM) are broadcast from the transmitter towers of radio stations in your vicinity. Your car radio receives these signals through the radio antenna. These signals received are directed to the audio system where they are processed, amplified and then converted into sound that is emitted from the audio system's speakers.

The quality of the audio reproduction that you hear depends on many factors. One important factor is signal strength. A clear and strong signal results in clear, static-free sound. A weak signal normally results in garbled sound with frequent breaks and also static. The radio antenna's ability to receive clear and strong radio signals depends on how close it is to the transmitting source and also whether there are physical obstructions (buildings or mountains) between the transmitter and antenna. For example, if you are driving away from the transmitting source, you can expect gradual deterioration in the quality of the reception.

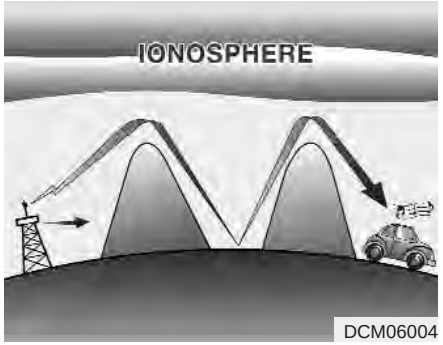

DCM06004

AM mode

Amplitude Modulation (AM) broadcasts makes use of low-frequency radio waves to carry the signals to your car antenna. Low frequency radio waves typically travel further and better than higher frequency radio waves (e.g. FM radio signals). This means that, compared to FM broadcasts, your car can travel further from an AM transmitting source before you experience deterioration in signal strength and clarity. One reason why AM radio signals can travel further is because they can 'bend' or 'go around' physical obstructions in their path to your car radio antenna.

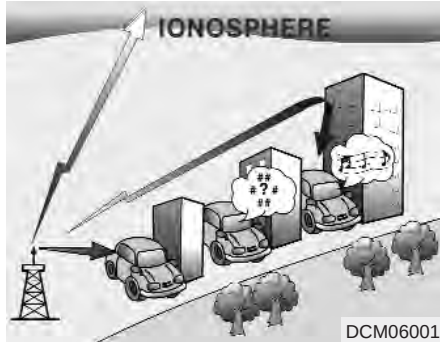

DCM06001

FM mode

Frequency Modulation (FM) broadcasts make use of high-frequency radio waves to carry the signals to your car antenna. FM radio waves are best received in 'clear line-of-sight' conditions. Unlike low-frequency radio waves that can 'bend' around physical obstructions like buildings or mountains, FM radio signals are easily blocked by physical obstructions like buildings or mountains. Moreover, FM radio signals cannot travel as far as AM radio signals. Due to FM radio signals' short transmission range, you will notice that FM stations generally serve listeners within a restricted radius (typically within one city).

The signal strength of a FM transmission will probably fade soon after you leave the city the station is based in. This is due to the technological limitations of the FM transmission standard and does not mean that your radio is defective.

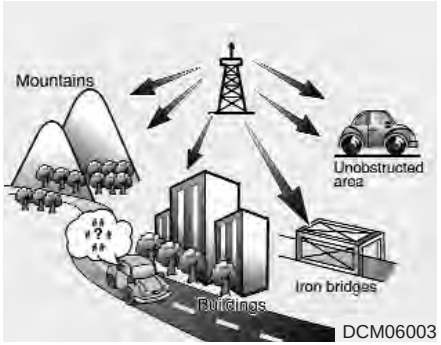

DCM06003

Comparing AM with FM

Do remember that signal strength is only one factor affecting audio reproduction quality. AM broadcasts are in Mono mode whereas FM broadcasts are in Stereo mode. Therefore, provided that the FM radio signal is strong and clear, the audio reproduction quality of an FM broadcast will always sound brighter, fuller and richer than an AM broadcast. This is due to the technological limitations of the AM transmission standard and is does not mean that your radio is defective.

Identifying your audio system

The front panels of the respective audio system models are shown below. Use the identifying callouts to confirm the model of your audio system.

OBL03446A

OBL03465A

Model D446

AM/FM tuner with single-disc CD player.

Model D465

AM/FM tuner with 6-disc changer CD player.

Controlling how your Audio System sounds

Operating your Audio system

Your audio system comprises a factory-installed amplifier, an AM/FM digital tuner (radio) and a CD player (single disc or 6-disc changer). Use the CD player to play discs encoded in the CD Audio, MP3, and WMA formats.

Your audio system has 4 different types of controls. These controls are used either independently or in combination with your audio system's radio, or CD player.

✻ NOTICE

Your audio system's factory-installed amplifier is pre-configured for optimum performance. You will not be able to make any adjustments. If there is a problem with the audio system's amplifier, please consult a professional audio engineer or the dealer where you purchased your vehicle.

1. Operational Controls:

These controls are used to operate the entire audio system. (e.g. Power ON-OFF control knob)

2. Sound Controls:

Use these controls independently or in combination to control how the audio system sounds. (e.g. Volume control, Bass and Treble controls).

The sound settings you make are applicable to all audio reproduction sources (radio or CD devices).

3. Radio controls:

Use these controls to operate, navigate the menu options and change settings when you are using the AM/FM digital tuner.

4. CD controls:

Use these controls to operate the CD player/changer, navigate the discs menu options and change playback settings when you are using the CD player.

✻ NOTICE

A button or control may have different functions depending on whether you are using the Radio or CD player. For example, the RPT (Repeat) button can only be used in the CD mode.

Using Operational and Sound Controls

1. Power ON-OFF / Volume Control knob
2. EQ button (Model D446) / Load button (Model D465)
3. CD EJECT Button
4. Audio Control knob
5. Sound properties
6. AM, FM (Model D465), FM1 (Model D446), FM2 (Model D446), CD (Model D465) buttons
7. Sound equalizer and digital signal processing (Model D465) / CD button (Model D446)

OBL03465-0

Model shown is Model D465. The buttons on your audio system may differ.
For details, see specific descriptions in the following sections.

1. Power ON-OFF / Volume Control knob

Power

To operate your audio system, your ignition key must be in the "ACC" or "ON" position.

Press the knob to switch on the audio system. The audio system resumes operation in either the Radio or CD mode.

Press the knob again to switch off the audio system.

Volume Control Knob

Rotate the knob clockwise to increase the volume and rotate the knob counterclockwise to reduce the volume.

2. Loading CDs

Model D446:

Only one CD can be loaded at any one time. If there is already a disc inserted in the CD player, eject the disc before loading a new CD.

To load a CD, gently insert the CD into the CD slot. The CD will be automatically loaded. The CD player then starts to play the CD.

✻ NOTICE

- **Do not force-load the CD as it will damage the loading mechanism and cause your disc to jam in the player.**
- **If a CD cannot be loaded, check if there is already a disc in the player and eject it first.**

Model D465:

Press the **LOAD** button to automatically switch the audio system on in CD player mode.

Follow the instructions on the LCD screen to load and play your CDs.

✻ NOTICE

To load more than 1 CD (maximum of 6), press and hold the load button for more than 2 seconds. The disc number indicator will flash to indicate how many CDs you can still load.

3. CD EJECT (⏏) Button

Model D446:

Press the ⏏ button once to eject the CD from the CD player.

Model D465

Press the ⏏ button once to eject the last CD played.

Press and hold button for more than 2 seconds to eject all the CDs in the changer in sequence beginning with the last CD played.

✻ NOTICE

You can eject discs even if the audio system is switched off.

4. Audio Control knob

Use the audio control knob to change how music playback sounds and also to control how sound is distributed to the speaker system.

Sound properties

Press the knob repeatedly to display the corresponding audio control settings (**Bass, Middle, Treble, Fader, Balance**).

The LCD screen displays the audio control settings in sequence. Once the audio control setting you want is displayed, rotate the knob **clockwise/anti-clockwise** to change the level of that audio setting.

Bass

Increases/decreases Bass response of audio reproduction

Middle

Increases/decreases Mid-range response of audio reproduction

Treble

Increases/decreases Treble response of audio reproduction

Fader

Sets front/rear balance level for your speaker system

Balance

Sets left/right balance level for your speaker system

✻ NOTICE

To return all audio control settings to the default (centered) positions, press and hold the audio control knob for more than 2 seconds. An audible beep indicates that all audio controls have been returned to the default setting.

5. AM, FM, FM1, FM2, CD buttons

Model D446: AM, FM1, FM2, CD

Model D465: AM, FM, CD

Use the input source selector buttons to select/switch operation modes. Press the **AM** band selector button, **FM/FM1/FM2** band selector button(s) or **CD** or button to resume operation in the corresponding mode.

Pressing any of these buttons automatically switches the audio system on.

The LCD screen displays either the radio frequency you are tuned into or the track currently played back.

✻ NOTICE

- **Remember that station Presets (1-6) stored in FM1 mode can only be accessed in FM1 mode. Similarly, FM2 presets can only be accessed in FM2 mode.**
- **For Model D465:**
  Press the FM band selector button repeatedly to switch between the FM1 and FM2 modes.

6. Sound equalizer and digital signal processing

Both Model D446 and Model D465: **EQ** button

EQ button:

Press the **EQ** button repeatedly to select the sound equalizer setting you want.

The 6 settings are: **ROCK, POP, JAZZ, CLASSIC, TALK** and equalizer off. If no icon is displayed in the LCD screen, the equalizer is switched off.

The 5 preset equalizer settings have been optimized for the 5 common genres of music. For example, the **ROCK** setting enhances bass reproduction with rock music whereas the **CLASSIC** setting enhances the clarity of string instruments during audio reproduction of classical music. You may want to experiment with the different settings to confirm your personal preferences.

✻ NOTICE

If you store a station Preset (1~6) with a specific equalizer setting, that setting is automatically used across other stations preset.

Using FM / AM Tuner (Radio) Controls

1. SCAN button
2. PRESET SCAN function
3. SEEK ∧ and ∨ buttons
4. Tuning Knob
5. Station Preset buttons (1~6)
6. Using Presets

OBL03465-1

The functions of the buttons and controls described below are only applicable when you select the Radio mode by pressing the **AM** or **FM** selector buttons (**models D465**), or, **AM, FM1** or **FM2** selector buttons (**model D446**).

Model shown is Model D465. The buttons on your audio system may differ.
For details, see specific descriptions in the following section.

1. SCAN button

Frequency band scan function

Press the **SCAN** button for the tuner to scan for radio signals in the selected frequency band (AM or FM). Once the tuner locks onto the signal of a transmitting station, it plays that station for 5 seconds before scanning for the next available station in the selected frequency band.

If you want to keep listening to a particular station and want to stop the scanning, press the **SCAN** button again.

This function is useful for providing you with a good overview of all the radio stations within range of your tuner.

2. PRESET SCAN function

Press and hold the **SCAN** button for more than 2 seconds. Each preset radio stations will be automatically played for 5 seconds. If you want to keep listening to a particular preset station and want to stop the scanning, press the **SCAN** button again.

3. SEEK ∧ and ∨ buttons

Automatic Channel Selection function

Press the ∧ and ∨ buttons to scan up and down the frequency range for the next available radio station and automatically lock on to that frequency.

The LCD screen displays the frequency of the radio station transmitting a clear and strong signal.

Use this function to search for a radio station you want. If you like a particular station, you can store it as one of 6 Presets using the **Preset** buttons below.

✻ NOTICE

This function is not effective if you are experiencing poor reception in your vicinity.

4. Tuning Knob

Manual Channel Selection

Rotate the knob clockwise or counter-clockwise to manually advance up or down the frequency range. The tuning knob also gives you fine-grain control which you can use to manually fine-tune your frequency selection. This is useful if you are searching for a radio signal which is not strong enough for you to use the Automatic Channel Selection function

✻ NOTICE

The speed at which you advance up or down the frequency range depends on how fast you turn the knob.

5. Station Preset buttons (1~6)

There are 6 Station Preset buttons which you can use to store the frequencies of your 6 favorite radio stations. Saving a station as a preset gives you one-touch access to the station you want. Remember that the 6 presets stations you store are for the specific radio band mode you are in. That means that you can store up to 6 stations in AM mode, 6 in FM1 mode, and 6 in FM2 mode. This means that you can store up to 18 of your favorite stations in the preset memory.

✻ NOTICE

- **To switch between FM1 and FM2 mode:**
  Use the FM1 and FM2 buttons (for Model D446)
  Press the FM button to switch between FM1 and FM2 modes (For Model D465)
- **Remember that if you store a station as preset 1 in FM2 mode, you must first select FM2 mode before you can use that preset button.**
- **This function is not effective if you are experiencing poor reception in your vicinity.**

6. Using Presets

To save a radio station as a preset:

1. Take note of the band selection displayed on the LCD screen (AM, FM1 or FM2)
2. Tune in to the radio station you want using either the **SEEK UP** and **DOWN** buttons or the **Tuning Knob**.
3. Choose the Preset button (1~6) you want to use to store the radio station.
4. Press and hold the Preset button for more than 2 seconds.
   The system beeps to indicate that it has saved the new station and displays the frequency and preset number on the LCD screen.

✻ NOTICE

Saving a new station erases the previous setting saved in that preset.

To tune in to a preset station:

1. Select the band (AM, FM1 or FM2) you want using the band selector buttons.
2. Press the preset button corresponding to the radio station you want.
   The system automatically jumps to the preset station. The frequency and preset number is displayed on the LCD screen.

Buttons not in use in Radio mode:

The following buttons and functions are not used in Radio mode.

- **REW** button
- **FF** button
- **RPT** button
- **RDM** button
- **MARK** button
- **NFO** button

Using CD player Controls

1. SCAN button
2. Track UP ∧ and DOWN ∨ buttons
3. CD selector buttons (1~6)
4. Rewind REW and Fast Forward FF buttons
5. Dir ∧ and ∨ buttons (MP3 and WMA discs)
6. File Search Knob
7. RPT, RDM, MARK & INFO buttons

OBL03465-0

The functions of the buttons and controls described below are only applicable when you select the CD mode by pressing the **CD** selector button (**for both Model D446 and Model D465**).

Model shown is D465. The buttons on your audio system may differ.
For details, see specific descriptions in the following section.

1. SCAN button

Disc Scan function

Model D446:

During CD playback, press the **SCAN** button to play the first 10 seconds (preview) of all tracks on the current CD.

Model D465:

To preview the first track of all the CDs in the CD changer, press and hold the **SCAN** button for more than 2 seconds.

Once you hear a track you want, press the **SCAN** button again to resume normal playback.

2. Track UP ∧ and DOWN ∨ buttons

During CD playback, press the ∧ and ∨ buttons to select and play the next or previous track on the current disc. The LCD screen displays the track number as you press the buttons. You can press the button several times to select the track you want.

3. CD selector buttons (1~6)

Model D446:

The **CD** selector buttons are not used with Model D446.

Model D465:

Press the **CD** selector button corresponding to the CD you want. The CD player automatically interrupts playback and loads the selected CD.

✻ NOTICE

If no CD is loaded in the selected position, the LCD screen displays the No Disc indicator.

4. Rewind REW and Fast Forward FF buttons

During CD playback, press and hold the **REW** or **FF** buttons to rewind or fast-forward playback of the current track. The LCD screen displays the elapsed time of the track you are rewinding or fast-forwarding.

Release the **REW** or **FF** button when you have reached the point you want. Playback resumes automatically at the selected point.

5. Dir ∧ and ∨ buttons (MP3 and WMA discs)

During **MP3/WMA** CD playback, press the **DIR** ∧ or ∨ buttons to switch to the next or previous directory on the CD. The LCD screen displays the name of the directory you have switched to. You can press the button several times to search for the directory you want. The directories are displayed in sequence (i.e. ascending or descending alphabetical order).

To access the directory displayed, press the **File Search knob** to **ENTER** your selection.

✻ NOTICE

The Directory UP and DOWN buttons can only be used when you are playing a CD which has organized its tracks in the form of directories. Normally, only MP3 or WMA CDs will contain a directory tree which you can navigate using these buttons.

6. File Search Knob

Rotate the knob clockwise or counter-clockwise to manually advance up or down the track list of the CD currently played. This function allows you to quickly scroll to a specific track number. It is especially useful if you are playing a **MP3** or **WMA CD** which contains many directories and tracks. The LCD screen displays the track number you have scrolled to.

Once the track number you want is displayed, press the File Search knob to **ENTER** your selection and begin playback of the selected track.

✻ NOTICE

You must push the File Search knob to select the track for playback. Otherwise, the CD player will not jump to the track number displayed in the number counter.

Use the File Search knob and the DIR ∧ and ∨ buttons in together to quickly search for a track you want on a MP3 CD with many directories and tracks.

7. RPT, RDM, MARK & INFO buttons

These buttons correspond to the Repeat, Random Playback, Marklist and Disc Information functions.

Turn to the next section of your handbook for detailed instructions.

Playing CDs, MP3 and WMA discs

1. Loading CDs

Model D446:

Only one CD can be loaded at any one time. If there is already a disc inserted in the CD player, eject the disc before loading a new CD.

To load a CD, gently insert the CD into the CD slot. The CD will be automatically loaded. The CD player then starts to play the CD.

✻ NOTICE

- **Do not force-load the CD as it will damage the loading mechanism and cause your disc to jam in the player.**
- **If a CD cannot be loaded, check if there is already a disc in the player and eject it first.**
  Only one CD can be loaded at any one time.

Model D465

You can load one or more CDs (maximum of 6) into the CD changer through the CD loading slot. To do so:

1. Press the **Load** button to load 1 CD.

   The LCD screen displays the number assigned to the CD as a flashing number. For example, if the CD changer currently contains 4 CDs, the loaded disc will be CD 5.

   OR

   Press and hold the **Load** button for more than 2 seconds to load more than 1 CD.

   The LCD screen displays empty slots in the CD changer as flashing numbers.
2. The LCD screen displays the instructions for loading one or more CDs. Follow the instructions - Wait, Insert CD1, Loading CD 1, Reading CD1,… Reading CD6.
3. Once you have finished loading the CD or CDs, the CD player automatically plays the first track of the last CD loaded.

   If the audio system was in Radio mode while you were loading the CDs, it automatically switches to CD player mode.

✻ NOTICE

The LCD screen displays Changer Full to indicate that the CD changer is full. Do not try to load any other disc.

2. Ejecting CDs

Model D446

Press the CD EJECT (⏏) button to eject the CD in the CD player.

Model D465

Press the ⏏ button once to eject the last CD played.

Press and hold ⏏ button for more than 2 seconds to eject all the CDs in the changer in sequence beginning with the last CD played.

✻ NOTICE

You can eject discs without switching on the audio system using the Power ON-OFF knob.

To eject 1 CD:

Press the **EJECT** button once.

If you are playing a CD, playback will automatically switch to the next available CD.

The LCD screen displays the number of the CD ejected as a flashing number.

If there are no other disc left in the CD changer, the audio system automatically switches to Radio mode and resumes with the last channel or frequency selected.

OR

If the audio system is in Radio mode, the last CD played will be ejected.

The LCD screen displays the number of the CD ejected as a flashing number.

To eject all CDs:

Press and hold the **EJECT** button for more than 2 seconds to eject all the CDs in the CD changer.

The LCD screen displays the CDs being ejected in the CD changer as flashing numbers. The CDs are ejected in sequence. Follow the instructions displayed on the LCD screen to remove all CDs from the changer.

✻ NOTICE

If the audio system is in Radio mode, you can eject CDs without interrupting the operation of the radio.

3. Selecting a disc to play

Model D446

Only the CD loaded in the player can be played.

Model D465

You can select any disc loaded in the CD changer for playback.

To do so:

Press the corresponding CD selector button (1~6).

The CD changer automatically loads the selected CD and begins playback of the first track.

The LCD screen displays the selected CD as a flashing number.

4. Selecting and playing tracks (songs)

To select tracks, you can use one of 3 methods:

Method 1:

Press the **Track Up** or **Track Down** button repeatedly until you find the track you want.

Method 2:

Rotate the File Search knob to scroll to the track you want. The number counter in the LCD screen shows you the track number.

Press the File Search knob to **ENTER** your selection and begin playback.

Method 3 (only for MP3 and WMA CDs):

Press the **DIR Up** or **Down** buttons repeatedly to switch to the directory you want on the CD.

The LCD screen displays the name of the directory you have switched to.

Rotate the File Search knob to scroll to the track you want in the selected directory. The number counter in the LCD screen shows you the track number. Press the **File Search knob** to **ENTER** your selection and begin playback.

5. Using the Repeat function (RPT button)

To repeat playback of the current track:

Press the **RPT** button once. The LCD screen displays **RPT** to indicate that it is in REPEAT mode. Playback of the current track will be repeated.

Press the **RPT** button again to resume normal playback. The **RPT** indicator is cleared.

To repeat playback of all tracks on the current CD/File Directory:

Press and hold the **RPT** button for more than 2 seconds. The LCD screen displays **RPT ALL** to indicate that it is in **REPEAT ALL** mode. The tracks of the current audio CD or the tracks in the current MP3 file directory will be repeated.

Press the **RPT** button again to resume normal playback. The **RPT ALL** indicator is cleared.

6. Using the Random playback function (RDM button)

For random playback in audio CDs (also applies to current MP3 file directory):

Press the **RDM** button once. The LCD screen displays **RDM** to indicate that it is in **RANDOM** mode. Tracks on the current audio CD/MP3 directory will be randomly selected and played.

Press the **RDM** button again to resume normal playback. The RDM indicator is cleared. Normal playback resumes.

For random playback of all tracks on a CD (only for MP3 and WMA CDs):

Press and hold the **RDM** button for more than 2 seconds. The LCD screen displays **RDM ALL** to indicate that it is in **RANDOM AL**L mode. Tracks from all directories in the **MP3/WMA CD** will be randomly selected and played.

Press the **RDM** button again to resume normal playback. The **RDM ALL** indicator is cleared.

7. Using the Bookmark function (MARK button)

The Bookmark function allows you to select and add up to 20 tracks from any CD in the CD changer to a playlist (marklist). You can then play the tracks on the playlist whenever you want.

Adding tracks to the playlist (marklist):

1. Play the track you want.
2. Press and hold the **MARK** button for more than 2 seconds to add the current track to the playlist (marklist). The LCD screen displays **MARK** to indicate that the track has been added to the playlist (marklist).
3. Repeat steps 1 & 2 to add more tracks to the marklist (maximum of 20 bookmarks.)

Playing tracks on the playlist (marklist):

1. Press the **MARK** button once. The LCD screen displays **MARK** to indicate that it is in bookmark mode and automatically begins playback of the tracks saved on the playlist (marklist) in sequence.
2. Press the **MARK** button again to resume normal playback. The **MARK** indicator is cleared. Normal playback resumes.

Deleting tracks from the playlist (marklist):

1. Press the **MARK** button once. The LCD screen displays **MARK** to indicate that it is in bookmark mode and automatically begins playback of the tracks saved on the playlist (marklist) in sequence.
2. Select the track you want to remove. (See Selecting and playing tracks (songs))
3. Press and hold the **MARK** button for more than 2 seconds. The LCD screen displays **TRACK DELETED** to confirm that the bookmark has been deleted.

Deleting all tracks from the playlist (marklist):

1. Press the **MARK** button once. The LCD screen displays **MARK** to indicate that it is in bookmark mode and automatically begins playback of the tracks saved on the playlist (marklist) in sequence.
2. Press and hold the **MARK** button for more than 4 seconds. The LCD screen displays **MARKLIST EMPTY** to confirm that all the bookmarks in the playlist (marklist) have been deleted.

✻ NOTICE

If rotate the File Search knob in non-bookmark mode, LCD screen shall display MARK indicator for the tracks saved on the playlist (marklist).

8. Using the file information function* (INFO button)

*** This function can only be used with MP3/WMA tracks.**

Press the INFO button repeatedly to display information about the track. The LCD screen displays the File Name, Artiste Name and Song Title in sequence.

✻ NOTICE

The information (File Name, Artiste Name and Song Title) available for display depends on the information the MP3/WMA file was encoded with. If the relevant information was not included when the file was encoded, you will not be able to see it.

Using External Controls

1. The Dimmer control

The Dimmer control setting determines the brightness of the entire vehicle's displays.

Turn the scroll wheel up or down to increase or decrease the brightness of the vehicle's instrument panels, backlit displays and the audio system's LCD screen and backlit controls.

2. Steering wheel audio controls

Steering wheel-mounted audio controls allow you to make adjustments to the most frequently used audio controls without taking your eyes off the road.

Control	Function
MODE button	Press this button to switch between the FM1/FM2/AM/CD modes. Check the LCD screen display to confirm if you have selected the mode you want. ✻ NOTICE **The modes available depend on the model of your audio.**
VOLUME up/down rocker switch	Press and hold to decrease (▼) or increase (▲) the volume.
SEEK up/down button	**IN RADIO MODE :** Press and release ▲ and ▼to switch to the next or previous preset station. For example, to switch from preset station 1 to preset station 3, press ▲ twice. Press and hold (about 1 second) ▲ and ▼ to scan up and down the frequency range for the next available radio station and automatically lock on to that frequency. **IN CD MODE :** During CD playback, press and release ▼ and ▲ to select and play the previous or next track on the disc. The LCD screen displays the track number as you press the buttons. You can press the button several times to select the track you want. Press and hold (about 1 second) ▲ and ▼ to:· • Fast-Forward or Rewind the current track (**Model D446/Model D465 (Only 1 disc inserted)**)· • Select and play the next or previous disc in the CD changer (**Model D465 (More than 1 disc inserted)**) ✻ NOTICE **Whether you are able to select, play, fast-forward or rewind the previous or next title/chapter/track on the disc depends on the contents encoded on your disc.**

Troubleshooting Poor Radio Reception

Problem:

Fading Signals / Interference / Increased interference/ Static

FM Broadcasts - The further you move away from the radio station's transmitting source (normally within a city or town), the weaker the signal will be. You might experience abrupt breaks in transmission, garbled sound and also static even though your radio remains tuned to the same frequency.

AM Broadcasts - Even though AM radio signals travel further and stronger than FM radio signals, weather or terrain conditions might adversely affect your radio's ability to receive the signals.

Solution:

Use your audio system's Scan function to automatically search for and select another radio station with good signal strength.

Problem:

High-pitched static, distortion or a 'fluttering' sound (Multi-Path Cancellation)

Radio stations transmitting on frequencies that are very close to each other may cause distortion or 'fluttering'. This effect is known as Multi-Path Cancellation. This normally occurs when your tuner is receiving a station's transmission as both direct and 'reflected' radio signals or when your tuner receives signals from more than 1 radio station transmitting on frequencies that are very close to each other.

Solution:

If the problem is caused by a temporary deterioration in the signal strength of one station's transmission, reduce the levels of your audio system's Treble and Middle settings to suppress the sound. If the problem is caused by interference from another station, select another radio station with good and clear signal strength.

Problem:

Interference from another FM radio broadcast ('station-swapping')

FM radio stations transmit on frequencies that are very close to each other on the FM band. When you travel further and further away from a transmitting source, the signal strength of that transmission decreases. Your radio's ability to 'lock' on to that specific frequency is affected. This is because your radio is designed to lock on to the strongest signal it can detect. Therefore, another radio station broadcasting on a frequency very close to your original station could 'interfere' with your reception and you might start to hear the broadcast of the second station. You will normally experience this when you are moving away from a weak signal and towards a stronger one.

Solution:

Use your audio system's Scan function to automatically search for and select another radio station with good signal strength.

Problem:

Interference caused by cellular phones and 2-way radios

Operating cellular phones and 2-way radios inside or within close proximity of your car may interfere with your radio reception. You may hear static, clicks, sounds or other types of white noise from your speakers.

Solution:

Cease operation of cellular phone or 2-way radios. Alternatively, move away from your car. The interference to your radio reception should be reduced.

⚠ WARNING

- **Your car's electrical systems contain sensitive electronics components. Interference from cellular phones, 2-way radios and other transmitting devices could adversely affect the safe operation of your vehicle. This could compromise the safety of both the driver and other passengers in the vehicle.**
- **When using cellular phones, 2-way radios and other transmitting devices in your vehicle, always use a separate external antenna. For restrictions on the use of communications and transmitting devices, please consult the relevant product documentation.**
- **Local laws may prohibit the use of cellular phones while driving. If you need to make or answer a call while driving, please stop the vehicle in a safe place before proceeding.**

Caring for your Audio System

Your audio system contains sophisticated electronics and precision-engineered parts and components that are not user-serviceable. To ensure trouble-free operation, please observe the following precautions:

1. General Use and Operation

Your audio system contains precision electronic components that are temperature-, moisture-, and static-sensitive. You should take care not to subject your audio system to extremes in temperatures or moisture. For example, if you have parked your car in the sun, the interior of the car could be very hot. Ventilate the car to reduce the interior temperature before trying to operate the audio system.

Never try to insert anything other than properly formatted CDs into the CD player. Foreign objects can cause the delicate mechanism to jam and render your CD player unusable. You must also follow the instructions displayed on your audio system's LCD screen.

For example, if your audio system is displaying "Wait", you should never try to force-load a CD into the CD player.

2. Your audio system's CD player

Your audio system includes a CD player that allows you to play audio CDs, MP3 and WMA CDs. To ensure trouble-free operation, please observe the following precautions:

- **Caring for your CDs (Audio, MP3 and WMA discs)**
  - Always hold and carry a CD by its edges to prevent scratching the disc. Fingerprints or dirt on the disc surface may cause skips or other errors during playback
  - If your CDs become dirty, clean it with a mild detergent and water and wipe it dry with a soft, lint-free cloth.
  - Never clean your CDs using corrosive or volatile cleaning agents such as benzene, thinner or cleaning sprays meant for vinyl records.

- **CD formats**

  Whether or not a CD can be played in your CD player depends on how the information on the CD has been encoded. Some CDs may be incompatible with your CD player and cannot be played back. For example, some types of copy-protected audio CDs which do not comply with the industry-standard Red Book format may not be played back. This does not indicate a fault with your CD player. Please verify that the encoding on your CD is compatible with your CD player. Consult the CD's documentation for more details.

CAUTION

- ***The creation and use of MP3 music files are governed by copyright legislation that may be specific to the country/district you reside in.***
- ***Specific copyrights attached to works may also govern their possession and use. Please observe all applicable copyright laws in the operation and use of your audio system's CD player.***

Ignition switch / 4-2
Starting the engine / 4-4
Automatic transmission / 4-5
Four wheel drive (4WD) / 4-10
Limited slip differential / 4-19
Brake system / 4-20
Steering wheel / 4-25
Cruise control system / 4-27

Driving your vehicle 4

Electronic stability control / 4-30
Rear parking assist system / 4-33
Instrument cluster / 4-36
Gauges / 4-37
Warnings and indicators / 4-39
Multi-meter / 4-45
Lighting / 4-51
Wipers and washers / 4-54
Defroster / 4-57
Hazard warning flasher / 4-58
Manual climate control system / 4-59
Automatic climate control system / 4-66
Windshield defrosting and defogging / 4-75

IGNITION SWITCH

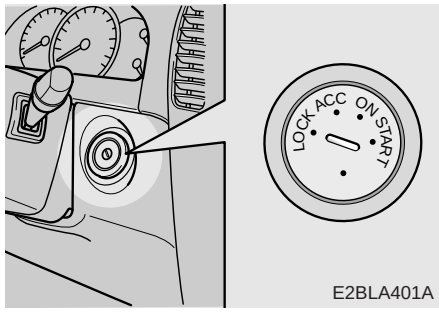

Illuminated ignition switch (if equipped)

Whenever a door is opened, the ignition switch will be illuminated for your convenience, provided the ignition switch is not in the ON position. The light will go off approximately 30 seconds after closing the door or when the ignition switch is turned on.

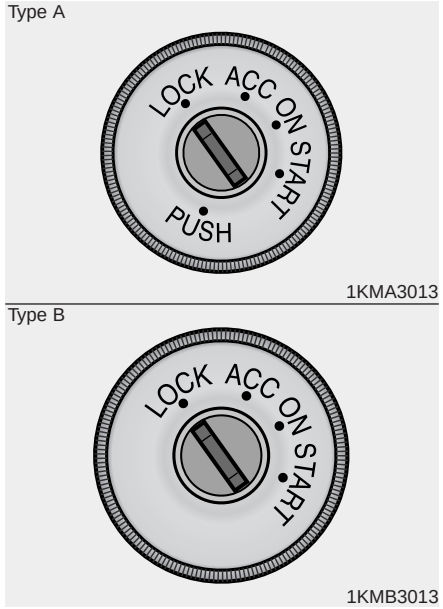

Ignition switch and anti-theft steering column lock

Ignition switch position

LOCK

The steering wheel locks to protect against theft. The ignition key can be removed only in the LOCK position. When turning the ignition switch to the LOCK position, push the key inward at the ACC position (Type A) and turn the key toward the LOCK position.

ACC (Accessory)

The steering wheel is unlocked and electrical accessories are operative.

ON

The warning lights can be checked before the engine is started. This is the normal running position after the engine is started.

Do not leave the ignition switch ON if the engine is not running to prevent battery discharge.

START

Turn the ignition key to the START position to start the engine. The engine will crank until you release the key; then it returns to the ON position. The brake warning lamp can be checked in this position.

✻ NOTICE

If difficulty is experienced in turning the ignition key, turn the steering wheel right and left to release the tension and then turn the key.

⚠ WARNING - Ignition key

- **Never turn the ignition switch to LOCK or ACC while the vehicle is moving. This would result in loss of directional control and braking function, which could cause an immediate accident.**
- **Before leaving the driver's seat, always make sure the shift lever is engaged in 1st gear for manual transmission or P (Park) for automatic transmission, set the parking brake fully and shut the engine off. Unexpected and sudden vehicle movement may occur if these precautions are not taken.**

(Continued)

(Continued)

- **Never reach for the ignition switch, or any other controls through the steering wheel while the vehicle is in motion. The presence of your hand or arm in this area could cause a loss of vehicle control, an accident and serious bodily injury or death.**
- **Do not place any movable objects around the driver's seat as they may move while driving, interfere with the driver and lead to an accident.**

Automatic transmission

When turning the ignition switch to the LOCK position, the shift lever must be in the P (Park) position.

STARTING THE ENGINE

⚠ WARNING

Always wear appropriate shoes when operating your vehicle. Unsuitable shoes (high heels, ski boots,etc.) may interfere with your ability to use the brake and accelerator pedal, and the clutch pedal (if equipped).

1. Make sure the parking brake is applied.
2. **Automatic Transmission -** Place the transmission shift lever in P (Park). Depress the brake pedal fully.

   You can also start the engine when the shift lever is in the N (Neutral) position.
3. Turn the ignition switch to START and hold it there until the engine starts (a maximum of 10 seconds), then release the key.
4. In extremely cold weather (below 0°F / -18°C) or after the vehicle has not been operated for several days, let the engine warm up without depressing the accelerator.

Whether the engine is cold or warm, it should be started ***without depressing the accelerator.***

CAUTION - Stall

If the engine stalls while you are in motion, do not attempt to move the shift lever to the P (Park) position. If traffic and road conditions permit, you may put the shift lever in the N (Neutral) position while the vehicle is still moving and turn the ignition switch to the START position in an attempt to restart the engine.

CAUTION

Do not engage the starter for more than 10 seconds. If the engine stalls or fails to start, wait 5 to 10 seconds before re-engaging the starter. Excessive or improper use of the starter may damage it.

The starter will not operate if:

Automatic Transmission - the shift lever is NOT in the P (Park) or N (Neutral) position.

AUTOMATIC TRANSMISSION (IF EQUIPPED)

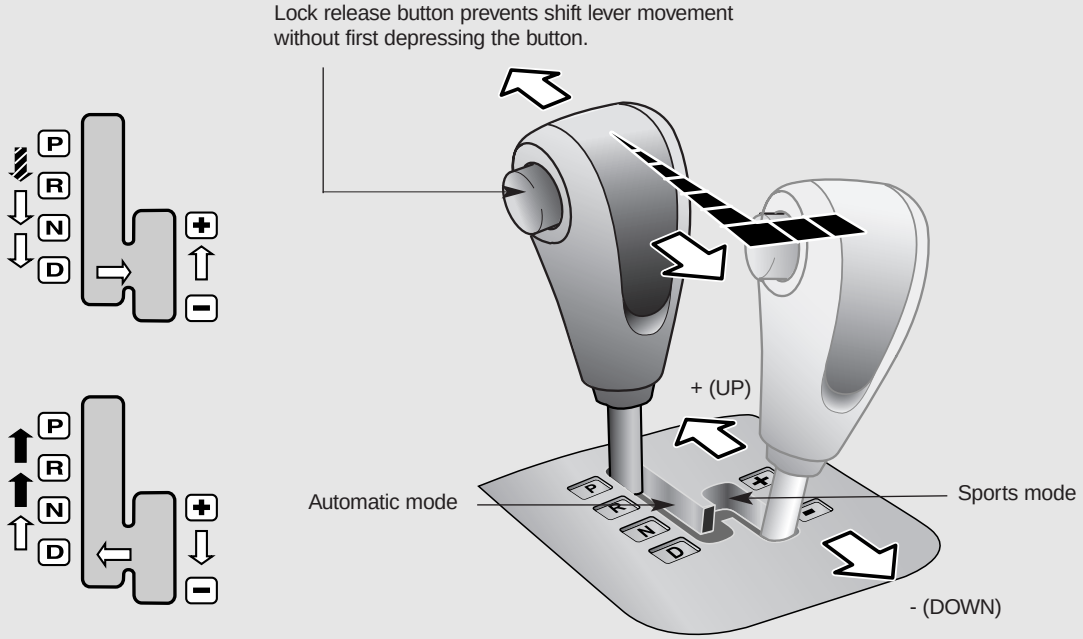

Depress the brake pedal and push the button when shifting.

The lock release button must be depressed while moving the shift lever.

The shift lever can be moved without depressing the lock release button.

OBL046900N

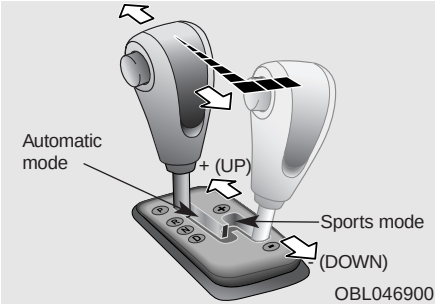

Automatic transmission operation

All normal forward driving is done with the shift lever in the D (Drive) position.

To move the shift lever from the P (Park) position, the brake pedal must be depressed and the lock release button must be depressed.

For smooth operation, depress the brake pedal when shifting from N (Neutral) to a forward or reverse gear.

WARNING - Automatic transmission

Before leaving the driver's seat, always make sure the shift lever is in the P (PARK) position; then set the parking brake fully and shut the engine off. Unexpected and sudden vehicle movement can occur if these precautions are not followed in the order identified.

CAUTION

- ***To avoid damage to your transmission, do not accelerate the engine in R (Reverse) or any forward gear position with the brakes on.***
- ***When stopped on an upgrade, do not hold the vehicle stationary with engine power. Use the service brake or the parking brake.***
- ***Do not shift from N (Neutral) or P (Park) into D (Drive), or R (Reverse) when the engine is above idle speed.***

Transmission ranges

P (park)

Always come to a complete stop before shifting into P. This position locks the transmission and prevents the front wheels from rotating.

WARNING - Automatic transmission

- **Shifting into P (Park) while the vehicle is in motion will cause the drive wheels to lock which will cause you to lose control of the vehicle.**
- **Do not use the P (Park) position in place of the parking brake. Always make sure the shift lever is latched in the P (Park) position so that it cannot be moved unless the lock release button is pushed in, AND set the parking brake fully.**

(Continued)

(Continued)

- **Before leaving the driver's seat, always make sure the shift lever is in the P (PARK) position. Set the parking brake fully, shut the engine off and take the key with you. Unexpected and sudden vehicle movement can occur if you do not follow these precautions in the order specified.**
- **Never leave a child unattended in a vehicle.**

CAUTION

The transmission may be damaged if you shift into P (Park) while the vehicle is in motion.

R (reverse)

Use this position to drive the vehicle backward.

CAUTION

Always come to a complete stop before shifting into or out of R (Reverse); you may damage the transmission if you shift into R while the vehicle is in motion.

N (neutral)

The wheels and transmission are not locked. The vehicle will roll freely even on the slightest incline unless the parking brake or service brakes are applied.

D (drive)

This is the normal forward driving position. The transmission will automatically shift through a 4-gear sequence, providing the best fuel economy and power.

For extra power when passing another vehicle or climbing grades, depress the accelerator fully, at which time the transmission will automatically downshift to the next lower gear.

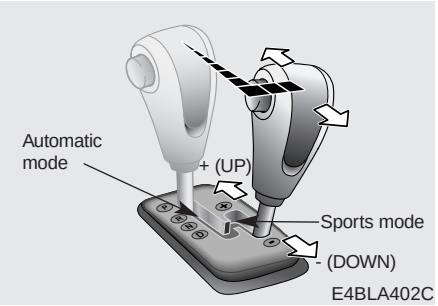

Sports mode

Whether the vehicle is stationary or in motion, sports mode is selected by pushing the shift lever from the “D” position into the manual gate. To return to “D” range operation, push the shift lever back into the main gate.

In sports mode, moving the shift lever backwards and forwards will allow you to make gearshifts rapidly. The sports mode allows gearshifts with the accelerator pedal depressed.

Up (+) : Push the lever forward once to shift up one gear.

Down (-) : Pull the lever backwards once to shift down one gear.

Snow mode

When taking off from a standstill on a slippery road, push the shift lever forward into the +(up) position. This causes the transmission to shift into the 2nd gear which is better for smooth driving on a slippery road.

Push the shift lever to the -(down) side to shift back to the 1st gear.

✻ NOTICE

- **Upshifts take place automatically in sports mode. However, the driver must execute upshifts in accordance with road conditions, taking care to keep the engine speed below the red zone because upshifts take place at the higher engine rpm.**
- **In sports mode, only the four forward gears can be selected. To reverse or park the vehicle, move the shift lever to the “R” or “P” position as required.**
- **In sports mode, downshifts are made automatically when the vehicle slows down. When the vehicle stops, 1st gear is automatically selected.**
- **In sports mode, when the engine rpm approaches the red zone shift points are varied to upshift automatically.**

✻ NOTICE

In the sport mode, if you push the lever to shift and no shift occurs, the system is acting to protect your safety and the vehicle.

Moving up a steep grade from a standing start

To move up a steep grade from a standing start, depress the brake pedal, shift the shift lever to D (Drive). Select the appropriate gear depending on load weight and steepness of the grade, and release the parking brake. Depress the accelerator gradually while releasing the service brakes.

When accelerating from a stop on a steep hill, the vehicle may have a tendency to roll backwards. Shifting the shift lever into 2 (Second Gear) while in Sport mode will help prevent the vehicle from rolling backwards.

Shift lock system

For your safety, the Automatic Transmission has a shift lock system which prevents shifting the transmission out of P (Park) unless the brake pedal is depressed.

To shift the transmission out of P (Park):

1. Depress and hold the brake pedal.
2. Start the engine or turn the ignition to the ACC or ON position.
3. Depress the lock release button and move the shift lever.

When the ignition switch is in the LOCK position, the transmission cannot be shifted from P (Park).

If the brake pedal is repeatedly depressed and released with the shift lever in the P (Park) position, a chattering noise near the shift lever may be heard. This is a normal condition.

Ignition key interlock system

The ignition key cannot be removed unless the shift lever is in the P (Park) position. If the ignition switch is in any other position, the key cannot be removed.

FOUR WHEEL DRIVE (4WD) (IF EQUIPPED)

For safe four-wheel drive operation

- Your vehicle allows you to drive in on-road and off-road conditions.
- However, do not try to drive in deep standing water, mud, or over steep hills.
- When you are driving up or down hills drive as close to straight up and down the hill as possible. Use extreme caution in going up or down steep hills, since you may flip your vehicle over depending on the grade, terrain and water/mud conditions.

⚠ WARNING - Four wheel drive

Driving across the contour of steep hills can be extremely dangerous. This danger can come from slight changes in the wheel angle which can destabilize the vehicle or, even if the vehicle is maintaining stability under power, it can lose that stability if the vehicle stops its forward motion. Your vehicle may roll over without warning and without time for you to correct a mistake that could cause serious injury or death.

- You must learn how to corner in a 4WD vehicle as soon as possible. Do not rely on your experience in conventional 2WD vehicles in choosing safe cornering speed. You must drive more slowly.
- Drive off-road carefully because your vehicle may be damaged by rocks or roots of trees. Become familiar with the off-road conditions you are going to drive before you start.

⚠ WARNING

Do not grab inside of the steering wheel when you are driving off-road. Your arm may be hurt by a sudden steering maneuver or from steering wheel rebound due to impact with objects on the ground. This may cause you to lose steering wheel control.

⚠ WARNING

Reduce speed when you turn corners. The center of gravity of 4WD vehicles is higher than that of conventional 2WD vehicles, making them more likely to roll over when you turn corners too fast.

- Always hold the steering wheel firmly when you are driving off-road.
- Make sure all passengers are wearing seat belts.
- Do not drive in water if the level is higher than the bottom of the vehicle.
- Check your brake condition once you are out of mud or water. Press the brake pedal several times as you move slowly until you feel normal braking forces return.
- Shorten your scheduled maintenance interval if you drive in off-road conditions such as sand, mud or water (see “Scheduled Maintenance” in the Index). Always wash your car thoroughly.

⚠ WARNING

If you are driving in heavy wind, the vehicle's higher center of gravity decreases your steering control capacity and requires you to drive more slowly.

⚠ WARNING

If you are driving too fast in water, the water spray can get into the engine compartment and wet the ignition system, causing your vehicle a sudden stop. If this happens and your vehicle is in a tilted position, your vehicle may roll over.

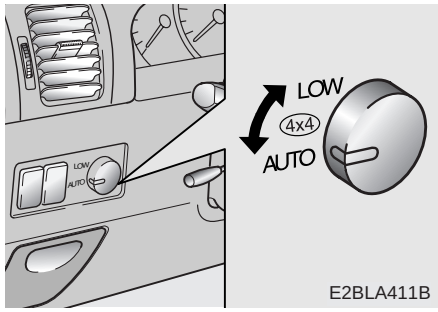

Full-time 4WD operation (if equipped)

When 4WD is selected with the transfer shift knob, the vehicle will switch to 4WD operation after a few seconds.

✻ NOTICE

When the vehicle shifts into 4WD mode, a slight mechanical sound and vibration may be felt and does not indicate a problem with the system.

To avoid shift shock, when the vehicle is stopped and you make a transfer case shift using the transfer shift knob, wait until the corresponding indicator light in the instrument cluster illuminates before driving.

Knob position

This is used to set different positions.

AUTO

Full power delivered to front and rear axle for increased traction. Use this mode for normal on-road driving.

The 4WD LOW indicator light (4WD LOW) will be turned off after blinking for a few seconds to remind you that you are in the AUTO mode.

LOW

Full power to both axles, including a lower gear ratio for low speed applications that require extra power such as wet pavement, snow-covered roads and/or off-road.

LOW Mode is not recommended on dry pavement.

The 4WD LOW indicator light (4WD LOW) will be turned on after blinking for a few seconds to remind you that you are in the LOW mode.

Transfer shift knob operation

AUTO ↔ LOW

1. Stop the vehicle.
2. Depress the clutch pedal (Manual transmission) or put the shift lever into N (Neutral) position (Automatic transmission).
3. **AUTO → LOW**
   : Turn the transfer shift knob to LOW mode.
   LOW → AUTO
   : Turn the transfer shift knob to AUTO mode.
4. Before releasing the clutch pedal (Manual transmission) or shifting to other ranges from N (Automatic transmission), wait for the corresponding indicator light in the instrument cluster to go ON or OFF.

CAUTION

If the vehicle moves while the transfer shift is in process, the gearbox may be damaged.

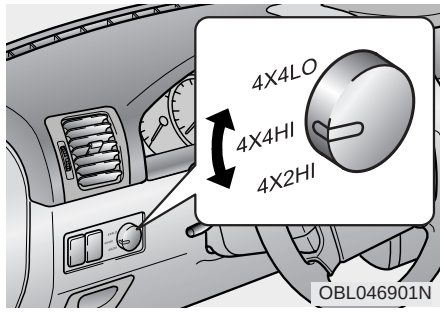

Part-time 4WD operation (if equipped)

You can send your engine's driving power to all front and rear wheels for maximum power.

Four-wheel drive is useful when you drive in snow, mud, ice or sand where good traction is required, or when your wheels lose traction using two-wheel drive.

When 4WD is selected with the transfer shift knob, the vehicle will switch to 4WD operation after a few seconds.

✻ NOTICE

When the vehicle shifts into 4WD mode, a slight mechanical sound and vibration may be felt and does not indicate a problem with the system.

To avoid shift shock, when the vehicle is stopped and you make a transfer case shift using the transfer shift knob, wait until the corresponding indicator light in the instrument cluster illuminates before driving.

✻ NOTICE

- **Do not select four wheel drive on flat and normal roads.**
- **Four-wheel driving on flat roads for a long period causes poor fuel economy and noise and it also causes tires to wear faster.**
- **Four-wheel driving on flat and normal roads can result in a severe binding and chattering condition when turning the steering wheel.**
- **Four-wheel driving on flat roads for a long period can also cause the differential oil temperature to increase, resulting in damage to parts in the power train.**

Knob position

This is used to set different positions.

2HI (Rear-wheel drive)

This mode is used, when driving on normal roads and highway.

4HI (High-range 4-wheel drive)

This mode is used, when driving off-roads, wet or snow covered roads with normal speed.

The 4WD indicator light (⊥⊥) will be turned on to remind you that you are in the 4HI mode.

4LO (Low-range 4-wheel drive)

Use 4LO for climbing or descending hills, off-roads driving and towing the vehicle, especially when increased power is required.

The 4WD LOW indicator light (4WD LOW) will be turned on to remind you that you are in the 4LO mode.

Transfer shift knob operation

By turning the transfer knob (4HI, 4LO), both front and rear axles are engaged.

This improves the traction characteristic.

2HI → 4HI

Turn the transfer knob from the 2HI mode to 4HI mode at speed below 80 km/h (50 mph).

It is not necessary to depress the clutch pedal or put the shift lever into N (Neutral) position (Manual transmission) or put the shift lever into N (Neutral) position (Automatic transmission).

Perform this operation when driving straight. There will be a few seconds of time delay before come into 4HI mode when you shift the knob to 4 HI from 2HI.

4HI → 2HI

Turn the transfer knob from the 4HI mode to the 2HI mode at speed below 80 km/h (50 mph). It is not necessary to depress the clutch pedal (Manual transmission) or put the shift lever into N (Neutral) (Automatic transmission). Perform this operation when driving straight.

If the transfer mode does not shift into 2HI mode when you turn the transfer knob to 2HI, drive straight ahead with accelerating or decelerating, or drive in reverse.

4HI ↔ 4LO

1. Stop the vehicle.
2. Depress the clutch pedal for the manual transmission or put the shift lever into N (Neutral) for the automatic transmission.
3. **4HI → 4LO**
   : Select the 4LO mode.
   4LO → 4HI
   : Select the 4HI mode.
4. Before releasing the clutch pedal (Manual transmission) or shifting to other ranges from N range (Automatic transmission), wait for corresponding indicator light turns on or off in the cluster.

CAUTION

If the vehicle moves while the transfer shift is in process, the gearbox may be damaged.

For safe four-wheel drive operation

- Your vehicle allows you to drive in on-road and off-road conditions.
- However, do not try to drive in deep standing water, mud, or over steep hills.

WARNING - Four-wheel driving

The conditions on-road or off-road that demand four-wheel drive mean all functions of your vehicle are exposed to more extreme stress than under highway conditions. Slow down, look ahead, and be ready for sudden changes in the composition and traction of the surface under your tires. If you have any doubt about the safety of the conditions you are facing, stop and consider the best way to proceed. Do not exceed the ability of yourself or your vehicle to operate safely.

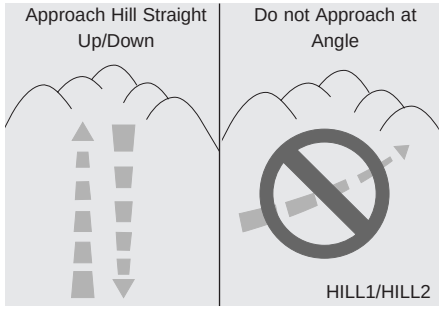

- When you are driving up or down hills, drive as close to straight up and down the hills as possible. Use extreme caution in going up or down steep hills, since you can flip your vehicle over depending on the grade, terrain and water/mud conditions.
- Drive off-road carefully because your vehicle may be damaged by rocks or roots of trees. Become familiar with the off-road conditions you are going to drive before you start.

⚠ WARNING - Steep hills

Driving across the contour of steep hills can be extremely dangerous. This danger can come from slight changes in the hill angle which can destabilize the vehicle. Even if the vehicle is maintaining stability under power, it can lose that stability if the vehicle stops its forward motion. Your vehicle may roll over without warning and without time for you to correct a mistake that could cause serious injury or death.

- You must learn how to corner in a 4WD vehicle as soon as possible. Do not rely on your experience in conventional 2WD vehicles in choosing a safe cornering speed. You must drive more slowly.

⚠ WARNING - Turning corners

Reduce speed when you turn corners. The center of gravity of 4WD and 2WD utility vehicles are raised higher than that of conventional 2WD cars, making them more likely to roll over when you turn corners too fast.

⚠ WARNING

Do not grab inside of the steering wheel when you are driving off-road. Your arm may be hurt by a sudden steering maneuver or from steering wheel rebound due to impact with objects on the ground. You could lose control of the steering wheel.

- Always hold the steering wheel firmly when you are driving off-road.
- Make sure all passengers are wearing seat belts.

⚠ WARNING

If you are driving in heavy wind, the vehicle's higher center of gravity decreases your steering control. Drive more slowly than you would in calm conditions.

- If you need to drive in water, stop your vehicle, set your transfer knob to 4LO or LOW and drive at less than 8 km/h (5 mph).

⚠ WARNING - Driving through water

If you are driving too fast in water, the water spray can get into the engine compartment and wet the ignition system, causing your vehicle to suddenly stop. If this happens and your vehicle is in a tilted position, your vehicle may roll over.

- Do not drive in water if the level is higher than the bottom of the wheel hubs.
- Check your brake condition once you are out of mud or water. Press the brake pedal several times as you move slowly until you feel normal braking forces return.
- Shorten your scheduled maintenance interval if you drive off-road in conditions such as sand, mud or water (see "Scheduled Maintenance" in the Index). Always wash your car thoroughly.
- The full time four wheel drive vehicle cannot be towed by an ordinarily tow truck. Make sure that the vehicle is towed with its four wheels raised off the ground.
- Since the driving torque is always applied to the 4 wheels the performance of the 4WD vehicle is greatly affected by the condition of the tires. Be sure to equip them with all four tires with same size and type.

⚠ WARNING

Your vehicle is equipped with tires designed to provide for safe ride and handling capability.

Do not use a size and type of tire and wheel that is different from the one that is originally installed on your vehicle. It can affect the safety and performance of your vehicle, which could lead to handling failure or rollover and serious injury.

When replacing the tires, be sure to equip all four tires with the tire and wheel of the same size, type, tread, brand and load-carrying capacity. If you nevertheless decide to equip your vehicle with any tire/wheel combination not recommended by Kia for off road driving, you should not use these tires for highway driving.

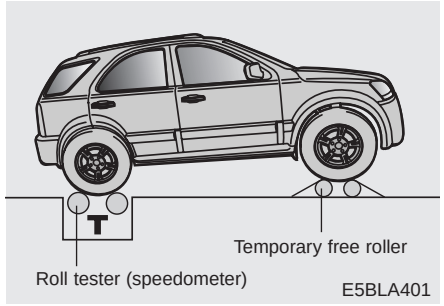

- For speedometer test or inspection/ maintenance (I/M) program of full-time 4WD vehicle, use a four wheel chassis dynamometer.

CAUTION

Never engage the parking brake while performing these tests.

- A 4WD vehicle should not be tested on a 2WD drive roll tester. If a 2WD roll tester must be used, perform the following:

1. Check the tire pressures recommended for your vehicle.
2. Place the rear wheels on the roll tester for speedometer test as shown in the illustration.
3. Release the parking brake.
4. Place the front wheels on the temporary free roller as shown in the illustration.

WARNING

Keep away from the front of the vehicle while inspecting. This is very dangerous as the vehicle can jump forward and cause serious injury or death.

CAUTION

While the full-time 4WD vehicle is being raised on a jack, never start the engine or cause the tires to rotate.

There is the danger that rotating tires touching the ground could cause the vehicle to go off the jack and to jump forward.

If one of the front or rear wheels begins to spin in mud, snow, etc. the vehicle can sometimes be driven out by depressing the accelerator pedal further; however avoid running the engine continuously at high rpm because doing so could damage the 4WD system.

⚠ WARNING

- **Avoid high cornering speed.**
- **Do not make quick steering wheel movements, such as sharp lane changes or fast, sharp turns.**
- **The risk of rollover is greatly increased if you lose control of your vehicle at high speeds.**
- **In a collision crash, an unbelted person is significantly more likely to die compared to a person wearing a seat belt.**
- **Loss of control often occurs if two or more wheels drop off the roadway and the driver over steers to re-enter the roadway.**
- **In the event your vehicle leaves the roadway, do not steer sharply. Instead, slow down before pulling back into the travel lanes.**

LIMITED SLIP DIFFERENTIAL (IF EQUIPPED)

A limited slip differential if equipped, is for the rear wheel differential only. The features of this limited slip differential are described below;

Just as with conventional differential, the wheel on one side is allowed to turn at a different speed from the wheel on the other side when the vehicle is cornering.

The difference between the limited slip differential and a conventional differential is that if the wheel on one side of the vehicle loses traction, a greater amount of torque is applied to the rear wheel on the other side to improve traction.

⚠ WARNING

To avoid injury, never run the engine with one wheel off the ground, such as when changing a tire.

BRAKE SYSTEM

Power brakes

Your vehicle has power-assisted brakes that adjust automatically through normal usage.

In the event that the power-assisted brakes lose power because of a stalled engine or some other reason, you can still stop your vehicle by applying greater force to the brake pedal than you normally would. The stopping distance, however, will be somewhat longer.

When the engine is not running, the reserve brake power is partially depleted each time the brake pedal is applied. Do not pump the brake pedal when the power assist has been interrupted.

Pump the brake pedal only when necessary to maintain steering control on slippery surfaces.

In the event of brake failure

If service brakes fail to operate while the vehicle is in motion, you can make an emergency stop with the parking brake. The stopping distance, however, will be much greater than normal.

⚠ WARNING - Parking brake

Operating the parking brake while the vehicle is moving at normal speeds can cause a sudden loss of control of the vehicle. If you must use the parking brake to stop the vehicle, use great caution in applying the brake.

⚠ WARNING - Brakes

- **Do not drive with your foot resting on the brake pedal. This will create abnormal high brake temperatures, excessive brake lining and pad wear, and increased stopping distances.**
- **When descending a long or steep hill, shift to a lower gear and avoid continuous application of the brakes. Continuous brake application will cause the brakes to overheat and could result in a temporary loss of braking performance.**
- **Wet brakes may result in the vehicle not slowing down at the usual rate and pulling to one side when the brakes are applied. After going through water, apply the brakes lightly to regain smooth braking performance.**

Disc brakes wear indicator

Your vehicle has disc brakes.

When your brake pads are worn and it's time for new pads, you will hear a high-pitched warning sound from your front brakes or rear brakes (if equipped). You may hear this sound come and go or it may occur whenever you depress the brake pedal.

Please remember that some driving conditions or climates may cause a brake squeal when you first apply (or lightly apply) the brakes. This is normal and does not indicate a problem with your brakes.

✻ NOTICE

To avoid costly brake repairs, do not continue to drive with worn brake pads.

⚠ WARNING - Brake wear

This brake wear warning sound means your vehicle needs service. If you ignore this audible warning, you will eventually lose braking performance, which could lead to a serious accident.

CAUTION

Always replace brake pads as complete front or rear axle sets to ensure smooth brake performance.

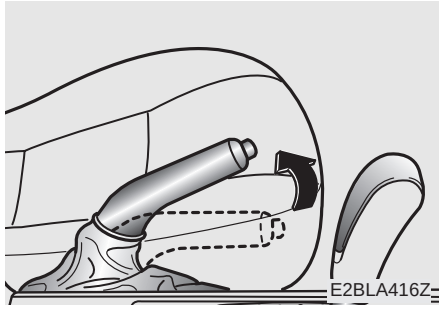

Parking brake

To apply the parking brake, pull the parking brake handle fully and firmly upward while applying the service brake.

CAUTION

Driving with the parking brake applied will cause excessive brake pad and brake rotor wear.

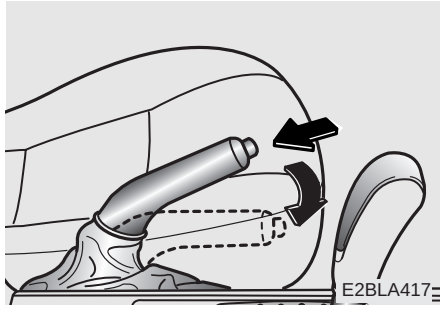

To release the parking brake, pull the handle up slightly and push the release button, then lower the handle to the released position while holding the button in.

⚠ WARNING - Parking brake

- **To prevent unintentional movement when stopped, do not use just the gear shift lever to hold the vehicle in position. Set the parking brake AND make sure the gearshift lever is securely positioned in 1st (First) gear or R (Reverse) for manual transmission equipped vehicles and in P (Park) for automatic transmission equipped vehicles.**
- **Never allow a person who is unfamiliar with the vehicle or children to touch the parking brake. If the parking brake is released unintentionally, serious injury may occur.**

Check the brake warning light by turning the ignition switch ON (do not start the engine). This light will be illuminated when the parking brake is applied with the ignition switch in the START or ON position.

Before driving, be sure the parking brake is fully released and the brake warning light is off.

If the brake warning light remains on after the parking brake is released, there may be a malfunction in the brake system. Immediate attention is necessary.

If at all possible, cease driving the vehicle immediately. If that is not possible, use extreme caution while operating the vehicle and only continue to drive the vehicle until you can reach a safe location or repair shop.

Parking on curbed streets

- When parking your vehicle on an uphill grade, park as close to the curb as possible and turn the front wheels away from the curb so that the front wheels will contact the curb if the vehicle moves backward.
- When parking your vehicle on a downhill grade, park as close to the curb as possible and turn the front wheels toward the curb so that the front wheels will contact the curb if the vehicle moves forward.

Anti-lock brake system (ABS) (if equipped)

⚠ WARNING - ABS Brakes

Your ABS is not a substitute for good driving judgement. You can still have an accident. In fact, your ABS system will not be able to prevent an accident. You must especially avoid:

- **Dangerous driving, such as neglecting safety precautions, speeding, or driving too close to the vehicle in front of you.**
- **Driving at high speed in situations providing considerably less traction, such as wet conditions where hydroplaning could occur.**
- **Driving too fast on poor road surfaces. The ABS is designed to improve maximum braking effectiveness on typical highways and roads in good condition. On poor road surfaces, the ABS may actually reduce braking effectiveness.**

The ABS system continuously senses the speed of the wheels. If the wheels are going to lock, the ABS system repeatedly modulates the hydraulic brake pressure to the wheels.

When you apply your brakes under conditions which may lock the wheels, you may hear a “tik-tik” sound from the brakes, or feel a corresponding sensation in the brake pedal. This is normal and it means your ABS system is active.

In order to obtain the maximum benefit from your ABS system in an emergency situation, do not attempt to modulate your brake pressure and do not try to pump your brakes. Press your brake pedal as hard as possible or as hard as the situation warrants and allow the ABS system to control the force being delivered to the brakes.

- Even with the anti-lock brake system, your vehicle still requires sufficient stopping distance. Always maintain a safe distance from the vehicle in front of you.
- Always slow down when cornering. The anti-lock brake system cannot prevent accidents resulting from excessive speeds.
- On loose or uneven road surfaces, operation of the anti-lock brake system may result in a longer stopping distance than for vehicles equipped with a conventional brake system.

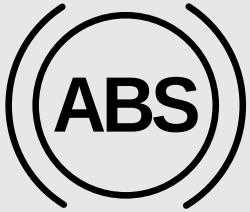

W-78

CAUTION

- ***If the ABS warning light is on and stays on, you may have a problem with the ABS system. In this case, however, your regular brakes will work normally.***
- ***The ABS warning light will stay on for approximately 3 seconds after the ignition switch is ON. During that time, the ABS will go through self-diagnosis and the light will go off if everything is normal. If the light stays on, you may have a problem with your ABS system. Contact an authorized Kia dealer as soon as possible.***

CAUTION

- ***When you drive on a road having poor traction, such as an icy road, and operate your brakes continuously, the ABS will be active continuously and the ABS warning light may illuminate. Pull your car over to a safe place and stop the engine.***
- ***Restart the engine. If the ABS warning light is off, then your ABS system is normal. Otherwise, you may have a problem with the ABS. Contact an authorized Kia dealer as soon as possible.***

✻ NOTICE

When you jump start your vehicle because of a drained battery, the engine may not run as smoothly and the ABS warning light may turn on at the same time. This happens because of the low battery voltage. It does not mean your ABS is malfunctioning.

- **Do not pump your brakes!**
- **Have the battery recharged before driving the vehicle.**

STEERING WHEEL

Power steering

Power Steering uses energy from the engine to assist you in steering the vehicle. If the engine is off or if the power steering system becomes inoperative, the vehicle may still be steered, but it will require increased steering effort.

Should you notice any change in the effort required to steer during normal vehicle operation, have the power steering checked by an Authorized Kia Dealer.

CAUTION

Never hold the steering wheel against a stop (extreme right or left turn) for more than 5 seconds with the engine running. Holding the steering wheel for more than 5 seconds in either position may cause damage to the power steering pump.

✻ NOTICE

If the power steering drive belt breaks or if the power steering pump malfunctions, the steering effort will greatly increase.

✻ NOTICE

If the vehicle is parked for extended periods outside in cold weather (below -10°C/14°F), the power steering may require increased effort when the engine is first started. This is caused by increased fluid viscosity due to the cold weather and does not indicate a malfunction.
When this happens, increase the engine RPM by depressing accelerator until the RPM reaches 1,500 rpm then release or let the engine idle for two or three minutes to warm up the fluid.

Tilt steering (if equipped)

A tilt steering wheel allows you to adjust the steering wheel before you drive. You can also raise it to the highest level to give your legs more room when you exit and enter the vehicle.

The steering wheel should be positioned so that it is comfortable for you to drive, while permitting you to see the instrument panel warning lights and gauges.

WARNING - Steering wheel

- **Never adjust the angle of steering wheel while driving. You may lose your steering control and cause severe personal injury or accidents.**
- **After adjusting, push the steering wheel both up and down to be certain it is locked in position.**

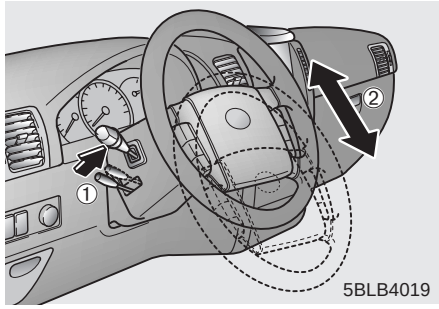

5BLB4019

To change the steering wheel angle, pull up the lock release lever (1), adjust the steering wheel to the desired angle (2), then release the lock-release lever to lock the steering wheel in place. Be sure to adjust the steering wheel to the desired position before driving.

6BLA422C

Horn

To sound the horn, press the horn symbol on your steering wheel.

Check the horn regularly to be sure it operates properly.

CAUTION - Horn

- ***To sound the horn, press the area indicated by the horn symbol on your steering wheel (see illustration). The horn will operate only when this area is pressed.***
- ***Do not strike the horn severely to operate it, or hit it with your fist. Do not press on the horn with a sharp-pointed object.***

CRUISE CONTROL SYSTEM (IF EQUIPPED)

The cruise control system allows you to program the vehicle to maintain a constant speed without resting your foot on the accelerator pedal.

With cruise control, you can set and automatically maintain any speed of between 40 km/h (24 mph) and 160 km/h (96 mph).

⚠ WARNING - Cruise control

Do not use the cruise control feature under the following conditions:

- **Heavy or unsteady traffic**
- **Slippery or winding roads**
- **Situations that involve varying speeds**

OBL064100

To set cruise control speed:

1. Pull the CRUISE ON-OFF button on the steering wheel to turn the system on. The CRUISE indicator light in the instrument cluster will illuminate.
2. Accelerate to the desired speed, which must be more than 40 km/h (24 mph) and less than 160 km/h (96 mph).

⚠ WARNING

If the cruise control is left on, (CRUISE indicator light in the instrument cluster illuminated) the cruise control can be switched on accidentally. Keep the cruise control system off (CRUISE indicator light OFF) when cruise control is not in use.

E2BLA421

3. Push the COAST/SET switch, and release it at the desired speed. The SET indicator light in the instrument cluster will illuminate. Release the accelerator at the same time. The desired speed will automatically be maintained.

The SET function cannot be activated until approximately 2 seconds after the CRUISE ON-OFF button has been engaged.

On a steep grade, the vehicle may momentarily slow down while going downhill.

To cancel cruise control, do one of the following:

- Press the brake pedal.
- Press the clutch pedal with a manual transmission or shift into N (Neutral) with an automatic transmission.
- Press the CANCEL switch located on the steering wheel.
- Press the COAST/SET and RES/ACCEL switches at the same time.

Each of these actions will cancel cruise control operation (the SET indicator light in the instrument cluster will go OFF), but it will not turn the system off. If you wish to resume cruise control operation, push the RES/ACCEL switch located on your steering wheel. You will return to your previously preset speed.

To turn cruise control off, do one of the following:

- Push the CRUISE ON-OFF button (the CRUISE indicator light in the instrument cluster will go OFF).
- Turn the ignition off.

Both of these actions cancel cruise control operation. If you want to resume cruise control operation, repeat the steps provided in "To Set Cruise Control Speed" on the previous page.

To increase cruise control set speed:

Follow either of these procedures:

- Push the RES/ACCEL switch and hold it. Your vehicle will accelerate. Release the switch at the speed you want.
- Push the RES/ACCEL switch and release it immediately. The cruising speed will increase by 1.6 km/h (1 mph) each time the RES/ACCEL switch is operated in this manner.

To temporarily accelerate with the cruise control on

If you want to speed up temporarily when the cruise control is on, depress the accelerator pedal. Increased speed will not interfere with cruise control operation or change the set speed.

To return to the set speed, take your foot off the accelerator.

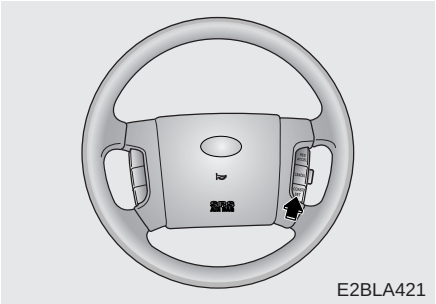

E2BLA421

To decrease the cruising speed:

Follow either of these procedures:

- Push the COAST/SET switch and hold it. Your vehicle will gradually slow down. Release the switch at the speed you want to maintain.
- Push the COAST/SET switch and release it immediately. The cruising speed will decrease by 1.6 km/h (1 mph) each time the COAST/SET switch is operated in this manner.

E2BLA422A

To resume cruising speed at more than 40 km/h (24 mph):

If any method other than the CRUISE ON-OFF switch was used to cancel cruising speed and the system is still activated, the most recent set speed will automatically resume when the RES/ACCEL switch is pushed.

It will not resume, however, if the vehicle speed has dropped below 40 km/h (24 mph).

ELECTRONIC STABILITY CONTROL (IF EQUIPPED)

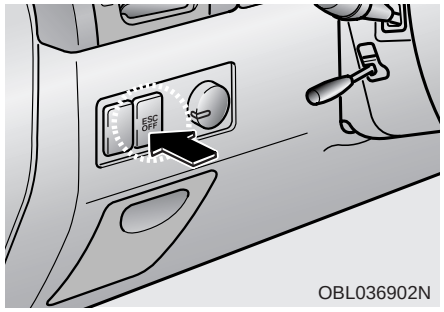

OBL036902N

The Electronic Stability Control (ESC) monitors information from various vehicle sensors and then compares the driver's commands with the actual behavior of the vehicle. If an unstable condition occurs - a sudden evasive movement for example - ESC intervenes within fractions of a second via the engine computer and brake system and attempts to stabilize the vehicle.

ESC operation

ESC ON condition

-

- When the ignition is turned ON, ESC and ESC OFF indicator lights illuminate for approximately 3 seconds, then ESC is turned on.
- Press the ESC OFF button for at least half a second after turning the ignition ON to turn ESC off. (ESC OFF indicator will illuminate). To turn the ESC on, press the ESC OFF button (ESC OFF indicator light will go off).
- When starting the engine, you may hear a slight ticking sound. This is the ESC performing an automatic system self-check and does not indicate a problem.

When operating

ESC

When the ESC is in operation, ESC indicator light blinks.

- When the Electronic Stability Control is operating properly, you can feel a slight pulsation in the vehicle. This is only the effect of brake control and indicates nothing unusual.
- When moving out of the mud or slippery road, pressing the accelerator pedal may not cause the engine rpm (revolutions per minute) to increase.

ESC operation off

ESC OFF state

ESC
OFF

- To cancel ESC operation, press the ESC OFF button (ESC OFF indicator light illuminates).
- If the ignition switch is turned to LOCK position when ESC is off, ESC remains off. Upon restarting the engine, the ESC will automatically turn on again.
- During ESC operation, if the transfer shift knob is turned from 2WD mode (2HI) to 4WD mode (4HI or 4LO), the ESC will automatically turn off, and if it is turned from 4WD mode (4HI or 4LO) to 2WD mode (2HI), the ESC will automatically turn on again. (if part time 4WD is equipped)

■ ESC indicator light (blinks)

ESC

■ ESC OFF indicator light (comes on)

ESC
OFF

Indicator light

When ignition switch is turned to ON, the indicator light illuminates, then goes off if ESC system is operating normally.

The ESC indicator light blinks whenever ESC is operating.

ESC OFF indicator light comes on when either the ESC is turned off with the button, or ESC malfunctions when turned on.

⚠ WARNING - ESC

The Electronic Stability Control system is only a driving aid; use precautions for safe driving by slowing down on curved, snowy, or icy roads. Don't attempt to accelerate excessively just because the ESC indicator light is blinking.

ESC OFF usage

When driving

- It's a good idea to keep the ESC turned on for daily driving whenever possible.
- To turn ESC off while driving, press the ESC OFF button while driving on a flat road surface.

Never press ESC OFF button while ESC is operating (ESC indicator light blinks).

If ESC is turned off while ESC is operating, the vehicle may slip out of control.

✻ NOTICE

- **When measuring the vehicle speed with a chassis dynamo-meter, make sure the ESC is turned off (ESC OFF light illuminated). If the ESC is left on, it may prevent the vehicle speed from increasing, and cause a false diagnosis of a faulty speedometer.**
- **Turning the ESC off does not affect ABS or brake system operation.**

⚠ WARNING - ESC

Never press the ESC OFF button while ESC is operating.

If the ESC is turned off while ESC is operating, the vehicle may slip out of control.

To turn ESC off while driving, press the ESC OFF button while driving on a flat road surface.

REAR PARKING ASSIST SYSTEM (IF EQUIPPED)

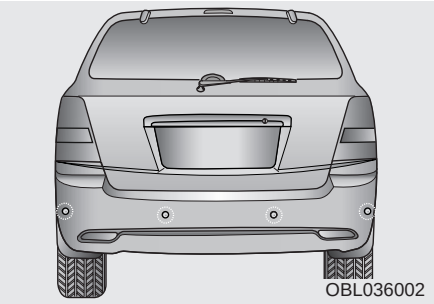

The rear parking assist system assists the driver during backward movement of the vehicle by chiming if any object is sensed within a distance of 120 cm (47 in.) behind the vehicle. This system is a supplemental system and it is not intended to nor does it replace the need for extreme care and attention of the driver. The sensing range and objects detectable by the back sensors are limited. Whenever backing-up, pay as much attention to what is behind you as you would in a vehicle without a rear parking assist system.

⚠ WARNING

The rear parking assist system is a supplementary function only. The operation of the rear parking assist system can be affected by several factors (including environmental conditions). It is the responsibility of the driver to always check the area behind the vehicle before backing up.

Operation of the rear parking assist system

Operating condition

- This system will activate when backing up with the ignition key ON.

  If the vehicle is moved at speed over 5 km/h (3 mph), the system may not activated correctly.
- The sensing distance while the rear parking assist system is in operation is approximately 120 cm (47 in.).
- When more than two objects are sensed at the same time, the closest one will be recognized first.

Types of warning sound

- When an object is 120 cm to 81 cm (47 in. to 32 in.) from the rear bumper : Buzzer beeps intermittently
- When an object is 80 cm to 41 cm (31 in. to 16 in.) from the rear bumper : Buzzer beeps more frequently
- When an object is within 40 cm (15 in.) of the rear bumper : Buzzer sounds continuously.

Non-operational conditions of rear parking assist system

Rear parking assist system may not operate normally when:

1. Moisture is frozen to the sensor. (It will operate normally when moisture melts.)
2. Sensor is covered with foreign matter, such as snow or water, or the sensor cover is blocked. (It will operate normally when the material is removed or the sensor is no longer blocked.)
3. Driving on uneven road surfaces (unpaved roads, gravel, bumps, gradient).
4. Objects generating excessive noise (vehicle horns, loud motorcycle engines, or truck air brakes) are within range of the sensor.
5. Heavy rain or water spray exists.
6. Wireless transmitters or mobile phones are within range of the sensor.
7. Sensor is covered with snow.
8. Trailer towing

Detecting range may decrease when:

1. Sensor is coverd with foreign matter such as snow or water. (Sensing range will return to normal when removed.)
2. Outside air temperature is extremely hot or cold.

Following objects may not be recognized by the sensor:

1. Sharp or slim objects such as ropes, chains or small poles.
2. Objects which tend to absorb sensor frequency such as clothes, spongy material or snow.
3. Undetectable objects smaller than 1 m (40 in.) and narrower than 14 cm (6 in.) in diameter.

CAUTION

1. ***The rear parking assist system may not sound sequentially depending on the speed and shapes of the objects detected.***
2. ***The rear parking assist system may malfunction if the vehicle bumper height or sensor installation has been modified or damaged. Any non-factory installed equipment or accessories may also interfere with the sensor performance.***
3. ***Sensor may not recognize objects less than 40 cm (15 in.) from the sensor, or it may sense an incorrect distance. Use caution.***
4. ***When the sensor is covered with snow, dirt or water, sensor may be inoperative until the debris is removed using a soft cloth***
5. ***Do not push, scratch or strike the sensor. Sensor damage could occur.***

CAUTION

This system can only sense objects within the range and location of the sensors; It can not detect objects in other areas where sensors are not installed. Also, small or slim objects, such as poles or objects located between sensors may not be detected by the sensors.

Always visually check behind the vehicle when driving back up.

Be sure to inform any drivers in the vehicle that may be unfamiliar with the system regarding the systems capabilities and limitations.

Your new vehicle warranty does not cover any accidents or damage to the vehicle or its occupants due to rear parking assist system malfunction. Always drive safely and cautiously.

WARNING

Pay close attention when the vehicle is driven close to objects on the road, particularly pedestrians, especially children. Be aware that some objects may not be detected by the sensors, due to the object's distance, size or material, all of which can limit the effectiveness of the sensor. Always perform a visual inspection to make sure the vehicle is clear of all obstructions before moving the vehicle in any direction.

✻ NOTICE

If you don't hear an audible warning sound or if the buzzer sounds intermittently when shifting the gear to "R" position, this may indicate a malfunction in the rear parking assist system. If this occurs, have your vehicle checked by an authorized Kia dealer as soon as possible.

INSTRUMENT CLUSTER

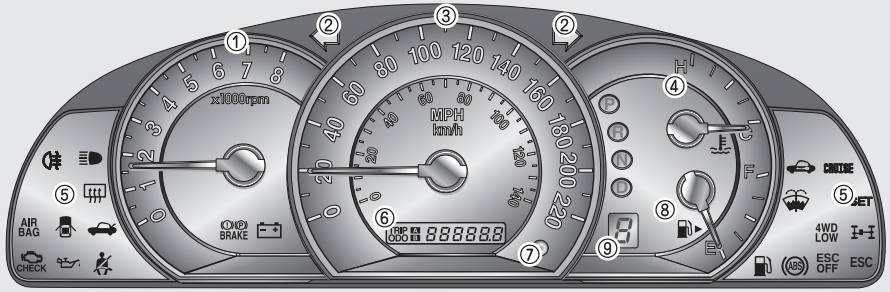

1. Tachometer
2. Turn signal indicators
3. Speedometer
4. Engine temperature gauge
5. Warning and indicator lights
6. Trip odometer / Odometer
7. Trip odometer reset button
8. Fuel gauge
9. Shift position indicator
   (Automatic transmission only)

OBL026008C

GAUGES

Speedometer

The speedometer indicates the forward speed of the vehicle.

Odometer/Trip odometer

You can choose the odometer, trip odometer A or trip odometer B by pressing the tripmeter mode button.

Odometer

The odometer indicates the total distance the vehicle has been driven.

Trip odometer

TRIP A: Trip odometer A

TRIP B: Trip odometer B

The trip odometer indicates the distance of individual trips selected by the driver. Trip odometer A and B can be reset to 0 by pressing the reset button for 1 second or more, and then releasing.

Tachometer

The tachometer indicates the approximate number of engine revolutions per minute (rpm).

Use the tachometer to select the correct shift points and to prevent lugging and/or over-revving the engine.

The tachometer pointer may move slightly when the ignition switch is in ACC or ON position with the engine OFF. This movement is normal and will not affect the accuracy of the tachometer once the engine is running.

CAUTION

Do not operate the engine within the tachometer's RED ZONE.

This may cause severe engine damage.

Engine temperature gauge

This gauge shows the temperature of the engine coolant when the ignition switch is ON.

Do not continue driving with an overheated engine. If your vehicle overheats, refer to “Overheating” in the Index.

CAUTION

If the gauge pointer moves beyond the normal range area toward the “H” position, it indicates overheating that may damage the engine.

Fuel gauge

The fuel gauge indicates the approximate amount of fuel remaining in the fuel tank.

Fuel tank capacity : See Chapter 8

The fuel gauge is supplemented by a low fuel warning light, which will illuminate when the fuel tank is nearly empty.

⚠ WARNING - Fuel gauge

Running out of fuel can expose vehicle occupants to danger.

You must stop and obtain additional fuel as soon as possible after the warning light comes on or when the gauge indicator comes close to the E level.

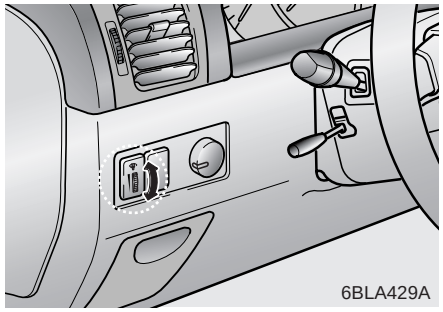

Instrument panel illumination (if equipped)

When the vehicle's parking lights or headlights are on, rotate the illumination control knob to adjust the instrument panel illumination intensity.

WARNINGS AND INDICATORS

Warning lights / audible indicators

Checking operation

All warning lights are checked by turning the ignition switch ON (do not start the engine). Any light that does not illuminate should be checked by an Authorized Kia Dealer.

After starting the engine, check to make sure that all warning lights are off. If any are still on, this indicates a situation that needs attention. When releasing the parking brake, the brake system warning light should go off. The fuel warning light will stay on if the fuel level is low.

Anti-lock brake system (ABS) warning light (if equipped)

This light illuminates if the key is turned to ON and goes off in approximately 3 seconds if the system is operating normally.

If the light stays on, you may have a problem with your ABS system. Contact an authorized Kia dealer as soon as possible.

Electronic brake force distribution (EBD) system warning light (if equipped)

If two warning lights illuminate at the same time while driving, your vehicle has a problem with ABS and EBD system.

In this case, your ABS system and regular brake system may not work normally. Have the vehicle checked by an Authorized Kia Dealer as soon as possible.

⚠ WARNING - Brake indicators

If the both ABS and Brake warning lights are ON and stay ON, your vehicle's brake system will not work normally. You may experience an unexpected and dangerous situation during sudden braking. In this case, avoid high speed driving and abrupt braking. Have your vehicle checked by Authorized Kia Dealer as soon as possible.

Engine oil pressure warning

This warning light indicates the engine oil pressure is low.

If the warning light illuminates while driving:

1. Drive safely to the side of the road and stop.
2. With the engine off, check the engine oil level. If the level is low, add oil as required.

If the warning light remains on after adding oil or if oil is not available, call an Authorized Kia Dealer.

CAUTION

If the engine is not stopped immediately, severe damage could result.

Charging system warning

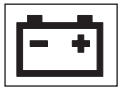

This warning light indicates a malfunction of either the generator or electrical charging system.

If the warning light comes on while the vehicle is in motion:

1. Drive to the nearest safe location.
2. With the engine off, check the generator drive belt for looseness or breakage.
3. If the belt is adjusted properly, a problem exists somewhere in the electrical charging system. Have an Authorized Kia Dealer correct the problem as soon as possible.

Safety belt warning

If the driver's safety belt is not fastened when the key is turned ON or if it is unfastened after the key is turned ON, the safety belt warning light blinks until the belt fastened.

Shift pattern indicators (if equipped)

The individual indicators illuminate to show the automatic transmission shift lever selection.

Immobilizer indicator (if equipped)

This light illuminates when the immobilizer key is inserted and turned to the ON position to start the engine.

At this time, you can start the engine. The light goes out after the engine is running. In case this light goes out before you start the engine, you must turn to the LOCK position and restart the engine.

If this light blinks when the ignition switch is in the ON position before starting the engine, have the system checked by an authorized Kia Dealer.

Parking brake & brake fluid warning

Parking brake warning

This light is illuminated when the parking brake is applied with the ignition switch in the START or ON position. The warning light should go off when the parking brake is released.

Low brake fluid level warning

If the warning light remains on, it may indicate that the brake fluid level in the reservoir is low.

If the warning light remains on:

1. Drive carefully to the nearest safe location and stop your vehicle.
2. With the engine stopped, check the brake fluid level immediately and add fluid as required. Then check all brake components for fluid leaks.
3. Do not drive the vehicle if leaks are found, the warning light remains on or the brakes do not operate properly. Have it towed to any Authorized Kia Dealer for a brake system inspection and necessary repairs.

To check bulb operation, check whether the parking brake and brake fluid warning light illuminates when the ignition switch is in the ON position.

⚠ WARNING

Driving the vehicle with a warning light on is dangerous. If the brake warning light remains on, have the brakes checked and repaired immediately by an Authorized Kia Dealer.

Rear hatch open warning (if equipped)

This warning light comes on when the rear hatch/window is not closed securely.

Low fuel level warning

This warning light indicates the fuel tank is nearly empty. The warning light will come on when the fuel has a little amount. Refuel as soon as possible.

Rear hatch window defroster indicator

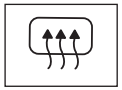

This light comes on when the rear hatch defroster switch is depressed to remove the frost on the rear hatch glass.

Press the switch again to shut off the defroster when the frost is removed.

The rear hatch window defroster will automatically turn off after 20 minutes.

It will also turn off whenever you remove the ignition key.

Door ajar warning

This warning light illuminates when a door is not closed securely with the ignition in any position.

Headlight high beam indicator

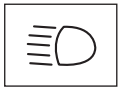

This indicator illuminates when the headlights are on and in the high beam position or when the turn signal lever is pulled into the Flash-to-Pass position.

Malfunction indicator lamp (MIL) (check engine light)

This indicator light is part of the Engine Control System which monitors various emission control system components. If this light illuminates while driving, it indicates that a potential problem has been detected somewhere in the emission control system.

Generally, your vehicle will continue to be drivable, but have the system checked by an authorized Kia Dealer promptly.

✻ NOTICE

A loose fuel filler cap may cause the On Board Diagnostic System Malfunction Indicator Light ( ) in the instrument panel to illuminate unnecessarily. Always make sure that the fuel filler cap is tight.

CAUTION - Check engine light

- ***Prolonged driving with the Emission Control System Malfunction Indicator Light ( ) illuminated may cause damage to the emission control systems which could effect drivability and/or fuel economy.***
- ***If the Emission Control System Malfunction Indicator Light ( ) begins to flash ON and OFF, potential catalytic converter damage is possible which could result in loss of engine power. Have the Engine Control System inspected as soon as possible by an authorized Kia Dealer.***

Air bag warning (if equipped)

AIR BAG

This warning light will illuminate for approximately 6 seconds each time you turn the ignition switch to the ON position.

If this indicator does not go out, or if it illuminates while the vehicle is being driven, see an authorized Kia Dealer for immediate service.

Auto cruise indicator (if equipped)

CRUISE indicator

CRUISE

The indicator light illuminates when the cruise control system is enabled.

SET indicator

SET

The indicator light illuminates when the cruise function switch (COAST/SET or RES/ACCEL) is ON.

ESC indicator (Electronic Stability Control) (if equipped)

ESC

The ESC indicator will illuminate when the ignition switch is turned ON, but should go off after approximately 3 seconds. When the ESC is on, it monitors the driving conditions and under normal driving conditions, the ESC light will remain off. When a slippery or low traction condition is encountered, the ESC will operate, and the ESC indicator will blink to indicate the ESC is operating.

ESC OFF indicator (if equipped)

ESC OFF

The ESC OFF indicator will illuminate when the ignition switch is turned ON, but should go off after approximately 3 seconds. To switch to ESC OFF mode, press the ESC OFF button. The ESC OFF indicator will illuminate indicating the ESC is deactivated. If this indicator stays on in the ESC ON mode, the ESC may have a malfunction. Take your car to the authorized Kia dealer and have the system checked.

Low washer fluid level warning indicator (If equipped)

This warning light indicates the washer fluid reservoir is near empty. Refill the washer fluid as soon as possible.

4WD system warning (if equipped)

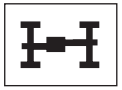

When the key is turned to the “ON” position, the 4WD indicator light will come on and then go off in a few seconds.

The 4WD indicator light will illuminate when the transfer shift knob is set to 4HI position (Part time 4WD only).

4WD LOW indicator light (if equipped)

When the key is turned to the “ON” position, the 4WD LOW indicator will come on and then go off in a few seconds. The 4WD LOW indicator light comes on when the transfer shift knob is set to 4WD LOW position.

Part-time 4WD : 4LO position

Full-time 4WD : Low position

CAUTION

If the 4WD indicator light ( ) blinks (full-time 4WD) or 4WD indicator light ( ) and 4WD LOW indicator light (4WD LOW) illuminate at the same time (part time 4WD), this indicates that there is a malfunction in the 4WD system. If this occurs, have your vehicle checked by an Authorized Kia Dealer as soon as possible.

Safety belt warning chime

If the driver's safety belt is not fastened when the ignition key is turned ON or if it is unfastened after the key is ON, the safety belt warning chime will sound for approximately 6 seconds. At this time, if the safety belt is fastened, the chime will stop at once.

Door ajar warning chime (if equipped)

If a door is opened while driving the vehicle more than 3 mph (5 km/h), the warning chime will sound.

Key reminder warning chime (if equipped)

If the driver’s door is opened while the ignition key is left in the ignition switch, the key reminder warning chime will sound. This is to prevent you from locking your keys in the vehicle.

MULTI-METER (IF EQUIPPED)

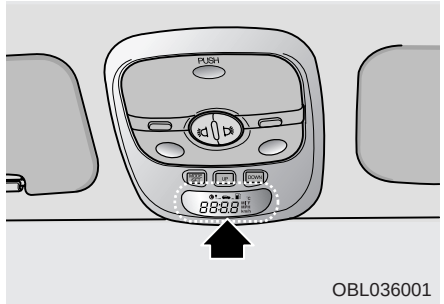

OBL036001

The functions of multi-meter

1. Azimuth Compass
2. Distance to empty
3. Average vehicle speed
4. Driving time
5. Ambient temperature (if equipped)

How to adjust the multi-meter

Switch function

Mode/Set Switch Function

1. Selection of modes : If you push the MODE/SET switch for less than 1.5 second, the mode will be selected as follows.
2. Correction of Relative Azimuth Compass Indicator.

Azimuth Compass
↓
Distance to empty
↓
Average vehicle speed
↓
Driving time
↓
Ambient temperature
(if equipped)
↓
OFF

3. Correction of Terrestrial deviation of the Azimuth Compass.
4. Clear the average vehicle speed or driving time to “0” (zero).

Up/Down Switch

1. Correction of the terrestrial deviation angle of the Azimuth Compass.
2. Conversion of the distance to empty. units (Km ⇔ Ml (mile))
3. Conversion of the average vehicle speed. units (Km/h ⇔ MPH)
4. Conversion of the temperature. units (°C ⇔ °F)

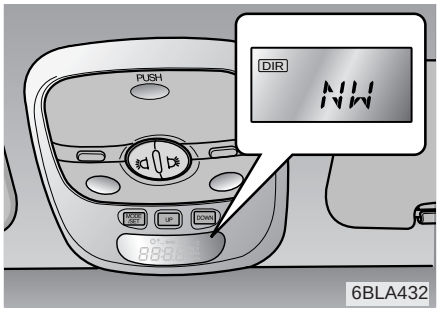

Electric azimuth compass

It displays azimuth according to the vehicle's driving direction.

The indication is displayed only when the vehicle is in motion.

✻ NOTICE

If new vehicle is first driven or if the battery has been disconnected, correct the azimuth indicator before driving.

Correcting azimuth indicator

It is needed to correct the error between a current azimuth to terrestrial magnetism sensor and the displayed azimuth in the vehicle position.

How to correct azimuth indicator

1. If you push the MODE/SET switch and hold for more than 1 second and less than 4.5 seconds, the azimuth indicator (DIR) will start blinking with the vehicle's present direction.
2. Slowly (about 5 km/h, 3 mph) rotate the vehicle one turn (360 degree) within 128 seconds.

   The rotation could be made at any direction(left or right) in an open space.
3. When the rotation is finished, the azimuth compass indicator (DIR) will stop blinking and the error correction is completed.

   If the indicator continues to blink, rotate the vehicle a bit more until the blinking stops.

The azimuth compass indicator correction will be cancelled:

1. If you press MODE/SET switch for more than 0.1 second.
2. When the vehicle is not rotated within 128 seconds after the blinking of the indicator.

✻ NOTICE

The azimuth may display abnormally in specific places (tunnel, parking lot in building, underground parking lot, near transformer substation, etc.). It is normal and the azimuth is displayed normally when escaping above mentioned places.

How to correct terrestrial deviation.

1. Press MODE/SET switch for more than 4.5 seconds, then the present terrestrial deviation angle value will be displayed after DIR blinking for 4.5 seconds.
2. Press UP or DOWN switch for more than 0.1 second to correct the Azimuth Compass within 30 seconds. If you press UP switch, the Azimuth compass will move 5 degree to the East and it will move 5 degree to West if you press DOWN switch.

   For the correct terrestrial deviation angle value for your location, refer to the contour line map included.

   If your place is located in between the terrestrial deviation contour line, you can apply any value (up or down value) for your location in the contour line map.

   The initial deviation angle is set to 5°W.

   Terrestrial Correction Range:

   West 30° ~ East 30°.
3. To finish the correction, press MODE/SET switch for more than 1 second.

✻ NOTICE

The terrestrial deviation setting will be remembered even if the battery has been disconnected.

The terrestrial deviation angle correction will be cancelled:

1. If you press MODE/SET switch for less than 1 second.
2. If you don't correct the terrestrial deviation angle within 30 seconds.

✻ NOTICE

1. **Do not install a ski rack, antenna, etc. that is attached to the vehicle using a magnet as anything attached to the roof of the vehicle with a magnet will effect compass operation.**
2. **If the compass deviates from the correct indication after repeated adjustment, have the compass checked at an authorized dealer.**
3. **The compass may not indicate the correct compass point in tunnels or while driving up or down a steep hill.**

(The compass returns to the correct compass point when the vehicle moves to an area where the geomagnetism is stabilized.)

The contour line map for terrestrial deviation angle correction

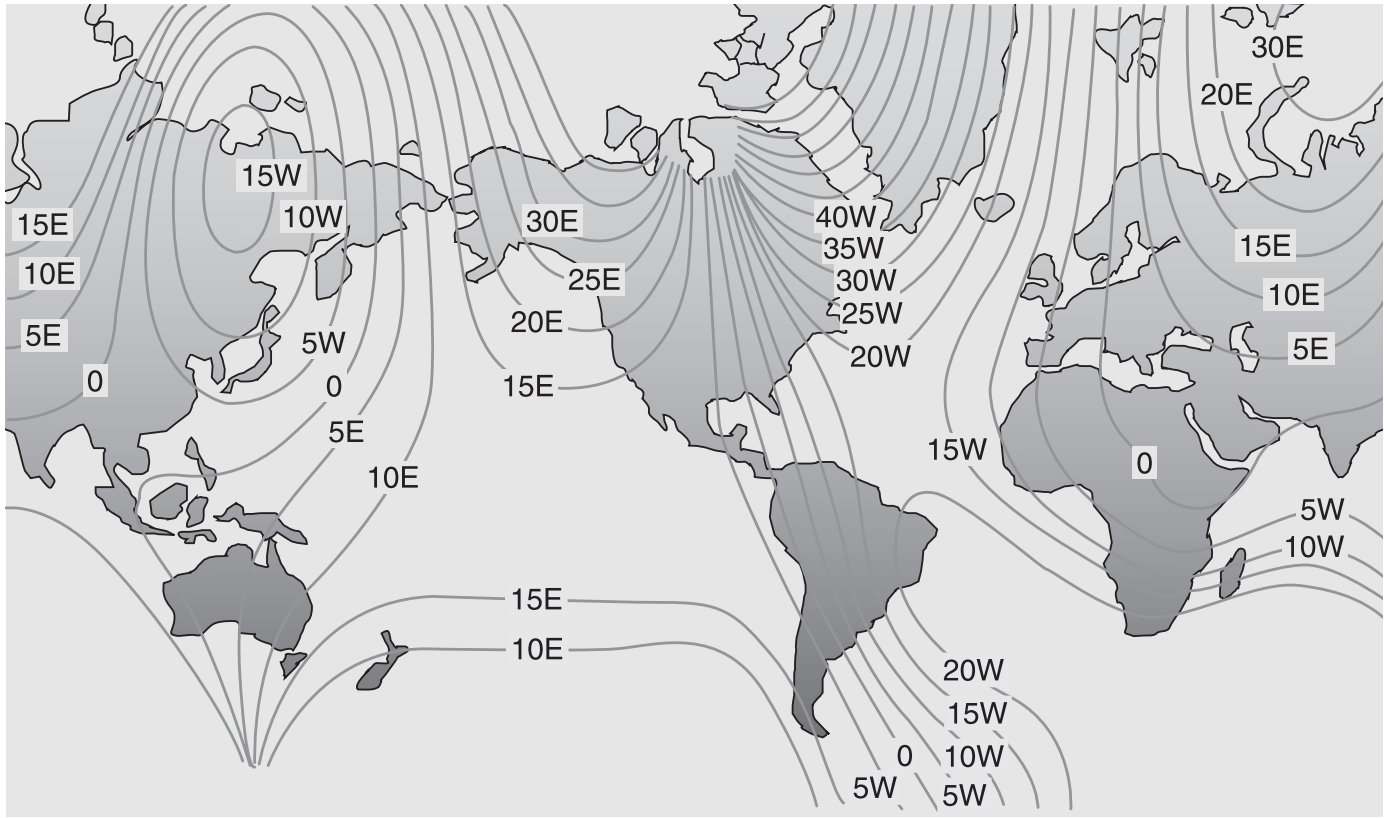

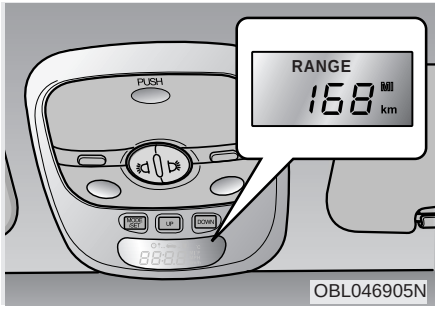

OBL046905N

Distance to empty (km or MI)

This mode indicates the estimated distance to empty from the current fuel in the fuel tank. When the remaining distance is below 50 km (30 miles), a blinking "---" symbol will be displayed.

Trip computer recognizes only the amount of fuel consumed to the engine. Therefore if the vehicle happens to abnormal oil leakage, the trip computer fails to sense causing the amount of fuel more than it really is.

If you press the "DOWN" switch for more than 5 seconds, the distance unit would transfer to "Km" from "Ml (mile) or "MI" from "Km".

✻ NOTICE

- **If the vehicle is not on level ground or the battery power has been interrupted, the "DISTANCE TO EMPTY" function may not operate correctly. The trip computer may not register additional fuel if less than 6 liters of fuel are added to the vehicle.**
- **Trip computer provides a driver with supplemental information about the current operating status of your vehicle. So the estimated distance to empty can be changed according to operating status of your vehicle, average fuel consumption and previously driving style. Therefore the values approved or displayed on LCD for the first time can be different with your vehicles.**
- **The figure of distance to empty is estimated driving distance, so it can be different from the driving distance really is.**

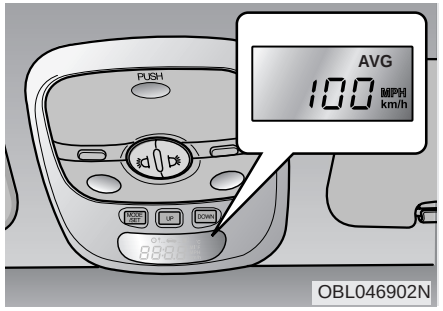

OBL046902N

Average vehicle speed (km/h or MPH)

This mode indicates the average speed from the starting of the vehicle to the ignition key "OFF". When the "MODE/SET" switch is pushed (more than 1.5 seconds), it will initialize to "---".

If you press the "DOWN" switch for more than 5 seconds, the speed unit would transfer to "Km/h" from "MPH" or "MPH" from "Km/h" .

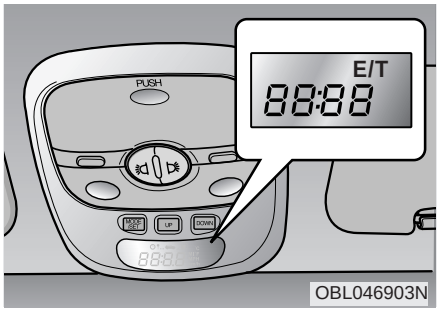

OBL046903N

Driving time

This mode indicates the total time from the starting of the vehicle to the ignition key “OFF” after resetting. When the “MODE/SET” switch is pushed, it will initialize to 0:00.

Reset

Push “MODE/SET” for more than 1.5 seconds to initialize the displayed information such as average speed and driving time.

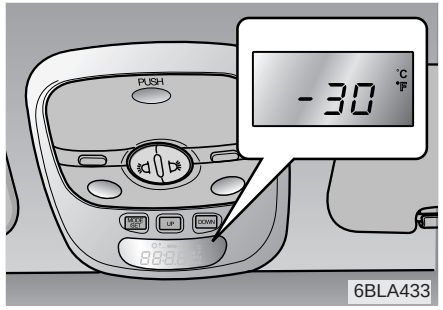

6BLA433

Ambient temperature (°C or °F) (if equipped)

This mode indicates the current ambient temperature. The meter’s working range -30°C(-30°F) to 65°C (149°F)

If you press the “DOWN” switch for more than 5 seconds, the temperature unit would transfer “°C” from “°F” or to “°F” from “°C”.

LIGHTING

Battery saver function

- The purpose of this feature is to prevent the battery from being discharged. The system automatically turns off the headlights and parking lights when the driver removes the ignition key and opens the driver- side door.
- With this feature, the parklight will be turned off automatically if the driver parks on the side of road at night.

If necessary, to keep the lights on when the ignition key is removed, perform the following :

1) Open the driver-side door.
2) Turn the parklights OFF and ON again using the light switch on the steering column.

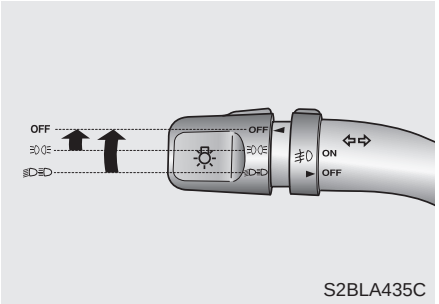

S2BLA435C

Lighting control

The light switch has a Headlight and a Parklight position.

To operate the lights, turn the knob at the end of the control lever to one of the following positions:

① OFF position
② Parklight position
③ Headlight position

Parklight position ( )

When the light switch is in the parklight position (1st position), the tail, position, license and instrument panel lights are ON.

Headlight position ( )

When the light switch is in the headlight position (2nd position) the head, tail, position, license and instrument panel lights are ON.

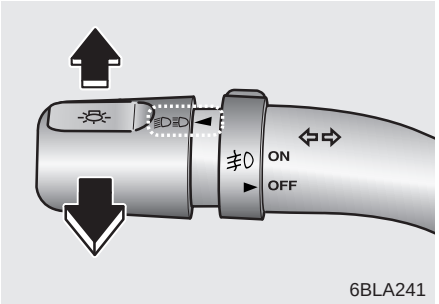

6BLA241

High - beam operation

To turn on the high beam headlights, push the lever forward.

The high-beam indicator will light when the headlight high beams are switched on.

To prevent the battery from being discharged, do not leave the lights on for a prolonged time while the engine is not running.

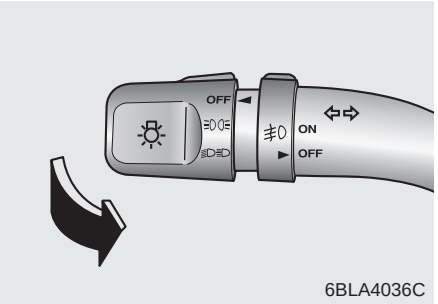

6BLA4036C

Flashing headlights

To flash the headlights, pull the lever towards you. It will return to the normal (low-beam) position when released. The headlight switch does not need to be on to use this flashing feature.

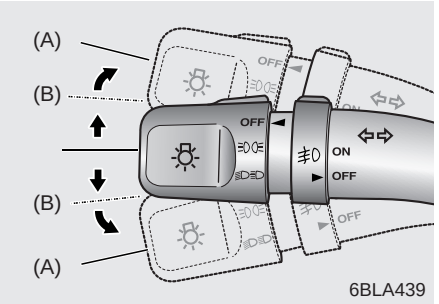

6BLA439

Turn signals (A)

The ignition switch must be on for the turn signals to function. To turn on the turn signals, move the lever up or down. Green arrow indicators on the instrument panel indicate which turn signal is operating. They will self-cancel after a turn is completed. If the indicator continues to flash after a turn, manually return the lever to the OFF position.

Lane change signals (B)

To signal a lane change, move the turn signal lever slightly and hold it in position. The lever will return to the OFF position when released.

If an indicator stays on and does not flash or if it flashes abnormally, one of the turn signal bulbs may be burned out and will require replacement.

✻ NOTICE

If an indicator flash is abnormally quick or slow, bulb may be burned out or have a poor electrical connection in the circuit.

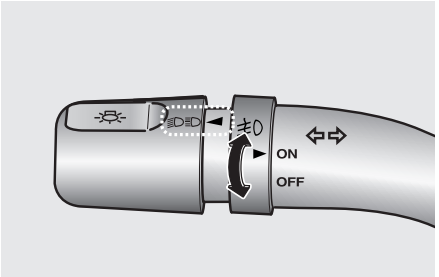

OBL046904N

Front fog light (if equipped)

Fog lights are used to provide improved visibility and avoid accidents when visibility is poor due to fog, rain or snow etc. The fog lights will turn on when fog light switch is turned to ON after the headlight is turned on.

To turn off the fog lights, turn the switch to OFF.

CAUTION

When in operation, the fog lights consume large amounts of vehicle electrical power. Only use the fog lights when visibility is poor. Unnecessary battery and generator drain could occur if the fog lights are used excessively.

Daytime running light (if equipped)

Daytime Running Lights (DRL) can make it easier for others to see the front of your vehicle during the day. DRL can be helpful in many different driving conditions, and it is especially helpful after dawn and before sunset.

The DRL system will make your high-beam headlights turn OFF when:

1. The head light switch is ON.
2. The parking brake engaged.
3. Engine stops.

WIPERS AND WASHERS

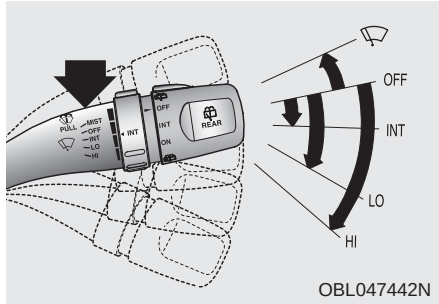

OBL047442N

Windshield wipers

Operates as follows when the ignition switch is turned ON.

OFF : Wiper is not in operation

INT : Wiper operates intermittently at the same wiping intervals. Use this mode in a light rain or mist. To vary the speed setting, turn the speed control knob.

LO : Normal wiper speed

HI : Fast wiper speed

: For a single wiping cycle, push the lever upward and release it with the lever in the OFF position. The wipers will operate continuously if the lever is pushed upward and held.

✻ NOTICE

Before using the windshield wipers when there is a heavy accumulation of snow or ice on the windshield, defrost the windshield for about 10 minutes, or until the snow or ice is removed. This will help ensure proper windshield wiper operation.

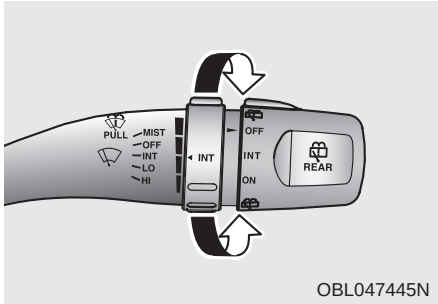

OBL047445N

Variable intermittent wipers

Set the lever to the INT position and choose the desired wiper interval by turning the ring.

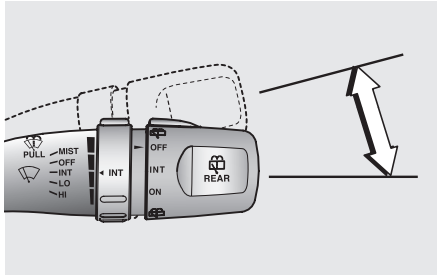

OBL047446N

One - touch wiper

For a single wiping cycle, push the lever upward and release it with the lever in the OFF position.

The wipers will operate continuously if the lever is pushed upward and held.

CAUTION

- ***To prevent possible damage to the wipers or windshield, do not operate the wipers when the windshield is dry.***
- ***To prevent damage to the wiper blades, do not use gasoline, kerosene, paint thinner, or other solvents on or near them.***
- ***To prevent damage to the wiper arms and other components, do not attempt to move the wipers manually.***

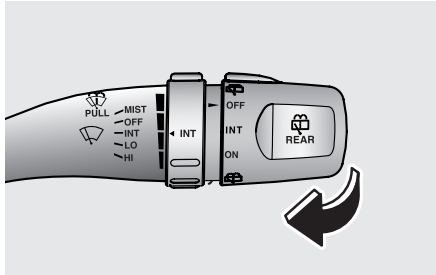

OBL047447N

Windshield washers

In the OFF position, pull the lever gently toward you to spray washer fluid on the windshield and to run the wipers 2-3 cycles.

Use this function when the windshield is dirty.

The spray and wiper operation will continue until you release the lever.

If the washer does not work, check the washer fluid level. If the fluid level is not sufficient, you will need to add appropriate non-abrasive windshield washer fluid to the washer reservoir.

The reservoir filler neck is located in the front of the engine compartment on the passenger side.

CAUTION

To prevent possible damage to the washer pump, do not operate the washer when the fluid reservoir is empty.

WARNING - Windshield washer

Do not use the washer in freezing temperatures without first warming the windshield with the defrosters; the washer solution could freeze on contact with the windshield and obscure your vision.

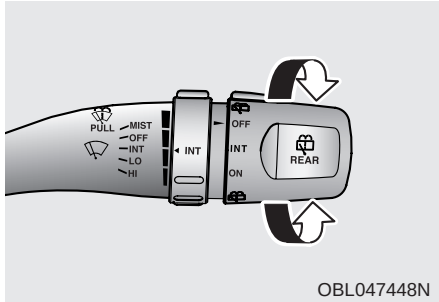

OBL047448N

Rear window wiper and washer switch (if equipped)

The rear window wiper and washer switch is located at the end of the wiper and washer switch lever. Turn the switch to desired position to operate the rear wiper and washer.

If the rear hatch window is open ( ), the rear wiper will not operate. Check the rear hatch window warning light in the instrument cluster, and make sure the rear hatch window is closed completely.

- Spraying washer fluid and wiping

INT - Intermittent wiper operation

ON - Normal wiper opertion

- Spraying washer fluid and wiping

DEFROSTER

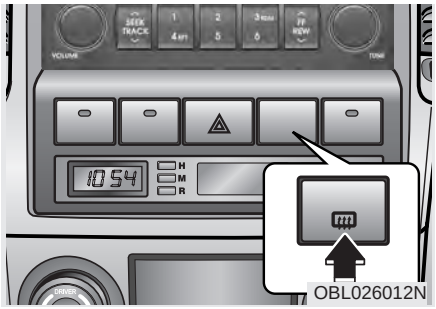

The defroster heats the window to remove frost, fog and thin ice from the interior and exterior of the rear window, while engine is running.

CAUTION

- ***To prevent damage to the conductors bonded to the inside surface of the rear window, never use sharp instruments or window cleaners containing abrasives to clean the window.***
- ***To prevent the battery from being discharged, the rear window defroster will only operate when the engine is running.***
- ***If you want to defrost and defog on the front windshield, refer to "Windshield Defrosting and Defogging" in this section.***

To activate the rear window defroster, press the rear window defroster button located in the center console switch panel. The indicator on the cluster illuminates when the defroster is ON.

If there is heavy accumulation of snow on the rear window, brush it off before operating the rear defroster.

The rear window defroster automatically turns off after 20 minutes or when the ignition switch is turned off. To turn off the defroster, press the rear window defroster button again.

Outside mirror heater (if equipped)

There is no control button for the outside mirror heater, instead the outside mirror heater automatically turns on when the rear window defroster is turned on.

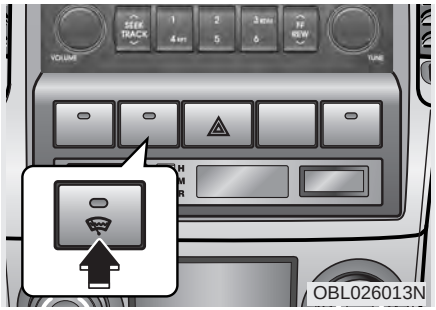

Front windshield deicer (if equipped)

To activate the front windshield deicer, press the front windshield deicer button. The indicator on the button illuminates when the deicer is ON.

The front windshield deicer automatically turns off after 20 minutes or when the ignition switch is turned off. To turn off the defroster, press the front windshield deicer button again.

The front windshield deicer is designed to defrost wiper blades. If you want to defrost and defog on the front windshield, refer to “Windshield Defrosting and Defogging” in this section.

HAZARD WARNING FLASHER

The hazard warning flasher causes the rear tail lights and front turn signal lights to flash on and off, which serves as a warning to other drivers to exercise caution when approaching or passing your vehicle.

To activate the flasher, depress the hazard warning flasher switch. This switch operates in any ignition switch position.

To turn the flashers off, depress the switch again.

MANUAL CLIMATE CONTROL SYSTEM (IF EQUIPPED)

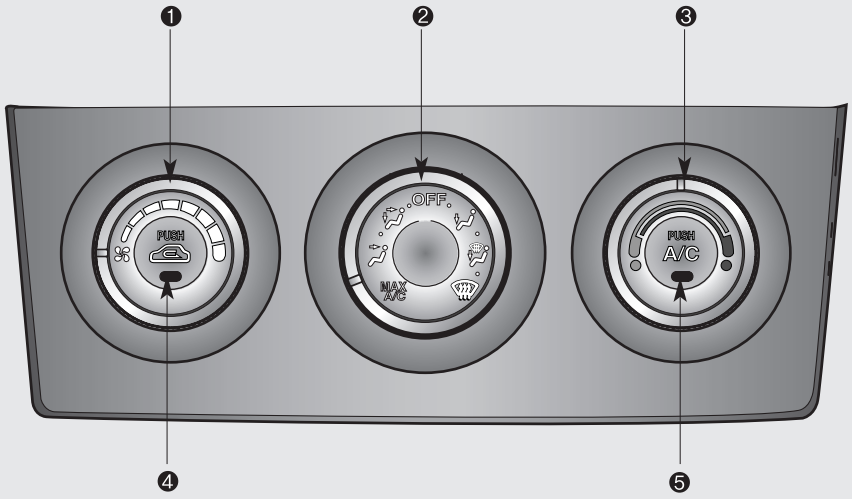

1. Fan speed control knob
2. Mode selection knob
3. Temperature control knob
4. Air intake control button
5. Air conditioning button (if equipped)

OBL026014N

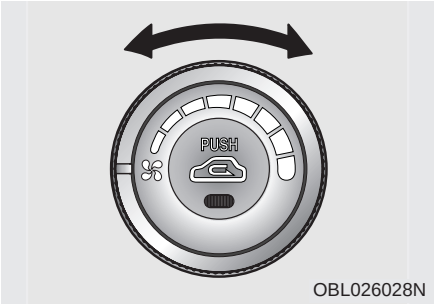

OBL026028N

Fan speed control knob

The ignition switch must be in the ON position for fan operation.

The fan speed control knob allows you to control the fan speed of the air flowing from the ventilation system. To change the fan speed, turn the knob to the right for higher speed or left for lower speed.

Setting the mode selection knob to the OFF position turns off the fan.

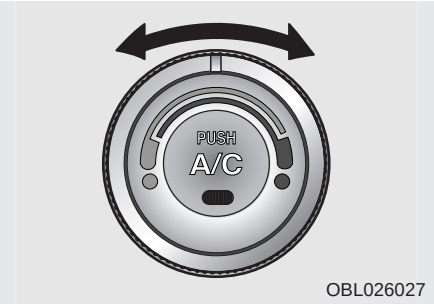

OBL026027

Temperature control knob

The temperature control knob allows you to control the temperature of the air flowing from the ventilation system. To change the air temperature in the passenger compartment, turn the knob to the right for warm and hot air or left for cooler air.

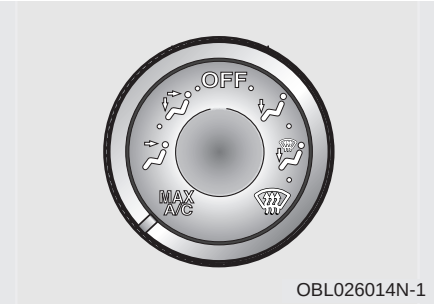

OBL026014N-1

Mode selection knob

The mode selection knob controls the direction of the air flow through the ventilation system.

The steps (•) between the air flow positions adjust the direction of the air flow to the middle position.

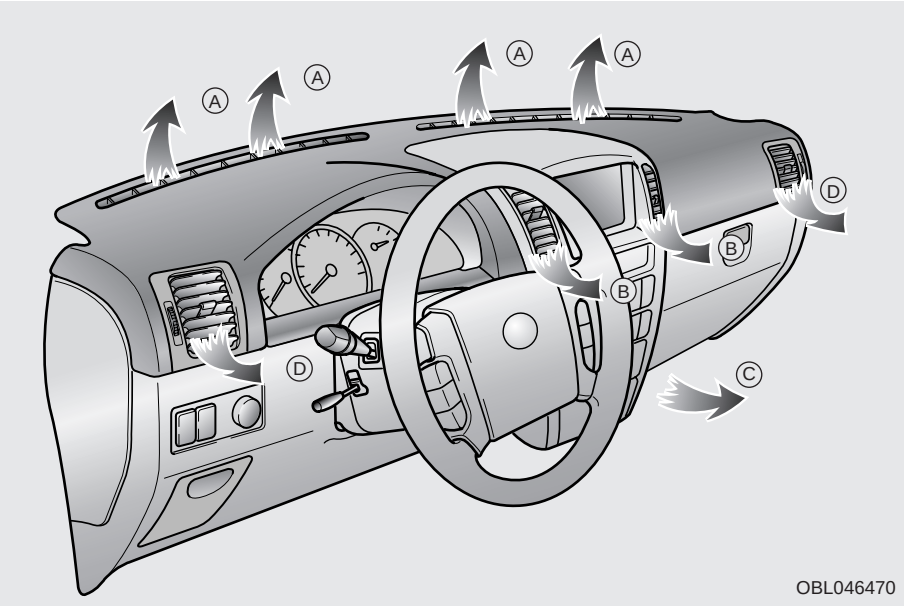

MAX/ A/C position

MAX A/C

When you select the MAX A/C mode while the fan speed is on, the following system settings will be made automatically;

- the air conditioning system will be turned on.
- the recirculated air position will be selected.
- the face mode will be selected.

If you select MAX A/C mode, you will not be able to cancel the A/C system operation, or change the recirculated air mode position.

Set the fan speed control knob to the desired speed and rotate the temperature control knob to the extreme left position for maximum cooling. (outlet port: Ⓑ, Ⓓ)

Face position

Air flow is directed toward the upper body and face. Additionally, each outlet can be controlled to direct the air discharged from the outlet.
(outlet port: Ⓑ,Ⓓ)

Face - floor position

Air flow is directed towards the face and the floor. The air to the floor is warmer than the air to the face (except when the temperature control is set to the extreme cold position).
(outlet port: Ⓑ,Ⓒ, Ⓓ)

OFF position

The climate control system is turned off.

Floor position

Most of the air flow is directed to the floor, with a small amount of the air being directed to the windshield and side window defroster.
(outlet port: Ⓒ, Ⓓ)

Floor - defrost position

Most of the air flow is directed to the floor and the windshield with a small amount directed to the side window defrosters.
(outlet port: Ⓐ,Ⓒ,Ⓓ)

Defrost position

Most of the air flow is directed to the windshield with a small amount of air directed to the side window defrosters.
(outlet port: Ⓐ, Ⓓ)

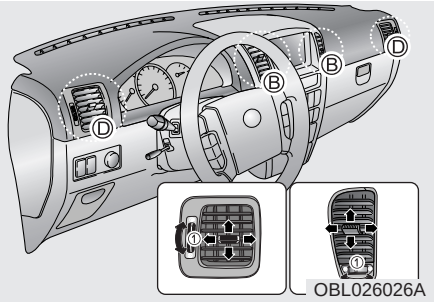

Instrument panel vents

If air flow control is not satisfactory, check the instrument panel vents. The outlet port (Ⓑ,Ⓓ) can be opened or closed separately using the thumbwheel.

Also, you can adjust the direction of air delivery from these vents using the vent control lever as shown.

The air from outlet port (Ⓓ) flows at any mode. Close the ventilation outlets using the knob to block the air flow if you do not want the air.

Air intake control button

This is used to select outside (fresh) air position or recirculated air position.

To change the air intake control position, push the control button.

Recirculated air position

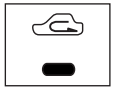

The indicator light on the button is illuminated when the recirculated air position is selected.

With the recirculated air position selected, air from passenger compartment will be drawn through the heating system and heated or cooled according to the function selected.

Outside (fresh) air position

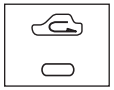

With the outside (fresh) air position selected, air enters the vehicle from outside and is heated or cooled according to the function selected.

⚠ WARNING - Recirculated air

- **Continued climate control system operation in the recirculated air position may allow humidity to increase inside vehicle which may fog the glass and obscure visibility.**
- **Continued climate control system operation in the recirculated air position can result in somewhat reduced oxygen levels, causing drowsiness or sleepiness, and loss of vehicle control. Set the air intake control to the outside (fresh) air position as much as possible while driving.**

✻ NOTICE

It should be noted that prolonged operation of the heating in recirculated air position will cause fogging of the windshield and side windows and the air within the passenger compartment will become stale.

In addition, prolonged use of the air conditioning with the recirculated air position selected, will result in excessively dry air in the passenger compartment.

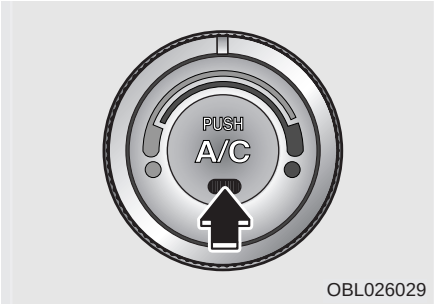

OBL026029

Air conditioning button (if equipped)

Push the A/C button to turn the air conditioning system on (indicator light will illuminate). Push the button again to turn the air conditioning system off.

System operation

Ventilation

1. Set the mode to the position.
2. Set the air intake control to the outside (fresh) air position.
3. Set the temperature control to the desired position.
4. Set the fan speed control to the desired speed.

Heating

1. Set the mode to the position.
2. Set the air intake control to the outside (fresh) air position.
3. Set the temperature control to the desired position.
4. Set the fan speed control to the desired speed.
5. If dehumidified heating is desired, turn the air conditioning system (if equipped) on.

- If the windshield fogs up, set the mode to the or position.

Air conditioning (if equipped)

All Kia Air Conditioning Systems are filled with environmentally friendly R-134a refrigerant which is not damaging to the ozone layer.

1. Start the engine. Push the air conditioning button.
2. Set the mode to the position.
3. Set the air intake control to the outside air or recirculated air position.
4. Set the temperature control knob to the desired position.
5. Set the fan speed control to the desired speed.
6. Adjust the fan speed control and temperature control to maintain maximum comfort.

- When maximum cooling is desired, set the temperature control to the extreme left position, set the air intake control to the recirculated air position, then set the fan speed control to the highest speed.

CAUTION

- ***When using the air conditioning system, monitor the temperature gauge closely while driving up hills or in heavy traffic when outside temperatures are high. Air conditioning system operation may cause engine overheating. Continue to use the blower fan but turn the air conditioning system off if the temperature gauge indicates engine overheating.***
- ***When opening the windows in humid weather air conditioning may create water droplets inside the vehicle. Since excessive water droplets may cause damage to electrical equipment, air conditioning should only be run with the windows closed.***

Air conditioning system operation tips

- If the vehicle has been parked in direct sunlight during hot weather, open the windows for a short time to let the hot air inside the vehicle escape.
- To help reduce moisture inside of windows on rainy humid days, decrease the humidity inside the vehicle by operating the air conditioning system.
- During air conditioning system operation, you may occasionally notice a slight change in engine speed at idle as the air conditioning compressor cycles on. This is a normal system operation characteristics.
- Use the air conditioning system every month if only for a few minutes to ensure maximum system performance.
- When using the air conditioning system, you may notice clear water dripping (or even puddling) on the ground under the passenger side of the vehicle. This is a normal system operation characteristics.
- Operating the air conditioning system in the recirculated air position does provide maximum cooling, however, continual operation in this mode may cause the air inside the vehicle to become stale.

Checking the amount of air conditioner refrigerant and compressor lubricant

When the amount of refrigerant is low, the performance of the air conditioning is reduced. Overfilling also has a bad influence on the air conditioning system.

Therefore, if abnormal operation is found, have the system inspected by an authorized Kia dealer.

CAUTION

The air conditioner refrigerant container is highly pressurized. Therefore it should be serviced by an authorized Kia dealer. Improper service may cause serious injury.

CAUTION

When the performance of the air conditioning system is reduced it is important that the correct type and amount of oil and refrigerant is used. Otherwise, damage to the compressor and abnormal system operation may occur.

AUTOMATIC CLIMATE CONTROL SYSTEM (IF EQUIPPED)

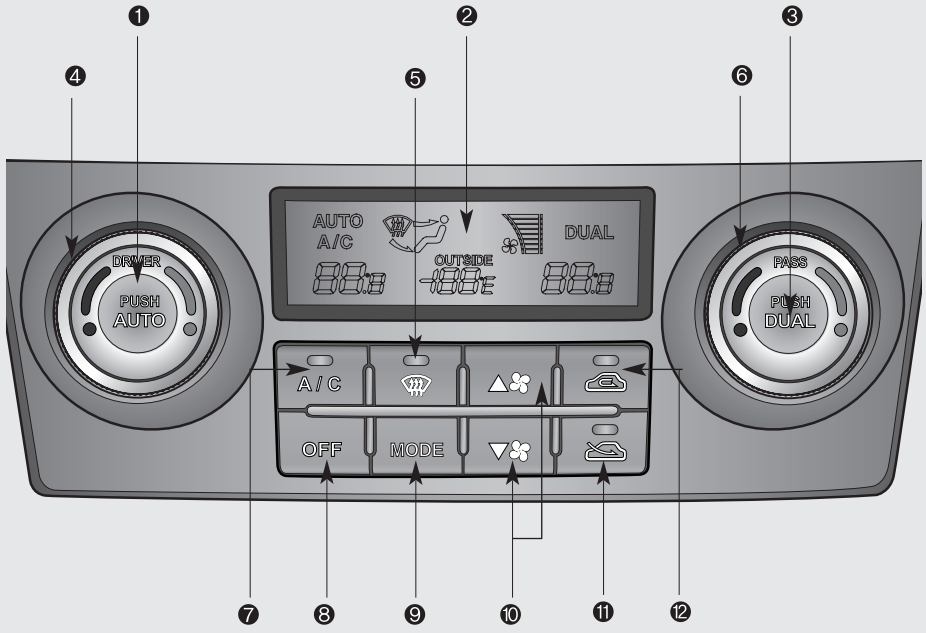

1. AUTO (automatic control) button
2. Indicator light
3. Dual temperature control selection button
4. Driver's temperature control knob
5. Defrost button
6. Passenger's temperature control knob
7. Air conditioning button
8. OFF button
9. Mode selection button
10. Fan speed control button
11. Outside (fresh) air position button
12. Recirculated air position button

OBL026015A

Automatic operation

AUTO

The automatic climate control system is controlled by simply setting the desired temperature.

The Full Automatic Temperature Control (FATC) system automatically controls the heating and cooling system as follows;

1. Push the AUTO button. It is indicated by AUTO on the display. The modes, fan speeds, air intake and air-conditioning will be controlled automatically by temperature setting.
2. Turn the TEMP knob to set the desired temperature.

   If the temperature is set to the lowest setting Lo, the air conditioning system will operate continuously.
3. To turn the automatic operation off, press any button except temperature control knob and AUTO, DUAL button. If you press the mode selection button, air-conditioning button, defrost button, air intake control button or fan speed button, the selected function will be controlled manually while other functions operate automatically.

Regardless of the temperature setting, when using automatic operation, the air conditioning system will automatically turn on to decrease the humidity inside the vehicle, even if the temperature is set to warm.

CAUTION

Never place anything over the sensor located on the instrument panel to ensure better control of the heating and cooling system.

Manual operation

The heating and cooling system can be controlled manually as well by pushing buttons other than the AUTO button. In this case, the system works sequentially according to the order of buttons selected.

When pressing any button except AUTO button while automatic operation, the functions of the buttons not selected will be controlled automatically.

Press the AUTO button in order to convert to full automatic control of the system.

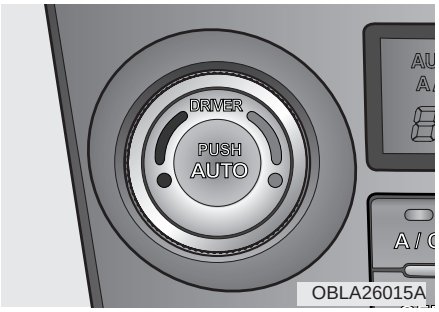

OBLA26015A

Temperature control knob

The temperature will increase to the maximum HI by turning the knob to the right extremely.
The temperature will decrease to the minimum Lo by turning the knob to the left extremely.
When turning the knob, the temperature will increase or decrease by 0.5°C/1°F.
When set to the lowest temperature setting, the air conditioning will operate continuously.

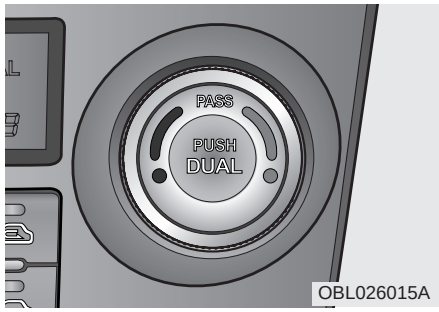

OBL026015A

Dual temperature control selection button

Adjusting the driver and passenger side temperature individually

1. Press the DUAL button to operate the driver and passenger side temperature individually. Turning the right temperature control knob will automatically switch to the DUAL mode as well.
2. Turn the left temperature control to adjust the driver side temperature. Turn the right temperature control to adjust the passenger side temperature.

Adjusting the driver and passenger side temperature equally

1. Press the DUAL button again to deactivate DUAL mode. The passenger side temperature will be set to the same as the driver side temperature.
2. Turn the left temperature control knob. The driver and passenger side temperature will be adjusted equally.

Temperature conversion

If the battery has been discharged or disconnected, the temperature mode will reset to display in Fahrenheit degrees.

This is a normal system operation and you can switch the temperature switch to display Fahrenheit to Centigrade as follows:

While depressing the AUTO button, depress the OFF button for 3 seconds or more. The display will change from Centigrade to Fahrenheit, or from Fahrenheit to Centigrade.

Fan speed control knob

The fan speed can be set to the desired speed by pressing the fan speed control button.

The higher the fan speed is, the more air is delivered.

Pressing the OFF button turns off the fan.

Air intake control button

This is used to select outside (fresh) air position or recirculated air position.

To change the air intake control position, push the control button.

Recirculated air position

The indicator light on the button is illuminated when the recirculated air position is selected.

With the recirculated air position selected, air from passenger compartment will be drawn through the heating system and heated or cooled according to the function selected.

Outside (fresh) air position

The indicator light on the button is illuminated when the outside (fresh) air position is selected.

With the outside (fresh) air position selected, air enters the vehicle from outside and is heated or cooled according to the function selected.

✻ NOTICE

It should be noted that prolonged operation of the heating in recirculated air position will cause fogging of the windshield and side windows and the air within the passenger compartment will become stale.

In addition, prolonged use of the air conditioning with the "recirculated air position" selected, will result in excessively dry air in the passenger compartment.

⚠ WARNING - Recirculated air

- **Continued climate control system operation in the recirculated air position may allow humidity to increase inside vehicle which may fog the glass and obscure visibility.**
- **Continued climate control system operation in the recirculated air position can result in somewhat reduced oxygen levels, causing drowsiness or sleepiness, and loss of vehicle control. Set the air intake control to the outside (fresh) air position as much as possible while driving.**

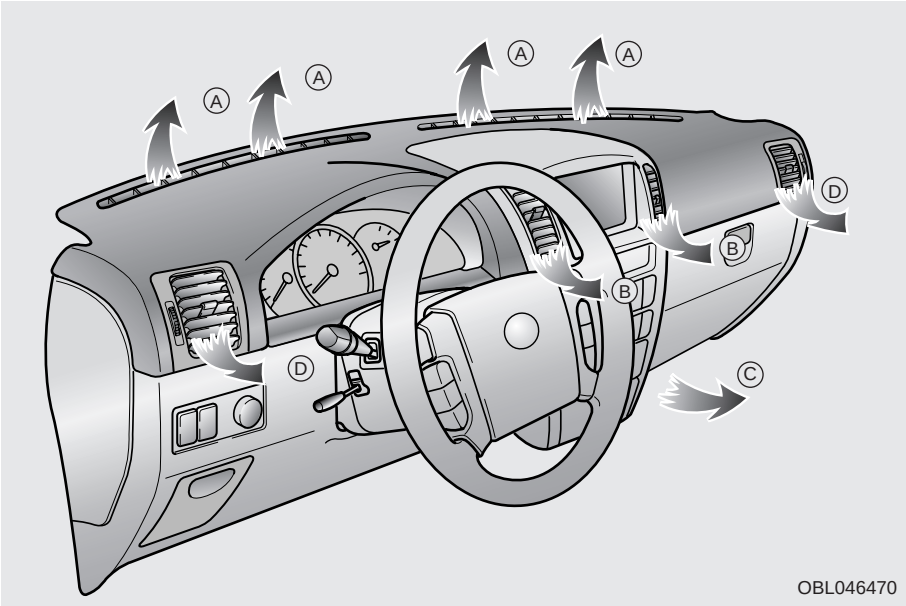

Mode selection button

The mode selection button controls the direction of the air flow through the ventilation system.

The air flow outlet port is converted as follows:

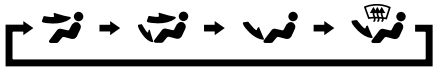

Face position

Air flow is directed toward the upper body and face. Additionally, each outlet can be controlled to direct the air discharged from the outlet. (outlet port: Ⓑ, Ⓓ)

Face - floor position

Air flow is directed towards the face and the floor. The air to the floor is warmer than the air to the face (except when the temperature control is set to the extreme cold position).
(outlet port: Ⓑ, Ⓒ, Ⓓ)

Floor position

Most of the air flow is directed to the floor, with a small amount of the air being directed to the windshield and side window defroster.
(outlet port: Ⓒ, Ⓓ)

Floor - defrost position

Most of the air flow is directed to the floor and the windshield with a small amount directed to the side window defrosters.
(outlet port: Ⓐ, Ⓒ, Ⓓ)

Defrost button

Most of the air flow is directed to the windshield with a small amount of air directed to the side window defrosters.
(outlet port: Ⓐ, Ⓓ)

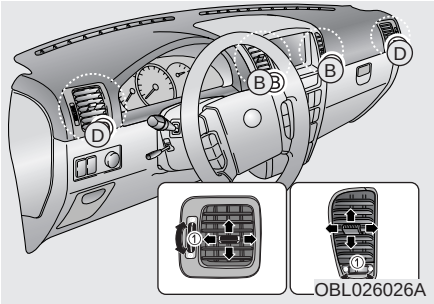

Instrument panel vents

If air flow control is not satisfactory, check the instrument panel vents. The outlet port (Ⓑ,Ⓓ) can be opened or closed separately using the thumbwheel.

Also, you can adjust the direction of air delivery from these vents using the vent control lever as shown.

The air from outlet port (Ⓓ) flows at any mode. Close the ventilation outlets using the knob to block the air flow if you do not want the air.

Air conditioning button

A/C

Push the A/C button to turn the air conditioning system on (indicator light will illuminate).

Push the button again to turn the air conditioning system off.

OFF button

OFF

Push the OFF button to turn off the air climate control system. However you can still operate the mode and air intake buttons as long as the ignition switch is ON.

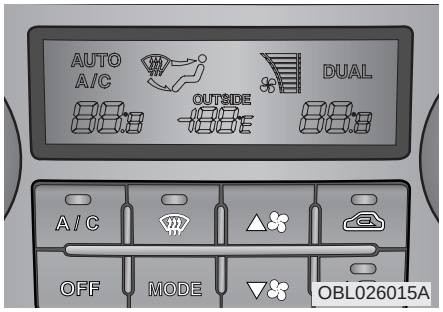

Outside tempmeter

The current outer temperature is displayed in 1°C (2°F) where the temperature range is between -40°C ~ 60°C (-40°F~140°F).

Press and hold the OFF and AUTO buttons simultaneously for about 3~5 seconds to change the display from Celsius to Fahrenheit. Repeat the procedure to switch the outside temperature display back to the previous state.

System operation

Ventilation

1. Set the mode to the position.
2. Set the air intake control to the outside (fresh) air position.
3. Set the temperature control to the desired position.
4. Set the fan speed control to the desired speed.

Heating

1. Set the mode to the position.
2. Set the air intake control to the outside (fresh) air position.
3. Set the temperature control to the desired position.
4. Set the fan speed control to the desired speed.
5. If dehumidified heating is desired, turn the air conditioning system on.

- If the windshield fogs up, set the mode to the or position.

Air conditioning

All Kia Air Conditioning Systems are filled with environmentally friendly R-134a refrigerant which is not damaging to the ozone layer.

1. Start the engine. Push the air conditioning button.
2. Set the mode to the position.
3. Set the air intake control to the outside air or recirculated air position.
4. Set the temperature control to the desired position.
5. Set the fan speed control to the desired speed.
6. Adjust the fan speed control and temperature control to maintain maximum comfort.

- When maximum cooling is desired, set the temperature control to the minimum Lo (62°F/17°C) and set the air intake to the recirculated air position, then set the fan speed control to the highest speed.

CAUTION

When using the air conditioning system, monitor the temperature gauge closely while driving up hills or in heavy traffic when outside temperatures are high. Air conditioning system operation may cause engine overheating. Continue to use the blower fan but turn the air conditioning system off if the temperature gauge indicates engine overheating.

Air conditioning system operation tips

- If the vehicle has been parked in direct sunlight during hot weather, open the windows for a short time to let the hot air inside the vehicle escape.
- To help reduce moisture inside of windows on rainy humid days, decrease the humidity inside the vehicle by operating the air conditioning system.
- During air conditioning system operation, you may occasionally notice a slight change in engine speed at idle as the air conditioning compressor cycles on. This is a normal system operating characteristic.
- Use the air conditioning system every month if only for a few minutes to ensure maximum system performance.
- When using the air conditioning system, you may notice clear water dripping (or even puddling) on the ground under the passenger side of the vehicle. This is a normal system operating characteristic.
- Operating the air conditioning system in the recirculated air position does provide maximum cooling, however, continual operation in this mode may cause the air inside the vehicle to become stale.

Checking the amount of air conditioner refrigerant and compressor lubricant

When the amount of refrigerant is low, the performance of the air conditioning is reduced. Overfilling also has a bad influence on the air conditioning system.

Therefore, if abnormal operation is found, have the system inspected by an authorized Kia dealer.

CAUTION

The air conditioner refrigerant container is highly pressurized. Therefore it should be serviced by an authorized Kia dealer. Improper service may cause serious injury.

CAUTION

When the performance of the air conditioning system is reduced it is important that the correct type and amount of oil and refrigerant is used. Otherwise, damage to the compressor and abnormal system operation may occur.

WINDSHIELD DEFROSTING AND DEFOGGING

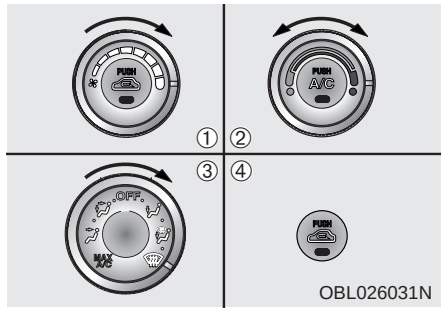

Manual climate control system

To defog inside windshield

1. Select any fan speed.
2. Select desired temperature.
3. Select the or position.
4. The outside (fresh) air position is automatically selected.

If the outside (fresh) air position is not selected automatically, press the corresponding button manually.

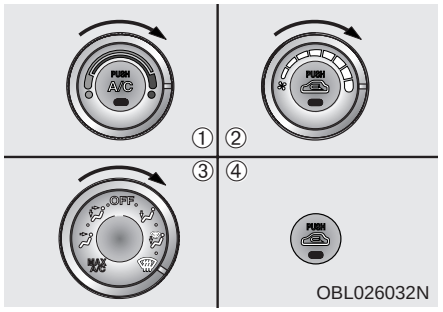

To defrost outside windshield

1. Set the fan speed to the highest (extreme right) position.
2. Set the temperature to the extreme hot position.
3. Select the position.
4. The outside (fresh) air position is automatically selected.

⚠ WARNING

Do not use the or position during cooling operation in extremely humid weather. The difference between the temperature of the outside air and that of the windshield could cause the outer surface of the windshield to fog up, causing loss of visibility. In this case, set the mode selection knob to the position and fan speed control knob to the lower speed.

- For maximum defrosting, set the temperature control to the extreme highest temperature setting and the fan speed control to the highest speed.
- Before driving, clear all snow and ice from the windshield, rear window, outside rear view mirrors, and all side windows.
- Clear all snow and ice from the hood and air inlet in the cowl grill to improve heater and defroster efficiency and to reduce the probability of fogging up inside of the windshield.

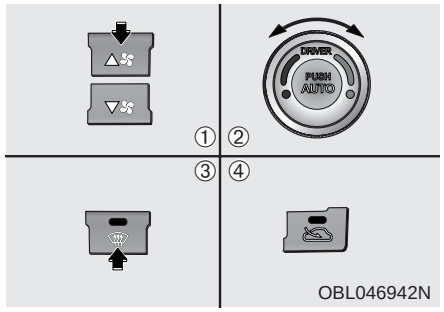

Automatic climate control system

To defog inside windshield

1. Select desired fan speed.
2. Select desired temperature.
3. Press the defrost button ( ).
4. The outside (fresh) air position is automatically selected.

If the outside (fresh) air position are not selected automatically, press the corresponding button manually.

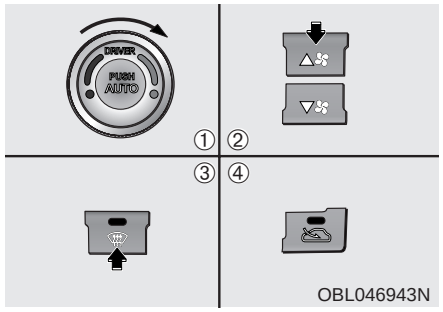

To defrost outside windshield

1. Set temperature to the extreme hot (HI) position.
2. Set fan speed to the highest position.
3. Press the defrost button ( ).
4. The outside (fresh) air position is automatically selected.

⚠ WARNING

Do not use the or position during cooling operation in extremely humid weather. The difference between the temperature of the outside air and that of the windshield could cause the outer surface of the windshield to fog up, causing loss of visibility. In this case, set the mode selection knob to the position and fan speed control knob to the lower speed.

- For maximum defrosting, set the temperature control to the extreme highest temperature setting and the fan speed control to the highest speed.
- Before driving, clear all snow and ice from the windshield, rear window, outside rear view mirrors, and all side windows.
- Clear all snow and ice from the hood and air inlet in the cowl grill to improve heater and defroster efficiency and to reduce the probability of fogging up inside of the windshield.

Defogging logic

Manual climate control system

To reduce the probability of fogging up the inside of the windshield, the air intake control is set to the outside (fresh) air position automatically if any of following occur.

- The mode is selected to the or while the system is activated.
- The ignition switch is turned on while the mode is selected to the *, or .
- The ignition switch is turned off.
- The fan is off.
- The fan begins to be operated.

Press the air intake control button to select the recirculated air position while the ignition switch is on.

* : if equipped

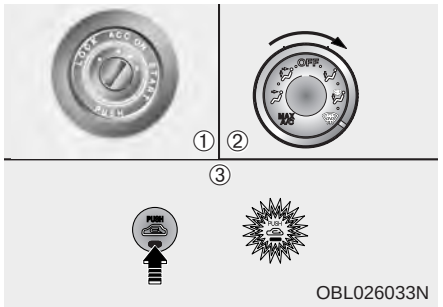

OBL026033N

How to cancel or return defogging logic of manual climate control system

1. Turn the ignition switch to the “ON” position.
2. Turn the mode selection knob to the defrost position ( ).
3. Push the air intake control button ( ) at least 5 times within 3 seconds.

The indicator light in the air intake control button will blink 3 times at 0.5 second intervals. This indicates that the defogging logic is canceled or has returned to the programmed condition.

If the battery has been discharged or disconnected, the defog logic is reset to the original condition.

Automatic climate control system

To reduce the probability of fogging up inside of the windshield, the air intake control is set to outside (fresh) air position automatically if any of following occur.

- The ignition switch is turned on while the mode is selected to the *, or .
- The OFF button is pushed.
- The mode is selected to the *, or position.

In the or mode, it is impossible to select the recirculated air position while the ignition switch is on.

* : only if manually selected

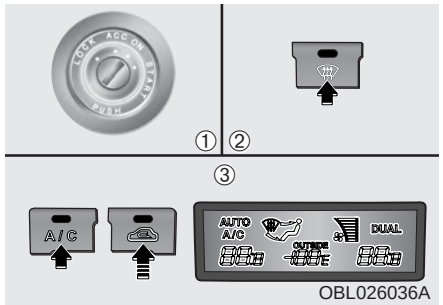

OBL026036A

How to cancel or return defogging logic of automatic climate control system

1. Turn the ignition switch to the “ON” position.
2. Select the defrost position pressing defrost button ( ).
3. While holding the air conditioning button (A/C) pressed, press the air intake control button ( ) at least 5 times within 3 seconds.

The A/C display will blink 3 times at 0.5 second intervals. This indicates that the defogging logic is canceled or has returned to the programmed condition.

If the battery has been discharged or disconnected, the defog logic is reset to the original condition.

Fuel requirements / 5-2
Emission control system / 5-3
Before driving / 5-5
Suggestions for economical operation / 5-6
Special driving conditions / 5-7
Using four-wheel drive / 5-11
Vehicle load limit / 5-25
Weight of the vehicle / 5-29
Trailer towing / 5-31
Label information / 5-39

Driving tips

5

FUEL REQUIREMENTS

Gasoline engine (unleaded)

Your new Kia vehicle is designed to use only unleaded fuel with a minimum Octane Rating of 87 Anti-Knock Index (AKI).

For improved vehicle performance, premium unleaded fuel with an octane rating of AKI 91 or higher is recommended.

CAUTION

NEVER USE LEADED FUEL. The use of leaded fuel is detrimental to the catalytic converter and will damage the engine control system's oxygen sensor and affect emission control.

Never add any fuel system cleaning agents to the fuel tank other than what Kia has specified. (Consult an Authorized Kia Dealer for details.)

Gasoline containing alcohol and methanol

Gasohol, a mixture of gasoline and ethanol (also known as grain alcohol), and gasoline or gasohol containing methanol (also known as wood alcohol) are being marketed along with or instead of leaded or unleaded gasoline.

Do not use gasohol containing more than 10% ethanol, and do not use gasoline or gasohol containing any methanol. Either of these fuels may cause drivability problems and damage to the fuel system.

Discontinue using gasohol of any kind if drivability problems occur.

Vehicle damage or driveability problems may not be covered by the manufacturer's warranty if they result from the use of:

1. Gasohol containing more than 10% ethanol.
2. Gasoline or gasohol containing methanol.
3. Leaded fuel or leaded gasohol.

CAUTION

Never use gasohol which contains methanol. Discontinue use of any gasohol product which impairs drivability.

EMISSION CONTROL SYSTEM

The emission control system of your vehicle is covered by a written limited warranty. Please see the warranty information contained in the Warranty & Consumer Information Manual in your vehicle.

Vehicle modifications

This vehicle should not be modified. Modification of your Kia could affect its performance, safety or durability and may even violate governmental safety and emissions regulations.

In addition, damage or performance problems resulting from any modification may not be covered under warranty.

Engine exhaust gas precautions (carbon monoxide)

⚠ WARNING - Exhaust

Engine exhaust gases contain carbon monoxide (CO). Though colorless and odorless, it is dangerous and could be lethal if inhaled. Follow the instructions following to avoid CO poisoning.

- Carbon monoxide can be present with other exhaust fumes. Therefore, if you smell exhaust fumes of any kind inside your vehicle, have it inspected and repaired immediately. If you ever suspect exhaust fumes are coming into your vehicle, drive it only with all the windows fully open. Have your vehicle checked and repaired immediately.
- Do not operate the engine in confined or closed areas (such as garages) any more than what is necessary to move the vehicle in or out of the area.
- When the vehicle is stopped in an open area for more than a short time with the engine running, adjust the ventilation system (as needed) to draw outside air into the vehicle.
- Never sit in a parked or stopped vehicle for any extended time with the engine running.
- When the engine stalls or fails to start, excessive attempts to re-start the engine may cause damage to the emission control system.

Operating precautions for catalytic converters

⚠ WARNING - Fire

A hot exhaust system can ignite flammable items under your vehicle. Do not park the vehicle over or near flammable objects, such as grass, vegetation, paper, leaves, etc.

Your vehicle is equipped with a catalytic converter emission control device.

Therefore, the following precautions must be observed:

- Use only UNLEADED FUEL for gasoline engine (unleaded).
- Do not operate the vehicle when there are signs of engine malfunction, such as misfire or a noticeable loss of performance.
- Do not misuse or abuse the engine. Examples of misuse are coasting with the ignition off and descending steep grades in gear with the ignition off.
- Do not operate the engine at high idle speed for extended periods (5 minutes or more).
- Do not modify or tamper with any part of the engine or emission control system. All inspections and adjustments must be made by an authorized Kia dealer.

Failure to observe these precautions could result in damage to the catalytic converter and to your vehicle. Additionally, such actions could void your warranties.

BEFORE DRIVING

Before entering vehicle:

- Be sure that all windows, outside mirror(s), and outside lights are clean.
- Check the condition of the tires.
- Check under the vehicle for any sign of leaks.
- Be sure there are no obstacles behind you if you intend to back up.

Necessary inspections

Fluid levels, such as engine oil, engine coolant, brake fluid, and washer fluid should be checked on a regular basis, with the exact interval depending on the fluid. Further details are provided in Section 7, Maintenance.

Before starting

- Close and lock all doors.
- Position the seat so that all controls are easily reached.
- Adjust the inside and outside rearview mirrors.
- Be sure that all lights work.
- Check all gauges.
- Check the operation of warning lights when the ignition switch is turned to the ON position.
- Release the parking brake and make sure the brake warning light goes out.

For safe operation, be sure you are familiar with your vehicle and its equipment.

⚠ WARNING - Driving under the influence of alcohol or drugs

Drinking and driving is dangerous. Drunk driving is the number one contributor to the highway death toll each year. Even a small amount of alcohol will affect your reflexes, perceptions and judgement. Driving while under the influence of drugs is as dangerous or more dangerous than driving drunk.

You are much more likely to have a serious accident if you drink or take drugs and drive.

If you are drinking or taking drugs, don't drive. Do not ride with a driver who has been drinking or taking drugs. Choose a designated driver or call a cab.

SUGGESTIONS FOR ECONOMICAL OPERATION

Your vehicle's fuel economy depends mainly on your style of driving, where you drive and when you drive.

Each of these factors affects how many kilometers (miles) you can get from a liter (gallon) of fuel. To operate your vehicle as economically as possible, use the following driving suggestions to help save money in both fuel and repairs:

- Avoid lengthy warm-up idling. Once the engine is running smoothly, begin driving. Remember, engine warm-up may take a little longer on cold days.
- Save fuel by accelerating slowly after stopping.
- Keep the engine in tune and follow the recommended periodic maintenance schedule. This will increase the life of all parts and lower your operating costs.
- Do not use the air conditioner unnecessarily.
- Slow down when driving on rough roads.
- For longer tire life and better fuel economy, always keep the tires inflated to the recommended pressures.
- Maintain a safe distance from other vehicles to avoid sudden stops. This will reduce wear on brake linings and pads. Driving in such a way will also save fuel because extra fuel is required to accelerate back to driving speed.
- Do not carry unnecessary weight in the vehicle.
- Do not rest your foot on the brake pedal while driving. This can cause needless wear, possible damage to the brakes, and poor fuel economy.
- Improper wheel alignment results in faster tire wear and lower fuel economy.
- Open windows at high speeds can reduce fuel economy.
- Fuel economy is less in crosswinds and headwinds. To help offset some of this loss, slow down when driving in these conditions.

Keeping a vehicle in good operating condition is important both for economy and safety. Therefore, have an authorized Kia dealer perform scheduled inspections and maintenance.

⚠ WARNING - Engine off during motion

Never turn the engine off to coast down hills or anytime the vehicle is in motion. The power steering and power brakes will not function without the engine running. Instead, keep the engine on and downshift to an appropriate gear for engine braking effect.

SPECIAL DRIVING CONDITIONS

Hazardous driving conditions

When hazardous driving conditions are encountered such as water, snow, ice, mud, sand, or similar hazards, follow these suggestions:

- Drive cautiously and allow extra distance for braking.
- Avoid sudden movements in braking or steering.
- When braking with non-ABS brakes pump the brake pedal with a light up-and-down motion until the vehicle is stopped.

WARNING

Do not pump the brake pedal on a vehicle equipped with ABS.

- If stalled in snow, mud, or sand, use second gear. Accelerate slowly to avoid spinning the drive wheels.
- Use sand, rock salt, tire chains, or other non-slip material under the drive wheels to provide traction when stalled in ice, snow, or mud.

WARNING - Downshifting

Downshifting with an automatic transmission, while driving on slippery surfaces can cause an accident. The sudden change in tire speed could cause the tires to skid. Be careful when downshifting on slippery surfaces.

Rocking the vehicle

If it is necessary to rock the vehicle to free it from snow, sand, or mud, first turn the steering wheel right and left to clear the area around your front wheels. Then, shift back and forth between 1 (First) and R (Reverse) in vehicles equipped with a manual transmission or R (Reverse) and any forward gear in vehicles equipped with an automatic transmission. Do not race the engine, and spin the wheels as little as possible. If you are still stuck after a few tries, have the vehicle pulled out by a tow vehicle to avoid engine overheating and possible damage to the transmission.

CAUTION

Prolonged rocking may cause engine over-heating, transmission damage or failure, and tire damage.

⚠ WARNING - Spinning tires

Do not spin the wheels, especially at speeds more than 56 km/h (35 mph). Spinning the wheels at high speeds when the vehicle is stationary could cause a tire to overheat, explode and injure bystanders.

CAUTION

The ESC system (if equipped) should be turned OFF prior to rocking the vehicle.

Driving at night

Because night driving presents more hazards than driving in the daylight, here are some important tips to remember:

- Slow down and keep more distance between you and other vehicles, as it may be more difficult to see at night, especially in areas where there may not be any street lights.
- Adjust your mirrors to reduce the glare from other driver's headlights.
- Keep your headlights clean and properly aimed on vehicles not equipped with the automatic headlight aiming feature. Dirty or improperly aimed headlights will make it much more difficult to see at night.
- Avoid staring directly at the headlights of oncoming vehicles. You could be temporarily blinded, and it will take several seconds for your eyes to readjust to the darkness.

Driving in the rain

Rain and wet roads can make driving dangerous, especially if you're not prepared for the slick pavement. Here are a few things to consider when driving in the rain:

- A heavy rainfall will make it harder to see and will increase the distance needed to stop your vehicle, so slow down.
- Keep your windshield wiping equipment in good shape. Replace your windshield wiper blades when they show signs of streaking or missing areas on the windshield.
- If your tires are not in good condition, making a quick stop on wet pavement can cause a skid and possibly lead to an accident. Be sure your tires are in good shape.
- Turn on your headlights to make it easier for others to see you.
- Driving too fast through large puddles can affect your brakes. If you must go through puddles, try to drive through them slowly.
- If you believe you may have gotten your brakes wet, apply them lightly while driving until normal braking operation returns.

Winter driving

- We recommend that you carry emergency equipment, including tire chains, a window scraper, windshield deicer, a bag of sand or salt, flares, a small shovel and jumper cables.
- Make sure you have sufficient ethylene glycol coolant in the radiator.
- Check the battery condition and cables. Cold temperatures reduce the capacity of any battery, so it must be in excellent condition to provide enough winter starting power.
- Make sure the engine oil viscosity is suitable for cold weather.
- Check the ignition system for loose connections and damage.
- Use antifreeze formulated windshield washer fluid. (Do not use engine coolant antifreeze.)
- Do not use the parking brake if it might freeze. When parking, shift to 1 (First) or R (Reverse) with a manual transmission or P (Park) with an automatic transmission and block the rear wheels.

Snow tires

If you mount snow tires on your Kia, make sure they are radial tires of the same size and load range as the original tires. Mount snow tires on all four wheels to balance your vehicle's handling in all weather conditions. Keep in mind that the traction provided by snow tires on dry roads may not be as high as your vehicle's original equipment tires. You should drive cautiously even when the roads are clear. Check with the tire dealer for maximum speed recommendations.

⚠ WARNING - Snow tire size

Snow tires should be equivalent in size and type to the vehicle's standard tires. Otherwise, the safety and handling of your vehicle may be adversely affected.

Do not install studded tires without first checking local, state and municipal regulations for possible restrictions against their use.

Driving in flooded areas

Avoid driving through flooded areas unless you are sure the water is no higher than the bottom of the wheel hub. Drive through any water slowly. Allow adequate stopping distance because brake performance may be affected.

After driving through water, dry the brakes by gently applying them several times while the vehicle is moving slowly.

Reducing the risk of a rollover

This multi-purpose passenger vehicle is defined as a Sports Utility Vehicle (SUV). SUV's have higher ground clearance and a narrower track to make them capable of performing in a wide variety of off-road applications. Specific design characteristics give them a higher center of gravity than ordinary cars. An advantage of the higher ground clearance is a better view of the road, which allows you to anticipate problems. They are not designed for cornering at the same speeds as conventional passenger drive vehicles, any more than low-slung sports cars are designed to perform satisfactorily in off-road conditions. Due to this risk, driver and passengers are strongly recommended to buckle their seatbelts. In a rollover crash, an unbelted person is more likely to die than a person wearing a seatbelt. There are steps that a driver can make to reduce the risk of a rollover. If at all possible, avoid sharp turns or abrupt maneuvers, do not load your roof rack with heavy cargo, and never modify your vehicle in any way.

Rollover warning label

To remind you of the danger of the rollover, a rollover warning label which is now required by the Federal safety regulations is adhered to the driver's sunvisor.

⚠ WARNING - Rollover

As with other Sports Utility Vehicle (SUV), failure to operate this vehicle correctly may result in loss of control, an accident or vehicle rollover.

- **Utility vehicles have a significantly higher rollover rate than other types of vehicles.**
- **Specific design characteristics (higher ground clearance, narrower track, etc.) give this vehicle a higher center of gravity than ordinary cars.**
- **A SUV is not designed for cornering at the same speeds as conventional vehicles.**
- **Avoid sharp turns or abrupt maneuvers.**
- **In a rollover crash, an unbelted person is significantly more likely to die than a person wearing a safety belt. Make sure everyone in the vehicle is properly buckled up.**

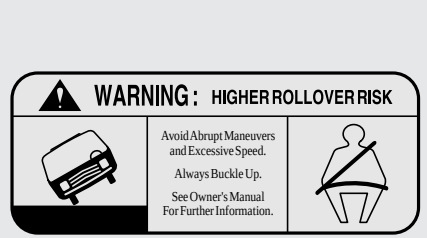

To remind you of the danger of the rollover, the rollover warning label is adhered to the driver's sunvisor. If you close the driver's sunvisor, you can see the rollover warning label which is located at the side of the air bag warning label.

USING FOUR-WHEEL DRIVE

Driving on snow- or ice-covered roads ("4HI, 4LO" for part-time 4WD operation or "AUTO" for full-time 4WD operation)

- Use snow tires. See “Tires” in this section for more information.
- Keep an adequate distance between yourself and other vehicles.
- Avoid sudden braking, acceleration or steering. These actions can cause your vehicle to lose traction.

Driving in sand or mud ("4HI, 4LO" for part-time 4WD operation or "AUTO" for full-time 4WD operation)

- Avoid sudden braking, acceleration or steering. These actions can cause your vehicle to get stuck in the sand or mud.
- Drive at low speeds whenever possible.
- You may need to get out of your vehicle at times to check road conditions.
- If you get stuck in the sand or mud, try placing stones, wood or other similar materials under the tires to get traction, or move forward and backward repeatedly to get unstuck.

⚠ WARNING - Traction

Make sure that no one stands in front of or behind the tires when materials are placed under the tires to get more traction. The tires may cause loose materials to fly out from under the vehicle, potentially causing serious bodily injury or death.

CAUTION

Prolonged rocking may cause engine damage, overheating, transmission differential or transfer case damage or failure and tire damage.

Driving on a hill ("4LO" for part-time 4WD operation or "LOW" for full-time 4WD operation)

- Use low gear when going uphill or downhill and avoid sudden braking.
- Do not shift gears or use your clutch when going downhill. Do not coast downhill in Neutral.

Crossing a ditch ("4LO" for part-time 4WD operation or "LOW" for full-time 4WD operation)

- Avoid driving through ditches if possible, especially if there is water in the ditch. Your vehicle may stall if the electrical system gets wet. If you must cross a ditch, select 4LO or LOW mode.
- Avoid driving where the water level is higher than the bottom of the wheel hub. If the water level rises above this mark, your vehicle will need to be serviced.
- Tap lightly on the brake pedal during and after driving through water. This will help keep the brakes dry and in proper working order.
- Do not shift gears while crossing a ditch.

Tight corner brake effect

⚠ WARNING - 4WD

When turning sharply on a paved road at low speed while in four-wheel drive, steering control will be difficult.

This is called tight corner brake effect. Tight corner brake effect is a unique characteristic of four-wheel drive vehicles caused by the difference in tire rotation at the four wheels and the zero-degree alignment of the front wheels and suspension.

Sharp turns at low speeds should be carried out with caution.

Off-road driving with your four-wheel drive vehicle

Off-road driving can be great fun. But it has definite hazards. The greatest of these is the terrain itself.

"Off-roading" means you've left the paved road system behind. Traffic lanes are not marked. Curves are not banked.

There are no carefully engineered road signs to warn you of dangerous conditions or to advise you of a safe speed. You have to assess the environment yourself. Surfaces can be slippery, rough, uphill or downhill.

Off-road driving involves learning new skills. That's why it's important that you read and understand this section. You'll find useful driving information and suggestions. These will help make your off-road driving safer and more enjoyable.

Before you go off-roading

There are some things to do before you leave the paved roads. Be sure to have all necessary maintenance and service work done beforehand. Be sure to read all the information about your four-wheel drive vehicle in this manual. Is there enough fuel? Is the spare tire fully inflated? Are the fluid levels at the proper levels? What are the local laws that apply to off-roading where you'll be driving? If you don't know, you should check with law enforcement people in the area. Will you be on someone's private land? If so, be sure to get the necessary permission.

Loading your vehicle for off-road driving

There are some important items to remember about how to properly load your vehicle.

- The heaviest things should be in the cargo area and forward of your rear axle. Place heavier items as far forward as you can.
- Be sure the load is properly secured, so driving over off-road terrain doesn't shift your load or throw items toward the driver or passengers.

⚠ WARNING - Cargo

- **Cargo piled close to the height of (or higher than) the seat backs can be thrown forward during a sudden stop or on downhill slopes. You or your passengers could be severely injured. Keep cargo below the top of the seat backs and, if possible, do not pile separate items.**
- **Unsecured cargo in the cargo area can be tossed about when driving on the highways or over rough terrain. You or your passengers can be struck by flying objects and severely injured. Secure the cargo properly.**

(Continued)

(Continued)

- **Cargo should not be carried on the roof without a proper roof rack installed. The roof rack will hold a maximum of 45 kg (100 lbs.). Heavy loads in a roof rack raise the vehicle's center of gravity, making it more likely to roll over. You can be seriously or fatally injured if the vehicle rolls over. Do not load cargo on the roof while driving off-road, if at all possible. Put heavy loads inside the cargo area, not on the roof or in a roof rack. Keep cargo in the cargo area as far forward and low as possible.**

Traveling to remote areas

It makes sense to plan your trip, especially when going to a remote area. Know the terrain and plan your route. You are much less likely to encounter unwanted surprises. Get accurate maps of trails.

It's also a good idea to travel with at least one other vehicle. If something happens to one of them, the other can quickly help.

Getting familiar with off-road driving

It's necessary for you to practice in an area that's safe and close to home before you begin serious off-road driving. Off-road driving requires new and different driving skills.

You need to tune your senses to different kinds of signals. For example, constantly sweep the terrain with your eyes looking for unexpected obstacles. Listen for unusual tire, gear, or engine sounds. Feel and respond to the vibrations of the vehicle with your hands, feet, and body while still carefully controlling your vehicle. You'll also need to adjust your expectations and greatly lower the number of miles you expect to cover in an hour or a day.

Controlling your vehicle is the key to successful off-road driving. One of the best ways to control your vehicle is to control your speed. Here are some things to keep in mind when traveling at higher speeds:

- You approach things faster and you have less time to scan the terrain for obstacles.
- You have less time to react.
- You have much more vehicle bounce when you drive over obstacles, giving you less vehicle control.
- You'll need more distance for braking, especially since you're on an unpaved surface. Such terrain will always be more "slippery" than a paved road.

⚠ WARNING - Off road driving

When you're driving off-road, bouncing and quick changes in direction can easily throw you out of position in your seat. This could cause you to lose control of the vehicle and crash. Whether you are driving on or off the road, you and your passengers should always wear safety belts.

Scanning the terrain

Off-road driving can take you over many different kinds of terrain. You need to be familiar with the terrain and its many different features. Here are some things to consider.

Surface conditions

Off-roading can take you over hard-packed dirt, gravel, rocks, grass, sand, mud, snow or ice. Each of these surfaces affects the steering, acceleration, and braking of your vehicle in different ways.

Depending upon the kind of surface you are on, you may experience slipping, sliding, wheel spinning, delayed acceleration, poor traction, and longer braking distances.

Surface obstacles

Unseen or hidden obstacles can be hazardous. A rock, log, hole, rut, or bump can startle you if you're not prepared. Often these obstacles are hidden by grass, bushes, snow or even the rise and fall of the terrain itself. Here are some things to constantly evaluate:

- Is the path ahead clear?
- Will the surface texture change ahead?
- Does the path take you uphill or downhill?
- Might you have to stop suddenly or change direction quickly?

When you drive over obstacles or rough terrain, it is critical that you keep a firm grip on the steering wheel. Ruts, troughs, or other surface features can force the wheel out of your hands if you're not prepared.

When you drive over bumps, rocks, or other obstacles, your wheels can leave the ground. If this happens, even with one or two wheels, you can't control the vehicle as well or perhaps at all. Because you will be on an unpaved surface, it's especially important to avoid sudden acceleration, sudden turns, or sudden braking. Any of these actions could cause the center of gravity of the vehicle to shift and destabilize the vehicle, leading to a collision or rollover accident.

Off-road driving requires a different kind of alertness from driving on paved roads and highways. There are no road signs, posted speed limits or signal lights. You have to use your own judgment about what is safe and what isn't. Bad judgment in this uncontrolled environment can be fatal.

⚠ WARNING - Drinking & driving

Drinking and driving, or drug use and driving can be very dangerous on any road. This certainly remains true for off-road driving. At the very time you need special alertness and driving skills, your reflexes, perceptions and judgement can be affected by even a small amount of alcohol or drugs. You could have a serious - or even fatal - accident if you drink or take drugs and drive or ride with a driver who has been drinking or taking drugs.

Driving on off-road hills

Off-road driving often takes you up, down, or across a hill. Driving safely on hills requires excellent judgment and an understanding of what your vehicle can and can't do. There are some hills that simply should not be driven.

⚠ WARNING - Driving on hills

Many hills are simply too steep for any vehicle. If you drive up them, you will stall. If you drive down them, you can't control your speed. In either case, you could flip over. If you drive across them, you will roll over. You could be seriously or fatally injured. If you have any doubt about the steepness, don't drive up or down the hill, even if it means that you have to turn around and find another route. Re-tracking is a normal part of safe off-roading.

Approaching a hill

When you approach a hill, you need to decide if it's one of those hills that's just too steep to climb, descend, or cross. Steepness can be difficult to judge. On a very small hill, for example, there may be a smooth, constant incline with only a small change in elevation where you can easily see all the way to the top. On a large hill, the incline may get steeper as you near the top, but you may not see this because the crest of the hill is hidden by bushes, grass, or shrubs.

Here are some other things to consider as you approach a hill:

- Is there a constant incline, or does the hill get sharply steeper in places?
- Is there good traction on the hillside, or will the surface cause tire slipping?
- Is there a straight path up or down the hill so you won't have to make turning maneuvers?
- Are there obstructions on the hill that can block your path (boulders, trees, logs or ruts)?
- What's beyond the hill? Is there a cliff, an embankment, a drop-off, or a fence? Get out of the vehicle and walk the hill if you are unsure. It's the smart way to find out.
- Is the hill simply too rough? Steep hills often have ruts, gullies, troughs, and exposed rocks because they are more susceptible to the effects of erosion.
- How have weather conditions affected the terrain? Is there likely to be mud, snow or ice on the hill?
- What time of day is it? Are temperatures dropping so that wet surfaces will start to freeze?

Driving uphill

Once you decide you can safely drive up the hill, you need to take some special steps.

- Use a low gear and get a firm grip on the steering wheel.
- Get a smooth start up the hill and try to maintain your speed. Don't use more power than you need, because you don't want your wheels to start spinning or sliding.
- Try to drive straight up the hill, if at all possible. If the path twists and turns, you may have to find another route.

⚠ WARNING - Driving across hills

Turning or driving across steep hills can be dangerous. You could lose traction, slide sideways, or just reach an area too steep to traverse. In any case, it could cause you to roll over. You could be seriously or fatally injured. When driving up hills, always try to go as straight up as possible.

- Slow down as you approach the top of the hill.
- Attach a flag to the vehicle to make you more visible to approaching traffic on trails or hills.
- Sound the horn as you approach the top of the hill to let opposing traffic know you're there.
- Use your headlights even during the day. They make you more visible to other drivers.

⚠ WARNING - Driving over hills

Driving to the top (crest) of a hill at full speed can cause an accident and result in serious or fatal injury. There could be a drop-off, embankment, cliff, another vehicle or people sitting on the ground. As you near the top of a hill, slow down and stay alert.

Stalling while driving uphill

What should I do if my vehicle stalls, or is about to stall, and I can't make it up the hill?

If your vehicle stalls, or is about to stall while driving uphill, there are some things you should do, and there are some things you must not do. First, here's what you should do:

- Push the brake pedal to stop the vehicle and keep it from rolling backwards. Also, apply the parking brake.
- If your engine is still running, shift the transmission into reverse, release the parking brake, and slowly back down the hill in reverse.
- If your engine has stopped running, you'll need to restart it. With the brake pedal depressed and the parking brake still applied, shift a manual transmission to N (Neutral), or an automatic transmission to P (Park) and restart the engine. Then, shift to reverse, release the parking brake, and slowly back down the hill in reverse.
- As you are backing down the hill, put your left hand on the steering wheel at the 12 o'clock position. This way, you'll be able to tell if your wheels are straight or turned to the left or right as you back down.

Here are some things you must not do if you stall, or are about to stall, when going up a hill.

- Never attempt to prevent a stall by depressing the clutch or shifting to N (Neutral) to “rev-up” the engine and regain forward momentum. This won’t work. Your vehicle will roll backwards very quickly and you could go out of control or roll over.

Instead, apply the brake to stop the vehicle. Then apply the parking brake. Shift into reverse, release the parking brake, and slowly back down.

⚠ WARNING - STALLING

Never attempt to turn around if you are about to stall when going up a hill. If the hill is steep enough to stall your vehicle, it’s steep enough to cause you to roll over if you turn around. If you can’t make it up, you must back down the hill.

Stalled on a steep uphill

If your vehicle stalls and you can’t back down the hill, try this: Set the parking brake, put your transmission in 1 (First) gear or P (Park), and turn the engine off. Leave the vehicle and get some help. If your vehicle is at an angle to the slope of the hill, exit the vehicle on the uphill side and stay clear of the path the vehicle would take if it rolled downhill. Leave it in 1 (First) gear for manual transmission or P (Park) for automatic transmission.

⚠ WARNING - Exiting vehicle

Getting out on the downhill (low) side of a vehicle stopped across an incline is dangerous. If the vehicle rolls over, you could be crushed or fatally injured. Always get out on the uphill (high) side of the vehicle and stay well clear of the rollover path.

⚠ WARNING - Leaving vehicle

If you are going to leave your vehicle, set the parking brake and shift a manual transmission to 1 (First), or an automatic transmission to P (Park).

Driving downhill

Going downhill can be considerably more dangerous than driving uphill. When off-roading takes you downhill, you'll want to consider many of the same things you thought about before you went uphill. As a brief reminder, those include:

- How steep is the downhill? Will I be able to maintain vehicle control?
- What's the surface like? Smooth? Rough? Slippery? Hard-packed dirt? Gravel?
- Are there hidden surface obstacles? Ruts? Logs? Boulders?
- What's at the bottom of the hill? Is there a hidden creek bank or even a river bottom with large rocks?
- Have changes in the weather conditions and their effect on the terrain since you went uphill made your task more difficult?

Once you have decided that you can go down a hill safely, try to keep your vehicle headed straight down, and use a low gear. This way, engine braking can help your brakes so they won't have to do all the work. Descend slowly, keeping your vehicle under control at all times.

⚠ WARNING - Downhill

Before beginning to go downhill, it is critical that you ensure that no cargo can shift forward while you are heading downhill. Such shifting could either endanger you and your occupants, or interfere with your ability to control the vehicle.

⚠ WARNING - Braking

Heavy braking when going down a hill can cause your brakes to overheat and fade. This could cause loss of control and a serious accident. Apply the brakes lightly when descending a hill and use a low gear to keep vehicle speed under control.

Avoid turns that take you across the incline of the hill. A hill that's not too steep to drive down may be too steep to drive across. You could roll over if you don't drive straight down.

Never go downhill with the clutch pedal depressed. This is called "free-wheeling." Your brakes will have to do all the work and could overheat and fade.

⚠ WARNING - Wheel locking

Avoid braking so hard that you lock the wheels when going downhill. If your front wheels are locked, you can't steer your vehicle.

If your wheels lock up during downhill braking, you may feel the vehicle starting to slide sideways. To regain your direction, just ease off the brakes and steer to keep the front of the vehicle pointing straight downhill.

Stalling downhill

Stalling is much more likely to happen going uphill. But if it happens going downhill, here's what to do.

- Stop your vehicle by applying the brakes. Then apply the parking brake.
- Move the shift lever to P (Park) in automatic transmission or shift to N (Neutral) in manual transmission and, while still braking, restart the engine.
- Shift back to a low gear, release the parking brake, and drive straight down.
- If the engine won't start, get out and seek help. Exit on the uphill side of the vehicle and stay clear of the path the vehicle would take if it rolled downhill.

Driving across an incline

Sooner or later, an off-road trail will probably go across the incline of a hill. If this happens, you have to decide whether or not to try to drive across the incline. Here are some things to consider:

- A hill that can be driven straight up or down may be too steep to drive across. When you go straight up or down a hill, the length of the wheel base (the distance from the front wheels to the rear wheels) reduces the likelihood the vehicle will tumble end over end. But when you drive across an incline, the much narrower track width (the distance between the left and right wheels) may not prevent the vehicle from tilting and rolling over. Also, driving across an incline puts more weight on the downhill wheels. This could cause a downhill slide or a rollover.
- Surface conditions can be a problem when you drive across a hill. Loose gravel, muddy spots, or even wet grass can cause your tires to slip sideways. If the vehicle slips sideways, it can hit something that will tip it (a rock, a rut, etc.) and cause it to roll over.
- Hidden obstacles can make the steepness of the incline even worse. If you drive across a rock with the uphill wheels, or if the downhill wheels drop into a rut or depression, your vehicle can tilt even more.

For reasons like these, you need to decide carefully whether or not to try to drive across an incline. Just because the trail goes across the incline doesn't mean you have to drive it.

⚠ WARNING - Roll over

Driving across an incline that's too steep will make your vehicle roll over. You could be seriously or fatally injured. If you have any doubt about the steepness of the incline, don't drive across it. Find another route instead.

If your vehicle slides downhill

If you feel your vehicle starting to slide sideways, turn downhill immediately. This should help straighten out the vehicle and prevent the side slipping. However, a much better way to prevent this is to get out and “walk the course” first so you know what the surface is like before you drive it.

Stalling while crossing an incline

If your vehicle stalls when you’re crossing an incline, be sure you (and your passengers) get out on the uphill side, even if that door is harder to open. If you get out on the downhill side and the vehicle starts to roll over, you’ll be in its path.

If you have to walk down the slope, stay out of the path the vehicle will take if it does roll over.

⚠ WARNING - Exiting vehicle

Getting out on the downhill (low) side of a vehicle stopped across an incline is dangerous. If the vehicle rolls over, you could be crushed or fatally injured. Always get out on the uphill (high) side of the vehicle and stay well clear of the rollover path.

Driving in mud, sand, snow, or ice

When you drive in mud, sand, snow, or ice, your wheels won’t get good traction. You can’t accelerate as quickly, turning is more difficult, and you’ll need longer braking distances.

It’s best to use a low gear when you’re in mud, the deeper the mud, the lower the gear. In extremely deep mud, the idea is to keep your vehicle moving so you don’t get stuck.

When you drive on sand, you’ll sense a change in wheel traction. But it will depend upon how loosely packed the sand is. On loosely packed sand (as on beaches or sand dunes) your tires will tend to sink into the sand. This has an effect on steering, accelerating, and braking. You may want to reduce the air pressure in your tires slightly when driving on sand. This will improve traction. Remember to re-inflate them the first chance that you have after you leave the loosely packed sand.

CAUTION

- ***In case of loss of traction in mud, loose soil, or sand, turn the steering wheel rapidly from side-to-side. This can help generate additional traction.***
- ***Do not gun the engine. This will cause the tires to spin and dig down, not forward, and could bury the vehicle to the frame. Smooth, easy power is better than too much power.***

Hard-packed snow and ice offer the worst tire traction. On these surfaces, it's very easy to lose control. On wet ice, for example, the traction is so poor that you will even have difficulty accelerating. And if you do get moving, poor steering and difficult braking can easily cause you to slide out of control.

WARNING - Frozen surfaces

Driving on frozen lakes, ponds or rivers can be dangerous. Underwater springs, currents under the ice, or sudden thaws can weaken the ice. Your vehicle could fall through the ice and you and your passengers could drown. Drive your vehicle on safe surfaces only.

Driving in water

Light rain causes no special off-road driving problems. However, heavy rain can cause flash flooding, and flood waters demand extreme caution.

Find out how deep the water is before you drive through it. If it's deep enough to cover your wheel bearing hubs, axles, or exhaust pipe, don't try it, You probably won't get through. Also, water that deep can damage your axle and other vehicle parts.

If the water isn't too deep, then drive through slowly. At fast speeds, water can splash on your ignition system and your vehicle can stall. Stalling can also occur if your tailpipe goes underwater. As long as your tailpipe is underwater, you will not be able to start your engine. When you go through water, remember that it may take you longer to stop when your brakes are wet.

If you have driven through water that was deep enough to cover your wheel bearing hubs, it may be a good idea to have an Authorized Kia dealer or other competent service center repack your front wheel bearings and examine your rear-end fluid for evidence of water.

⚠ WARNING - Water

Driving through rushing water can be dangerous. Deep water can sweep your vehicle downstream and you and your passengers could drown. If it's only inches deep, it can still wash away the ground from under your tires, and you could lose traction and roll the vehicle. Never drive through rushing water.

After off-road driving

Remove any brush or debris that has collected on the underbody, chassis or under the hood. These accumulations can be a fire hazard.

After driving in mud or sand, clean and check the brake linings. Accumulation of mud or sand can cause glazing and uneven braking. Check the body structure, steering, suspension, wheels, tires, and exhaust system for damage. Also, check the fuel lines and cooling system for any leakage. Your vehicle will also require more frequent service due to off-road use.

VEHICLE LOAD LIMIT

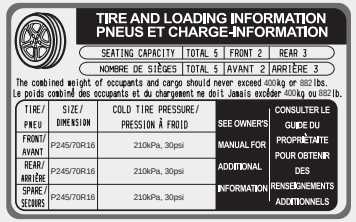

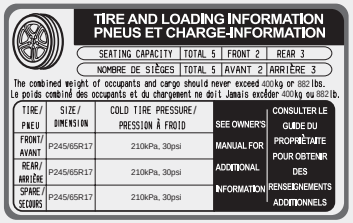

6BLN5001/6BLN5001N

Tire and loading information label

The label located on the driver's door sill gives the original tire size, cold tire pressures recommended for your vehicle, the number of people that can be in your vehicle and vehicle capacity weight.

Steps for determining correct load limit

1. Locate the statement "The combined weight of occupants and cargo should never exceed XXX kg or XXX lbs." on your vehicle's placard.
2. Determine the combined weight of the driver and passengers that will be riding in your vehicle.
3. Subtract the combined weight of the driver and passengers from XXX kg or XXX lbs.
4. The resulting figure equals the available amount of cargo and luggage load capacity. For example, if the "XXX" amount equals 635 kg (1400 lbs.), and there will be five 68 kg (150 lbs.) passengers in your vehicle, the amount of available cargo and luggage load capacity is 295 kg (650 lbs.).

   (635-340 (5 x 68) = 295 kg or 1400-750 (5 x 150) = 650 lbs.)
5. Determine the combined weight of luggage and cargo being loaded on the vehicle. That weight may not safely exceed the available cargo and luggage load capacity calculated in Step 4.
6. If your vehicle will be towing a trailer, load from your trailer will be transferred to your vehicle. Consult this manual to determine how this reduces the available cargo and luggage load capacity of your vehicle.

Example 1

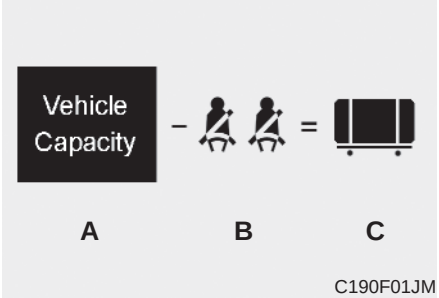

Item	Description	Total
A	Vehicle Capacity Weight	635 kg (1400 lbs)
B	Subtract Occupant Weight 68 kg (150 lbs) × 2	136 kg (300 lbs)
C	Available Cargo and Luggage weight	499 kg (1100 lbs)

Example 2

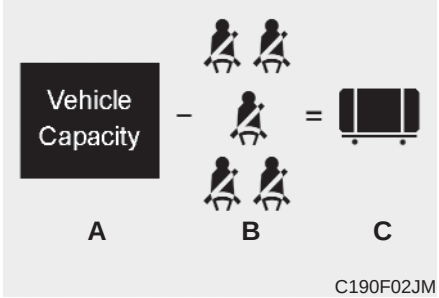

Item	Description	Total
A	Vehicle Capacity Weight	635 kg (1400 lbs)
B	Subtract Occupant Weight 68 kg (150 lbs) × 5	340 kg (750 lbs)
C	Available Cargo and Luggage weight	295 kg (650 lbs)

Example 3

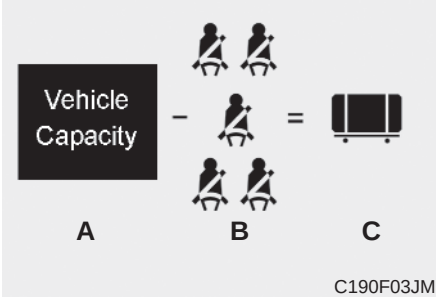

Item	Description	Total
A	Vehicle Capacity Weight	635 kg (1400 lbs)
B	Subtract Occupant Weight 78 kg (172 lbs) × 5	390 kg (860 lbs)
C	Available Cargo and Luggage weight	245 kg (540 lbs)

Refer to your vehicle’s tire and loading information label for specific information about your vehicle's capacity weight and seating positions. The combined weight of the driver, passengers and cargo should never exceed your vehicle's capacity weight.

Compliance label

The compliance label is located on the driver's door sill.

This label shows the maximum allowable weight of the fully loaded vehicle. This is called the GVWR (Gross Vehicle Weight Rating). The GVWR includes the weight of the vehicle, all occupants, fuel and cargo.

This label also tells you the maximum weight that can be supported by the front and rear axles, called Gross Axle Weight Rating (GAWR).

To find out the actual loads on your front and rear axles, you need to go to a weigh station and weigh your vehicle. Your dealer can help you with this. Be sure to spread out your load equally on both sides of the centerline.

⚠ WARNING - Over loading

- **Never exceed the GVWR for your vehicle, the GAWR for either the front or rear axle and vehicle capacity weight. Exceeding these ratings can cause an accident or vehicle damage. You can calculate the weight of your load by weighing the items (or people) before putting them in the vehicle. Be careful not to overload your vehicle.**
- **Do not load your vehicle any heavier than the GVWR, either the maximum front or rear GAWR and vehicle capacity weight. If you do, parts, including tires on your vehicle can break, and it can change the way your vehicle handles and braking ability. This could cause you to lose control and crash. Also, overloading can shorten the life of your vehicle.**

The label will help you decide how much cargo and installed equipment your vehicle can carry.

If you carry items inside your vehicle - like suitcases, tools, packages, or anything else - they are moving as fast as the vehicle. If you have to stop or turn quickly, or if there is a crash, the items will keep going and can cause an injury if they strike the driver or a passenger.

CAUTION

- ***Overloading your vehicle may cause damage. Repairs would not be covered by your warranty. Do not overload your vehicle.***
- ***Using heavier suspension components to get added durability might not change your weight ratings. Ask your dealer to help you load your vehicle the right way.***

WARNING - Loose cargo

Items you carry inside your vehicle can strike and injure occupants in a sudden stop or turn, or in a crash.

- **Put items in the cargo area of your vehicle. Try to spread the weight evenly.**
- **Never stack items, like suitcases, inside the vehicle above the tops of the seats.**
- **Do not leave an unsecured child restraint in your vehicle.**
- **When you carry something inside the vehicle, secure it.**
- **Do not drive with a seat folded down unless necessary.**

WEIGHT OF THE VEHICLE - WITH AND WITHOUT A TRAILER

This section will guide you in the proper loading of your vehicle and/or trailer, to keep your loaded vehicle weight within its design rating capability, with or without a trailer. Properly loading your vehicle will provide maximum return of the vehicle design performance. Before loading your vehicle, familiarize yourself with the following terms for determining your vehicle's weight ratings, with or without a trailer, from the vehicle's Specifications and the compliance label:

Base curb weight

This is the weight of the vehicle including a full tank of fuel and all standard equipment. It does not include passengers, cargo, or optional equipment.

Vehicle curb weight

This is the weight of your new vehicle when you picked it up from your dealer plus any aftermarket equipment.

Cargo weight

This figure includes all weight added to the Base Curb Weight, including cargo and optional equipment. When towing, trailer tongue load or king pin weight also is part of the Cargo Weight.

GAW (Gross axle weight)

This is the total weight placed on each axle (front and rear) - including vehicle curb weight and all payload.

GAWR (Gross axle weight rating)

This is the maximum allowable weight that can be carried by a single axle (front or rear). These numbers are shown on the compliance label. The total load on each axle must never exceed its GAWR.

GVW (Gross vehicle weight)

This is the Base Curb Weight plus actual Cargo Weight plus passengers.

GVWR (Gross vehicle weight rating)

This is the maximum allowable weight of the fully loaded vehicle (including all options, equipment, passengers and cargo). The GVWR is shown on the compliance label located on the driver's door pillar.

GCW (Gross Combined Weight)

This is the weight of the loaded vehicle (GVW) plus the weight of the fully loaded trailer.

GCWR (Gross Combined Weight Rating)

This is the maximum allowable weight of the vehicle and the loaded trailer - including all cargo and passengers - that the vehicle can handle without risking damage. (Important : The towing vehicle's braking system is rated for operation at GVWR, not GCWR. Separate functional brakes should be used for safe control of towed vehicles and for trailers weighing an 750kg (1,653 lbs).) The GCW must never exceed the GCWR.

Maximum Trailer Weight

This is the highest possible weight of a fully loaded trailer the vehicle can tow. It assumes a vehicle with only mandatory options, no cargo, and a driver. The weight of other optional equipment, passengers and cargo in your vehicle will reduce the maximum trailer weight your vehicle can tow.

Calculating the load your vehicle can tow

1. Use the appropriate maximum GCWR chart (in the Weight of the Trailer section in this chapter) for your type of drive system and transmission.
2. Weigh your vehicle.
3. Subtract the weight of your vehicle from the maximum GCWR in the chart. This is the maximum trailer weight your vehicle can tow. It must be below the maximum trailer weight shown in the chart. Note that the maximum trailer weight your vehicle can tow depends on the total weight of any cargo, passengers and available equipment in the vehicle.

TRAILER TOWING

⚠ WARNING - Towing a trailer

If you don't use the correct equipment and drive properly, you can lose control when you pull a trailer. For example, if the trailer is too heavy, the brakes may not work well - or even at all. You and your passengers could be seriously or fatally injured. Pull a trailer only if you have followed all the steps in this section.

⚠ WARNING - Weight limits

Before towing, make sure the total trailer weight, gross combination weight, gross vehicle weight, gross axle weight and trailer tongue load are all within the limits.

Item	3.3 Engine		3.8 Engine	
	4WD*1	2WD*2	4WD*1	2WD*2
Maximum GCWR	3,665 kg (8,079 lbs)	3,572 kg (7,874 lbs)	4,339 kg (9,565 lbs)	4,255 kg (9,314 lbs)
Maximum Trailer Weight	1,590 kg (3,500 lbs)		2,268 kg (5,000 lbs)	

*1 : Four Wheel Drive
*2 : Two Wheel Drive

✻ NOTICE

- **For definitions of terms used in this table and instructions on how to calculate your vehicle load, refer to Weight of the Vehicle in this chapter.**
- **The combined weight of the completed towing vehicle and the loaded trailer must not exceed the GCWR.**
- **When towing maximum loads under high outside temperatures and/or on steep grades, the A/C system may cycle on and off to protect the engine from overheating. This may result in a temporary increase of interior temperature.**

CAUTION

Pulling a trailer improperly can damage your vehicle and result in costly repairs not covered by your warranty. To pull a trailer correctly, follow the advice in this section.

To identify what the vehicle trailering capacity is for your vehicle, you should refer to the chart on this page.

Remember that trailering is different than just driving your vehicle by itself. Trailering causes major changes in handling, durability, and fuel economy. Successful, safe trailering requires correct equipment, and cautious driving.

This section contains many time-tested, important trailering tips and safety rules. Many of these are important for your safety and that of your passengers. Please read this section carefully before you pull a trailer.

Load-pulling components such as the engine, transmission, wheel assemblies, and tires are forced to work harder against the load of the added weight. The engine is required to operate at relatively higher speeds and under greater loads. This additional burden generates extra heat. The trailer also adds considerably to wind resistance, increasing the pulling requirements.

If you do decide to pull a trailer

Here are some important points if you decide to pull a trailer:

- State, provincial, county and municipal government have varying trailering laws. Make sure your hitch, mirrors, lights and wiring arrangements are legal, not only where you live, but also where you'll be driving. A good source for this information is state or local law enforcement agencies.
- Consider using a sway control. You can ask a hitch dealer about sway control.
- After your odometer indicates 800 km (500 miles) or more, you can tow a trailer. For the first 800 km (500 miles) that you tow a trailer, don't drive over 80 km/h (50 mph) and don't make starts at full throttle. This helps your engine and other parts of your vehicle "wear" in at the heavier loads.
- Always drive your vehicle at a moderate speed (less than 100 km/h (60 mph)).
- On a long uphill grade, do not exceed 70 km/h (45 mph) or the posted towing speed limit, whichever is lower.
- The important considerations have to do with weight:

Weight of the trailer

How heavy can a trailer safely be? It should never weigh more than the maximum trailer weight with trailer brakes. But even that can be too heavy.

It depends on how you plan to use your trailer. For example, speed, altitude, road grades, outside temperature and how much your vehicle is used to pull a trailer are all important. The ideal trailer weight can also depend on any special equipment that you have on your vehicle.

Weight of the trailer tongue

The tongue load of any trailer is an important weight to measure because it affects the total gross vehicle weight (GVW) of your vehicle. This weight includes the curb weight of the vehicle, any cargo you may carry in it, and the people who will be riding in the vehicle. And if you will tow a trailer, you must add the tongue load to the GVW because your vehicle will also be carrying that weight.

The trailer tongue should weigh a maximum of 10% of the total loaded trailer weight. After you've loaded your trailer, weigh the trailer and then the tongue, separately, to see if the weights are proper. If they aren't, you may be able to correct them simply by moving some items around in the trailer.

⚠ WARNING - Trailer

- **Never load a trailer with more weight in the rear than in the front. The front should be loaded with approximately 60% of the total trailer load; the rear should be loaded with approximately 40% of the total trailer load.**
- **Never exceed the maximum weight limits of the trailer or trailer towing equipment. Improper loading can result in damage to your vehicle and/or personal injury. Check weights and loading at a commercial scale or highway patrol office equipped with scales.**
- **An improperly loaded trailer can cause loss of vehicle control.**

Hitches

It's important to have the correct hitch equipment. Crosswinds, large trucks going by, and rough roads are a few reasons why you'll need the right hitch. Here are some rules to follow:

- Will you have to make any holes in the body of your vehicle when you install a trailer hitch? If you do, then be sure to seal the holes later when you remove the hitch.

  If you don't seal them, deadly carbon monoxide (CO) from your exhaust can get into your vehicle, as well as dirt and water.
- The bumpers on your vehicle are not intended for hitches. Do not attach rental hitches or other bumper-type hitches to them. Use only a frame-mounted hitch that does not attach to the bumper.

Safety chains

You should always attach chains between your vehicle and your trailer. Cross the safety chains under the tongue of the trailer so that the tongue will not drop to the road if it becomes separated from the hitch.

Instructions about safety chains may be provided by the hitch manufacturer or by the trailer manufacturer. Follow the manufacturer's recommendation for attaching safety chains. Always leave just enough slack so you can turn with your trailer. And, never allow safety chains to drag on the ground.

Trailer brakes

If your trailer weighs more than the maximum trailer weight without trailer brakes loaded, then it needs its own brakes and they must be adequate. Be sure to read and follow the instructions for the trailer brakes so you'll be able to install, adjust and maintain them properly.

- Don't tap into your vehicle's brake system.

⚠ WARNING - Trailer brakes

Do not use a trailer with its own brakes unless you are absolutely certain that you have properly set up the brake system. This is not a task for amateurs. Use an experienced, competent trailer shop for this work.

Driving with a trailer

Towing a trailer requires a certain amount of experience. Before setting out for the open road, you must get to know your trailer. Acquaint yourself with the feel of handling and braking with the added weight of the trailer. And always keep in mind that the vehicle you are driving is now a good deal longer and not nearly so responsive as your vehicle is by itself.

Before you start, check the trailer hitch and platform, safety chains, electrical connector(s), lights, tires and mirror adjustment. If the trailer has electric brakes, start your vehicle and trailer moving and then apply the trailer brake controller by hand to be sure the brakes are working. This lets you check your electrical connection at the same time.

During your trip, check occasionally to be sure that the load is secure, and that the lights and any trailer brakes are still working.

Following distance

Stay at least twice as far behind the vehicle ahead as you would when driving your vehicle without a trailer. This can help you avoid situations that require heavy braking and sudden turns.

Passing

You'll need more passing distance up ahead when you're towing a trailer. And, because you're a good deal longer, you'll need to go much farther beyond the passed vehicle before you can return to your lane.

Backing up

Hold the bottom of the steering wheel with one hand. Then, to move the trailer to the left, just move your hand to the left. To move the trailer to the right, move your hand to the right. Always back up slowly and, if possible, have someone guide you.

Making turns

When you're turning with a trailer, make wider turns than normal. Do this so your trailer won't strike soft shoulders, curbs, road signs, trees, or other objects. Avoid jerky or sudden maneuvers. Signal well in advance.

Turn signals when towing a trailer

When you tow a trailer, your vehicle has to have a different turn signal flasher and extra wiring. The green arrows on your instrument panel will flash whenever you signal a turn or lane change. Properly connected, the trailer lights will also flash to alert other drivers you're about to turn, change lanes, or stop.

When towing a trailer, the green arrows on your instrument panel will flash for turns even if the bulbs on the trailer are burned out. Thus, you may think drivers behind you are seeing your signals when, in fact, they are not. It's important to check occasionally to be sure the trailer bulbs are still working. You must also check the lights every time you disconnect and then reconnect the wires.

Do not connect a trailer lighting system directly to your vehicle's lighting system. Use only an approved trailer wiring harness.

Your Authorized Kia Dealer can assist you in installing the wiring harness.

WARNING

Failure to use an approved trailer wiring harness could result in damage to the vehicle electrical system and/or personal injury.

Driving on grades

Reduce speed and shift to a lower gear before you start down a long or steep downgrade. If you don't shift down, you might have to use your brakes so much that they would get hot and no longer operate efficiently.

On a long uphill grade, shift down and reduce your speed to around 70 km/h (45 mph) to reduce the possibility of engine and transmission overheating.

If your trailer weighs more than the maximum trailer weight without trailer brakes and you have an automatic transmission, you should drive in D (Drive) when towing a trailer.

Operating your vehicle in D (Drive) when towing a trailer will minimize heat build up and extend the life of your transmission.

If you have a manual transmission, drive in fourth gear (or, as you need to, a lower gear).

CAUTION

- ***When towing a trailer on steep grades (in excess of 6%) pay close attention to the engine coolant temperature gauge to ensure the engine does not overheat. If the needle of the coolant temperature gauge moves across the dial towards "H" (HOT), pull over and stop as soon as it is safe to do so, and allow the engine to idle until it cools down. You may proceed once the engine has cooled sufficiently.***
- ***You must decide driving speed depending on trailer weight and uphill grade to reduce the possibility of engine and transmission overheating.***

Parking on hills

Generally, you should not park your vehicle, with a trailer attached, on a hill. People can be seriously or fatally injured, and both your vehicle and the trailer can be damaged if they begin a downhill trajectory.

⚠ WARNING - Parking on a hill

Parking your vehicle on a hill with a trailer attached could cause serious injury or death, should the trailer break lose.

However, if you ever have to park your trailer on a hill, here's how to do it:

1. Apply your brakes, but don't shift into gear.
2. Have someone place chocks under the trailer wheels.
3. When the wheel chocks are in place, release the brakes until the chocks absorb the load.
4. Reapply the brakes. Apply your parking brake, and then shift to R (Reverse) for a manual transmission or P (Park) for an automatic transmission.
5. Release the brakes.

⚠ WARNING - Parking brake

It can be dangerous to get out of your vehicle if the parking brake is not firmly set.

If you have left the engine running, the vehicle can move suddenly. You or others could be seriously or fatally injured.

When you are ready to leave after parking on a hill

1. With the manual transmission in Neutral or automatic transmission in P (Park), apply your brakes and hold the brake pedal down while you:
   - Start your engine;
   - Shift into gear; and
   - Release the parking brake.
2. Slowly remove your foot from the brake pedal.
3. Drive slowly until the trailer is clear of the chocks.
4. Stop and have someone pick up and store the chocks.

Maintenance when trailer towing

Your vehicle will need service more often when you regularly pull a trailer. Important items to pay particular attention to include engine oil, automatic transmission fluid, axle lubricant and cooling system fluid. Brake condition is another important item to frequently check. Each item is covered in this manual, and the Index will help you find them quickly. If you're trailering, it's a good idea to review these sections before you start your trip.

Don't forget to also maintain your trailer and hitch. Follow the maintenance schedule that accompanied your trailer and check it periodically. Preferably, conduct the check at the start of each day's driving. Most importantly, all hitch nuts and bolts should be tight.

CAUTION

- ***Due to higher load during trailer usage, overheating might occur in hot days or during uphill driving. If the coolant gauge indicates over-heating, switch off the A/C and stop the vehicle in a safe area to cool down the engine.***
- ***When towing check transmission fluid more frequently.***
- ***If your vehicle is not equipped with the air conditioner, you should install a condenser fan to improve engine performance when towing a trailer.***

LABEL INFORMATION

There are several important labels and identification numbers located on your vehicle. The label locations are identified in the illustrations shown.

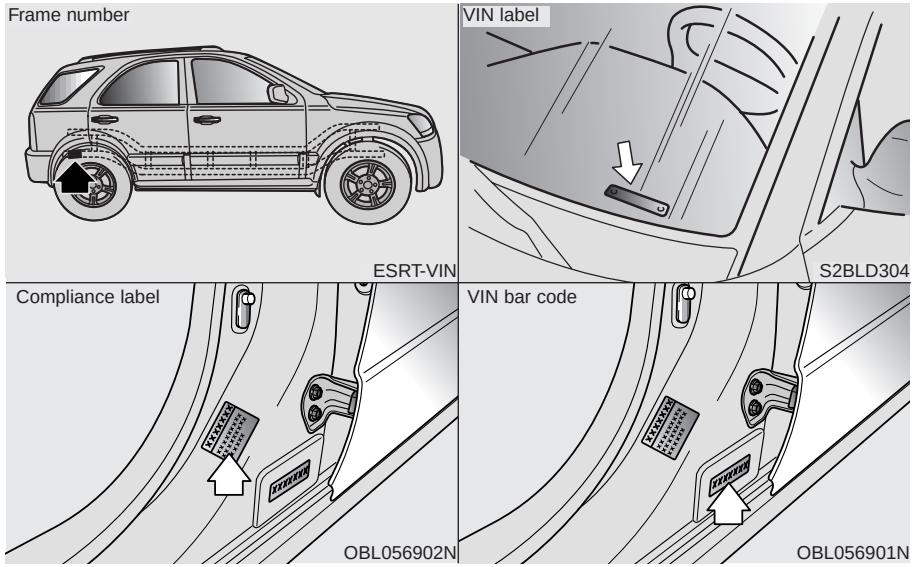

Vehicle identification number (VIN)

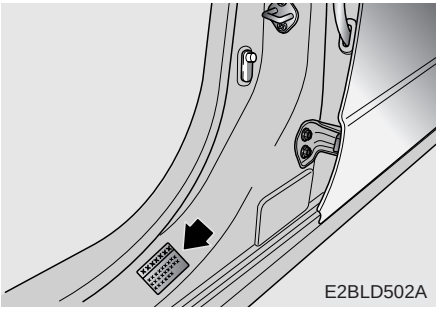

Tire specification / pressure label

Engine Number

Road warning / 6-2
Overheating / 6-3
Emergency starting / 6-4
Electrical circuit protection / 6-7
Towing / 6-14
If you have a flat tire / 6-19

In case of an emergency

6

ROAD WARNING

Hazard warning flasher

The hazard warning flasher serves as a warning to other drivers to exercise extreme caution when approaching, overtaking, or passing your vehicle. It should be used whenever emergency repairs are being made or when the vehicle is stopped near the edge of a roadway.

Depress the flasher switch with the ignition switch in any position. The flasher switch is located in the center console switch panel. All turn signal lights will flash simultaneously.

- The hazard warning flasher operates whether your vehicle is running or not.
- The turn signals do not work when the hazard flasher is on.
- Care must be taken when using the hazard warning flasher while the vehicle is being towed.

OVERHEATING

If your temperature gauge indicates overheating, if you experience a loss of power, or if you hear a loud knocking or pinging noise, the engine has probably overheated. Should any of these symptoms occur, use the following procedure:

1. Turn on the hazard warning flasher, then drive to the nearest safe location and stop your vehicle; set the automatic transmission in P (Park), or shift the manual transmission to N (Neutral) and apply the parking brake.
2. Make sure the air conditioner is off.
3. If coolant or steam is boiling out of the radiator, stop the engine and call an Authorized Kia Dealer for assistance.

   If coolant is not boiling out, allow the engine to idle and open the hood to permit the engine to cool gradually.

   If the temperature does not go down with the engine idling, stop the engine and allow sufficient time for it to cool.
4. The coolant level should then be checked. If the level in the reservoir is low, look for leaks at the radiator hoses and connections, heater hoses and connections, radiator, and water pump. If you find a major leak or another problem that may have caused the engine to overheat, do not operate the engine until it has been corrected. Call an Authorized Kia Dealer for assistance. If you do not find a leak or other problem, carefully add coolant to the reservoir.

⚠ WARNING - Removing radiator cap

Do not remove the radiator cap when the engine and radiator are hot. Scalding hot coolant and steam may blow out under pressure. This could cause serious injury.

If the engine frequently overheats, have the cooling system checked and repaired by an Authorized Kia Dealer.

EMERGENCY STARTING

Jump starting

Jump starting can be dangerous if done incorrectly. Therefore, to avoid harm to yourself or damage to your vehicle or battery, follow the jump starting procedures listed on page 6-6. If in doubt, we strongly recommend that you have a competent technician or towing service jump start your vehicle.

✻ NOTICE

Use only a 12-volt jumper system. You can damage a 12-volt starting motor, ignition system, and other electrical parts beyond repair by use of a 24-volt power supply (either two 12-volt batteries in series or a 24-volt motor generator set).

⚠ WARNING - Battery

Never attempt to check the electrolyte level of the battery as this may cause the battery to rupture or explode causing serious injury.

⚠ WARNING - Battery

- **Keep all flames or sparks away from the battery. The battery produces hydrogen gas which may explode if exposed to flame or sparks.**
- **Do not attempt to jump start the vehicle if the discharged battery is frozen or if the electrolyte level is low; the battery may rupture or explode.**

Connecting jumper cables

Connect cables in numerical order and disconnect in reverse order.

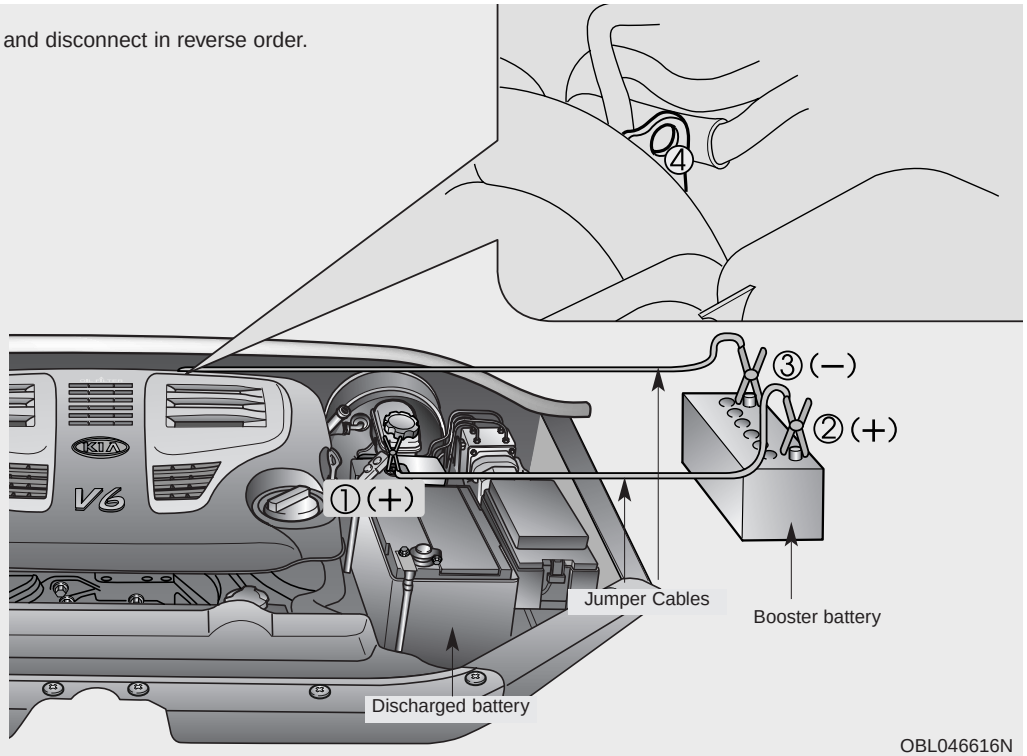

Jump starting procedure

1. Make sure the booster battery is 12-volt and that its negative terminal is grounded.
2. If the booster battery is in another vehicle, do not allow the vehicles to touch.
3. Turn off all unnecessary electrical loads.
4. Connect the jumper cables in the exact sequence shown in the previous illustration. First connect one end of a jumper cable to the positive terminal of the discharged battery (①), then connect the other end to the positive terminal on the booster battery (②). Proceed to connect one end of the other jumper cable to the negative terminal of the booster battery (③), then the other end to a solid, stationary, metallic point (for example, the engine lifting bracket) away from the battery (④). Do not connect it to or near any part that moves when the engine is cranked.

CAUTION - Battery cables

Do not connect the jumper cable from the negative terminal of the booster battery to the negative terminal of the discharged battery. This can cause the discharged battery to overheat and crack, releasing battery acid.

Do not allow the jumper cables to contact anything except the correct battery terminals or the correct ground. Do not lean over the battery when making connections.

5. Start the engine of the vehicle with the booster battery and let it run at 2,000 rpm, then start the engine of the vehicle with the discharged battery.

If the cause of your battery discharging is not apparent, you should have your vehicle checked by an Authorized Kia Dealer.

Push-starting

Your manual transmission-equipped vehicle should not be push-started because it might damage the emission control system.

Vehicles equipped with automatic transmission cannot be push-started.

Follow the directions in this section for jump-starting.

CAUTION

Never tow a vehicle to start it because the sudden surge forward when the engine starts could cause a collision with the tow vehicle.

ELECTRICAL CIRCUIT PROTECTION

Fuses

A vehicle's electrical system is protected from electrical overload damage by fuses.

This vehicle has two fuse panels, one located in the driver's side panel bolster, the other in the engine compartment near the battery.

If any of your vehicle's lights, accessories, or controls do not work, check the appropriate circuit fuse. If a fuse has blown, the element inside the fuse will be melted.

If the electrical system does not work, first check the driver's side fuse panel.

Always replace a blown fuse with one of the same rating.

If the replacement fuse blows, this indicates an electrical problem. Avoid using the system involved and immediately consult an Authorized Kia Dealer.

Three kinds of fuses are used: blade type for lower amperage rating and cartridge type, fusible link for higher amperage ratings.

Fuse replacement

⚠ WARNING - Fuse replacement

- **Never replace a fuse with anything but another fuse of the same rating.**
- **A higher capacity fuse could cause damage and possibly a fire.**
- **Never install a wire instead of the proper fuse - even as a temporary repair. It may cause extensive wiring damage and possibly a fire.**

CAUTION

Do not use a screwdriver or any other metal object to remove fuses because it may cause a short circuit and damage the system.

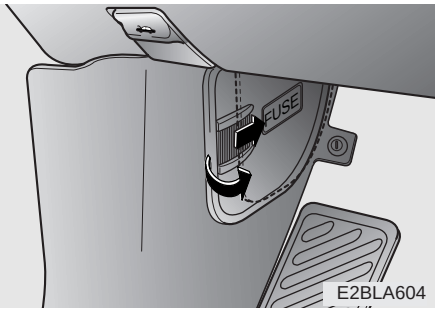

Driver's side panel

1. Turn the ignition switch and all other switches off.
2. Pull the suspected fuse straight out. Use the removal tool provided on the main fuse box in the engine compartment fuse relay box (if equipped). Refer to the fuse panel chart on the fuse panel cover to identify the likely problem fuse or electrical circuit.
3. Check the removed fuse; replace it if it is blown. The number of fuses vary according to the vehicle model. Check both the passenger and engine compartment fuse box covers.
4. Push in a new fuse of the same rating, and make sure it fits tightly in the clips.

If it fits loosely, consult an authorized Kia dealer.

If you do not have a spare, use a fuse of the same rating from a circuit you may not need for operating the vehicle, such as the cigar lighter fuse.

If the headlights or other electrical components do not work and the fuses are OK, check the fuse block in the engine compartment. If a fuse is blown, it must be replaced.

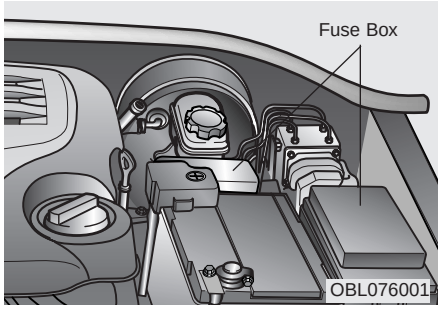

Engine compartment

1. Turn the ignition switch and all other switches off.
2. Remove the fuse box cover by pressing the taps on both ends and pulling up.
3. Check the removed fuse; replace it if it is blown. To remove or insert the fuse, use the fuse puller in the main fuse box.
4. Push in a new fuse of the same rating, and make sure it fits tightly in the clips.

If it fits loosely, consult an Authorized Kia Dealer.

CAUTION

After checking the fuse box in the engine compartment, securely install the fuse box cover. If not, electrical failures may occur from water leaking in.

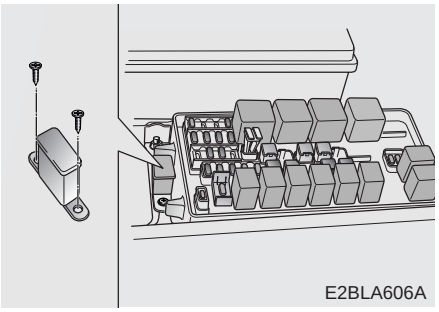

Main fuse

If the MAIN fuse is blown, it must be removed as follows:

1. Disconnect the negative battery cable.
2. Remove the nuts shown in the picture above.
3. Replace the fuse with a new one of the same rating.
4. Reinstall in the reverse order of removal.

✻ NOTICE

If the MAIN fuse is blown, consult an Authorized Kia Dealer.

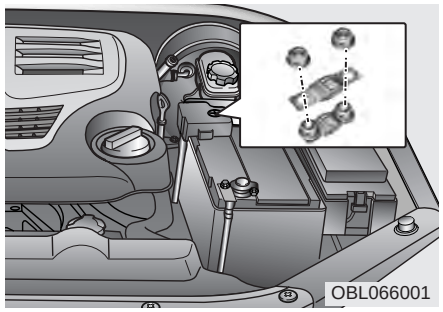

If the ALTERNATOR is blown, it must be removed as follows:

1. Disconnect the negative battery cable.
2. Remove the nuts shown in the picture above.
3. Replace the fuse with a new one of the same rating.
4. Reinstall in the reverse order of removal.

✻ NOTICE

If the ALTERNATOR is blown, consult an Authorized Kia Dealer.

Fuse/Relay panel description

Inside the fuse/relay box covers, you can find the fuse/relay label describing fuse/relay name and capacity.

Driver's side panel

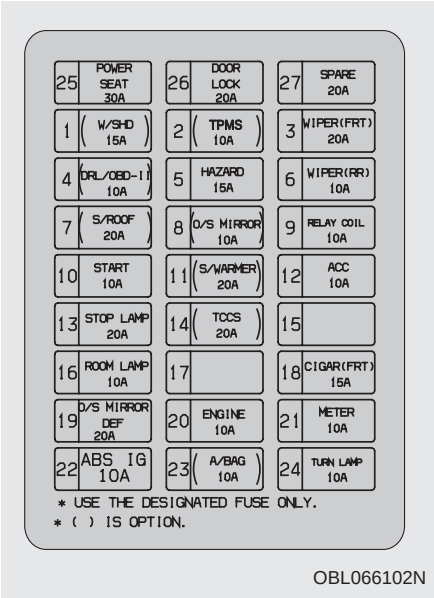

OBL066102N

Engine compartment

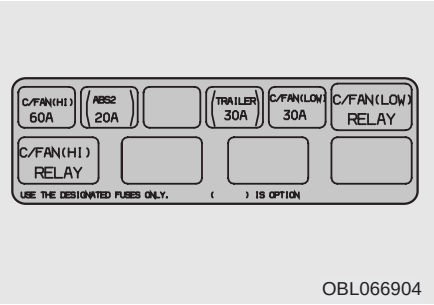

OBL066904

Alternator fuse

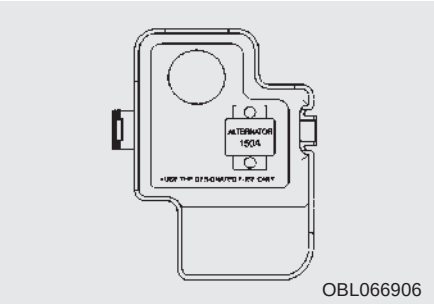

OBL066906

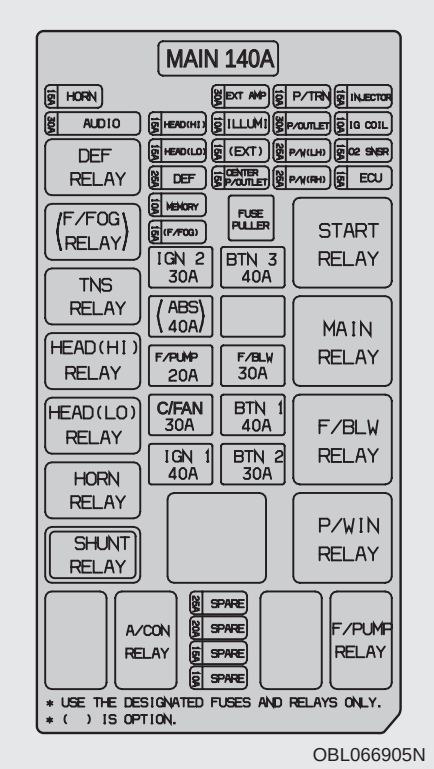

OBL066905N

Driver side panel

Description	Fuse rating	Protected component
W/SHD*	15A	Rear window defroster
TPMS*	10A	Tire pressure monitoring system
WIPER(FRT)	20A	Front wiper
DRL/OBD-II*	15A	Daytime running light
HAZARD	15A	Hazard warning light
WIPER(RR)	10A	Rear wiper
S/ROOF*	20A	Sunroof
O/S MIRROR	10A	Outside rearview mirror
RELAY COIL	10A	Ignition coil
START	10A	Start motor
S/WARMER	20A	Seat warmer
ACC	15A	Accessory
STOP LAMP	20A	Stop light
TCCS	20A	TCS, ESC, Immobilizer
ROOM LAMP	10A	Room lamp
CIGAR(FRT)	15A	Cigar lighter
O/S MIRROR DEF	20A	Outside rearview mirror heater
ENGINE	10A	Engine control unit
METER	10A	Multi-meter
ABS IG	10A	ABS
A/BAG	10A	Airbag
TURN LAMP	10A	Turn signal light
POWER SEAT	30A	Power seat
DOOR LOCK	20A	Central door lock
SPARE	20A	Spare fuse

*** : if equipped**

Engine compartment

Description	Fuse rating	Protected component
HORN	15A	Horn
AUDIO	30A	Audio
MAIN	140A	Alternator
ALTERNATOR*	150A	Alternator
HEAD (HI)	15A	Headlight (high)
HEAD (LO)	15A	Headlight (low)
DEF	25A	Rear window defroster
MEMORY	10A	Cluster, ETACS, A/C, Clock, Room lamp
F/FOG*	15A	Front fog light
IGN 2	30A	Ignition
ABS*	40A	ABS
F/PUMP*	20A	Fuel pump
C/FAN	30A	Radiator fan
IGN 1	40A	Ignition
EXT AMP	30A	Amplifier
ILLUMI	10A	Instrument panel illumination
EXT*	15A	Taillight, Turn signal light
CENTER P/OUTLET	15A	Power outlet
BTN 3	40A	In panel B+
F/BLW	30A	Blower
BTN 1	40A	In panel B+
BTN 2	30A	In panel B+
P/TRN	10A	Power train control system sensors,TCU

Description	Fuse rating	Protected component
P/OUTLET	30A	Power outlet
P/W LH	25A	Power window (left)
P/W RH	25A	Power window (right)
INJECTOR*	15A	Injector
IG COIL	10A	Ignition coil
O2 SNSR	15A	O2 sensor
ECU*	15A	Engine control unit
SPARE	25A	Spare fuse
SPARE	20A	Spare fuse
SPARE	15A	Spare fuse
SPARE	10A	Spare fuse

*** : if equipped**

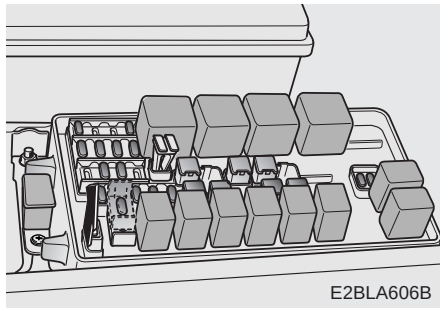

Memory fuse

Your vehicle is equipped with a “Memory Fuse” to prevent battery discharge if your vehicle is parked without being operated for prolonged periods. Use the following procedures before parking the vehicle for prolonged period.

1. Turn off the engine.
2. Turn off the headlights and tail lights.
3. Open the main fuse box cover in engine compartment and pull up the “AUDIO 30A”. This will change the memory fuse mode to prevent battery discharge.

CAUTION

- ***If the memory fuse is pulled up from the fuse box housing, the key reminder warning chime, door ajar warning chime and light, and clock will not operate. The clock must be reset.***
- ***Even though the memory fuse is pulled up, the battery can still be discharged by operation of the headlights or other electrical devices.***

TOWING

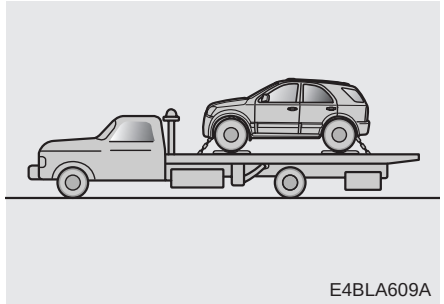
E4BLA609A

If emergency towing is necessary, we recommend having it done by an authorized Kia dealer or a commercial tow-truck service. Proper lifting and towing procedures are necessary to prevent damage to the vehicle. The use of wheel dollies or flatbed is recommended.

For trailer towing guidelines information, refer to section 5 “Driving Tips”.

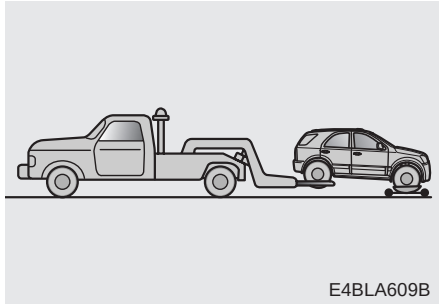
E4BLA609B

On 4WD vehicles, your vehicle must be towed with a wheel lift and dollies or flatbed equipment with all the wheels off the ground.

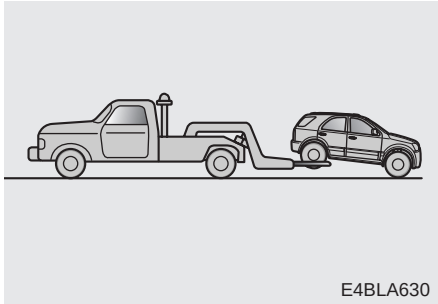
E4BLA630

On 2WD vehicles, it is acceptable to tow the vehicle with the front wheels on the ground (without dollies) and the rear wheels off the ground.

When being towed by a commercial tow truck and wheel dollies are not used, the rear of the vehicle should always be lifted, not the front.

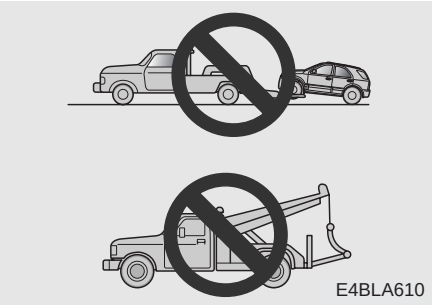

CAUTION

- ***Do not tow the vehicle fowards with the rear wheels on the ground as this may cause damage to the vehicle.***
- ***Do not tow with sling-type equipment. Use wheel lift or flatbed equipment.***

When towing your vehicle in an emergency without wheel dollies (2WD Vehicles or Part-time 4WD Vehicles):

1. Set the ignition switch in the ACC position.
2. Place the transmission shift lever in N (Neutral).
3. Place the transfer shift knob for part-time 4WD operation in the 2HI position.
4. Release the parking brake.

CAUTION

Failure to place the transmission shift lever in N (Neutral) and the transfer shift knob for part-time 4WD operation to 2HI may cause internal damage to the transmission.

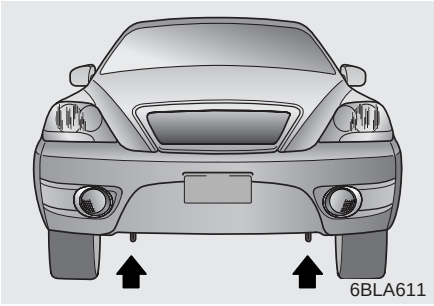

Towing with a vehicle other than a tow truck

If towing is necessary, we recommend you to have it done by an Authorized Kia dealer or a commercial tow truck service.

If towing service is not available in an emergency, your vehicle may be temporarily towed using a cable or chain secured to the emergency towing hook under the front of the vehicle. Use extreme caution when towing the vehicle. A driver must be in the vehicle to steer it and operate the brakes.

Towing in this manner may be done only on hard-surfaced roads for a short distance and at low speeds. Also, the wheels, axles, power train, steering and brakes must all be in good condition.

- Do not use the tow hooks to pull a vehicle out of mud, sand or other conditions from which the vehicle cannot be driven out under its own power.
- Avoid towing a vehicle heavier than the vehicle doing the towing.
- The drivers of both vehicles should communicate with each other frequently.

CAUTION

- ***Attach a towing strap to the tow hook.***
- ***Using a portion of the vehicle other than the tow hooks for towing may damage the body of your vehicle.***
- ***Use only a cable or chain specifically intended for use in towing vehicles. Securely fasten the cable or chain to the towing hook provided.***

- Before emergency towing, check that the hook is not broken or damaged.
- Fasten the towing cable or chain securely to the hook.
- Do not jerk the hook. Apply steady and even force.
- To avoid damaging the hook, do not pull from the side or at a vertical angle. Always pull straight ahead.

WARNING

Use extreme caution when towing the vehicle.

- **Avoid sudden starts or erratic driving maneuvers which would place excessive stress on the emergency towing hook and towing cable or chain. The hook and towing cable or chain may break and cause serious injury or damage.**
- **If the towing vehicle can hardly move, do not forcibly continue the towing. Contact an Authorized Kia dealer or a commercial tow truck service for assistance.**
- **Tow the vehicle as straight ahead as possible.**
- **Keep away from the vehicle during towing.**

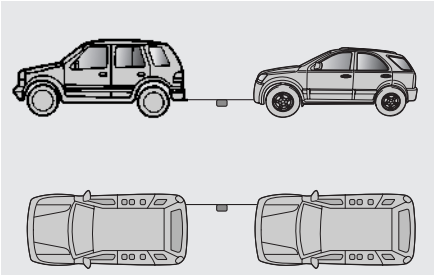

E4BLA613

- Use a towing strap less than 5 m (16 feet) long. Attach a white or red cloth (about 30 cm (12 inches) wide) in the middle of the strap for easy visibility.
- Drive carefully so that the towing strap is not loosened during towing.

When your vehicle is being towed by another vehicle other than a tow truck (in case of an emergency) (2WD vehicles or part-time 4WD vehicles)

- Turn the ignition switch to ACC so the steering wheel isn't locked.
- Place the transmission shift lever in N (Neutral).
- Place the transfer shift knob for part-time 4WD operation in the 2HI position.
- Release the parking bake.
- Vehicle equipped with automatic transmissions should not exceed 45 km/h (28 mph) and should not be towed more than 80 km (50 miles).

✻ NOTICE

Remove the rear drive shaft if it is necessary to exceed 45 km/h (28 mph) and/or 80 km (50 miles). If the drive shaft cannot be removed, stop every 80 km (50 miles) and start the engine. Allow the engine to idle for a few minutes. This will ensure that the transmission is sufficiently lubricated.

- Press the brake pedal with more force than normal since you will have reduced brake performance.
- More steering effort will be required because the power steering system will be disabled.
- If you are driving down a long hill, the brakes may overheat and brake performance will be reduced. Stop often and let the brakes cool off.

✻ NOTICE

To prevent internal damage to the transmission, never tow your vehicle from the rear (backwards) with all four tires in contact with the surface.

Tips for towing a stuck vehicle

The following methods are effective when your vehicle is stuck in mud, sand or similar substances that prevent the vehicle from being driven out under its own power.

- Remove the soil and sand, etc. from the front and the back of the tires.
- Place a stone or wood under the tires.

IF YOU HAVE A FLAT TIRE

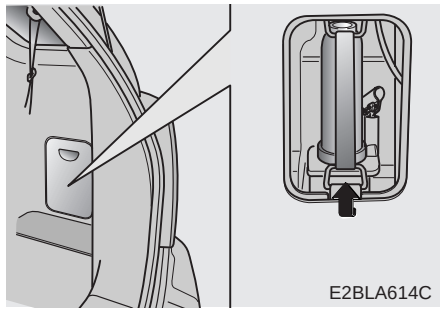

Storing the jack and tools

Jack is stored in the compartment of the cargo area.

Jack handle and wheel lug nut wrench are located in the cargo area floor.

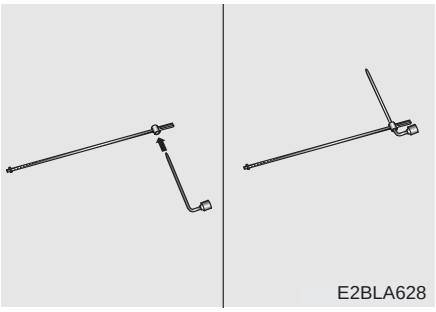

Removing the spare tire

Your spare tire is stored underneath your vehicle, directly below the cargo area.

1. Open the rear hatch.
2. Assemble the wheel lug nut wrench to the jack handle.

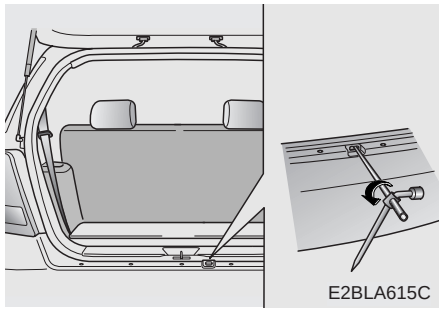

3. Insert the jack handle into the hole just above the rear bumper. The resistance to turning will be felt when properly engaged.
4. Turn the jack handle counter-clockwise until the spare tire reaches the ground. Turn the jack handle 10~13 revolutions counter-clockwise more after the spare tire reaches the ground, and draw the spare tire towards rear of vehicle. Never rotate the jack handle more than 17 revolutions, otherwise the spare tire carrier may be damaged.

⚠ WARNING

Hold the handle firmly and turn it slowly to lower the spare tire. The separation of the wrench from the handle could cause loss of control and personal injury.

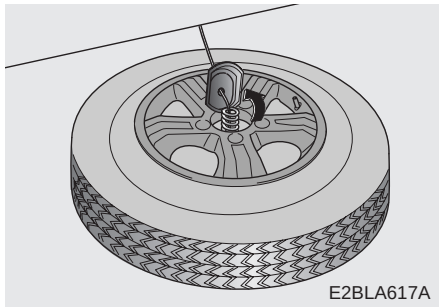

5. Remove the retainer from the center of the spare tire.

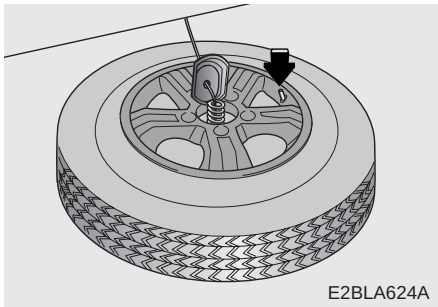

Storing the spare tire

1. Lay the tire on the ground with the valve stem facing up.
2. Place the wheel under the vehicle and install the retainer through the wheel center.
3. Turn the handle clockwise until it clicks.

Changing tires

Jacking instructions

The jack is provided for emergency tire changing only.

Follow jacking instructions to reduce the possibility of personal injury.

⚠ WARNING - Changing tires

- **Never attempt vehicle repairs in the traffic lanes of a public road or highway.**
- **Always move the vehicle completely off the road and onto the shoulder before trying to change a tire. If you cannot find a firm, level place off the road, call a towing service company for assistance.**
- **Be sure to use the correct front and rear jacking positions on the vehicle; never use the bumpers or any other part of the vehicle for jack support.**
- **The vehicle can easily roll off the jack causing serious injury or death. Never allow any portion of your body to get beneath the vehicle while using the jack.**

(Continued)

(Continued)

- **Do not start or run the engine while the vehicle is on the jack.**
- **Do not allow anyone to remain in the vehicle while it is on the jack.**
- **Make sure any children present are in a secure place away from the road and from the vehicle to be raised with the jack.**

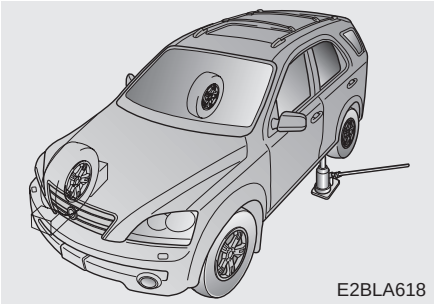

Tire replacement

1. Park on a level surface and apply the parking brake firmly.
2. Shift into R (Reverse) with manual transmission or P (Park) with automatic transmission.
3. Activate the hazard warning flasher.
4. Remove the wheel lug nut wrench, jack, jack handle, and spare tire from the vehicle.
5. Block both the front and rear of the wheel that is diagonally opposite the jack position.

⚠ WARNING - Changing tires

To prevent vehicle movements while changing a tire, always set the parking brake fully, and always block the wheel diagonally opposite the wheel being changed.

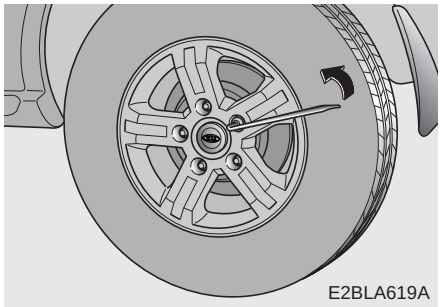

6. Loosen the wheel lug nuts counterclockwise one turn each, but do not remove any nut until the tire has been raised off the ground.

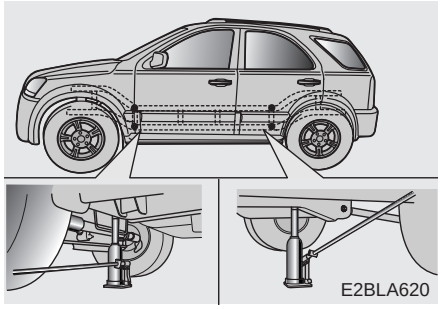

7. Place the jack at the front or rear jacking position closest to the tire you are changing.

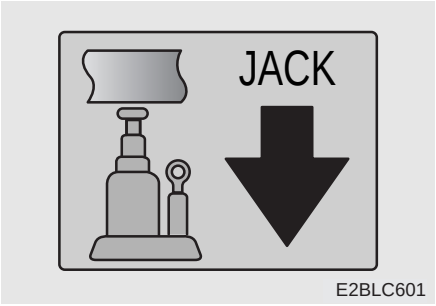

⚠ WARNING - Jack Location

To reduce the possibility of injury, be sure to use only the jack provided with the vehicle and in the correct jack position; never use any other part of the vehicle for jack support.

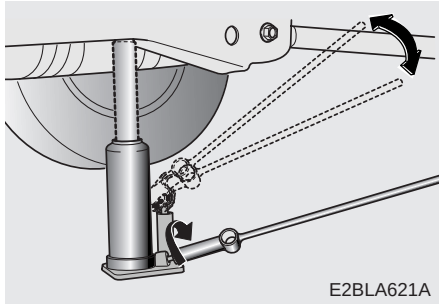

8. Securely tighten the valve of the jack. Move the jack handle up and down until the top of the jack contacts the proper point and takes on a slight load.

   Raise the vehicle until the tire just clears the ground (approximately 30 mm (1.2 in)). Never raise the wheel higher. Before removing the wheel lug nuts, make sure the vehicle is stable and that there is no chance for it to slip or move.

9. Remove the wheel lug nuts by turning them counterclockwise, then remove the wheel.

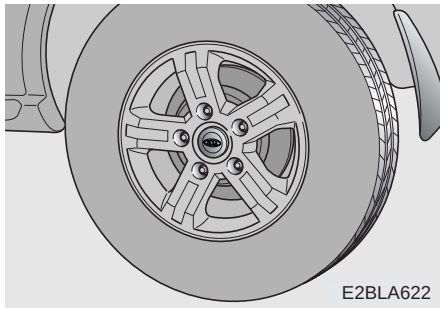

10. Mount the spare tire into position and install the wheel lug nuts with the beveled edge inward.

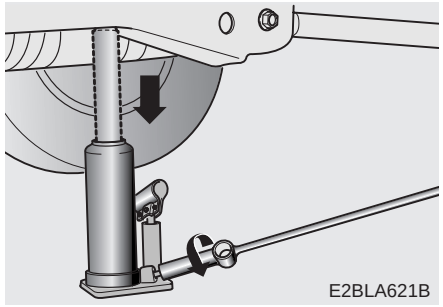

11. Gradually loosen the valve of the jack with the groove on the jack handle to lower the vehicle.

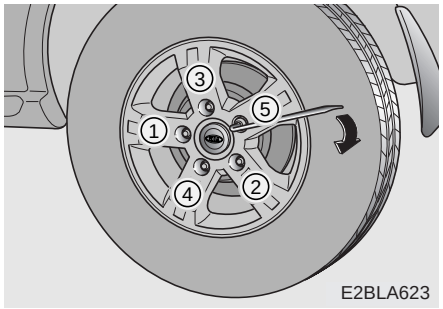

12. Once the wheel lug nuts have been tightened, lower the vehicle fully to the ground and continue to tighten the lug nuts until they are fully secured. Tighten the wheel lug nuts firmly in a “star” pattern.

    If you are unsure of the tightness of the wheel lug nuts, have them checked at the nearest service station. The specified tightening torque is 9~12 kg•m (88-118 N•m, 65-87 ft•lb).

CAUTION

Your vehicle has metric threads on the wheel studs and nuts. Make certain during wheel removal that the same nuts removed are reinstalled - or, if replaced, that nuts with metric threads and the same chamfer configuration are used. Installation of a non-metric thread nut on a metric stud or vice-versa will not secure the wheel to the hub properly and will damage the stud so that it must be replaced.

Note that most lug nuts do not have metric threads. Be sure to use extreme care in checking for thread style before installing aftermarket lug nuts or wheels. If in doubt, consult an Authorized Kia Dealer.

WARNING - Wheel Studs

If the studs are damaged, they may lose their ability to retain the wheel. This could lead to the loss of the wheel and a collision.

To prevent the jack, jack handle, wheel lug nut, wrench and spare tire from rattling while the vehicle is in motion, store them properly. To store the flat fire, refer to “Storing the spare

WARNING

Check the inflation pressures as soon as possible after installing the spare tire. Adjust it to the specified pressure, if necessary. Refer to Section 8, Specifications.

Maintenance services / 7-2
Maintenance schedule / 7-3
Owner maintenance / 7-7
Engine compartment / 7-10
Engine oil / 7-11
Engine cooling system / 7-12
Brake fluid / 7-14
Power steering / 7-15
Automatic transmission / 7-16
Lubricants and fluids / 7-18
Air cleaner / 7-19
Climate control air filter / 7-20
Wiper blades / 7-20
Battery / 7-22
Tires and wheels / 7-25
Lubricant specifications / 7-37

Maintenance 7

Exterior care / 7-39
Interior care / 7-42

MAINTENANCE SERVICES

You should exercise the utmost care to prevent damage to your vehicle and injury to yourself whenever performing any maintenance or inspection procedures.

Should you have any doubts concerning the inspection or servicing of your vehicle, we strongly recommend that you have an Authorized Kia Dealer perform this work.

An Authorized Kia Dealer has factory-trained technicians and genuine Kia parts to service your vehicle properly. For expert advice and quality service, see an Authorized Kia Dealer.

Inadequate, incomplete or insufficient servicing may result in operational problems with your vehicle that could lead to vehicle damage, an accident, or personal injury.

Owner’s responsibility

Maintenance Service and Record Retention are the owner's responsibility.

You must retain documents that show proper maintenance has been performed on your vehicle in accordance with the scheduled maintenance service charts shown on the following pages. You need this information to establish your compliance with the servicing and maintenance requirements of your Kia warranties.

Detailed warranty information is provided in your Warranty & Consumer Information manual.

Repairs and adjustments required as a result of improper maintenance or a lack of required maintenance are not covered.

We strongly recommend that all vehicle maintenance be performed by an authorized Kia dealer using genuine Kia parts.

MAINTENANCE SCHEDULE

Engine control system

MAINTENANCE INTERVALS / MAINTENANCE ITEM	Kilometers or time in months, whichever comes first																
	× 1,000 km	8	16	24	32	40	48	56	64	72	80	88	96	104	112	120	128
	# Months	4	8	12	16	20	24	28	32	36	40	44	48	52	56	60	64
Engine oil & engine oil filter (1)		R	R	R	R	R	R	R	R	R	R	R	R	R	R	R	R
Drive belts (tension)					I				I				I				I
Cooling system hoses & connections				I			I			I			I			I	
Engine coolant (1)		I	I	I	I	I	R	I	I	I	I	I	R	I	I	I	I
Fuel filter							R						R				
Fuel tank cap, lines, EVAP canister and hoses							I						I				
Fuel tank air filter				I			R			I			R			I	
Air cleaner element (2)		I	I	I	I	I	R	I	I	I	I	I	R	I	I	I	I
Ignition wires							I						I				
Spark plugs		Replace every 160,000 km															
PCV valve (if equipped)					I				I				I				I
Idle speed				I			I			I			I			I	
Valve clearance (1)													I				

MAINTENANCE SCHEDULE (CONTINUED)

Chassis and body

MAINTENANCE INTERVALS / MAINTENANCE ITEM	Kilometers or time in months, whichever comes first															
× 1,000 km	8	16	24	32	40	48	56	64	72	80	88	96	104	112	120	128
# Months	4	8	12	16	20	24	28	32	36	40	44	48	52	56	60	64
Air conditioner compressor operation & refrigerant amount (if equipped)			I			I			I			I			I	
Exhaust pipes, heat shield & mountings	I		I		I		I		I		I		I		I	
Transfer case oil (if equipped)	I	I	I	R	I	I	I	R	I	I	I	R	I	I	I	R
Front differential fluid (if equipped)	I	I	I	R	I	I	I	R	I	I	I	R	I	I	I	R
Rear differential fluid (if equipped)	I	I	I	R	I	I	I	R	I	I	I	R	I	I	I	R
Front suspension ball joints				I				I				I				I
Brakes/clutch fluid (1)	I	I	I	I	I	I	I	R	I	I	I	I	I	I	I	R
Front brake pads & discs (3)	I	I	I	I	I	I	I	I	I	I	I	I	I	I	I	I
Rear brake pads & discs (3)	I	I	I	I	I	I	I	I	I	I	I	I	I	I	I	I
Parking brake		I		I		I		I		I		I		I		I
Brake lines & connections (including booster)			I			I			I			I			I	
Manual transaxle oil (1)	I	I	I	R	I	I	I	R	I	I	I	R	I	I	I	R
Clutch & brake pedal free play	I	I	I	I	I	I	I	I	I	I	I	I	I	I	I	I

MAINTENANCE SCHEDULE (CONTINUED)

Chassis and body (Continued)

MAINTENANCE INTERVALS / MAINTENANCE ITEM	Kilometers or time in months, whichever comes first															
	× 1,000 km	8	16	24	32	40	48	56	64	72	80	88	96	104	112	120	128
	# Months	4	8	12	16	20	24	28	32	36	40	44	48	52	56	60	64
Automatic transaxle fluid (1)		I	I	I	R	I	I	I	R	I	I	I	R	I	I	I	R
Chassis & underbody bolts & nuts		I	I	I	I	I	I	I	I	I	I	I	I	I	I	I	I
Tire condition & inflation pressure		I	I	I	I	I	I	I	I	I	I	I	I	I	I	I	I
Wheel alignment (4)		Inspect when abnormal condition noted															
Tire rotation		Rotate the tires every 12,000 km															
Steering operation & linkage		I	I	I	I	I	I	I	I	I	I	I	I	I	I	I	I
Power steering fluid & lines			I		I		I		I		I		I		I		I
Driveshaft u-joints (SUV)		L	L	L	L	L	L	L	L	L	L	L	L	L	L	L	L
Driveshaft dust boots				I			I			I			I			I	
Seat belts, buckles & anchors		I	I	I	I	I	I	I	I	I	I	I	I	I	I	I	I
Lock, hinges & hood latch		L	L	L	L	L	L	L	L	L	L	L	L	L	L	L	L

Chart Symbols:

I- Inspect these items and their related parts. If necessary, correct, clean, refill, adjust of replace.
R- Replace or change
L- Lubricate.
(1) Refer to the lubricant and coolant specifications in the Owner's Manual.
(2) More frequent maintenance is required if driving under dusty conditions.
(3) More frequent maintenance is required if the vehicle is operated under any of the following conditions:
a. Short-distance driving
b. Driving on dusty roads.
c. Extensive idling or slow-speed driving in stop-and-go traffic.
(4) If necessary, rotate and balance the wheels.

* Note: Check the engine oil and coolant levels every week.

OWNER MAINTENANCE

Owner maintenance schedule

The following lists are vehicle checks and inspections that should be performed by the owner or an Authorized Kia Dealer at the frequencies indicated to help ensure safe, dependable operation of your vehicle.

Any adverse conditions should be brought to the attention of your dealer as soon as possible.

These Owner Maintenance Checks are generally not covered by warranties and you may be charged for labor, parts and lubricants used.

When you stop for fuel:

- Check the engine oil level.
- Check coolant level in coolant reservoir.

⚠ WARNING

Be careful when checking your engine coolant level when the engine is hot. Scalding hot coolant and steam may blow out under pressure. This could cause burns or other serious injury.

- Check the windshield washer fluid level.
- Look for low or under-inflated tires.

While operating your vehicle:

- Note any changes in the sound of the exhaust or any smell of exhaust fumes in the vehicle.
- Check for vibrations in the steering wheel. Notice any increased steering effort or looseness in the steering wheel, or change in its straight-ahead position.
- Notice if your vehicle constantly turns slightly or “pulls” to one side when traveling on smooth, level road.
- When stopping, listen and check for strange sounds, pulling to one side, increased brake pedal travel or “hard-to-push” brake pedal.
- If any slipping or changes in the operation of your transmission occurs, check the transmission fluid level.
- Check automatic transmission P (Park) function.
- Check parking brake.
- Check for fluid leaks under your vehicle (water dripping from the air conditioning system during or after use is normal).

At least monthly:

- Check coolant level in the coolant recovery reservoir.
- Check the operation of all exterior lights, including the stoplights, turn signals and hazard warning flashers.
- Check the inflation pressures of all tires including the spare.

At least twice a year (i.e., every Spring and Fall) :

- Check radiator, heater and air conditioning hoses for leaks or damage.
- Check windshield washer spray and wiper operation. Clean wiper blades with clean cloth dampened with washer fluid.
- Check headlight alignment.
- Check muffler, exhaust pipes, shields and clamps.
- Check the lap/shoulder belts for wear and function.
- Check for worn tires and loose wheel lug nuts.

At least once a year :

- Clean body and door drain holes.
- Lubricate door hinges and checks, and hood hinges.
- Lubricate door and hood locks and latches.
- Lubricate door rubber weatherstrips.
- Check the air conditioning system before the warm weather season.
- Check the power steering fluid level.
- Inspect and lubricate automatic transmission linkage and controls.
- Clean battery and terminals.
- Check the brake fluid level.

Owner maintenance precautions

Improper or incomplete service may result in problems. This section gives instructions only for the maintenance items that are easy to perform.

As explained earlier in this section, several procedures can be done only by an Authorized Kia Dealer with special tools.

✻ NOTICE

Improper owner maintenance during the warranty period may affect warranty coverage. For details, read the separate Kia Warranty & Consumer Information Manual provided with the vehicle. If you're unsure about any servicing or maintenance procedure, have it done by an Authorized Kia Dealer.

⚠ WARNING - Maintenance work

- **Performing maintenance work on a vehicle can be dangerous. You can be seriously injured while performing some maintenance procedures. If you lack sufficient knowledge and experience or the proper tools and equipment to do the work, have it done by an Authorized Kia Dealer.**
- **Working under the hood with the engine running is dangerous. It becomes even more dangerous when you wear jewelry or loose clothing. These can become entangled in moving parts and result in injury. Always remove all loose or hanging clothing and all jewelry before working on the engine.**

ENGINE COMPARTMENT

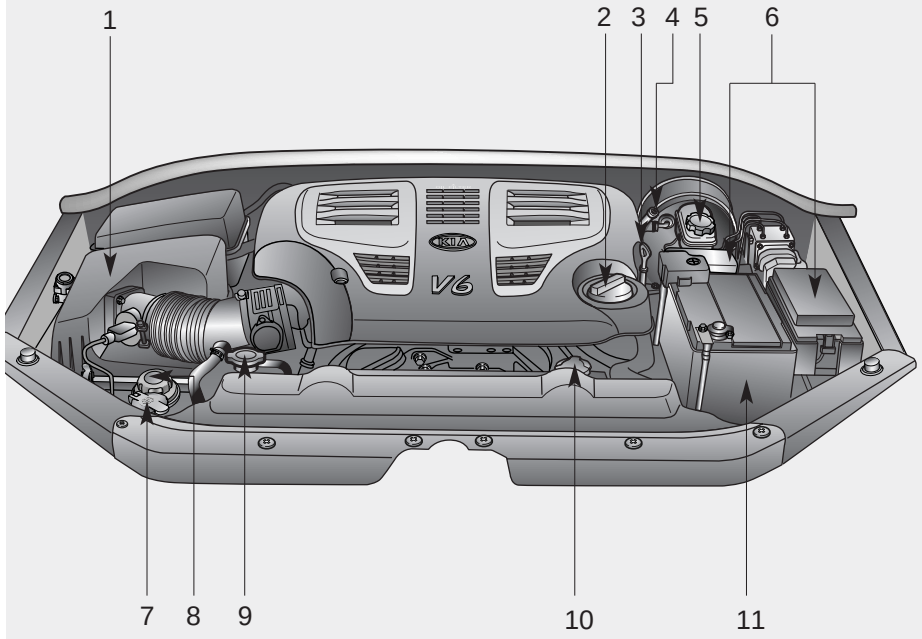

1. Air cleaner
2. Engine oil filler cap
3. Engine oil dipstick
4. Auto transmission fluid dipstick*
5. Brake / clutch* fluid reservoir
6. Fuse box
7. Windshield washer fluid reservoir
8. Power steering fluid reservoir
9. Radiator cap
10. Engine coolant reservoir
11. Battery

* : if equipped

OBL076001N

ENGINE OIL

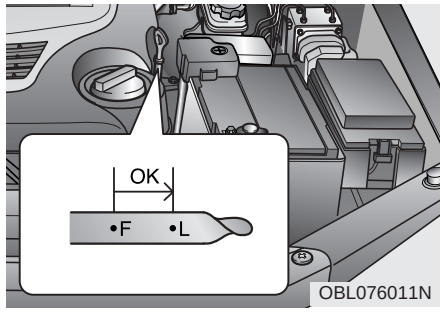

Checking the engine oil level

1. Be sure the vehicle is on level ground.
2. Start the engine and allow it to reach normal operating temperature.
3. Turn the engine off and wait for a few minutes (about 5 minutes) for the oil to return to the oil pan.
4. Pull the dipstick out, wipe it clean, and re-insert it fully.

⚠ WARNING - Radiator hose

Be very careful not to touch the radiator hose when checking or adding the engine oil as it may be hot enough to burn you.

5. Pull the dipstick out again and check the level. The level should be between F and L.

If it is near or at L, add enough oil to bring the level to F. **Do not overfill.**

Use only the specified engine oil. (Refer to "Recommended Lubricants" later in this section.)

Have engine oil and filter changed by an Authorized Kia Dealer according to the Maintenance Schedule at the beginning of this section.

ENGINE COOLING SYSTEM

The high-pressure cooling system has a reservoir filled with a mixture of antifreeze and water. The reservoir is filled at the factory.

Check the antifreeze protection and coolant level at least once a year, at the beginning of the winter season, and before traveling to a colder climate.

Checking the coolant level

⚠ WARNING - Removing radiator cap

- **Never attempt to remove the radiator cap while the engine is operating or hot. Doing so might lead to cooling system and engine damage and could result in serious personal injury from escaping hot coolant or steam.**

(Continued)

(Continued)

- **Turn the engine off and wait until it cools down. Use extreme care when removing the radiator cap. Wrap a thick towel around it, and turn it counterclockwise slowly to the first stop. Step back while the pressure is released from the cooling system. When you are sure all the pressure has been released, press down on the cap, using a thick towel, and continue turning counterclockwise to remove it.**
- **Even if the engine is not operating, do not remove the radiator cap or the drain plug while the engine and radiator are hot. Hot coolant and steam may still blow out under pressure, causing serious injury.**

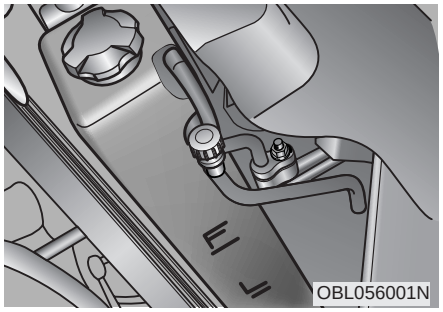

Check the condition and connections of all cooling system hoses and heater hoses. Replace any swollen or deteriorated hoses.

The coolant level should be filled between F and L marks on the side of the coolant reservoir when the engine is cool.

If the coolant level is low, add enough specified coolant to provide protection against freezing and corrosion. Bring the level to F, but do not overfill. If frequent additions are required, see an Authorized Kia Dealer for a cooling system inspection.

Changing coolant

Have coolant changed by an Authorized Kia Dealer according to the Maintenance Schedule at the beginning of this section.

- Use only soft (de-mineralized) water in the coolant mixture.
- The engine in your vehicle has aluminum engine parts and must be protected by an ethylene-glycol-based coolant to prevent corrosion and freezing.
- DO NOT USE alcohol or methanol coolant or mix them with the specified coolant.
- Do not use a solution that contains more than 60% antifreeze or less than 35% antifreeze, which would reduce the effectiveness of the solution.

For mixture percentage, refer to the following table.

Ambient Temperature	Mixture Percentage (volume)	
	Coolant Solution	Water
-15°C (5°F)	35	65
-25°C (-13°F)	40	60
-35°C (-31°F)	50	50
-45°C (-49°F)	60	40

OMG075006

⚠ WARNING - Radiator cap

Do not remove the radiator cap when the engine and radiator are hot. Scalding hot coolant and steam may blow out under pressure causing serious injury.

BRAKE FLUID (IF EQUIPPED)

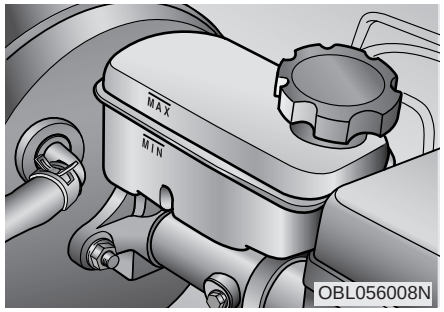

Checking brake fluid level

Check the fluid level in the reservoir periodically. The fluid level should be between MAX and MIN marks on the side of the reservoir.

Before removing the reservoir cap and adding brake fluid, clean the area around the reservoir cap thoroughly to prevent brake fluid contamination.

If the level is low, add fluid to the MAX level. The level will fall with accumulated mileage. This is a normal condition associated with the wear of the brake linings. If the fluid level is excessively low, have the brake system checked by an Authorized Kia Dealer.

Use only the specified brake fluid. (Refer to "Recommended Lubricants" later in this section.)

Never mix different types of fluid.

WARNING - Loss of brake fluid

In the event the brake system requires frequent additions of fluid, the vehicle should be inspected by an Authorized Kia Dealer.

WARNING - Brake fluid

When changing and adding brake fluid, handle it carefully. Do not let it come in contact with your eyes. If brake fluid should come in contact with your eyes, immediately flush them with a large quantity of fresh tap water. Have your eyes examined by a doctor as soon as possible.

CAUTION

Do not allow brake fluid to contact the vehicle's body paint, as paint damage will result. Brake fluid, which has been exposed to open air for an extended time should never be used as its quality cannot be guaranteed. It should be thrown out. Don't put in the wrong kind of fluid. A few drops of mineral-based oil, such as engine oil, in your brake system can damage brake system parts.

POWER STEERING

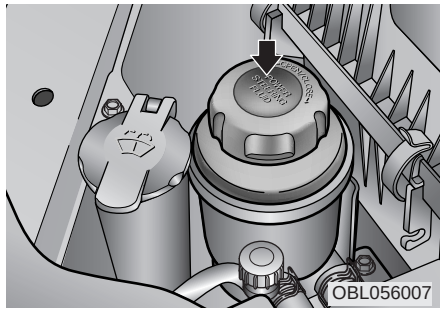

Checking the power steering fluid level

With the vehicle on level ground, check the fluid level in the power steering reservoir periodically. The fluid should be between MAX and MIN marks on the side of the reservoir at the normal temperature.

Before adding power steering fluid, thoroughly clean the area around the reservoir cap to prevent power steering fluid contamination.

If the level is low, add fluid to the MAX level.

In the event the power steering system requires frequent addition of fluid, the vehicle should be inspected by an Authorized Kia Dealer.

CAUTION

- ***To avoid damage to the power steering pump, do not operate the vehicle for prolonged periods with a low power steering fluid level.***
- ***Never start the engine when the reservoir tank is empty.***
- ***When adding fluid, be careful that dirt does not get into the tank.***
- ***Too little fluid can make the steering wheel heavier or strange noise can be generated.***
- ***The use of the non-specified fluid could reduce the effectiveness of the power steering wheel and cause damage to it.***

Use only the specified power steering fluid. (Refer to "Recommended Lubricants" later in this section.)

Power steering hose

Check the connections for oil leaks, severe damage and the twists in the power steering hose before driving.

AUTOMATIC TRANSMISSION (IF EQUIPPED)

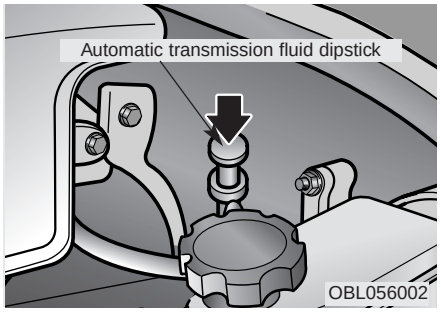

Checking the automatic transmission fluid level

The automatic transmission fluid level should be checked regularly.

Keep the vehicle on the level ground with the parking brake applied and check the fluid level according to the following procedure.

1. Place the selector lever in N (Neutral) position and confirm the engine is running at idle speed.
2. After the transmission is warmed up sufficiently (fluid temperature 70~80°C (158~176°F), for example by 10 minutes usual driving, shift the selector lever through all positions then place the selector lever in “N (Neutral) or P (Park)” position.

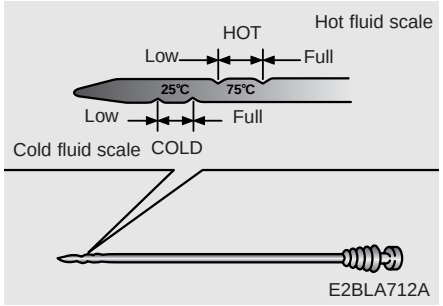

3. Confirm that the fluid level is in “HOT” range on the level gauge. If the fluid level is lower, add the specified fluid from the fill hole. If the fluid level is higher, drain the fluid from the drain hole.
4. If the fluid level is checked in cold condition (fluid temperature 20~30°C (68~86°F) add the fluid to “COLD” line and then recheck the fluid level according to the above step 2.

⚠ WARNING - Transmission fluid

The transmission fluid level should be checked when the engine is at normal operating temperature. This means that the engine, radiator, radiator hose and exhaust system etc., are very hot. Exercise great care not to burn yourself during this procedure.

CAUTION

- ***Low fluid level causes transmission slippage. Overfilling can cause foaming, loss of fluid and transmission malfunction.***
- ***The use of a non-specified fluid could result in transmission malfunction and failure.***

⚠ WARNING - Parking brake

To avoid sudden movement of the vehicle, apply parking brake and depress the brake pedal before moving the shift lever.

✻ NOTICE

"COLD" scale is for reference only and should NOT be used to determine transmission fluid level.

✻ NOTICE

New automatic transmission fluid should be red. The red dye is added so the assembly plant can identify it as automatic transmission fluid and distinguish it from engine oil or antifreeze. The red dye, which is not an indicator of fluid quality, is not permanent. As the vehicle is driven, the automatic transmission fluid will begin to look darker. The color may eventually appear light brown. Therefore, have an Authorized Kia dealer change the automatic transmission fluid according to the Scheduled Maintenance at the beginning of this section.

LUBRICANTS AND FLUIDS

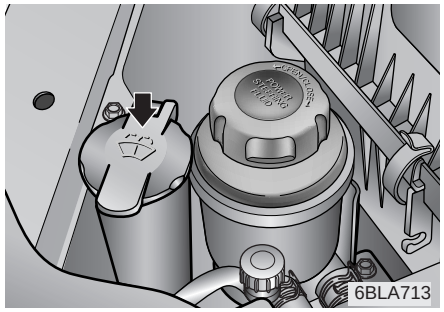

Checking the washer fluid level

The reservoir is translucent so that you can check the level with a quick visual inspection.

Check the fluid level in the washer fluid reservoir and add fluid if necessary. Plain water may be used if washer fluid is not available. However, use washer solvent with antifreeze characteristics in cold climates to prevent freezing.

This warning light indicates the washer fluid reservoir is near empty. Refill the washer fluid as soon as possible.

⚠ WARNING - Coolant

- **Do not use radiator coolant or antifreeze in the washer fluid reservoir.**
- **Radiator coolant can severely obscure visibility when sprayed on the windshield and may cause loss of vehicle control or damage to paint and body trim.**
- **Windshield Washer fluid agents contain some amounts of alcohol and can be flammable under certain circumstances. Do not allow sparks or flame to contact the washer fluid or the washer fluid reservoir. Damage to the vehicle or it's occupants could occur.**
- **Windshield washer fluid is poisonous to humans and animals. Do not drink and avoid contacting windshield washer fluid. Serious injury or death could occur.**

Body lubrication

All moving points of the body, such as door hinges, hood hinges, and locks, should be lubricated each time the engine oil is changed. Use a non-freezing lubricant on locks during cold weather.

Make sure the engine hood secondary latch keeps the hood from opening when the primary latch is released.

AIR CLEANER

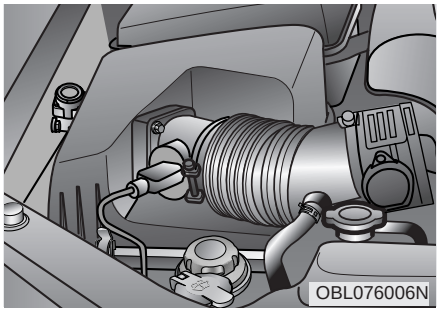

Element replacement

Have the air cleaner element checked and replaced in accordance with the maintenance schedule.

✻ NOTICE

Do not drive with the air cleaner removed; this will result in excessive engine wear.

CAUTION - Engine

Driving without an air cleaner encourages backfiring, which could cause a fire in the engine compartment.

CLIMATE CONTROL AIR FILTER (IF EQUIPPED)

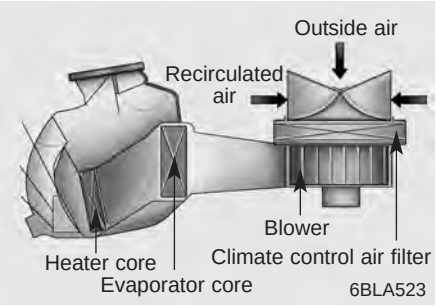

The climate control air filter installed behind the glove box filters the dust or other pollutants that come into the vehicle from the outside through the heating and air conditioning system. If dust or other pollutants accumulate in the filter over a period of time, the air flow from the air vents may decrease, resulting in moisture accumulation on the inside of the windshield even when the outside (fresh) are position is selected. If this happens, have the climate control air filter replaced by an Authorized Kia Dealer.

The air filter should be replaced every 15,000 km (10,000 miles). If the vehicle is operated in the severely air-polluted cities or on dusty rough roads for a long period, it should be inspected more frequently and replaced earlier. When you try to replace the air filter by owner maintenance, replace it performing the following procedure, and in this case, be careful to avoid damaging other components.

WIPER BLADES

Wiper blade maintenance

Commercial hot waxes applied by automatic car washes have been known to make the windshield difficult to clean.

Contamination of either the windshield or the wiper blades with foreign matter can reduce the effectiveness of the windshield wipers. Common sources of contamination are insects, tree sap, and hot wax treatments used by some commercial car washes. If the blades are not wiping properly, clean both the window and the blades with a good cleaner or mild detergent, and rinse thoroughly with clean water.

CAUTION

To prevent damage to the wiper blades, do not use gasoline, kerosene, paint thinner, or other solvents on or near them.

Windshield wiper blade replacement

When the wipers no longer clean adequately, the blades may be worn or cracked, and require replacement.

CAUTION

To prevent damage to the wiper arms or other components, do not attempt to move the wipers manually.

CAUTION

The use of a non-specified wiper blade could result in wiper malfunction and failure.

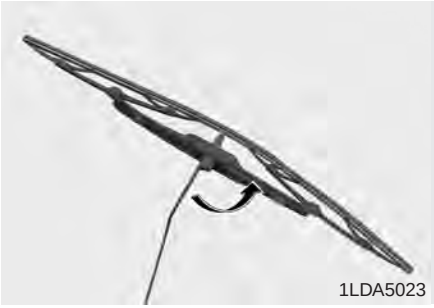

1. Raise the wiper arm and turn the wiper blade assembly to expose the plastic locking clip.

CAUTION

Do not allow the wiper arm to fall against the windshield, since it may chip or crack the windshield.

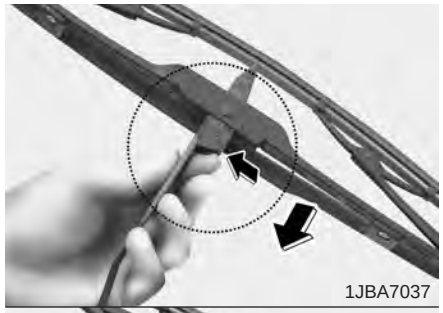

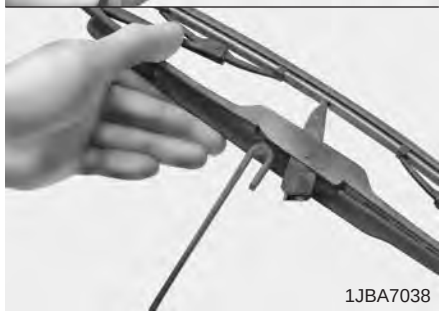

2. Compress the clip and slide the blade assembly downward.
3. Lift it off the arm.
4. Install the blade assembly in the reverse order of removal.

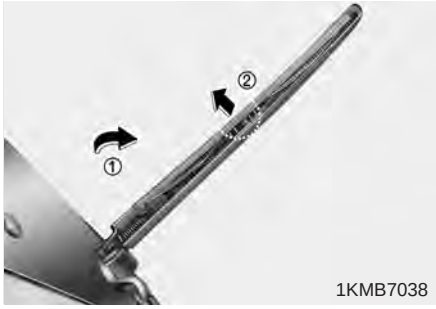

Rear window wiper blade replacement

1. Raise the wiper arm and pull out the wiper blade assembly.

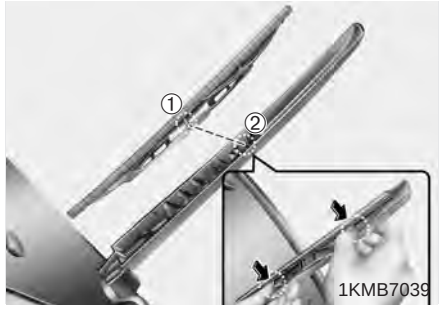

2. Install the new blade assembly by inserting the center part (①) into the slot (②) in the wiper arm until it clicks into place.
3. Make sure the blade assembly is installed firmly by gently pulling on the blade.

BATTERY

WARNING - Battery dangers

Always read the following instructions carefully when handling a battery.

Keep lighted cigarettes and all other flames or sparks away from the battery.

Hydrogen, a highly combustible gas, is always present in battery cells and may explode if ignited.

Keep batteries out of the reach of children because batteries contain highly corrosive SULFURIC ACID. Do not allow battery acid to contact your skin, eyes, clothing or paint finish.

(Continued)

(Continued)

If any electrolyte gets into your eyes, flush your eyes with clean water for at least 15 minutes and get immediate medical attention. If possible, continue to apply water with a sponge or cloth until medical attention is received.

If electrolyte gets on your skin, thoroughly wash the contacted area. If you feel a pain or a burning sensation, get medical attention immediately.

Wear eye protection when charging or working near a battery. Always provide ventilation when working in an enclosed space.

(Continued)

(Continued)

- **When lifting a plastic-cased battery, excessive pressure on the case may cause battery acid to leak, resulting in personal injury. Lift with a battery carrier or with your hands on opposite corners.**
- **Never attempt to recharge the battery when the battery cables are connected.**
- **The electrical ignition system works with high voltage. Never touch these components with the engine running or the ignition switched on.**

Failure to follow the above warnings can result in serious bodily injury or death.

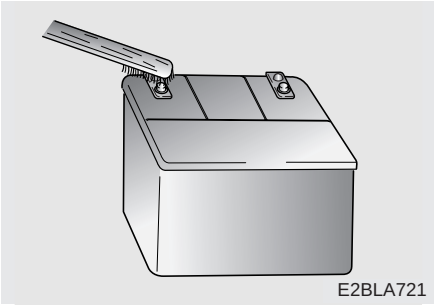

For best battery service :

- Keep the battery securely mounted.
- Keep the battery top clean and dry.
- Keep the terminals and connections clean, tight, and coated with petroleum jelly or terminal grease.
- Rinse any spilled electrolyte from the battery immediately with a solution of water and baking soda.
- If the vehicle is not going to be used for an extended time, disconnect the battery cables.

Battery recharging

Your vehicle has a maintenance-free, calcium-based battery.

- If the battery becomes discharged in a short time (because, for example, the headlights or interior lights were left on while the vehicle was not in use), recharge it by slow charging (trickle) for 10 hours.
- If the battery gradually discharges because of high electric load while the vehicle is being used, recharge it at 20-30A for two hours.

Items to be reset after the battery has been discharged or the battery has been disconnected.

- Clock (See Chapter 3)
- Trip computer (See Chapter 4)
- Compass (See Chapter 4)
- Climate control system (See Chapter 4)
- Audio (See Chapter 3)

WARNING - Recharging battery

When recharging the battery, observe the following precautions:

- **The battery must be removed from the vehicle and placed in an area with good ventilation.**
- **Do not allow cigarettes, sparks, or flame near the battery.**
- **Watch the battery during charging, and stop or reduce the charging rate if the battery cells begin gassing (boiling) violently or if the temperature of the electrolyte of any cell exceeds 49°C (120°F).**
- **Wear eye protection when checking the battery during charging.**
- **Disconnect the battery charger in the following order.**

1. **Turn off the battery charger main switch.**
2. **Unhook the negative clamp from the negative battery terminal.**
3. **Unhook the positive clamp from the positive battery terminal.**

CAUTION

- ***Before performing maintenance or recharging the battery, turn off all accessories and stop the engine.***
- ***The negative battery cable must be removed first and installed last when the battery is disconnected.***

TIRES AND WHEELS

Tires care

For proper maintenance, safety, and maximum fuel economy, you must always maintain recommended tire inflation pressures and stay within the load limits and weight distribution recommended for your vehicle.

Inflation pressures

All tire pressures (including the spare) should be checked every day when the tires are cold. “Cold Tires” means the vehicle has not been driven for at least three hours or driven less than 1.6 km (one mile).

Recommended pressures must be maintained for the best ride, top vehicle handling, and minimum tire wear.

(Refer to “Tires” in section 8, Specifications.)

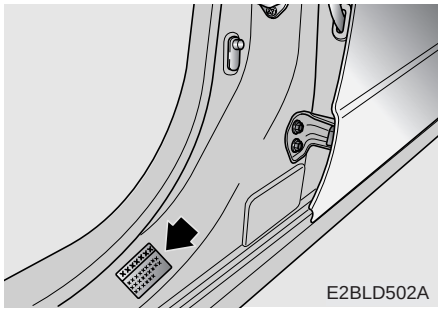

All specifications (sizes and pressures) can be found on a label attached to the front driver’s door sill.

⚠ WARNING - Tire underinflation

Severe underinflation (70 kPa (10 psi) or more) can lead to severe heat build-up, causing blowouts, tread separation and other tire failures that can result in the loss of vehicle control leading to severe injury or death. This risk is much higher on hot days and when driving for protracted periods at high speeds.

CAUTION

- *Underinflation also results in excessive wear, poor handling and reduced fuel economy. Wheel deformation also is possible. Keep your tire pressures at the proper levels. If a tire frequently needs refilling, have it checked by an Authorized Kia Dealer.*
- *Overinflation produces a harsh ride, excessive wear at the center of the tire tread, and a greater possibility of damage from road hazards.*

CAUTION

- *Warm tires normally exceed recommended cold tire pressures by 28 to 41 kPa (4 to 6 psi). Do not release air from warm tires to adjust the pressure or the tires will be underinflated.*
- *Be sure to reinstall the tire inflation valve caps. Without the valve cap, dirt or moisture could get into the valve core and cause air leakage. If the cap have been lost, install new one as soon as possible.*

WARNING - Tire Inflation

Overinflation or underinflation can reduce tire life, adversely affect vehicle handling, and lead to sudden tire failure. This could result in loss of vehicle control and potential injury.

CAUTION - Tire pressure

Always observe the following:

- *Check tire pressure when the tires are cold. (After vehicle has been parked for at least three hours or hasn't been driven more than 1.6 km (one mile) since startup.)*
- *Check the pressure of your spare tire each time you check the pressure of other tires.*
- *Never overload your vehicle. Be careful not to overload a vehicle luggage rack if your vehicle is equipped with one.*
- *Worn, old tires can cause accidents. If your tread is badly worn, or if your tires have been damaged, replace them.*

Checking tire inflation pressure

Check your tires once a month or more.

Also, check the tire pressure of the spare tire.

How to check

Use a good quality gage to check tire pressure. You can not tell if your tires are properly inflated simply by looking at them. Radial tires may look properly inflated even when they're underinflated.

Check the tire's inflation pressure when the tires are cold. - "Cold" means your vehicle has been sitting for at least three hours or driven no more than 1.6 km (1 mile).

Remove the valve cap from the tire valve stem. Press the tire gage firmly onto the valve to get a pressure measurement. If the cold tire inflation pressure matches the recommended pressure on the tire and loading information label, no further adjustment is necessary. If the pressure is low, add air until you reach the recommended amount.

If you overfill the tire, release air by pushing on the metal stem in the center of the tire valve. Recheck the tire pressure with the tire gage. Be sure to put the valve caps back on the valve stems. They help prevent leaks by keeping out dirt and moisture.

Tire rotation

To equalize tread wear, it is recommended that the tires be rotated every 12,000 km (7,500 miles) or sooner if irregular wear develops.

During rotation, check the tires for correct balance.

When rotating tires, check for uneven wear and damage. Abnormal wear is usually caused by incorrect tire pressure, improper wheel alignment, out-of-balance wheels, severe braking or severe cornering. Look for bumps or bulges in the tread or side of tire. Replace the tire if you find either of these conditions. Replace the tire also if you can see fabric or cord. After rotation, be sure to bring the front and rear tire pressures to specification and check lug nut tightness.

Refer to Section 8, Specifications.

With a full-size spare tire

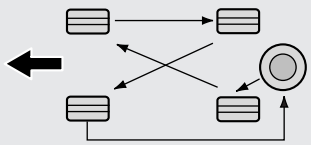

CBGQ0706

Without a spare tire

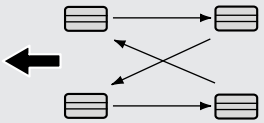

CBGQ0707

Directional tires (if equipped)

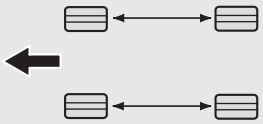

CBGQ0707A

Disc brake pads should be inspected for wear whenever tires are rotated.

Rotate radial tires that have an asymmetric tread pattern only from front to rear and not from right to left.

⚠ WARNING

Do not mix bias ply and radial ply tires under any circumstance. This may cause unusual handling characteristics that could result in death, severe injury, or property damage.

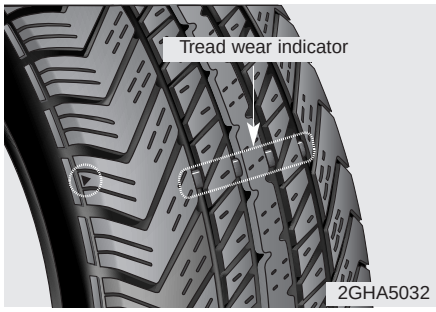

Tire replacement

If the tire is worn evenly, a tread wear indicator will appear as a solid band across the tread. This shows there is less than 1.6 mm (1/16 inch) of tread left on the tire. Replace the tire when this happens.

Do not wait for the band to appear across the entire tread before replacing the tire.

Wheel alignment and tire balance

The wheels on your vehicle were aligned and balanced carefully at the factory to give you the longest tire life and best overall performance.

In most cases, you will not need to have your wheels aligned again. However, if you notice unusual tire wear or your vehicle pulling one way or the other, the alignment may need to be reset.

If you notice your vehicle vibrating when driving on a smooth road, your wheels may need to be rebalanced.

CAUTION

Improper wheel weights can damage your vehicle's aluminum wheels. Use only approved wheel weights.

WARNING - Replacing tires

- **Driving on worn-out tires is very hazardous and will reduce braking effectiveness, steering accuracy, and traction.**
- **Your vehicle is equipped with tires designed to provide for safe ride and handling capability. Do not use a size and type of tire and wheel that is different from the one that is originally installed on your vehicle. It can affect the safety and performance of your vehicle, which could lead to handling failure or rollover and serious injury. When replacing the tires, be sure to equip all four tires with the tire and wheel of the same size, type, tread, brand and load-carrying capacity.**

(Continued)

(Continued)

If you nevertheless decide to equip your vehicle with any tire/wheel combination not recommended by Kia for off road driving, you should not use these tires for highway driving.

- **The use of any other tire size or type may seriously affect ride, handling, ground clearance, stopping distance, body to tire clearance, snow tire clearance, and speedometer reliability.**
- **It is best to replace all four tires at the same time. If that is not possible, or necessary, then replace the two front or two rear tires as a pair. Replacing just one tire can seriously affect your vehicle's handling.**

Wheel replacement

When replacing the metal wheels for any reason, make sure the new wheels are equivalent to the original factory units in diameter, rim width and offset.

⚠ WARNING

A wheel that is not the correct size may adversely affect wheel and bearing life, braking and stopping abilities, handling characteristics, ground clearance, body-to-tire clearance, snow chain clearance, speedometer calibration, headlight aim and bumper height.

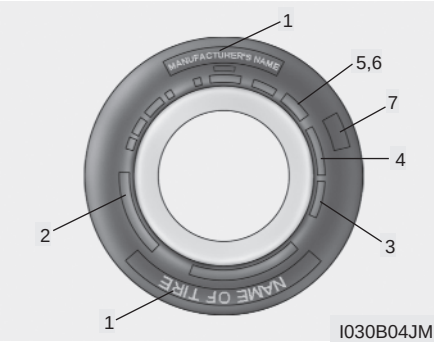

Tire sidewall labeling

Federal law requires tire manufacturers to place standardized information on the sidewall of all tires. This information identifies and describes the fundamental characteristics of the tire and also provides the tire identification number (TIN) for safety standard certification. The TIN can be used to identify the tire in case of a recall.

1. Manufacturer or brand name

Manufacturer or Brand name is shown.

2. Tire size designation

A tire's sidewall is marked with a tire size designation. You will need this information when selecting replacement tires for your car. The following explains what the letters and numbers in the tire size designation mean.

Example tire size designation:

(These numbers are provided as an example only; your tire size designator could vary depending on your vehicle.)

P245/70R16 106T

P - Applicable vehicle type (tires marked with the prefix “P” are intended for use on passenger cars or light trucks; however, not all tires have this marking).

245 - Tire width in millimeters.

70 - Aspect ratio. The tire’s section height as a percentage of its width.

R - Tire construction code (Radial).

16 - Rim diameter in inches.

106 - Load Index, a numerical code associated with the maximum load the tire can carry.

T - Speed Rating Symbol. See the speed rating chart in this section for additional information.

Wheel size designation

Wheels are also marked with important information that you need if you ever have to replace one. The following explains what the letters and numbers in the wheel size designation mean.

Example wheel size designation:

7.0 JJX16

7.0 - Rim width in inches.

JJ - Rim contour designation.

16 - Rim diameter in inches.

Tire speed ratings

The chart below lists many of the different speed ratings currently being used for passenger cars. The speed rating is part of the tire size designation on the sidewall of the tire. This symbol corresponds to that tire's designed maximum safe operating speed.

Speed Rating Symbol	Maximum Speed
S	180 km/h (112 mph)
T	190 km/h (118 mph)
H	210 km/h (130 mph)
V	240 km/h (149 mph)
Z	Above 240 km/h (149 mph)

3. Checking tire life (TIN : Tire Identification Number)

Any tires that are over 6 years, based on the manufacturing date, tire strength and performance, decline with age naturally (even unused spare tires). Therefore, the tires (including the spare tire) should be replaced by new ones. You can find the manufacturing date on the tire sidewall (possibly on the inside of the wheel), displaying the DOT Code. The DOT Code is a series of numbers on a tire consisting of numbers and English letters. The manufacturing date is designated by the last four digits (characters) of the DOT code.

DOT : XXXX XXXX OOOO

The front part of the DOT means a plant code number, tire size and tread pattern and the last four numbers indicate week and year manufactured.

For example:

DOT XXXX XXXX 1606 represents that the tire was produced in the 16th week of 2006.

⚠ WARNING - Tire age

Tires degrade over time, even when they are not being used. Regardless of the remaining tread, it is recommended that tires generally be replaced after six (6) years of normal service. Heat caused by hot climates or frequent high loading conditions can accelerate the aging process. Failure to follow this warning can result in sudden tire failure, which could lead to a loss of control and an accident involving serious injury or death.

4. Tire ply composition and material

The number of layers or plies of rubbercoated fabric in the tire. Tire manufacturers also must indicate the materials in the tire, which include steel, nylon, polyester, and others. The letter "R" means radial ply construction; the letter "D" means diagonal or bias ply construction; and the letter "B" means belted-bias ply construction.

5. Maximum permissible inflation pressure

This number is the greatest amount of air pressure that should be put in the tire. Do not exceed the maximum permissible inflation pressure. Refer to the Tire and Loading Information label for recommended inflation pressure.

6. Maximum load rating

This number indicates the maximum load in kilograms and pounds that can be carried by the tire. When replacing the tires on the vehicle, always use a tire that has the same load rating as the factory installed tire.

7. Uniform tire quality grading

The following information relates to the tire grading system developed by the Canadian Motor Vehicle Standard Safety (CMVSS) for grading tires by tread wear, traction and temperature performance.

Tread wear

The tread wear grade is a comparative rating based on the wear rate of the tire when tested under controlled conditions on a specified government test course. For example, a tire graded 150 would wear one-and-a-half times as well on the government course as a tire graded 100.

The relative performance of tires depends upon the actual conditions of their use. However, performance may differ from the norm because of variations in driving habits, service practices and differences in road characteristics and climate.

These grades are molded on the side-walls of passenger vehicle tires. The tires available as standard or optional equipment on Kia vehicles may vary with respect to grade.

Traction - AA, A, B & C

The traction grades, from highest to lowest, are AA, A, B and C. The grades represent the tires ability to stop on wet pavement as measured under controlled conditions on specified government test surfaces of asphalt and concrete. A tire marked C may have poor traction performance.

Temperature -A, B & C

The temperature grades are A (the highest), B and C. The grades represent the tire's resistance to the generation of heat and its ability to dissipate heat when tested under controlled conditions on a specified indoor laboratory test wheel.

Sustained high temperature can cause the material of the tires to degenerate and reduce tires life, and excessive temperature can lead to sudden tires failure. Grades A and B represent higher levels of performance on the laboratory test wheel than the minimum required by the law.

⚠ WARNING - Tire temperature

The temperature grade for this tire is established for a tire that is properly inflated and not overloaded. Excessive speed, underinflation, or excessive loading, either separately or in combination, can cause heat build-up and possible sudden tires failure. This can cause loss of vehicle control and serious injury or death.

Tire terminology and definitions

Air Pressure: The amount of air inside the tire pressing outward on the tire. Air pressure is expressed in kilopascal (kPa) or pounds per square inch (psi).

Accessory Weight: This means the combined weight of optional accessories. Some examples of optional accessories are, automatic transmission, power seats, and air conditioning.

Aspect Ratio: The relationship of a tire's height to its width.

Belt: A rubber coated layer of cords that is located between the plies and the tread. Cords may be made from steel or other reinforcing materials.

Bead: The tire bead contains steel wires wrapped by steel cords that hold the tire onto the rim.

Bias Ply Tire: A pneumatic tire in which the plies are laid at alternate angles less than 90 degrees to the centerline of the tread.

Cold Tire Pressure: The amount of air pressure in a tire, measured in kilopascals (kPa) or pounds per square inch (psi) before a tire has built up heat from driving.

Curb Weight: This means the weight of a motor vehicle with standard and optional equipment including the maximum capacity of fuel, oil and coolant, but without passengers and cargo.

DOT Markings: The DOT code includes the Tire Identification Number (TIN), an alphanumeric designator which can also identify the tire manufacturer, production plant, brand and date of production.

GVWR: Gross Vehicle Weight Rating

GAWR FRT: Gross Axle Weight Rating for the front Axle.

GAWR RR: Gross Axle Weight Rating for the rear axle.

Intended Outboard Sidewall: The side of an asymmetrical tire, that must always face outward when mounted on a vehicle.

Kilopascal (kPa): The metric unit for air pressure.

Load Index: An assigned number ranging from 1 to 279 that corresponds to the load carrying capacity of a tire.

Maximum Inflation Pressure: The maximum air pressure to which a cold tire may be inflated. The maximum air pressure is molded onto the sidewall.

Maximum Load Rating: The load rating for a tire at the maximum permissible inflation pressure for that tire.

Maximum Loaded Vehicle Weight: The sum of curb weight; accessory weight; vehicle capacity weight; and production options weight.

Normal Occupant Weight: The number of occupants a vehicle is designed to seat multiplied by 68 kg (150 pounds).

Occupant Distribution: Designated seating positions.

Outward Facing Sidewall: The side of a asymmetrical tire that has a particular side that faces outward when mounted on a vehicle. The side of the tire that contains a whitewall, bears white lettering or bears manufacturer, brand and or model name molding that is higher or deeper than the same moldings on the other sidewall of the tire.

Passenger (P-Metric) Tire: A tire used on passenger cars and some light duty trucks and multipurpose vehicles.

Recommended Inflation Pressure: Vehicle manufacturer's recommended tire inflation pressure and shown on the tire placard.

Radial Ply tire: A pneumatic tire in which the ply cords that extend to the beads are laid at 90 degrees to the centerline of the tread.

Rim: A metal support for a tire and upon which the tire beads are seated.

Sidewall: The portion of a tire between the tread and the bead.

Speed Rating: An alphanumeric code assigned to a tire indicating the maximum speed at which a tire can operate.

Traction: The friction between the tire and the road surface. The amount of grip provided.

Tread: The portion of a tire that comes into contact with the road.

Treadwear Indicators: Narrow bands, sometimes called “wear bars”, that show across the tread of a tire when only 2/32 inch of tread remains.

UTQGS: Uniform Tire Quality Grading Standards, a tire information system that provides consumers with ratings for a tire's traction, temperature and treadwear. Ratings are determined by tire manufacturers using government testing procedures. The ratings are molded into the sidewall of the tire.

Vehicle Capacity Weight: The number of designated seating positions multiplied by 68 kg (150 lbs.) plus the rated cargo and luggage load.

Vehicle Maximum Load on the Tire: Load on an individual tire due to curb and accessory weight plus maximum occupant and cargo weight.

Vehicle Normal Load on the Tire: That load on an individual tire that is determined by distributing to each axle its share of the curb weight, accessory weight, and normal occupant weight and driving by 2.

Vehicle Placard: A label permanently attached to a vehicle showing the original equipment tire size and recommended inflation pressure.

All season tires

Kia specifies all season tires on some models to provide good performance for use all year round, including snowy and icy road conditions. All season tires are identified by ALL SEASON and/or M+S (Mud and Snow) on the tire sidewall. Snow tires have better snow traction than all season tires and may be more appropriate in some areas.

Summer tires

Kia specifies summer tires on some models to provide superior performance on dry roads. Summer tire performance is substantrally reduced in snow and ice. Summer tires do not have the tire traction rating M+S (Mud and Snow) on the tire side wall. if you plan to operate your vehicle in snowy or icy conditions. Kia recommends the use of snow tires or all season tires on all four wheels.

Snow tires

If you equip your car with snow tires, they should be the same size and have the same load capacity as the original tires. Snow tires should be installed on all four wheels; otherwise, poor handling may result.

Snow tires should carry 28 kPa (4 psi) more air pressure than the pressure recommended for the standard tires on the tire label on the driver's side of the center pillar, or up to the maximum pressure shown on the tire sidewall whichever is less.

Do not drive faster than 120 km/h (75 mph) when your car is equipped with snow tires.

LUBRICANT SPECIFICATIONS

Recommended lubricants

To help achieve proper engine and powertrain performance and durability, use only lubricants of the proper quality. The correct lubricants also help promote engine efficiency that results in improved fuel economy.

Engine oils labeled Energy Conserving Oil are now available. Along with other additional benefits, they contribute to fuel economy by reducing the amount of fuel necessary to overcome engine friction. Often, these improvements are difficult to measure in everyday driving, but in a year's time, they can offer significant cost and energy savings.

These lubricants and fluids are recommended for use in your vehicle.

Lubricant		Classification
Engine oil *1		API Service SJ, SL or above, ILSAC GF-3 or above
Automatic transmission fluid		APOLLOIL ATF RED-1K
4WD transfer case fluid		DEXRON III (fill-for-life)
Front differential fluid		API Service GL-5 (SAE 90)
Rear differential fluid	Without LSD	API Service GL-5 (SAE 90)
	With LSD	API Service GL-5 (SAE 85W-90, INFILREX 33)
Power steering fluid		PSF-III
Brake fluid		FMVSS116 DOT-3 or DOT-4

*1 Refer to the recommended SAE viscosity numbers on the next page.

Recommended SAE viscosity number

CAUTION

Always be sure to clean the area around any filler plug, drain plug, or dipstick before checking or draining any lubricant. This is especially important in dusty or sandy areas and when the vehicle is used on unpaved roads. Cleaning the plug and dipstick areas will prevent dirt and grit from entering the engine and other mechanisms that could be damaged.

Engine oil viscosity (thickness) has an effect on fuel economy and cold weather operating (starting and oil flow). Lower viscosity engine oils can provide better fuel economy and cold weather performance, however, higher viscosity engine oils are required for satisfactory lubrication in hot weather. Using oils of any viscosity other than those recommended could result in engine damage.

When choosing an oil, consider the range of temperature your vehicle will be operated in before the next oil change. Proceed to select the recommended oil viscosity from the chart.

Temperature Range for SAE Viscosity Numbers										
Temperature	°C	-30	-20	-10	0	10	20	30	40	50
	(°F)	-10	0	20	40	60	80	100	120	
Gasoline Engine Oil *1				10W-30						
				5W-20, 5W-30						

1. For better fuel economy, it is recommended to use the engine oil of a viscosity grade SAE 5W-20,5W-30 (API SJ,SL / ILSAC GF-3). However, if the engine oil is not available in your country, select the proper engine oil using the engine oil viscosity chart.

EXTERIOR CARE

Exterior general caution

It is very important to follow the label directions when using any chemical cleaner or polish. Read all warning and caution statements that appear on the label.

Finish maintenance

Washing

To help protect your vehicle's finish from rust and deterioration, wash it thoroughly and frequently at least once a month with lukewarm or cold water.

If you use your vehicle for off-road driving, you should wash it after each off-road trip. Pay special attention to the removal of any accumulation of salt, dirt, mud, and other foreign materials. Make sure the drain holes in the lower edges of the doors and rocker panels are kept clear and clean.

Insects, tar, tree sap, bird droppings, industrial pollution and similar deposits can damage your vehicle's finish if not removed immediately.

Even prompt washing with plain water may not completely remove all these deposits. A mild soap, safe for use on painted surfaces, may be used.

After washing, rinse the vehicle thoroughly with lukewarm or cold water. Do not allow soap to dry on the finish.

CAUTION

Do not use strong soap, chemical detergents or hot water, and do not wash the vehicle in direct sunlight or when the body of the vehicle is warm.

WARNING - Wet brakes

After washing the vehicle, test the brakes while driving slowly to see if they have been affected by water. If braking performance is impaired, dry the brakes by applying them lightly while maintaining a slow forward speed.

CAUTION

- ***Water washing in the engine compartment including high pressure water washing may cause the failure of electrical circuits located in the engine compartment.***
- ***Never allow water or other liquids to come in contact with electrical/electronic components inside the vehicle as this may damage them.***

Waxing

Wax the vehicle when water will no longer bead on the paint.

Always wash and dry the vehicle before waxing. Use a good quality liquid or paste wax, and follow the manufacturer's instructions. Wax all metal trim to protect it and to maintain its luster.

Removing oil, tar, and similar materials with a spot remover will usually strip the wax from the finish. Be sure to re-wax these areas even if the rest of the vehicle does not yet need waxing.

CAUTION

- ***Wiping dust or dirt off the body with a dry cloth will scratch the finish.***
- ***Do not use steel wool, abrasive cleaners, or strong detergents containing highly alkaline or caustic agents on chrome-plated or anodized aluminum parts. This may result in damage to the protective coating and cause discoloration or paint deterioration.***

Finish damage repair

Deep scratches or stone chips in the painted surface must be repaired promptly. Exposed metal will quickly rust and may develop into a major repair expense.

✻ NOTICE

If your vehicle is damaged and requires any metal repair or replacement, be sure the body shop applies anti-corrosion materials to the parts repaired or replaced.

Bright-metal maintenance

- To remove road tar and insects, use a tar remover, not a scraper or other sharp object.
- To protect the surfaces of bright-metal parts from corrosion, apply a coating of wax or chrome preservative and rub to a high luster.
- During winter weather or in coastal areas, cover the bright metal parts with a heavier coating of wax or preservative. If necessary, coat the parts with non-corrosive petroleum jelly or other protective compound.

Underbody maintenance

Corrosive materials used for ice and snow removal and dust control may collect on the underbody. If these materials are not removed, accelerated rusting can occur on underbody parts such as the fuel lines, frame, floor pan and exhaust system, even though they have been treated with rust protection.

Thoroughly flush the vehicle underbody and wheel openings with lukewarm or cold water once a month, after off-road driving and at the end of each winter. Pay special attention to these areas because it is difficult to see all the mud and dirt. It will do more harm than good to wet down the road grime without removing it. The lower edges of doors, rocker panels, and frame members have drain holes that should not be allowed to clog with dirt; trapped water in these areas can cause rusting.

⚠ WARNING

After washing the vehicle, test the brakes while driving slowly to see if they have been affected by water. If braking performance is impaired, dry the brakes by applying them lightly while maintaining a slow forward speed.

Aluminum wheel maintenance

The aluminum wheels are coated with a clear protective finish.

- Do not use any abrasive cleaner, polishing compound, solvent, or wire brushes on aluminum wheels. They may scratch or damage the finish.
- Use only a mild soap or neutral detergent, and rinse thoroughly with water. Also, be sure to clean the wheels after driving on salted roads. This helps prevent corrosion.
- Avoid washing the wheels with high-speed car wash brushes.
- Do not use any acid detergent. It may damage and corrode the aluminum wheels coated with a clear protective finish.

INTERIOR CARE

Interior general precautions

Prevent caustic solutions such as perfume and cosmetic oil from contacting the dashboard because they may cause damage or discoloration. If they do contact the dashboard, wipe them off immediately. See the instructions that follow for the proper way to clean vinyl.

CAUTION

Never allow water or other liquids to come in contact with electrical/electronic components inside the vehicle as this may damage them.

Cleaning the upholstery and interior trim

Vinyl

Remove dust and loose dirt from vinyl with a whisk broom or vacuum cleaner. Clean vinyl surfaces with a vinyl cleaner.

Fabric

Remove dust and loose dirt from fabric with a whisk broom or vacuum cleaner. Clean with a mild soap solution recommended for upholstery or carpets. Remove fresh spots immediately with a fabric spot cleaner. If fresh spots do not receive immediate attention, the fabric can be stained and its color can be affected. Also, its fire-resistant properties can be reduced if the material is not properly maintained.

CAUTION

Using anything but recommended cleaners and procedures may affect the fabric's appearance and fire-resistant properties.

To clean the leather upholstery (if equipped)

In the normal course of use, leather upholstered surfaces will, like any material, pick-up dust and dirt. This dust and dirt must be cleaned off or it may work into the surface of the leather, causing damage.

Fine leather needs care, and should be cleaned when necessary. Washing leather thoroughly with soap and water will keep your leather lustrous, beautiful and ensure you have many years of wear.

Take a piece of cheese cloth and using any mild soap and lukewarm water, work up a good lather. Thoroughly wash the leather. Wipe clean with a slightly damp cloth and dry with soft cloth. Do this as often as the leather becomes soiled.

During tanning operations, sufficient oils are incorporated through processing that none need be applied during the life of the leather. Oil applied to the finished surface will in no way help the leather and may do more harm than good. Varnishes and furniture polishes should never be used under any conditions.

Cleaning the lap/shoulder belt webbing

Clean the belt webbing with any mild soap solution recommended for cleaning upholstery or carpet. Follow the instructions provided with the soap. Do not bleach or re-dye the webbing because this may weaken it.

Cleaning the interior window glass

If the interior glass surfaces of the vehicle become fogged (that is, covered with an oily, greasy or waxy film), they should be cleaned with glass cleaner. Follow the directions on the glass cleaner container.

CAUTION

Do not scrape or scratch the inside of the rear window. This may result in damage to the rear window defroster grid.

Specifications

8

SPECIFICATIONS

The specifications given here are for general information only. Although this information was accurate at the time of printing, Kia reserves the right to change its vehicles or their specifications without notice. Please check with an authorized Kia dealer for more precise and more up-to-date information.

Dimensions

Item	mm (in)
Overall length	4,590 (180.7)
Overall width	1800(70.9) / 1885 (74.2)*1
Overall height	1725 (67.9) / 1805 (71.1)*2
Front tread	1580 (62.2)
Rear tread	1580 (62.2)
Wheelbase	2710 (106.7)

*1 With side garnish *2 With roof rack

Weights

Refer to the compliance label describing GVWR & GAWR weights attached to your vehicle.
(see page 5-39, Label information)

Bulb wattage

Light Bulb	Wattage
Exterior Lights	
Headlights (High/Low)	55 / 55
Front turn signal / position lights	28 / 8
Front fog lights	27
Front side marker	5
Rear turn signal lights	27
Stop and tail lights	27 / 8
Back-up lights	18
License plate lights	5
High mounted stop light	5
Rear side marker	5
Interior Lights	
Room lamp	10
Map lamp	10
Rear cargo area lamp	10
Door courtesy lamp	5
Vanity mirror lamp	3

Tires

Item		Inflation Pressure	Wheel lug nut torque
Tire	Wheel	kPa (psi)	kg·m (lb·ft, N·m)
P245/70R16	7.0JJ x 16	210 (30)	9~11 (65~79, 88~107)
P245/65R17	7.0JJ x 17	210 (30)	9~11 (65~79, 88~107)

Capacities

Lubricant		Volume	Classification
Engine oil with filter *1		5.2 *l* (5.49 US qt.)	API Service SJ, SL or above, ILSAC GF-3 or above
Automatic transmission fluid		10 *l* (10.57 US qt.)	APOLLOIL ATF RED-1K
4WD transfer case		1.42 *l* (1.50 US qt.)	DEXRON III (fill for-life)
Power steering		0.85~0.9 *l* (0.9~0.95 US qt.)	PSF-III
Front differential		1.3 *l* (1.37 US qt.)	API SERVICE GL-5 (SAE 90)
Rear differential	Without LSD	1.3 *l* (1.37 US qt.)	API SERVICE GL-5 (SAE 90)
	With LSD	1.6 *l* (1.69 US qt.)	API SERVICE GL-5 (SAE 85W-90, INFILREX33)
Coolant		9.0 *l* (9.4 US qt.)	Ethylene glycol base for aluminum radiator
Brake fluid		0.35 *l* (0.37 US qt.)	FMVSS116 DOT-3 or DOT-4
Fuel		80 *l* (21 US gal)	-

*1 Refer to the recommended SAE viscosity numbers on the page 7-38.

Index

A

Air bags - advanced supplemental restraint system ····· 3-47
Air cleaner ····· 7-19
Antenna ····· 3-98
Audio remote control ····· 3-99
Audio system ····· 3-100
Auto fuel cutoff switch ····· 3-74
Automatic climate control system ····· 4-66
Automatic transmission ····· 4-5,7-16

B

Battery ····· 7-22
Before driving ····· 5-5
Brake fluid ····· 7-14
Brake system ····· 4-20

C

Climate control air filter ····· 7-20
Cruise control system ····· 4-27

D

Defroster ····· 4-57
Door locks ····· 3-7

E

Electrical circuit protection ····· 6-7
Electronic stability control ····· 4-30
Emergency starting ····· 6-4
Emission control system ····· 5-3
Engine compartment ····· 2-3,7-10
Engine cooling system ····· 7-12
Engine oil ····· 7-11
Exterior care ····· 7-39

F

Four wheel drive (4WD) ····· 4-10
Fuel filler lid ····· 3-71
Fuel requirements ····· 5-2

G

Gauges ····· 4-37

H

Hazard warning flasher ····· 4-58
Homelink® wireless control system ····· 3-78
Hood ····· 3-69
How to use this manual ····· 1-2

I

If you have a flat tire ····· 6-19
Ignition switch ····· 4-2
Immobilizer system ····· 3-5
Instrument cluster ····· 4-36
Instrument panel overview ····· 2-2
Interior care ····· 7-42
Interior features ····· 3-86
Interior lights ····· 3-82

K

Keys ····· 3-2

L

Label information ····· 5-39
Lighting ····· 4-51
Limited slip differential ····· 4-19
Lubricant specifications ····· 7-37
Lubricants and fluids ····· 7-18
Luggage center box ····· 3-96
Luggage net ····· 3-94

M

Maintenance schedule Owner maintenance ····· 7-7
Maintenance services ····· 7-2
Manual climate control system ····· 4-59
Mirrors ····· 3-74
Multi-meter ····· 4-45

O

Overheating ····· 6-3

P

Power steering ····· 7-15

R

Rear parking assist system ····· 4-33
Remote keyless entry ····· 3-3
Road warning ····· 6-2
Roof rack ····· 3-96

S

Safety belts ····· 3-25
Seat ····· 3-15
Special driving conditions ····· 5-7
Specifications ····· 8-2
Starting the engine ····· 4-4
Steering wheel ····· 4-25
Storage compartment ····· 3-83
Suggestions for economical operation ····· 5-6
Sunroof ····· 3-91

T

Tires and wheels ····· **7-25**
Tonneau cover ····· **3-95**
Towing ····· **6-14**
Trailer towing ····· **5-31**

U

Using four-wheel drive ····· **5-11**

V

Vehicle break-in process ····· **1-3**
Vehicle handling instructions ····· **1-3**
Vehicle load limit ····· **5-25**

W

Warnings and indicators ····· **4-39**
Weight of the vehicle ····· **5-29**
Window ····· **3-13**
Windshield defrosting and defogging ····· **4-75**
Wiper blades ····· **7-20**
Wipers and washers ····· **4-54**