YAMAHA

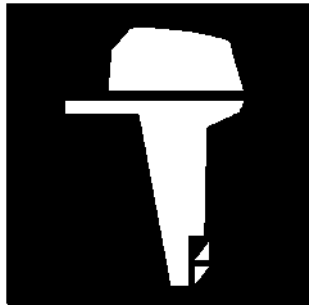

PARTS CATALOGUE

4ACMH'07 (6E06)
5CMH'07 (6E36)

1F6E0-700E1

( )

YAMAHA
GENUINE
Parts & Accessories

4ACMH/5CMH
PARTS CATALOGUE
©2006 by Yamaha Motor Co., Ltd.
1st edition, May 2006
All rights reserved.
Any reprinting or unauthorized use
without the written permission of
Yamaha Motor Co., Ltd.
is expressly prohibited.
Printed in Japan.

FOREWORD

This Parts Catalogue is related to the parts for the model(s) on the cover page. When you are ordering replacement parts, please refer to this Parts Catalogue and quote both part numbers and part names correctly.

1. Modifications or additions which have been made after the issue of the Parts Catalogue will be announced in the Parts News.
   It is advisable that you make the necessary corrections to the Parts Catalogue according to the Parts News.

2. Abbreviations
   The following abbreviations are used in this Parts Catalogue.

   "UR" Use specified parts number.
   "UN" Use as many as needed.
   "AP" Alternate Parts
   "LM" Locally Made (Parts need to be ordered locally)
   "F#" Frame No. (Applicable machine No.)
   "O/S" Over Size

3. The number of components for assembly
   - Parts, which are to be supplied in an assembly, are listed with a dot (.) in front of the part name as shown below.
   - The numeral appearing to the right of each component part indicates the quantity of parts for each assembly unit.

PART NO.	DESCRIPTION	Q'TY	REMARKS
2F5–83310–60	FRONT FLASHER LIGHT ASSY	2	
115–83311–60	.BULB (6V–18W)	1	

4. Applicable colours of graphics are represented in the "REMARKS" as shown below.

PART NO.	DESCRIPTION	Q'TY	REMARKS
2N4–24110–00–X5	FUEL TANK COMP.	2	MXR
3J1–24240–10	.GRAPHIC, FUEL TANK	1	FOR MXR

5. Note that the illustrations for reference in finding parts numbers are not to be used for assembling. When assembling, please use the applicable service manual.

6. The asterisk (*) before a reference number indicates modified items after the first edition.

7. Applicable Serial No.

   Engine Serial No.

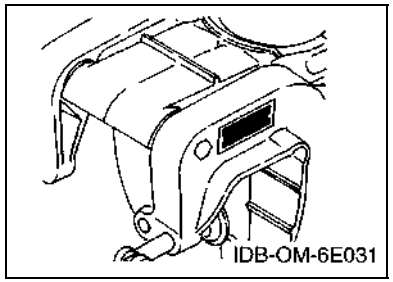

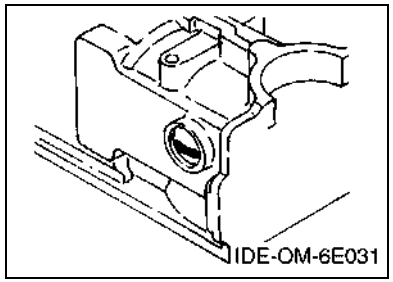

8. Applicable Engine Starting Serial No.

Model	Serial No.	Model	Serial No.
4AC	6E0K-1007271	5C	6E3K-1034061

9. Applicable Colour Code

Abbreviation	Colour Name	Colour Code
DBNM2	DARK BLUISH GRAY METALLIC 2	004D

10. Quantity Column Information

Column No.	Name Of Q'ty Column	Applicable Model
1	6E06	4ACMH
2	6E36	5CMH

CONTENTS

TOP COWLING 1
CYLINDER & CRANKCASE 2
INTAKE 5
STARTER 7
GENERATOR 9
ELECTRICAL 10
BOTTOM COWLING 11
CONTROL 13
UPPER CASING & BRACKET 15
LOWER CASING & DRIVE 18
REPAIR KIT 21

INDEX

NUMERICAL INDEX 23

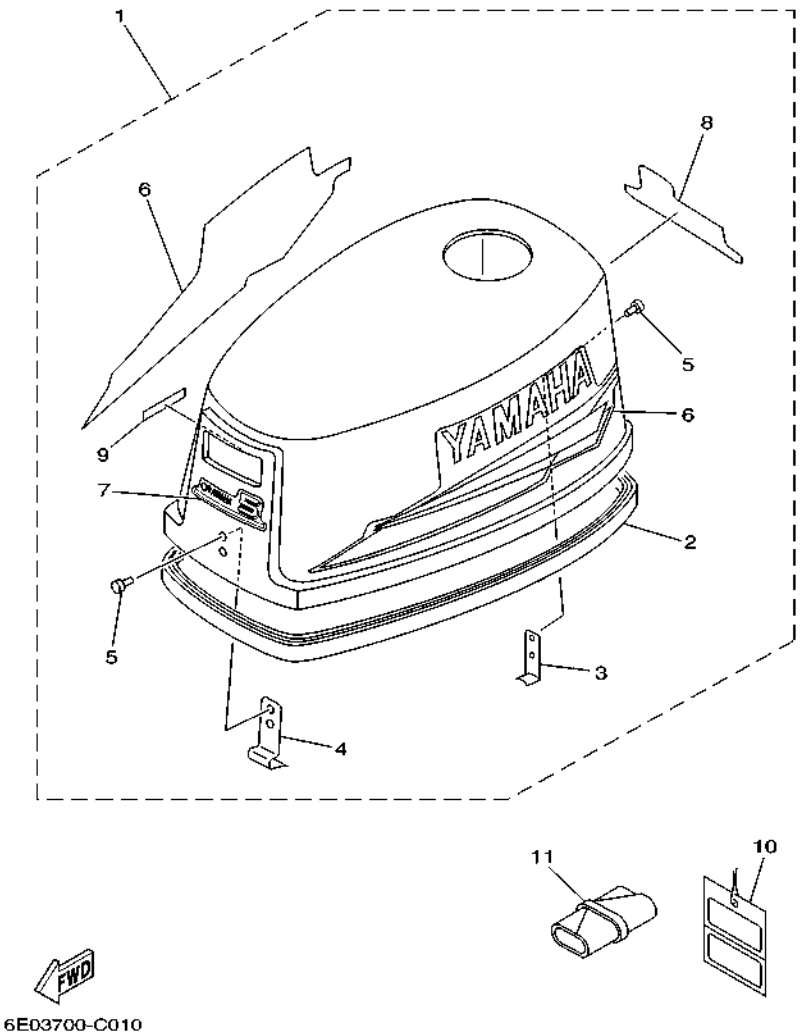

FIG. 1 TOP COWLING

REF. NO.	PART NO.	DESCRIPTION	6E06	6E36				REMARKS
1	6E0–42610–40–4D	TOP COWLING ASSY	1					
	6E3–42610–40–4D	TOP COWLING ASSY		1				
2	6E0–42615–00	.SEAL	1	1				
3	6E0–42647–01	.HOLDER, CLAMP BAND	1	1				
4	6E0–42651–02	.HOOK	1	1				
5	90266–04M00	.RIVET	4	4				
6	6E0–W0070–14	.GRAPHIC SET	1	1				
7	6E0–42677–20	.GRAPHIC, FRONT	1					
	6E3–42677–20	.GRAPHIC, FRONT		1				
8	6E0–42678–12	.GRAPHIC, REAR	1					
	6E3–42678–12	.GRAPHIC, REAR		1				
9	6E0–44191–11	.INDICATOR, SHIFT	1	1				
10	61H–2819R–31	TAG, WARNING	1	1				
11	656–W2810–02	TOOL KIT	1	1				AP

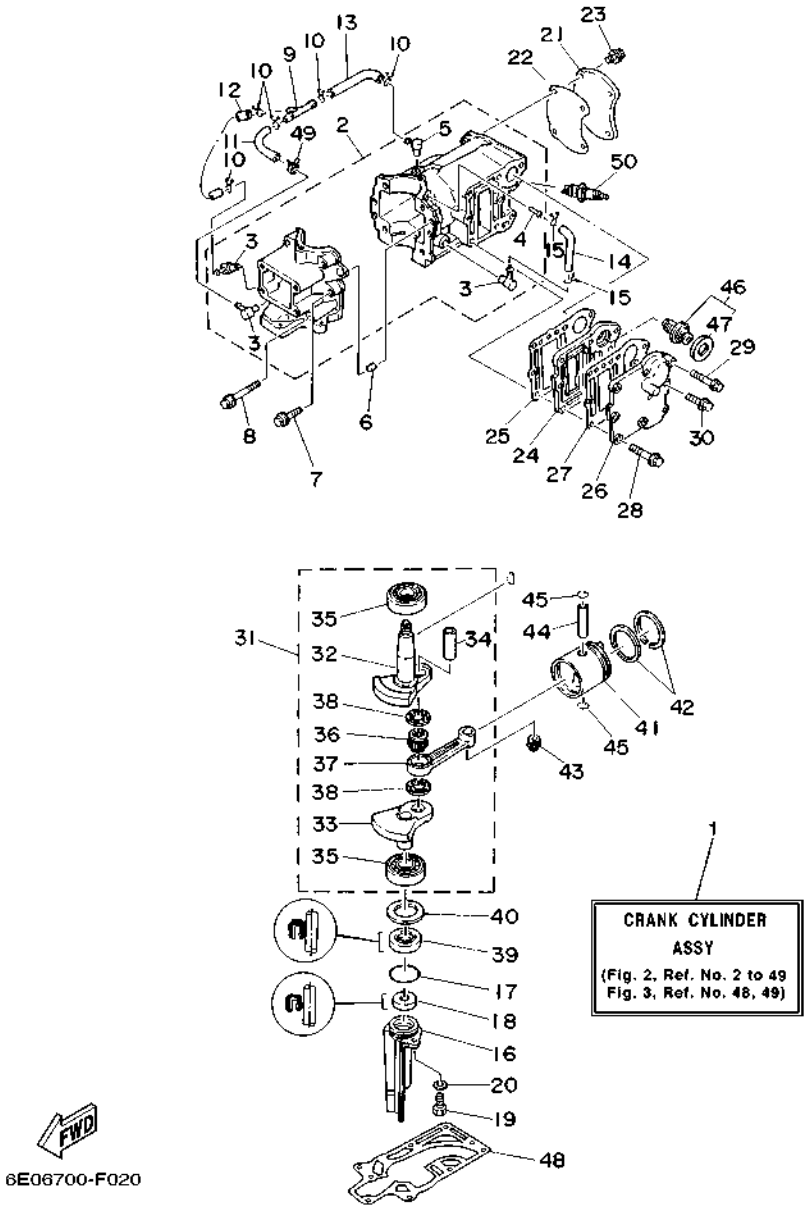

FIG. 2 CYLINDER & CRANKCASE

REF. NO.	PART NO.	DESCRIPTION	6E06	6E36				REMARKS
1	6E0–W0090–04–1S	CRANK CYLINDER ASSY	1					
	6E3–W0090–04–1S	CRANK CYLINDER ASSY		1				
2	6E0–15100–01–1S	CRANKCASE ASSY	1					
	6E3–15100–02–1S	CRANKCASE ASSY		1				
3	650–11370–01	.CHECK VALVE ASSY	3	3				
4	624–14485–00	.PIPE, JOINT	1	1				
5	6E5–11372–01	.NIPPLE, HOSE	1	1				
6	93606–12019	PIN, DOWEL	2	2				
7	90105–06M16	BOLT, FLANGE	4	4				
8	90105–06M17	BOLT, FLANGE	2	2				
9	6E0–24378–00	PIPE, JOINT 4	1	1				
10	90467–06016	CLIP	5	5				
11	90445–07M00	HOSE (L100)	1	1				
12	90445–07M28	HOSE (L70)	1	1				
13	90445–07M32	HOSE (L120)	1	1				
14	90445–07M28	HOSE (L70)	1	1				
15	90467–06016	CLIP	2	2				
16	6E0–15396–03–5B	HOUSING, OIL SEAL	1	1				
17	93210–31MJ5	O-RING	1	1				
18	93101–10M25	OIL SEAL	1	1				
19	97095–06016	BOLT	1	1				
20	92995–06600	WASHER	1	1				
21	6E0–11191–01–1S	COVER, CYLINDER HEAD 1	1					
	6E3–11191–01–1S	COVER, CYLINDER HEAD 1		1				
22	6E0–11193–A1	GASKET, HEAD COVER 1	1					
	6E3–11193–A1	GASKET, HEAD COVER 1		1				
23	90105–06039	BOLT, FLANGE	4	4				

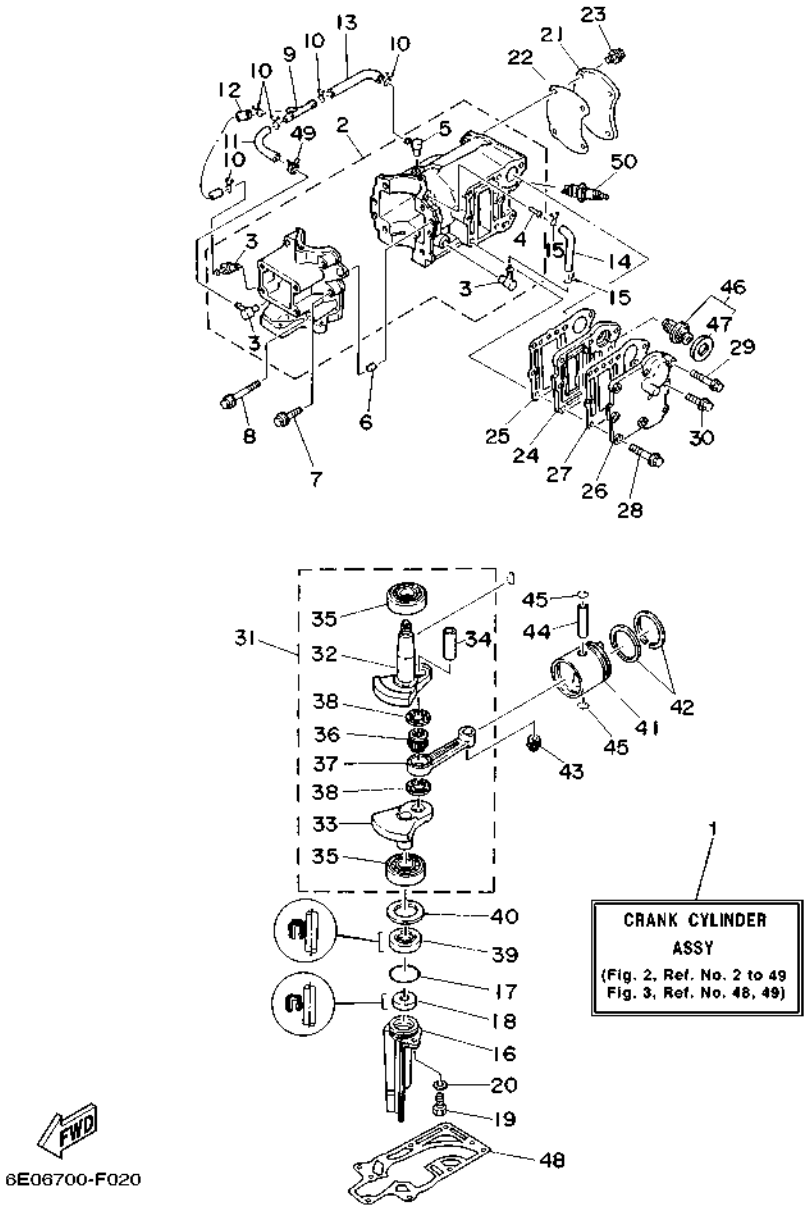

FIG. 2 CYLINDER & CRANKCASE

REF. NO.	PART NO.	DESCRIPTION	6E06	6E36				REMARKS
24	6E0–41111–01–1S	INNER COVER, EXHAUST	1					
	6E3–41111–01–1S	INNER COVER, EXHAUST		1				
25	6E0–41112–A1	GASKET, EXHAUST INNER COVER	1					
	6E3–41112–A1	GASKET, EXHAUST INNER COVER		1				
26	6E0–41113–01–1S	OUTER COVER, EXHAUST	1					
	6E3–41113–01–1S	OUTER COVER, EXHAUST		1				
27	6E0–41114–A1	GASKET, EXHAUST OUTER COVER	1					
	6E3–41114–A1	GASKET, EXHAUST OUTER COVER		1				
28	90105–06037	BOLT, FLANGE	7					
	90105–06037	BOLT, FLANGE		8				
29	90105–06035	BOLT, FLANGE	1					
30	90105–06039	BOLT, FLANGE	1	1				
31	6E0–11400–00	CRANKSHAFT ASSY	1					
	6E3–11400–00	CRANKSHAFT ASSY		1				
32	6E0–11412–00	.CRANK 1	1					
	6E3–11412–00	.CRANK 1		1				
33	6E0–11422–00	.CRANK 2	1					
	6E3–11422–00	.CRANK 2		1				
34	6G1–11681–00	.PIN, CRANK 1	1	1				
35	93306–204U0	.BEARING	2	2				
36	93310–418V1	.BEARING	1	1				
37	6E0–11651–01	.ROD, CONNECTING	1	1				
38	90209–18112	.WASHER	2	2				
39	93101–20M29	OIL SEAL	1	1				
40	90201–32M48	WASHER, PLATE	1	1				
41	6E0–11631–00–98	PISTON (STD)	1					
	6E3–11631–00–98	PISTON (STD)		1				

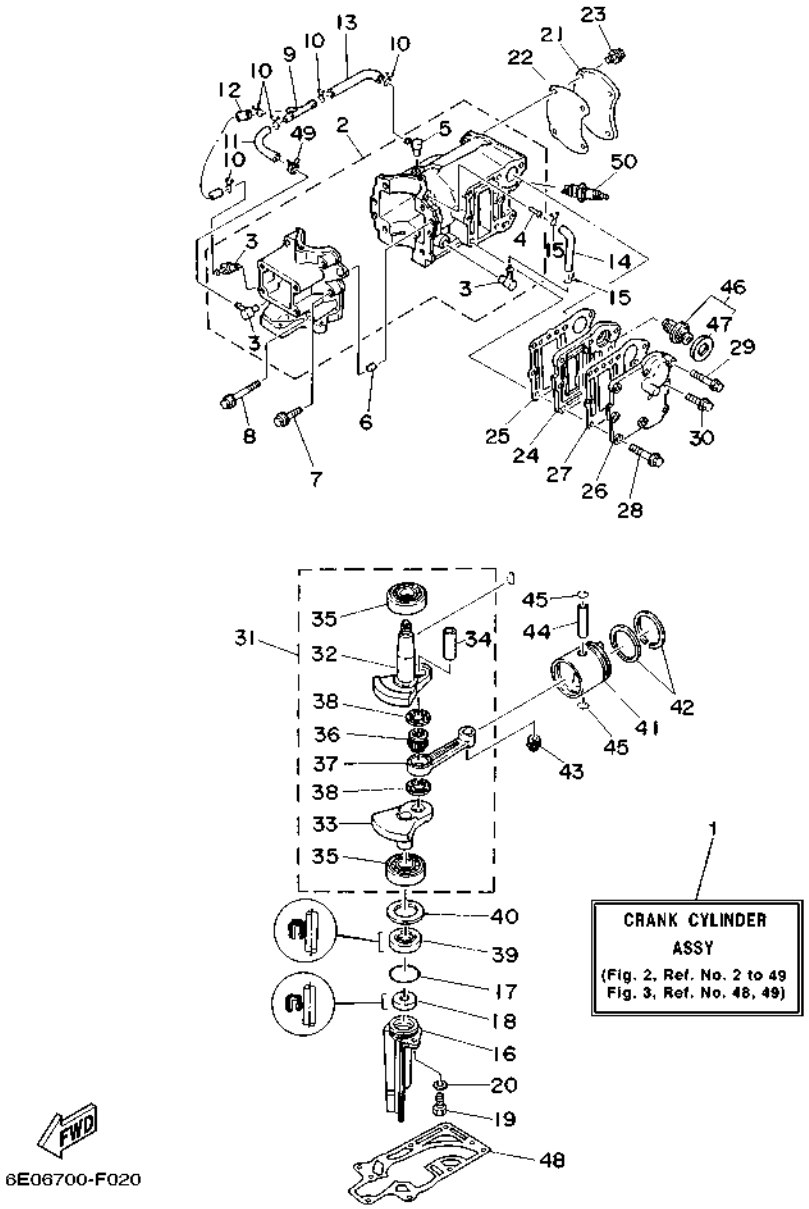

FIG. 2 CYLINDER & CRANKCASE

REF. NO.	PART NO.	DESCRIPTION	6E06	6E36				REMARKS
42	6G1–11610–00	PISTON RING SET (STD)	1					
	6J1–11610–00	PISTON RING SET (STD)		1				
43	93310–112V0	BEARING	1	1				
44	6G1–11633–00	PIN, PISTON	1	1				
45	93450–13022	CIRCLIP	2	2				
46	6E5–12411–02	THERMOSTAT	1	1				
47	6E5–12412–00	.SEAL, THERMOSTAT	1	1				
48	6E0–45113–A1	GASKET, UPPER CASING	1	1				
49	90468–07M02	CLIP	1	1				
50	94702–00272	PLUG, SPARK (NGK BR7HS)	1	1				

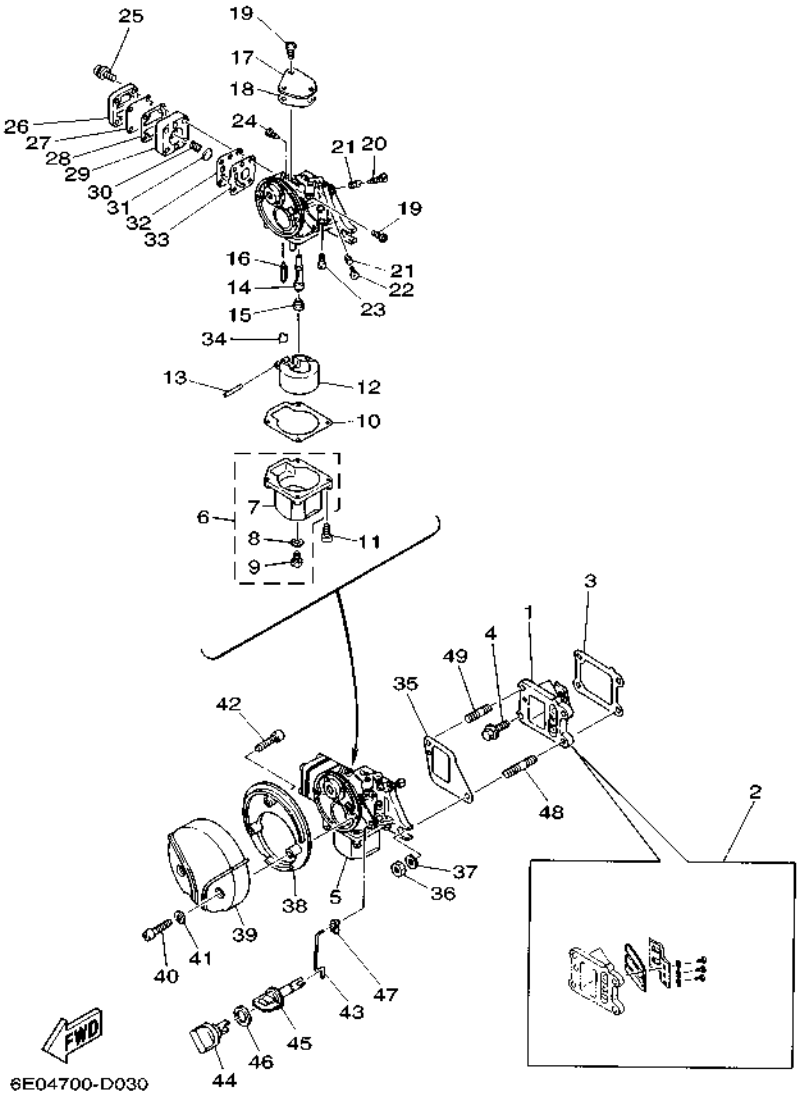

FIG. 3 INTAKE

REF. NO.	PART NO.	DESCRIPTION	6E06	6E36				REMARKS
1	6E0–13610–00	REED VALVE ASSY	1	1				
2	6E0–W0004–00	.REED SET	1	1				
3	6E0–13621–A2	GASKET, VALVE SEAT	1	1				
4	95895–06016	BOLT, FLANGE	2	2				
5	6E0–14301–05	CARBURETOR ASSY 1	1					
	6E3–14301–05	CARBURETOR ASSY 1		1				
6	6E0–14180–00	.FLOAT CHAMBER ASSY	1	1				
7	6E0–14381–02	..BODY, FLOAT CHAMBER	1	1				
8	646–14198–01	..GASKET	1	1				
9	97890–05006	..SCREW, PAN HEAD	1	1				
10	6E0–14384–00	.GASKET, FLOAT CHAMBER	1	1				
11	97980–04116	.SCREW, WITH WASHER	4	4				
12	6E7–14385–01	.FLOAT	1	1				
13	647–14386–00	.PIN, FLOAT	1	1				
14	6E0–14341–01	.NOZZLE, MAIN	1					
	6E3–14341–02	.NOZZLE, MAIN		1				
15	648–14343–40	.JET, MAIN (# 80)	1	1				
16	6F5–14392–00	.VALVE, NEEDLE	1	1				
17	6E0–14157–00	.COVER, PLATE	1	1				
18	6E0–14227–00	.GASKET	1	1				
19	97890–04007	.SCREW, PAN HEAD	4	4				
20	647–14323–00	.SCREW, AIR ADJUSTING	1	1				
21	646–14212–01	.SPRING, PILOT ADJUSTING	2	2				
22	664–14321–01	.SCREW, THROTTLE	1	1				
23	648–14342–23	.JET, PILOT (# 46)	1					
	648–14342–26	.JET, PILOT (# 52)		1				
24	647–14326–00	.SCREW, GUIDE	1	1				

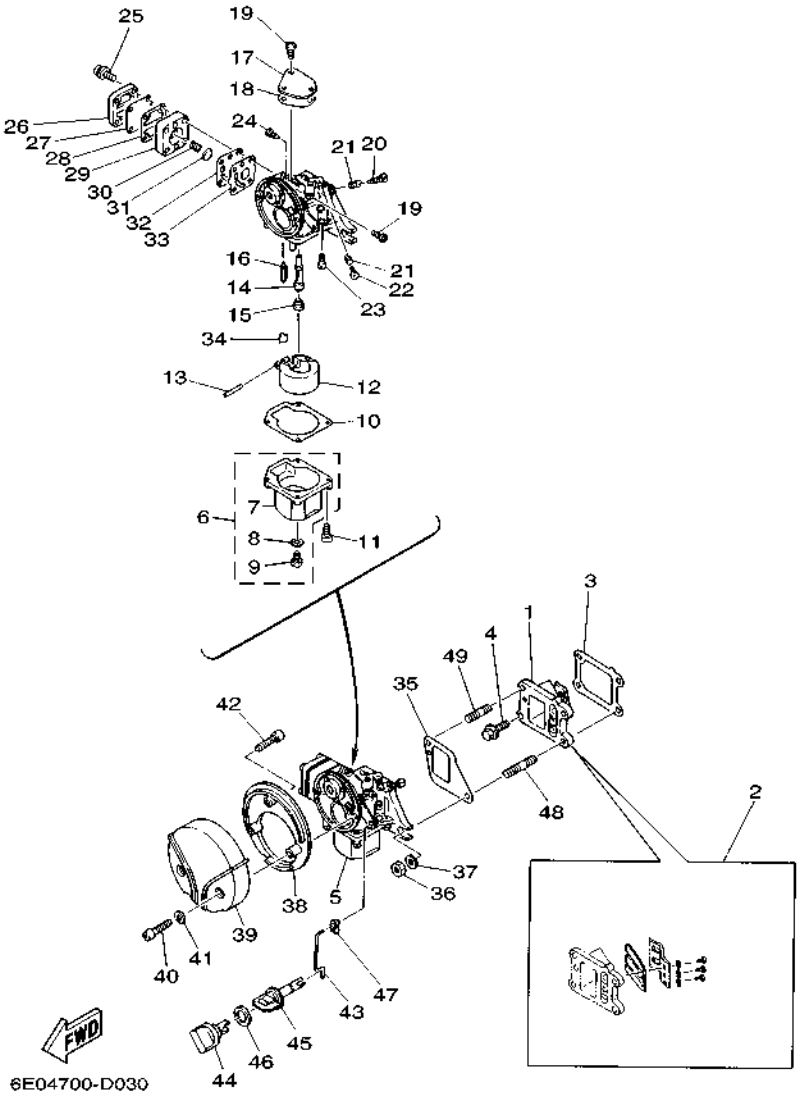

FIG. 3 INTAKE

REF. NO.	PART NO.	DESCRIPTION	6E06	6E36				REMARKS
25	97980–04120	.SCREW, WITH WASHER	4	4				
26	6E0–24413–00	.COVER	1	1				
27	6E0–24471–00	.DIAPHRAGM	1	1				
28	6E0–24435–00	.GASKET, BODY 2	1	1				
29	6E0–24412–00	.BODY 1	1	1				
30	6E0–24423–00	.SPRING, DIAPHRAGM	1	1				
31	6E0–14346–00	.PLATE	1	1				
32	6E0–24411–00	.DIAPHRAGM	1	1				
33	6E0–24434–00	.GASKET, BODY	1	1				
34	6E0–14159–00	.CLIP	1	1				
35	6E0–14198–A0	GASKET	1	1				
36	95380–06700	NUT	2	2				
37	92995–06600	WASHER	2	2				
38	6E0–14417–00	COVER 1	1	1				
39	6E0–14418–00	COVER 2	1	1				
40	97880–05025	SCREW, PAN HEAD	2	2				
41	92990–05600	WASHER, PLATE	2	2				
42	97780–40720	SCREW, TAPPING	1	1				
43	6E0–41256–00	ROD, CHOKE 1	1	1				
44	6E0–41271–00	KNOB, CHOKE	1	1				
45	6E0–41272–00	KNOB, CHOKE	1	1				
46	90202–12M16	WASHER, PLATE	1	1				
47	661–41262–02	JOINT, CHOKE LEVER	1	1				
48	95627–06325	BOLT, STUD	1	1				
49	90116–06M08	BOLT, STUD	1	1				

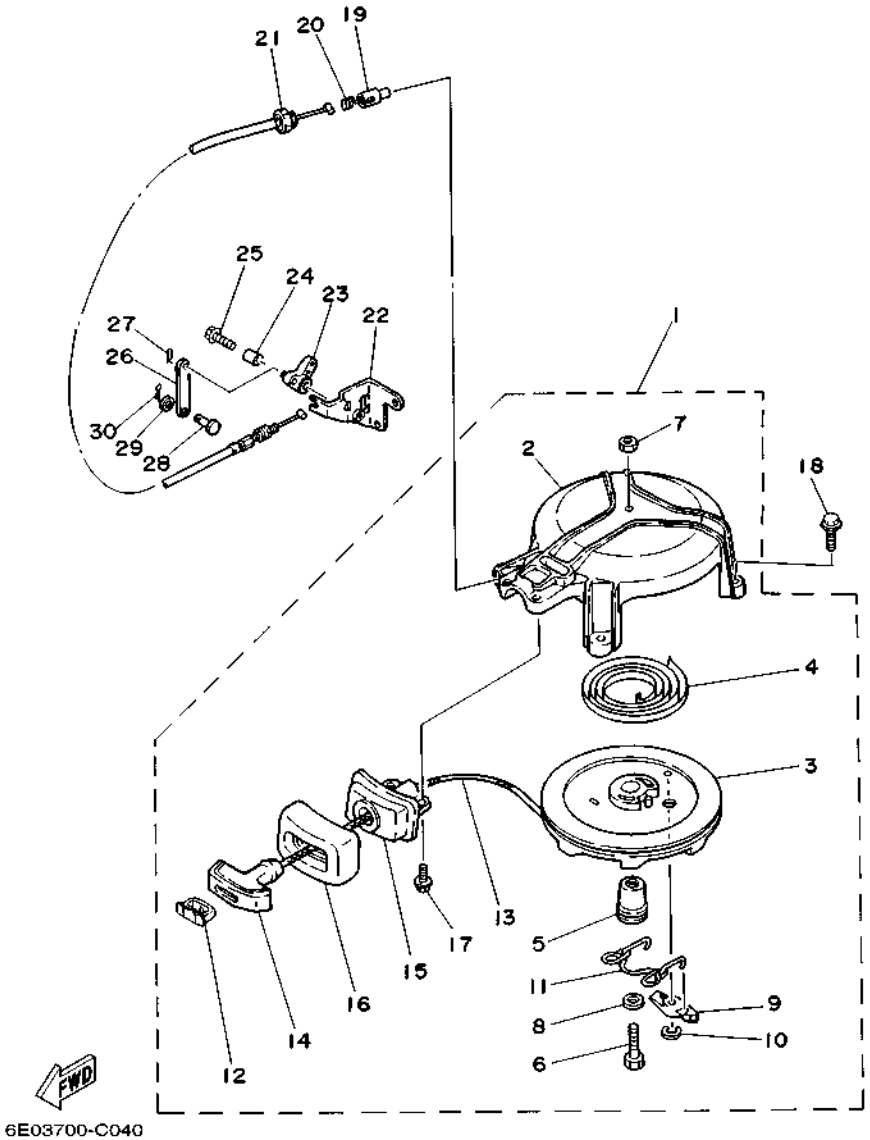

*1:CUT FROM 50M ROLLS,PART NO.90890-44372,CUTTING LENGTH 1.85M

FIG. 4 STARTER

REF. NO.	PART NO.	DESCRIPTION	6E06	6E36				REMARKS
1	6E0–15710–72–94	STARTER ASSY	1					
	6E4–15710–73–94	STARTER ASSY		1				
2	6E4–15711–71–94	.CASE, STARTER	1	1				
3	6E0–15714–01	.DRUM, SHEAVE	1	1				
4	90510–08M03	.SPRING, SPIRAL	1	1				
5	6E0–15717–00	.SHAFT, STARTER	1	1				
6	97313–06035	.BOLT	1	1				
7	95303–06600	.NUT	1	1				
8	90201–06M30	.WASHER, PLATE	1	1				
9	677–15741–01	.PAWL, DRIVE	1	1				
10	93430–06M02	.CIRCLIP	1	1				
11	6E0–15705–00	.SPRING, DRIVE PAWL	1	1				
12	6G1–15779–00	.COVER	1	1				
13	*	.WIRE (L1850)	1	1				*1
14	6G1–15755–00	.HANDLE, STARTER	1	1				
15	6E0–15758–01	.GUIDE, ROPE	1					
	6E3–15758–01	.GUIDE, ROPE		1				
16	6E0–15761–00	.SEAL, RUBBER 1	1	1				
17	90105–06M14	.BOLT FLANGE	2	2				
18	95895–06020	BOLT, FLANGE	3	3				
19	656–15748–00	PLUNGER, STARTER STOP	1	1				
20	90501–10227	SPRING, COMPRESSION	1	1				
21	6E4–15770–70	CABLE COMP., STARTER STOP	1	1				
22	6E0–15772–71	STAY 2	1					
	6E4–15772–71	STAY 2		1				
23	6E4–15746–70	ARM	1	1				
24	90387–06504	COLLAR	1	1				

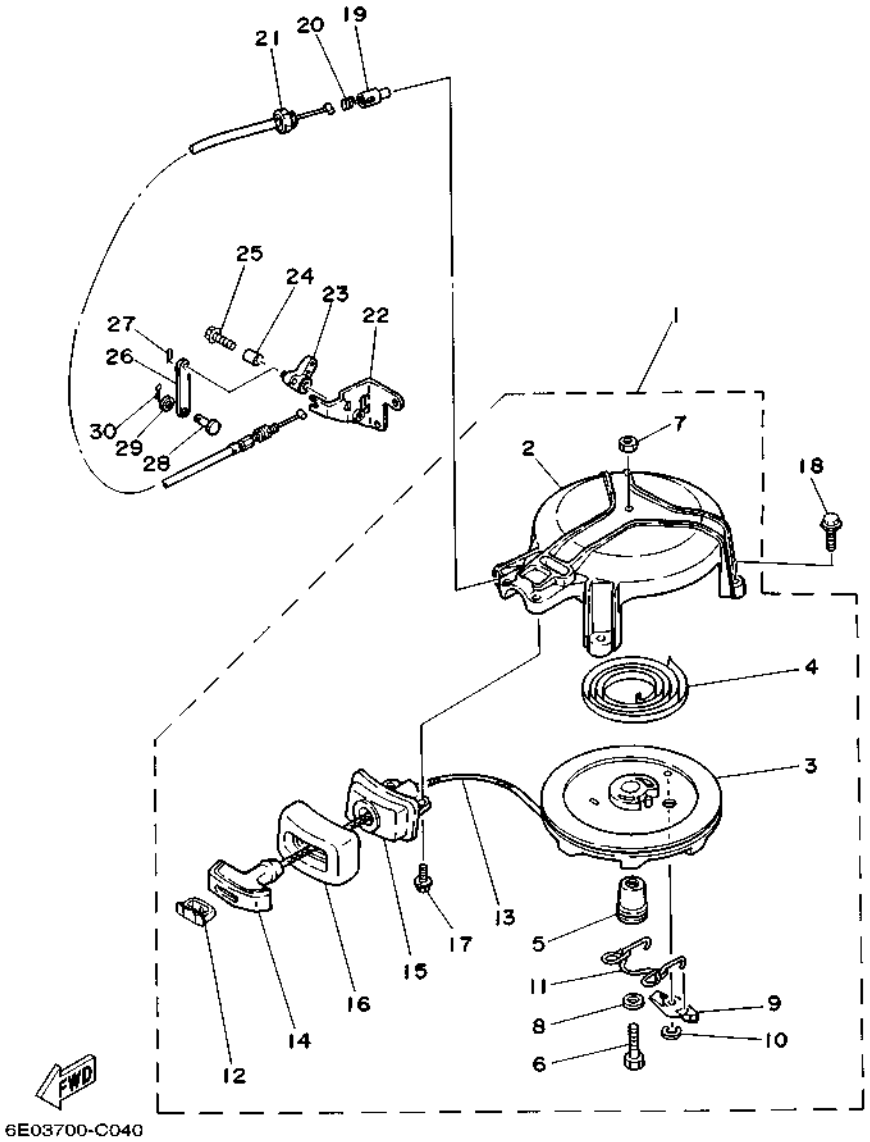

*1:CUT FROM 50M ROLLS,PART NO.90890-44372,CUTTING LENGTH 1.85M

FIG. 4 STARTER

REF. NO.	PART NO.	DESCRIPTION	6E06	6E36				REMARKS
25	90119–06M18	BOLT, WITH WASHER	1	1				
26	6E4–15747–70	LINK	1	1				
27	90468–10005	CLIP	1	1				
28	91790–05010	PIN, CLEVIS	1	1				
29	90202–05088	WASHER, PLATE	1	1				
30	91490–16010	PIN, COTTER	1	1				

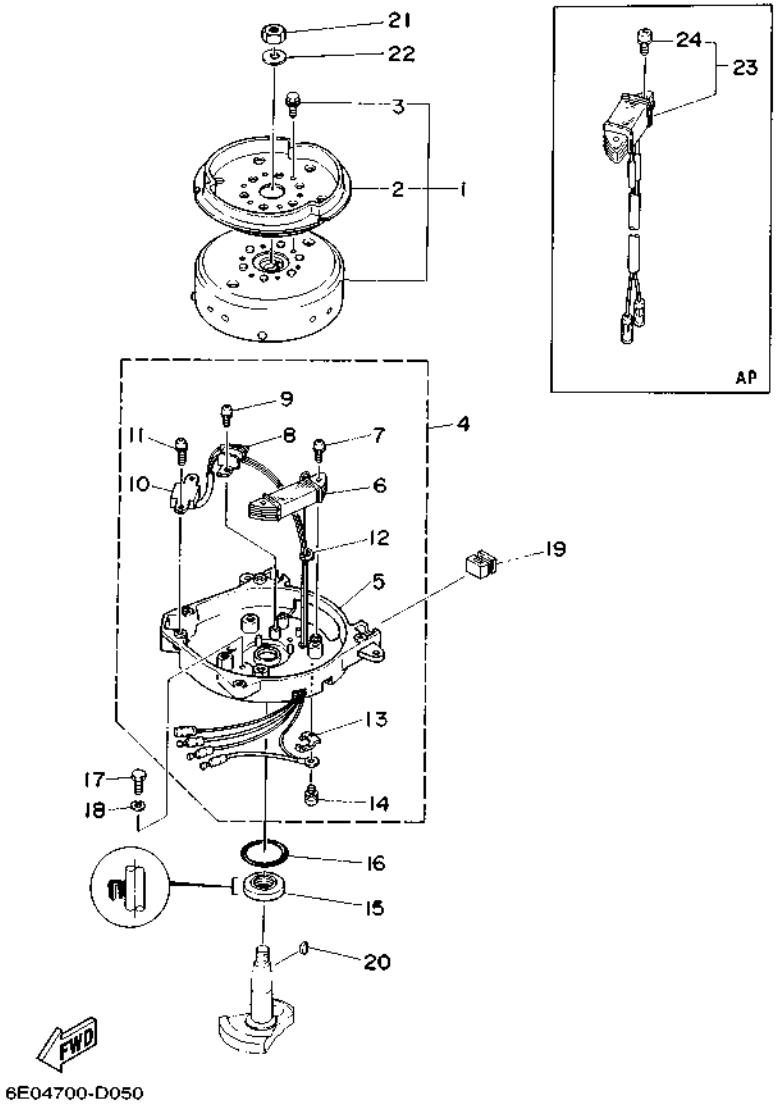

FIG. 5 GENERATOR

REF. NO.	PART NO.	DESCRIPTION	6E06	6E36				REMARKS
1	6E0–85550–72	ROTOR ASSY	1	1				
2	6E0–15723–00–94	.PULLEY, STARTER	1	1				
3	90105–06M14	.BOLT FLANGE	3	3				
4	6E0–85560–71	BASE ASSY	1	1				
5	6E0–15359–01–94	.HOUSING, OIL SEAL	1	1				
6	6E0–85520–70	.COIL, CHARGE	1	1				
7	90159–05038	.SCREW, WITH WASHER	2	2				
8	6E0–85595–70	.COIL, PULSER	1	1				
9	90159–04036	.SCREW, WITH WASHER	2	2				
10	6E0–85592–70	.PULSER COIL ASSY	1	1				
11	90159–05037	.SCREW, WITH WASHER	2	2				
12	6E0–81336–70	.GROMMET	1	1				
13	6E0–81328–70	.CLAMP	1	1				
14	90159–04035	.SCREW, WITH WASHER	1	1				
15	93102–20M25	OIL SEAL	1	1				
16	93210–42159	O-RING	1	1				
17	97095–06016	BOLT	2	2				
18	92995–06100	WASHER, SPRING	2	2				
19	6E0–24183–00	DAMPER, LOCATING 3	2	2				
20	90280–04M06	KEY, WOODRUFF	1	1				
21	90170–10113	NUT	1	1				
22	90201–10126	WASHER, PLATE	1	1				
23	6E0–81303–40	LIGHTING COIL ASSY	1	1				AP 40W
	6E0–81303–80	LIGHTING COIL ASSY	1	1				AP 60W
24	90159–05040	.SCREW, WITH WASHER	2	2				

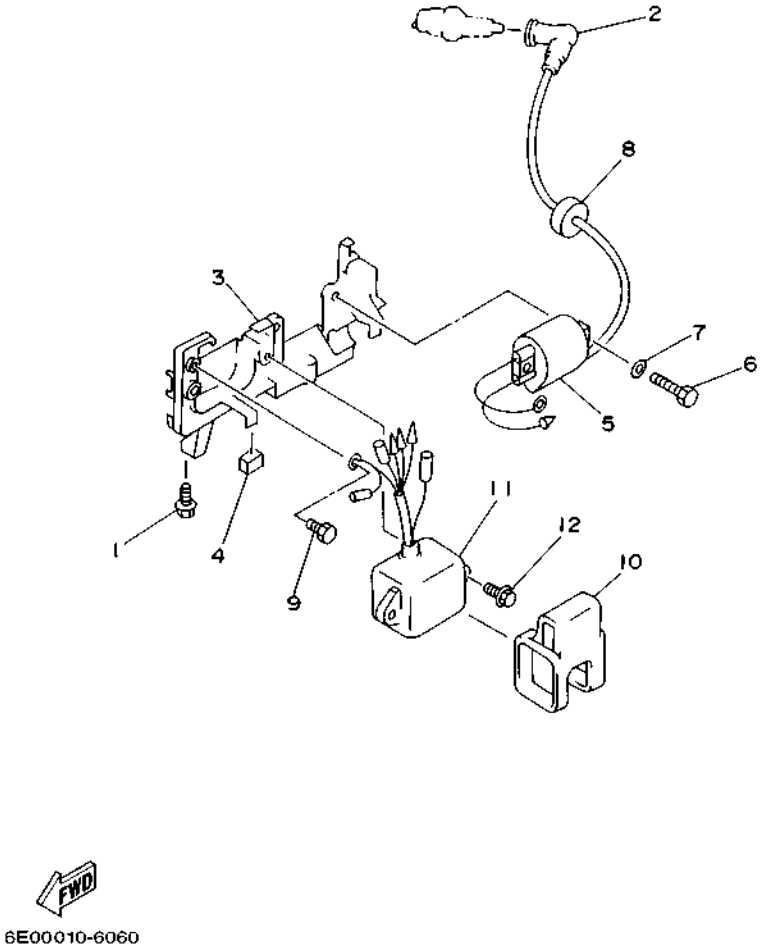

FIG. 6 ELECTRICAL

REF. NO.	PART NO.	DESCRIPTION	6E06	6E36				REMARKS
1	95895–06016	BOLT, FLANGE	2	2				
2	6G1–82370–21	PLUG CAP ASSY	1					
	6E3–82370–21	PLUG CAP ASSY		1				
3	6E0–82316–01–94	BRACKET, IGNITION COIL	1	1				
4	6E0–82317–00	DAMPER, IGNITION COIL	2	2				
5	6E0–85570–00	IGNITION COIL ASSY	1	1				
6	97095–06016	BOLT	2	2				
7	92995–06600	WASHER	2	2				
8	90480–25161	GROMMET	1	1				
9	97080–06010	BOLT	1	1				
10	6E0–85548–00	HOLDER	1	1				
11	6E0–85540–71	C.D.I. UNIT ASSY	1	1				
12	95895–06020	BOLT, FLANGE	2	2				

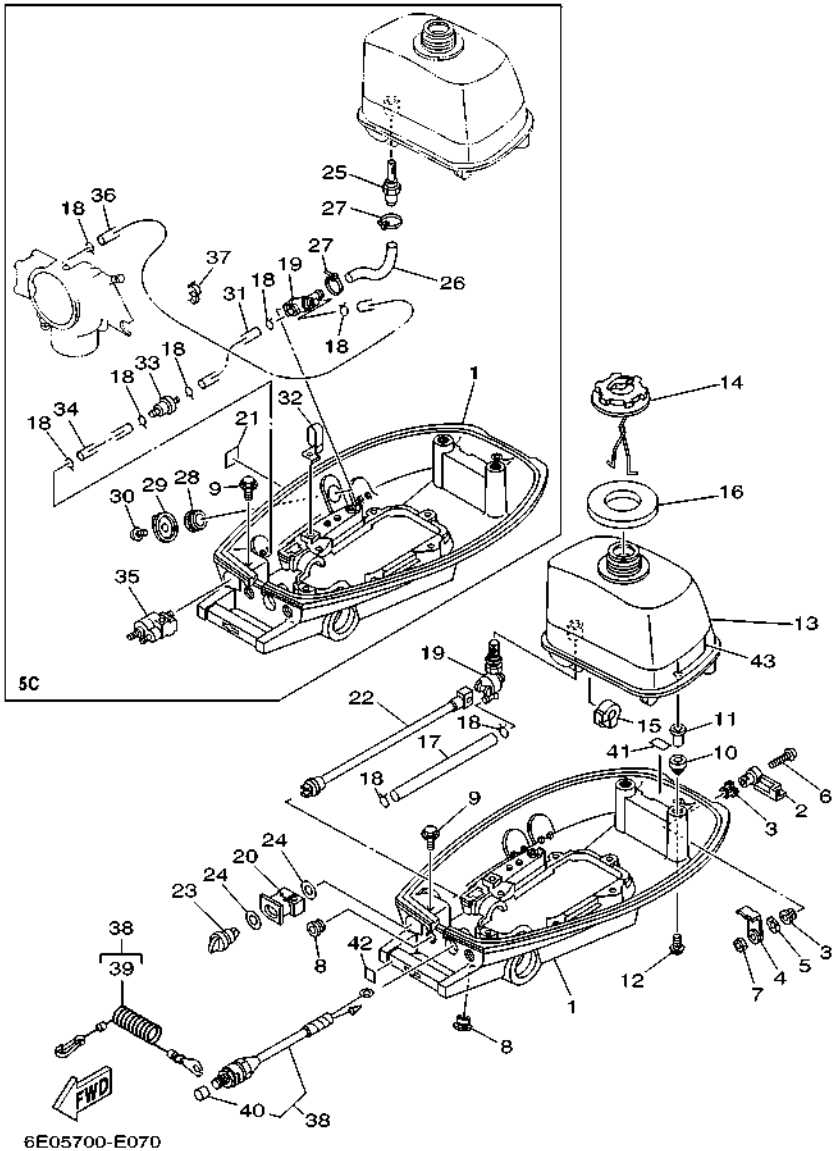

FIG. 7 BOTTOM COWLING

REF. NO.	PART NO.	DESCRIPTION	6E06	6E36				REMARKS
1	6E0–42711–05–4D	COWLING, BOTTOM 1	1					
	6E0–42711–10–4D	COWLING, BOTTOM 1		1				
2	6E0–42815–00–4D	LEVER, CLAMP	1	1				
3	90386–12069	BUSH	2	2				
4	6E0–42816–00	LEVER, CLAMP	1	1				
5	90206–12052	WASHER, WAVE	1	1				
6	97885–06030	SCREW, PAN HEAD	1	1				
7	95380–06700	NUT	1	1				
8	90480–14M14	GROMMET	2	2				
9	95895–06020	BOLT, FLANGE	1	1				
10	6E0–24182–00	DAMPER, LOCATING 2	2					
	6E3–24182–00	DAMPER, LOCATING 2		2				
11	6E0–42542–00	PIPE	2	2				
12	95895–06025	BOLT, FLANGE	2	2				
13	6E0–24110–01–4D	FUEL TANK COMP.	1	1				
14	6E0–24610–02	CAP ASSY	1	1				
15	6E0–24181–00	DAMPER, LOCATING 1	2	2				
16	6E0–24641–00	GASKET, CAP 1	1					
	6E3–24641–00	GASKET, CAP 1		1				
17	90445–09M37	HOSE (L240)	1					
18	90467–08004	CLIP	2					
	90467–08004	CLIP		6				
19	6E0–24500–01	FUEL COCK ASSY 1	1					
	6E0–24500–10	FUEL COCK ASSY 1		1				
20	6E0–24571–00	BUSHING	1					
21	6E0–24591–10	EMBLEM, FUEL COCK		1				
22	6E0–24572–00	SHAFT, FUEL CHANGE	1					

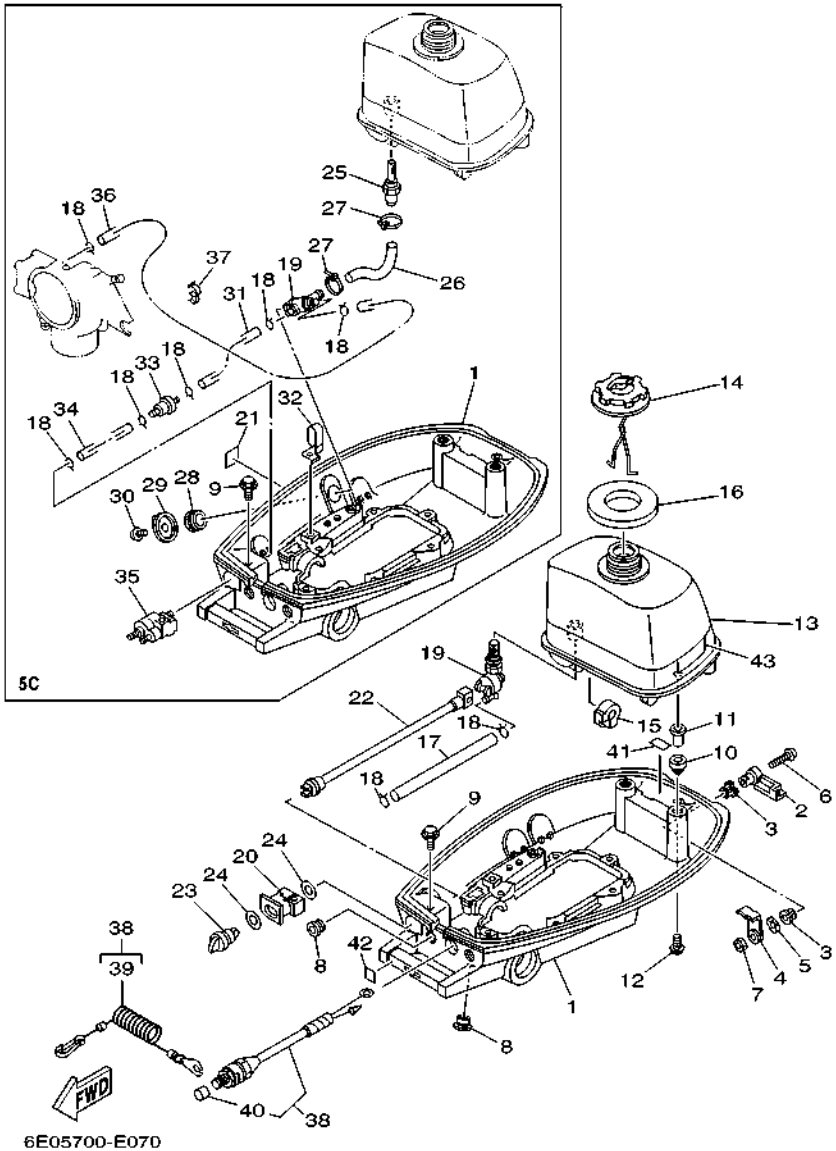

FIG. 7 BOTTOM COWLING

REF. NO.	PART NO.	DESCRIPTION	6E06	6E36				REMARKS
23	6E0–24575–01	LEVER, FUEL CHANGE	1					
24	90202–12M17	WASHER, PLATE	2					
25	6E0–24335–00	PIPE, SUCTION 1		1				
26	6E0–24311–00	PIPE, FUEL 1		1				
27	90465–13M11	CLAMP		2				
28	90170–16M35	NUT		1				
29	6J1–24524–00	LEVER, COCK		1				
30	90159–04M24	SCREW, WITH WASHER		1				
31	90445–09M27	HOSE (L125)		1				
32	90465–08M62	CLAMP		1				
33	646–24251–02	STRAINER 1		1				
34	90445–09057	HOSE (L45)		1				
35	6G1–24304–02	FUEL PIPE JOINT COMP. 1		1				
36	6E0–24312–00	PIPE 2		1				
37	90464–09M21	CLAMP		1				
38	6E0–82575–00	ENGINE STOP SWITCH ASSY	1	1				
39	682–82556–00	.LANYARD, STOP SWITCH	1	1				
40	689–8257Y–00	.CAP	1	1				
41	664–42791–10	MARK 1	1	1				
42	6A1–42792–01	MARK (100:1)	1	1				
43	6A1–83625–41	MARK 5	1	1				

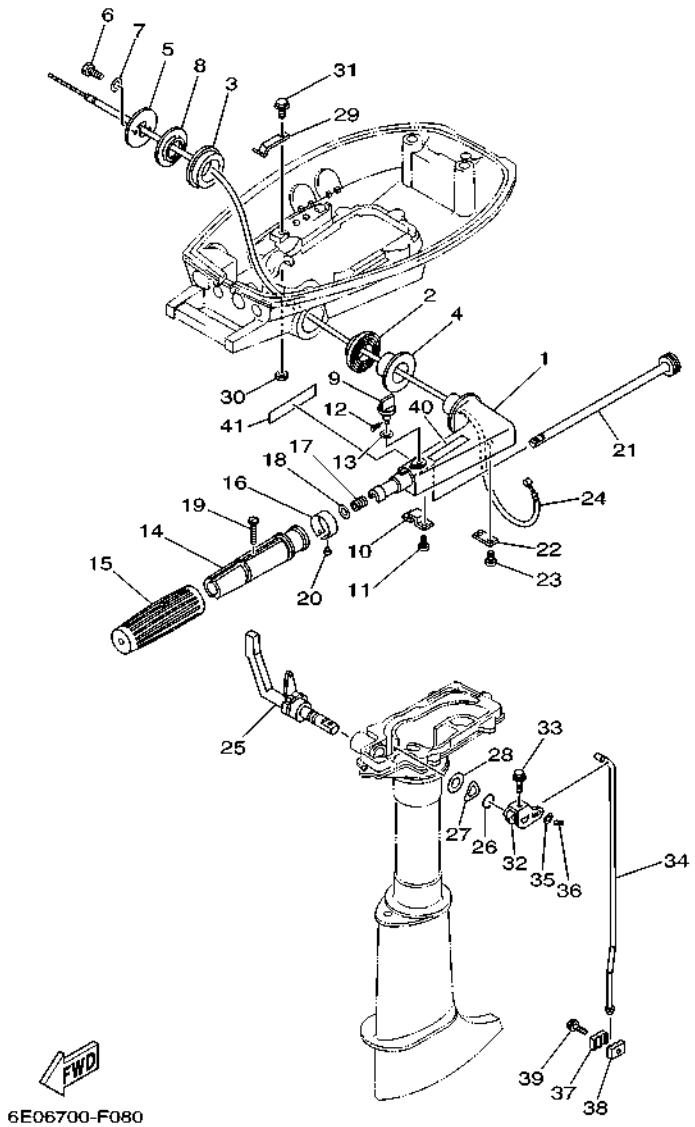

FIG. 8 CONTROL

REF. NO.	PART NO.	DESCRIPTION	6E06	6E36				REMARKS
1	6E0–42111–02–4D	HANDLE, STEERING	1	1				
2	6E0–42129–02	BUSHING, RUBBER	1	1				
3	6E4–42129–00	BUSHING, RUBBER	1	1				
4	90386–26M30	BUSH	1	1				
5	6E0–42131–02–94	COVER, HANDLE STEERING	1	1				
6	97013–05020	BOLT	2	2				
7	92903–05600	WASHER, PLATE	2	2				
8	90386–26M33	BUSH	1	1				
9	6E0–42125–00	BOLT, FRICTION ADJUSTING	1	1				
10	6E0–42134–02	COVER, THROTTLE LEVER	1	1				
11	97885–05012	SCREW, PAN HEAD	2	2				
12	91490–12010	PIN, COTTER	1	1				
13	90202–07M22	WASHER, PLATE	1	1				
14	6E0–42119–00	GRIP, STEERING HANDLE	1	1				
15	6E0–42177–00	RUBBER, HANDLE	1	1				
16	6E0–42137–10	INDICATOR, THROTTLE	1	1				
17	90501–23215	SPRING, COMPRESSION	1	1				
18	90201–10119	WASHER, PLATE	1	1				
19	90149–05M13	SCREW	1	1				
20	90269–02M09	RIVET	1	1				
21	6E0–42138–01	LEVER, THROTTLE	1	1				
22	6E0–42159–02	STAY	1	1				
23	97885–05012	SCREW, PAN HEAD	2	2				
24	6E0–26301–01	THROTTLE CABLE ASSY	1	1				
25	6E4–44111–72–4D	HANDLE, GEAR SHIFT	1	1				
26	93210–12327	O-RING	1	1				
27	90206–16M06	WASHER, WAVE	1	1				

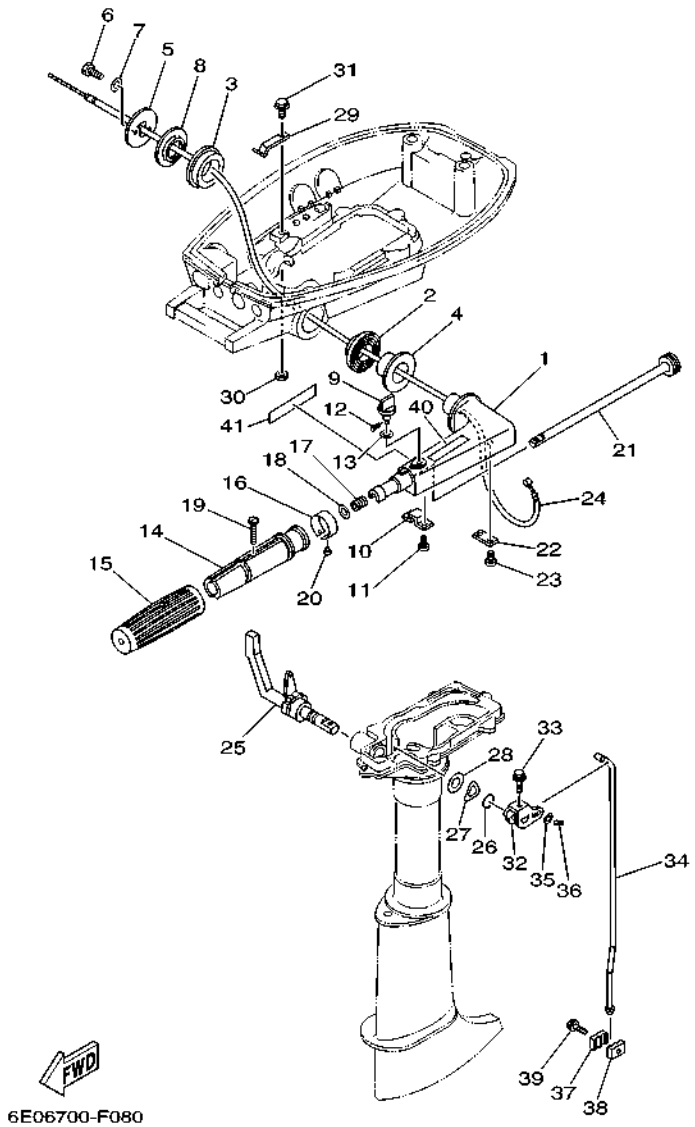

FIG. 8 CONTROL

REF. NO.	PART NO.	DESCRIPTION	6E06	6E36				REMARKS
28	90202–16061	WASHER, PLATE	1	1				
29	6E0–44116–00	SPRING	1	1				
30	95380–06700	NUT	1	1				
31	95895–06012	BOLT, FLANGE	1	1				
32	6E0–44121–00	LEVER, SHIFT ROD	1	1				
33	95895–06025	BOLT, FLANGE	1	1				
34	6E0–44143–00	ROD, SHIFT	1	1				S(17.5")
	6E0–44143–10	ROD, SHIFT		1				L(22.5")
35	92990–05600	WASHER, PLATE	1	1				
36	91490–16010	PIN, COTTER	1	1				
37	6E0–44145–00	CONNECTOR, SHIFT ROD	1	1				
38	6E0–44146–00	CONNECTOR, SHIFT ROD	1	1				
39	95895–06020	BOLT, FLANGE	1	1				
40	6E0–83627–41	LABEL, CAUTION 7	1	1				
41	6A1–2415A–41	LABEL, CAUTION	1	1				

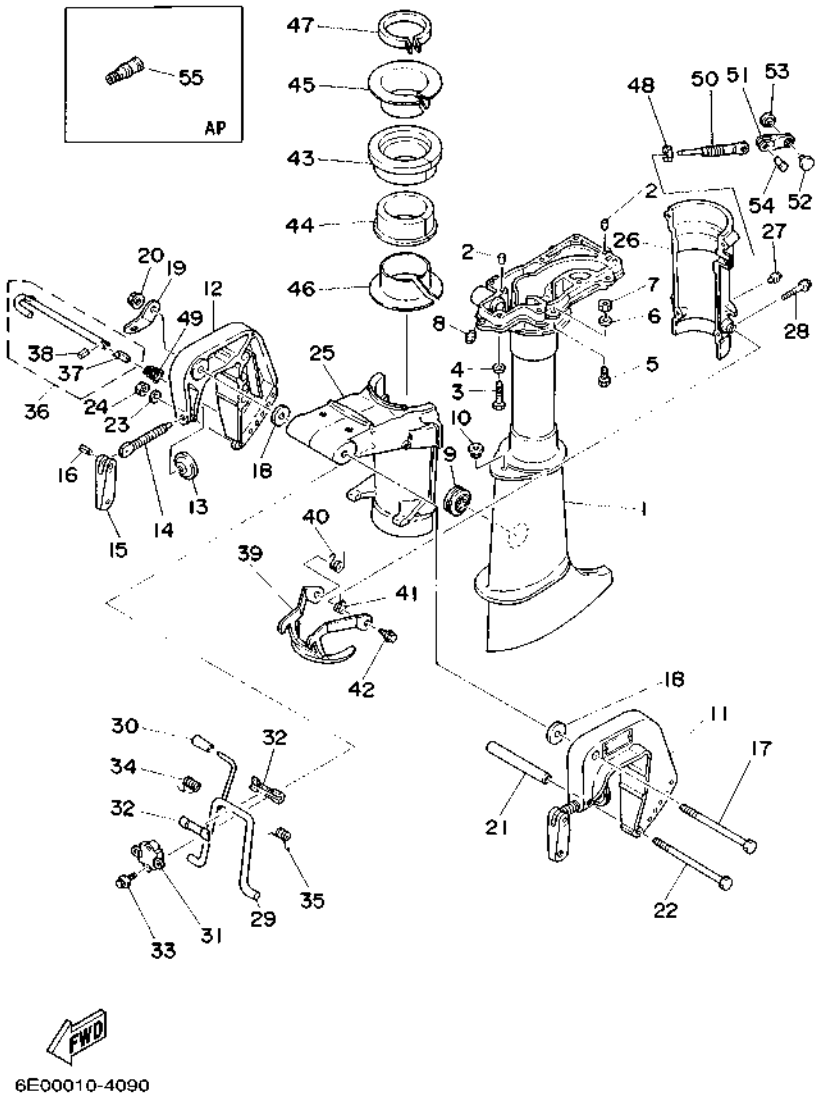

FIG. 9 UPPER CASING & BRACKET

REF. NO.	PART NO.	DESCRIPTION	6E06	6E36				REMARKS
1	6E0–45111–02–4D	CASING, UPPER	1	1				S(17.5")
	6E0–45111–12–4D	CASING, UPPER		1				L(22.5")
2	93606–12019	PIN, DOWEL	2	2				
3	97095–06030	BOLT	7	7				
4	92995–06600	WASHER	7	7				
5	97095–06016	BOLT	4	4				
6	92995–06600	WASHER	4	4				
7	95380–06700	NUT	4	4				
8	93700–06M03	NIPPLE, GREASE	1	1				
9	647–45151–01	COVER, UPPER CASING	1	1				
10	90480–10M13	GROMMET	1	1				
11	6E0–43111–02–4D	BRACKET, CLAMP 1	1	1				
12	6E0–43112–01–4D	BRACKET, CLAMP 2	1	1				
13	620–43114–00	PAD, TRANSOM CLAMP	2	2				
14	6E0–43116–01	SCREW, TRANSOM CLAMP	2	2				
15	6E0–43118–01	HANDLE, TRANSOM CLAMP	2	2				
16	90243–04M01	PIN	2	2				
17	90101–08M07	BOLT	1	1				
18	90201–08M03	WASHER, PLATE	2	2				
19	6A1–43113–01	PLATE, CLAMP BRACKET	1	1				
20	90185–08057	NUT, SELF-LOCKING	1	1				
21	90387–06M11	COLLAR	1	1				
22	90101–06335	BOLT	1	1				
23	92990–06600	WASHER, PLATE	1	1				
24	95380–06600	NUT, HEXAGON	1	1				
25	6E0–43311–04–4D	BRACKET, SWIVEL 1	1	1				
26	6E0–43312–02–4D	BRACKET, SWIVEL 2	1	1				

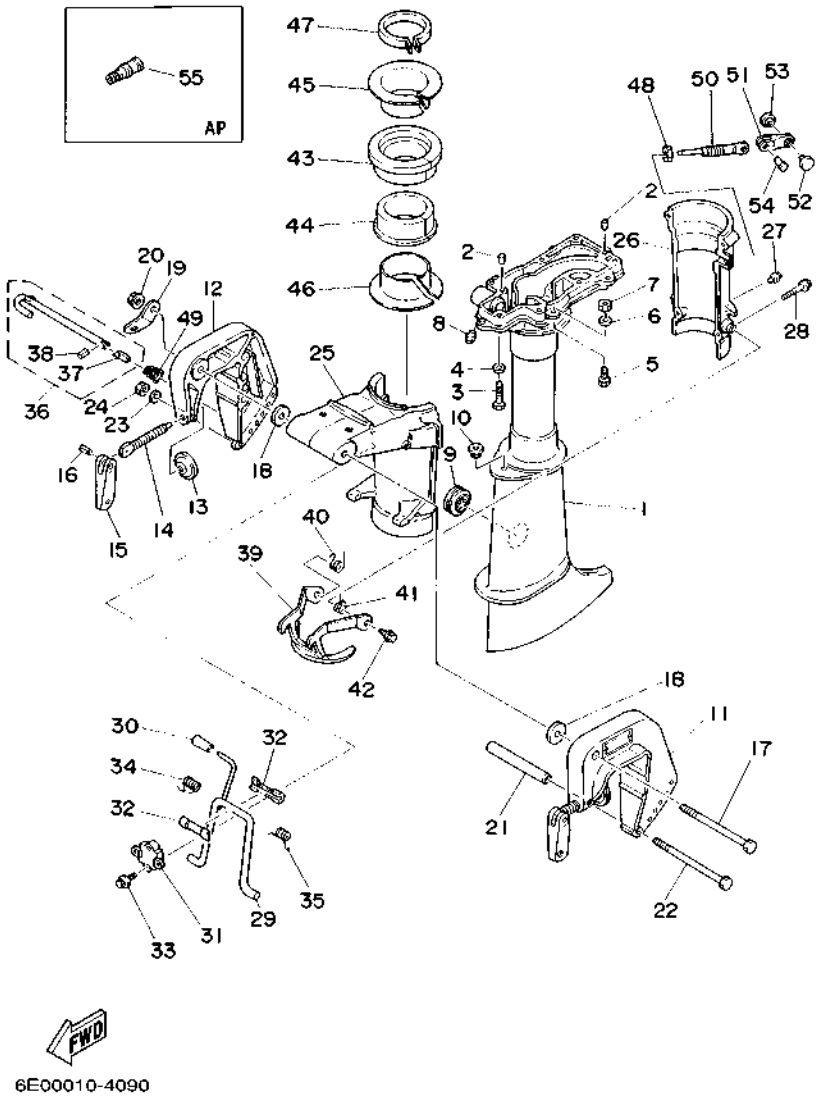

6E00010-4090

FIG. 9 UPPER CASING & BRACKET

REF. NO.	PART NO.	DESCRIPTION	6E06	6E36				REMARKS
27	93700–06M03	NIPPLE, GREASE	1	1				
28	95895–06035	BOLT, FLANGE	4	4				
29	6E0–43181–00	LEVER, TILT STOP	1	1				
30	6E0–43632–00	KNOB, TILT	1	1				
31	6E0–43313–00–94	BRACKET, SWIVEL 3	1	1				
32	620–43189–00	BUSHING	2	2				
33	95895–06020	BOLT, FLANGE	2	2				
34	90508–16020	SPRING, TORSION	1	1				
35	90508–16021	SPRING, TORSION	1	1				
36	6E0–43160–01	TILT ROD ASSY	1	1				
37	689–43165–00	.PLATE, TILT LOCK	1	1				
38	91690–30008	.PIN, SPRING	1	1				
39	6E0–43614–00–5B	PLATE, TILT LOCK	1	1				
40	90508–14M10	SPRING, TORSION	1	1				
41	90508–14M11	SPRING, TORSION	1	1				
42	95895–06010	BOLT, FLANGE	2	2				
43	6E0–42537–02	BUSHING, PIVOT SHAFT	1	1				
44	6E0–42538–02	BUSHING, PIVOT SHAFT	1	1				
45	6E0–42539–00	BUSHING, PIVOT SHAFT	1	1				
46	6E0–42549–00	BUSHING, PIVOT SHAFT	1	1				
47	6E0–42528–03	PLATE, FRICTION	1	1				
48	95380–08600	NUT	1	1				
49	90502–08M05	SPRING, CONICAL	1	1				
50	6L5–42529–01	SCREW, FRICTION PIECE	1	1				
51	6L5–42561–00	KNOB, STEERING LOCK	1	1				
52	6L5–44196–00	INDICATOR 3	1	1				
53	6L5–44197–00	INDICATOR 4	1	1				

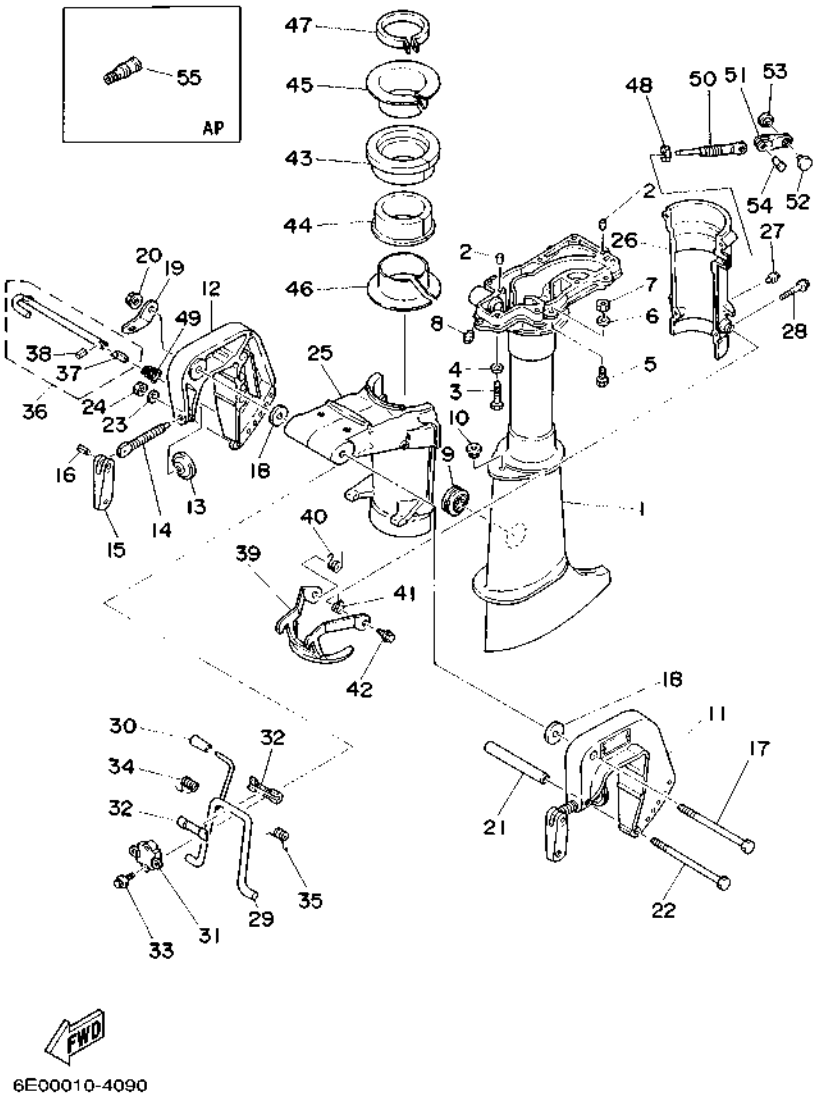

6E00010-4090

FIG. 9 UPPER CASING & BRACKET

REF. NO.	PART NO.	DESCRIPTION	6E06	6E36				REMARKS
54	90266–04M05	RIVET	1	1				
55	626–28193–01–94	PLUG, WATER CHECK	1	1				AP D:15MM

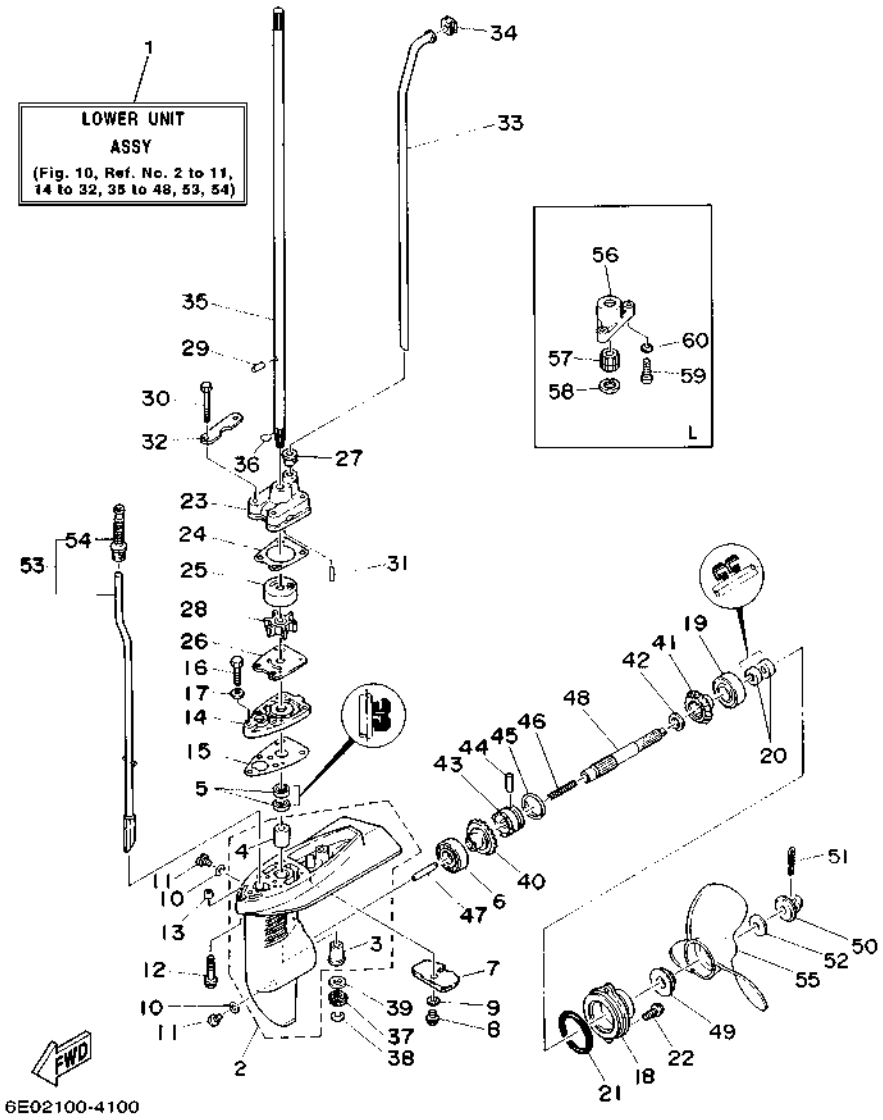

FIG. 10 LOWER CASING & DRIVE

REF. NO.	PART NO.	DESCRIPTION	6E06	6E36				REMARKS
1	6E0–45300–03–4D	LOWER UNIT ASSY	1	1				S(17.5")
	6E0–45300–13–4D	LOWER UNIT ASSY		1				L(22.5")
2	6E0–45311–02–4D	CASING, LOWER	1	1				
3	6E0–45317–09	.BUSHING, DRIVE SHAFT	1	1				
4	6E0–45316–09	.BUSHING, DRIVE SHAFT	1	1				
5	93101–10M14	OIL SEAL	2	2				
6	93306–004U0	BEARING	1	1				
7	6L5–45251–03	ANODE	1	1				
8	95895–06012	BOLT, FLANGE	1	1				
9	92990–06300	WASHER, INTERNAL TOOTH	1	1				
10	90430–08020	GASKET	3	3				
11	90340–08002	PLUG, STRAIGHT SCREW	3	3				
12	90119–06M40	BOLT, WITH WASHER	2	2				
13	90387–06M14	COLLAR	2	2				
14	6E0–45321–01–5B	PLATE	1	1				
15	6E0–45315–A0	PACKING, LOWER CASING	1	1				
16	97095–06025	BOLT	1	1				
17	92995–06600	WASHER	1	1				
18	6E0–45361–01–4D	CAP, LOWER CASING	1	1				
19	93306–004U0	BEARING	1	1				
20	93101–13M12	OIL SEAL	2	2				
21	93210–48214	O-RING	1	1				
22	95895–06016	BOLT, FLANGE	2	2				
23	6E0–44311–00	HOUSING, WATER PUMP	1	1				
24	6E0–44315–A0	GASKET, WATER PUMP	1	1				
25	6E0–44322–02	INSERT, CARTRIDGE	1	1				
26	6E0–44323–00	OUTER PLATE, CARTRIDGE	1	1				

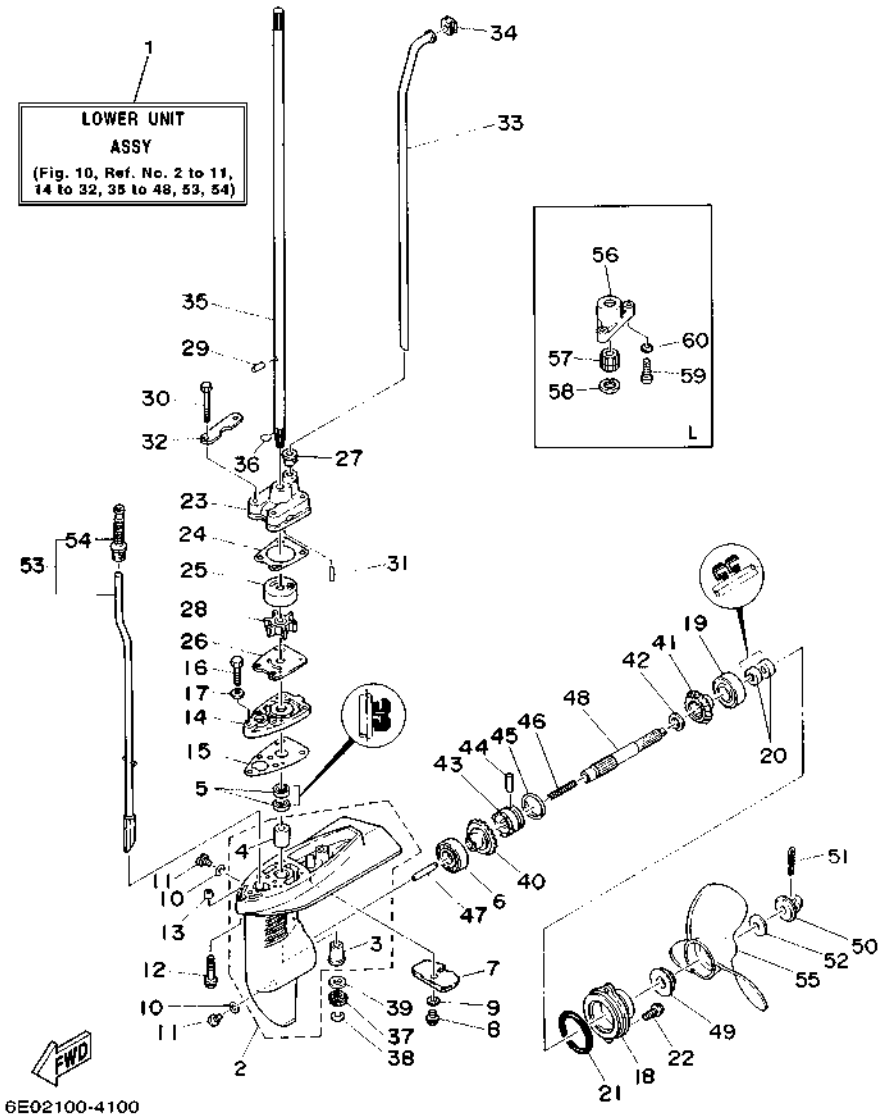

FIG. 10 LOWER CASING & DRIVE

REF. NO.	PART NO.	DESCRIPTION	6E06	6E36				REMARKS
27	6E0–44366–00	DAMPER, WATER SEAL	1	1				
28	6E0–44352–00	IMPELLER	1	1				
29	93604–09066	PIN, DOWEL	1	1				
30	97095–06045	BOLT	4	4				
31	93604–18080	PIN, DOWEL	2	2				
32	6E0–44328–00	PLATE	2	2				
33	6E0–44361–00	TUBE, WATER	1	1				S(17.5")
	6E0–44361–10	TUBE, WATER		1				L(22.5")
34	646–44365–00	DAMPER, WATER SEAL	1	1				
35	6E0–45511–01	SHAFT, DRIVE	1	1				S(17.5")
	6E0–45511–11	SHAFT, DRIVE		1				L(22.5")
36	90467–08M01	CLIP	1	1				
37	6E0–45551–00	PINION (13T)	1	1				
38	99001–06600	CIRCLIP	1	1				
39	90201–11M49	WASHER, PLATE	1	1				
40	6E0–45560–00	GEAR 1 (27T)	1	1				
41	6E0–45570–00	GEAR 2 (27T)	1	1				
42	90201–13M50	WASHER, PLATE	1	1				
43	6E0–45631–00	CLUTCH, DOG	1	1				
44	90250–05046	PIN, STRAIGHT	1	1				
45	654–45633–00	RING, CROSS PIN	1	1				
46	90501–10064	SPRING, COMPRESSION	1	1				
47	654–45635–00	PLUNGER, SHIFT	1	1				
48	6E0–45611–01	SHAFT, PROPELLER	1	1				
49	6L5–45987–01	SPACER	1	1				
50	6L5–45616–00	NUT, PROPELLER	1	1				
51	91490–25030	PIN, COTTER	1	1				

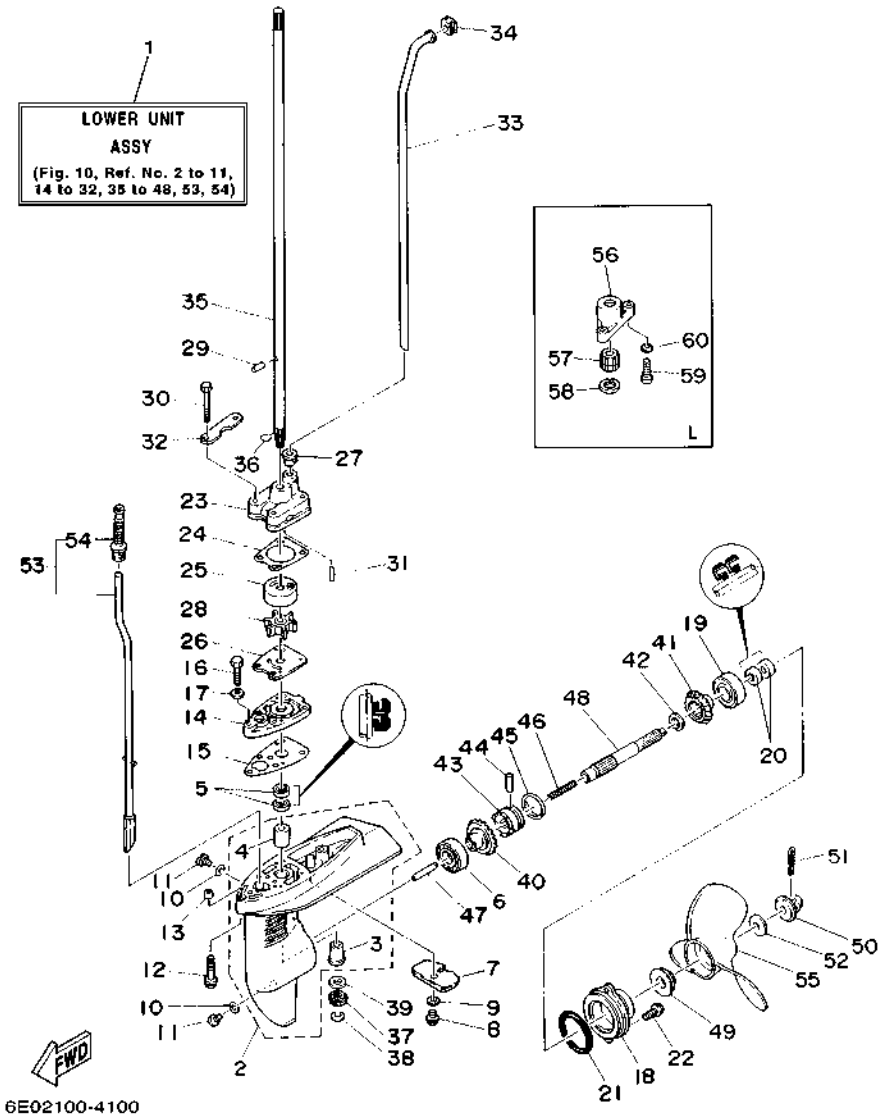

FIG. 10 LOWER CASING & DRIVE

REF. NO.	PART NO.	DESCRIPTION	6E06	6E36				REMARKS
52	90201–08M54	WASHER, PLATE	1	1				
53	6E0–44150–00	SHIFT CAM ASSY	1	1				S(17.5")
	6E0–44150–10	SHIFT CAM ASSY		1				L(22.5")
54	6G1–44147–00	.BOOT, SHIFT ROD	1	1				
55	6E0–45941–01–EL	PROPELLER (3X7-1/2"X8"-BA)	1	1				UR
	6E0–45943–01–EL	PROPELLER (3X7-1/2"X7"-BA)	1	1				UR
	6E0–45949–00–EL	PROPELLER (3X7-1/4"X6-1/2"-BA)	1	1				UR
56	6E0–45331–00–5B	HOUSING, BEARING		1				L(22.5")
57	6E0–45318–01	BUSHING, DRIVE SHAFT		1				L(22.5")
58	93420–22M03	CIRCLIP		1				L(22.5")
59	97880–05025	SCREW, PAN HEAD		2				L(22.5")
60	92990–05600	WASHER, PLATE		2				L(22.5")

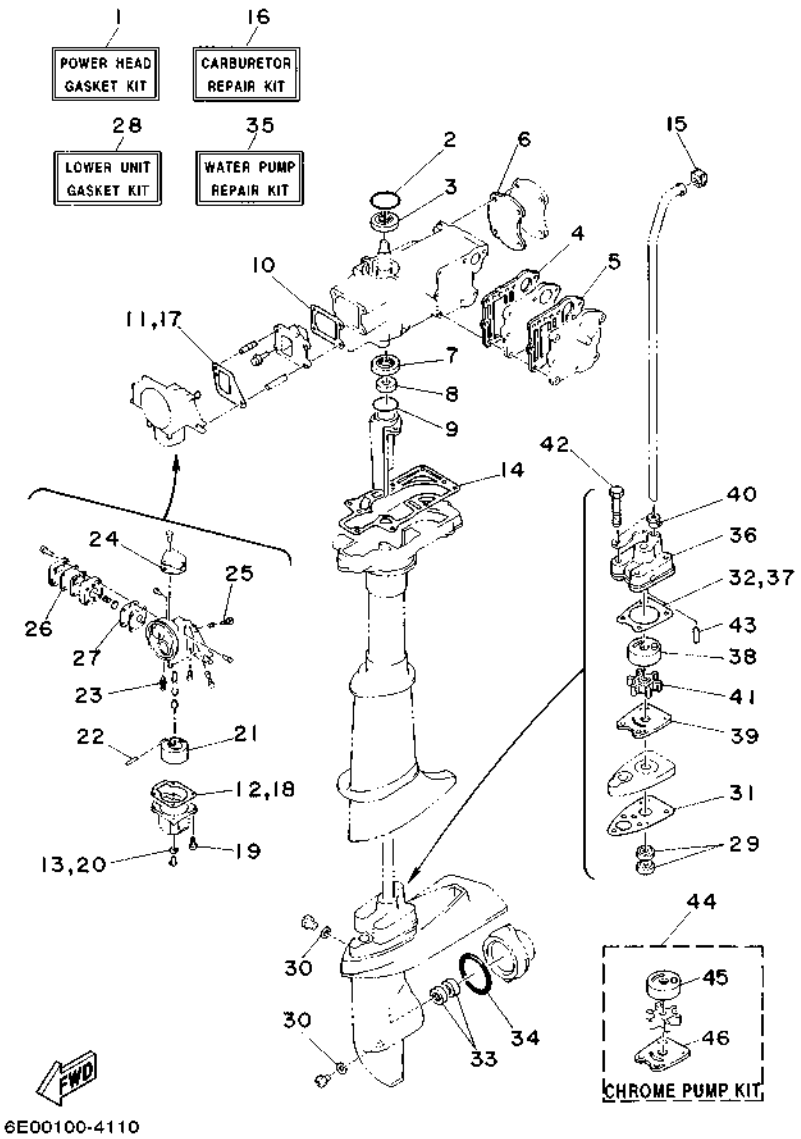

FIG. 11 REPAIR KIT

REF. NO.	PART NO.	DESCRIPTION	6E06	6E36				REMARKS
1	6E0–W0001–A4	POWER HEAD GASKET KIT	1					
	6E3–W0001–A4	POWER HEAD GASKET KIT		1				
2	93210–42159	.O-RING	1	1				
3	93102–20M25	.OIL SEAL	1	1				
4	6E0–41112–A1	.GASKET, EXHAUST INNER COVER	1					
	6E3–41112–A1	.GASKET, EXHAUST INNER COVER		1				
5	6E0–41114–A1	.GASKET, EXHAUST OUTER COVER	1					
	6E3–41114–A1	.GASKET, EXHAUST OUTER COVER		1				
6	6E0–11193–A1	.GASKET, HEAD COVER 1	1					
	6E3–11193–A1	.GASKET, HEAD COVER 1		1				
7	93101–20M29	.OIL SEAL	1	1				
8	93101–10M25	.OIL SEAL	1	1				
9	93210–31MJ5	.O-RING	1	1				
10	6E0–13621–A2	.GASKET, VALVE SEAT	1	1				
11	6E0–14198–A0	.GASKET	1	1				
12	6E0–14384–00	.GASKET, FLOAT CHAMBER	1	1				
13	646–14198–01	.GASKET	1	1				
14	6E0–45113–A1	.GASKET, UPPER CASING	1	1				
15	646–44365–00	.DAMPER, WATER SEAL	1	1				
16	6E0–W0093–04	CARBURETOR REPAIR KIT	1	1				
17	6E0–14198–A0	.GASKET	1	1				
18	6E0–14384–00	.GASKET, FLOAT CHAMBER	1	1				
19	97980–04116	.SCREW, WITH WASHER	4	4				
20	646–14198–01	.GASKET	1	1				
21	6E7–14385–01	.FLOAT	1	1				
22	647–14386–00	.PIN, FLOAT	1	1				
23	6F5–14392–00	.VALVE, NEEDLE	1	1				

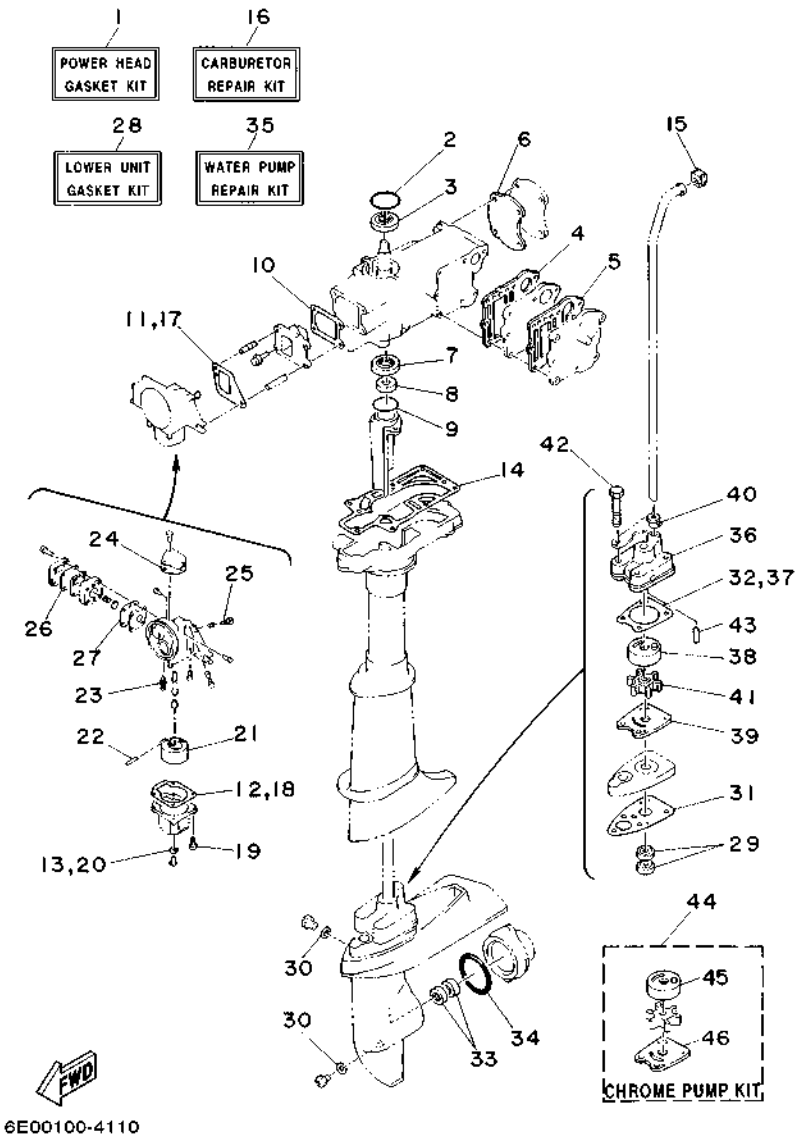

FIG. 11 REPAIR KIT

REF. NO.	PART NO.	DESCRIPTION	6E06	6E36				REMARKS
24	6E0–14227–00	.GASKET	1	1				
25	647–14323–00	.SCREW, AIR ADJUSTING	1	1				
26	6E0–24471–00	.DIAPHRAGM	1	1				
27	6E0–24411–00	.DIAPHRAGM	1	1				
28	6E0–W0001–C1	LOWER UNIT GASKET KIT	1	1				
29	93101–10M14	.OIL SEAL	2	2				
30	90430–08020	.GASKET	3	3				
31	6E0–45315–A0	.PACKING, LOWER CASING	1	1				
32	6E0–44315–A0	.GASKET, WATER PUMP	1	1				
33	93101–13M12	.OIL SEAL	2	2				
34	93210–48214	.O-RING	1	1				
35	6E0–W0078–A3	WATER PUMP REPAIR KIT	1	1				
36	6E0–44311–00	.HOUSING, WATER PUMP	1	1				
37	6E0–44315–A0	.GASKET, WATER PUMP	1	1				
38	6E0–44322–02	.INSERT, CARTRIDGE	1	1				
39	6E0–44323–00	.OUTER PLATE, CARTRIDGE	1	1				
40	6E0–44366–00	.DAMPER, WATER SEAL	1	1				
41	6E0–44352–00	.IMPELLER	1	1				
42	97095–06045	.BOLT	4	4				
43	93604–18080	.PIN, DOWEL	2	2				
44	6E0–W0078–0A	CHROME PUMP KIT	1	1				
45	6E0–44322–40	.INSERT, CARTRIDGE	1	1				
46	6E0–44323–40	.OUTER PLATE, CARTRIDGE	1	1				

PART NO.	REF. NO.
6E0–11191–01–1S	2 – 21
6E3–11191–01–1S	2 – 21
6E0–11193–A1	2 – 22
	11 – 6
6E3–11193–A1	2 – 22
	11 – 6
650–11370–01	2 – 3
6E5–11372–01	2 – 5
6E0–11400–00	2 – 31
6E3–11400–00	2 – 31
6E0–11412–00	2 – 32
6E3–11412–00	2 – 32
6E0–11422–00	2 – 33
6E3–11422–00	2 – 33
6G1–11610–00	2 – 42
6J1–11610–00	2 – 42
6E0–11631–00–98	2 – 41
6E3–11631–00–98	2 – 41
6G1–11633–00	2 – 44
6E0–11651–01	2 – 37
6G1–11681–00	2 – 34
6E5–12411–02	2 – 46
6E5–12412–00	2 – 47
6E0–13610–00	3 – 1
6E0–13621–A2	3 – 3
	11 – 10
6E0–14157–00	3 – 17
6E0–14159–00	3 – 34
6E0–14180–00	3 – 6
646–14198–01	3 – 8
	11 – 13
	11 – 20
6E0–14198–A0	3 – 35
	11 – 11
	11 – 17
646–14212–01	3 – 21
6E0–14227–00	3 – 18
	11 – 24
6E0–14301–05	3 – 5
6E3–14301–05	3 – 5
664–14321–01	3 – 22
647–14323–00	3 – 20
	11 – 25
647–14326–00	3 – 24
6E0–14341–01	3 – 14
6E3–14341–02	3 – 14
648–14342–23	3 – 23
648–14342–26	3 – 23

PART NO.	REF. NO.
648–14343–40	3 – 15
6E0–14346–00	3 – 31
6E0–14381–02	3 – 7
6E0–14384–00	3 – 10
	11 – 12
	11 – 18
6E7–14385–01	3 – 12
	11 – 21
647–14386–00	3 – 13
	11 – 22
6F5–14392–00	3 – 16
	11 – 23
6E0–14417–00	3 – 38
6E0–14418–00	3 – 39
624–14485–00	2 – 4
6E0–15100–01–1S	2 – 2
6E3–15100–02–1S	2 – 2
6E0–15359–01–94	5 – 5
6E0–15396–03–5B	2 – 16
6E0–15705–00	4 – 11
6E0–15710–72–94	4 – 1
6E4–15710–73–94	4 – 1
6E4–15711–71–94	4 – 2
6E0–15714–01	4 – 3
6E0–15717–00	4 – 5
6E0–15723–00–94	5 – 2
677–15741–01	4 – 9
6E4–15746–70	4 – 23
6E4–15747–70	4 – 26
656–15748–00	4 – 19
6G1–15755–00	4 – 14
6E0–15758–01	4 – 15
6E3–15758–01	4 – 15
6E0–15761–00	4 – 16
6E4–15770–70	4 – 21
6E0–15772–71	4 – 22
6E4–15772–71	4 – 22
6G1–15779–00	4 – 12
6E0–24110–01–4D	7 – 13
6A1–2415A–41	8 – 41
6E0–24181–00	7 – 15
6E0–24182–00	7 – 10
6E3–24182–00	7 – 10
6E0–24183–00	5 – 19
646–24251–02	7 – 33
6G1–24304–02	7 – 35
6E0–24311–00	7 – 26
6E0–24312–00	7 – 36

PART NO.	REF. NO.
6E0–24335–00	7 – 25
6E0–24378–00	2 – 9
6E0–24411–00	3 – 32
	11 – 27
6E0–24412–00	3 – 29
6E0–24413–00	3 – 26
6E0–24423–00	3 – 30
6E0–24434–00	3 – 33
6E0–24435–00	3 – 28
6E0–24471–00	3 – 27
	11 – 26
6E0–24500–01	7 – 19
6E0–24500–10	7 – 19
6J1–24524–00	7 – 29
6E0–24571–00	7 – 20
6E0–24572–00	7 – 22
6E0–24575–01	7 – 23
6E0–24591–10	7 – 21
6E0–24610–02	7 – 14
6E0–24641–00	7 – 16
6E3–24641–00	7 – 16
6E0–26301–01	8 – 24
626–28193–01–94	9 – 55
61H–2819R–31	1 – 10
6E0–41111–01–1S	2 – 24
6E3–41111–01–1S	2 – 24
6E0–41112–A1	2 – 25
	11 – 4
6E3–41112–A1	2 – 25
	11 – 4
6E0–41113–01–1S	2 – 26
6E3–41113–01–1S	2 – 26
6E0–41114–A1	2 – 27
	11 – 5
6E3–41114–A1	2 – 27
	11 – 5
6E0–41256–00	3 – 43
661–41262–02	3 – 47
6E0–41271–00	3 – 44
6E0–41272–00	3 – 45
6E0–42111–02–4D	8 – 1
6E0–42119–00	8 – 14
6E0–42125–00	8 – 9
6E4–42129–00	8 – 3
6E0–42129–02	8 – 2
6E0–42131–02–94	8 – 5
6E0–42134–02	8 – 10
6E0–42137–10	8 – 16

PART NO.	REF. NO.
6E0–42138–01	8 – 21
6E0–42159–02	8 – 22
6E0–42177–00	8 – 15
6E0–42528–03	9 – 47
6L5–42529–01	9 – 50
6E0–42537–02	9 – 43
6E0–42538–02	9 – 44
6E0–42539–00	9 – 45
6E0–42542–00	7 – 11
6E0–42549–00	9 – 46
6L5–42561–00	9 – 51
6E0–42610–40–4D	1 – 1
6E3–42610–40–4D	1 – 1
6E0–42615–00	1 – 2
6E0–42647–01	1 – 3
6E0–42651–02	1 – 4
6E0–42677–20	1 – 7
6E3–42677–20	1 – 7
6E0–42678–12	1 – 8
6E3–42678–12	1 – 8
6E0–42711–05–4D	7 – 1
6E0–42711–10–4D	7 – 1
664–42791–10	7 – 41
6A1–42792–01	7 – 42
6E0–42815–00–4D	7 – 2
6E0–42816–00	7 – 4
6E0–43111–02–4D	9 – 11
6E0–43112–01–4D	9 – 12
6A1–43113–01	9 – 19
620–43114–00	9 – 13
6E0–43116–01	9 – 14
6E0–43118–01	9 – 15
6E0–43160–01	9 – 36
689–43165–00	9 – 37
6E0–43181–00	9 – 29
620–43189–00	9 – 32
6E0–43311–04–4D	9 – 25
6E0–43312–02–4D	9 – 26
6E0–43313–00–94	9 – 31
6E0–43614–00–5B	9 – 39
6E0–43632–00	9 – 30
6E4–44111–72–4D	8 – 25
6E0–44116–00	8 – 29
6E0–44121–00	8 – 32
6E0–44143–00	8 – 34
6E0–44143–10	8 – 34
6E0–44145–00	8 – 37
6E0–44146–00	8 – 38

PART NO.	REF. NO.
6G1–44147–00	10 – 54
6E0–44150–00	10 – 53
6E0–44150–10	10 – 53
6E0–44191–11	1 – 9
6L5–44196–00	9 – 52
6L5–44197–00	9 – 53
6E0–44311–00	10 – 23
	11 – 36
6E0–44315–A0	10 – 24
	11 – 32
	11 – 37
6E0–44322–02	10 – 25
	11 – 38
6E0–44322–40	11 – 45
6E0–44323–00	10 – 26
	11 – 39
6E0–44323–40	11 – 46
6E0–44328–00	10 – 32
6E0–44352–00	10 – 28
	11 – 41
6E0–44361–00	10 – 33
6E0–44361–10	10 – 33
646–44365–00	10 – 34
	11 – 15
6E0–44366–00	10 – 27
	11 – 40
6E0–45111–02–4D	9 – 1
6E0–45111–12–4D	9 – 1
6E0–45113–A1	2 – 48
	11 – 14
647–45151–01	9 – 9
6L5–45251–03	10 – 7
6E0–45300–03–4D	10 – 1
6E0–45300–13–4D	10 – 1
6E0–45311–02–4D	10 – 2
6E0–45315–A0	10 – 15
	11 – 31
6E0–45316–09	10 – 4
6E0–45317–09	10 – 3
6E0–45318–01	10 – 57
6E0–45321–01–5B	10 – 14
6E0–45331–00–5B	10 – 56
6E0–45361–01–4D	10 – 18
6E0–45511–01	10 – 35
6E0–45511–11	10 – 35
6E0–45551–00	10 – 37
6E0–45560–00	10 – 40
6E0–45570–00	10 – 41

PART NO.	REF. NO.
6E0–45611–01	10 – 48
6L5–45616–00	10 – 50
6E0–45631–00	10 – 43
654–45633–00	10 – 45
654–45635–00	10 – 47
6E0–45941–01–EL	10 – 55
6E0–45943–01–EL	10 – 55
6E0–45949–00–EL	10 – 55
6L5–45987–01	10 – 49
6E0–81303–40	5 – 23
6E0–81303–80	5 – 23
6E0–81328–70	5 – 13
6E0–81336–70	5 – 12
6E0–82316–01–94	6 – 3
6E0–82317–00	6 – 4
6E3–82370–21	6 – 2
6G1–82370–21	6 – 2
682–82556–00	7 – 39
6E0–82575–00	7 – 38
689–8257Y–00	7 – 40
6A1–83625–41	7 – 43
6E0–83627–41	8 – 40
6E0–85520–70	5 – 6
6E0–85540–71	6 – 11
6E0–85548–00	6 – 10
6E0–85550–72	5 – 1
6E0–85560–71	5 – 4
6E0–85570–00	6 – 5
6E0–85592–70	5 – 10
6E0–85595–70	5 – 8
6E0–W0001–A4	11 – 1
6E3–W0001–A4	11 – 1
6E0–W0001–C1	11 – 28
6E0–W0004–00	3 – 2
6E0–W0070–14	1 – 6
6E0–W0078–0A	11 – 44
6E0–W0078–A3	11 – 35
6E0–W0090–04–1S	2 – 1
6E3–W0090–04–1S	2 – 1
6E0–W0093–04	11 – 16
656–W2810–02	1 – 11
90101–06335	9 – 22
90101–08M07	9 – 17
90105–06035	2 – 29
90105–06037	2 – 28
	2 – 28
90105–06039	2 – 23
	2 – 30

PART NO.	REF. NO.
90105–06M14	4 – 17
	5 – 3
90105–06M16	2 – 7
90105–06M17	2 – 8
90116–06M08	3 – 49
90119–06M18	4 – 25
90119–06M40	10 – 12
90149–05M13	8 – 19
90159–04035	5 – 14
90159–04036	5 – 9
90159–04M24	7 – 30
90159–05037	5 – 11
90159–05038	5 – 7
90159–05040	5 – 24
90170–10113	5 – 21
90170–16M35	7 – 28
90185–08057	9 – 20
90201–06M30	4 – 8
90201–08M03	9 – 18
90201–08M54	10 – 52
90201–10119	8 – 18
90201–10126	5 – 22
90201–11M49	10 – 39
90201–13M50	10 – 42
90201–32M48	2 – 40
90202–05088	4 – 29
90202–07M22	8 – 13
90202–12M16	3 – 46
90202–12M17	7 – 24
90202–16061	8 – 28
90206–12052	7 – 5
90206–16M06	8 – 27
90209–18112	2 – 38
90243–04M01	9 – 16
90250–05046	10 – 44
90266–04M00	1 – 5
90266–04M05	9 – 54
90269–02M09	8 – 20
90280–04M06	5 – 20
90340–08002	10 – 11
90386–12069	7 – 3
90386–26M30	8 – 4
90386–26M33	8 – 8
90387–06504	4 – 24
90387–06M11	9 – 21
90387–06M14	10 – 13
90430–08020	10 – 10
	11 – 30

PART NO.	REF. NO.
90445–07M00	2 – 11
90445–07M28	2 – 12
	2 – 14
90445–07M32	2 – 13
90445–09057	7 – 34
90445–09M27	7 – 31
90445–09M37	7 – 17
90464–09M21	7 – 37
90465–08M62	7 – 32
90465–13M11	7 – 27
90467–06016	2 – 10
	2 – 15
90467–08004	7 – 18
	7 – 18
90467–08M01	10 – 36
90468–07M02	2 – 49
90468–10005	4 – 27
90480–10M13	9 – 10
90480–14M14	7 – 8
90480–25161	6 – 8
90501–10064	10 – 46
90501–10227	4 – 20
90501–23215	8 – 17
90502–08M05	9 – 49
90508–14M10	9 – 40
90508–14M11	9 – 41
90508–16020	9 – 34
90508–16021	9 – 35
90510–08M03	4 – 4
91490–12010	8 – 12
91490–16010	4 – 30
	8 – 36
91490–25030	10 – 51
91690–30008	9 – 38
91790–05010	4 – 28
92903–05600	8 – 7
92990–05600	3 – 41
	8 – 35
	10 – 60
92990–06300	10 – 9
92990–06600	9 – 23
92995–06100	5 – 18
92995–06600	2 – 20
	3 – 37
	6 – 7
	9 – 4
	9 – 6
	10 – 17

PART NO.	REF. NO.
93101–10M14	10 – 5
	11 – 29
93101–10M25	2 – 18
	11 – 8
93101–13M12	10 – 20
	11 – 33
93101–20M29	2 – 39
	11 – 7
93102–20M25	5 – 15
	11 – 3
93210–12327	8 – 26
93210–31MJ5	2 – 17
	11 – 9
93210–42159	5 – 16
	11 – 2
93210–48214	10 – 21
	11 – 34
93306–004U0	10 – 6
	10 – 19
93306–204U0	2 – 35
93310–112V0	2 – 43
93310–418V1	2 – 36
93420–22M03	10 – 58
93430–06M02	4 – 10
93450–13022	2 – 45
93604–09066	10 – 29
93604–18080	10 – 31
	11 – 43
93606–12019	2 – 6
	9 – 2
93700–06M03	9 – 8
	9 – 27
94702–00272	2 – 50
95303–06600	4 – 7
95380–06600	9 – 24
95380–06700	3 – 36
	7 – 7
	8 – 30
	9 – 7
95380–08600	9 – 48
95627–06325	3 – 48
95895–06010	9 – 42
95895–06012	8 – 31
	10 – 8
95895–06016	3 – 4
	6 – 1
	10 – 22
95895–06020	4 – 18

PART NO.	REF. NO.
95895–06020	6 – 12
	7 – 9
	8 – 39
	9 – 33
95895–06025	7 – 12
	8 – 33
95895–06035	9 – 28
97013–05020	8 – 6
97080–06010	6 – 9
97095–06016	2 – 19
	5 – 17
	6 – 6
	9 – 5
97095–06025	10 – 16
97095–06030	9 – 3
97095–06045	10 – 30
	11 – 42
97313–06035	4 – 6
97780–40720	3 – 42
97880–05025	3 – 40
	10 – 59
97885–05012	8 – 11
	8 – 23
97885–06030	7 – 6
97890–04007	3 – 19
97890–05006	3 – 9
97980–04116	3 – 11
	11 – 19
97980–04120	3 – 25
99001–06600	10 – 38

PART NO.	REF. NO.

PART NO.	REF. NO.