YAMAHA

OWNER'S SERVICE MANUAL

YZ450F(V)

2S2-28199-80

EC010010

YZ450F(V)
OWNER'S SERVICE MANUAL
©2005 by Yamaha Motor Co., Ltd.
1st Edition, September 2005
All rights reserved. Any reprinting or unauthorized use without the written permission of Yamaha Motor Co., Ltd. is expressly prohibited.
Printed in Japan

EC020000

INTRODUCTION

Congratulations on your purchase of a Yamaha YZ series. This model is the culmination of Yamaha's vast experience in the production of pacesetting racing machines. It represents the highest grade of craftsmanship and reliability that have made Yamaha a leader.

This manual explains operation, inspection, basic maintenance and tuning of your machine. If you have any questions about this manual or your machine, please contact your Yamaha dealer.

NOTE:

Yamaha continually seeks advancements in product design and quality. Therefore, while this manual contains the most current product information available at the time of printing, there may be minor discrepancies between your machine and this manual. If you have any questions concerning this manual, please consult your Yamaha dealer.

⚠ WARNING

PLEASE READ THIS MANUAL CAREFULLY AND COMPLETELY BEFORE OPERATING THIS MACHINE. DO NOT ATTEMPT TO OPERATE THIS MACHINE UNTIL YOU HAVE ATTAINED A SATISFACTORY KNOWLEDGE OF ITS CONTROLS AND OPERATING FEATURES AND UNTIL YOU HAVE BEEN TRAINED IN SAFE AND PROPER RIDING TECHNIQUES. REGULAR INSPECTIONS AND CAREFUL MAINTENANCE, ALONG WITH GOOD RIDING SKILLS, WILL ENSURE THAT YOU SAFETY ENJOY THE CAPABILITIES AND THE RELIABILITY OF THIS MACHINE.

IMPORTANT NOTICE

THIS MACHINE IS DESIGNED STRICTLY FOR COMPETITION USE, ONLY ON A CLOSED COURSE. It is illegal for this machine to be operated on any public street, road, or highway. Off-road use on public lands may also be illegal. Please check local regulations before riding.

⚠ SAFETY INFORMATION

1. **THIS MACHINE IS TO BE OPERATED BY AN EXPERIENCED RIDER ONLY.**
   Do not attempt to operate this machine at maximum power until you are totally familiar with its characteristics.
2. **THIS MACHINE IS DESIGNED TO BE RIDDEN BY THE OPERATOR ONLY.**
   Do not carry passengers on this machine.
3. **ALWAYS WEAR PROTECTIVE APPAREL.**
   When operating this machine, always wear an approved helmet with goggles or a face shield. Also wear heavy boots, gloves, and protective clothing. Always wear proper fitting clothing that will not be caught in any of the moving parts or controls of the machine.
4. **ALWAYS MAINTAIN YOUR MACHINE IN PROPER WORKING ORDER.**
   For safety and reliability, the machine must be properly maintained. Always perform the pre-operation checks indicated in this manual. Correcting a mechanical problem before you ride may prevent an accident.
5. **GASOLINE IS HIGHLY FLAMMABLE.**
   Always turn off the engine while refueling. Take care to not spill any gasoline on the engine or exhaust system. Never refuel in the vicinity of an open flame, or while smoking.

6. **GASOLINE CAN CAUSE INJURY.**
   If you should swallow some gasoline, inhale excess gasoline vapors, or allow any gasoline to get into your eyes, contact a doctor immediately. If any gasoline spills onto your skin or clothing, immediately wash skin areas with soap and water, and change your clothes.
7. **ONLY OPERATE THE MACHINE IN AN AREA WITH ADEQUATE VENTILATION.**
   Never start the engine or let it run for any length of time in an enclosed area.
   Exhaust fumes are poisonous. These fumes contain carbon monoxide, which by itself is odorless and colorless. Carbon monoxide is a dangerous gas which can cause unconsciousness or can be lethal.
8. **PARK THE MACHINE CAREFULLY; TURN OFF THE ENGINE.**
   Always turn off the engine if you are going to leave the machine. Do not park the machine on a slope or soft ground as it may fall over.
9. **THE ENGINE, EXHAUST PIPE, MUFFLER, AND OIL TANK WILL BE VERY HOT AFTER THE ENGINE HAS BEEN RUN.**
   Be careful not to touch them or to allow any clothing item to contact them during inspection or repair.
10. **PROPERLY SECURE THE MACHINE BEFORE TRANSPORTING IT.**
    When transporting the machine in another vehicle, always be sure it is properly secured and in an upright position and that the fuel cock is in the "OFF" position. Otherwise, fuel may leak out of the carburetor or fuel tank.

EC050000

TO THE NEW OWNER

This manual will provide you with a good basic understanding of features, operation, and basic maintenance and inspection items of this machine. Please read this manual carefully and completely before operating your new machine. If you have any questions regarding the operation or maintenance of your machine, please consult your Yamaha dealer.

NOTE:

This manual should be considered a permanent part of this machine and should remain with it even if the machine is subsequently sold.

EC060000

NOTICE

Some data in this manual may become outdated due to improvements made to this model in the future. If there is any question you have regarding this manual or your machine, please consult your Yamaha dealer.

EC070001

F.I.M. MACHINE WEIGHTS:

Weights of machines without fuel

The minimum weights for motocross machines are:

for the class 125 cc ..... minimum 88 kg (194 lb)

for the class 250 cc ..... minimum 98 kg (216 lb)

for the class 500 cc ..... minimum 102 kg (225 lb)

In modifying your machine (e.g., for weight reduction), take note of the above limits of weight.

EC080000

HOW TO USE THIS MANUAL

EC081000

PARTICULARLY IMPORTANT INFORMATION

⚠

The Safety Alert Symbol means ATTENTION! BECOME ALERT! YOUR SAFETY IS INVOLVED!

⚠ WARNING

Failure to follow WARNING instructions could result in severe injury or death to the machine operator, a bystander, or a person inspecting or repairing the machine.

CAUTION:

A CAUTION indicates special precautions that must be taken to avoid damage to the machine.

NOTE:

A NOTE provides key information to make procedures easier or clearer.

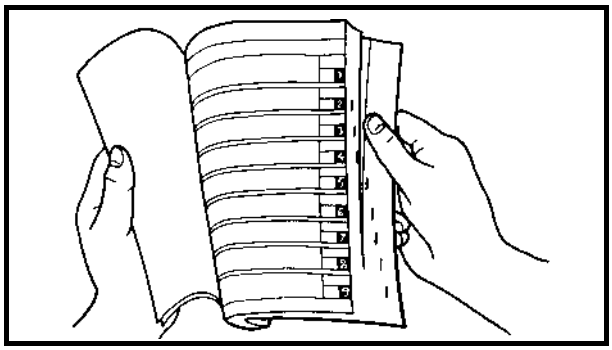

EC082000

FINDING THE REQUIRED PAGE

1. This manual consists of seven chapters; “General Information”, “Specifications”, “Regular inspection and adjustments”, “Engine”, “Chassis”, “Electrical” and “Tuning”.
2. The table of contents is at the beginning of the manual. Look over the general layout of the book before finding then required chapter and item.
   Bend the book at its edge, as shown, to find the required fore edge symbol mark and go to a page for required item and description.

EC083000

MANUAL FORMAT

All of the procedures in this manual are organized in a sequential, step-by-step format. The information has been complied to provide the mechanic with an easy to read, handy reference that contains comprehensive explanations of all disassembly, repair, assembly, and inspection operations.

In this revised format, the condition of a faulty component will precede an arrow symbol and the course of action required will follow the symbol, e.g.,

- Bearings
  Pitting/damage → Replace.

EC084002

HOW TO READ DESCRIPTIONS

To help identify parts and clarify procedure steps, there are exploded diagrams at the start of each removal and disassembly section.

1. An easy-to-see exploded diagram ① is provided for removal and disassembly jobs.
2. Numbers ② are given in the order of the jobs in the exploded diagram. A number that is enclosed by a circle indicates a disassembly step.
3. An explanation of jobs and notes is presented in an easy-to-read way by the use of symbol marks ③. The meanings of the symbol marks are given on the next page.
4. A job instruction chart ④ accompanies the exploded diagram, providing the order of jobs, names of parts, notes in jobs, etc.
5. Extent of removal ⑤ is provided in the job instruction chart to save the trouble of an unnecessary removal job.
6. For jobs requiring more information, the step-by-step format supplements ⑥ are given in addition to the exploded diagram and job instruction chart.

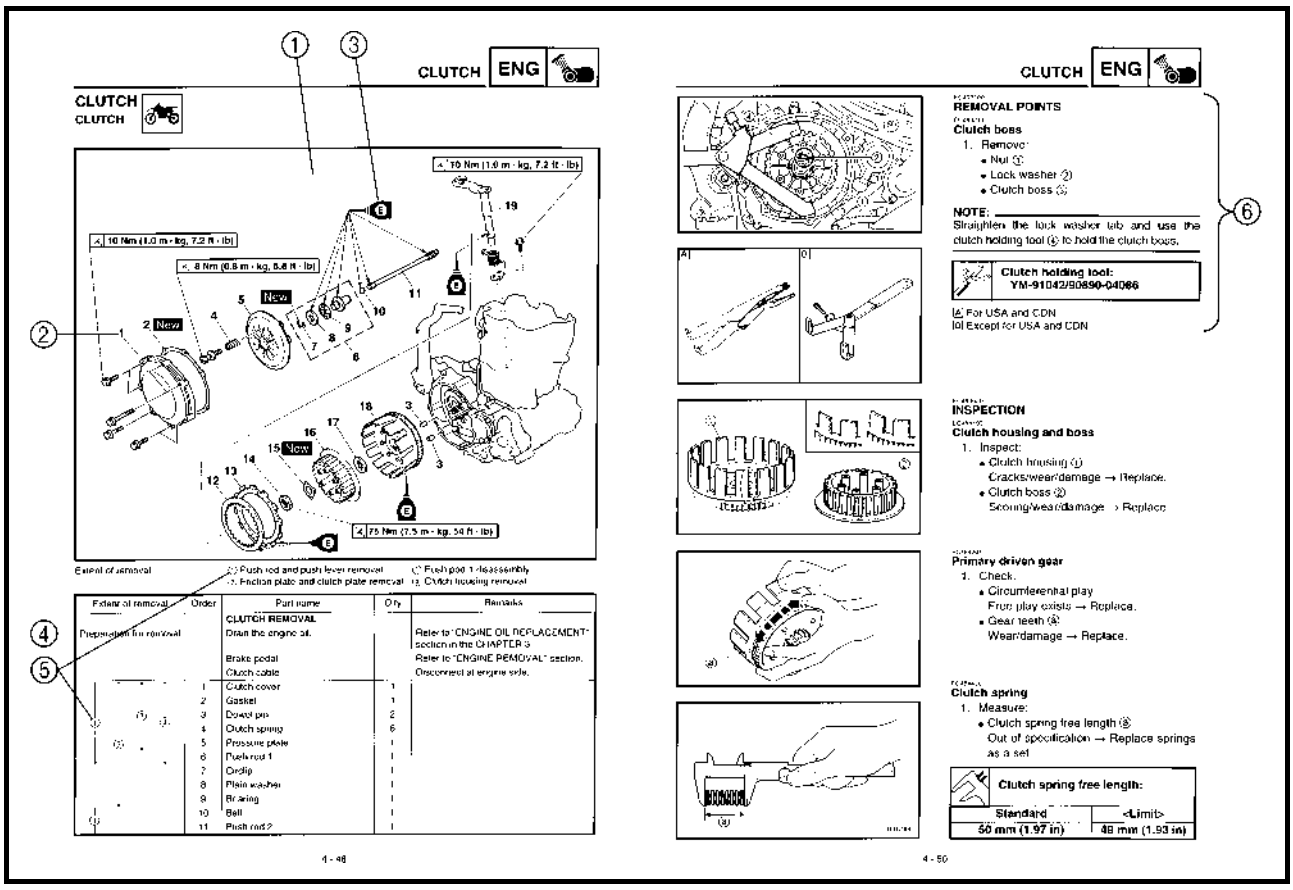

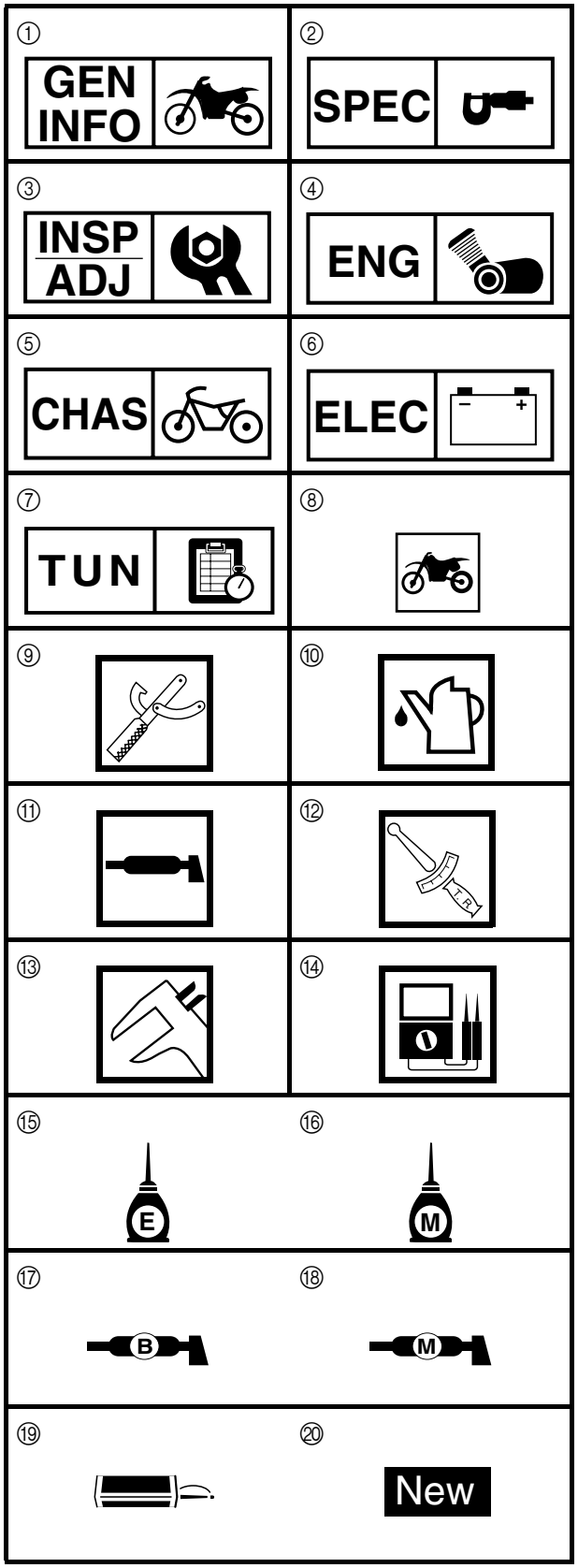

ILLUSTRATED SYMBOLS (Refer to the illustration)

Illustrated symbols ① to ⑦ are designed as thumb tabs to indicate the chapter's number and content.

① General information
② Specifications
③ Regular inspection and adjustments
④ Engine
⑤ Chassis
⑥ Electrical
⑦ Tuning

Illustrated symbols ⑧ to ⑭ are used to identify the specifications appearing in the text.

⑧ With engine mounted
⑨ Special tool
⑩ Filling fluid
⑪ Lubricant
⑫ Tightening
⑬ Specified value, Service limit
⑭ Resistance (Ω), Voltage (V), Electric current (A)

Illustrated symbols ⑮ to ⑱ in the exploded diagrams indicate grade of lubricant and location of lubrication point.

⑮ Apply engine oil
⑯ Apply molybdenum disulfide oil
⑰ Apply lightweight lithium-soap base grease
⑱ Apply molybdenum disulfide grease

Illustrated symbols ⑲ to ⑳ in the exploded diagrams indicate where to apply a locking agent and where to install new parts.

⑲ Apply locking agent (LOCTITE®)
⑳ Use new one

EC090000

INDEX

GENERAL INFORMATION

SPECIFICATIONS

REGULAR INSPECTION AND ADJUSTMENTS

ENGINE

CHASSIS

ELECTRICAL

TUNING

EC0A0000

CONTENTS

CHAPTER 1
GENERAL INFORMATION

DESCRIPTION 1-1
MACHINE IDENTIFICATION 1-2
IMPORTANT INFORMATION 1-3
CHECKING OF CONNECTION 1-6
SPECIAL TOOLS 1-7
CONTROL FUNCTIONS 1-10
FUEL 1-13
STARTING AND BREAK-IN 1-14
TORQUE-CHECK POINTS 1-18
CLEANING AND STORAGE 1-19

CHAPTER 2
SPECIFICATIONS

GENERAL SPECIFICATIONS 2-1
MAINTENANCE SPECIFICATIONS 2-4
GENERAL TORQUE
SPECIFICATIONS 2-18
DEFINITION OF UNITS 2-18
LUBRICATION DIAGRAMS 2-19
CABLE ROUTING DIAGRAM 2-21

CHAPTER 3
REGULAR INSPECTION AND ADJUSTMENTS

MAINTENANCE INTERVALS 3-1
PRE-OPERATION INSPECTION
AND MAINTENANCE 3-4
ENGINE 3-5
CHASSIS 3-24
ELECTRICAL 3-46

CHAPTER 4
ENGINE

SEAT, FUEL TANK AND SIDE COVERS 4-1
EXHAUST PIPE AND SILENCER 4-3
RADIATOR 4-6
CARBURETOR 4-9
CAMSHAFTS 4-22
CYLINDER HEAD 4-30
VALVES AND VALVE SPRINGS 4-34
CYLINDER AND PISTON 4-43
CLUTCH 4-49
OIL FILTER, WATER PUMP AND CRANKCASE COVER (RIGHT) 4-56
BALANCER 4-63
OIL PUMP 4-66
KICK AXLE AND SHIFT SHAFT 4-70
CDI MAGNETO 4-78
ENGINE REMOVAL 4-81
CRANKCASE AND CRANKSHAFT 4-86
TRANSMISSION, SHIFT CAM AND SHIFT FORK 4-95

CHAPTER 5
CHASSIS

FRONT WHEEL AND REAR WHEEL 5-1
FRONT BRAKE AND REAR BRAKE 5-10
FRONT FORK 5-26
HANDLEBAR 5-43
STEERING 5-49
SWINGARM 5-54
REAR SHOCK ABSORBER 5-62

CHAPTER 6
ELECTRICAL

ELECTRICAL COMPONENTS AND
WIRING DIAGRAM 6-1
MAP-CONTROLLED CDI UNIT 6-2
IGNITION SYSTEM 6-3
TPS (THROTTLE POSITION SENSOR)
SYSTEM 6-7

CHAPTER 7
TUNING

ENGINE 7-1
CHASSIS 7-11

EC100000
GENERAL INFORMATION

EC110000
DESCRIPTION

① Clutch lever
② Hot starter lever
③ Front brake lever
④ Throttle grip
⑤ Radiator cap
⑥ Fuel tank cap
⑦ “ENGINE STOP” button
⑧ Kick starter
⑨ Fuel tank
⑩ Radiator
⑪ Coolant drain bolt
⑫ Rear brake pedal
⑬ Valve joint
⑭ Fuel cock
⑮ Cold starter knob
⑯ Drive chain
⑰ Air cleaner
⑱ Shift pedal
⑲ Oil dipstick
⑳ Front fork

NOTE:
- The machine you have purchased may differ slightly from those shown in the following.
- Designs and specifications are subject to change without notice.

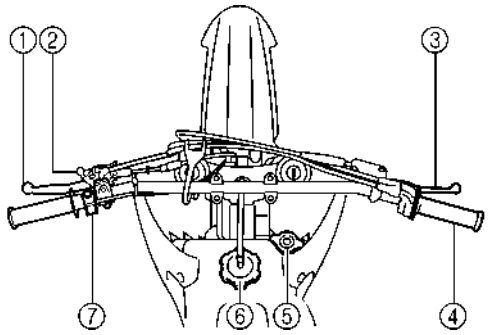

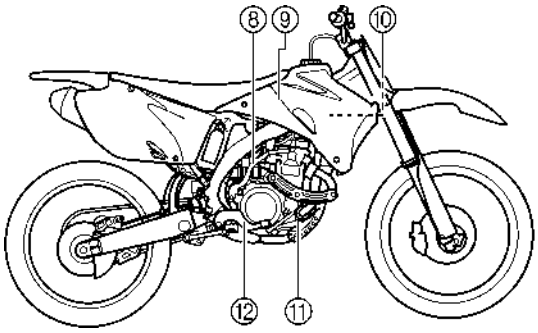

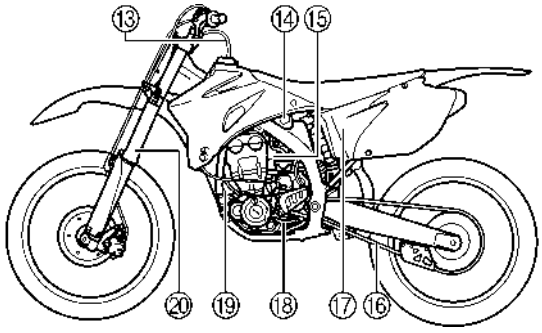

EC120001
MACHINE IDENTIFICATION

There are two significant reasons for knowing the serial number of your machine:

1. When ordering parts, you can give the number to your Yamaha dealer for positive identification of the model you own.
2. If your machine is stolen, the authorities will need the number to search for and identify your machine.

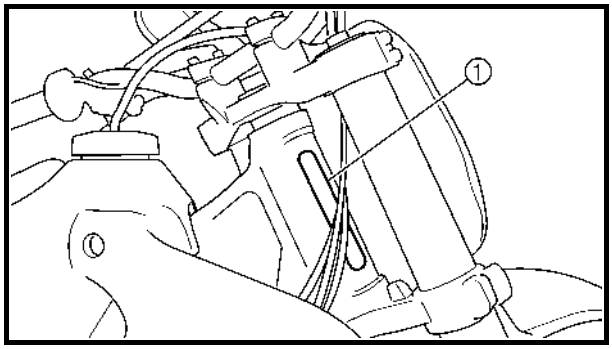

EC121001
VEHICLE IDENTIFICATION NUMBER

The vehicle identification number ① is stamped on the right of the steering head pipe.

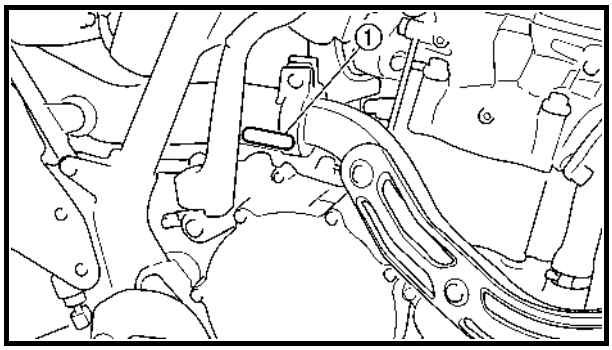

EC123001
ENGINE SERIAL NUMBER

The engine serial number ① is stamped into the elevated part of the right-side of the engine.

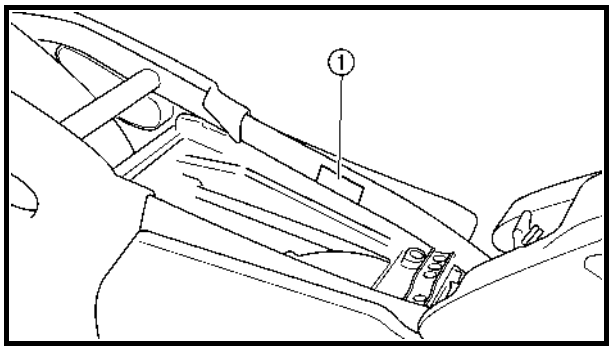

EC124000
MODEL LABEL

The model label ① is affixed to the frame under the rider's seat. This information will be needed to order spare parts.

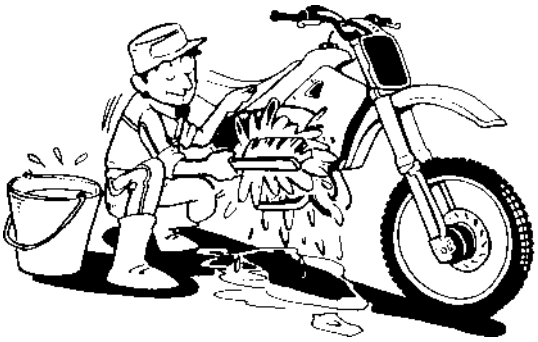

EC130000
IMPORTANT INFORMATION

EC131010
PREPARATION FOR REMOVAL AND DISASSEMBLY

1. Remove all dirt, mud, dust, and foreign material before removal and disassembly. When washing the machine with high pressured water, cover the parts as follows.
   - Silencer exhaust port
   - Side cover air intake port
   - Water pump housing hole at the bottom
   - Drain hole on the cylinder head (right side)

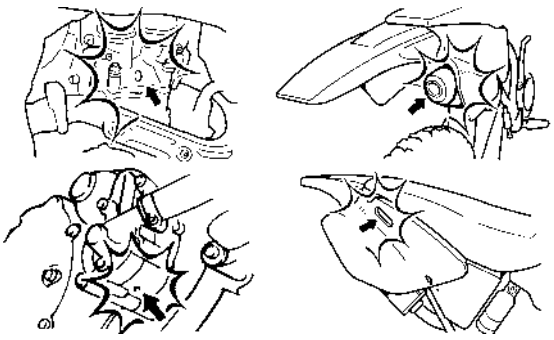

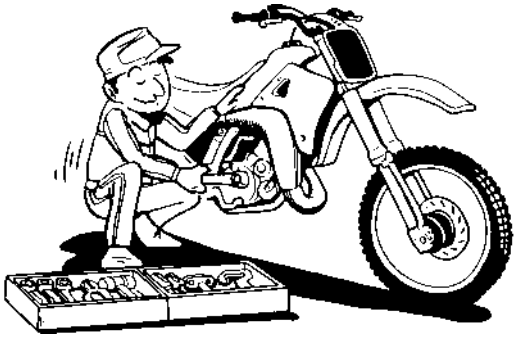

2. Use proper tools and cleaning equipment. Refer to “SPECIAL TOOLS” section.

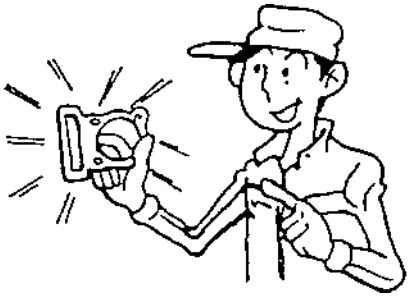

3. When disassembling the machine, keep mated parts together. They include gears, cylinders, pistons, and other mated parts that have been “mated” through normal wear. Mated parts must be reused as an assembly or replaced.

4. During the machine disassembly, clean all parts and place them in trays in the order of disassembly. This will speed up assembly time and help assure that all parts are correctly reinstalled.

5. Keep away from fire.

EC132000
ALL REPLACEMENT PARTS

1. We recommend to use Yamaha genuine parts for all replacements. Use oil and/or grease recommended by Yamaha for assembly and adjustment.

EC133000
GASKETS, OIL SEALS AND O-RINGS

1. All gaskets, oil seals, and O-rings should be replaced when an engine is overhauled. All gasket surfaces, oil seal lips, and O-rings must be cleaned.
2. Properly oil all mating parts and bearings during reassembly. Apply grease to the oil seal lips.

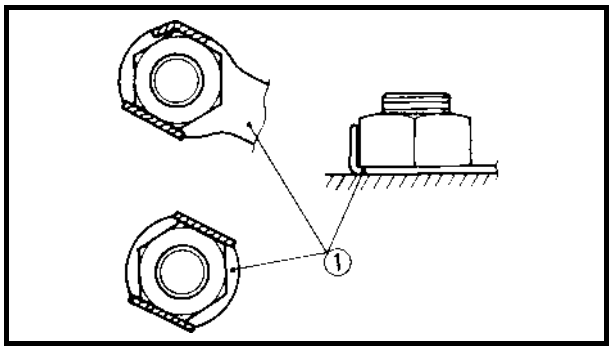

EC134000
LOCK WASHERS/PLATES AND COTTER PINS

1. All lock washers/plates ① and cotter pins must be replaced when they are removed. Lock tab(s) should be bent along the bolt or nut flat(s) after the bolt or nut has been properly tightened.

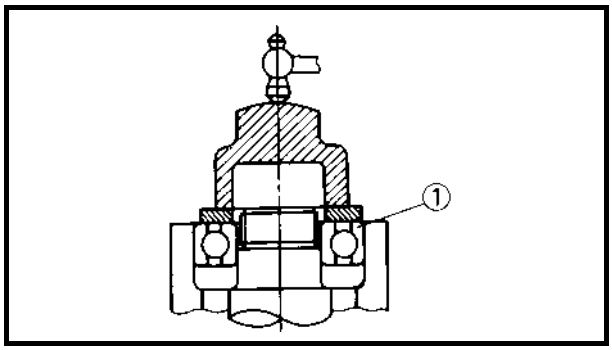

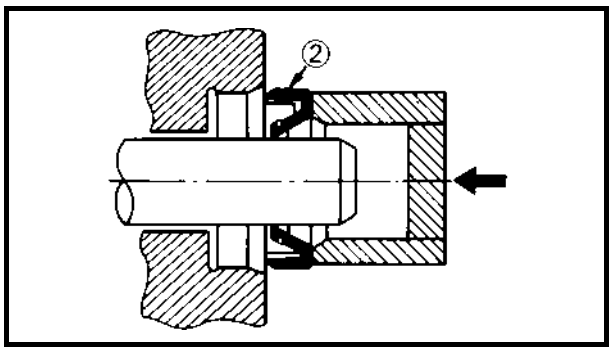

EC135001
BEARINGS AND OIL SEALS

1. Install the bearing(s) ① and oil seal(s) ② with their manufacturer's marks or numbers facing outward. (In other words, the stamped letters must be on the side exposed to view.) When installing oil seal(s), apply a light coating of light-weight lithium base grease to the seal lip(s). Oil the bearings liberally when installing.

CAUTION:

Do not use compressed air to spin the bearings dry. This causes damage to the bearing surfaces.

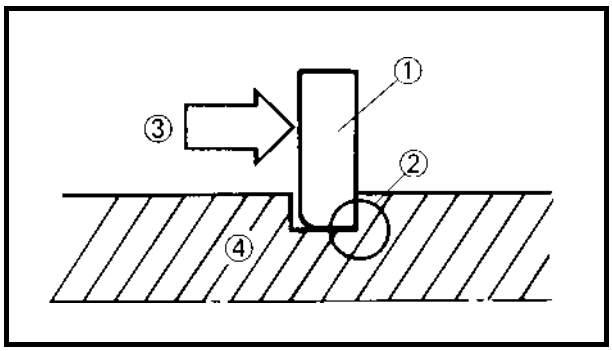

EC136000
CIRCLIPS

1. All circlips should be inspected carefully before reassembly. Always replace piston pin clips after one use. Replace distorted circlips. When installing a circlip ①, make sure that the sharp-edged corner ② is positioned opposite to the thrust ③ it receives. See the sectional view.

④ Shaft

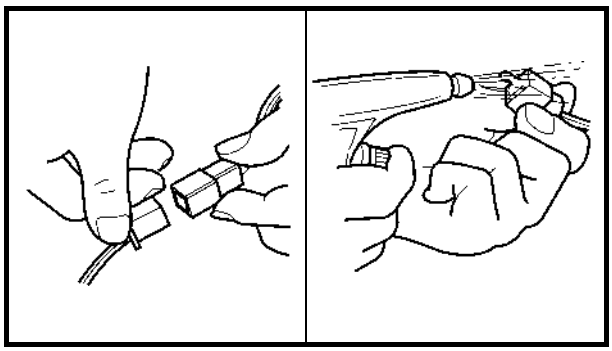

EC1C0001

CHECKING OF CONNECTION

Dealing with stains, rust, moisture, etc. on the connector.

1. Disconnect:
   - Connector
2. Dry each terminal with an air blower.

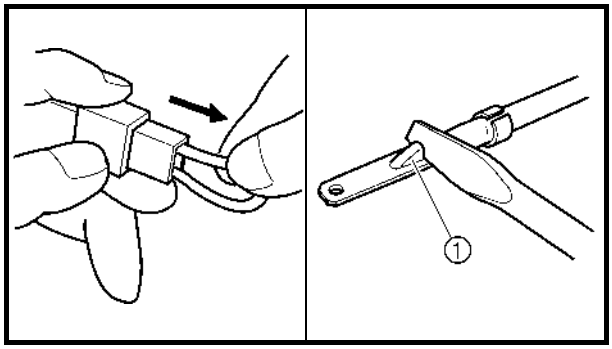

3. Connect and disconnect the connector two or three times.
4. Pull the lead to check that it will not come off.
5. If the terminal comes off, bend up the pin ① and reinsert the terminal into the connector.

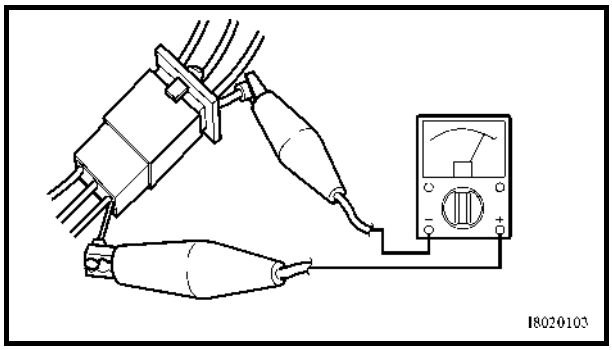

6. Connect:
   - Connector

NOTE:
The two connectors “click” together.

7. Check for continuity with a tester.

NOTE:
- If there in no continuity, clean the terminals.
- Be sure to perform the steps 1 to 7 listed above when checking the wire harness.
- For a field remedy, use a contact revitalizer available on the market.
- Use the tester on the connector as shown.

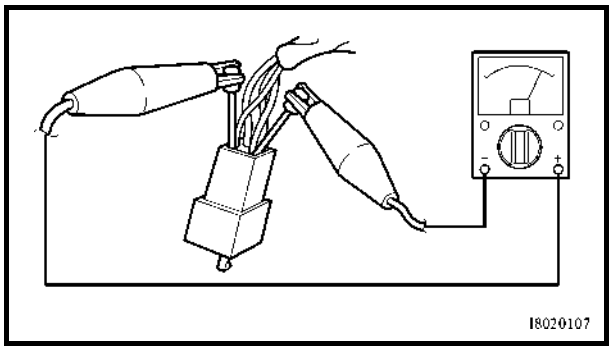

EC140001

SPECIAL TOOLS

The proper special tools are necessary for complete and accurate tune-up and assembly. Using the correct special tool will help prevent damage caused by the use of improper tools or improvised techniques. The shape and part number used for the special tool differ by country, so two types are provided. Refer to the list provided to avoid errors when placing an order.

NOTE:

- For U.S.A. and Canada, use part number starting with “YM-”, “YU-” or “ACC-”.
- For others, use part number starting with “90890-”.

Part number	Tool name/How to use	Illustration	
YU-3097, 90890-01252 YU-1256	Dial gauge and stand Stand These tools are used to check each part for runout or bend.	YU-3097 YU-1256	90890-01252
YU-90050, 90890-01274 YU-90050, 90890-01275 YU-91044, 90890-04081 YU-90063, 90890-01278	Crankshaft installing tool Crankshaft installing pot Crankshaft installing bolt Spacer (crankshaft installer) Adapter (M12) These tools are used to install the crankshaft.	YU-90050 YU-90063 YU-91044	90890-01274 90890-01275 90890-01278 90890-04081
YU-1304, 90890-01304	Piston pin puller This tool is used to remove the piston pin.	YU-1304	90890-01304
YU-24460-01, 90890-01325 YU-33984, 90890-01352	Radiator cap tester Adapter These tools are used for checking the cooling system.	YU-24460-01 YU-33984	90890-01325 90890-01352
YM-04151, 90890-04151	Rotor puller This tool is used to remove the flywheel magneto.	YM-04151	90890-04151
YU-33975, 90890-01403	Ring nut wrench This tool is used when tighten the steering ring nut to specification.	YU-33975	90890-01403
YM-01500, 90890-01500	Cap bolt wrench This tool is used to loosen or tighten the base valve.	YM-01500	90890-01500

Part number	Tool name/How to use	Illustration	
YM-01501, 90890-01501	Cap bolt ring wrench This tool is used to loosen or tighten the damper assembly.	YM-01501	90890-01501
YM-A0948, 90890-01502	Fork seal driver This tool is used when install the fork oil seal.	YM-A0948	90890-01502
YU-3112-C, 90890-03112	Pocket tester Use this tool to inspect the coil resistance, output voltage and amperage.	YU-3112-C	90890-03112
YM-33277-A, 90890-03141	Timing light This tool is necessary for checking ignition timing.	YM-33277-A	90890-03141
YM-4019, 90890-04019	Valve spring compressor This tool is needed to remove and install the valve assemblies.	YM-4019	90890-04019
YM-91042, 90890-04086	Clutch holding tool This tool is used to hold the clutch when removing or installing the clutch boss securing nut.	YM-91042	90890-04086
YM-4116, 90890-04116 YM-4097, 90890-04097	Valve guide remover Intake 4.5 mm (0.18 in) Exhaust 5.0 mm (0.20 in) This tool is needed to remove and install the valve guide.	YM-4116 YM-4097	90890-04116 90890-04097
YM-4117, 90890-04117 YM-4098, 90890-04098	Valve guide installer Intake Exhaust This tool is needed to install the valve guide.	YM-4117 YM-4098	90890-04117 90890-04098
YM-4118, 90890-04118 YM-4099, 90890-04099	Valve guide reamer Intake 4.5 mm (0.18 in) Exhaust 5.0 mm (0.20 in) This tool is needed to rebore the new valve guide.	YM-4118 YM-4099	90890-04118 90890-04099

Part number	Tool name/How to use	Illustration	
YU-A9642, 90890-04152	Crankcase separating tool These tool is used to remove the crankshaft from either case.	YU-A9642 	90890-04152 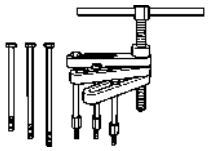
YM-34487 90890-06754	Dynamic spark tester Ignition checker This instrument is necessary for checking the ignition system components.	YM-34487 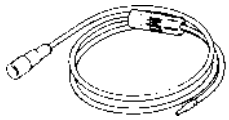	90890-06754 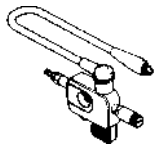
90890-85505	YAMAHA Bond No. 1215 (ThreeBond® No.1215) This sealant (Bond) is used for crankcase mating surface, etc.	90890-85505 	90890-85505

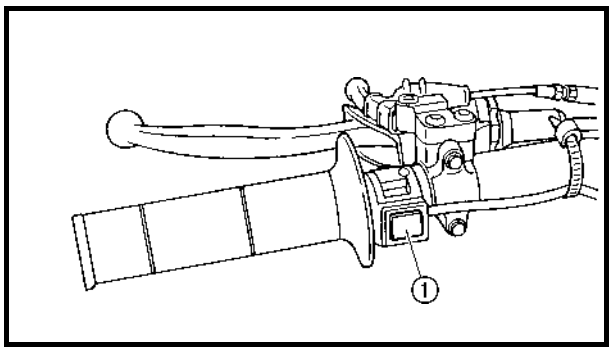

EC150000
CONTROL FUNCTIONS

EC151000
"ENGINE STOP" BUTTON

The "ENGINE STOP" button ① is located on the left handlebar. Continue pushing the "ENGINE STOP" button till the engine comes to a stop.

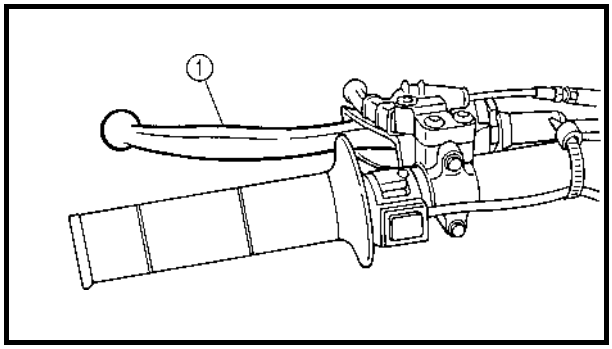

EC152000
CLUTCH LEVER

The clutch lever ① is located on the left handlebar; it disengages or engages the clutch. Pull the clutch lever to the handlebar to disengage the clutch, and release the lever to engage the clutch. The lever should be pulled rapidly and released slowly for smooth starts.

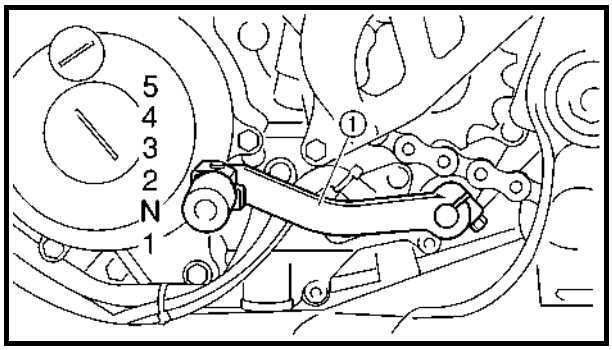

EC153000
SHIFT PEDAL

The gear ratios of the constant-mesh 5 speed transmission are ideally spaced. The gears can be shifted by using the shift pedal ① on the left side of the engine.

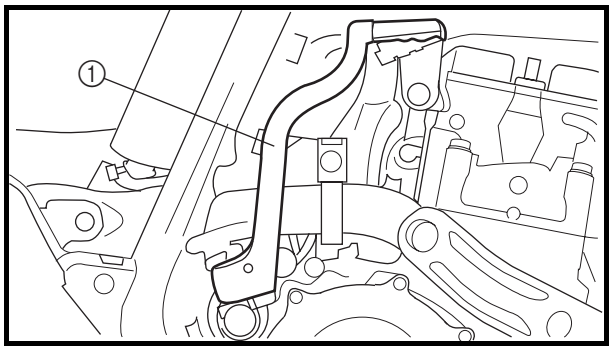

EC154000
KICK STARTER

Rotate the kick starter ① away from the engine. Push the starter down lightly with your foot until the gears engage, then kick smoothly and forcefully to start the engine. This model has a primary kick starter so the engine can be started in any gear if the clutch is disengaged. In normal practices, however, shift to neutral before starting.

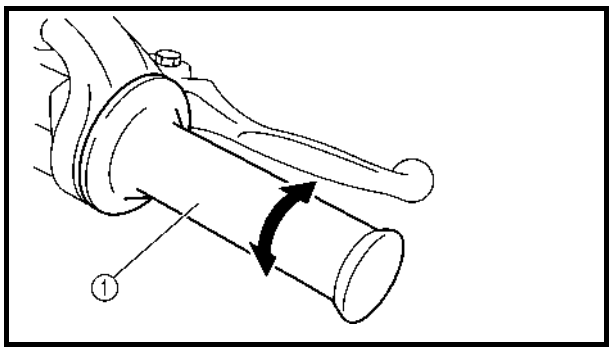

EC155001
THROTTLE GRIP

The throttle grip ① is located on the right handlebar; it accelerates or decelerates the engine. For acceleration, turn the grip toward you; for deceleration, turn it away from you.

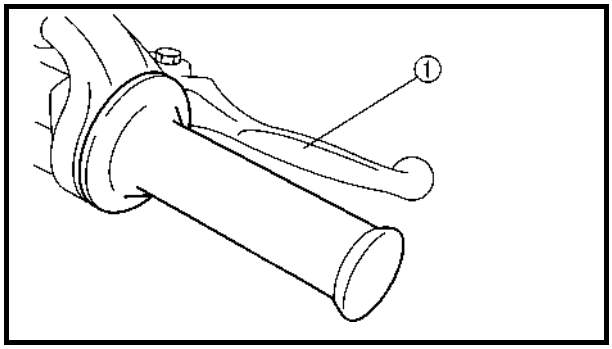

EC156000
FRONT BRAKE LEVER
The front brake lever ① is located on the right handlebar. Pull it toward the handlebar to activate the front brake.

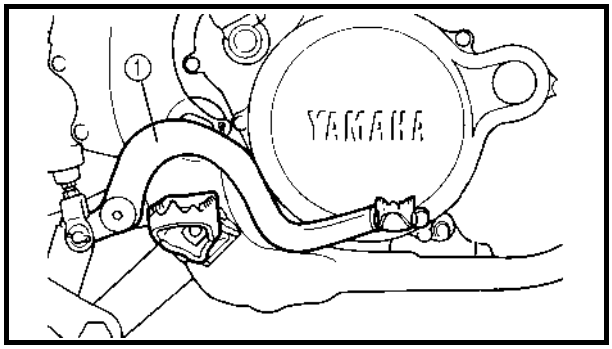

EC157000
REAR BRAKE PEDAL
The rear brake pedal ① is located on the right side of the machine. Press down on the brake pedal to activate the rear brake.

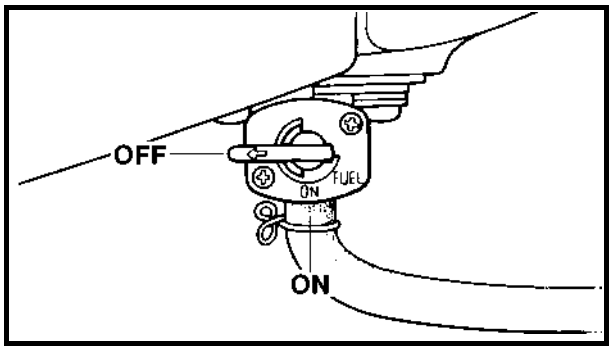

EC158001
FUEL COCK
The fuel cock supplies fuel from the tank to carburetor while filtering the fuel. The fuel cock has the two positions:

OFF: With the lever in this position, fuel will not flow. Always return the lever to this position when the engine is not running.

ON: With the lever in this position, fuel flows to the carburetor. Normal riding is done with the lever in this position.

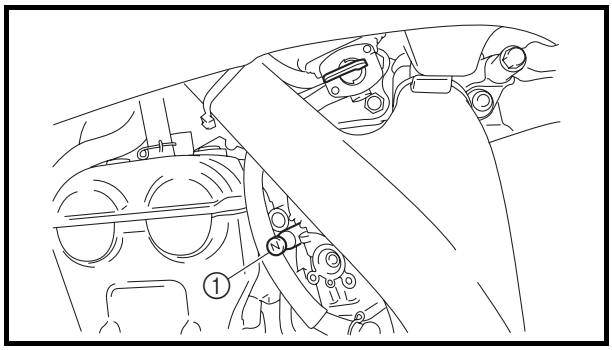

COLD STARTER KNOB
When cold, the engine requires a richer air-fuel mixture for starting. A separate starter circuit, which is controlled by the cold starter knob ①, supplies this mixture. Pull the cold starter knob out to open the circuit for starting. When the engine has warmed up, push it in to close the circuit.

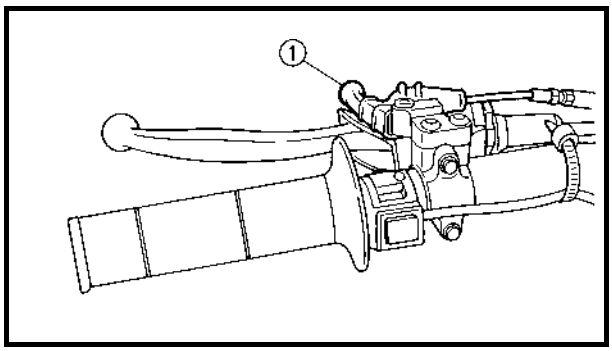

HOT STARTER LEVER
The hot starter lever ① is used when starting a warm engine.

Use the hot starter lever when starting the engine again immediately after it was stopped (the engine is still warm). Pulling the hot starter lever injects secondary air to thin the air-fuel mixture temporarily, allowing the engine to be started more easily.

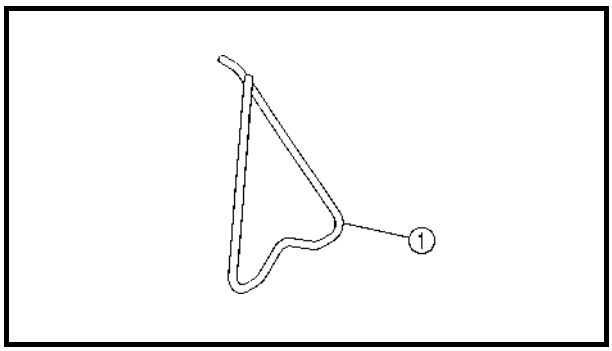

EC15R001
DETACHABLE SIDESTAND

This sidestand ① is used to support only the machine when standing or transporting it.

⚠ WARNING

- **Never apply additional force to the sidestand.**
- **Remove this sidestand before starting out.**

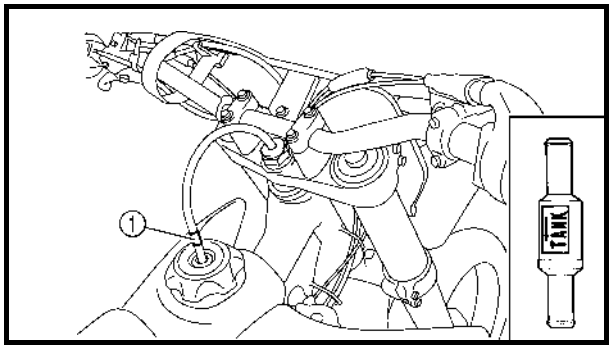

EC15F000
VALVE JOINT

This valve joint ① prevents fuel from flowing out and is installed to the fuel tank breather hose.

CAUTION:

In this installation, make sure the arrow faces the fuel tank and also downward.

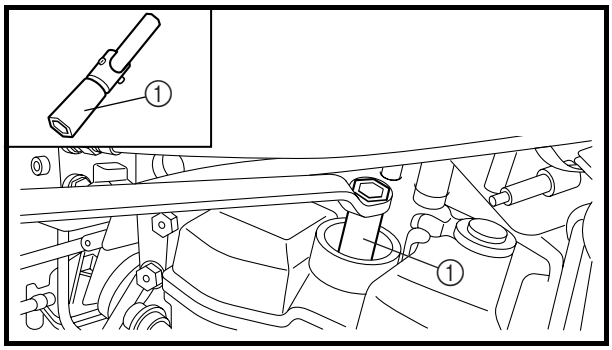

SPARK PLUG WRENCH

This spark plug wrench ① is used to remove and install the spark plug.

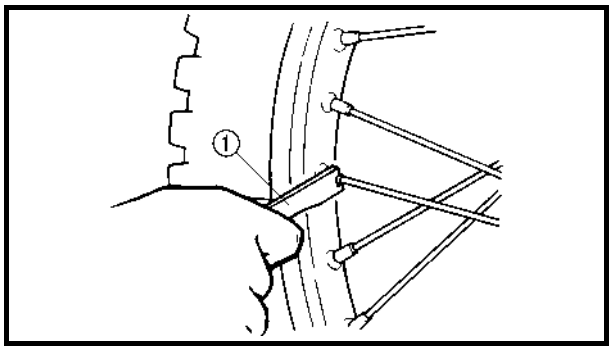

NIPPLE WRENCH

This nipple wrench ① is used to tighten the spoke.

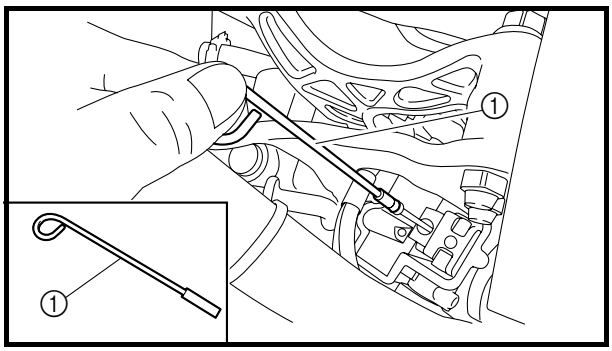

JET NEEDLE PULL-UP TOOL

The jet needle pull-up tool ① is used to pull the jet needle out of the carburetor.

FUEL

Always use the recommended fuel as stated below. Also, be sure to use new gasoline the day of a race.

Recommended fuel:
Premium unleaded gasoline only with a research octane number of 95 or higher.

CAUTION:

Use only unleaded gasoline. The use of leaded gasoline will cause severe damage to the engine internal parts such as valves, piston rings, and exhaust system, etc.

NOTE:

If knocking or pinging occurs, use a different brand of gasoline or higher octane grade.

WARNING

- **For refueling, be sure to stop the engine and use enough care not to spill any fuel. Also be sure to avoid refueling close to a fire.**
- **Refuel after the engine, exhaust pipe, etc. have cooled off.**

STARTING AND BREAK-IN

WARNING

Never start or run the engine in a closed area. The exhaust fumes are poisonous; they can cause loss of consciousness and death in a very short time. Always operate the machine in a well-ventilated area.

CAUTION:

- **The carburetor on this machine has a built-in accelerator pump. Therefore, when starting the engine, do not operate the throttle or the spark plug will foul.**
- **Unlike a two-stroke engine, this engine cannot be kick started when the throttle is open because the kick starter may kick back. Also, if the throttle is open the air/fuel mixture may be too lean for the engine to start.**
- **Before starting the machine, perform the checks in the pre-operation check list.**

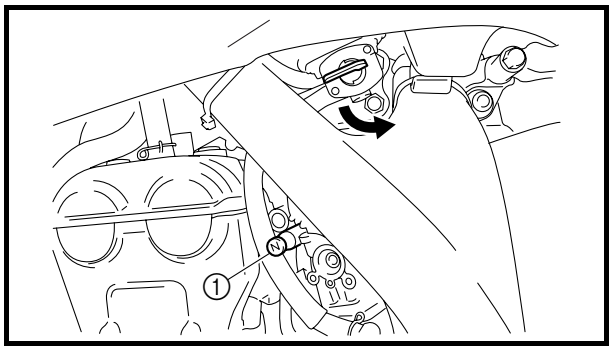

STARTING A COLD ENGINE

1. Inspect the coolant level.
2. Turn the fuel cock to “ON”.
3. Shift the transmission into neutral.
4. Fully open the cold starter knob ①.
5. Kick the kick starter.

WARNING

Do not open the throttle while kicking the kick starter. Otherwise, the kick starter may kick back.

6. Return the cold starter knob to its original position and run the engine at 3,000 ~ 5,000 r/min for 1 or 2 minutes.

NOTE:
Since this model is equipped with an accelerator pump, if the engine is raced (the throttle opened and closed), the air/fuel mixture will be too rich and the engine may stall. Also unlike a two-stroke engine, this model can idle.

CAUTION:
Do not warm up the engine for extended periods of time.

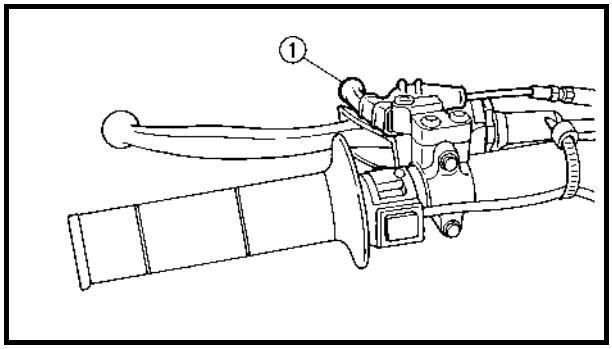

STARTING A WARM ENGINE

Do not operate the cold starter knob and throttle. Pull the hot starter lever ① and start the engine by kicking the kick starter forcefully with a firm stroke.

As soon as the engine starts, release the hot starter lever to close the air passage.

Restarting an engine after a fall

Pull the hot starter lever and start the engine. As soon as the engine starts, release the hot starter lever to close the air passage.

The engine fails to start

Pull the hot starter lever all the way out and while holding the lever, kick the kick starter 10 to 20 times to clear the engine.

Then, restart the engine.

Refer to “Restarting an engine after a fall”.

		Throttle grip operation*	Cold starter knob	Hot starter lever
Starting a cold engine	Air temperature = less than 5 °C (41 °F)	Open 3 or 4 times	ON	OFF
	Air temperature = more than 5 °C (41 °F)	None	ON	OFF
	Air temperature (normal temperature) = between 5 °C (41 °F) and 25 °C (77 °F)	None	ON/OFF	OFF
	Air temperature = more than 25 °C (77 °F)	None	OFF	OFF
Starting an engine after a long period of time		None	ON	OFF
Restarting a warm engine		None	OFF	ON
Restarting an engine after a fall		None	OFF	ON

* Operate the throttle grip before kick starting.

CAUTION:

Observe the following break-in procedures during initial operation to ensure optimum performance and avoid engine damage.

BREAK-IN PROCEDURES

1. Before starting the engine, fill the fuel tank with the fuel.
2. Perform the pre-operation checks on the machine.
3. Start and warm up the engine. Check the idle speed, and check the operation of the controls and the “ENGINE STOP” button. Then, restart the engine and check its operation within no more than 5 minutes after it is restarted.
4. Operate the machine in the lower gears at moderate throttle openings for five to eight minutes.
5. Check how the engine runs when the machine is ridden with the throttle 1/4 to 1/2 open (low to medium speed) for about one hour.
6. Restart the engine and check the operation of the machine throughout its entire operating range. Restart the machine and operate it for about 10 to 15 more minutes. The machine will now be ready to race.

CAUTION:

- **After the break-in or before each race, you must check the entire machine for loose fittings and fasteners as per “TORQUE-CHECK POINTS”.**
  Tighten all such fasteners as required.
- **When any of the following parts have been replaced, they must be broken in.**
  CYLINDER AND CRANKSHAFT:
  About one hour of break-in operation is necessary.
  PISTON, RING, VALVES, CAMSHAFTS AND GEARS:
  These parts require about 30 minutes of break-in operation at half-throttle or less. Observe the condition of the engine carefully during operation.

TORQUE-CHECK POINTS

- Frame construction
  - Frame to rear frame
  - Combined seat and tank
    - Fuel tank to frame
- Exhaust system
  - Silencer to rear frame
- Engine mounting
  - Frame to engine
  - Engine bracket to engine
  - Engine bracket to frame
- Steering
  - Steering shaft to handlebar
    - Steering shaft to frame
    - Steering shaft to handle crown
    - Handle crown to handlebar
- Suspension
  - Front
    - Steering shaft to front fork
      - Front fork to handle crown
      - Front fork to under bracket
  - Rear
    - For link type
      - Assembly of links
      - Link to frame
      - Link to shock absorber
      - Link to swingarm
  - Rear
    - Installation of shock absorber
      - Shock absorber to frame
  - Rear
    - Installation of swingarm
      - Tightening of pivot shaft
- Wheel
  - Installation of wheel
    - Front
      - Tightening of front axle
      - Tightening of axle holder
    - Rear
      - Tightening of rear axle
      - Wheel to sprocket
- Brake
  - Front
    - Caliper to front fork
    - Brake disc to wheel
    - Tightening of union bolt
    - Master cylinder to handlebar
    - Tightening of air bleeder
    - Tightening of brake hose holder
  - Rear
    - Brake pedal to frame
    - Brake disc to wheel
    - Tightening of union bolt
    - Master cylinder to frame
    - Tightening of air bleeder
    - Tightening of brake hose holder
- Fuel system
  - Fuel tank to fuel cock
- Lubrication system
  - Tightening of oil hose clamp

NOTE:
Concerning the tightening torque, refer to “MAINTENANCE SPECIFICATIONS” section in the CHAPTER 2.

EC1B0000
CLEANING AND STORAGE

EC1B1000
CLEANING

Frequent cleaning of your machine will enhance its appearance, maintain good overall performance, and extend the life of many components.

1. Before washing the machine, block off the end of the exhaust pipe to prevent water from entering. A plastic bag secured with a rubber band may be used for this purpose.
2. If the engine is excessively greasy, apply some degreaser to it with a paint brush. Do not apply degreaser to the chain, sprockets, or wheel axles.
3. Rinse the dirt and degreaser off with a garden hose; use only enough pressure to do the job.

CAUTION:

Excessive hose pressure may cause water seepage and contamination of wheel bearings, front forks, brakes and transmission seals. Many expensive repair bills have resulted from improper high pressure detergent applications such as those available in coin-operated car washers.

4. After the majority of the dirt has been hosed off, wash all surfaces with warm water and a mild detergent. Use an old toothbrush to clean hard-to-reach places.
5. Rinse the machine off immediately with clean water, and dry all surfaces with a soft towel or cloth.
6. Immediately after washing, remove excess water from the chain with a paper towel and lubricate the chain to prevent rust.
7. Clean the seat with a vinyl upholstery cleaner to keep the cover pliable and glossy.

8. Automotive wax may be applied to all painted or chromed surfaces. Avoid combination cleaner-waxes, as they may contain abrasives.
9. After completing the above, start the engine and allow it to idle for several minutes.

EC1B2001

STORAGE

If your machine is to be stored for 60 days or more, some preventive measures must be taken to avoid deterioration. After cleaning the machine thoroughly, prepare it for storage as follows:

1. Drain the fuel tank, fuel lines, and the carburetor float bowl.
2. Remove the spark plug, pour a tablespoon of SAE 10W-30 motor oil in the spark plug hole, and reinstall the plug. With the engine stop switch pushed in, kick the engine over several times to coat the cylinder walls with oil.
3. Remove the drive chain, clean it thoroughly with solvent, and lubricate it. Reinstall the chain or store it in a plastic bag tied to the frame.
4. Lubricate all control cables.
5. Block the frame up to raise the wheels off the ground.
6. Tie a plastic bag over the exhaust pipe outlet to prevent moisture from entering.
7. If the machine is to be stored in a humid or salt-air environment, coat all exposed metal surfaces with a film of light oil. Do not apply oil to rubber parts or the seat cover.

NOTE:

Make any necessary repairs before the machine is stored.

EC200000
SPECIFICATIONS

EC211000
GENERAL SPECIFICATIONS

Model name:	YZ450FV (USA, CDN, AUS, NZ) YZ450F (EUROPE, ZA)		
Model code number:	2S21, 2S25 (USA, CDN) 2S22 (EUROPE) 2S24, 2S26 (AUS, NZ, ZA)		
Dimensions:	USA, CDN, ZA, AUS, NZ	EUR (Except for F)	F
Overall length	2,192 mm (86.30 in)	2,197 mm (86.50 in)	←
Overall width	815 mm (32.09 in)	←	←
Overall height	1,298 mm (51.10 in)	1,300 mm (51.18 in)	1,301 mm (51.22 in)
Seat height	986 mm (38.82 in)	998 mm (39.29 in)	←
Wheelbase	1,495 mm (58.86 in)	←	1,494 mm (58.82 in)
Minimum ground clearance	370 mm (14.57 in)	373 mm (14.69 in)	374 mm (14.72 in)
Dry weight:			
Without oil and fuel	99.8 kg (220 lb)		
Engine:			
Engine type	Liquid cooled 4-stroke, DOHC		
Cylinder arrangement	Single cylinder, forward inclined		
Displacement	449 cm^3 (15.8 Imp oz, 15.2 US oz)		
Bore × stroke	95.0 × 63.4 mm (3.74 × 2.50 in)		
Compression ratio	12.3 : 1		
Starting system	Kick starter		
Lubrication system:	Dry sump		

Oil type or grade: Engine oil 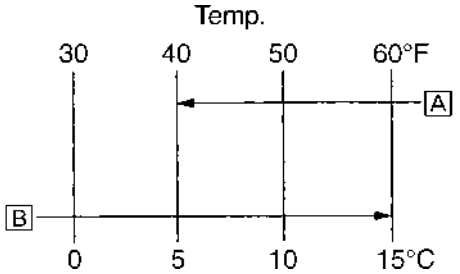 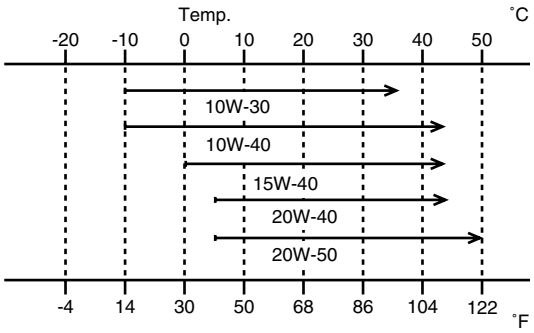 	(For USA and CDN) At 5 °C (40 °F) or higher A Yamalube 4 (20W-40) or SAE 20W-40 type SG motor oil (Non-Friction modified) At 15 °C (60 °F) or lower B Yamalube 4 (10W-30) or SAE 10W-30 type SG motor oil (Non-Friction modified) and/or Yamalube 4-R (15W-50) (Non-Friction modified) (Except for USA and CDN) API “SG” or higher grade
Oil capacity: Engine oil Periodic oil change With oil filter replacement Total amount	 0.95 L (0.84 Imp qt, 1.00 US qt) 1.0 L (0.88 Imp qt, 1.06 US qt) 1.2 L (1.06 Imp qt, 1.27 US qt)
Coolant capacity (including all routes):	0.99 L (0.87 Imp qt, 1.05 US qt)
Air filter:	Wet type element
Fuel: Type Tank capacity	 Premium unleaded gasoline only with a research octane number of 95 or higher. 7.0 L (1.54 Imp gal, 1.85 US gal)
Carburetor: Type Manufacturer	 FCR MX39 KEIHIN
Spark plug: Type/manufacturer Gap	 CR8E/NGK (resistance type) 0.7 ~ 0.8 mm (0.028 ~ 0.031 in)
Clutch type:	Wet, multiple-disc

Transmission:			
Primary reduction system	Gear		
Primary reduction ratio	61/23 (2.652)		
Secondary reduction system	Chain drive		
Secondary reduction ratio	49/13 (3.769)		
Transmission type	Constant mesh, 5-speed		
Operation	Left foot operation		
Gear ratio: 1st	27/14 (1.929)		
2nd	23/15 (1.533)		
3rd	23/18 (1.278)		
4th	24/22 (1.091)		
5th	20/21 (0.952)		
Chassis:	USA, CDN, ZA, AUS, NZ	EUR (Except for F)	F
Frame type	Semi double cradle	←	←
Caster angle	27.0°	27.0°	27.1°
Trail	115.6 mm (4.55 in)	117.0 mm (4.61 in)	117.8 mm (4.64 in)
Tire:			
Type	With tube		
Size (front)	80/100-21 51M (For USA, CDN, ZA, AUS, NZ and F) 80/100-21 51R (For EUROPE except F)		
Size (rear)	110/90-19 62M (For USA, CDN, ZA, AUS, NZ and F) 110/90-19 NHS (For EUROPE except F)		
Tire pressure (front and rear)	100 kPa (1.0 kgf/cm^2, 15 psi)		
Brake:			
Front brake type	Single disc brake		
Operation	Right hand operation		
Rear brake type	Single disc brake		
Operation	Right foot operation		
Suspension:			
Front suspension	Telescopic fork		
Rear suspension	Swingarm (link type monocross suspension)		
Shock absorber:			
Front shock absorber	Coil spring/oil damper		
Rear shock absorber	Coil spring/gas, oil damper		
Wheel travel:			
Front wheel travel	300 mm (11.8 in)		
Rear wheel travel	310 mm (12.2 in)		
Electrical:			
Ignition system	CDI magneto		

MAINTENANCE SPECIFICATIONS

ENGINE

Item	Standard	Limit
Cylinder head:		
Warp limit 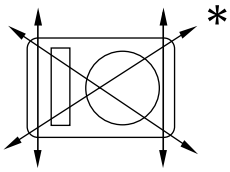	----	0.05 mm (0.002 in)
Cylinder:		
Bore size	95.00 ~ 95.01 mm (3.7402 ~ 3.7406 in)	----
Out of round limit	----	0.05 mm (0.002 in)
Camshaft:		
Drive method	Chain drive (Left)	----
Camshaft cap inside diameter	22.000 ~ 22.021 mm (0.8661 ~ 0.8670 in)	----
Camshaft journal diameter	21.959 ~ 21.972 mm (0.8645 ~ 0.8650 in)	----
Shaft-to-cap clearance	0.028 ~ 0.062 mm (0.0011 ~ 0.0024 in)	0.08 mm (0.003 in)
Cam dimensions 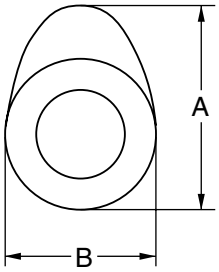		
Intake "A"	31.200 ~ 31.300 mm (1.2283 ~ 1.2323 in)	31.100 mm (1.2244 in)
"B"	22.550 ~ 22.650 mm (0.8878 ~ 0.8917 in)	22.450 mm (0.8839 in)
Exhaust "A"	30.950 ~ 31.050 mm (1.2185 ~ 1.2224 in)	30.850 mm (1.2146 in)
"B"	22.494 ~ 22.594 mm (0.8856 ~ 0.8895 in)	22.394 mm (0.8817 in)
Camshaft runout limit 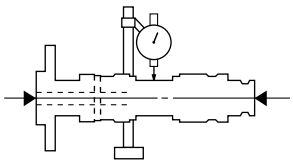	----	0.03 mm (0.0012 in)

Item		Standard	Limit
Cam chain:			
Cam chain type/No. of links		98XRH2010-118M/118	----
Cam chain adjustment method		Automatic	----
Valve, valve seat, valve guide:			
Valve clearance (cold)	IN	0.10 ~ 0.15 mm (0.0039 ~ 0.0059 in)	----
	EX	0.20 ~ 0.25 mm (0.0079 ~ 0.0098 in)	----
Valve dimensions:			
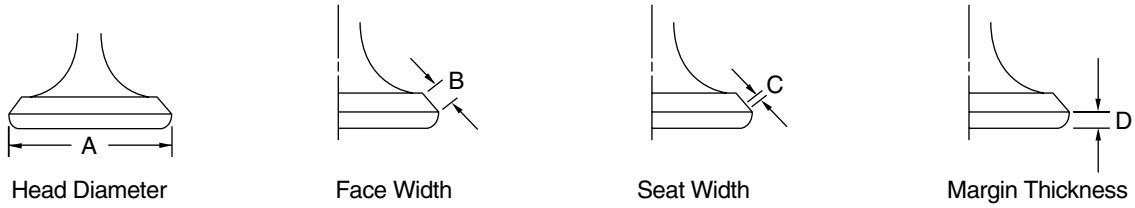 Head Diameter / Face Width / Seat Width / Margin Thickness			
"A" head diameter	IN	26.9 ~ 27.1 mm (1.0591 ~ 1.0669 in)	----
	EX	27.9 ~ 28.1 mm (1.0984 ~ 1.1063 in)	----
"B" face width	IN	2.26 mm (0.089 in)	----
	EX	2.26 mm (0.089 in)	----
"C" seat width	IN	0.9 ~ 1.1 mm (0.0354 ~ 0.0433 in)	1.6 mm (0.0630 in)
	EX	0.9 ~ 1.1 mm (0.0354 ~ 0.0433 in)	1.6 mm (0.0630 in)
"D" margin thickness	IN	1 mm (0.0394 in)	0.85 mm (0.033 in)
	EX	1 mm (0.0394 in)	0.85 mm (0.033 in)
Stem outside diameter	IN	4.475 ~ 4.490 mm (0.1762 ~ 0.1768 in)	4.445 mm (0.1750 in)
	EX	4.965 ~ 4.980 mm (0.1955 ~ 0.1961 in)	4.935 mm (0.1943 in)
Guide inside diameter	IN	4.500 ~ 4.512 mm (0.1772 ~ 0.1776 in)	4.550 mm (0.1791 in)
	EX	5.000 ~ 5.012 mm (0.1969 ~ 0.1973 in)	5.050 mm (0.1988 in)
Stem-to-guide clearance	IN	0.010 ~ 0.037 mm (0.0004 ~ 0.0015 in)	0.08 mm (0.003 in)
	EX	0.020 ~ 0.047 mm (0.0008 ~ 0.0019 in)	0.10 mm (0.004 in)
Stem runout limit		----	0.01 mm (0.0004 in)
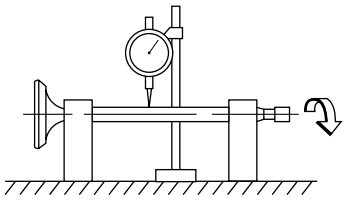			

Item		Standard	Limit
Valve spring:			
Free length	IN	37.03 mm (1.46 in)	36.03 mm (1.42 in)
	EX	37.68 mm (1.48 in)	36.68 mm (1.44 in)
Set length (valve closed)	IN	27.87 mm (1.10 in)	----
	EX	27.38 mm (1.08 in)	----
Compressed force (installed)	IN	111.3 ~ 127.9 N at 27.87 mm (11.3 ~ 13.0 kg at 27.87 mm, 24.91 ~ 28.66 lb at 1.10 in)	----
	EX	127.4 ~ 146.4 N at 27.38 mm (13.0 ~ 14.9 kg at 27.38 mm, 28.66 ~ 32.85 lb at 1.08 in)	----
Tilt limit *	IN	----	2.5°/1.61 mm (2.5°/0.063 in)
	EX	----	2.5°/1.65 mm (2.5°/0.065 in)
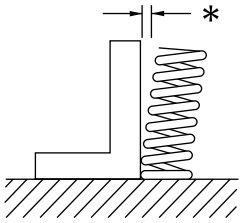			
Direction of winding (top view)	IN	Clockwise	----
	EX	Clockwise	----
Piston:			
Piston to cylinder clearance		0.040 ~ 0.065 mm (0.0016 ~ 0.0026 in)	0.1 mm (0.004 in)
Piston size “D”		94.945 ~ 94.960 mm (3.738 ~ 3.739 in)	----
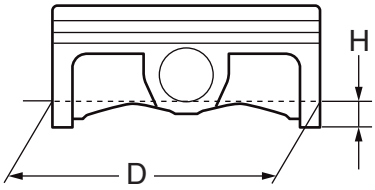			
Measuring point “H”		8 mm (0.315 in)	----
Piston off-set		1 mm (0.0394 in)	----
Piston pin bore inside diameter		18.004 ~ 18.015 mm (0.7088 ~ 0.7093 in)	18.045 mm (0.7104 in)
Piston pin outside diameter		17.991 ~ 18.000 mm (0.7083 ~ 0.7087 in)	17.971 mm (0.7075 in)

Item	Standard	Limit
Piston rings:		
Top ring: 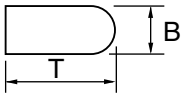		
Type	Barrel	----
Dimensions (B × T)	1.2 × 3.5 mm (0.05 × 0.14 in)	----
End gap (installed)	0.20 ~ 0.30 mm (0.008 ~ 0.012 in)	0.55 mm (0.022 in)
Side clearance (installed)	0.030 ~ 0.065 mm (0.0012 ~ 0.0026 in)	0.12 mm (0.005 in)
2nd ring: 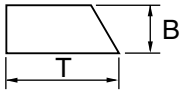		
Type	Taper	----
Dimensions (B × T)	1.00 × 3.35 mm (0.04 × 0.13 in)	----
End gap (installed)	0.35 ~ 0.50 mm (0.014 ~ 0.020 in)	0.85 mm (0.033 in)
Side clearance	0.020 ~ 0.055 mm (0.0008 ~ 0.0022 in)	0.12 mm (0.005 in)
Oil ring: 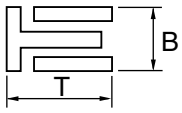		
Dimensions (B × T)	2.0 × 2.9 mm (0.08 × 0.11 in)	----
End gap (installed)	0.2 ~ 0.5 mm (0.01 ~ 0.02 in)	----
Crankshaft:		
Crank width “A” 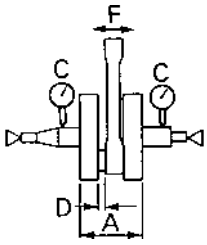	61.95 ~ 62.00 mm (2.439 ~ 2.441 in)	----
Runout limit “C”	0.03 mm (0.0012 in)	0.05 mm (0.002 in)
Big end side clearance “D”	0.15 ~ 0.45 mm (0.0059 ~ 0.0177 in)	0.50 mm (0.02 in)
Small end free play “F”	0.4 ~ 1.0 mm (0.02 ~ 0.04 in)	2.0 mm (0.08 in)
Balancer:		
Balancer drive method	Gear	----
Air filter oil grade:	Foam-air-filter oil or equivalent oil	----

Item		Standard	Limit
Clutch:			
Friction plate thickness		2.92 ~ 3.08 mm (0.115 ~ 0.121 in)	2.8 mm (0.110 in)
Quantity		9	----
Clutch plate thickness		1.1 ~ 1.3 mm (0.043 ~ 0.051 in)	----
Quantity		8	----
Warp limit		----	0.1 mm (0.004 in)
Clutch spring free length		47.8 mm (1.88 in)	46.8 mm (1.84 in)
Quantity		6	----
Clutch housing thrust clearance		0.10 ~ 0.35 mm (0.0039 ~ 0.0138 in)	----
Clutch housing radial clearance		0.010 ~ 0.044 mm (0.0004 ~ 0.0017 in)	----
Clutch release method		Inner push, cam push	----
Shifter:			
Shifter type		Cam drum and guide bar	----
Guide bar bending limit		----	0.05 mm (0.002 in)
Kick starter:			
Type		Ratchet type	----
Carburetor:			
I.D. mark		2S21 00	----
Main jet	(M.J)	#165	----
Main air jet	(M.A.J)	ø2.0	----
Jet needle - clip position	(J.N)	NFPR-4	----
Cutaway	(C.A)	1.5	----
Pilot jet	(P.J)	#42	----
Pilot air jet	(P.A.J)	#100	----
Pilot outlet	(P.O)	ø0.9	----
Pilot screw (example)	(P.S)	2-1/8	----
Bypass	(B.P)	ø1.0	----
Valve seat size	(V.S)	ø3.8	----
Starter jet	(G.S)	#72	----
Leak jet	(Acc. P)	#55	----
Float height	(F.H)	8 mm (0.31 in)	----
Engine idle speed		1,900 ~ 2,100 r/min	----
Intake vacuum		28.0 ~ 33.3 kPa (210 ~ 250 mmHg, 8.27 ~ 9.84 inHg)	----
Hot starter lever free play		3 ~ 6 mm (0.12 ~ 0.24 in)	----

Item	Standard	Limit
Lubrication system:		
Oil filter type	Paper type	----
Oil pump type	Trochoid type	----
Tip clearance “A”	0.12 mm or less (0.0047 in or less)	0.20 mm (0.008 in)
Tip clearance “B”	0.09 ~ 0.17 mm (0.0035 ~ 0.0067 in)	0.24 mm (0.009 in)
Side clearance	0.03 ~ 0.10 mm (0.0012 ~ 0.0039 in)	0.17 mm (0.007 in)
Bypass valve setting pressure	40 ~ 80 kPa (0.4 ~ 0.8 kg/cm^2, 5.69 ~ 11.38 psi)	----
Cooling:		
Radiator core size		
Width	120.2 mm (4.73 in)	----
Height	240 mm (9.45 in)	----
Thickness	22 mm (0.87 in)	----
Radiator cap opening pressure	110 kPa (1.1 kg/cm^2, 15.6 psi)	----
Radiator capacity (total)	0.56 L (0.49 Imp qt, 0.59 US qt)	----
Water pump		
Type	Single-suction centrifugal pump	----

Item	Standard

Lubrication chart:

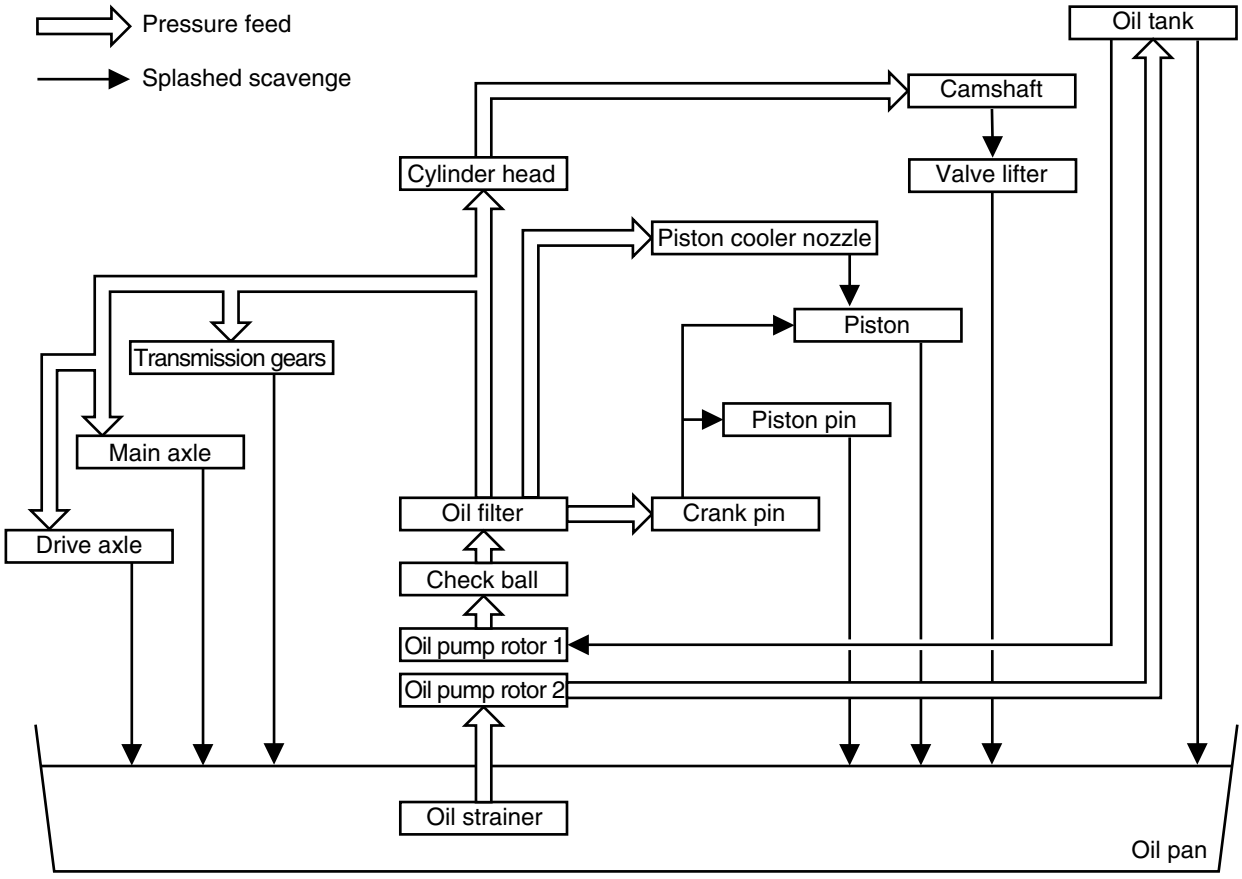

Part to be tightened	Thread size	Q'ty	Tightening torque		
			Nm	m·kg	ft·lb
Spark plug	M10S × 1.0	1	13	1.3	9.4
Camshaft cap	M6 × 1.0	10	10	1.0	7.2
Cylinder head blind plug screw	M12 × 1.0	1	28	2.8	20
Cylinder head (stud bolt)	M8 × 1.25	1	15	1.5	11
(bolt)	M10 × 1.25	4	Refer to NOTE.*1		
(bolt)	M6 × 1.0	2	10	1.0	7.2
Cylinder head cover	M6 × 1.0	2	10	1.0	7.2
Cylinder	M6 × 1.0	1	10	1.0	7.2
Timing chain tensioner	M6 × 1.0	2	10	1.0	7.2
Tensioner cap bolt	M6 × 1.0	1	7	0.7	5.1
Timing chain guide (rear)	M6 × 1.0	2	10	1.0	7.2
Exhaust pipe (nut)	M8 × 1.25	1	13	1.3	9.4
(bolt)	M8 × 1.25	1	24	2.4	17
△ Silencer	M8 × 1.25	2	35	3.5	25
Silencer clamp	M8 × 1.25	1	16	1.6	11
Exhaust pipe protector	M6 × 1.0	3	10	1.0	7.2
Carburetor joint	M6 × 1.0	3	10	1.0	7.2
Carburetor joint clamp	M4 × 0.7	1	3	0.3	2.2
△ Air filter case	M6 × 1.0	2	8	0.8	5.8
Air filter joint clamp	M6 × 1.0	1	3	0.3	2.2
Air filter joint and air filter case	M5 × 0.8	1	4	0.4	2.9
Throttle cable adjust bolt and locknut	M6 × 0.75	1	4	0.4	2.9
Throttle cable (pull)	M6 × 1.0	1	4	0.4	2.9
Throttle cable (return)	M12 × 1.0	1	11	1.1	8.0
Throttle cable cover	M5 × 0.8	2	4	0.4	2.9
Hot starter plunger	M12 × 1.0	1	2	0.2	1.4
Hot starter cable adjust bolt and locknut	M6 × 0.75	1	4	0.4	2.9
Air filter element	M6 × 1.0	1	2	0.2	1.4
Radiator panel (upper)	M6 × 1.0	2	10	1.0	7.2
Radiator	M6 × 1.0	4	10	1.0	7.2
Radiator hose clamp	M6 × 1.0	8	2	0.2	1.4
Radiator pipe 1, 2	M6 × 1.0	2	10	1.0	7.2
Impeller	M8 × 1.25	1	14	1.4	10
Water pump housing cover	M6 × 1.0	3	10	1.0	7.2
Coolant drain bolt	M6 × 1.0	1	10	1.0	7.2
Oil pump cover	M4 × 0.7	1	2	0.2	1.4
Oil pump	M6 × 1.0	2	10	1.0	7.2
Engine oil drain bolt (oil filter)	M6 × 1.0	1	10	1.0	7.2
Oil filter cover	M6 × 1.0	2	10	1.0	7.2
Oil check bolt (cylinder head)	M6 × 1.0	1	10	1.0	7.2
△ Oil hose clamp	—	2	2	0.2	1.4
Clutch cover	M6 × 1.0	7	10	1.0	7.2

Part to be tightened	Thread size	Q'ty	Tightening torque		
			Nm	m·kg	ft·lb
Crankcase cover (right)	M6 × 1.0	8	10	1.0	7.2
	M6 × 1.0	2	12	1.2	8.7
Crankcase cover (left)	M6 × 1.0	8	10	1.0	7.2
Crankcase	M6 × 1.0	12	12	1.2	8.7
Clutch cable holder	M6 × 1.0	2	10	1.0	7.2
Oil drain bolt (crankcase right)	M10 × 1.25	1	20	2.0	14
(crankcase left)	M8 × 1.25	1	20	2.0	14
Oil check bolt (crankcase)	M6 × 1.0	1	10	1.0	7.2
Oil strainer	M6 × 1.0	1	10	1.0	7.2
Crankcase bearing stopper	M6 × 1.0	4	14	1.4	10
Crankcase bearing stopper	M6 × 1.0	8	10	1.0	7.2
Drive axle oil seal stopper	M6 × 1.0	2	10	1.0	7.2
Ratchet wheel guide	M6 × 1.0	2	12	1.2	8.7
Kick starter	M8 × 1.25	1	33	3.3	24
Screw (kick starter)	M6 × 1.0	1	7	0.7	5.1
Primary drive gear	M20 × 1.0	1	110	11.0	80
Clutch boss	M20 × 1.0	1	75	7.5	54
Clutch cable adjust bolt and locknut	M6 × 0.75	1	4	0.4	2.9
Clutch spring	M6 × 1.0	6	10	1.0	7.2
Balancer	M10 × 1.0	1	45	4.5	32
Balancer driven gear	M14 × 1.0	1	50	5.0	36
Balancer weight plate	M6 × 1.0	3	10	1.0	7.2
Drive sprocket	M20 × 1.0	1	75	7.5	54
Drive sprocket cover	M6 × 1.0	2	8	0.8	5.8
Shift pedal	M6 × 1.0	1	12	1.2	8.7
Shift guide	M6 × 1.0	2	10	1.0	7.2
Stopper lever	M6 × 1.0	1	10	1.0	7.2
Segment	M8 × 1.25	1	30	3.0	22

NOTE:

△ - marked portion shall be checked for torque tightening after break-in or before each race.

NOTE:

*1: Tighten the cylinder head bolts to 30 Nm (3.0 m • kg, 22 ft • lb) in the proper tightening sequence, remove and retighten the cylinder head bolts to 20 Nm (2.0 m • kg, 14 ft • lb) in the proper tightening sequence, and then tighten the cylinder head bolts further to reach the specified angle 180° in the proper tightening sequence.

EC212201
CHASSIS

Item	Standard		Limit
Steering system:			
Steering bearing type	Taper roller bearing		----
Front suspension:	USA, CDN, AUS, NZ, ZA	EUROPE	
Front fork travel	300 mm (11.8 in)	←	----
Fork spring free length	454 mm (17.9 in)	←	449 mm (17.7 in)
Spring rate, STD	K = 4.6 N/mm (0.469 kg/mm, 26.3 lb/in)	K = 4.5 N/mm (0.459 kg/mm, 25.7 lb/in)	----
Optional spring	Yes	←	----
Oil capacity	542 cm^3 (19.1 Imp oz, 18.3 US oz)	532 cm^3 (18.7 Imp oz, 18.0 US oz)	----
Oil grade	Suspension oil "S1"	←	----
Inner tube outer diameter	48 mm (1.89 in)	←	----
Front fork top end	Zero mm (Zero in)	←	----
Rear suspension:	USA, CDN, AUS, NZ, ZA	EUROPE	
Shock absorber travel	131.5 mm (5.18 in)	←	----
Spring free length	Approx. 275 mm (10.83 in)	←	----
Fitting length	One I.D. mark 264 mm (10.39 in)	One I.D. mark 262 mm (10.31 in)	----
	Two I.D. marks 270 mm (10.63 in)	Two I.D. marks 268 mm (10.55 in)	----
	Three I.D. marks 261.5 mm (10.30 in)	Three I.D. marks 259.5 mm (10.22 in)	----
<Min.~Max.>	One I.D. mark 255.5 ~ 273.5 mm (10.06 ~ 10.77 in)	←	----
	Two I.D. marks 261.5 ~ 279.5 mm (10.30 ~ 11.00 in)	←	----
	Three I.D. marks 253.0 ~ 271.0 mm (9.96 ~ 10.67 in)	←	----
Spring rate, STD	K = 54.0 N/mm (5.50 kg/mm, 308.0 lb/in)	←	----
Optional spring	Yes	←	----
Enclosed gas pressure	1,000 kPa (10 kg/cm^2, 142 psi)	←	----

Item	Standard	Limit
Swingarm:		
Swingarm free play limit		
End	----	1.0 mm (0.04 in)
Wheel:		
Front wheel type	Spoke wheel	----
Rear wheel type	Spoke wheel	----
Front rim size/material	21 × 1.60/Aluminum	----
Rear rim size/material	19 × 2.15/Aluminum	----
Rim runout limit:		
Radial	----	2.0 mm (0.08 in)
Lateral	----	2.0 mm (0.08 in)
Drive chain:		
Type/manufacturer	DID520DMA2 SDH/DAIDO	----
Number of links	113 links + joint	----
Chain slack	48 ~ 58 mm (1.9 ~ 2.3 in)	----
Chain length (15 links)	----	242.9 mm (9.563 in)
Front disc brake:		
Disc outside dia. × Thickness	250 × 3.0 mm (9.84 × 0.12 in)	250 × 2.5 mm (9.84 × 0.10 in)
Pad thickness	4.4 mm (0.17 in)	1.0 mm (0.04 in)
Master cylinder inside dia.	11.0 mm (0.433 in)	----
Caliper cylinder inside dia.	27.0 mm (1.063 in) × 2	----
Brake fluid type	DOT #4	----
Rear disc brake:		
Disc outside dia. × Thickness	245 × 4.0 mm (9.65 × 0.16 in)	245 × 3.5 mm (9.65 × 0.14 in)
Deflection limit	----	0.15 mm (0.006 in)
Pad thickness	6.4 mm (0.25 in)	1.0 mm (0.04 in)
Master cylinder inside dia.	11.0 mm (0.433 in)	----
Caliper cylinder inside dia.	25.4 mm (1.000 in) × 1	----
Brake fluid type	DOT #4	----
Brake lever and brake pedal:		
Brake lever position	95 mm (3.74 in)	----
Brake pedal height (vertical height above footrest top)	5 mm (0.20 in)	----
Clutch lever free play (lever end)	8 ~ 13 mm (0.31 ~ 0.51 in)	----
Throttle grip free play	3 ~ 5 mm (0.12 ~ 0.20 in)	----

	Part to be tightened	Thread size	Q'ty	Tightening torque		
				Nm	m·kg	ft·lb
△	Handle crown and outer tube	M8 × 1.25	4	23	2.3	17
△	Under bracket and outer tube	M8 × 1.25	4	20	2.0	14
△	Handle crown and steering shaft	M24 × 1.0	1	145	14.5	105
△	Handlebar holder (upper)	M8 × 1.25	4	28	2.8	20
△	Handlebar holder (lower)	M12 × 1.25	2	40	4.0	29
△	Steering ring nut	M28 × 1.0	1	Refer to NOTE.		
	Front fork and damper assembly	M51 × 1.5	2	30	3.0	22
	Front fork and adjuster	M22 × 1.25	2	55	5.5	40
	Damper assembly and base valve	M42 × 1.5	2	29	2.9	21
	Adjuster and damper assembly	M12 × 1.25	2	29	2.9	21
	Bleed screw (front fork) and base valve	M5 × 0.8	2	1	0.1	0.7
△	Front fork and protector	M6 × 1.0	6	7	0.7	5.1
△	Protector and brake hose holder	M6 × 1.0	2	7	0.7	5.1
	Throttle cable cap	M5 × 0.8	2	4	0.4	2.9
	Clutch lever holder mounting	M5 × 0.8	2	4	0.4	2.9
	Clutch lever mounting (nut)	M6 × 1.0	1	4	0.4	2.9
	Hot starter lever holder mounting	M5 × 0.8	2	4	0.4	2.9
△	Front brake master cylinder and bracket	M6 × 1.0	2	9	0.9	6.5
	Front brake master cylinder cap	M4 × 0.7	2	2	0.2	1.4
	Brake lever mounting (bolt)	M6 × 1.0	1	6	0.6	4.3
	Brake lever mounting (nut)	M6 × 1.0	1	6	0.6	4.3
	Brake lever position locknut	M6 × 1.0	1	5	0.5	3.6
△	Cable guide (front brake hose) and under bracket	M6 × 1.0	1	4	0.4	2.9
△	Front brake hose union bolt (master cylinder)	M10 × 1.25	1	30	3.0	22
△	Front brake hose union bolt (caliper)	M10 × 1.25	1	30	3.0	22
△	Front brake caliper and front fork	M8 × 1.25	2	23	2.3	17
△	Front brake caliper and brake hose holder	M6 × 1.0	1	10	1.0	7.2
△	Brake caliper (front and rear) and pad pin plug	M10 × 1.0	2	3	0.3	2.2
△	Brake caliper (front and rear) and pad pin	M10 × 1.0	2	18	1.8	13
△	Brake caliper (front and rear) and bleed screw	M8 × 1.25	2	6	0.6	4.3
△	Front wheel axle and nut	M16 × 1.5	1	105	10.5	75
△	Front wheel axle holder	M8 × 1.25	4	23	2.3	17
△	Front brake disc and wheel hub	M6 × 1.0	6	12	1.2	8.7
△	Rear brake disc and wheel hub	M6 × 1.0	6	14	1.4	10
△	Footrest bracket and frame	M10 × 1.25	4	55	5.5	40
△	Brake pedal mounting	M8 × 1.25	1	26	2.6	19
△	Rear brake master cylinder and frame	M6 × 1.0	2	10	1.0	7.2
	Rear brake master cylinder cap	M4 × 0.7	2	2	0.2	1.4
△	Rear brake hose union bolt (caliper)	M10 × 1.25	1	30	3.0	22
△	Rear brake hose union bolt (master cylinder)	M10 × 1.25	1	30	3.0	22

NOTE:

1. First, tighten the ring nut approximately 38 Nm (3.8 m • kg, 27 ft • lb) by using the ring nut wrench, then loosen the ring nut one turn.
2. Retighten the ring nut 7 Nm (0.7 m • kg, 5.1 ft • lb).

	Part to be tightened	Thread size	Q'ty	Tightening torque		
				Nm	m·kg	ft·lb
△	Rear wheel axle and nut	M20 × 1.5	1	125	12.5	90
△	Driven sprocket and wheel hub	M8 × 1.25	6	42	4.2	30
△	Nipple (spoke)	—	72	3	0.3	2.2
△	Disc cover and rear brake caliper	M6 × 1.0	2	10	1.0	7.2
△	Protector and rear brake caliper	M6 × 1.0	2	7	0.7	5.1
	Chain puller adjust bolt and locknut	M8 × 1.25	2	16	1.6	11
	Engine mounting:					
△	Engine upper bracket and frame	M10 × 1.25	4	55	5.5	40
△	Engine lower bracket and frame	M8 × 1.25	4	34	3.4	24
△	Engine and engine bracket (front)	M10 × 1.25	1	53	5.3	38
△	Engine and engine bracket (upper)	M10 × 1.25	1	55	5.5	40
△	Engine and frame (lower)	M10 × 1.25	1	53	5.3	38
△	Engine guard	M6 × 1.0	1	10	1.0	7.2
	Engine skid plate mounting	M6 × 1.0	3	10	1.0	7.2
	CDI unit bracket mounting	M6 × 1.0	2	7	0.7	5.1
	Cable guide and CDI unit bracket	M5 × 0.8	2	4	0.4	2.9
	Cable guide and frame	M5 × 0.8	1	5	0.5	3.6
△	Pivot shaft and nut	M16 × 1.5	1	85	8.5	61
△	Relay arm and swingarm	M14 × 1.5	1	70	7.0	50
△	Relay arm and connecting rod	M14 × 1.5	1	80	8.0	58
△	Connecting rod and frame	M14 × 1.5	1	80	8.0	58
△	Rear shock absorber and frame	M10 × 1.25	1	56	5.6	40
△	Rear shock absorber and relay arm	M10 × 1.25	1	53	5.3	38
△	Rear frame and frame (upper)	M8 × 1.25	1	32	3.2	23
△	Rear frame and frame (lower)	M8 × 1.25	2	32	3.2	23
△	Swingarm and brake hose holder	M5 × 0.8	4	2	0.2	1.4
	Swingarm and patch	M4 × 0.7	4	2	0.2	1.4
	Drive chain tensioner mounting (upper)	M8 × 1.25	1	16	1.6	11
	Drive chain tensioner mounting (lower)	M8 × 1.25	1	16	1.6	11
	Chain support and swingarm	M6 × 1.0	3	7	0.7	5.1
△	Seal guard and swingarm	M5 × 0.8	4	6	0.6	4.3
△	Fuel tank mounting boss and frame	M10 × 1.25	1	20	2.0	14
△	Fuel tank mounting	M6 × 1.0	2	10	1.0	7.2
△	Fuel tank and fuel cock	M6 × 1.0	2	6	0.6	4.3
	Fuel tank and seat set bracket	M6 × 1.0	1	7	0.7	5.1
	Fuel tank and fuel tank bracket	M6 × 1.0	4	7	0.7	5.1
	Seat mounting	M8 × 1.25	2	23	2.3	17
△	Side cover mounting	M6 × 1.0	2	7	0.7	5.1
△	Air scoop and fuel tank	M6 × 1.0	6	7	0.7	5.1
△	Air scoop and radiator panel (lower)	M6 × 1.0	2	7	0.7	5.1
△	Front fender mounting	M6 × 1.0	4	7	0.7	5.1
△	Rear fender mounting (front)	M6 × 1.0	2	7	0.7	5.1
△	Rear fender mounting (rear)	M6 × 1.0	2	16	1.6	11
△	Number plate	M6 × 1.0	1	7	0.7	5.1

NOTE:

△ - marked portion shall be checked for torque tightening after break-in or before each race.

EC212300
ELECTRICAL

Item	Standard	Limit
Ignition system:		
Advancer type	Electrical	----
C.D.I.:		
Magneto-model (stator)/manufacturer	2S200/YAMAHA	----
Source coil 1 resistance (color)	720 ~ 1,080 Ω at 20 °C (68 °F) (Green – Brown)	----
Source coil 2 resistance (color)	44 ~ 66 Ω at 20 °C (68 °F) (Black – Pink)	----
Pickup coil resistance (color)	248 ~ 372 Ω at 20 °C (68 °F) (White – Red)	----
CDI unit-model/manufacturer	2S2-00/YAMAHA (For USA and CDN) 2S2-10/YAMAHA (Except for USA and CDN)	---- ----
Ignition coil:		
Model/manufacturer	5TA-10/DENSO	----
Minimum spark gap	6 mm (0.24 in)	----
Primary winding resistance	0.08 ~ 0.10 Ω at 20 °C (68 °F)	----
Secondary winding resistance	4.6 ~ 6.8 kΩ at 20 °C (68 °F)	----

Part to be tightened	Thread size	Q'ty	Tightening torque		
			Nm	m·kg	ft·lb
Stator	M6 × 1.0	3	10	1.0	7.2
Rotor	M12 × 1.25	1	56	5.6	40
Neutral switch	M5 × 0.8	2	4	0.4	2.9

EC220001
GENERAL TORQUE SPECIFICATIONS

This chart specifies torque for standard fasteners with standard I.S.O. pitch threads. Torque specifications for special components or assemblies are included in the applicable sections of this book. To avoid warpage, tighten multi-fastener assemblies in a crisscross fashion, in progressive stages, until full torque is reached. Unless otherwise specified, torque specifications call for clean, dry threads. Components should be at room temperature.

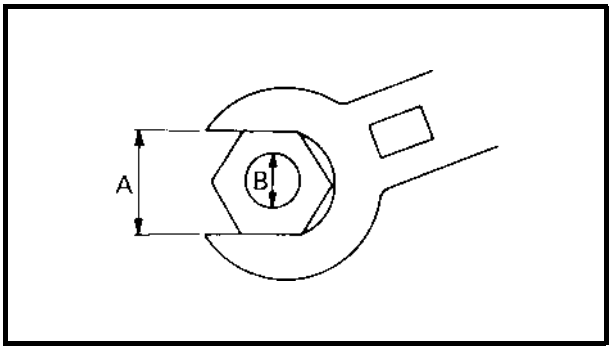

A: Distance between flats
B: Outside thread diameter

A (Nut)	B (Bolt)	TORQUE SPECIFICATION		
		Nm	m•kg	ft•lb
10 mm	6 mm	6	0.6	4.3
12 mm	8 mm	15	1.5	11
14 mm	10 mm	30	3.0	22
17 mm	12 mm	55	5.5	40
19 mm	14 mm	85	8.5	61
22 mm	16 mm	130	13	94

EC230000
DEFINITION OF UNITS

Unit	Read	Definition	Measure
mm cm	millimeter centimeter	10^{-3} meter 10^{-2} meter	Length Length
kg	kilogram	10^{3} gram	Weight
N	Newton	1 kg $\times$ m/sec^2	Force
Nm m • kg	Newton meter Meter kilogram	N $\times$ m m $\times$ kg	Torque Torque
Pa	Pascal	N/m^2	Pressure
N/mm	Newton per millimeter	N/mm	Spring rate
L cm^3	Liter Cubic centimeter	— —	Volume or capacity Volume or capacity
r/min	Revolution per minute	—	Engine speed

LUBRICATION DIAGRAMS

① Oil filter element
② Oil pump
③ Drive axle
④ Main axle
⑤ Crankshaft
⑥ Connecting rod
A From cylinder
B To oil tank

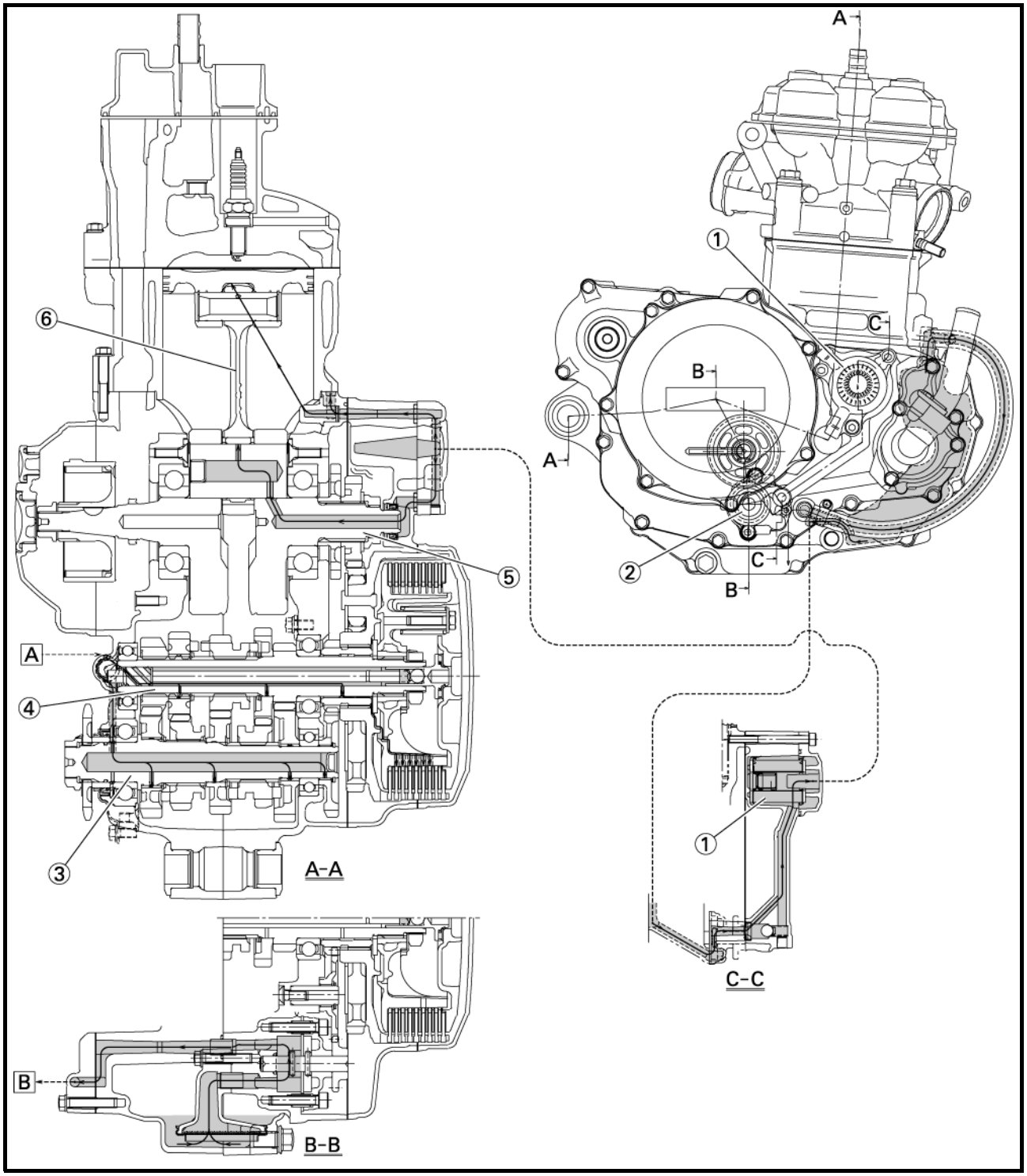

① Intake camshaft
② Exhaust camshaft
Ⓐ To main axle
Ⓑ From oil pump

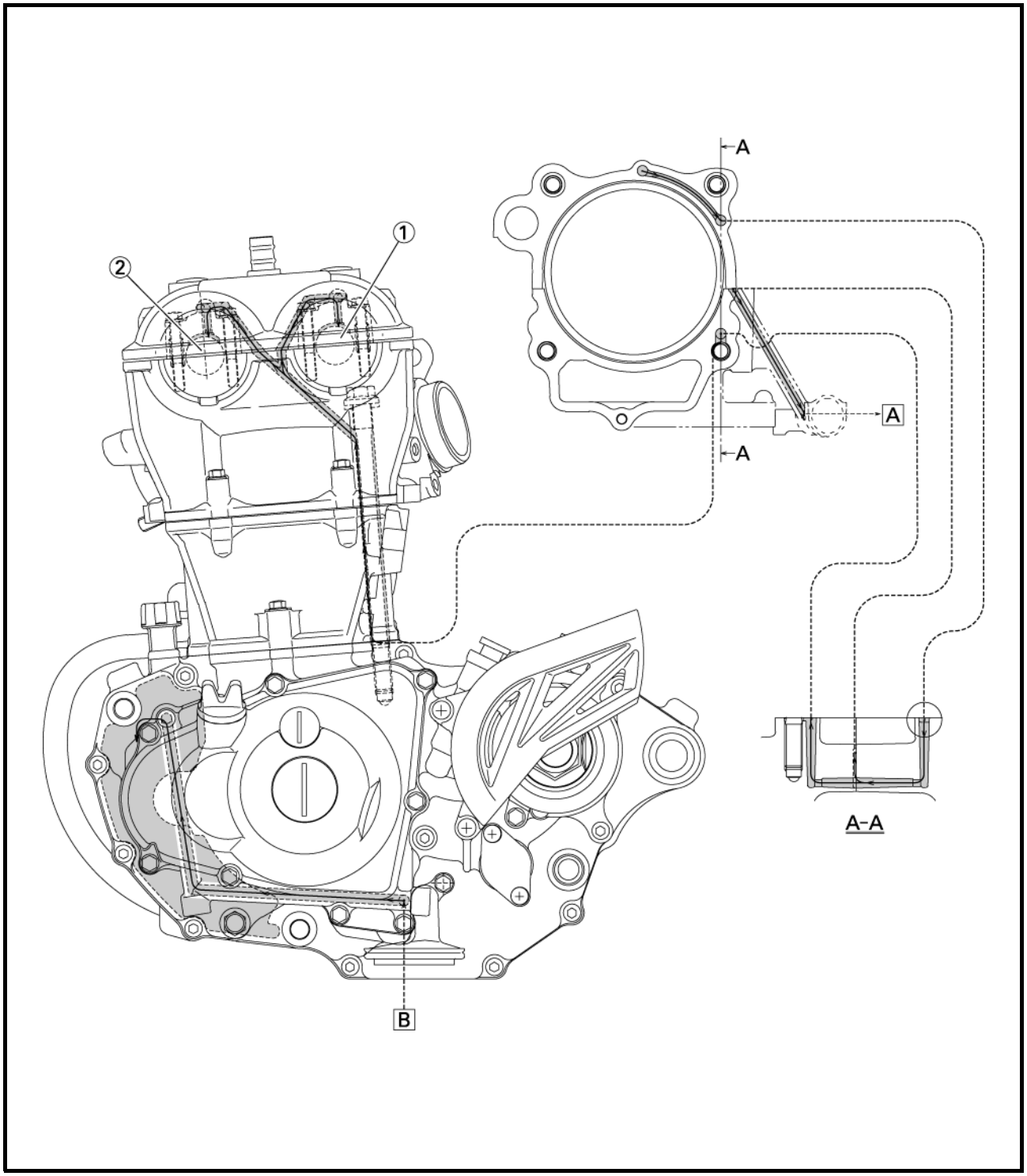

EC240000

CABLE ROUTING DIAGRAM

① Fuel tank breather hose
② Radiator hose 1
③ Cylinder head breather hose
④ Hose holder
⑤ Radiator hose 4
⑥ Clutch cable
⑦ Connector cover
⑧ Fuel hose
⑨ TPS (throttle position sensor) lead
⑩ Hot starter cable
⑪ Carburetor breather hose
⑫ Carburetor overflow hose

A Insert the end of the fuel tank breather hose into the hole in the steering shaft.
B Pass the cylinder head breather hose on the outside of the radiator hose 1 and between the radiator hose 4 and frame.
C Align the paint on the cylinder head breather hose with the front edge of the hose holder.
D Pass the clutch cable through the cable guide.
E Pass the clutch cable in front of the radiator mounting boss.
F Install the connector cover so that it does not come in between the radiator hose 1 and radiator.
G Pass the fuel hose between the hot starter cable and TPS lead.
H Pass the carburetor breather hoses and overflow hose so that all there hoses do not contact the rear shock absorber.

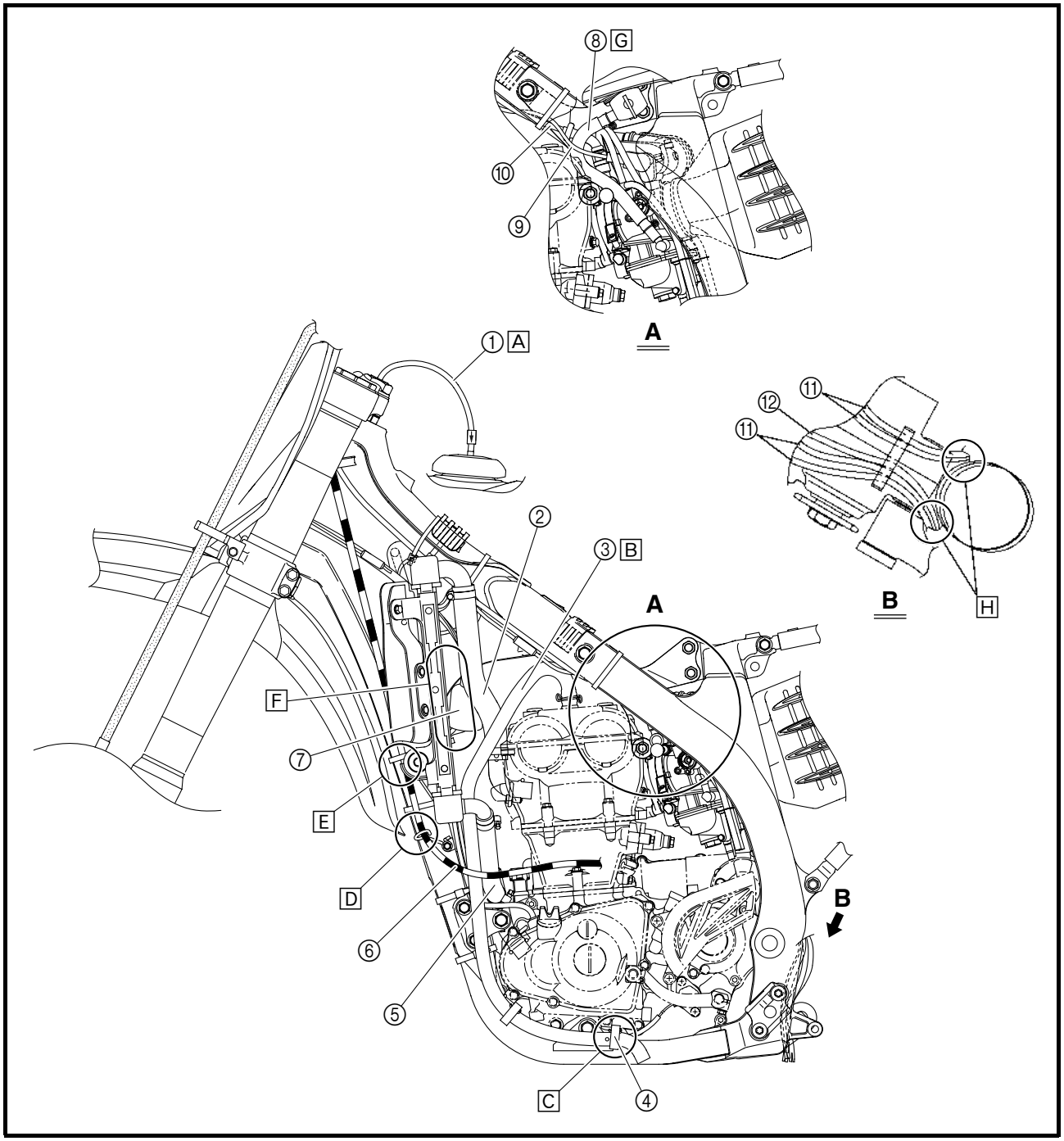

① Hot starter cable
② Clamp
③ TPS (throttle position sensor) lead
④ Hump (frame)
⑤ Neutral switch lead
⑥ Engine bracket
⑦ Engine skid plate stay
⑧ CDI magneto lead
⑨ Clutch cable
⑩ Radiator breather hose
⑪ Radiator hose 2
⑫ “ENGINE STOP” button lead
⑬ Sub wire harness
⑭ Ground lead
⑮ CDI unit bracket
⑯ CDI unit
⑰ Cable guide
⑱ Ignition coil lead
⑲ Throttle cable

[A] Fasten the hot starter cable and throttle cables onto the frame. Locate the clamp ends under the hot starter cable.
[B] Fasten the hot starter cable, throttle cables, TPS lead and ignition coil lead to the frame.
[C] Fasten the TPS lead to the frame behind its hump.
[D] Pass the TPS lead over the hot starter cable.
[E] Pass the neutral switch lead on the inside of the engine bracket.
[F] Pass the neutral switch lead over the engine skid plate stay.

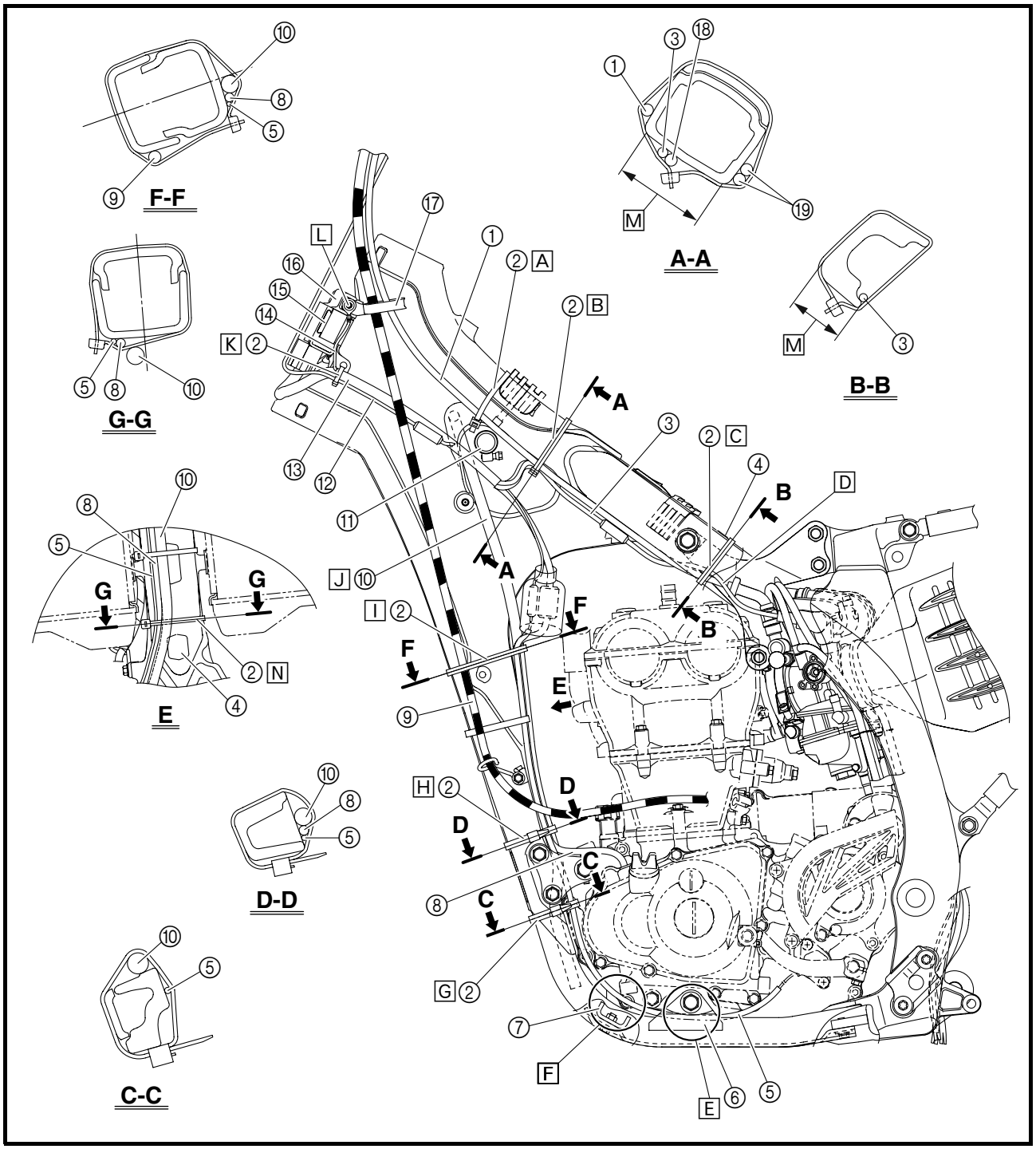

[G] Fasten the neutral switch lead and radiator breather hose to the frame.
[H] Fasten the neutral switch lead, CDI magneto lead and radiator breather hose to the frame.
[I] Fasten the neutral switch lead, CDI magneto lead, radiator breather hose and clutch cable to the frame over the radiator mounting boss.
[J] Pass the radiator breather hose in front of the radiator hose 2, on the left of the chassis, and then between the frame and radiator hose 4.
[K] Fasten the sub wire harness and "ENGINE STOP" button lead to the CDI unit bracket with the clamp ends facing downward behind the location where the ground lead branches out from the sub wire harness.
[L] Fasten the ground lead and cable guide together to the CDI unit bracket.
[M] Locate the clamp ends in the arrowed range.
[N] Fasten the neutral switch lead and CDI magneto lead to the frame over its hump.

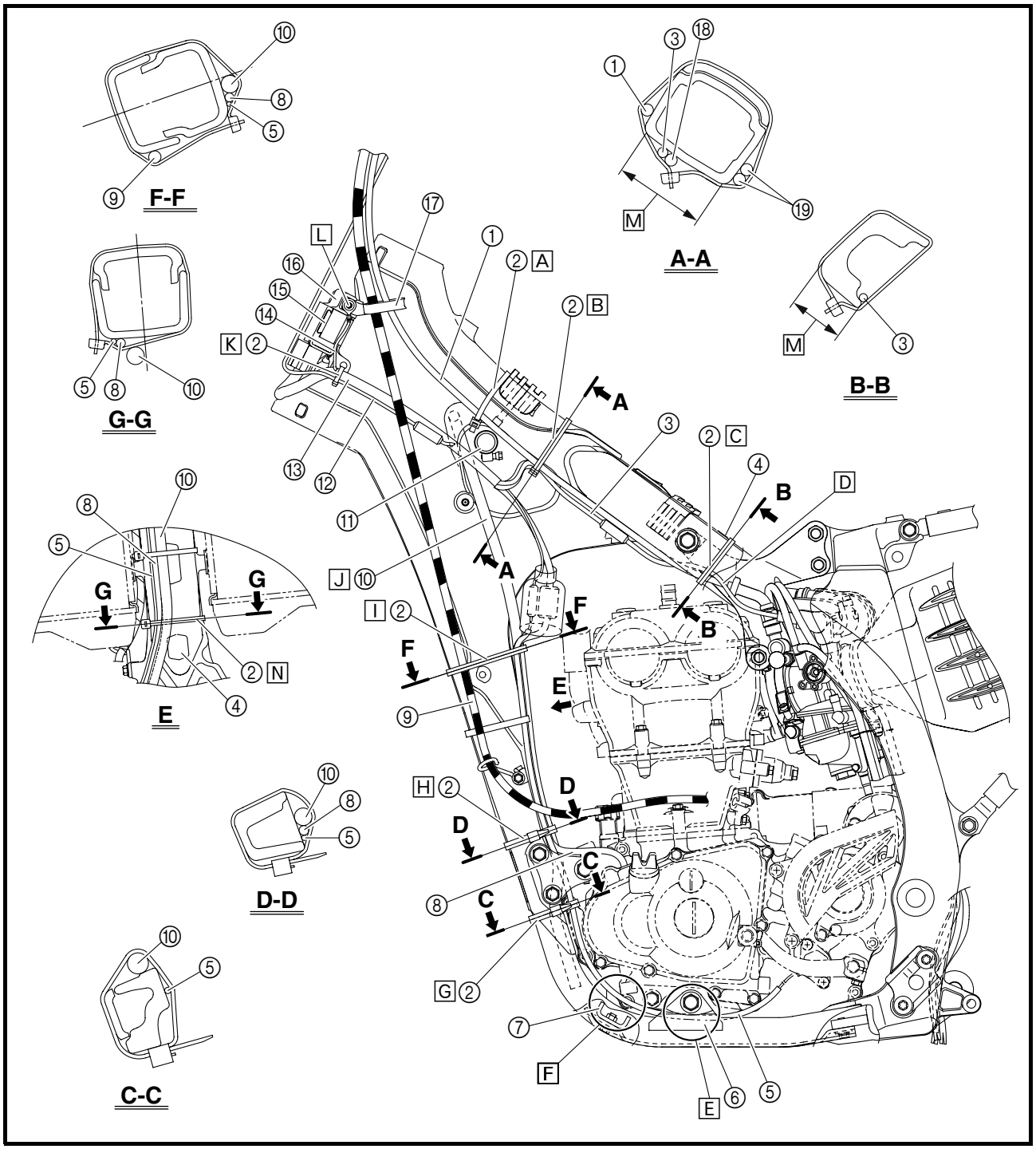

① Throttle cable (pull)
② Throttle cable (return)
③ Radiator hose 2
④ Ignition coil
⑤ Rear arm bracket
⑥ Cylinder head breather hose

A Pass the throttle cables over the radiator hose 2.
B Pass the throttle cables on the outside of the ignition coil.
C Fasten the throttle cables with the clamp so that the cables are not bent, and pass them under the rear arm bracket.
D Pass the cylinder head breather hose so that it does not contact the ignition coil.

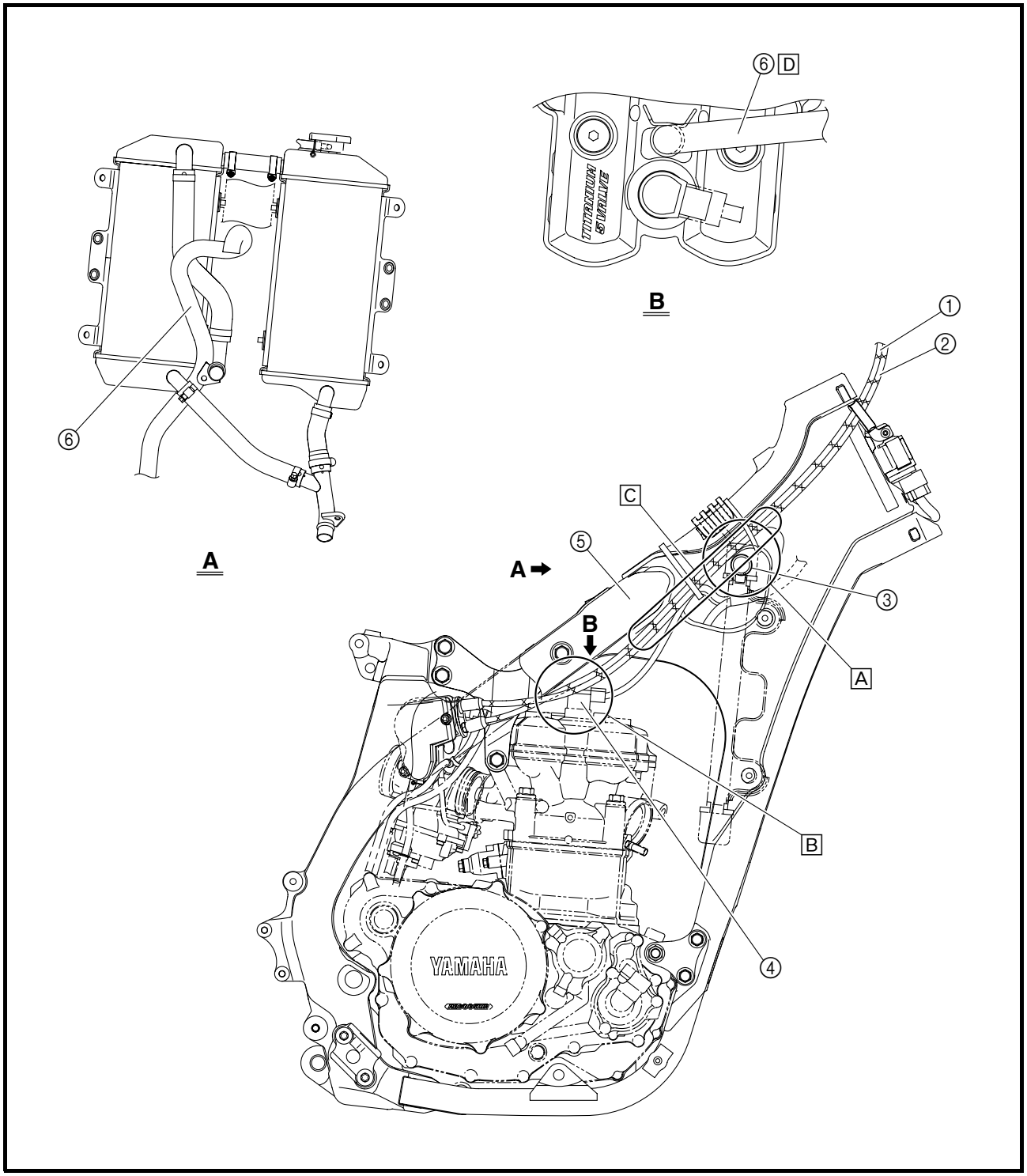

① Master cylinder
② Brake hose holder
③ Brake hose

A Install the brake hose so that its pipe portion directs as shown and lightly touches the projection on the caliper.
B Pass the brake hose into the brake hose holders.
C If the brake hose contacts the spring (rear shock absorber), correct its twist.
D Install the brake hose so that its pipe portion directs as shown and lightly touches the projection on the master cylinder.

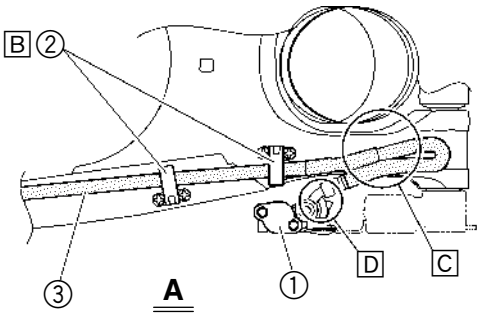

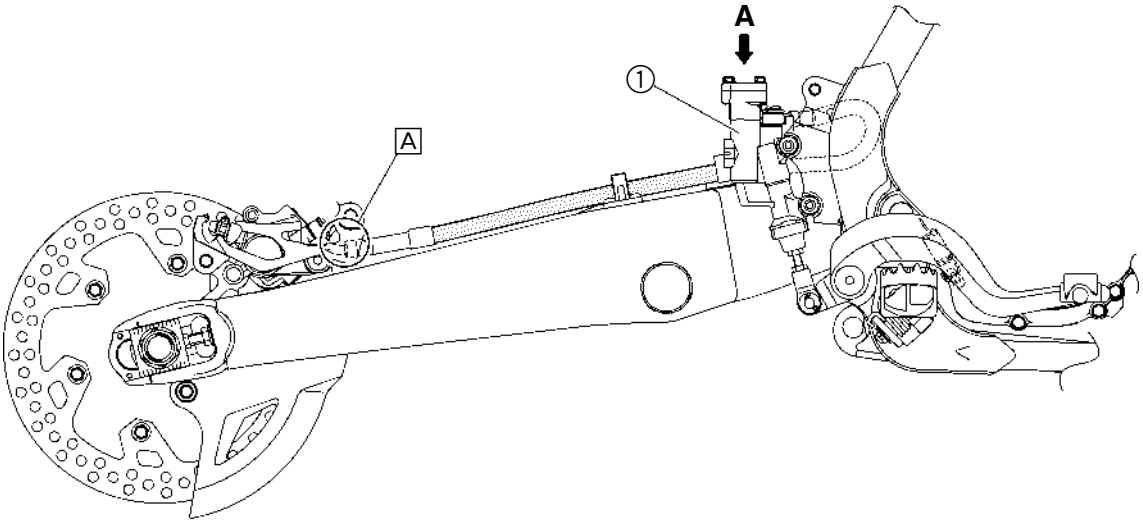

① Throttle cable
② Clamp
③ Hot starter cable
④ Clutch cable
⑤ “ENGINE STOP” button lead
⑥ Cable guide
⑦ Brake hose
⑧ Hose guide

A Fasten the “ENGINE STOP” button lead to the handlebar.
B Pass the clutch cable and hot starter cable through the cable guide.
C Pass the brake hose in front of the number plate.
D Pass the throttle cables through the cable guide.
E Pass the clutch cable and hot starter cable through the cable guide on the number plate.

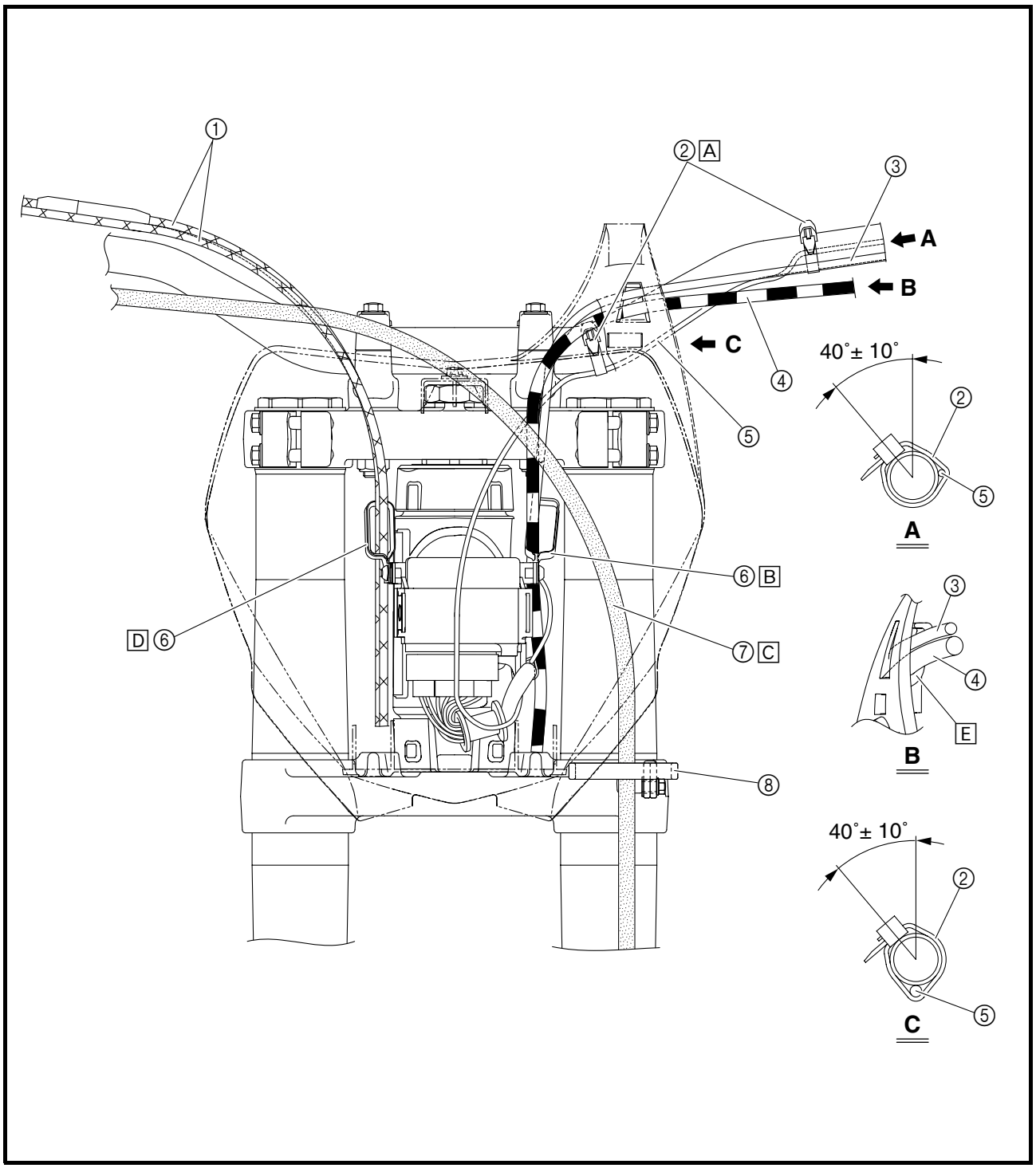

EC300000

REGULAR INSPECTION AND ADJUSTMENTS

MAINTENANCE INTERVALS

The following schedule is intended as a general guide to maintenance and lubrication. Bear in mind that such factors as weather, terrain, geographical location, and individual usage will alter the required maintenance and lubrication intervals. If you are a doubt as to what intervals to follow in maintaining and lubricating your machine, consult your Yamaha dealer.

Item	After break-in	Every race	Every third (or 500 km)	Every fifth (or 1,000 km)	As required	Remarks
ENGINE OIL						
Replace	●			●		
VALVES						
Check the valve clearances	●		●			The engine must be cold.
Inspect				●		Check the valve seats and valve stems for wear.
Replace					●	
VALVE SPRINGS						
Inspect				●		Check the free length and the tilt.
Replace					●	
VALVE LIFTERS						
Inspect				●		Check for scratches and wear.
Replace					●	
CAMSHAFTS						
Inspect				●		Inspect the camshaft surface.
Replace					●	Inspect the decompression system
CAMSHAFT SPROCKETS						
Inspect				●		Check for wear on the teeth and for damage.
Replace					●	
PISTON						
Inspect				●	●	Inspect crack
Clean					●	Inspect carbon deposits and eliminate them.
Replace					●	
PISTON RING						
Inspect				●		Check ring end gap
Replace				●	●	
PISTON PIN						
Inspect				●		
Replace					●	
CYLINDER HEAD						
Inspect and clean				●		Inspect carbon deposits and eliminate them. Change gasket
CYLINDER						
Inspect and clean				●		Inspect score marks
Replace					●	Inspect wear
CLUTCH						
Inspect and adjust	●	●				Inspect housing, friction plate, clutch plate and spring
Replace					●	
TRANSMISSION						
Inspect					●	
Replace bearing					●	

Item	After break-in	Every race	Every third (or 500 km)	Every fifth (or 1,000 km)	As required	Remarks
SHIFT FORK, SHIFT CAM, GUIDE BAR						
Inspect					●	Inspect wear
ROTOR NUT						
Retighten	●			●		
MUFFLER						
Inspect and retighten	●	●				
Clean				●		
Replace					●	* Whichever comes first
CRANK						
Inspect and clean				●	●	
CARBURETOR						
Inspect, adjust and clean	●	●				
SPARK PLUG						
Inspect and clean	●		●			
Replace					●	
DRIVE CHAIN						Use chain lube
Lubricate, slack, alignment	●	●				Chain slack: 48 ~ 58 mm (1.9 ~ 2.3 in)
Replace					●	
COOLING SYSTEM						
Check coolant level and leakage	●	●				
Check radiator cap operation					●	
Replace coolant					●	Every two years
Inspect hoses		●				
OUTSIDE NUTS AND BOLTS						Refer to “STARTING AND BREAK-IN” section in the CHAPTER 1.
Retighten	●	●				
AIR FILTER						Use foam air-filter oil or equivalent oil
Clean and lubricate	●	●				
Replace					●	
OIL FILTER						
Replace	●			●		
FRAME						
Clean and inspect	●	●				
FUEL TANK, COCK						
Clean and inspect	●		●			
BRAKES						
Adjust lever position and pedal height	●	●				
Lubricate pivot point	●	●				
Check brake disc surface	●	●				
Check fluid level and leakage	●	●				
Retighten brake disc bolts, caliper bolts, master cylinder bolts and union bolts	●	●				
Replace pads					●	
Replace brake fluid					●	Every one year
FRONT FORKS						
Inspect and adjust	●	●				
Replace oil	●			●		Suspension oil “S1”
Replace oil seal					●	

Item	After break-in	Every race	Every third (or 500 km)	Every fifth (or 1,000 km)	As required	Remarks
FRONT FORK OIL SEAL AND DUST SEAL						
Clean and lube	●	●				Lithium base grease
PROTECTOR GUIDE						
Replace					●	
REAR SHOCK ABSORBER						
Inspect and adjust	●	●			(After rain ride)	
Lube			●		●	Molybdenum disulfide grease
Replace spring seat					●	Every one year
Retighten	●	●				
CHAIN GUARD AND ROLLERS						
Inspect	●	●				
SWINGARM						Molybdenum disulfide grease
Inspect, lube and retighten	●	●				
RELAY ARM, CONNECTING ROD						Molybdenum disulfide grease
Inspect, lube and retighten	●	●				
STEERING HEAD						
Inspect free play and retighten	●	●				
Clean and lube				●		Lithium base grease
Replace bearing					●	
TIRE, WHEELS						
Inspect air pressure, wheel run-out, tire wear and spoke looseness	●	●				
Retighten sprocket bolt	●	●				
Inspect bearings			●			
Replace bearings					●	
Lubricate			●			Lithium base grease
THROTTLE, CONTROL CABLE						
Check routing and connection	●	●				Yamaha cable lube or SAE 10W-30 motor oil
Lubricate	●	●				
HOT STARTER, CLUTCH LEVER						
Inspect free play					●	

EC320000

PRE-OPERATION INSPECTION AND MAINTENANCE

Before riding for break-in operation, practice or a race, make sure the machine is in good operating condition.

Before using this machine, check the following points.

GENERAL INSPECTION AND MAINTENANCE

Item	Routine	Page
Coolant	Check that coolant is filled up to the radiator filler cap. Check the cooling system for leakage.	P.3-5 ~ 9
Fuel	Check that a fresh gasoline is filled in the fuel tank. Check the fuel line for leakage.	P.1-13
Engine oil	Check that the oil level is correct. Check the crankcase and oil line for leakage.	P.3-13 ~ 17
Gear shifter and clutch	Check that gears can be shifted correctly in order and that the clutch operates smoothly.	P.3-9 ~ 10
Throttle grip/Housing	Check that the throttle grip operation and free play are correctly adjusted. Lubricate the throttle grip and housing, if necessary.	P.3-10 ~ 11
Brakes	Check the play of front brake and effect of front and rear brake.	P.3-24 ~ 30
Chain	Check chain slack and alignment. Check that the chain is lubricated properly.	P.3-31 ~ 33
Wheels	Check for excessive wear and tire pressure. Check for loose spokes and have no excessive play.	P.3-41 ~ 42
Steering	Check that the handlebar can be turned smoothly and have no excessive play.	P.3-42 ~ 44
Front forks and rear shock absorber	Check that they operate smoothly and there is no oil leakage.	P.3-33 ~ 40
Cables (wires)	Check that the clutch and throttle cables move smoothly. Check that they are not caught when the handlebars are turned or when the front forks travel up and down.	—
Muffler	Check that the muffler is tightly mounted and has no cracks.	—
Sprocket	Check that the driven sprocket tightening bolt is not loose.	P.3-31
Lubrication	Check for smooth operation. Lubricate if necessary.	P.3-45
Bolts and nuts	Check the chassis and engine for loose bolts and nuts.	P.1-18
Lead connectors	Check that the CDI magneto, CDI unit, and ignition coil are connected tightly.	P.1-6
Settings	Is the machine set suitably for the condition of the racing course and weather or by taking into account the results of test runs before racing? Are inspection and maintenance completely done?	P.7-1 ~ 21

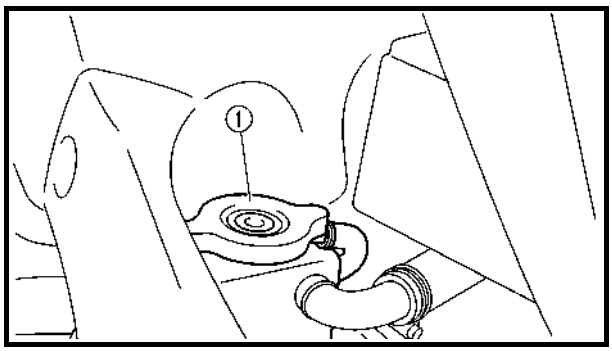

EC350000
ENGINE

EC351011
COOLANT LEVEL INSPECTION

WARNING

Do not remove the radiator cap ①, drain bolt and hoses when the engine and radiator are hot. Scalding hot fluid and steam may be blown out under pressure, which could cause serious injury.
When the engine has cooled, place a thick towel over the radiator cap, slowly rotate the cap counterclockwise to the detent. This procedure allows any residual pressure to escape. When the hissing sound has stopped, press down on the cap while turning counterclockwise and remove it.

CAUTION:

Hard water or salt water is harmful to the engine parts. You may use distilled water, if you can't get soft water.

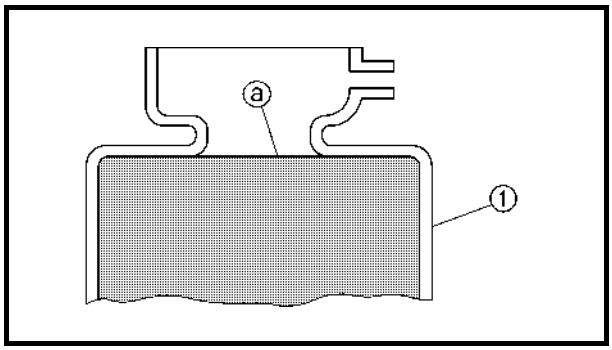

1. Place the machine on a level place, and hold it in an upright position.
2. Remove:
   - Radiator cap
3. Check:
   - Coolant level ⓐ
     Coolant level low → Add coolant.

① Radiator

EC353011
COOLANT REPLACEMENT

WARNING

Do not remove the radiator cap when the engine is hot.

CAUTION:

Take care so that coolant does not splash on painted surfaces. If it splashes, wash it away with water.

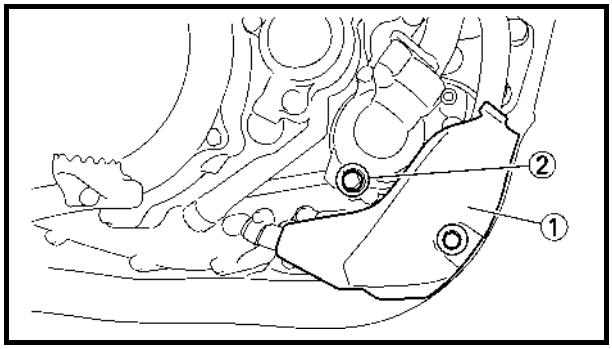

1. Place a container under the engine.
2. Remove:
   - Engine guard ①
   - Coolant drain bolt ②
3. Remove:
   - Radiator cap
     Drain the coolant completely.
4. Clean:
   - Cooling system
     Thoroughly flush the cooling system with clean tap water.
5. Install:
   - Plain washer New
   - Coolant drain bolt
     10 Nm (1.0 m · kg, 7.2 ft · lb)
   - Engine guard
   - Bolt (engine guard)
     10 Nm (1.0 m · kg, 7.2 ft · lb)
6. Fill:
   - Radiator
   - Engine
     To specified level.

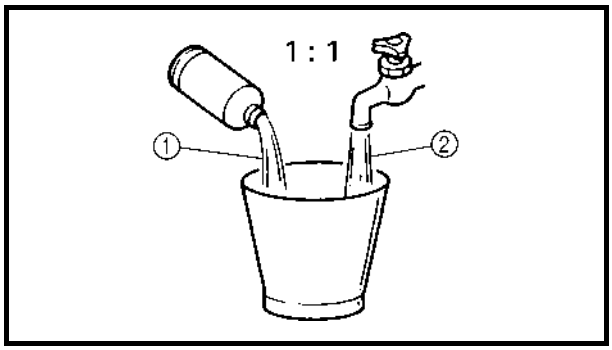

Recommended coolant:
High quality ethylene glycol anti-freeze containing anti-corrosion for aluminum engine
Coolant ① and water (soft water) ② mixing ratio:
50 %/50 %
Coolant capacity:
0.99 L (0.87 Imp qt, 1.05 US qt)

CAUTION:

- **Do not mix more than one type of ethylene glycol antifreeze containing corrosion inhibitors for aluminum engine.**
- **Do not use water containing impurities or oil.**

Handling notes of coolant:
The coolant is harmful so it should be handled with special care.

WARNING

- **When coolant splashes to your eye. Thoroughly wash your eye with water and see your doctor.**
- **When coolant splashes to your clothes. Quickly wash it away with water and then with soap.**
- **When coolant is swallowed. Quickly make him vomit and take him to a doctor.**

7. Install:
   - Radiator cap
     Start the engine and warm it up for a several minutes.
8. Check:
   - Coolant level
     Coolant level low → Add coolant.

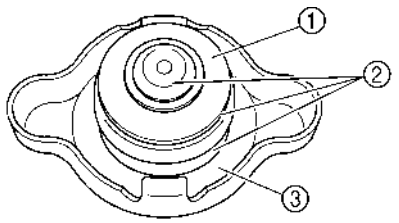

EC355000
RADIATOR CAP INSPECTION

1. Inspect:
   - Seal (radiator cap) ①
   - Valve and valve seat ②
     Crack/damage → Replace.
     Exist fur deposits ③ → Clean or replace.

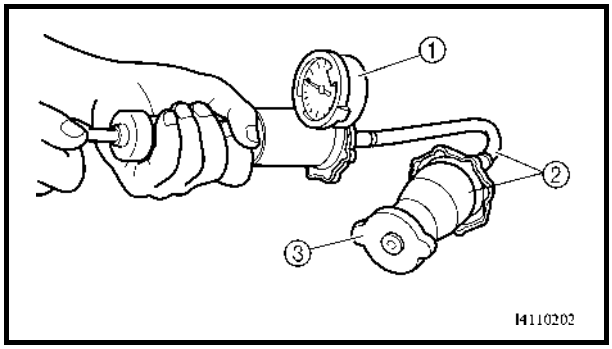

EC356001
RADIATOR CAP OPENING PRESSURE INSPECTION

1. Attach:
   - Radiator cap tester ① and adapter ②

Radiator cap tester:
YU-24460-01/90890-01325
Adapter:
YU-33984/90890-01352

NOTE:
Apply water on the radiator cap seal.

③ Radiator cap

2. Apply the specified pressure.

Radiator cap opening pressure:
110 kPa (1.1 kg/cm^2, 15.6 psi)

3. Inspect:
   - Pressure
     Impossible to maintain the specified pressure for 10 seconds → Replace.

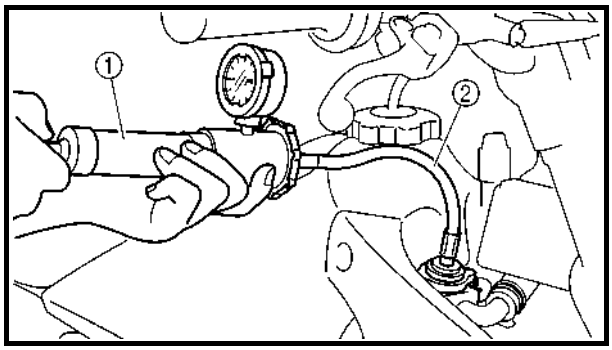

EC357002
COOLING SYSTEM INSPECTION

1. Inspect:
   - Coolant level
2. Attach:
   - Radiator cap tester ① and adapter ②

Radiator cap tester:
YU-24460-01/90890-01325
Adapter:
YU-33984/90890-01352

3. Apply the specified pressure.

Standard pressure:
180 kPa (1.8 kg/cm^2, 25.6 psi)

NOTE:
- Do not apply pressure more than specified pressure.
- Radiator should be filled fully.

4. Inspect:
   - Pressure
     Impossible to maintain the specified pressure for 10 seconds → Repair.
   - Radiator
   - Radiator hose joint
     Coolant leakage → Repair or replace.
   - Radiator hose
     Swelling → Replace.

EC359020
CLUTCH ADJUSTMENT

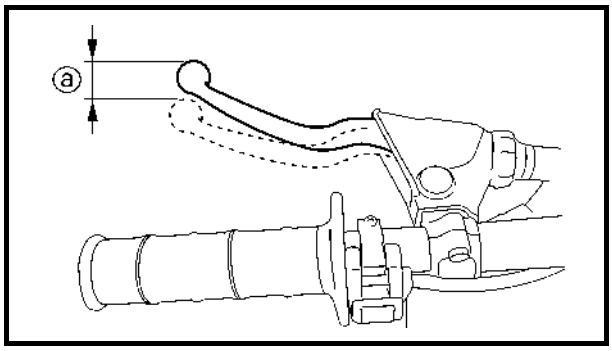

1. Check:
   - Clutch lever free play ⓐ
     Out of specification → Adjust.

	Clutch lever free play ⓐ: **8 ~ 13 mm (0.31 ~ 0.51 in)**

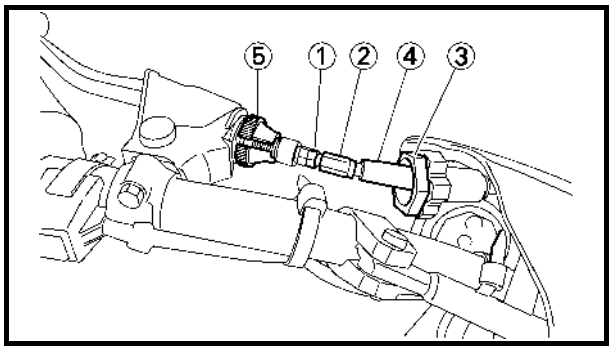

2. Adjust:
   - Clutch lever free play

Clutch lever free play adjustment steps:
- Loosen the locknut ①.
- Turn the adjuster ② until free play ⓐ is within the specified limits.
- Tighten the locknut.

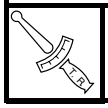	**Locknut:** **4 Nm (0.4 m • kg, 2.9 ft • lb)**

NOTE:
- Before adjustment, expose the adjuster by moving the boot ③ and cap ④ away.
- Make minute adjustment on the lever side using the adjuster ⑤.
- After adjustment, check proper operation of clutch lever.

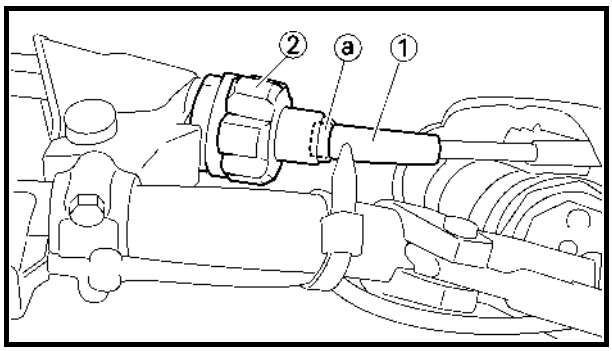

3. Install:
   - Cap ①
   - Boot ②

NOTE:
Place the tip ⓐ of the cap in the boot.

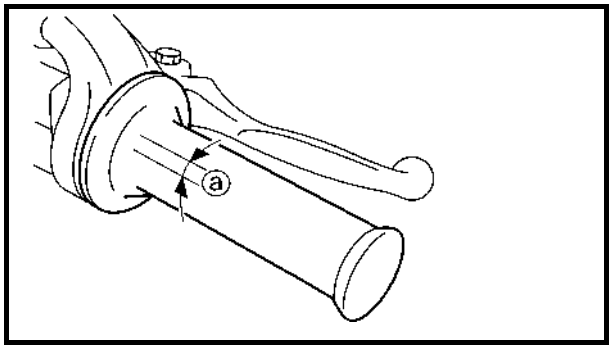

EC35A001
THROTTLE CABLE ADJUSTMENT

1. Check:
   - Throttle grip free play ⓐ
     Out of specification → Adjust.

Throttle grip free play ⓐ:
3 ~ 5 mm (0.12 ~ 0.20 in)

2. Adjust:
   - Throttle grip free play

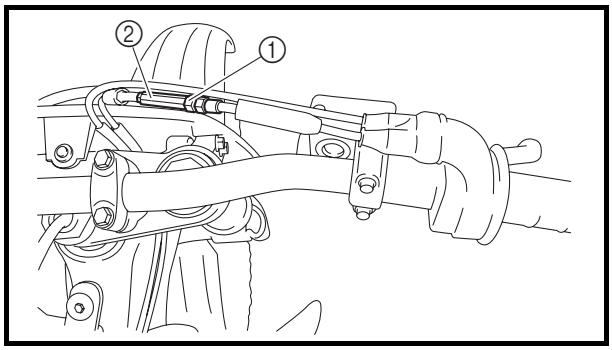

Throttle grip free play adjustment steps:
- Slide the adjuster cover.
- Loosen the locknut ①.
- Turn the adjuster ② until the specified free play is obtained.
- Tighten the locknut.

Locknut:
4 Nm (0.4 m • kg, 2.9 ft • lb)

NOTE:
Before adjusting the throttle cable free play, the engine idle speed should be adjusted.

⚠ WARNING
After adjusting, turn the handlebar to right and left and make sure that the engine idling does not run faster.

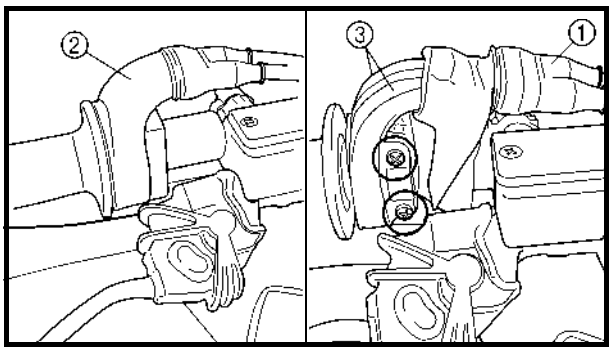

THROTTLE LUBRICATION

1. Remove:
   - Cover (throttle cable cap) ①
   - Cover (grip cap) ②
   - Throttle cable cap ③

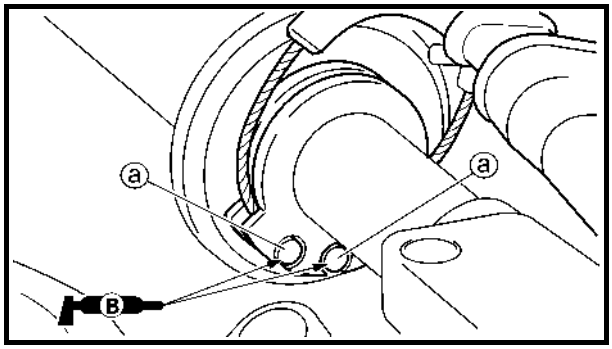

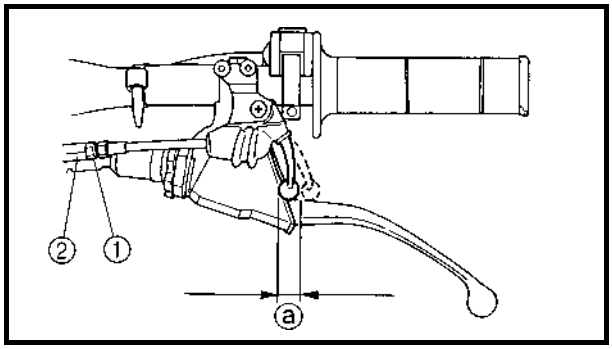

2. Apply:
   - Lithium soap base grease
     On the throttle cable end ⓐ.
3. Install:
   - Throttle cable cap
   - Screw (throttle cable cap)

	4 Nm (0.4 m · kg, 2.9 ft · lb)

   - Cover (grip cap)
   - Cover (throttle cable cap)

HOT STARTER LEVER ADJUSTMENT

1. Check:
   - Hot starter lever free play ⓐ
     Out of specification → Adjust.

	Hot starter lever free play ⓐ: 3 ~ 6 mm (0.12 ~ 0.24 in)

2. Adjust:
   - Hot starter lever free play

Hot starter lever free play adjustment steps:
- Loosen the locknut ①.
- Turn the adjuster ② until free play ⓐ is within the specified limits.
- Tighten the locknut.

	Locknut: 4 Nm (0.4 m • kg, 2.9 ft • lb)

NOTE:
After adjustment, check proper operation of hot starter.

EC35G040
AIR FILTER CLEANING

NOTE:
Proper air filter maintenance is the biggest key to preventing premature engine wear and damage.

CAUTION:
Never run the engine without the air filter element in place; this would allow dirt and dust to enter the engine and cause rapid wear and possible engine damage.

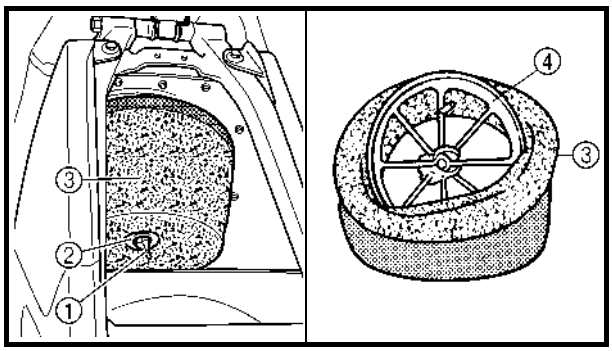

1. Remove:
   - Seat
   - Fitting bolt ①
   - Washer ②
   - Air filter element ③
   - Filter guide ④

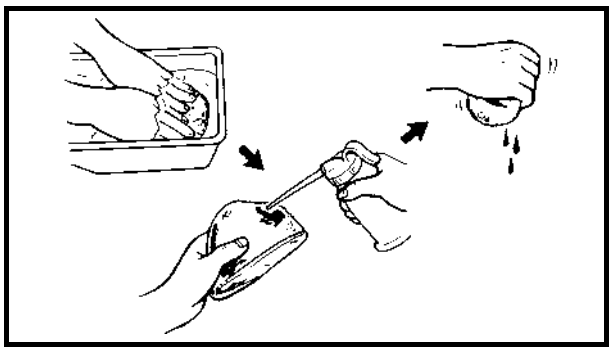

2. Clean:
   - Air filter element
     Clean them with solvent.

NOTE:
After cleaning, remove the remaining solvent by squeezing the element.

CAUTION:
- **Do not twist the element when squeezing the element.**
- **Leaving too much of solvent in the element may result in poor starting.**

3. Inspect:
   - Air filter element
     Damage → Replace.
4. Apply:
   - Foam-air-filter oil or equivalent oil to the element.

NOTE:
Squeeze out the excess oil. Element should be wet but not dripping.

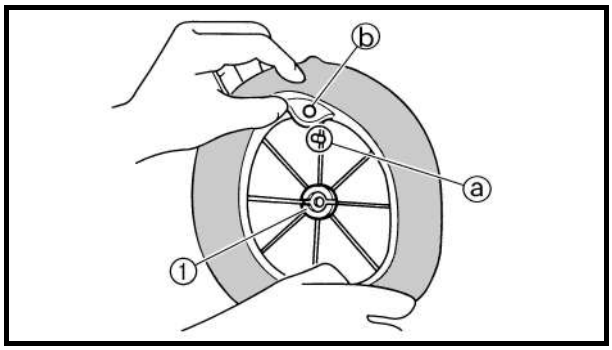

5. Install:
   - Filter guide ①

NOTE:
Align the projection ⓐ on filter guide with the hole ⓑ in air filter element.

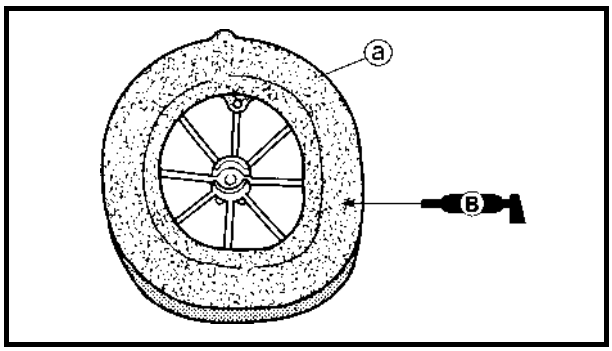

6. Apply:
   - Lithium soap base grease
     On the matching surface ⓐ on air filter element.

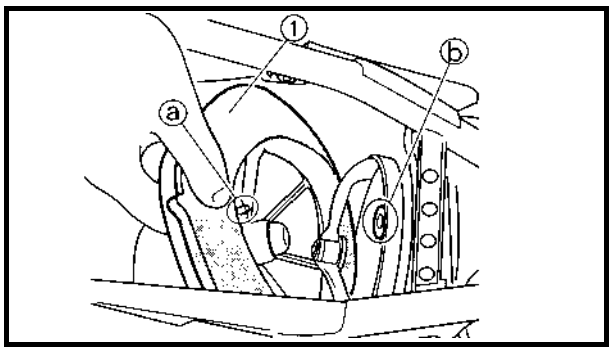

7. Install:
   - Air filter element ①
   - Washer
   - Fitting bolt | 2 Nm (0.2 m · kg, 1.4 ft · lb) |

NOTE:
Align the projection ⓐ on filter guide with the hole ⓑ in air filter case.

ENGINE OIL LEVEL INSPECTION

1. Stand the machine on a level surface.

NOTE:
- When checking the oil level make sure that the machine is upright.
- Place the machine on a suitable stand.

WARNING

Never remove the oil tank cap just after high speed operation. The heated oil could spurt out. causing danger. Wait until the oil cools down to approximately 70 °C (158 °F).

2. Idle the engine more than 3 minutes while keeping the machine upright. Then stop the engine and inspect the oil level.

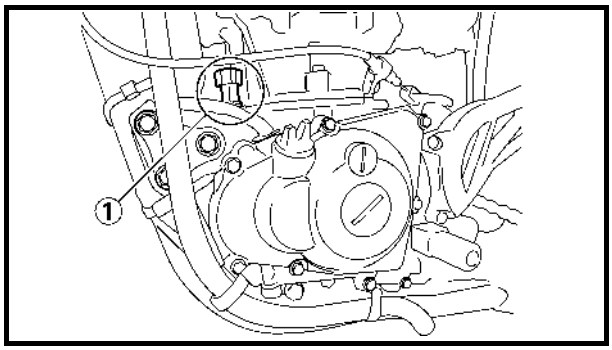

3. Remove:
   - Oil tank cap ①

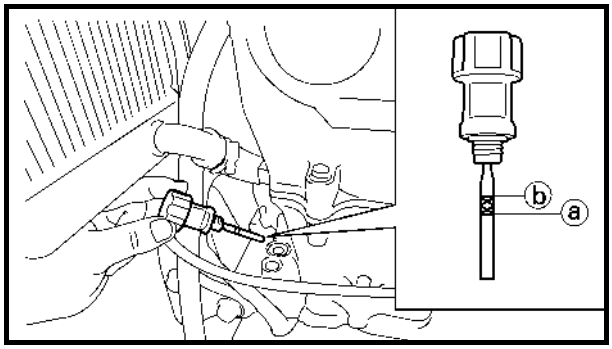

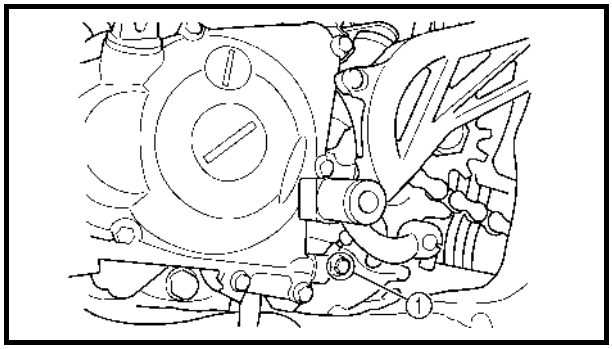

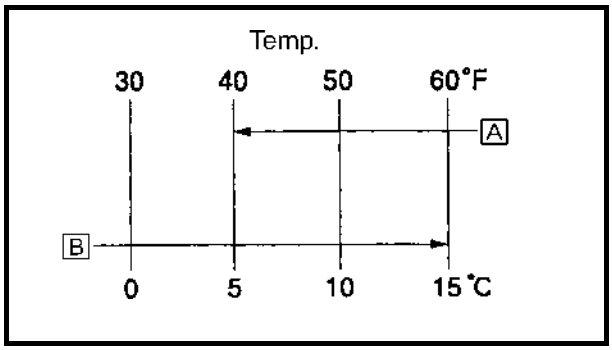

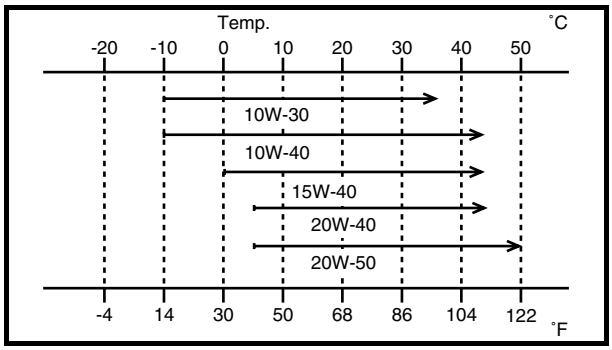

4. Inspect:
   - Oil level
     Remove the oil tank cap and check that engine oil is above the level mark ⓐ.
     Below the level mark ⓐ → Add oil above the level mark ⓐ.
     Above the level mark ⓑ → Remove the check bolt ① and drain the oil until it stops coming out.

NOTE:
When inspecting the oil level, do not screw the oil level gauge into the oil tank.
Insert the gauge lightly.

(For USA and CDN)

Recommended oil:
At 5 °C (40 °F) or higher A
Yamalube 4 (20W-40) or SAE 20W-40 type SG motor oil (Non-Friction modified)
At 15 °C (60 °F) or lower B
Yamalube 4 (10W-30) or SAE 10W-30 type SG motor oil (Non-Friction modified)
and/or
Yamalube 4-R (15W-50) (Non-Friction modified)

CAUTION:
- **Do not add any chemical additives. Engine oil also lubricates the clutch and additives could cause clutch slippage.**
- **Do not allow foreign material to enter the crankcase.**

(Except for USA and CDN)

Recommended oil:
Refer to the following chart for selection of oils which are suited to the atmospheric temperatures.
Recommended engine oil classification:
API STANDARD:
API "SG" or higher grade (Designed primarily for motorcycles)

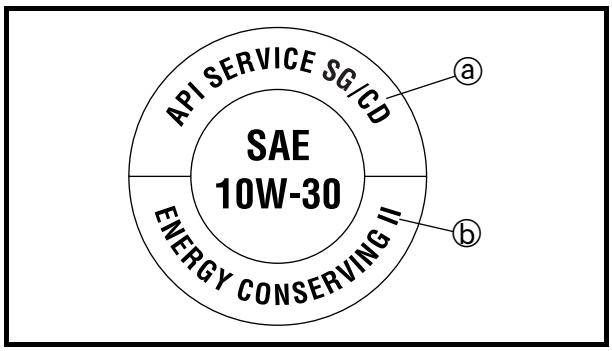

CAUTION:

- **Do not add any chemical additives or use oils with a grade of CD ⓐ or higher.**
- **Do not use oils labeled "ENERGY CONSERVING II" ⓑ or higher. Engine oil also lubricates the clutch and additives could cause clutch slippage.**
- **Do not allow foreign materials to enter the crankcase.**

5. Start the engine and let it warm up for several minutes.

CAUTION:

When the oil tank is empty, never start the engine.

6. Idle the engine more than 10 seconds while keeping the machine upright. Then stop the engine and add the oil to the maximum level.
7. Install:
   - Oil tank cap

ENGINE OIL REPLACEMENT

1. Start the engine and let it warm up for several minutes.
2. Stop the engine and place an oil pan under the drain bolt.
3. Remove:
   - Oil tank plug ①
   - Oil filler cap ②
   - Drain bolt (with gasket) ③
   - Oil filter drain bolt (O-ring) ④
   - Drain bolt (with gasket) ⑤

   Drain the crankcase and oil tank of its oil.

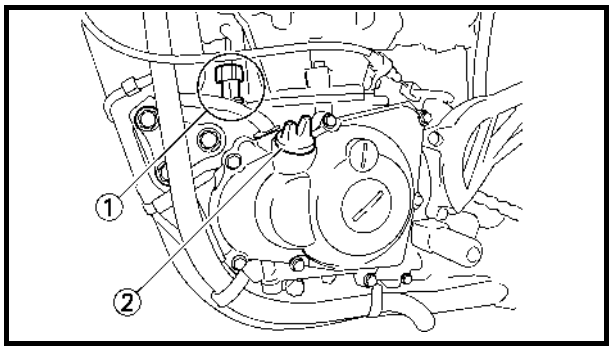

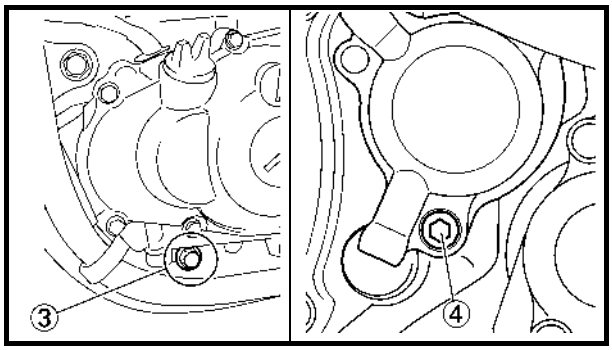

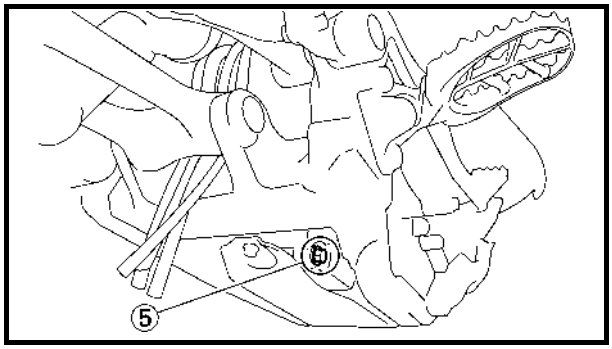

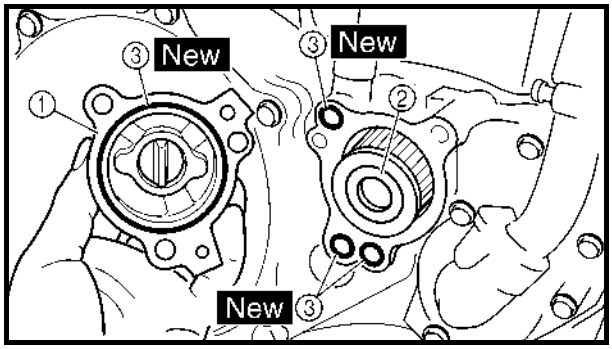

4. If the oil filter is to be replaced during this oil change, remove the following parts and reinstall them.

Replacement steps:
- Remove the oil filter cover ① and oil filter element ②.
- Check the O-rings ③, if cracked or damaged, replace them with a new one.
- Install the oil filter element and oil filter cover.

Oil filter cover:
10 Nm (1.0 m • kg, 7.2 ft • lb)

5. Install:
   - Gaskets New
   - Oil filter drain bolt
     10 Nm (1.0 m · kg, 7.2 ft · lb)
   - Drain bolt (crankcase right)
     20 Nm (2.0 m · kg, 14 ft · lb)
   - Drain bolt (crankcase left)
     20 Nm (2.0 m · kg, 14 ft · lb)

6. Fill:
   - Crankcase

Oil quantity:
Periodic oil change:
0.95 L (0.84 Imp qt, 1.00 US qt)
With oil filter replacement:
1.0 L (0.88 Imp qt, 1.06 US qt)
Total amount:
1.2 L (1.06 Imp qt, 1.27 US qt)

7. Install:
   - Oil filler cap
8. Inspect:
   - Engine (for oil leaks)
   - Oil level
     Refer to “ENGINE OIL LEVEL INSPECTION”.

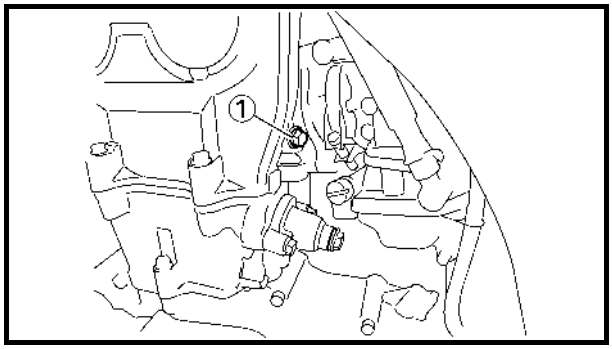

9. Check:
   - Oil pressure

Checking steps:
- Slightly loosen the oil gallery bolt ①.
- Start the engine and keep it idling until oil starts to seep from the oil gallery bolt. If no oil comes out after one minute, turn the engine off so it will not seize.
- Check oil passages, oil filter and oil pump for damage or leakage.
- Start the engine after solving the problem(s) and recheck the oil pressure.
- Tighten the oil gallery bolt to specification.

Oil gallery bolt:
10 Nm (1.0 m • kg, 7.2 ft • lb)

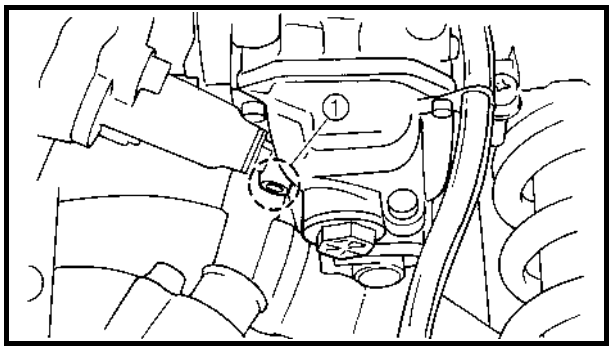

PILOT SCREW ADJUSTMENT

1. Adjust:
   - Pilot screw ①

Adjusting steps:

NOTE:
To optimize the fuel flow at a smaller throttle opening, each machine’s pilot screw has been individually set at the factory. Before adjusting the pilot screw, turn it in fully and count the number of turns. Record this number as the factory-set number of turns out.

- Turn in the pilot screw until it is lightly seated.
- Turn out the pilot screw by the factory-set number of turns.

Pilot screw (example):
2-1/8 turns out

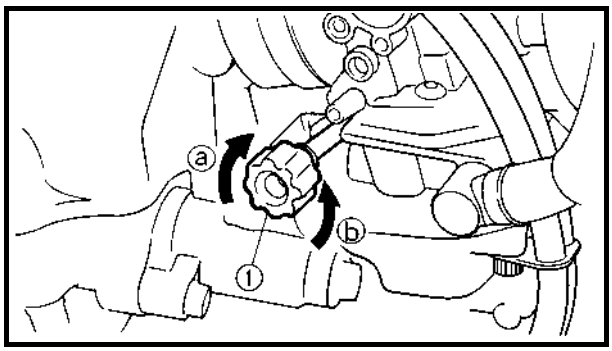

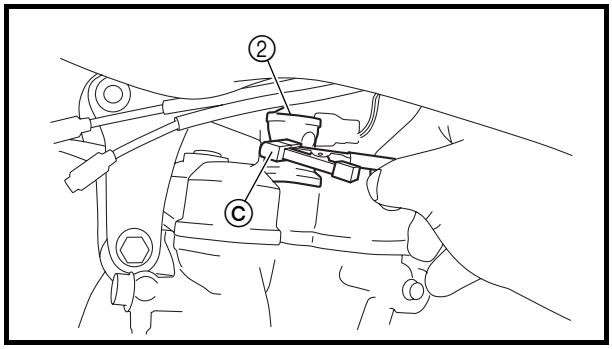

EC35M021

IDLE SPEED ADJUSTMENT

1. Start the engine and thoroughly warm it up.
2. Adjust:
   - Idle speed

Adjustment steps:
- Adjust the pilot screw.
  Refer to "PILOT SCREW ADJUSTMENT" section.
- Turn the throttle stop screw ① until the specified engine idling speed.

NOTE:
Using a digital engine tachometer for idle speed adjustment, detect the engine idling speed by bringing the sensing element ⓒ of the engine tachometer close to the ignition coil ②.

To increase idle speed →
Turn the throttle stop screw ① in ⓐ.
To decrease idle speed →
Turn the throttle stop screw ① out ⓑ.

Engine idling speed:
1,900 ~ 2,100 r/min

VALVE CLEARANCE ADJUSTMENT

NOTE:
- The valve clearance should be adjusted when the engine is cool to the touch.
- The piston must be at Top Dead Center (T.D.C.) on compression stroke to check or adjust the valve clearance.

1. Remove:
   - Seat
   - Fuel tank
     Refer to "SEAT, FUEL TANK AND SIDE COVERS" section in the CHAPTER 4.
2. Remove:
   - Spark plug
   - Engine upper bracket
   - Hot starter plunger
     Refer to "CARBURETOR" section in the CHAPTER 4.
   - Cylinder head cover
     Refer to "CAMSHAFTS" section in the CHAPTER 4.

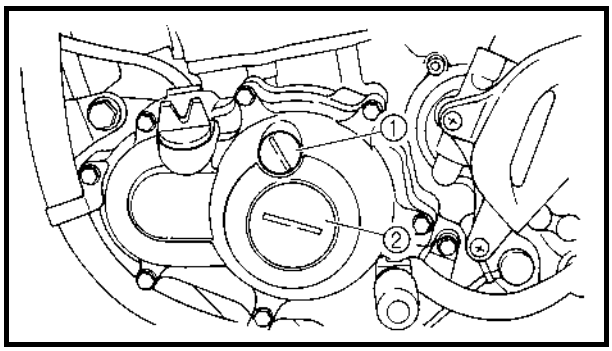

3. Remove:
   - Timing plug ①
   - Straight plug ②
   - O-ring

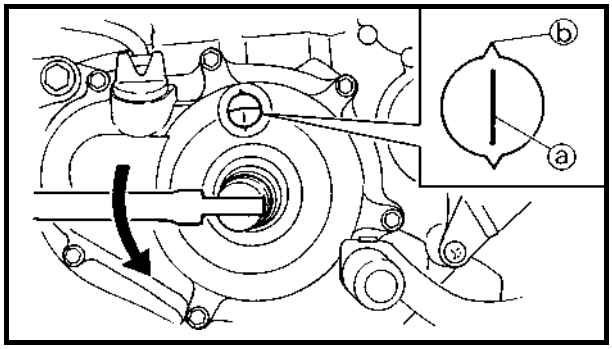

4. Check:
   - Valve clearance
     Out of specification → Adjust.

Valve clearance (cold):
Intake valve:
0.10 ~ 0.15 mm
(0.0039 ~ 0.0059 in)
Exhaust valve:
0.20 ~ 0.25 mm
(0.0079 ~ 0.0098 in)

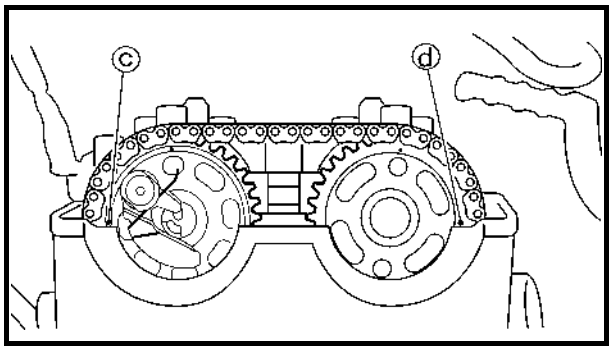

Checking steps:
- Turn the crankshaft counterclockwise with a wrench.
- Align the T.D.C. mark ⓐ on the rotor with the align mark ⓑ on the crankcase cover when piston is at T.D.C. on compression stroke.

NOTE:
In order to be sure that the piston is at Top Dead Center, the punch mark ⓒ on the exhaust camshaft and the punch mark ⓓ on the intake camshaft must align with the cylinder head surface, as shown in the illustration.

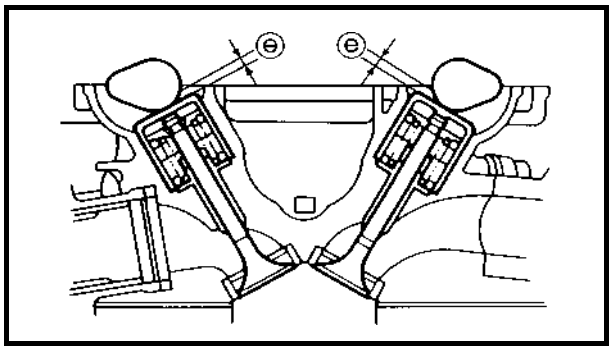

- Measure the valve clearance ⓔ using a feeler gauge ①.

NOTE:
Record the measured reading if the clearance is incorrect.

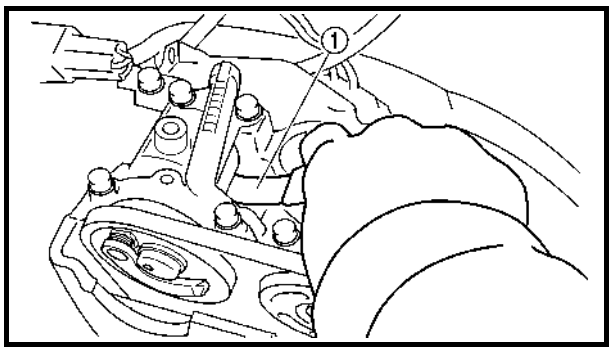

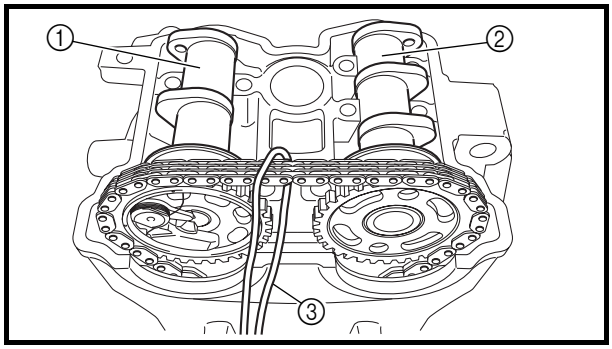

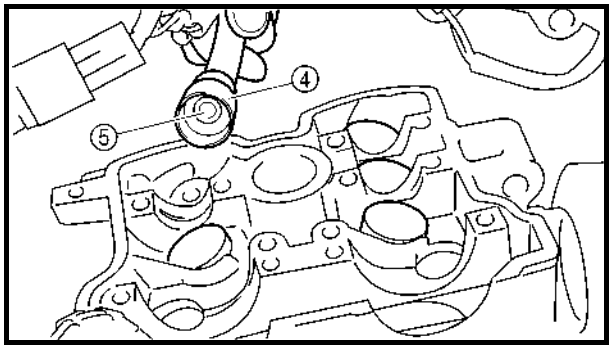

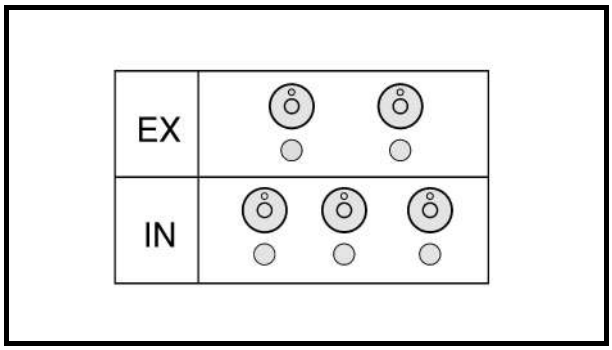

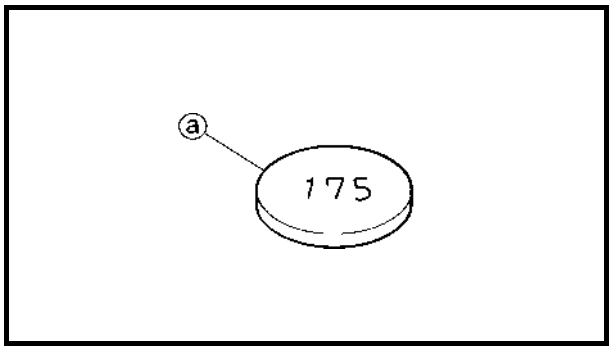

5. Adjust:
   - Valve clearance

Adjustment steps:
- Loosen the timing chain tensioner cap bolt.
- Remove the timing chain tensioner and camshaft caps.

NOTE:
Remove the camshaft cap bolts in a criss-cross pattern from the outside working inwards.

- Remove the camshaft (exhaust ① and intake ②).

NOTE:
Attach a wire ③ to the timing chain to prevent it from falling into the crankcase.

- Remove the valve lifters ④ and the pads ⑤.

NOTE:
- Place a rag in the timing chain space to prevent pads from falling into the crankcase.
- Identity each valve lifter and pad position very carefully so that they can be reinstalled in their original place.

- Select the proper pad using the pad selecting table.

Pad range		Pad Availability: 25 increments
No. 120 ~ No. 240	1.20 mm ~ 2.40 mm	Pads are available in 0.05 mm increments

NOTE:
The thickness ⓐ of each pad is indicated in hundreths of millimeters on the pad upper surface.

- Round off the last digit of the installed pad number to the nearest increment.

Last digit of pad number	Rounded value
0, 1 or 2	0
4, 5 or 6	5
8 or 9	10

EXAMPLE:
Installed pad number = 148
Rounded off value = 150

NOTE:
Pads can only be selected in 0.05 mm increments.

- Locate the rounded-off value and the measured valve clearance in the chart "PAD SELECTION TABLE". The field where these two coordinates intersect shows the new pad number to use.

NOTE:
Use the new pad number only as a guide when verifying the valve clearance adjustment.

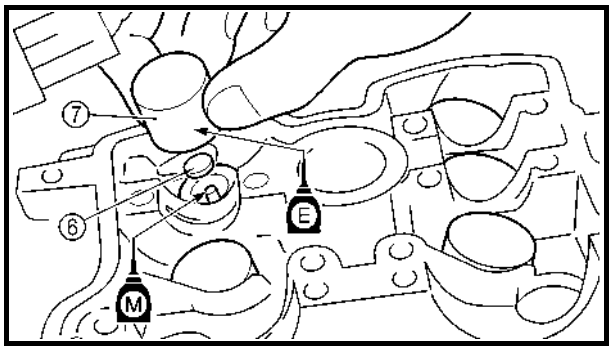

- Install the new pads ⑥ and the valve lifters ⑦.

NOTE:
- Apply the engine oil on the valve lifters.
- Apply the molybdenum disulfide oil on the valve stem ends.
- Valve lifter must turn smoothly when rotated with a finger.
- Be careful to reinstall valve lifters and pads in their original place.

- Install the camshafts (exhaust and intake), the timing chain and the camshaft caps. Refer to "CAMSHAFTS" section in the CHAPTER 4.

Bolt (camshaft cap):
10 Nm (1.0 m • kg, 7.2 ft • lb)

- Install the timing chain tensioner.
  Refer to “CAMSHAFTS” section in the CHAPTER 4.

NOTE:
Turn the crankshaft counterclockwise several turns so that the installed parts settle into the right position.

- Recheck the valve clearance.
- If the clearance is still incorrect, repeat all the clearance adjustment steps until the specified clearance is obtained.

6. Install:
   - All removed parts

NOTE:
Install all removed parts in reversed order of their removal.

INTAKE

MEASURED CLEARANCE	INSTALLED PAD NUMBER																								
	120	125	130	135	140	145	150	155	160	165	170	175	180	185	190	195	200	205	210	215	220	225	230	235	240
0.00 ~ 0.04			120	125	130	135	140	145	150	155	160	165	170	175	180	185	190	195	200	205	210	215	220	225	230
0.05 ~ 0.09		120	125	130	135	140	145	150	155	160	165	170	175	180	185	190	195	200	205	210	215	220	225	230	235
0.10 ~ 0.15	STANDARD CLEARANCE																								
0.16 ~ 0.20	125	130	135	140	145	150	155	160	165	170	175	180	185	190	195	200	205	210	215	220	225	230	235	240	
0.21 ~ 0.25	130	135	140	145	150	155	160	165	170	175	180	185	190	195	200	205	210	215	220	225	230	235	240		
0.26 ~ 0.30	135	140	145	150	155	160	165	170	175	180	185	190	195	200	205	210	215	220	225	230	235	240			
0.31 ~ 0.35	140	145	150	155	160	165	170	175	180	185	190	195	200	205	210	215	220	225	230	235	240				
0.36 ~ 0.40	145	150	155	160	165	170	175	180	185	190	195	200	205	210	215	220	225	230	235	240					
0.41 ~ 0.45	150	155	160	165	170	175	180	185	190	195	200	205	210	215	220	225	230	235	240						
0.46 ~ 0.50	155	160	165	170	175	180	185	190	195	200	205	210	215	220	225	230	235	240							
0.51 ~ 0.55	160	165	170	175	180	185	190	195	200	205	210	215	220	225	230	235	240								
0.56 ~ 0.60	165	170	175	180	185	190	195	200	205	210	215	220	225	230	235	240									
0.61 ~ 0.65	170	175	180	185	190	195	200	205	210	215	220	225	230	235	240										
0.66 ~ 0.70	175	180	185	190	195	200	205	210	215	220	225	230	235	240											
0.71 ~ 0.75	180	185	190	195	200	205	210	215	220	225	230	235	240												
0.76 ~ 0.80	185	190	195	200	205	210	215	220	225	230	235	240													
0.81 ~ 0.85	190	195	200	205	210	215	220	225	230	235	240														
0.86 ~ 0.90	195	200	205	210	215	220	225	230	235	240															
0.91 ~ 0.95	200	205	210	215	220	225	230	235	240																
0.96 ~ 1.00	205	210	215	220	225	230	235	240																	
1.01 ~ 1.05	210	215	220	225	230	235	240																		
1.06 ~ 1.10	215	220	225	230	235	240																			
1.11 ~ 1.15	220	225	230	235	240																				
1.16 ~ 1.20	225	230	235	240																					
1.21 ~ 1.25	230	235	240																						
1.26 ~ 1.30	235	240																							
1.31 ~ 1.35	240																								

VALVE CLEARANCE (cold):
0.10 ~ 0.15 mm
Example: Installed is 175
Measured clearance is 0.22 mm
Replace 175 pad with 185 pad
Pad number: (example)
Pad No. 175 = 1.75 mm
Pad No. 185 = 1.85 mm

EXHAUST

MEASURED CLEARANCE	INSTALLED PAD NUMBER																								
	120	125	130	135	140	145	150	155	160	165	170	175	180	185	190	195	200	205	210	215	220	225	230	235	240
0.00 ~ 0.04					120	125	130	135	140	145	150	155	160	165	170	175	180	185	190	195	200	205	210	215	220
0.05 ~ 0.09				120	125	130	135	140	145	150	155	160	165	170	175	180	185	190	195	200	205	210	215	220	225
0.10 ~ 0.14			120	125	130	135	140	145	150	155	160	165	170	175	180	185	190	195	200	205	210	215	220	225	230
0.15 ~ 0.19		120	125	130	135	140	145	150	155	160	165	170	175	180	185	190	195	200	205	210	215	220	225	230	235
0.20 ~ 0.25	STANDARD CLEARANCE																								
0.26 ~ 0.30	125	130	135	140	145	150	155	160	165	170	175	180	185	190	195	200	205	210	215	220	225	230	235	240	
0.31 ~ 0.35	130	135	140	145	150	155	160	165	170	175	180	185	190	195	200	205	210	215	220	225	230	235	240		
0.36 ~ 0.40	135	140	145	150	155	160	165	170	175	180	185	190	195	200	205	210	215	220	225	230	235	240			
0.41 ~ 0.45	140	145	150	155	160	165	170	175	180	185	190	195	200	205	210	215	220	225	230	235	240				
0.46 ~ 0.50	145	150	155	160	165	170	175	180	185	190	195	200	205	210	215	220	225	230	235	240					
0.51 ~ 0.55	150	155	160	165	170	175	180	185	190	195	200	205	210	215	220	225	230	235	240						
0.56 ~ 0.60	155	160	165	170	175	180	185	190	195	200	205	210	215	220	225	230	235	240							
0.61 ~ 0.65	160	165	170	175	180	185	190	195	200	205	210	215	220	225	230	235	240								
0.66 ~ 0.70	165	170	175	180	185	190	195	200	205	210	215	220	225	230	235	240									
0.71 ~ 0.75	170	175	180	185	190	195	200	205	210	215	220	225	230	235	240										
0.76 ~ 0.80	175	180	185	190	195	200	205	210	215	220	225	230	235	240											
0.81 ~ 0.85	180	185	190	195	200	205	210	215	220	225	230	235	240												
0.86 ~ 0.90	185	190	195	200	205	210	215	220	225	230	235	240													
0.91 ~ 0.95	190	195	200	205	210	215	220	225	230	235	240														
0.96 ~ 1.00	195	200	205	210	215	220	225	230	235	240															
1.01 ~ 1.05	200	205	210	215	220	225	230	235	240																
1.06 ~ 1.10	205	210	215	220	225	230	235	240																	
1.11 ~ 1.15	210	215	220	225	230	235	240																		
1.16 ~ 1.20	215	220	225	230	235	240																			
1.21 ~ 1.25	220	225	230	235	240																				
1.26 ~ 1.30	225	230	235	240																					
1.31 ~ 1.35	230	235	240																						
1.36 ~ 1.40	235	240																							
1.41 ~ 1.45	240																								

VALVE CLEARANCE (cold):
0.20 ~ 0.25 mm
Example: Installed is 175
Measured clearance is 0.32 mm
Replace 175 pad with 185 pad
Pad number: (example)
Pad No. 175 = 1.75 mm
Pad No. 185 = 1.85 mm

EC360000
CHASSIS

EC361012
BRAKE SYSTEM AIR BLEEDING

WARNING

Bleed the brake system if:
- **The system has been disassembled.**
- **A brake hose has been loosened or removed.**
- **The brake fluid is very low.**
- **The brake operation is faulty.**

A dangerous loss of braking performance may occur if the brake system is not properly bled.

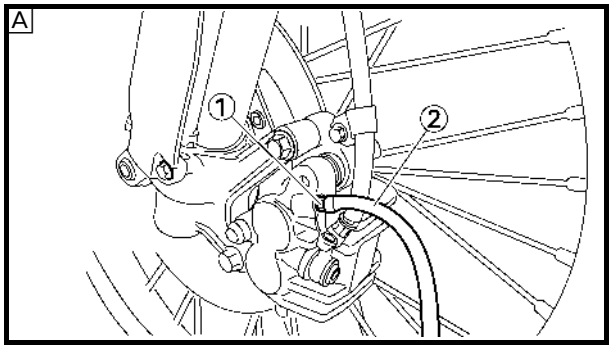

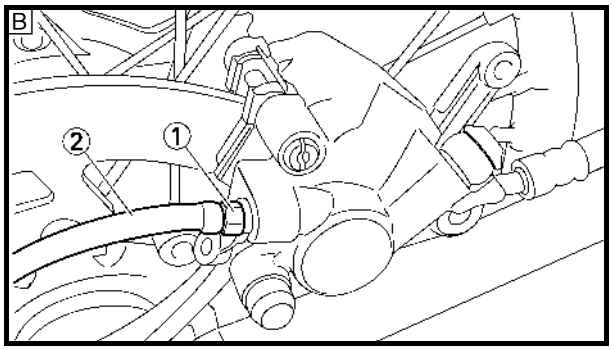

1. Remove:
   - Master cylinder cap
   - Diaphragm
   - Reservoir float (front brake)
   - Protector (rear brake)
2. Bleed:
   - Brake fluid

A Front
B Rear

Air bleeding steps:

a. Add proper brake fluid to the reservoir.
b. Install the diaphragm. Be careful not to spill any fluid or allow the reservoir to overflow.
c. Connect the clear plastic tube ② tightly to the caliper bleed screw ①.
d. Place the other end of the tube into a container.
e. Slowly apply the brake lever or pedal several times.
f. Pull the lever in or push down on the pedal. Hold the lever or pedal in position.
g. Loosen the bleed screw and allow the lever or pedal to travel towards its limit.
h. Tighten the bleed screw when the lever or pedal limit has been reached; then release the lever or pedal.

Bleed screw:
6 Nm (0.6 m • kg, 4.3 ft • lb)

i. Repeat steps (e) to (h) until of the air bubbles have been removed from the system.

NOTE:
If bleeding is difficult, it may be necessary to let the brake fluid system stabilize for a few hours. Repeat the bleeding procedure when the tiny bubbles in the system have disappeared.

j. Add brake fluid to the level line on the reservoir.

WARNING
Check the operation of the brake after bleeding the brake system.

3. Install:
   - Protector (rear brake)
   - Reservoir float (front brake)
   - Diaphragm
   - Master cylinder cap

EC362040
FRONT BRAKE ADJUSTMENT

1. Check:
   - Brake lever position ⓐ

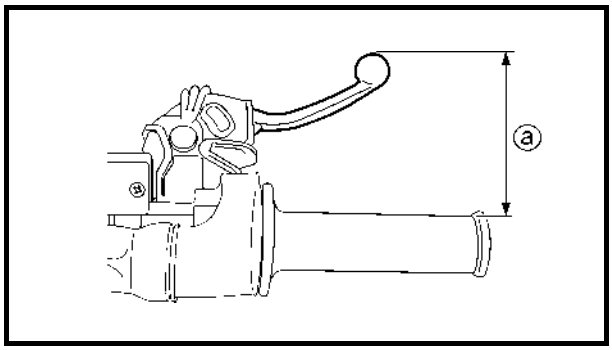

Brake lever position ⓐ:	
Standard position	**Extent of adjustment**
95 mm (3.74 in)	**76 ~ 97 mm (2.99 ~ 3.82 in)**

2. Remove:
   - Lever cover
3. Adjust:
   - Brake lever position

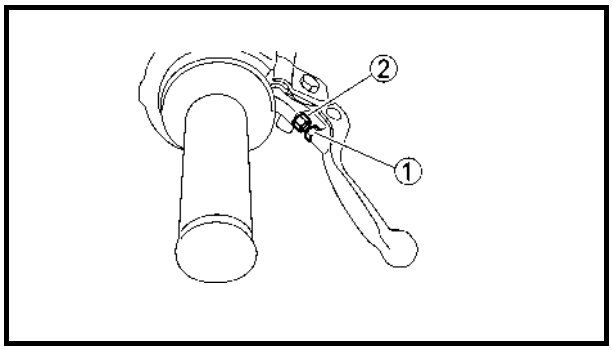

Brake lever position adjustment steps:
- Loosen the locknut ①.
- Turn the adjusting bolt ② until the lever position ⓐ is within specified position.
- Tighten the locknut.

Locknut:
5 Nm (0.5 m • kg, 3.6 ft • lb)

CAUTION:
Be sure to tighten the locknut, as it will cause poor brake performance.

4. Install:
   - Lever cover

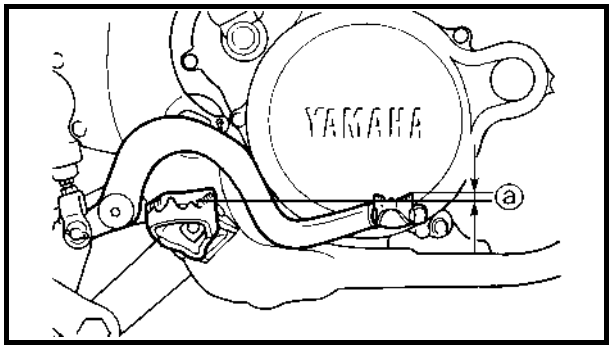

EC364002
REAR BRAKE ADJUSTMENT

1. Check:
   - Brake pedal height ⓐ
     Out of specification → Adjust.

	Brake pedal height ⓐ: 5 mm (0.20 in)

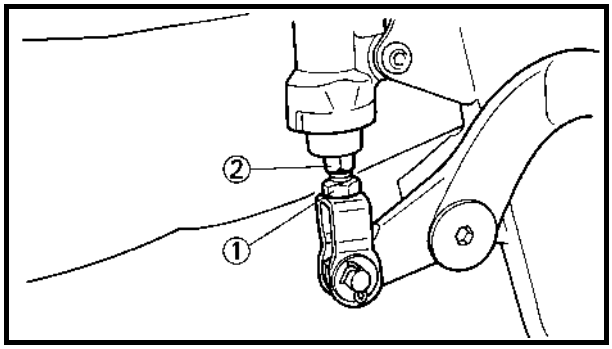

2. Adjust:
   - Brake pedal height

Pedal height adjustment steps:
- Loosen the locknut ①.
- Turn the adjusting nut ② until the pedal height ⓐ is within specified height.
- Tighten the locknut.

⚠ WARNING
- **Adjust the pedal height between the maximum [A] and the minimum [B] as shown. (In this adjustment, the bolt ③ end ⓑ should protrude out of the threaded portion ④ but not be less than 2 mm (0.08 in) ⓒ away from the brake pedal ⑤).**
- **After the pedal height adjustment, make sure that the rear brake does not drag.**

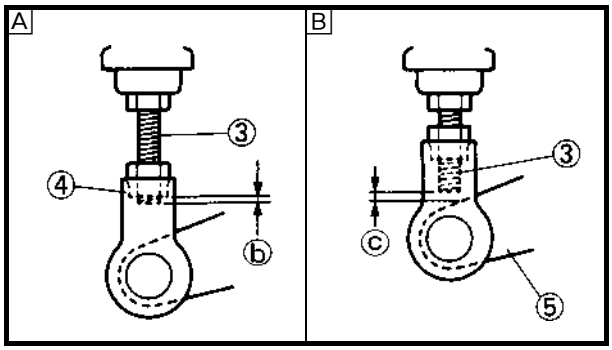

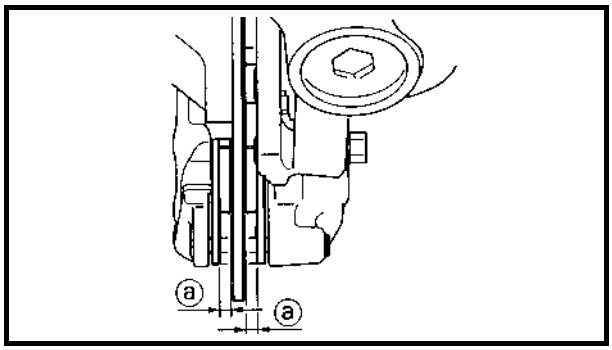

EC365080
FRONT BRAKE PAD INSPECTION AND REPLACEMENT

1. Inspect:
   - Brake pad thickness ⓐ
     Out of specification → Replace as a set.

Brake pad thickness ⓐ:

Standard	<Limit>
4.4 mm (0.17 in)	1.0 mm (0.04 in)

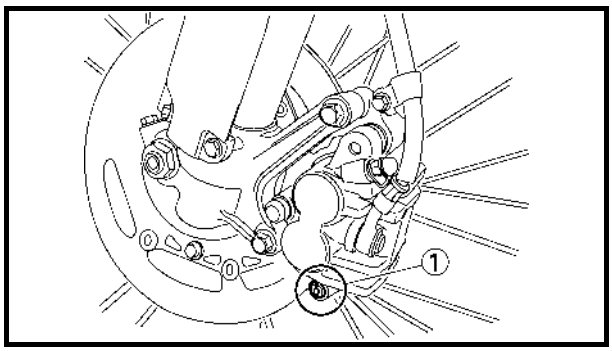

2. Replace:
   - Brake pad

Brake pad replacement steps:
- Remove the pad pin plug ①.

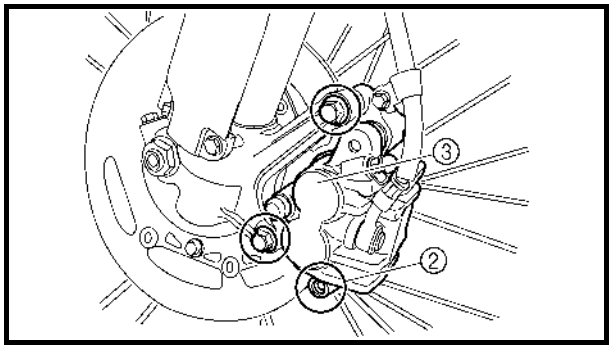

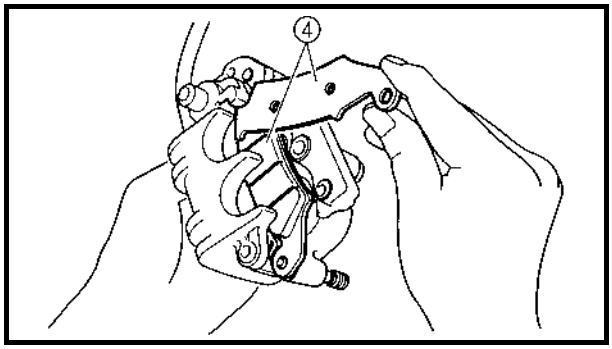

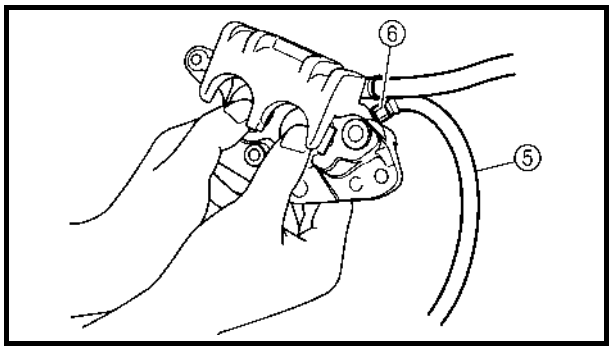

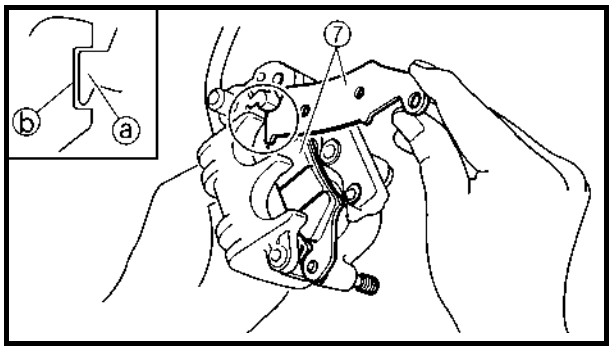

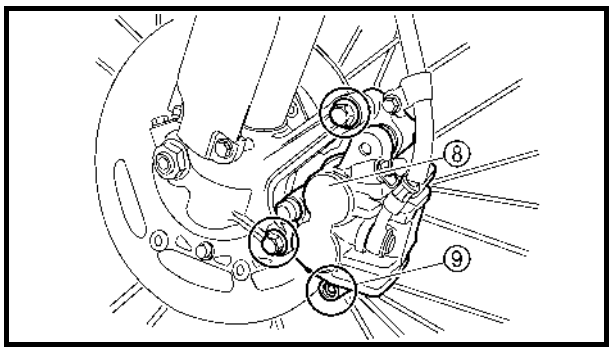

- Loosen the pad pin ②.
- Remove the caliper ③ from the front fork.
- Remove the pad pin and brake pads ④.
- Connect the transparent hose ⑤ to the bleed screw ⑥ and place the suitable container under its end.
- Loosen the bleed screw and push the caliper piston in.

CAUTION:

Do not reuse the drained brake fluid.

- Tighten the bleed screw.

Bleed screw:
6 Nm (0.6 m • kg, 4.3 ft • lb)

- Install the brake pads ⑦ and pad pin.

NOTE:

- Install the brake pads with their projections ⓐ into the caliper recesses ⓑ.
- Temporarily tighten the pad pin at this point.

- Install the caliper ⑧ and tighten the pad pin ⑨.

Bolt (caliper):
23 Nm (2.3 m • kg, 17 ft • lb)
Pad pin:
18 Nm (1.8 m • kg, 13 ft • lb)

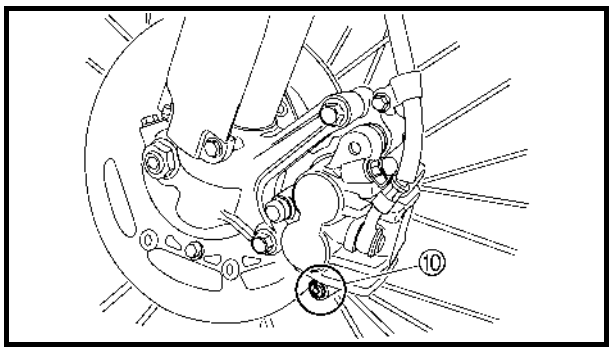

- Install the pad pin plug ⑩.

	Pad pin plug: **3 Nm (0.3 m • kg, 2.2 ft • lb)**

3. Inspect:
   - Brake fluid level
     Refer to “BRAKE FLUID LEVEL INSPECTION” section.
4. Check:
   - Brake lever operation
     A softy or spongy feeling → Bleed brake system.
     Refer to “BRAKE SYSTEM AIR BLEEDING” section.

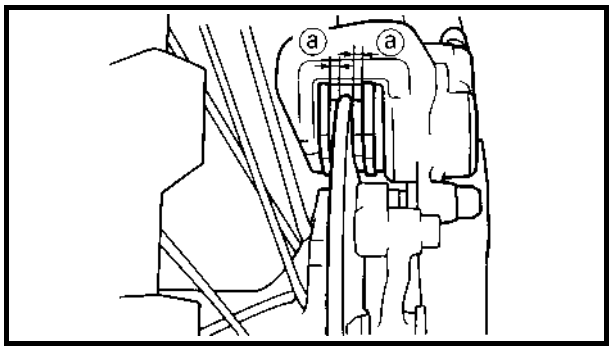

EC366060

REAR BRAKE PAD INSPECTION AND REPLACEMENT

1. Inspect:
   - Brake pad thickness ⓐ
     Out of specification → Replace as a set.

Brake pad thickness ⓐ:	
Standard	**<Limit>**
6.4 mm (0.25 in)	**1.0 mm (0.04 in)**

2. Replace:
   - Brake pad

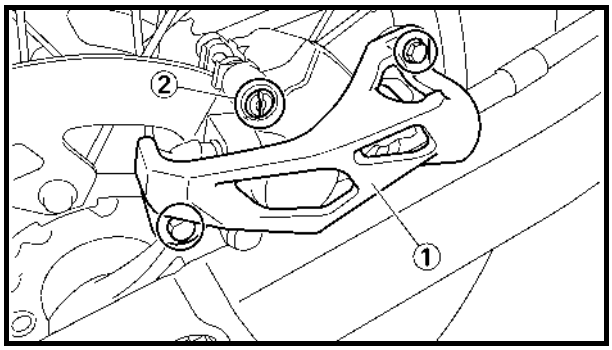

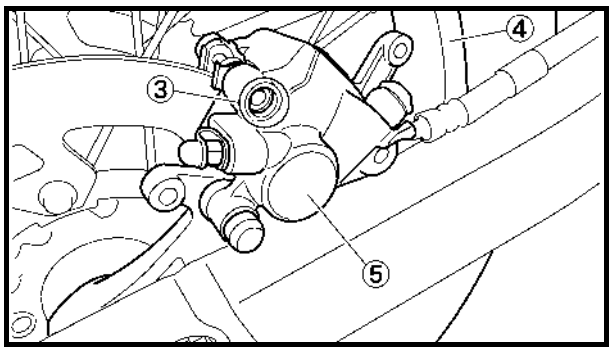

Brake pad replacement steps:
- Remove the protector ① and pad pin plug ②.
- Loosen the pad pin ③.
- Remove the rear wheel ④ and caliper ⑤.
  Refer to “FRONT WHEEL AND REAR WHEEL” section in the CHAPTER 5.

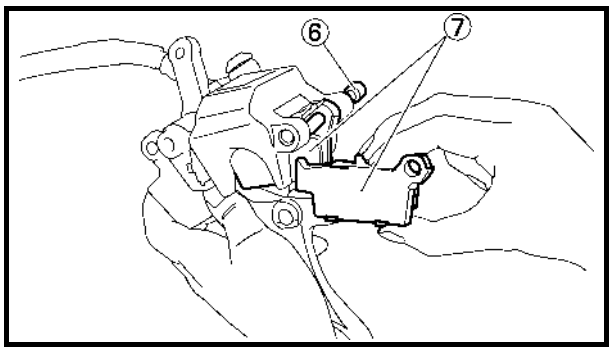

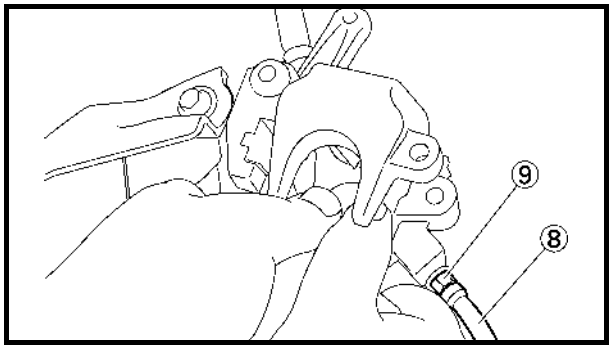

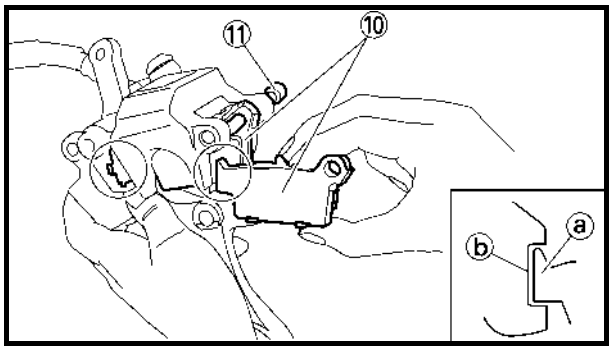

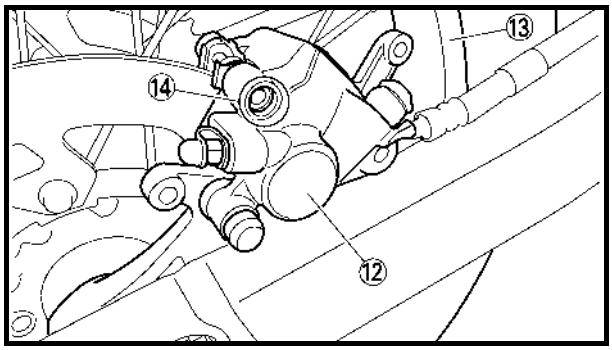

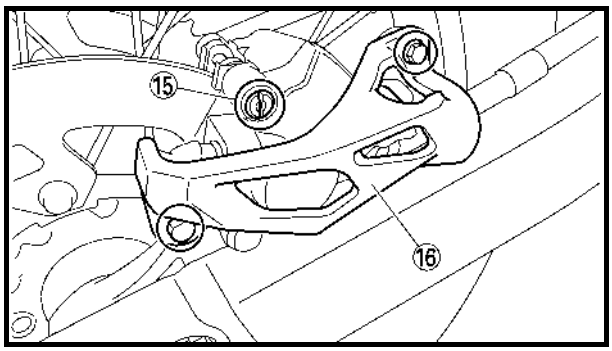

- Remove the pad pin ⑥ and brake pads ⑦.
- Connect the transparent hose ⑧ to the bleed screw ⑨ and place the suitable container under its end.
- Loosen the bleed screw and push the caliper piston in.

CAUTION:

Do not reuse the drained brake fluid.

- Tighten the bleed screw.

Bleed screw:
6 Nm (0.6 m • kg, 4.3 ft • lb)

- Install the brake pad ⑩ and pad pin ⑪.

NOTE:
- Install the brake pads with their projections ⓐ into the caliper recesses ⓑ.
- Temporarily tighten the pad pin at this point.

- Install the caliper ⑫ and rear wheel ⑬. Refer to "FRONT WHEEL AND REAR WHEEL" section in the CHAPTER 5.
- Tighten the pad pin ⑭.

Pad pin:
18 Nm (1.8 m • kg, 13 ft • lb)

- Install the pad pin plug ⑮ and protector ⑯.

Pad pin plug:
3 Nm (0.3 m • kg, 2.2 ft • lb)
Bolt (protector):
7 Nm (0.7 m • kg, 5.1 ft • lb)

3. Inspect:
   - Brake fluid level
     Refer to “BRAKE FLUID LEVEL INSPECTION” section.
4. Check:
   - Brake pedal operation
     A softy or spongy feeling → Bleed brake system.
     Refer to “BRAKE SYSTEM AIR BLEEDING” section.

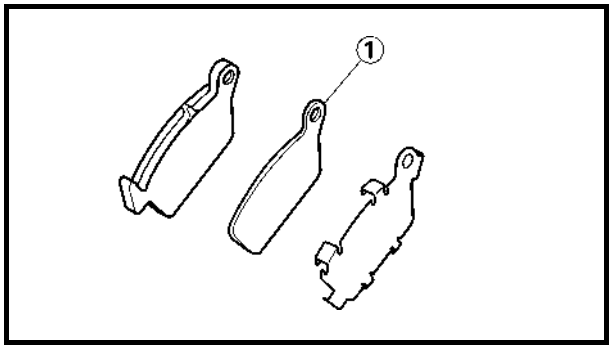

EC36b000

REAR BRAKE PAD INSULATOR INSPECTION

1. Remove:
   - Brake pad
     Refer to “REAR BRAKE PAD INSPECTION AND REPLACEMENT” section.
2. Inspect:
   - Rear brake pad insulator ①
     Damage → Replace.

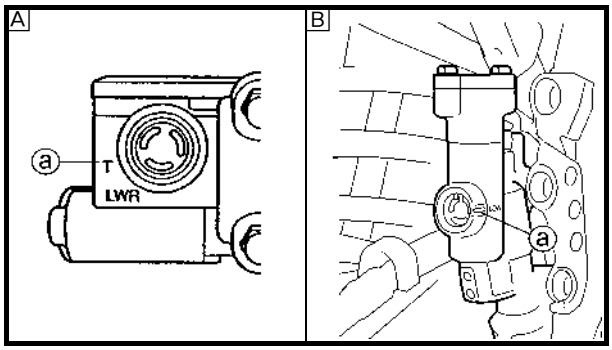

EC367001

BRAKE FLUID LEVEL INSPECTION

1. Place the master cylinder so that its top is in a horizontal position.
2. Inspect:
   - Brake fluid level
     Fluid at lower level → Fill up.

ⓐ Lower level
A Front
B Rear

Recommended brake fluid:
DOT #4

WARNING

- **Use only designated quality brake fluid to avoid poor brake performance.**
- **Refill with same type and brand of brake fluid; mixing fluids could result in poor brake performance.**
- **Be sure that water or other contaminants do not enter master cylinder when refilling.**
- **Clean up spilled fluid immediately to avoid erosion of painted surfaces or plastic parts.**

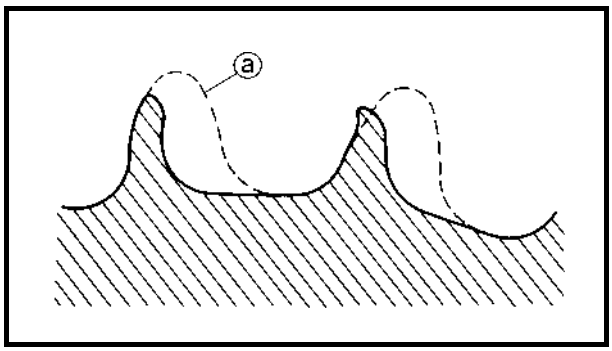

EC368000
SPROCKETS INSPECTION

1. Inspect:
   - Sprocket teeth ⓐ
     Excessive wear → Replace.

NOTE:
Replace the drive, driven sprockets and drive chain as a set.

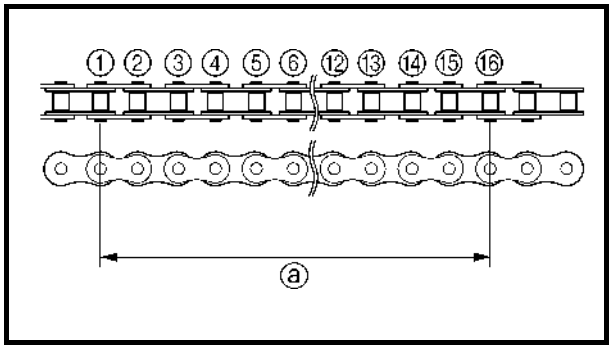

DRIVE CHAIN INSPECTION

1. Measure:
   - Drive chain length (15 links) ⓐ
     Out of specification → Replace.

Drive chain length (15 links):
<Limit>: 242.9 mm (9.563 in)

NOTE:
- While measuring the drive chain length, push down on the drive chain to increase its tension.
- Measure the length between drive chain roller ① and ⑯ as shown.
- Perform this measurement at two or three different places.

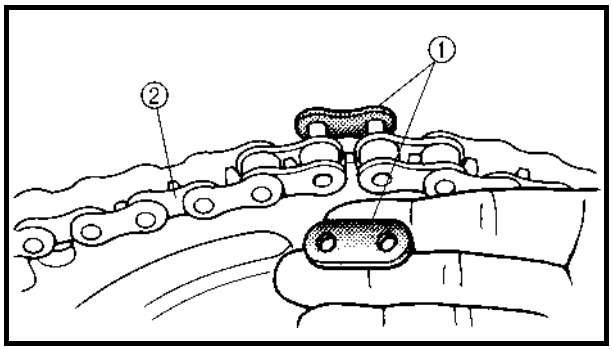

2. Remove:
   - Master link clip
   - Joint ①
   - Drive chain ②

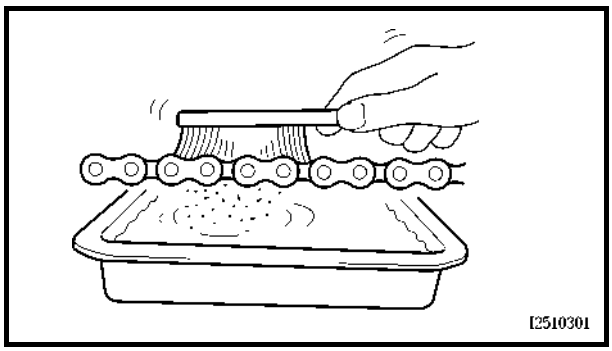

3. Clean:
   - Drive chain
     Place it in kerosene, and brush off as much dirt as possible. Then remove the chain from the kerosene and dry the chain.

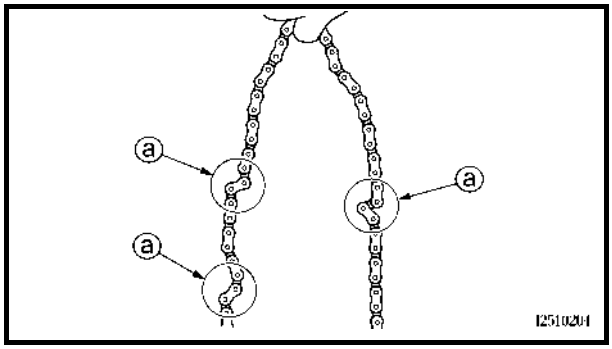

4. Check:
   - Drive chain stiffness ⓐ
     Clean and oil the chain and hold as illustrated.
     Stiff → Replace drive chain.

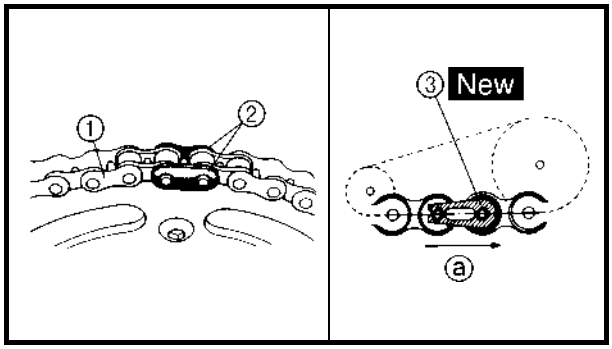

5. Install:
   - Drive chain ①
   - Joint ②
   - Master link clip ③ New

CAUTION:

Be sure to install the master link clip to the direction as shown.

ⓐ Turning direction

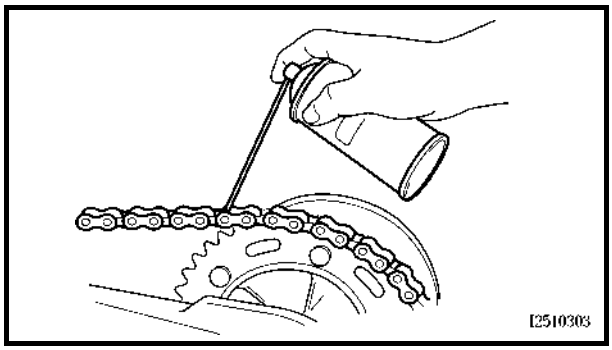

6. Lubricate:
   - Drive chain

Drive chain lubricant:
SAE 10W-30 motor oil or suitable chain lubricants

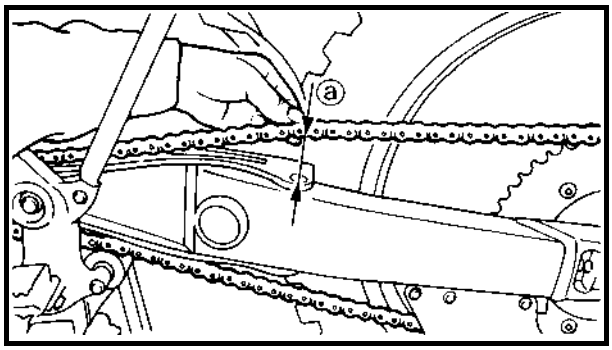

DRIVE CHAIN SLACK ADJUSTMENT

1. Elevate the rear wheel by placing the suitable stand under the engine.
2. Check:
   - Drive chain slack ⓐ
     Above the seal guard installation bolt.
     Out of specification → Adjust.

Drive chain slack:
48 ~ 58 mm (1.9 ~ 2.3 in)

NOTE:

Before checking and/or adjusting, rotate the rear wheel through several revolutions and check the slack several times to find the tightest point. Check and/or adjust chain slack with rear wheel in this “tight chain” position.

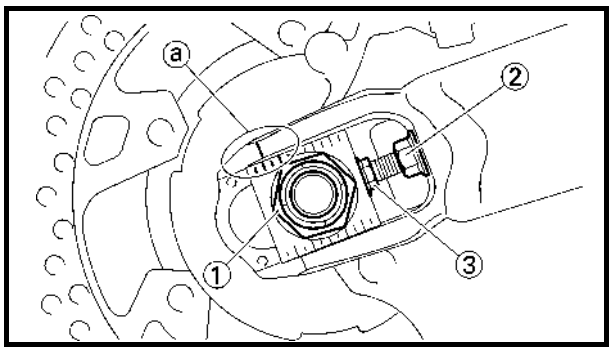

3. Adjust:
   - Drive chain slack

Drive chain slack adjustment steps:
- Loosen the axle nut ① and locknuts ②.
- Adjust chain slack by turning the adjusters ③.

To tighten → Turn adjuster ③ counter-clockwise.
To loosen → Turn adjuster ③ clockwise and push wheel forward.

- Turn each adjuster exactly the same amount to maintain correct axle alignment. (There are marks ⓐ on each side of chain puller alignment.)

NOTE:
Turn the adjuster so that the chain is in line with the sprocket, as viewed from the rear.

CAUTION:
Too small chain slack will overload the engine and other vital parts; keep the slack within the specified limits.

- Tighten the axle nut while pushing down the drive chain.

	Axle nut: **125 Nm (12.5 m • kg, 90 ft • lb)**

- Tighten the locknuts.

	Locknut: **16 Nm (1.6 m • kg, 11 ft • lb)**

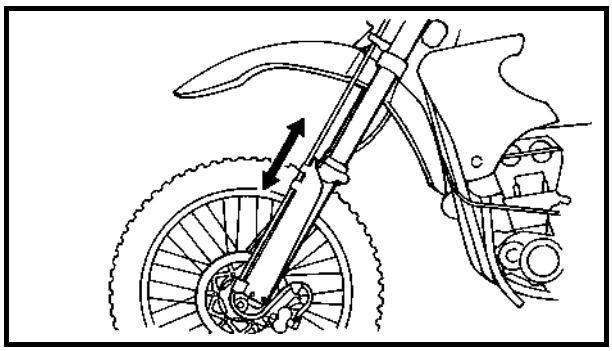

EC36C000
FRONT FORK INSPECTION

1. Inspect:
   - Front fork smooth action
     Operate the front brake and stroke the front fork.
     Unsmooth action/oil leakage → Repair or replace.

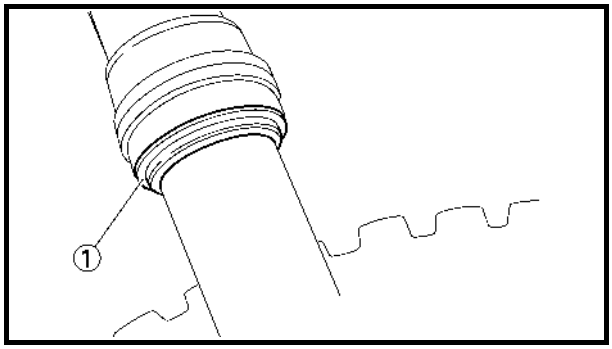

EC36D001

FRONT FORK OIL SEAL AND DUST SEAL CLEANING

1. Remove:
   - Protector
   - Dust seal ①

NOTE:
Use a thin screw driver, and be careful not to damage the inner fork tube and dust seal.

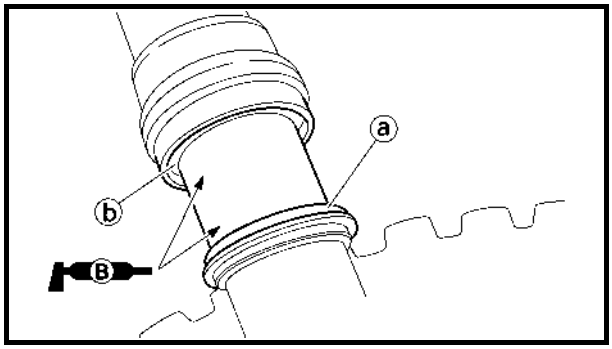

2. Clean:
   - Dust seal ⓐ
   - Oil seal ⓑ

NOTE:
- Clean the dust seal and oil seal after every run.
- Apply the lithium soap base grease on the inner tube.

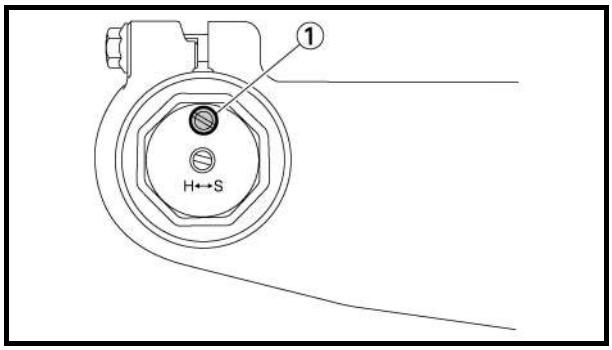

FRONT FORK INTERNAL PRESSURE RELIEVING

NOTE:
If the front fork initial movement feels stiff during a run, relieve the front fork internal pressure.

1. Elevate the front wheel by placing a suitable stand under the engine.
2. Remove the air bleed screw ① and release the internal pressure from the front fork.
3. Install:
   - Air bleed screw

	1 Nm (0.1 m · kg, 0.7 ft · lb)

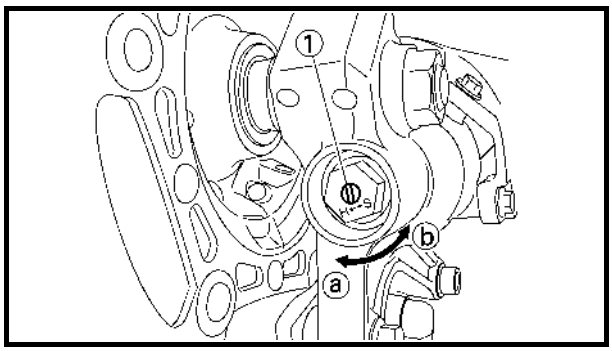

EC36H002

FRONT FORK REBOUND DAMPING FORCE ADJUSTMENT

1. Adjust:
   - Rebound damping force
     By turning the adjuster ①.

Stiffer ⓐ →	**Increase the rebound damping force. (Turn the adjuster ① in.)**
Softer ⓑ →	**Decrease the rebound damping force. (Turn the adjuster ① out.)**

Extent of adjustment:	
Maximum	**Minimum**
Fully turned in position	**20 clicks out (from maximum position)**

- STANDARD POSITION:
  This is the position which is back by the specific number of clicks from the fully turned-in position.

Standard position:
7 clicks out
***8 clicks out**

* For EUROPE

CAUTION:

Do not force the adjuster past the minimum or maximum extent of adjustment. The adjuster may be damaged.

WARNING

Always adjust each front fork to the same setting. Uneven adjustment can cause poor handling and loss of stability.

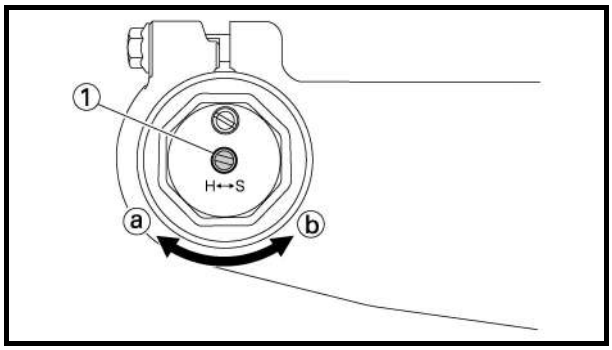

EC36J001

FRONT FORK COMPRESSION DAMPING FORCE ADJUSTMENT

1. Adjust:
   - Compression damping force
     By turning the adjuster ①.

Stiffer ⓐ →	**Increase the compression damping force. (Turn the adjuster ① in.)**
Softer ⓑ →	**Decrease the compression damping force. (Turn the adjuster ① out.)**

Extent of adjustment:	
Maximum	**Minimum**
Fully turned in position	**20 clicks out (from maximum position)**

- STANDARD POSITION:
  This is the position which is back by the specific number of clicks from the fully turned-in position.

Standard position:
11 clicks out
***6 clicks out**

* For EUROPE

CAUTION:

Do not force the adjuster past the minimum or maximum extent of adjustment. The adjuster may be damaged.

WARNING

Always adjust each front fork to the same setting. Uneven adjustment can cause poor handling and loss of stability.

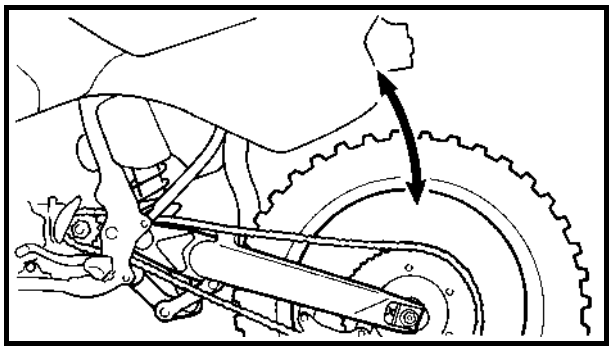

EC36K000

REAR SHOCK ABSORBER INSPECTION

1. Inspect:
   - Swingarm smooth action
     Abnormal noise/unsmooth action → Grease the pivoting points or repair the pivoting points.
     Damage/oil leakage → Replace.

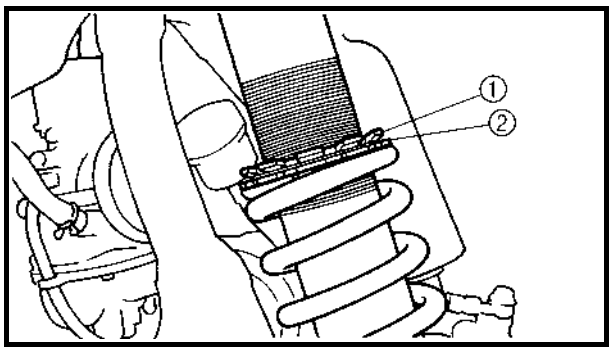

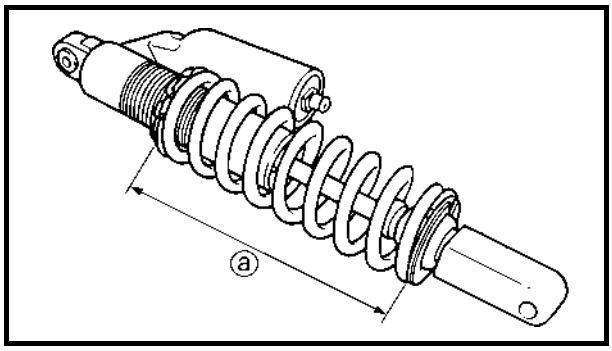

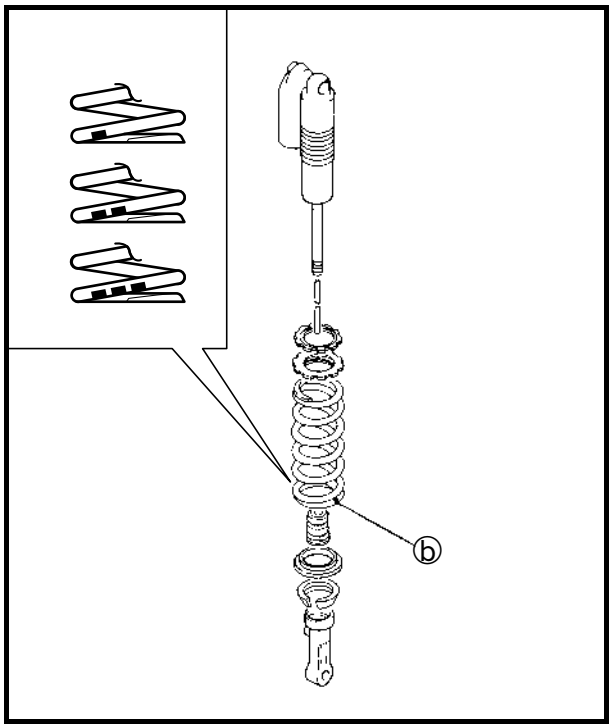

REAR SHOCK ABSORBER SPRING PRELOAD ADJUSTMENT

1. Elevate the rear wheel by placing the suitable stand under the engine.
2. Remove:
   - Rear frame
3. Loosen:
   - Locknut ①
4. Adjust:
   - Spring preload
     By turning the adjuster ②.

Stiffer →	**Increase the spring preload. (Turn the adjuster ② in.)**
Softer →	**Decrease the spring preload. (Turn the adjuster ② out.)**

Spring length (installed) ⓐ:

Standard length	Extent of adjustment
One I.D. mark	
264 mm (10.39 in)	**255.5 ~ 273.5 mm**
***262 mm (10.31 in)**	**(10.06 ~ 10.77 in)**
Two I.D. marks	
270 mm (10.63 in)	**261.5 ~ 279.5 mm**
***268 mm (10.55 in)**	**(10.30 ~ 11.00 in)**
Three I.D. marks	
261.5 mm (10.30 in)	**253.0 ~ 271.0 mm**
***259.5 mm (10.22 in)**	**(9.96 ~ 10.67 in)**

* For EUROPE

NOTE:

- Be sure to remove all dirt and mud from around the locknut and adjuster before adjustment.
- The length of the spring (installed) changes 1.5 mm (0.06 in) per turn of the adjuster.
- The I.D. mark ⓑ is marked at the end of the spring.
- The standard length and extent of adjustment vary according to the quantity of I.D. marks.

CAUTION:

Never attempt to turn the adjuster beyond the maximum or minimum setting.

5. Tighten:
   - Locknut
6. Install:
   - Rear frame

	32 Nm (3.2 m · kg, 23 ft · lb)

EC36N014

REAR SHOCK ABSORBER REBOUND DAMPING FORCE ADJUSTMENT

1. Adjust:
   - Rebound damping force
     By turning the adjuster ①.

Stiffer ⓐ →	**Increase the rebound damping force. (Turn the adjuster ① in.)**
Softer ⓑ →	**Decrease the rebound damping force. (Turn the adjuster ① out.)**

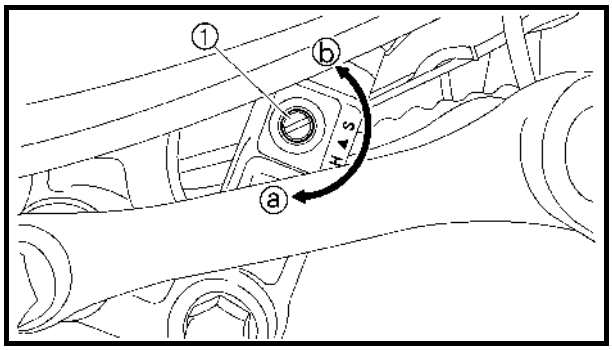

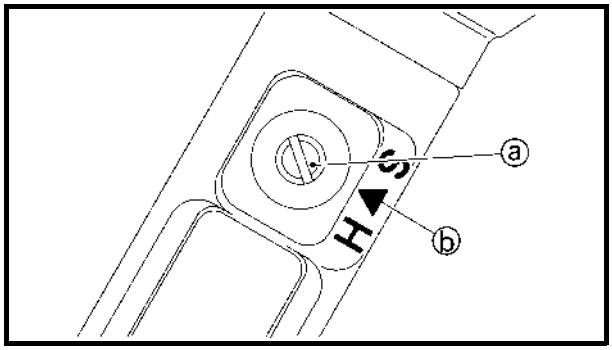

Extent of adjustment:

Maximum	Minimum
Fully turned in position	**20 clicks out (from maximum position)**

- STANDARD POSITION:
  This is the position which is back by the specific number of clicks from the fully turned-in position. (Which align the punch mark ⓐ on the adjuster with the punch mark ⓑ on the bracket.)

Standard position:
About 8 clicks out
***About 12 clicks out**

* For EUROPE

CAUTION:

Do not force the adjuster past the minimum or maximum extent of adjustment. The adjuster may be damaged.

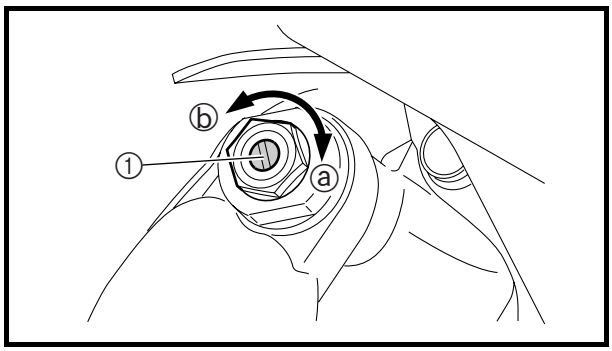

EC36c000

REAR SHOCK ABSORBER LOW COMPRESSION DAMPING FORCE ADJUSTMENT

1. Adjust:
   - Low compression damping force
     By turning the adjuster ①.

Stiffer ⓐ →	**Increase the low compression damping force. (Turn the adjuster ① in.)**
Softer ⓑ →	**Decrease the low compression damping force. (Turn the adjuster ① out.)**

Extent of adjustment:

Maximum	Minimum
Fully turned in position	**20 clicks out (from maximum position)**

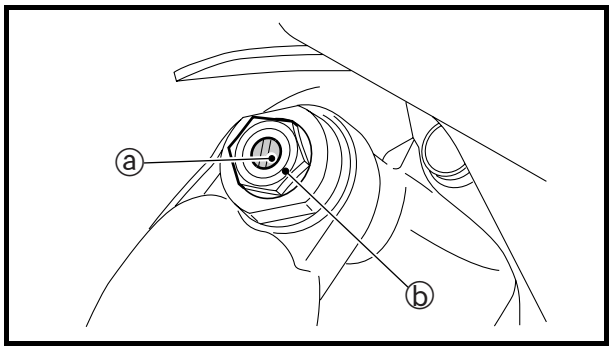

- STANDARD POSITION:
  This is the position which is back by the specific number of clicks from the fully turned-in position. (Which align the punch mark ⓐ on the adjuster with the punch mark ⓑ on the high compression damping adjuster.)

Standard position:
About 8 clicks out

CAUTION:

Do not force the adjuster past the minimum or maximum extent of adjustment. The adjuster may be damaged.

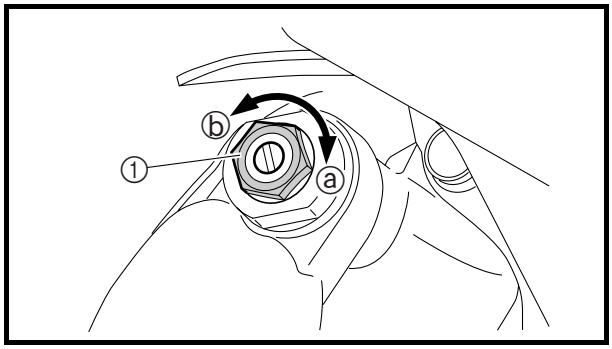

EC36d000

REAR SHOCK ABSORBER HIGH COMPRESSION DAMPING FORCE ADJUSTMENT

1. Adjust:
   - High compression damping force
     By turning the adjuster ①.

Stiffer ⓐ →	**Increase the high compression damping force. (Turn the adjuster ① in.)**
Softer ⓑ →	**Decrease the high compression damping force. (Turn the adjuster ① out.)**

Extent of adjustment:

Maximum	Minimum
Fully turned in position	**2 turns out (from maximum position)**

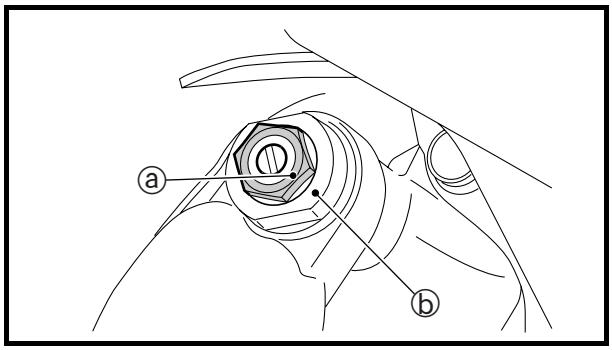

- STANDARD POSITION:
  This is the position which is back by the specific number of turns from the fully turned-in position. (Which align the punch mark ⓐ on the adjuster with the punch mark ⓑ on the adjuster body.)

Standard position:
About 1-1/2 turns out
***About 1-1/4 turns out**

* For EUROPE

CAUTION:

Do not force the adjuster past the minimum or maximum extent of adjustment. The adjuster may be damaged.

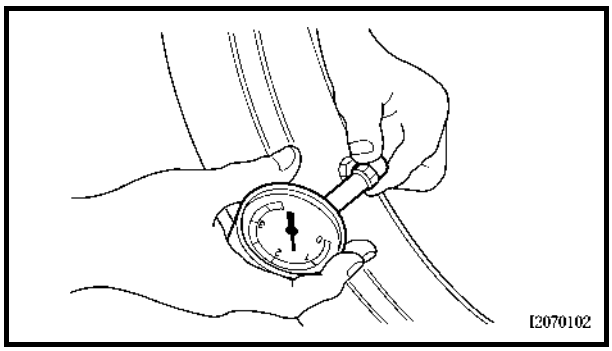

EC36Q000
TIRE PRESSURE CHECK

1. Measure:
   - Tire pressure
     Out of specification → Adjust.

	Standard tire pressure: 100 kPa (1.0 kgf/cm², 15 psi)

NOTE:
- Check the tire while it is cold.
- Loose bead stoppers allow the tire to slip off its position on the rim when the tire pressure is low.
- A tilted tire valve stem indicates that the tire slips off its position on the rim.
- If the tire valve stem is found tilted, the tire is considered to be slipping off its position. Correct the tire position.

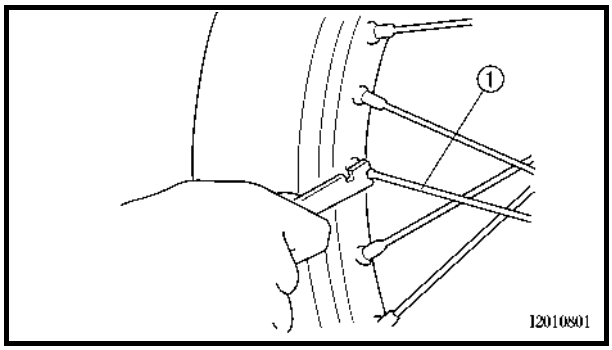

EC36S002
SPOKES INSPECTION AND TIGHTENING

1. Inspect:
   - Spokes ①
     Bend/damage → Replace.
     Loose spoke → Retighten.
2. Tighten:
   - Spokes **3 Nm (0.3 m · kg, 2.2 ft · lb)**

NOTE:
Be sure to retighten these spokes before and after break-in. After a practice or a race check spokes for looseness.

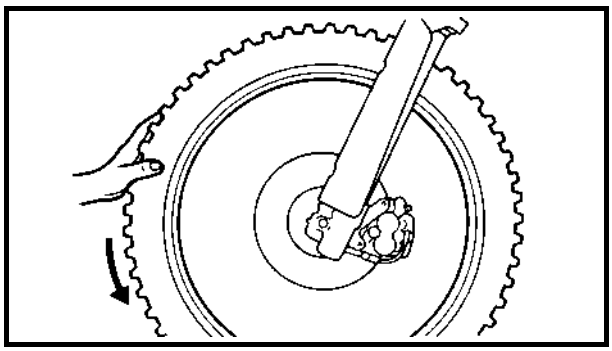

EC36T000
WHEEL INSPECTION

1. Inspect:
   - Wheel runout
     Elevate the wheel and turn it.
     Abnormal runout → Replace.

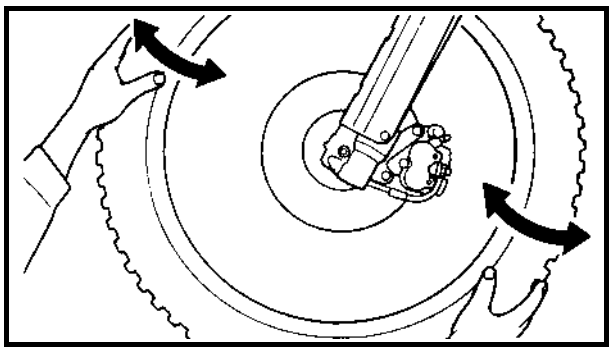

2. Inspect:
   - Bearing free play
     Exist play → Replace.

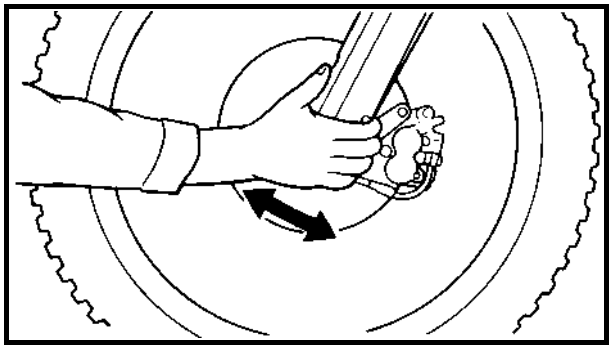

STEERING HEAD INSPECTION AND ADJUSTMENT

1. Elevate the front wheel by placing a suitable stand under the engine.
2. Check:
   - Steering shaft
     Grasp the bottom of the forks and gently rock the fork assembly back and forth.
     Free play → Adjust steering head.
3. Check:
   - Steering smooth action
     Turn the handlebar lock to lock.
     Unsmooth action → Adjust steering ring nut.

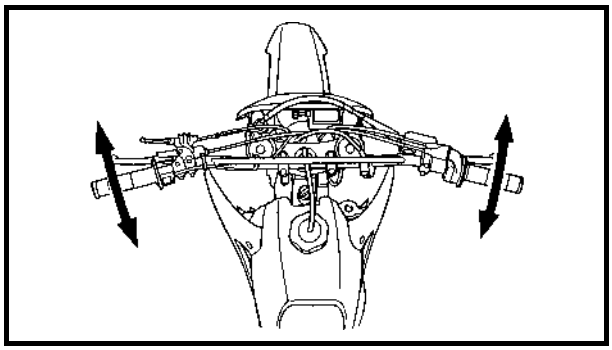

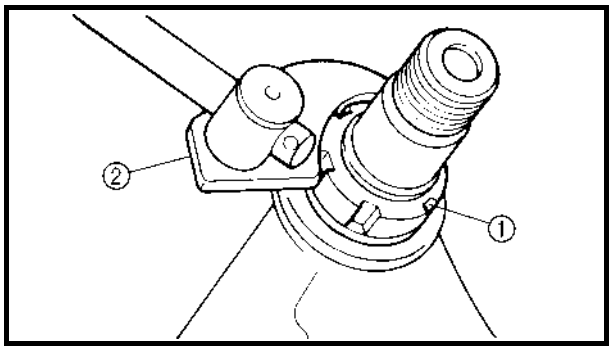

4. Adjust:
   - Steering ring nut

Steering ring nut adjustment steps:
- Remove the number plate.
- Remove the handlebar and handle crown.
- Loosen the ring nut ① using the ring nut wrench ②.

Ring nut wrench:
YU-33975/90890-01403

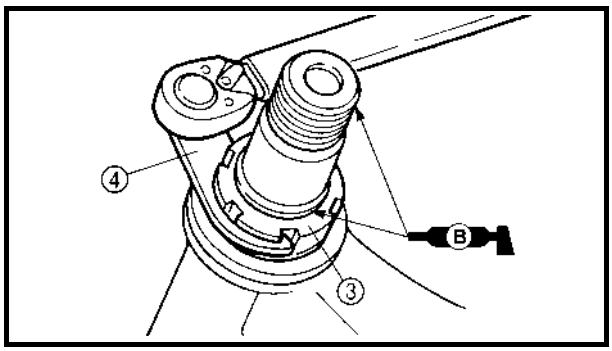

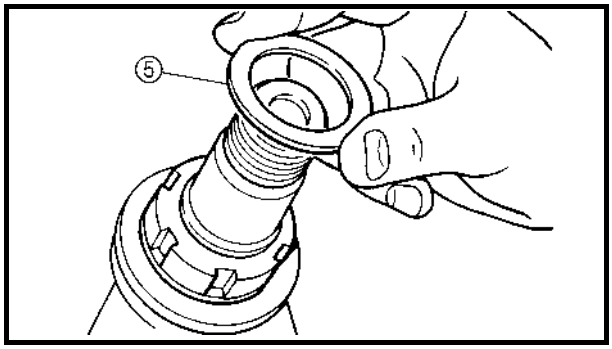

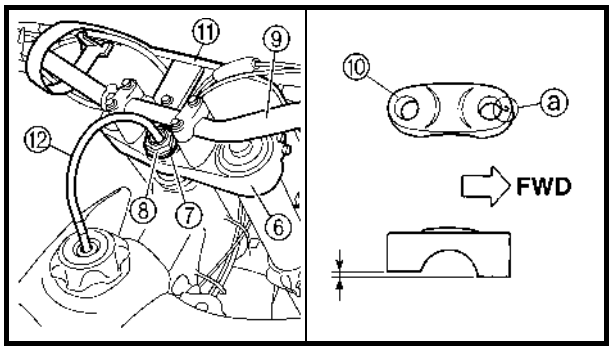

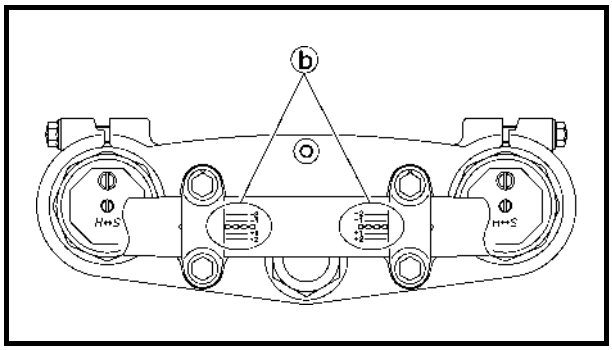

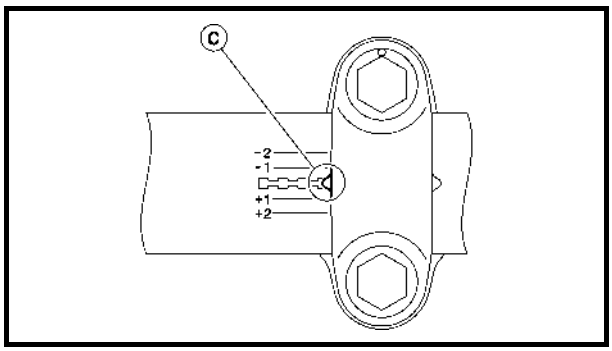

- Tighten the ring nut ③ using ring nut wrench ④.

NOTE:
- Apply the lithium soap base grease on the thread of the steering shaft.
- Set the torque wrench to the ring nut wrench so that they form a right angle.

Ring nut wrench:
YU-33975/90890-01403

Ring nut (initial tightening):
38 Nm (3.8 m • kg, 27 ft • lb)

- Loosen the ring nut one turn.
- Retighten the ring nut using the ring nut wrench.

⚠ WARNING

Avoid over-tightening.

Ring nut (final tightening):
7 Nm (0.7 m • kg, 5.1 ft • lb)

- Check the steering shaft by turning it lock to lock. If there is any binding, remove the steering shaft assembly and inspect the steering bearings.
- Install the plain washer ⑤, handle crown ⑥, plain washer ⑦, steering shaft nut ⑧, handlebar ⑨, handlebar holder (upper) ⑩ and number plate ⑪.

NOTE:
- The handlebar holder (upper) should be installed with the punched mark ⓐ forward.
- Install the handlebar so that the marks ⓑ are in place on both sides.
- Install the handlebar so that the projection ⓒ of the handlebar holder (upper) is positioned at the mark on the handlebar as shown.
- Insert the end of fuel breather hose ⑫ into the hole in the steering shaft.

CAUTION:

First tighten the bolts on the front side of the handlebar holder (upper), and then tighten the bolts on the rear side.

Steering shaft nut:
145 Nm (14.5 m • kg, 105 ft • lb)
Handlebar holder (upper):
28 Nm (2.8 m • kg, 20 ft • lb)
Pinch bolt (handle crown):
23 Nm (2.3 m • kg, 17 ft • lb)
Number plate:
7 Nm (0.7 m • kg, 5.1 ft • lb)

LUBRICATION

To ensure smooth operation of all components, lubricate your machine during setup, after break-in, and after every race.

① All control cable
② Clutch lever pivot
③ Shift pedal pivot
④ Footrest pivot
⑤ Throttle-to-handlebar contact
⑥ Drive chain
⑦ Tube guide cable winding portion
⑧ Throttle cable end
⑨ Clutch cable end
⑩ Hot starter cable end

A Use Yamaha cable lube or equivalent on these areas.
B Use SAE 10W-30 motor oil or suitable chain lubricants.
C Lubricate the following areas with high quality, lightweight lithium-soap base grease.

CAUTION:

Wipe off any excess grease, and avoid getting grease on the brake discs.

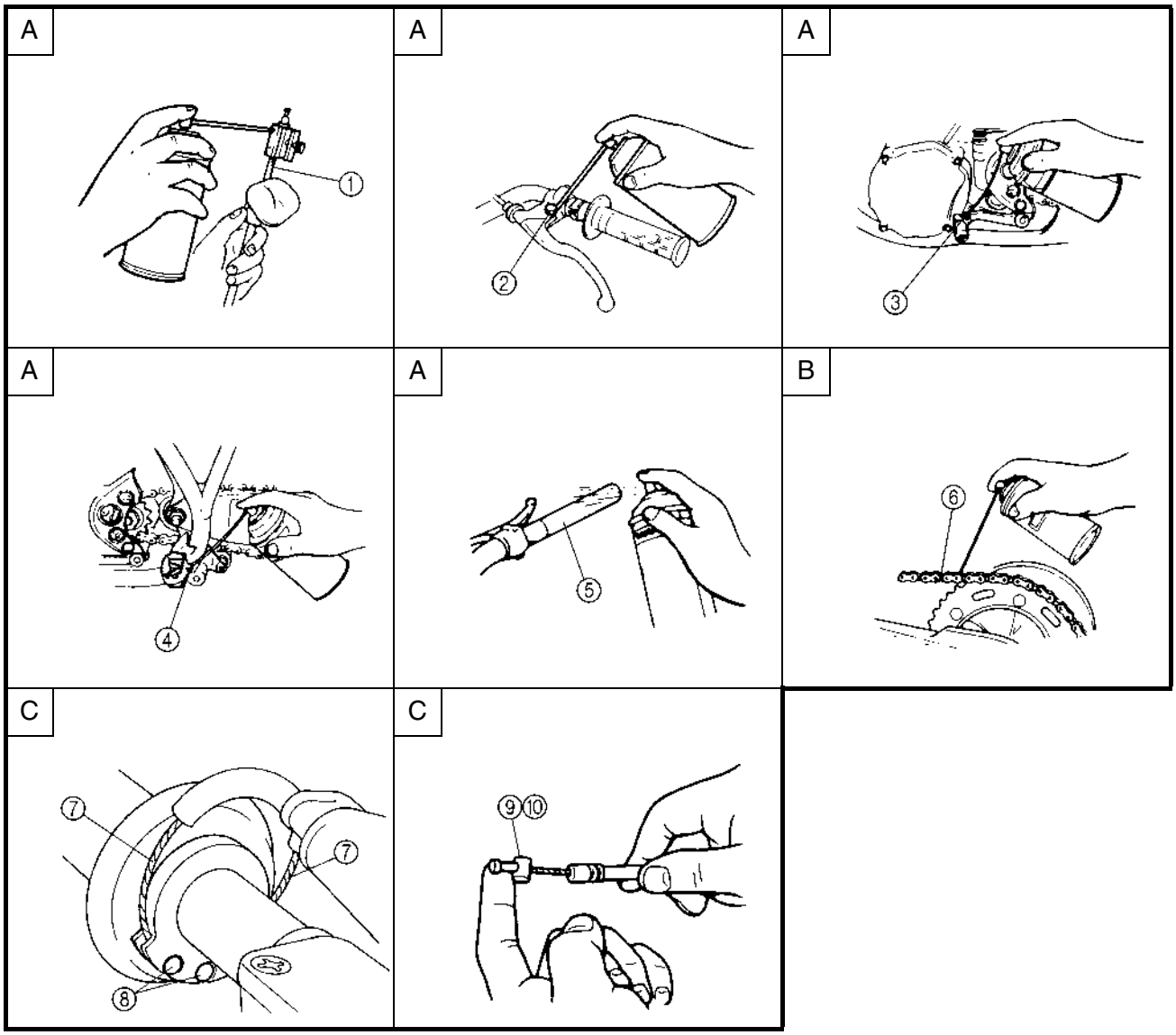

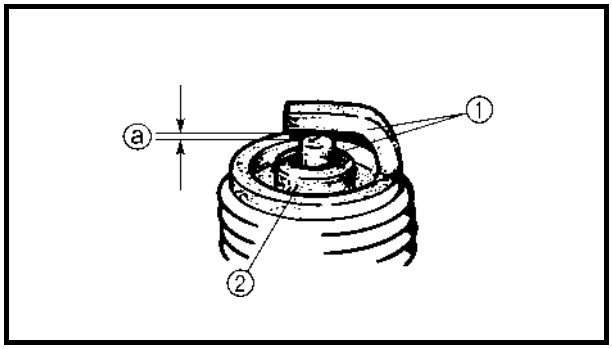

EC370000
ELECTRICAL

EC371001
SPARK PLUG INSPECTION

1. Remove:
   - Spark plug
2. Inspect:
   - Electrode ①
     Wear/damage → Replace.
   - Insulator color ②
     Normal condition is a medium to light tan color.
     Distinctly different color → Check the engine condition.

NOTE:
When the engine runs for many hours at low speeds, the spark plug insulator will become sooty, even if the engine and carburetor are in good operating condition.

3. Measure:
   - Plug gap ⓐ
     Use a wire gauge or thickness gauge.
     Out of specification → Regap.

Spark plug gap:
0.7 ~ 0.8 mm (0.028 ~ 0.031 in)

4. Clean the plug with a spark plug cleaner if necessary.

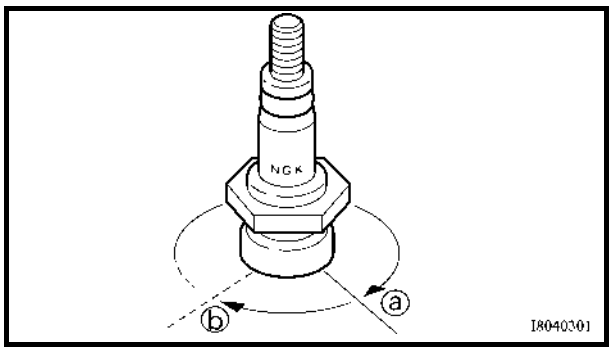

5. Tighten:
   - Spark plug

13 Nm (1.3 m · kg, 9.4 ft · lb)

NOTE:
- Before installing a spark plug, clean the gasket surface and plug surface.
- Finger-tighten ⓐ the spark plug before torquing to specification ⓑ.

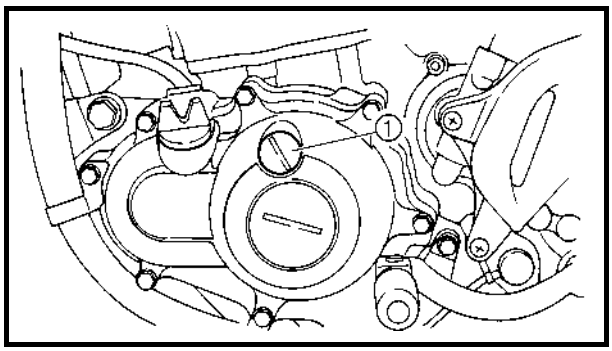

IGNITION TIMING CHECK

1. Remove:
   - Timing plug ①

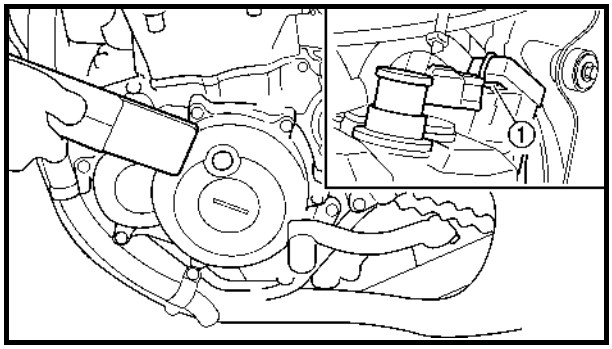

2. Attach:
   - Timing light
   - Inductive tachometer
     To the ignition coil lead
     (orange lead ①).

	Timing light: **YM-33277-A/90890-03141**

3. Adjust:
   - Engine idling speed
     Refer to “IDLE SPEED ADJUSTMENT”.

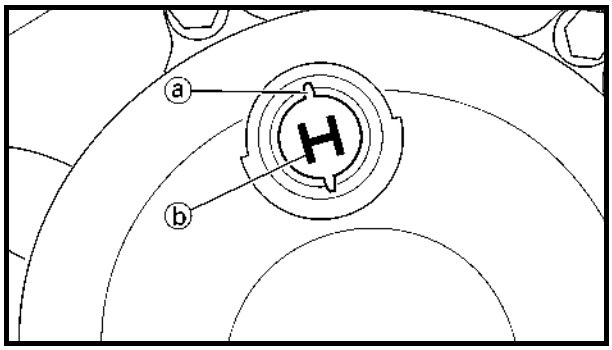

4. Check:
   - Ignition timing
     Visually check the stationary pointer ⓐ is within the firing range ⓑ on the rotor.
     Incorrect firing range → Check rotor and pickup assembly.

5. Install:
   - Timing plug

EC400000
ENGINE

EC4R0000
SEAT, FUEL TANK AND SIDE COVERS

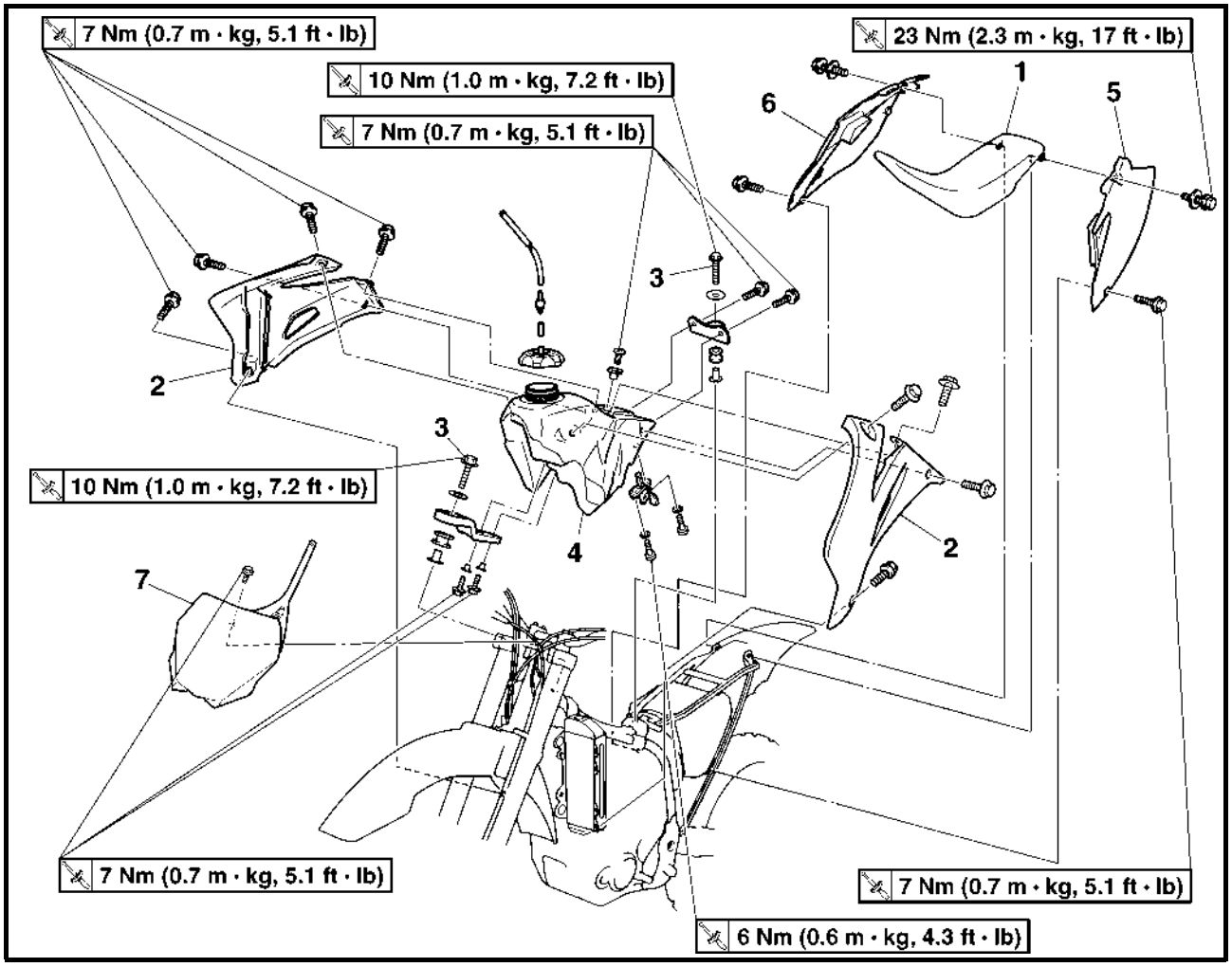

Extent of removal:
① Seat removal
② Fuel tank removal
③ Side covers removal
④ Number plate removal

Extent of removal	Order	Part name	Q'ty	Remarks
Preparation for removal		**SEAT, FUEL TANK AND SIDE COVERS REMOVAL** Turn the fuel cock to "OFF". Disconnect the fuel hose.		
①↕ ③↕ ②↕ ③↕ ④↕	1	Seat	1	
	2	Air scoop (left and right)	2	
	3	Bolt (fuel tank)	2	
	4	Fuel tank	1	
	5	Side cover (left)	1	Refer to "REMOVAL POINTS".
	6	Side cover (right)	1	
	7	Number plate	1	

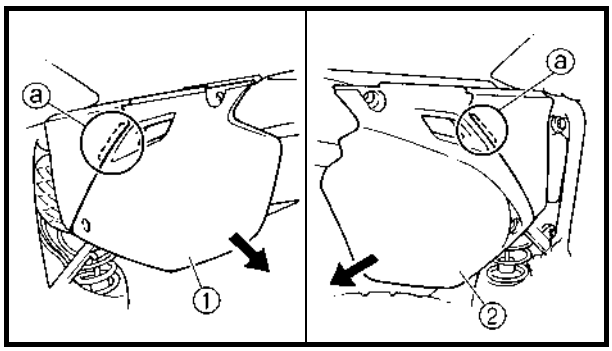

REMOVAL POINTS

Side cover

1. Remove:
   - Bolt (side cover)
   - Side cover (left) ①
   - Side cover (right) ②

NOTE:

Draw the side cover downward to remove it because its claws ⓐ are inserted in the air filter case.

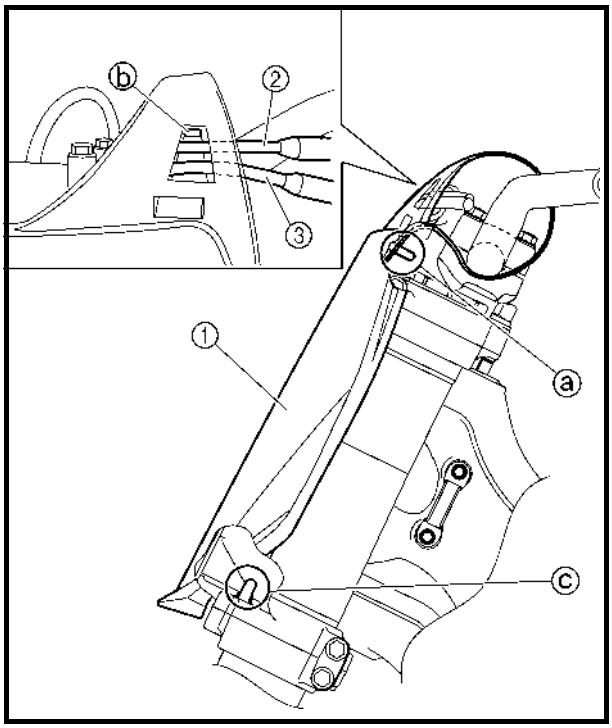

Number plate

1. Remove:
   - Bolt (number plate)
   - Number plate ①

NOTE:

- The projection ⓐ is inserted into the band of the number plate. Pull the band off the projection before removal.
- Remove the hot starter cable ② and clutch cable ③ from the cable guide ⓑ on the number plate.
- The projection ⓒ on the under bracket is inserted into the number plate. Remove the number plate by pulling it off the projection.

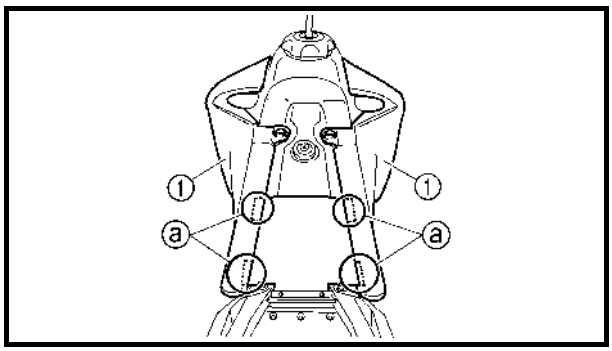

ASSEMBLY AND INSTALLATION

Air scoop

1. Install:
   - Air scoop ①
   - Bolt (air scoop)

	7 Nm (0.7 m · kg, 5.1 ft · lb)

NOTE:

Put the portion ⓐ of the flap of the air filter case on the inside of the air scoop.

EC4S0000

EXHAUST PIPE AND SILENCER

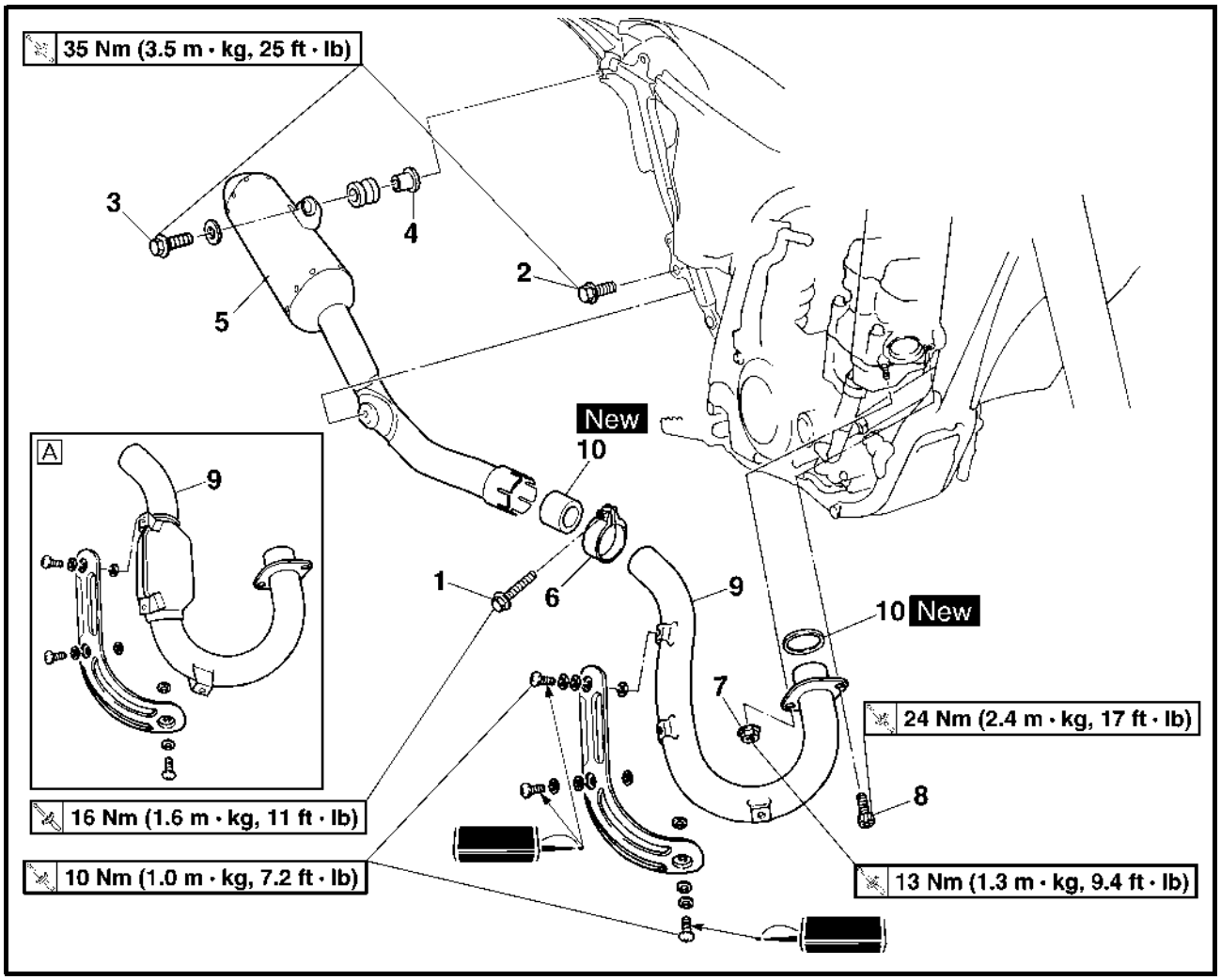

A Except for USA and CDN

Extent of removal: ① Silencer removal ② Exhaust pipe removal

Extent of removal	Order	Part name	Q'ty	Remarks
Preparation for removal		**EXHAUST PIPE AND SILENCER REMOVAL** Side cover (right)		Refer to "SEAT, FUEL TANK AND SIDE COVERS" section.
② ① ②	1	Bolt (clamp)	1	Only loosening.
	2	Bolt [silencer (front)]	1	
	3	Bolt [silencer (rear)]	1	
	4	Collar	1	
	5	Silencer	1	
	6	Clamp	1	
	7	Nut (exhaust pipe)	1	
	8	Bolt (exhaust pipe)	1	
	9	Exhaust pipe	1	
	10	Gasket	2	

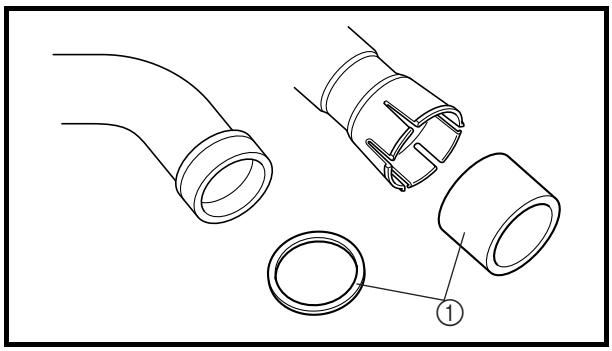

INSPECTION

Exhaust pipe and silencer

1. Inspect:
   - Gasket ①
     Damage → Replace.

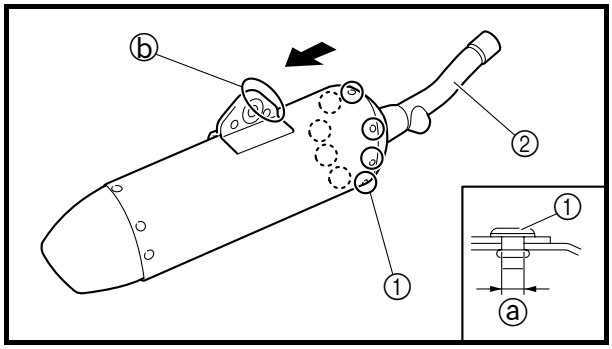

Silencer fiber replacement

1. Remove:
   - Rivet (front) ①
   - Inner pipe ②

CAUTION:

Take care not to damage the rivet fitting holes (ø4.9 mm) ⓐ in removal.

NOTE:

Pull out the inner pipe while lightly tapping the stay ⓑ on the silencer using a soft hammer.

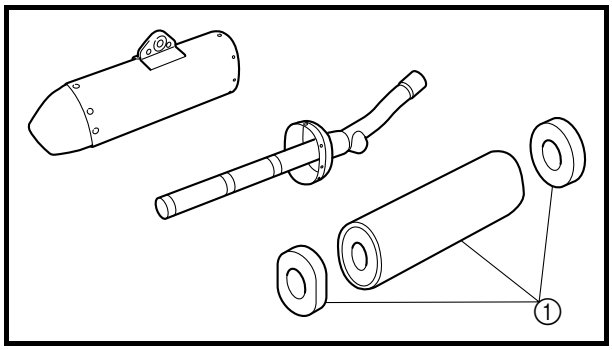

2. Replace:
   - Fiber ①

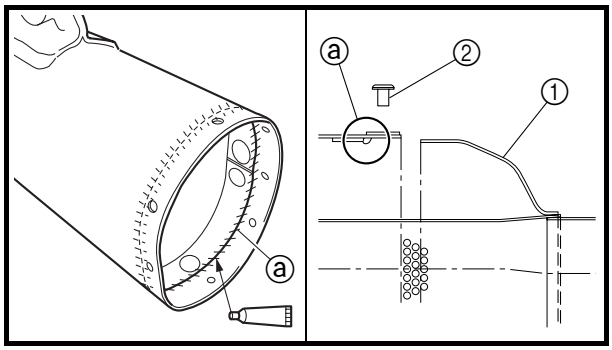

3. Install:
   - Inner pipe ①
   - Rivet (front) ②

NOTE:

- Apply heat resistant sealant along the plate edge ⓐ on the inside of the silencer and also along the silencer edge ⓑ as shown.
- Take care not to allow the fiber out of place when installing the inner pipe.

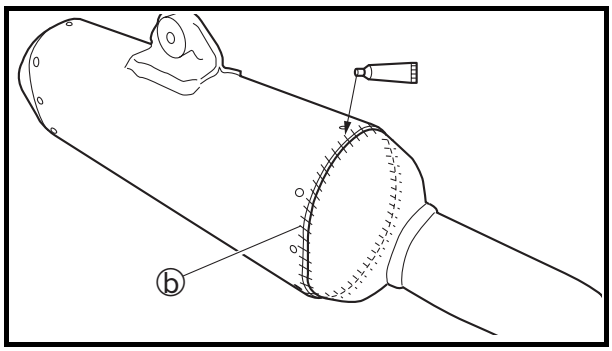

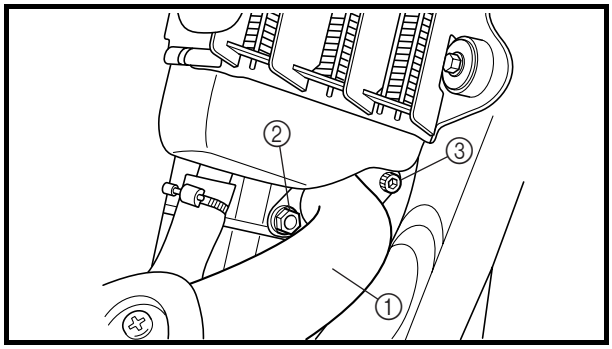

ASSEMBLY AND INSTALLATION

Exhaust pipe and silencer

1. Install:
   - Gasket New
   - Exhaust pipe ①
   - Nut (exhaust pipe) ②

     13 Nm (1.3 m · kg, 9.4 ft · lb)
   - Bolt (exhaust pipe) ③

     24 Nm (2.4 m · kg, 17 ft · lb)

NOTE:

First, temporarily tighten the nut (exhaust pipe), then tighten the bolt (exhaust pipe) 20 Nm (2.0 m • kg, 14 ft • lb). After that, retighten the nut (exhaust pipe) 13 Nm (1.3 m • kg, 9.4 ft • lb) and then the bolt (exhaust pipe) 24 Nm (2.4 m • kg, 17 ft • lb).

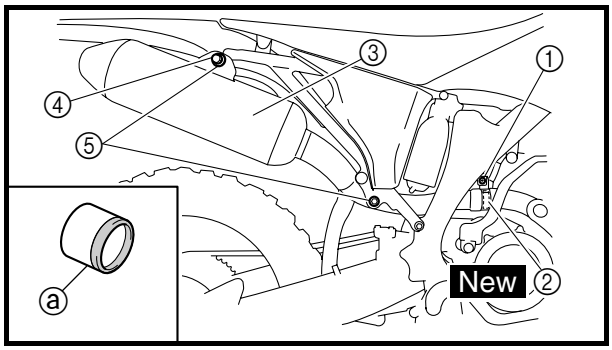

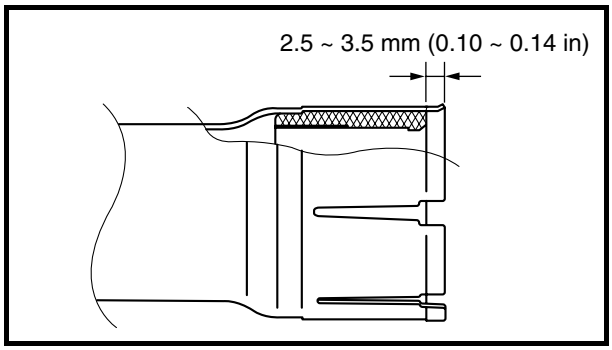

2. Install:
   - Clamp ① **16 Nm (1.6 m · kg, 11 ft · lb)**
   - Gasket ② New
   - Silencer ③
   - Plain washer ④
   - Bolt (silencer) ⑤

     35 Nm (3.5 m · kg, 25 ft · lb)

NOTE:

- Install the gasket with its meshed area ⓐ toward the exhaust pipe side.
- The gasket should be installed according to the dimension shown.

EC450001
RADIATOR

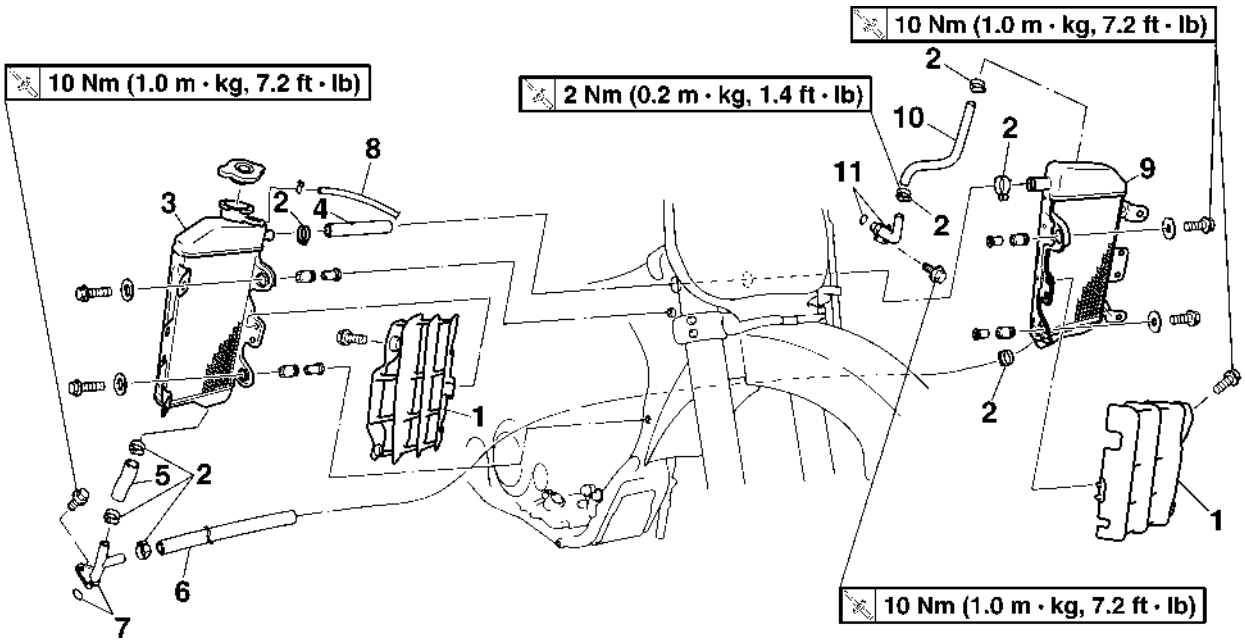

Extent of removal: ① Radiator removal

Extent of removal	Order	Part name	Q'ty	Remarks
Preparation for removal		**RADIATOR REMOVAL** Drain the coolant. Seat and fuel tank Exhaust pipe		 Refer to "COOLANT REPLACEMENT" section in the CHAPTER 3. Refer to "SEAT, FUEL TANK AND SIDE COVERS" section. Refer to "EXHAUST PIPE AND SILENCER" section.
①	1 2 3 4 5 6 7 8 9 10 11	Panel Clamp Radiator (right) Hose 2 Hose 3 Hose 4 Pipe 2/O-ring Radiator breather hose Radiator (left) Hose 1 Pipe 1/O-ring	2 8 1 1 1 1 1/1 1 1 1 1/1	

EC456000
HANDLING NOTE

WARNING

Do not remove the radiator cap when the engine and radiator are hot. Scalding hot fluid and steam may be blown out under pressure, which could cause serious injury.
When the engine has cooled, open the radiator cap by the following procedure:
Place a thick rag, like a towel, over the radiator cap, slowly rotate the cap counterclockwise to the detent. This procedure allows any residual pressure to escape. When the hissing sound has stopped, press down on the cap while turning counterclockwise and remove it.

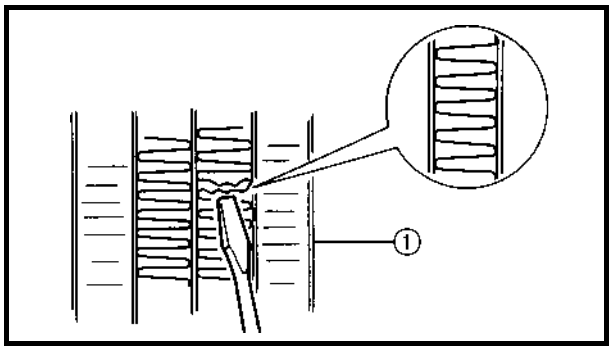

EC454000
INSPECTION

EC444100
Radiator

1. Inspect:
   - Radiator core ①
     Obstruction → Blow out with compressed air through rear of the radiator.
     Bent fin → Repair/replace.

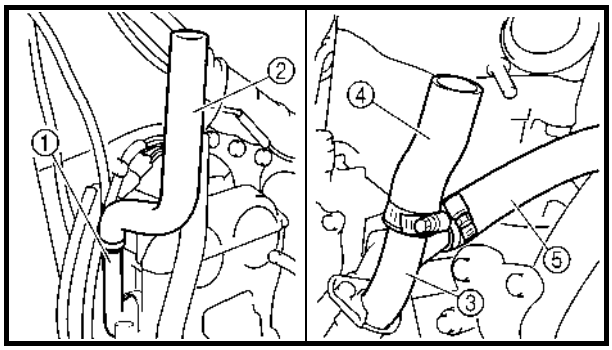

EC455000
ASSEMBLY AND INSTALLATION

Radiator

1. Install:
   - Pipe 1 ① — 10 Nm (1.0 m · kg, 7.2 ft · lb)
   - Hose 1 ② — 2 Nm (0.2 m · kg, 1.4 ft · lb)
   - Pipe 2 ③ — 10 Nm (1.0 m · kg, 7.2 ft · lb)
   - Hose 3 ④ — 2 Nm (0.2 m · kg, 1.4 ft · lb)
   - Hose 4 ⑤ — 2 Nm (0.2 m · kg, 1.4 ft · lb)

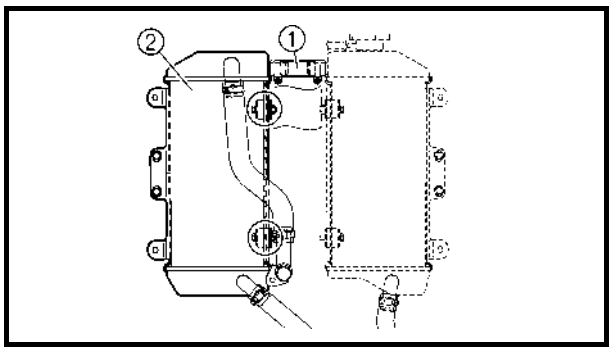

2. Install:
   - Hose 2 ① — 2 Nm (0.2 m · kg, 1.4 ft · lb)
   - Radiator (left) ② — 10 Nm (1.0 m · kg, 7.2 ft · lb)

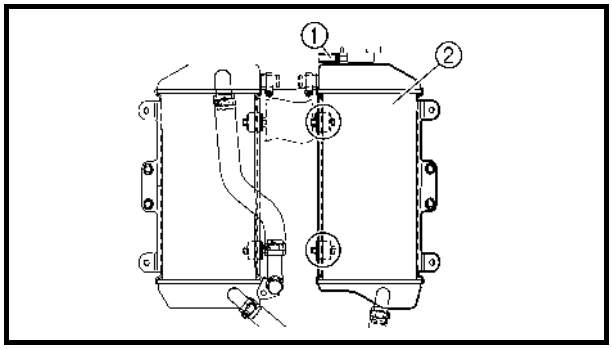

3. Install:
   - Radiator breather hose ①
   - Radiator (right) ②

   10 Nm (1.0 m · kg, 7.2 ft · lb)

   Refer to "CABLE ROUTING DIAGRAM" section in the CHAPTER 2.

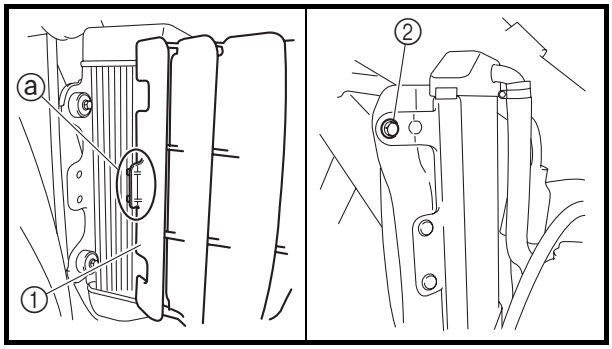

4. Install:
   - Panel ①
   - Bolt (radiator panel upper) ②

   10 Nm (1.0 m · kg, 7.2 ft · lb)

NOTE:
Fit the hook ⓐ on the inner side first into the radiator.

CARBURETOR

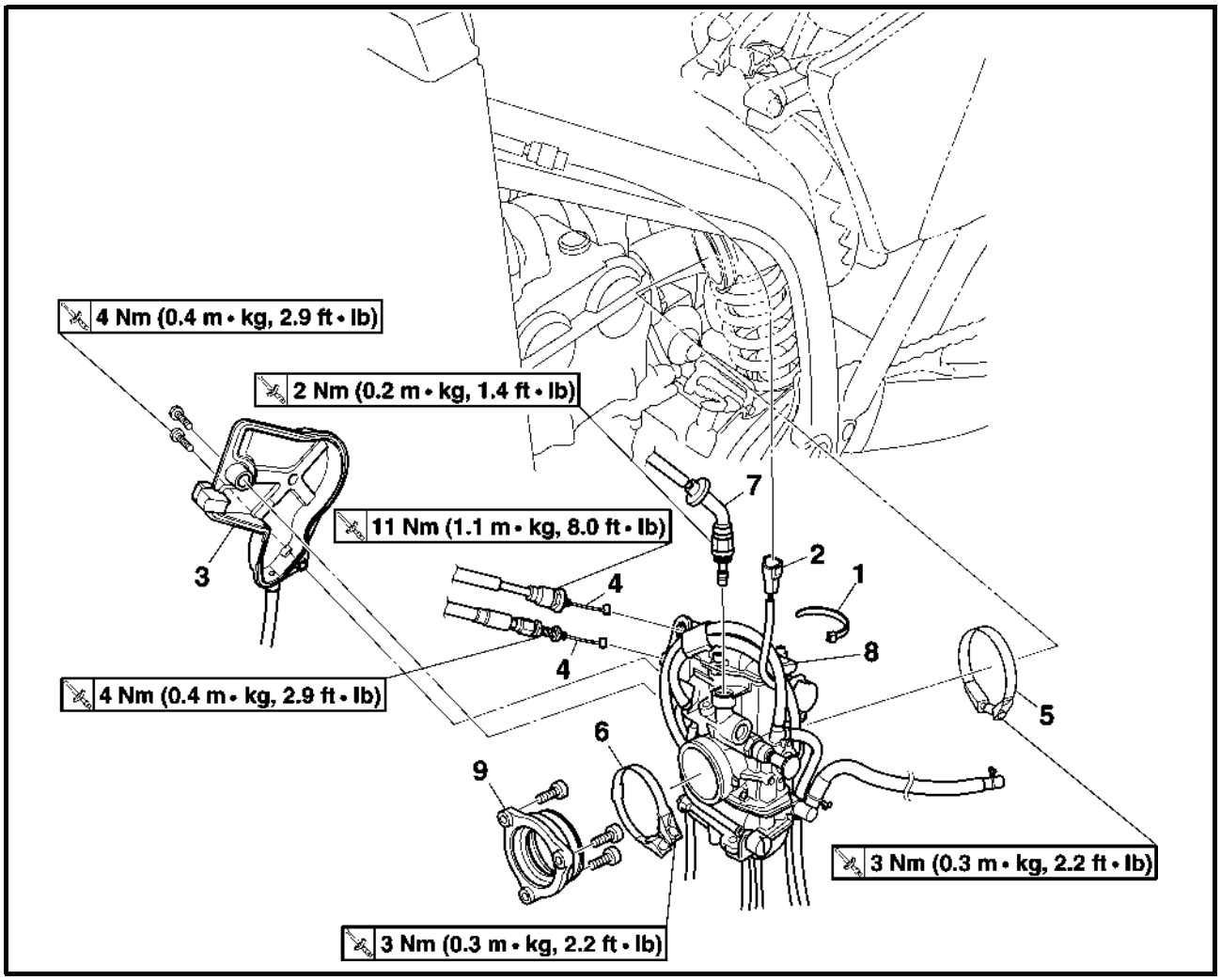

Extent of removal: ① Carburetor removal

Extent of removal	Order	Part name	Q'ty	Remarks
Preparation for removal		**CARBURETOR REMOVAL** Fuel tank Rear shock absorber		Refer to "SEAT, FUEL TANK AND SIDE COVERS" section. Refer to "REAR SHOCK ABSORBER" section in the CHAPTER 5.
①	1	Band	1	
	2	TPS coupler	1	
	3	Throttle cable cover	1	
	4	Throttle cable	2	
	5	Clamp (air cleaner joint)	1	Loosen the screw (air cleaner joint).
	6	Clamp (carburetor joint)	1	Loosen the screws (carburetor joint).
	7	Hot starter plunger	1	
	8	Carburetor	1	
	9	Carburetor joint	1	

CARBURETOR DISASSEMBLY

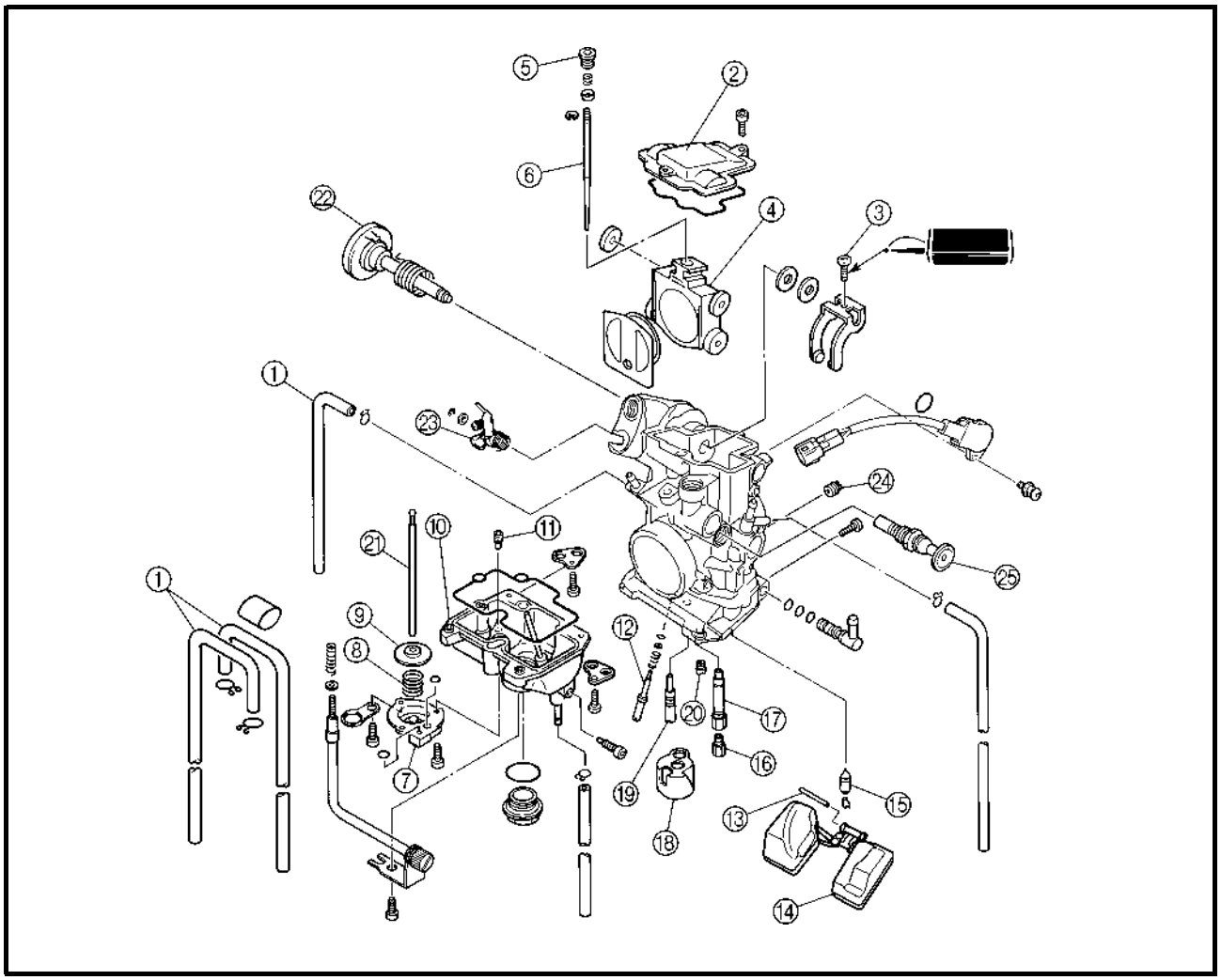

Extent of removal: ① Carburetor disassembly

Extent of removal	Order	Part name	Q'ty	Remarks
		CARBURETOR DISASSEMBLY		
↑	①	Breather hose	4	
	②	Valve lever housing cover	1	
	③	Screw (throttle shaft)	1	
	④	Throttle valve	1	
	⑤	Needle holder	1	
	⑥	Jet needle	1	
	⑦	Cover	1	
①	⑧	Spring	1	
	⑨	Diaphragm (accelerator pump)	1	
	⑩	Float chamber	1	
	⑪	Leak jet	1	
	⑫	Pilot screw	1	Refer to "REMOVAL POINTS".
	⑬	Float pin	1	
	⑭	Float	1	
↓	⑮	Needle valve	1	

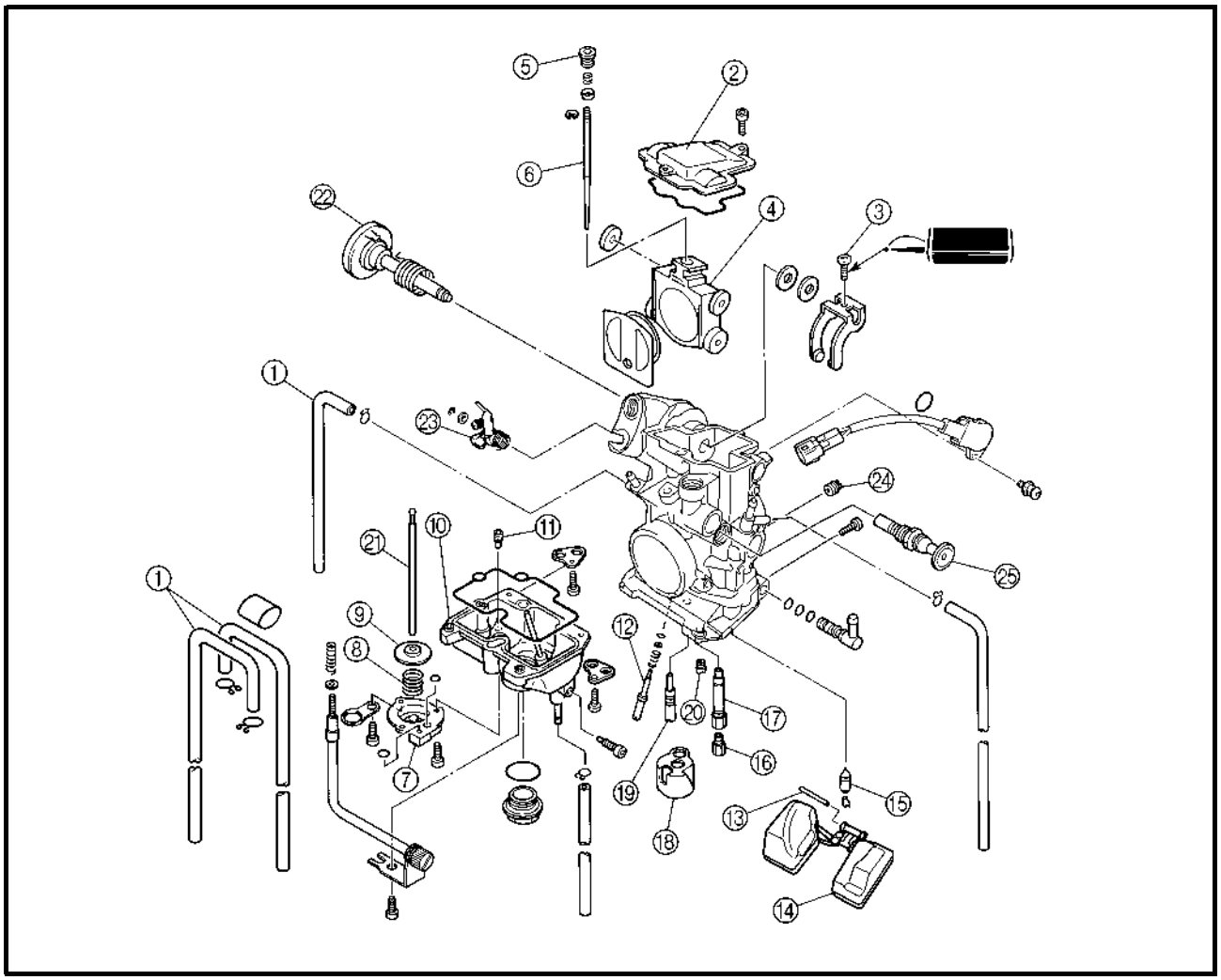

Extent of removal	Order	Part name	Q'ty	Remarks
①	⑯	Main jet	1	
	⑰	Needle jet	1	
	⑱	Spacer	1	
	⑲	Pilot jet	1	
	⑳	Starter jet	1	
	㉑	Push rod	1	Pull the push rod.
	㉒	Throttle shaft assembly	1	
	㉓	Push rod link lever assembly	1	
	㉔	Pilot air jet	1	
	㉕	Cold starter plunger	1	

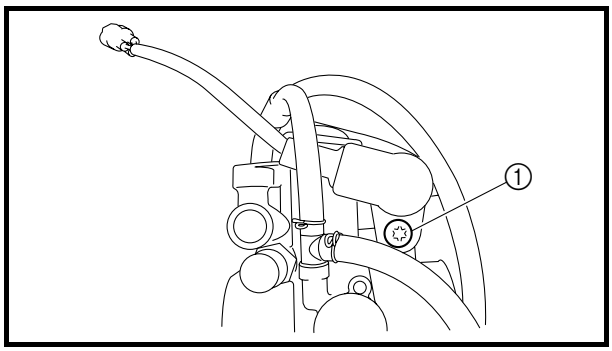

EC466020
HANDLING NOTE

CAUTION:

Do not loosen the screws {TPS (throttle position sensor)} ① except when changing the TPS (throttle position sensor) due to failure because it will cause a drop in engine performance.

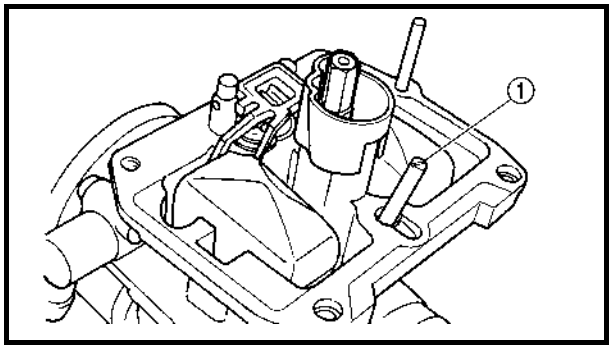

REMOVAL POINTS

Pilot screw

1. Remove:
   - Pilot screw ①

NOTE:

To optimize the fuel flow at a small throttle opening, each machine's pilot screw has been individually set at the factory. Before removing the pilot screw, turn it in fully and count the number of turns. Record this number as the factory-set number of turns out.

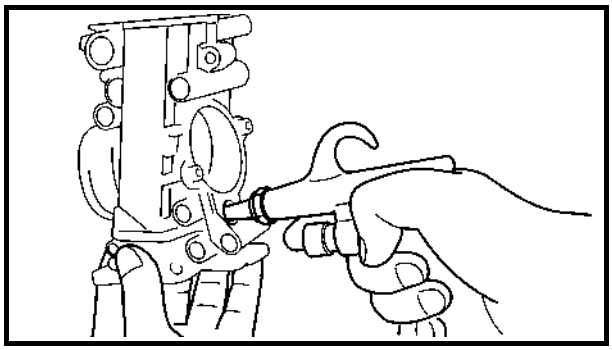

INSPECTION

Carburetor

1. Inspect:
   - Carburetor body
     Contamination → Clean.

NOTE:

- Use a petroleum based solvent for cleaning. Blow out all passages and jets with compressed air.
- Never use a wire.

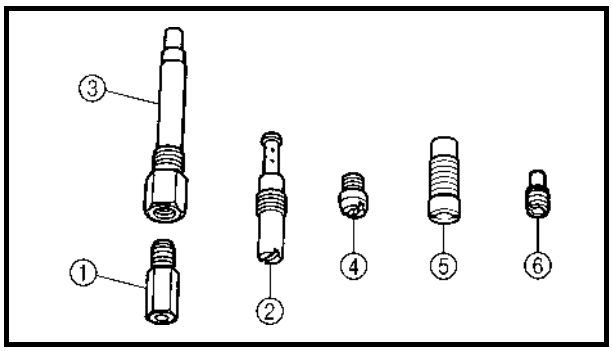

2. Inspect:
   - Main jet ①
   - Pilot jet ②
   - Needle jet ③
   - Starter jet ④
   - Pilot air jet ⑤
   - Leak jet ⑥
     Damage → Replace.
     Contamination → Clean.

NOTE:
- Use a petroleum based solvent for cleaning. Blow out all passages and jets with compressed air.
- Never use a wire.

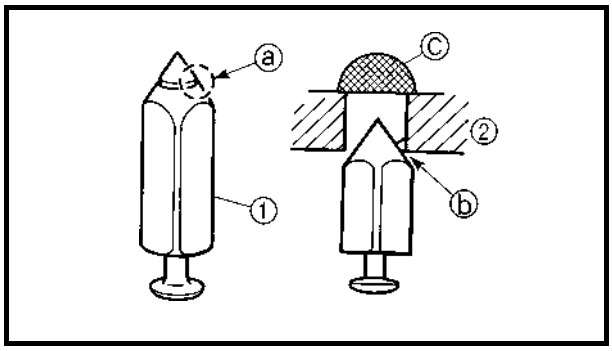

Needle valve

1. Inspect:
   - Needle valve ①
   - Valve seat ②
     Grooved wear ⓐ → Replace.
     Dust ⓑ → Clean.
   - Filter ⓒ
     Clogged → Clean.

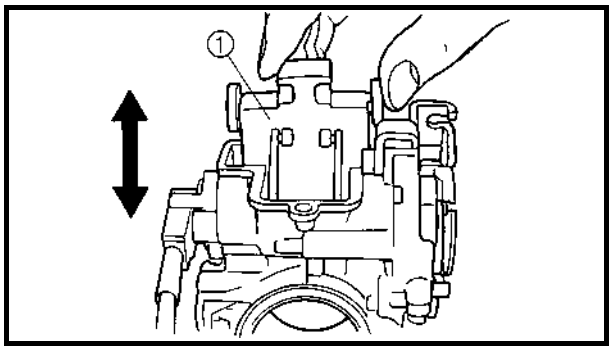

EC464300

Throttle valve

1. Check:
   - Free movement
     Stick → Repair or replace.

NOTE:
Insert the throttle valve ① into the carburetor body, and check for free movement.

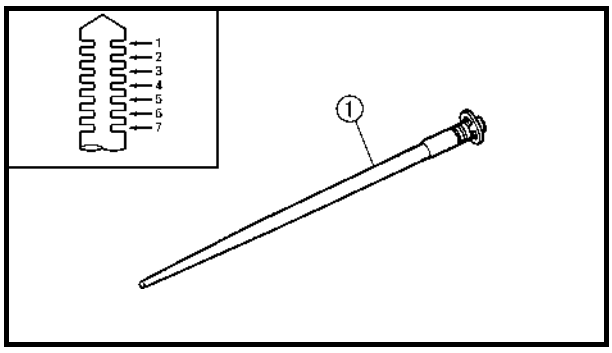

EC464400

Jet needle

1. Inspect:
   - Jet needle ①
     Bends/wear → Replace.
   - Clip groove
     Free play exists/wear → Replace.
   - Clip position

Standard clip position:
No.4 Groove

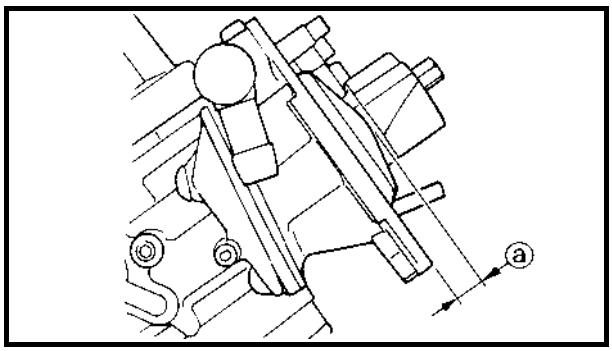

EC464511
Float height

1. Measure:
   - Float height ⓐ
     Out of specification → Adjust.

Float height:
8.0 mm (0.31 in)

Measurement and adjustment steps:
- Hold the carburetor in an upside down position.

NOTE:
- Slowly tilt the carburetor in the opposite direction, then take the measurement when the needle valve aligns with the float arm.
- If the carburetor is level, the weight of the float will push in the needle valve, resulting in an incorrect measurement.

- Measure the distance between the mating surface of the float chamber and top of the float using a vernier calipers.

NOTE:
The float arm should be resting on the needle valve, but not compressing the needle valve.

- If the float height is not within specification, inspect the valve seat and needle valve.
- If either is worn, replace them both.
- If both are fine, adjust the float height by bending the float tab ⓑ on the float.
- Recheck the float height.

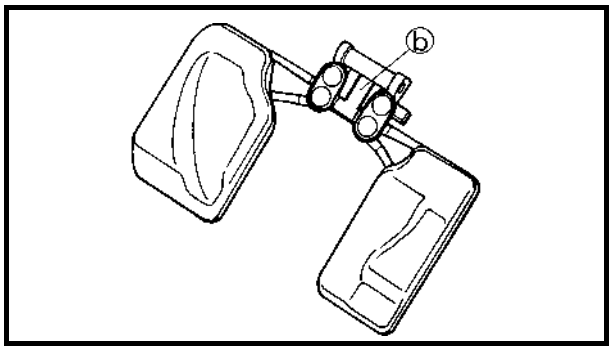

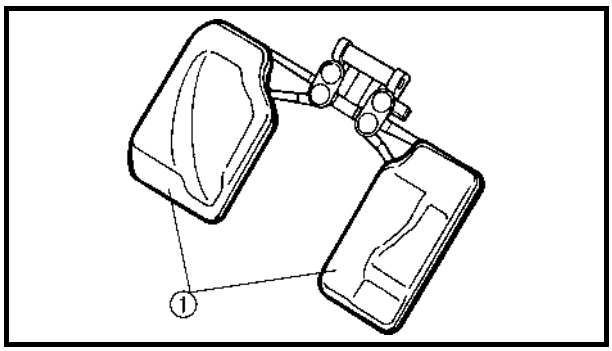

EC464600
Float

1. Inspect:
   - Float ①
     Damage → Replace.

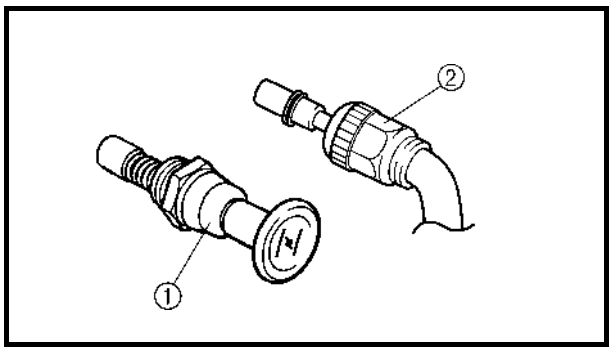

Starter plunger

1. Inspect:
   - Cold starter plunger ①
   - Hot starter plunger ②
     Wear/damage → Replace.

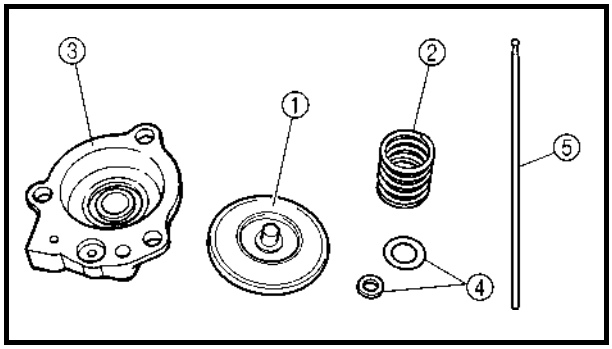

Accelerator pump

1. Inspect:
   - Diaphragm (accelerator pump) ①
   - Spring ②
   - Cover ③
   - O-ring ④
   - Push rod ⑤
     Tears (diaphragm)/damage → Replace.
     Dirt → Clean.

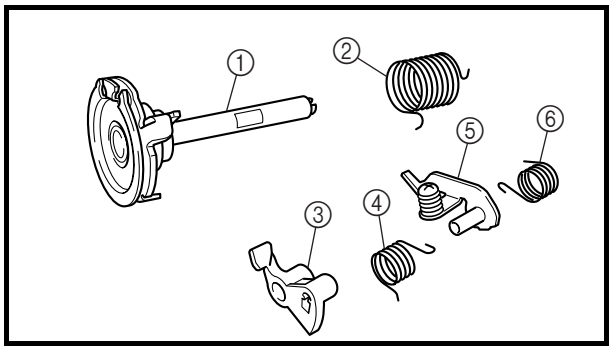

2. Inspect:
   - Throttle shaft ①
   - Spring ②
   - Lever 1 ③
   - Spring 1 ④
   - Lever 2 ⑤
   - Spring 2 ⑥
     Dirt → Clean.

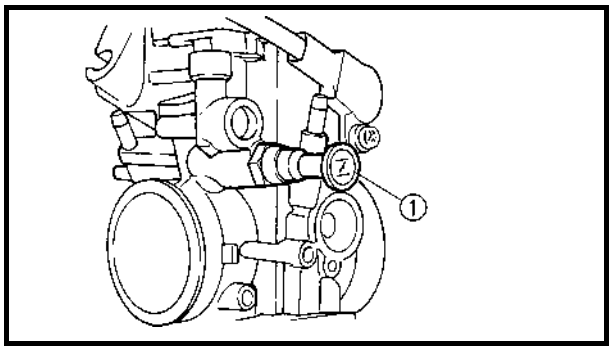

ASSEMBLY AND INSTALLATION

Carburetor

1. Install:
   - Cold starter plunger ①

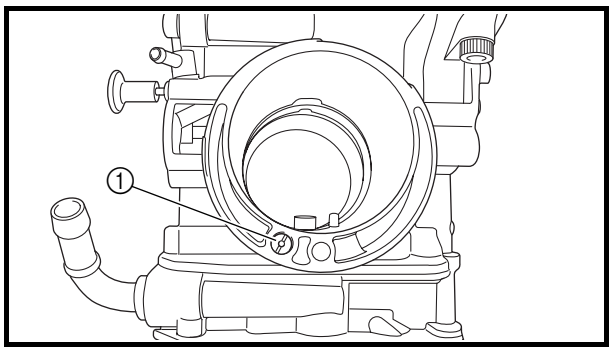

2. Install:
   - Pilot air jet ①

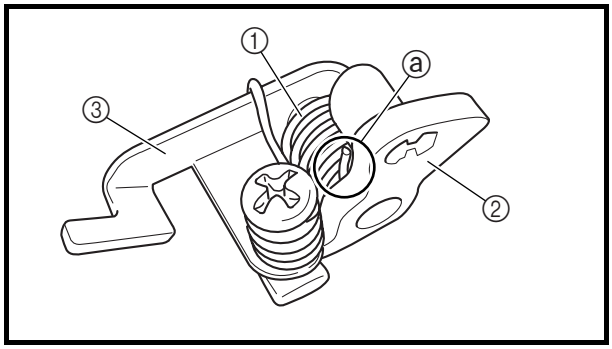

3. Install:
   - Spring 1 ①
   - Lever 1 ②
     To lever 2 ③.

NOTE:
Make sure the spring 1 fits on the stopper ⓐ of the lever 2.

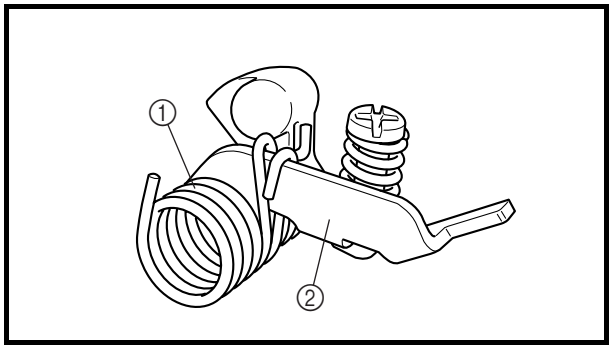

4. Install:
   - Spring 2 ①
     To lever 2 ②.

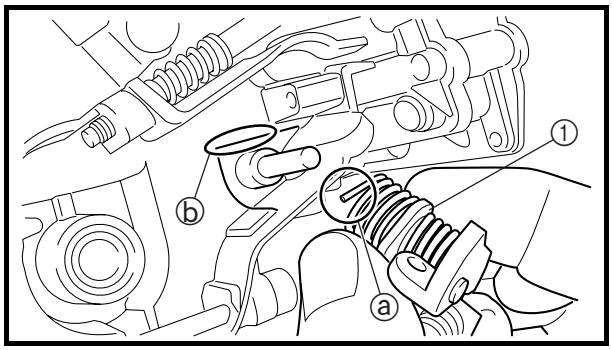

5. Install:
   - Push rod link lever assembly ①

NOTE:
Make sure the stopper ⓐ of the spring 2 fits into the recess ⓑ in the carburetor.

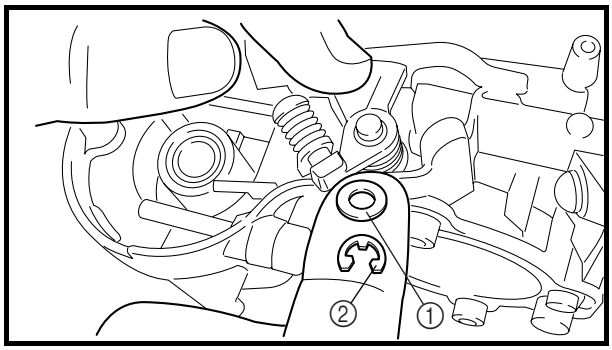

6. Install:
   - Plain washer ①
   - Circlip ②

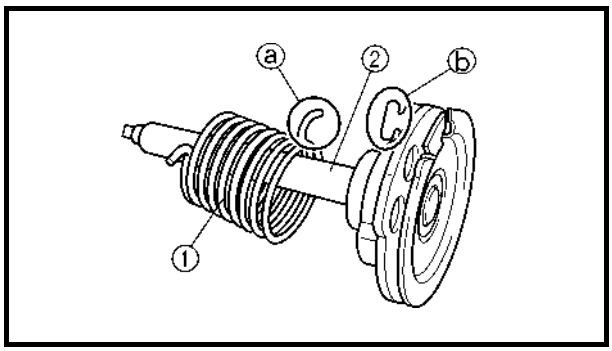

7. Install:
   - Spring ①
     To throttle shaft ②.

NOTE:
Install the bigger hook ⓐ of the spring fits on the stopper ⓑ of the throttle shaft pulley.

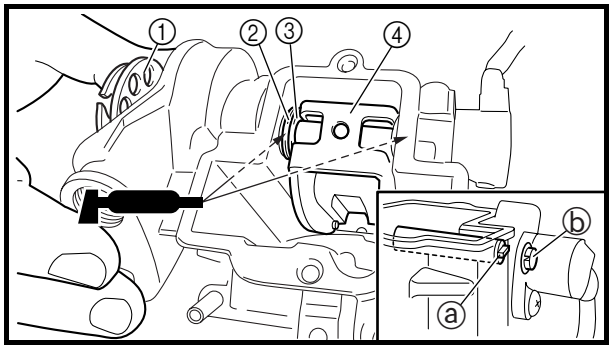

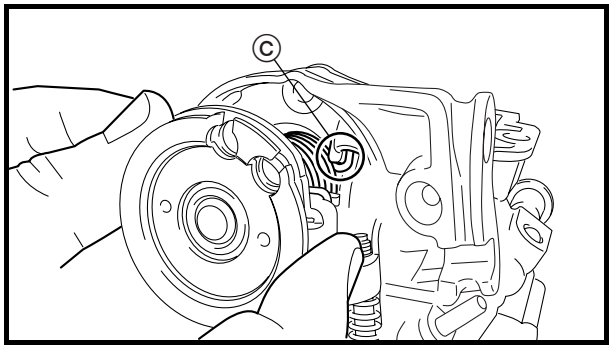

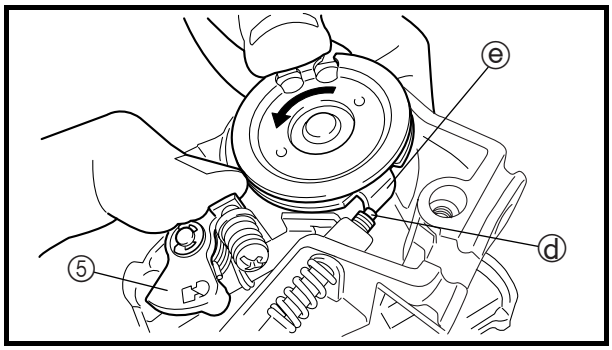

8. Install:
   - Throttle shaft assembly ①
   - Plain washer (metal) ②
   - Plain washer (resin) ③
   - Valve lever ④

NOTE:
- Apply the fluorochemical grease on the bearings.
- Fit the projection ⓐ on the throttle shaft assembly into the slot ⓑ in the TPS (throttle position sensor).
- Make sure the stopper ⓒ of the spring fits into the recess in the carburetor.
- Turn the throttle shaft assembly left while holding down the lever 1 ⑤ and fit the throttle stop screw tip ⓓ to the stopper ⓔ of the throttle shaft assembly pulley.

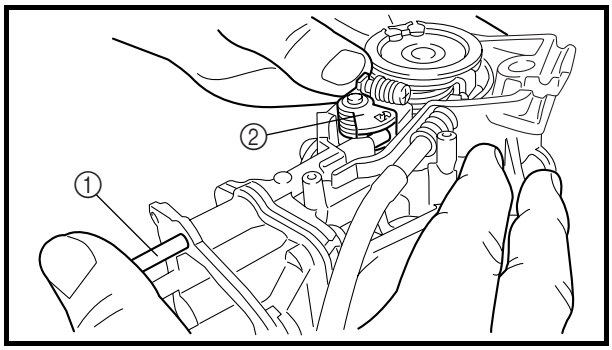

9. Install:
   - Push rod ①

NOTE:
While holding down the lever 1 ②, insert the push rod farthest into the carburetor.

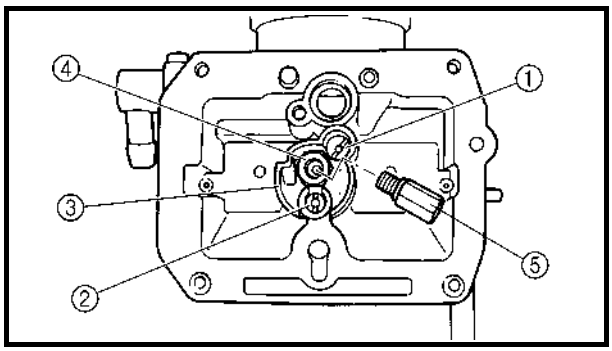

10. Install:
    - Starter jet ①
    - Pilot jet ②
    - Spacer ③
    - Needle jet ④
    - Main jet ⑤

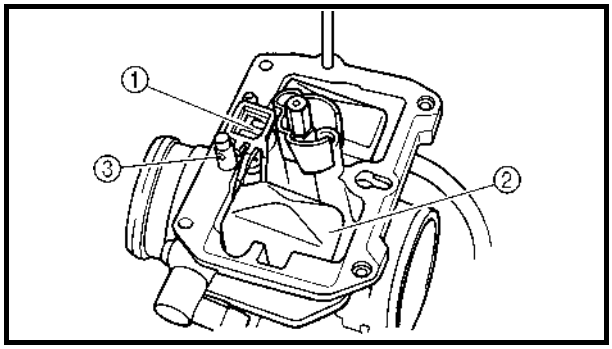

11. Install:
    - Needle valve ①
    - Float ②
    - Float pin ③

NOTE:
- After installing the needle valve to the float, install them to the carburetor.
- Check the float for smooth movement.

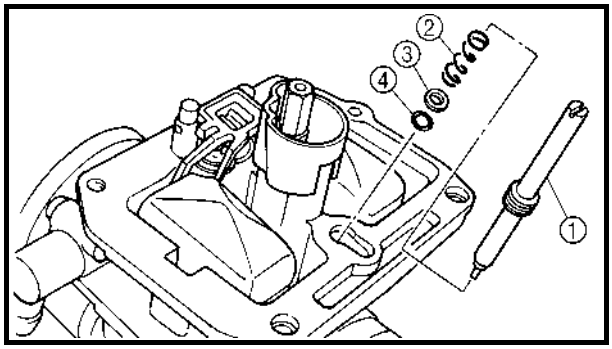

12. Install:
    - Pilot screw ①
    - Spring ②
    - Washer ③
    - O-ring ④

Note the following installation points:
- Turn in the pilot screw until it is lightly seated.
- Turn out the pilot screw by the number of turns recorded before removing.

Pilot screw (example):
2-1/8 turns out

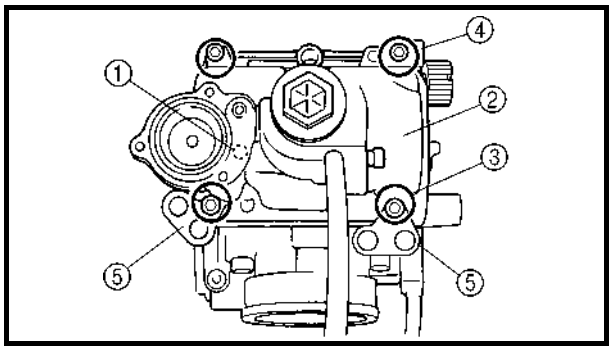

13. Install:
    - O-ring
    - Leak jet ①
    - Float chamber ②
    - Bolt (float chamber) ③
    - Cable holder (throttle stop screw cable) ④
    - Hose holder (carburetor breather hose) ⑤

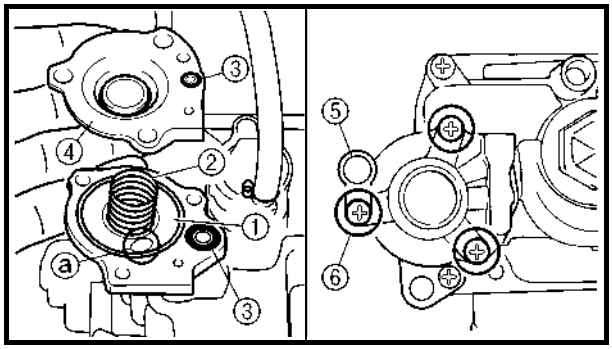

14. Install:
    - Diaphragm (accelerator pump) ①
    - Spring ②
    - O-ring ③
    - Cover ④
    - Hose holder (drain hose) ⑤
    - Screw (cover) ⑥

NOTE:
Install the diaphragm (accelerator pump) with its mark ⓐ facing the spring.

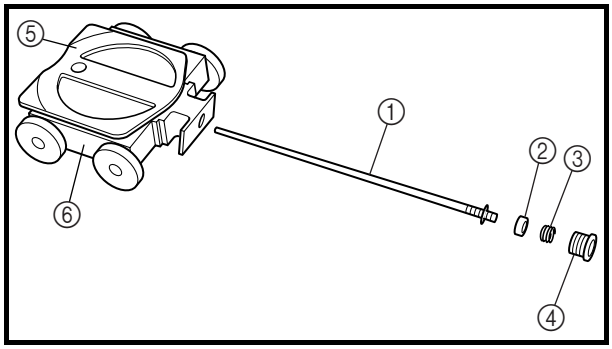

15. Install:
    - Jet needle ①
    - Collar ②
    - Spring ③
    - Needle holder ④
    - Throttle valve plate ⑤
      To throttle valve ⑥.

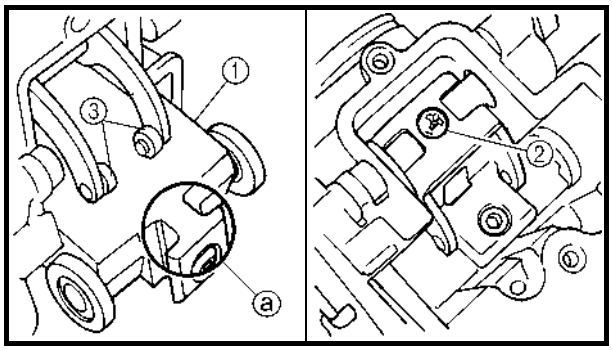

16. Install:
    - Throttle valve assembly ①
    - Screw (throttle shaft) ②

NOTE:
Install the valve lever rollers ③ into the slits ⓐ of the throttle valve.

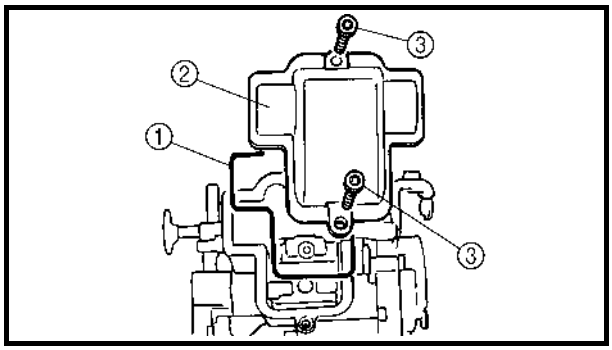

17. Install:
    - O-ring ①
    - Valve lever housing cover ②
    - Bolt (valve lever housing cover) ③

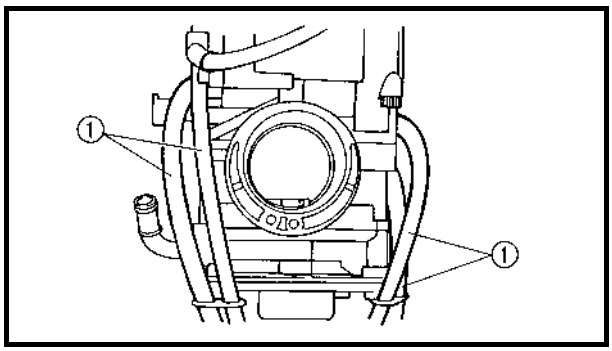

18. Install:
    - Carburetor breather hose ①
      Refer to “CABLE ROUTING DIAGRAM” section in the CHAPTER 2.

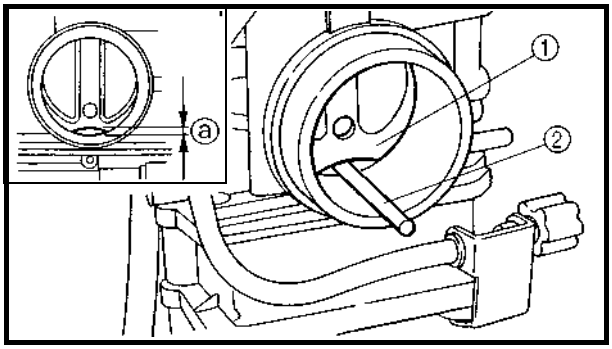

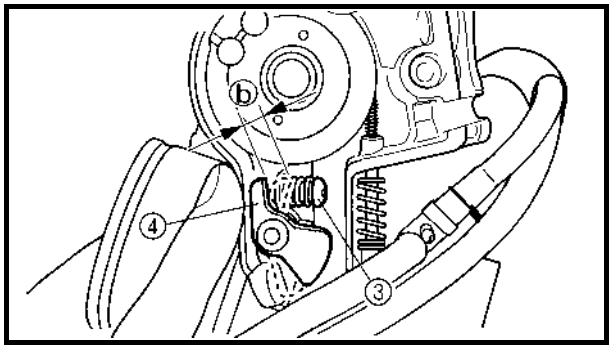

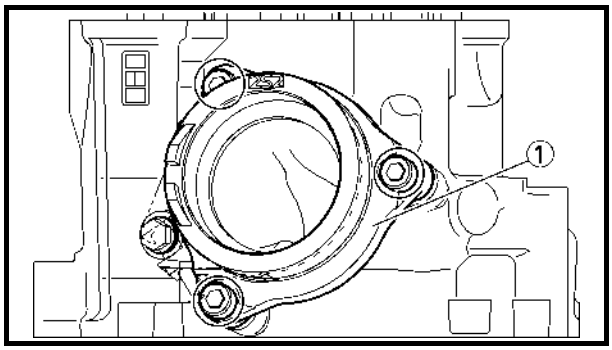

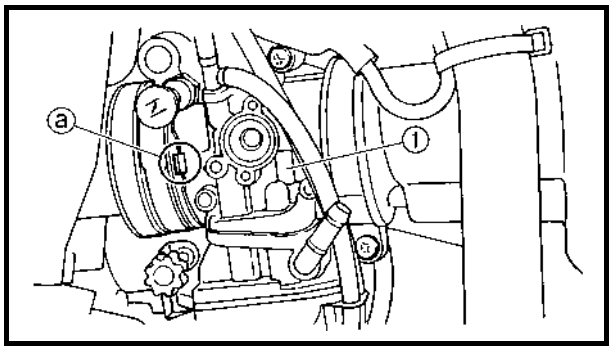

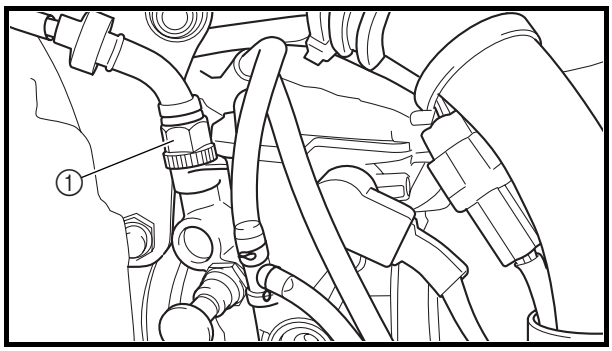

Accelerator pump timing adjustment

Adjustment steps:

NOTE:
In order for the throttle valve height ⓐ to achieve the specified value, tuck under the throttle valve plate ① the rod ② etc. with the same outer diameter as the specified value.

Throttle valve height:
1.25 mm (0.049 in)

- Fully turn in the accelerator pump adjusting screw ③.
- Check that the link lever ④ has free play ⓑ by pushing lightly on it.
- Gradually turn out the adjusting screw while moving the link lever until it has no more free play.

Carburetor installation

1. Install:
   - Carburetor joint ①

10 Nm (1.0 m · kg, 7.2 ft · lb)

2. Install:
   - Carburetor ①

NOTE:
Install the projection ⓐ between the carburetor joint slots.

3. Install:
   - Hot starter plunger ①

2 Nm (0.2 m · kg, 1.4 ft · lb)

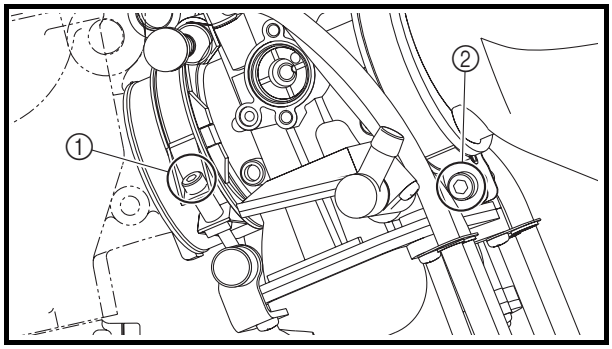

4. Tighten:
   - Bolt (air cleaner joint) ①

     3 Nm (0.3 m · kg, 2.2 ft · lb)
   - Bolt (carburetor joint) ②

     3 Nm (0.3 m · kg, 2.2 ft · lb)

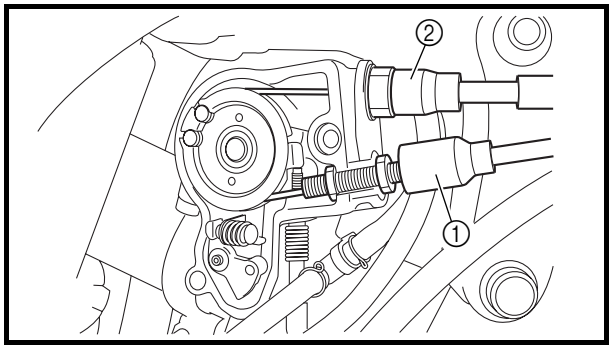

5. Install:
   - Throttle cable (pull) ①

     4 Nm (0.4 m · kg, 2.9 ft · lb)
   - Throttle cable (return) ②

     11 Nm (1.1 m · kg, 8.0 ft · lb)
6. Adjust:
   - Throttle grip free play
     Refer to “THROTTLE CABLE ADJUSTMENT” section in the CHAPTER 3.

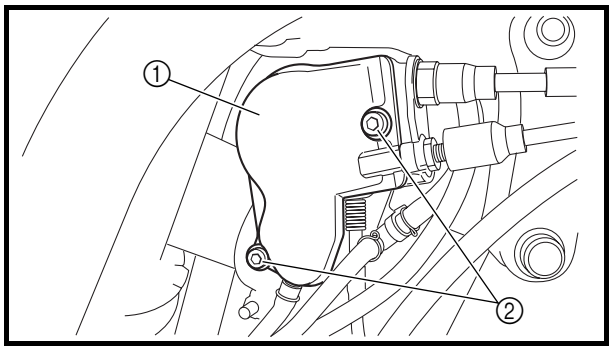

7. Install:
   - Throttle cable cover ①
   - Screw (throttle cable cover) ②

     4 Nm (0.4 m · kg, 2.9 ft · lb)

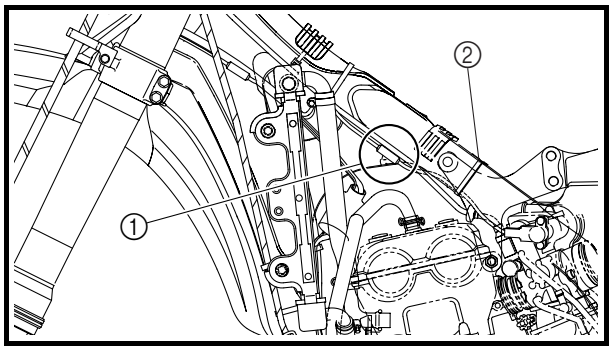

8. Install:
   - TPS (throttle position sensor) coupler ①
   - Clamp ②
     Refer to “CABLE ROUTING DIAGRAM” section in the CHAPTER 2.

CAMSHAFTS

CYLINDER HEAD COVER

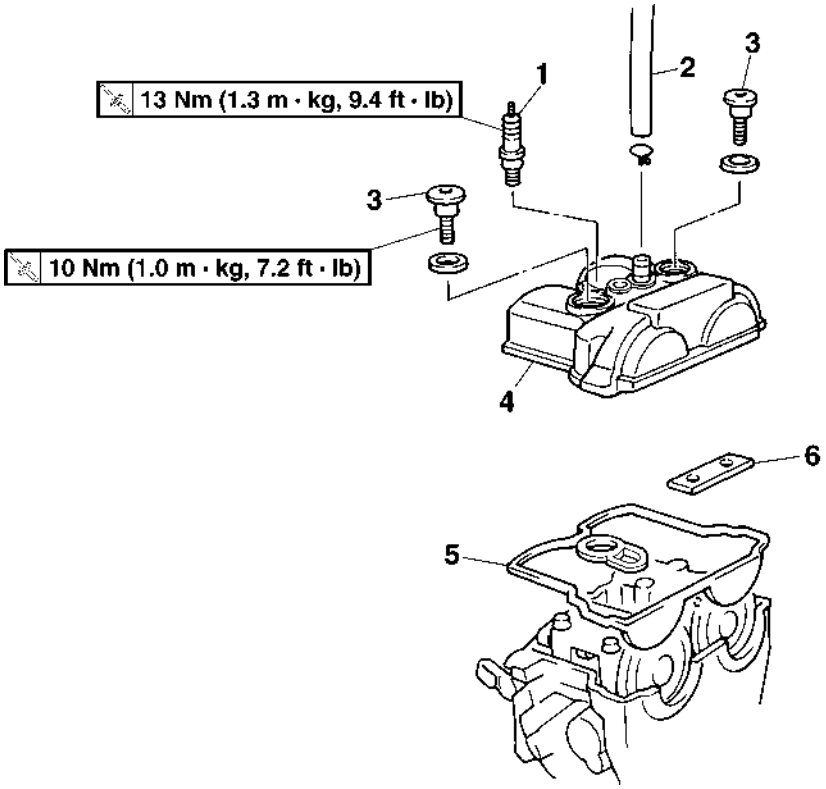

Extent of removal: ① Cylinder head cover removal

Extent of removal	Order	Part name	Q'ty	Remarks
Preparation for removal		**CYLINDER HEAD COVER REMOVAL** Seat and fuel tank Hot starter plunger Engine upper bracket (right) Engine upper bracket (left)		 Refer to "SEAT, FUEL TANK AND SIDE COVERS" section. Refer to "CARBURETOR" section. Refer to "ENGINE REMOVAL" section.
①	1	Spark plug	1	
	2	Cylinder head breather hose	1	
	3	Bolt (cylinder head cover)	2	
	4	Cylinder head cover	1	
	5	Gasket	1	
	6	Timing chain guide (top)	1	

CAMSHAFTS

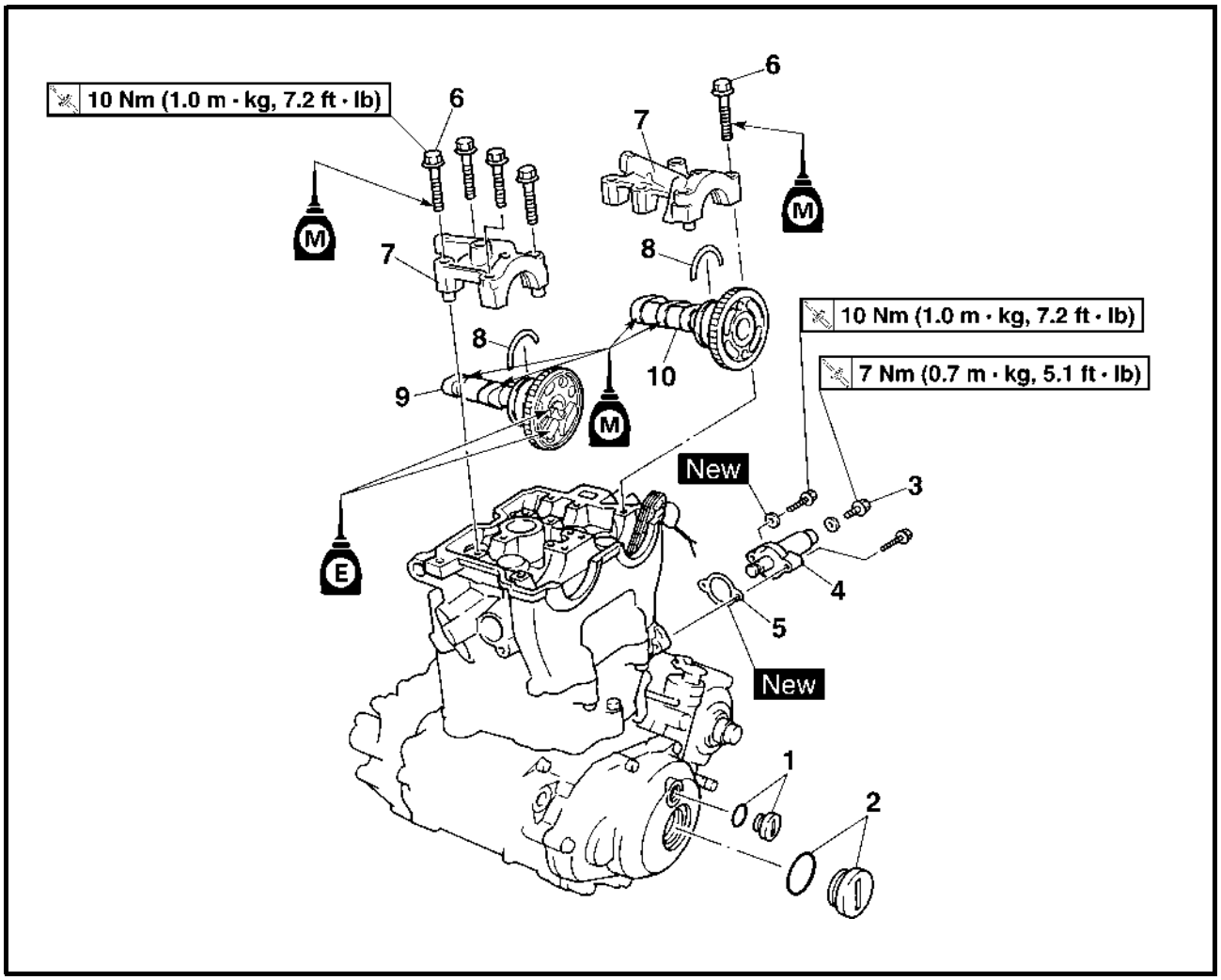

Extent of removal: ① Camshaft removal

Extent of removal	Order	Part name	Q'ty	Remarks
		CAMSHAFTS REMOVAL		
①	1	Timing plug	1	Refer to "REMOVAL POINTS".
	2	Straight plug	1	
	3	Tensioner cap bolt	1	
	4	Timing chain tensioner	1	
	5	Gasket	1	
	6	Bolt (camshaft cap)	10	
	7	Camshaft cap	2	
	8	Clip	2	
	9	Exhaust camshaft	1	
	10	Intake camshaft	1	

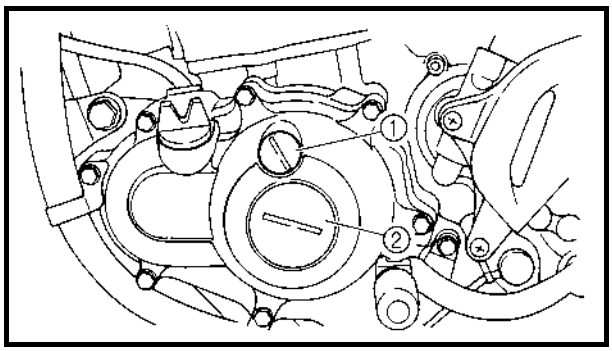

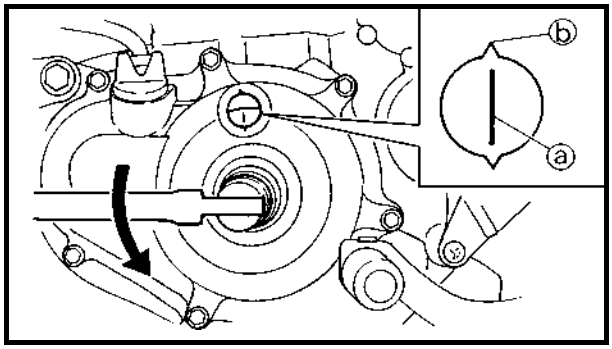

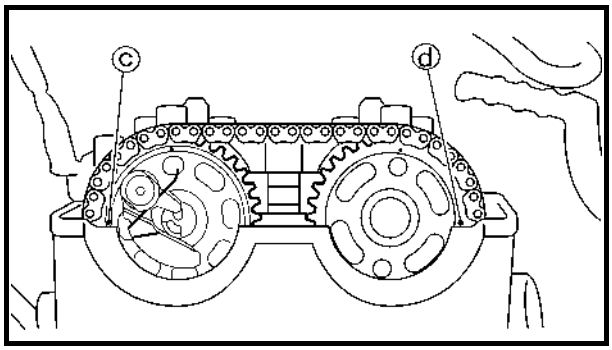

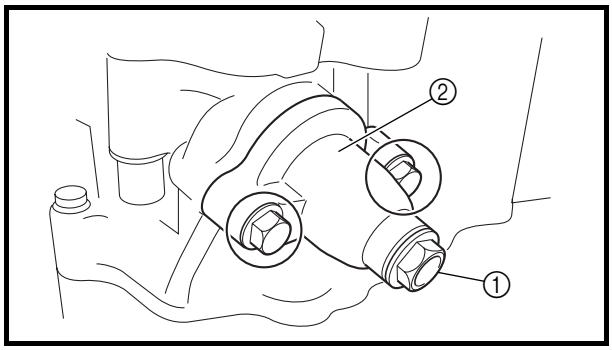

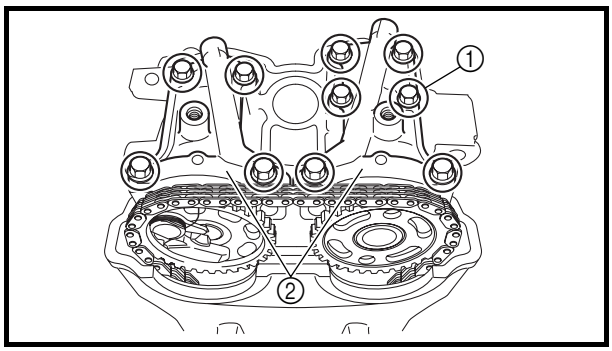

REMOVAL POINTS

Camshaft

1. Remove:
   - Timing plug ①
   - Straight plug ②
2. Align:
   - "I" mark
     With stationary pointer.

Checking steps:

- Turn the crankshaft counterclockwise with a wrench.
- Align the "I" mark ⓐ on the rotor with the stationary pointer ⓑ on the crankcase cover. When the "I" mark is aligned with the stationary pointer, the piston is at the Top Dead Center (T.D.C.).

NOTE:

- In order to be sure that the piston is at Top Dead Center, the punch mark ⓒ on the exhaust camshaft and the punch mark ⓓ on the intake camshaft must align with the cylinder head surface, as shown in the illustration.
- If there is no clearance, rotate the crankshaft counterclockwise one turn.

3. Loosen:
   - Tensioner cap bolt ①
4. Remove:
   - Timing chain tensioner ②

5. Remove:
   - Bolt (camshaft cap) ①
   - Camshaft caps ②

NOTE:

Remove the bolts (camshaft cap) in a criss-cross pattern, working from the outside in.

CAUTION:

The bolts (camshaft cap) must be removed evenly to prevent damage to the cylinder head, camshafts or camshaft caps.

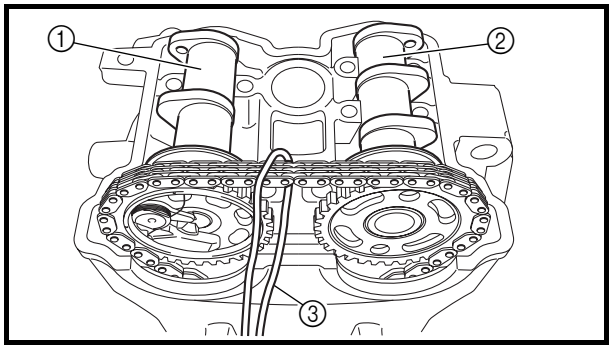

6. Remove:
   - Clips
   - Exhaust camshaft ①
   - Intake camshaft ②

NOTE:
Attach a wire ③ to the timing chain to prevent it from falling into the crankcase.

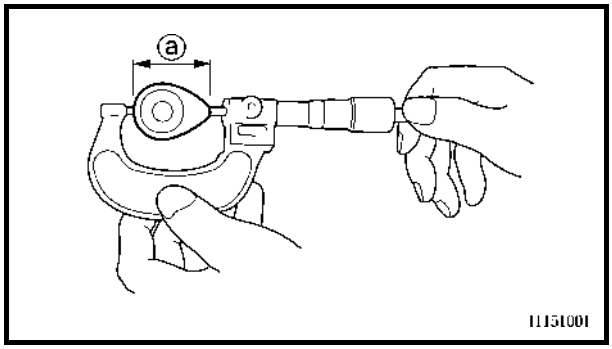

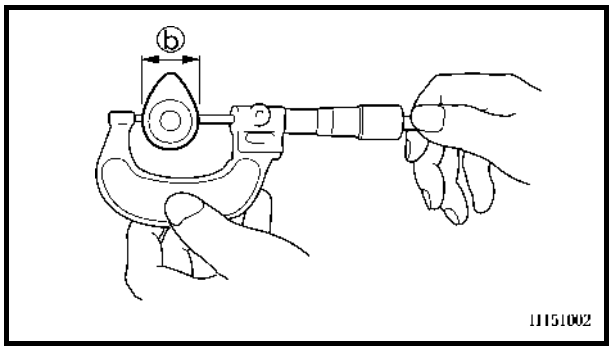

INSPECTION
Camshaft

1. Inspect:
   - Cam lobes
     Pitting/scratches/blue discoloration → Replace.
2. Measure:
   - Cam lobes length ⓐ and ⓑ
     Out of specification → Replace.

Cam lobes length:
Intake:
ⓐ 31.200 ~ 31.300 mm (1.2283 ~ 1.2323 in)
<Limit>: 31.100 mm (1.2244 in)
ⓑ 22.550 ~ 22.650 mm (0.8878 ~ 0.8917 in)
<Limit>: 22.450 mm (0.8839 in)
Exhaust:
ⓐ 30.950 ~ 31.050 mm (1.2185 ~ 1.2224 in)
<Limit>: 30.850 mm (1.2146 in)
ⓑ 22.494 ~ 22.594 mm (0.8856 ~ 0.8895 in)
<Limit>: 22.394 mm (0.8817 in)

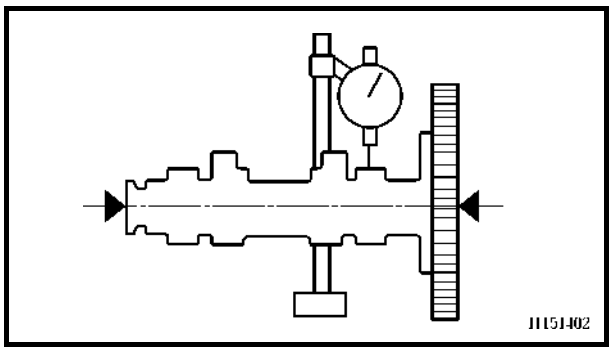

3. Measure:
   - Runout (camshaft)
     Out of specification → Replace.

Runout (camshaft):
Less than 0.03 mm (0.0012 in)

4. Measure:
   - Camshaft-to-cap clearance
     Out of specification → Measure camshaft journal diameter.

Camshaft-to-cap clearance:
0.028 ~ 0.062 mm
(0.0011 ~ 0.0024 in)
<Limit>: 0.08 mm (0.003 in)

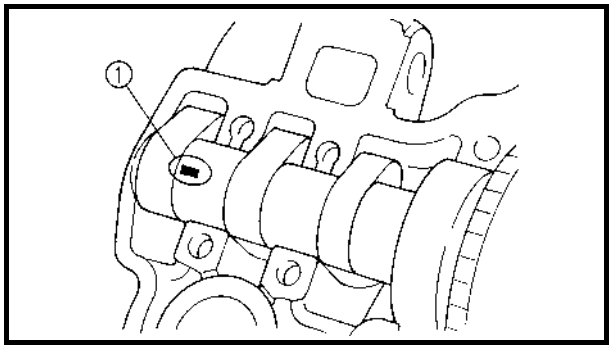

Measurement steps:
- Install the camshaft onto the cylinder head.
- Position a strip of Plastigauge® ① onto the camshaft.
- Install the circlip, dowel pins and camshaft caps.

Bolt (camshaft cap):
10 Nm (1.0 m • kg, 7.2 ft • lb)

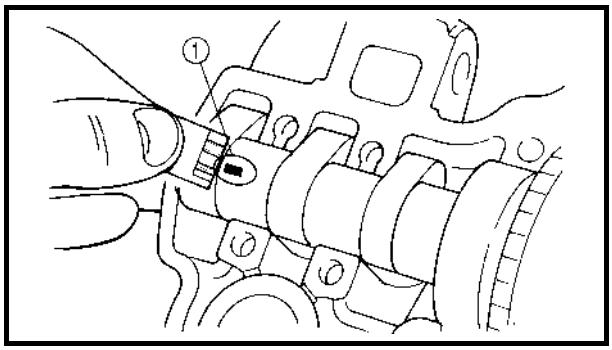

NOTE:
- Tighten the bolts (camshaft cap) in a criss-cross pattern from innermost to outer caps.
- Do not turn the camshaft when measuring clearance with the Plastigauge®.

- Remove the camshaft caps and measure the width of the Plastigauge® ①.

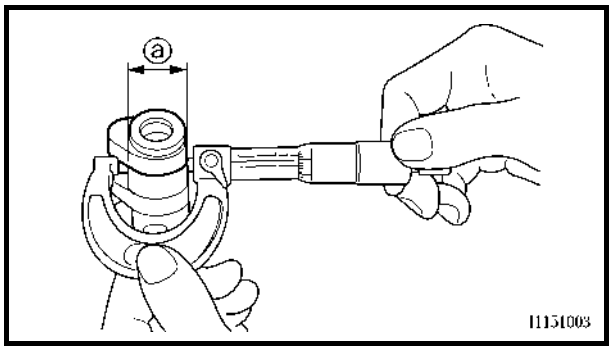

5. Measure:
   - Camshaft journal diameter ⓐ
     Out of specification → Replace the camshaft.
     Within specification → Replace camshaft case and camshaft caps as a set.

Camshaft journal diameter:
21.959 ~ 21.972 mm
(0.8645 ~ 0.8650 in)

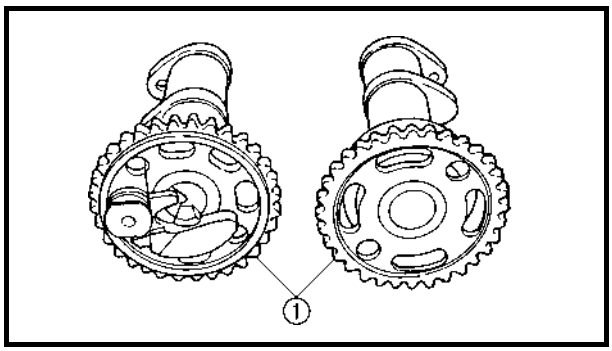

Camshaft sprocket

1. Inspect:
   - Camshaft sprocket ①
     Wear/damage → Replace the camshaft assembly and timing chain as a set.

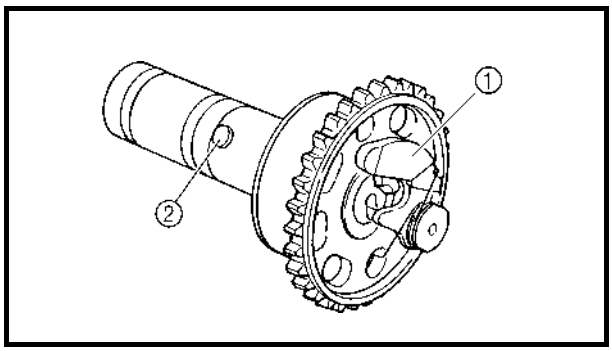

Decompression system

1. Check:
   - Decompression system

Checking steps:
- Check that the decompressor cam ① moves smoothly.
- Check that the decompressor lever pin ② projects from the camshaft.

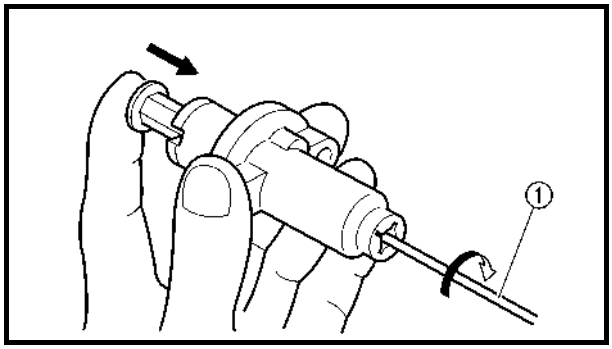

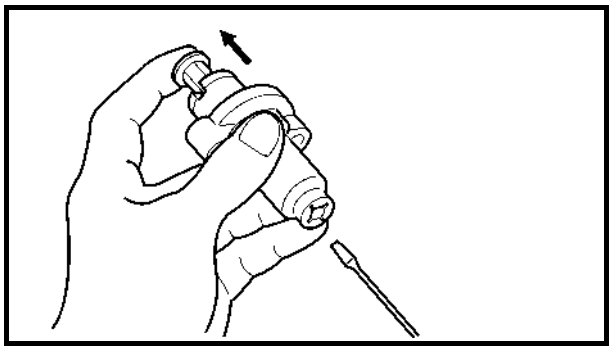

Timing chain tensioner

1. Check:
   - While pressing the tensioner rod lightly with fingers, use a thin screwdriver ① and wind the tensioner rod up fully clockwise.
   - When releasing the screwdriver by pressing lightly with fingers, make sure that the tensioner rod will come out smoothly.
   - If not, replace the tensioner assembly.

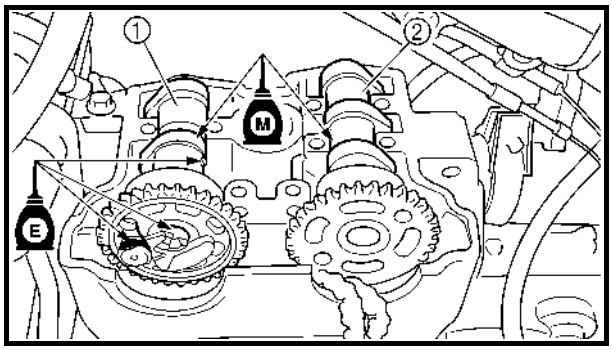

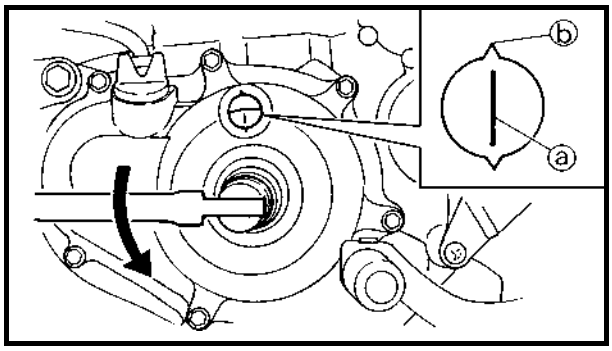

ASSEMBLY AND INSTALLATION

1. Install:
   - Exhaust camshaft ①
   - Intake camshaft ②

Installation steps:
- Turn the crankshaft counterclockwise until the “I” mark ⓐ on the rotor is aligned with the stationary pointer ⓑ on the crankcase cover.

NOTE:
- Apply the molybdenum disulfide oil on the camshafts.
- Apply the engine oil on the decompression system.

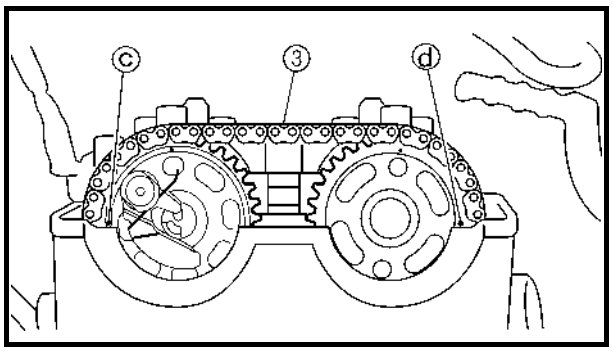

- Fit the timing chain ③ onto both camshaft sprockets and install the camshafts on the cylinder head.

NOTE:
The camshafts should be installed onto the cylinder head so that the exhaust cam sprocket punch mark ⓒ and the intake cam sprocket punch mark ⓓ align with the surface of the cylinder head.

CAUTION:
Do not turn the crankshaft during the camshaft installation. Damage or improper valve timing will result.

- Install the clips and camshaft caps ④.

Bolt (camshaft cap):
10 Nm (1.0 m • kg, 7.2 ft • lb)

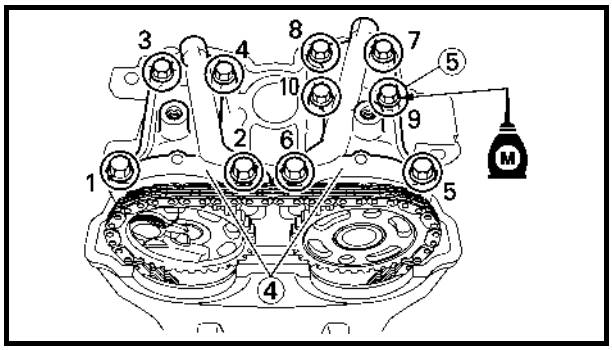

NOTE:
- Apply the molybdenum disulfide oil on the thread of the bolts (camshaft cap) ⑤.
- Tighten the bolts to the specified torque in two or three steps in the proper tightening sequence as shown.

CAUTION:
The bolts (camshaft cap) must be tightened evenly, or damage to the cylinder head, camshaft caps, and camshaft will result.

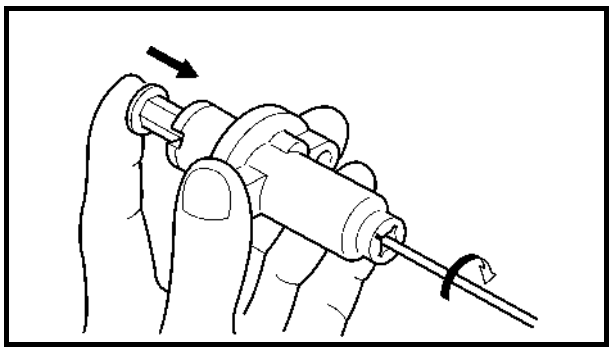

2. Install:
   - Timing chain tensioner

Installation steps:
- While pressing the tensioner rod lightly with fingers, use a thin screwdriver and wind the tensioner rod up fully clockwise.

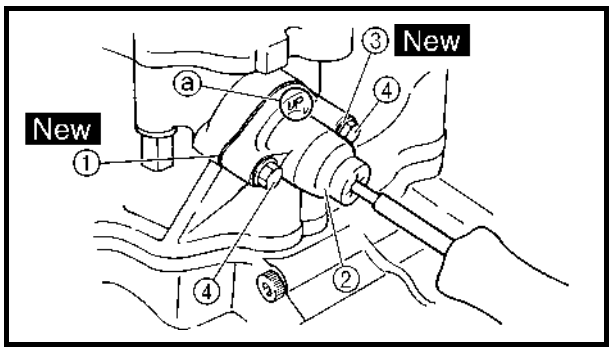

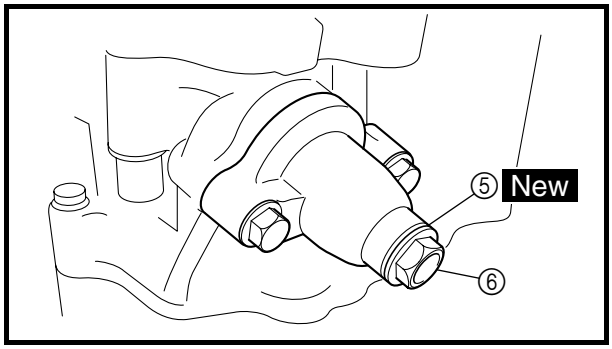

- With the rod fully wound and the chain tensioner UP mark ⓐ facing upward, install the gasket ①, the chain tensioner ② and the gasket ③, and tighten the bolt ④ to the specified torque.

	Bolt (timing chain tensioner): 10 Nm (1.0 m • kg, 7.2 ft • lb)

- Release the screwdriver, check the tensioner rod to come out and tighten the gasket ⑤ and the cap bolt ⑥ to the specified torque.

	Tensioner cap bolt: 7 Nm (0.7 m • kg, 5.1 ft • lb)

3. Turn:
   - Crankshaft
     Counterclockwise several turns
4. Check:
   - Rotor “I” mark
     Align with the crankcase stationary pointer.
   - Camshaft match marks
     Align with the cylinder head surface.
     Out of alignment → Adjust.

CYLINDER HEAD

CYLINDER HEAD

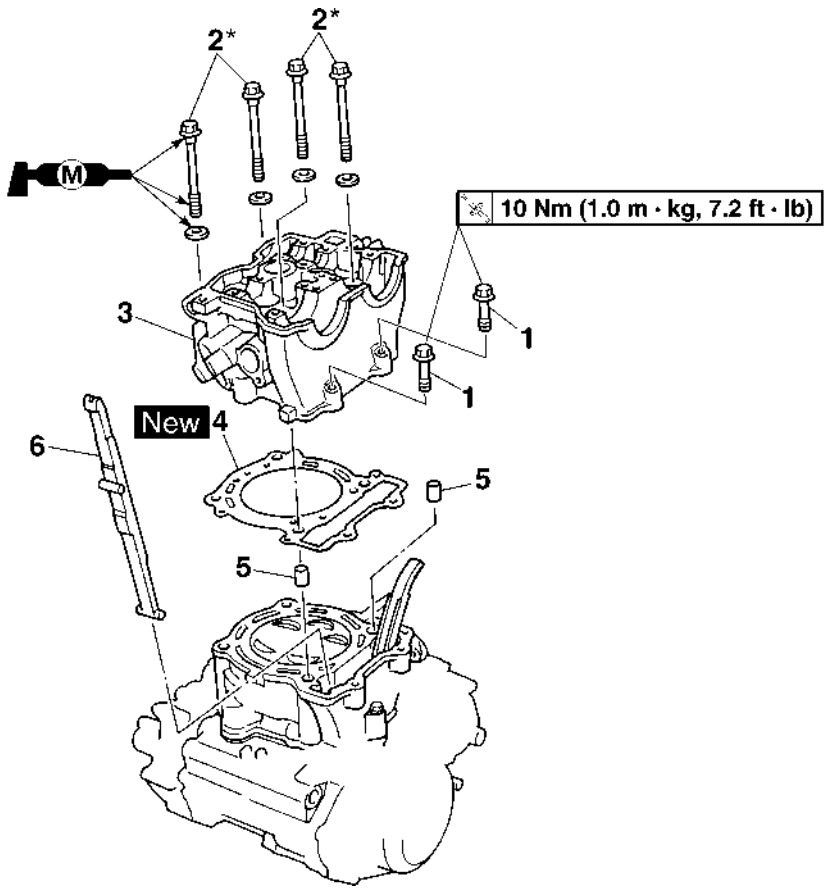

Extent of removal: ① Cylinder head removal

Extent of removal	Order	Part name	Q'ty	Remarks
		CYLINDER HEAD REMOVAL		
Preparation for removal		Seat and fuel tank		Refer to "SEAT, FUEL TANK AND SIDE COVERS" section.
		Exhaust pipe and silencer		Refer to "EXHAUST PIPE AND SILENCER" section.
		Radiator		Refer to "RADIATOR" section.
		Carburetor		Refer to "CARBURETOR" section.
		Camshaft		Refer to "CAMSHAFTS" section.
①	1	Bolt	2	Refer to NOTE.
	2*	Bolt	4	
	3	Cylinder head	1	
	4	Gasket	1	
	5	Dowel pin	2	
	6	Timing chain guide (front)	1	

NOTE:

Tighten the cylinder head bolts to 30 Nm (3.0 m • kg, 22 ft • lb) in the proper tightening sequence, remove and retighten the cylinder head bolts to 20 Nm (2.0 m • kg, 14 ft • lb) in the proper tightening sequence, and then tighten the cylinder head bolts further to reach the specified angle 180° in the proper tightening sequence.

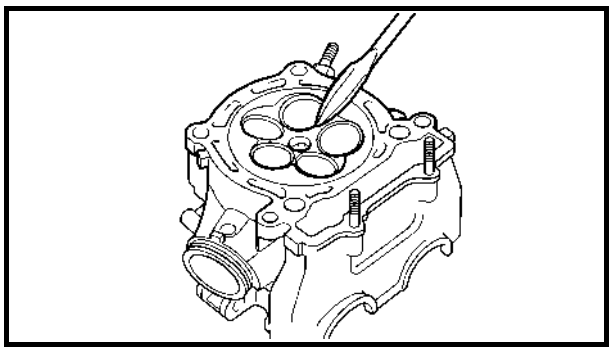

INSPECTION

Cylinder head

1. Eliminate:
   - Carbon deposits (from the combustion chambers)
     Use a rounded scraper.

NOTE:
Do not use a sharp instrument to avoid damaging or scratching:
- Spark plug threads
- Valve seats

2. Inspect:
   - Cylinder head
     Scratches/damage → Replace.

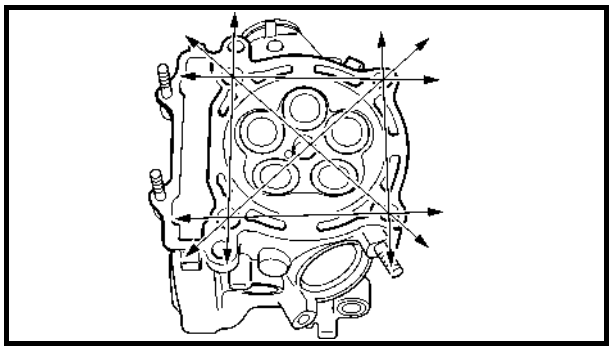

3. Measure:
   - Cylinder head warpage
     Out of specification → Resurface.

Cylinder head warpage:
Less than 0.05 mm (0.002 in)

Warpage measurement and re-surfacement steps:
- Place a straightedge and a feeler gauge across the cylinder head.
- Use a feeler gauge to measure the warpage.
- If the warpage is out of specification, resurface the cylinder head.
- Place a 400 ~ 600 grit wet sandpaper on the surface plate, and resurface the head using a figure-eight sanding pattern.

NOTE:
To ensure an even surface rotate the cylinder head several times.

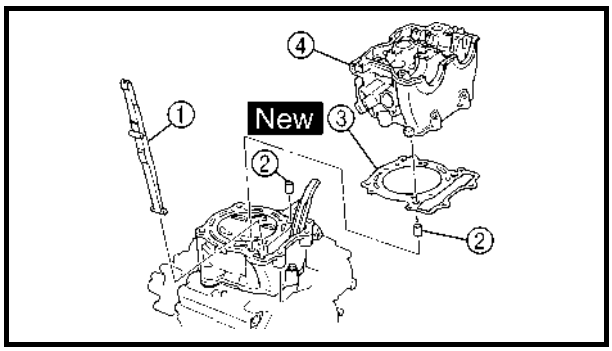

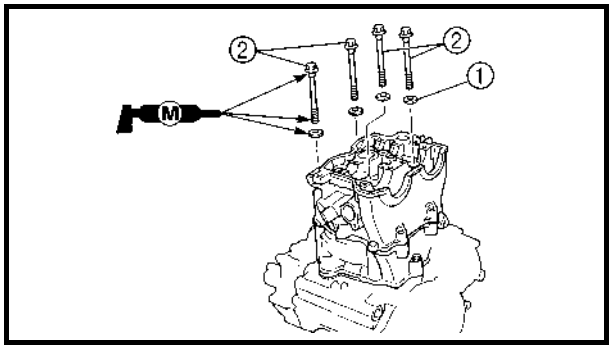

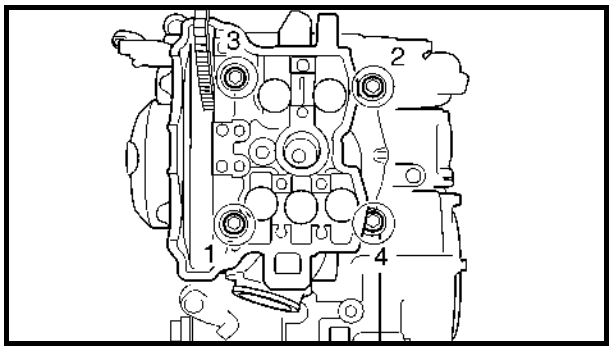

ASSEMBLY AND INSTALLATION

1. Install:
   - Timing chain guide (front) ①
   - Dowel pin ②
   - Cylinder head gasket ③ New
   - Cylinder head ④

NOTE:
While pulling up the timing chain, install the timing chain guide (front) and cylinder head.

2. Install:
   - Plain washer ①
   - Bolt ②

Installation steps:

CAUTION:
Tighten the cylinder head using the rotation angle procedure to obtain uniform tightening torque.

- Wash the threads and contact surfaces of the bolts, the contact surfaces of the plain washers, the contact surface of the cylinder head, and the threads of the crankcase.
- Apply the molybdenum disulfide grease on the threads and contact surfaces of the bolts and on both contact surfaces of the plain washers.
- Install the plain washers and bolts.
- Tighten the bolts to the specified torque in two or three steps in the proper tightening sequence as shown.

Bolts (cylinder head):
1st:
30 Nm (3.0 m • kg, 22 ft • lb)

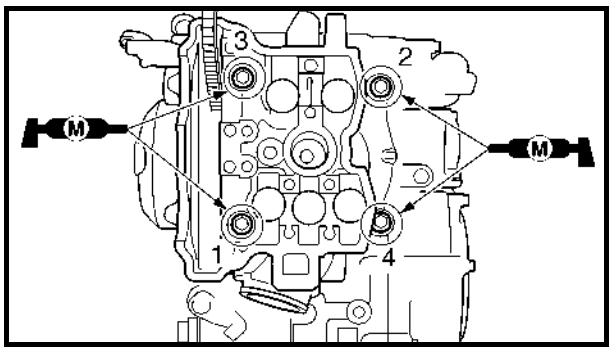

- Remove the bolts.
- Again apply the molybdenum disulfide grease on the threads and contact surfaces of the bolts and on both contact surfaces of the plain washers.
- Retighten the bolts.

NOTE:
Tighten the bolts to the specified torque in two or three steps in the proper tightening sequence as shown.

Bolts (cylinder head):
2nd:
20 Nm (2.0 m • kg, 14 ft • lb)

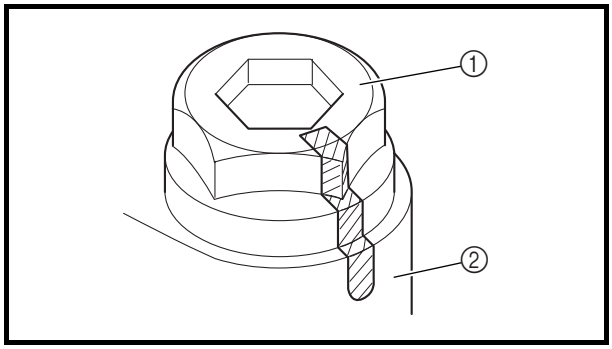

- Put a mark on the corner ① of the bolt (cylinder head) and the cylinder head ② as shown.

NOTE:
Tighten the bolts 90° in each of the two steps to reach the specified angle of 180° in the proper tightening sequence as shown.

Bolts (cylinder head):
Final:
Specified angle 180°

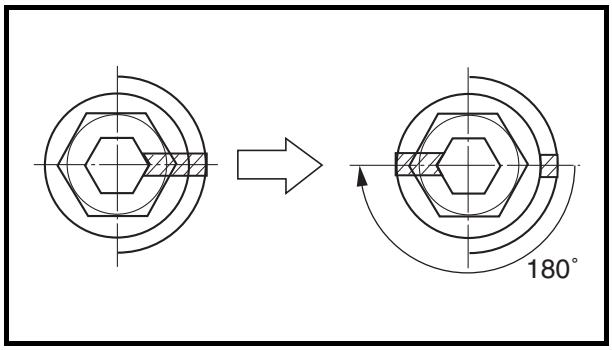

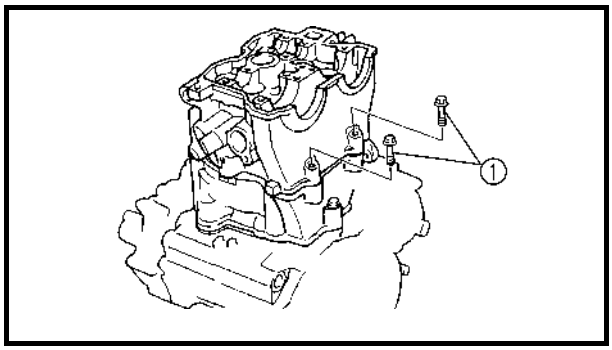

3. Install:
   - Bolt (cylinder head) ①

10 Nm (1.0 m · kg, 7.2 ft · lb)

VALVES AND VALVE SPRINGS

VALVES AND VALVE SPRINGS

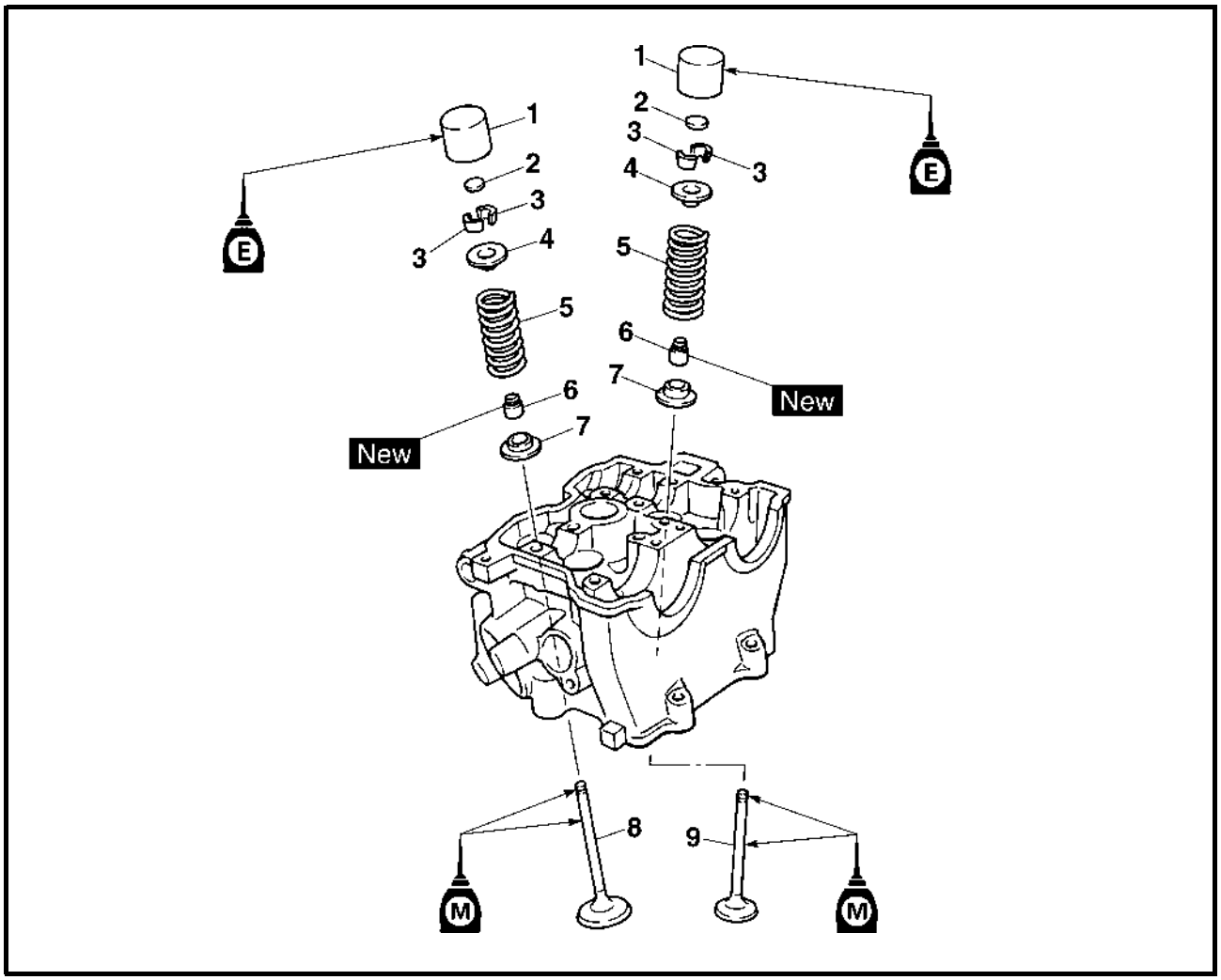

Extent of removal: ① Valve removal

Extent of removal	Order	Part name	Q'ty	Remarks
		VALVES AND VALVE SPRINGS REMOVAL		
Preparation for removal		Cylinder head		Refer to "CYLINDER HEAD" section.
①	1	Valve lifter	5	Use special tool. Refer to "REMOVAL POINTS".
	2	Adjusting pad	5	
	3	Valve cotter	10	
	4	Valve retainer	5	
	5	Valve spring	5	
	6	Stem seal	5	
	7	Valve spring seat	5	
	8	Exhaust valve	2	
	9	Intake valve	3	

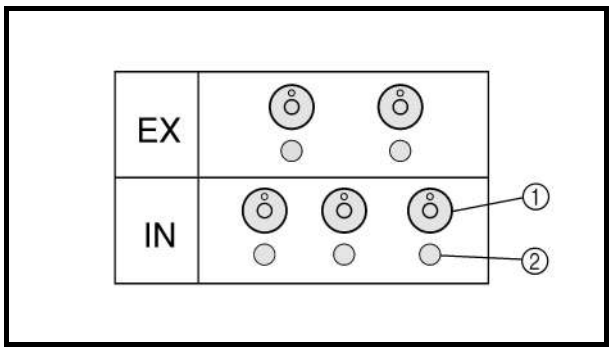

REMOVAL POINTS

Valve lifter and valve cotter

1. Remove:
   - Valve lifters ①
   - Pads ②

NOTE:
Identify each lifter ① and pad ② position very carefully so that they can be reinstalled in their original place.

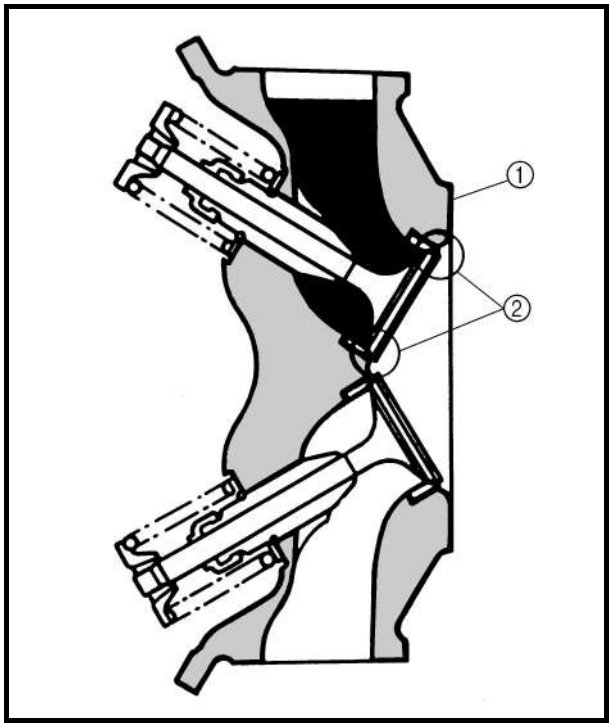

2. Check:
   - Valve sealing
     Leakage at the valve seat → Inspect the valve face, valve seat and valve seat width.

Checking steps:
- Pour a clean solvent ① into the intake and exhaust ports.
- Check that the valve seals properly.
  There should be no leakage at the valve seat ②.

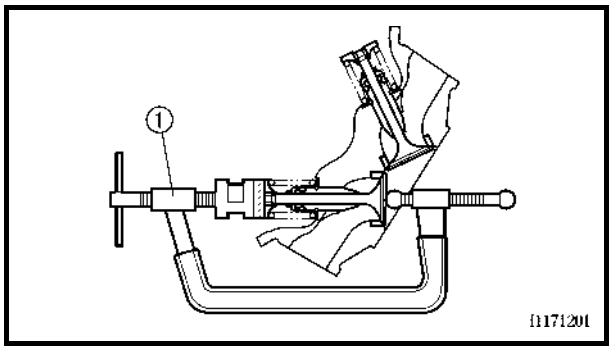

3. Remove:
   - Valve cotters

NOTE:
Attach a valve spring compressor ① between the valve spring retainer and the cylinder head to remove the valve cotters.

Valve spring compressor:
YM-4019/90890-04019

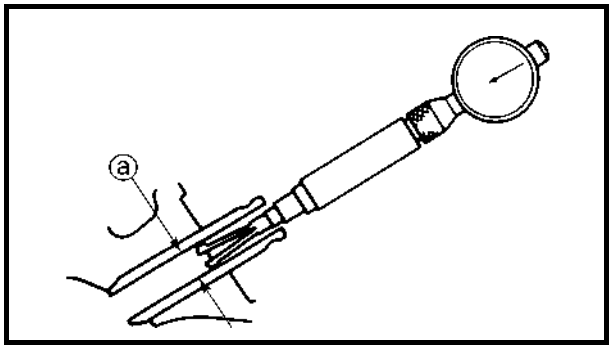

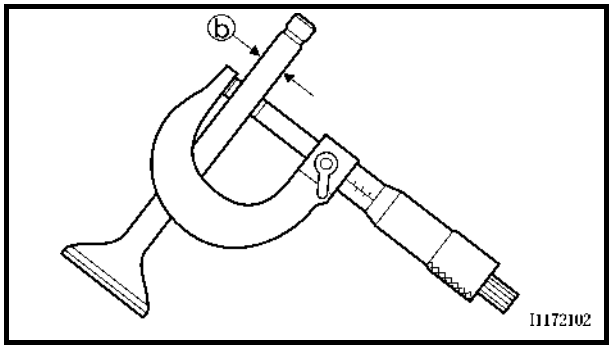

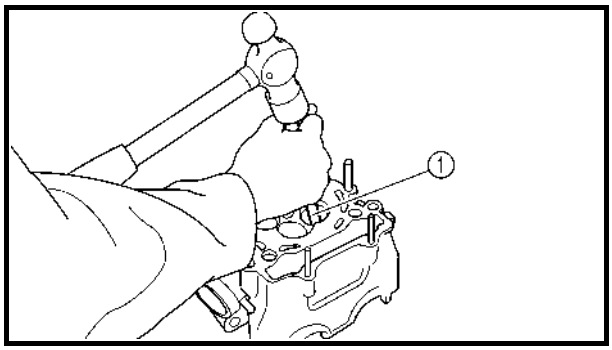

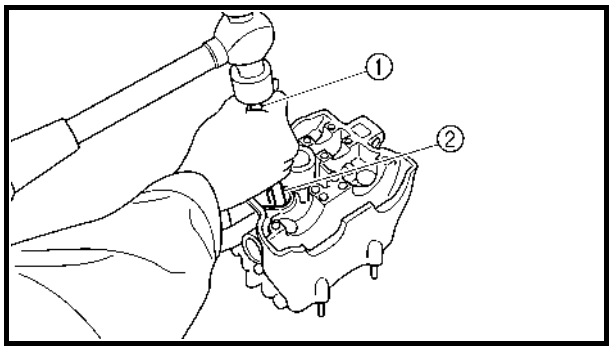

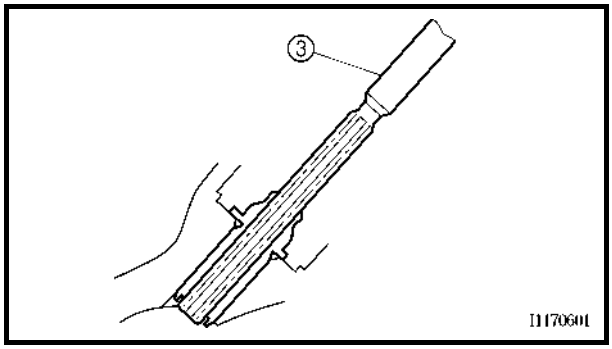

INSPECTION

Valve

1. Measure:
   - Stem-to-guide clearance

Stem-to-guide clearance =
valve guide inside diameter ⓐ –
valve stem diameter ⓑ

Out of specification → Replace the valve guide.

Clearance (stem to guide):
Intake:
0.010 ~ 0.037 mm
(0.0004 ~ 0.0015 in)
<Limit>: 0.08 mm (0.003 in)
Exhaust:
0.020 ~ 0.047 mm
(0.0008 ~ 0.0019 in)
<Limit>: 0.10 mm (0.004 in)

2. Replace:
   - Valve guide

Replacement steps:

NOTE:
To ease guide removal, installation and to maintain correct fit heat the cylinder head in an over to 100 °C (212 °F).

- Remove the valve guide using a valve guide remover ①.
- Install the new valve guide using a valve guide remover ① and valve guide installer ②.
- After installing the valve guide, bore the valve guide using a valve guide reamer ③ to obtain proper stem-to-guide clearance.

Valve guide remover:
Intake: 4.5 mm (0.18 in)
YM-4116/90890-04116
Exhaust: 5.0 mm (0.20 in)
YM-4097/90890-04097
Valve guide installer:
Intake:
YM-4117/90890-04117
Exhaust:
YM-4098/90890-04098
Valve guide reamer:
Intake: 4.5 mm (0.18 in)
YM-4118/90890-04118
Exhaust: 5.0 mm (0.20 in)
YM-4099/90890-04099

NOTE:
After replacing the valve guide reface the valve seat.

3. Inspect:
   - Valve face
     Pitting/wear → Grind the face.
   - Valve stem end
     Mushroom shape or diameter larger than the body of the stem → Replace.

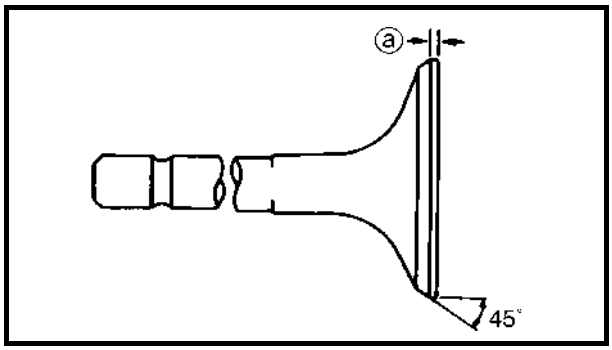

4. Measure:
   - Margin thickness ⓐ
     Out of specification → Replace.

Margin thickness:
Intake:
1.0 mm (0.039 in)
<Limit>: 0.85 mm (0.033 in)
Exhaust:
1.0 mm (0.039 in)
<Limit>: 0.85 mm (0.033 in)

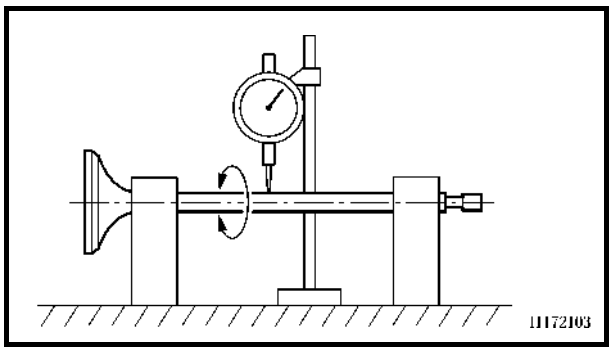

5. Measure:
   - Runout (valve stem)
     Out of specification → Replace.

Runout limit:
0.01 mm (0.0004 in)

NOTE:
- When installing a new valve always replace the guide.
- If the valve is removed or replaced always replace the oil seal.

6. Eliminate:
   - Carbon deposits
     (from the valve face and valve seat)
7. Inspect:
   - Valve seats
     Pitting/wear → Reface the valve seat.

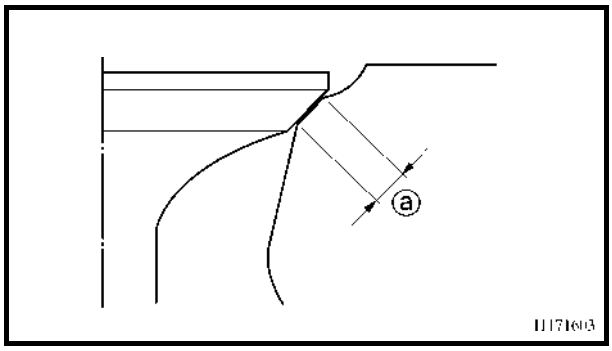

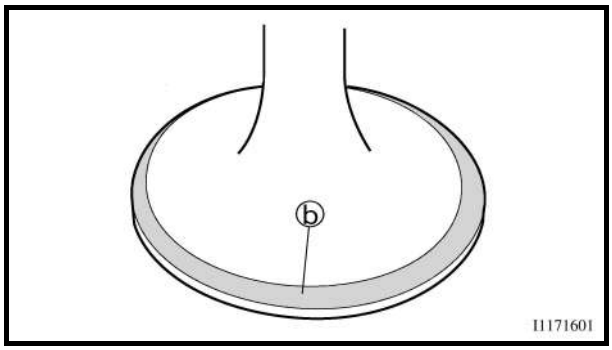

8. Measure:
   - Valve seat width ⓐ
     Out of specification → Reface the valve seat.

Valve seat width:
Intake:
0.9 ~ 1.1 mm (0.0354 ~ 0.0433 in)
<Limit>: 1.6 mm (0.0630 in)
Exhaust:
0.9 ~ 1.1 mm (0.0354 ~ 0.0433 in)
<Limit>: 1.6 mm (0.0630 in)

Measurement steps:
- Apply Mechanic's blueing dye (Dykem) ⓑ to the valve face.
- Install the valve into the cylinder head.
- Press the valve through the valve guide and onto the valve seat to make a clear pattern.
- Measure the valve seat width. Where the valve seat and valve face made contact, blueing will have been removed.
- If the valve seat is too wide, too narrow, or the seat is not centered, the valve seat must be refaced.

9. Lap:
   - Valve face
   - Valve seat

NOTE:
After refacing the valve seat or replacing the valve and valve guide, the valve seat and valve face should be lapped.

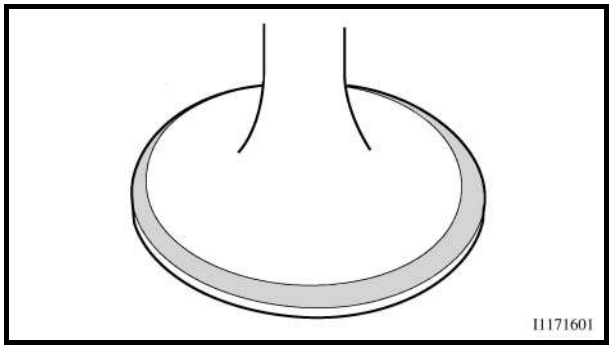

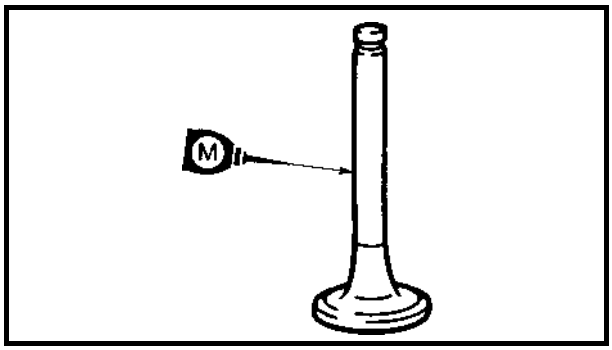

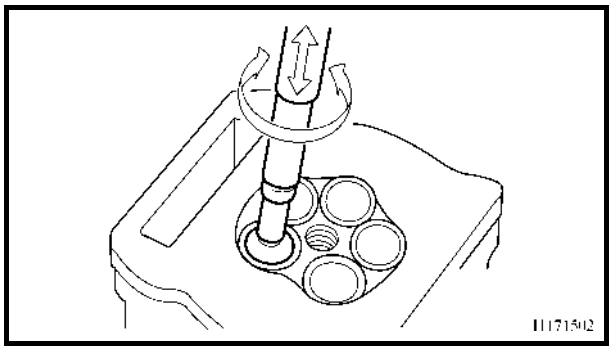

Lapping steps:
- Apply a coarse lapping compound to the valve face.

CAUTION:
Do not let the compound enter the gap between the valve stem and the guide.

- Apply molybdenum disulfide oil to the valve stem.
- Install the valve into the cylinder head.
- Turn the valve until the valve face and valve seat are evenly polished, then clean off all of the compound.

NOTE:
For best lapping results, lightly tap the valve seat while rotating the valve back and forth between your hands.

- Apply a fine lapping compound to the valve face and repeat the above steps.

NOTE:
After every lapping operation be sure to clean off all of the compound from the valve face and valve seat.

- Apply Mechanic's blueing dye (Dykem) to the valve face.
- Install the valve into the cylinder head.
- Press the valve through the valve guide and onto the valve seat to make a clear pattern.
- Measure the valve seat width again. If the valve seat width is out of specification, reface and relap the valve seat.

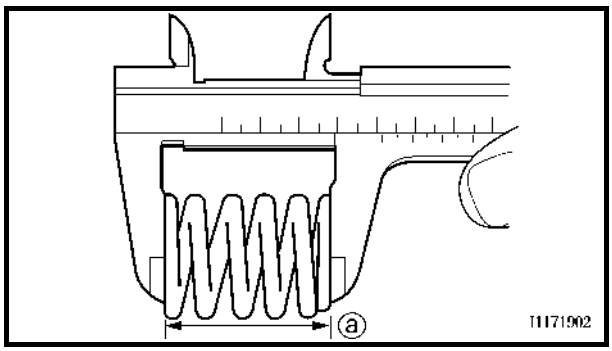

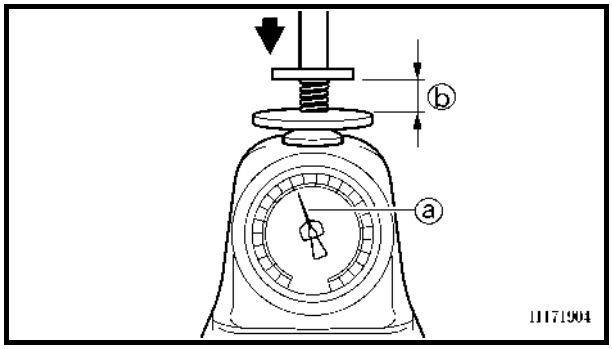

Valve spring

1. Measure:
   - Valve spring free length ⓐ
     Out of specification → Replace.

Free length (valve spring):
Intake:
37.03 mm (1.46 in)
<Limit>: 36.03 mm (1.42 in)
Exhaust:
37.68 mm (1.48 in)
<Limit>: 36.68 mm (1.44 in)

2. Measure:
   - Compressed spring force ⓐ
     Out of specification → Replace.

ⓑ Installed length

Compressed spring force:
Intake:
111.3 ~ 127.9 N at 27.87 mm (11.3 ~ 13.0 kg at 27.87 mm, 24.91 ~ 28.66 lb at 1.10 in)
Exhaust:
127.4 ~ 146.4 N at 27.38 mm (13.0 ~ 14.9 kg at 27.38 mm, 28.66 ~ 32.85 lb at 1.08 in)

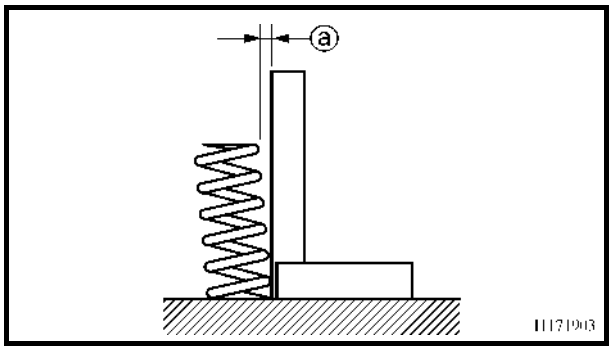

3. Measure:
   - Spring tilt ⓐ
     Out of specification → Replace.

Spring tilt limit:
Intake:
2.5°/1.61 mm (0.063 in)
Exhaust:
2.5°/1.65 mm (0.065 in)

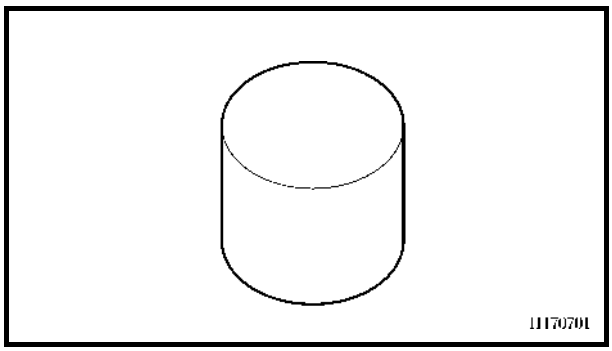

Valve lifter

1. Inspect:
   - Valve lifter
     Scratches/damage → Replace both lifters and cylinder head.

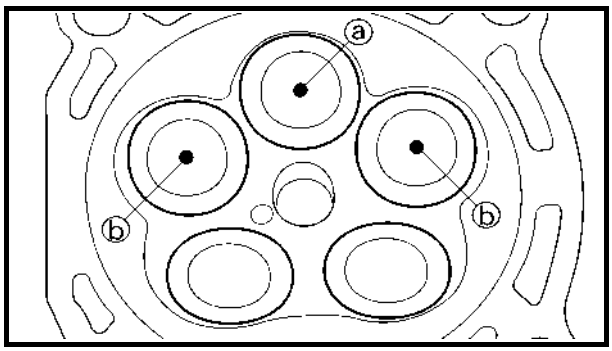

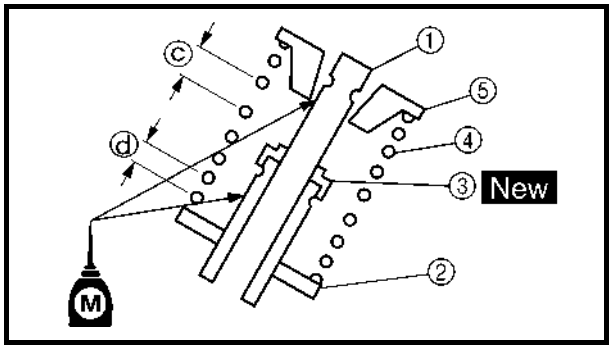

ASSEMBLY AND INSTALLATION

1. Apply:
   - Molybdenum disulfide oil
     Onto the valve stem and valve stem seal.
2. Install:
   - Valves ①
   - Valve spring seats ②
   - Valve stem seals ③ New
   - Valve springs ④
   - Valve spring retainers ⑤

NOTE:

- Make sure that each valve is installed in its original place, also referring to the painted color as follows.
  Intake (middle) ⓐ: blue
  Intake (right/left) ⓑ: gray
  Exhaust: not paint
- Install the valve springs with the larger pitch ⓒ facing upward.

ⓓ Smaller pitch

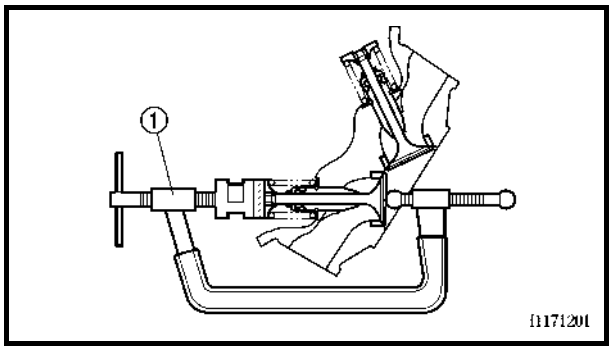

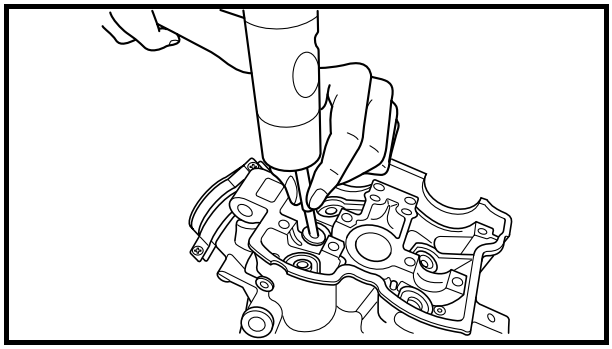

3. Install:
   - Valve cotters

NOTE:

While compressing the valve spring with a valve spring compressor ① install the valve cotters.

Valve spring compressor:
YM-4019/90890-04019

4. To secure the valve cotters onto the valve stem, lightly tap the valve tip with a piece of wood.

CAUTION:

Hitting the valve tip with excessive force could damage the valve.

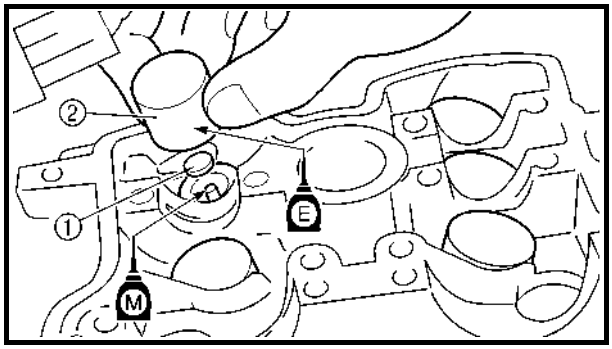

5. Install:
   - Adjusting pad ①
   - Valve lifter ②

NOTE:
- Apply the engine oil on the valve lifters.
- Apply the molybdenum disulfide oil on the valve stem end.
- Valve lifter must turn smoothly when rotated with a finger.
- Be careful to reinstall valve lifters and pads in their original place.

CYLINDER AND PISTON

CYLINDER AND PISTON

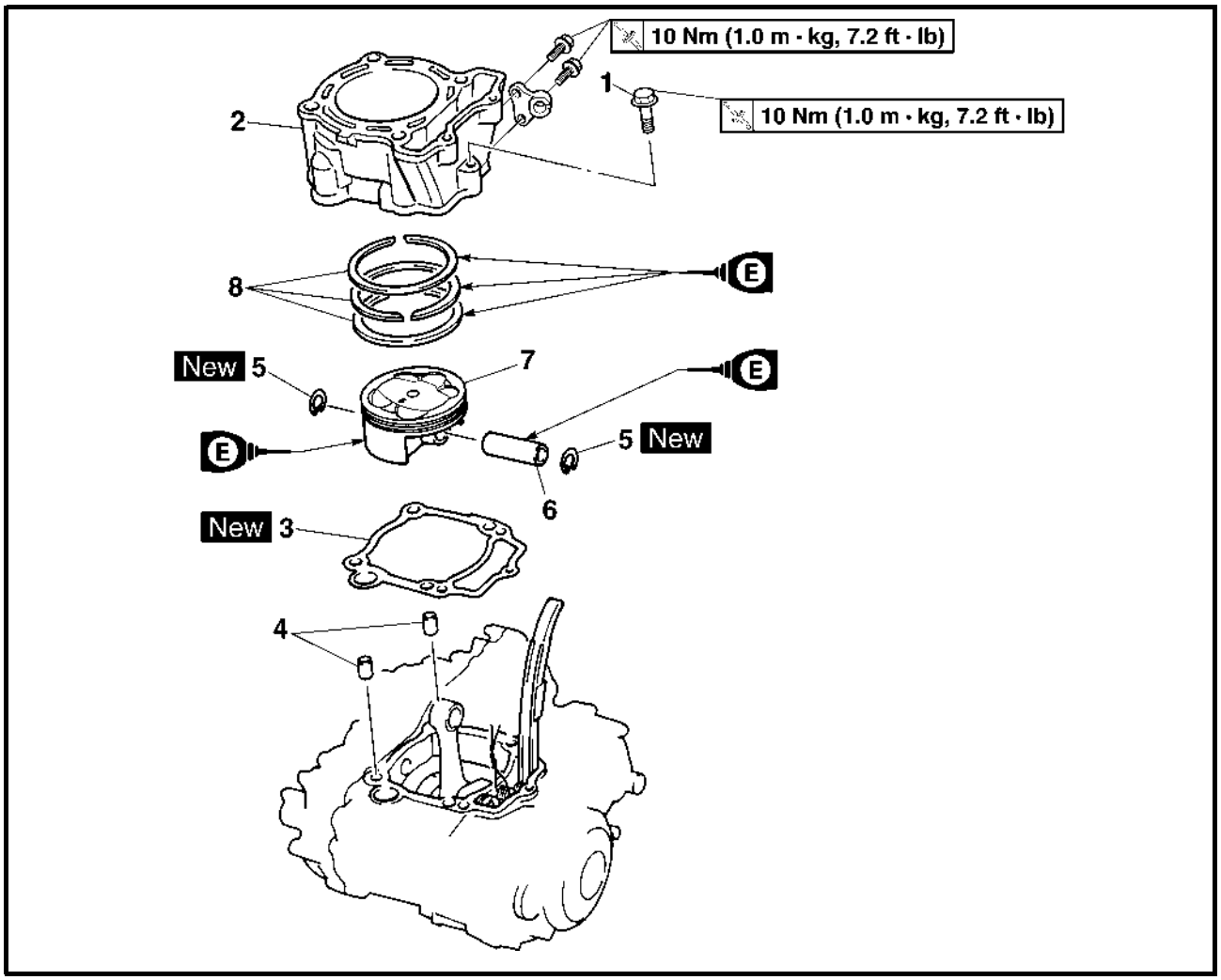

Extent of removal: ① Cylinder removal ② Piston removal

Extent of removal	Order	Part name	Q'ty	Remarks
		CYLINDER AND PISTON REMOVAL		
Preparation for removal		Cylinder head		Refer to "CYLINDER HEAD" section.
①	1	Bolt (cylinder)	1	
	2	Cylinder	1	
	3	Gasket	1	
	4	Dowel pin	2	
②	5	Piston pin clip	2	
	6	Piston pin	1	Use special tool.
	7	Piston	1	Refer to "REMOVAL POINTS".
	8	Piston ring set	1	

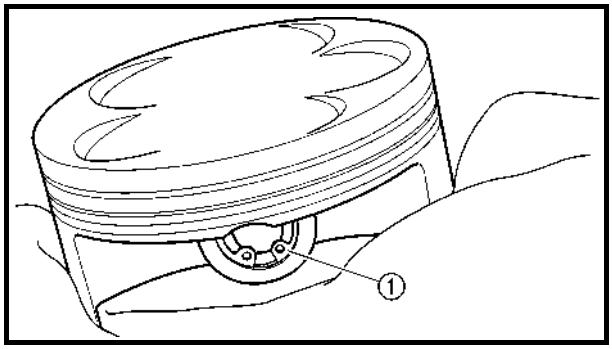

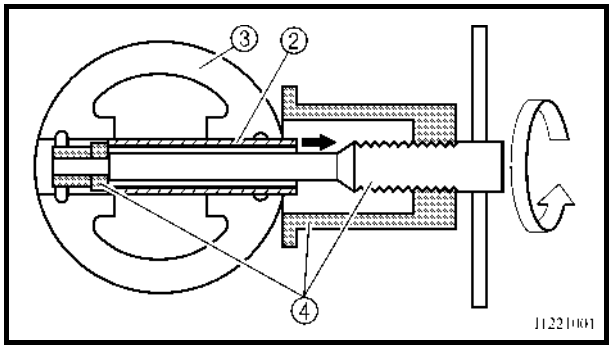

REMOVAL POINTS

Piston

1. Remove:
   - Piston pin clips ①
   - Piston pin ②
   - Piston ③

NOTE:

- Put identification marks on each piston head for reference during reinstallation.
- Before removing each piston pin, deburr the clip groove and pin hole area. If the piston pin groove is deburred and the piston pin is still difficult to remove, use the piston pin puller ④.

Piston pin puller:
YU-1304/90890-01304

CAUTION:

Do not use a hammer to drive the piston pin out.

Piston ring

1. Remove:
   - Piston rings

NOTE:

Spread the end gaps apart while at the same time lifting the piston ring over the top of the piston crown, as shown in the illustration.

INSPECTION

Cylinder and piston

1. Inspect:
   - Cylinder and piston walls
     Vertical scratches → Replace cylinder and piston.
2. Measure:
   - Piston-to-cylinder clearance

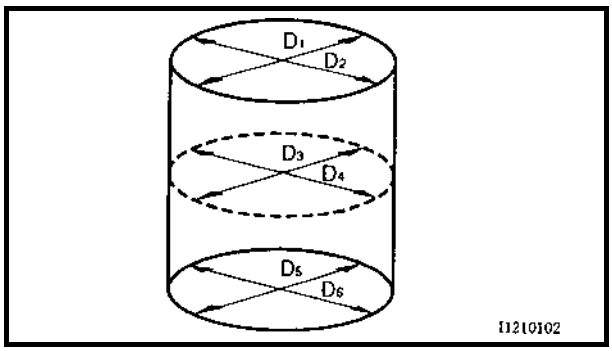

Measurement steps:

1st step:

- Measure the cylinder bore “C” with a cylinder bore gauge.

NOTE:

Measure the cylinder bore “C” in parallel to and at right angles to the crankshaft. Then, find the average of the measurements.

Cylinder bore "C"	**95.00 ~ 95.01 mm (3.7402 ~ 3.7406 in)**
Taper limit "T"	**0.05 mm (0.002 in)**
Out of round "R"	**0.05 mm (0.002 in)**

"C" = Maximum D

"T" = (Maximum D_1 or D_2) – (Maximum D_5 or D_6)

"R" = (Maximum D_1, D_3 or D_5) – (Minimum D_2, D_4 or D_6)

- If out of specification, replace the cylinder, and replace the piston and piston rings as set.

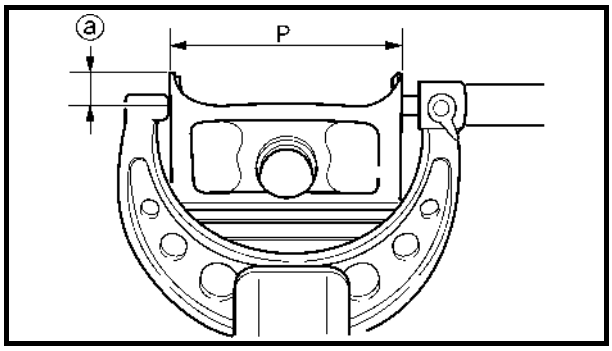

2nd step:

- Measure the piston skirt diameter "P" with a micrometer.

ⓐ 8 mm (0.315 in) from the piston bottom edge

	Piston size "P"
Standard	**94.945 ~ 94.960 mm (3.738 ~ 3.739 in)**

- If out of specification, replace the piston and piston rings as a set.

3rd step:

- Calculate the piston-to-cylinder clearance with following formula:

Piston-to-cylinder clearance = Cylinder bore "C" – Piston skirt diameter "P"

Piston-to-cylinder clearance: 0.040 ~ 0.065 mm (0.0016 ~ 0.0026 in) <Limit>: 0.1 mm (0.004 in)

- If out of specification, replace the cylinder, and replace the piston and piston rings as set.

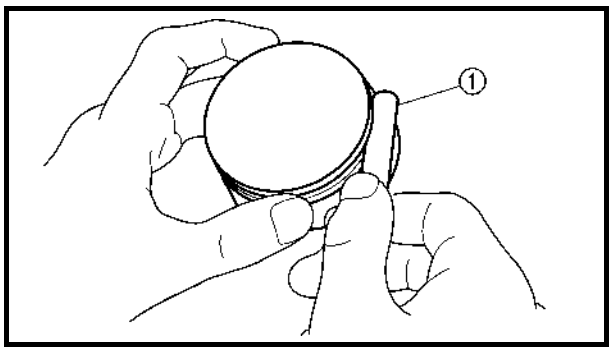

Piston ring

1. Measure:
   - Ring side clearance
     Use a feeler gauge ①.
     Out of specification → Replace the piston and rings as a set.

NOTE:
Clean carbon from the piston ring grooves and rings before measuring the side clearance.

	Side clearance:	
	Standard	**<Limit>**
Top ring	**0.030 ~ 0.065 mm (0.0012 ~ 0.0026 in)**	**0.12 mm (0.005 in)**
2nd ring	**0.020 ~ 0.055 mm (0.0008 ~ 0.0022 in)**	**0.12 mm (0.005 in)**

2. Position:
   - Piston ring
     (in cylinder)

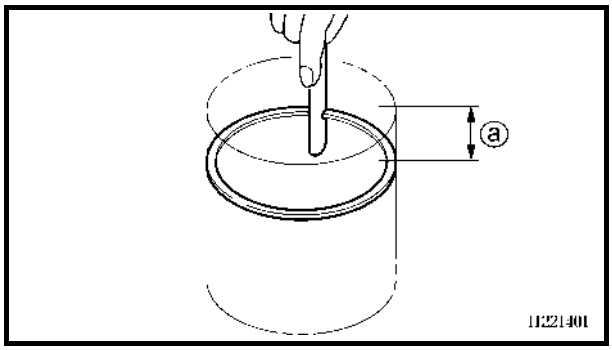

NOTE:
Insert a ring into the cylinder and push it approximately 10 mm (0.39 in) into the cylinder. Push the ring with the piston crown so that the ring will be at a right angle to the cylinder bore.

ⓐ 10 mm (0.39 in)

3. Measure:
   - Ring end gap
     Out of specification → Replace.

NOTE:
You cannot measure the end gap on the expander spacer of the oil control ring. If the oil control ring rails show excessive gap, replace all three rings.

	End gap:	
	Standard	**<Limit>**
Top ring	**0.20 ~ 0.30 mm (0.008 ~ 0.012 in)**	**0.55 mm (0.022 in)**
2nd ring	**0.35 ~ 0.50 mm (0.014 ~ 0.020 in)**	**0.85 mm (0.033 in)**
Oil ring	**0.20 ~ 0.50 mm (0.01 ~ 0.02 in)**	**—**

Piston pin

1. Inspect:
   - Piston pin
     Blue discoloration/grooves → Replace, then inspect the lubrication system.
2. Measure:
   - Piston pin-to-piston clearance

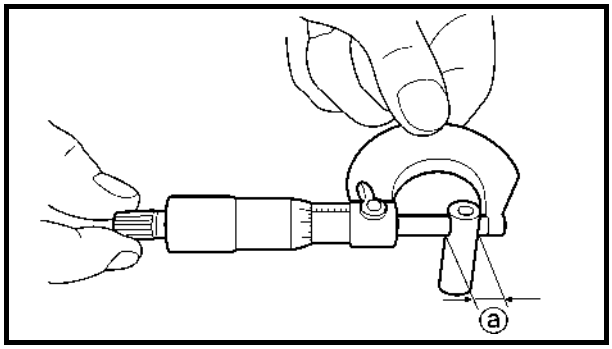

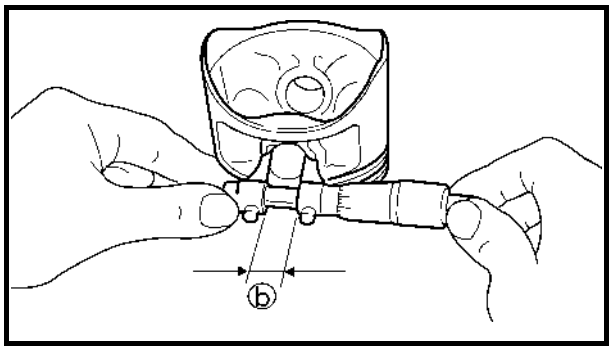

Measurement steps:

- Measure the outside diameter (piston pin) ⓐ.
  If out of specification, replace the piston pin.

Outside diameter (piston pin):
17.991 ~ 18.000 mm
(0.7083 ~ 0.7087 in)

- Measure the inside diameter (piston) ⓑ.

Inside diameter (piston):
18.004 ~ 18.015 mm
(0.7088 ~ 0.7093 in)

- Calculate the piston pin-to-piston clearance with the following formula.

Piston pin-to-piston clearance =
Inside diameter (piston) ⓑ –
Outside diameter (piston pin) ⓐ

- If out of specification, replace the piston.

Piston pin-to-piston clearance:
0.004 ~ 0.024 mm
(0.00016 ~ 0.00094 in)
<Limit>: 0.07 mm (0.003 in)

ASSEMBLY AND INSTALLATION

Piston

1. Install:
   - Piston rings
     Onto the piston.

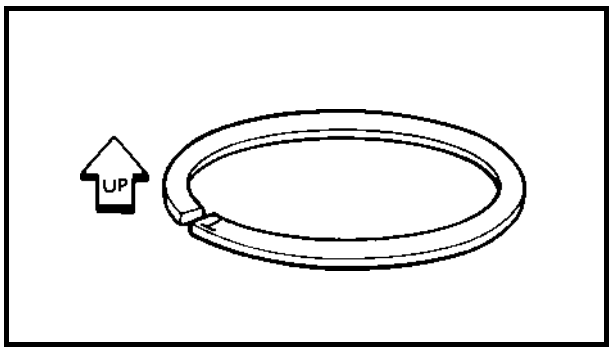

NOTE:

- Be sure to install the piston rings so that the manufacturer's marks or numbers are located on the upper side of the rings.
- Lubricate the piston and piston rings liberally with engine oil.

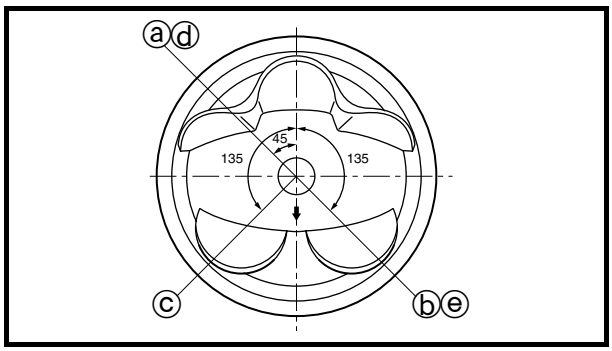

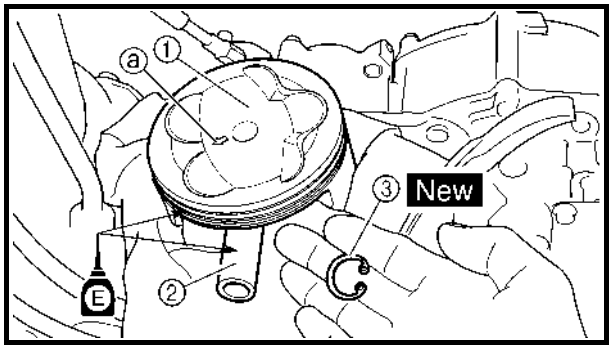

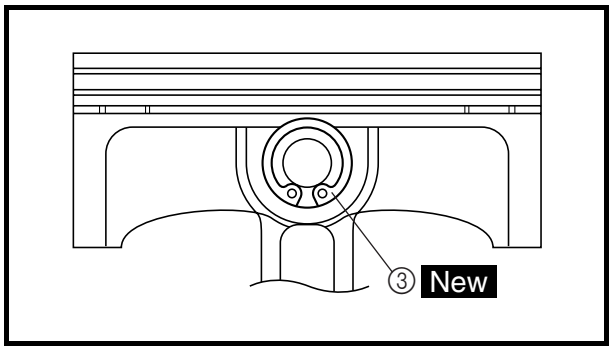

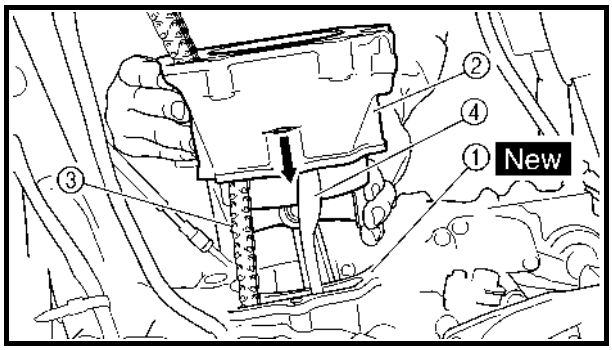

2. Position:
   - Top ring
   - 2nd ring
   - Oil ring

   Offset the piston ring end gaps as shown.

ⓐ Top ring end
ⓑ 2nd ring end
ⓒ Oil ring end (upper)
ⓓ Oil ring
ⓔ Oil ring end (lower)

3. Install:
   - Piston ①
   - Piston pin ②
   - Piston pin clips ③ New

NOTE:
- Apply engine oil onto the piston pin and piston.
- Be sure that the arrow mark ⓐ on the piston points to the exhaust side of the engine.
- Before installing the piston pin clip, cover the crankcase with a clean rag to prevent the piston pin clip from falling into the crankcase.
- Install the piston pin clips with their ends facing downward.

4. Lubricate:
   - Piston
   - Piston rings
   - Cylinder

NOTE:
Apply a liberal coating of engine oil.

Cylinder

1. Install:
   - Dowel pins
   - O-ring New
   - Gasket ① New
   - Cylinder ②

NOTE:
Install the cylinder with one hand while compressing the piston rings with the other hand.

CAUTION:
- **Pass the timing chain ③ through the timing chain cavity.**
- **Be careful not to damage the timing chain guide ④ during installation.**

2. Install:
   - Bolt (cylinder)

10 Nm (1.0 m · kg, 7.2 ft · lb)

CLUTCH
CLUTCH

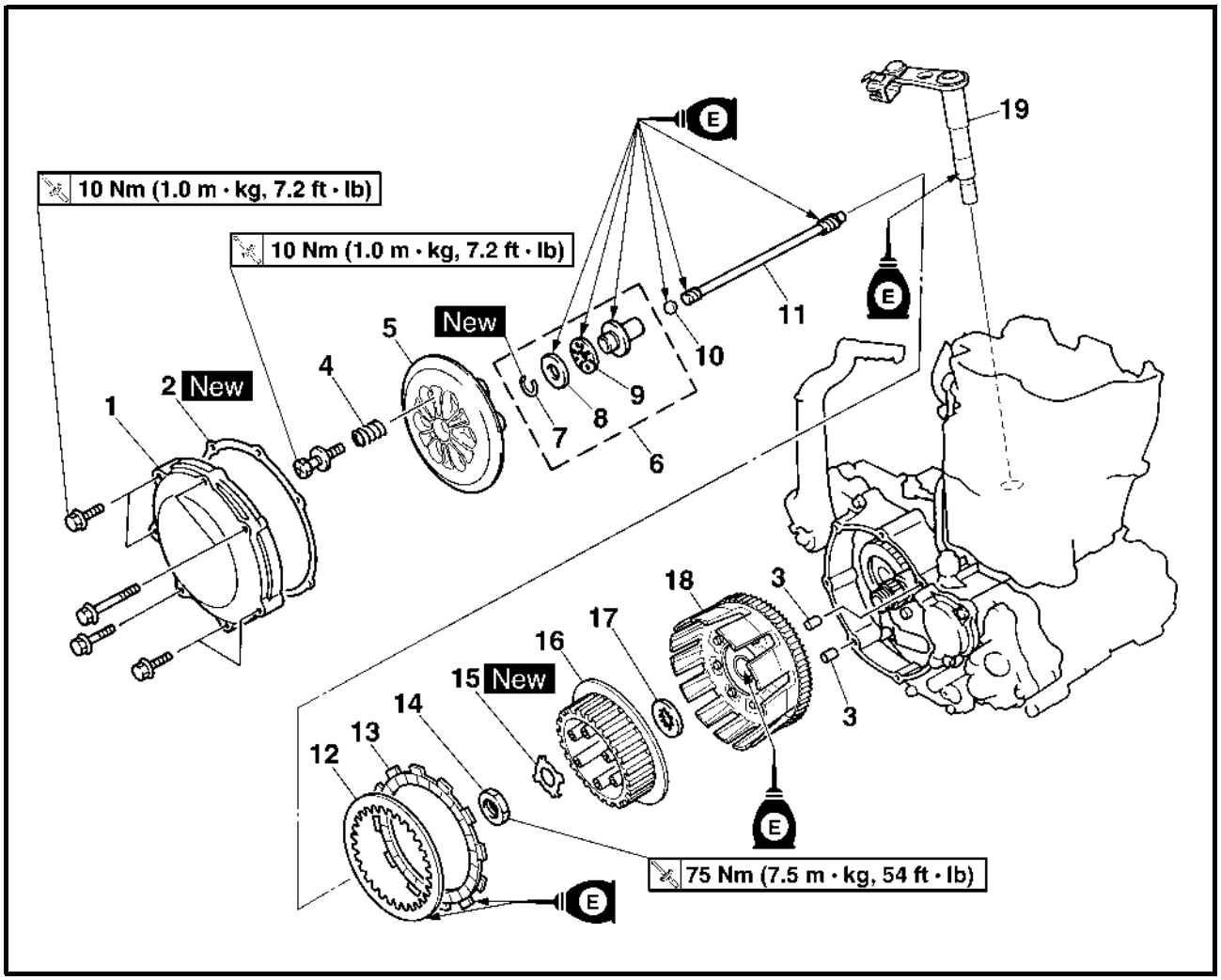

Extent of removal:
① Push rod and push lever removal
② Push rod 1 disassembly
③ Friction plate and clutch plate removal
④ Clutch housing removal

Extent of removal	Order	Part name	Q'ty	Remarks
		CLUTCH REMOVAL		
Preparation for removal		Drain the engine oil.		Refer to "ENGINE OIL REPLACEMENT" section in the CHAPTER 3.
		Brake pedal		Refer to "ENGINE REMOVAL" section.
		Clutch cable		Disconnect at engine side.
① ② ③ ④	1	Clutch cover	1	
	2	Gasket	1	
	3	Dowel pin	2	
	4	Clutch spring	6	
	5	Pressure plate	1	
	6	Push rod 1	1	
	7	Circlip	1	
	8	Plain washer	1	
	9	Bearing	1	
①	10	Ball	1	
	11	Push rod 2	1	

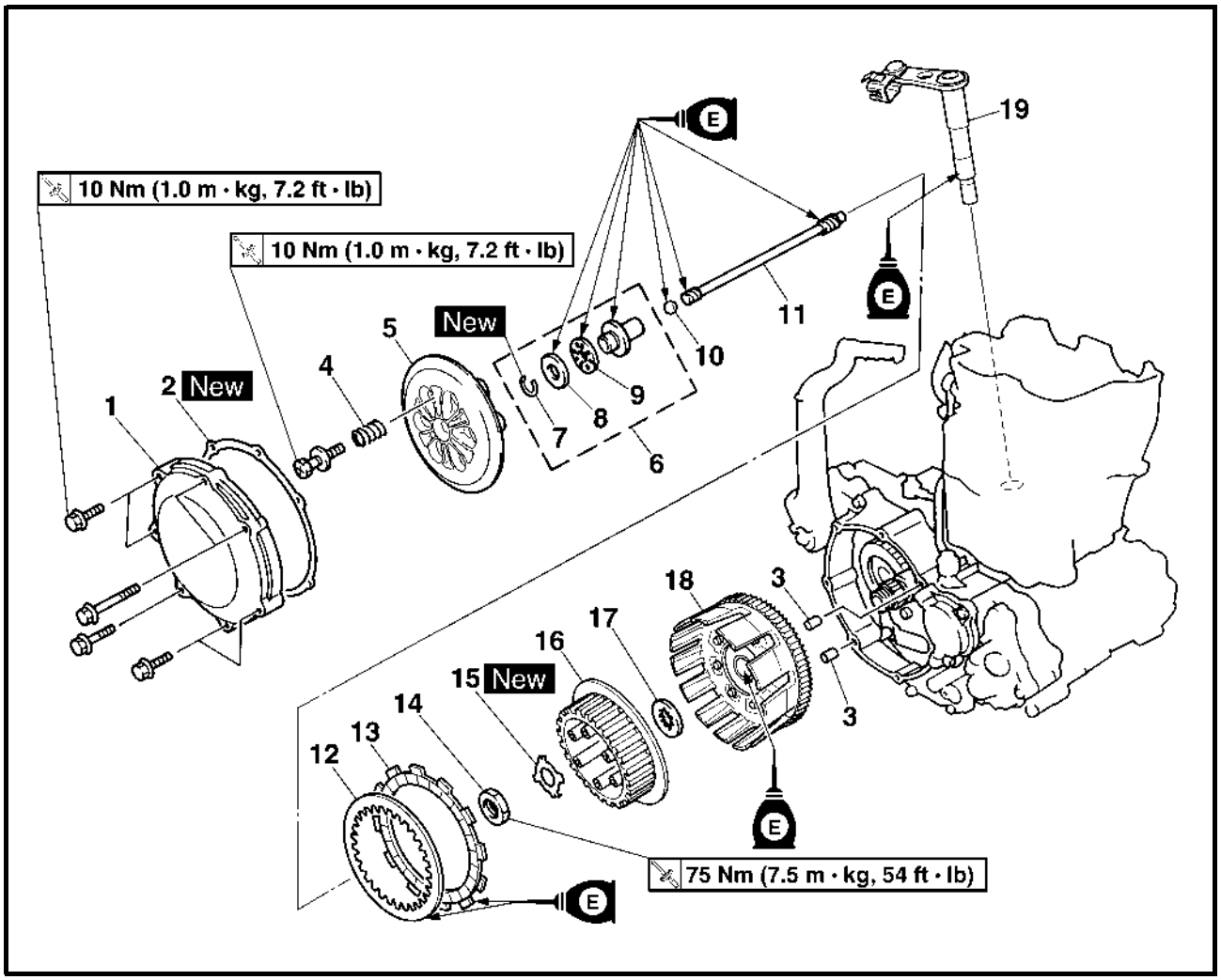

Extent of removal	Order	Part name	Q'ty	Remarks
	12	Clutch plate	8	
	13	Friction plate	9	
③	14	Nut	1	Use special tool. Refer to "REMOVAL POINTS".
④	15	Lock washer	1	
	16	Clutch boss	1	
	17	Thrust washer	1	
	18	Clutch housing	1	
①	19	Push lever	1	

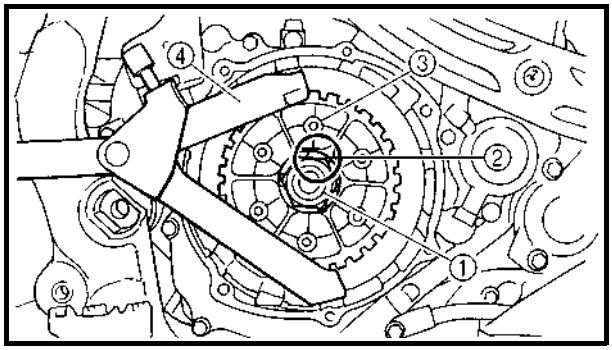

EC493000
REMOVAL POINTS

EC483211
Clutch boss

1. Remove:
   - Nut ①
   - Lock washer ②
   - Clutch boss ③

NOTE:
Straighten the lock washer tab and use the clutch holding tool ④ to hold the clutch boss.

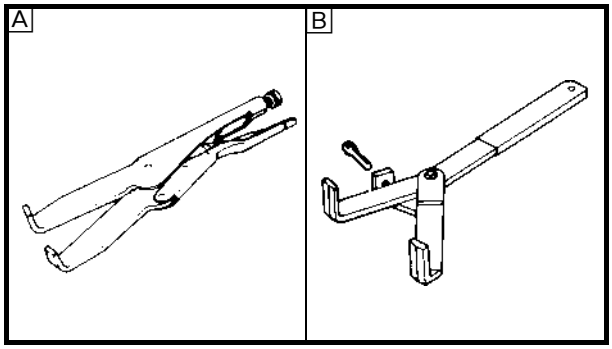

	Clutch holding tool: YM-91042/90890-04086

A For USA and CDN
B Except for USA and CDN

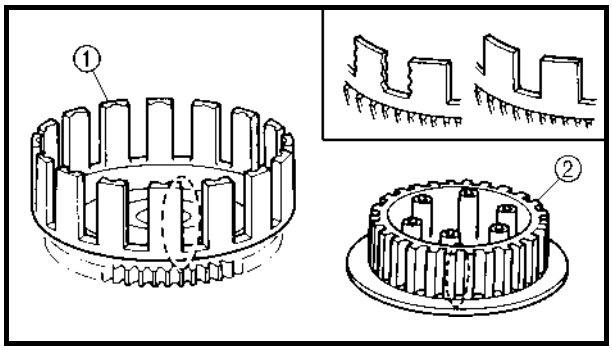

EC494000
INSPECTION

EC484100
Clutch housing and boss

1. Inspect:
   - Clutch housing ①
     Cracks/wear/damage → Replace.
   - Clutch boss ②
     Scoring/wear/damage → Replace.

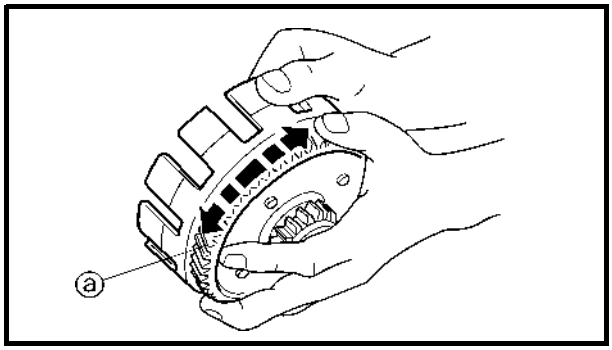

EC484201
Primary driven gear

1. Check:
   - Circumferential play
     Free play exists → Replace.
   - Gear teeth ⓐ
     Wear/damage → Replace.

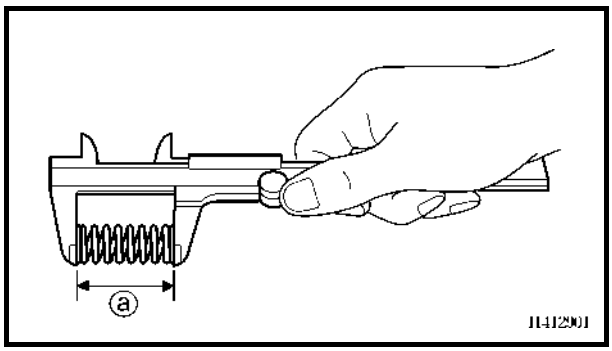

EC484400
Clutch spring

1. Measure:
   - Clutch spring free length ⓐ
     Out of specification → Replace springs as a set.

Clutch spring free length:	
Standard	**<Limit>**
47.8 mm (1.88 in)	**46.8 mm (1.84 in)**

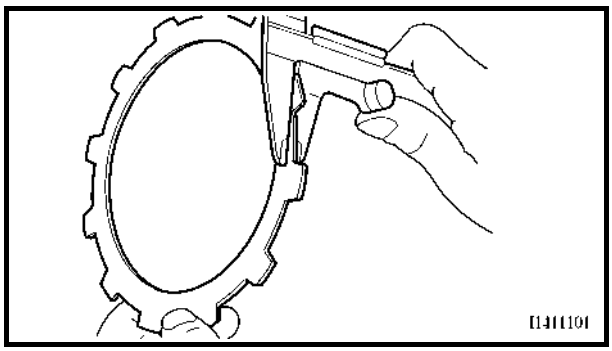

EC484500
Friction plate

1. Measure:
   - Friction plate thickness
     Out of specification → Replace friction plate as a set.
     Measure at all four points.

Friction plate thickness:
2.92 ~ 3.08 mm
(0.115 ~ 0.121 in)
<Limit>: 2.8 mm (0.110 in)

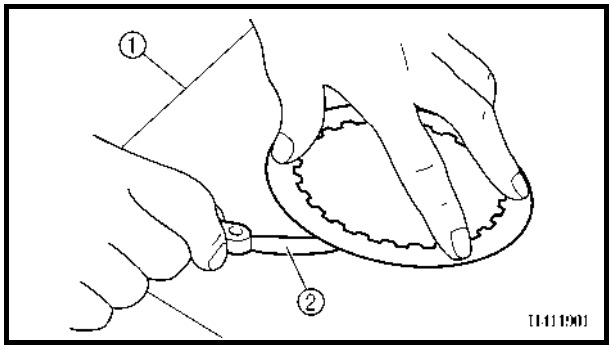

EC484600
Clutch plate

1. Measure:
   - Clutch plate warpage
     Out of specification → Replace clutch plate as a set.
     Use a surface plate ① and thickness gauge ②.

Warp limit:
0.1 mm (0.004 in)

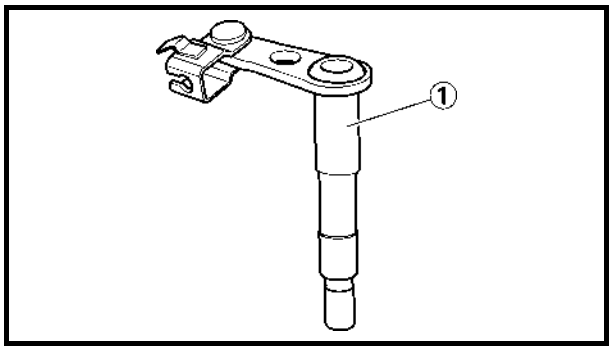

Push lever

1. Inspect:
   - Push lever ①
     Wear/damage → Replace.

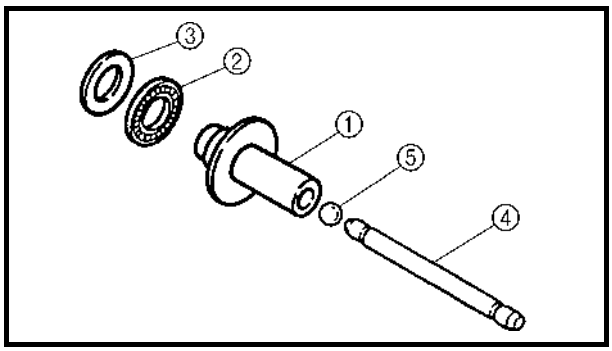

EC484810
Push rod

1. Inspect:
   - Push rod 1 ①
   - Bearing ②
   - Plain washer ③
   - Push rod 2 ④
   - Ball ⑤
     Wear/damage/bend → Replace.

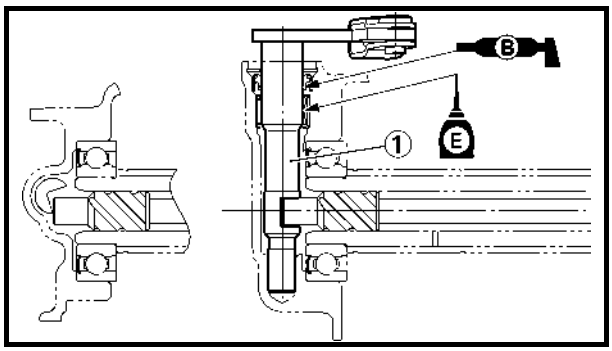

EC4A5000
ASSEMBLY AND INSTALLATION

Push lever

1. Install:
   - Push lever ①

NOTE:
- Apply the lithium soap base grease on the oil seal lip.
- Apply the engine oil on the push lever.

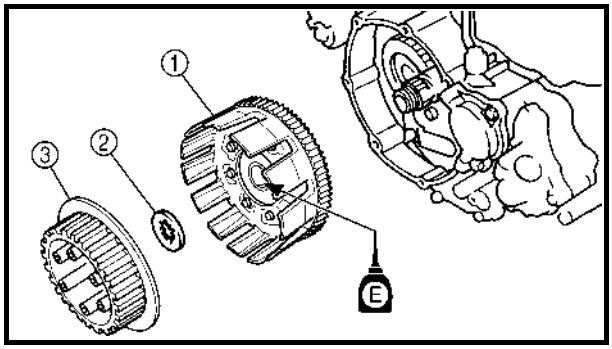

Clutch

1. Install:
   - Primary driven gear ①
   - Thrust washer ②
   - Clutch boss ③

NOTE:
Apply the engine oil on the primary driven gear inner circumference.

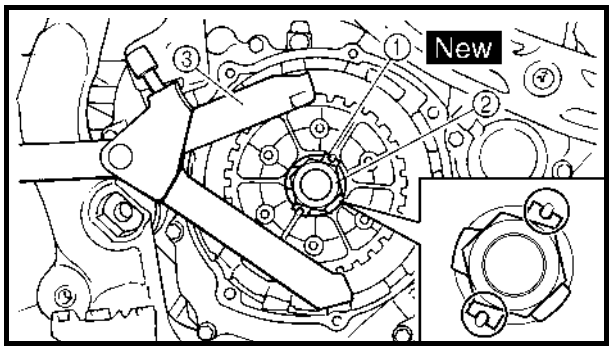

2. Install:
   - Lock washer ① New
   - Nut (clutch boss) ②

	75 Nm (7.5 m · kg, 54 ft · lb)

NOTE:
- Install the lock washer with its concaves fitted over the convexes of the clutch boss.
- Use the clutch holding tool ③ to hold the clutch boss.

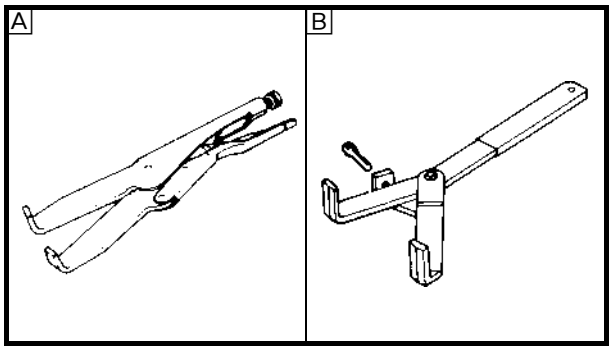

	Clutch holding tool: **YM-91042/90890-04086**

A For USA and CDN
B Except for USA and CDN

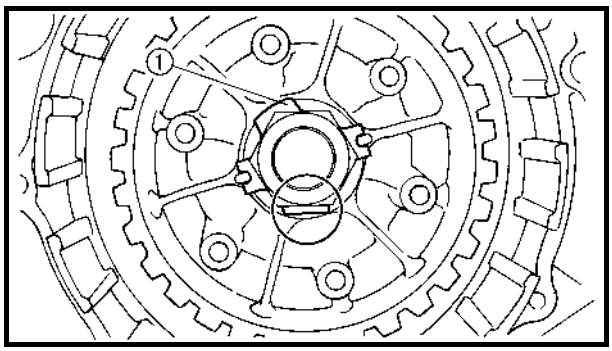

3. Bend the lock washer ① tab.

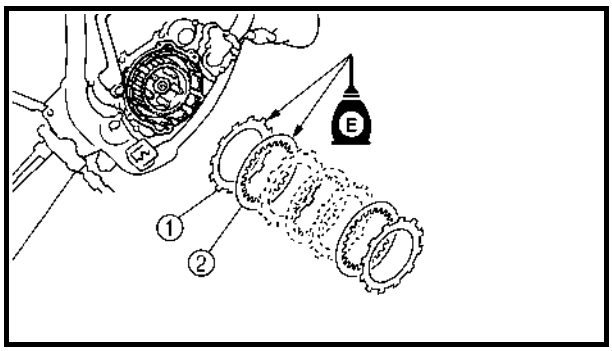

4. Install:
   - Friction plate ①
   - Clutch plate ②

NOTE:
- Install the clutch plates and friction plates alternately on the clutch boss, starting with a friction plate and ending with a friction plate.
- Apply the engine oil on the friction plates and clutch plates.

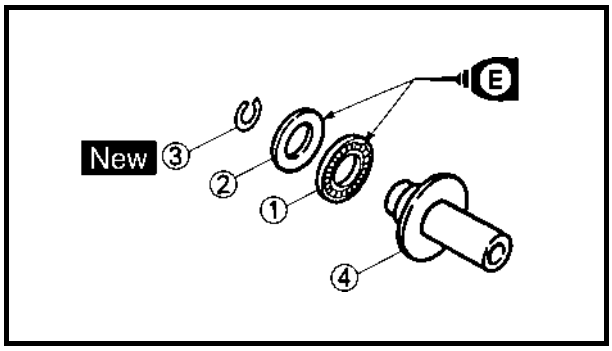

5. Install:
   - Bearing ①
   - Plain washer ②
   - Circlip ③ New
     To push rod 1 ④.

NOTE:
Apply the engine oil on the bearing and plain washer.

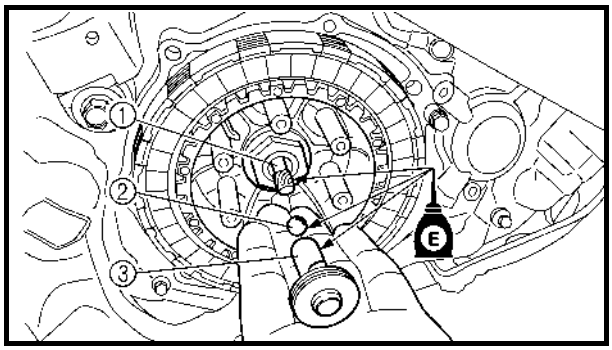

6. Install:
   - Push rod 2 ①
   - Ball ②
   - Push rod 1 ③

NOTE:
Apply the engine oil on the push rod 1, 2 and ball.

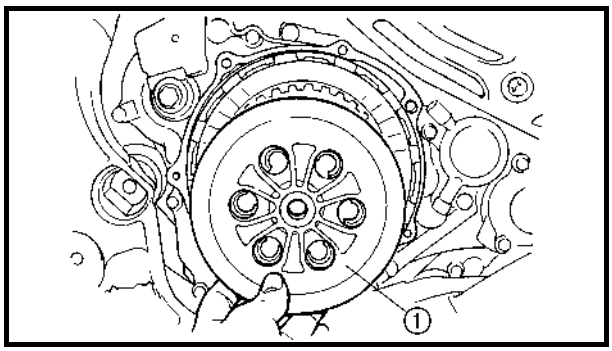

7. Install:
   - Pressure plate ①

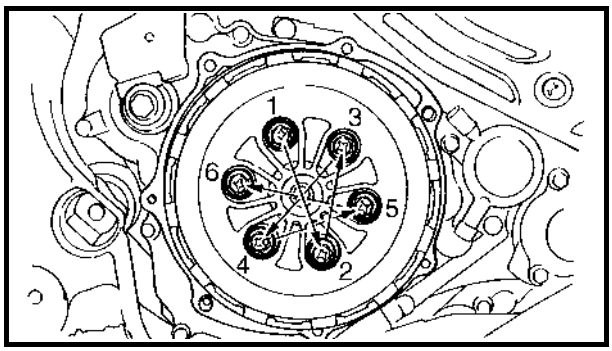

8. Install:
   - Clutch spring
   - Bolt (clutch spring)

	10 Nm (1.0 m · kg, 7.2 ft · lb)

NOTE:
Tighten the bolts in stage, using a crisscross pattern.

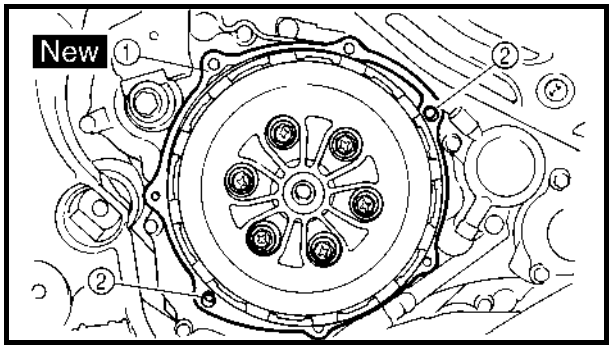

9. Install:
   - Gasket (clutch cover) ① New
   - Dowel pin ②

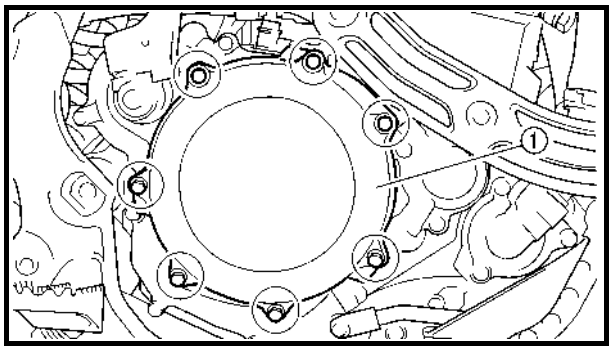

10. Install:
    - Clutch cover ①
    - Bolt (clutch cover)

	10 Nm (1.0 m · kg, 7.2 ft · lb)

NOTE:
Tighten the bolts in stage, using a crisscross pattern.

OIL FILTER, WATER PUMP AND CRANKCASE COVER (RIGHT)

OIL FILTER, WATER PUMP AND CRANKCASE COVER (RIGHT)

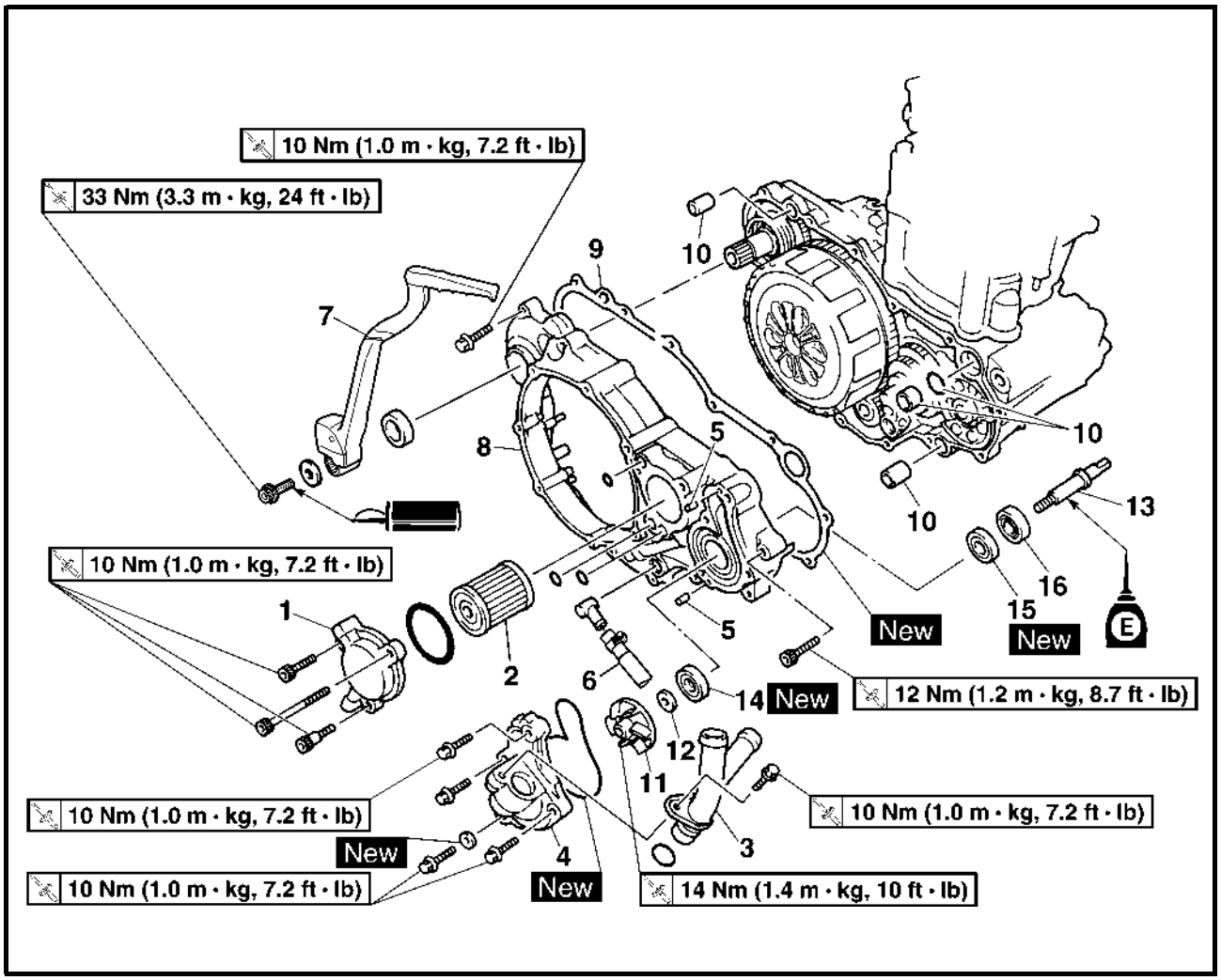

Extent of removal: ① Oil filter removal ② Water pump removal ③ Crankcase cover (right) removal

Extent of removal	Order	Part name	Q'ty	Remarks
		OIL FILTER, WATER PUMP AND CRANKCASE COVER (RIGHT) REMOVAL		
Preparation for removal		Engine guard (right)		Refer to "ENGINE REMOVAL" section.
		Drain the engine oil.		Refer to "ENGINE OIL REPLACEMENT" section in the CHAPTER 3.
		Drain the coolant.		Refer to "COOLANT REPLACEMENT" section in the CHAPTER 3.
		Exhaust pipe		Refer to "EXHAUST PIPE AND SILENCER" section.
		Brake pedal		Refer to "ENGINE REMOVAL" section.
		Clutch cover		Refer to "CLUTCH" section.
① ② ③	1	Oil filter cover	1	
	2	Oil filter	1	
	3	Coolant pipe 2	1	
	4	Water pump housing	1	
	5	Pin	2	

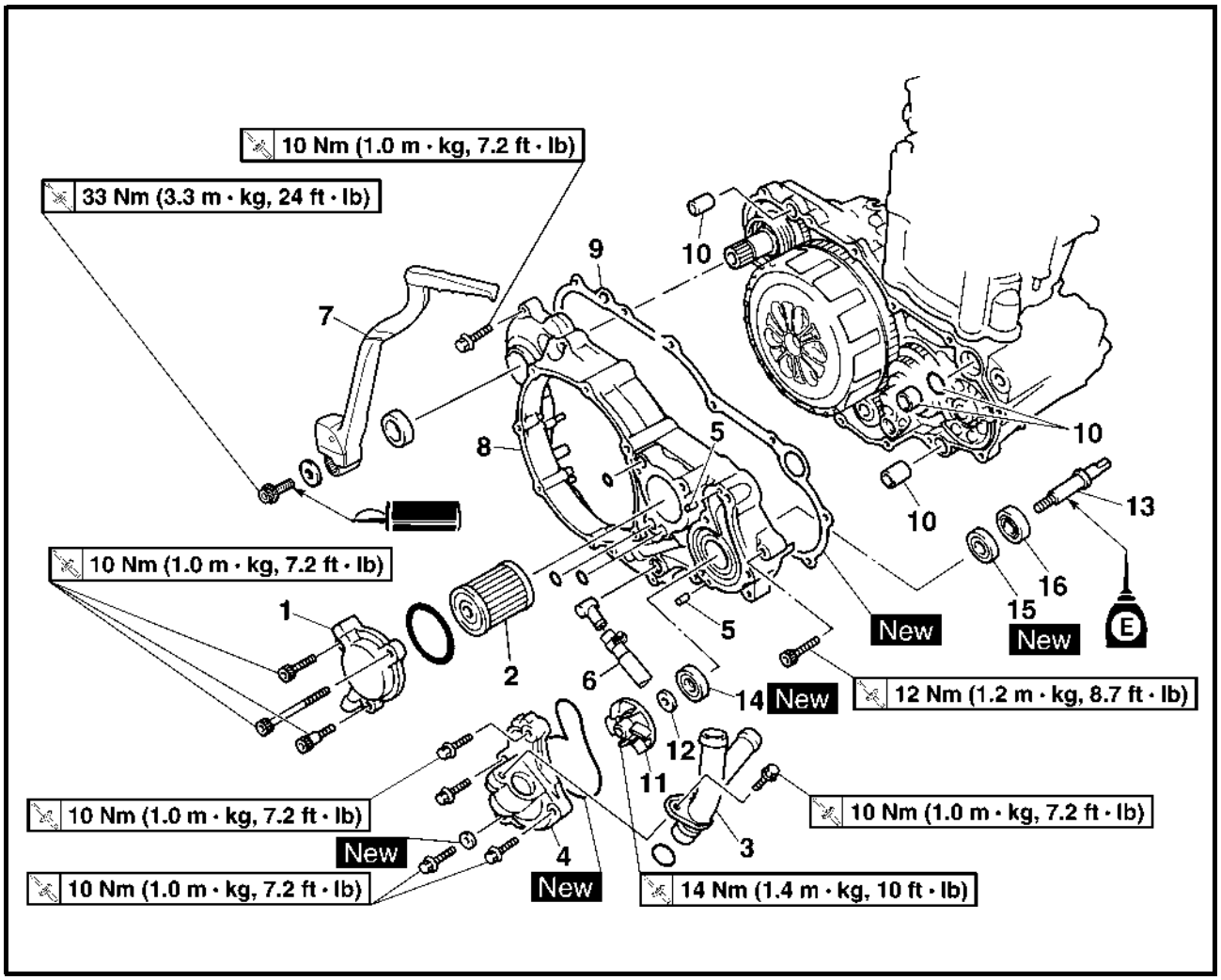

Extent of removal	Order	Part name	Q'ty	Remarks
	6	Oil tank breather hose	1	
②	7	Kick starter	1	
③	8	Crankcase cover (right)	1	
	9	Gasket	1	
	10	Dowel pin/O-ring	3/1	
	11	Impeller	1	Refer to "REMOVAL POINTS".
	12	Plain washer	1	
②	13	Impeller shaft	1	
	14	Oil seal 1	1	
	15	Oil seal 2	1	
	16	Bearing	1	

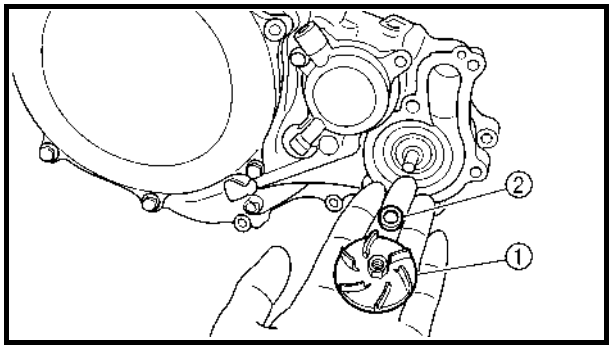

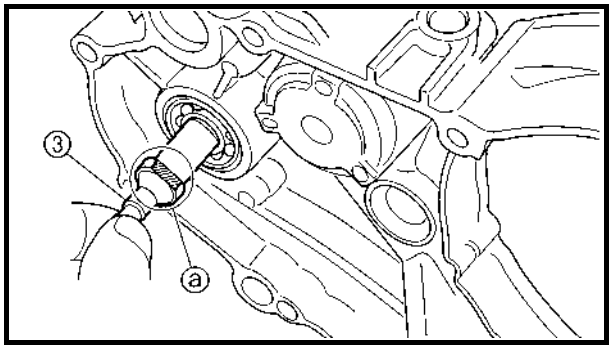

REMOVAL POINTS

EC4G3110

Impeller shaft

1. Remove:
   - Impeller ①
   - Plain washer ②
   - Impeller shaft ③

NOTE:
Hold the impeller shaft on its width across the flats ⓐ with spanners, etc. and remove the impeller.

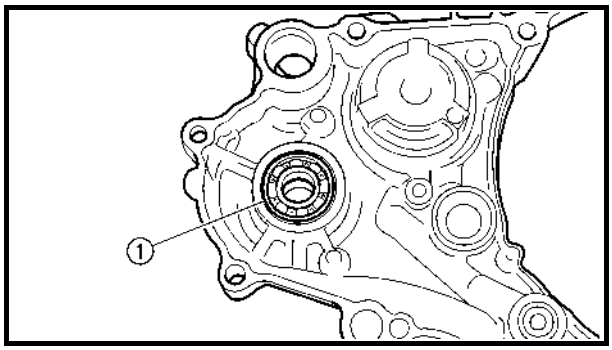

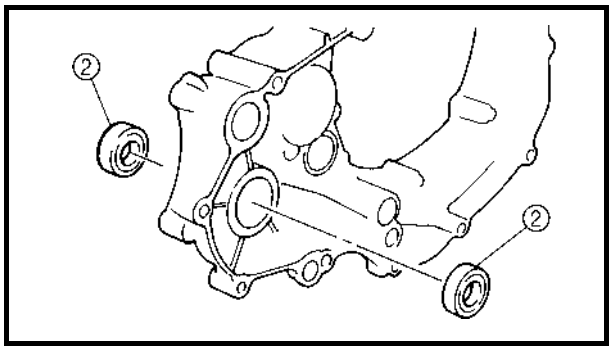

EC4G3210

Oil seal

NOTE:
It is not necessary to disassemble the water pump, unless there is an abnormality such as excessive change in coolant level, discoloration of coolant, or milky transmission oil.

1. Remove:
   - Bearing ①
   - Oil seal ②

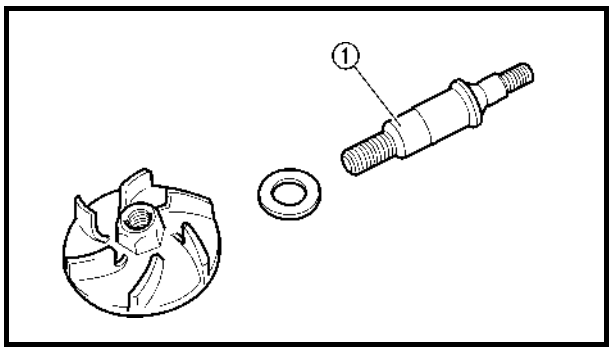

INSPECTION

EC444200

Impeller shaft

1. Inspect:
   - Impeller shaft ①
     Bend/wear/damage → Replace.
     Fur deposits → Clean.

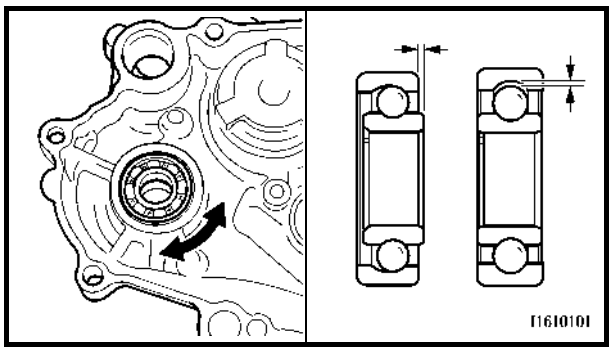

EC4H4600
Bearing

1. Inspect:
   - Bearing
     Rotate inner race with a finger.
     Rough spot/seizure → Replace.

EC444400
Oil seal

1. Inspect:
   - Oil seal
     Wear/damage → Replace.

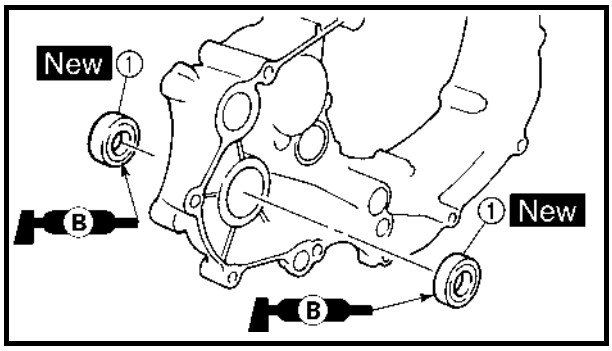

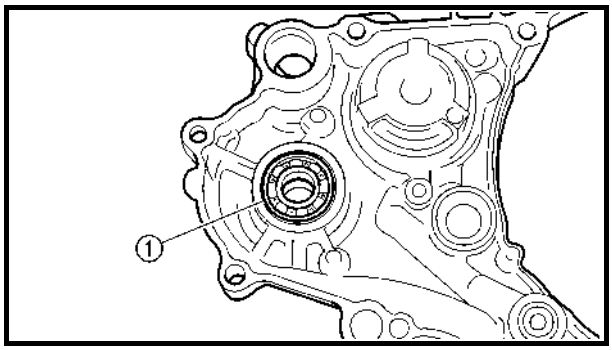

ASSEMBLY AND INSTALLATION

EC4G5110
Oil seal

1. Install:
   - Oil seal ① New

NOTE:
- Apply the lithium soap base grease on the oil seal lip.
- Install the oil seal with its manufacture's marks or numbers facing inward.

Bearing

1. Install:
   - Bearing ①

NOTE:
Install the bearing by pressing its outer race parallel.

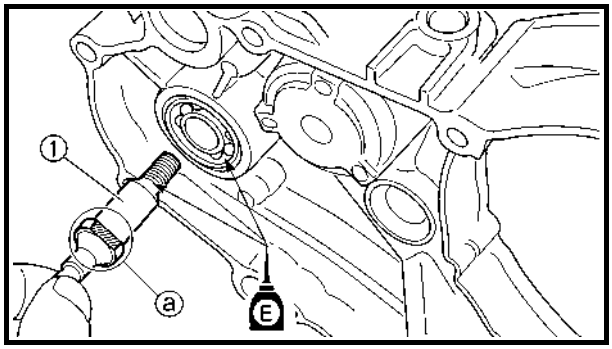

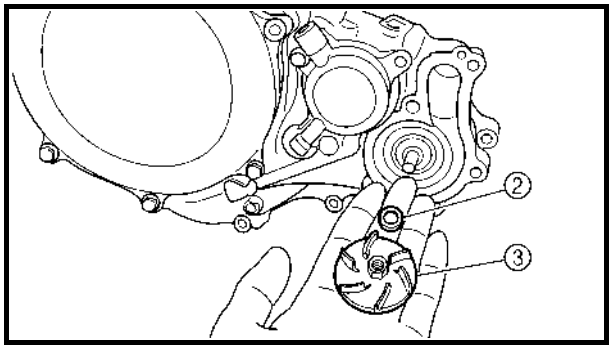

EC4G5220
Impeller shaft

1. Install:
   - Impeller shaft ①
   - Plain washer ②
   - Impeller ③

	14 Nm (1.4 m · kg, 10 ft · lb)

NOTE:
- Take care so that the oil seal lip is not damaged or the spring does not slip off its position.
- When installing the impeller shaft, apply the engine oil on the oil seal lip, bearing and impeller shaft. And install the shaft while turning it.
- Hold the impeller shaft on its width across the flats ⓐ with spanners, etc. and install the impeller.

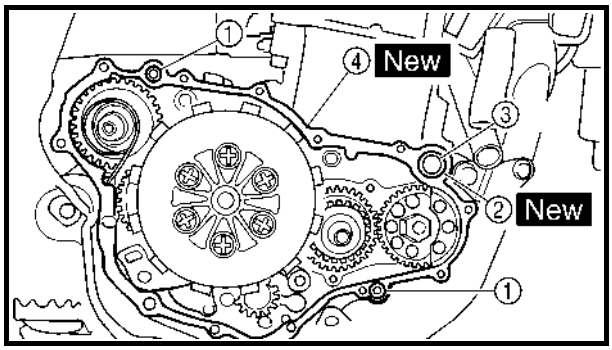

Crankcase cover (right)

1. Install:
   - Dowel pin ①
   - O-ring ② New
   - Collar ③
   - Gasket ④ New

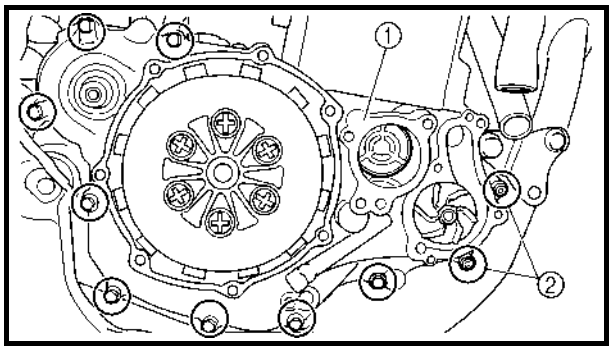

2. Install:
   - Crankcase cover (right) ①
   - Bolt ② **12 Nm (1.2 m · kg, 8.7 ft · lb)**
   - Bolt **10 Nm (1.0 m · kg, 7.2 ft · lb)**

NOTE:
- Apply the engine oil on the impeller shaft end.
- When installing the crankcase cover onto the crankcase, be sure that the impeller shaft end ② aligns with the balancer end slot ③.
- Tighten the bolts in stage, using a crisscross pattern.

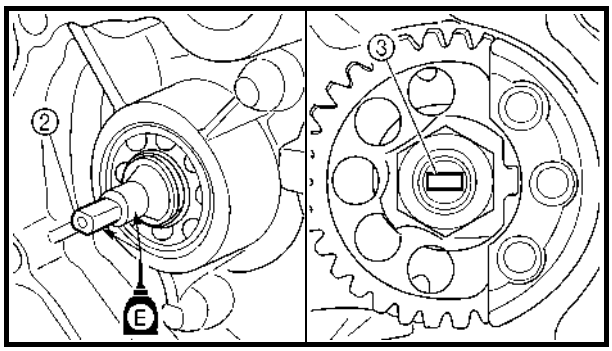

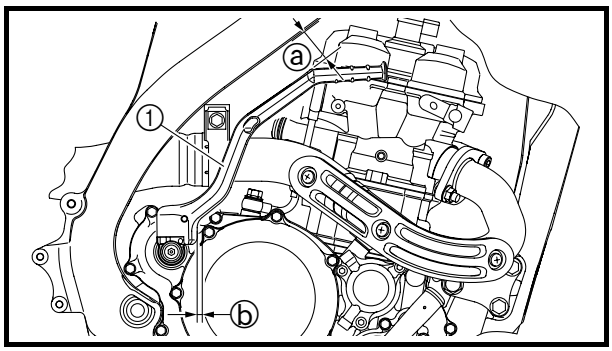

Kick crank

1. Install:
   - Kick starter ①
   - Plain washer
   - Bolt (kick starter)

33 Nm (3.3 m · kg, 24 ft · lb)

NOTE:
Install the kickstarter crank with the kickstarter crank and frame 10 mm (0.39 in) or more apart ⓐ and the kickstarter crank and right crankcase 3 mm (0.12 in) or more apart ⓑ.

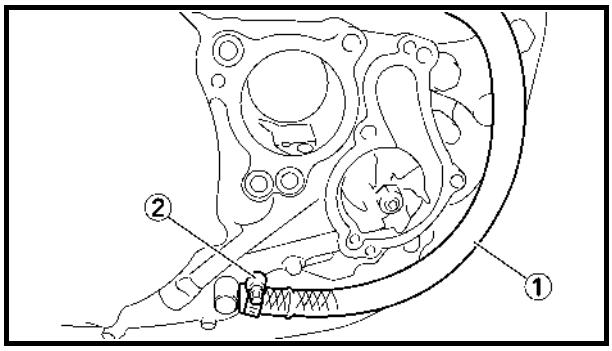

2. Install:
   - Oil tank breather hose ①
   - Clamp ②

2 Nm (0.2 m · kg, 1.4 ft · lb)

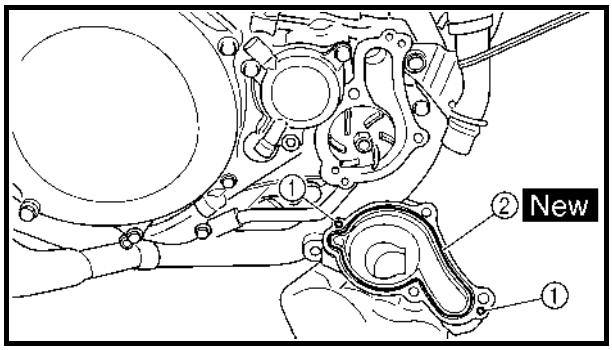

Water pump housing

1. Install:
   - Dowel pin ①
   - O-ring ② New

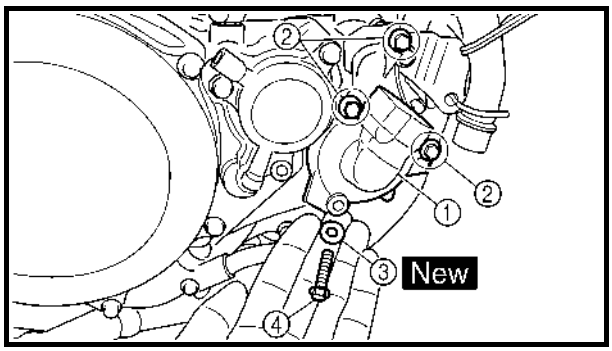

2. Install:
   - Water pump housing ①
   - Bolt (water pump housing) ②

10 Nm (1.0 m · kg, 7.2 ft · lb)

   - Plain washer ③ New
   - Coolant drain bolt ④

10 Nm (1.0 m · kg, 7.2 ft · lb)

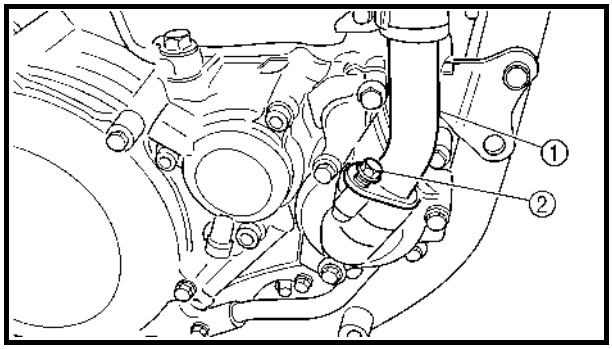

3. Install:
   - O-ring
   - Coolant pipe ①
   - Bolt (coolant pipe) ②

	10 Nm (1.0 m · kg, 7.2 ft · lb)

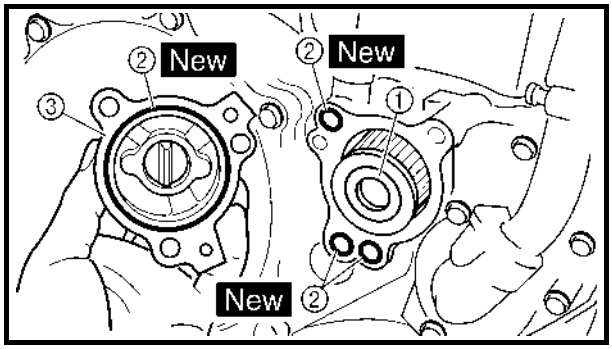

Oil filter

1. Install:
   - Oil filter ①
   - O-ring ② New
   - Oil filter cover ③
   - Bolt (oil filter cover)

	10 Nm (1.0 m · kg, 7.2 ft · lb)

BALANCER

BALANCER

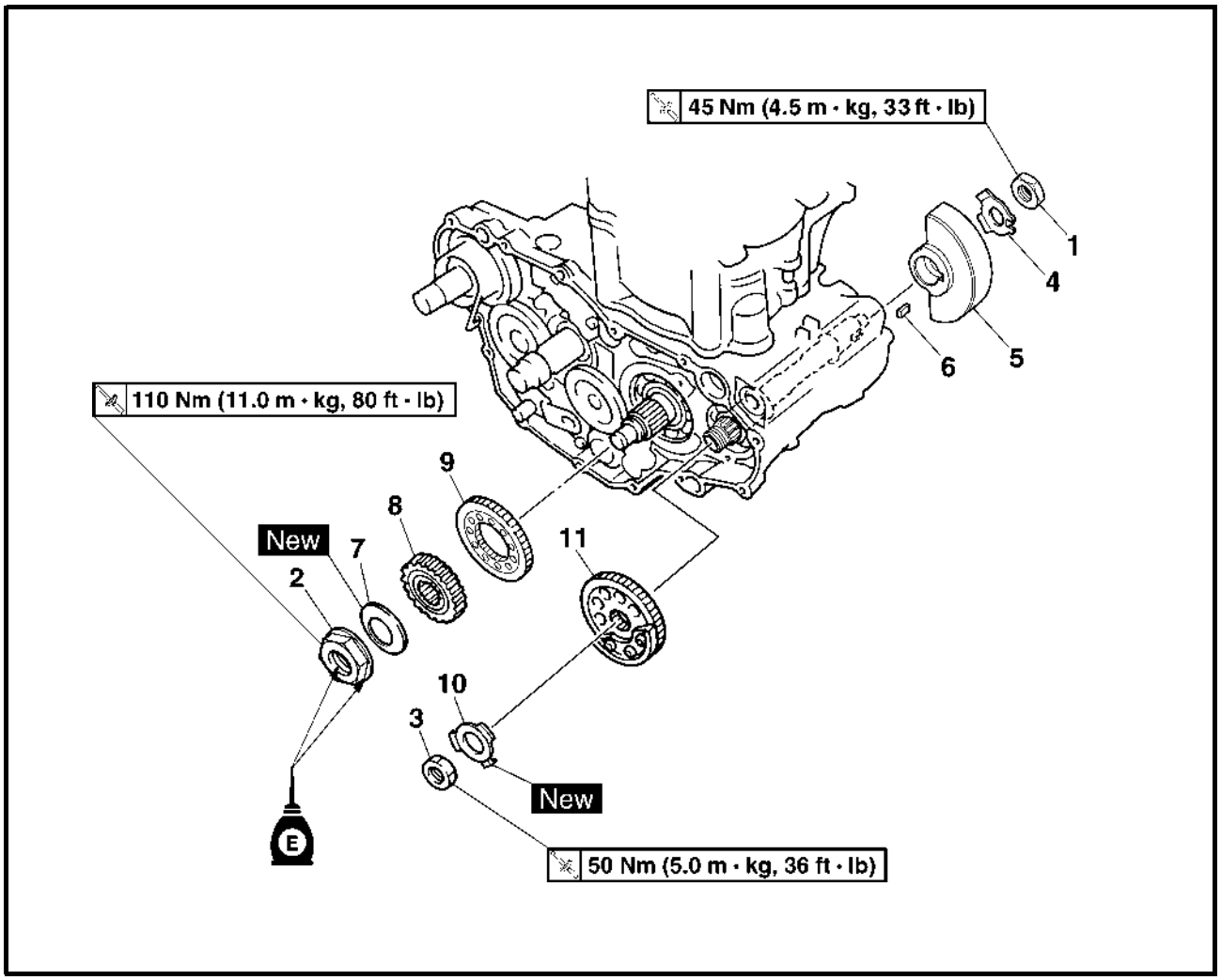

Extent of removal: ① Balancer drive gear ② Balancer

Extent of removal	Order	Part name	Q'ty	Remarks
		BALANCER REMOVAL		
Preparation for removal		Clutch housing		Refer to "CLUTCH" section.
		Crankcase cover (right)		Refer to "OIL FILTER, WATER PUMP AND CRANKCASE COVER (RIGHT)" section.
		Stator		Refer to "CDI MAGNETO" section.
② ①	1	Nut (balancer)	1	Refer to "REMOVAL POINTS".
	2	Nut (primary drive gear)	1	
	3	Nut (balancer driven gear)	1	
②	4	Lock washer	1	
	5	Balancer	1	
	6	Straight key	1	
①	7	Conical washer	1	
	8	Primary drive gear	1	
	9	Balancer drive gear	1	
	10	Lock washer	1	
	11	Balancer driven gear	1	

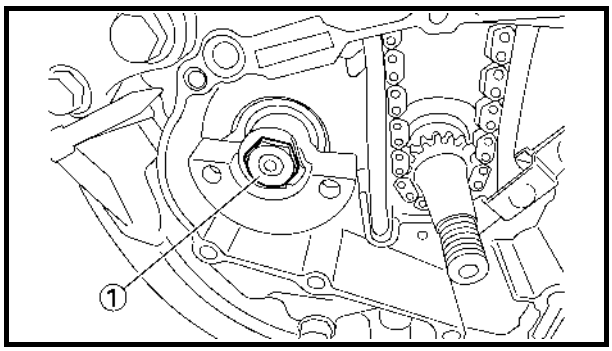

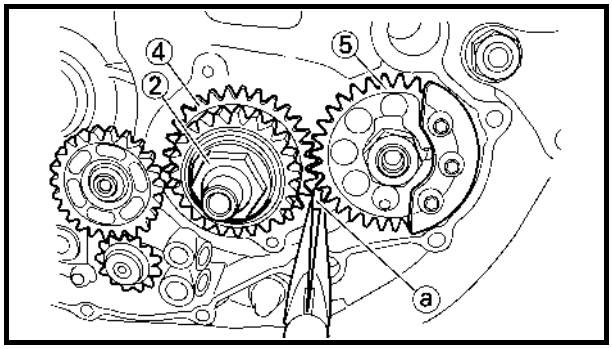

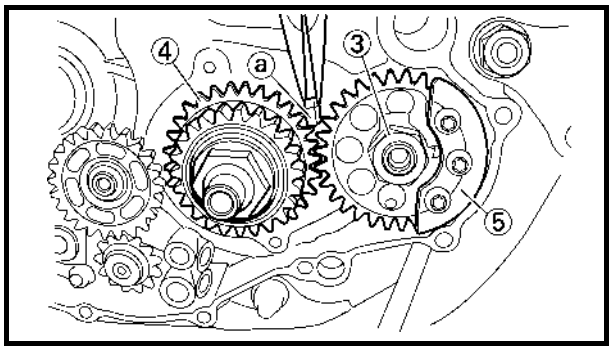

REMOVAL POINTS

Balancer, balancer drive gear and balancer driven gear

1. Straighten the lock washer tab.
2. Loosen:
   - Nut (balancer) ①
   - Nut (primary drive gear) ②
   - Nut (balancer driven gear) ③

NOTE:

Place an aluminum plate ⓐ between the teeth of the balancer drive gear ④ and balancer driven gear ⑤.

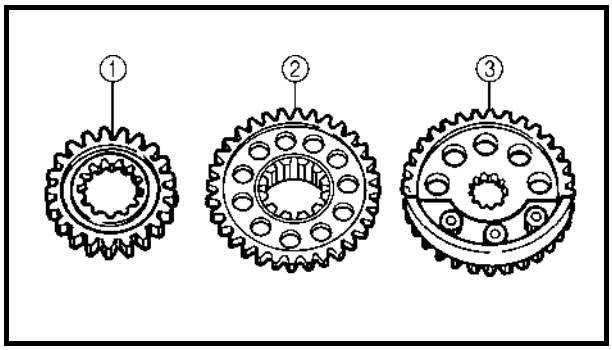

INSPECTION

Primary drive gear, balancer drive gear and balancer driven gear

1. Inspect:
   - Primary drive gear ①
   - Balancer drive gear ②
   - Balancer driven gear ③
     Wear/damage → Replace.

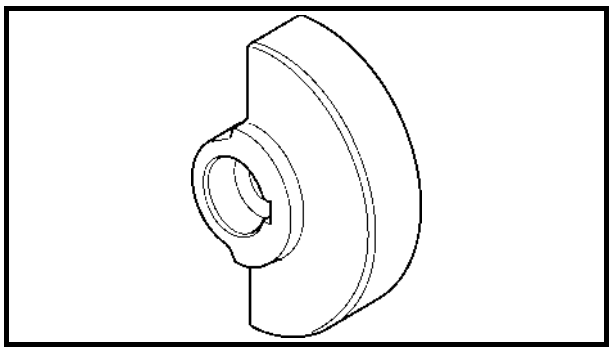

Balancer

1. Inspect:
   - Balancer
     Cracks/damage → Replace.

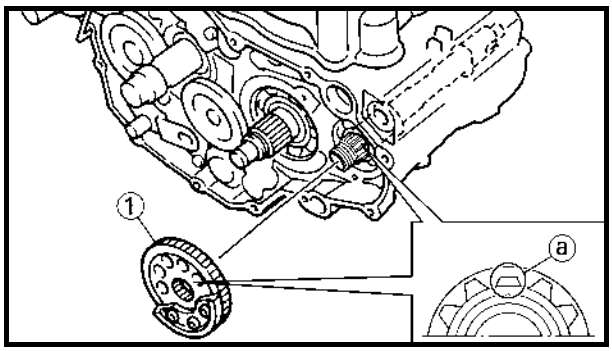

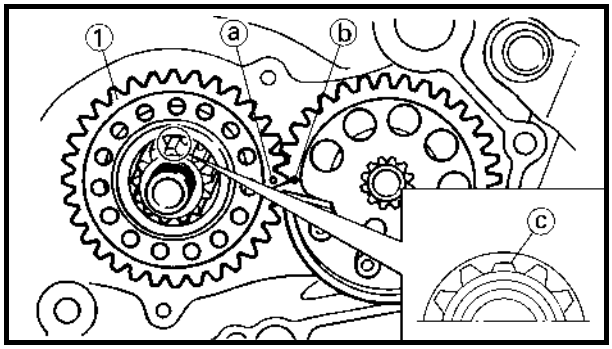

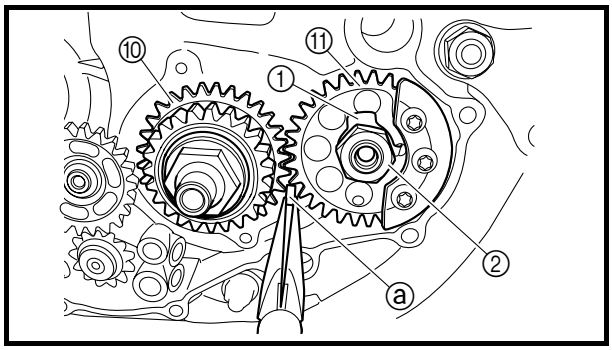

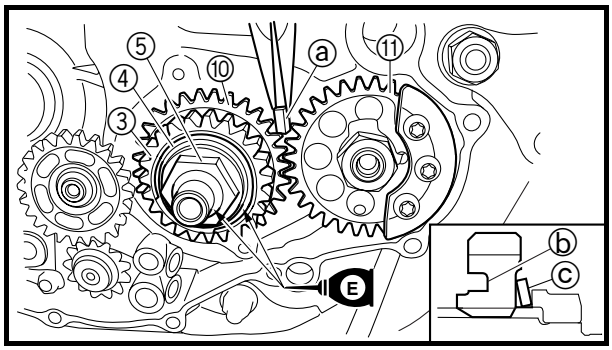

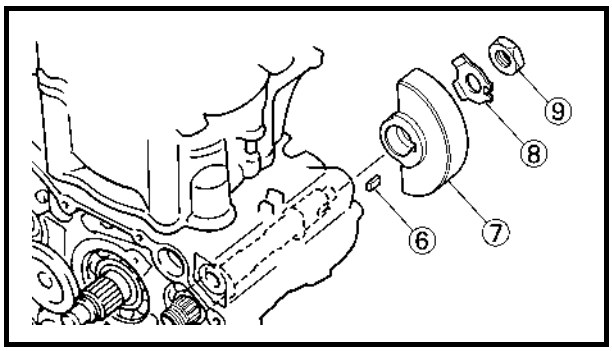

ASSEMBLY AND INSTALLATION

Balancer, balancer drive gear and balancer driven gear

1. Install:
   - Balancer driven gear ①

NOTE:

Install the balancer driven gear and balancer shaft with their lower splines ⓐ aligning with each other.

2. Install:
   - Balancer drive gear ①

NOTE:

- Align the punched mark ⓐ on the balancer drive gear with the punched mark ⓑ on the balancer driven gear.
- Install the balancer driven gear and crankshaft with the lower splines ⓒ aligning with each other.

3. Install:
   - Lock washer ①
   - Nut (balancer driven gear) ②

     50 Nm (5.0 m · kg, 36 ft · lb)
   - Primary drive gear ③
   - Conical washer ④
   - Nut (primary drive gear) ⑤

     110 Nm (11.0 m · kg, 80 ft · lb)
   - Straight key ⑥
   - Balancer ⑦
   - Lock washer ⑧
   - Nut (balancer) ⑨

     45 Nm (4.5 m · kg, 33 ft · lb)

NOTE:

- Apply engine oil to the contact surface and threaded portion of the nut (primary drive gear).
- Place an aluminum plate ⓐ between the teeth of the balancer drive gear ⑩ and balancer driven gear ⑪.
- Install the primary drive gear with its weight reduction holes ⓑ facing the engine.
- Install the conical washer with its convex surface ⓒ outward.

4. Bend the lock washer tab.

OIL PUMP

OIL PUMP

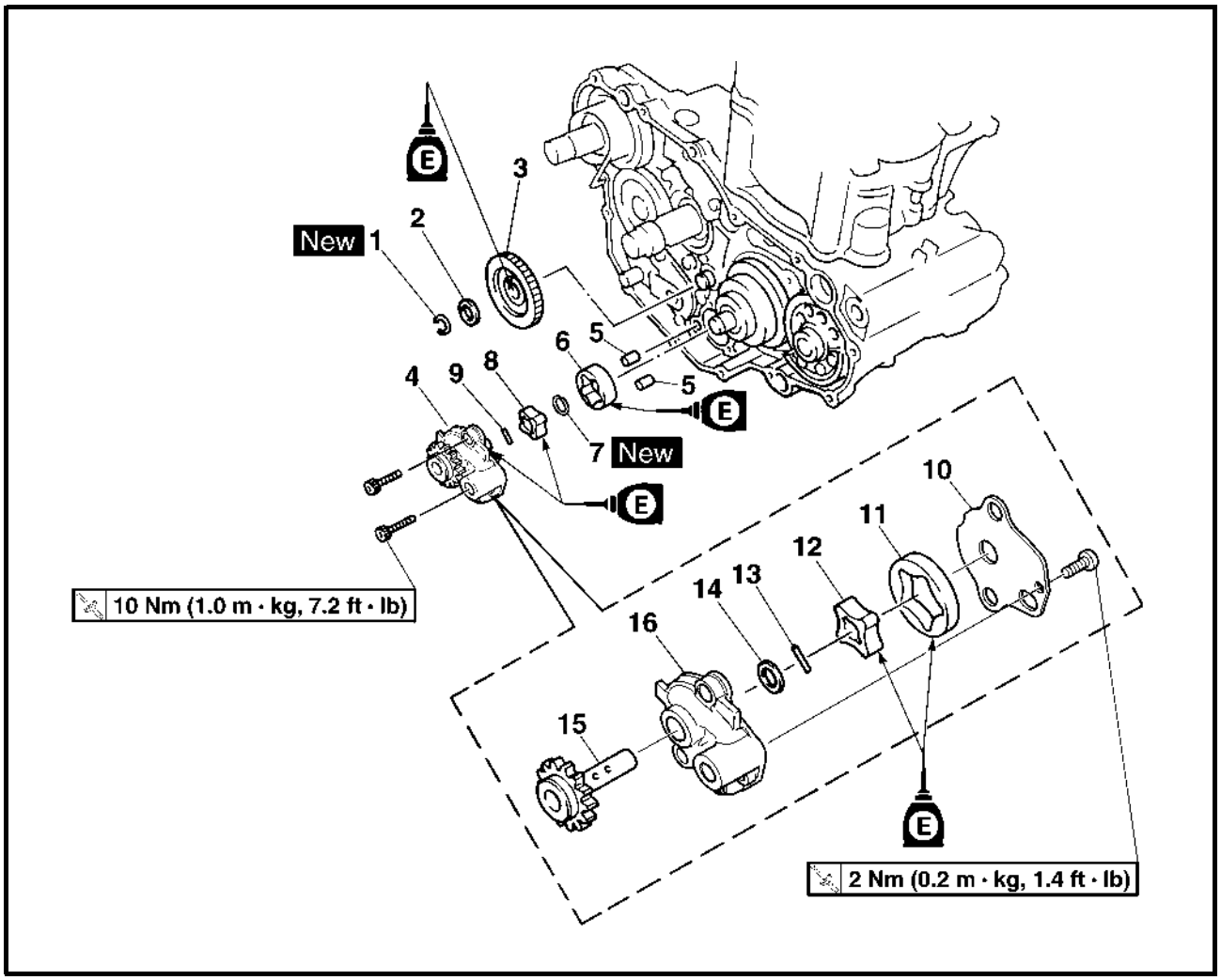

Extent of removal: ① Oil pump removal ② Oil pump disassembly

Extent of removal	Order	Part name	Q'ty	Remarks
Preparation for removal		**OIL PUMP REMOVAL AND DISASSEMBLY** Clutch housing Crankcase cover (right)		 Refer to "CLUTCH" section. Refer to "OIL FILTER, WATER PUMP AND CRANKCASE COVER (RIGHT)" section.
① ②	1	Circlip	1	
	2	Plate washer	1	
	3	Oil pump drive gear	1	
	4	Oil pump assembly	1	
	5	Dowel pin	2	
	6	Outer rotor 2	1	
	7	Circlip	1	
	8	Inner rotor 2	1	
	9	Pin	1	
	10	Oil pump cover	1	
	11	Outer rotor 1	1	
	12	Inner rotor 1	1	

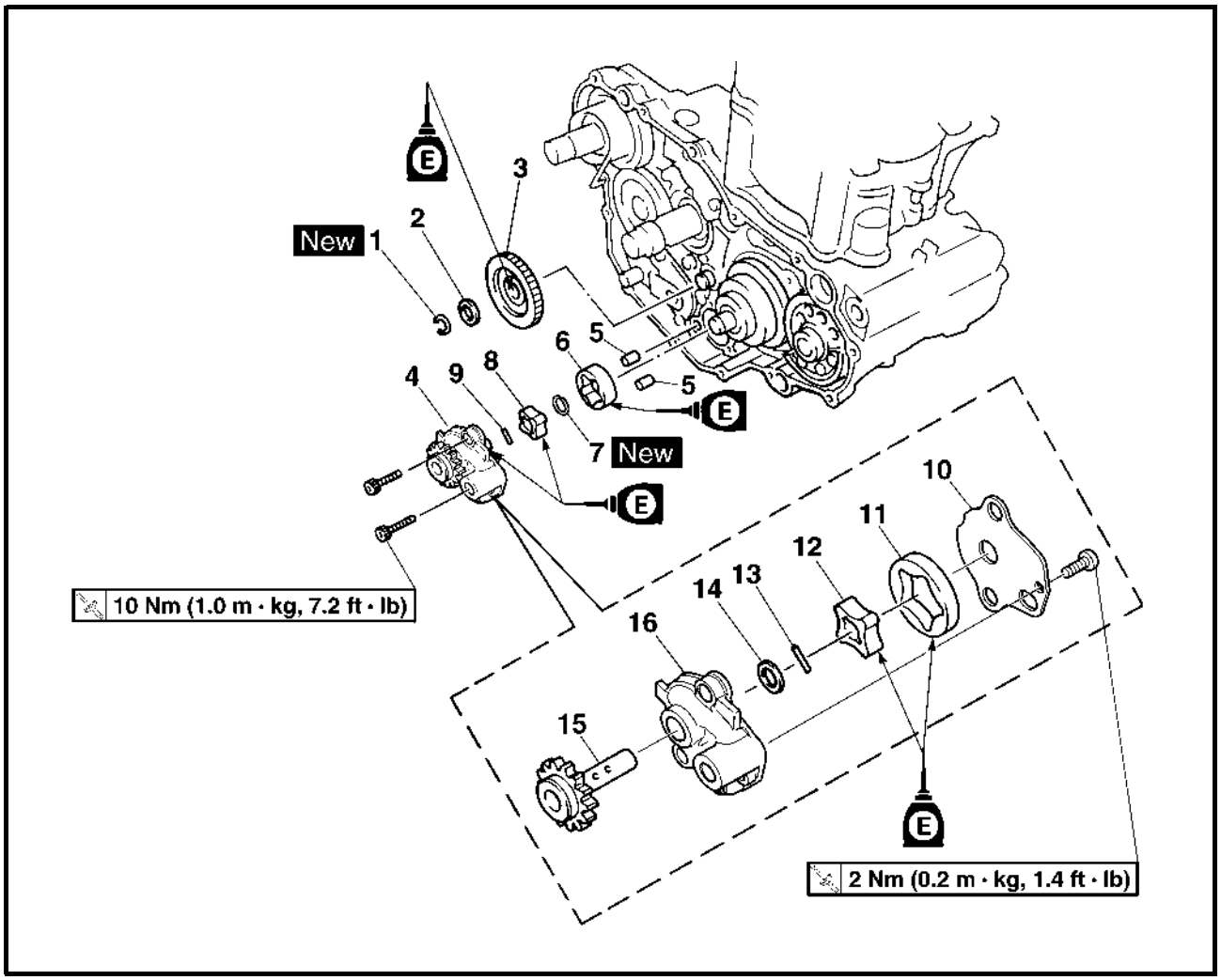

Extent of removal	Order	Part name	Q'ty	Remarks
②	13	Pin	1	
	14	Washer	1	
	15	Oil pump drive shaft	1	
	16	Rotor housing	1	

INSPECTION

Oil pump

1. Inspect:
   - Oil pump drive gear
   - Oil pump driven gear
   - Rotor housing
   - Oil pump cover
     Cracks/wear/damage → Replace.

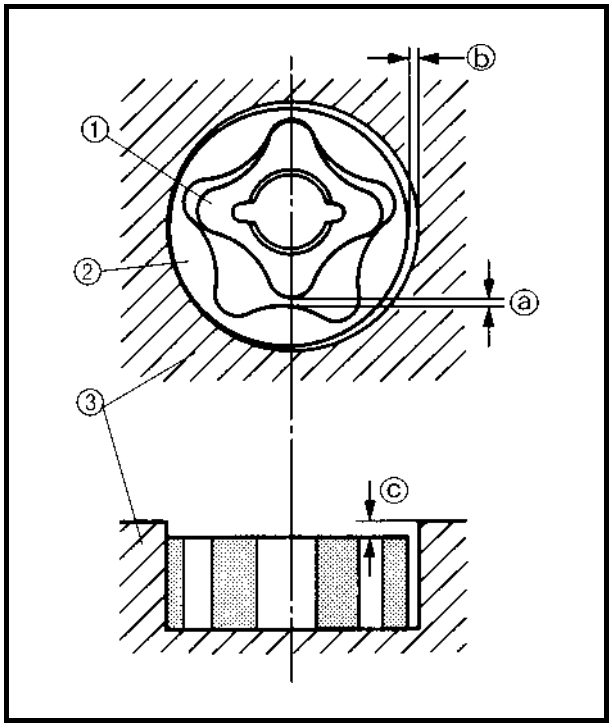

2. Measure:
   - Tip clearance ⓐ
     Between the inner rotor ① and the outer rotor ②.
   - Tip clearance ⓑ
     Between the outer rotor ② and the rotor housing ③.
     Out of specification → Replace the oil pump.

Tip clearance ⓐ:
0.12 mm or less
(0.0047 in or less)
<Limit>: 0.20 mm (0.008 in)
Tip clearance ⓑ:
0.09 ~ 0.17 mm (0.0035 ~ 0.0067 in)
<Limit>: 0.24 mm (0.009 in)
Side clearance ⓒ:
0.03 ~ 0.10 mm (0.0012 ~ 0.0039 in)
<Limit>: 0.17 mm (0.007 in)

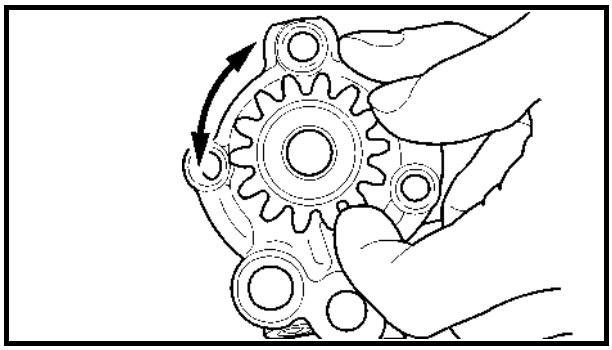

3. Check:
   - Unsmooth → Repeat steps #1 and #2 or replace the defective parts.

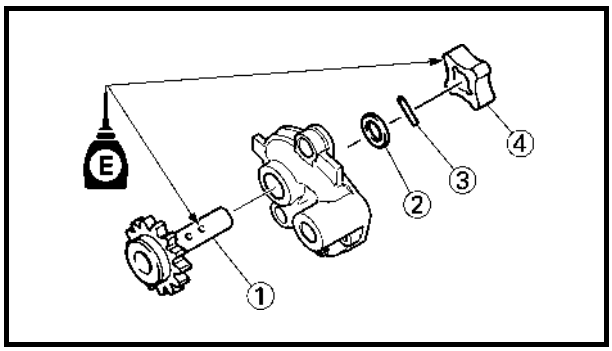

ASSEMBLY AND INSTALLATION

Oil pump

1. Install:
   - Oil pump drive shaft ①
   - Washer ②
   - Pin ③
   - Inner rotor 1 ④

NOTE:
- Apply the engine oil on the oil pump drive shaft and inner rotor 1.
- Fit the pin into the groove in the inner rotor 1.

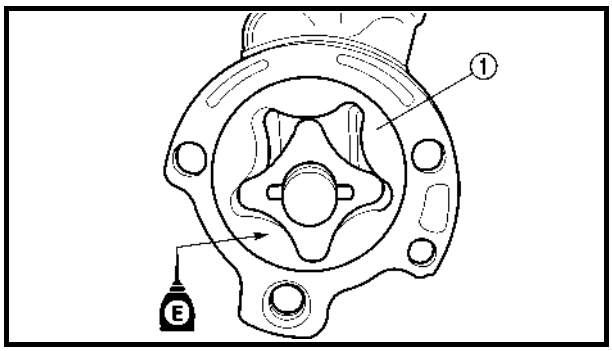

2. Install:
   - Outer rotor 1 ①

NOTE:
Apply the engine oil on the outer rotor 1.

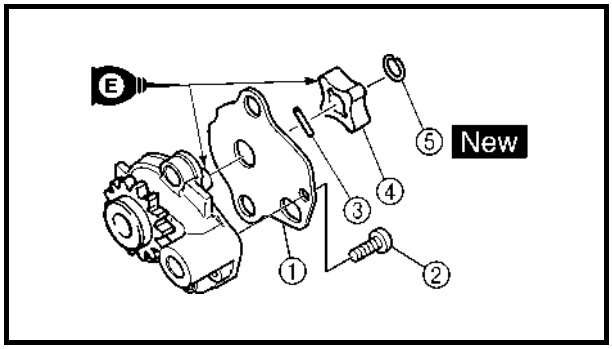

3. Install:
   - Oil pump cover ①
   - Screw (oil pump cover) ②

2 Nm (0.2 m · kg, 1.4 ft · lb)

   - Pin ③
   - Inner rotor 2 ④
   - Circlip ⑤ New

NOTE:
- Apply the engine oil on the oil pump drive shaft end and inner rotor 2.
- Fit the pin into the groove in the inner rotor 2.

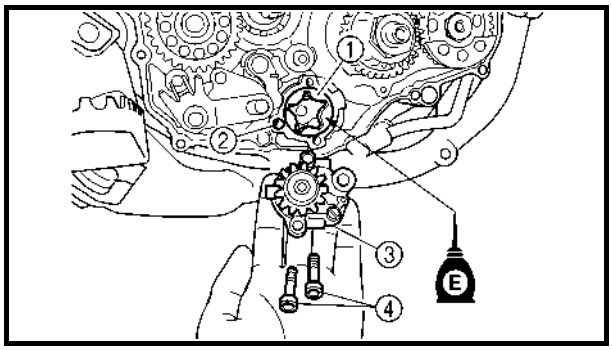

4. Install:
   - Outer rotor 2 ①
   - Dowel pin ②
   - Oil pump assembly ③
   - Bolt (oil pump assembly) ④

10 Nm (1.0 m · kg, 7.2 ft · lb)

NOTE:
Apply the engine oil on the outer rotor 2.

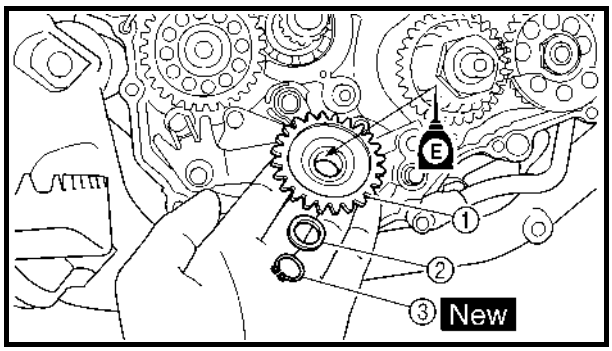

5. Install:
   - Oil pump drive gear ①
   - Plate washer ②
   - Circlip ③ New

NOTE:
Apply the engine oil on the oil pump drive gear inner circumference.

KICK AXLE AND SHIFT SHAFT

KICK AXLE AND SHIFT SHAFT

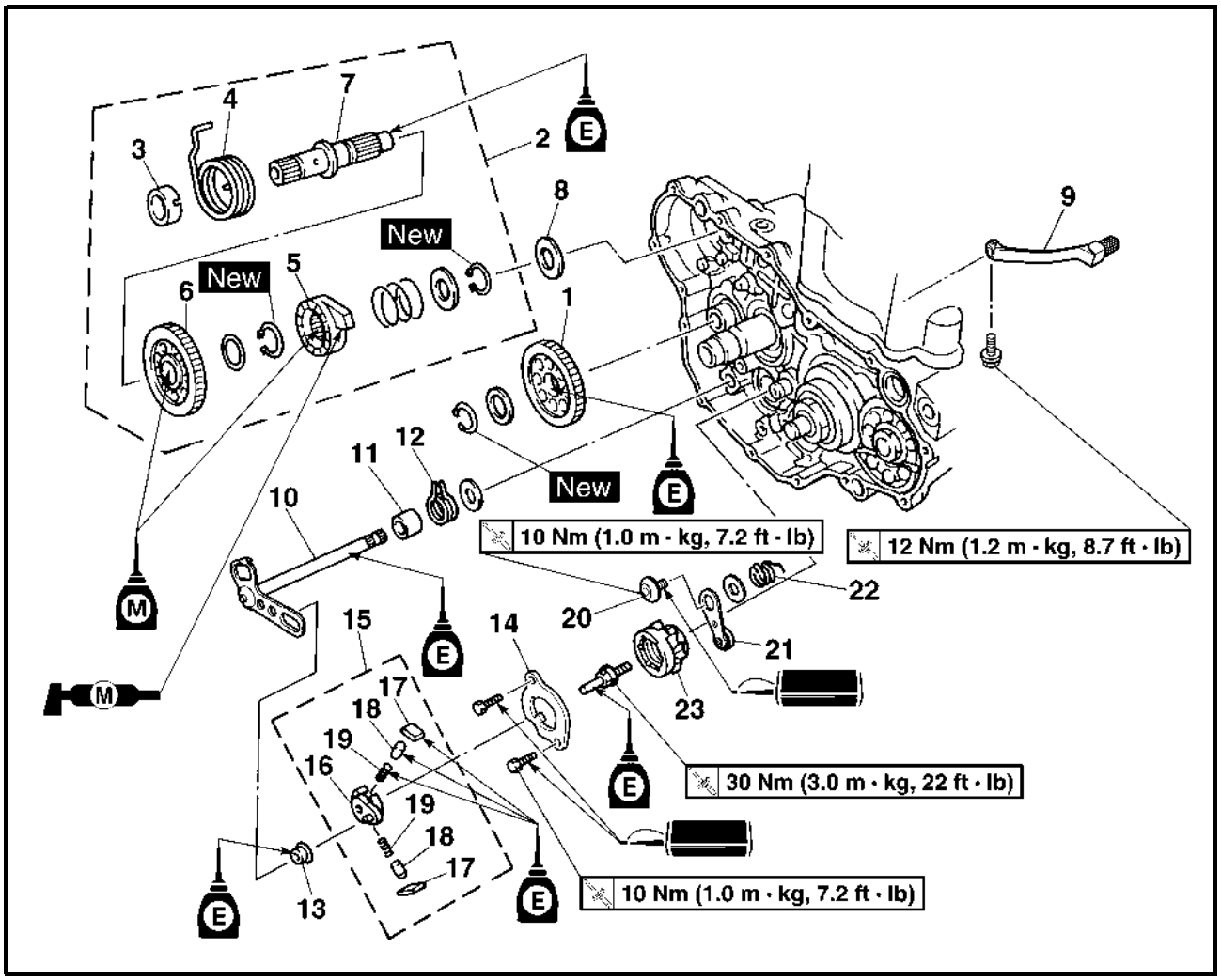

Extent of removal:
① Kick axle removal
② Kick axle disassembly
③ Shift shaft removal
④ Segment removal

Extent of removal	Order	Part name	Q'ty	Remarks
		KICK AXLE AND SHIFT SHAFT REMOVAL		
Preparation for removal		Oil pump		Refer to "OIL PUMP" section.
①	1	Kick idle gear	1	
	2	Kick axle assembly	1	Refer to "REMOVAL POINTS".
	3	Spring guide	1	
②	4	Torsion spring	1	
	5	Ratchet wheel	1	
	6	Kick gear	1	
	7	Kick axle	1	
①	8	Plain washer	1	
	9	Shift pedal	1	
③ ④	10	Shift shaft	1	
	11	Collar	1	
	12	Torsion spring	1	

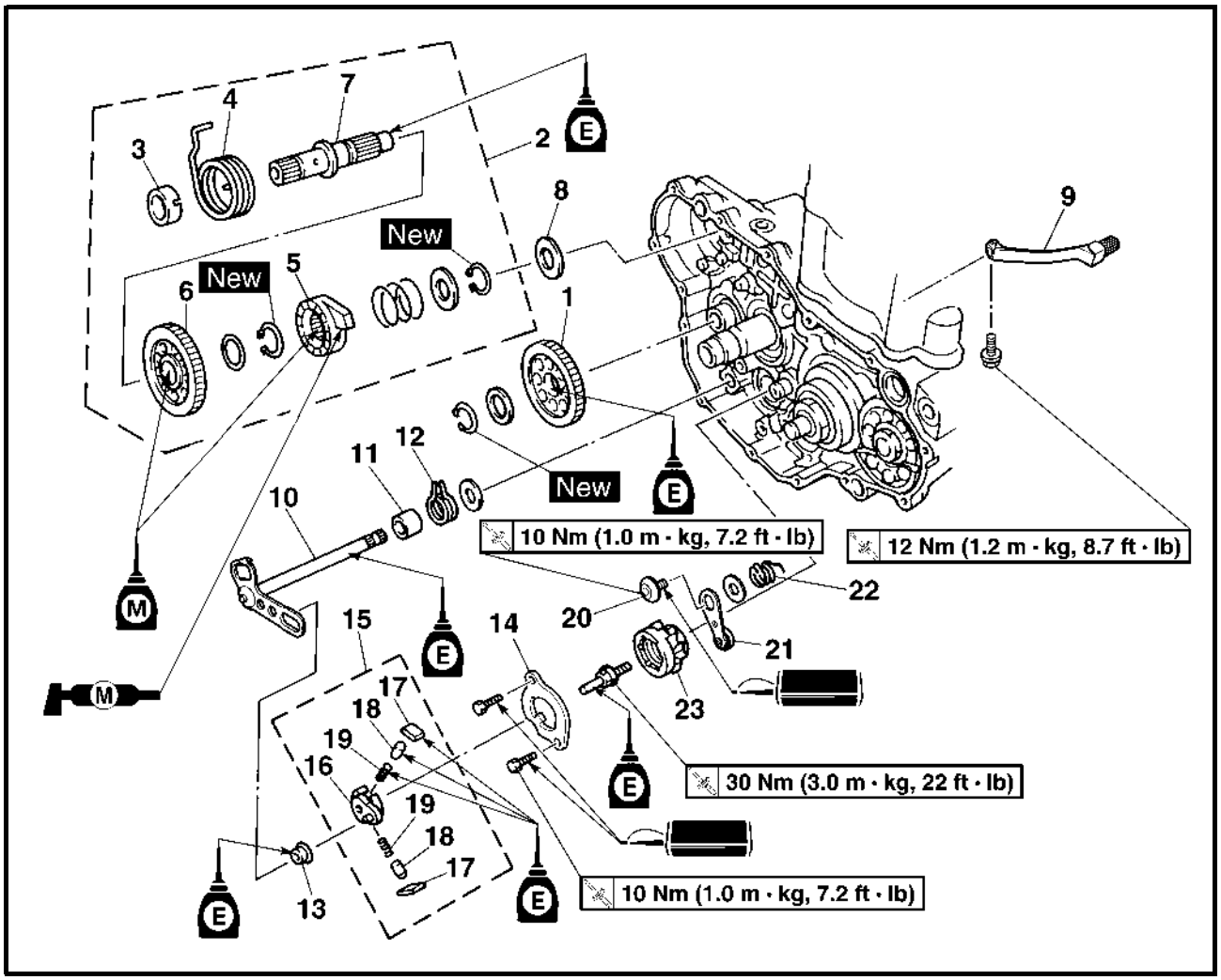

Extent of removal	Order	Part name	Q'ty	Remarks
	13	Roller	1	
	14	Shift guide	1	Refer to "REMOVAL POINTS".
	15	Shift lever assembly	1	
	16	Shift lever	1	
	17	Pawl	2	
④	18	Pawl pin	2	
	19	Spring	2	
	20	Bolt (stopper lever)	1	
	21	Stopper lever	1	
	22	Torsion spring	1	
	23	Segment	1	Refer to "REMOVAL POINTS".

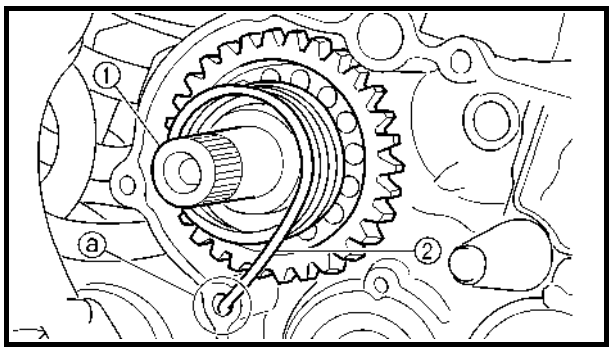

REMOVAL POINTS

EC4B3101

Kick axle assembly

1. Remove:
   - Kick axle assembly ①

NOTE:
Unhook the torsion spring ② from the hole ⓐ in the crankcase.

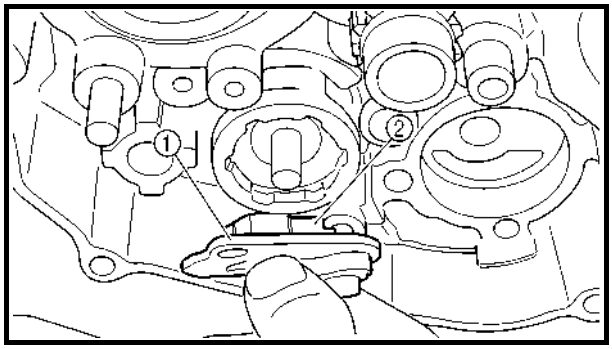

EC4C3101

Shift guide and shift lever assembly

1. Remove:
   - Bolt (shift guide)
   - Shift guide ①
   - Shift lever assembly ②

NOTE:
The shift lever assembly is disassembled at the same time as the shift guide.

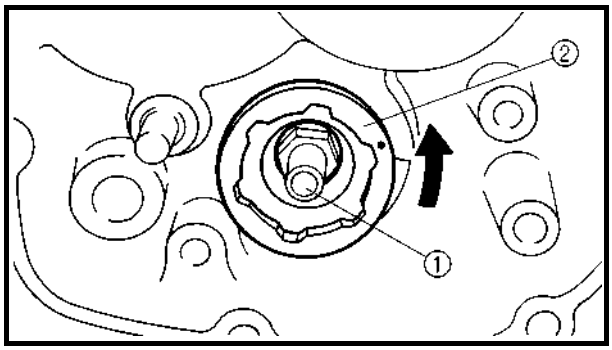

EC4N3100

Segment

1. Remove:
   - Bolt (segment) ①
   - Segment ②

NOTE:
Turn the segment counterclockwise until it stops and loosen the bolt.

CAUTION:
If the segment gets an impact, it may be damaged. Take care not to give an impact to the segment when removing the bolt.

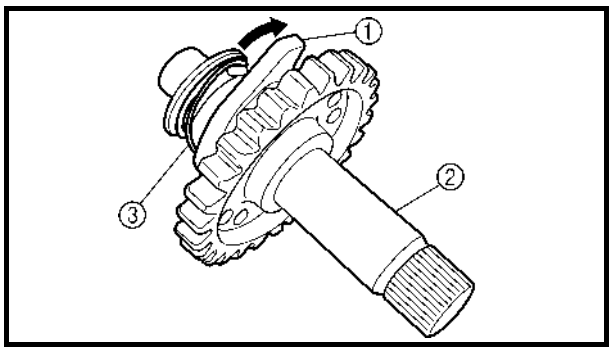

INSPECTION

EC4C4200

Kick axle and ratchet wheel

1. Check:
   - Ratchet wheel ① smooth movement
     Unsmooth movement → Replace.
   - Kick axle ②
     Wear/damage → Replace.
   - Spring ③
     Broken → Replace.

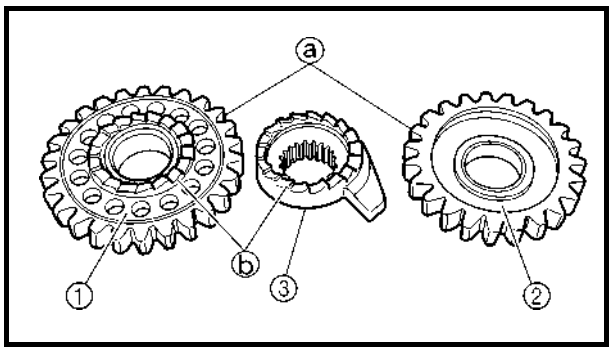

EC4C4300
Kick gear, kick idle gear and ratchet wheel

1. Inspect:
   - Kick gear ①
   - Kick idle gear ②
   - Ratchet wheel ③
   - Gear teeth ⓐ
   - Ratchet teeth ⓑ
     Wear/damage → Replace.

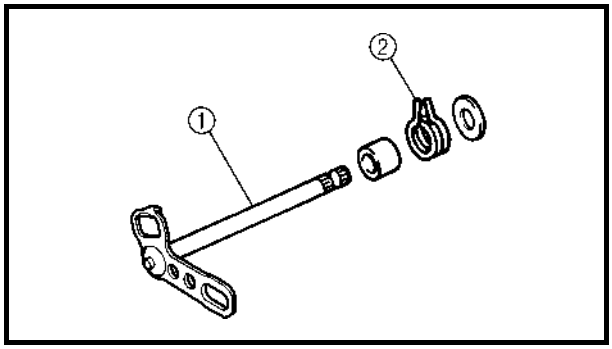

EC4B4400
Shift shaft

1. Inspect:
   - Shift shaft ①
     Bend/damage → Replace.
   - Spring ②
     Broken → Replace.

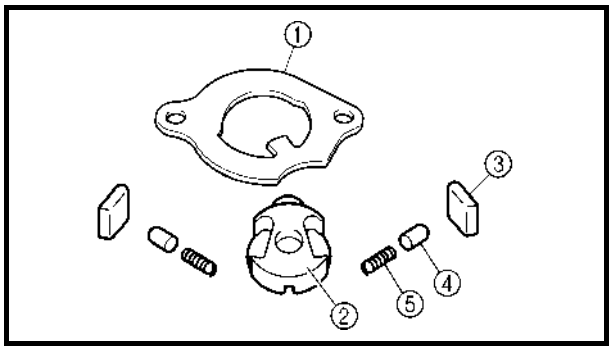

EC4C4100
Shift guide and shift lever assembly

1. Inspect:
   - Shift guide ①
   - Shift lever ②
   - Pawl ③
   - Pawl pin ④
   - Spring ⑤
     Wear/damage → Replace.

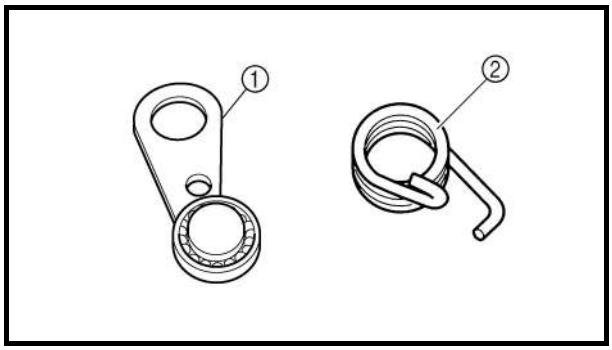

EC4B4500
Stopper lever

1. Inspect:
   - Stopper lever ①
     Wear/damage → Replace.
   - Torsion spring ②
     Broken → Replace.

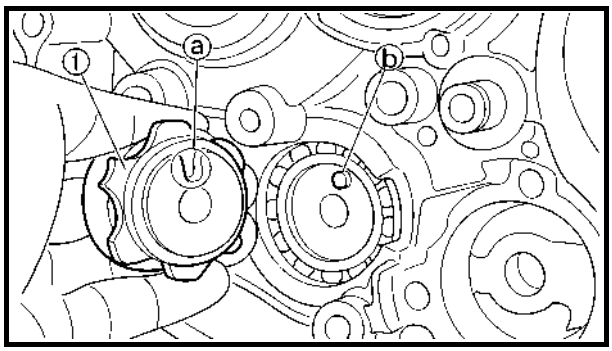

EC4C5000
ASSEMBLY AND INSTALLATION

Segment

1. Install:
   - Segment ①
   - Bolt (segment)

	30 Nm (3.0 m · kg, 22 ft · lb)

NOTE:
Align the notch ⓐ on the segment with the pin ⓑ on the shift cam.

CAUTION:
If the segment gets an impact, it may be damaged. Take care not to give an impact to the segment when tightening the bolt.

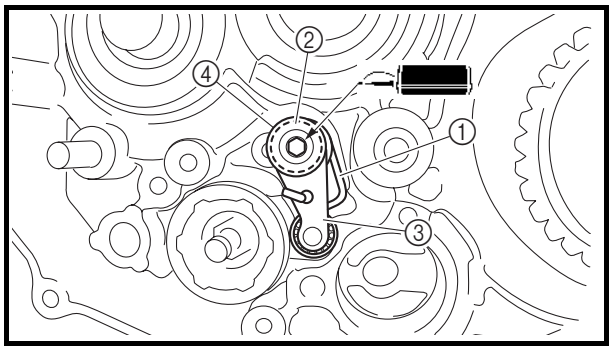

EC4B5111
Stopper lever

1. Install:
   - Torsion spring ①
   - Plain washer ②
   - Stopper lever ③
   - Bolt (stopper lever) ④

	10 Nm (1.0 m · kg, 7.2 ft · lb)

NOTE:
Align the stopper lever roller with the slot on segment.

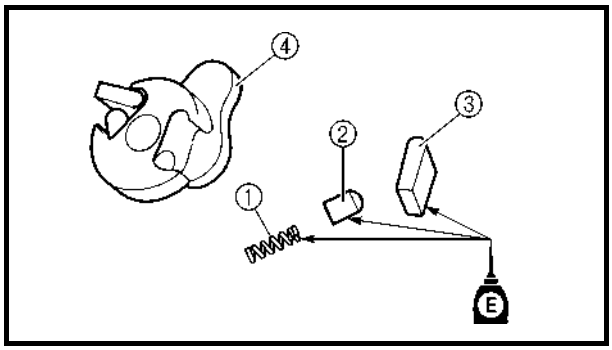

Shift guide and shift lever assembly

1. Install:
   - Spring ①
   - Pawl pin ②
   - Pawl ③
     To shift lever ④.

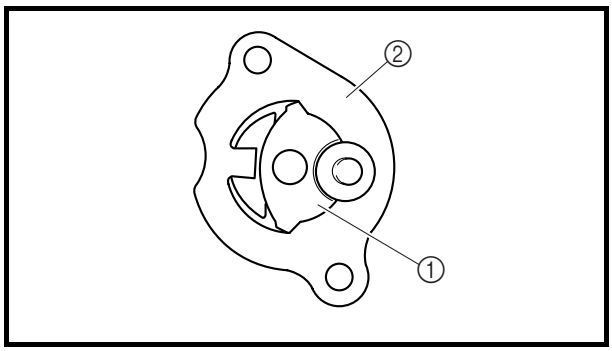

NOTE:
Apply the engine oil on the springs, pawl pins and pawls.

2. Install:
   - Shift lever assembly ①
     To shift guide ②.

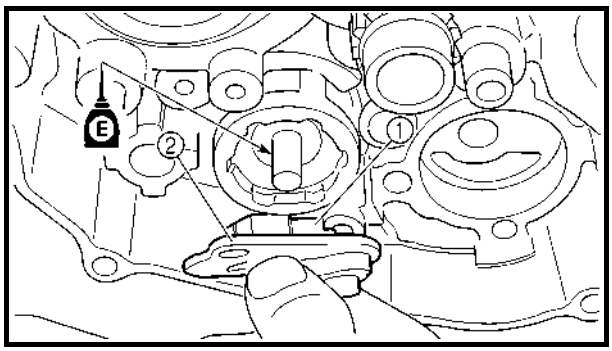

3. Install:
   - Shift lever assembly ①
   - Shift guide ②

NOTE:
- The shift lever assembly is installed at the same time as the shift guide.
- Apply the engine oil on the bolt (segment) shaft.

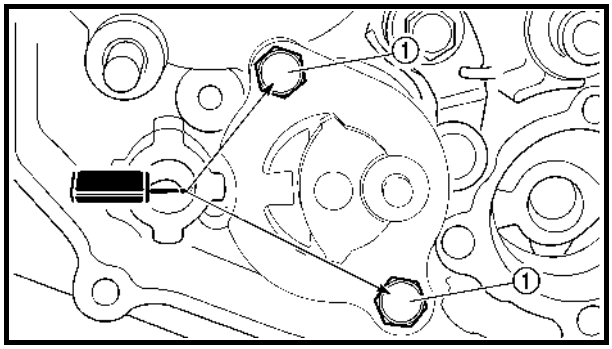

4. Install:
   - Bolt (shift guide) ①

10 Nm (1.0 m · kg, 7.2 ft · lb)

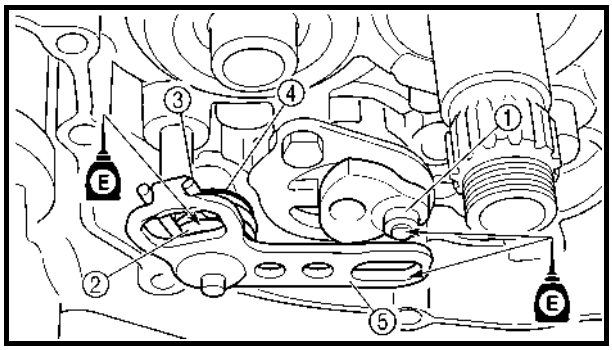

EC4C5301
Shift shaft

1. Install:
   - Roller ①
   - Collar ②
   - Torsion spring ③
   - Plain washer ④
   - Shift shaft ⑤

NOTE:
Apply the engine oil on the roller and shift shaft.

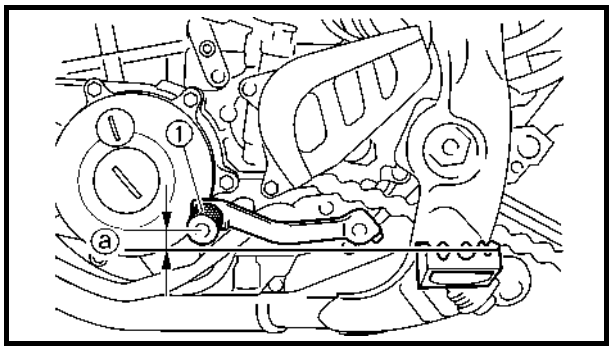

2. Install:
   - Shift pedal ①
   - Bolt (shift pedal)

12 Nm (1.2 m · kg, 8.7 ft · lb)

NOTE:
When installing the shift pedal onto the shift shaft, be sure that the center of the shift pedal is about 4.4 mm (0.17 in) ⓐ above the top of the footrest.

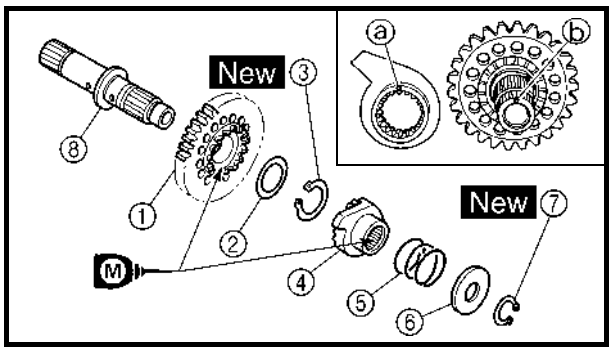

Kick axle assembly

1. Install:
   - Kick gear ①
   - Plain washer ②
   - Circlip ③ New
   - Ratchet wheel ④
   - Spring ⑤
   - Plain washer ⑥
   - Circlip ⑦ New

   To kick axle ⑧.

NOTE:
- Apply the molybdenum disulfide oil on the inner circumferences of the kick gear and ratchet wheel.
- Align the punch mark ⓐ on the ratchet wheel with the punch mark ⓑ on the kick axle.

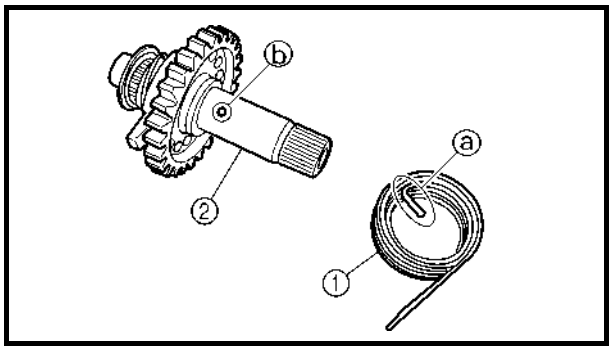

2. Install:
   - Torsion spring ①

   To kick axle ②.

NOTE:
Make sure the stopper ⓐ of the torsion spring fits into the hole ⓑ on the kick axle.

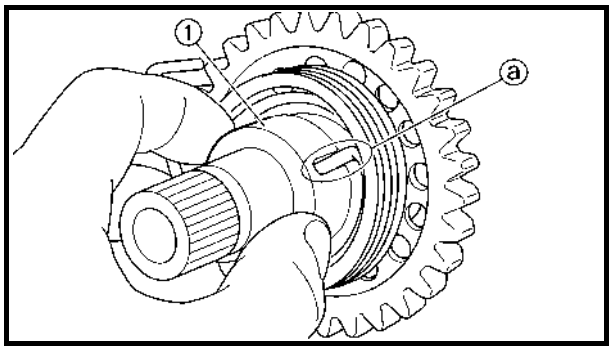

3. Install:
   - Spring guide ①

NOTE:
Slide the spring guide into the kick axle, make sure the groove ⓐ in the spring guide fits on the stopper of the torsion spring.

4. Install:
   - Kick axle assembly ①
   - Plain washer ②

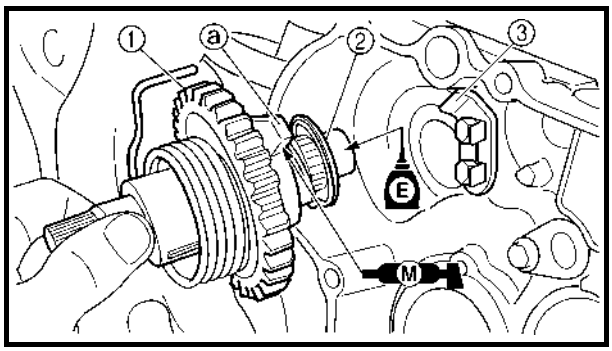

NOTE:
- Apply the molybdenum disulfide grease on the contacting surfaces of the kick axle stopper ⓐ and ratchet wheel guide ③.
- Apply the engine oil on the kick axle.
- Slide the kick axle assembly into the crankcase and make sure the kick axle stopper fits into the ratchet wheel guide.

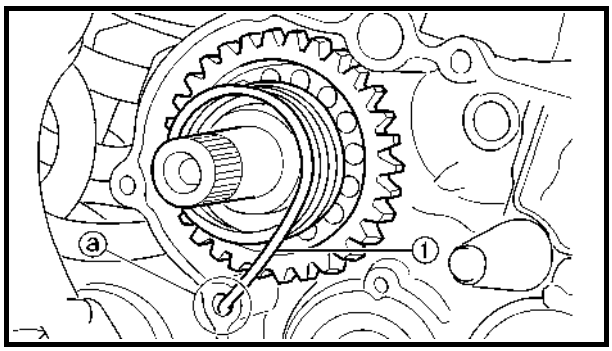

5. Hook:
   - Torsion spring ①

NOTE:
Turn the torsion spring clockwise and hook into the proper hole ⓐ in the crankcase.

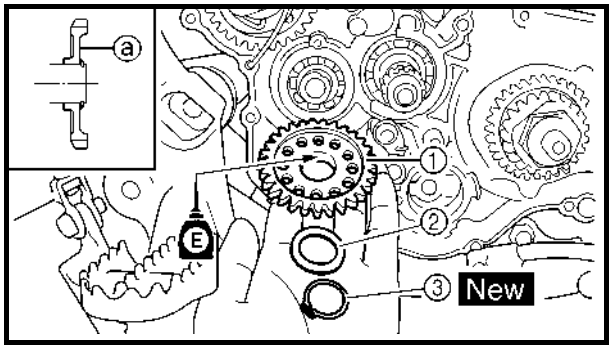

Kick idle gear

1. Install:
   - Kick idle gear ①
   - Plain washer ②
   - Circlip ③ New

NOTE:
- Install the kick idle gear with its depressed side ⓐ toward you.
- Apply the engine oil on the kick idle gear inner circumference.

EC4L0000
CDI MAGNETO

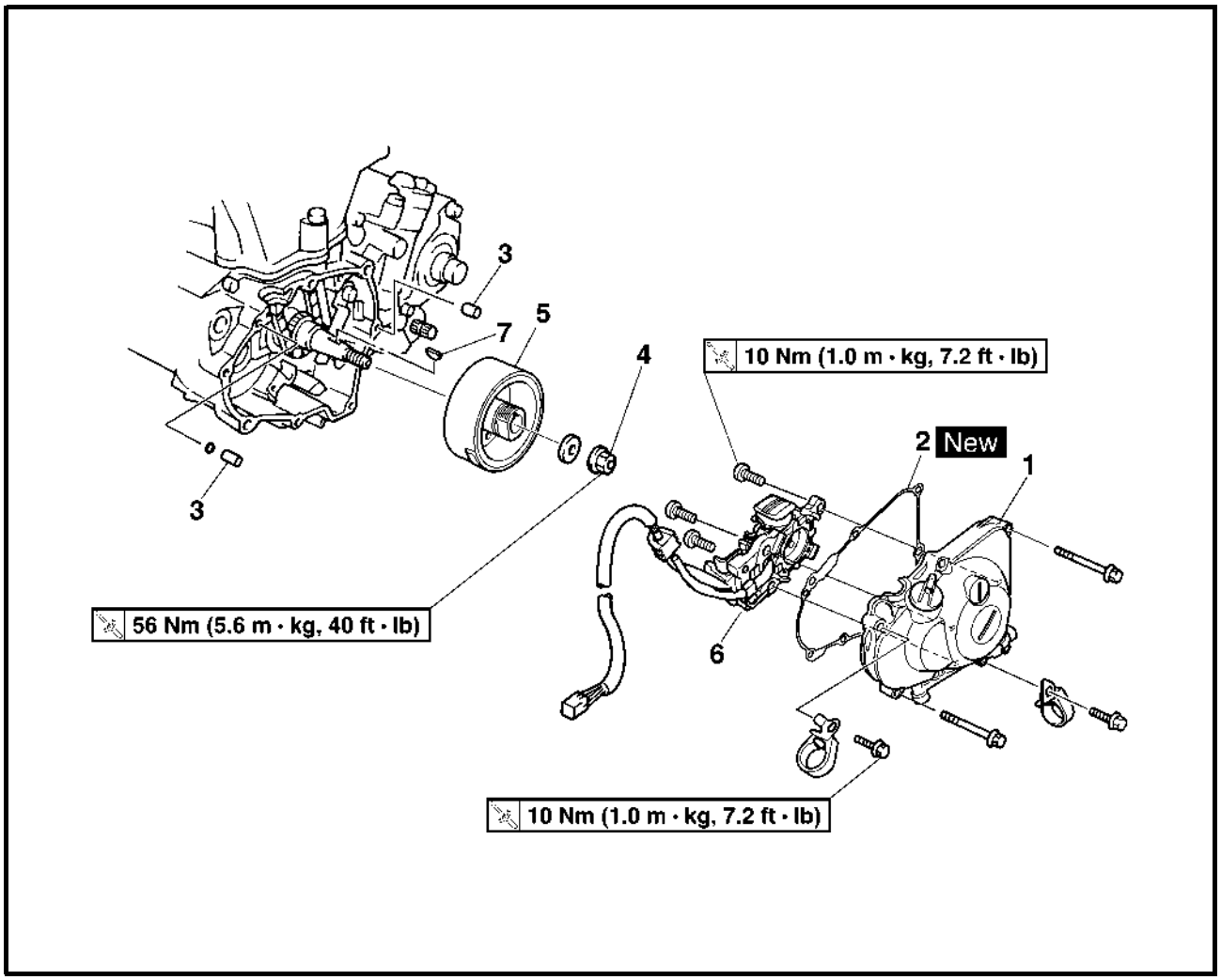

Extent of removal: ① CDI magneto removal

Extent of removal	Order	Part name	Q'ty	Remarks
Preparation for removal		**CDI MAGNETO REMOVAL** Seat and fuel tank Disconnect the CDI magneto lead.		Refer to "SEAT, FUEL TANK AND SIDE COVERS" section.
①	1	Crankcase cover (left)	1	
	2	Gasket	1	
	3	Dowel pin	2	
	4	Nut (rotor)	1	Use special tool. Refer to "REMOVAL POINTS".
	5	Rotor	1	
	6	Stator	1	
	7	Woodruff key	1	

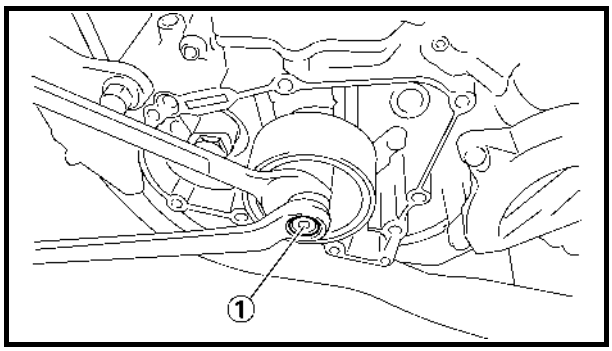

EC4L3000
REMOVAL POINTS

EC4L3101
Rotor

1. Remove:
   - Nut (rotor) ①
   - Plain washer

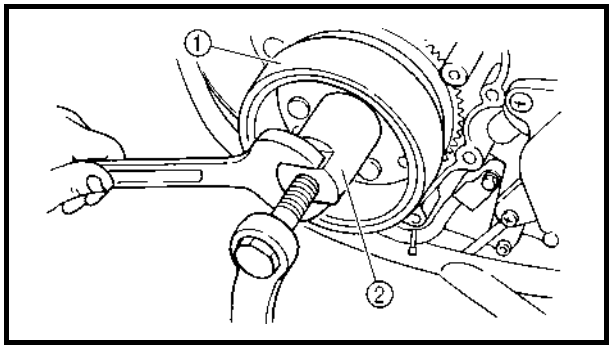

2. Remove:
   - Rotor ①
     Use the rotor puller ②.

	Rotor puller: YM-04151/90890-04151

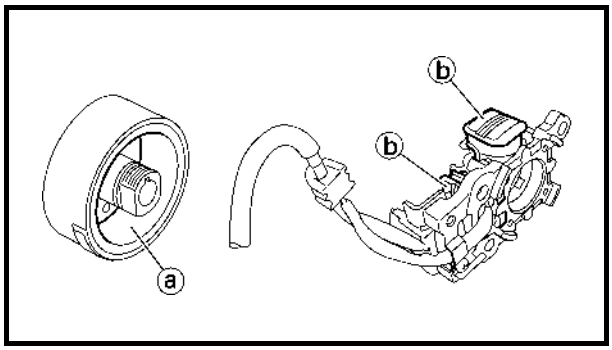

EC4L4000
INSPECTION

EC4L4101
CDI magneto

1. Inspect:
   - Rotor inner surface ⓐ
   - Stator outer surface ⓑ
     Damage → Inspect the crankshaft runout and crankshaft bearing.
     If necessary, replace CDI magneto and/or stator.

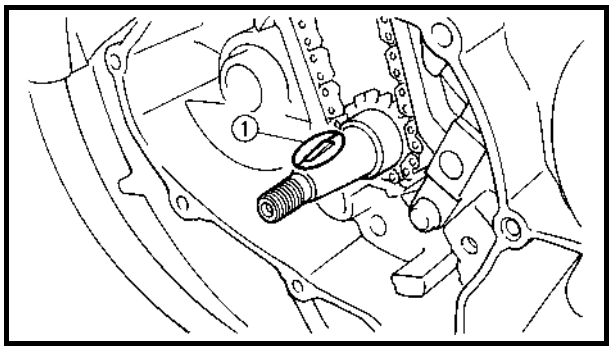

EC4L4200
Woodruff key

1. Inspect:
   - Woodruff key ①
     Damage → Replace.

EC4L5000
ASSEMBLY AND INSTALLATION

CDI magneto

1. Install:
   - Stator ①
   - Screw (stator) ②

	10 Nm (1.0 m · kg, 7.2 ft · lb)

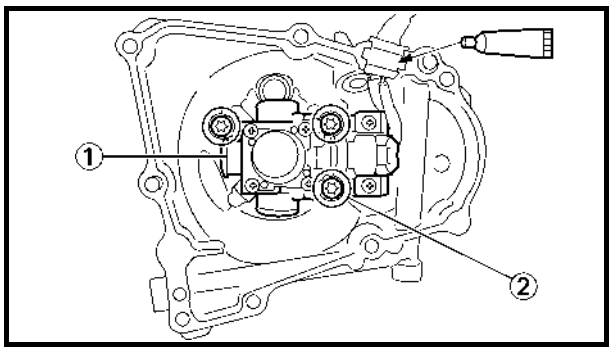

NOTE:
- Apply the sealant to the grommet of the CDI magneto lead.
- Tighten the screws using the T30 bit.

	YAMAHA Bond No. 1215 (ThreeBond® No. 1215): 90890-85505

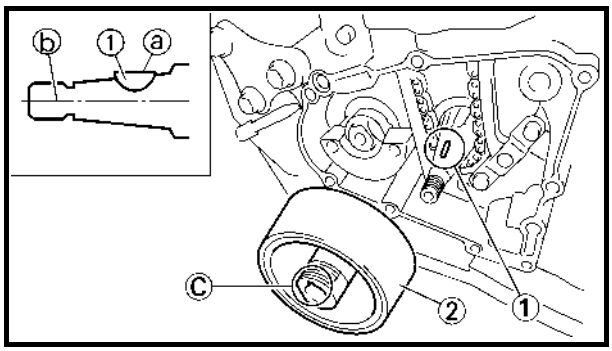

2. Install:
   - Woodruff key ①
   - Rotor ②

NOTE:
- Clean the tapered portions of the crankshaft and rotor.
- When installing the woodruff key, make sure that its flat surface ⓐ is in parallel with the crankshaft center line ⓑ.
- When installing the rotor, align the keyway ⓒ of the rotor with the woodruff key.

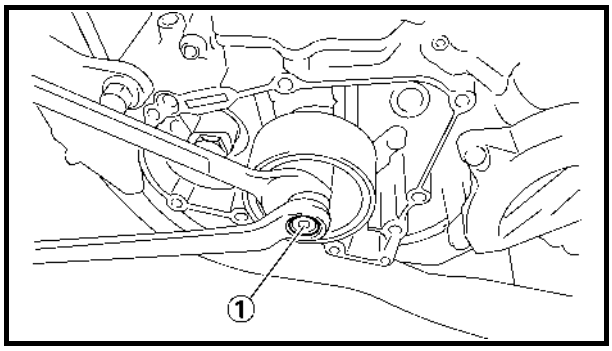

3. Install:
   - Plain washer
   - Nut (rotor) ①

	56 Nm (5.6 m · kg, 40 ft · lb)

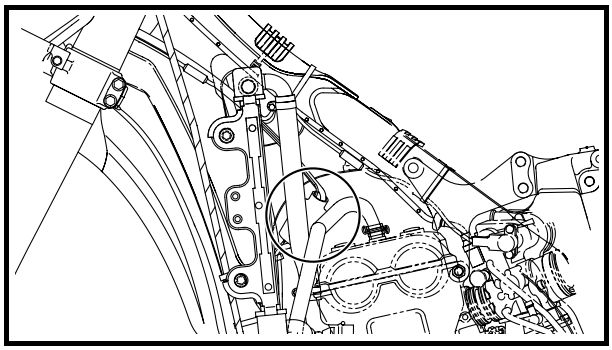

4. Connect:
   - CDI magneto lead
     Refer to “CABLE ROUTING DIAGRAM” section in the CHAPTER 2.

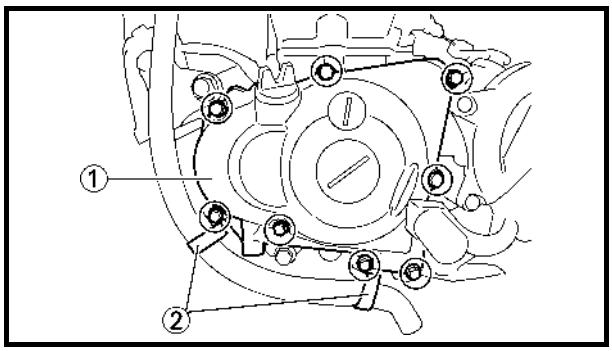

5. Install:
   - Dowel pin
   - O-ring
   - Gasket [crankcase cover (left)] New
   - Crankcase cover (left) ①
   - Hose holder (cylinder head breather hose) ②
   - Bolt [crankcase cover (left)]

	10 Nm (1.0 m · kg, 7.2 ft · lb)

NOTE:
Tighten the bolts in stage, using a crisscross pattern.

EC4M0000

ENGINE REMOVAL

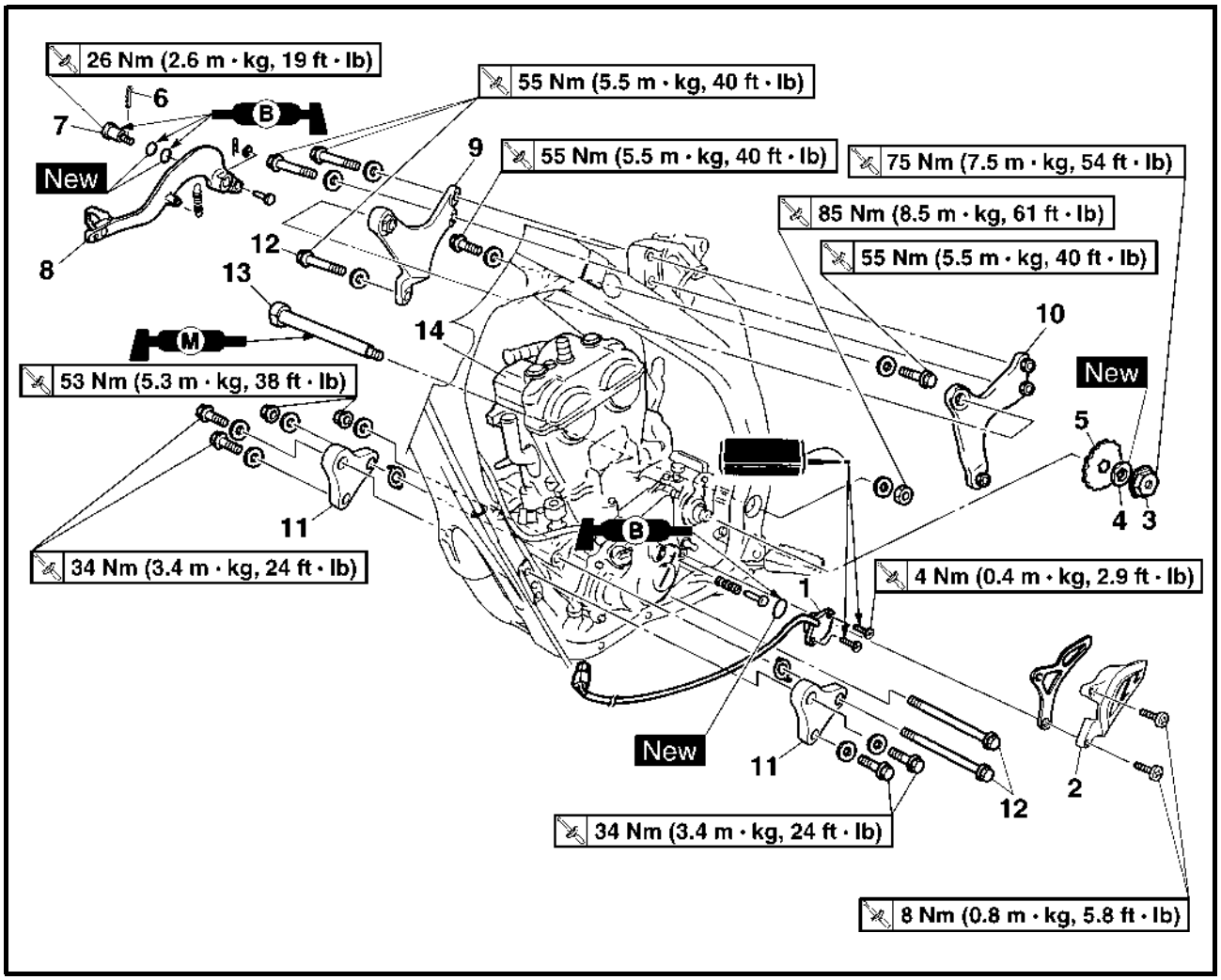

Extent of removal	Order	Part name	Q'ty	Remarks
		ENGINE REMOVAL		
Preparation for removal		Hold the machine by placing the suitable stand under the frame.		**WARNING** **Support the machine securely so there is no danger of it falling over.**
		Seat and fuel tank		Refer to "SEAT, FUEL TANK AND SIDE COVERS" section.
		Rear shock absorber		Refer to "REAR SHOCK ABSORBER" section in the CHAPTER 5.
		Carburetor		Refer to "CARBURETOR" section.
		Exhaust pipe and silencer		Refer to "EXHAUST PIPE AND SILENCER" section.
		Clutch cable		Disconnect at engine side.
		Radiator		Refer to "RADIATOR" section.
		Shift pedal		Refer to "KICK AXLE AND SHIFT SHAFT" section.
		Cylinder head breather hose		Refer to "CAMSHAFTS" section.
		Drain the engine oil		Refer to "ENGINE OIL REPLACEMENT" section in the CHAPTER 3.
		Ignition coil Disconnect the CDI magneto lead.		
		Engine guard		

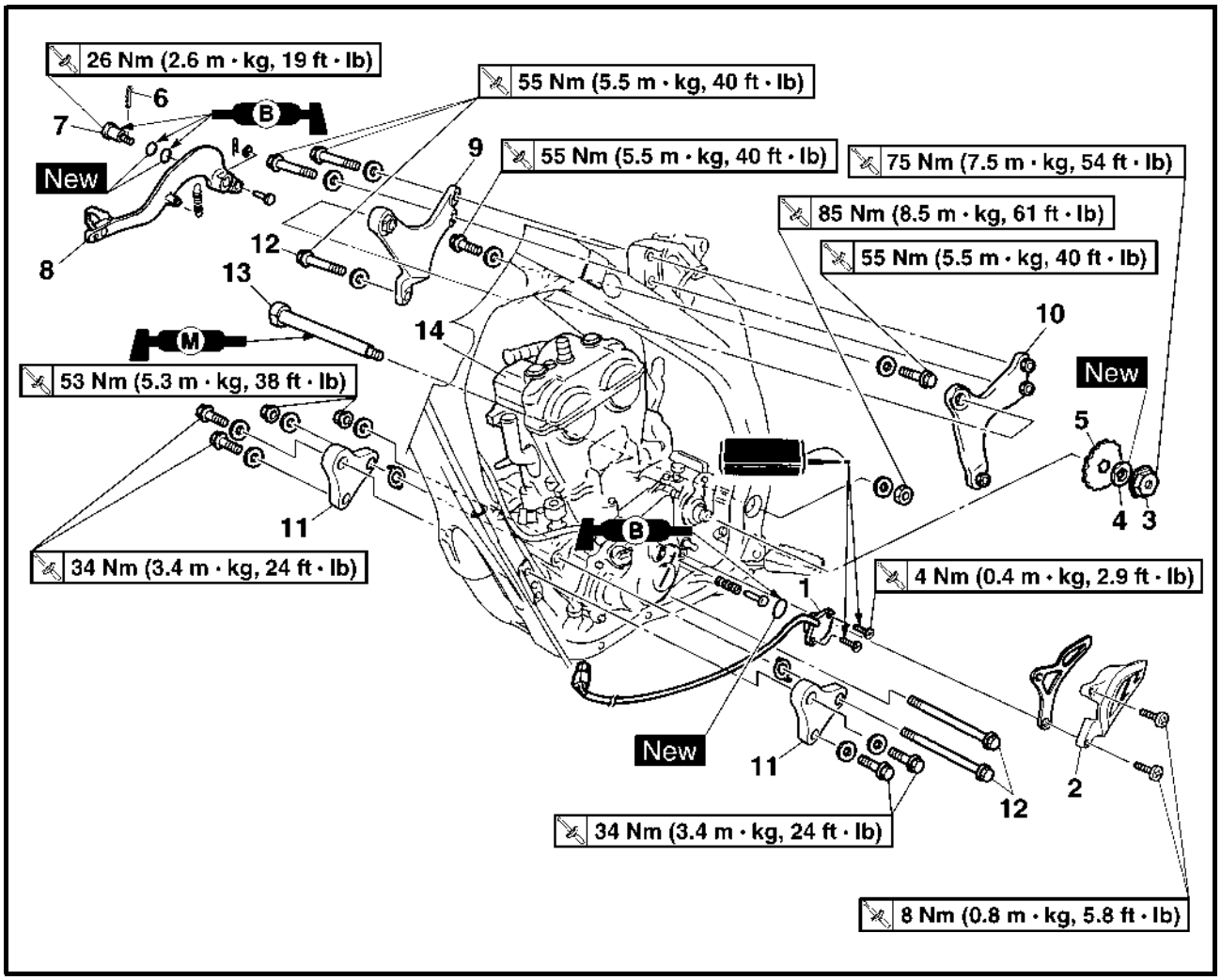

Extent of removal: ① Engine removal

Extent of removal	Order	Part name	Q'ty	Remarks
①	1	Neutral switch	1	
	2	Chain cover	1	
	3	Nut (drive sprocket)	1	Refer to "REMOVAL POINTS".
	4	Lock washer	1	
	5	Drive sprocket	1	
	6	Clip	1	
	7	Bolt (brake pedal)	1	
	8	Brake pedal	1	
	9	Engine upper bracket (right)	1	
	10	Engine upper bracket (left)	1	
	11	Engine lower bracket	2	
	12	Engine mounting bolt	3	
	13	Pivot shaft	1	Refer to "REMOVAL POINTS".
	14	Engine	1	

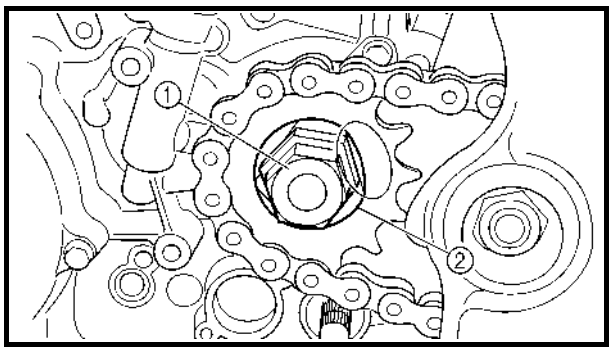

EC4M3000
REMOVAL POINTS

EC4F3100
Drive sprocket

1. Remove:
   - Nut (drive sprocket) ①
   - Lock washer ②

NOTE:
- Straighten the lock washer tab.
- Loosen the nut while applying the rear brake.

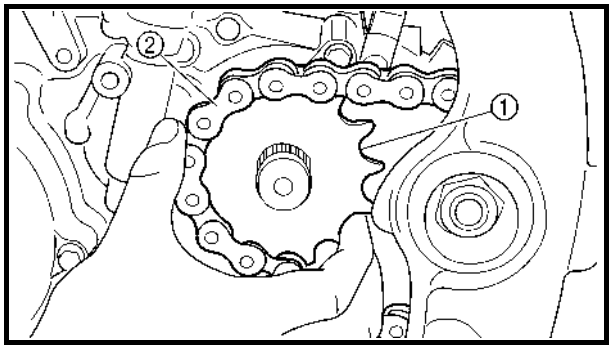

2. Remove:
   - Drive sprocket ①
   - Drive chain ②

NOTE:
Remove the drive sprocket together with the drive chain.

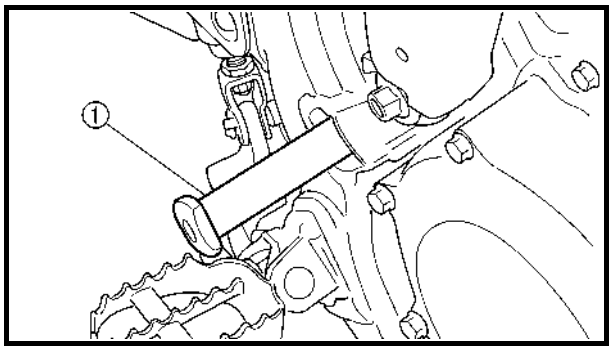

EC4M3301
Engine removal

1. Remove:
   - Pivot shaft ①

NOTE:
If the pivot shaft is pulled all the way out, the swingarm will come loose. If possible, insert a shaft of similar diameter into the other side of the swingarm to support it.

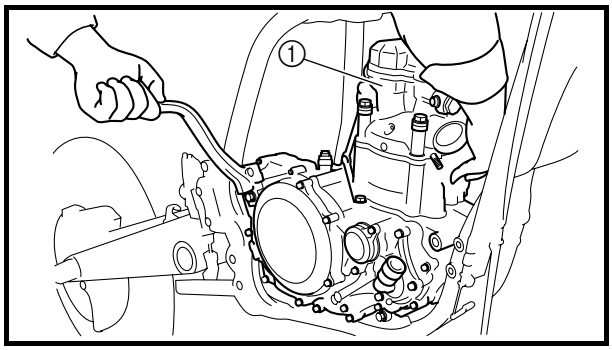

2. Remove:
   - Engine ①
     From right side.

NOTE:
Make sure that the couplers, hoses and cables are disconnected.

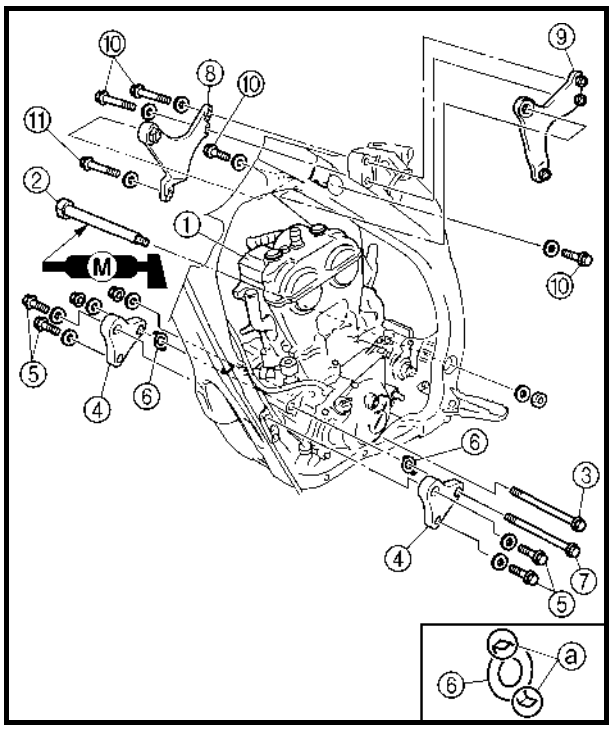

EC4M5000

ASSEMBLY AND INSTALLATION

Engine installation

1. Install:
   - Engine ①
     Install the engine from right side.
   - Pivot shaft ②
     85 Nm (8.5 m · kg, 61 ft · lb)
   - Engine mounting bolt (lower) ③
     53 Nm (5.3 m · kg, 38 ft · lb)
   - Engine lower bracket ④
   - Bolt (engine lower bracket) ⑤
     34 Nm (3.4 m · kg, 24 ft · lb)
   - Patch ⑥
   - Engine mounting bolt (front) ⑦
     53 Nm (5.3 m · kg, 38 ft · lb)
   - Engine upper bracket (right) ⑧
   - Engine upper bracket (left) ⑨
   - Bolt (engine upper bracket) ⑩
     55 Nm (5.5 m · kg, 40 ft · lb)
   - Engine mounting bolt (upper) ⑪
     55 Nm (5.5 m · kg, 40 ft · lb)

NOTE:
- Apply the molybdenum disulfide grease on the pivot shaft.
- Install the patch with the claw ⓐ facing outside the chassis.

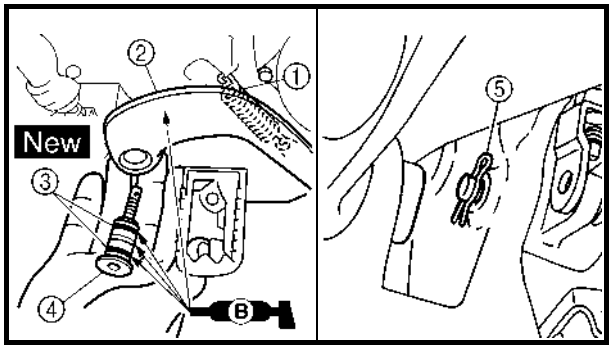

Brake pedal

1. Install:
   - Spring ①
   - Brake pedal ②
   - O-ring ③ New
   - Bolt (brake pedal) ④
     26 Nm (2.6 m · kg, 19 ft · lb)
   - Clip ⑤

NOTE:
Apply the lithium soap base grease on the bolt, O-rings and brake pedal bracket.

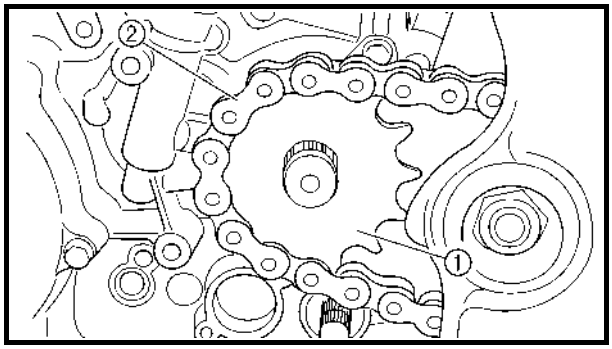

Drive sprocket

1. Install:
   - Drive sprocket ①
   - Drive chain ②

NOTE:
Install the drive sprocket together with the drive chain.

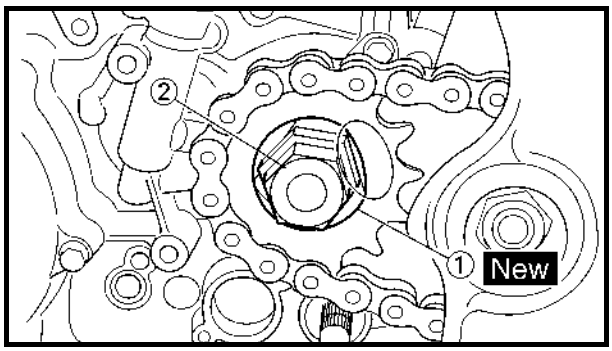

2. Install:
   - Lock washer ① New
   - Nut (drive sprocket) ②

	75 Nm (7.5 m · kg, 54 ft · lb)

NOTE:
Tighten the nut while applying the rear brake.

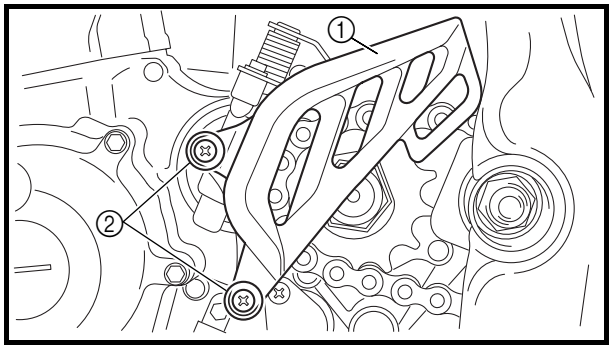

3. Bend the lock washer tab to lock the nut.
4. Install:
   - Chain guide
   - Chain cover ①
   - Screw (chain cover) ②

	8 Nm (0.8 m · kg, 5.8 ft · lb)

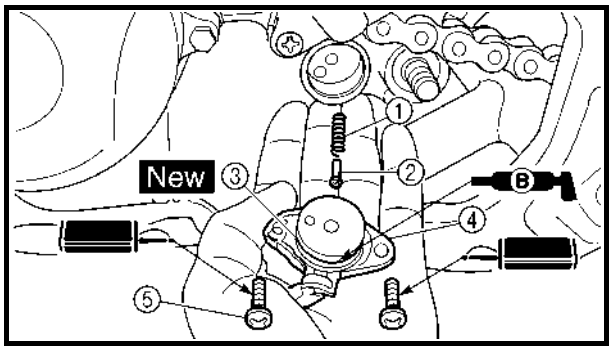

5. Install:
   - Spring ①
   - Pin ②
   - O-ring ③ New
   - Neutral switch ④
   - Screw (neutral switch) ⑤

	4 Nm (0.4 m · kg, 2.9 ft · lb)

NOTE:
Apply the lithium soap base grease on the O-ring.

CRANKCASE AND CRANKSHAFT

CRANKCASE AND CRANKSHAFT

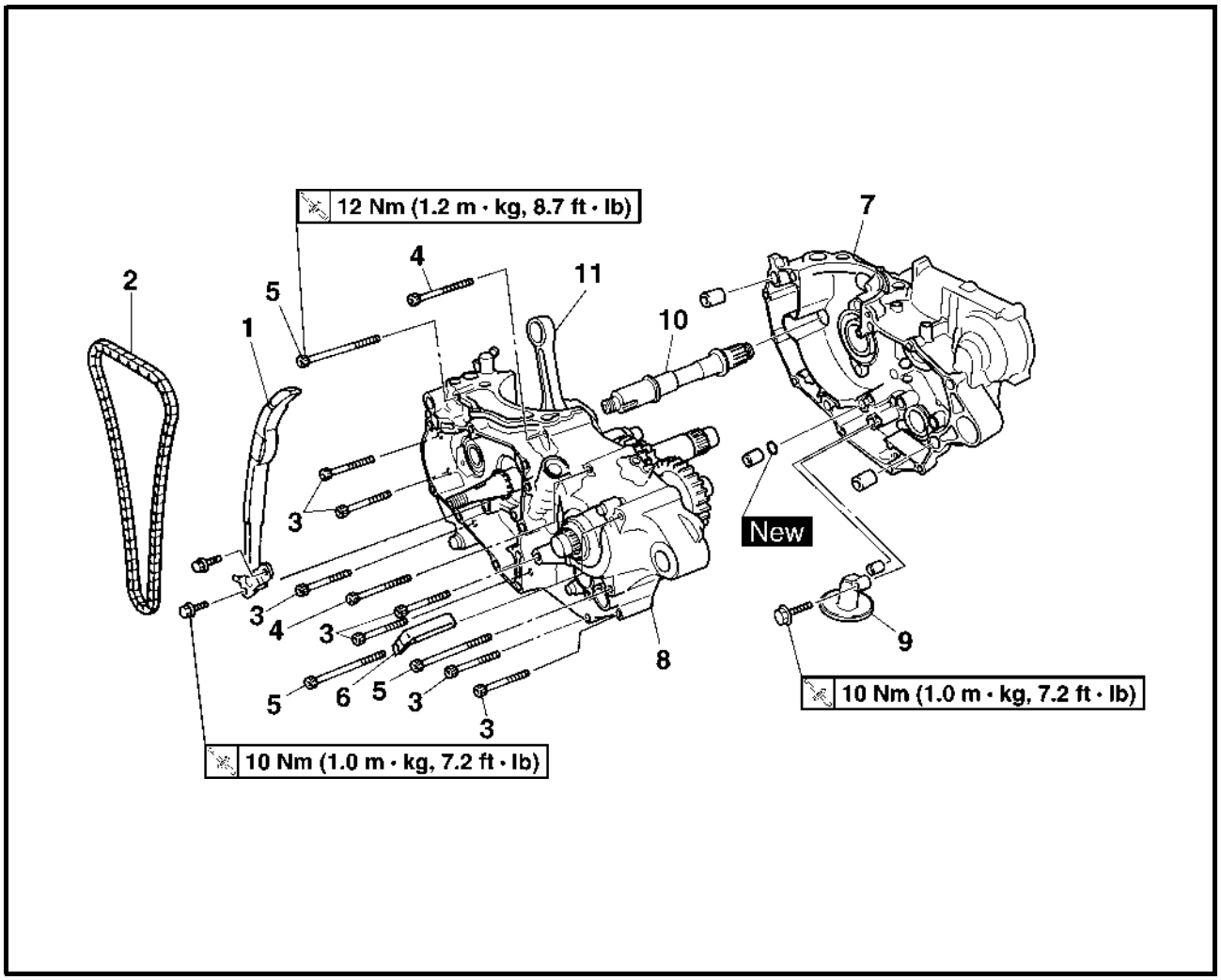

Extent of removal: ① Crankcase separation ② Crankshaft removal

Extent of removal	Order	Part name	Q'ty	Remarks
Preparation for removal		**CRANKCASE SEPARATION**		
		Engine		Refer to "ENGINE REMOVAL" section.
		Piston		Refer to "CYLINDER AND PISTON" section.
		Balancer		Refer to "BALANCER" section.
		Kick axle assembly		Refer to "KICK AXLE AND SHIFT SHAFT" section.
		Segment		
		Stator		Refer to "CDI MAGNETO" section.
① ②	1	Timing chain guide (rear)	1	Refer to "REMOVAL POINTS".
	2	Timing chain	1	
	3	Bolt (50 mm)	7	
	4	Bolt (60 mm)	2	
	5	Bolt (80 mm)	3	
	6	Hose guide	1	

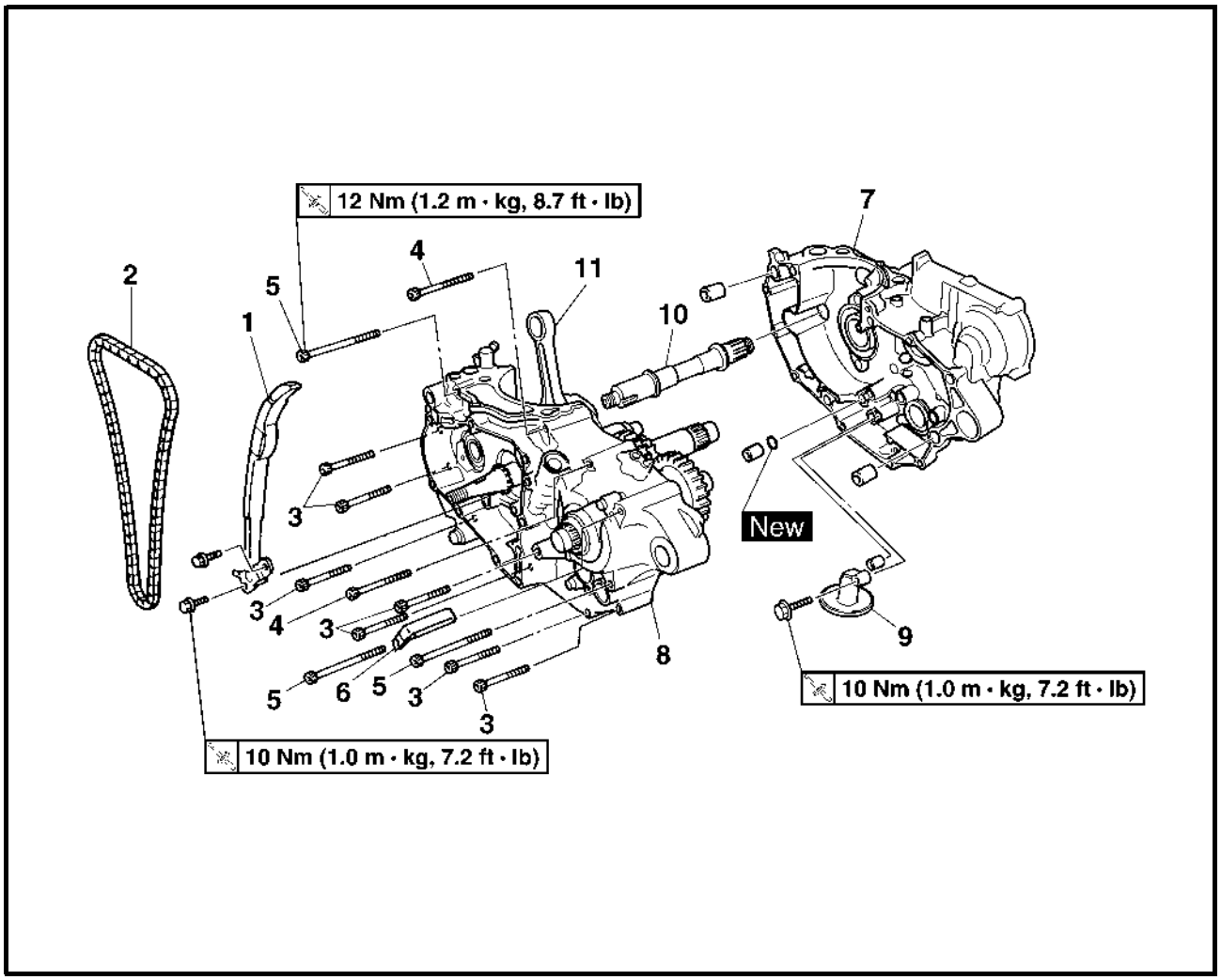

Extent of removal	Order	Part name	Q'ty	Remarks
①	7	Crankcase (right)	1	Refer to "REMOVAL POINTS".
	8	Crankcase (left)	1	
②	9	Oil strainer	1	
	10	Balancer shaft	1	Refer to "REMOVAL POINTS".
	11	Crankshaft	1	Use special tool. Refer to "REMOVAL POINTS".

CRANKCASE BEARING

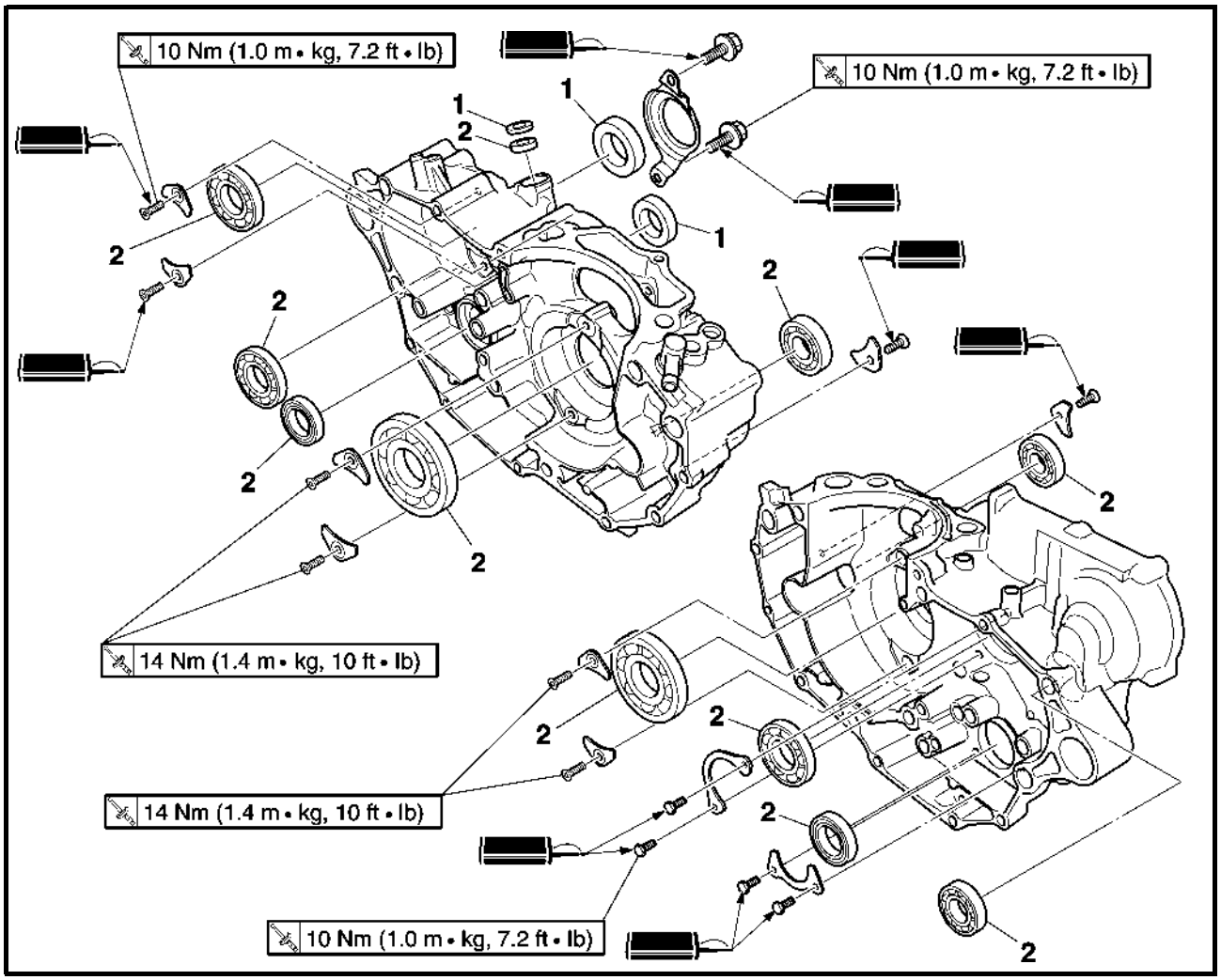

Extent of removal: ① Crankcase bearing removal

Extent of removal	Order	Part name	Q'ty	Remarks
Preparation for removal		**CRANKCASE BEARING REMOVAL** Transmission Shift cam and shift fork		Refer to "TRANSMISSION, SHIFT CAM AND SHIFT FORK" section.
①	1 2	Oil seal Bearing	3 10	Refer to "REMOVAL POINTS".

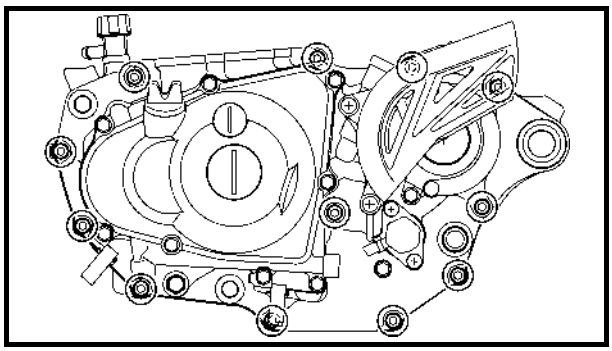

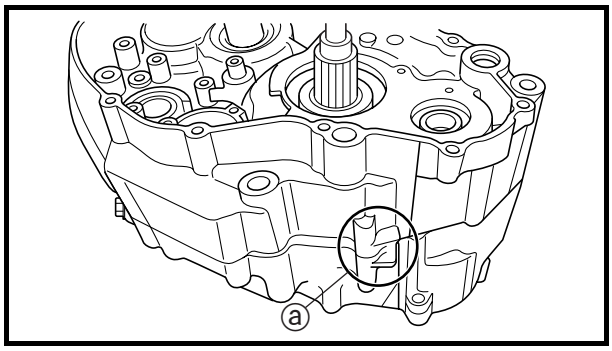

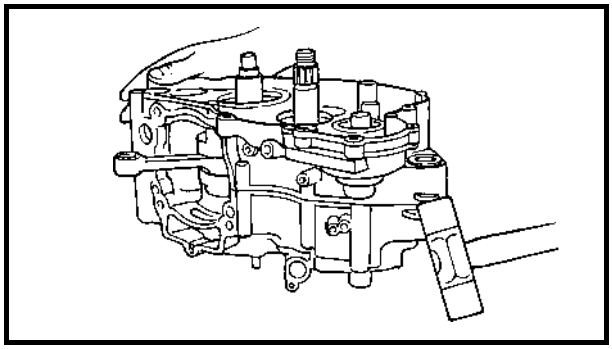

REMOVAL POINTS

Crankcase

1. Separate:
   - Crankcase (right)
   - Crankcase (left)

Separation steps:

- Remove the crankcase bolts, hose guide and clutch cable holder.

NOTE:

Loosen each bolt 1/4 of a turn at a time and after all the bolts are loosened, remove them.

- Remove the crankcase (right).

NOTE:

- Place the crankcase with its left side downward and split it by inserting a screwdriver tip into the splitting slit ⓐ in the crankcase.
- Lift the crankcase (right) horizontally while lightly patting the case splitting slit and engine mounting boss using a soft hammer, and leave the crankshaft and transmission with the crankcase (left).

CAUTION:

Use soft hammer to tap on the case half. Tap only on reinforced portions of case. Do not tap on gasket mating surface. Work slowly and carefully. Make sure the case halves separate evenly. If one end "hangs up", take pressure off the push screw, realign, and start over. If the cases do not separate, check for a remaining case screw or fitting. Do not force.

- Remove the dowel pins and O-ring.

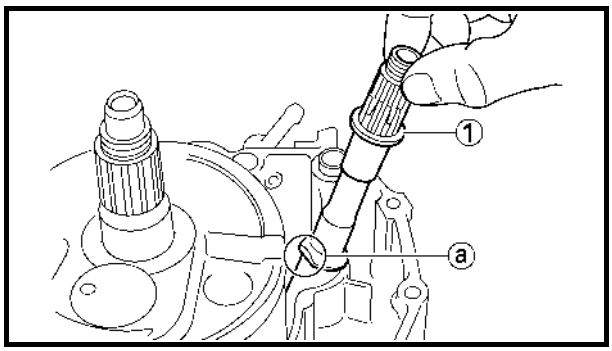

Balancer shaft

1. Remove:
   - Balancer shaft ①

NOTE:

Remove the balancer shaft with its flat side ⓐ facing the crankshaft.

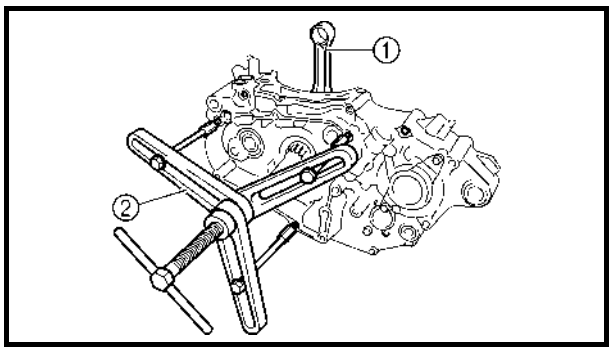

Crankshaft

1. Remove:
   - Crankshaft ①
     Use the crankcase separating tool ②.

	Crankcase separating tool: YU-A9642/90890-04152

NOTE:
Install the crankcase separating tool as shown.

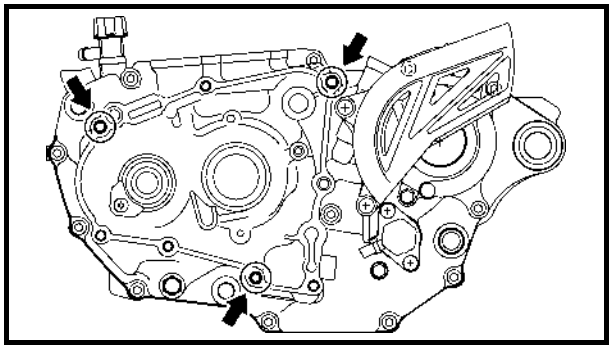

CAUTION:
Do not use a hammer to drive out the crankshaft.

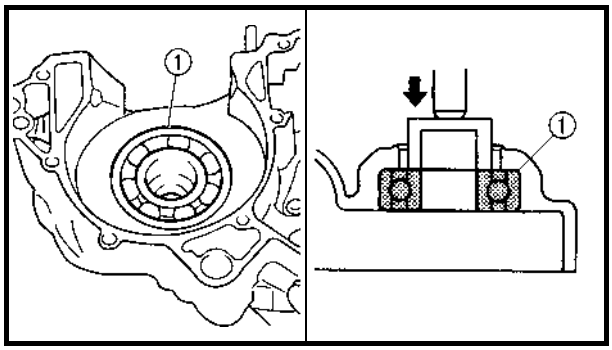

Crankshaft bearing

1. Remove:
   - Bearing ①

NOTE:
- Remove the bearing from the crankcase by pressing its inner race.
- Do not use the removed bearing.

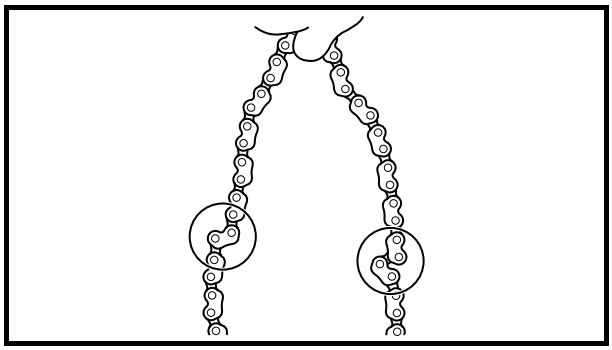

INSPECTION

Timing chain and timing chain guide

1. Inspect:
   - Timing chain
     Cracks/stiff → Replace the timing chain and camshaft sprocket as a set.
2. Inspect:
   - Timing chain guide
     Wear/damage → Replace.

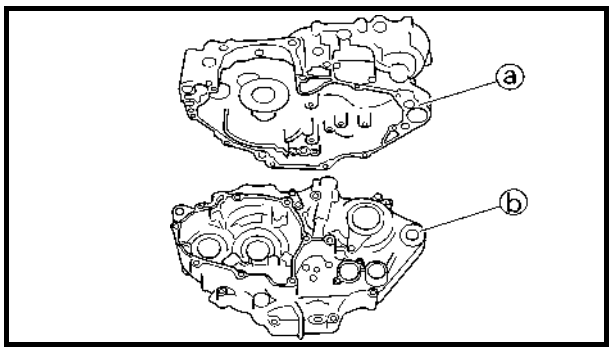

EC4N4101

Crankcase

1. Inspect:
   - Contacting surface ⓐ
     Scratches → Replace.
   - Engine mounting boss ⓑ, crankcase
     Cracks/damage → Replace.

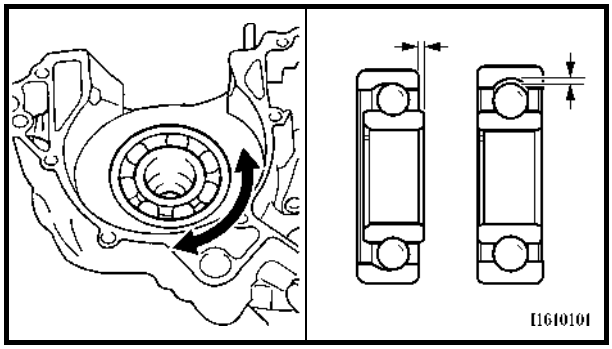

2. Inspect:
   - Bearing
     Rotate inner race with a finger.
     Rough spot/seizure → Replace.
3. Inspect:
   - Oil seal
     Wear/damage → Replace.

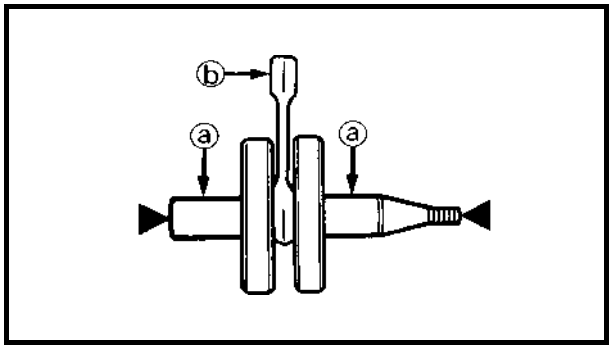

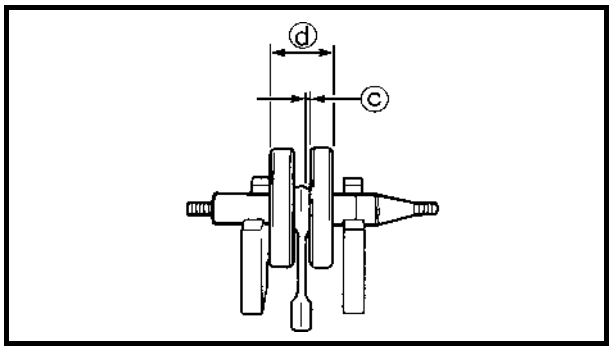

EC4N4201

Crankshaft

1. Measure:
   - Runout limit ⓐ
   - Small end free play limit ⓑ
   - Connecting rod big end side clearance ⓒ
   - Crank width ⓓ
     Out of specification → Replace.
     Use the dial gauge and a thickness gauge.

	Dial gauge and stand: YU-3097/90890-01252

	Standard	<Limit>
Runout limit:	**0.03 mm (0.0012 in)**	**0.05 mm (0.002 in)**
Small end free play:	**0.4 ~ 1.0 mm (0.016 ~ 0.039 in)**	**2.0 mm (0.08 in)**
Side clearance:	**0.15 ~ 0.45 mm (0.0059 ~ 0.0177 in)**	**0.50 mm (0.02 in)**
Crack width:	**61.95 ~ 62.00 mm (2.439 ~ 2.441 in)**	**—**

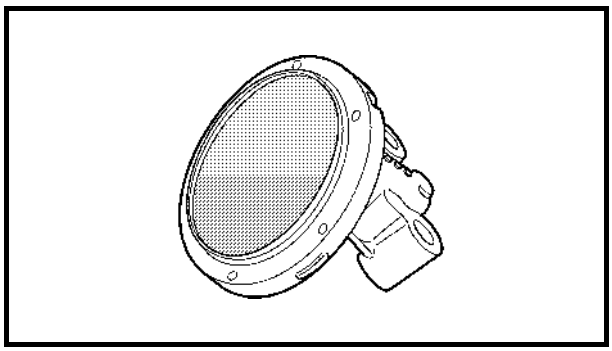

Oil strainer

1. Inspect:
   - Oil strainer
     Damage → Replace.

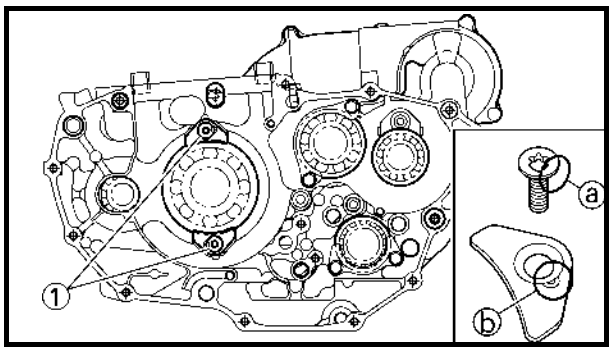

EC4N5000

ASSEMBLY AND INSTALLATION

Crankshaft bearing

1. Install:
   - Bearing New
   - Bearing stopper
   - Bolt (bearing stopper)

     10 Nm (1.0 m · kg, 7.2 ft · lb)
   - Screw (bearing stopper)

     10 Nm (1.0 m · kg, 7.2 ft · lb)
   - Screw [bearing stopper (crankshaft)] ①

     14 Nm (1.4 m · kg, 10 ft · lb)

     To crankcase (left and right).

NOTE:
- Install the bearing by pressing its outer race parallel.
- To prevent the screw [bearing stopper (crankshaft)] from becoming loose, crush the screw head periphery ⓐ into the concave ⓑ using a punch etc. In so doing, take care not to damage the screwdriver receiving hole in the screw head.

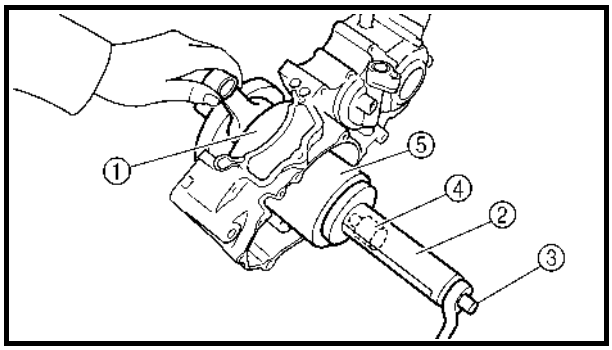

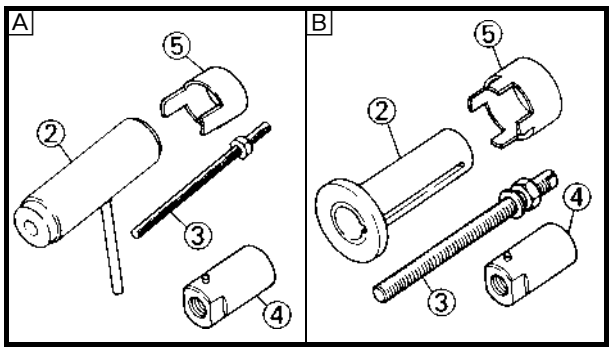

Crankshaft

1. Install:
   - Crankshaft ①

     Use the crankshaft installing tool ②, ③, ④ and ⑤.

Crankshaft installing pot ②:
YU-90050/90890-01274
Crankshaft installing bolt ③:
YU-90050/90890-01275
Adaptor (M12) ④:
YU-90063/90890-01278
Spacer (crankshaft installer) ⑤:
YM-91044/90890-04081

A For USA and CDN
B Except for USA and CDN

NOTE:
- Hold the connecting rod at top dead center with one hand while turning the nut of the installing tool with the other. Operate the installing tool until the crankshaft bottoms against the bearing.
- Before installing the crankshaft, clean the contacting surface of crankcase.

CAUTION:
Do not use a hammer to drive in the crankshaft.

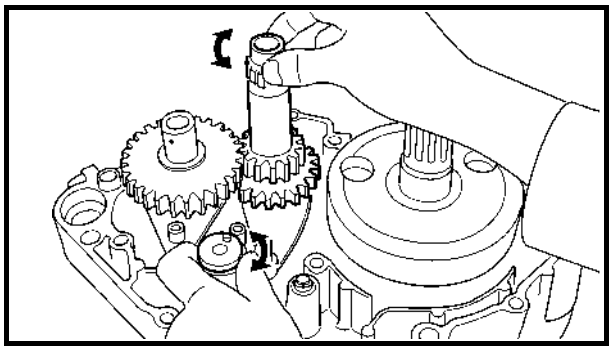

2. Check:
   - Shifter operation
   - Transmission operation
     Unsmooth operation → Repair.

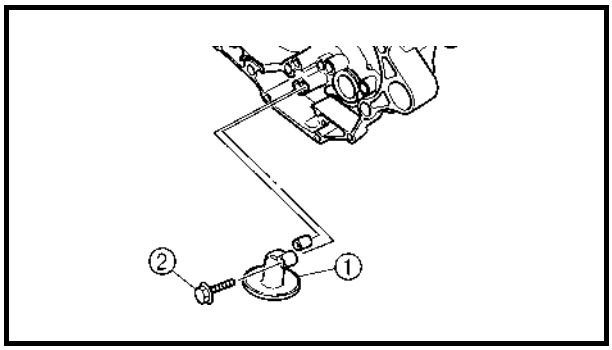

3. Install:
   - Oil strainer ①
   - Bolt (oil strainer) ②

10 Nm (1.0 m · kg, 7.2 ft · lb)

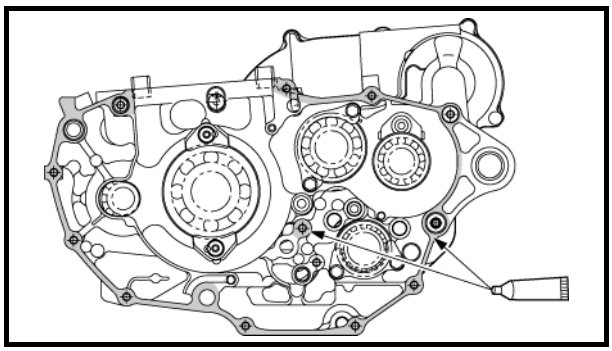

4. Apply:
   - Sealant
     On the crankcase (right).

YAMAHA Bond No. 1215 (ThreeBond® No. 1215): 90890-85505

NOTE:
Clean the contacting surface of crankcase (left and right) before applying the sealant.

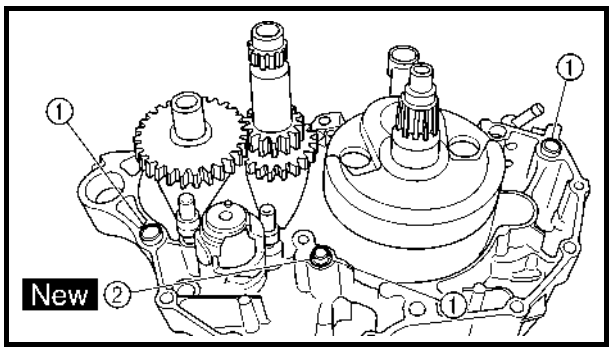

5. Install:
   - Dowel pin ①
   - O-ring ② New
   - Crankcase (right)
     To crankcase (left).

NOTE:
- Fit the crankcase (right) onto the crankcase (left). Tap lightly on the case with soft hammer.
- When installing the crankcase, the connecting rod should be positioned at TDC (top dead center).

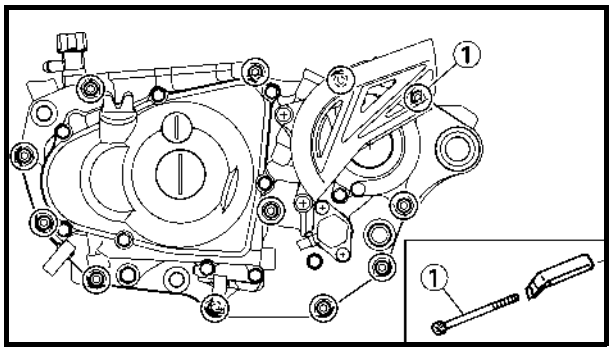

6. Tighten:
   - Bolt (hose guide) ①
   - Bolt (crankcase)

	12 Nm (1.2 m · kg, 8.7 ft · lb)

NOTE:
Tighten the crankcase tightening bolts in stage, using a crisscross pattern.

7. Install:
   - Timing chain
   - Timing chain guide (rear)
   - Bolt (timing chain guide)

	10 Nm (1.0 m · kg, 7.2 ft · lb)

8. Remove:
   - Sealant
     Forced out on the cylinder mating surface.
9. Apply:
   - Engine oil
     To the crank pin, bearing and oil delivery hole.
10. Check:
   - Crankshaft and transmission operation.
     Unsmooth operation → Repair.

TRANSMISSION, SHIFT CAM AND SHIFT FORK

TRANSMISSION, SHIFT CAM AND SHIFT FORK

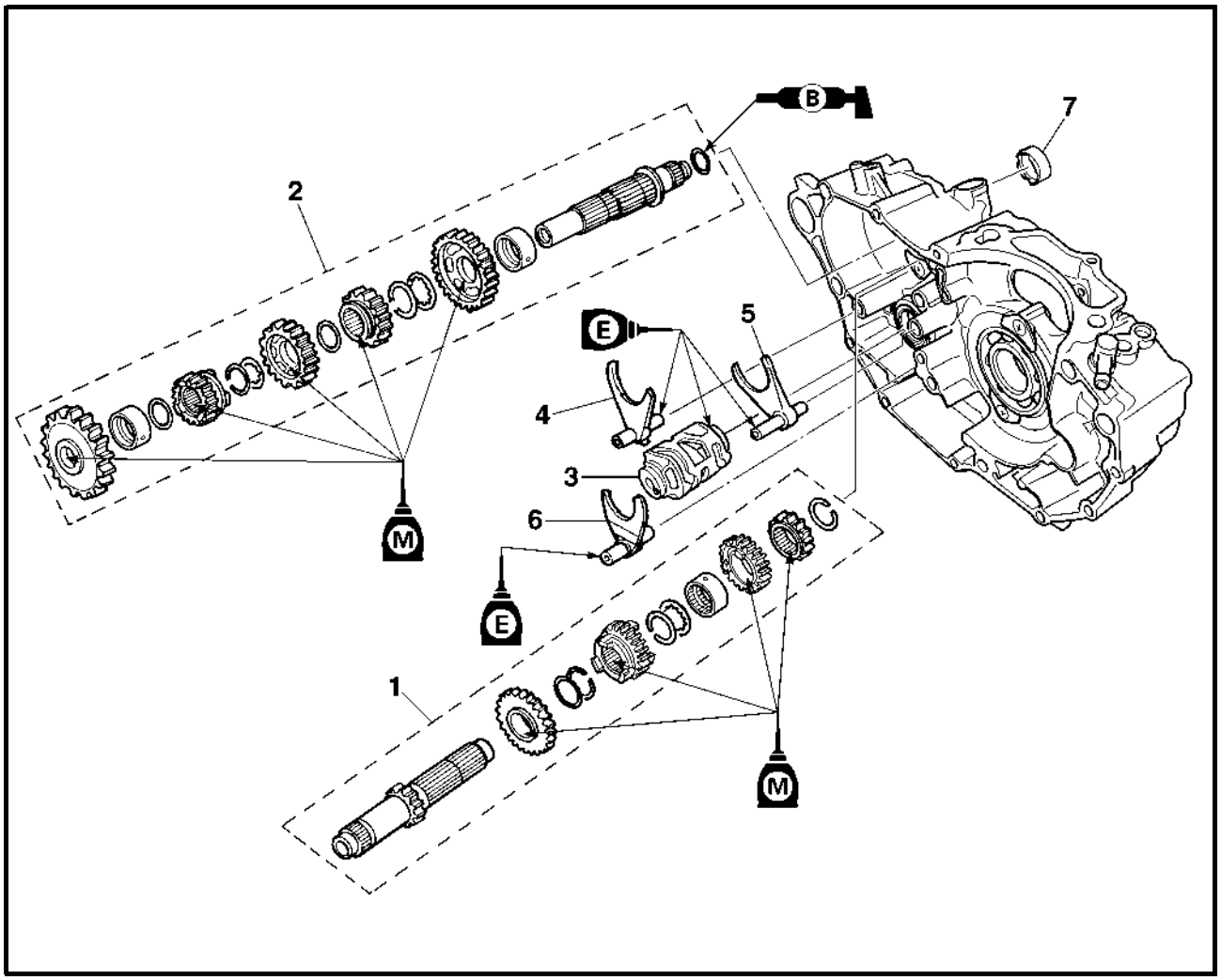

Extent of removal: ① Shift fork, shift cam, main axle and drive axle removal

Extent of removal	Order	Part name	Q'ty	Remarks
Preparation for removal		**TRANSMISSION, SHIFT CAM AND SHIFT FORK REMOVAL** Engine Separate the crankcase.		 Refer to "ENGINE REMOVAL" section. Refer to "CRANKCASE AND CRANKSHAFT" section.
①	1	Main axle	1	Refer to "REMOVAL POINTS".
	2	Drive axle	1	
	3	Shift cam	1	
	4	Shift fork 3	1	
	5	Shift fork 2	1	
	6	Shift fork 1	1	
	7	Collar	1	

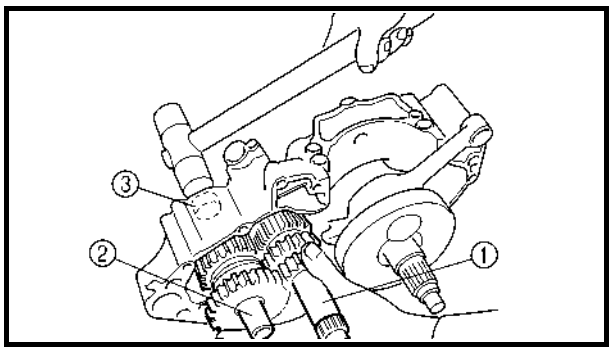

EC4H3000
REMOVAL POINTS

EC4H3230
Transmission

1. Remove:
   - Main axle ①
   - Drive axle ②
   - Shift cam
   - Shift fork 3
   - Shift fork 2
   - Shift fork 1

NOTE:
- Remove assembly with the collar ③ installed to the crankcase.
- Remove assembly carefully. Note the position of each part. Pay particular attention to the location and direction of shift forks.
- Remove the main axle, drive axle, shift cam and shift fork all together by tapping lightly on the transmission drive axle with a soft hammer.

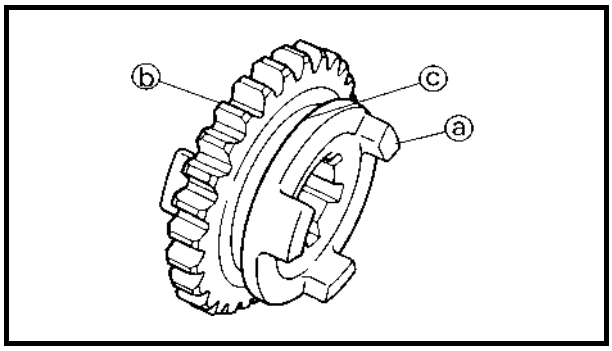

EC4H4000
INSPECTION

EC4H4200
Gears

1. Inspect:
   - Matching dog ⓐ
   - Gear teeth ⓑ
   - Shift fork groove ⓒ
     Wear/damage → Replace.

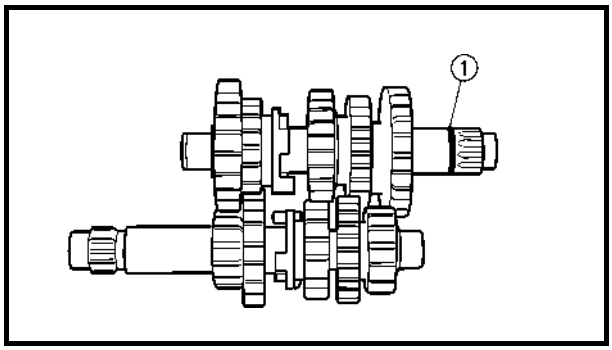

2. Inspect:
   - O-ring ①
     Damage → Replace.
3. Check:
   - Gears movement
     Unsmooth movement → Repair or replace.

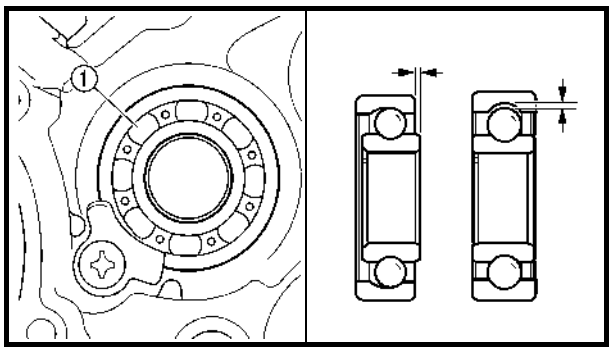

EC4H4600
Bearing

1. Inspect:
   - Bearing ①
     Rotate inner race with a finger.
     Rough spot/seizure → Replace.

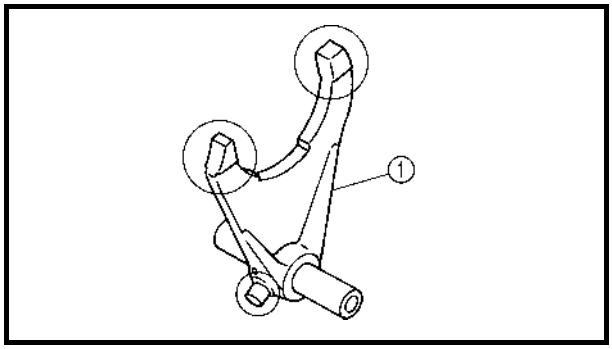

EC4H4801
Shift fork, shift cam and segment

1. Inspect:
   - Shift fork ①
     Wear/damage/scratches → Replace.

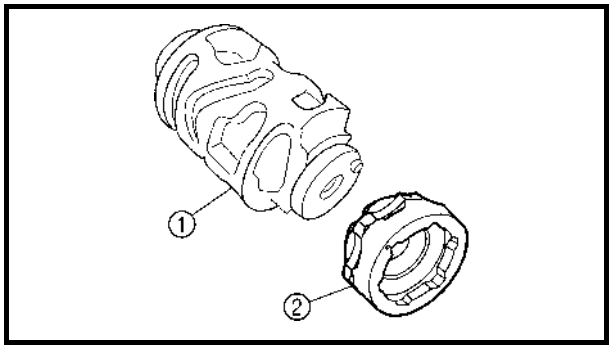

2. Inspect:
   - Shift cam ①
   - Segment ②
     Bend/wear/damage → Replace.

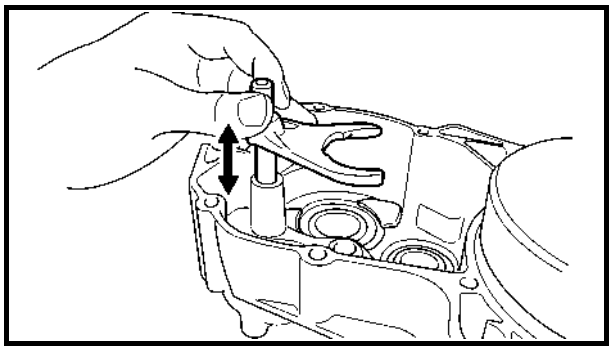

3. Check:
   - Shift fork movement
     Unsmooth operation → Replace shift fork.

NOTE:
For a malfunctioning shift fork, replace not only the shift fork itself but the two gears each adjacent to the shift fork.

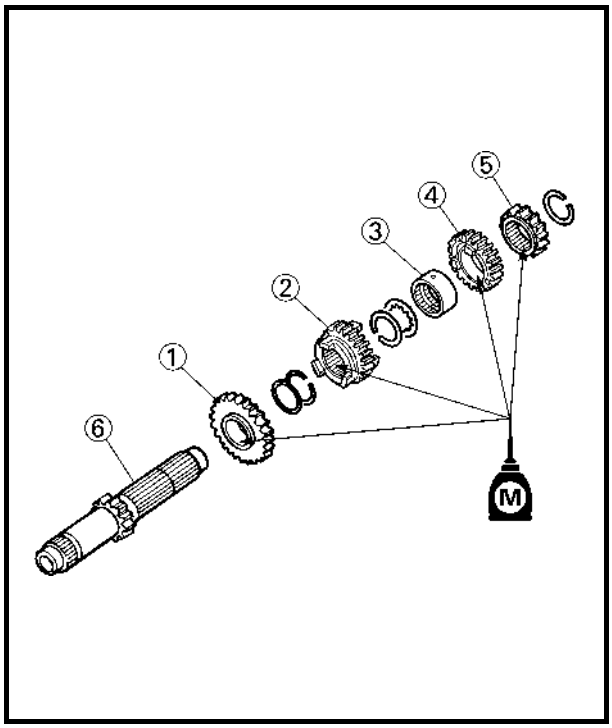

ASSEMBLY AND INSTALLATION
Transmission

1. Install:
   - 5th pinion gear (21T) ①
   - 3rd pinion gear (18T) ②
   - Collar ③
   - 4th pinion gear (22T) ④
   - 2nd pinion gear (15T) ⑤
     To main axle ⑥.

NOTE:
Apply the molybdenum disulfide oil on the inner and end surface of the idler gear and on the inner surface of the sliding gear, then install.

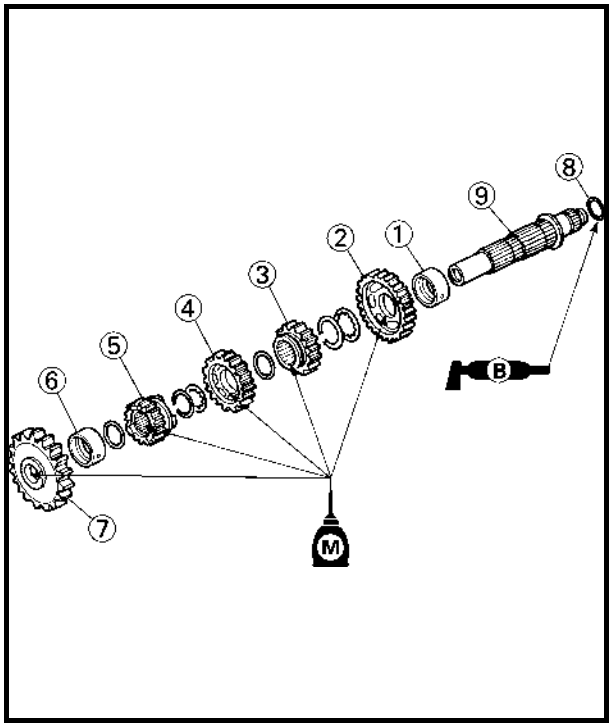

2. Install:
   - Collar ①
   - 2nd wheel gear (23T) ②
   - 4th wheel gear (24T) ③
   - 3rd wheel gear (23T) ④
   - 5th wheel gear (20T) ⑤
   - Collar ⑥
   - 1st wheel gear (27T) ⑦
   - O-ring ⑧
     To drive axle ⑨.

NOTE:
- Apply the molybdenum disulfide oil on the inner and end surface of the idler gear and on the inner surface of the sliding gear, then install.
- Apply the lithium soap base grease on the O-ring.

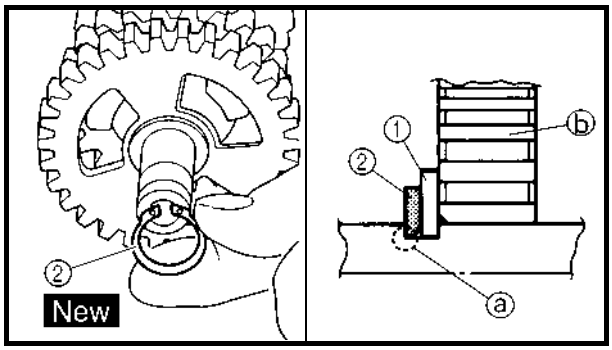

3. Install:
   - Plain washer ①
   - Circlip ② New

NOTE:
- Be sure the circlip sharp-edged corner ⓐ is positioned opposite side to the plain washer and gear ⓑ.
- Install the circlip with its ends ⓒ settled evenly on the spline crests.

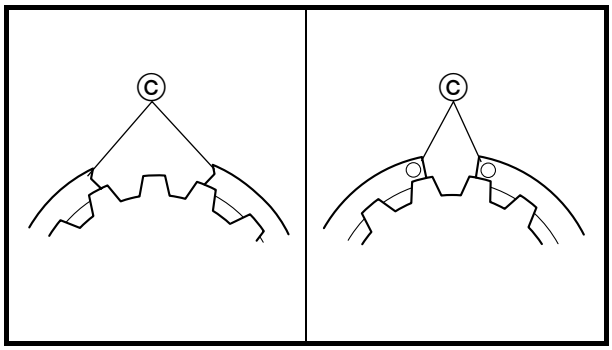

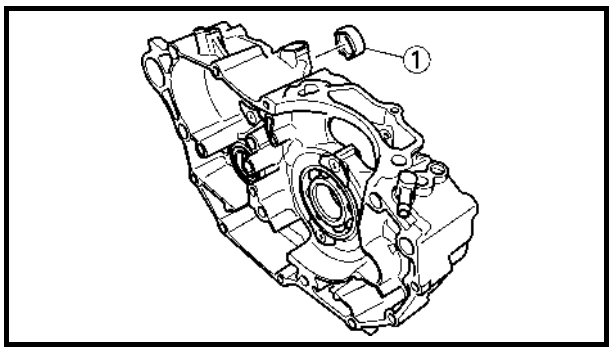

4. Install:
   - Collar ①

NOTE:
- Apply the lithium soap base grease on the oil seal lip.
- When installing the collar into the crankcase, pay careful attention to the crankcase oil seal lip.

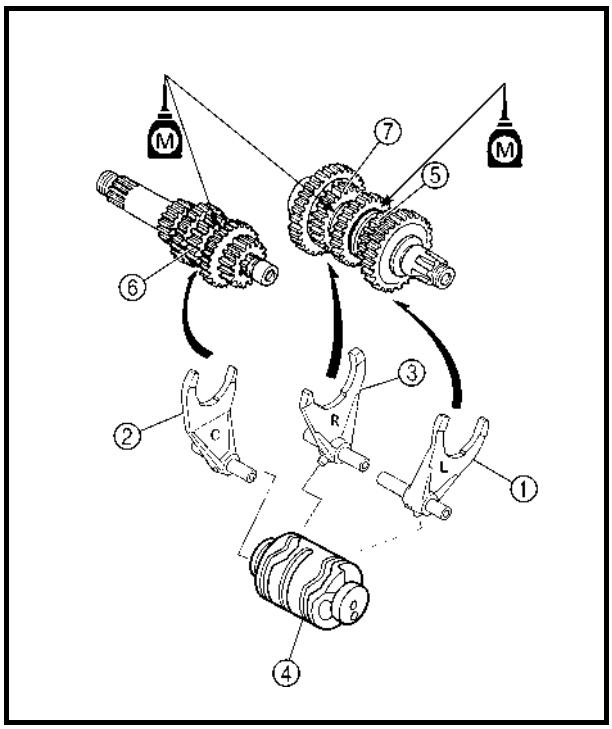

5. Install:
   - Shift fork 1 (L) ①
   - Shift fork 2 (C) ②
   - Shift fork 3 (R) ③
   - Shift cam ④
     To main axle and drive axle.

NOTE:
- Apply the molybdenum disulfide oil on the shift fork grooves.
- Mesh the shift fork #1 (L) with the 4th wheel gear ⑤ and #3 (R) with the 5th wheel gear ⑦ on the drive axle.
- Mesh the shift fork #2 (C) with the 3rd pinion gear ⑥ on the main axle.

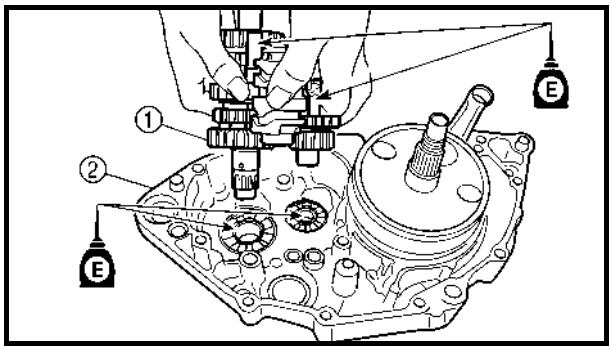

6. Install:
   - Transmission assembly ①
     To crankcase (left) ②.

NOTE:
Apply the engine oil on the bearings and guide bars.

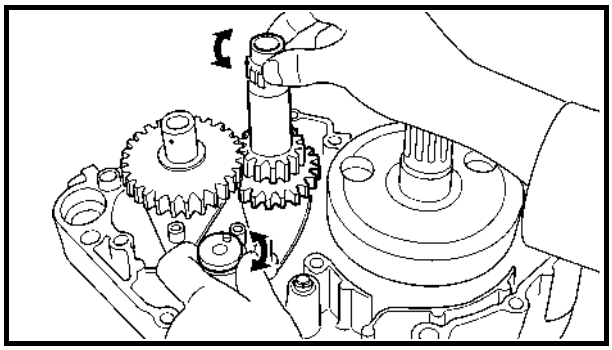

7. Check:
   - Shifter operation
   - Transmission operation
     Unsmooth operation → Repair.

EC500000
CHASSIS

EC590000
FRONT WHEEL AND REAR WHEEL

EC598000
FRONT WHEEL

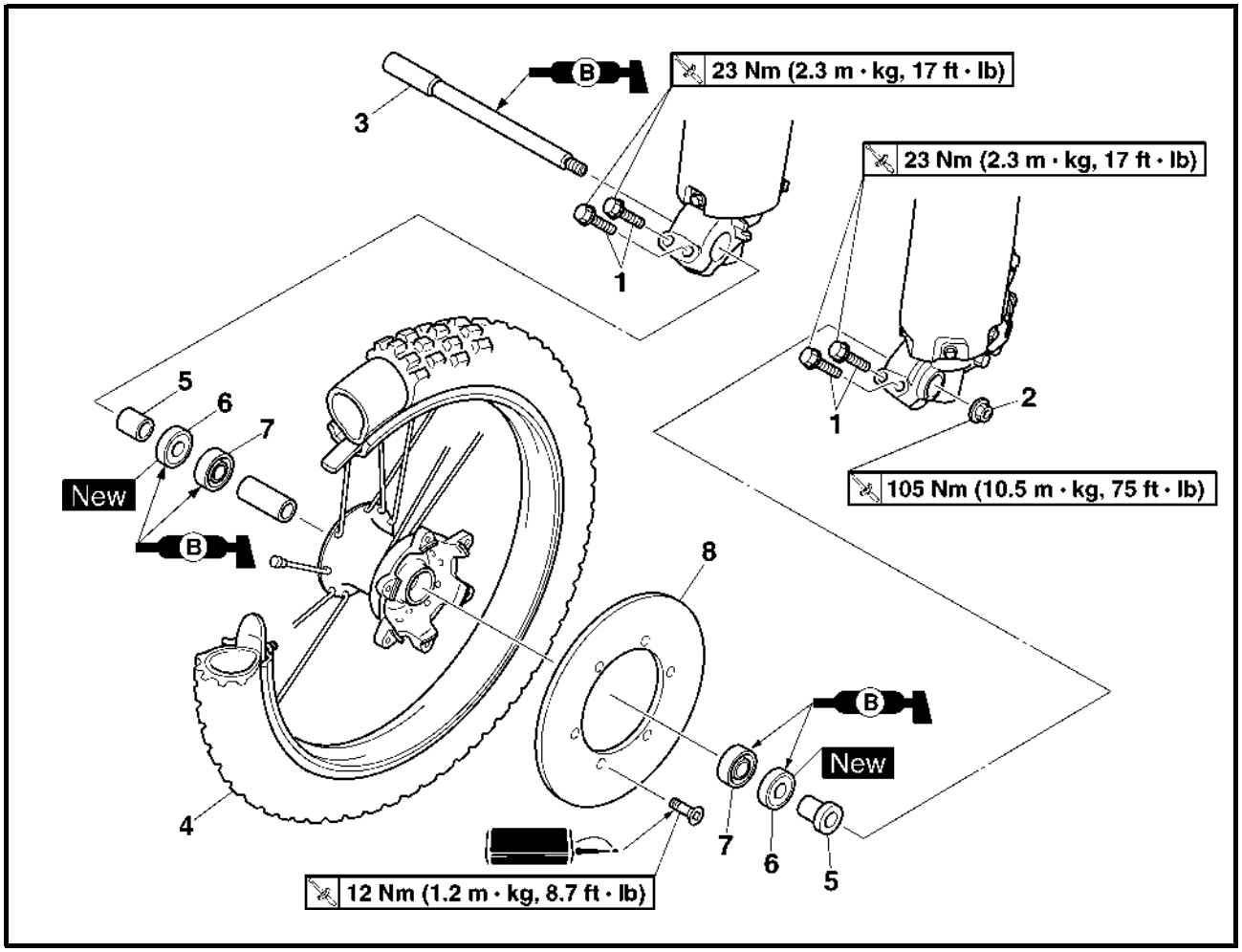

Extent of removal: ① Front wheel removal ② Wheel bearing removal ③ Brake disc removal

Extent of removal	Order	Part name	Q'ty	Remarks
Preparation for removal		**FRONT WHEEL REMOVAL** Hold the machine by placing the suitable stand under the engine.		**WARNING** **Support the machine securely so there is no danger of it falling over.**
① ② ③	1	Bolt (axle holder)	4	Only loosening.
	2	Nut (front wheel axle)	1	
	3	Front wheel axle	1	
	4	Front wheel	1	
	5	Collar	2	
	6	Oil seal	2	
	7	Bearing	2	Refer to "REMOVAL POINTS".
③	8	Brake disc	1	

EC598100
REAR WHEEL

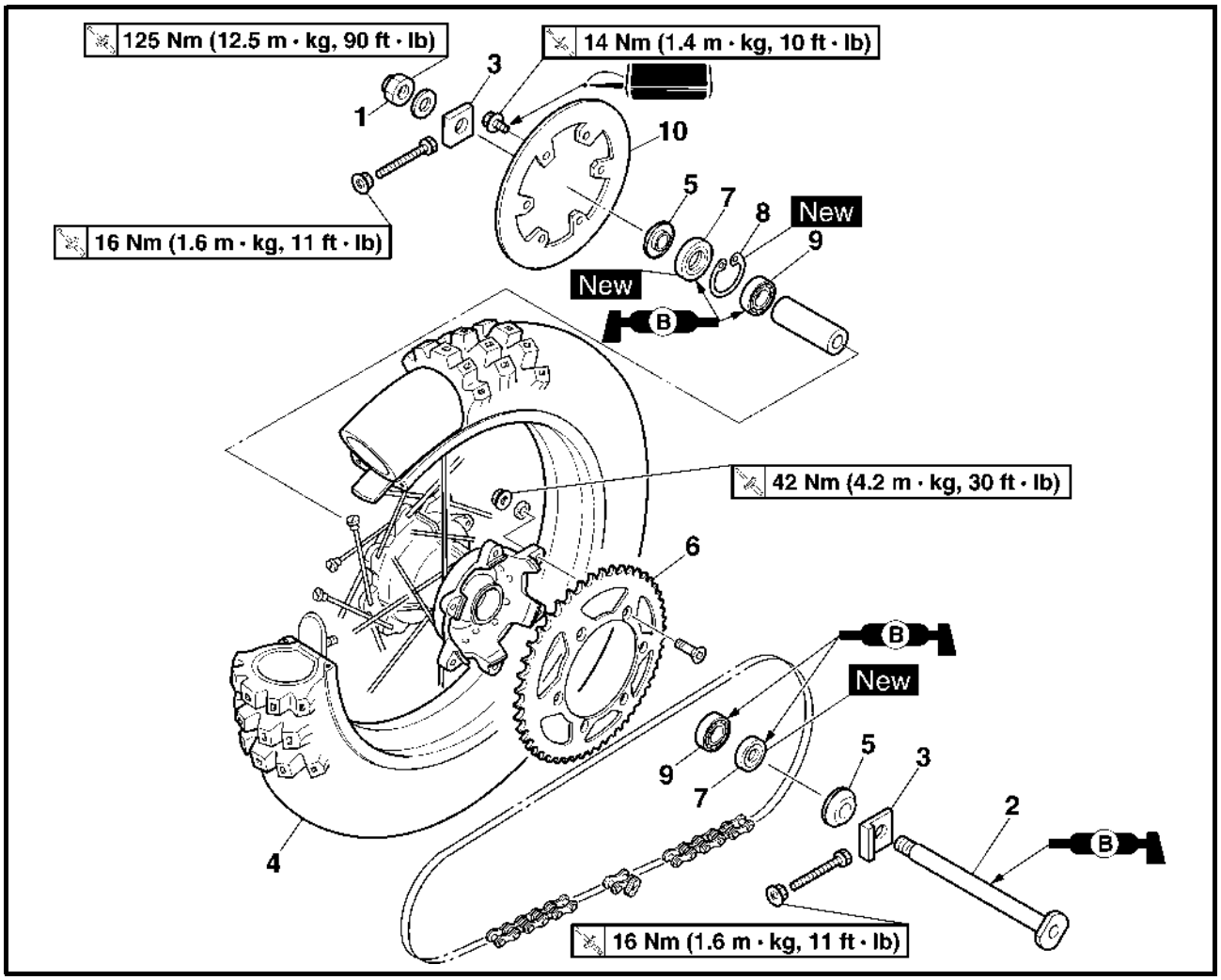

Extent of removal: ① Rear wheel removal ② Wheel bearing removal ③ Brake disc removal

Extent of removal	Order	Part name	Q'ty	Remarks
Preparation for removal		**REAR WHEEL REMOVAL** Hold the machine by placing the suitable stand under the engine.		**WARNING** **Support the machine securely so there is no danger of it falling over.**
① ② ③	1	Nut (rear wheel axle)	1	
	2	Rear wheel axle	1	
	3	Chain puller	2	
	4	Rear wheel	1	Refer to "REMOVAL POINTS".
	5	Collar	2	
	6	Driven sprocket	1	
	7	Oil seal	2	
	8	Circlip	1	
	9	Bearing	2	Refer to "REMOVAL POINTS".
③	10	Brake disc	1	

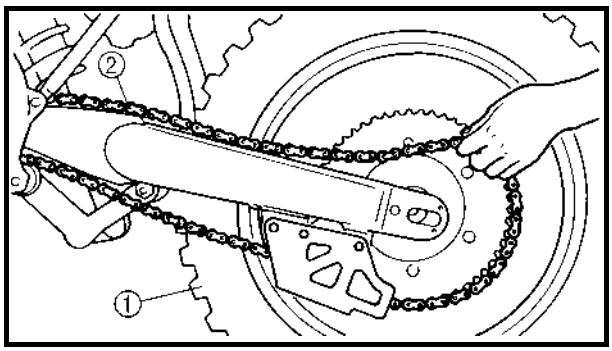

EC593000
REMOVAL POINTS

EC523101
Rear wheel

1. Remove:
   - Wheel ①

NOTE:
Push the wheel forward and remove the drive chain ②.

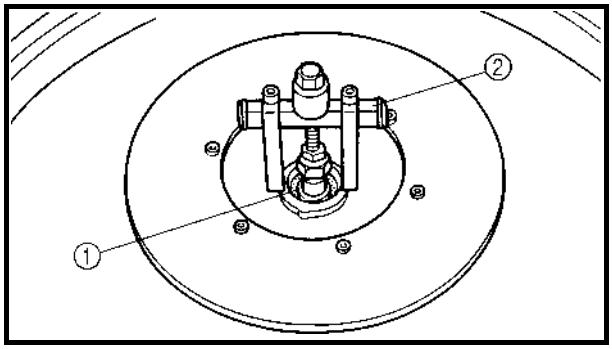

EC513201
Wheel bearing (if necessary)

1. Remove:
   - Bearing ①

NOTE:
Remove the bearing using a general bearing puller ②.

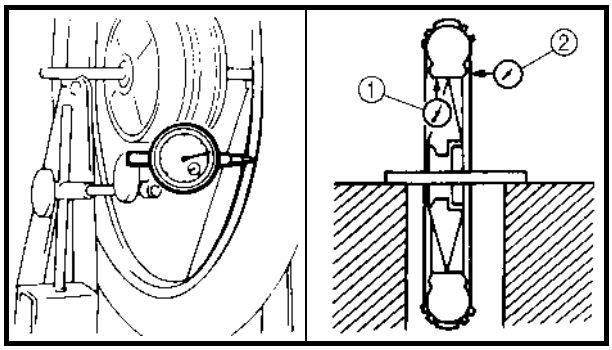

EC594000
INSPECTION

EC514100
Wheel

1. Measure:
   - Wheel runout
     Out of limit → Repair/replace.

Wheel runout limit:
Radial ①: 2.0 mm (0.08 in)
Lateral ②: 2.0 mm (0.08 in)

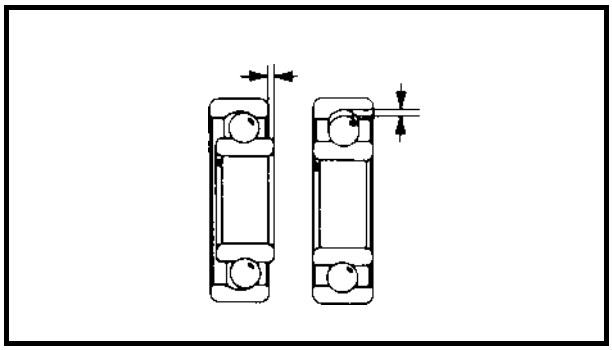

2. Inspect:
   - Bearing
     Rotate inner race with a finger.
     Rough spot/seizure → Replace.

NOTE:
Replace the bearings, oil seal and wheel collar as a set.

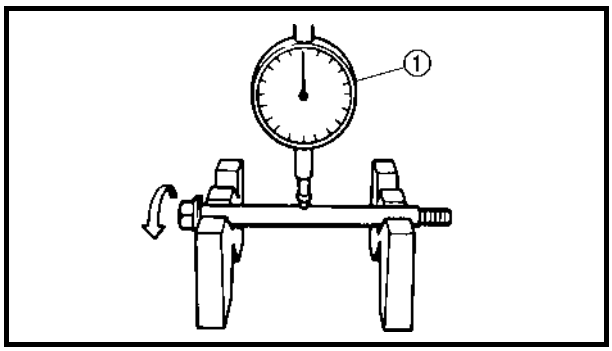

EC514200
Wheel axle

1. Measure:
   - Wheel axle bends
     Out of specification → Replace.
     Use the dial gauge ①.

	Wheel axle bending limit: 0.5 mm (0.020 in)

NOTE:
The bending value is shown by one half of the dial gauge reading.

⚠ WARNING
Do not attempt to straighten a bent axle.

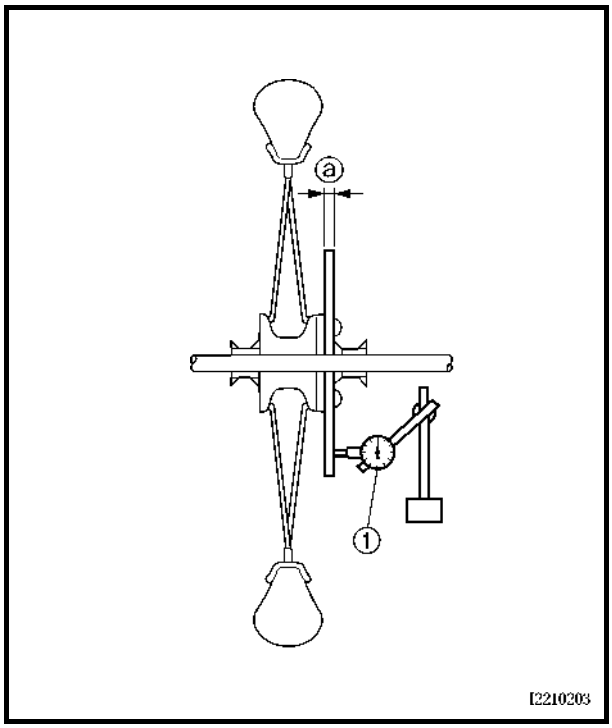

EC594200
Brake disc

1. Measure:
   - Brake disc deflection (only rear brake disc)
     Use the dial gauge ①.
     Out of specification → Inspect wheel runout.
     If wheel runout is in good condition, replace the brake disc.

	Disc deflection limit:	
	Standard	**<Limit>**
Rear	**—**	**0.15 mm (0.006 in)**

2. Measure:
   - Brake disc thickness ⓐ
     Out of limit → Replace.

	Disc wear limit:	
	Standard	**<Limit>**
Front	**3.0 mm (0.12 in)**	**2.5 mm (0.10 in)**
Rear	**4.0 mm (0.16 in)**	**3.5 mm (0.14 in)**

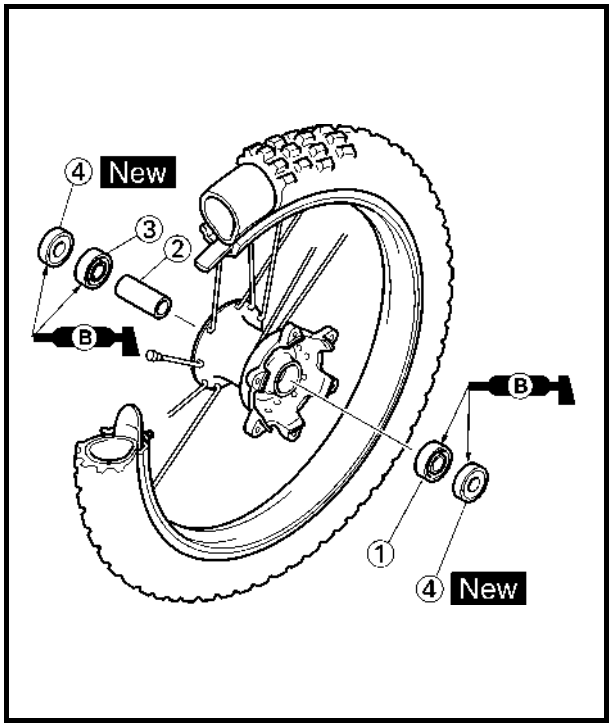

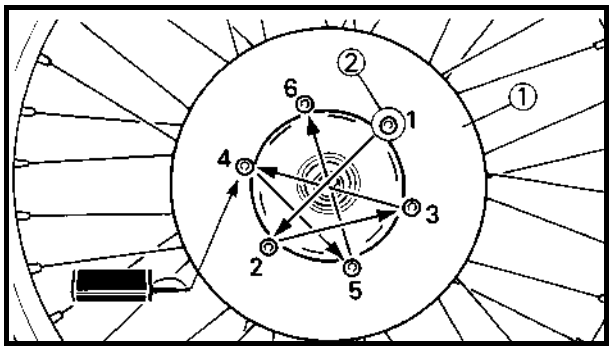

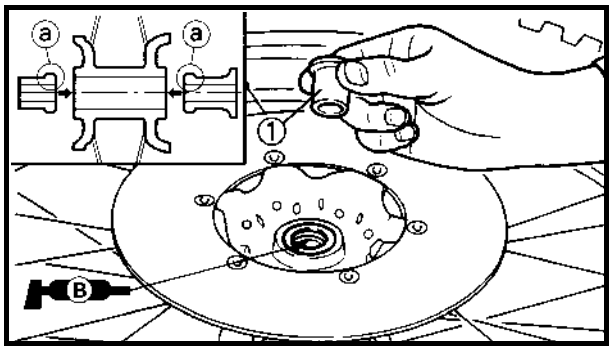

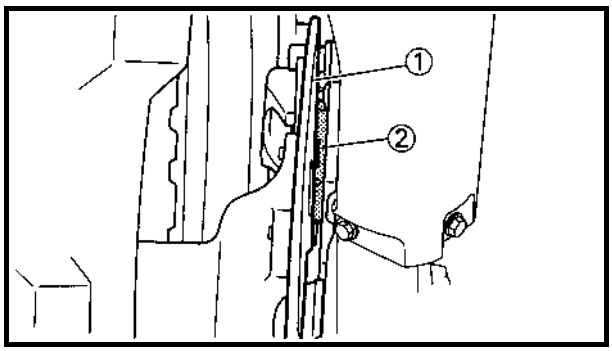

EC595000

ASSEMBLY AND INSTALLATION

Front wheel

1. Install:
   - Bearing (left) ①
   - Spacer ②
   - Bearing (right) ③
   - Oil seal ④ New

NOTE:
- Apply the lithium soap base grease on the bearing and oil seal lip when installing.
- Use a socket that matches the outside diameter of the race of the bearing.
- Left side of bearing shall be installed first.
- Install the oil seal with its manufacture's marks or numbers facing outward.

CAUTION:

Do not strike the inner race of the bearing. Contact should be made only with the outer race.

2. Install:
   - Brake disc ①
   - Bolt (brake disc) ②

   12 Nm (1.2 m · kg, 8.7 ft · lb)

NOTE:
Tighten the bolts in stage, using a crisscross pattern.

3. Install:
   - Collar ①

NOTE:
- Apply the lithium soap base grease on the oil seal lip.
- Install the collars with their projections ⓐ facing the wheel.

4. Install:
   - Wheel

NOTE:
Install the brake disc ① between the brake pads ② correctly.

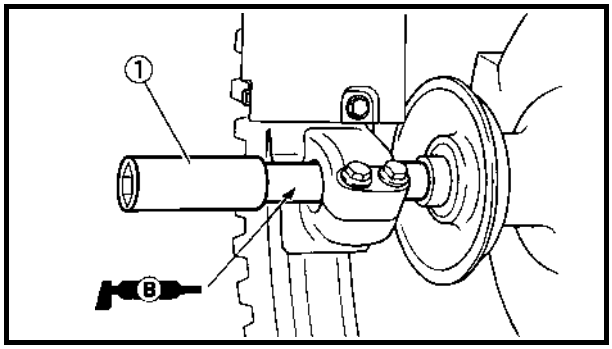

5. Install:
   - Wheel axle ①

NOTE:
Apply the lithium soap base grease on the wheel axle.

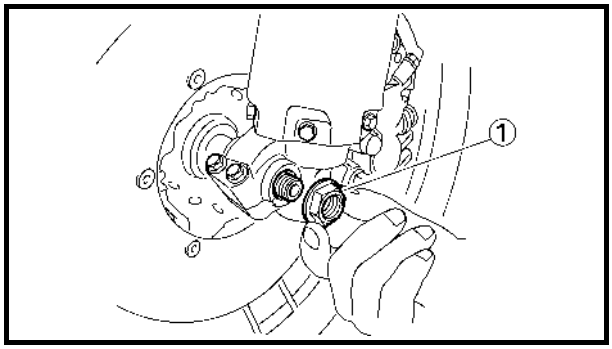

6. Install:
   - Nut (wheel axle) ①

105 Nm (10.5 m · kg, 75 ft · lb)

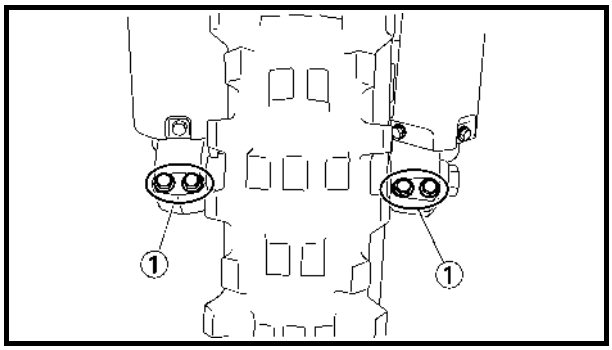

7. Tighten:
   - Bolt (axle holder) ①

23 Nm (2.3 m · kg, 17 ft · lb)

NOTE:
Before tightening the bolt, fit the wheel axle to the axle holder by stroking the front fork several times with the front brake applied.

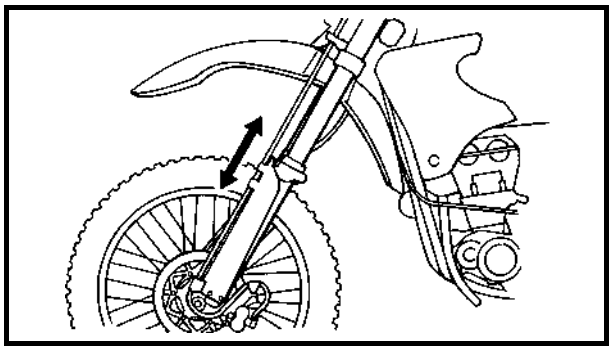

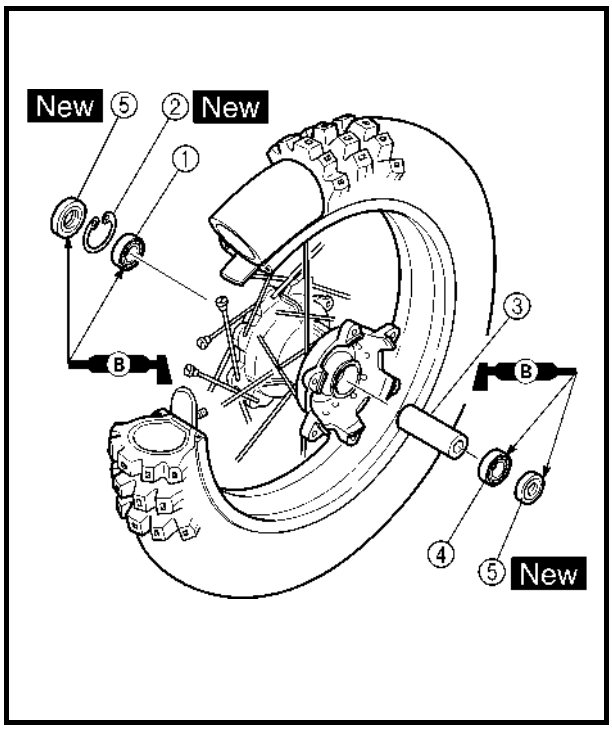

Rear wheel

1. Install:
   - Bearing (right) ①
   - Circlip ② New
   - Spacer ③
   - Bearing (left) ④
   - Oil seal ⑤ New

NOTE:
- Apply the lithium soap base grease on the bearing and oil seal lip when installing.
- Install the bearing with seal facing outward.
- Use a socket that matches the outside diameter of the race of the bearing.
- Right side of bearing shall be installed first.
- Install the oil seal with its manufacture's marks or numbers facing outward.

CAUTION:
Do not strike the inner race of the bearing. Contact should be made only with the outer race.

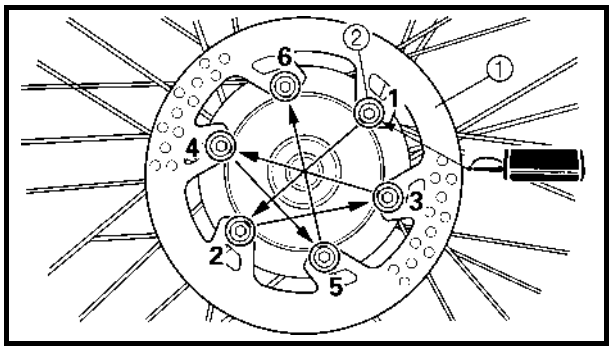

2. Install:
   - Brake disc ①
   - Bolt (brake disc) ②

14 Nm (1.4 m · kg, 10 ft · lb)

NOTE:
Tighten the bolts in stage, using a crisscross pattern.

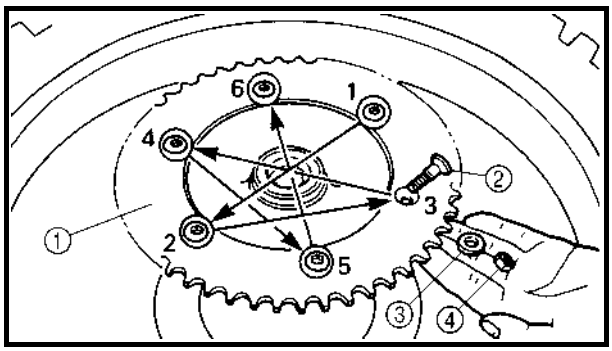

3. Install:
   - Driven sprocket ①
   - Bolt (driven sprocket) ②
   - Plain washer (driven sprocket) ③
   - Nut (driven sprocket) ④

42 Nm (4.2 m · kg, 30 ft · lb)

NOTE:
Tighten the nuts in stage, using a crisscross pattern.

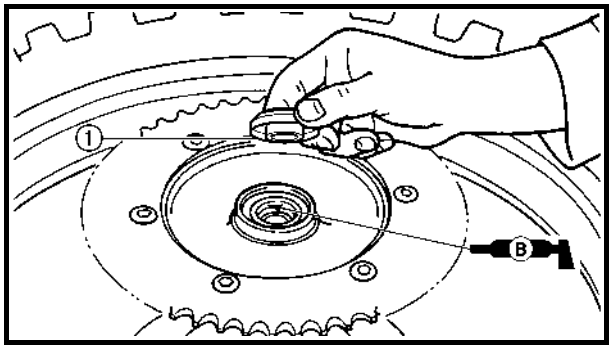

4. Install:
   - Collar ①

NOTE:
Apply the lithium soap base grease on the oil seal lip.

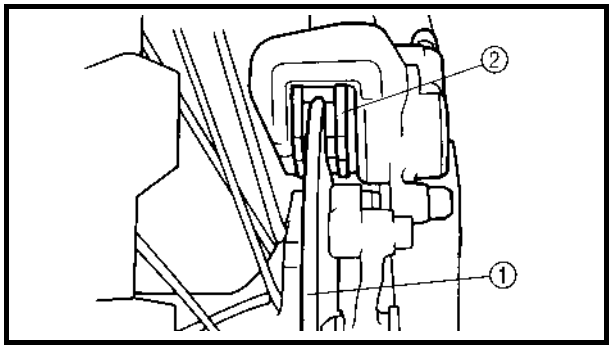

5. Install:
   - Wheel

NOTE:
Install the brake disc ① between the brake pads ② correctly.

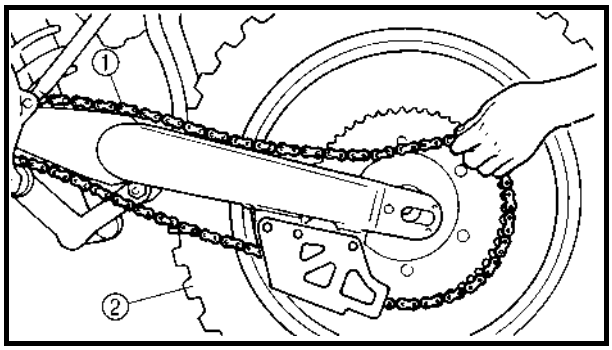

6. Install:
   - Drive chain ①

NOTE:
Push the wheel ② forward and install the drive chain.

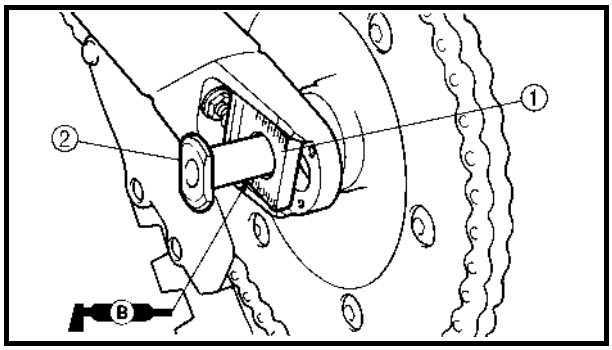

7. Install:
   - Chain puller (left) ①
   - Wheel axle ②

NOTE:
- Install the chain puller (left), and insert the wheel axle from left side.
- Apply the lithium soap base grease on the wheel axle.

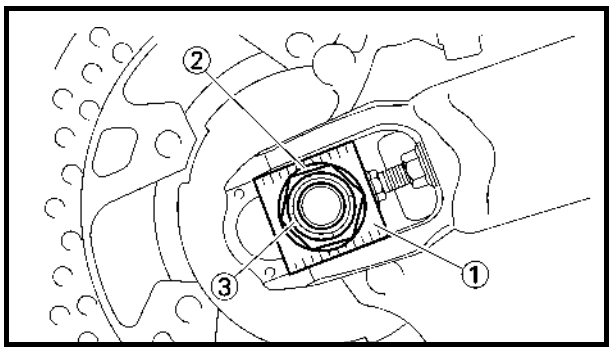

8. Install:
   - Chain puller (right) ①
   - Plain washer ②
   - Nut (wheel axle) ③

NOTE:
Temporarily tighten the nut (wheel axle) at this point.

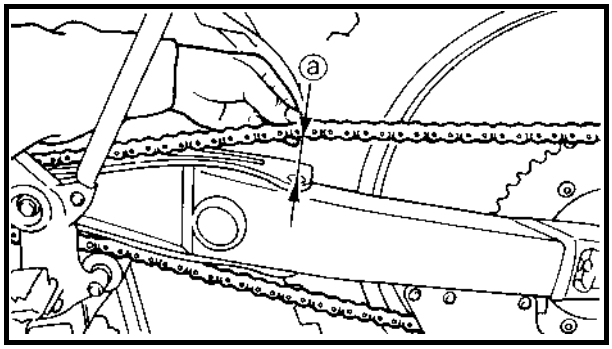

9. Adjust:
   - Drive chain slack ⓐ

Drive chain slack:
48 ~ 58 mm (1.9 ~ 2.3 in)

Refer to “DRIVE CHAIN SLACK ADJUSTMENT” section in the CHAPTER 3.

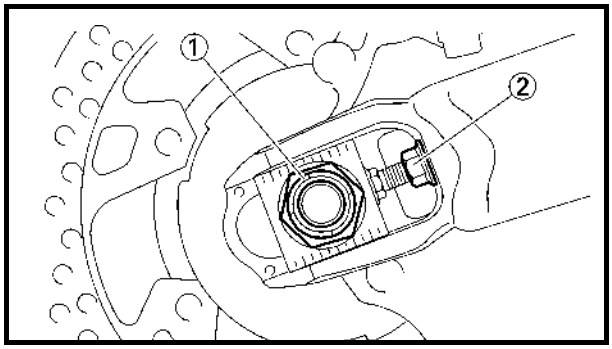

10. Tighten:
    - Nut (wheel axle) ①

125 Nm (12.5 m · kg, 90 ft · lb)

    - Locknut ②

16 Nm (1.6 m · kg, 11 ft · lb)

EC5A0000
FRONT BRAKE AND REAR BRAKE

EC5A8000
FRONT BRAKE

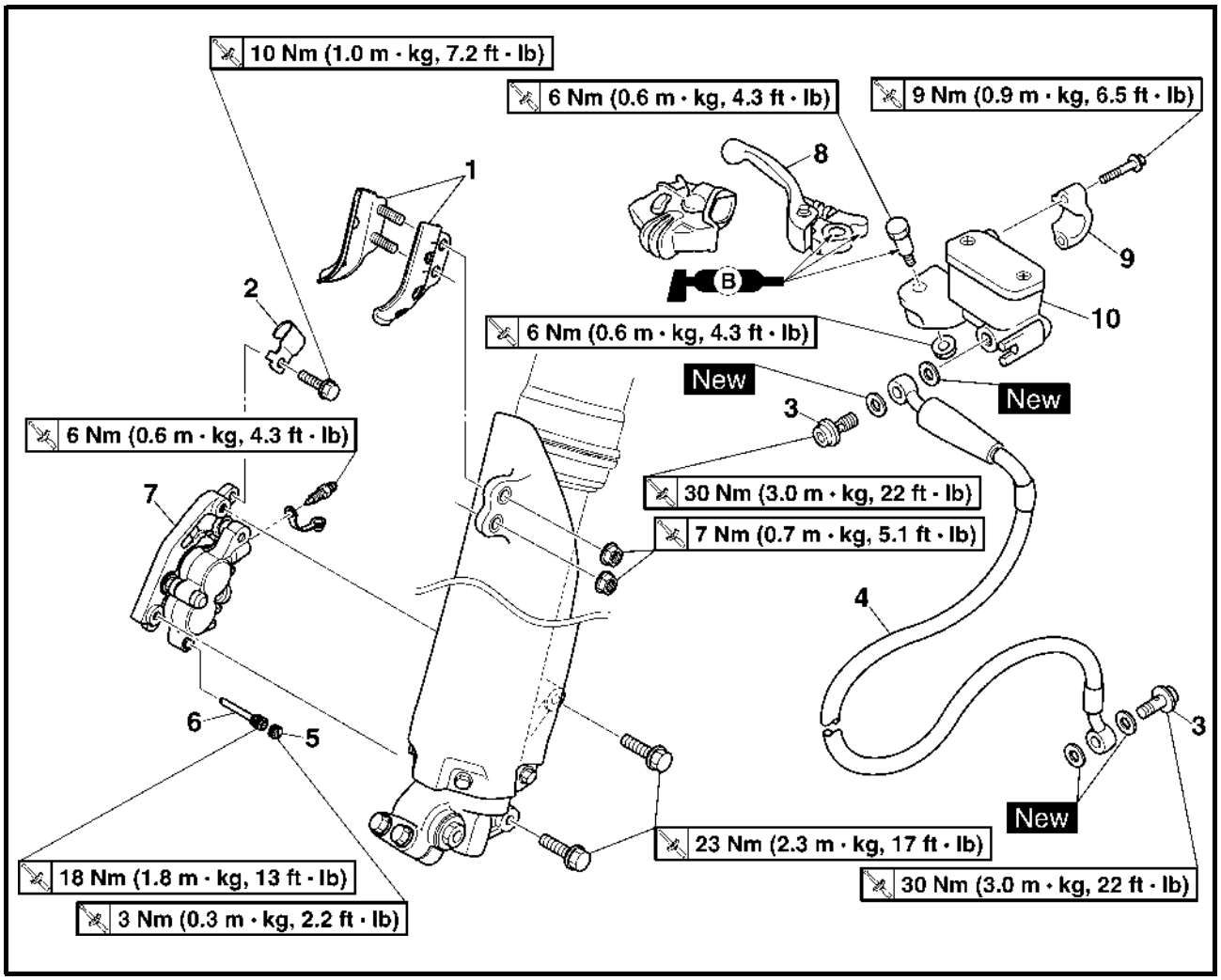

Extent of removal: ① Brake hose removal ② Caliper removal ③ Master cylinder removal

Extent of removal	Order	Part name	Q'ty	Remarks
Preparation for removal		**FRONT BRAKE REMOVAL** Hold the machine by placing the suitable stand under the engine. Drain the brake fluid.		**WARNING** **Support the machine securely so there is no danger of it falling over.** Refer to "REMOVAL POINTS".
① ② ③	1	Brake hose holder (protector)	2	
	2	Brake hose holder (caliper)	1	
	3	Union bolt	2	
	4	Brake hose	1	
②	5	Pad pin plug	1	Remove when loosening the pad pin.
	6	Pad pin	1	Loosen when disassembling the caliper.
	7	Caliper	1	
③	8	Brake lever	1	
	9	Master cylinder bracket	1	
	10	Master cylinder	1	

EC5A8100
REAR BRAKE

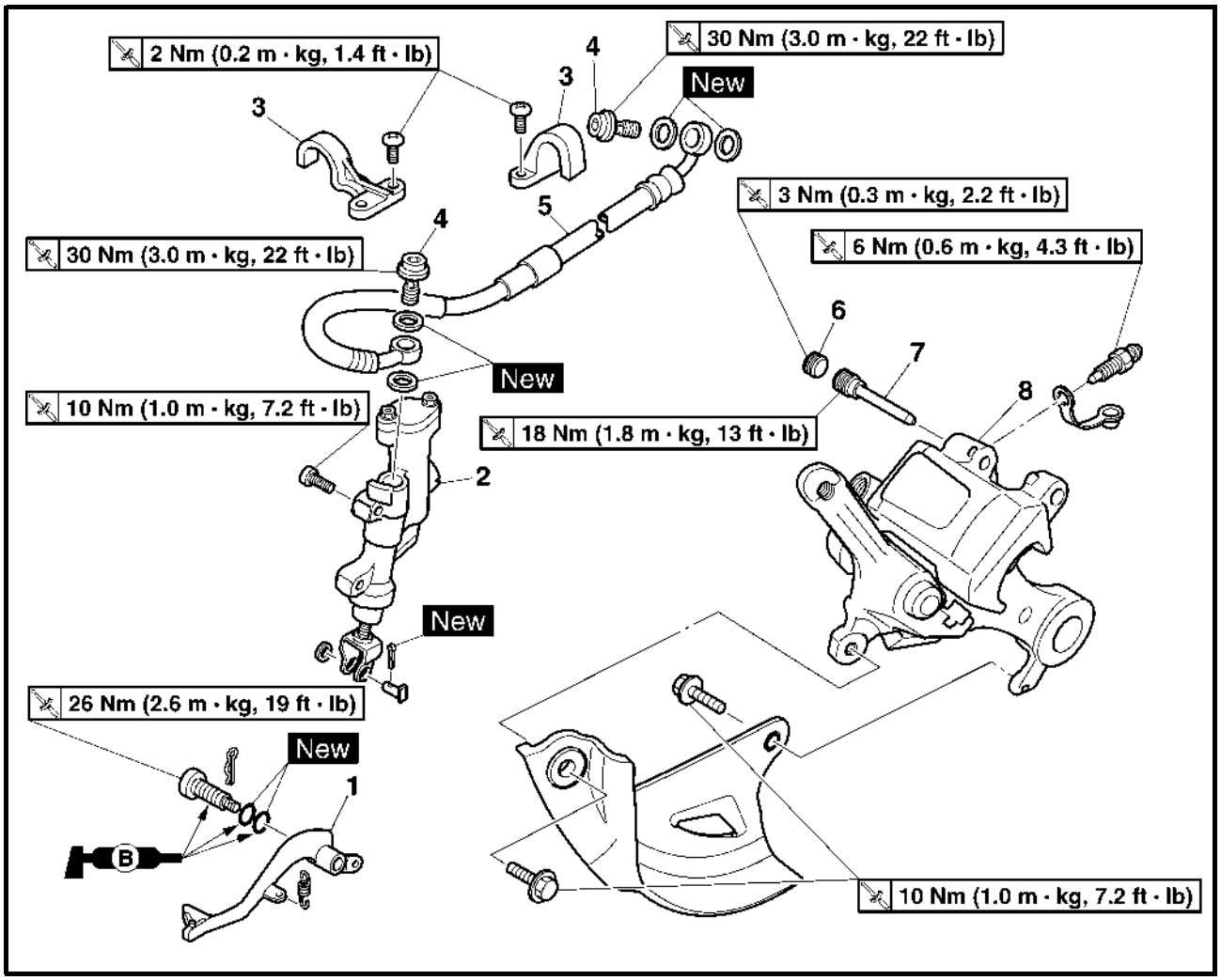

Extent of removal: ① Master cylinder removal ② Brake hose removal ③ Caliper removal

Extent of removal	Order	Part name	Q'ty	Remarks
Preparation for removal		**REAR BRAKE REMOVAL** Hold the machine by placing the suitable stand under the engine. Rear wheel Drain the brake fluid.		**WARNING** **Support the machine securely so there is no danger of it falling over.** Refer to "FRONT WHEEL AND REAR WHEEL" section. Refer to "REMOVAL POINTS".
①	1	Brake pedal	1	
	2	Master cylinder	1	
	3	Brake hose holder	2	
① ② ③	4	Union bolt	2	
	5	Brake hose	1	
	6	Pad pin plug	1	Remove when loosening the pad pin.
③	7	Pad pin	1	Loosen when disassembling the caliper.
	8	Caliper	1	

EC5A8200
CALIPER DISASSEMBLY

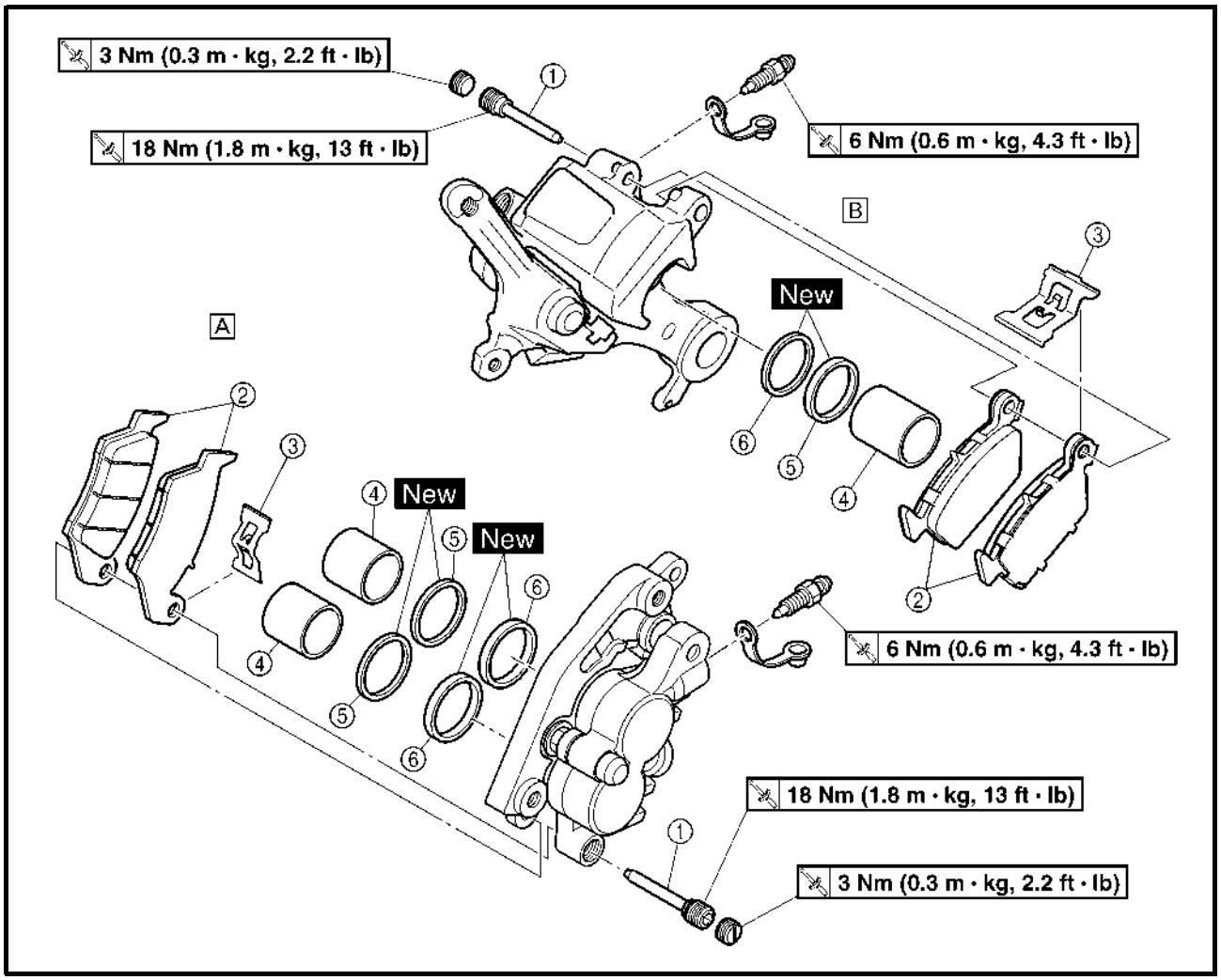

A Front
B Rear
Extent of removal: ① Front caliper disassembly ② Rear caliper disassembly

Extent of removal	Order	Part name	Q'ty A	Q'ty B	Remarks
		CALIPER DISASSEMBLY			
① ②	①	Pad pin	1	1	
	②	Brake pad	2	2	
	③	Pad support	1	1	
	④	Caliper piston	2	1	Refer to "REMOVAL POINTS".
	⑤	Dust seal	2	1	
	⑥	Piston seal	2	1	

EC5A8300
MASTER CYLINDER DISASSEMBLY

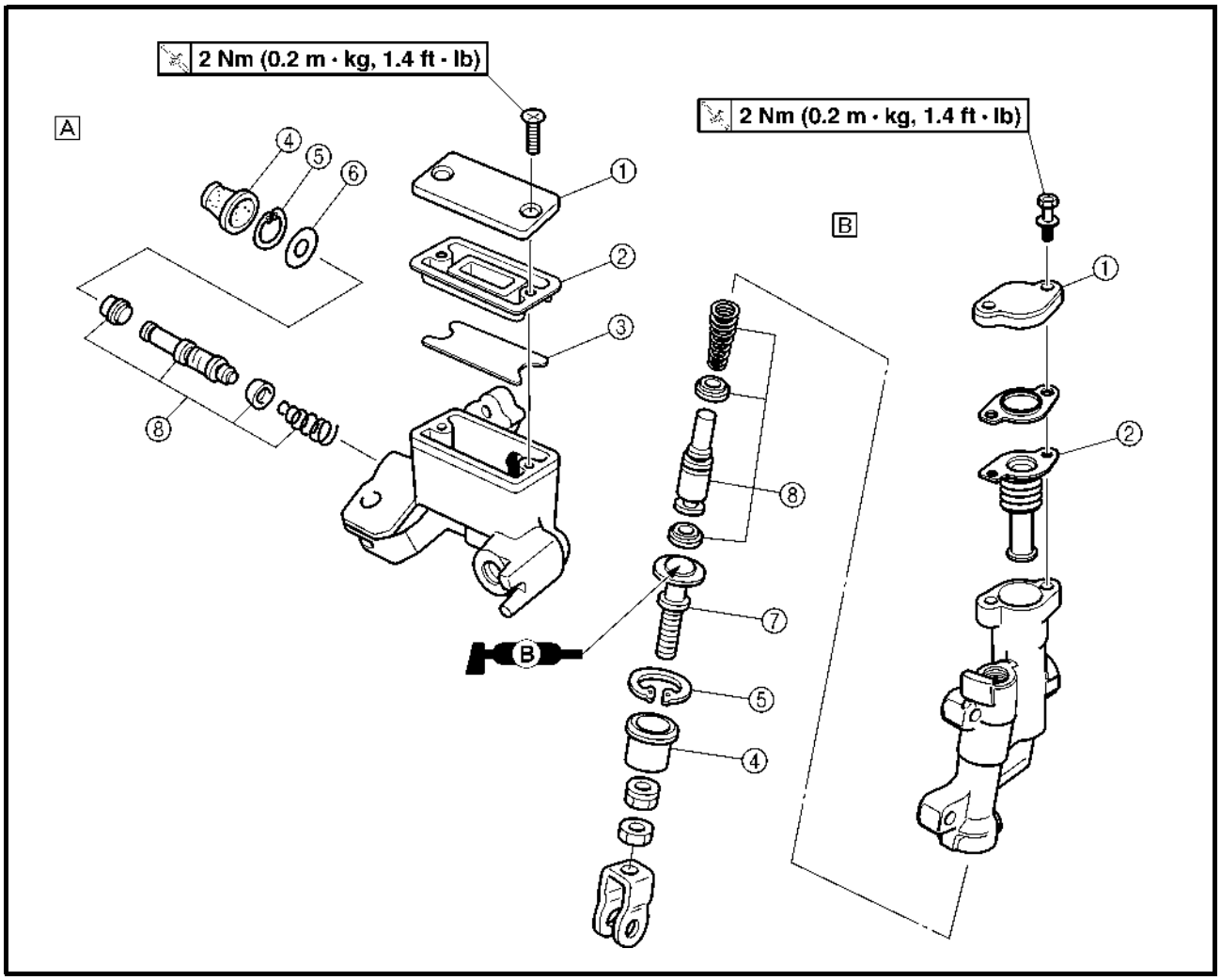

A Front
B Rear
Extent of removal: ① Front master cylinder disassembly ② Rear master cylinder disassembly

Extent of removal	Order	Part name	Q'ty	Remarks
		MASTER CYLINDER DISASSEMBLY		
②	①	Master cylinder cap	1	
	②	Diaphragm	1	
①	③	Reservoir float	1	
②	④	Master cylinder boot	1	
	⑤	Circlip	1	Use a long nose circlip pliers.
	⑥	Plain washer	1	
②	⑦	Push rod	1	
①	⑧	Master cylinder kit	1	

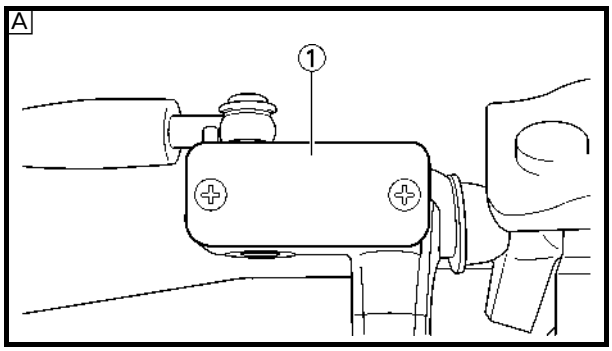

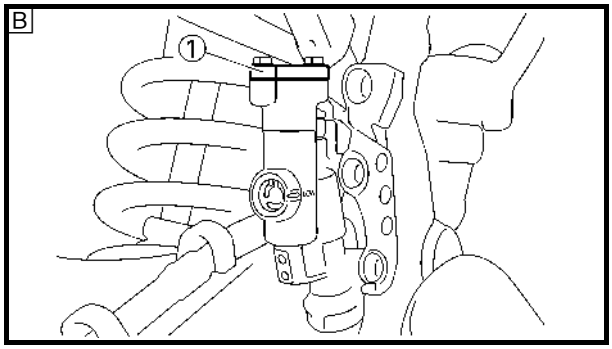

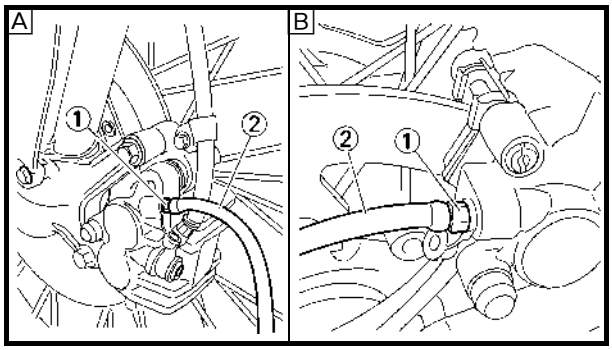

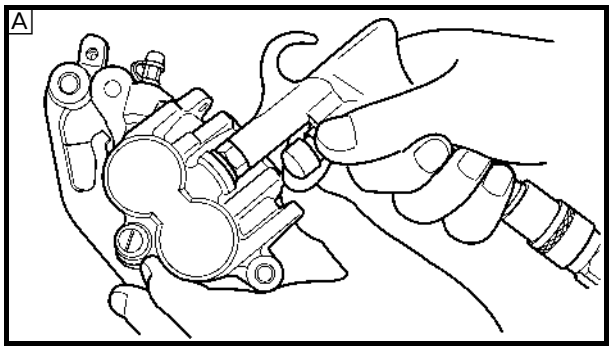

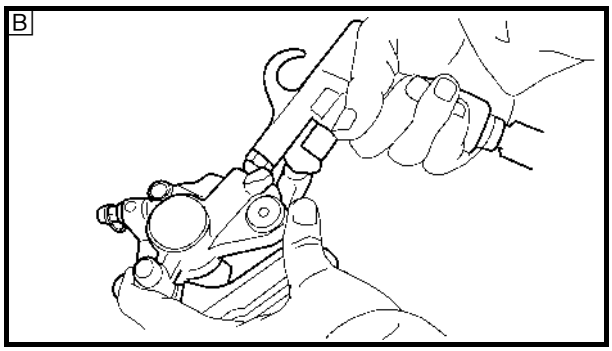

EC5A3000
REMOVAL POINTS
Brake fluid

1. Remove:
   [Front]
   - Master cylinder cap ①
   [Rear]
   - Master cylinder cap ①
   - Protector

NOTE:
Do not remove the diaphragm.

A Front
B Rear

2. Connect the transparent hose ② to the bleed screw ① and place a suitable container under its end.

A Front
B Rear

3. Loosen the bleed screw and drain the brake fluid while pulling the lever in or pushing down on the pedal.

CAUTION:
- **Do not reuse the drained brake fluid.**
- **Brake fluid may erode painted surfaces or plastic parts. Always clean up spilled fluid immediately.**

EC533301
Caliper piston

1. Remove:
   - Caliper piston
     Use compressed air and proceed carefully.

⚠ WARNING
- **Cover piston with rag and use extreme caution when expelling piston from cylinder.**
- **Never attempt to pry out piston.**

Caliper piston removal steps:
- Insert a piece of rag into the caliper to lock one caliper.
- Carefully force the piston out of the caliper cylinder with compressed air.

A Front
B Rear

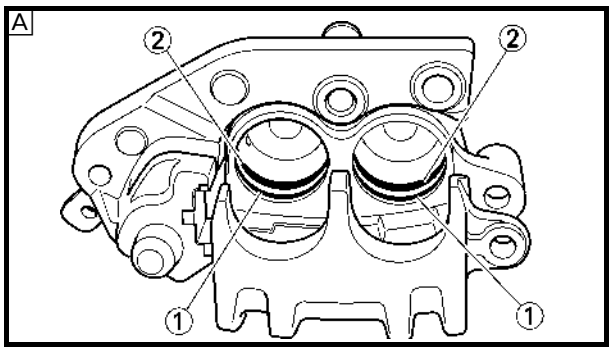

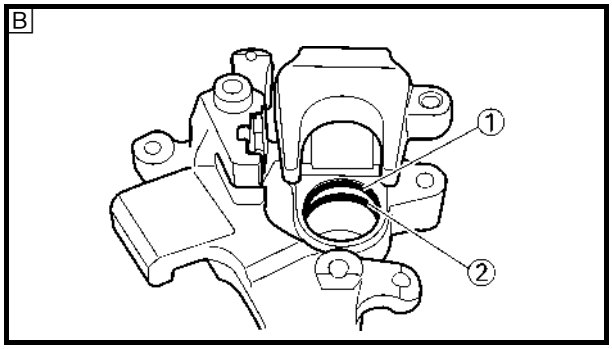

EC533402
Piston seal kit

1. Remove:
   - Dust seal ①
   - Piston seal ②

NOTE:
Remove the piston seals and dust seals by pushing them with a finger.

CAUTION:
Never attempt to pry out piston seals and dust seals.

⚠ WARNING
Replace the piston seals and dust seals whenever a caliper is disassembled.

A Front
B Rear

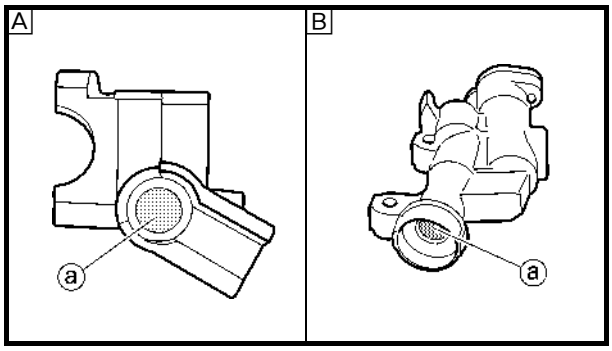

EC5A4000
INSPECTION

EC534112
Master cylinder

1. Inspect:
   - Master cylinder inner surface ⓐ
     Wear/scratches → Replace master cylinder assembly.
     Stains → Clean.

⚠ WARNING
Use only new brake fluid.

A Front
B Rear

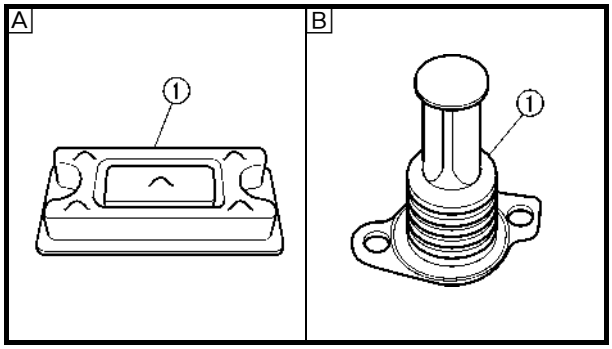

2. Inspect:
   - Diaphragm ①
     Crack/damage → Replace.

A Front
B Rear

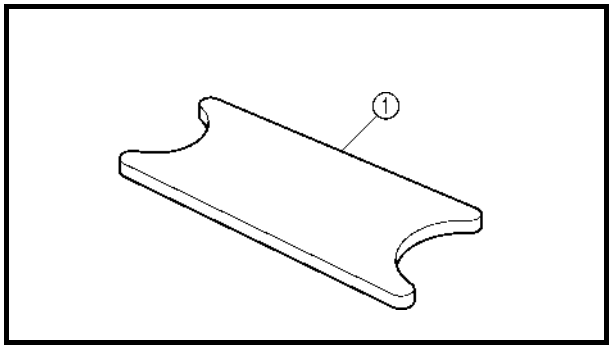

3. Inspect: (front brake only)
   - Reservoir float ①
     Damage → Replace.

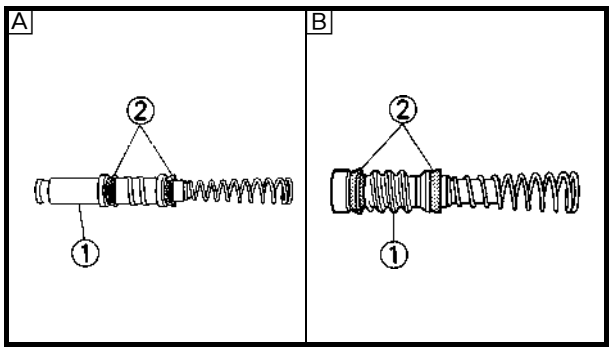

4. Inspect:
   - Master cylinder piston ①
   - Master cylinder cup ②
     Wear/damage/score marks → Replace master cylinder kit.

A Front
B Rear

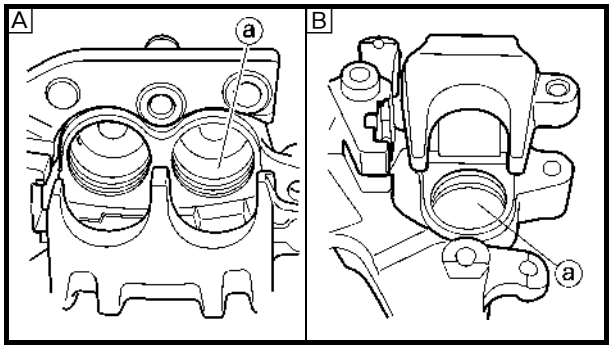

EC534214
Caliper

1. Inspect:
   - Caliper cylinder inner surface ⓐ
     Wear/score marks → Replace caliper assembly.

A Front
B Rear

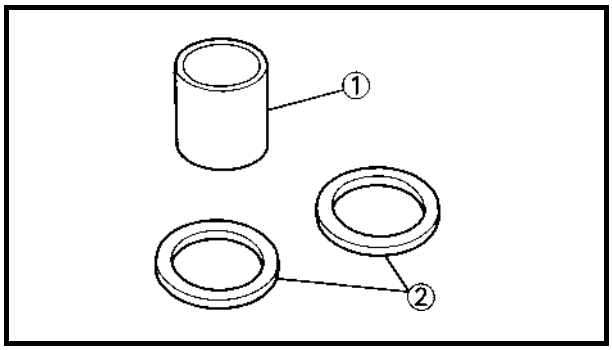

2. Inspect:
   - Caliper piston ①
     Wear/score marks → Replace caliper piston assembly.

WARNING

Replace the piston seals and dust seals ② whenever a caliper is disassembled.

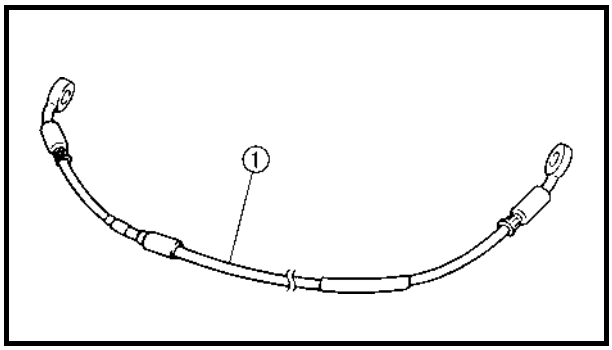

EC534301
Brake hose

1. Inspect:
   - Brake hose ①
     Crack/damage → Replace.

EC5A5000
ASSEMBLY AND INSTALLATION

WARNING

- **All internal parts should be cleaned in new brake fluid only.**
- **Internal parts should be lubricated with brake fluid when installed.**
- **Replace the piston seals and dust seals whenever a caliper is disassembled.**

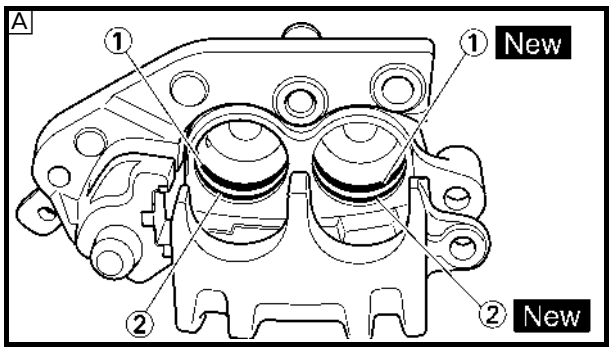

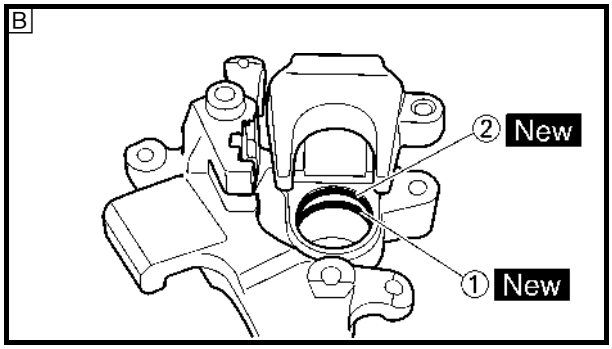

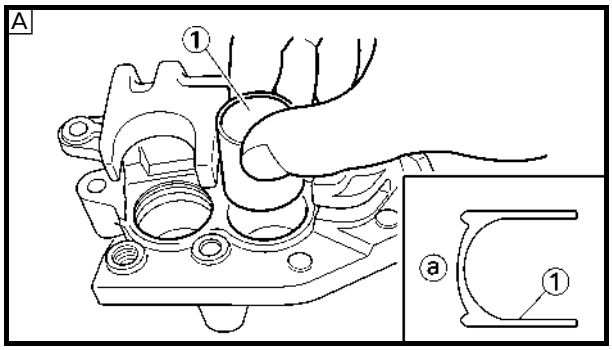

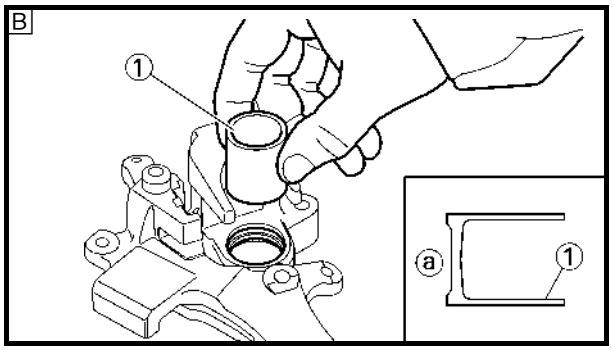

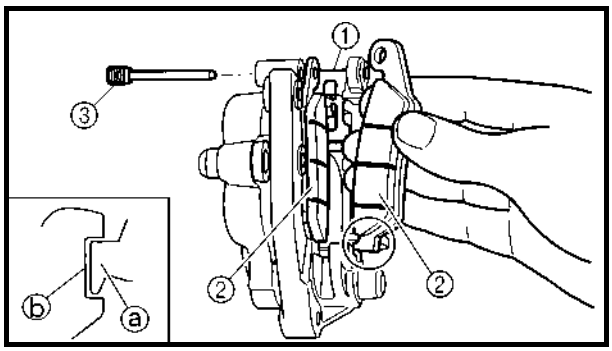

EC5A5800

Caliper piston

1. Clean:
   - Caliper
   - Piston seal
   - Dust seal
   - Caliper piston

   Clean them with brake fluid.
2. Install:
   - Piston seal ① New
   - Dust seal ② New

⚠ WARNING

Always use new piston seals and dust seals.

NOTE:

Fit the piston seals and dust seals onto the slot on caliper correctly.

A Front
B Rear

3. Install:
   - Caliper piston ①

NOTE:

Apply the brake fluid on the piston wall.

CAUTION:

- **Install the piston with its shallow depressed side ⓐ facing the caliper.**
- **Never force to insert.**

A Front
B Rear

EC5A5700

Front caliper

1. Install:
   - Pad support ①
   - Brake pad ②
   - Pad pin ③

NOTE:

- Install the brake pads with their projections ⓐ into the caliper recesses ⓑ.
- Temporarily tighten the pad pin at this point.

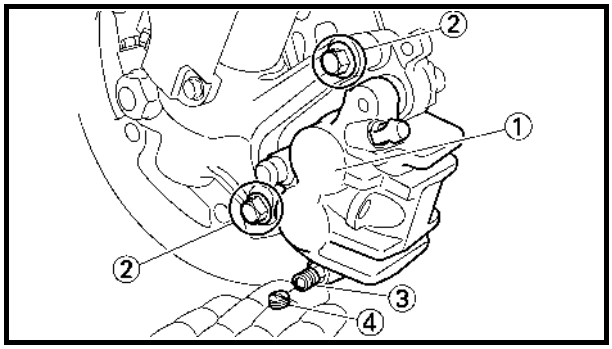

2. Install:
   - Caliper ①
   - Bolt (caliper) ②

   23 Nm (2.3 m · kg, 17 ft · lb)
3. Tighten:
   - Pad pin ③

   18 Nm (1.8 m · kg, 13 ft · lb)
4. Install:
   - Pad pin plug ④

   3 Nm (0.3 m · kg, 2.2 ft · lb)

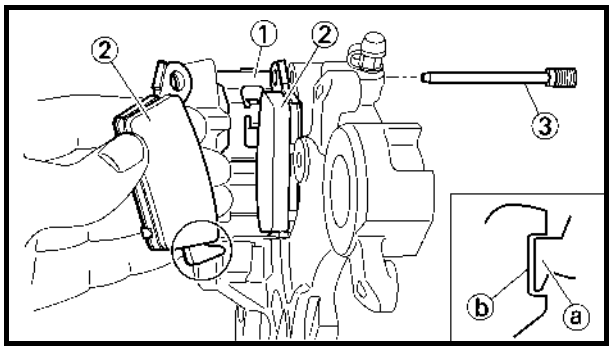

EC5A5100
Rear caliper

1. Install:
   - Pad support ①
   - Brake pad ②
   - Pad pin ③

NOTE:
- Install the brake pads with their projections ⓐ into the caliper recesses ⓑ.
- Temporarily tighten the pad pin at this point.

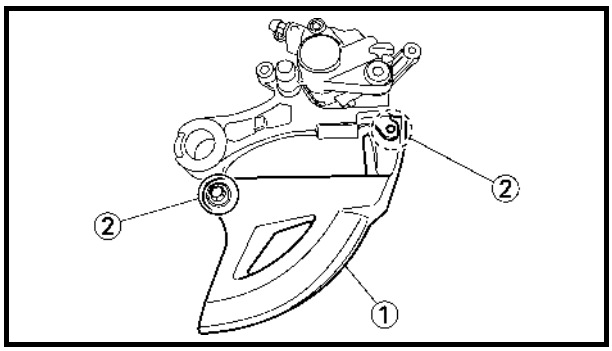

2. Install:
   - Disc cover ①
   - Bolt (disc cover) ②

   10 Nm (1.0 m · kg, 7.2 ft · lb)

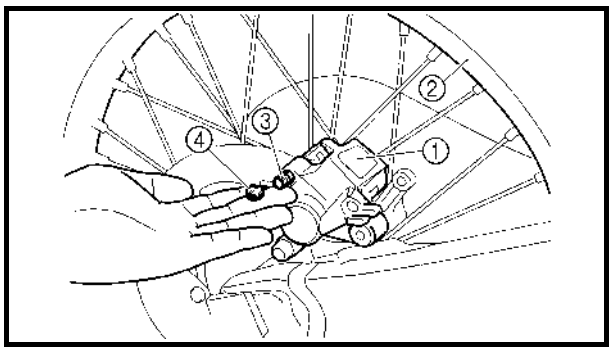

3. Install:
   - Caliper ①
   - Rear wheel ②
     Refer to “FRONT WHEEL AND REAR WHEEL” section.
4. Tighten:
   - Pad pin ③

	18 Nm (1.8 m · kg, 13 ft · lb)

5. Install:
   - Pad pin plug ④

	3 Nm (0.3 m · kg, 2.2 ft · lb)

Master cylinder kit

1. Clean:
   - Master cylinder
   - Master cylinder kit
     Clean them with brake fluid.

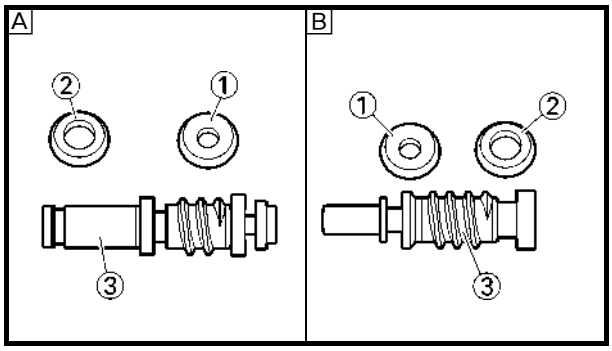

2. Install:
   - Master cylinder cup (primary) ①
   - Master cylinder cup (secondary) ②
     To master cylinder piston ③.

NOTE:
Apply the brake fluid on the master cylinder cup.

WARNING

After installing, cylinder cup should be installed as shown direction. Wrong installation cause improper brake performance.

A Front
B Rear

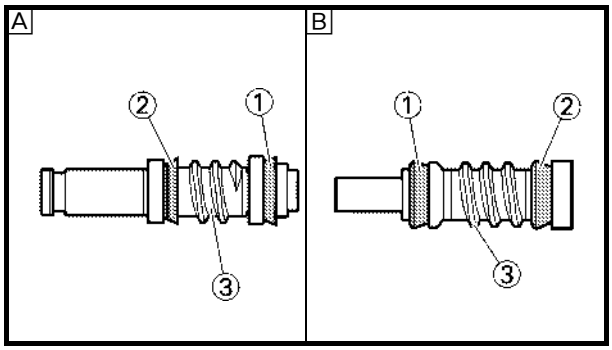

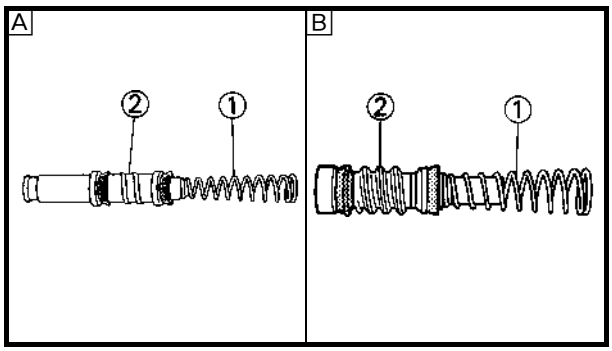

3. Install:
   - Spring ①
     To master cylinder piston ②.

NOTE:
Install the spring at the smaller dia. side.

A Front
B Rear

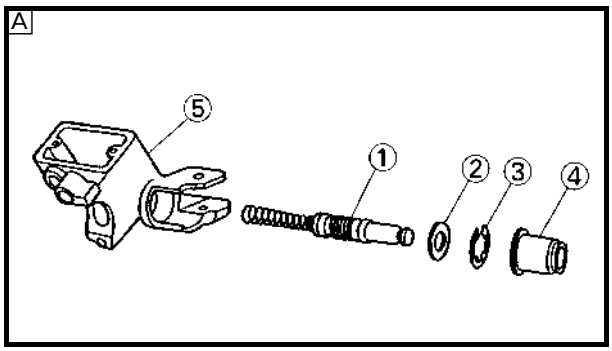

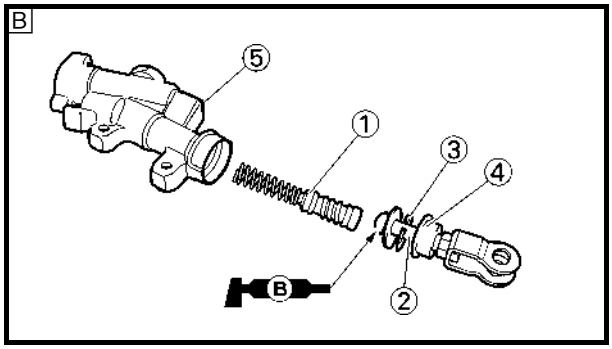

4. Install:
   [Front]
   - Master cylinder kit ①
   - Plain washer ②
   - Circlip ③
   - Master cylinder boot ④
     To master cylinder ⑤.

   [Rear]
   - Master cylinder kit ①
   - Push rod ②
   - Circlip ③
   - Master cylinder boot ④
     To master cylinder ⑤.

NOTE:
- Apply the brake fluid on the master cylinder kit.
- Apply the lithium soap base grease on the tip of the push rod.
- When installing the circlip, use a long nose circlip pliers.

A Front
B Rear

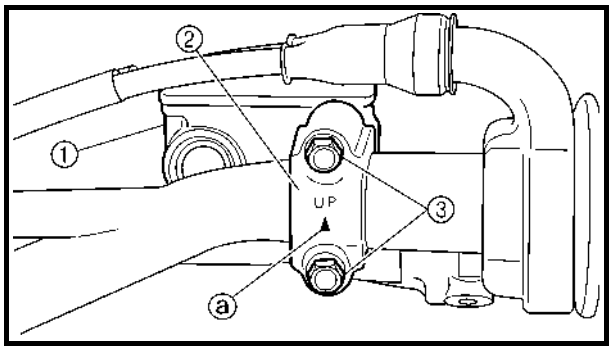

EC5A5310
Front master cylinder

1. Install:
   - Master cylinder ①
   - Master cylinder bracket ②
   - Bolt (master cylinder bracket) ③

	9 Nm (0.9 m · kg, 6.5 ft · lb)

NOTE:
- Install the bracket so that the arrow mark ⓐ face upward.
- First tighten the bolts on the upper side of the master cylinder bracket, and then tighten the bolts on the lower side.

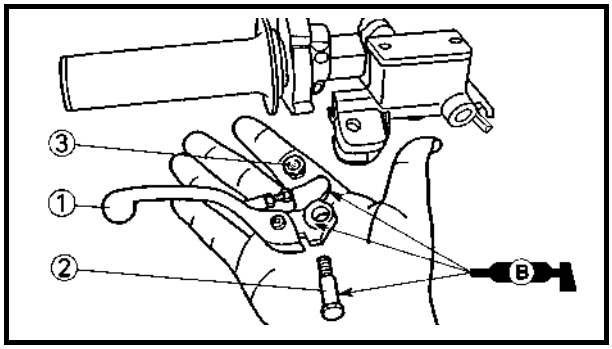

2. Install:
   - Brake lever ①
   - Bolt (brake lever) ②

   6 Nm (0.6 m · kg, 4.3 ft · lb)
   - Nut (brake lever) ③

   6 Nm (0.6 m · kg, 4.3 ft · lb)

NOTE:
Apply the lithium soap base grease on the brake lever sliding surface, bolt and contacting surface of the master cylinder piston.

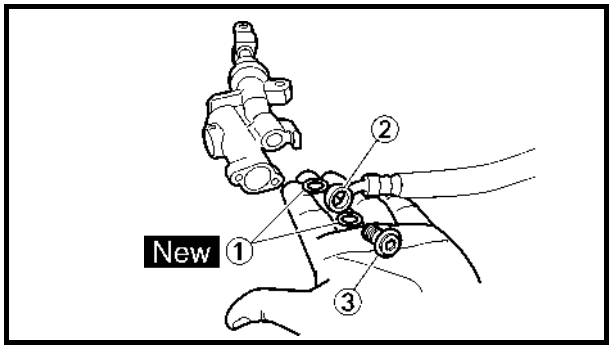

Rear master cylinder

1. Install:
   - Copper washer ① New
   - Brake hose ②
   - Union bolt ③

   30 Nm (3.0 m · kg, 22 ft · lb)

WARNING
Always use new copper washers.

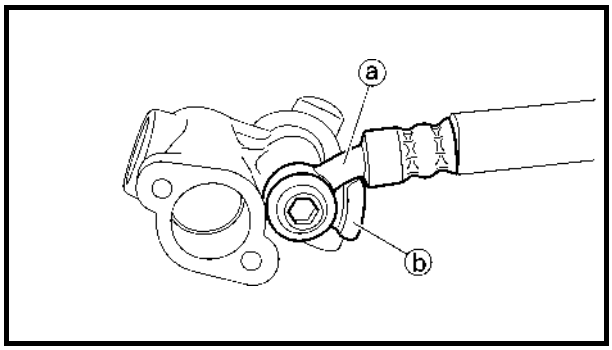

CAUTION:
Install the brake hose so that its pipe portion ⓐ directs as shown and lightly touches the projection ⓑ on the master cylinder.

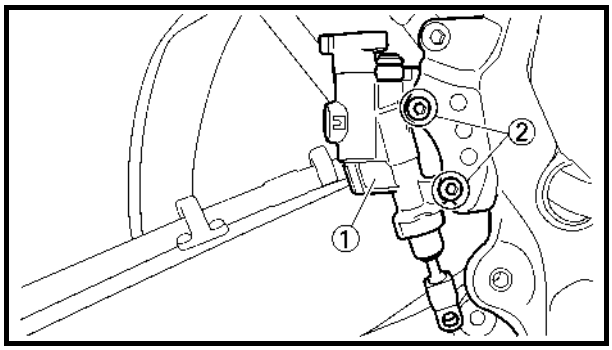

2. Install:
   - Master cylinder ①
   - Bolt (master cylinder) ②

   10 Nm (1.0 m · kg, 7.2 ft · lb)

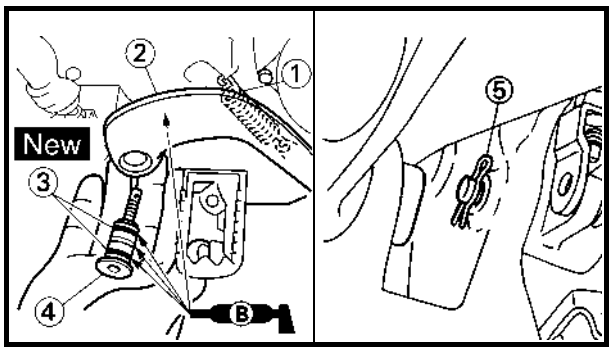

3. Install:
   - Spring ①
   - Brake pedal ②
   - O-ring ③ New
   - Bolt (brake pedal) ④

   26 Nm (2.6 m · kg, 19 ft · lb)
   - Clip ⑤

NOTE:
Apply the lithium soap base grease on the bolt, O-ring and brake pedal bracket.

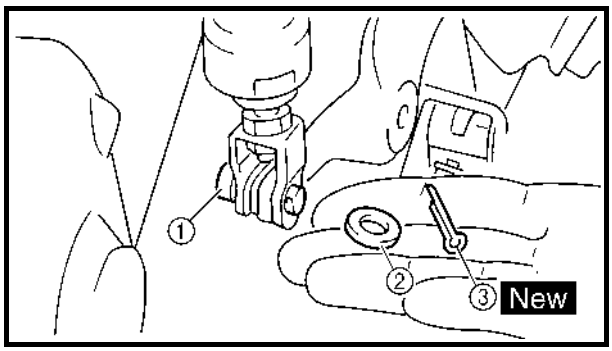

4. Install:
   - Pin ①
   - Plain washer ②
   - Cotter pin ③ New

NOTE:
After installing, check the brake pedal height. Refer to "REAR BRAKE ADJUSTMENT" section in the CHAPTER 3.

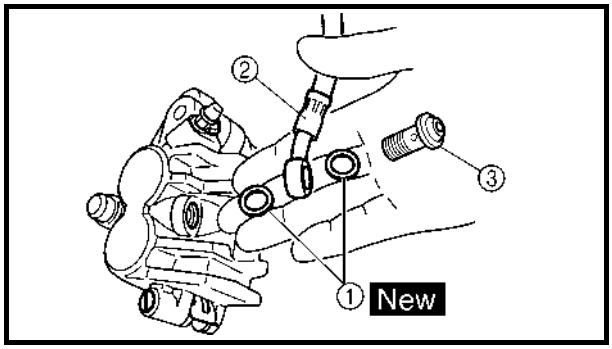

Front brake hose

1. Install:
   - Copper washer ① New
   - Brake hose ②
   - Union bolt ③

30 Nm (3.0 m · kg, 22 ft · lb)

WARNING
Always use new copper washers.

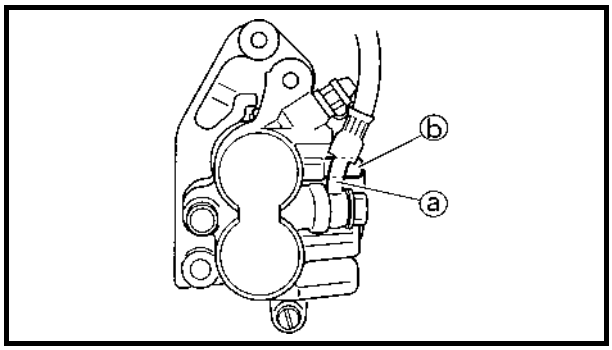

CAUTION:
Install the brake hose so that its pipe portion ⓐ directs as shown and lightly touches the projection ⓑ on the caliper.

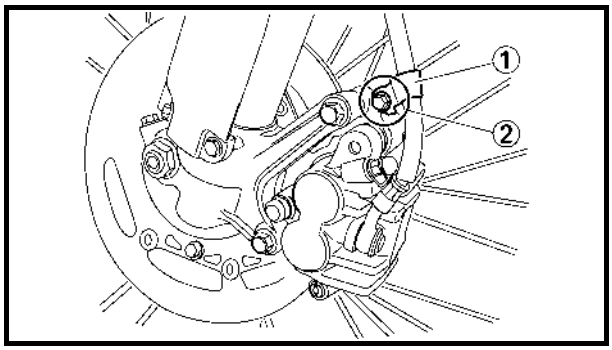

2. Install:
   - Brake hose holder ①
   - Bolt (brake hose holder) ②

10 Nm (1.0 m · kg, 7.2 ft · lb)

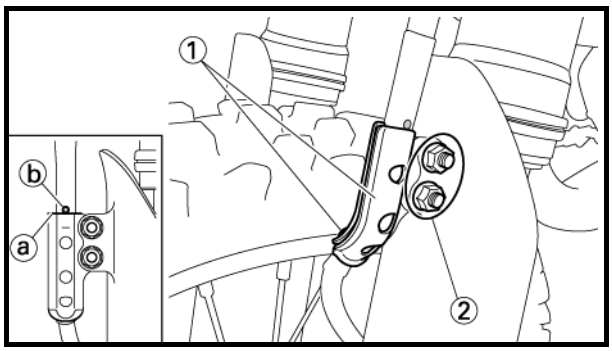

3. Install:
   - Brake hose holder ①
   - Nut (brake hose holder) ②

7 Nm (0.7 m · kg, 5.1 ft · lb)

NOTE:
Align the top ⓐ of the brake hose holder with the paint ⓑ of the brake hose.

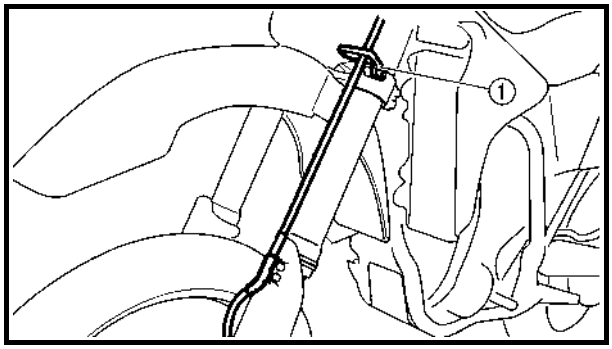

4. Pass the brake hose through the cable guide ①.

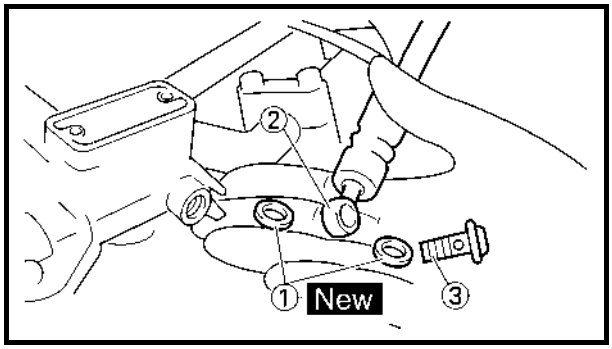

5. Install:
   - Copper washer ① New
   - Brake hose ②
   - Union bolt ③

	30 Nm (3.0 m · kg, 22 ft · lb)

WARNING

Always use new copper washers.

CAUTION:

Install the brake hose so that its pipe portion ⓐ directs as shown and lightly touches the projection ⓑ on the master cylinder.

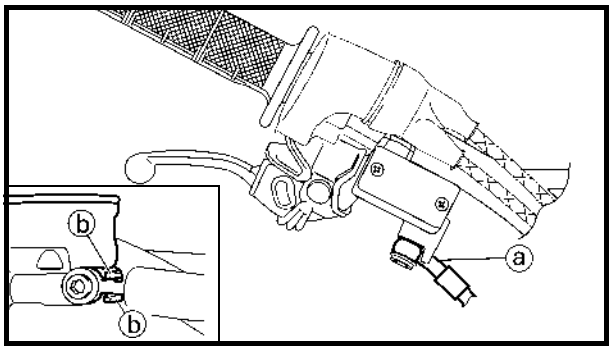

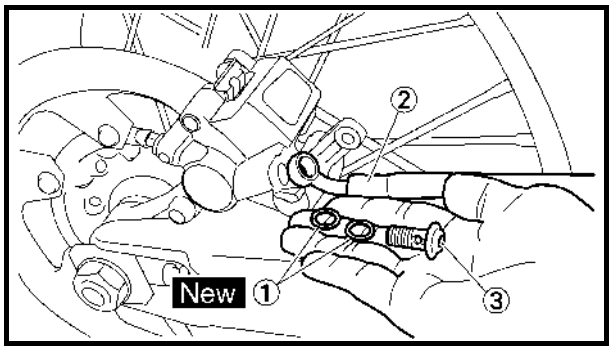

Rear brake hose

1. Install:
   - Copper washer ① New
   - Brake hose ②
   - Union bolt ③

	30 Nm (3.0 m · kg, 22 ft · lb)

WARNING

Always use new copper washers.

CAUTION:

Install the brake hose so that its pipe portion ⓐ directs as shown and lightly touches the projection ⓑ on the caliper.

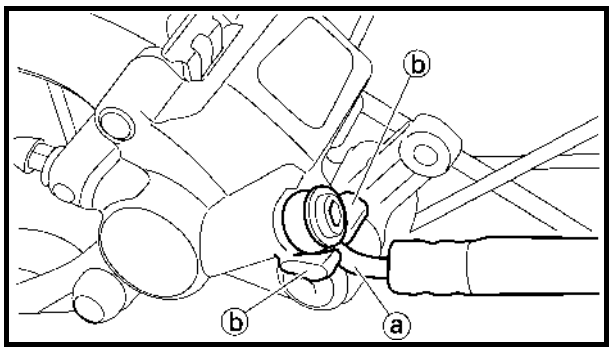

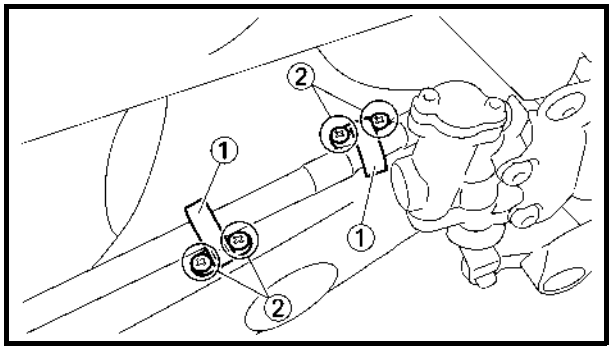

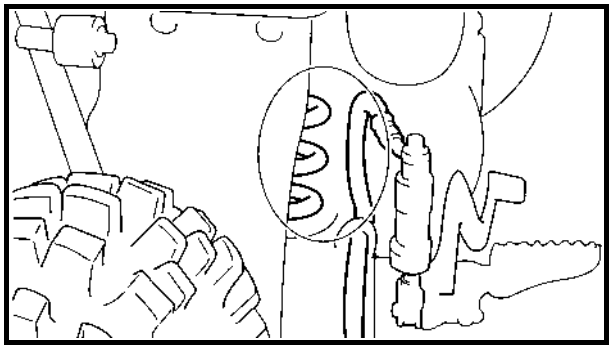

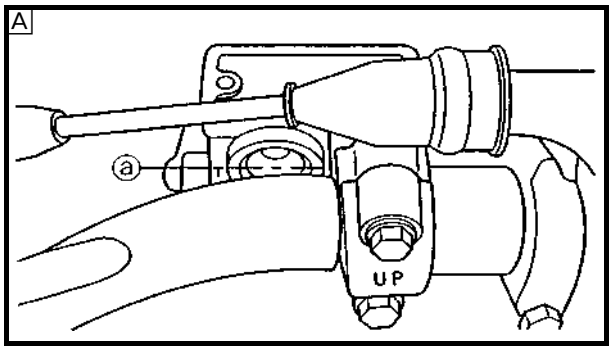

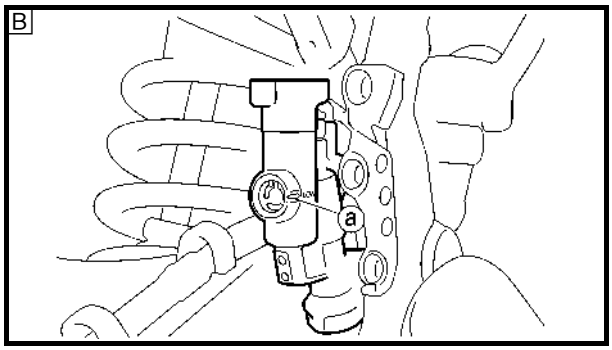

2. Install:
   - Brake hose holder ①
   - Screw (brake hose holder) ②

	2 Nm (0.2 m · kg, 1.4 ft · lb)

CAUTION:

After installing the brake hose holders, make sure the brake hose does not contact the spring (rear shock absorber). If it does, correct its twist.

Brake fluid

1. Fill:
   - Brake fluid
     Until the fluid level reaches "LOWER" level line ⓐ.

	Recommended brake fluid: **DOT #4**

WARNING

- **Use only the designated quality brake fluid:**
  otherwise, the rubber seals may deteriorate, causing leakage and poor brake performance.
- **Refill with the same type of brake fluid; mixing fluids may result in a harmful chemical reaction and lead to poor performance.**
- **Be careful that water does not enter the master cylinder when refilling. Water will significantly lower the boiling point of the fluid and may result in vapor lock.**

CAUTION:

Brake fluid may erode painted surfaces or plastic parts. Always clean up spilled fluid immediately.

A Front
B Rear

2. Air bleed:
   - Brake system
     Refer to “BRAKE SYSTEM AIR BLEEDING” section in the CHAPTER 3.

3. Inspect:
   - Brake fluid level
     Fluid at lower level → Fill up.
     Refer to “BRAKE FLUID LEVEL INSPECTION” section in the CHAPTER 3.

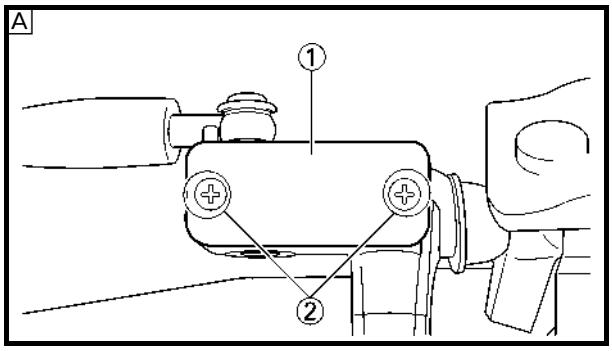

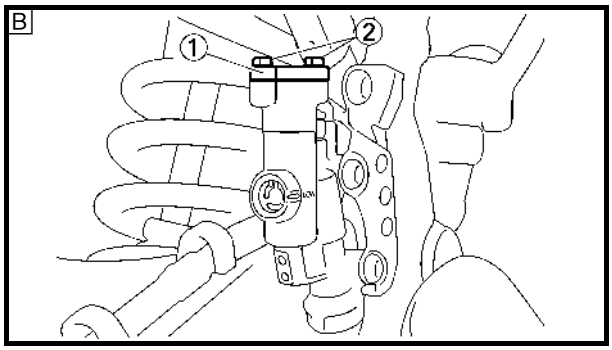

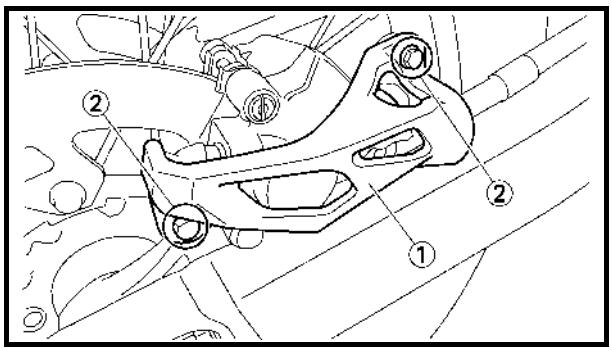

4. Install:
   [Front]
   - Reservoir float
   - Diaphragm
   - Master cylinder cap ①
   - Screw (master cylinder cap) ②

   2 Nm (0.2 m · kg, 1.4 ft · lb)

   [Rear]
   - Diaphragm
   - Master cylinder cap ①
   - Bolt (master cylinder cap) ②

   2 Nm (0.2 m · kg, 1.4 ft · lb)

CAUTION:

After installation, while pulling the lever in or pushing down on the pedal, check whether there is any brake fluid leaking where the union bolts are installed respectively at the master cylinder and caliper.

A Front
B Rear

5. Install: (rear brake only)
   - Protector ①
   - Bolt (protector) ②

   7 Nm (0.7 m · kg, 5.1 ft · lb)

EC550000
FRONT FORK

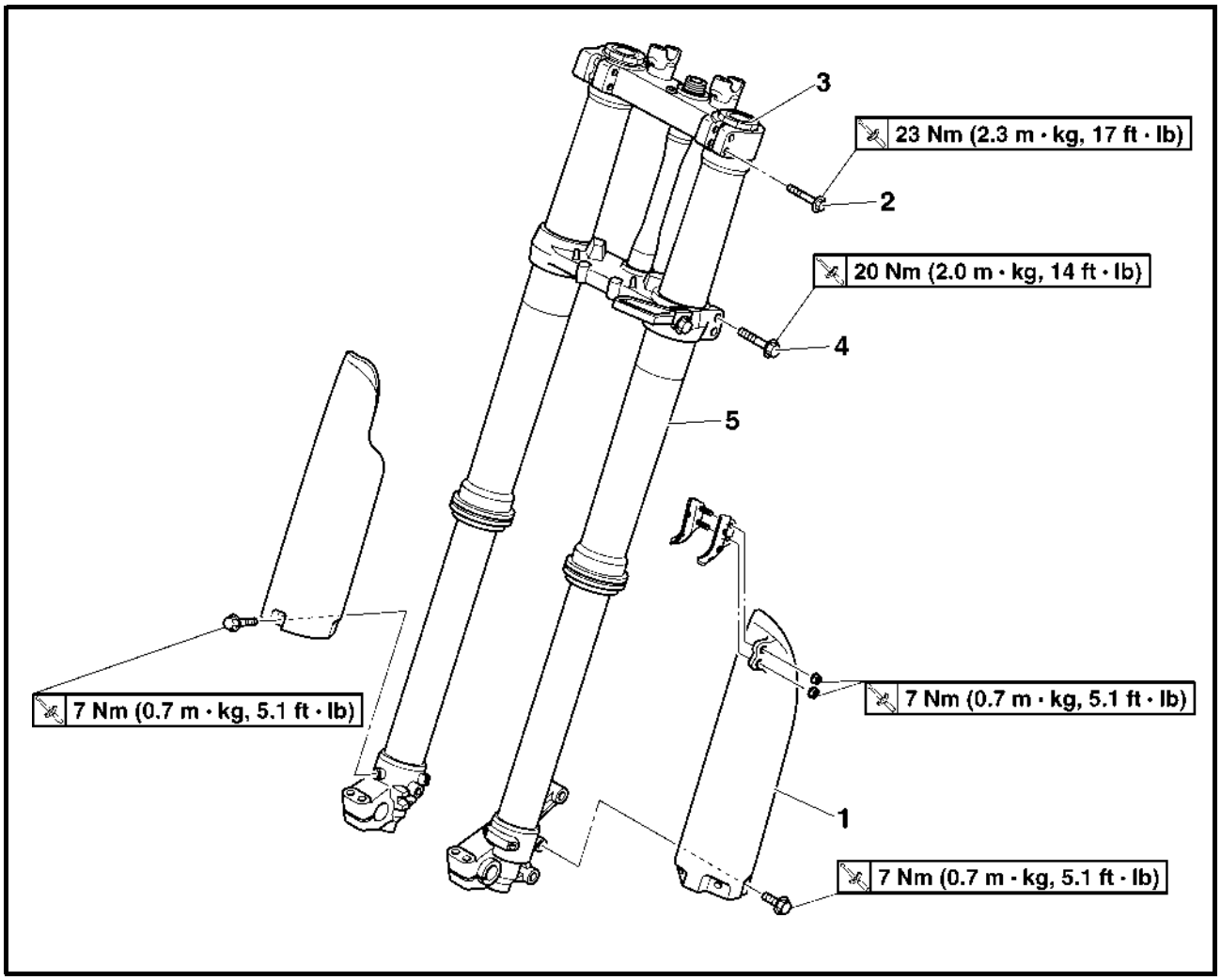

Extent of removal: ① Front fork removal

Extent of removal	Order	Part name	Q'ty	Remarks
Preparation for removal		**FRONT FORK REMOVAL** Hold the machine by placing the suitable stand under the engine.		**WARNING** **Support the machine securely so there is no danger of it falling over.**
		Front wheel		Refer to "FRONT WHEEL AND REAR WHEEL" section.
		Front caliper		Refer to "FRONT BRAKE AND REAR BRAKE" section.
		Number plate		Refer to "SEAT, FUEL TANK AND SIDE COVERS" section in the CHAPTER 4.
①	1	Protector	1	
	2	Pinch bolt (handle crown)	2	Only loosening.
	3	Damper assembly	1	Loosen when disassembling the front fork. Use special tool. Refer to "REMOVAL POINTS".
	4	Pinch bolt (under bracket)	2	Only loosening.
	5	Front fork	1	

EC558000
FRONT FORK DISASSEMBLY

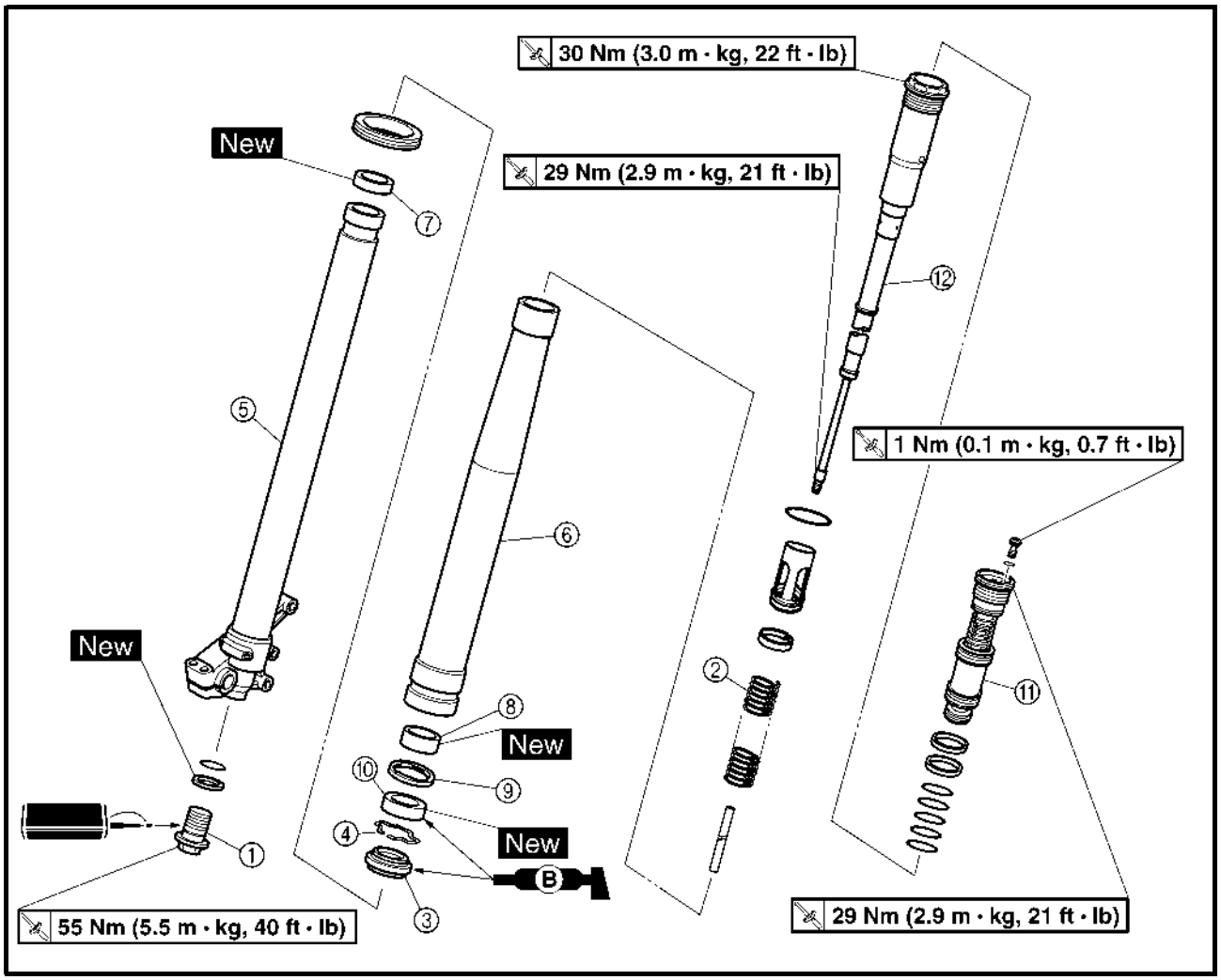

Extent of removal: ① Oil seal removal ② Damper assembly removal

Extent of removal	Order	Part name	Q'ty	Remarks
		FRONT FORK DISASSEMBLY		
① ②	①	Adjuster	1	Drain the fork oil. Use special tool. Refer to "REMOVAL POINTS".
	②	Fork spring	1	
	③	Dust seal	1	Refer to "REMOVAL POINTS".
	④	Stopper ring	1	
	⑤	Inner tube	1	
	⑥	Outer tube	1	
	⑦	Piston metal	1	
	⑧	Slide metal	1	
	⑨	Oil seal washer	1	
	⑩	Oil seal	1	
	⑪	Base valve	1	Drain the fork oil. Use special tool. Refer to "REMOVAL POINTS".
	⑫	Damper assembly	1	

EC556000
HANDLING NOTE

NOTE:
The front fork requires careful attention. So it is recommended that the front fork be maintained at the dealers.

CAUTION:
To prevent an accidental explosion of air, the following instructions should be observed:
- **The front fork with a built-in piston rod has a very sophisticated internal construction and is particularly sensitive to foreign material.**
  Use enough care not to allow any foreign material to come in when the oil is replaced or when the front fork is disassembled and reassembled.
- **Before removing the base valves or front forks, be sure to extract the air from the air chamber completely.**

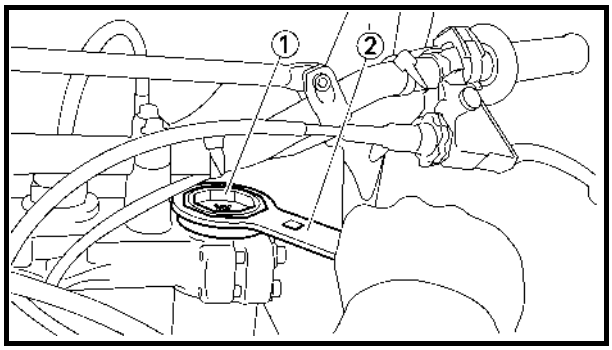

EC553000
REMOVAL POINTS
Damper assembly
1. Loosen:
   - Damper assembly ①

NOTE:
Before removing the front fork from the machine, loosen the damper assembly with the cap bolt ring wrench ②.

	Cap bolt ring wrench: **YM-01501/90890-01501**

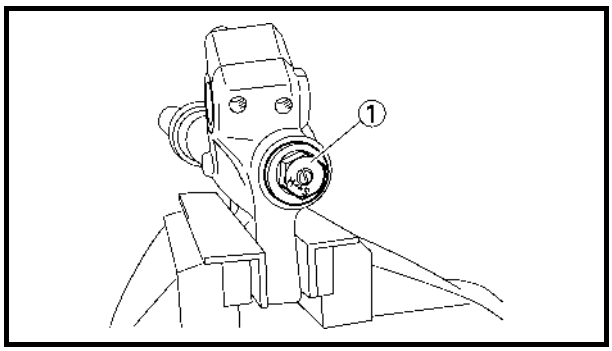

Adjuster

1. Drain the outer tube of its front fork oil at its top.
2. Loosen:
   - Adjuster ①

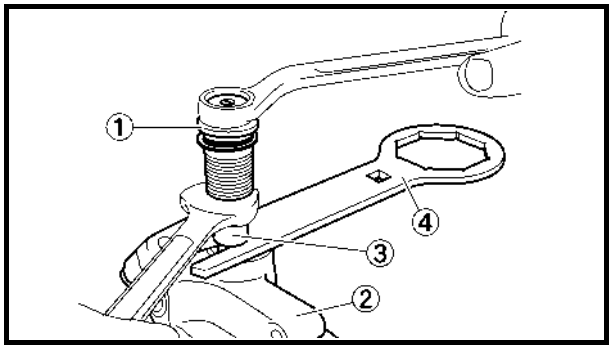

3. Remove:
   - Adjuster ①

NOTE:

- While compressing the inner tube ②, set the cap bolt ring wrench ④ between the inner tube and locknut ③.
- Hold the locknut and remove the adjuster.

CAUTION:

Do not remove the locknut as the damper rod may go into the damper assembly and not be taken out.

Cap bolt ring wrench:
YM-01501/90890-01501

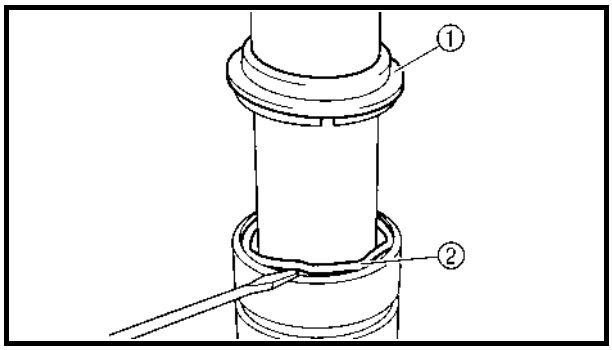

EC553201

Inner tube

1. Remove:
   - Dust seal ①
   - Stopper ring ②
     Using slotted-head screwdriver.

CAUTION:

Take care not to scratch the inner tube.

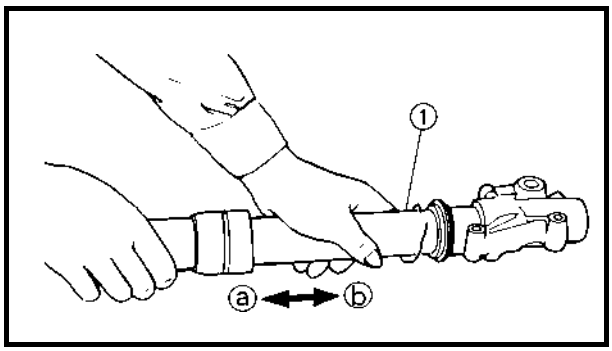

2. Remove:
   - Inner tube ①

Oil seal removal steps:

- Push in slowly ⓐ the inner tube just before it bottoms out and then pull it back quickly ⓑ.
- Repeat this step until the inner tube can be pulled out from the outer tube.

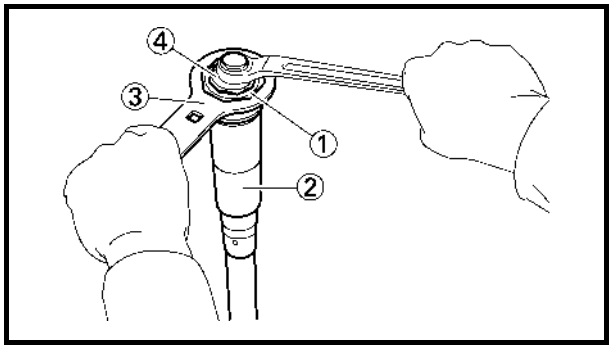

Base valve

1. Remove:
   - Base valve ①
     From damper assembly ②.

NOTE:
Hold the damper assembly with the cap bolt ring wrench ③ and use the cap bolt wrench ④ to remove the base valve.

Cap bolt wrench:
YM-01500/90890-01500
Cap bolt ring wrench:
YM-01501/90890-01501

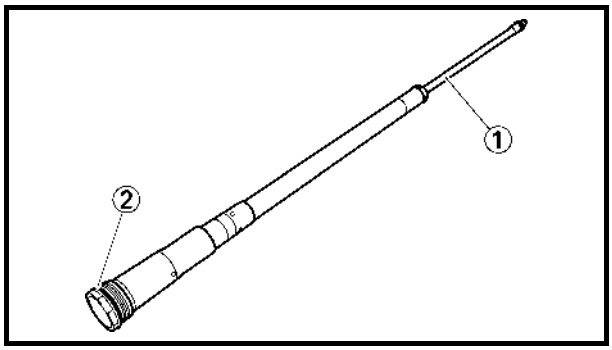

EC554000
INSPECTION

Damper assembly

1. Inspect:
   - Damper assembly ①
     Bend/damage → Replace.
   - O-ring ②
     Wear/damage → Replace.

CAUTION:
The front fork with a built-in piston rod has a very sophisticated internal construction and is particularly sensitive to foreign material.
Use enough care not to allow any foreign material to come in when the oil is replaced or when the front fork is disassembled and reassembled.

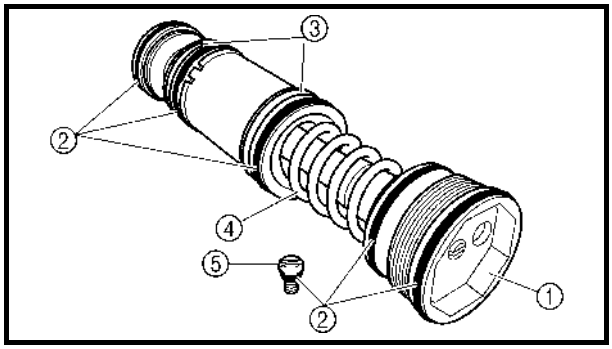

Base valve

1. Inspect:
   - Base valve ①
     Wear/damage → Replace.
     Contamination → Clean.
   - O-ring ②
     Wear/damage → Replace.
   - Piston metal ③
     Wear/damage → Replace.
   - Spring ④
     Damage/fatigue → Replace base valve.
   - Air bleed screw ⑤
     Wear/damage → Replace.

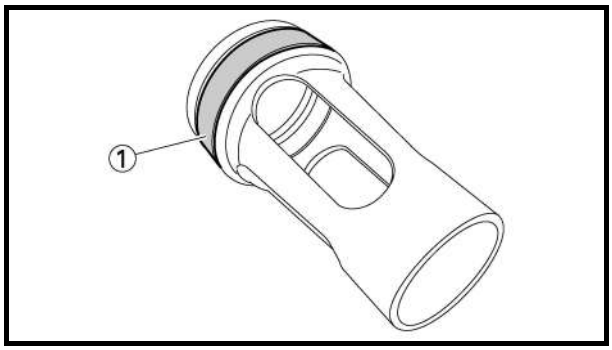

Collar

1. Inspect:
   - Piston metal ①
     Wear/damage → Replace.

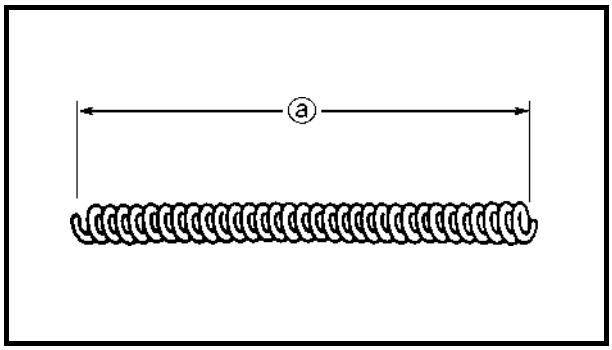

EC554400

Fork spring

1. Measure:
   - Fork spring free length ⓐ
     Out of specification → Replace.

Fork spring free length:	
Standard	**<Limit>**
454 mm (17.9 in)	**449 mm (17.7 in)**

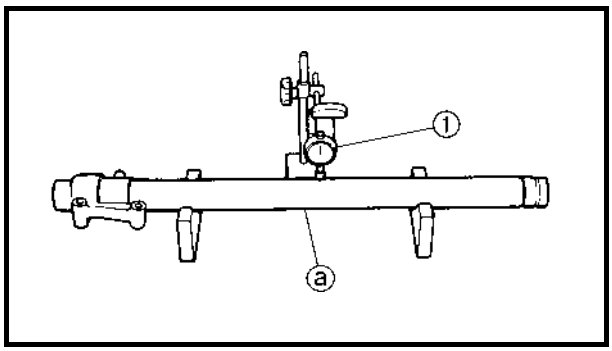

EC554502
Inner tube

1. Inspect:
   - Inner tube surface ⓐ
     Score marks → Repair or replace.
     Use #1,000 grit wet sandpaper.
     Damaged oil lock piece → Replace.
   - Inner tube bends
     Out of specification → Replace.
     Use the dial gauge ①.

Inner tube bending limit:
0.2 mm (0.008 in)

NOTE:
The bending value is shown by one half of the dial gauge reading.

WARNING
Do not attempt to straighten a bent inner tube as this may dangerously weaken the tube.

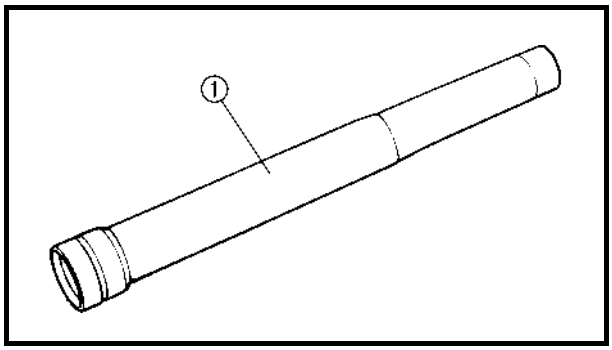

EC554600
Outer tube

1. Inspect:
   - Outer tube ①
     Score marks/wear/damage → Replace.

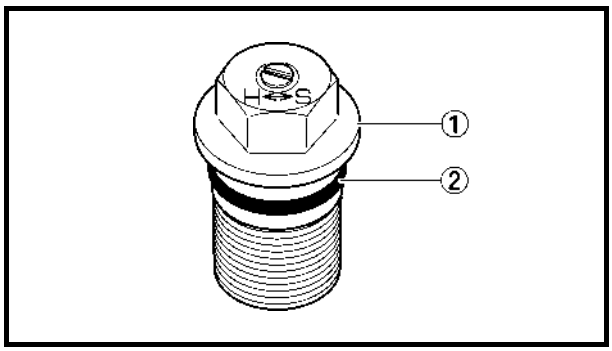

Adjuster

1. Inspect:
   - Adjuster ①
   - O-ring ②
     Wear/damage → Replace.

EC555000
ASSEMBLY AND INSTALLATION
Front fork assembly

1. Wash the all parts in a clean solvent.
2. Stretch the damper assembly fully.

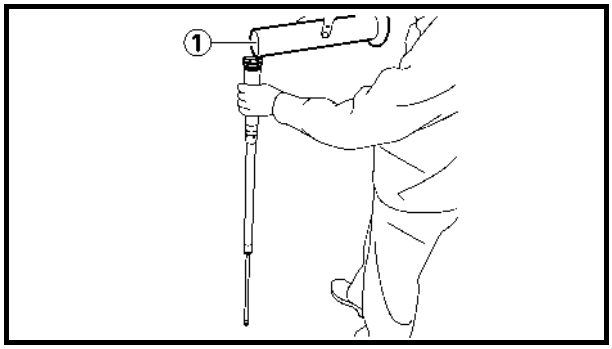

3. Fill:
   - Front fork oil ①
     To damper assembly.

Recommended oil:
Suspension oil "S1"
Oil capacity:
195 cm^3 (6.86 Imp oz, 6.59 US oz)

CAUTION:

- **Be sure to use recommended fork oil. If other oils are used, they may have an excessively adverse effect on the front fork performance.**
- **Never allow foreign materials to enter the front fork.**

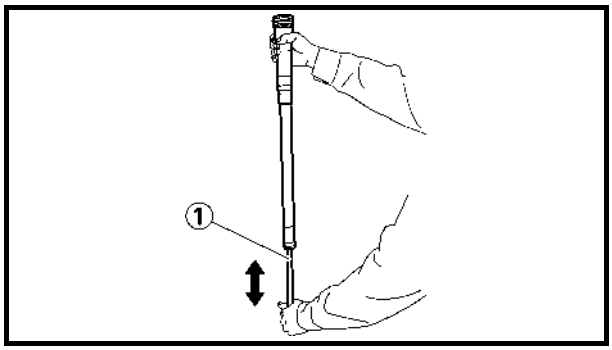

4. After filling, pump the damper assembly ① slowly up and down (about 200 mm (7.9 in) stroke) several times to bleed the damper assembly of air.

NOTE:
Be careful not to excessive full stroke. A stroke of 200 mm (7.9 in) or more will cause air to enter. In this case, repeat the steps 2 to 4.

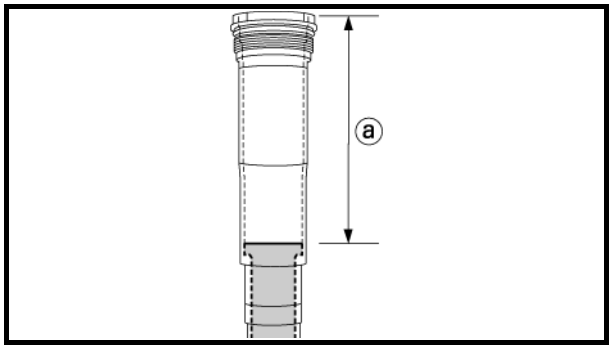

5. Measure:
   - Oil level (left and right) ⓐ
     Out of specification → Adjust.

Standard oil level:
145 ~ 148 mm (5.71 ~ 5.83 in)
From top of fully stretched damper assembly.

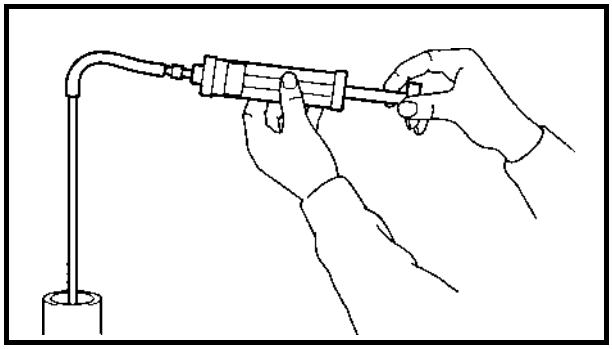

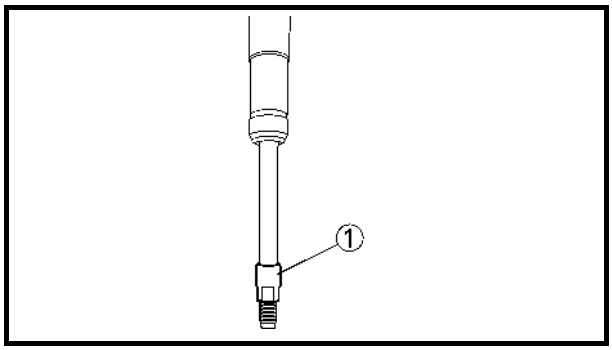

6. Tighten:
   - Locknut ①

NOTE:
Fully finger tighten the locknut onto the damper assembly.

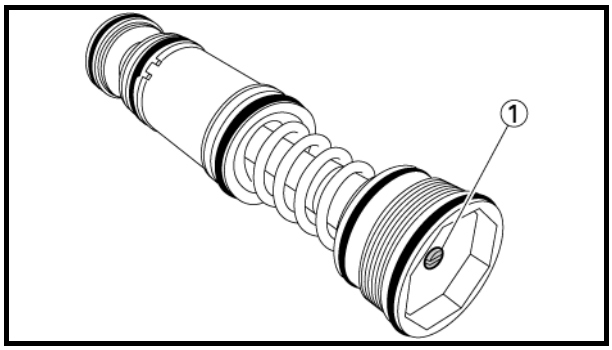

7. Loosen:
   - Compression damping adjuster ①

NOTE:
- Loosen the compression damping adjuster finger tight.
- Record the set position of the adjuster (the amount of turning out the fully turned in position).

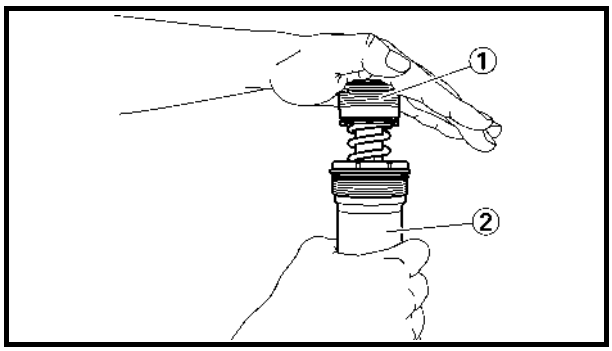

8. Install:
   - Base valve ①
     To damper assembly ②.

NOTE:
First bring the damper rod pressure to a maximum. Then install the base valve while releasing the damper rod pressure.

9. Check that the damper assembly is fully stretched. Not fully stretched → Repeat the steps 2 to 8.

10. Tighten:
    - Base valve ①

	29 Nm (2.9 m · kg, 21 ft · lb)

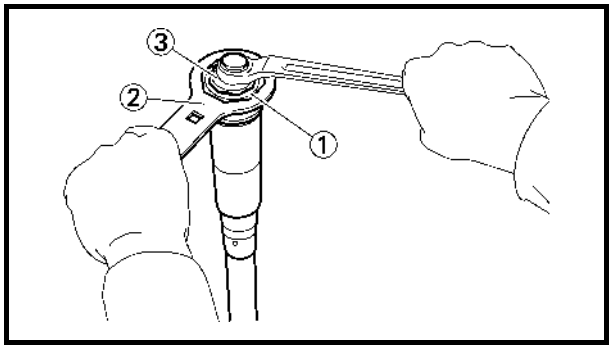

NOTE:
Hold the damper assembly with the cap bolt ring wrench ② and use the cap bolt wrench ③ to tighten the base valve with specified torque.

Cap bolt wrench:
YM-01500/90890-01500
Cap bolt ring wrench:
YM-01501/90890-01501

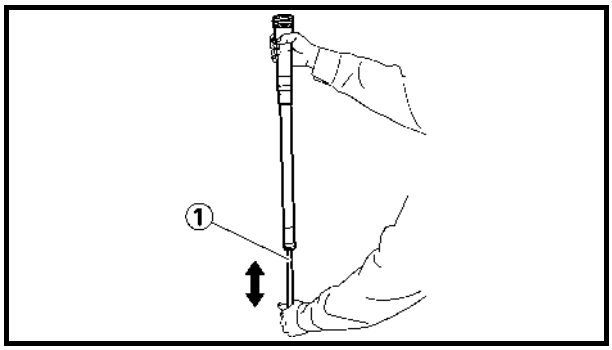

11. After filling, pump the damper assembly ① slowly up and down more than 10 times to distribute the fork oil.

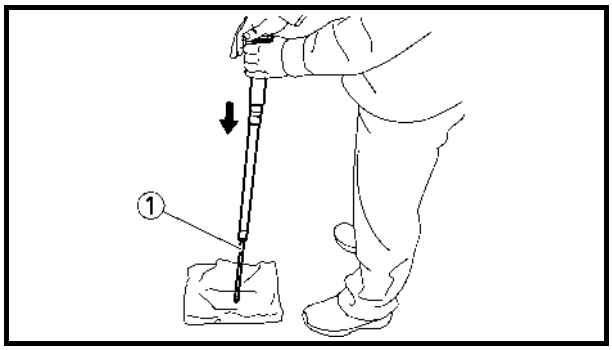

12. While protecting the damper assembly ① with a rag and compressing fully, allow excessive oil to overflow on the base valve side.

CAUTION:
Take care not to damage the damper assembly.

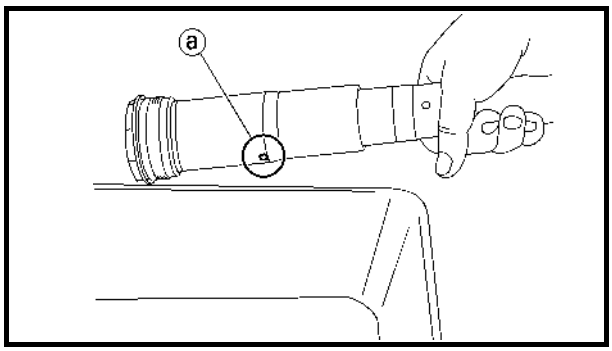

13. Allow the overflowing oil to escape at the hole ⓐ in the damper assembly.

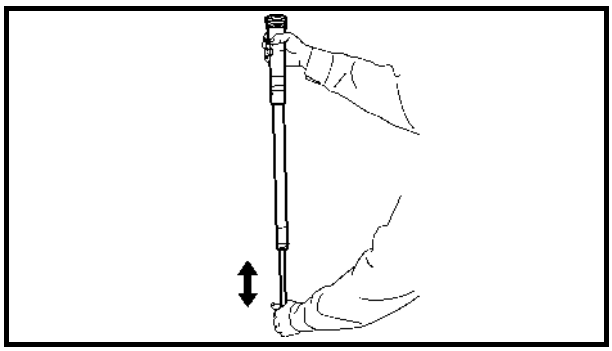

14. Check:
    - Damper assembly smooth movement
      Tightness/binding/rough spots → Repeat the steps 2 to 13.

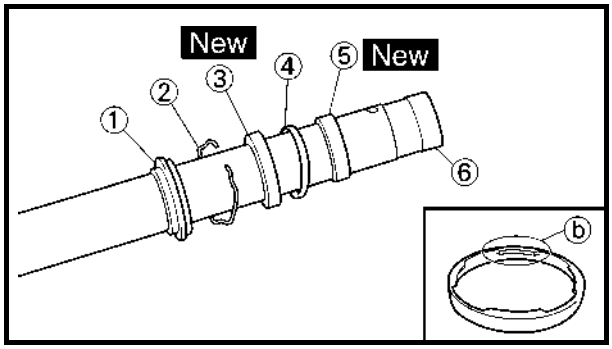

15. Install:
    - Dust seal ①
    - Stopper ring ②
    - Oil seal ③ New
    - Oil seal washer ④
    - Slide metal ⑤ New
      To inner tube ⑥.

NOTE:
- Apply the fork oil on the inner tube.
- When installing the oil seal, use vinyl seat ⓐ with fork oil applied to protect the oil seal lip.
- Install the oil seal with its manufacture's marks or number facing the axle holder side.
- Install the oil seal washer with its projections ⓑ facing upward.

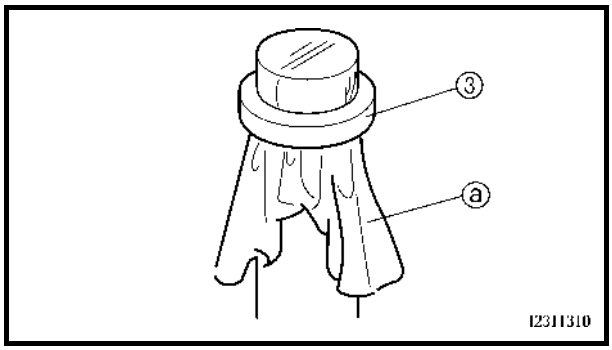

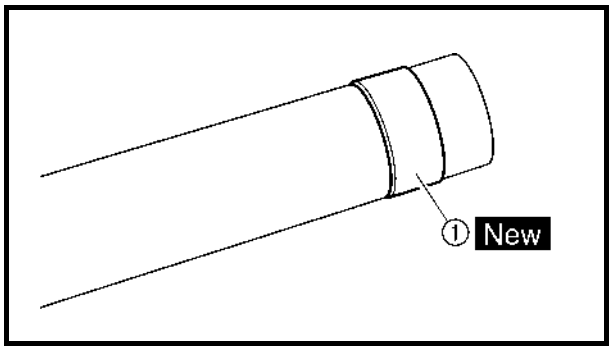

16. Install:
    - Piston metal ① New

NOTE:
Install the piston metal onto the slot on inner tube.

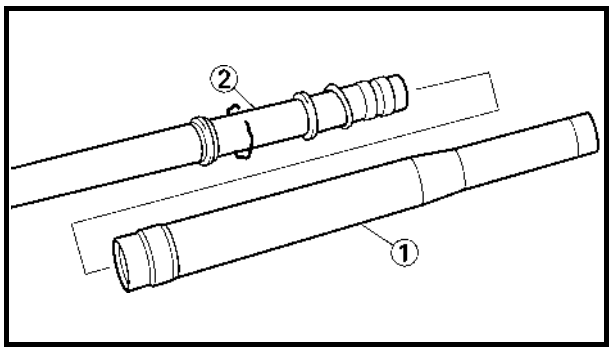

17. Install:
    - Outer tube ①
      To inner tube ②.

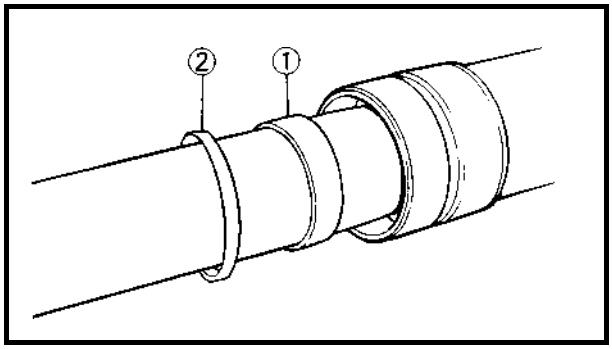

18. Install:
    - Slide metal ①
    - Oil seal washer ②
      To outer tube slot.

NOTE:
Press the slide metal into the outer tube with fork seal driver ③.

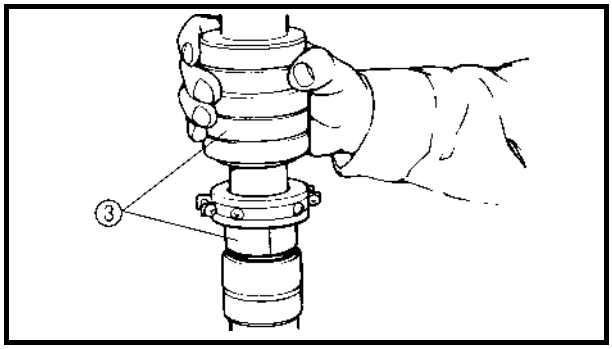

	Fork seal driver: **YM-A0948/90890-01502**

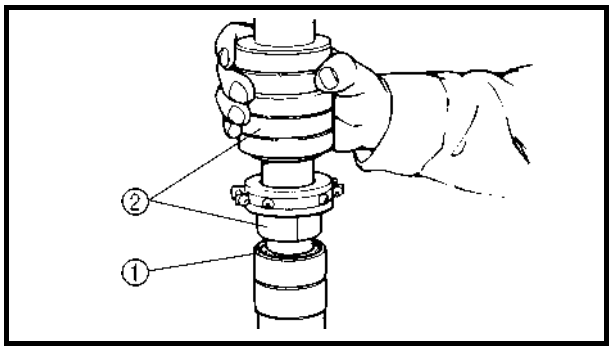

19. Install:
    - Oil seal ①

NOTE:
Press the oil seal into the outer tube with fork seal driver ②.

	Fork seal driver: **YM-A0948/90890-01502**

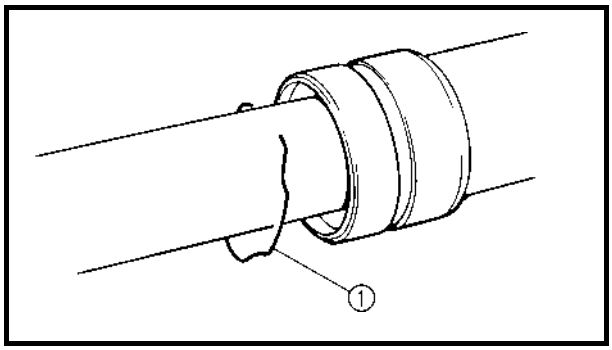

20. Install:
    - Stopper ring ①

NOTE:
Fit the stopper ring correctly in the groove in the outer tube.

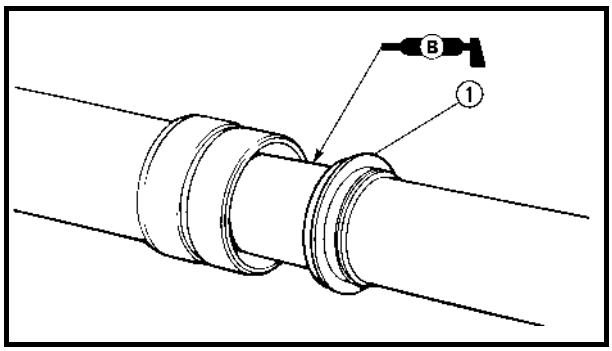

21. Install:
    - Dust seal ①

NOTE:
Apply the lithium soap base grease on the inner tube.

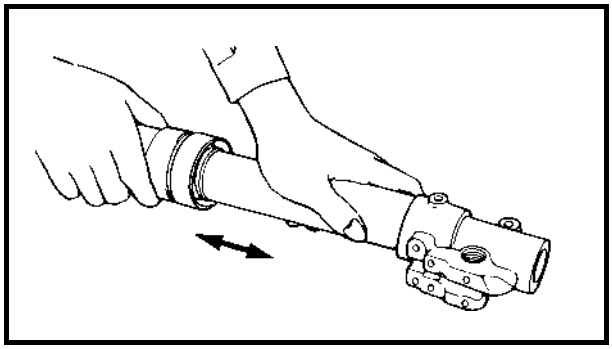

22. Check:
    - Inner tube smooth movement
      Tightness/binding/rough spots → Repeat the steps 15 to 21.

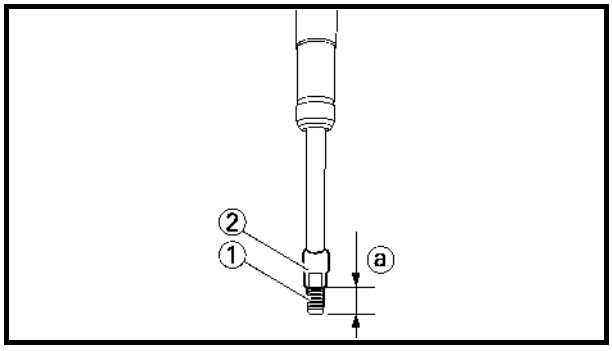

23. Measure:
    - Distance ⓐ
      Out of specification → Turn into the locknut.

Distance ⓐ:
19 mm (0.75 in) or more
Between the damper assembly ① bottom and locknut ② bottom.

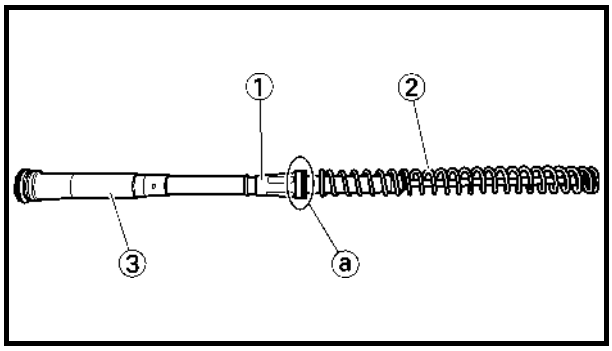

24. Install:
    - Collar ①
    - Fork spring ②
      To damper assembly ③.

NOTE:
Install the collar with its larger dia. end ⓐ facing the fork spring.

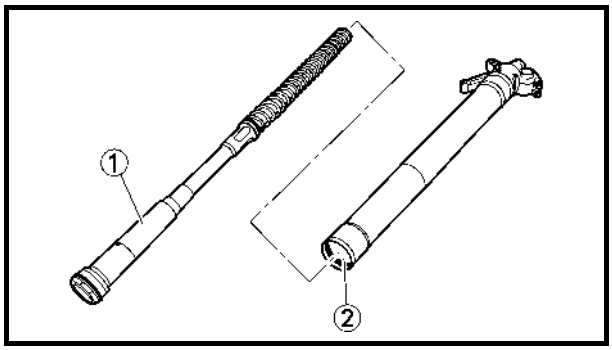

25. Install:
    - Damper assembly ①
      To inner tube ②.

CAUTION:
To install the damper assembly into the inner tube, hold the inner tube aslant. If the inner tube is held vertically, the damper assembly may fall into it, damaging the valve inside.

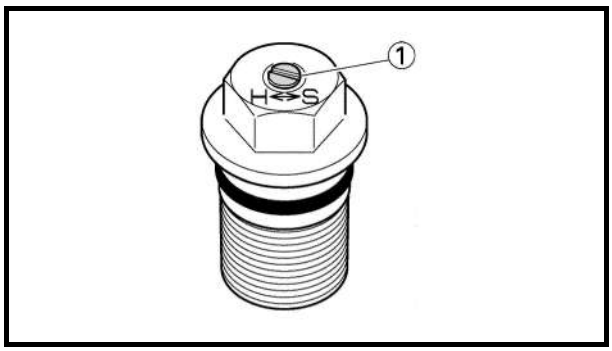

26. Loosen:
    - Rebound damping adjuster ①

NOTE:
- Loosen the rebound damping adjuster finger tight.
- Record the set position of the adjuster (the amount of turning out the fully turned in position).

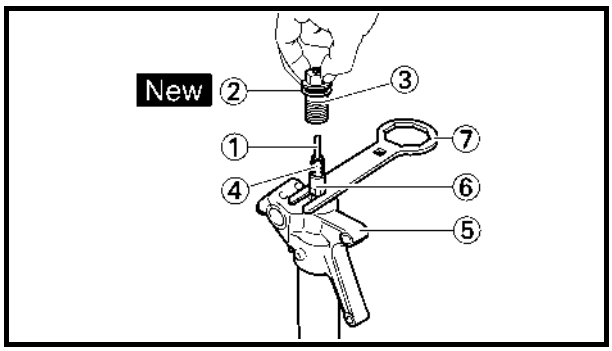

27. Install:
    - Push rod ①
    - Copper washer ② New
    - Adjuster ③
      To damper assembly ④.

NOTE:
- While compressing the inner tube ⑤, set the cap bolt ring wrench ⑦ between the inner tube and locknut ⑥.
- Fully finger tighten the adjuster onto the damper assembly.

Cap bolt ring wrench:
YM-01501/90890-01501

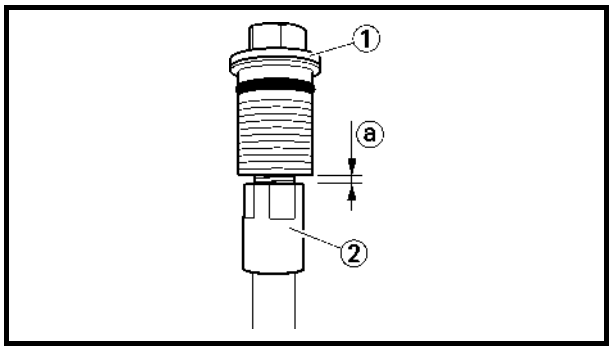

28. Inspect:
    - Gap ⓐ between the adjuster ① and locknut ②.
      Out of specification → Retighten and readjust the locknut.

Gap ⓐ between the adjuster and locknut:
0.5 ~ 1.0 mm (0.02 ~ 0.04 in)

NOTE:
If the adjuster is installed out of specification, proper damping force cannot be obtained.

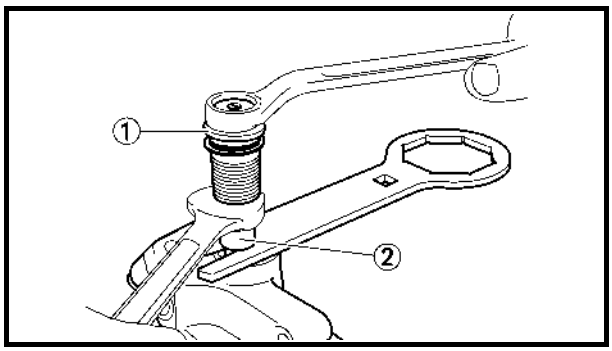

29. Tighten:
    - Adjuster (locknut) ①

29 Nm (2.9 m · kg, 21 ft · lb)

NOTE:
Hold the locknut ② and tighten the adjuster with specified torque.

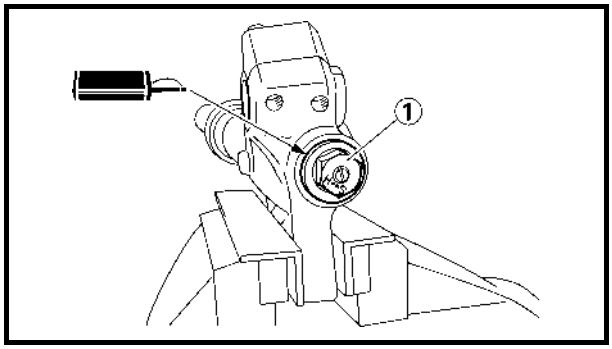

30. Install:
    - Adjuster ①

      55 Nm (5.5 m · kg, 40 ft · lb)

      To inner tube.

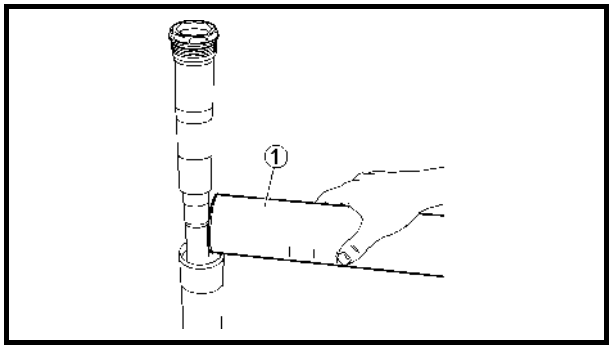

31. Fill:
    - Front fork oil ①

      From outer tube top.

Recommended oil:
Suspension oil "S1"
Standard oil amount:
355 cm³ (12.5 Imp oz, 12.0 US oz)
***345 cm³ (12.1 Imp oz, 11.7 US oz)**
Extent of adjustment:
300 ~ 380 cm³
(10.6 ~ 13.4 Imp oz,
10.1 ~ 12.8 US oz)

* For EUROPE

WARNING

Never fail to make the oil amount adjustment between the maximum and minimum amount and always adjust each front fork to the same setting. Uneven adjustment can cause poor handling and loss of stability.

CAUTION:

- **Be sure to use recommended fork oil. If other oils are used, they may have an excessively adverse effect on the front fork performance.**
- **Never allow foreign materials to enter the front fork.**

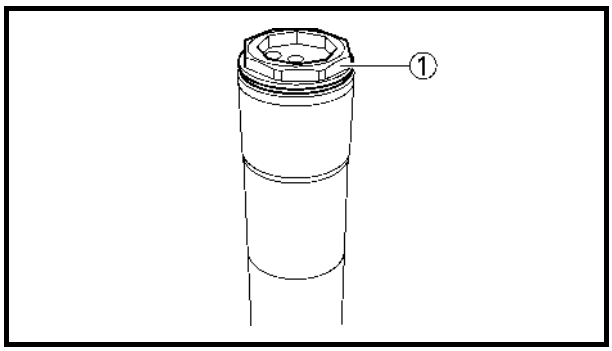

32. Install:
    - Damper assembly ①

      To outer tube.

NOTE:
Temporarily tighten the damper assembly.

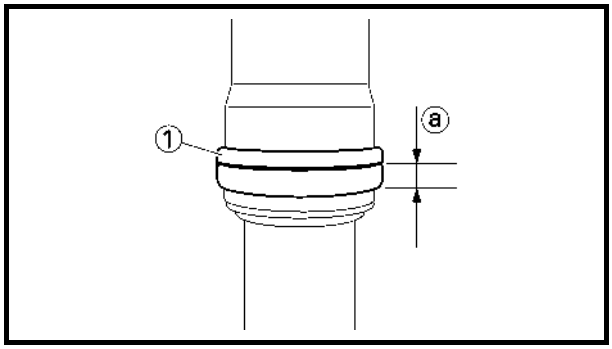

33. Install:
    - Protector guide ①

NOTE:
Install the protector guide with its wider side ⓐ facing downward.

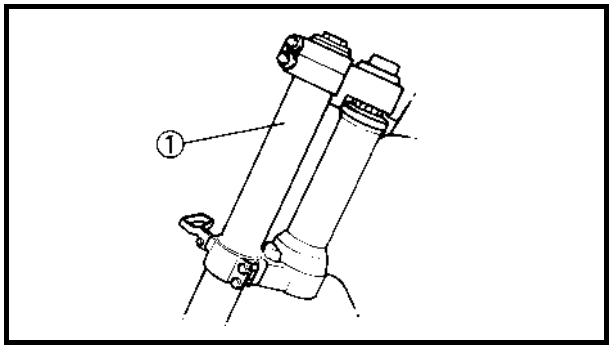

Installation

1. Install:
    - Front fork ①

NOTE:
- Temporarily tighten the pinch bolts (under bracket).
- Do not tighten the pinch bolts (handle crown) yet.

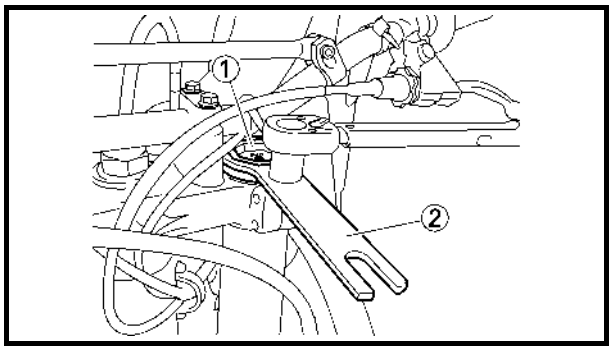

2. Tighten:
    - Damper assembly ①

	30 Nm (3.0 m · kg, 22 ft · lb)

NOTE:
Use the cap bolt ring wrench ② to tighten the damper assembly with specified torque.

	Cap bolt ring wrench: YM-01501/90890-01501

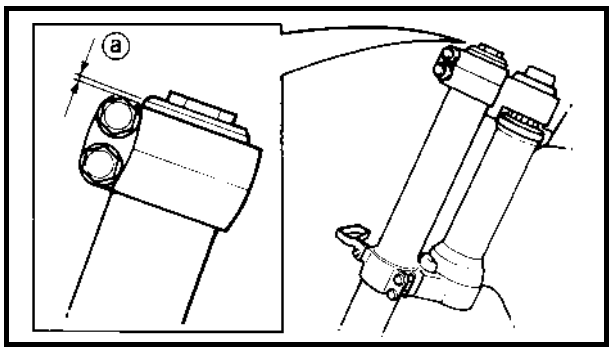

3. Adjust:
    - Front fork top end ⓐ

	Front fork top end (standard) ⓐ: Zero mm (Zero in)

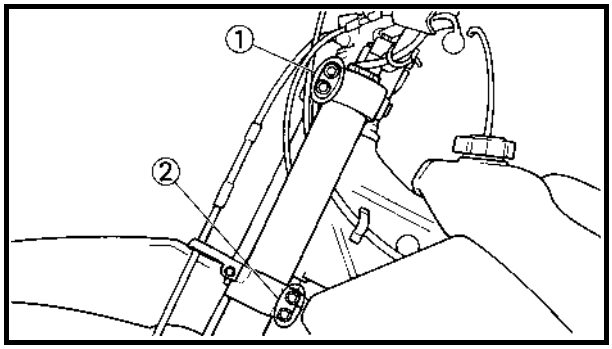

4. Tighten:
   - Pinch bolt (handle crown) ①

     23 Nm (2.3 m · kg, 17 ft · lb)
   - Pinch bolt (under bracket) ②

     20 Nm (2.0 m · kg, 14 ft · lb)

CAUTION:

Tighten the under bracket to specified torque. If torqued too much, it may cause the front fork to malfunction.

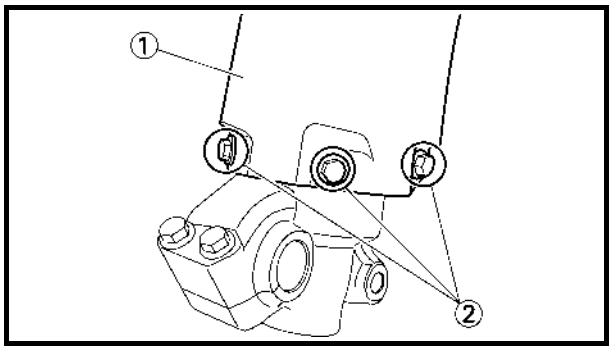

5. Install:
   - Protector ①
   - Bolt (protector) ②

     7 Nm (0.7 m · kg, 5.1 ft · lb)

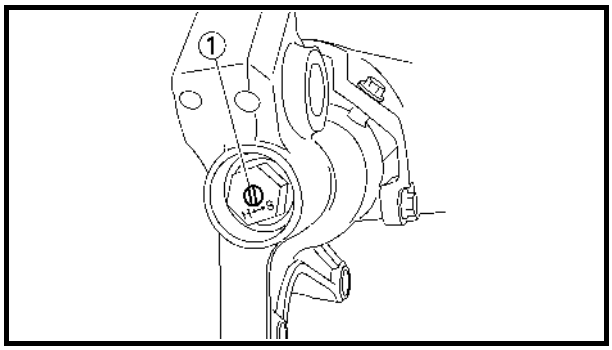

6. Adjust:
   - Rebound damping force

NOTE:

Turn in the damping adjuster ① finger-tight and then turn out to the originally set position.

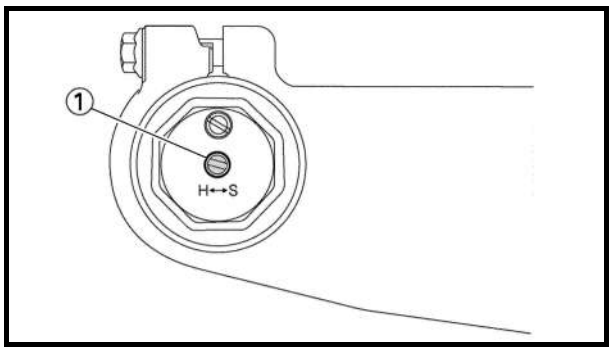

7. Adjust:
   - Compression damping force

NOTE:

Turn in the damping adjuster ① finger-tight and then turn out to the originally set position.

EC5B0000
HANDLEBAR

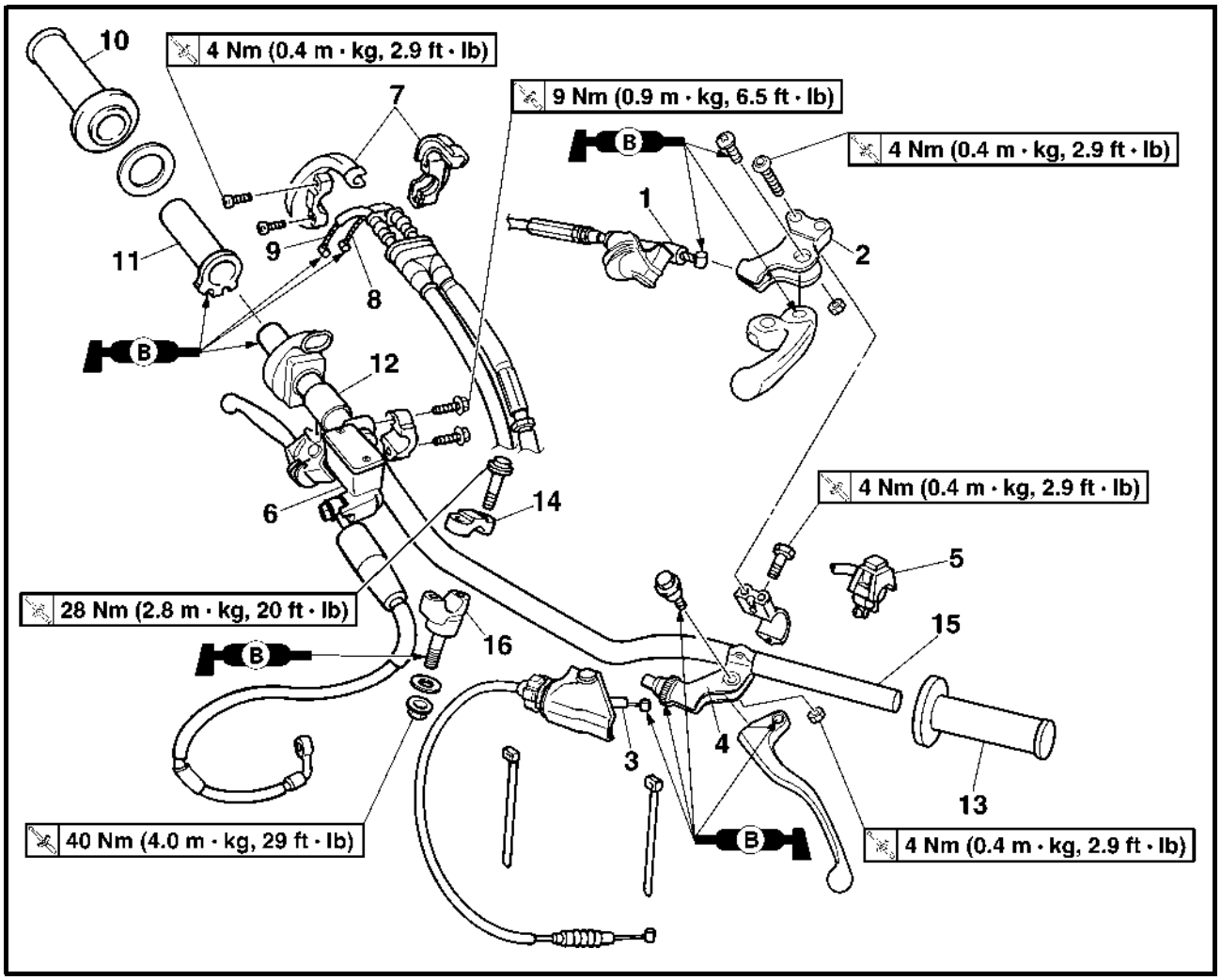

Extent of removal: ① Handlebar removal

Extent of removal	Order	Part name	Q'ty	Remarks
		HANDLEBAR REMOVAL		
Preparation for removal		Number plate		Remove the band only.
①	1	Hot starter cable	1	Disconnect at the lever side.
	2	Hot starter lever holder	1	
	3	Clutch cable	1	Disconnect at the lever side.
	4	Clutch lever holder	1	
	5	"ENGINE STOP" button	1	
	6	Master cylinder	1	Refer to "REMOVAL POINTS".
	7	Throttle cable cap	1	
	8	Throttle cable #1 (pulled)	1	Disconnect at the throttle side.
	9	Throttle cable #2 (pushed)	1	Disconnect at the throttle side.
	10	Grip (right)	1	Refer to "REMOVAL POINTS".
	11	Tube guide	1	
	12	Collar	1	
	13	Grip (left)	1	Refer to "REMOVAL POINTS".
	14	Handlebar holder (upper)	2	
	15	Handlebar	1	
	16	Handlebar holder (lower)	2	

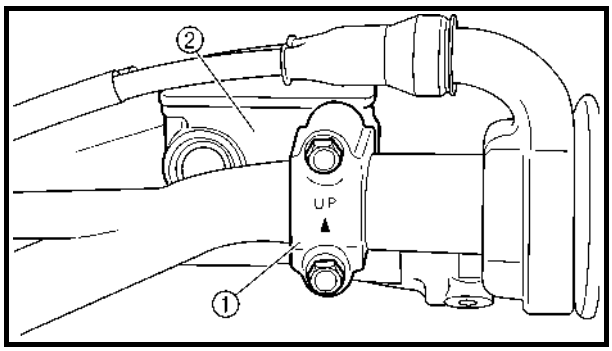

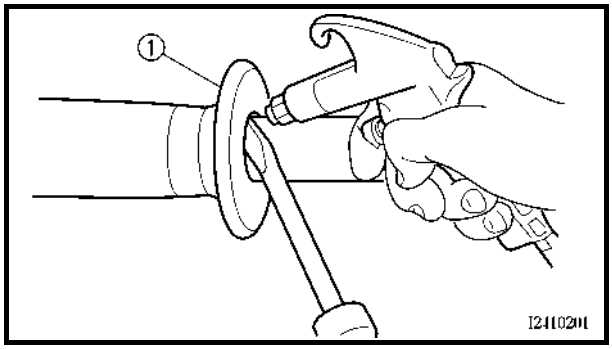

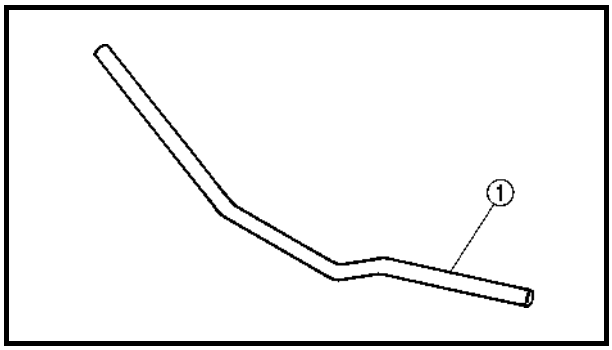

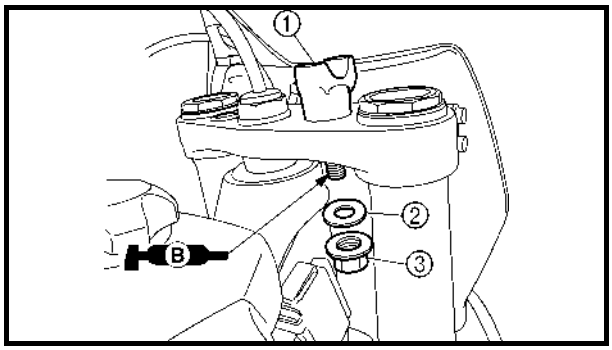

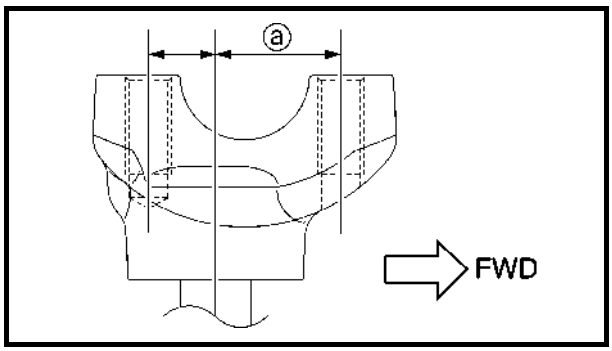

EC5B3000
REMOVAL POINTS

EC5B3100
Master cylinder

1. Remove:
   - Master cylinder bracket ①
   - Master cylinder ②

CAUTION:

- **Do not let the master cylinder hang on the brake hose.**
- **Keep the master cylinder cap side horizontal to prevent air from coming in.**

EC5B3200
Grip

1. Remove:
   - Grip ①

NOTE:

Blow in air between the handlebar or tube guide and the grip. Then remove the grip which has become loose.

EC5B4000
INSPECTION

EC5B4100
Handlebar

1. Inspect:
   - Handlebar ①
     Bends/cracks/damage → Replace.

⚠ WARNING

Do not attempt to straighten a bent handlebar as this may dangerously weaken the handlebar.

EC5B5000
ASSEMBLY AND INSTALLATION

Handlebar

1. Install:
   - Handlebar holder (lower) ①
   - Plain washer ②
   - Nut [handlebar holder (lower)] ③

NOTE:

- Install the handlebar holder (lower) with its side having the greater distance ⓐ from the mounting bolt center facing forward.
- Apply the lithium soap base grease on the thread of the handlebar holder (lower).
- Installing the handlebar holder (lower) in the reverse direction allows the front-to-rear offset amount of the handlebar position to be changed.
- Do not tighten the nut yet.

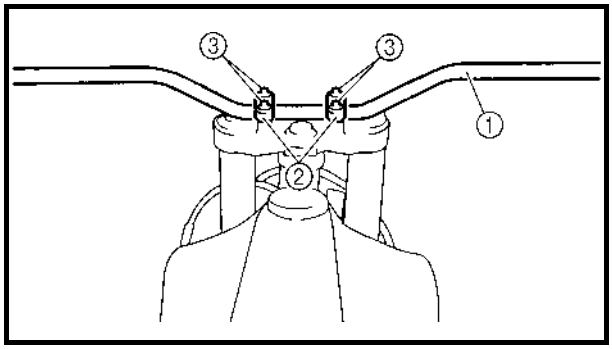

2. Install:
   - Handlebar ①
   - Handlebar holder (upper) ②
   - Bolt [handlebar holder (upper)] ③

	28 Nm (2.8 m · kg, 20 ft · lb)

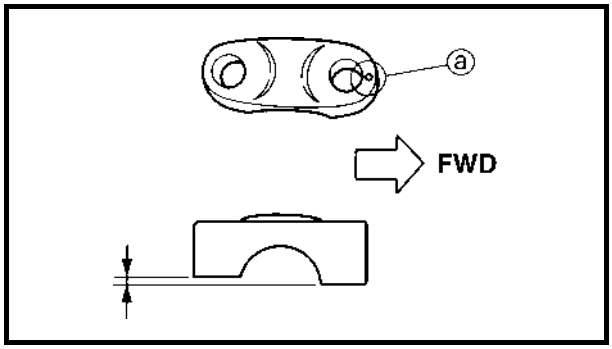

NOTE:
- The handlebar holder (upper) should be installed with the punched mark ⓐ forward.
- Install the handlebar so that the marks ⓑ are in place on both sides.
- Install the handlebar so that the projection ⓒ of the handlebar holder (upper) is positioned at the mark on the handlebar as shown.
- First tighten the bolts on the front side of the handlebar holder (upper), and then tighten the bolts on the rear side.

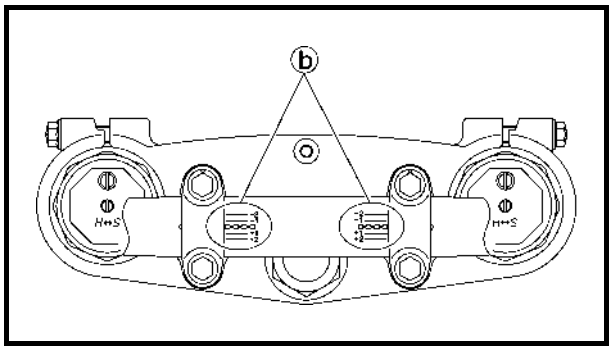

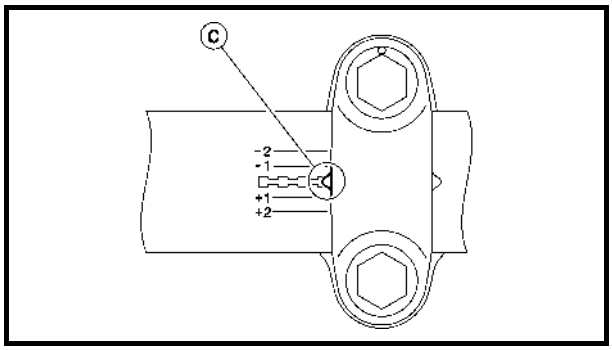

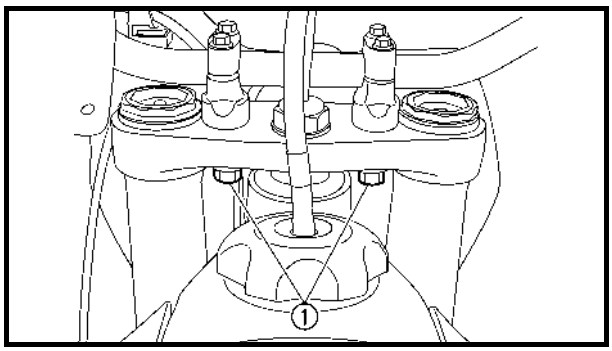

3. Tighten:
   - Nut [handlebar holder (lower)] ①

	40 Nm (4.0 m · kg, 29 ft · lb)

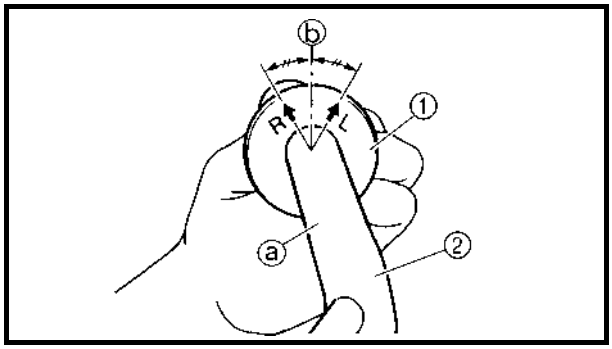

4. Install:
   - Grip (left) ①
     Apply the adhesive to the handlebar ②.

NOTE:
- Before applying the adhesive, wipe off grease or oil on the handlebar surface ⓐ with a lacquer thinner.
- Install the grip (left) to the handlebar so that the line ⓑ between the two arrow marks faces straight upward.

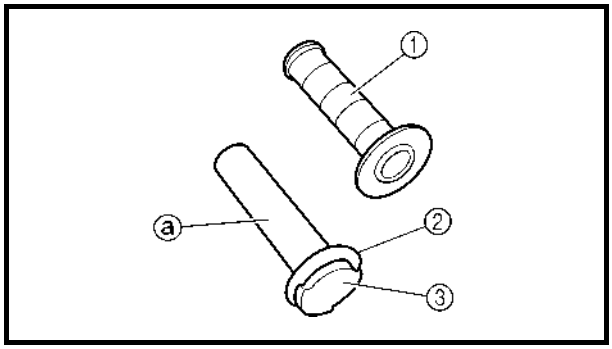

5. Install:
   - Grip (right) ①
   - Collar ②
     Apply the adhesive on the tube guide ③.

NOTE:
- Before applying the adhesive, wipe off grease or oil on the tube guide surface ⓐ with a lacquer thinner.
- Install the grip to the tube guide so that the grip match mark ⓑ and tube guide slot ⓒ form the angle as shown.

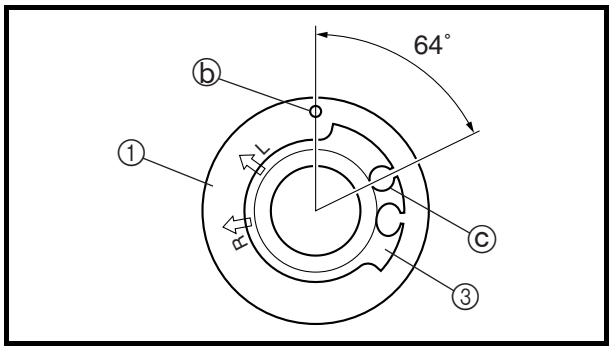

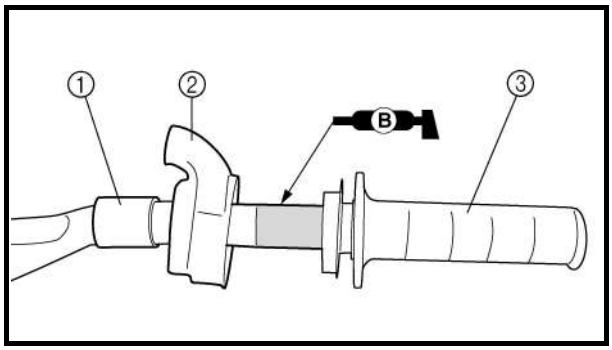

6. Install:
   - Collar ①
   - Cover (grip cap) ②
   - Throttle grip ③

NOTE:
Apply the lithium soap base grease on the throttle grip sliding surface.

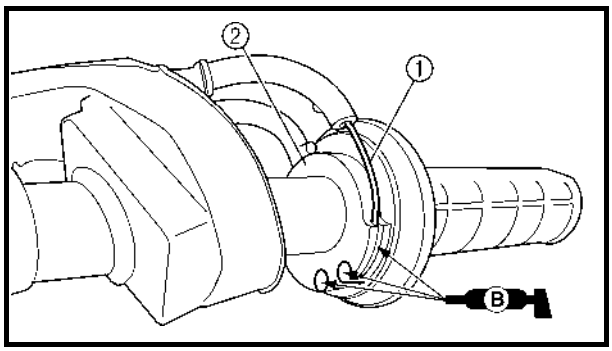

7. Install:
   - Throttle cables ①
     To tube guide ②.

NOTE:
Apply the lithium soap base grease on the throttle cable end and tube guide cable winding portion.

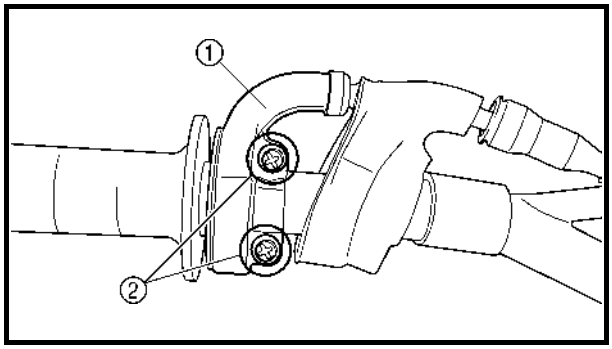

8. Install:
   - Throttle cable cap ①
   - Screw (throttle cable cap) ②

	4 Nm (0.4 m · kg, 2.9 ft · lb)

WARNING

After tightening the screws, check that the throttle grip ③ moves smoothly. If it does not, retighten the bolts for adjustment.

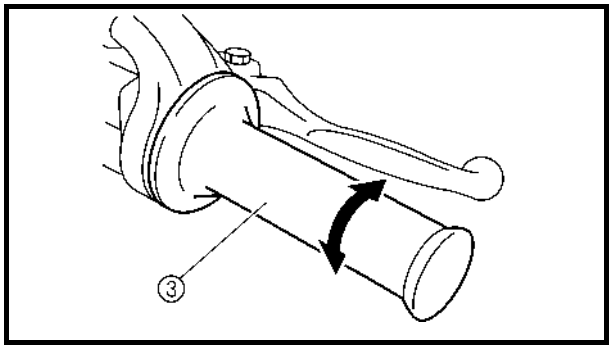

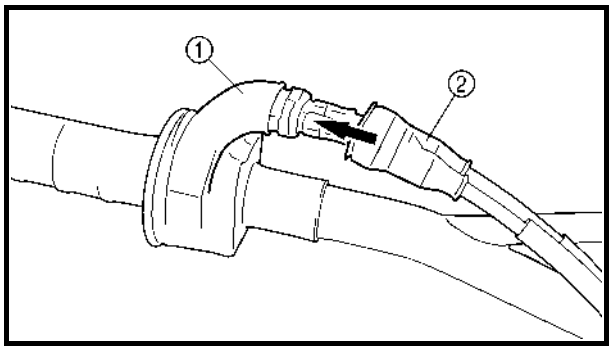

9. Install:
   - Cover (grip cap) ①
   - Cover (throttle cable cap) ②

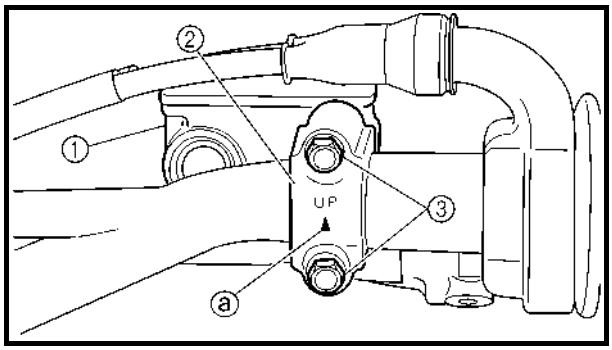

10. Install:
    - Master cylinder ①
    - Master cylinder bracket ②
    - Bolt (master cylinder bracket) ③

	9 Nm (0.9 m · kg, 6.5 ft · lb)

NOTE:
- Install the bracket so that the arrow mark ⓐ faces upward.
- First tighten the bolt on the upper side of the master cylinder bracket, and then tighten the bolt on the lower side.

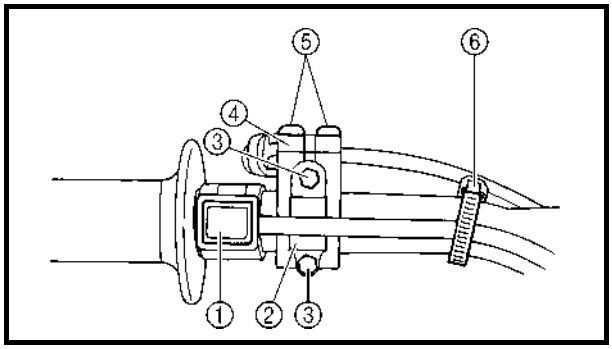

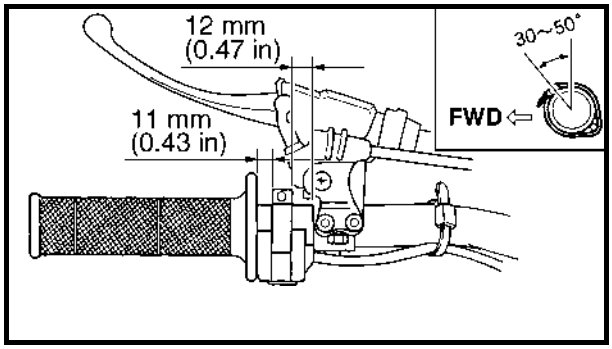

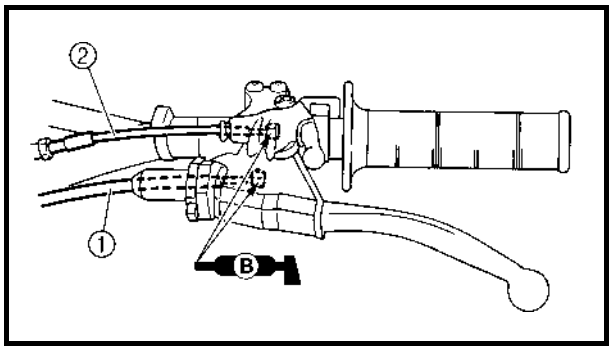

11. Install:
    - "ENGINE STOP" button ①
    - Clutch lever holder ②
    - Bolt (clutch lever holder) ③

      4 Nm (0.4 m · kg, 2.9 ft · lb)
    - Hot starter lever holder ④
    - Bolt (hot starter lever holder) ⑤

      4 Nm (0.4 m · kg, 2.9 ft · lb)
    - Clamp ⑥

NOTE:
- The "ENGINE STOP" button, clutch lever holder and clamp should be installed according to the dimensions shown.
- Pass the "ENGINE STOP" button lead in the middle of the clutch lever holder.

12. Install:
    - Clutch cable ①
    - Hot starter cable ②

NOTE:
Apply the lithium soap base grease on the clutch cable end and hot starter cable end.

13. Adjust:
    - Clutch lever free play
      Refer to "CLUTCH ADJUSTMENT" section in the CHAPTER 3.
    - Hot starter lever free play
      Refer to "HOT STARTER LEVER ADJUSTMENT" section in the CHAPTER 3.

EC560000
STEERING

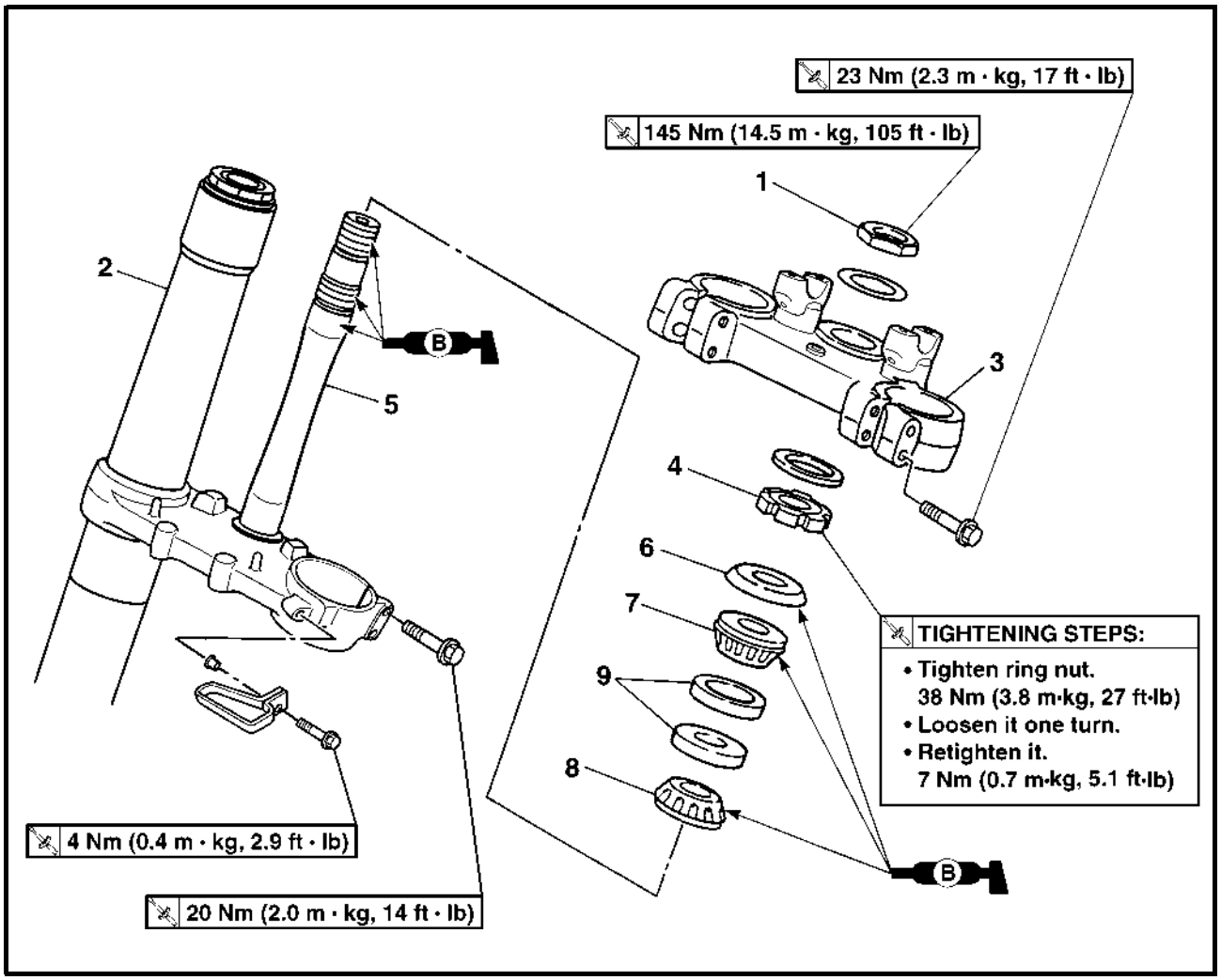

Extent of removal: ① Under bracket removal ② Bearing removal

Extent of removal	Order	Part name	Q'ty	Remarks
Preparation for removal		**STEERING REMOVAL** Hold the machine by placing the suitable stand under the engine. Number plate Handlebar Front fender		**WARNING** **Support the machine securely so there is no danger of it falling over.** Refer to "SEAT, FUEL TANK AND SIDE COVERS" section in the CHAPTER 4. Refer to "HANDLEBAR" section.
① ②	1	Steering shaft nut	1	
	2	Front fork	2	Refer to "FRONT FORK" section.
	3	Handle crown	1	
	4	Ring nut	1	Use special tool. Refer to "REMOVAL POINTS".
	5	Under bracket	1	
	6	Bearing race cover	1	
	7	Bearing (upper)	1	
	8	Bearing (lower)	1	Refer to "REMOVAL POINTS".
	9	Bearing race	2	

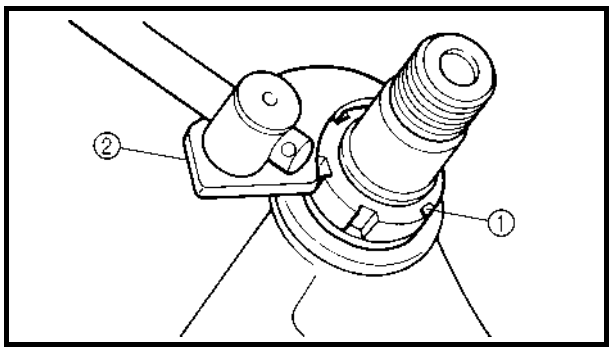

EC563000
REMOVAL POINTS

EC563202
Ring nut

1. Remove:
   - Ring nut ①
     Use the ring nut wrench ②.

Ring nut wrench:
YU-33975/90890-01403

⚠ WARNING

Support the steering shaft so that it may not fall down.

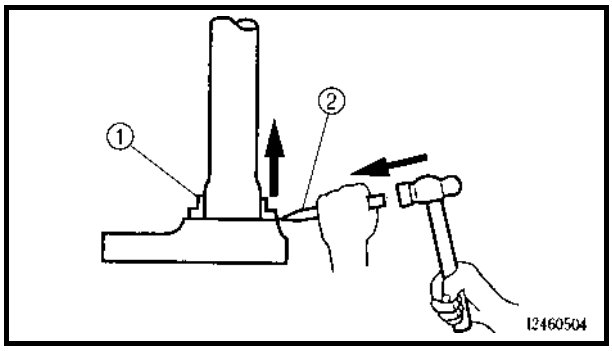

EC563300
Bearing (lower)

1. Remove:
   - Bearing (lower) ①
     Use the floor chisel ②.

CAUTION:

Take care not to damage the steering shaft thread.

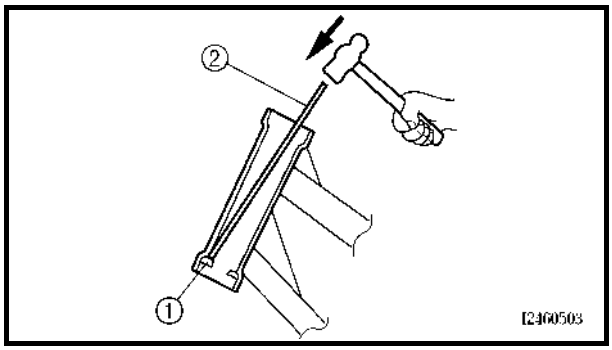

Bearing race

1. Remove:
   - Bearing race ①
     Remove the bearing race using long rod ② and the hammer.

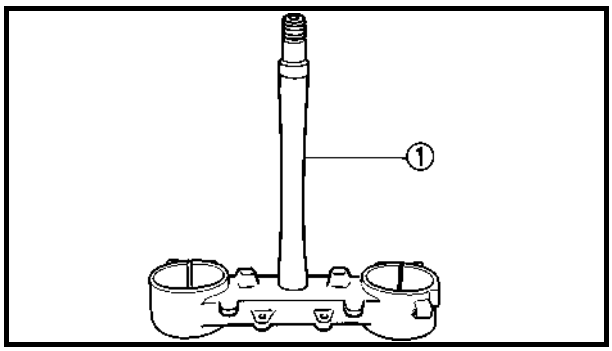

EC564000
INSPECTION

EC564200
Steering shaft

1. Inspect:
   - Steering shaft ①
     Bend/damage → Replace.

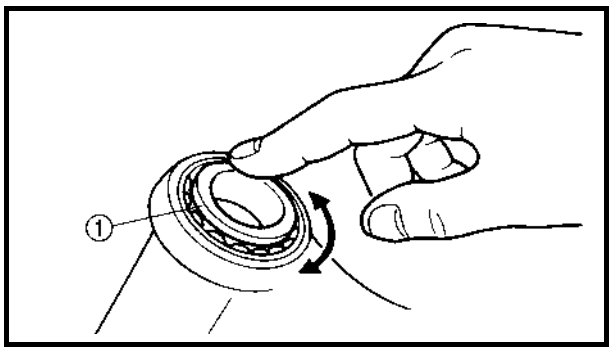

Bearing and bearing race

1. Wash the bearings and bearing races with a solvent.
2. Inspect:
   - Bearing ①
   - Bearing race
     Pitting/damage → Replace bearings and bearing races as a set.
     Install the bearing in the bearing races. Spin the bearings by hand. If the bearings hang up or are not smooth in their operation in the bearing races, replace bearings and bearing races as a set.

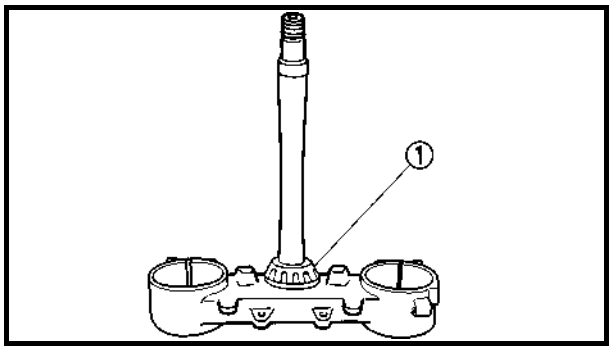

EC565000

ASSEMBLY AND INSTALLATION

Under bracket

1. Install:
   - Bearing (lower) ①

NOTE:
Apply the lithium soap base grease on the dust seal lip and bearing inner circumference.

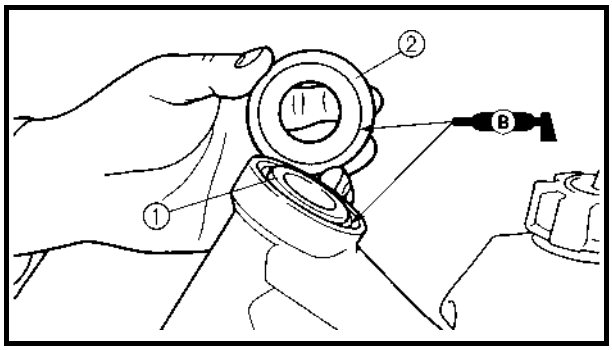

2. Install:
   - Bearing race
   - Bearing (upper) ①
   - Bearing race cover ②

NOTE:
Apply the lithium soap base grease on the bearing and bearing race cover lip.

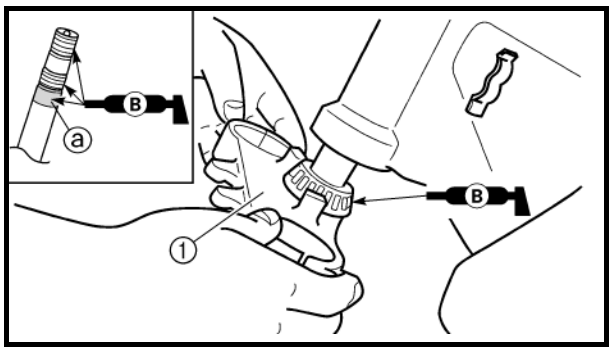

3. Install:
   - Under bracket ①

NOTE:
Apply the lithium soap base grease on the bearing, the portion ⓐ and thread of the steering shaft.

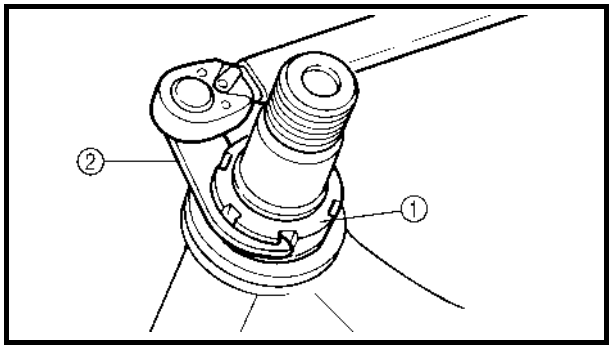

4. Install:
   - Ring nut ①

   7 Nm (0.7 m · kg, 5.1 ft · lb)

   Tighten the ring nut using the ring nut wrench ②.
   Refer to "STEERING HEAD INSPECTION AND ADJUSTMENT" section in the CHAPTER 3.

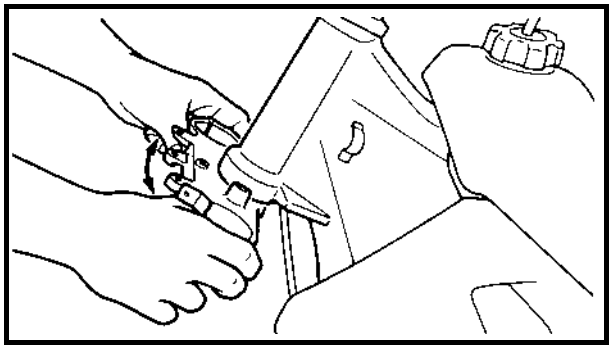

5. Check the steering shaft by turning it lock to lock. If there is any binding, remove the steering shaft assembly and inspect the steering bearings.

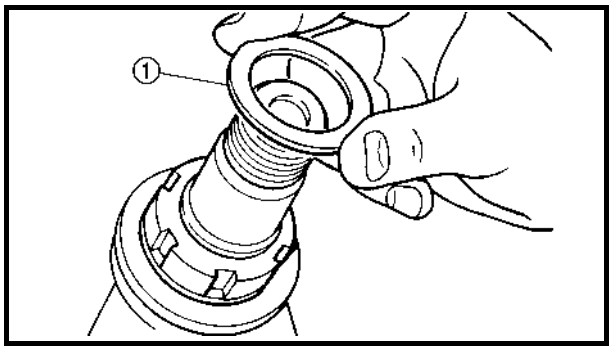

6. Install:
   - Plain washer ①

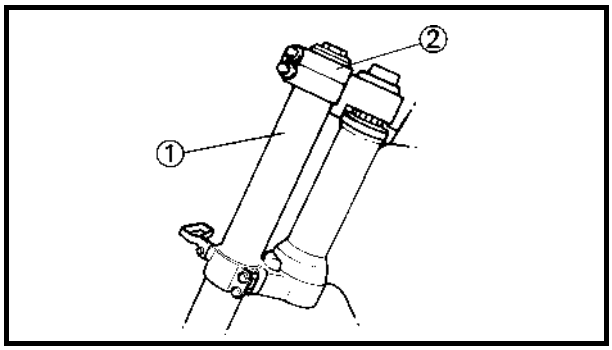

7. Install:
   - Front fork ①
   - Handle crown ②

NOTE:
- Temporarily tighten the pinch bolts (under bracket).
- Do not tighten the pinch bolts (handle crown) yet.

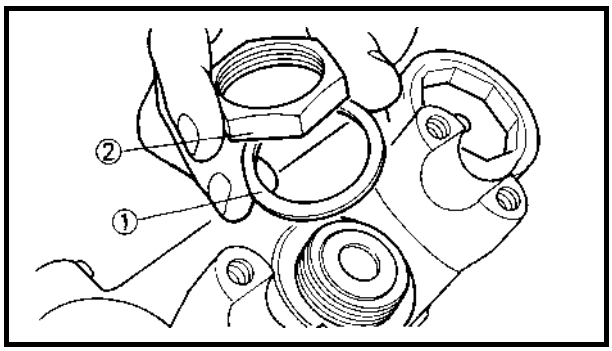

8. Install:
   - Plain washer ①
   - Steering shaft nut ②

   145 Nm (14.5 m · kg, 105 ft · lb)

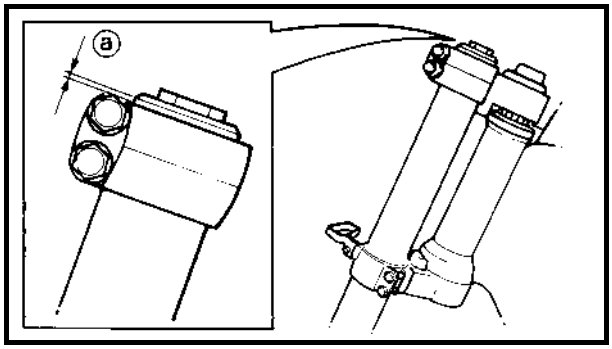

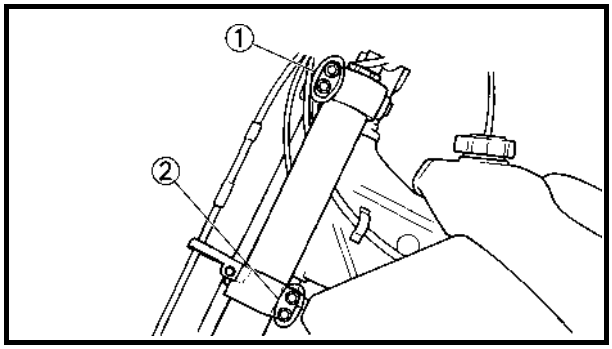

9. After tightening the nut, check the steering for smooth movement. If not, adjust the steering by loosening the ring nut little by little.
10. Adjust:
    - Front fork top end ⓐ

	Front fork top end (standard) ⓐ: Zero mm (Zero in)

11. Tighten:
    - Pinch bolt (handle crown) ①

	23 Nm (2.3 m · kg, 17 ft · lb)

    - Pinch bolt (under bracket) ②

	20 Nm (2.0 m · kg, 14 ft · lb)

CAUTION:

Tighten the under bracket to specified torque. If torqued too much, it may cause the front fork to malfunction.

EC570000
SWINGARM

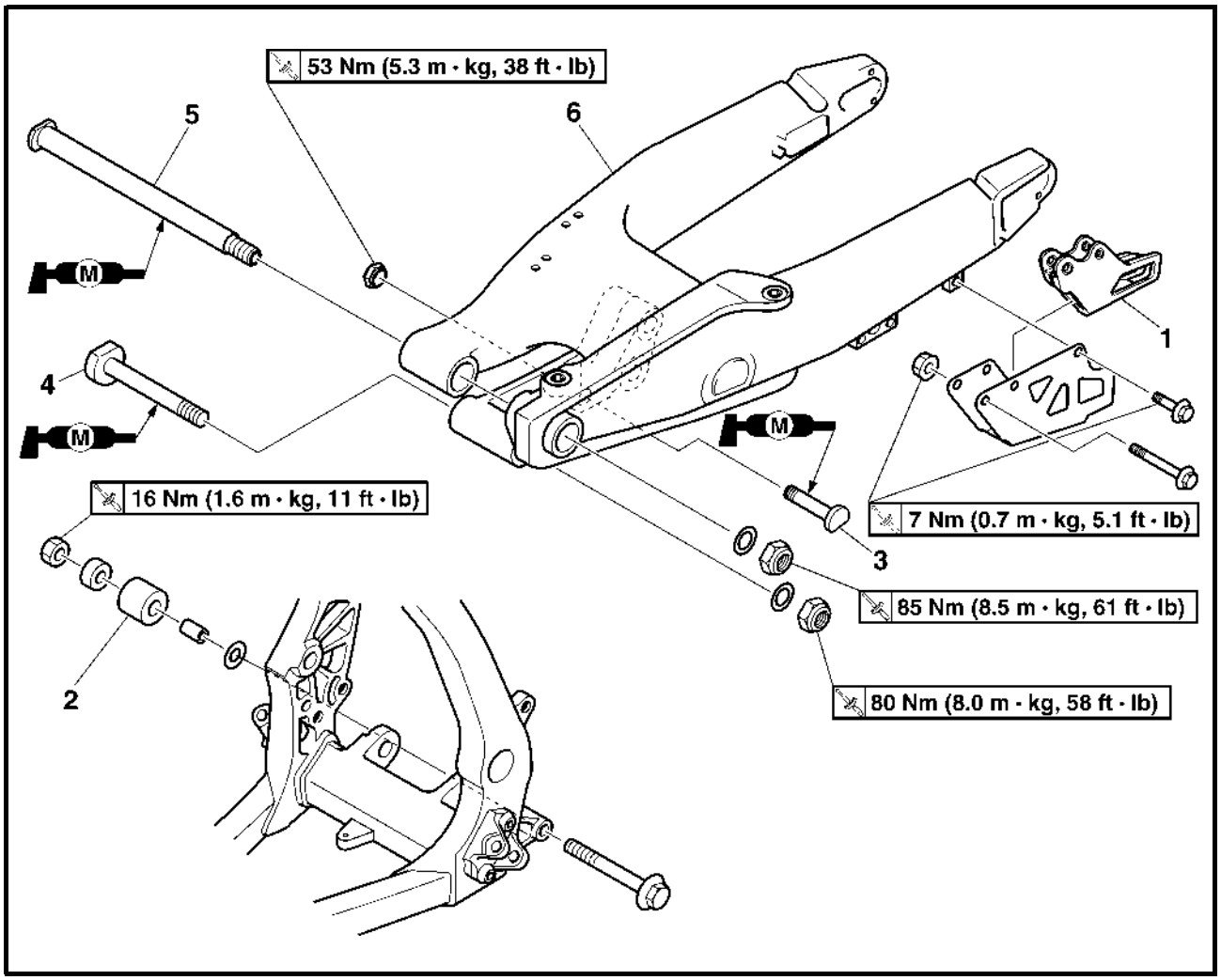

Extent of removal: ① Swingarm removal

Extent of removal	Order	Part name	Q'ty	Remarks
Preparation for removal		**SWINGARM REMOVAL** Hold the machine by placing the suitable stand under the engine. Brake hose holder Rear caliper Bolt (brake pedal) Drive chain		**WARNING** **Support the machine securely so there is no danger of it falling over.** Refer to "FRONT BRAKE AND REAR BRAKE" section. Shift the brake pedal backward.
①	1 2 3 4 5 6	Chain support Chain tensioner (lower) Bolt (rear shock absorber-relay arm) Bolt (connecting rod) Pivot shaft Swingarm	1 1 1 1 1 1	Hold the swingarm.

EC578000
SWINGARM DISASSEMBLY

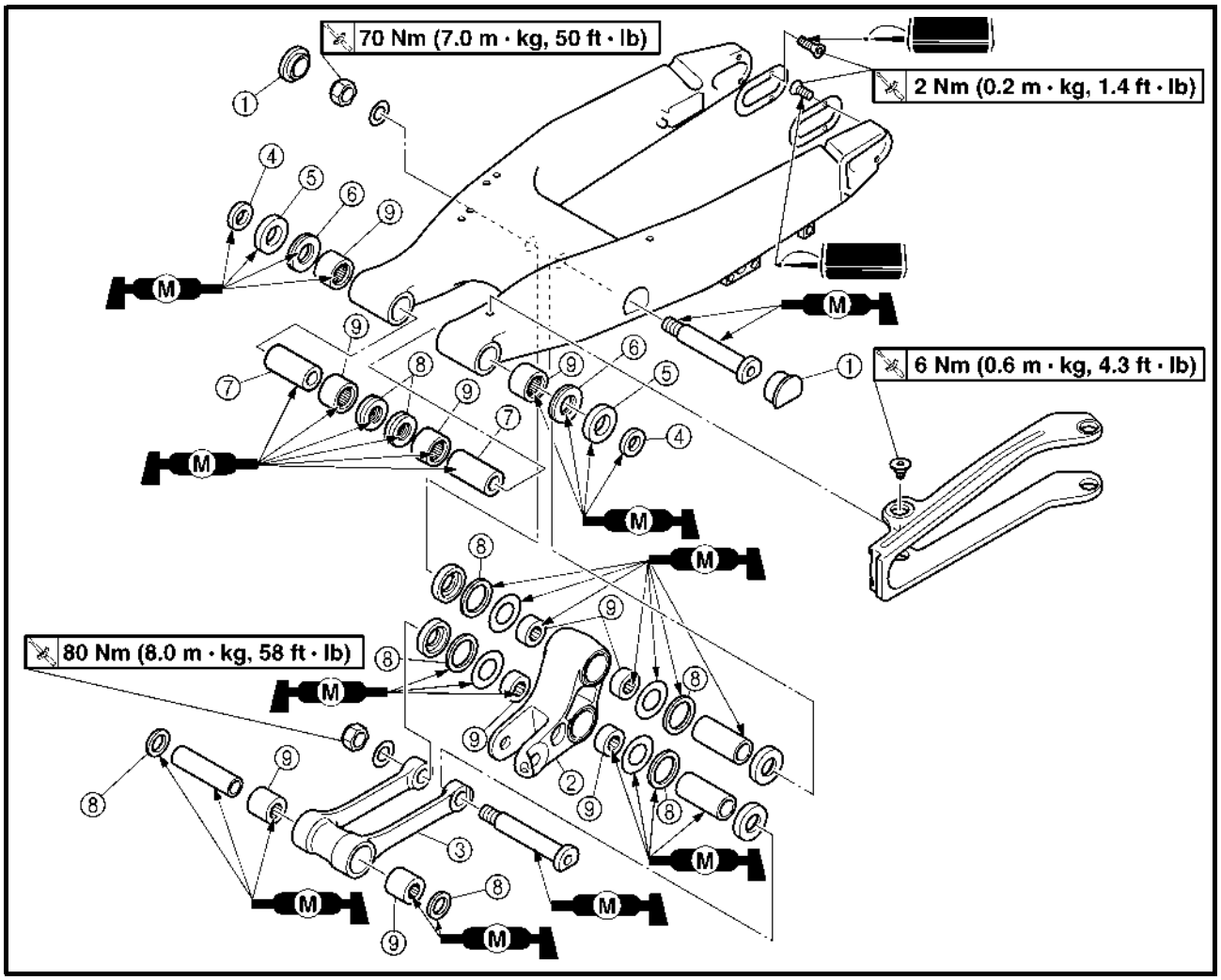

Extent of removal: ① Swingarm disassembly ② Connecting rod removal and disassembly ③ Relay arm removal and disassembly

Extent of removal	Order	Part name	Q'ty	Remarks
		SWINGARM DISASSEMBLY		
	①	Cap	2	Refer to "REMOVAL POINTS".
	②	Relay arm	1	
	③	Connecting rod	1	
	④	Collar	2	
	⑤	Oil seal	2	
	⑥	Thrust bearing	2	
	⑦	Bush	2	
	⑧	Oil seal	8	
	⑨	Bearing	10	Refer to "REMOVAL POINTS".

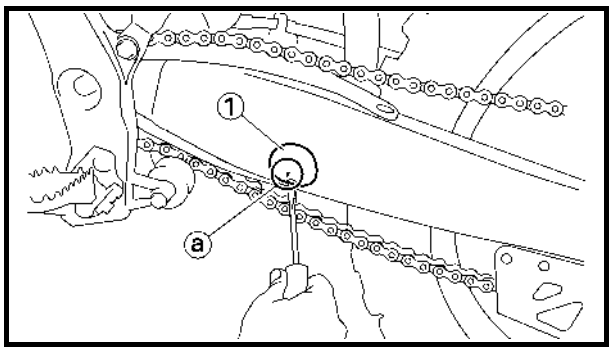

EC573000
REMOVAL POINTS
Cap
1. Remove:
   - Cap (left) ①

NOTE:
Remove with a slotted-head screwdriver inserted under the mark ⓐ on the cap (left).

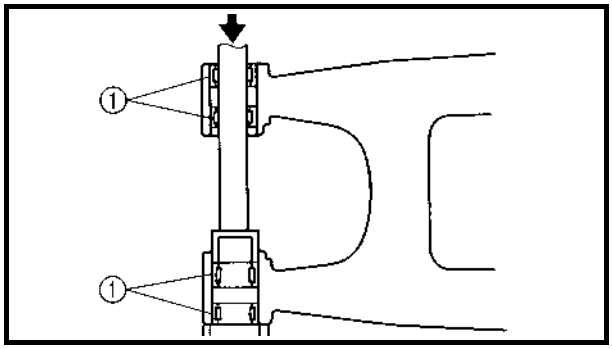

EC573200
Bearing
1. Remove:
   - Bearing ①

NOTE:
Remove the bearing by pressing its outer race.

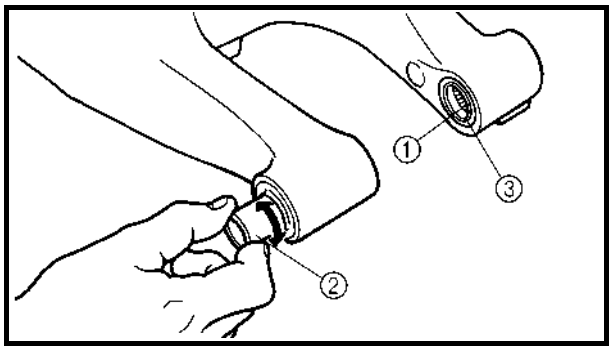

EC574010
INSPECTION
Wash the bearings, bushes and collars in a solvent.

EC574111
Swingarm
1. Inspect:
   - Bearing ①
   - Bush ②
     Free play exists/unsmooth revolution/rust → Replace bearing and bush as a set.
2. Inspect:
   - Oil seal ③
     Damage → Replace.

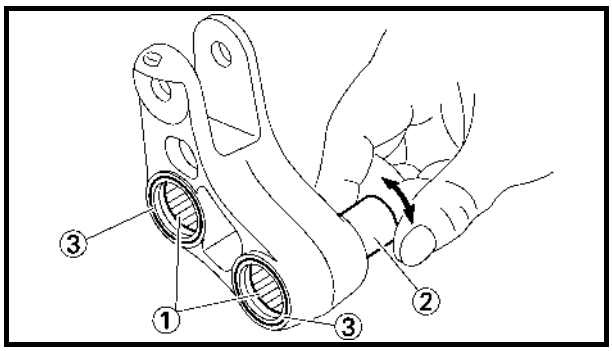

Relay arm
1. Inspect:
   - Bearing ①
   - Collar ②
     Free play exists/unsmooth revolution/rust → Replace bearing and collar as a set.
2. Inspect:
   - Oil seal ③
     Damage → Replace.

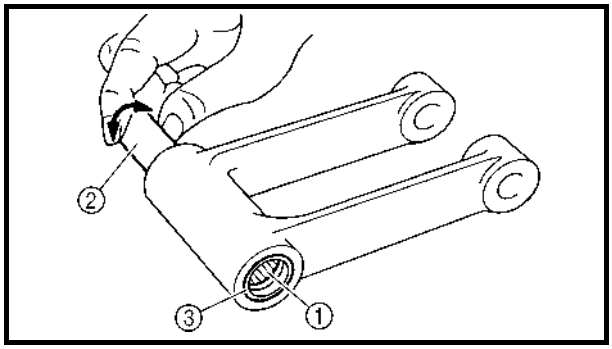

Connecting rod

1. Inspect:
   - Bearing ①
   - Collar ②
     Free play exists/unsmooth revolution/rust
     → Replace bearing and collar as a set.
2. Inspect:
   - Oil seal ③
     Damage → Replace.

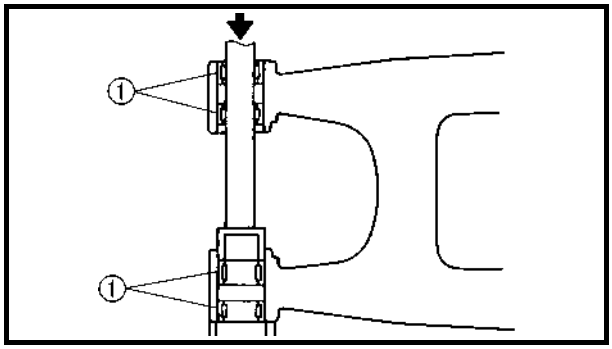

EC575000

ASSEMBLY AND INSTALLATION

Bearing and oil seal

1. Install:
   - Bearing ①
   - Oil seal ②
     To swingarm.

NOTE:

- Apply the molybdenum disulfide grease on the bearing when installing.
- Install the bearing by pressing it on the side having the manufacture's marks or numbers.
- First install the outer and then the inner bearings to a specified depth from inside.

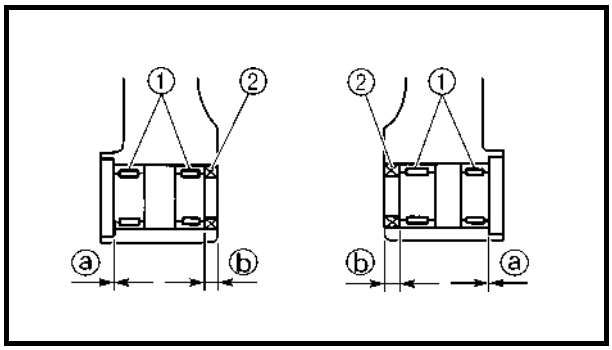

Installed depth of bearings:
Outer ⓐ: Zero mm (Zero in)
Inner ⓑ: 6.5 mm (0.26 in)

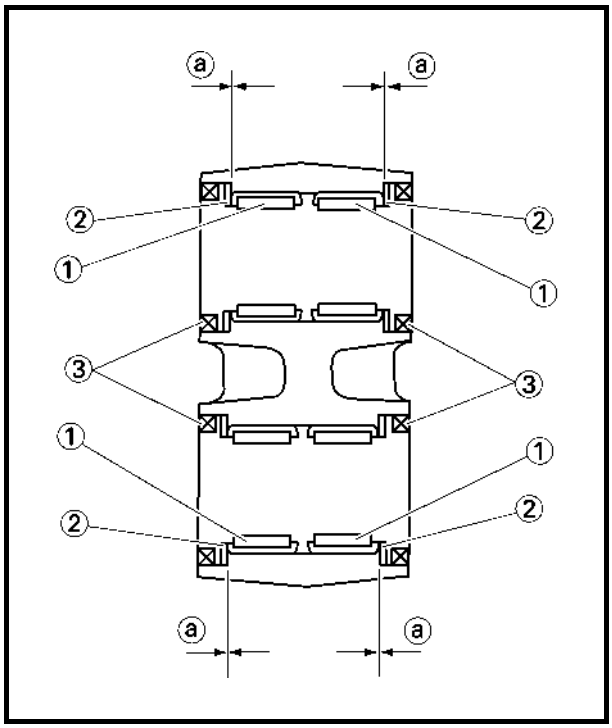

2. Install:
   - Bearing ①
   - Plain washer ②
   - Oil seal ③
     To relay arm.

NOTE:

- Apply the molybdenum disulfide grease on the bearing when installing.
- Install the bearing by pressing it on the side having the manufacture's marks or numbers.
- Apply the molybdenum disulfide grease on the plain washer.

Installed depth of bearings ⓐ:
Zero mm (Zero in)

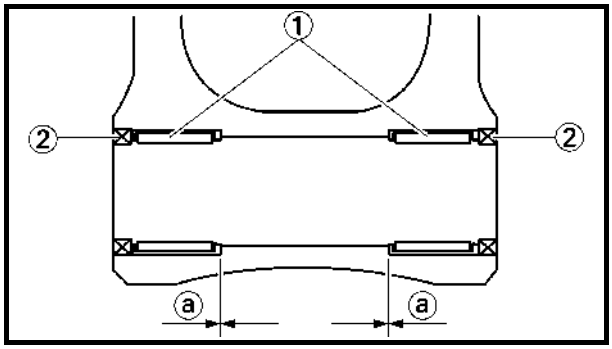

3. Install:
   - Bearing ①
   - Oil seal ②
     To connecting rod.

NOTE:
- Apply the molybdenum disulfide grease on the bearing when installing.
- Install the bearing by pressing it on the side having the manufacture's marks or numbers.

Installed depth of bearings ⓐ:
Zero mm (Zero in)

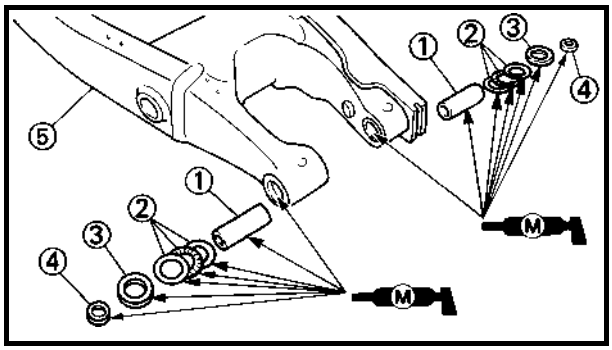

Swingarm

1. Install:
   - Bush ①
   - Thrust bearing ②
   - Oil seal ③
   - Collar ④
     To swingarm ⑤.

NOTE:
Apply the molybdenum disulfide grease on the bushes, thrust bearings, oil seal lips and contact surfaces of the collar and thrust bearing.

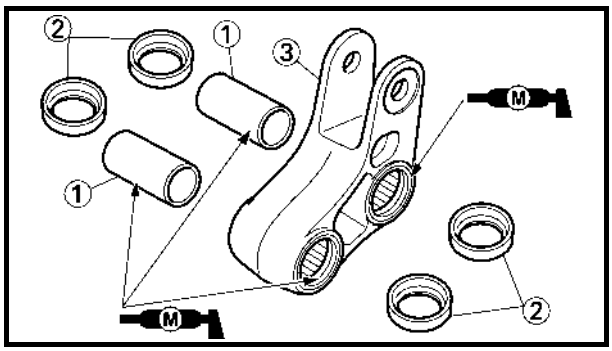

2. Install:
   - Collar ①
   - Washer ②
     To relay arm ③.

NOTE:
Apply the molybdenum disulfide grease on the collars and oil seal lips.

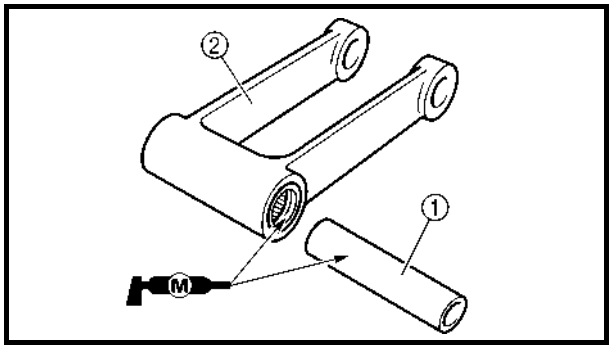

3. Install:
   - Collar ①
     To connecting rod ②.

NOTE:
Apply the molybdenum disulfide grease on the collar and oil seal lips.

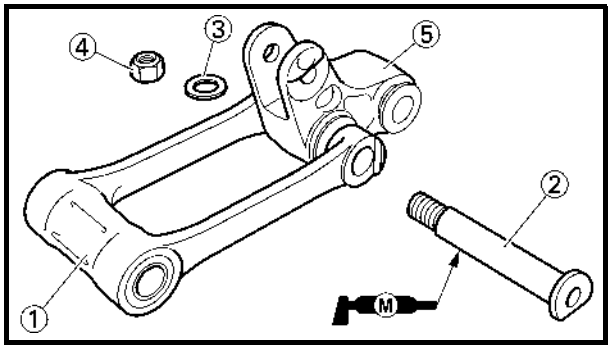

4. Install:
   - Connecting rod ①
   - Bolt (connecting rod) ②
   - Plain washer ③
   - Nut (connecting rod) ④

     80 Nm (8.0 m · kg, 58 ft · lb)

     To relay arm ⑤.

NOTE:
Apply the molybdenum disulfide grease on the bolt.

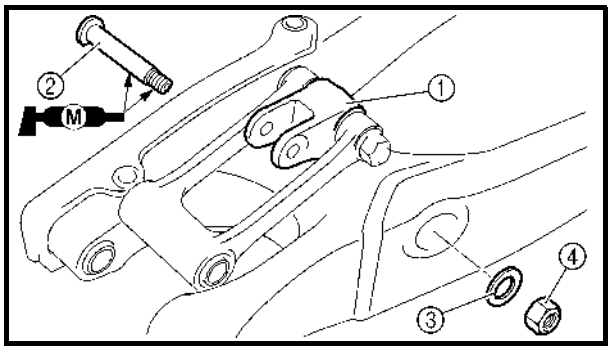

5. Install:
   - Relay arm ①
   - Bolt (relay arm) ②
   - Plain washer ③
   - Nut (relay arm) ④
     To swingarm.

NOTE:
- Apply the molybdenum disulfide grease on the bolt circumference and threaded portion.
- Do not tighten the nut yet.

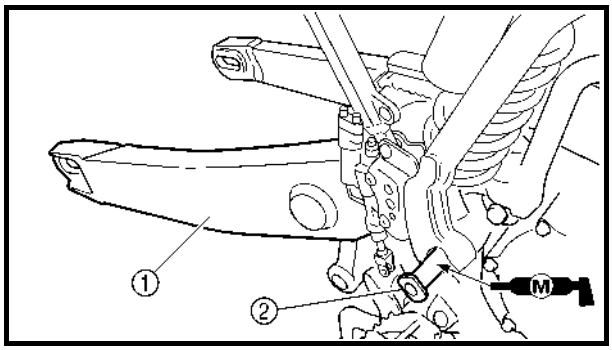

6. Install:
   - Swingarm ①
   - Pivot shaft ②

     85 Nm (8.5 m · kg, 61 ft · lb)

NOTE:
- Apply the molybdenum disulfide grease on the pivot shaft.
- Insert the pivot shaft from right side.

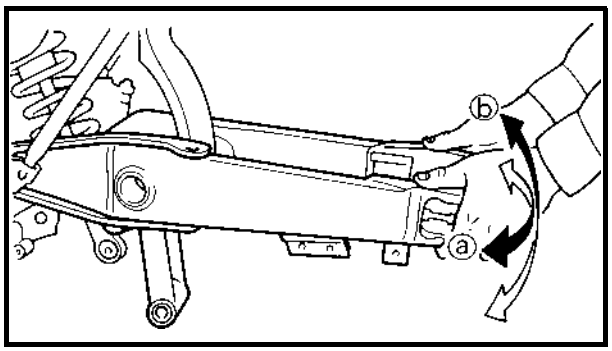

7. Check:
   - Swingarm side play ⓐ
     Free play exists → Replace thrust bearing.
   - Swingarm up and down movement ⓑ
     Unsmooth movement/binding/rough spots → Grease or replace bearings, bushes and collars.

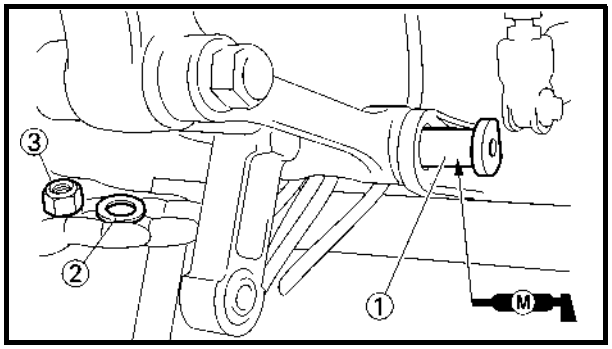

8. Install:
   - Bolt (connecting rod) ①
   - Plain washer ②
   - Nut (connecting rod) ③

NOTE:
- Apply the molybdenum disulfide grease on the bolt.
- Do not tighten the nut yet.

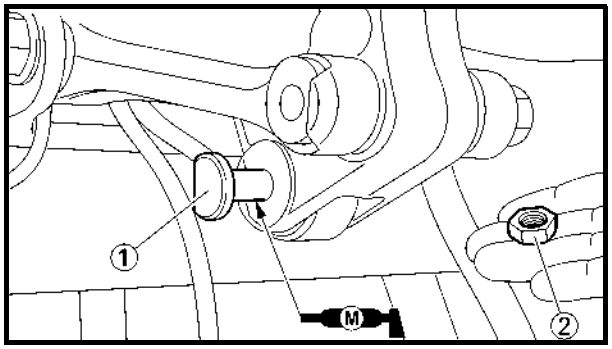

9. Install:
   - Bolt (rear shock absorber-relay arm) ①
   - Nut (rear shock absorber-relay arm) ②

53 Nm (5.3 m · kg, 38 ft · lb)

NOTE:
Apply the molybdenum disulfide grease on the bolt.

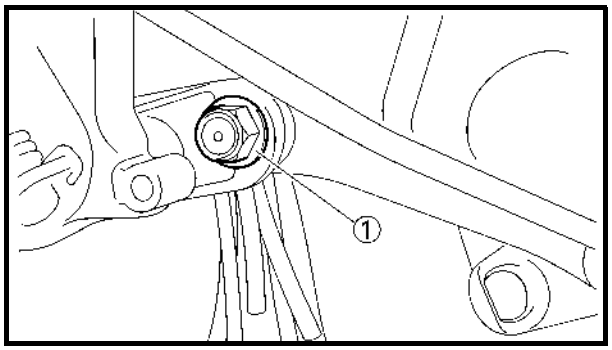

10. Tighten:
    - Nut (connecting rod) ①

80 Nm (8.0 m · kg, 58 ft · lb)

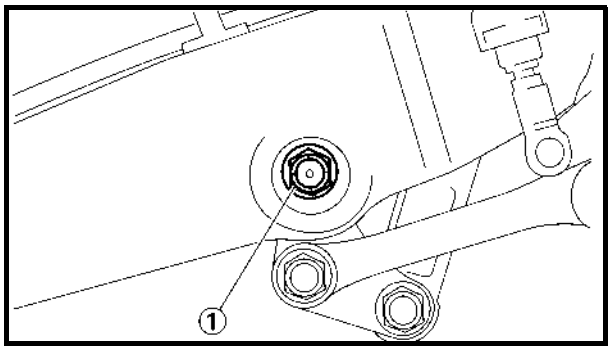

11. Tighten:
    - Nut (relay arm) ①

70 Nm (7.0 m · kg, 50 ft · lb)

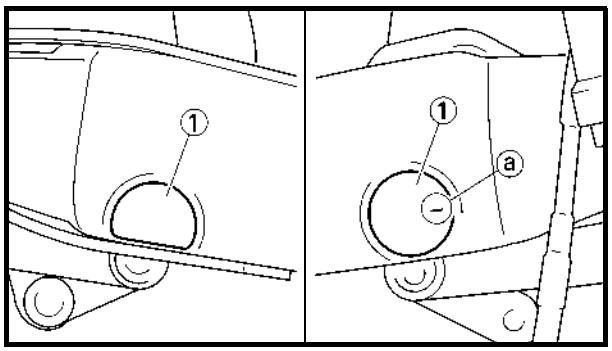

12. Install:
    - Cap ①

NOTE:
Install the cap (right) with its mark ⓐ facing forward.

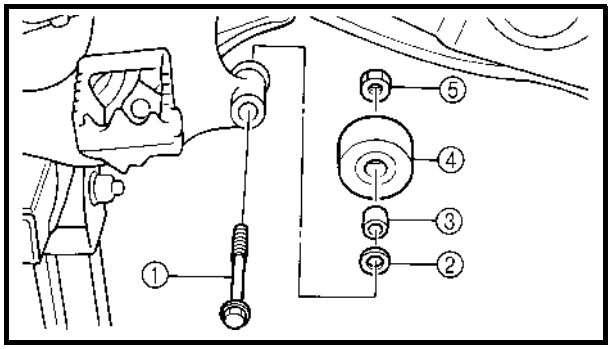

13. Install:
    - Bolt [chain tensioner (lower)] ①
    - Plain washer ②
    - Collar ③
    - Chain tensioner (lower) ④
    - Nut [chain tensioner (lower)] ⑤

	16 Nm (1.6 m · kg, 11 ft · lb)

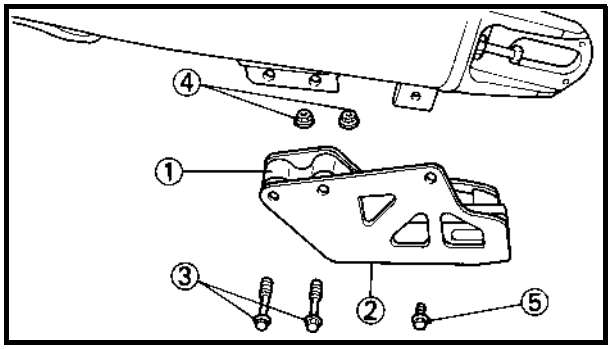

14. Install:
    - Chain support ①
    - Support cover ②
    - Bolt {chain support [ℓ = 50 mm (1.97 in)]} ③
    - Nut (chain support) ④

	7 Nm (0.7 m · kg, 5.1 ft · lb)

    - Bolt {support cover [ℓ = 10 mm (0.39 in)]} ⑤

	7 Nm (0.7 m · kg, 5.1 ft · lb)

EC580000

REAR SHOCK ABSORBER

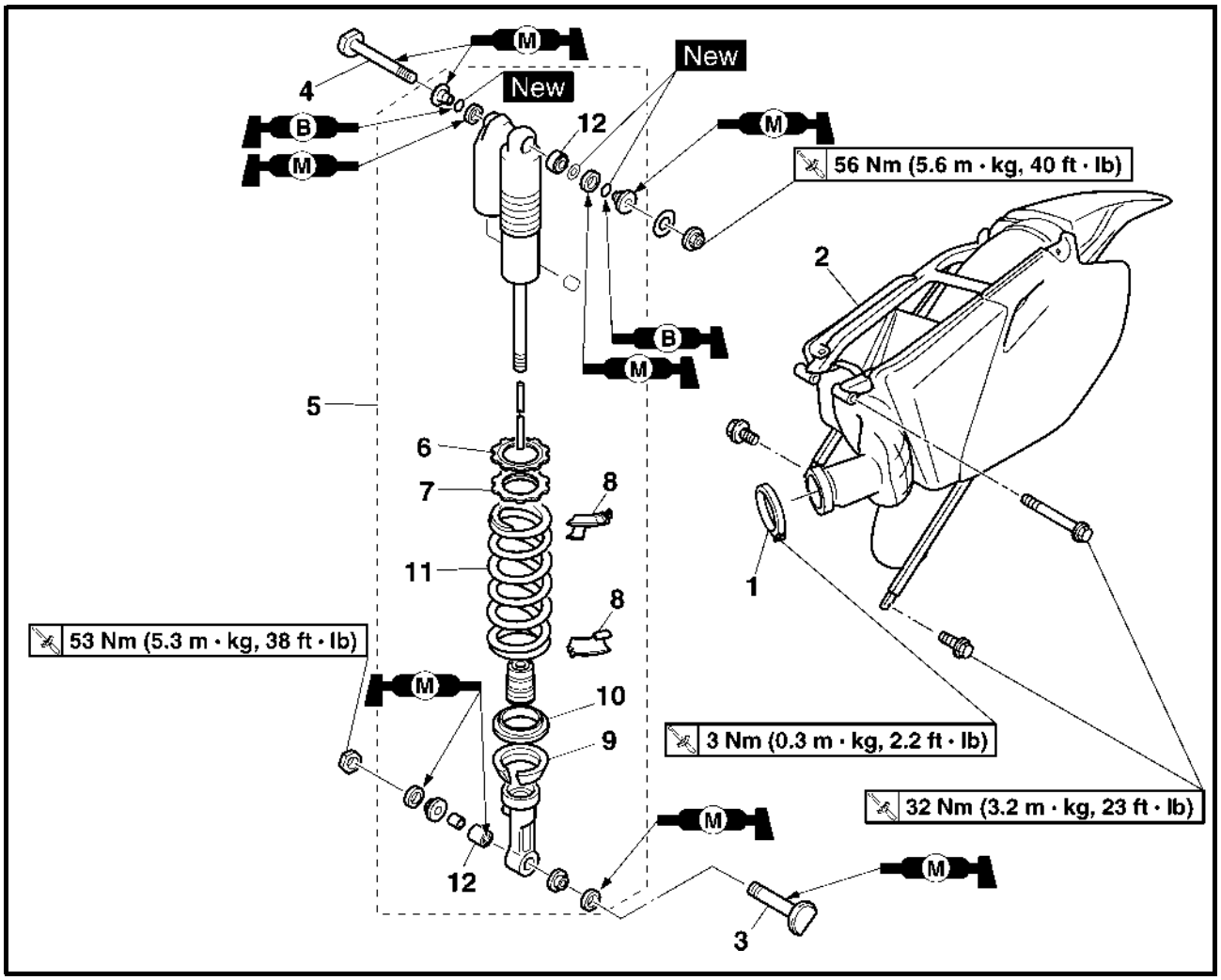

Extent of removal: ① Rear shock absorber removal ② Rear shock absorber disassembly

Extent of removal	Order	Part name	Q'ty	Remarks
Preparation for removal		**REAR SHOCK ABSORBER REMOVAL** Hold the machine by placing the suitable stand under the engine. Seat Silencer		**WARNING** **Support the machine securely so there is no danger of it falling over.** Refer to "SEAT, FUEL TANK AND SIDE COVERS" section in the CHAPTER 4. Refer to "EXHAUST PIPE AND SILENCER" section in the CHAPTER 4.
① ②	1	Clamp (air filter joint)	1	Only loosening.
	2	Rear frame	1	
	3	Bolt (rear shock absorber-relay arm)	1	Hold the swingarm.
	4	Bolt (rear shock absorber-frame)	1	
	5	Rear shock absorber	1	
	6	Locknut	1	Only loosening.
	7	Adjuster	1	Only loosening.
	8	Spring seat	2	

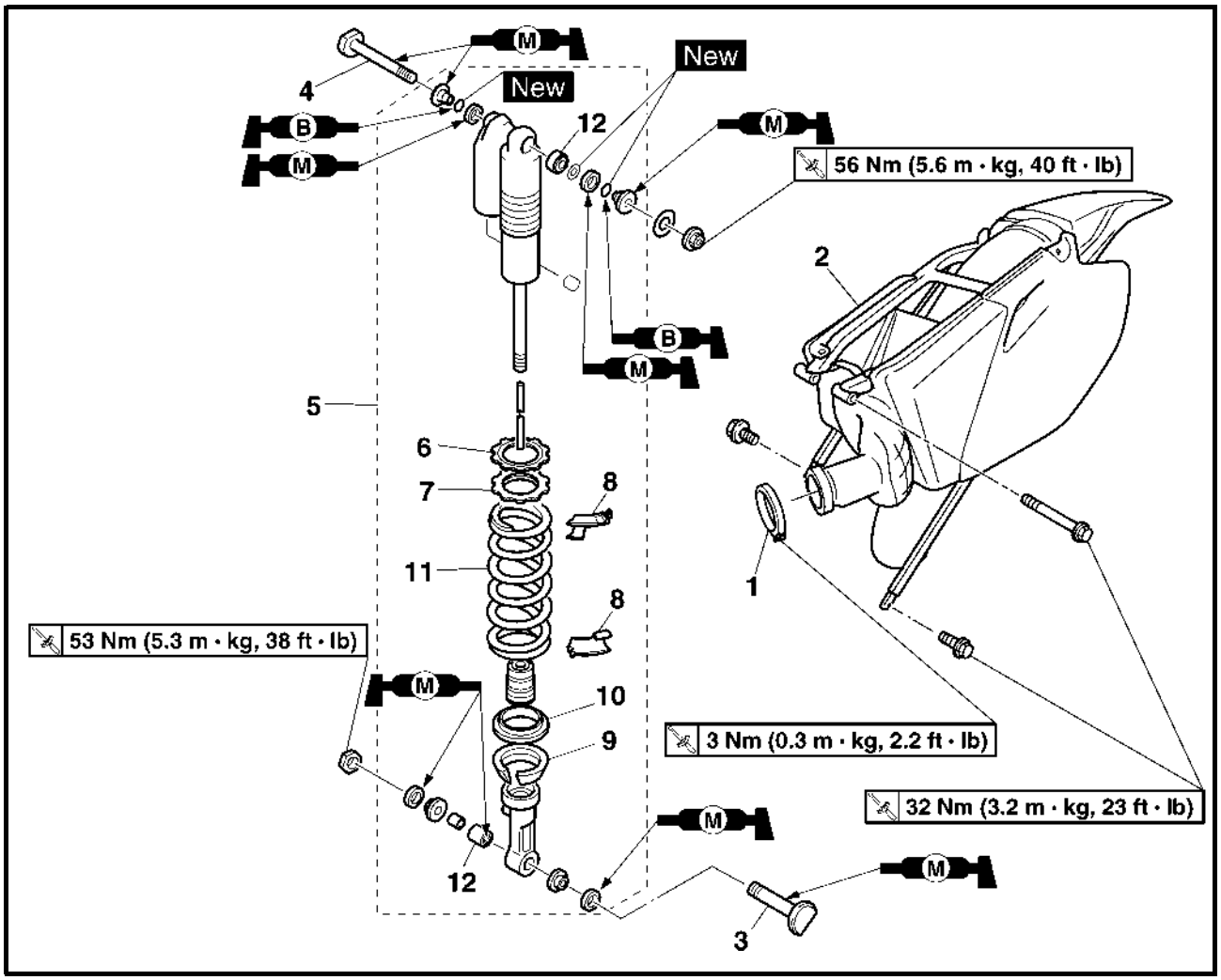

Extent of removal	Order	Part name	Q'ty	Remarks
②	9	Spring guide (lower)	1	
	10	Spring guide (upper)	1	
	11	Spring (rear shock absorber)	1	
	12	Bearing	2	Refer to "REMOVAL POINTS".

EC586000
HANDLING NOTE

WARNING

This shock absorber is provided with a separate type tank filled with high-pressure nitrogen gas. To prevent the danger of explosion, read and understand the following information before handling the shock absorber.
The manufacturer can not be held responsible for property damage or personal injury that may result from improper handling.

1. **Never tamper or attempt to disassemble the cylinder or the tank.**
2. **Never throw the shock absorber into an open flame or other high heat. The shock absorber may explode as a result of nitrogen gas expansion and/or damage to the hose.**
3. **Be careful not to damage any part of the gas tank. A damaged gas tank will impair the damping performance or cause a malfunction.**
4. **Take care not to scratch the contact surface of the piston rod with the cylinder; or oil could leak out.**
5. **Never attempt to remove the plug at the bottom of the nitrogen gas tank. It is very dangerous to remove the plug.**
6. **When scrapping the shock absorber, follow the instructions on disposal.**

EC587000
NOTES ON DISPOSAL (YAMAHA DEALERS ONLY)

Before disposing the shock absorber, be sure to extract the nitrogen gas from valve ①. Wear eye protection to prevent eye damage from escaping gas and/or metal chips.

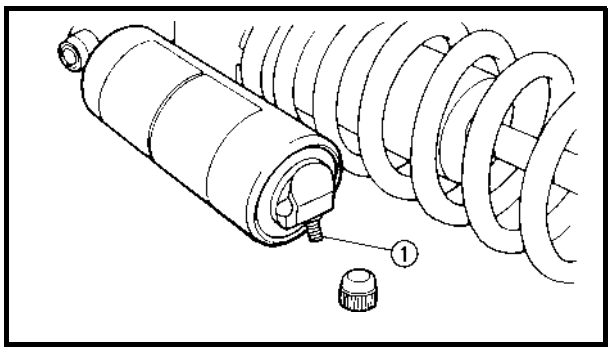

WARNING

To dispose of a damaged or worn-out shock absorber, take the unit to your Yamaha dealer for this disposal procedure.

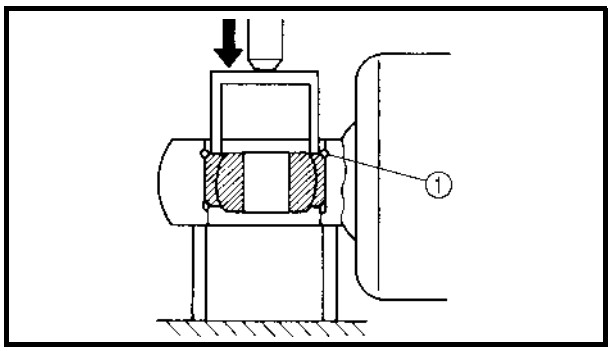

EC583000
REMOVAL POINTS

EC583320
Bearing

1. Remove:
   - Stopper ring (upper bearing) ①

NOTE:
Press in the bearing while pressing its outer race and remove the stopper ring.

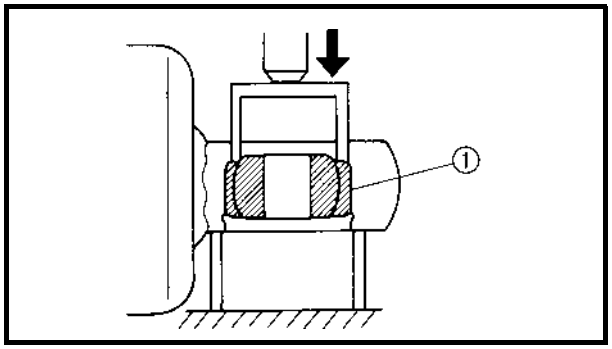

2. Remove:
   - Upper bearing ①

NOTE:
Remove the bearing by pressing its outer race.

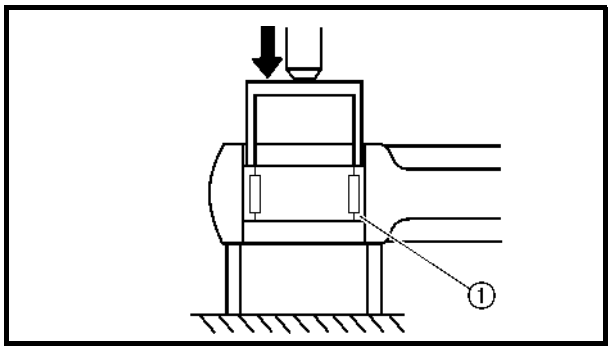

3. Remove:
   - Lower bearing ①

NOTE:
Remove the bearing by pressing its outer race.

EC584000
INSPECTION

Rear shock absorber

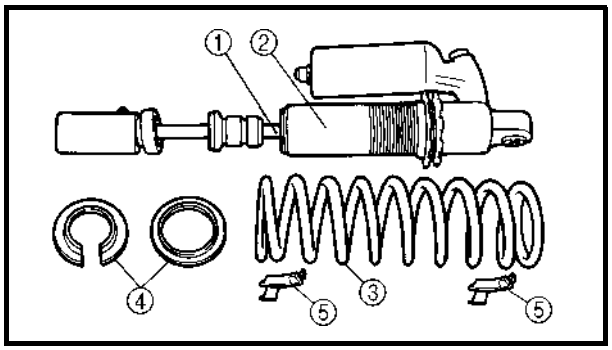

1. Inspect:
   - Damper rod ①
     Bends/damage → Replace absorber assembly.
   - Shock absorber ②
     Oil leaks → Replace absorber assembly.
     Gas leaks → Replace absorber assembly.
   - Spring ③
     Damage → Replace spring.
     Fatigue → Replace spring.
     Move spring up and down.
   - Spring guide ④
     Wear/damage → Replace spring guide.
   - Spring seat ⑤
     Cracks/damage → Replace.
   - Bearing ⑥
     Free play exists/unsmooth revolution/rust → Replace.

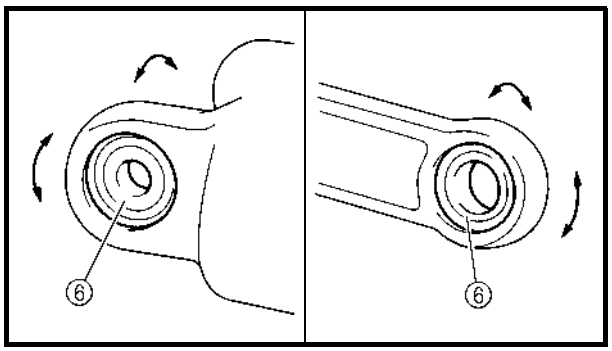

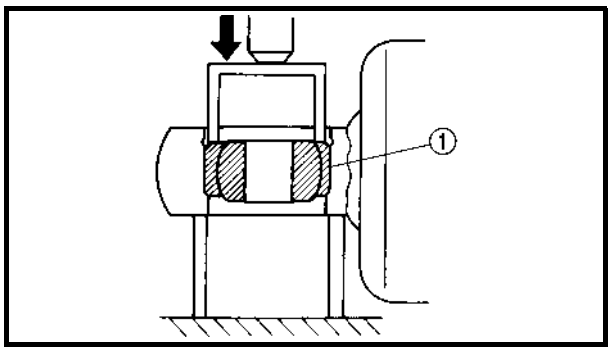

EC585000
ASSEMBLY AND INSTALLATION

EC585300
Bearing

1. Install:
   - Upper bearing ①

NOTE:
Install the bearing parallel until the stopper ring groove appears by pressing its outer race.

CAUTION:
Do not apply the grease on the bearing outer race because it will wear the rear shock absorber surface on which the bearing is press fitted.

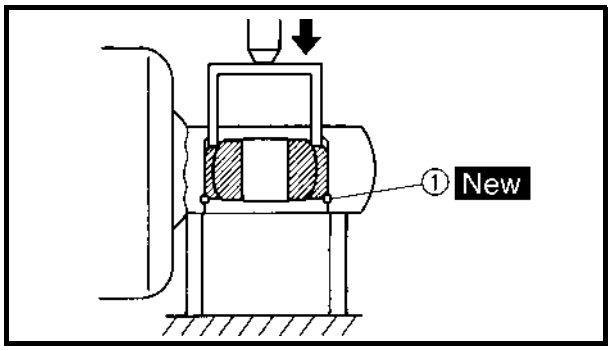

2. Install:
   - Stopper ring (upper bearing) ① New

NOTE:
After installing the stopper ring, push back the bearing until it contacts the stopper ring.

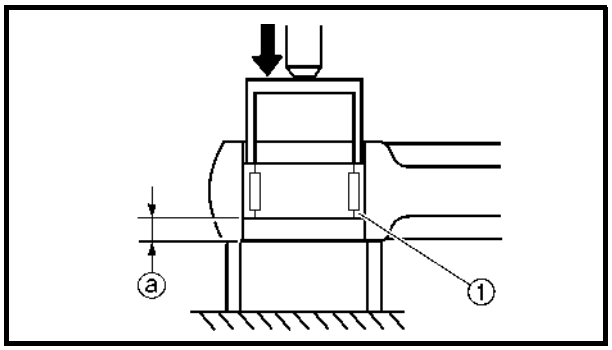

3. Install:
   - Lower bearing ①

NOTE:
Install the bearing by pressing it on the side having the manufacture's marks or numbers.

Installed depth of the bearing ⓐ:
4 mm (0.16 in)

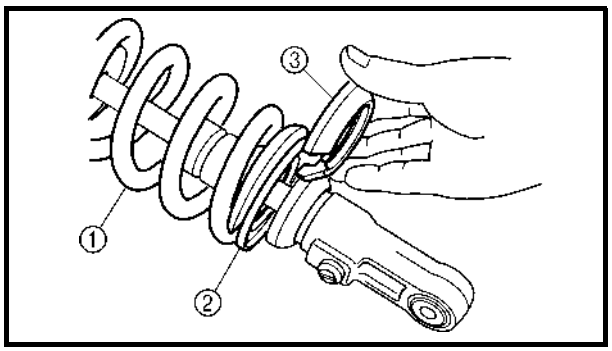

EC585111
Spring (rear shock absorber)

1. Install:
   - Spring ①
   - Spring guide (upper) ②
   - Spring guide (lower) ③

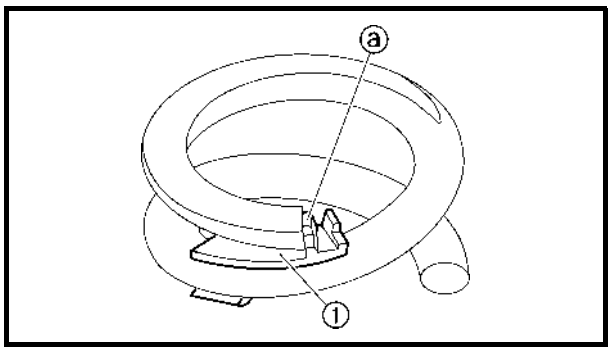

2. Install:
   - Spring seat ①

NOTE:
Install the spring seat with the projection ⓐ brought into contact with the spring end, as shown.

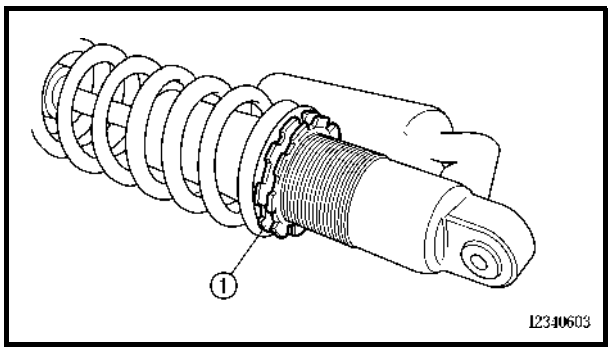

3. Tighten:
   - Adjuster ①

4. Adjust:
   - Spring length (installed)
     Refer to "REAR SHOCK ABSORBER SPRING PRELOAD ADJUSTMENT" section in the CHAPTER 3.

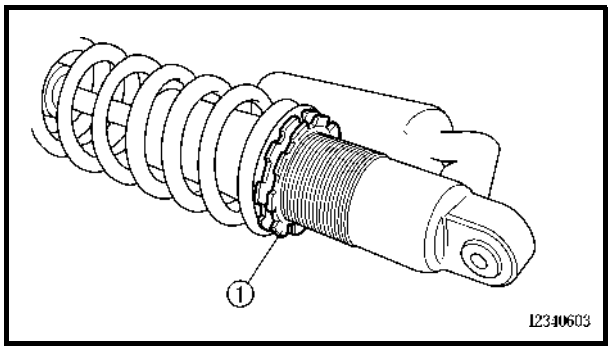

5. Tighten:
   - Locknut ①

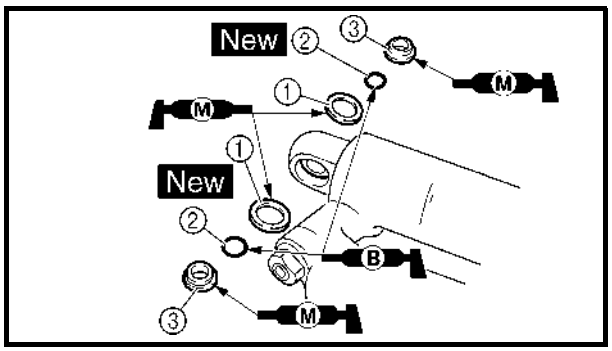

Rear shock absorber

1. Install:
   - Dust seal ①
   - O-ring ② New
   - Collar ③

NOTE:
- Apply the molybdenum disulfide grease on the dust seal lips and collars.
- Apply the lithium soap base grease on the O-rings.

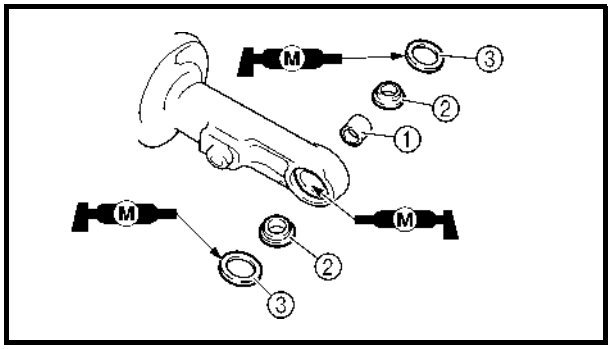

2. Install:
   - Bush ①
   - Collar ②
   - Dust seal ③

NOTE:
- Apply the molybdenum disulfide grease on the bearing and dust seal lips.
- Install the dust seals with their lips facing outward.

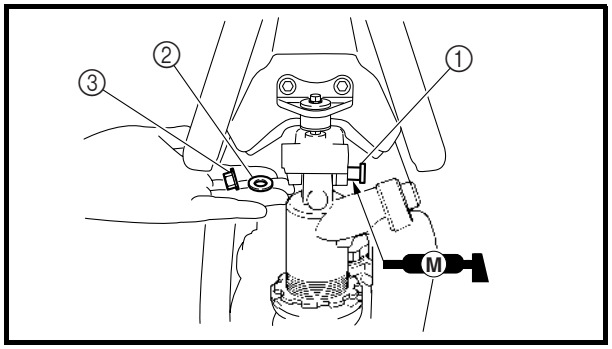

3. Install:
   - Rear shock absorber
4. Install:
   - Bolt (rear shock absorber-frame) ①
   - Plain washer ②
   - Nut (rear shock absorber-frame) ③

56 Nm (5.6 m · kg, 40 ft · lb)

NOTE:
Apply the molybdenum disulfide grease on the bolt.

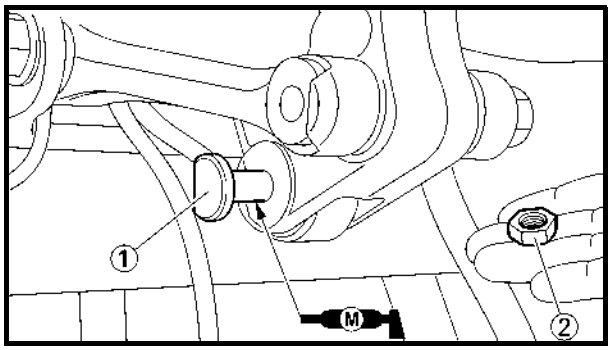

5. Install:
   - Bolt (rear shock absorber-relay arm) ①
   - Nut (rear shock absorber-relay arm) ②

53 Nm (5.3 m · kg, 38 ft · lb)

NOTE:
Apply the molybdenum disulfide grease on the bolt.

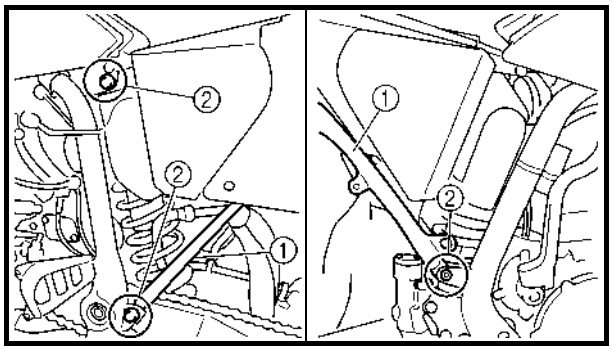

6. Install:
   - Rear frame ①
   - Bolt (rear frame) ②

32 Nm (3.2 m · kg, 23 ft · lb)

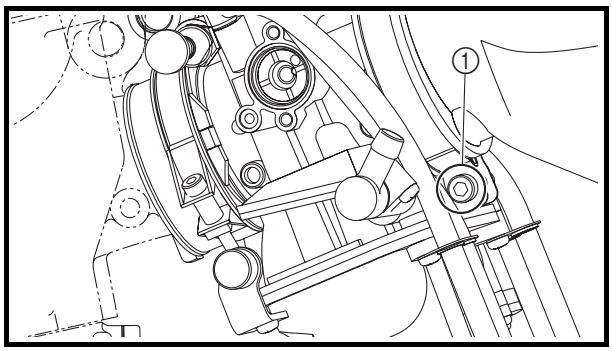

7. Tighten:
   - Bolt (air filter joint) ①

3 Nm (0.3 m · kg, 2.2 ft · lb)

EC600000
ELECTRICAL

EC610000
ELECTRICAL COMPONENTS AND WIRING DIAGRAM

EC611000
ELECTRICAL COMPONENTS

① “ENGINE STOP” button
② TPS (throttle position sensor)
③ Neutral switch
④ CDI magneto
⑤ Ignition coil
⑥ Spark plug
⑦ CDI unit

COLOR CODE

B	Black	W	White
Br	Brown	Y	Yellow
G	Green	B/L	Black/Blue
L	Blue	B/W	Black/White
O	Orange	B/Y	Black/Yellow
P	Pink	G/B	Green/Black
R	Red	L/W	Blue/White
Sb	Sky blue	R/W	Red/White

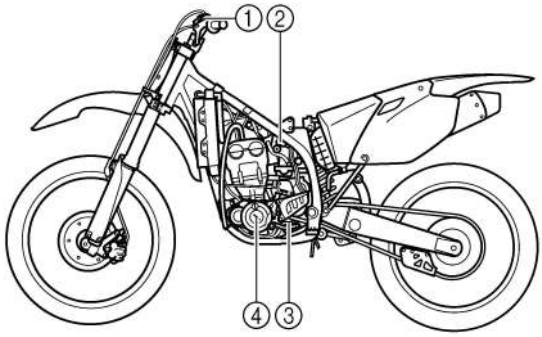

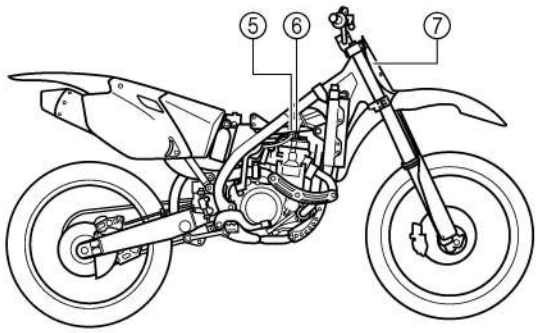

EC612000
WIRING DIAGRAM

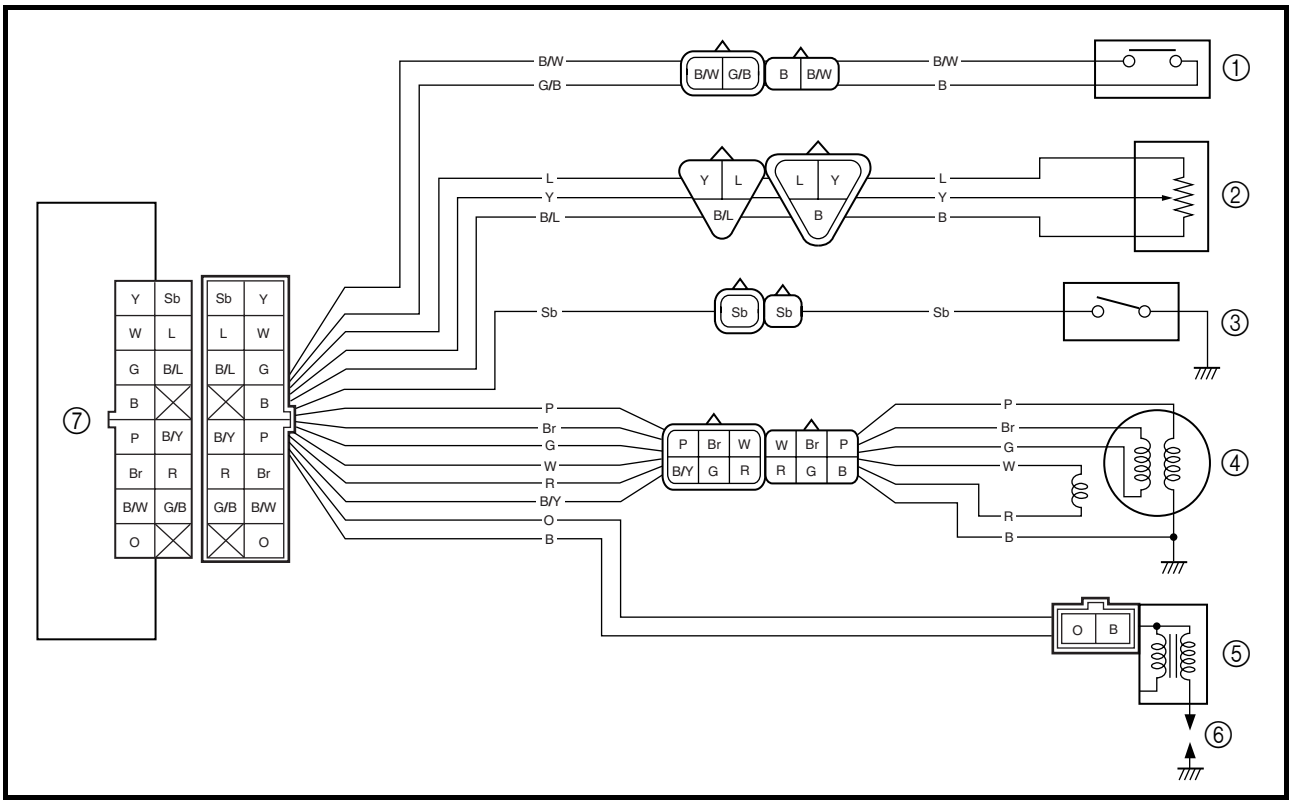

MAP-CONTROLLED CDI UNIT

A map-controlled, CDI ignition system is used in the YZ450F.

The microcomputer in the CDI unit detects the engine speed and throttle position, thus determining the optimum ignition timing through the entire operating range. In this way, quick throttle response can be achieved according to various riding conditions.

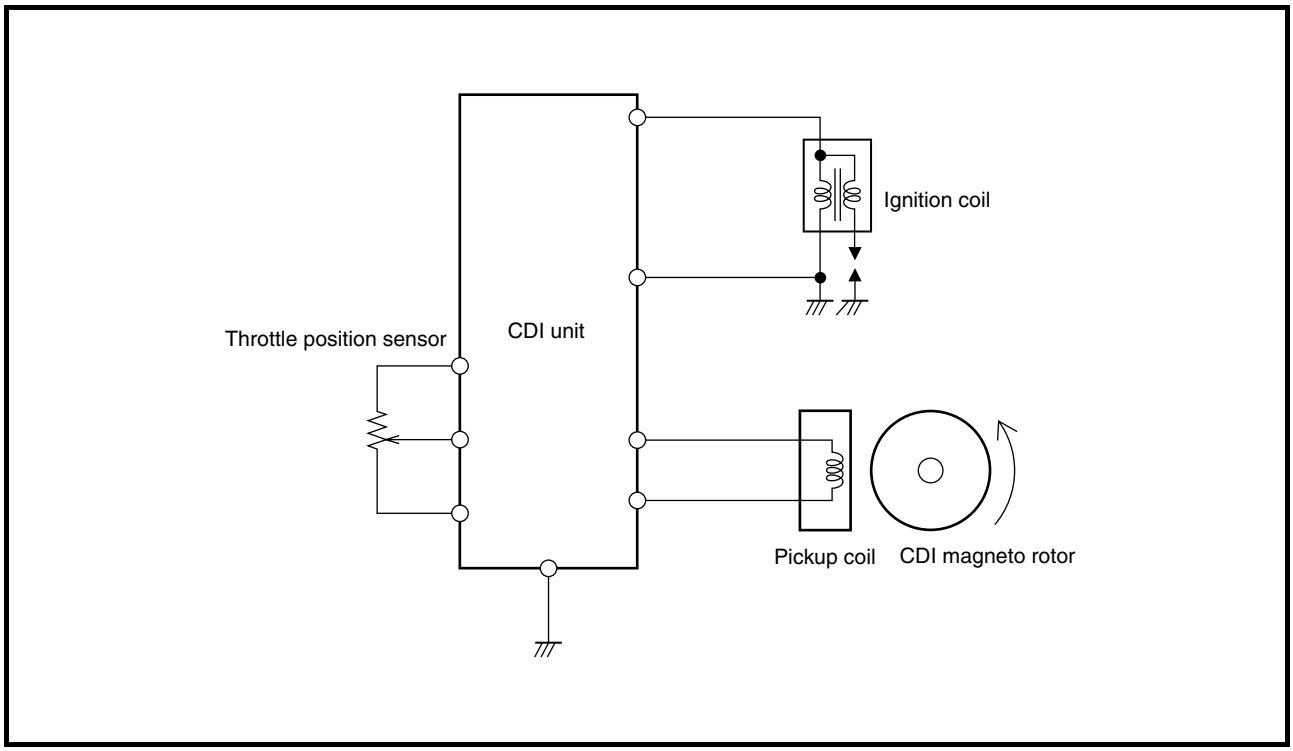

■ Function of Component

Component	Function
TPS (throttle position sensor)	Detects throttle valve opening and inputs it into the computer in the CDI unit as a throttle opening signal.
Pickup coil	Detects signal rotor revolutions and inputs them into the computer in the CDI unit as engine revolution signals.
CDI unit	The signals of the TPS and pickup coil sensor are analyzed by the computer in the CDI unit, which then adjusts ignition timing for the operation requirements.

■ Principal of 3-Dimensional Control

Conventionally, ignition timing was controlled only by engine revolutions (2-dimensional control). However, ignition timing needs advancement also by engine load. Thus, accurate ignition timing can be determined by adding throttle opening to determine ignition timing (3-dimensional control).

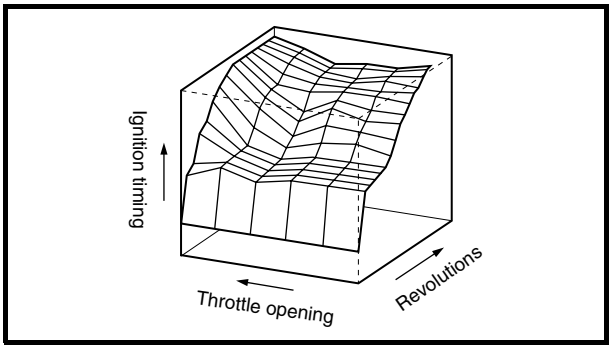

3-D Image Map of Ignition Timing
(different from actual characteristics)

EC620000

IGNITION SYSTEM

INSPECTION STEPS

Use the following steps for checking the possibility of the malfunctioning engine being attributable to ignition system failure and for checking the spark plug which will not spark.

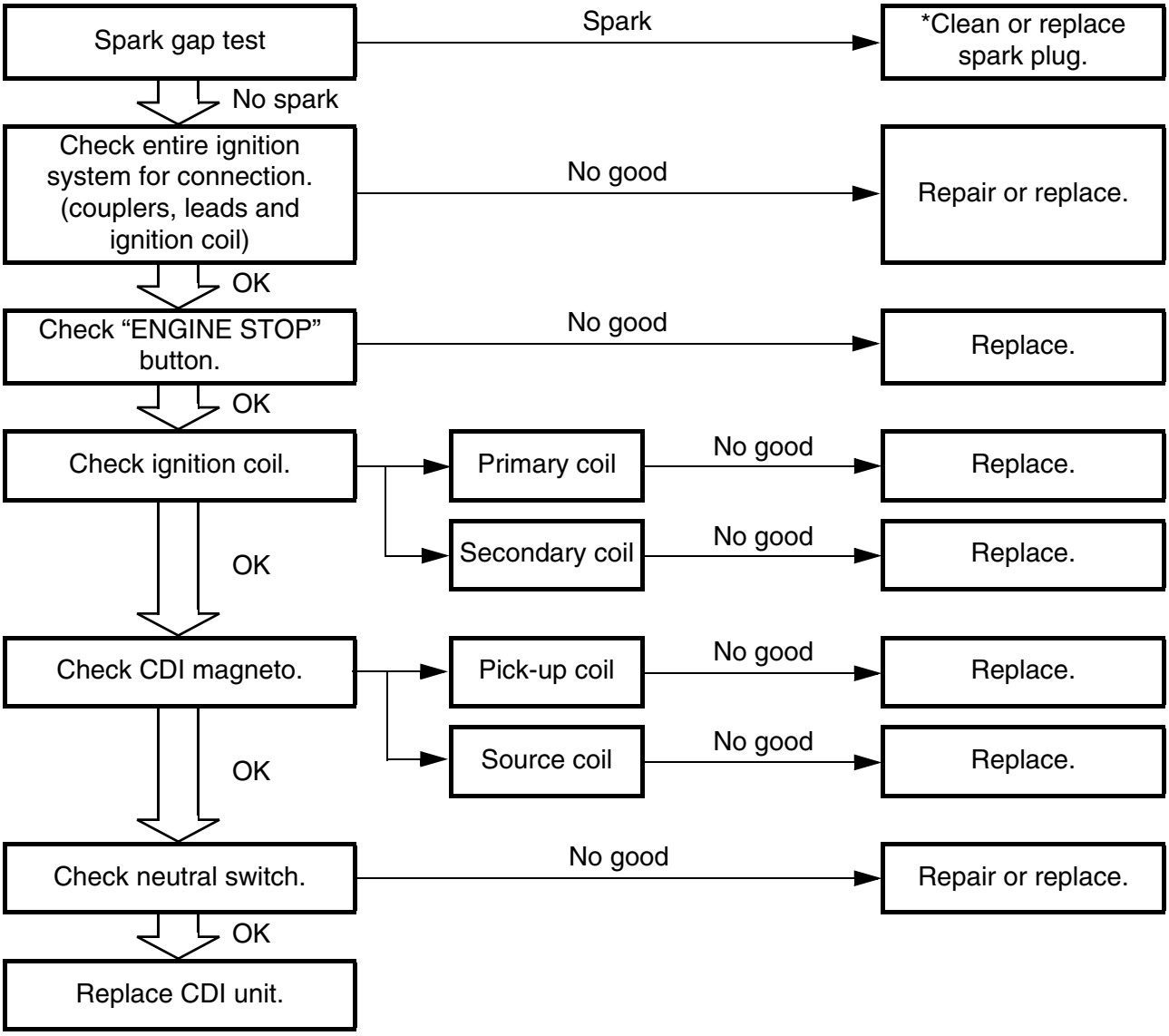

***marked: Only when the ignition checker is used.**

NOTE:

- Remove the following parts before inspection.
  1) Seat
  2) Fuel tank
- Use the following special tools in this inspection.

Dynamic spark tester:
YM-34487
Ignition checker:
90890-06754

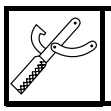

Pocket tester:
YU-3112-C/90890-03112

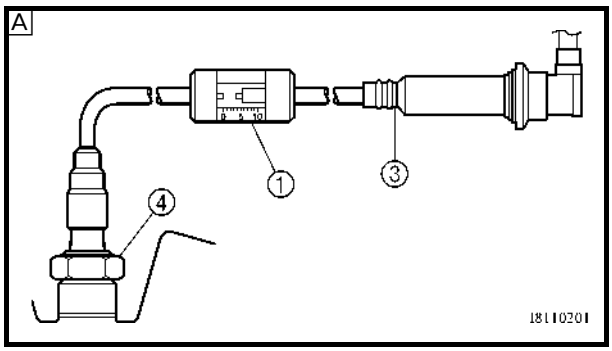

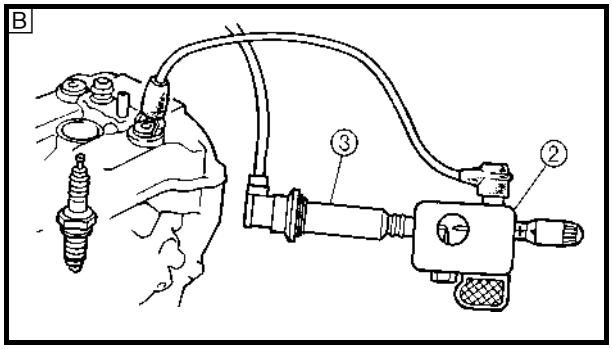

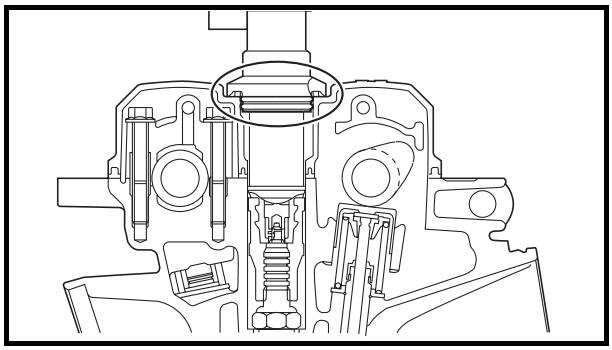

SPARK GAP TEST

1. Disconnect the ignition coil from spark plug.
2. Remove the ignition coil cap.
3. Connect the dynamic spark tester ① (ignition checker ②) as shown.
   - Ignition coil ③
   - Spark plug ④

A For USA and CDN
B Except for USA and CDN

4. Kick the kick starter.
5. Check the ignition spark gap.
6. Start engine, and increase spark gap until misfire occurs. (for USA and CDN only)

	Minimum spark gap: 6.0 mm (0.24 in)

COUPLERS, LEADS AND IGNITION COIL CONNECTION INSPECTION

1. Check:
   - Couplers and leads connection
     Rust/dust/looseness/short-circuit → Repair or replace.
   - Ignition coil and spark plug as they are fitted
     Push in the ignition coil until it closely contacts the spark plug hole in the cylinder head cover.

EC625001

"ENGINE STOP" BUTTON INSPECTION

1. Inspect:
   - "ENGINE STOP" button conduct

Tester (+) lead → Black/White lead ① **Tester (–) lead → Black lead ②**

		B/W ①	B ②	Tester selector position
	PUSH IN	○	○	Ω × 1
	FREE			

No continuity while being pushed → Replace.
Continuity while being freed → Replace.

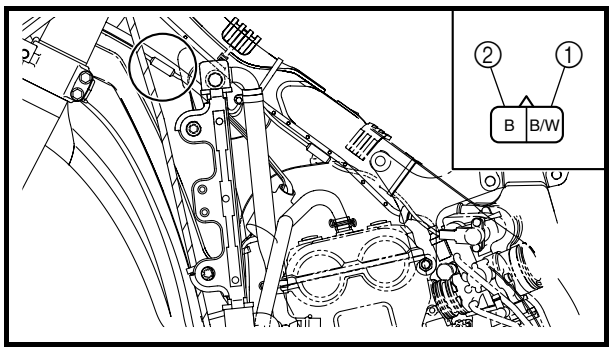

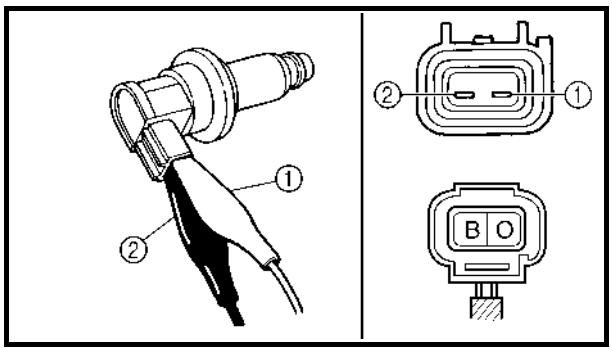

EC626002
IGNITION COIL INSPECTION

1. Remove the ignition coil cap.
2. Inspect:
   - Primary coil resistance
     Out of specification → Replace.

Tester (+) lead → Orange lead ①
Tester (–) lead → Black lead ②

	Primary coil resistance	Tester selector position
	0.08 ~ 0.10 Ω at 20 °C (68 °F)	**Ω × 1**

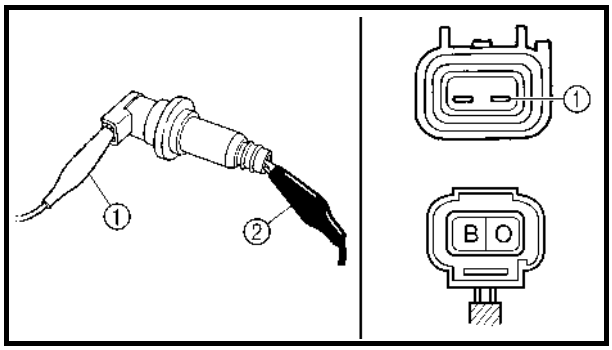

3. Inspect:
   - Secondary coil resistance
     Out of specification → Replace.

Tester (+) lead → Orange lead ①
Tester (–) lead → Spark plug terminal ②

	Secondary coil resistance	Tester selector position
	4.6 ~ 6.8 kΩ at 20 °C (68 °F)	**kΩ × 1**

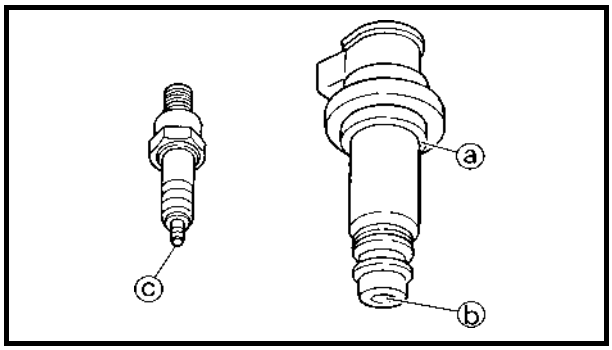

4. Inspect:
   - Sealed portion of ignition coil ⓐ
   - Spark plug terminal pin ⓑ
   - Threaded portion of spark plug ⓒ
     Wear → Replace.

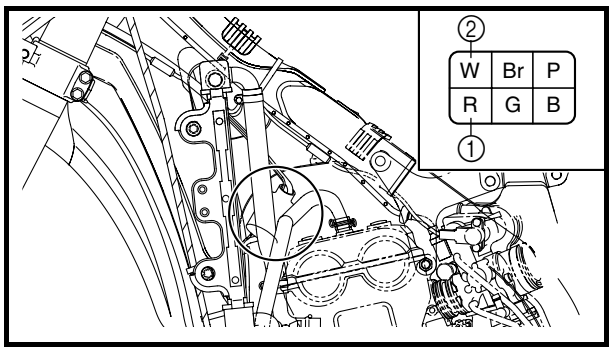

EC627011
CDI MAGNETO INSPECTION

1. Inspect:
   - Pick-up coil resistance
     Out of specification → Replace.

Tester (+) lead → Red lead ①
Tester (–) lead → White lead ②

	Pick-up coil resistance	Tester selector position
	248 ~ 372 Ω at 20 °C (68 °F)	**Ω × 100**

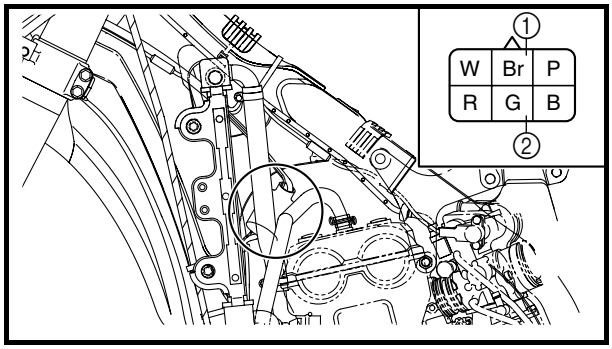

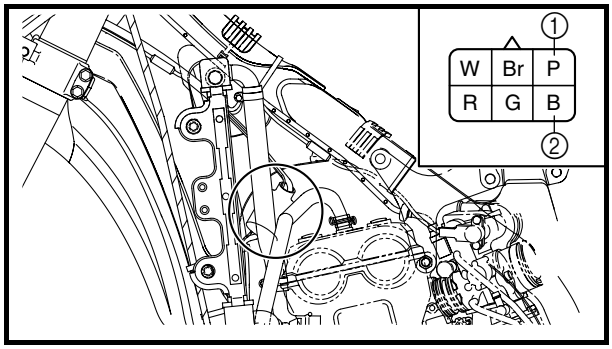

2. Inspect:
   - Source coil 1 resistance
     Out of specification → Replace.

Tester (+) lead → Brown lead ①
Tester (–) lead → Green lead ②

	Source coil 1 resistance	Tester selector position
	720 ~ 1,080 Ω at 20 °C (68 °F)	**Ω × 100**

3. Inspect:
   - Source coil 2 resistance
     Out of specification → Replace.

Tester (+) lead → Pink lead ①
Tester (–) lead → Black lead ②

	Source coil 2 resistance	Tester selector position
	44 ~ 66 Ω at 20 °C (68 °F)	**Ω × 10**

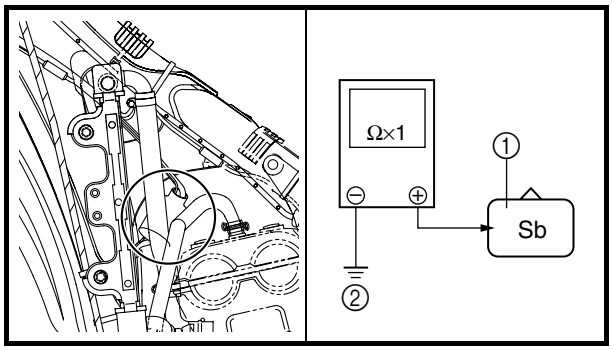

NEUTRAL SWITCH INSPECTION

1. Inspect:
   - Neutral switch conduct

Tester (+) lead → Sky blue lead ①
Tester (–) lead → Ground ②

		Sb ①	Ground ②	Tester selector position
	NEUTRAL	○	○	**Ω × 1**
	IN GEAR			

No continuity while in neutral → Replace.
Continuity while in gear → Replace.

EC628000

CDI UNIT INSPECTION

Check all electrical components. If no fault is found, replace the CDI unit. Then check the electrical components again.

EC690000

TPS (THROTTLE POSITION SENSOR) SYSTEM

INSPECTION STEPS

If the TPS will not operate, use the following inspection steps.

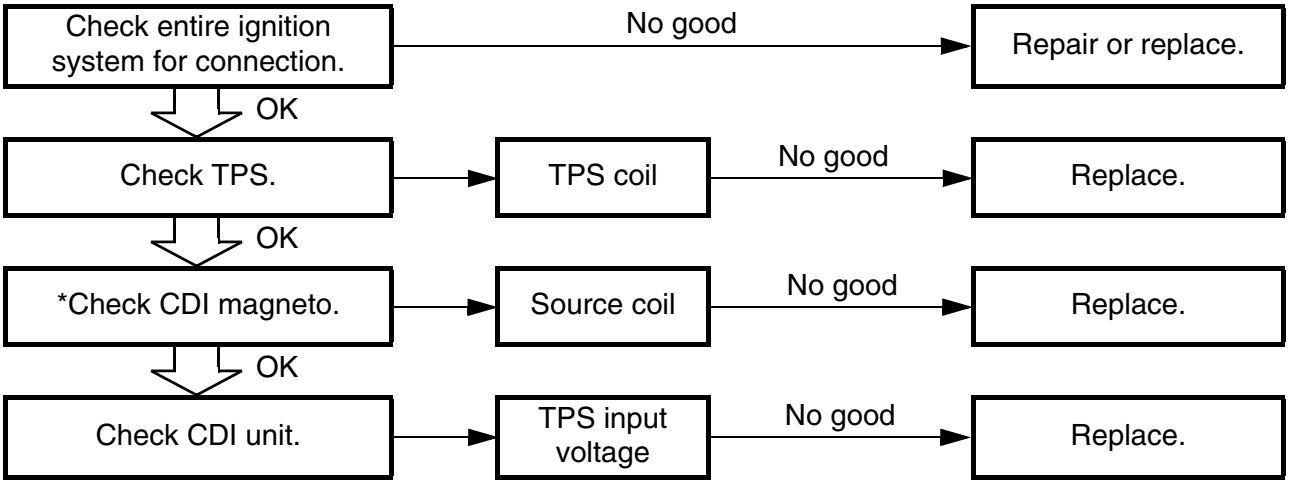

***marked: Refer to "IGNITION SYSTEM" section.**

NOTE:

Use the following special tools in this inspection.

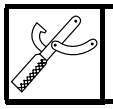

Pocket tester:
YU-3112-C/90890-03112

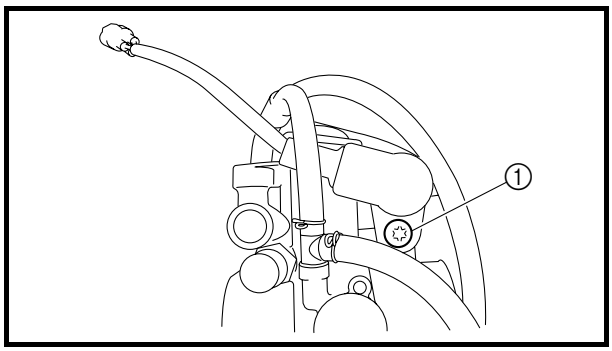

HANDLING NOTE

CAUTION:

Do not loosen the screws {TPS (throttle position sensor)} ① except when changing the TPS (throttle position sensor) due to failure because it will cause a drop in engine performance.

EC624000

COUPLERS AND LEADS CONNECTION INSPECTION

1. Check:
   - Couplers and leads connection
     Rust/dust/looseness/short-circuit → Repair or replace.

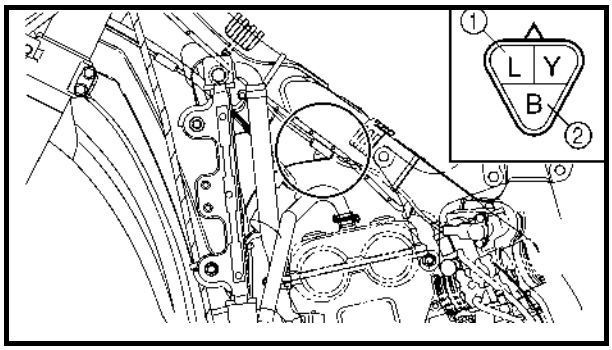

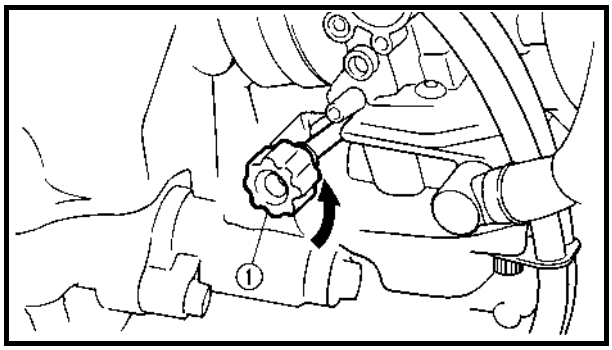

TPS COIL INSPECTION

1. Inspect:
   - TPS coil resistance
     Out of specification → Replace.

Tester (+) lead → Blue lead ①
Tester (–) lead → Black lead ②

	TPS coil resistance	Tester selector position
	4 ~ 6 kΩ at 20 °C (68 °F)	**kΩ × 1**

2. Loosen:
   - Throttle stop screw ①

NOTE:

Turn out the throttle stop screw until the throttle shaft is in the full close position.

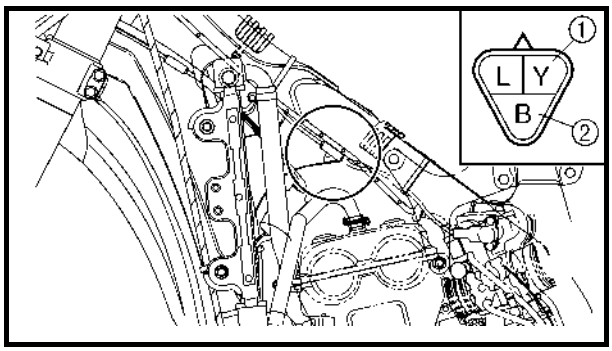

3. Inspect:
   - TPS coil variable resistance
     Check that the resistance in increased as the throttle grip is moved from the full close position to the full open position.
     Out of specification → Replace.

Tester (+) lead → Yellow lead ①
Tester (–) lead → Black lead ②

	TPS coil variable resistance		Tester selector position
	Full closed	Full opened	
	0 ~ 2 kΩ at 20 °C (68 °F)	4 ~ 6 kΩ at 20 °C (68 °F)	kΩ × 1

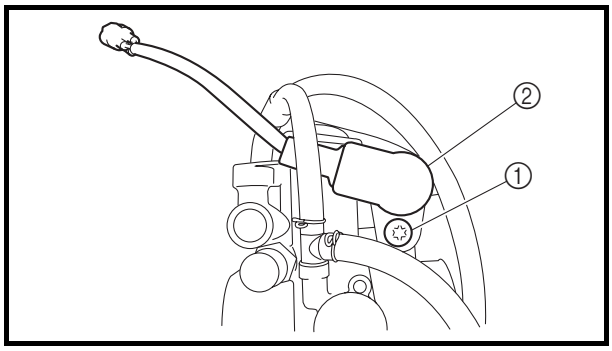

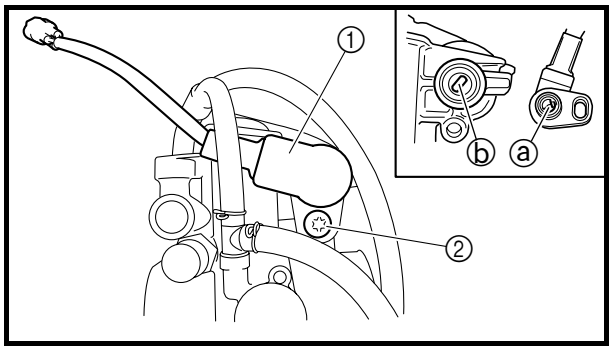

TPS REPLACEMENT AND ADJUSTMENT

1. Remove:
   - TPS coupler
   - Carburetor
2. Remove:
   - Screw (TPS) ①
   - TPS ②

NOTE:
Loosen the screws (TPS) using the T25 bit.

3. Replace:
   - TPS
4. Install:
   - TPS ①
   - Screw (TPS) ②

NOTE:
- Align the slot ⓐ in the TPS with the projection ⓑ on the carburetor.
- Temporarily tighten the screws (TPS).

5. Install:
   - Carburetor
   - TPS coupler

6. Adjust:
   - Idle speed
     Refer to “IDLE SPEED ADJUSTMENT” section in the CHAPTER 3.

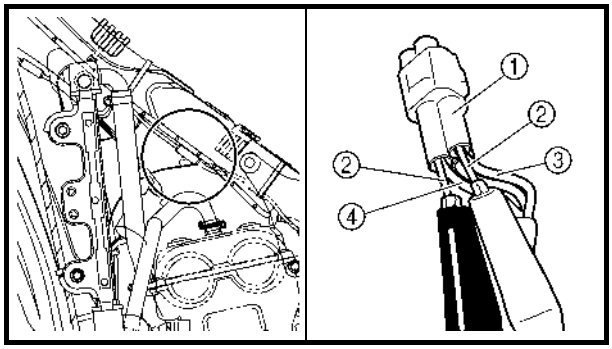

7. Insert the thin electric conductors ② (lead) into the TPS coupler ①, as shown, and connect the tester to them.

Tester (+) lead → Yellow lead ③
Tester (–) lead → Black lead ④

CAUTION:

- **Do not insert the electric conductors more than required because it may reduce the waterproof function of the coupler.**
- **Make sure that a short-circuit does not develop between the terminals because it may cause damage to electrical components.**

8. Start the engine.
9. Adjust:
   - TPS output voltage

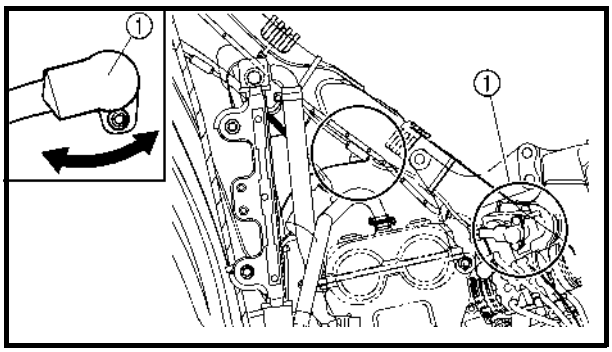

Adjustment steps:
Adjust the installation angle of the TPS ① to obtain the specified output voltage.

NOTE:
Measure the output voltage accurately with a digital electronic voltmeter that gives an easy reading of a small voltage.

	TPS output voltage	Tester selector position
	0.58 ~ 0.78 V	DCV

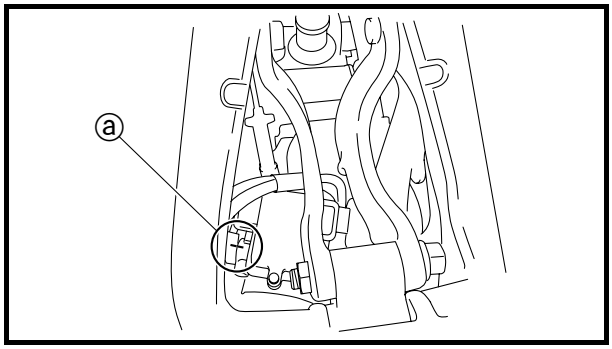

10. Put the aligning marks ⓐ on the TPS and carburetor.
11. Stop the engine.
12. Remove the carburetor.

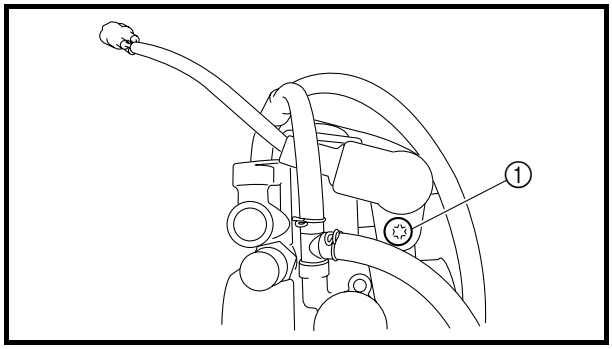

13. Tighten:
    - Screw (TPS) ①

NOTE:
Tighten the screws (TPS) using the T25 bit.

14. Install the carburetor.

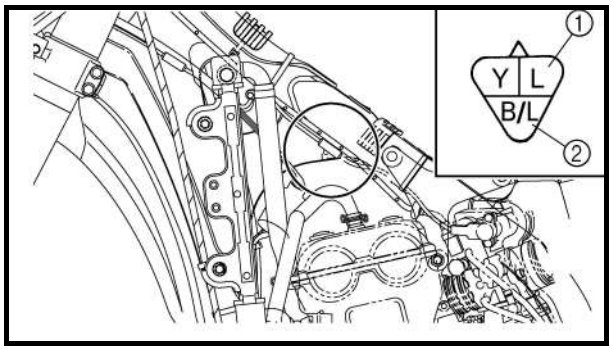

EC694000
TPS INPUT VOLTAGE INSPECTION

1. Disconnect the TPS coupler.
2. Start the engine.
3. Inspect:
    - TPS input voltage
      Out of specification → Replace the CDI unit.

Tester (+) lead → Blue lead ①
Tester (–) lead → Black/Blue lead ②

	TPS input voltage	Tester selector position
	4 ~ 6 V	DCV-20

EC700000
TUNING

EC710000
ENGINE

Carburetor setting

- The air/fuel mixture will vary depending on atmospheric conditions. Therefore, it is necessary to take into consideration the air pressure, ambient temperature, humidity, etc., when adjusting the carburetor.
- Perform a test run to check for proper engine performance (e.g., throttle response) and spark plug(-s) discoloration or fouling. Use these readings to determine the best possible carburetor setting.

NOTE:

It is recommended to keep a record of all carburetor settings and external conditions (e.g., atmospheric conditions, track/surface conditions, lap times) to make future carburetor setting easier.

WARNING

- **The carburetor is a part of the fuel line. Therefore, be sure to install it in a well-ventilated area, away from flammable objects and any sources of fire.**
- **Never look into the carburetor intake. Flames may shoot out from the pipe if the engine backfires while it is being started. Gasoline may be discharged from the accelerator pump nozzle when the carburetor has been removed.**

CAUTION:

- **The carburetor is extremely sensitive to foreign matter (dirt, sand, water, etc.). During installation, do not allow foreign matter to get into the carburetor.**
- **Always handle the carburetor and its components carefully. Even slight scratches, bends or damage to carburetor parts may prevent the carburetor from functioning correctly. Carefully perform all servicing with the appropriate tools and without applying excessive force.**
- **When the engine is stopped or when riding at no load, do not open and close the throttle unnecessarily. Otherwise, too much fuel may be discharged, starting may become difficult or the engine may not run well.**
- **After installing the carburetor, check that the throttle operates correctly and opens and closes smoothly.**

Atmospheric conditions and carburetor settings

Air temp.	Humidity	Air pressure (altitude)	Mixture	Setting
High	High	Low (high)	Richer	Leaner
Low	Low	High (low)	Leaner	Richer

The air density (i.e., concentration of oxygen in the air) determines the richness or leanness of the air/fuel mixture. Therefore, refer to the above table for mixture settings.

That is:

- Higher temperature expands the air with its resultant reduced density.
- Higher humidity reduces the amount of oxygen in the air by so much of the water vapor in the same air.
- Lower atmospheric pressure (at a high altitude) reduces the density of the air.

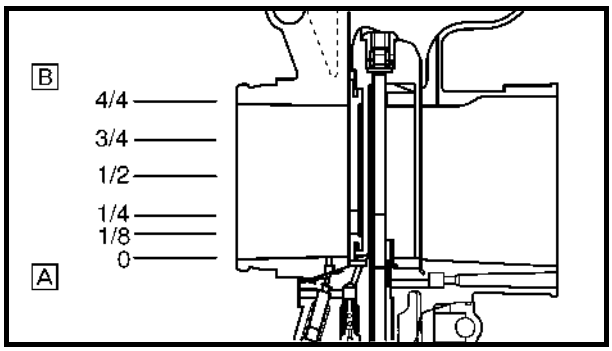

A Closed
B Fully open

Effects of the setting parts on the throttle valve opening

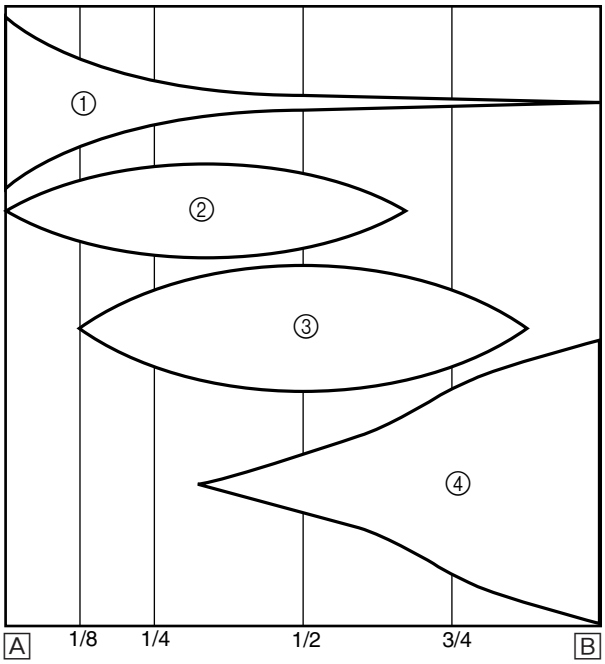

① Pilot screw/pilot jet
② Throttle valve cutaway
③ Jet needle
④ Main jet

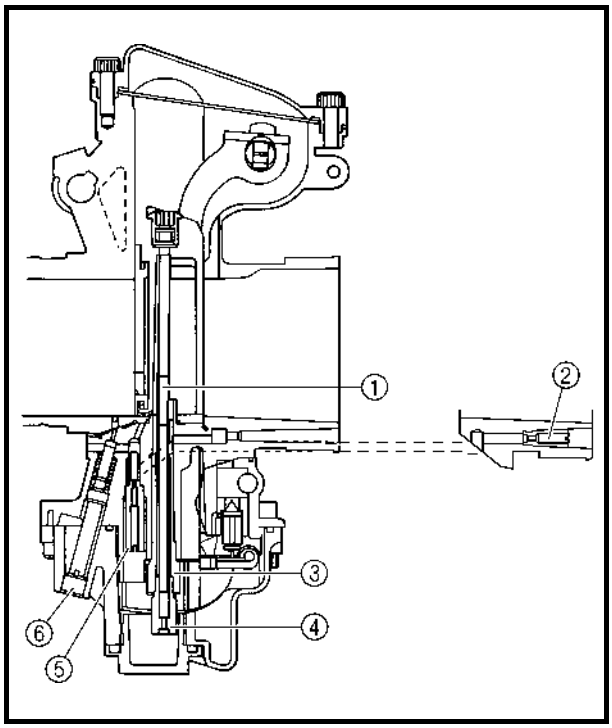

Main system

The FLATCR carburetor has a primary main jet. This type of main jet is perfect for racing machines since it supplies an even flow of fuel, even at full load. Use the main jet and the jet needle to set the carburetor.

① Jet needle
② Pilot air jet
③ Needle jet
④ Main jet
⑤ Pilot jet
⑥ Pilot screw

Pilot system

The FLATCR carburetor is manufactured with a pilot screw. The pilot screw adjustment ranges from fully closed throttle to 1/4 open throttle.

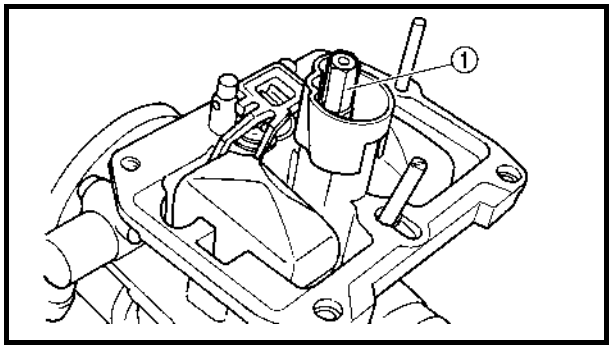

Main jet adjustment

The richness of the air-fuel mixture at full throttle can be set by changing the main jet ①.

Standard main jet	#165

If the air-fuel mixture is too rich or too lean, the engine power will drop, resulting in poor acceleration.

Effects of changing the main jet (reference)

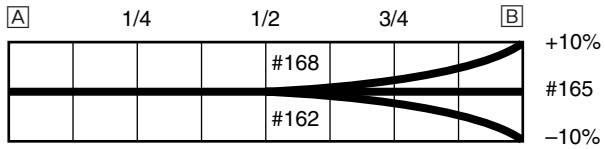

A Idle B Fully open

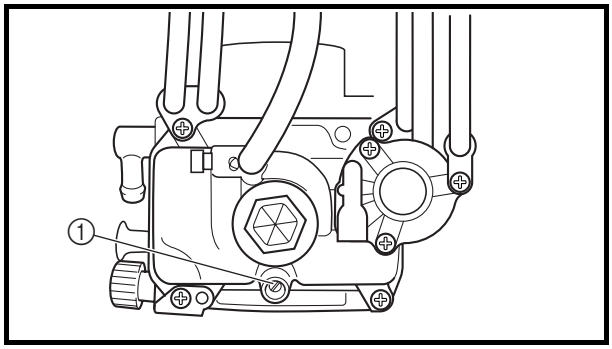

Pilot screw adjustment

The richness of the air-fuel mixture with the throttle fully closed to 1/4 open can be set by turning the pilot screw ①. Turning in the pilot screw will make the mixture lean at low speeds, and turning it out will enrich it.

Standard pilot screw position (example)	**2-1/8**

NOTE:

- If the idling speed fluctuates, turn the pilot screw only 1/2 of a turn in either direction.
- To optimize the fuel flow at a smaller throttle opening, each machine's pilot screw has been individually set at the factory. Before adjusting the pilot screw, turn it in fully and count the number of turns. Record this number as the factory-set number of turns out.

Effects of adjusting the pilot screw (reference)

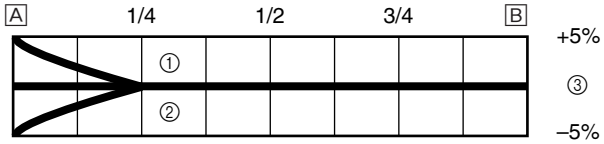

A Idle
B Fully open
① 2-5/8 turns out
② 1-5/8 turns out
③ 2-1/8 turns out

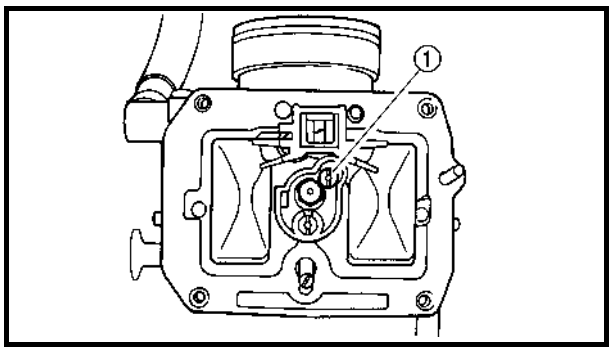

Pilot jet adjustment

The richness of the air-fuel mixture with the throttle open 1/4 or less can be set by adjusting the pilot jet ①.

Standard pilot jet	#42

Effects of adjusting the pilot jet (reference)

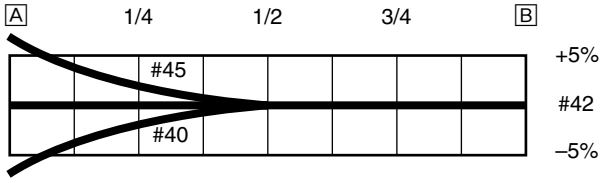

A Idle B Fully open

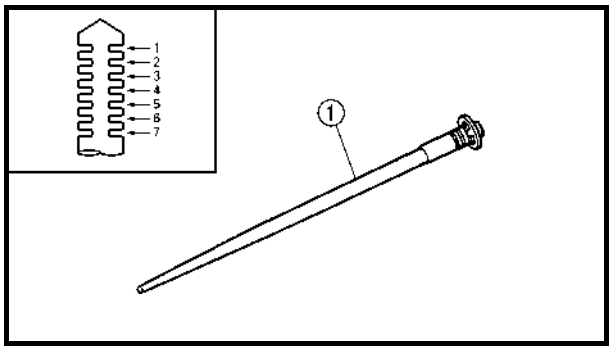

Jet needle groove position adjustment

Adjusting the jet needle ① position affects the acceleration when the throttle is 1/8 to 3/4 open.

1. Too rich at intermediate speeds
   Rough engine operation is felt and the engine will not pick up speed smoothly. In this case, step up the jet needle clip by one groove and move down the needle to lean out the mixture.
2. Too lean at intermediate speeds
   The engine breathes hard and will not pick up speed quickly.
   Step down the jet needle clip by one groove and move up the needle to enrich the mixture.

Standard clip position	No.4 groove

Effects of changing the jet needle groove position (reference)

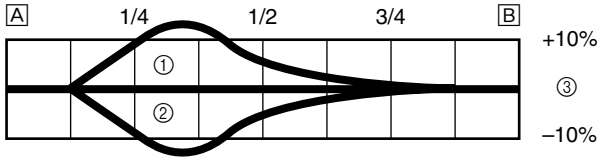

A Idle
B Fully open
① No.5 groove
② No.3 groove
③ No.4 groove

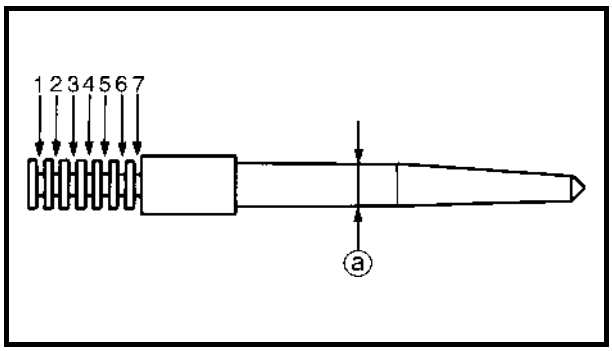

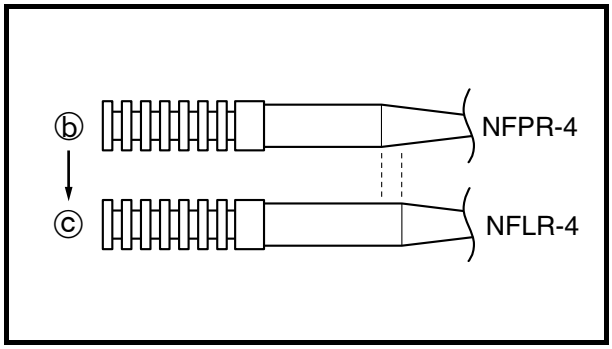

Jet needle adjustment

The jet needle is adjusted by changing it.

Standard jet needle	NFPR

The jet needle setting parts, having the same taper angle, are available in different straight portion diameters and in different taper starting positions.

<Example>

NFPR - 4

Clip position

Diameter ⓐ of straight portion

ⓑ Reference needle

ⓒ 0.5 leaner

Changing from NFPR-4 to NFLR-4 has the same effect as a lowering of 0.5 clip position.

Clip position \ Diameter of straight portion		Rich ←						→ Lean
		N	P	Q	R	S	T	U
Rich	1 richer	NFPN-5	NFPP-5	NFPQ-5	NFPR-5	NFPS-5	NFPT-5	NFPU-5
↕	0.5 richer	NFLN-5	NFLP-5	NFLQ-5	NFLR-5	NFLS-5	NFLT-5	NFLU-5
	STD	NFPN-4	NFPP-4	NFPQ-4	NFPR-4	NFPS-4	NFPT-4	NFPU-4
	0.5 leaner	NFLN-4	NFLP-4	NFLQ-4	NFLR-4	NFLS-4	NFLT-4	NFLU-4
Lean	1 leaner	NFPN-3	NFPP-3	NFPQ-3	NFPR-3	NFPS-3	NFPT-3	NFPU-3

Effects of changing the jet needle (reference)

(Diameter of the straight portion)

Changing the diameter of the straight portion adjusts the air-fuel mixture when the throttle is 1/8 to 1/4 open.

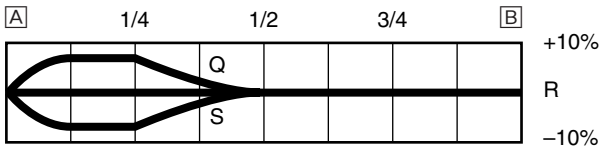

A Idle B Fully open

Relationship with throttle opening

The flow of the fuel through the carburetor main system is controlled by the main jet and then, it is further regulated by the area between the main nozzle and the jet needle.

The fuel flow relates to the diameter of the straight portion of the jet needle with the throttle 1/8 to 1/4 open and relates to the clip position with the throttle 1/8 to 3/4 open.

Therefore, the fuel flow is balanced at each stage of throttle opening by the combination of the jet needle straight portion diameter, and clip position.

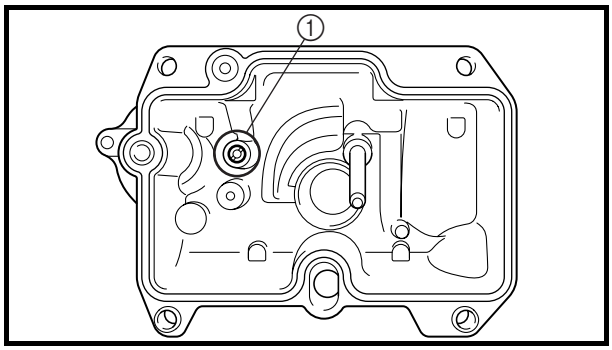

Leak jet adjustment (accelerator pump adjustment)

The leak jet ① is a setting part that adjusts the flow of fuel discharged by the accelerator pump. Since the accelerator pump operates only when throttle is open, the leak jet is used to adjust a fuel mixture ratio for quick throttle opening and is therefore different from other setting parts that adjust a fuel mixture for each throttle opening (each engine speed).

1. The engine breathes hard in quick throttle opening.
   Select a leak jet having lower calibrating No. than standard to enrich the mixture.
   <Example> #55 → #50
2. Rough engine operation is felt in quick throttle opening.
   Select a leak jet having higher calibrating No. than standard to lean out the mixture.
   <Example> #55 → #60

Standard leak jet	#55

Carburetor setting parts

Part name		Size	Part number
Main jet	Rich	#178	4MX-14943-93
		#175	4MX-14943-42
		#172	4MX-14943-92
		#170	4MX-14943-41
		#168	4MX-14943-91
	(STD)	#165	4MX-14943-40
		#162	4MX-14943-90
		#160	4MX-14943-39
		#158	4MX-14943-89
		#155	4MX-14943-38
	Lean	#152	4MX-14943-88
Pilot jet	Rich	#50	4MX-14948-07
		#48	4MX-14948-06
		#45	4MX-14948-05
	(STD)	#42	4MX-14948-04
		#40	4MX-14948-03
		#38	4MX-14948-02
	Lean	#35	4MX-14948-01
Jet needle	Rich	NFPN	5TA-14916-PN
		NFPP	5TA-14916-PP
		NFPQ	5TA-14916-P1
	(STD)	NFPR	5TA-14916-PR
		NFPS	5TA-14916-PS
		NFPT	5TA-14916-PT
	Lean	NFPU	5TA-14916-PU
	Rich	NFLN	5TA-14916-LN
		NFLP	5TA-14916-LP
		NFLQ	5TA-14916-L1
		NFLR	5TA-14916-LR
		NFLS	5TA-14916-LS
		NFLT	5TA-14916-LT
	Lean	NFLU	5TA-14916-LU
Leak jet	Rich	#45	4JT-1494F-05
		#50	4JT-1494F-07
	(STD)	#55	4JT-1494F-09
		#60	4JT-1494F-11
	Lean	#65	4JT-1494F-13

Examples of carburetor setting depending on symptom

Symptom	Setting	Checking
At full throttle Hard breathing Shearing noise Whitish spark plug ↓ Lean mixture	Increase main jet calibration no. (Gradually)	Discoloration of spark plug → If tan color, it is in good condition. If cannot be corrected: Clogged float valve seat Clogged fuel hose Clogged fuel cock Check that the accelerator pump operates smoothly.
At full throttle Speed pick-up stops Slow speed pick-up Slow response Sooty spark plug ↓ Rich mixture	Decrease main jet calibration no. (Gradually)	Discoloration of spark plug → If tan color, it is in good condition. If cannot be corrected: Clogged air cleaner Fuel overflow from carburetor
Lean mixture	Lower jet needle clip position. (1 groove down)	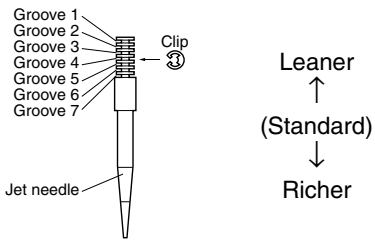 The clip position is the jet needle groove on which the clip is installed. The positions are numbered from the top. Check that the accelerator pump operates smoothly (except for rich mixture symptom).
Rich mixture	Raise jet needle clip position. (1 groove up)	
1/4 ~ 3/4 throttle Hard breathing Lack of speed	Lower jet needle clip position. (1 groove down)	
1/4 ~ 1/2 throttle Slow speed pick-up Poor acceleration	Raise jet needle clip position. (1 groove up)	
Closed to 1/4 throttle Hard breathing Speed down	Use jet needle with a smaller diameter.	Slow-speed-circuit passage Clogged → Clean. Overflow from carburetor
Closed to 1/4 throttle Poor acceleration	Use jet needle with a larger diameter. Raise jet needle clip position. (1 groove up)	
Poor response in the low to intermediate speeds	Raise jet needle clip position. If this has no effect, lower the jet needle clip position.	
Poor response when throttle is opened quickly	Check overall settings. Use main jet with a lower calibration no. Raise jet needle clip position. (1 groove up) If these have no effect, use a main jet with a higher calibration no. and lower the jet needle clip position.	Check air cleaner for fouling. Check that the accelerator pump operates smoothly.

* This should be taken simply for an example. It is necessary to set the carburetor while checking the operating conditions of the engine.

EC720000
CHASSIS

EC71P002
Selection of the secondary reduction ratio (Sprocket)

$$\text{Secondary reduction ratio} = \frac{\text{Number of driven sprocket teeth}}{\text{Number of drive sprocket teeth}}$$

Standard secondary reduction ratio	**49/13 (3.769)**

<Requirement for selection of secondary gear reduction ratio>

- It is generally said that the secondary gear ratio should be reduced for a longer straight portion of a speed course and should be increased for a course with many corners. Actually, however, as the speed depends on the ground condition of the day of the race, be sure to run through the circuit to set the machine suitable for the entire course.
- In actuality, it is very difficult to achieve settings suitable for the entire course and some settings may be sacrificed. Thus, the settings should be matched to the portion of the course that has the greatest effect on the race result. In such a case, run through the entire course while making notes of lap times to find the best balance; then, determine the secondary reduction ratio.
- If a course has a long straight portion where a machine can run at maximum speed, the machine is generally set such that it can develop its maximum revolutions toward the end of the straight line, with care taken to avoid the engine over-revving.

NOTE:

Riding technique varies from rider to rider and the performance of a machine also vary from machine to machine. Therefore, do not imitate other rider's settings from the beginning but choose your own setting according to the level of your riding technique.

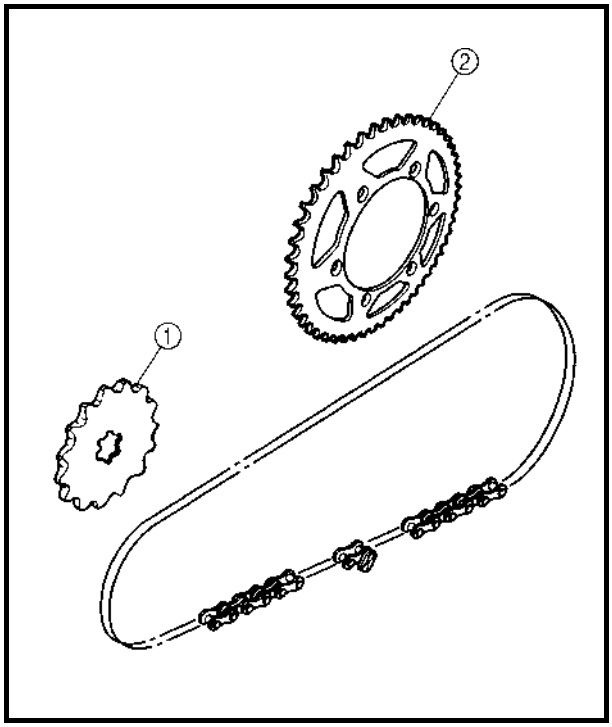

EC72N000

Drive and driven sprockets setting parts

Part name	Size	Part number
Drive sprocket ① (STD)	13T	9383E-13233
Driven sprocket ② (STD)	47T	1C3-25447-00
	48T	1C3-25448-00
	49T	1C3-25449-00
	50T	1C3-25450-00
	51T	1C3-25451-00
	52T	1C3-25452-00

EC721002

Tire pressure

Tire pressure should be adjust to suit the road surface condition of the circuit.

Standard tire pressure:
100 kPa (1.0 kgf/cm^2, 15 psi)

- Under a rainy, muddy, sandy, or slippery condition, the tire pressure should be lower for a larger area of contact with the road surface.

Extent of adjustment:
60 ~ 80 kPa
(0.6 ~ 0.8 kgf/cm^2, 9.0 ~ 12 psi)

- Under a stony or hard road condition, the tire pressure should be higher to prevent a flat tire.

Extent of adjustment:
100 ~ 120 kPa
(1.0 ~ 1.2 kgf/cm^2, 15 ~ 18 psi)

EC722011
Front fork setting

The front fork setting should be made depending on the rider's feeling of an actual run and the circuit conditions.

The front fork setting includes the following three factors:

1. Setting of air spring characteristics
   - Change the fork oil amount.
2. Setting of spring preload
   - Change the spring.
3. Setting of damping force
   - Change the compression damping.
   - Change the rebound damping.

   The spring acts on the load and the damping force acts on the cushion travel speed.

EC723001
Change in amount and characteristics of fork oil

Damping characteristic near the final stroke can be changed by changing the fork oil amount.

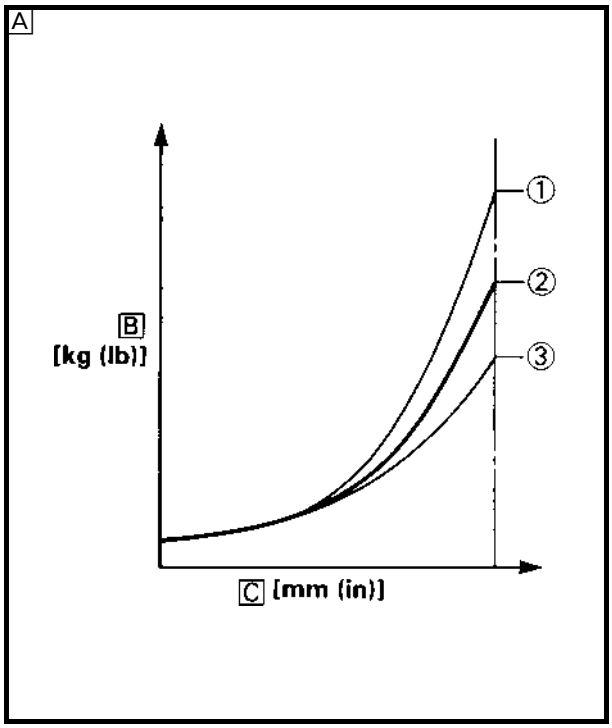

CAUTION:

Adjust the oil amount in 5 cm³ (0.2 Imp oz, 0.2 US oz) increments or decrements. Too small oil amount causes the front fork to produce a noise at full rebound or the rider to feel some pressure on his hands or body. Alternatively, too large oil amount will cause the air spring characteristics to have a tendency to be stiffer with the consequent deteriorated performance and characteristics. Therefore, adjust the front fork within the specified range.

Standard oil amount:
355 cm³ (12.5 Imp oz, 12.0 US oz)
***345 cm³ (12.1 Imp oz, 11.7 US oz)**
Extent of adjustment:
300 ~ 380 cm³
(10.6 ~ 13.4 Imp oz,
10.1 ~ 12.8 US oz)

* For EUROPE

A Air spring characteristics in relation to oil amount change
B Load
C Stroke
① Max. oil amount
② Standard oil amount
③ Min. oil amount

EC72A001

Setting of spring after replacement

As the front fork setting can be easily affected by rear suspension, take care so that the machine front and rear are balanced (in position, etc.) when setting the front fork.

1. Use of soft spring
   Generally a soft spring gives a soft riding feeling. Rebound damping tends to become stronger and the front fork may sink deeply over a series of gaps.
   To set a soft spring:
   - Change the rebound damping.
     Turn out one or two clicks.
   - Change the compression damping.
     Turn in one or two clicks.

2. Use of stiff spring
   Generally a stiff spring gives a stiff riding feeling. Rebound damping tends to become weaker, resulting in lack of a sense of contact with the road surface or in a vibrating handlebar.
   To set a stiff spring:
   - Change the rebound damping.
     Turn in one or two clicks.
   - Change the compression damping.
     Turn out one or two clicks.

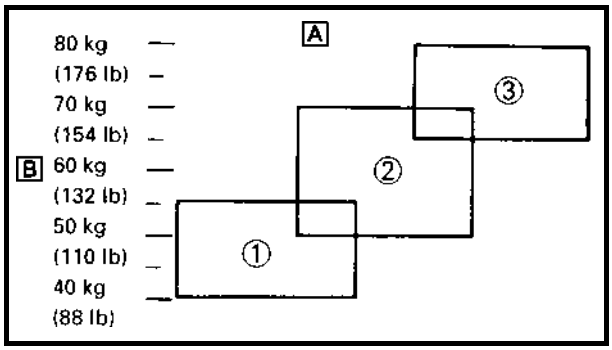

A Coverage of spring by weight
B Rider weight
① Soft
② Standard
③ Stiff

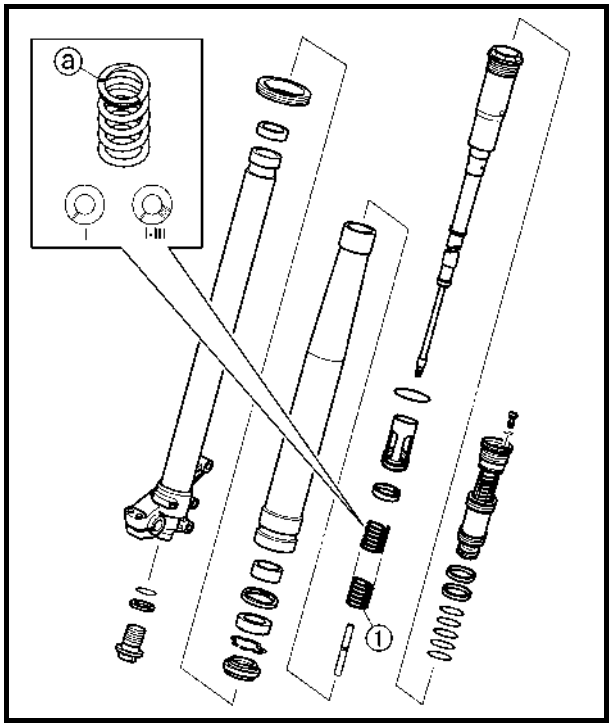

EC72P000

Front fork setting parts

- Front fork spring ①

TYPE	SPRING RATE	SPRING PART NUMBER	I.D. MARK (slits)
SOFT	0.398 0.408 0.418 0.428 0.438 0.449	1C3-23141-A0 1C3-23141-B0 1C3-23141-C0 1C3-23141-D0 1C3-23141-E0 1C3-23141-F0	I II III IIII IIIII I-I
*STD	0.459	2S2-23141-M0	–
STD	0.469	2S2-23141-L0	–
STIFF	0.479	1C3-23141-J0	I-IIII

* For EUROPE

NOTE:

The I.D. mark (slits) ⓐ is proved on the end of the spring.

EC72B000

Rear suspension setting

The rear suspension setting should be made depending on the rider's feeling of an actual run and the circuit conditions.

The rear suspension setting includes the following two factors:

1. Setting of spring preload
   - Change the set length of the spring.
   - Change the spring.
2. Setting of damping force
   - Change the rebound damping.
   - Change the compression damping.

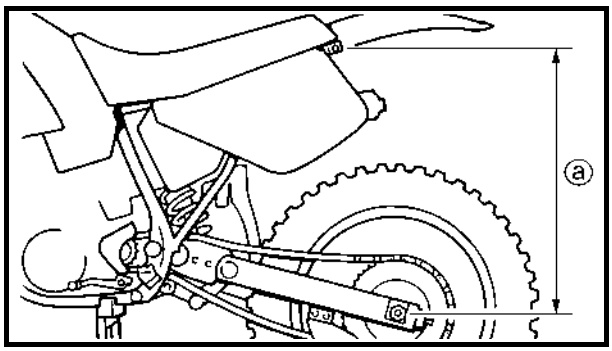

EC72C001

Choosing set length

1. Place a stand or block under the engine to put the rear wheel above the floor, and measure the length ⓐ between the rear wheel axle center and the rear fender holding bolt.

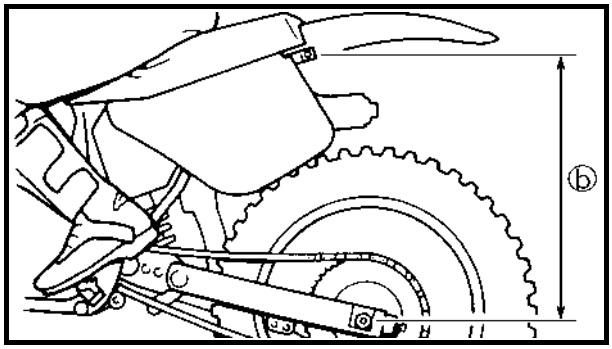

2. Remove the stand or block from the engine and with a rider astride the seat, measure the sunken length ⓑ between the rear wheel axle center and the rear fender holding bolt.

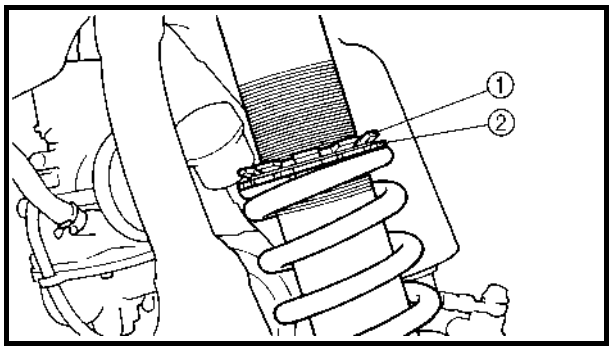

3. Loosen the locknut ① and make adjustment by turning the spring adjuster ② to achieve the standard figure from the subtraction of the length ⓑ from the length ⓐ.

Standard figure:
90 ~ 100 mm (3.5 ~ 3.9 in)

NOTE:

- If the machine is new and after it is broken in, the same set length of the spring may change because of the initial fatigue, etc. of the spring. Therefore, be sure to make re-evaluation.
- If the standard figure cannot be achieved by adjusting the spring adjuster and changing the spring set length, replace the spring with an optional one and make re-adjustment.

EC72G001

Setting of spring after replacement

After replacement, be sure to adjust the spring to the set length [sunken length 90 ~ 100 mm (3.5 ~ 3.9 in)] and set it.

1. Use of soft spring
   - Set the soft spring for less rebound damping to compensate for its less spring load. Run with the rebound damping adjuster one or two clicks on the softer side and readjust it to suit your preference.
2. Use of stiff spring
   - Set the soft spring for more rebound damping to compensate for its greater spring load. Run with the rebound damping adjuster one or two clicks on the stiffer side and readjust it to suit your preference.

* Adjusting the rebound damping will be followed more or less by a change in the compression damping. For correction, turn the low compression damping adjuster on the softer side.

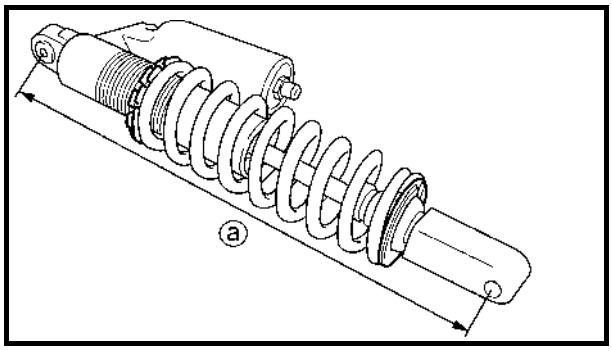

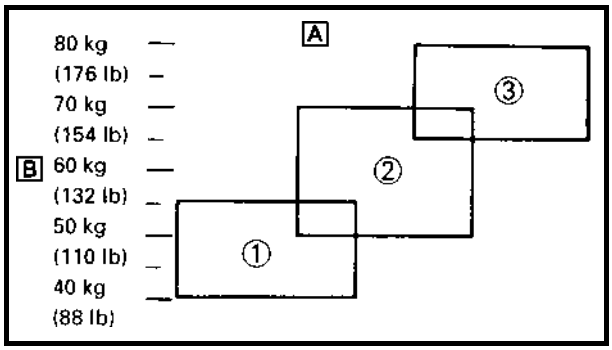

CAUTION:

When using a rear cushion other than currently installed, use the one whose overall length ⓐ does not exceed the standard as it may result in faulty performance. Never use one whose overall length is greater than standard.

Length ⓐ of standard shock: 488.5 mm (19.23 in)

A Coverage of spring by weight
B Rider weight
① Soft
② Standard
③ Stiff

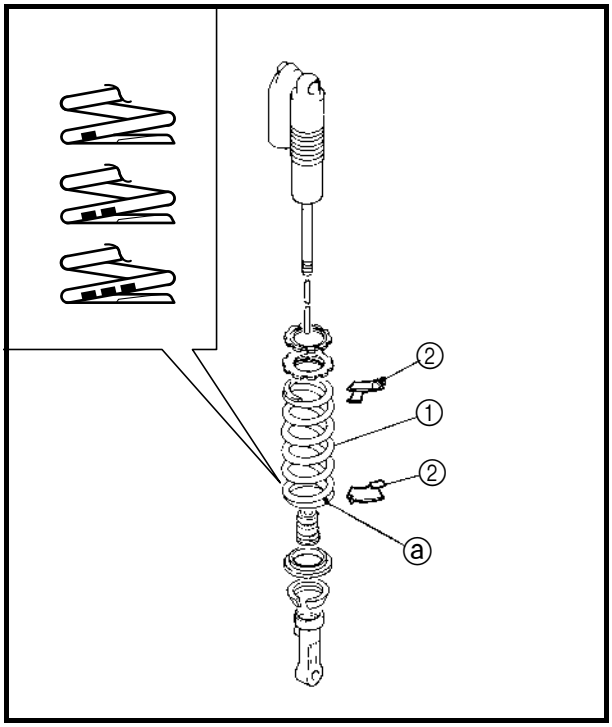

EC72Q000

Rear shock absorber setting parts

- Rear shock spring ①

[Equal-pitch titanium spring]

TYPE	SPRING RATE	SPRING PART NUMBER	I.D. MARK	SPRING FREE LENGTH (approx.)
SOFT	4.5	1C3-22212-00	Green	265
	4.7	1C3-22212-10	Red	265
	4.9	1C3-22212-20	Black	265
	5.1	1C3-22212-30	Blue	265
	5.3	1C3-22212-40	Yellow	275
STD	5.5	1C3-22212-50	Pink	275
STIFF	5.7	1C3-22212-60	White	275

[Equal-pitch steel spring]

TYPE	SPRING RATE	SPRING PART NUMBER	I.D. MARK/ Q'TY	SPRING FREE LENGTH
	4.3	5UN-22212-00	Brown/1	260

[Unequal-pitch steel spring]

TYPE	SPRING RATE (approx.)	SPRING PART NUMBER	I.D. MARK/ Q'TY	SPRING FREE LENGTH
SOFT	4.5	5UN-22212-A0	Green/2	275
	4.7	5UN-22212-B0	Red/2	275
	4.9	5UN-22212-C0	Black/2	275
	5.1	5UN-22212-D0	Blue/2	275
	5.3	5UN-22212-E0	Yellow/2	275
	5.5	5UN-22212-F0	Pink/2	275
STIFF	5.7	5UN-22212-G0	White/2	275

CAUTION:

Install the spring seat ② to the titanium spring.

NOTE:

- The unequal-pitch spring is softer in initial characteristic than the equal-pitch spring and is difficult to bottom out under full compression.
- The I.D. mark ⓐ is marked at the end of the spring.
- Spring specification varies according to the color and quantity of I.D. marks.

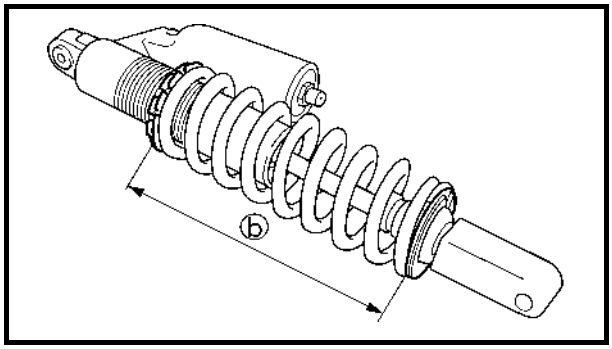

• Extent of adjustment (spring length)
[Titanium spring]

SPRING FREE LENGTH	EXTENT OF ADJUSTMENT ⓑ
Approx. 265 mm (10.43 in)	One I.D. mark 245.5 ~ 263.5 mm (9.67 ~ 10.37 in) Two I.D. marks 251.5 ~ 269.5 mm (9.90 ~ 10.61 in) Three I.D. marks 243.0 ~ 261.0 mm (9.57 ~ 10.28 in)
Approx. 275 mm (10.83 in)	One I.D. mark 255.5 ~ 273.5 mm (10.06 ~ 10.77 in) Two I.D. marks 261.5 ~ 279.5 mm (10.30 ~ 11.00 in) Three I.D. marks 253.0 ~ 271.0 mm (9.96 ~ 10.67 in)

[Steel spring]

SPRING FREE LENGTH	EXTENT OF ADJUSTMENT ⓑ
260 mm (10.24 in)	240.5 ~ 258.5 mm (9.47 ~ 10.18 in)
275 mm (10.83 in)	255.5 ~ 273.5 mm (10.06 ~ 10.77 in)

EC72H002

Suspension setting

- Front fork

NOTE:

- If any of the following symptoms is experienced with the standard position as the base, make resetting by reference to the adjustment procedure given in the same chart.
- Before any change, set the rear shock absorber sunken length to the standard figure 90 ~ 100 mm (3.5 ~ 3.9 in).

Symptom	Section				Check	Adjust
	Jump	Large gap	Medium gap	Small gap		
Stiff over entire range	○	○	○		Compression damping	Turn adjuster counterclockwise (about 2 clicks) to decrease damping.
					Oil amount	Decrease oil amount by about 5 ~ 10 cm^3 (0.2 ~ 0.4 Imp oz, 0.2 ~ 0.3 US oz).
					Spring	Replace with soft spring.
Unsmooth movement over entire range	○	○	○	○	Outer tube	Check for any bends, dents, and other noticeable scars, etc. If any, replace affected parts.
					Inner tube	
					Slide metal	Replace with a new one for extended use.
					Piston metal	Replace with a new one for extended use.
					Under bracket tightening torque	Retighten to specified torque.
Poor initial movement				○	Rebound damping	Turn adjuster counterclockwise (about 2 clicks) to decrease damping.
					Oil seal	Apply grease in oil seal wall.
Soft over entire range, bottoming out	○	○			Compression damping	Turn adjuster clockwise (about 2 clicks) to increase damping.
					Oil amount	Increase oil amount by about 5 ~ 10 cm^3 (0.2 ~ 0.4 Imp oz, 0.2 ~ 0.3 US oz).
					Spring	Replace with stiff spring.
Stiff toward stroke end	○				Oil amount	Decrease oil amount by about 5 cm^3 (0.2 Imp oz, 0.2 US oz).
Soft toward stroke end, bottoming out	○				Oil amount	Increase oil amount by about 5 cm^3 (0.2 Imp oz, 0.2 US oz).
Stiff initial movement	○	○	○	○	Compression damping	Turn adjuster counterclockwise (about 2 clicks) to decrease damping.
Low front, tending to lower front posture			○	○	Compression damping	Turn adjuster clockwise (about 2 clicks) to increase damping.
					Rebound damping	Turn adjuster counterclockwise (about 2 clicks) to decrease damping.
					Balance with rear end	Set sunken length for 95 ~ 100 mm (3.7 ~ 3.9 in) when one passenger is astride seat (lower rear posture).
					Oil amount	Increase oil amount by about 5 cm^3 (0.2 Imp oz, 0.2 US oz).
“Obtrusive” front, tending to upper front posture			○	○	Compression damping	Turn adjuster counterclockwise (about 2 clicks) to decrease damping.
					Balance with rear end	Set sunken length for 90 ~ 95 mm (3.5 ~ 3.7 in) when one passenger is astride seat (upper rear posture).
					Spring	Replace with soft spring.
					Oil amount	Decrease oil amount by about 5 ~ 10 cm^3 (0.2 ~ 0.4 Imp oz, 0.2 ~ 0.3 US oz).

- Rear shock absorber

NOTE:

- If any of the following symptoms is experienced with the standard position as the base, make resetting by reference to the adjustment procedure given in the same chart.
- Adjust the rebound damping in 2-click increments or decrements.
- Adjust the low compression damping in 1-click increments or decrements.
- Adjust the high compression damping in 1/6 turn increments or decrements.

Symptom	Section				Check	Adjust
	Jump	Large gap	Medium gap	Small gap		
Stiff, tending to sink			○	○	Rebound damping Spring set length	Turn adjuster counterclockwise (about 2 clicks) to decrease damping. Set sunken length for 90 ~ 100 mm (3.5 ~ 3.9 in) when one passenger is astride seat.
Spongy and unstable			○	○	Rebound damping Low compression damping Spring	Turn adjuster clockwise (about 2 clicks) to increase damping. Turn adjuster clockwise (about 1 click) to increase damping. Replace with stiff spring.
Heavy and dragging			○	○	Rebound damping Spring	Turn adjuster counterclockwise (about 2 clicks) to decrease damping. Replace with soft spring.
Poor road gripping				○	Rebound damping Low compression damping High compression damping Spring set length Spring	Turn adjuster counterclockwise (about 2 clicks) to decrease damping. Turn adjuster clockwise (about 1 clicks) to increase damping. Turn adjuster clockwise (about 1/6 clicks) to increase damping. Set sunken length for 90 ~ 100 mm (3.5 ~ 3.9 in) when one passenger is astride seat. Replace with soft spring.
Bottoming out	○	○			High compression damping Spring set length Spring	Turn adjuster clockwise (about 1/6 turn) to increase damping. Set sunken length for 90 ~ 100 mm (3.5 ~ 3.9 in) when one passenger in astride seat. Replace with stiff spring.
Bouncing	○	○			Rebound damping Spring	Turn adjuster clockwise (about 2 clicks) to increase damping. Replace with soft spring.
Stiff travel	○	○			High compression damping Spring set length Spring	Turn adjuster counterclockwise (about 1/6 turn) to decrease damping. Set sunken length for 95 ~ 100 mm (3.7 ~ 3.9 in) when one passenger is astride seat. Replace with soft spring.

PRINTED ON RECYCLED PAPER

YAMAHA MOTOR CO., LTD.
2500 SHINGAI IWATA SHIZUOKA JAPAN

PRINTED IN JAPAN
2005.09-2.0×1 CR
(E,F,G)