Wiring Diagrams

Index

Air Conditioner 12
Anti-lock Brake System 13
Battery 1
Blower Controls 12
Charging System 1
Cigarette Lighter 7
Clock 7
Cruise Control 10
Defogger, Rear Window 11
Fan Control 12
Fuel Injection System 14, 15
Gauges 2
Heater Control 12
Horns 4
Ignition Switch 1
Ignition System 1
Integrated Control Unit 4
Interlock System 3
Lights, Exterior
- Back-up Lights 8
- Brake Lights 8
- Daytime Running Lights (Canada) 6
- Hazard Lights 7
- Headlights 5, 6
- License Plate Lights 5, 6
- Parking Lights 5, 6
- Tailights 5, 6
- Turn Signal Lights 7

Lights, Interior
- Ashtray Light 7
- Ceiling Lights 4
- Dashlight Brightness Control 5, 6
- Trunk Light 4

Lighting System 5, 6
Locks, Power 9
Mirrors, Power 8
Moonroof 11
Shift Lever Position Indicator 3
Starting System 1
Stereo Sound System 7
Supplemental Restraint System (SRS) 16
Turn Signal/Hazard Flasher System 7
Washer, Windshield 10
Windows, Power 9
Wipers, Windshield 10

Fuel Injection System Diagram
Fuel Injection System Connectors

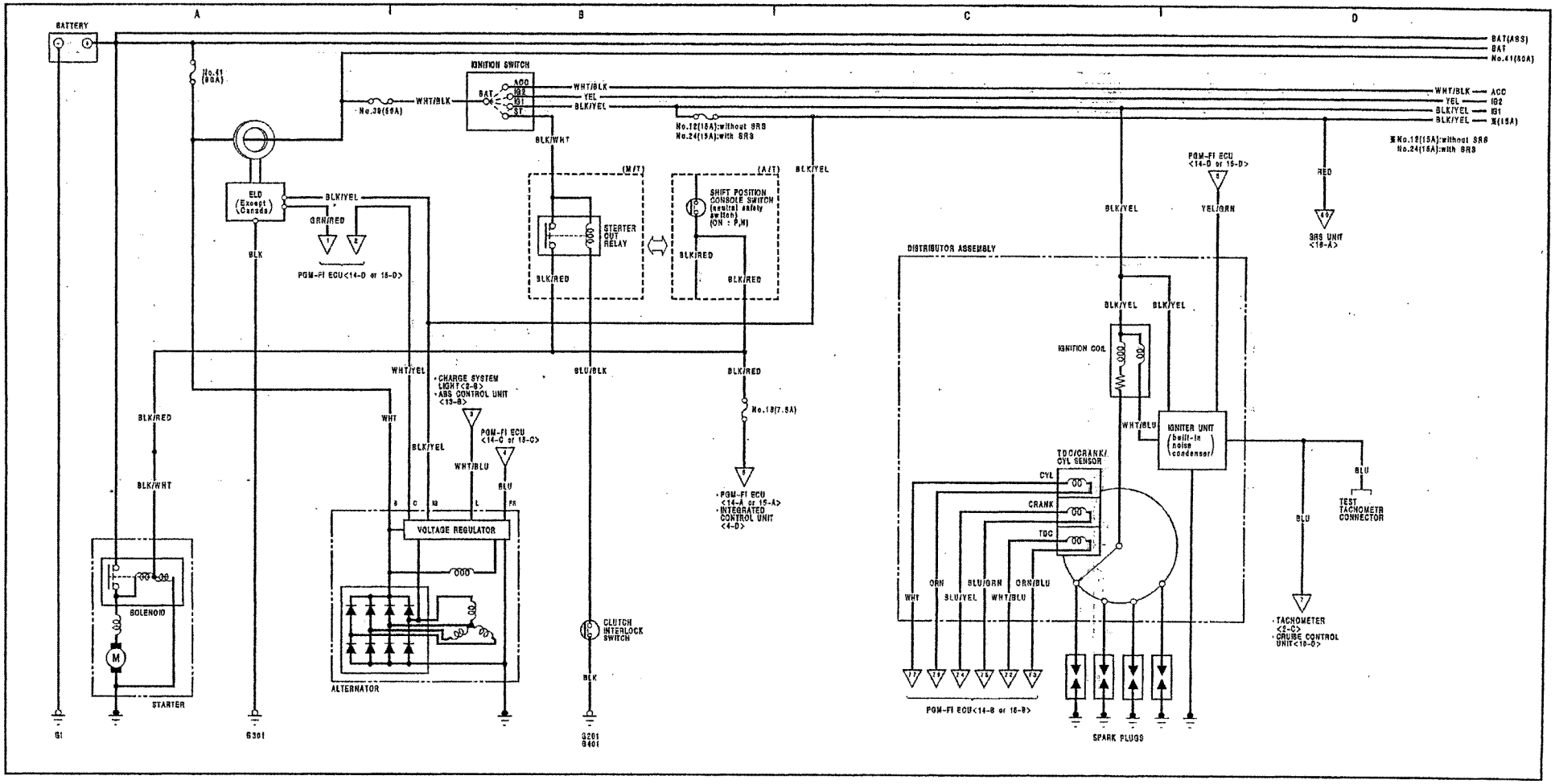
BATTERY
IGNITION SWITCH
ACC
IG2
IG1
ST
BAT
BAT(ABS)
BAT
No.41(80A)
No.41 (80A)
No.30(50A)
WHT/BLK
YEL
BLK/YEL
BLK/WHT
No.12(15A):without SRS
No.24(15A):with SRS
※No.12(15A):without SRS
No.24(15A):with SRS
ELD (Except Canada)
BLK/YEL
GRN/RED
BLK
PGM-FI ECU<14-D or 15-D>
(M/T)
(A/T)
STARTER CUT RELAY
SHIFT POSITION CONSOLE SWITCH (neutral safety switch) (ON : P,N)
BLK/RED
BLU/BLK
BLK/RED
No.18(7.5A)
PGM-FI ECU <14-A or 15-A>
INTEGRATED CONTROL UNIT <4-D>
CHARGE SYSTEM LIGHT<2-B>
ABS CONTROL UNIT <13-B>
PGM-FI ECU <14-C or 15-C>
WHT/YEL
WHT
WHT/BLU
BLU
VOLTAGE REGULATOR
ALTERNATOR
SOLENOID
STARTER
CLUTCH INTERLOCK SWITCH
BLK
G1
G301
G201
G401
DISTRIBUTOR ASSEMBLY
IGNITION COIL
IGNITER UNIT (built-in noise condenser)
TDC/CRANK/CYL SENSOR
CYL
CRANK
TDC
WHT
ORN
BLU/YEL
BLU/GRN
WHT/BLU
ORN/BLU
YEL/GRN
RED
SRS UNIT <18-A>
TEST TACHOMETER CONNECTOR
TACHOMETER <2-C>
CRUISE CONTROL UNIT<16-D>
PGM-FI ECU<14-B or 16-B>
SPARK PLUGS

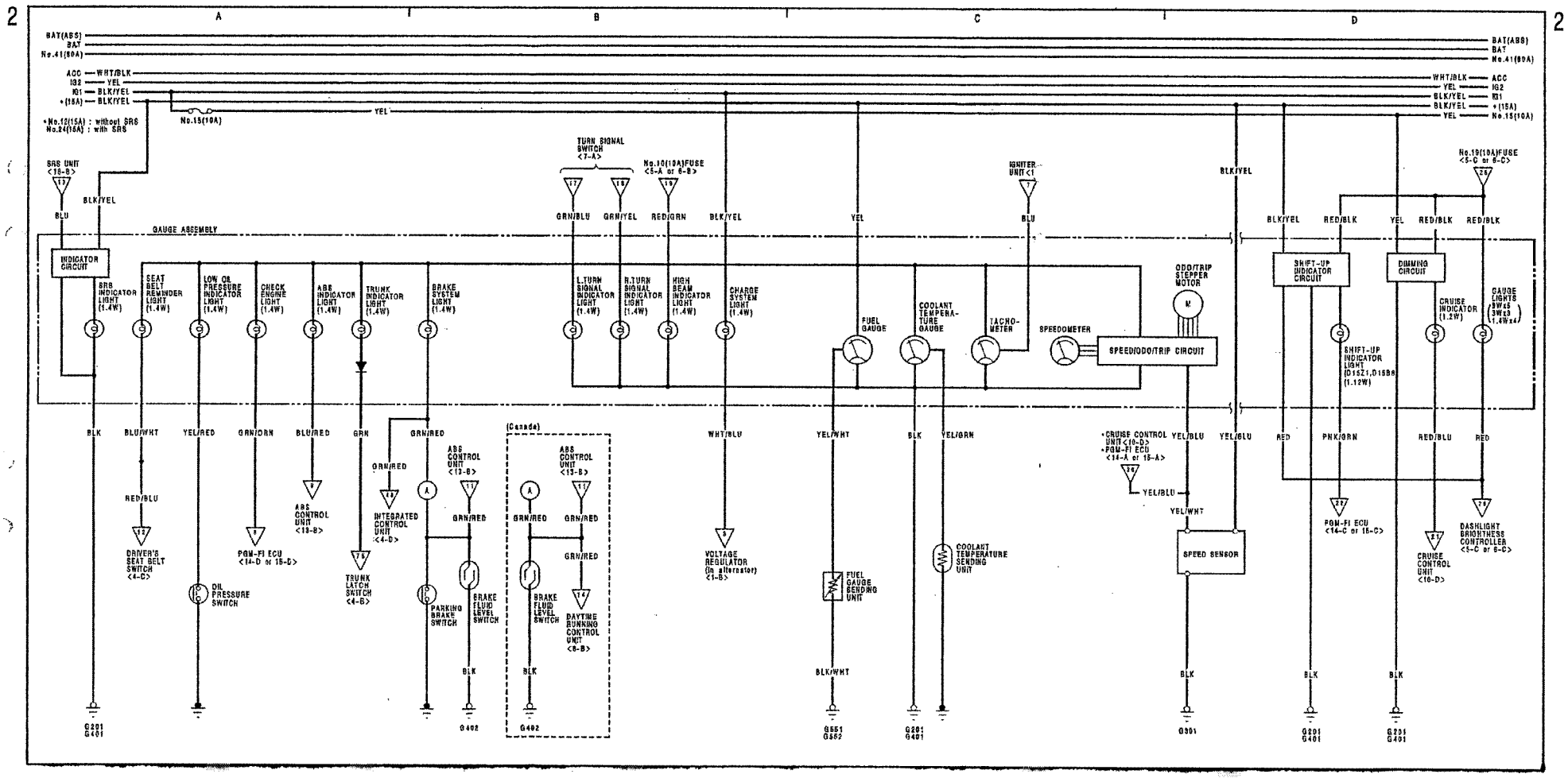
2
A
B
C
D
BAT(ABS)
BAT
No.41(80A)
ACC
IG2
IG1
*(15A)
WHT/BLK
YEL
BLK/YEL
*No.12(15A) : without SRS
No.24(15A) : with SRS
No.15(10A)
SRS UNIT <15-B>
BLU
BLK/YEL
GAUGE ASSEMBLY
INDICATOR CIRCUIT
SRS INDICATOR LIGHT (1.4W)
SEAT BELT REMINDER LIGHT (1.4W)
LOW OIL PRESSURE INDICATOR LIGHT (1.4W)
CHECK ENGINE LIGHT (1.4W)
ABS INDICATOR LIGHT (1.4W)
TRUNK INDICATOR LIGHT (1.4W)
BRAKE SYSTEM LIGHT (1.4W)
TURN SIGNAL SWITCH <7-A>
GRN/BLU
GRN/YEL
No.10(10A)FUSE <5-A or 6-B>
RED/GRN
L.TURN SIGNAL INDICATOR LIGHT (1.4W)
R.TURN SIGNAL INDICATOR LIGHT (1.4W)
HIGH BEAM INDICATOR LIGHT (1.4W)
CHARGE SYSTEM LIGHT (1.4W)
IGNITER UNIT <1>
FUEL GAUGE
COOLANT TEMPERATURE GAUGE
TACHOMETER
SPEEDOMETER
ODO/TRIP STEPPER MOTOR
SPEED/ODO/TRIP CIRCUIT
SHIFT-UP INDICATOR CIRCUIT
DIMMING CIRCUIT
No.19(10A)FUSE <5-C or 6-C>
SHIFT-UP INDICATOR LIGHT (D15Z1,D15B8) (1.12W)
CRUISE INDICATOR (1.2W)
GAUGE LIGHTS (3W x 3, 1.4W x 4)
BLK
BLU/WHT
YEL/RED
GRN/ORN
BLU/RED
GRN
GRN/RED
RED/BLU
DRIVER'S SEAT BELT SWITCH <4-C>
OIL PRESSURE SWITCH
PGM-FI ECU <14-D or 15-D>
ABS CONTROL UNIT <13-B>
TRUNK LATCH SWITCH <4-B>
INTEGRATED CONTROL UNIT <4-D>
PARKING BRAKE SWITCH
BRAKE FLUID LEVEL SWITCH
(Canada)
BRAKE FLUID LEVEL SWITCH
DAYTIME RUNNING CONTROL UNIT <8-B>
WHT/BLU
VOLTAGE REGULATOR (In alternator) <1-B>
YEL/WHT
FUEL GAUGE SENDING UNIT
BLK/WHT
YEL/GRN
COOLANT TEMPERATURE SENDING UNIT
*CRUISE CONTROL UNIT <10-D>
*PGM-FI ECU <14-A or 15-A>
YEL/BLU
SPEED SENSOR
YEL/GLU
RED
PNK/ORN
PGM-FI ECU <14-C or 15-C>
CRUISE CONTROL UNIT <10-D>
DASHLIGHT BRIGHTNESS CONTROLLER <5-C or 6-C>
G201
G401
G402
G551
G552
G301

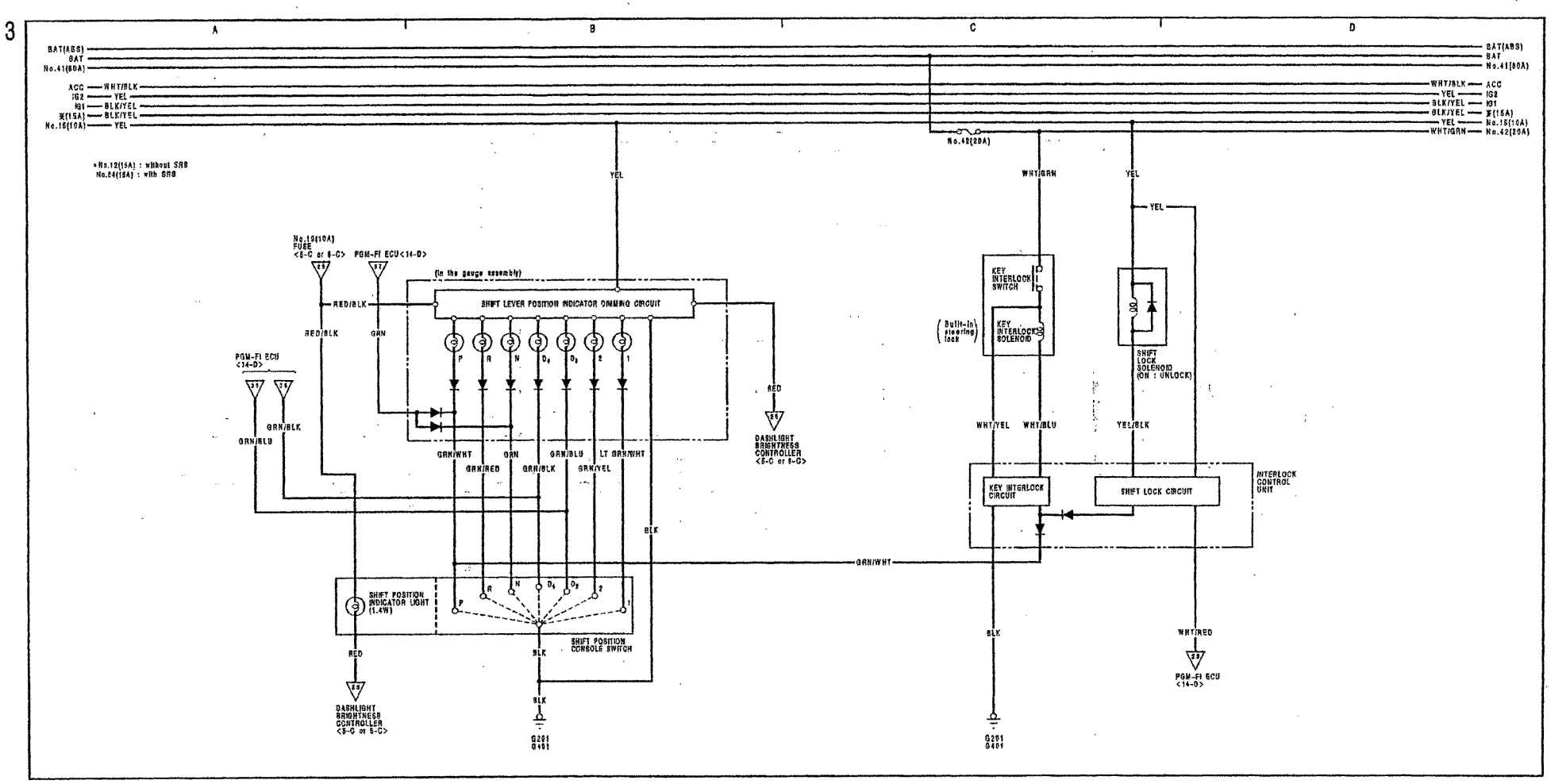
3
A
B
C
D
BAT(ABS)
BAT
No.41(80A)
ACC
IG2
IG1
*(15A)
No.15(10A)
WHT/BLK
YEL
BLK/YEL
BLK/YEL
YEL
No.42(20A)
WHT/GRN
*No.12(15A) : without SRS
No.24(15A) : with SRS
No.13(10A) FUSE <8-C or 8-C>
PGM-FI ECU <14-D>
(In the gauge assembly)
SHIFT LEVER POSITION INDICATOR DIMMING CIRCUIT
RED/BLK
GRN
P
R
N
D4
D3
2
1
GRN/WHT
GRN/RED
GRN/BLU
GRN/BLK
LT GRN/WHT
GRN/YEL
RED
DASHLIGHT BRIGHTNESS CONTROLLER <8-C or 8-C>
BLK
SHIFT POSITION INDICATOR LIGHT (1.4W)
SHIFT POSITION CONSOLE SWITCH
G201
G401
KEY INTERLOCK SWITCH
KEY INTERLOCK SOLENOID
(Built-in steering lock)
SHIFT LOCK SOLENOID (ON : UNLOCK)
WHT/YEL
WHT/BLU
YEL/BLK
INTERLOCK CONTROL UNIT
KEY INTERLOCK CIRCUIT
SHIFT LOCK CIRCUIT
WHT/RED
PGM-FI ECU <14-D>

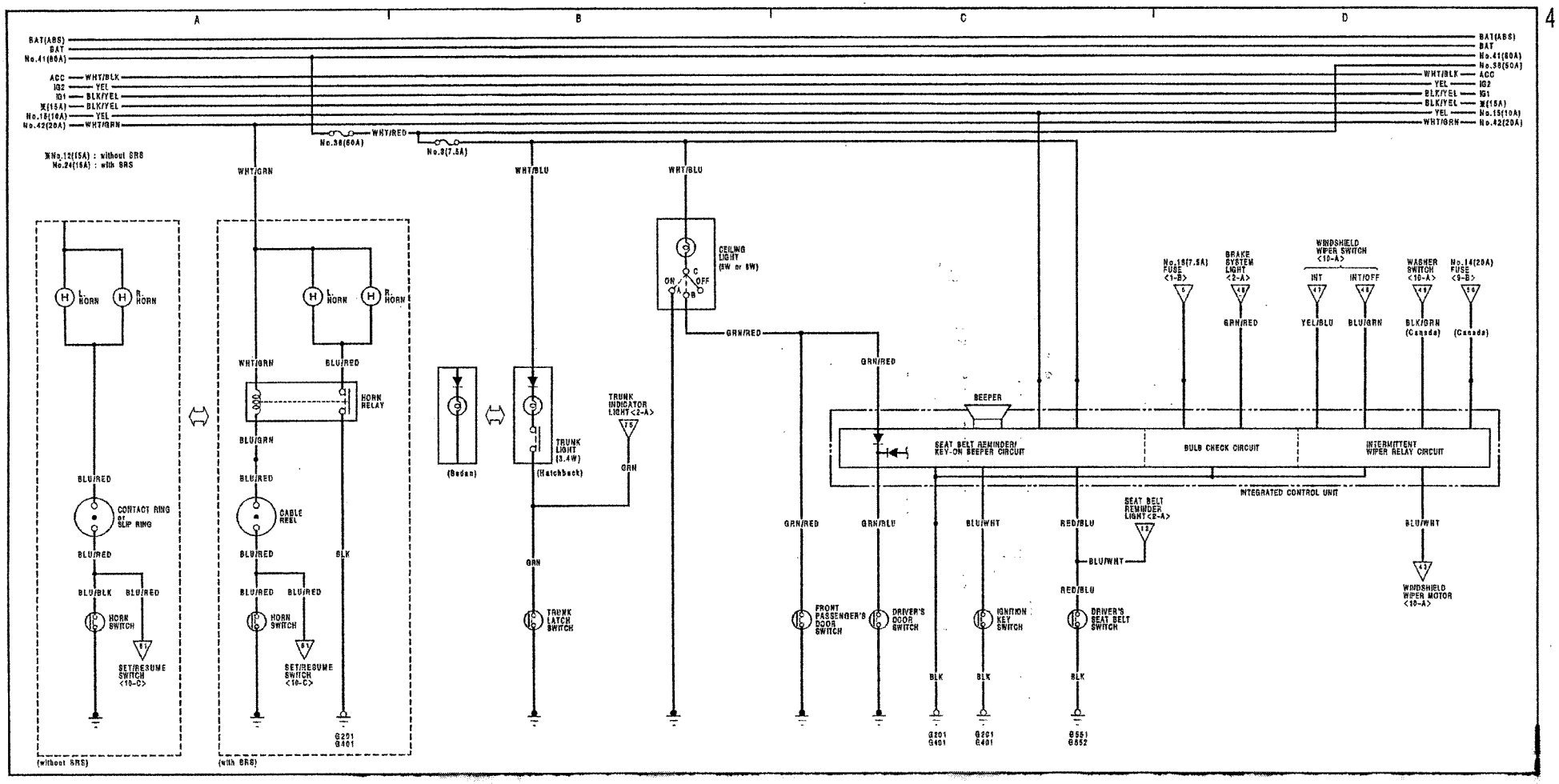
4
A
B
C
D
BAT(ABS)
BAT
No.41(60A)
ACC
IG2
IG1
*(15A)
No.18(10A)
No.42(20A)
WHT/BLK
YEL
BLK/YEL
BLK/YEL
YEL
WHT/GRN
No.58(50A)
*No.12(15A) : without SRS
No.24(15A) : with SRS
No.58(60A)
WHT/RED
No.8(7.5A)
WHT/GRN
WHT/BLU
WHT/BLU
L. HORN
R. HORN
CONTACT RING or SLIP RING
BLU/RED
BLU/BLK
HORN SWITCH
SET/RESUME SWITCH <10-C>
(without SRS)
HORN RELAY
BLU/GRN
CABLE REEL
BLK
G221
G401
(with SRS)
(Sedan)
TRUNK LIGHT (3.4W)
(Hatchback)
TRUNK INDICATOR LIGHT <2-A>
GRN
TRUNK LATCH SWITCH
CEILING LIGHT (8W or 5W)
ON
OFF
GRN/RED
No.19(7.5A) FUSE <1-B>
BRAKE SYSTEM LIGHT <2-A>
WINDSHIELD WIPER SWITCH <10-A>
INT
INT/OFF
WASHER SWITCH <10-A>
No.14(20A) FUSE <9-B>
YEL/BLU
BLU/GRN
BLK/GRN (Canada)
(Canada)
BEEPER
SEAT BELT REMINDER/ KEY-ON BEEPER CIRCUIT
BULB CHECK CIRCUIT
INTERMITTENT WIPER RELAY CIRCUIT
INTEGRATED CONTROL UNIT
SEAT BELT REMINDER LIGHT <2-A>
GRN/BLU
BLU/WHT
RED/BLU
FRONT PASSENGER'S DOOR SWITCH
DRIVER'S DOOR SWITCH
IGNITION KEY SWITCH
DRIVER'S SEAT BELT SWITCH
WINDSHIELD WIPER MOTOR <10-A>
G201
G401
G551
G552

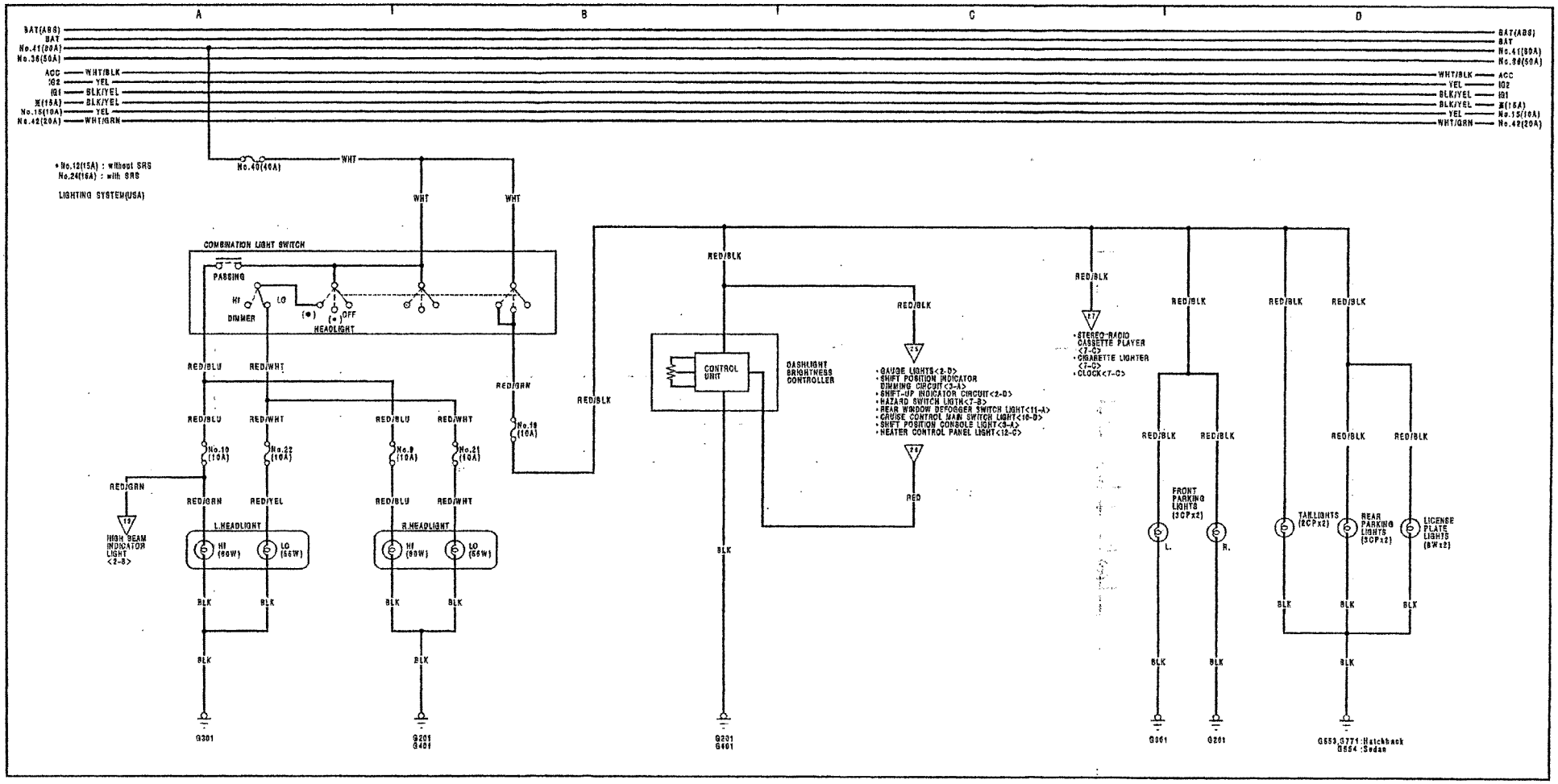
A
B
C
D
BAT(ABS)
BAT
No.41(80A)
No.36(50A)
ACC
IG2
IG1
※(15A)
No.15(10A)
No.42(20A)
WHT/BLK
YEL
BLK/YEL
WHT/GRN
* No.12(15A) : without SRS
No.24(16A) : with SRS
LIGHTING SYSTEM(USA)
No.40(40A)
WHT
COMBINATION LIGHT SWITCH
PASSING
HI
LO
DIMMER
OFF
HEADLIGHT
RED/BLU
RED/WHT
RED/GRN
No.19 (10A)
No.22 (10A)
No.9 (10A)
No.21 (10A)
No.18 (10A)
RED/YEL
HIGH BEAM INDICATOR LIGHT <2-B>
L.HEADLIGHT
R.HEADLIGHT
HI (60W)
LO (55W)
BLK
G301
G201
G401
RED/BLK
CONTROL UNIT
DASHLIGHT BRIGHTNESS CONTROLLER
• GAUGE LIGHTS<2-D>
• SHIFT POSITION INDICATOR DIMMING CIRCUIT<3-A>
• SHIFT-UP INDICATOR CIRCUIT<2-D>
• HAZARD SWITCH LIGHT<7-B>
• REAR WINDOW DEFOGGER SWITCH LIGHT<11-A>
• CRUISE CONTROL MAIN SWITCH LIGHT<10-D>
• SHIFT POSITION CONSOLE LIGHT<3-A>
• HEATER CONTROL PANEL LIGHT<12-C>
RED
• STEREO-RADIO CASSETTE PLAYER <7-C>
• CIGARETTE LIGHTER <7-C>
• CLOCK<7-C>
FRONT PARKING LIGHTS (3CPx2)
L.
R.
TAILLIGHTS (8CPx2)
REAR PARKING LIGHTS (3CPx2)
LICENSE PLATE LIGHTS (8Wx2)
G361
G261
G553,G771:Hatchback
G554 :Sedan

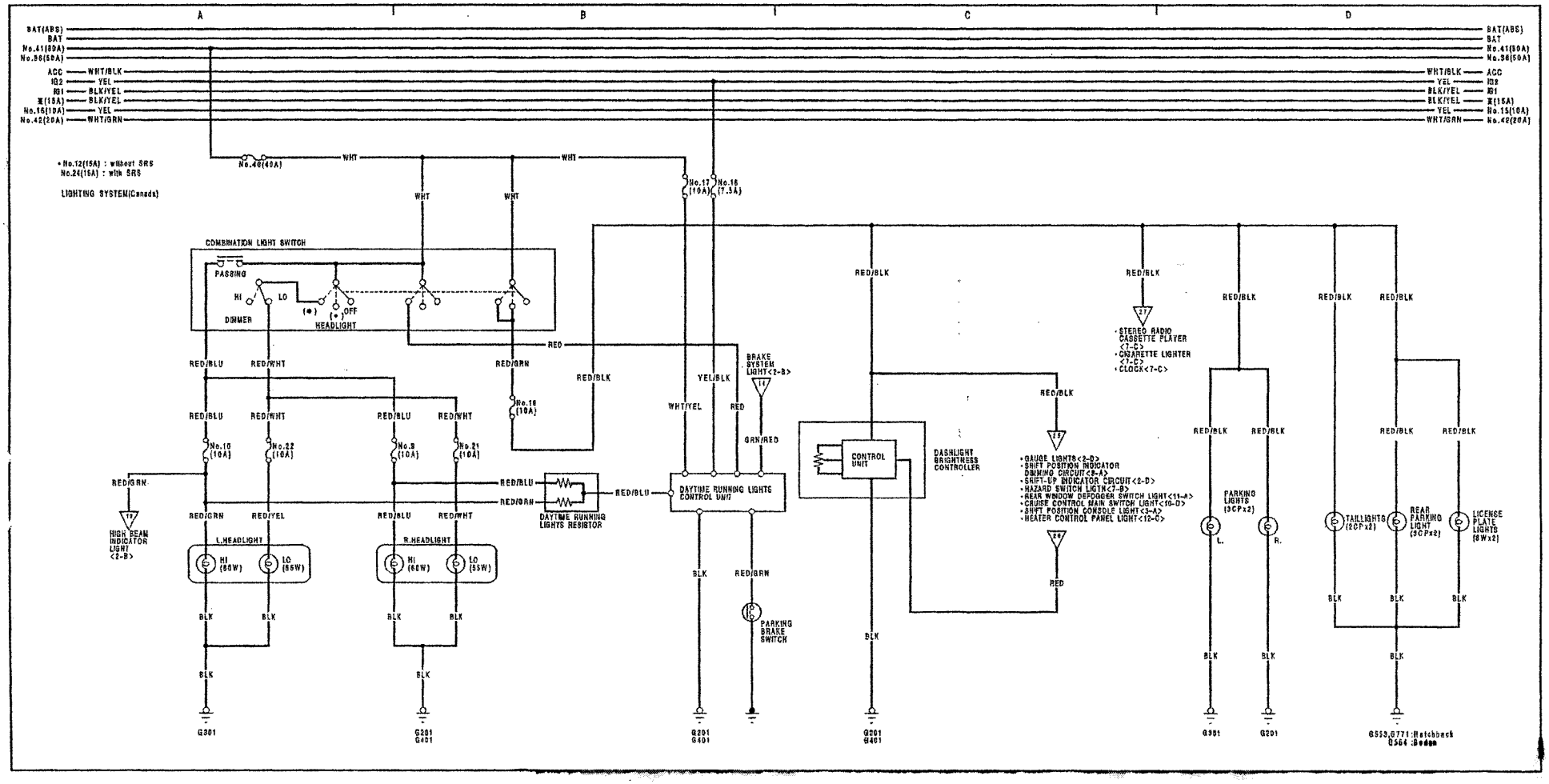
A
B
C
D
BAT(ABS)
BAT
No.41(50A)
No.36(50A)
ACC
IG2
IG1
※(15A)
No.15(10A)
No.42(20A)
WHT/BLK
YEL
BLK/YEL
BLK/YEL
YEL
WHT/GRN
• No.12(15A) : without SRS
No.24(15A) : with SRS
LIGHTING SYSTEM(Canada)
No.40(40A)
WHT
No.17 (10A)
No.18 (7.5A)
COMBINATION LIGHT SWITCH
PASSING
HI
LO
DIMMER
(•)
(•)
OFF
HEADLIGHT
RED
RED/BLU
RED/WHT
RED/GRN
No.16 (10A)
RED/BLK
YEL/BLK
WHT/YEL
BRAKE SYSTEM LIGHT<2-B>
GRN/RED
No.10 (10A)
No.22 (10A)
No.9 (10A)
No.21 (10A)
HIGH BEAM INDICATOR LIGHT <2-B>
DAYTIME RUNNING LIGHTS RESISTOR
DAYTIME RUNNING LIGHTS CONTROL UNIT
CONTROL UNIT
DASHLIGHT BRIGHTNESS CONTROLLER
• STEREO RADIO CASSETTE PLAYER <7-C>
• CIGARETTE LIGHTER <7-C>
• CLOCK<7-C>
• GAUGE LIGHTS<2-D>
• SHIFT POSITION INDICATOR DIMMING CIRCUIT<9-A>
• SHIFT-UP INDICATOR CIRCUIT<2-D>
• HAZARD SWITCH LIGTH<2-B>
• REAR WINDOW DEFOGGER SWITCH LIGHT<11-A>
• CRUISE CONTROL MAIN SWITCH LIGHT<10-D>
• SHIFT POSITION CONSOLE LIGHT<3-A>
• HEATER CONTROL PANEL LIGHT<12-C>
PARKING LIGHTS (3CPx2)
L.
R.
TAILLIGHTS (2CPx2)
REAR PARKING LIGHT (3CPx2)
LICENSE PLATE LIGHTS (8Wx2)
L.HEADLIGHT
R.HEADLIGHT
HI (65W)
LO (55W)
RED/YEL
BLK
PARKING BRAKE SWITCH
G301
G201
G401
G553,G771:Hatchback
G564 :Sedan

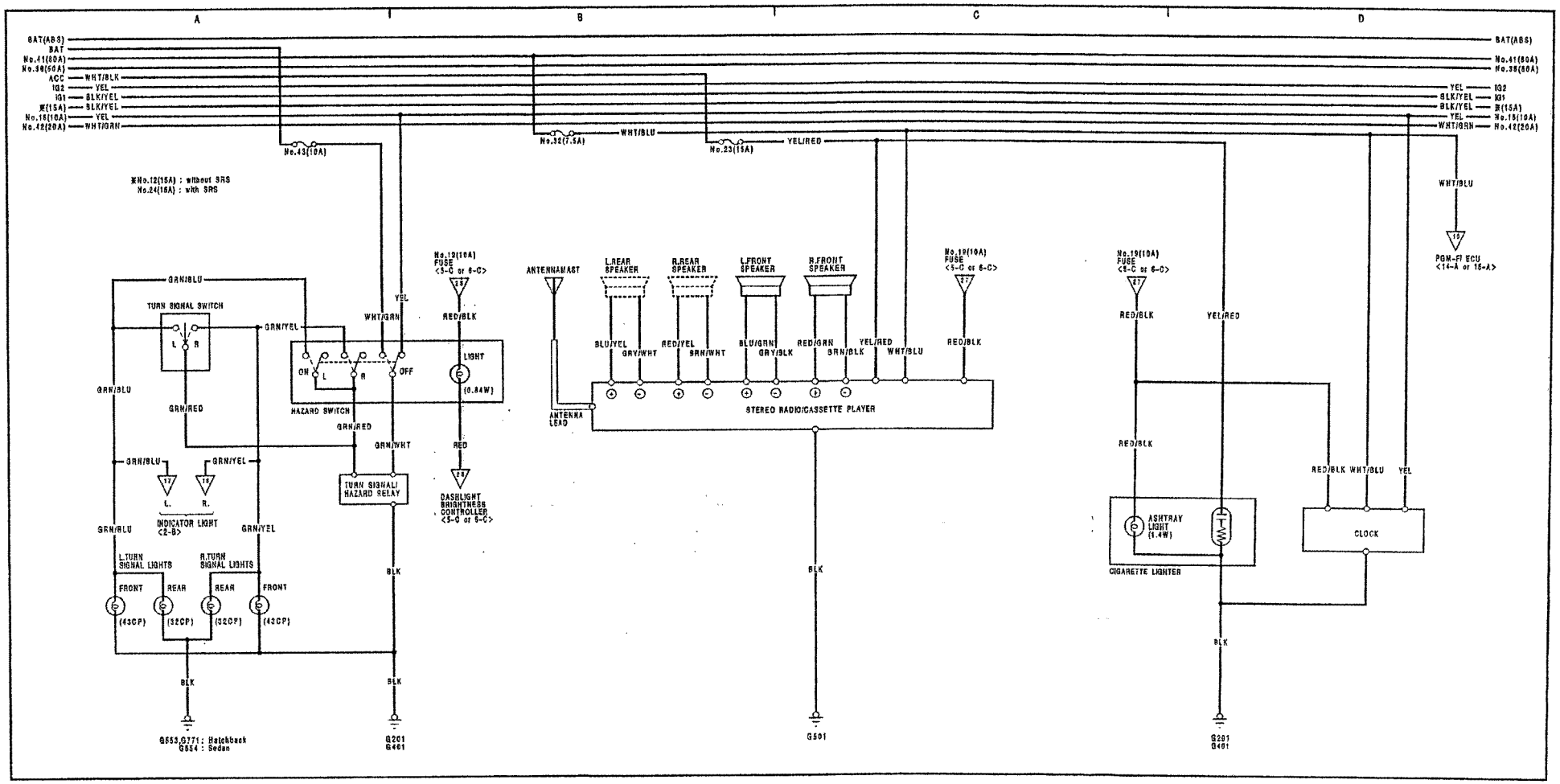
A
B
C
D
BAT(ABS)
BAT
No.41(80A)
No.38(50A)
ACC
IG2
IG1
#(15A)
No.18(10A)
No.42(20A)
WHT/BLK
YEL
BLK/YEL
BLK/YEL
YEL
WHT/GRN
No.43(10A)
No.32(7.5A)
WHT/BLU
No.23(15A)
YEL/RED
※No.12(15A) : without SRS
No.24(16A) : with SRS
WHT/BLU
PGM-FI ECU
<14-A or 15-A>
GRN/BLU
TURN SIGNAL SWITCH
GRN/YEL
L
R
GRN/RED
YEL
WHT/GRN
ON
OFF
HAZARD SWITCH
No.19(10A)
FUSE
<5-C or 6-C>
RED/BLK
LIGHT
(0.84W)
GRN/WHT
RED
TURN SIGNAL/
HAZARD RELAY
DASHLIGHT
BRIGHTNESS
CONTROLLER
<5-C or 6-C>
INDICATOR LIGHT
<2-B>
L.
R.
L.TURN
SIGNAL LIGHTS
R.TURN
SIGNAL LIGHTS
FRONT
REAR
(43CP)
(32CP)
BLK
G553,G771 : Hatchback
G554 : Sedan
G201
G401
ANTENNAMAST
ANTENNA
LEAD
L.REAR
SPEAKER
R.REAR
SPEAKER
L.FRONT
SPEAKER
R.FRONT
SPEAKER
BLU/YEL
GRY/WHT
RED/YEL
BRN/WHT
BLU/GRN
GRY/BLK
RED/GRN
BRN/BLK
STEREO RADIO/CASSETTE PLAYER
G501
ASHTRAY
LIGHT
(1.4W)
CIGARETTE LIGHTER
CLOCK

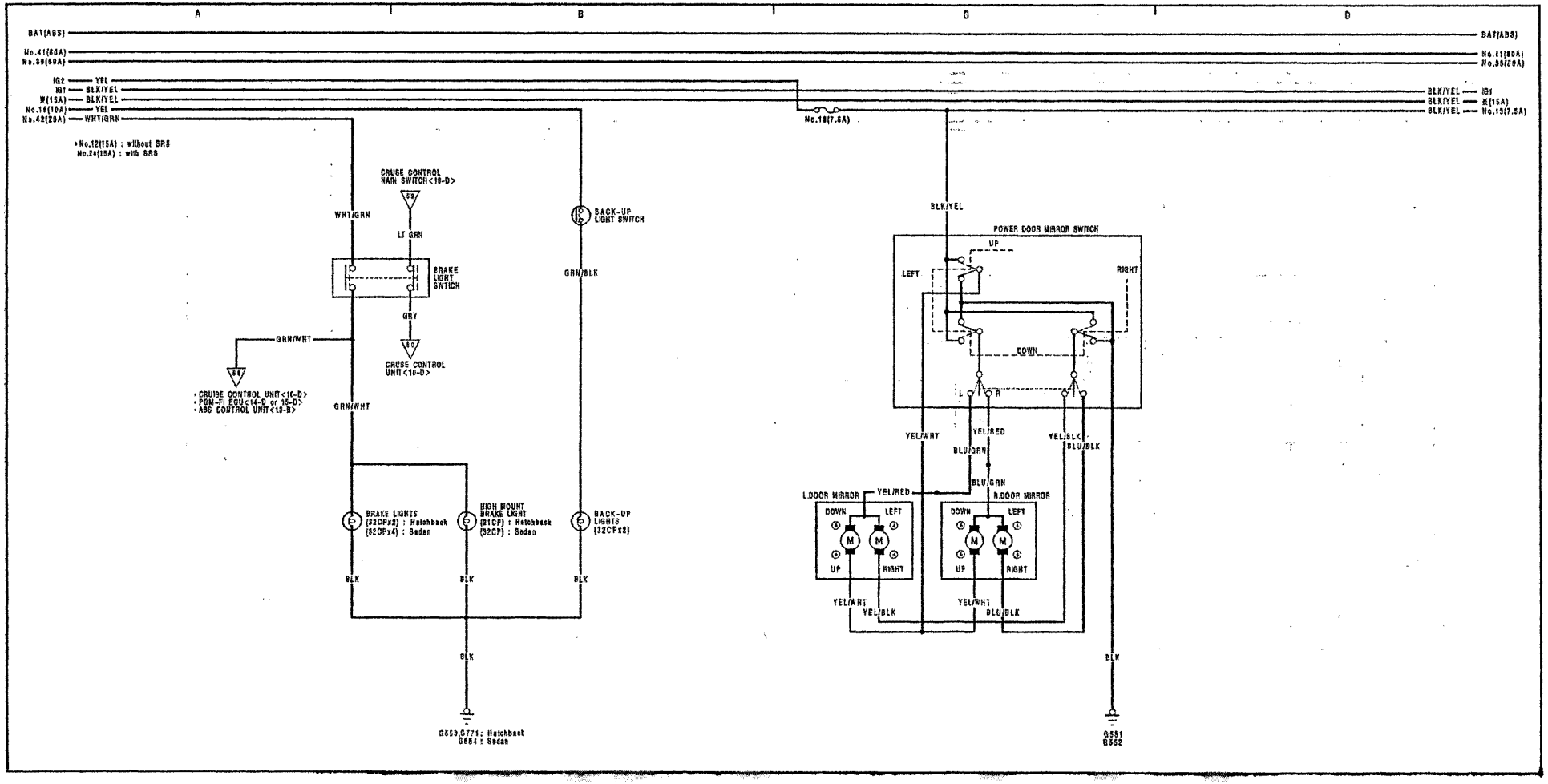
A
B
C
D
BAT(ABS)
No.41(60A)
No.39(50A)
IG2
YEL
IG1
BLK/YEL
ACC(15A)
No.16(10A)
No.42(20A)
WHT/GRN
No.13(7.5A)
*No.12(15A) : without SRS
No.24(15A) : with SRS
CRUSE CONTROL MAIN SWITCH<10-D>
LT GRN
BRAKE LIGHT SWITCH
GRY
CRUSE CONTROL UNIT<10-D>
GRN/WHT
*CRUISE CONTROL UNIT<10-D>
*PGM-FI ECU<14-D or 15-D>
*ABS CONTROL UNIT<13-B>
BACK-UP LIGHT SWITCH
GRN/BLK
BRAKE LIGHTS (32CPx2) : Hatchback (32CPx4) : Sedan
HIGH MOUNT BRAKE LIGHT (31CP) : Hatchback (32CP) : Sedan
BACK-UP LIGHTS (32CPx2)
BLK
G553,G771 : Hatchback
G554 : Sedan
POWER DOOR MIRROR SWITCH
UP
LEFT
RIGHT
DOWN
L
R
YEL/WHT
YEL/RED
BLU/GRN
YEL/BLK
BLU/BLK
L.DOOR MIRROR
R.DOOR MIRROR
M
G551
G552

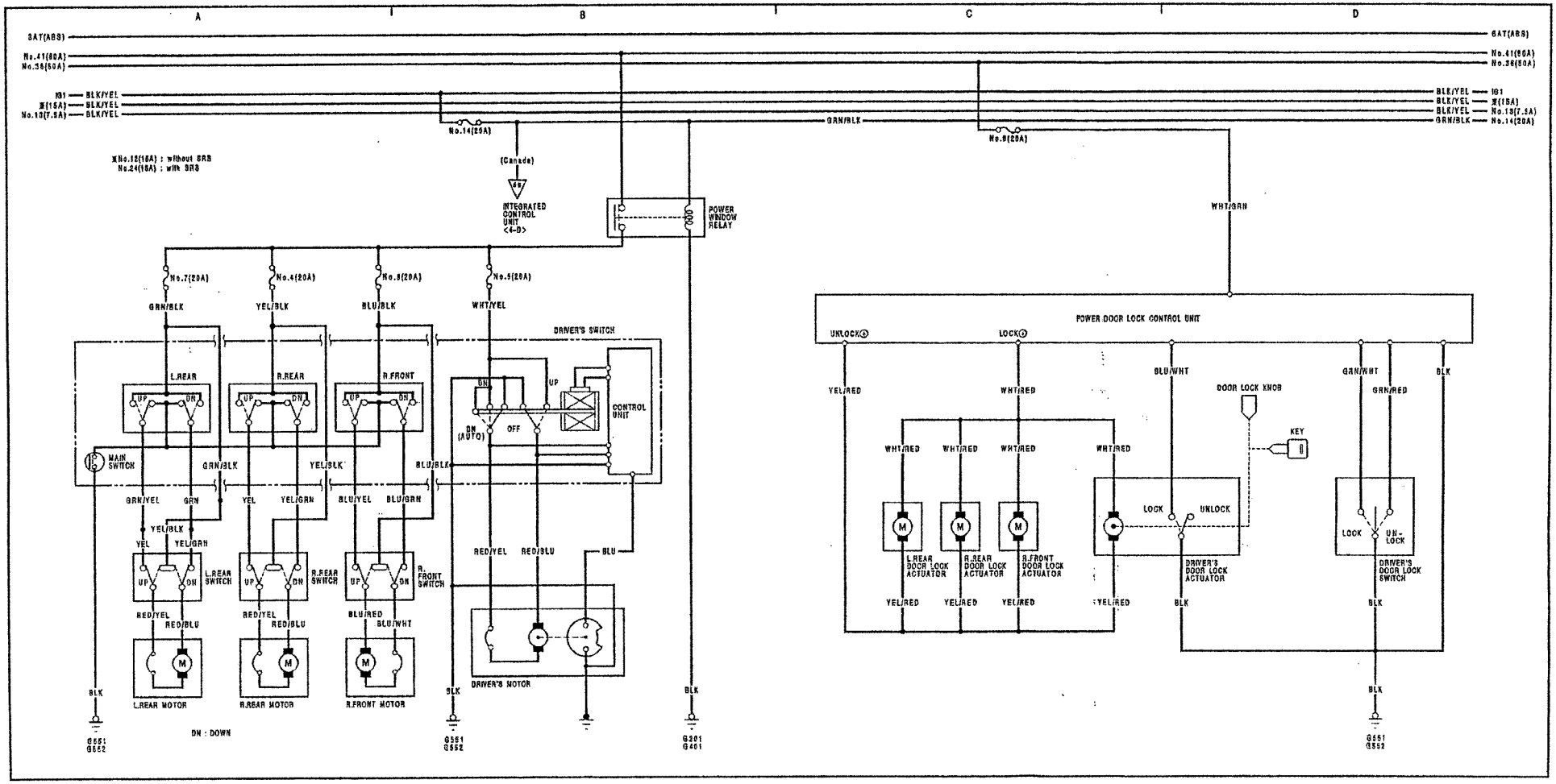
A
B
C
D
BAT(ABS)
No.41(60A)
No.36(50A)
101
BLK/YEL
※(15A)
No.13(7.5A)
No.14(20A)
GRN/BLK
No.9(20A)
※No.12(15A) : without SRS
No.24(15A) : with SRS
(Canada)
INTEGRATED CONTROL UNIT <4-D>
POWER WINDOW RELAY
WHT/GRN
No.7(20A)
No.4(20A)
No.8(20A)
No.5(20A)
GRN/BLK
YEL/BLK
BLU/BLK
WHT/YEL
DRIVER'S SWITCH
L.REAR
R.REAR
R.FRONT
UP
DN
CONTROL UNIT
DN (AUTO)
OFF
MAIN SWITCH
GRN/YEL
GRN
YEL
YEL/GRN
BLU/YEL
BLU/GRN
L.REAR SWITCH
R.REAR SWITCH
R. FRONT SWITCH
RED/YEL
RED/BLU
BLU/RED
BLU/WHT
L.REAR MOTOR
R.REAR MOTOR
R.FRONT MOTOR
DRIVER'S MOTOR
BLK
G551
G552
G201
G401
DN : DOWN
POWER DOOR LOCK CONTROL UNIT
UNLOCK
LOCK
YEL/RED
WHT/RED
BLU/WHT
GRN/WHT
GRN/RED
DOOR LOCK KNOB
KEY
L.REAR DOOR LOCK ACTUATOR
R.REAR DOOR LOCK ACTUATOR
R.FRONT DOOR LOCK ACTUATOR
DRIVER'S DOOR LOCK ACTUATOR
DRIVER'S DOOR LOCK SWITCH
UN-LOCK

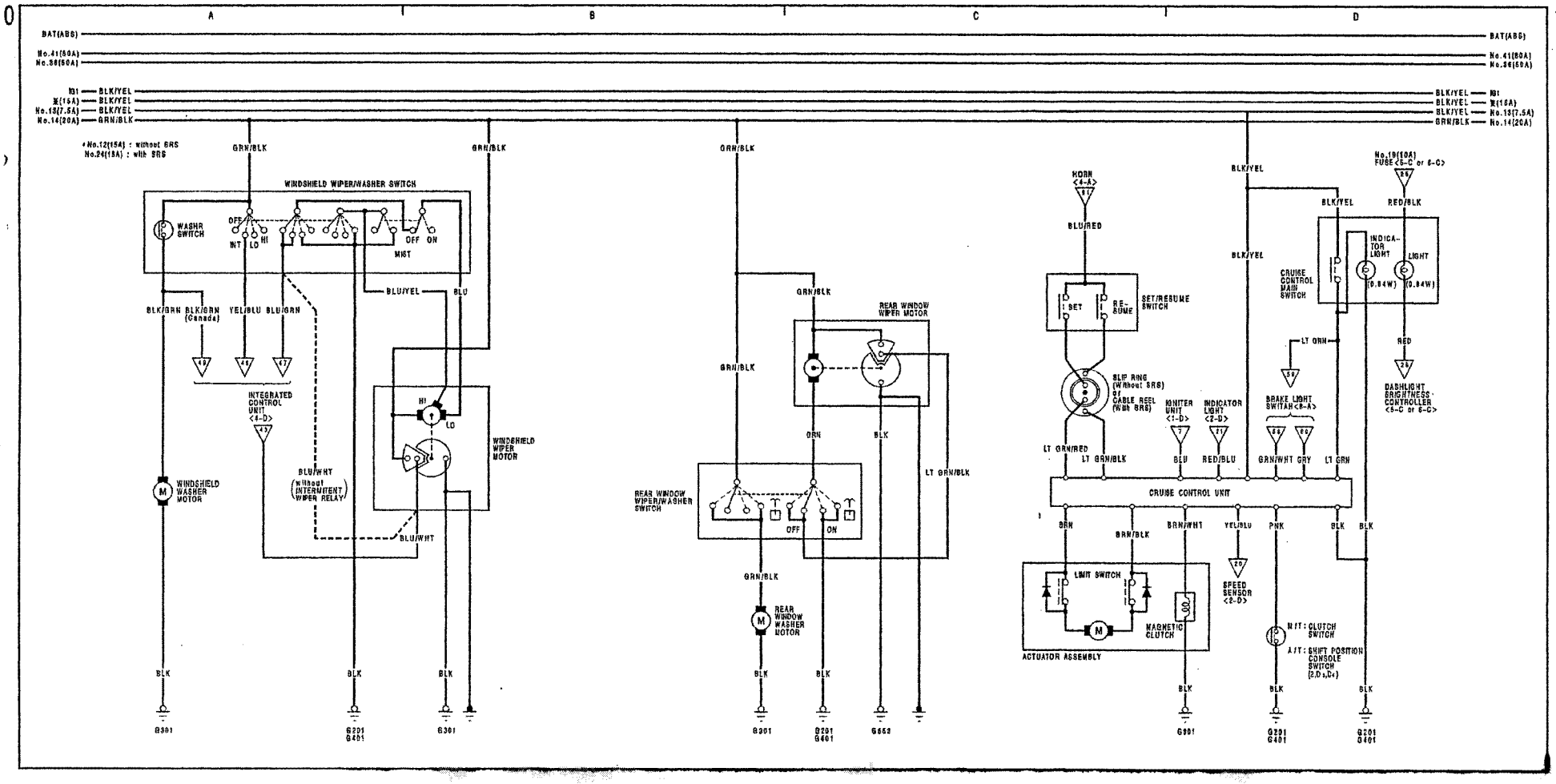
A
B
C
D
BAT(ABS)
No.41(50A)
No.36(50A)
No.13(7.5A)
No.14(20A)
BLK/YEL
GRN/BLK
*No.12(15A) : without SRS
No.24(15A) : with SRS
WINDSHIELD WIPER/WASHER SWITCH
WASHR SWITCH
OFF
INT
LO
HI
MIST
BLU/YEL
BLU
BLK/GRN
BLK/GRN (Canada)
YEL/BLU
BLU/GRN
INTEGRATED CONTROL UNIT <4-D>
WINDSHIELD WIPER MOTOR
WINDSHIELD WASHER MOTOR
BLU/WHT
(without INTERMITTENT WIPER RELAY)
BLU/WHT
BLK
G301
G201
G401
REAR WINDOW WIPER MOTOR
GRN
REAR WINDOW WIPER/WASHER SWITCH
LT GRN/BLK
REAR WINDOW WASHER MOTOR
G662
HORN <4-A>
BLU/RED
SET/RESUME SWITCH
SET
RESUME
SLIP RING (Without SRS) or CABLE REEL (With SRS)
IGNITER UNIT <1-D>
INDICATOR LIGHT <2-D>
LT GRN/RED
LT GRN/BLK
BLU
RED/BLU
No.19(10A) FUSE <5-C or 6-C>
RED/BLK
INDICATOR LIGHT
LIGHT
(0.84W)
CRUISE CONTROL MAIN SWITCH
LT GRN
RED
BRAKE LIGHT SWITCH <8-A>
GRN/WHT
GRY
DASHLIGHT BRIGHTNESS CONTROLLER <5-C or 6-C>
CRUISE CONTROL UNIT
BRN
BRN/BLK
BRN/WHT
YEL/BLU
PNK
LIMIT SWITCH
MAGNETIC CLUTCH
ACTUATOR ASSEMBLY
SPEED SENSOR <2-D>
M/T : CLUTCH SWITCH
A/T : SHIFT POSITION CONSOLE SWITCH (2,D,D4)
G901

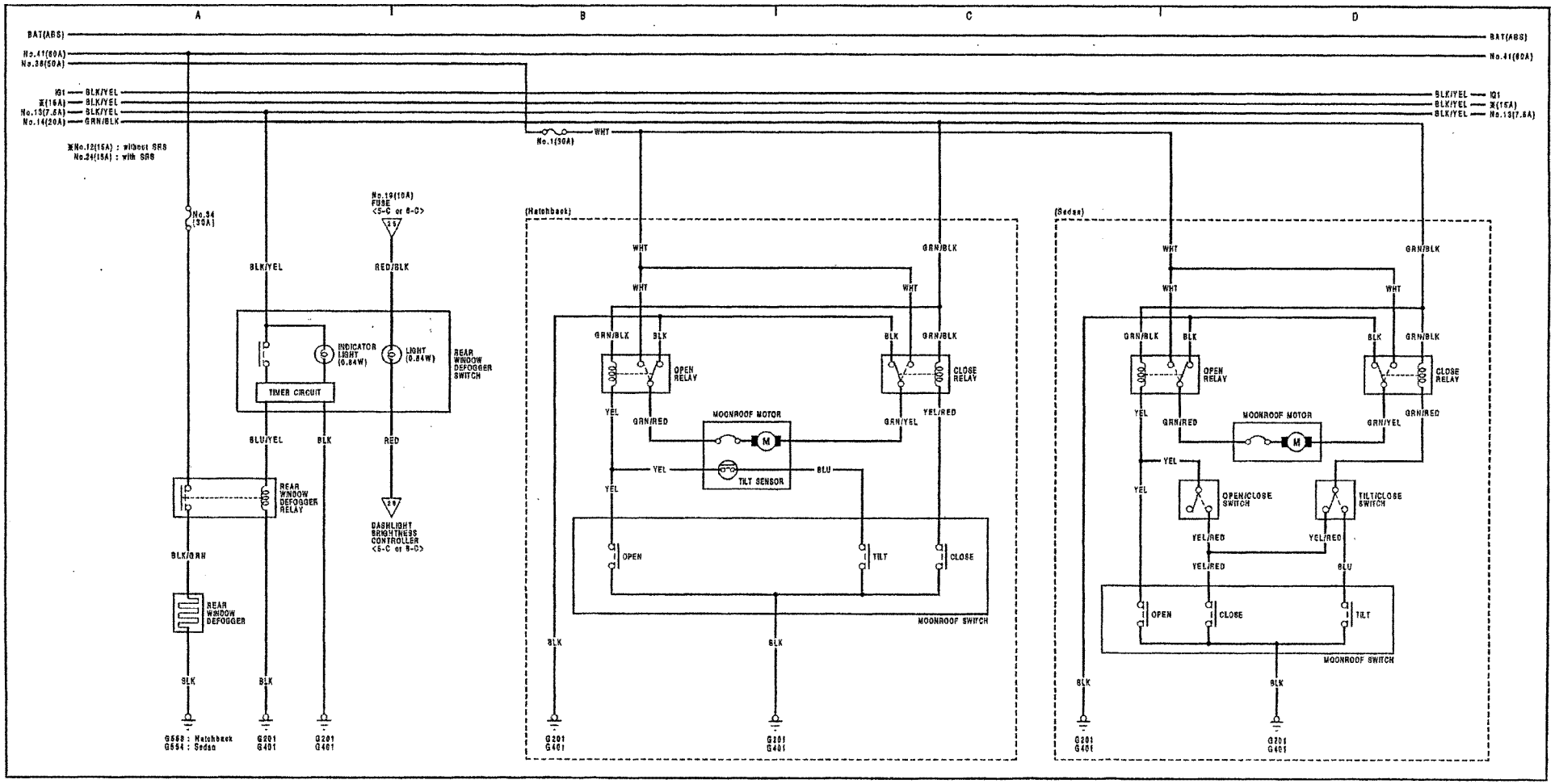
A
B
C
D
BAT(ABS)
No.41(60A)
No.38(50A)
IG1
BLK/YEL
※(15A)
No.13(7.5A)
No.14(20A)
GRN/BLK
※No.12(15A) : without SRS
No.24(15A) : with SRS
No.1(50A)
WHT
No.34 (30A)
No.19(10A) FUSE <5-C or 6-C>
BLK/YEL
RED/BLK
INDICATOR LIGHT (0.84W)
LIGHT (0.84W)
REAR WINDOW DEFOGGER SWITCH
TIMER CIRCUIT
BLU/YEL
BLK
RED
REAR WINDOW DEFOGGER RELAY
DASHLIGHT BRIGHTNESS CONTROLLER <5-C or 6-C>
BLK/GRN
REAR WINDOW DEFOGGER
BLK
G568 : Hatchback
G554 : Sedan
G201
G401
(Hatchback)
GRN/BLK
OPEN RELAY
CLOSE RELAY
YEL
GRN/RED
MOONROOF MOTOR
GRN/YEL
YEL/RED
TILT SENSOR
BLU
OPEN
TILT
CLOSE
MOONROOF SWITCH
(Sedan)
OPEN/CLOSE SWITCH
TILT/CLOSE SWITCH

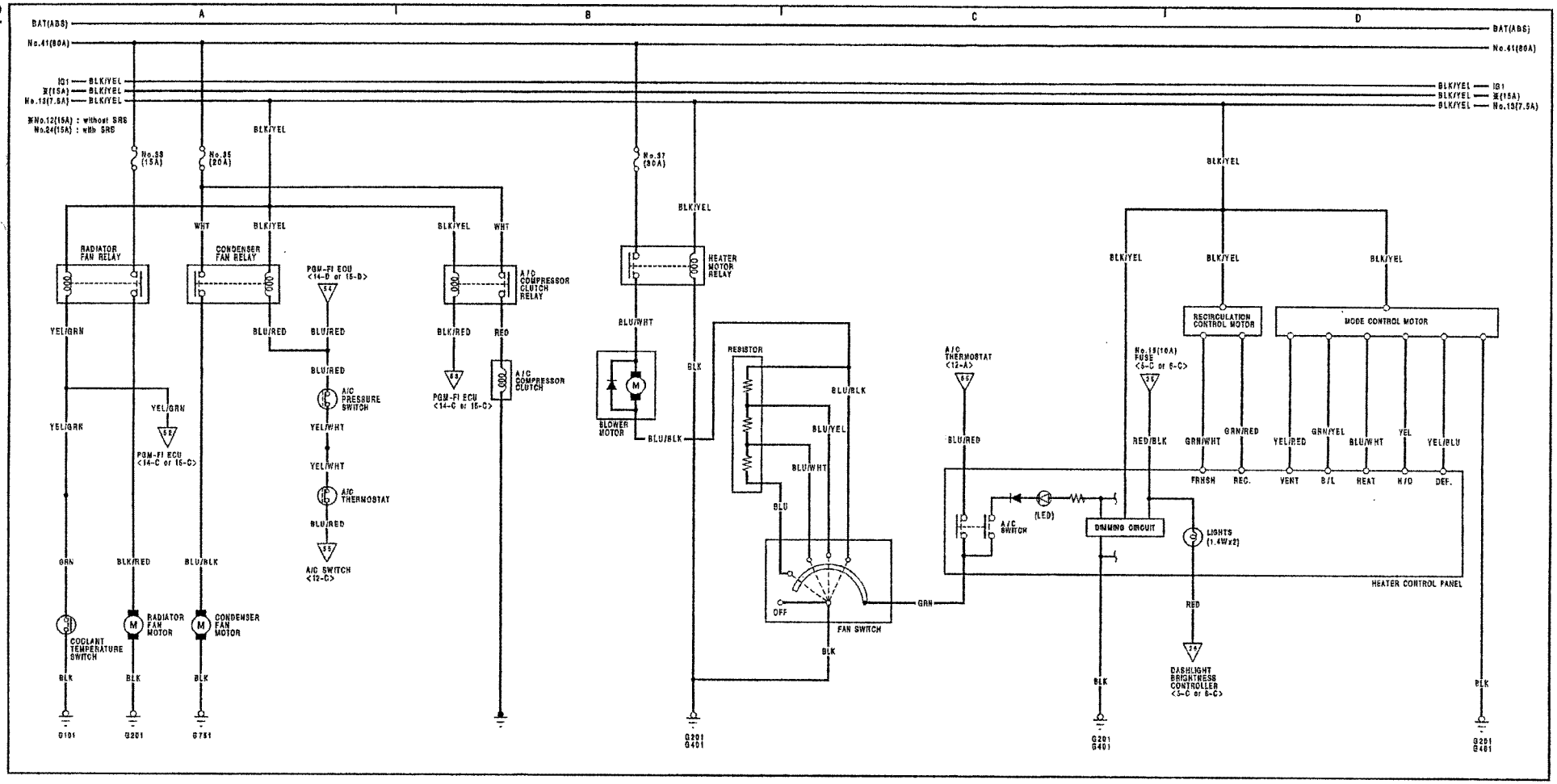
A
B
C
D
BAT(ABS)
No.41(80A)
IG1
※(15A)
No.13(7.5A)
BLK/YEL
※No.12(15A) : without SRS
No.24(15A) : with SRS
No.38 (15A)
No.35 (20A)
No.37 (30A)
WHT
RADIATOR FAN RELAY
CONDENSER FAN RELAY
PGM-FI ECU <14-D or 15-D>
A/C COMPRESSOR CLUTCH RELAY
HEATER MOTOR RELAY
YEL/GRN
BLU/RED
BLK/RED
RED
BLU/WHT
BLU/BLK
A/C PRESSURE SWITCH
YEL/WHT
A/C THERMOSTAT
A/C SWITCH <12-C>
PGM-FI ECU <14-C or 15-C>
A/C COMPRESSOR CLUTCH
BLOWER MOTOR
BLK
RESISTOR
BLU/YEL
BLU
OFF
FAN SWITCH
GRN
COOLANT TEMPERATURE SWITCH
RADIATOR FAN MOTOR
CONDENSER FAN MOTOR
G101
G201
G751
G401
A/C THERMOSTAT <12-A>
A/C SWITCH
(LED)
DIMMING CIRCUIT
LIGHTS (1.4Wx2)
No.19(10A) FUSE <5-C or 6-C>
RECIRCULATION CONTROL MOTOR
MODE CONTROL MOTOR
RED/BLK
GRN/WHT
GRN/RED
YEL/RED
GRN/YEL
BLU/WHT
YEL
YEL/BLU
FRNSH
REC.
VENT
B/L
HEAT
H/D
DEF.
HEATER CONTROL PANEL
DASHLIGHT BRIGHTNESS CONTROLLER <5-C or 6-C>

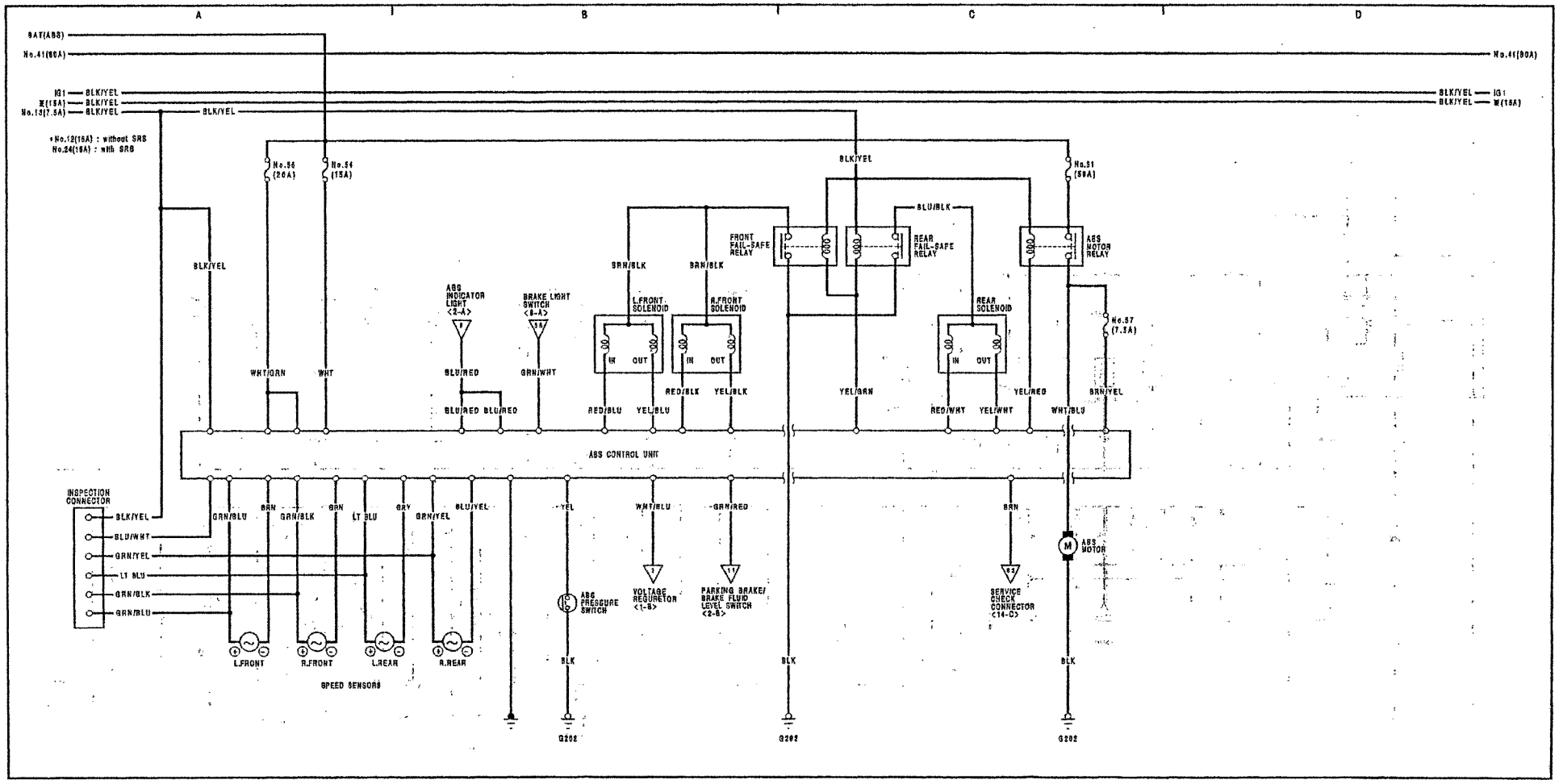
A
B
C
D
BAT(ABS)
No.41(80A)
IG1
E(15A)
No.13(7.5A)
BLK/YEL
*No.12(15A) : without SRS
No.24(15A) : with SRS
No.56 (20A)
No.54 (15A)
No.51 (50A)
No.57 (7.5A)
BLU/BLK
FRONT FAIL-SAFE RELAY
REAR FAIL-SAFE RELAY
ABS MOTOR RELAY
GRN/BLK
ABS INDICATOR LIGHT <2-A>
BRAKE LIGHT SWITCH <8-A>
L.FRONT SOLENOID
R.FRONT SOLENOID
REAR SOLENOID
IN
OUT
WHT/GRN
WHT
BLU/RED
GRN/WHT
RED/BLK
YEL/BLK
YEL/GRN
YEL/RED
BRN/YEL
RED/BLU
YEL/BLU
RED/WHT
YEL/WHT
WHT/BLU
ABS CONTROL UNIT
INSPECTION CONNECTOR
BLU/WHT
GRN/YEL
LT BLU
GRN/BLU
BRN
GRN
GRY
BLU/YEL
YEL
WHT/BLU
GRN/RED
ABS MOTOR
ABS PRESSURE SWITCH
VOLTAGE REGURETOR <1-B>
PARKING BRAKE/ BRAKE FLUID LEVEL SWITCH <2-B>
SERVICE CHECK CONNECTOR <14-C>
L.FRONT
R.FRONT
L.REAR
R.REAR
SPEED SENSORS
BLK
G202

13

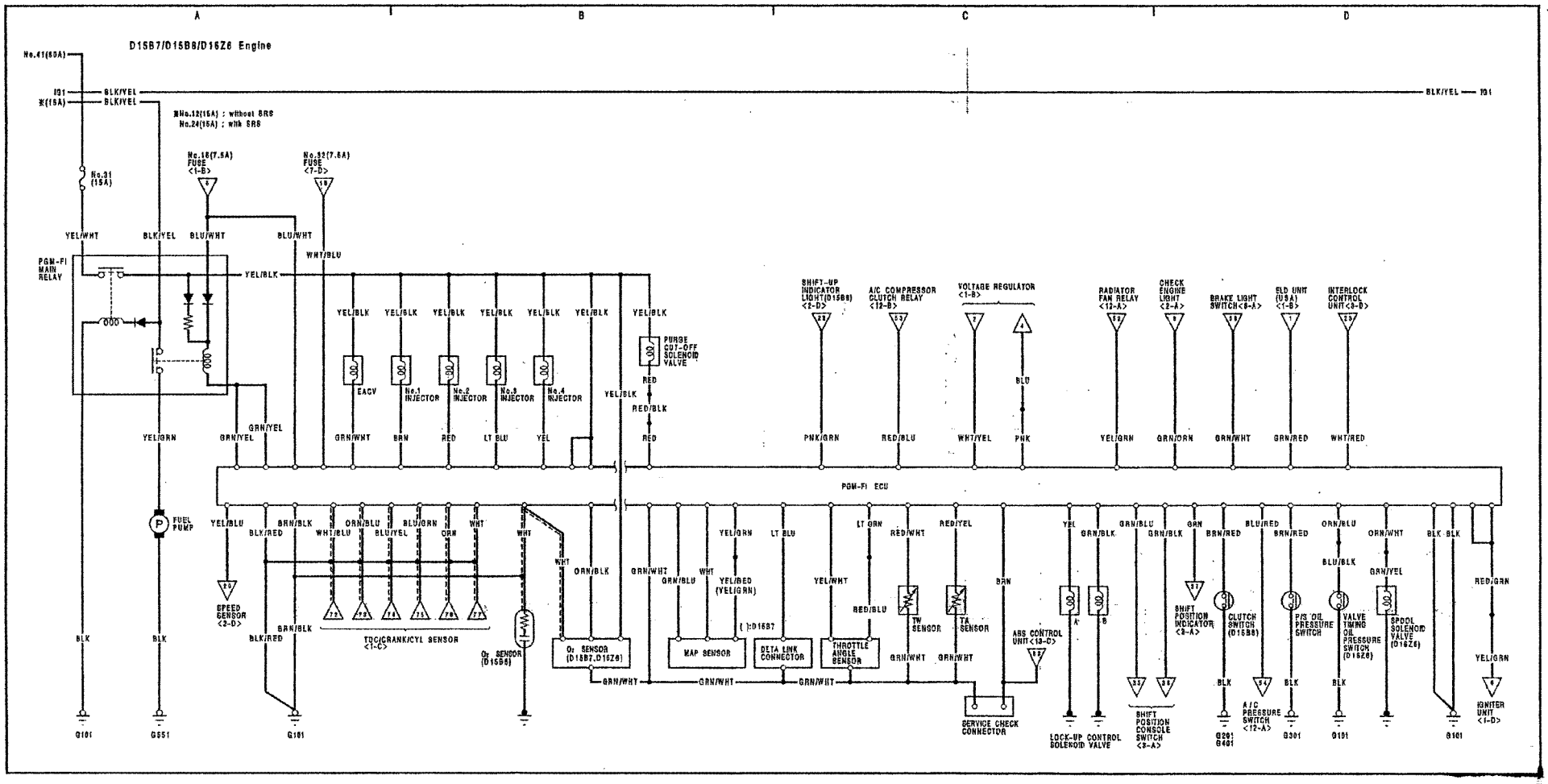
D15B7/D15B8/D16Z6 Engine
No.41(60A)
131
BLK/YEL
*(15A)
*No.12(15A) : without SRS
No.24(15A) : with SRS
No.31 (15A)
No.18(7.5A) FUSE <1-B>
No.32(7.5A) FUSE <7-D>
PGM-FI MAIN RELAY
YEL/WHT
BLU/WHT
BLU/WHT
WHT/BLU
YEL/BLK
YEL/GRN
GRN/YEL
EACV
No.1 INJECTOR
No.2 INJECTOR
No.3 INJECTOR
No.4 INJECTOR
PURGE CUT-OFF SOLENOID VALVE
RED
RED/BLK
SHIFT-UP INDICATOR LIGHT(D15B8) <2-D>
A/C COMPRESSOR CLUTCH RELAY <12-B>
VOLTAGE REGULATOR <1-B>
RADIATOR FAN RELAY <12-A>
CHECK ENGINE LIGHT <2-A>
BRAKE LIGHT SWITCH <8-A>
ELD UNIT (USA) <1-B>
INTERLOCK CONTROL UNIT <3-D>
BLU
PNK/GRN
RED/BLU
WHT/YEL
PNK
YEL/GRN
GRN/ORN
GRN/WHT
GRN/RED
WHT/RED
PGM-FI ECU
FUEL PUMP
YEL/BLU
BRN/BLK
BLK/RED
WHT/BLU
ORN/BLU
BLU/YEL
BLU/GRN
ORN
WHT
SPEED SENSOR <2-D>
TDC/CRANK/CYL SENSOR <1-C>
O2 SENSOR (D15B8)
O2 SENSOR (D15B7,D16Z6)
ORN/BLK
GRN/WHT
YEL/GRN
LT BLU
YEL/RED (YEL/GRN)
( ):D16B7
MAP SENSOR
DETA LINK CONNECTOR
THROTTLE ANGLE SENSOR
YEL/WHT
RED/BLU
LT GRN
RED/WHT
TW SENSOR
RED/YEL
TA SENSOR
BRN
ABS CONTROL UNIT <13-D>
SERVICE CHECK CONNECTOR
YEL
GRN/BLK
LOCK-UP CONTROL SOLENOID VALVE
GRN/BLU
SHIFT POSITION CONSOLE SWITCH <3-A>
GRN
SHIFT POSITION INDICATOR <3-A>
BRN/RED
CLUTCH SWITCH (D15B8)
BLU/RED
A/C PRESSURE SWITCH <12-A>
P/S OIL PRESSURE SWITCH
ORN/BLU
BLU/BLK
VALVE TIMING OIL PRESSURE SWITCH (D16Z6)
ORN/WHT
GRN/YEL
SPOOL SOLENOID VALVE (D16Z6)
BLK
RED/GRN
YEL/GRN
IGNITER UNIT <1-D>
G101
G551
G101
G201
G401
G301
G101
G101

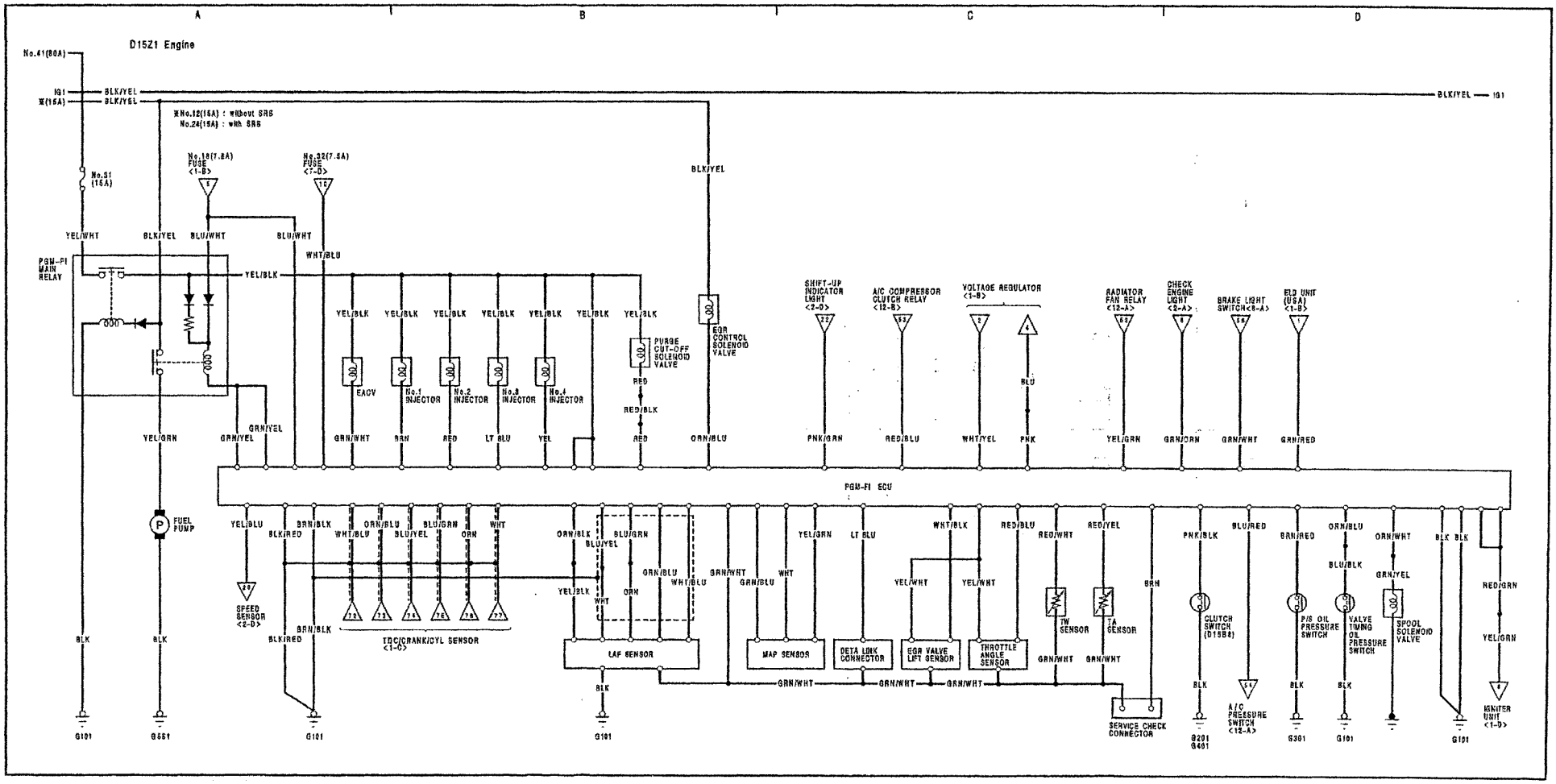
A
B
C
D
D15Z1 Engine
No.41(80A)
IG1
BLK/YEL
*(15A)
*No.12(15A) : without SRS
No.24(15A) : with SRS
No.31 (15A)
No.18(7.5A) FUSE <1-B>
No.32(7.5A) FUSE <7-D>
YEL/WHT
BLU/WHT
WHT/BLU
PGM-FI MAIN RELAY
YEL/BLK
YEL/GRN
GRN/YEL
FUEL PUMP
EACV
No.1 INJECTOR
No.2 INJECTOR
No.3 INJECTOR
No.4 INJECTOR
PURGE CUT-OFF SOLENOID VALVE
RED
RED/BLK
EGR CONTROL SOLENOID VALVE
SHIFT-UP INDICATOR LIGHT <2-D>
A/C COMPRESSOR CLUTCH RELAY <12-B>
VOLTAGE REGULATOR <1-B>
BLU
RADIATOR FAN RELAY <12-A>
CHECK ENGINE LIGHT <2-A>
BRAKE LIGHT SWITCH<8-A>
ELD UNIT (USA) <1-B>
PGM-FI ECU
SPEED SENSOR <2-D>
TDC/CRANK/CYL SENSOR <1-D>
LAF SENSOR
MAP SENSOR
DETA LINK CONNECTOR
EGR VALVE LIFT SENSOR
THROTTLE ANGLE SENSOR
TW SENSOR
TA SENSOR
SERVICE CHECK CONNECTOR
CLUTCH SWITCH (D15B8)
A/C PRESSURE SWITCH <12-A>
P/S OIL PRESSURE SWITCH
VALVE TIMING OIL PRESSURE SWITCH
SPOOL SOLENOID VALVE
IGNITER UNIT <1-D>
G101
G651
G201
G401
G301

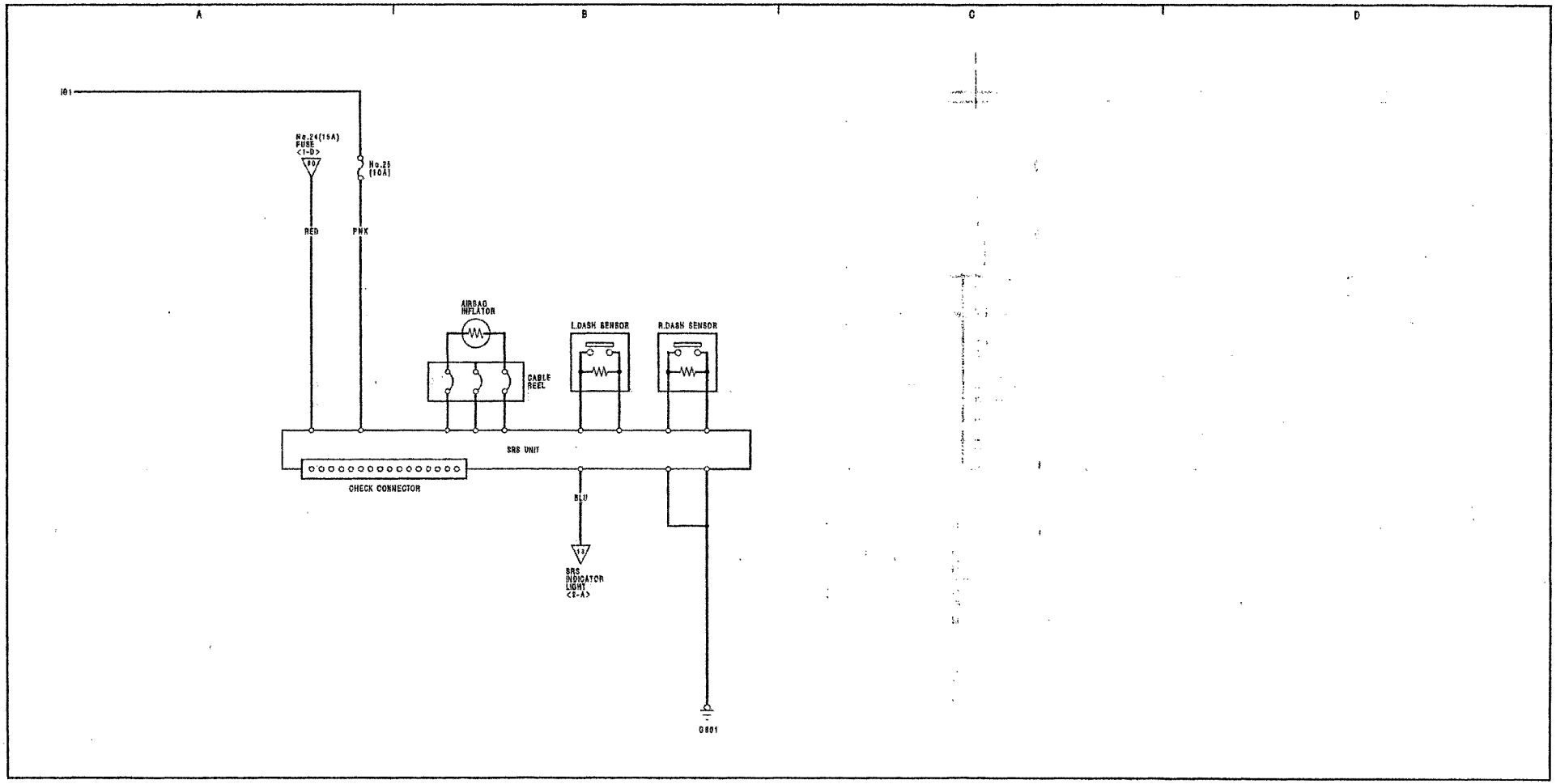
A
B
C
D
101
No.24(15A)
FUSE
<1-D>
#07
No.25
(10A)
RED
PNK
AIRBAG
INFLATOR
CABLE
REEL
L.DASH SENSOR
R.DASH SENSOR
SRS UNIT
CHECK CONNECTOR
BLU
#13
SRS
INDICATOR
LIGHT
<2-A>
G801

Fuel-Injected System Connectors

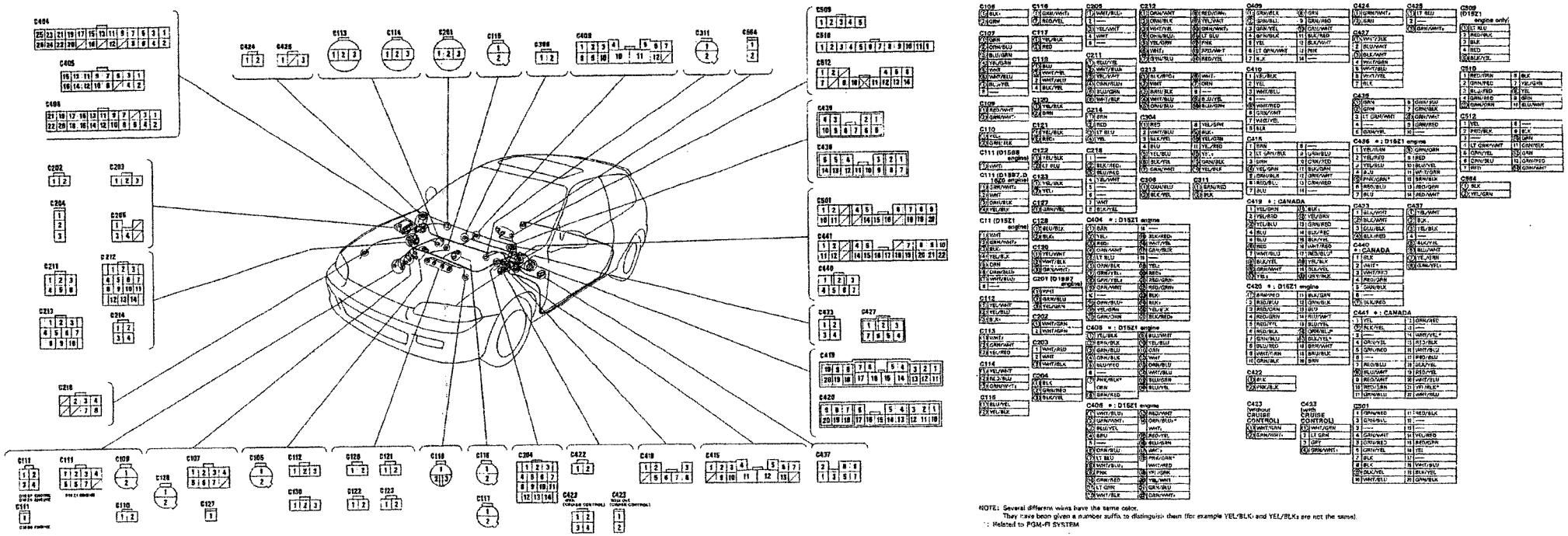

NOTE: Several different wires have the same color.
They have been given a number suffix to distinguish them (for example YEL/BLK1 and YEL/BLK2 are not the same).
*: Related to PGM-FI SYSTEM
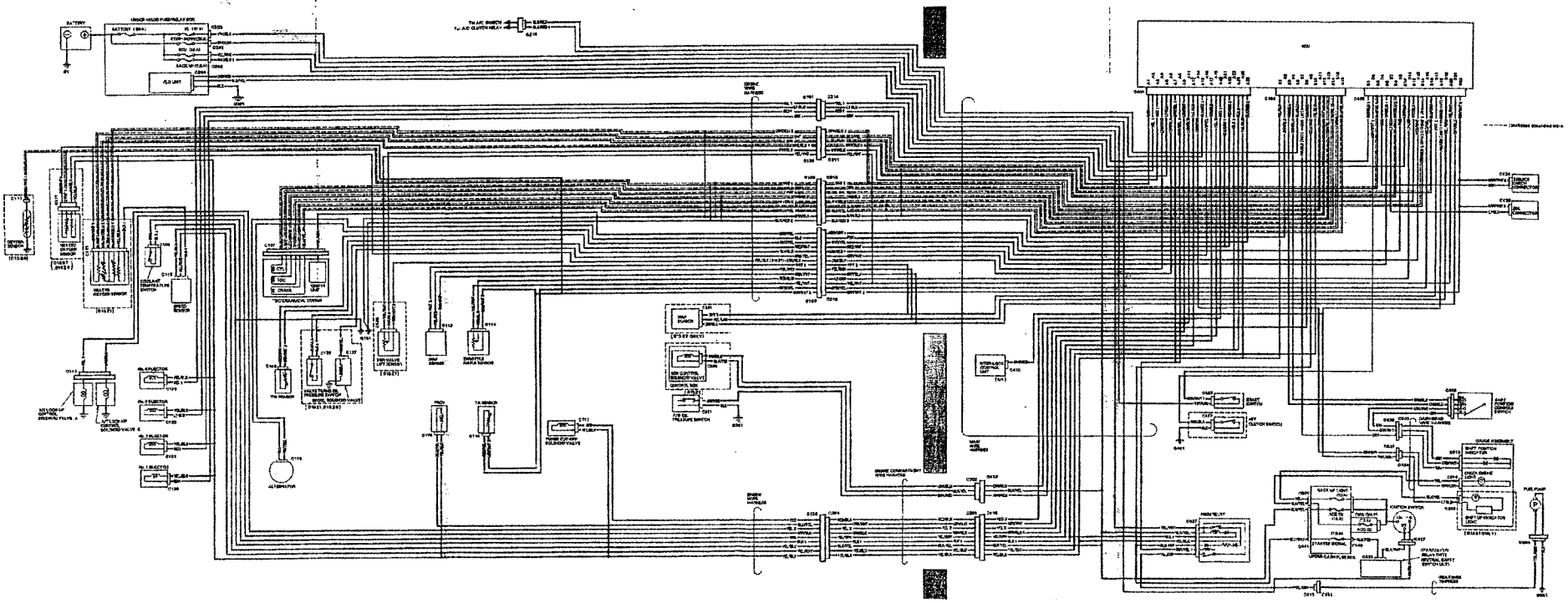
Fuel-Injected System Diagram