SHOP MANUAL

CB HORNET 160R

CB HORNET 160R

A Few Words About Safety
Service information

The service and repair information contained in this manual is intended for use by qualified, professional technicians.

Attempting service or repairs without the proper training, tools, and equipment could cause injury to you or others. It could also damage the vehicle or create an unsafe condition.

This manual describes the proper methods and procedures for performing service, maintenance, and repairs. Some procedures require the use of specially designed tools and dedicated equipment. Any person who intends to use a replacement part, service procedure or a tool that is not recommended by Honda, must determine the risks to their personal safety and the safe operation of the vehicle.

If you need to replace a part, use genuine Honda parts with the correct part number or an equivalent part. We strongly recommended that you do not use replacement parts of inferior quality.

For Your Customer's Safety

Proper service and maintenance are essential to the customer's safety and the reliability of the vehicle. Any error or oversight while servicing a vehicle can result in faulty operation, damage to the vehicle, or injury to others.

⚠ WARNING

Improper service or repairs can create an unsafe condition that can cause your customer or others to be seriously hurt or killed.

Follow the procedures and precautions in this manual and other service materials carefully.

For Your Safety

Because this manual is intended for the professional service technician, we do not provide warnings about many basic shop safety practices (e.g,.Hot parts – wear gloves). If you have not received shop safety training or do not feel confident about your knowledge of safe servicing practice, we recommended that you do not attempt to perform the procedures described in this manual.

Some of the most important general service safety precautions are given below. However, we cannot warn you of every conceivable hazard that can arise in performing service and repair procedures. Only you can decide whether or not you should perform a given task.

⚠ WARNING

Failure to properly follow instructions and precautions can cause you to be seriously hurt or killed.

Follow the procedures and precautions in this manual carefully.

Important Safety Precautions

Make sure you have a clear understanding of all basic shop safety practices and that you are wearing appropriate clothing and using safety equipment. When performing any service task, be especially careful of the following:

- Read all of the instructions before you begin, and make sure you have the tools, the replacement or repair parts, and the skills required to perform the tasks safely and completely.
- Protect your eyes by using proper safety glasses, goggles or face shields any time you hammer, drill, grind, pry or work around pressurized air or liquids, and springs or other stored-energy components. If there is any doubt, put on eye protection.
- Use other protective wear when necessary, for example gloves or safety shoes. Handling hot or sharp parts can cause severe burns or cuts. Before you grab something that looks like it can hurt you, stop and put on gloves.
- Protect yourself and others whenever you have the vehicle up in the air. Any time you lift the vehicle, either with a hoist or a jack, make sure that it is always securely supported. Use jack stands.

Make sure the engine is off before you begin any servicing procedures, unless the instruction tells you to do otherwise. This will help eliminate several potential hazards:

- Carbon monoxide poisoning from engine exhaust. Be sure there is adequate ventilation whenever you run the engine.
- Burns from hot parts or coolant. Let the engine and exhaust system cool before working in those areas.
- Injury from moving parts. If the instruction tells you to run the engine, be sure your hands, fingers and clothing are out of the way.

Gasoline vapors and hydrogen gases from batteries are explosive. To reduce the possibility of a fire or explosion, be careful when working around gasoline or batteries.

- Use only a nonflammable solvent, not gasoline, to clean parts.
- Never drain or store gasoline in an open container.
- Keep all cigarettes sparks and flames away from the battery and all fuel-related parts.

HOW TO USE THIS MANUAL

This service manual describes the service procedures for the CBF160MG.

Follow the Maintenance Schedule (Section 3) recommendations to ensure that the vehicle is in peak operating condition.

Performing the first scheduled maintenance is very important. It compensates for the initial wear that occurs during the break-in period.

Sections 1 and 3 apply to the whole vehicle. Section 2 illustrates procedures for removal/installation of components that may be required to perform service described in the following sections. Section 4 through 18 describe parts of the vehicle, grouped according to location.

Find the section you want on this page, then turn to the table of contents on the first page of the section.

Most sections start with an assembly or system illustration, service information and troubleshooting for the section. The subsequent pages give detailed procedures.

If you don't know the source of the trouble, go to section 20 Troubleshooting.

Your safety, and the safety of others, is very important. To help you make informed decisions we have provided safety messages and other information throughout this manual. Of course, it is not practical or possible to warn you about all the hazards associated with servicing this vehicle. You must use your own good judgement.

You will find important safety information in a variety of forms including:

- Safety Labels – on the vehicle
- Safety Messages – preceded by a safety alert symbol ⚠ and one of three signal words, DANGER, WARNING, or CAUTION. These signal words mean:

⚠ DANGER You WILL be KILLED or SERIOUSLY HURT if you don't follow instructions.

⚠ WARNING You CAN be KILLED or SERIOUSLY HURT if you don't follow instructions.

⚠ CAUTION You CAN be HURT if you don't follow instructions.

- Instructions– How to service this vehicle correctly and safely.

As you read this manual, you will find information that is preceded by a **NOTICE** symbol. The purpose of this message is to help prevent damage to your vehicle, other property, or the environment.

Some information provided in this manual is applicable for ID type model only.

ALL INFORMATION, ILLUSTRATIONS, DIRECTIONS AND SPECIFICATIONS INCLUDED IN THIS PUBLICATION ARE BASED ON THE LATEST PRODUCT INFORMATION AVAILABLE AT THE TIME OF APPROVAL FOR PRINTING. HONDA MOTOR CO., LTD. RESERVES THE RIGHT TO MAKE CHANGES AT ANY TIME WITHOUT NOTICE AND WITHOUT INCURRING ANY OBLIGATION WHATEVER. NO PART OF THIS PUBLICATION MAY BE REPRODUCED WITHOUT WRITTEN PERMISSION. THIS MANUAL IS WRITTEN FOR PERSONS WHO HAVE ACQUIRED BASIC KNOWLEDGE OF MAINTENANCE ON HONDA MOTORCYCLES, MOTOR SCOOTERS OR ATVS.

Honda Motor Co., Ltd.
SERVICE PUBLICATION OFFICE

Month of Issue: November, 2015
© Honda Motor Co., Ltd.

CONTENTS

	GENERAL INFORMATION	1
	FRAME/BODY PANELS/EXHAUST SYSTEM	2
	MAINTENANCE	3
ENGINE	LUBRICATION SYSTEM	4
ENGINE	FUEL SYSTEM	5
ENGINE	ENGINE REMOVAL/INSTALLATION	6
ENGINE	CYLINDER HEAD/VALVES	7
ENGINE	CYLINDER/PISTON	8
ENGINE	CLUTCH/GEARSHIFT LINKAGE	9
ENGINE	ALTERNATOR	10
ENGINE	CRANKCASE/TRANSMISSION/KICKSTARTER	11
CHASSIS	FRONT WHEEL/SUSPENSION/STEERING	12
CHASSIS	REAR WHEEL/SUSPENSION	13
CHASSIS	BRAKE SYSTEM	14
ELECTRICAL	BATTERY/CHARGING SYSTEM	15
ELECTRICAL	IGNITION SYSTEM	16
ELECTRICAL	LIGHTS/METERS/SWITCHES	17
ELECTRICAL	ELECTRIC STARTER SYSTEM	18
ELECTRICAL	WIRING DIAGRAM	19
	TROUBLESHOOTING	20
	INDEX	21

SYMBOLS

The symbols used throughout this manual show specific service procedures. If supplementary information is required pertaining to these symbols, it would be explained specifically in the text without the use of the symbols.

	Replace the part(s) with new one(s) before assembly.
	Use recommended engine oil, unless otherwise specified.
	Use molybdenum oil solution (mixture of the engine oil and molybdenum grease in a ratio of 1:1).
	Use multi-purpose grease (Lithium based multi-purpose grease NLGI #2 or equivalent).
	Use water resistant multi-purpose grease (Shell Alvania EP2 or Excelite EP2 (KYODO YUSHI CO. LTD) or equivalent).
	Use molybdenum disulfide grease (containing more than 3% molybdenum disulfide, NLGI #2 or equivalent). Example: Molykote® BR-2 plus manufactured by Dow corning U.S.A. Multi-purpose M-2 manufactured by Mitsubishi Oil, Japan
	Use molybdenum disulfide paste (containing more than 40% molybdenum disulfide, NLGI #2 or equivalent). Example: Molykote® G-n paste manufactured by Dow Corning, U.S.A. Honda Moly 60 (U.S.A. only) Rocol ASP manufactured by Rocol Limited, U.K. Rocol Paste manufactured by Sumico Lubricant, Japan
	Use silicone grease.
	Apply a locking agent. Use a middle strength locking agent unless otherwise specified.
	Apply sealant.
	Use DOT 3 or DOT 4 brake fluid. Use the recommended brake fluid unless otherwise specified.
	Use Fork or Suspension Fluid.

1. GENERAL INFORMATION

SERVICE RULES	1-1	FRONT WHEEL/SUSPENSION/ STEERING SPECIFICATIONS	1-7
MODEL IDENTIFICATION	1-2	REAR WHEEL/SUSPENSION SPECIFICATIONS	1-8
SERIAL NUMBERS	1-3	BRAKE SYSTEM SPECIFICATIONS	1-8
COLOUR LABEL	1-3	BATTERY/CHARGING SYSTEM SPECIFICATIONS	1-8
GENERAL SPECIFICATIONS	1-4	ELECTRIC STARTER SPECIFICATION	1-9
LUBRICATION SYSTEM SPECIFICATIONS	1-5	IGNITION SYSTEM SPECIFICATIONS	1-9
FUEL SYSTEM SPECIFICATIONS	1-5	LIGHTS/METER/SWITCHES SPECIFICATIONS	1-9
CYLINDER HEAD/VALVES SPECIFICATIONS	1-5	STANDARD TORQUE VALUES	1-10
CYLINDER/PISTON SPECIFICATIONS	1-6	ENGINE & FRAME TORQUE VALUES	1-10
CLUTCH/GEARSHIFT LINKAGE SPECIFICATIONS	1-6	LUBRICATION & SEAL POINTS	1-13
ALTERNATOR/STARTER CLUTCH SPECIFICATIONS	1-6	CABLE & HARNESS ROUTING	1-15
CRANKCASE CRANKSHAFT/ TRANSMISSION/KICKSTARTER SPECIFICATIONS	1-7	EMISSION CONTROL SYSTEMS	1-22

SERVICE RULES

1. Use genuine HONDA or HONDA–recommended parts and lubricants or their equivalents. Parts that do not meet Honda's design specifications may cause damage to the motorcycle.
2. Use the special tools designed for this product to avoid damage and incorrect assembly.
3. Use only metric tools when servicing the motorcycle. Metric bolts, nuts and screws are not interchangeable with English fasteners.
4. Install new gaskets, O–rings, cotter pins, and lock plates when reassembling.
5. When tightening bolts or nuts, begin with the larger diameter or inner bolt first. Then tighten to the specified torque diagonally in incremental steps unless a particular sequence is specified.
6. Clean parts in cleaning solvent upon disassembly. Lubricate any sliding surfaces before reassembly.
7. After reassembly, check all parts for proper installation and operation.
8. Route all electrical wires as shown in the Cable and Harness Routing (page 1-15).

ABBREVIATION

Abbrev. Term	Full term
PAIR	Pulse Secondary Air Injection

MODEL IDENTIFICATION

This manual covers 2 type of CBF 160 models

STD and CBS

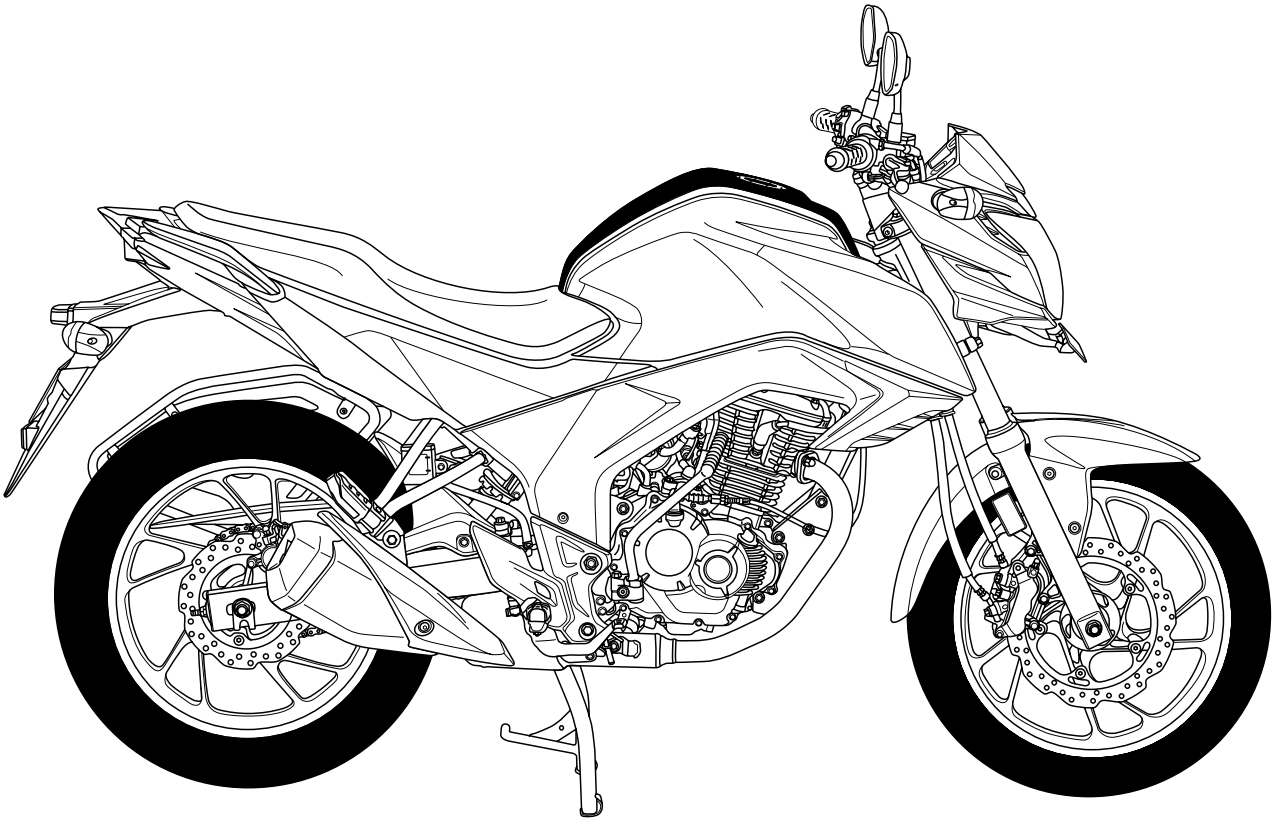

SERIAL NUMBERS

Frame Serial Number

The Vehicle Identification Number (V.I.N.) is stamped other right side of the steering head.

Vehicle Identification Number: ME4KC23 XXXXXXXXXX

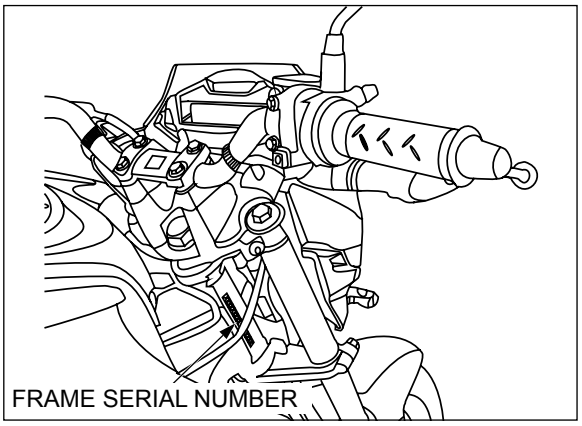
FRAME SERIAL NUMBER

Engine Serial Number

The Engine Serial Number is stamped on the lower left side of the crankcase.

Engine Serial Number: KC23E – X – XXXXXXX

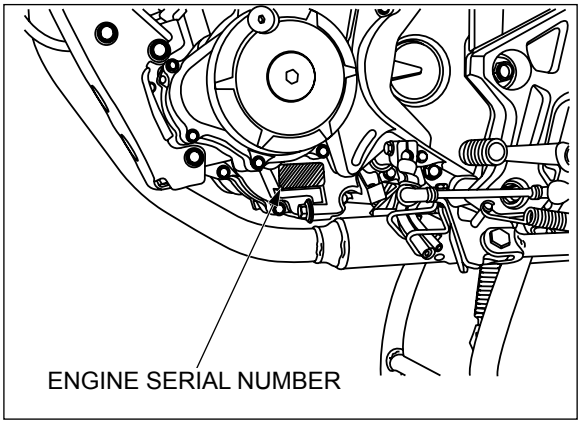
ENGINE SERIAL NUMBER

Carburetor Serial Number

The carburetor identification number is stamped on the left side of the carburetor body.

Carburetor identification number: AVK 6BA X XXXX

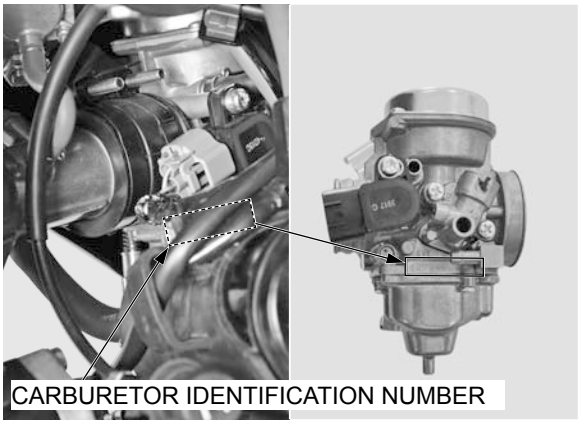
CARBURETOR IDENTIFICATION NUMBER

COLOR LABEL

The color label is attached as shown. When ordering color - coded parts, always specify the designated color code.

S.NO.	Colour	Colour Code
1.	Pearl Nightstar Black	NHA84
2.	Sports Red	R321
3.	Pearl Amazing White	NHB63
4.	Pearl Siren Blue - A	PB123
5.	Neo Orange Metallic	YR302

GENERAL SPECIFICATIONS

	ITEM		SPECIFICATION	Page NO.
DIMENSIONS	Overall length		2041 mm (80.4 in)	–
	Overall width		783 mm (30.8 in)	–
	Overall height		1067 mm (42.0 in)	–
	Wheelbase		1346 mm (52.9 in)	–
	Seat height		794 mm (31.2 in)	–
	Foot peg height		314 mm (12.7 in)	–
	Ground clearance		164 mm (6.4 in)	–
	Dry weight	(STD/CBS)	128 kg (286.6 lbs) / 130 kg (288.8 lbs)	–
	Maximum weight capacity		170 kg (330.6 lbs)	–
FRAME	Frame type		Diamond type	–
	Front suspension		Telescopic fork	Page 3–23
	Front axle travel		117 mm (4.6 in)	–
	Rear suspension		Swing arm	Page 3–23
	Rear axle travel		113 mm (4.4 in)	–
	Rear damper		Mono suspension	–
	Front tyre size (BRAND)		100/80-17M/C 52S (MRF)	Page 3–25
	Rear tyre size (BRAND)		140/70 -17 M/C 66S (MRF)	Page 3–25
	Front brake		Disc Type (Hydraulic Single Disc)	–
	Rear brake	STD	Drum Type (Mechanical Leading Trailing)	–
		CBS	Disc Type (Hydraulic Single Disc)	–
	Caster angle		25^0 30	–
	Trail length		100 mm (3.9 in)	–
	Fuel tank capacity		12.0 litre (3.17 US gal, 2.63 Imp gal)	–
	Fuel tank reserve capacity		1.7 litre (0.52 US gal, 0.44 Imp gal)	–
ENGINE	Cylinder arrangement		Single cylinder inclined 15° from vertical	–
	Bore and stroke		57.3 x 63.096 mm (2.25 x 2.48 in)	–
	Displacement		162.71 cm^3	–
	Compression ratio		10:01	–
	Valve train		Chain driven OHC with rocker arm	–
	Intake valve	Opens at 1.08 mm (0.04 in) lift	10° BTDC	–
		Closes at 1.08 mm (0.04 in) lift	35° ABDC	–
	Exhaust valve	Opens at 1.24 mm (0.04 in) lift	35° BBDC	–
		Closes at 1.24 mm (0.04 in) lift	5° ATDC	–
	Lubrication system		Forced pressure and wet sump	–
	Oil pump type		Trochoid	–
	Cooling system		Air cooled	–
	Air filtration		Viscous paper filter	–
	Engine dry weight		29.4 kg (65.03 lbs)	–
CARBURETOR	Carburetor type		CV (constant velocity) type	Page 5–6
	Throttle bore		28 mm (1.10 in)	–
DRIVE TRAIN	Clutch system		Multi plate, wet clutch	–
	Clutch operation system		Cable operation	Page 3–22
	Transmission		5 Speed, Manual	Page 11–6
	Primary reduction		3.136 (69/22)	–
	Final reduction		3.133 (47/15)	–
	Gear ratio	1st	3.076 (40/13)	–
		2nd	1.789 (34/19)	–
		3rd	1.300 (26/20)	–
		4th	1.066 (32/30)	–
		5th	0.916 (22/24)	–
	Gearshift pattern		Left foot operation system (1–N–2–3–4–5)	–
ELECTRICAL	Battery capacity		12V, 4Ah	Page 15–3
	Ignition system		DIGITAL DC – C.D.I.	Page 16–1
	Starting system		Electric starter motor	–
	Charging system		Single phase output alternator	Page 15–1
	Regulator / Rectifier		SCR Shorted, Single phase half wave rectification	Page 15–9

LUBRICATION SYSTEM SPECIFICATIONS

Unit: mm (in)

	ITEM	STANDARD	SERVICE LIMIT	Page NO.
Engine oil capacity	At draining	1.0 litre (1.0 US qt, 0.9 Imp qt)	–	Page 3–11
	At disassembly	1.2 litre (1.3 US qt, 1.1 Imp qt)	–	Page 3–11
Recommended engine oil		Honda 4-stroke oil or equivalent motor oil API service classification: MA Viscosity: SAE 10W–30	–	Page 3–10
Oil pump rotor	Tip clearance	0.15 (0.006)	0.20 (0.008)	Page 4–4
	Body clearance	0.15 – 0.20 (0.006 – 0.008)	0.25 (0.010)	Page 4–4
	Side clearance	0.05 – 0.10 (0.002 – 0.004)	0.15 (0.006)	Page 4–4

FUEL SYSTEM SPECIFICATIONS

Unit: mm (in)

ITEM	SPECIFICATIONS	Page NO.
Carburetor identification number	AVK6BA	Page 1–3
Main jet	#118	Page 5–11
Slow jet	#38	Page 5–11
Pilot screw initial opening	2 1/8	Page 5–18
Float level	13.0 mm (0.51in)	Page 5–12
Engine Idle speed	1,400 ± 100 min^{-1} (rpm)	Page 5–18
Throttle grip free play	2 ~ 6 mm (0.07 – 0.2 in)	Page 3–5
PAIR control valve specified vacuum	53.3 kPa (400 mm Hg)	Page 5–20

CYLINDER HEAD/VALVES SPECIFICATIONS

Unit: mm (in)

ITEM			STANDARD	SERVICE LIMIT	Page NO.
Cylinder compression at 650 min^{-1} (rpm)			1300 kPa (13.2 kgf/cm², 188.5 psi)	–	Page 7–4
Valve clearance		IN	0.08 (0.003)	–	Page 3–9
		EX	0.24 (0.010)	–	Page 3–9
Valve, valve guide	Valve stem O.D.	IN	4.975 – 4.990 (0.1958 – 0.1964)	4.92 (0.194)	Page 7–13
		EX	4.955 – 4.970 (0.1950 – 0.1956)	4.90 (0.193)	Page 7–13
	Valve guide I.D.	IN/EX	5.000 – 5.012 (0.1969 – 0.1973)	5.04 (0.198)	Page 7–14
	Stem-to-guide clearance	IN	0.010 – 0.037 (0.0004 – 0.0015)	0.07 (0.003)	Page 7–14
		EX	0.030 – 0.057 (0.0012 – 0.0022)	0.09 (0.004)	Page 7–14
	Valve seat width	IN/EX	0.9 - 1.1 (0.035 - 0.043)	1.5 (0.06)	Page 7–15
Valve spring	Free length	INNER	35.59 (1.415)	35.14 (1.383)	Page 7–13
		OUTER	39.46 (1.553)	38.60 (1.519)	Page 7–13
Rocker arm	Shaft O.D.	IN/EX	9.988 – 10.000 (0.3926 – 0.3936)	9.91 (0.390)	Page 7–11
	Arm to shaft clearance	OUTER	0.002 – 0.049 (0.0001 – 0.0019)	0.10 (0.004)	Page 7–11
Camshaft	Cam lobe height	IN	34.46 – 34.54 (1.356 – 1.359)	32.96 (1.298)	Page 7–8
		EX	34.29 – 34.37 (1.349 – 1.353)	32.85 (1.293)	Page 7–8
Cylinder head warpage			–	0.05 (0.002)	Page 7–13

CYLINDER/PISTON SPECIFICATIONS

Unit: mm (in)

ITEM			STANDARD	SERVICE LIMIT	Page NO.
Cylinder	I.D.		57.300 – 57.310 (2.2559 – 2.2563)	57.40 (2.260)	Page 8–2
	Out-of-round		–	0.10 (0.004)	Page 8–3
	Taper		–	0.10 (0.004)	Page 8–3
	Warpage		–	0.10 (0.004)	Page 8–3
Piston, piston pin, piston ring	Piston O.D. at 10 (0.4) from bottom		57.280 – 57.295 (2.2551 – 2.2557)	57.20 (2.252)	Page 8–4
	Piston pin hole I.D.		14.002 – 14.008 (0.5512 – 0.5514)	14.04 (0.553)	Page 8–4
	Piston pin O.D.		13.994 – 14.000 (0.5510 – 0.5511)	13.96 (0.550)	Page 8–5
	Piston-to-piston pin clearance		0.002 – 0.014 (0.0001 – 0.0006)	0.04 (0.002)	Page 8–5
	Piston ring end gap	Top	0.07 – 0.17 (0.002 – 0.0066)	0.40 (0.016)	Page 8–5
		Second	0.10 – 0.25 (0.004 – 0.010)	0.40 (0.016)	Page 8–5
		Oil (side rail)	0.10 – 0.35 (0.008 – 0.013)	0.85 (0.033)	Page 8–5
	Piston ring-to-ring groove clearance	Top	0.030 – 0.060 (0.0012 – 0.0024)	0.10 (0.004)	Page 8–5
		Second	0.015 – 0.050 (0.0006 – 0.0020)	0.10 (0.004)	Page 8–5
Cylinder-to-piston clearance			0.005 – 0.030 (0.0002 – 0.0012)	0.09 (0.004)	Page 8–4
Connecting rod small end I.D.			14.010 – 14.028 (0.5516 – 0.5523)	14.06 (0.554)	Page 8–5
Connecting rod-to-piston pin clearance			0.010 – 0.034 (0.0004 – 0.0013)	0.10 (0.004)	Page 8–5

CLUTCH/GEARSHIFT LINKAGE SPECIFICATIONS

Unit: mm (in)

ITEM		STANDARD	SERVICE LIMIT	Page NO.
Clutch lever free play		10 – 20 (0.4 – 0.8)	–	Page 3–22
Clutch	Spring free length	38.4 (1.59)	37.5 (1.47)	Page 9–8
	Disc thickness	2.92 – 3.08 (0.115 – 0.121)	2.6 (0.10)	Page 9–9
	Plate warpage	–	0.20 (0.008)	Page 9–9
Clutch outer I.D.		23.000 – 23.021 (0.9055 – 0.9063)	23.08 (0.909)	Page 9–9
Clutch outer guide	O.D.	22.959 – 22.980 (0.9039 – 0.9047)	22.93 (0.903)	Page 9–9
	I.D.	16.991 – 17.009 (0.6689 – 0.6696)	17.04 (0.671)	Page 9–9
Mainshaft O.D. at clutch outer guide		16.966 – 16.984 (0.6680 – 0.6687)	16.95 (0.667)	Page 9–9

ALTERNATOR/STARTER CLUTCH SPECIFICATIONS

Unit: mm (in)

ITEM	STANDARD	SERVICE LIMIT	Page NO.
Starter driven gear boss O.D.	45.660 – 45.673 (1.7976 – 1.7981)	45.60 (1.795)	Page 10–7

CRANKCASE/CRANKSHAFT/TRANSMISSION/ KICKSTARTER SPECIFICATIONS

Unit: mm (in)

ITEM			STANDARD	SERVICE LIMIT	Page NO.
Crankshaft	Runout		–	0.03 (0.0007)	Page 11–8
	Connecting rod big end radial clearance		0 – 0.008 (0 – 0.0003)	0.05 (0.002)	Page 11–9
	Connecting rod big end side clearance		0.10 – 0.35 (0.003 – 0.014)	0.80 (0.032)	Page 11–9
Transmission	Gear I.D.	M4	20.000 – 20.018 (0.7874 – 0.7882)	20.05 (0.789)	Page 11–7
		M5	17.000 – 17.018 (0.6692 – 0.6699)	17.05 (0.671)	Page 11–7
		C1	20.500 – 20.521 (0.8071 – 0.8079)	20.55 (0.809)	Page 11–7
		C2	23.020 – 23.041 (0.9063 – 0.9071)	23.07 (0.908)	Page 11–7
		C3	20.020 – 20.038 (0.7881 – 0.7888)	20.07 (0.790)	Page 11–7
	Bushing O.D.	C1	20.459 – 20.480 (0.8055 – 0.8063)	20.41 (0.804)	Page 11–7
		C2	22.984 – 23.005 (0.9049 – 0.9057)	22.95 (0.904)	Page 11–7
	Gear-to-bushing clearance	C1	0.020 – 0.062 (0.0008 – 0.0024)	0.10 (0.004)	Page 11–7
		C2	0.015 – 0.057 (0.0006 – 0.0022)	0.10 (0.004)	Page 11–7
	Bushing I.D.	C1	17.000 – 17.018 (0.6693 – 0.6699)	17.04 (0.671)	Page 11–7
		C2	20.020 – 20.041 (0.7882 – 0.7890)	20.07 (0.790)	Page 11–7
	Mainshaft / countershaft O.D.	C1	16.966 – 16.984 (0.6680 – 0.6687)	16.93 (0.667)	Page 11–7
		C2	19.978 – 19.989 (0.7865 – 0.7870)	19.94 (0.785)	Page 11–7
		M4	19.968 – 19.980 (0.7861 – 0.7866)	19.94 (0.785)	Page 11–7
		M5	16.968 – 16.980 (0.6679 – 0.6686)	16.93 (0.666)	Page 11–7
	Bushing-to-shaft clearance	C1	0.016 – 0.052 (0.0006 – 0.0020)	0.10 (0.004)	Page 11–7
		C2	0.031 – 0.063 (0.0012 – 0.0025)	0.20 (0.008)	Page 11–7
Shift fork, shift fork shaft	Shift fork shaft O.D.		9.986 – 9.995 (0.3931 – 0.3935)	9.93 (0.391)	Page 11–8
	Shift fork I.D.		10.000 – 10.018 (0.3937 – 0.3944)	10.05 (0.396)	Page 11–8
	Shift fork claw thickness		4.930 – 5.000 (0.194 – 0.197)	4.500 (0.177)	Page 11–8
Kickstarter drive gear I.D			20.00 – 20.21 (0.7873 – 0.7956)	16.06 (0.632)	Page 11–21
Kickstarter spindle O.D. at Kickstarter drive gear			19.959 – 19.980 (0.7875 – 0.7866)	15.94 (0.628)	Page 11–21

FRONT WHEEL/ SUSPENSION/STEERING SPECIFICATIONS

Unit: mm (in)

ITEM		STANDARD	SERVICE LIMIT	Page NO.
Minimum tire thread depth		–	1.5 (0.06)	Page 3–25
Cold tire pressure	Driver only	175 kPa (1.75 kgf/cm², 25 psi)	–	Page 3–25
	Driver and passenger	175 kPa (1.75 kgf/cm², 25 psi)	–	Page 3–25
Axle runout		–	0.2 (0.01)	Page 12–10
Wheel rim runout	Radial	–	0.3 (0.01)	Page 12–11
	Axial	–	0.3 (0.01)	Page 12–11
Fork	Spring free length	390.3 (15.366)	363 (14.291)	Page 12–17
	Pipe runout	–	0.20 (0.008)	Page 12–17
	Recommended fluid	Honda Ultra Cushion Oil No.10 (BAHARAT SS-8)	–	Page 12–20
	Fluid level	144 mm (5.66 in)	–	Page 12–20
	Fluid capacity	310 cm³ ± 2.5 cm³ (11.0 ± 0.08 USoz, 11.5 ± 0.09 UKoz)	–	Page 12–20
Steering head bearing preload		0.7 – 1.3 kgf (1.64 – 2.81 lbf)	–	Page 12–27

REAR WHEEL/ SUSPENSION SPECIFICATIONS

Unit: mm (in)

ITEM		STANDARD	SERVICE LIMIT	Page NO.
Minimum tire thread depth		–	2.0 (0.08)	Page 3–25
Cold tire pressure	Driver only	175 kPa (1.75 kgf/cm², 25 psi)	–	Page 3–25
	Driver and passenger	200 kPa (2.00 kgf/cm², 29 psi)	–	Page 3–25
Axle runout		–	0.2 (0.01)	Page 13–5
Wheel rim runout	Radial	–	0.3 (0.04)	Page 13–6
	Axial	–	0.3 (0.04)	Page 13–6
Drive chain	Size/link	428/132	–	Page 3–17
	Slack	25 - 35 (0.984 - 1.37)	50 (1.96)	Page 3–16

BRAKE SYSTEM SPECIFICATIONS

Unit: mm (in)

ITEM			STANDARD	SERVICE LIMIT	Page NO.
FRONT BRAKE AND MASTER CYLINDER	Specified brake fluid		DOT 3 or DOT 4	–	Page 14–5
	Brake disc thickness		3.8 – 4.6 (0.14 – 0.15)	3.5 (0.13)	Page 14–8
	Brake disc runout		–	0.10 (0.004)	Page 14–9
	Master cylinder I.D.	STD	12.700 – 12.743 (0.4999 – 0.5017)	12.775 (0.5029)	Page 14–11
		CBS	12.700 – 12.743 (0.4999 – 0.5017)	12.775 (0.5029)	Page 14–11
	Master piston O.D.	STD	12.657 – 12.684 (0.4983 – 0.4994)	12.645 (0.4978)	Page 14–11
		CBS	12.657 – 12.684 (0.4983 – 0.4994)	12.645 (0.4978)	Page 14–11
	Caliper cylinder I.D. (STD)		25.400 – 25.450 (1.0000 – 1.0020)	25.460 (1.0024)	Page 14–17
	Caliper cylinder I.D.(CBS)	Cylinder A	22.650 – 22.700 (0.8917 – 0.8937)	22.710 (0.8941)	Page 14–15
		Cylinder B	27.000 – 27.050 (1.0629 – 1.0649)	25.460 (1.0023)	Page 14–15
	Caliper piston O.D. (STD)		25.318 – 25.368 (0.9968 – 0.9987)	25.31 (0.996)	Page 14–17
	Caliper piston O.D. (CBS)	Piston A	22.585 – 22.618 (0.8891 – 0.8904)	22.577 (0.888)	Page 14–15
		Piston B	26.935 – 26.968 (1.0604 – 0.8905)	26.927 (1.060)	Page 14–15
REAR MASTER CYLINDER (CBS/ DISC TYPE)	Specified brake fluid		DOT 3 or DOT 4	–	Page 14–5
	Master cylinder I.D.		14.000 – 14.043 (0.5512 – 0.5529)	14.055 (0.5533)	Page 14–22
	Master piston O.D.		13.957 – 12.984 (0.5495 – 0.5529)	13.945 (0.5490)	Page 14–22
	Caliper cylinder I.D.		33.960 – 34.010 (1.3370 – 1.3389)	34.020 (1.3393)	Page 14–25
	Caliper piston O.D.		33.878 – 33.928 (1.3337 – 1.3357)	33.87 (1.333)	Page 14–25
	Brake pedal height		64.0 – 66.0 (2.51 – 2.59)	–	Page 14–23
REAR (Drum Type)	Brake pedal free play		20 – 30 (0.787 – 1.178)	–	Page 3–20
	Brake drum I.D.		130.0 - 130.2 (5.11 - 5.12)	131.0 (5.16)	Page 14–30
	Lining thickness			To the Indicator	–

BATTERY/CHARGING SYSTEM SPECIFICATIONS

ITEM		SPECIFICATION	Page NO.
Battery	Capacity	12 V – 4 Ah	Page 15–3
	Current leakage	0.02mA max	Page 15–7
	Fully charged	12.5 - 13.0 V	Page 15–3
	Needs charging	Below 12.4 V	Page 15–3
Alternator	Capacity	0.14kW / 5000 min-1(rpm)	Page 15–8
	Charging coil resistance (20^0C / 68^0F)	0.2 – 1.0 Ω	Page 15–8

ELECTRIC STARTER SPECIFICATION

Unit: mm (in)

ITEM	STANDARD	SERVICE LIMIT	Page NO.
Starter motor brush length	10.00 – 10.05 (0.394 – 0.396)	6.5 (0.26)	Page 10–11

IGNITION SYSTEM SPECIFICATIONS

ITEM		SPECIFICATION	Page NO.
Spark plug	Standard	CPR8EA-9 (NGK)	Page 3–7
Spark plug gap		0.8 ~ 0.9 mm (0.03 – 0.04 in)	Page 3–7
Ignition coil peak voltage		100 V minimum	Page 16–4
Ignition pulse generator peak voltage		0.7 V minimum	Page 16–4
Ignition timing (“F” mark)		8° BTDC at 1400 rpm	Page 16–5
Throttle position sensor	Input voltage	5 V	Page 16–7
	Resistance (20^0C/68^0F)	4.0 –6.0 Ω	Page 16–7

LIGHTS/METER/SWITCHES SPECIFICATIONS

ITEM			SPECIFICATION	Page NO.
Bulb	Headlight (Hi/low beam)		12V – 35/35W	–
	Position light		12V - 5W x 2	–
	Brake/tail light (LED)		2 W (LED)*9	–
	Turn signal light		12V - 10W x 4	–
	Instrument light		140 mcd LED*6	–
	Turn signal indicator		56 mcd LED	–
	High-beam indicator		28 mcd LED	–
	Tail light		0.3 W (LED)*9	–
	Neutral indicator		56 mcd LED	–
Fuse		Main	20A	–
		Sub	15A & 5A	–
Fuel level sensor		Full	6 – 9 Ω	Page 17–14
		Empty	90 – 96 Ω	Page 17–14

STANDARD TORQUE VALUES

FASTENER TYPE	TORQUE N·m (kgf·m, lbf·ft)	FASTENER TYPE	TORQUE N·m (kgf·m, lbf·ft)
5 mm bolt and nut	5 (0.5, 3.6)	5 mm screw	4 (0.4, 2.9)
6 mm bolt and nut	10 (1.0, 7.3)	6 mm screw	9 (0.9, 6.5)
(Include SH flange bolt)		6 mm flange bolt	12 (1.2, 9)
8 mm bolt and nut	22 (2.2, 16)	(Include NSHF) and nut	
10 mm bolt and nut	34 (3.5, 25)	8 mm flange bolt and nut	26 (2.7, 20)
12 mm bolt and nut	54 (5.5, 40)	10 mm flange bolt and nut	39 (4.0, 29)

ENGINE & FRAME TORQUE VALUES

- Torque specifications listed below are for specified fasteners.
- Others should be tightened to standard torque values listed above.

NOTE

1. Apply engine oil to the threads and seating surface.
2. Apply locking agent to the threads.
3. U–nut/ Lock Nut
4. Apply grease to the threads.

ENGINE

ITEM	PART NO.	QTY	THREAD DIA. (mm)	TORQUE N·m (kgf·m, lbf·ft)	REMARKS	Page NO.
MAINTENANCE						
Spark plug	31916 – KRM – 841	1	10	16 (1.6, 12)		Page 3–7
Valve adjusting lock nut	90206 – 250 – 000	2	6	18 (1.8, 13.2)	NOTE 1	Page 3–9
Timing hole cap	90084 – MN8 – 010	1	14	10 (1.0, 7.3)		Page 3–10
Crankshaft hole cap	90087 – KSP – 860	1	32	15 (1.5, 11)	NOTE 4	Page 3–10
Oil drain bolt	90131 – KRM – 840	1	12	30 (3.0, 22)		Page 3–11
Oil filter rotor cover screw	93700 – 05012 – 0A	3	5	4 (0.4, 3.0)		Page 3–13
LUBRICATION						
Oil pump plate screw	93901 – 34120	1	4	3 (0.3, 2.2)		Page 4–6
Oil pump mounting bolt	95701 – 06035 – 00	2	6	12 (1.2, 9)		Page 4–6
FUEL SYSTEM						
Fuel tank mounting bolt	95701 – 06012 – 00	2	8	27 (2.8, 20)		–
SE valve lock nut	16046 – KVC – 901	1	10	2.3 (0.2, 1.7)		Page 5–6
Carburetor drain screw	–	1	6	1.5 (0.2, 1.1)		Page 5–6
Slow jet	16180 – K38 – 901	1	5	1.5 (0.1, 1.1)		Page 5–11
Needle jet holder	16165 – K21 – 901	1	7	2.5 (0.25, 1.8)		Page 5–11
Main jet	99101 – KTN – 118	1	5	2.1 (0.2, 1.6)		Page 5–11
Float chamber screw	93500 – 04012 – 0H	3	4	2.1 (0.2, 1.6)		Page 5–12
SE valve cover screw	93892 – 05012 – 18	2	5	3.4 (0.4, 2.5)		Page 5–13
Vacuum chamber cover screw	93500 – 04008 – 1H	2	4	2.1 (0.2, 1.6)		Page 5–14
Throttle cable stay screw	93500 – 05012 – 1H	2	5	3.4 (0.34, 2.5)		Page 5–14
Insulator band screw	16217 – KSP – 910	1	5	1 (0.1, 0.7)		Page 5–15
Fuel valve lock nut	16950 – K43 – 901	1	16	22 (2.2, 16)		Page 5–23
Fuel unit	94050 – 06000	4	6	9 (0.9, 6.6)		–
CYLINDER HEAD/VALVES						
Cylinder head cover bolt	96001 – 06035 – 00	4	6	10 (1.0, 7.3)		Page 7–6
Rocker arm shaft bolt	90002 – KRM – 840	2	5	5 (0.5, 3.7)		Page 7–12
Cam sprocket bolt	90083 – KRM – 840	2	5	9 (0.9, 6.6)		Page 7–9
Cylinder stud bolt nuts	90201 – KRE – G00	4	9	30 (3.0, 22)	NOTE 1	Page 7–19
Inlet pipe bolt	95701 – 06025 – 00	2	6	12 (1.2, 9)		Page 7–21
Cam chain tensioner lifter screw	90005 – K15 – 900	1	6	4 (0.4, 3.0)		Page 7–22
Cylinder stud bolt	90031 – KRE – G00	2	9	9 (0.9, 6.6)		Page 7–19
	90032 – KRE – G00	2	9	9 (0.9, 6.6)		Page 7–19

ITEM	PART NO.	QTY	THREAD DIA. (mm)	TORQUE N·m (kgf·m, lbf·ft)	REMARKS	Page NO.
CLUTCH/GEARSHIFT LINKAGE						
Clutch center lock nut	90202 – KRM – 840	1	14	83 (8.3, 61)	NOTE 1	Page 9–11
Clutch lifter plate bolt	90008 – KRM – 840	3	6	12 (1.2, 9)		Page 9–11
Oil filter rotor lock nut	90202 – KRM – 840	1	14	83 (8.3, 61)	NOTE 1	Page 9–12
Shift drum stopper arm bolt	90022 – KRM – 840	1	6	12 (1.2, 9)	NOTE 2	Page 9–13
Gear shift cam bolt	90003 – KVS – 900	1	6	12 (1.2, 9)	NOTE 2	Page 9–14
ALTERNATOR/STARTER CLUTCH						
Flywheel lock nut	90201 – KRM – 840	1	14	74 (7.4, 55)	NOTE 1	Page 10–5
Starter clutch bolt	90085 – KSP – 901	6	6	16 (1.6, 12)	NOTE 2	Page 10–8
Ignition pulse generator mounting bolt	96001 – 06016 – 00	2	6	10 (1.0, 7.3)	NOTE 2	Page 10–17
Wire guide bolt	96001 – 06016 – 00	1	6	10 (1.0, 7.3)	NOTE 2	Page 10–17
CRANKCASE/CRANKSHAFT/TRANSMISSION/BALANCER DRIVE/KICK STARTER						
Balancer Shaft Nut (Right crankcase)	90202 – KRM – 840	1	14	64 (6.5, 47)	NOTE 1	Page 11–19
Balancer Shaft Nut (Left crankcase)	94002 – 12000 – 0S	1	12	55 (5.5, 44)	NOTE 1	Page 11–20
Push plug bolt	96001 – 06016 – 00	1	6	10 (1.0, 7.3)		Page 11–20
Drive sprocket	90084 – 041 – 0001	1	12	12 (1.2, 9)		–
Brg hold plate(Right crankcase)	95701 – 06016 – 00	1	6	12 (1.2, 9)		–
	95702 – 06016 – 00	1	6	12 (1.2, 9)		–
Brg hold plate(Left crankcase)	96001 – 06016 – 00	1	6	10 (1.0, 7.3)		–
Pin, shift return spring	24652 – KRM – 840	1	8	22 (2.2, 16)		–

EXHAUST PIPE STUD BOLT

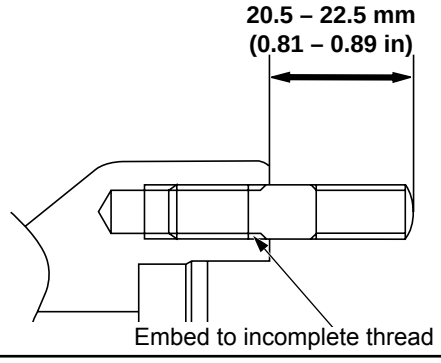

INSULATOR BAND SCREW:

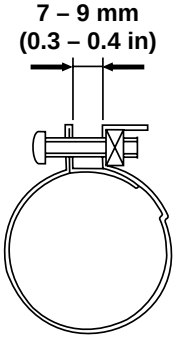

CYLINDER STUD BOLT:

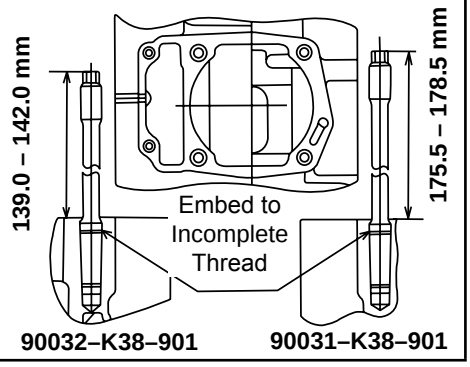

FRAME

ITEM	PART NO.	QTY	THREAD DIA. (mm)	TORQUE N·m (kgf·m, lbf·ft)	REMARKS	PAGE NO.
FRAME/BODY PANELS/EXHAUST SYSTEM						
Exhaust pipe stud bolt	90035 – KRM – 840	2	8	11 (1.1, 8)		Page 2–9
Sari Guard flange bolt	95701 – 08014 – 07	2	8	22 (2.2, 16)		Page 2–8
	95701 – 08040 – 07	1	8	22 (2.2, 16)		Page 2–8
ENGINE REMOVAL/INSTALLATION						
Front engine hanger nut	95801 – 10090 – 00	4	10	45 (3.5, 26)		Page 6–5
Rear engine hanger nut	90019 – 399 – 010	2	10	54 (5.5, 37.6)		Page 6–5
Drive sprocket fixing plate bolt	90084 – 041 – 000	2	6	12 (1.2, 9)		Page 6–5
FRONT WHEEL/BRAKE/SUSPENSION/STEERING						
Front brake disc bolt	90105 – KSP – 870	5	8	42 (4.3, 31)	NOTE 2	Page 12–12
Front axle nut	90306 – KTE – 911	1	12	59 (5.9, 43)	NOTE 3	Page 12–13
Handlebar upper holder bolt	90111 – 362 – 000	4	6	22 (2.2, 16)		Page 12–6
Master cylinder holder bolt	96001 – 06022 – 07	2	6	9 (0.9,6.6)		Page 12–9
Rear view mirror lock nut	90201 – MW3 – 620	2	10	34 (3.5, 26)		Page 12–9
Fork socket bolt	90116 – KV3 – 701	2	8	20 (2.0, 15)	NOTE 2	Page 12–20
Fork cap	51450 – K43 – 901	2	33	22 (2.2, 16)		Page 12–22
Bottom bridge pinch bolt	95701 – 10032 – 07	2	10	32 (3.2, 23)		Page 12–22
Top bridge bolt	90101 – K43 – 900	2	8	22 (2.2, 16)		Page 12–22
Steering bearing adjustment nut	53220 – KSP – 860	1	26	2.5 (0.25, 1.8)		Page 12–26
Steering stem nut	90304 – KSP – 900	1	24	74 (7.5, 55)		Page 12–27
REAR WHEEL/BRAKE/SUSPENSION						
Rear brake arm	90302 – KTE – 911	1	6	10 (1.0, 7.3)	NOTE 3	–
Rear brake disc bolt	90105 – KSP – 870	4	8	42 (4.3, 31)		Page 13–12
Driven sprocket nut	90304 – KTE – 911	4	10	64 (6.4, 47)	NOTE 3	Page 13–12
Rear axle nut	90305 – KYJ – 711	1	16	88 (8.8, 65)	NOTE 3	Page 13–9
Shock absorber mounting nut	90304 – KTE – 911	2	10	44 (4.4, 32)	NOTE 3	Page 13–13
Shock absorber mounting bolt Upper	90153 – KYJ – 900	1	10	44 (4.4, 32)	NOTE 3	Page 13–13
Shock absorber mounting bolt Lower	90151 – KSP – 900	1	10	44 (4.4, 32)		Page 13–13
Swing arm pivot bolt	90121 – KSP – 900	1	14	54 (5.4, 40)	NOTE 3	Page 13–17
HYDRAULIC BRAKE						
Caliper bleeder valve	43352 – 568 – 0030	1	8	5.4 (0.55, 4)		Page 14–5
FR Master cylinder cap	93600 – 04012 – 1G	2	4	1.5 (0.15, 1.1)		Page 14–6
RR Master cylinder cap	43516 – K43911	2	4	1.5 (0.15, 1.1)		–
Brake caliper mounting bolt	90131 – KYJ – 7101	2	8	30 (3.0, 22)		Page 14–16
Front brake light switch screw	90508 – K21 – 921	1	4	1.2 (1.2, 0.9)		Page 14–13
Brake lever pivot bolt(Disk)	90114 – 166 – 006	1	6	1.0 (0.1, 0.7)		Page 14–13
Brake lever pivot nut (Disk)	94050 – 06000	1	6	5.9 (0.59, 4.4)		Page 14–13
Brake hose oil bolt	90145 – GAZ – 981	2	10	34 (3.4, 25)		Page 14–16
FR caliper secondery pin (STD)	45131 – GZ0 – 006	1	8	17.2 (1.7, 12)		–
FR caliper hanger pin (STD)	45215 – KPH – 951	1	10	17.2 (1.7, 12)		–
FR brake caliper pin (CBS)	45131 – ML7 – 921	1	8	22 (0.6, 16)	NOTE 2	–
FR brake caliper hangar pin (CBS)	45215 – MBT – D51	1	10	17.2 (1.7, 12)		Page 14–8
CBS M/C joint nut	95701 – 06022 – 08	1	6	17.2 (1.7, 12)		–
CBS M/C holder bolts	90701 – 06022 – 08	2	6	12 (1.2, 8.8)		Page 14–23
Brake pipe joint nut	46312 – VMO – 770	1	10	14 (1.4, 10)		–
CARBURETOR						
Throttle position sensor screw	16080 – KTN – 901	1	5	3.4 (0.4, 2.5)		Page 16–8
LIGHTS/METER/SWITCHES						
Fuel level sensor mounting nut	94050 – 06000	4	6	9 (0.9, 6.6)		Page 17–16
SIDE STAND						
Side stand pivot screw	90107 – GN1 – 010	1	10	10 (1.0, 7.3)		Page 2–8
Side stand lock nut	90304 – KTE – 911	1	10	39 (3.9, 28.7)		Page 2-8

LUBRICATION AND SEAL POINTS

ENGINE

LOCATION	MATERIAL	REMARKS
Crankcase mating area 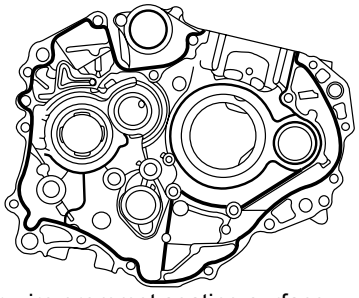 Alternator wire grommet seating surface	Liquid sealant	6.5 (0.26)
Oil pump rotors Oil through sliding area Oil pump drive gear teeth Rocker arm shaft entire surface Rocker arm inner surface and roller surface Camshaft lobes Cam chain entire surface Cylinder inner surface Piston outer surface and piston rings Clutch disc entire surface Primary drive gear teeth Primary driven gear teeth Clutch lifter rod sliding surface Gearshift spindle journal rotating area Electric starter idle gear shaft entire surface Electric starter idle gear teeth Electric starter driven gear teeth Transmission gear teeth Shift fork shaft sliding area Shift drum journal rotating area Each bearing rotating area Each O–ring	Engine oil	
Each dust seal lip Each oil seal lip Crankshaft hole cap threads	Multi– purpose grease	
Valve stem sliding surface Piston pin entire surface Clutch outer guide entire surface Clutch outer rotating area Starter clutch rolling surfaces Crankshaft connecting rod big end needle bearing Crankshaft connecting rod small end inner surface Crankshaft bearing push plug entire surface M4, M5, C1, C2, C3 gear rotating surface C1, C2, C3 gear bushing entire surface M3, C4, C5 gear shift fork grooves	Molybdenum oil solution (a mixture of engine oil and molybdenum disulfide grease in a ratio of 1:1)	
Shift drum stopper arm bolt threads Gear shift cam bolt threads Starter clutch bolt threads Ignition pulse generator mounting bolt threads Crankshaft push plug plate Alternator stator wire guide bolt threads	Locking agent	Coating width: 6.5 ± 1.0 mm from tip Coating width: 6.5 ± 1.0 mm from tip Coating width: 6.5 ± 1.0 mm from tip Coating width: 6.5 ± 1.0 mm from tip Coating width: 6.5 ± 1.0 mm from tip Coating width: 6.5 ± 1.0 mm from tip

FRAME

LOCATION	MATERIAL	REMARKS
Steering head bearings Steering head cone race Steering head bearing dust seal lips	Use Water resistant multi–purpose grease {Excelite EP2 (KYODO YUSHI CO. LTD) or equivalent}	Apply Min 3g Apply Min 3g Apply Min 3g
Axle bolt surface Wheel distance collar surface Front wheel dust seal lips Driven flange dust seal lip Rear wheel hub O–ring Rear brake cam rotating surface and shoe contacting area Rear brake panel anchor pin Swing arm needle bearings Swing arm pivot collar surface Swing arm pivot dust seal cap lips Swing arm pivot bolt and nut threads Center stand pivot Throttle grip pipe rotating area Clutch lever pivot Brake lever pivot Brake master cylinder push rod contacting area Brake caliper pin boot inner surface Brake caliper pin sliding surface Each dust seal lips Each bearing rotating area Each O–ring Rear brake pedal equalizer pivot	Multi–purpose grease	6.5 (0.26)
Rear brake cam felt seal	Gear oil (IDEMITSU AUTOLUB 30 or MECHANIC OIL 44 or equivalent)	
Drive chain	Gear oil (SAE #80 – 90) / Molten grease	
Throttle cable boot inside and connecting area Clutch cable boot inside and connecting area Rear brake pedal pivot rotating area	Silicone grease	
Brake master cylinder piston cups	DOT3 or DOT4 brake fluid	
Throttle cable case inside Clutch cable case inside	Molybdenum oil solution (a mixture of engine oil and molybdenum disul fide grease in a ratio of 1:1)	
Fork socket bolt threads Ignition switch mounting bolt threads Combination and lock switch bolt	Locking agent	
Fork cap O–ring Fork oil seal lips	Fork fluid	
Handlebar grip inner surface	Honda Bond A or equivalent	

CABLE & HARNESS ROUTING

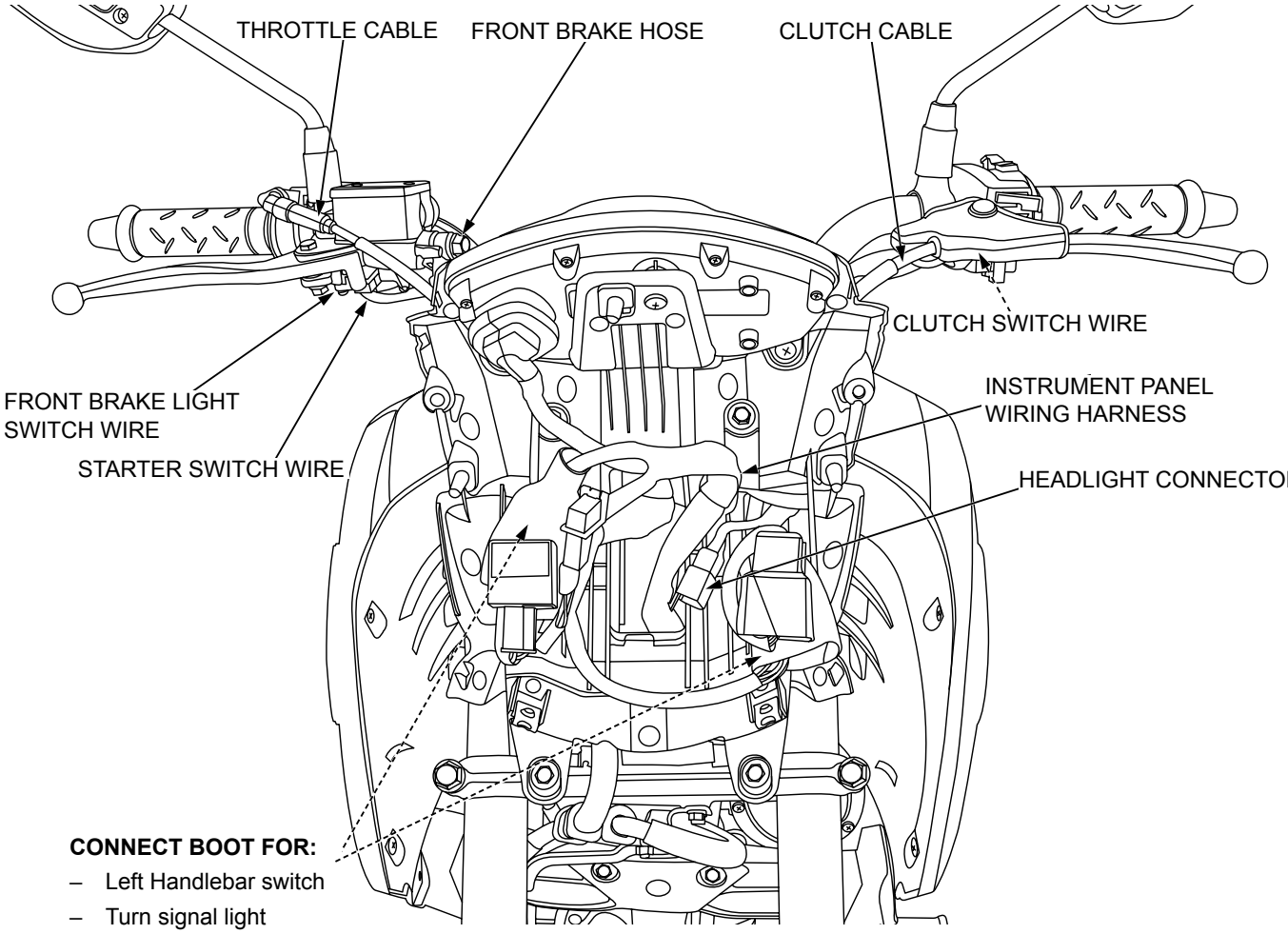

CONNECT BOOT FOR:

- Left Handlebar switch
- Turn signal light
- Ignition switch
- Front brakelight switch

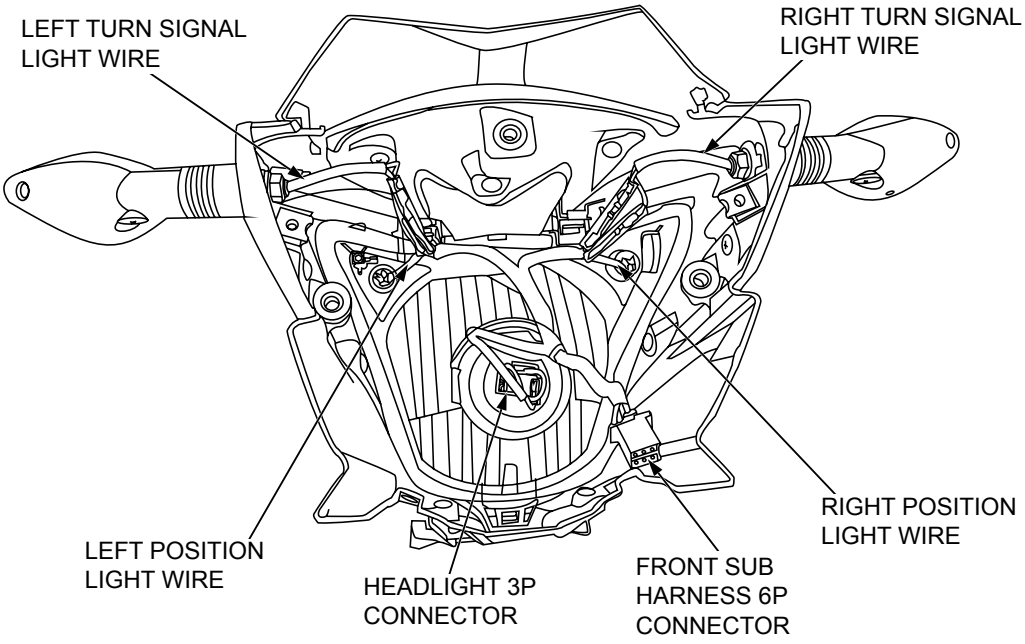

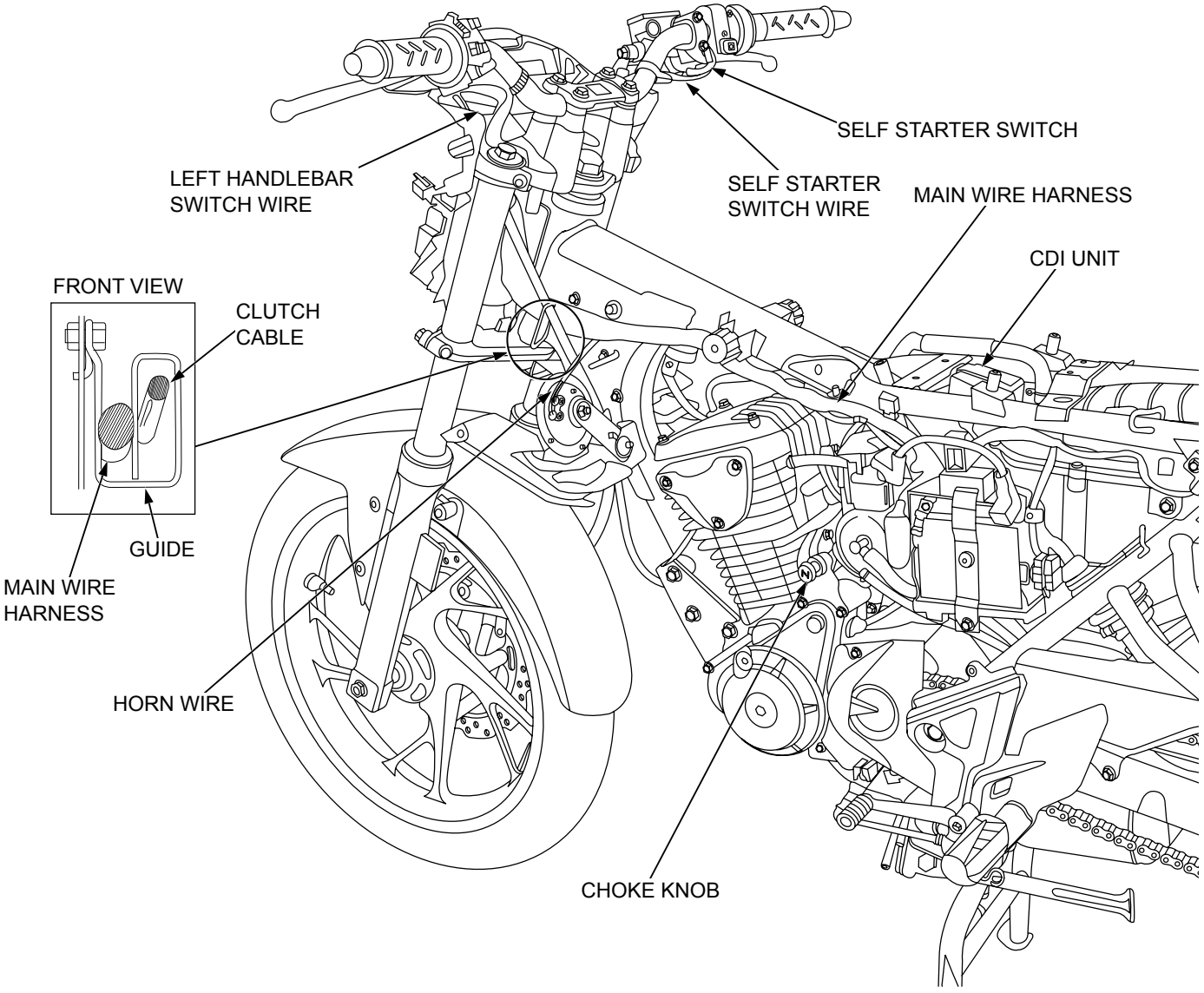
SELF STARTER SWITCH
LEFT HANDLEBAR SWITCH WIRE
SELF STARTER SWITCH WIRE
MAIN WIRE HARNESS
CDI UNIT
FRONT VIEW
CLUTCH CABLE
GUIDE
MAIN WIRE HARNESS
HORN WIRE
CHOKE KNOB

CBS TYPE:

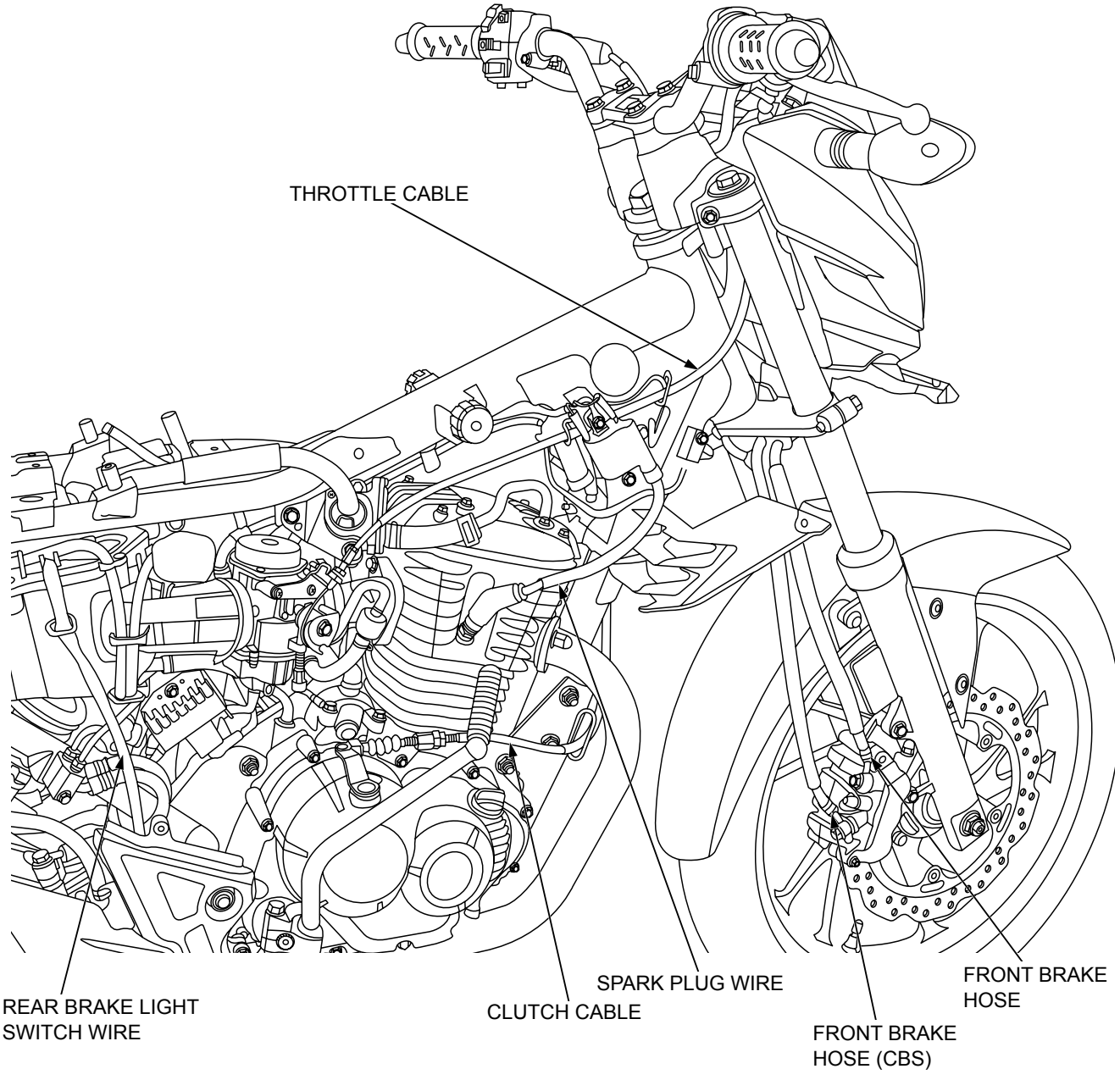
THROTTLE CABLE
REAR BRAKE LIGHT SWITCH WIRE
CLUTCH CABLE
SPARK PLUG WIRE
FRONT BRAKE HOSE (CBS)
FRONT BRAKE HOSE

STD TYPE:

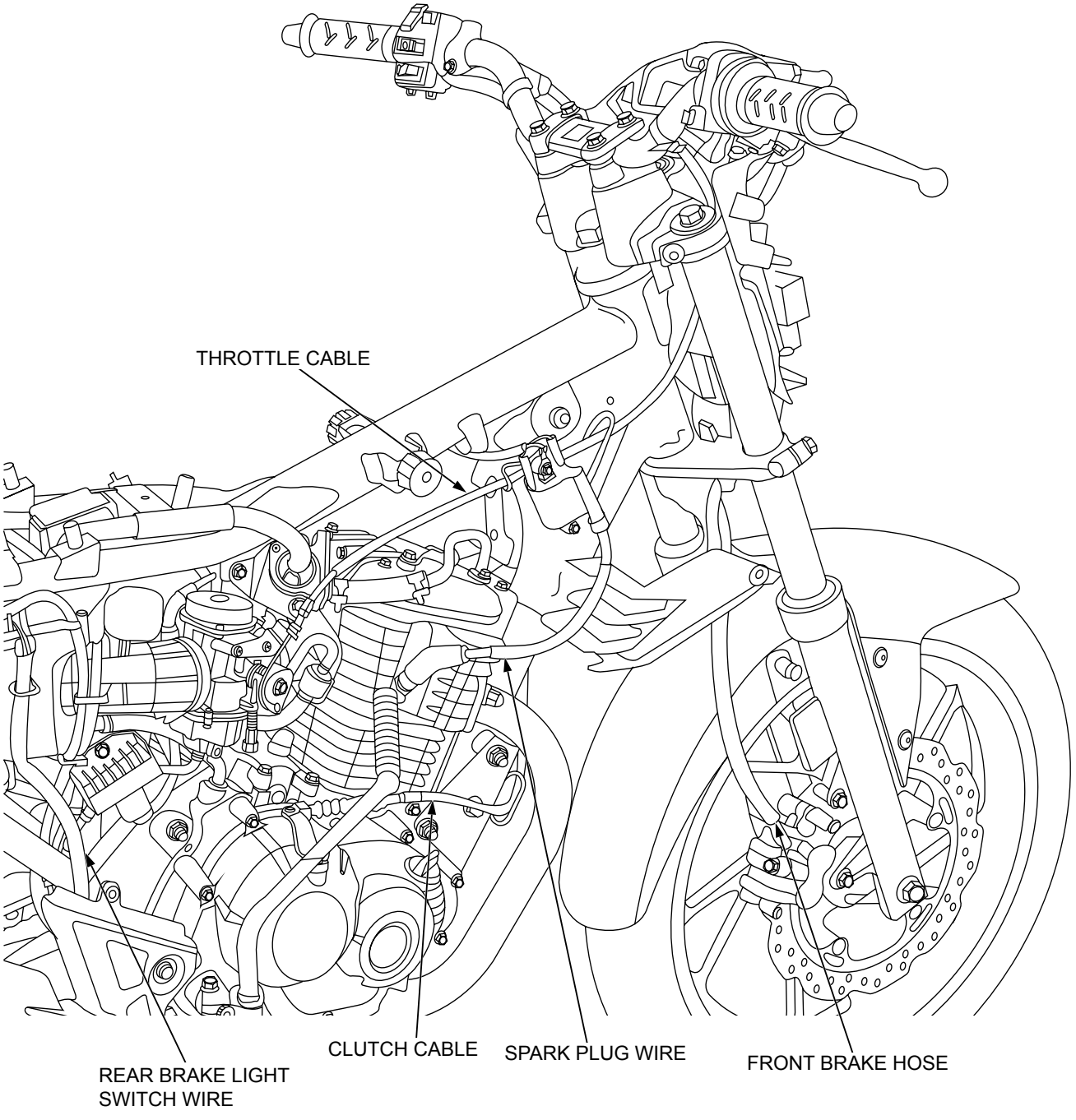
THROTTLE CABLE
REAR BRAKE LIGHT SWITCH WIRE
CLUTCH CABLE
SPARK PLUG WIRE
FRONT BRAKE HOSE

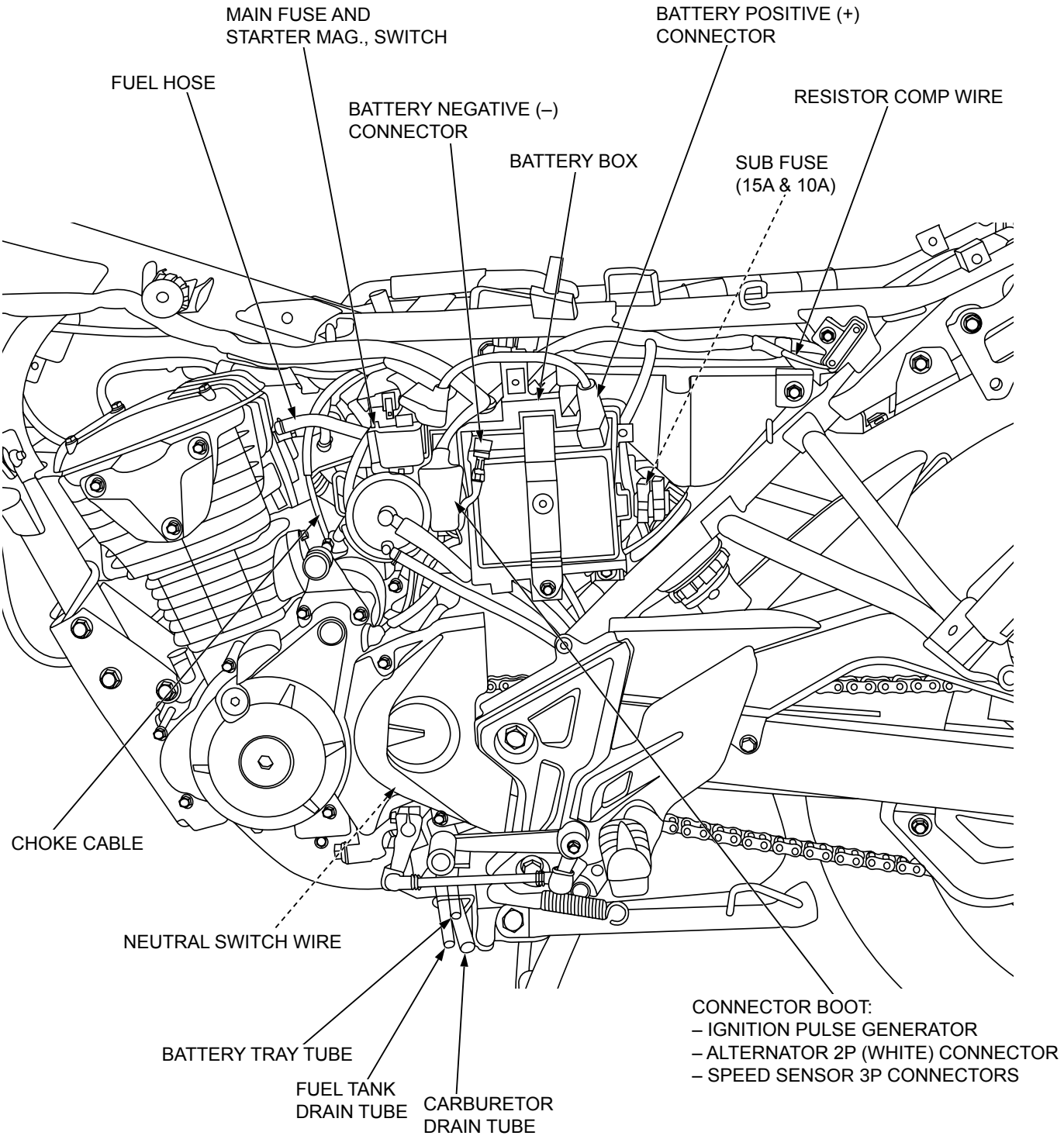
MAIN FUSE AND
STARTER MAG., SWITCH
BATTERY POSITIVE (+)
CONNECTOR
FUEL HOSE
RESISTOR COMP WIRE
BATTERY NEGATIVE (–)
CONNECTOR
BATTERY BOX
SUB FUSE
(15A & 10A)
CHOKE CABLE
NEUTRAL SWITCH WIRE
CONNECTOR BOOT:
– IGNITION PULSE GENERATOR
– ALTERNATOR 2P (WHITE) CONNECTOR
– SPEED SENSOR 3P CONNECTORS
BATTERY TRAY TUBE
FUEL TANK
DRAIN TUBE
CARBURETOR
DRAIN TUBE

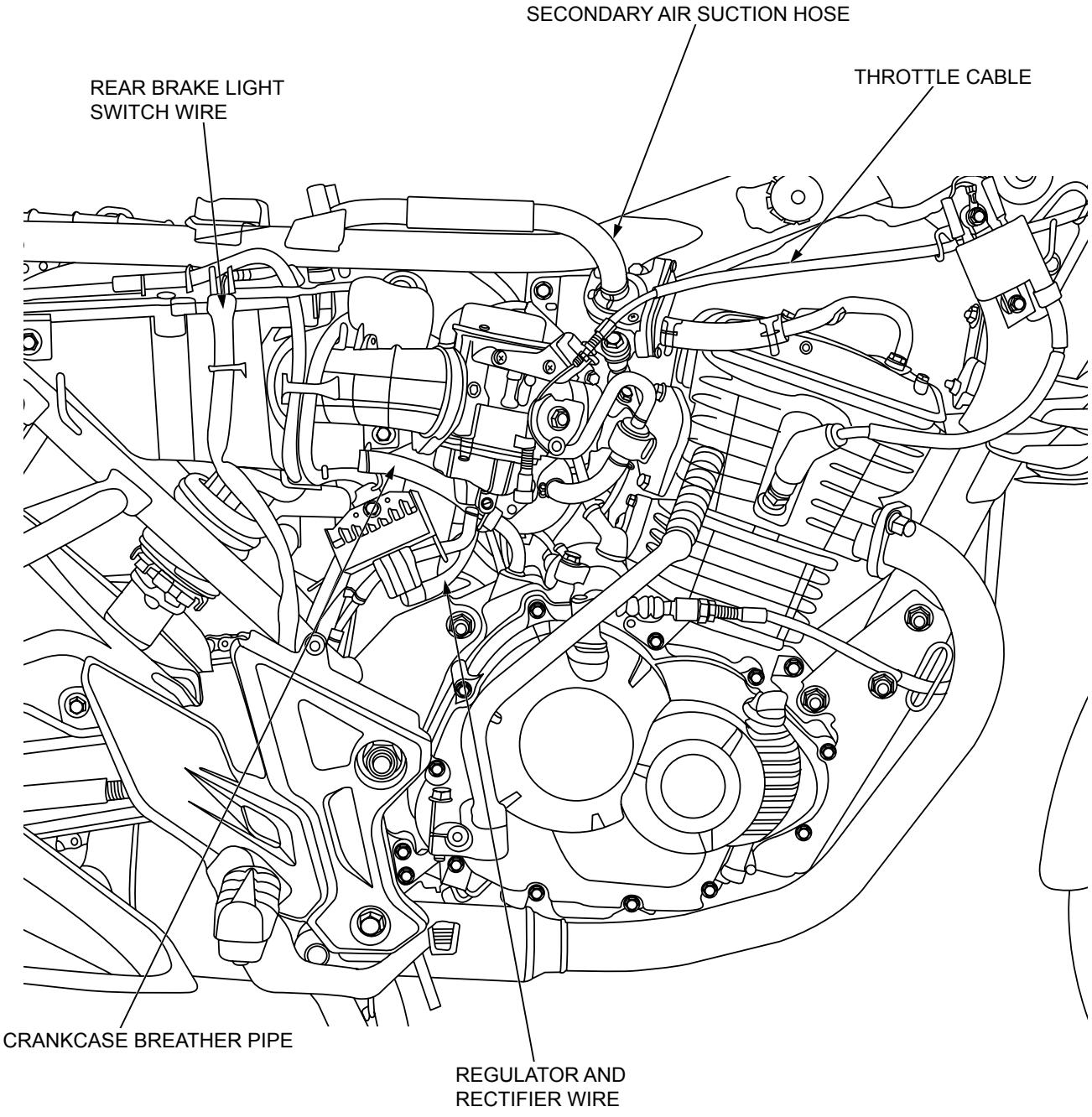
SECONDARY AIR SUCTION HOSE
THROTTLE CABLE
REAR BRAKE LIGHT SWITCH WIRE
CRANKCASE BREATHER PIPE
REGULATOR AND RECTIFIER WIRE

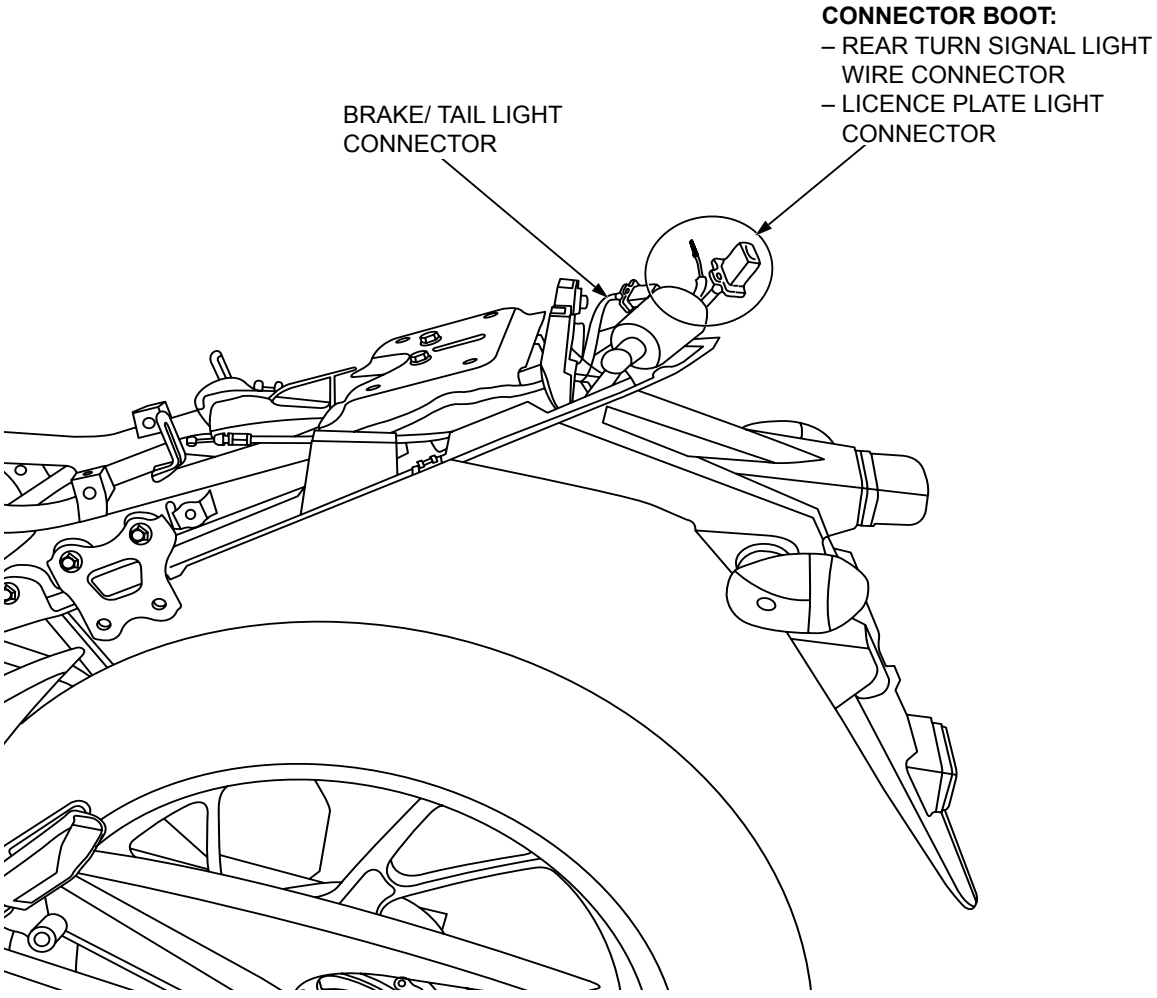
CONNECTOR BOOT:
– REAR TURN SIGNAL LIGHT WIRE CONNECTOR
– LICENCE PLATE LIGHT CONNECTOR
BRAKE/ TAIL LIGHT CONNECTOR

EMISSION CONTROL SYSTEMS

SOURCE OF EMISSIONS

The combustion process produces carbon monoxide (CO), oxides of nitrogen (NOx) and hydrocarbons (HC). Control of carbon monoxide, oxides of nitrogen and hydrocarbons is very important because, under certain conditions, they react to form photochemical smog when subjected to sunlight. Carbon monoxide does not react in the same way, but it is toxic.

Honda Motor Co., Ltd. utilizes appropriate carburetor settings as well as other systems, to reduce carbon monoxide and hydrocarbons.

CRANKCASE EMISSION CONTROL SYSTEM

The engine is equipped with a closed crankcase system to prevent discharging crankcase emissions into the atmosphere. Blow–by gas is returned to the combustion chamber through the air cleaner and carburetor.

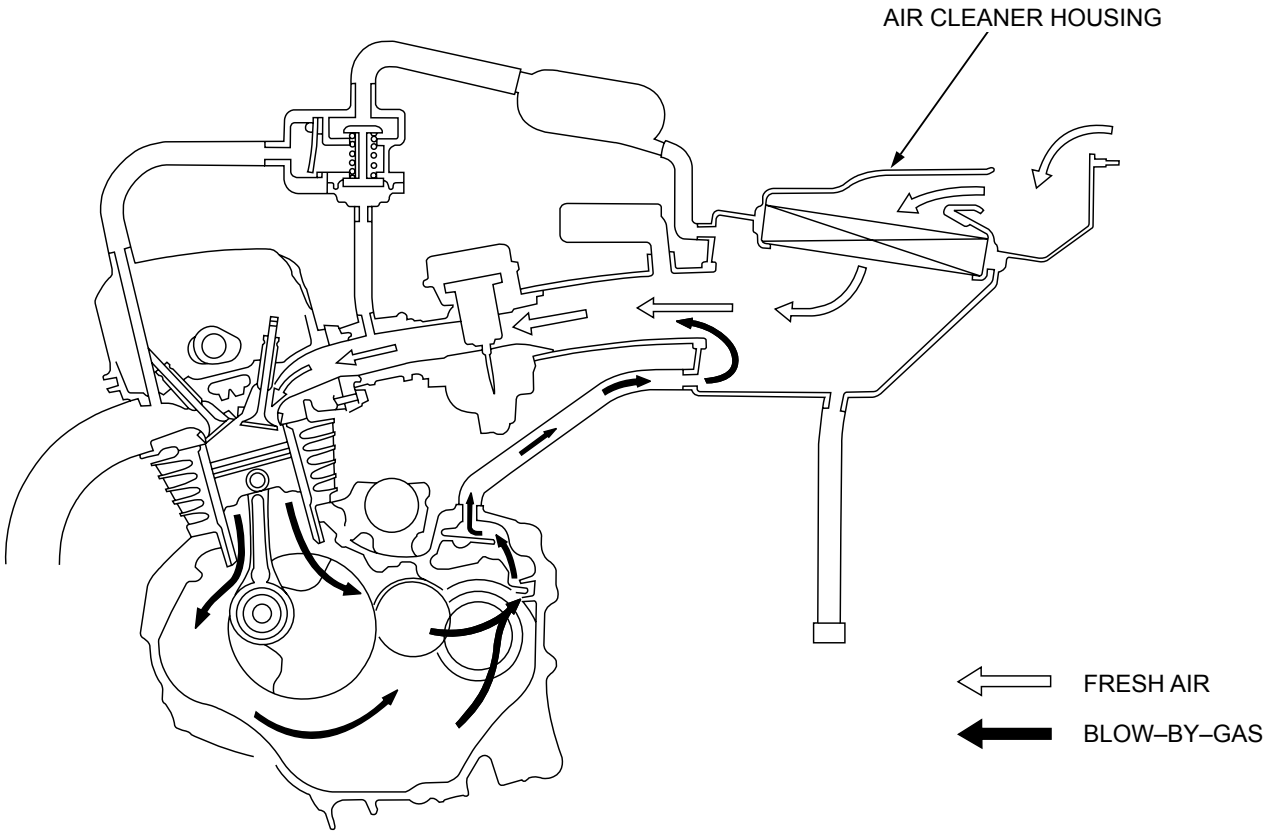

EXHAUST EMISSION CONTROL SYSTEM

The exhaust emission control system is composed of a pulse secondary air injection system and lean carburetor settings.

No adjustment should be made except idle speed adjustment with the throttle stop screw. The exhaust emission control system is separate from the crankcase emission control system.

SECONDARY AIR SUPPLY SYSTEM

The secondary air supply system introduces filtered air into the exhaust gases in the exhaust port. Fresh air is drawn into the exhaust port by the function of the PAIR control valve.

This charge of fresh air promotes burning of the unburned exhaust gases and changes a considerable amount of hydrocarbons and carbon monoxide into relatively harmless carbon dioxide and water vapour.

The reed valve prevents reverse air flow through the system. The PAIR control valve reacts to high intake manifold vacuum and will cut off the supply of fresh air during engine deceleration, thereby preventing after burn in the exhaust system.

No adjustments to the secondary air supply system should be made, although periodic inspection of the components is recommended.

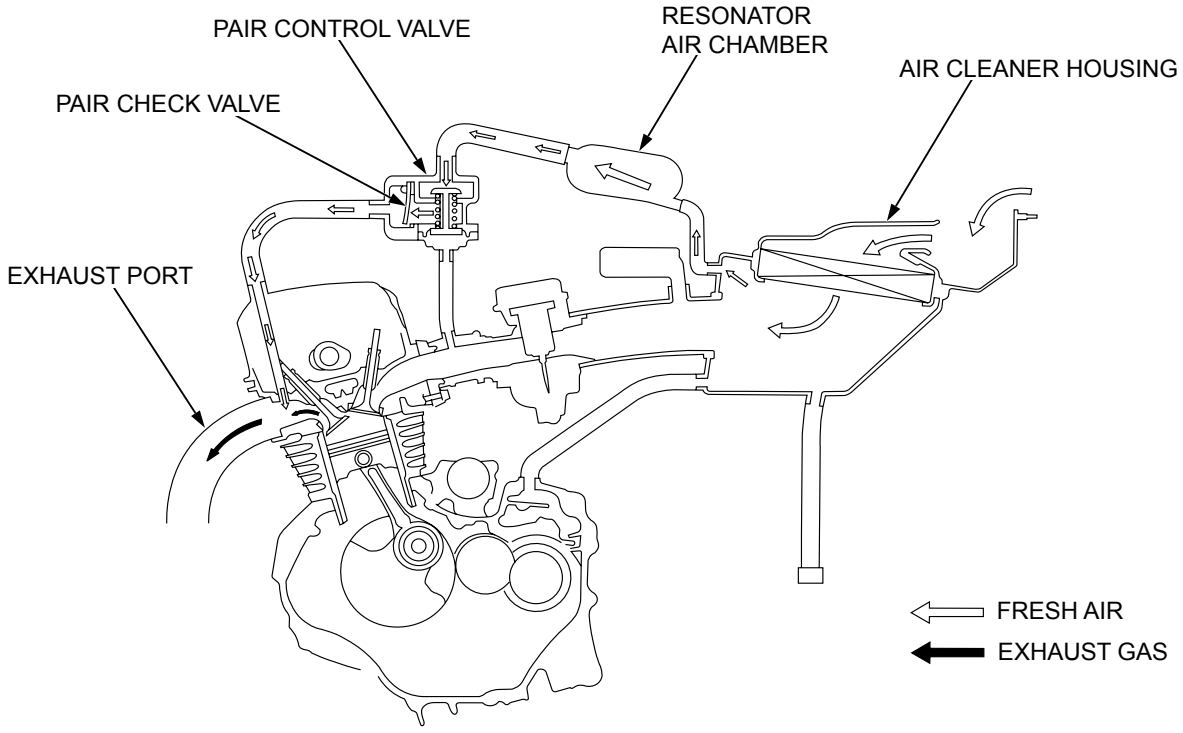

OXIDATION CATALYTIC CONVERTER

This motorcycle is equipped with an oxidation catalytic converter.

The oxidation catalytic converter is in the exhaust system. Through chemical reactions, it converts HC and CO in the engine's exhaust to carbon dioxide (CO_2) and water vapour.

NOISE EMISSION CONTROL SYSTEM

TAMPERING WITH THE NOISE EMISSION CONTROL SYSTEM IS PROHIBITED: Local law prohibits the following acts or the causing thereof: (1) The removal or rendering inoperative by any person, other than for the purpose of maintenance, repair or replacement, of any device or element of design incorporated into any vehicle for the purpose of noise control prior to its sale or delivery to the ultimate customer or while it is in use: or (2) the use of any vehicle after such device or element of design has been remove or rendered inoperative by any person.

AMONG THOSE ACTS PRESUMED TO CONSTITUTE TAMPERING ARE THE ACTS LISTED BELOW:

1. Removal of or puncturing of the muffler, header pipes or any other component which conducts exhaust gases.
2. Removal of or puncturing of any parts of the intake system.
3. Lack of proper maintenance.
4. Replacing any moving parts of the vehicle, or parts of the exhaust or intake system, with parts other than those specified by the manufacturer.

EVAPORATIVE EMISSION CONTROL SYSTEM

This device collects the fuel vapour from the fuel tank and is routed into the evaporative emission canister, where it is absorbed and stored while the engine is stopped. When the engine is running and evaporative emission (EVAP) one way valve is open, fuel vapour in the canister is drawn into the engine through the carburetor for reburning to avoid air pollution caused by fuel vapour diffused into the air.

No adjustment to the canister or the one way valve is required.

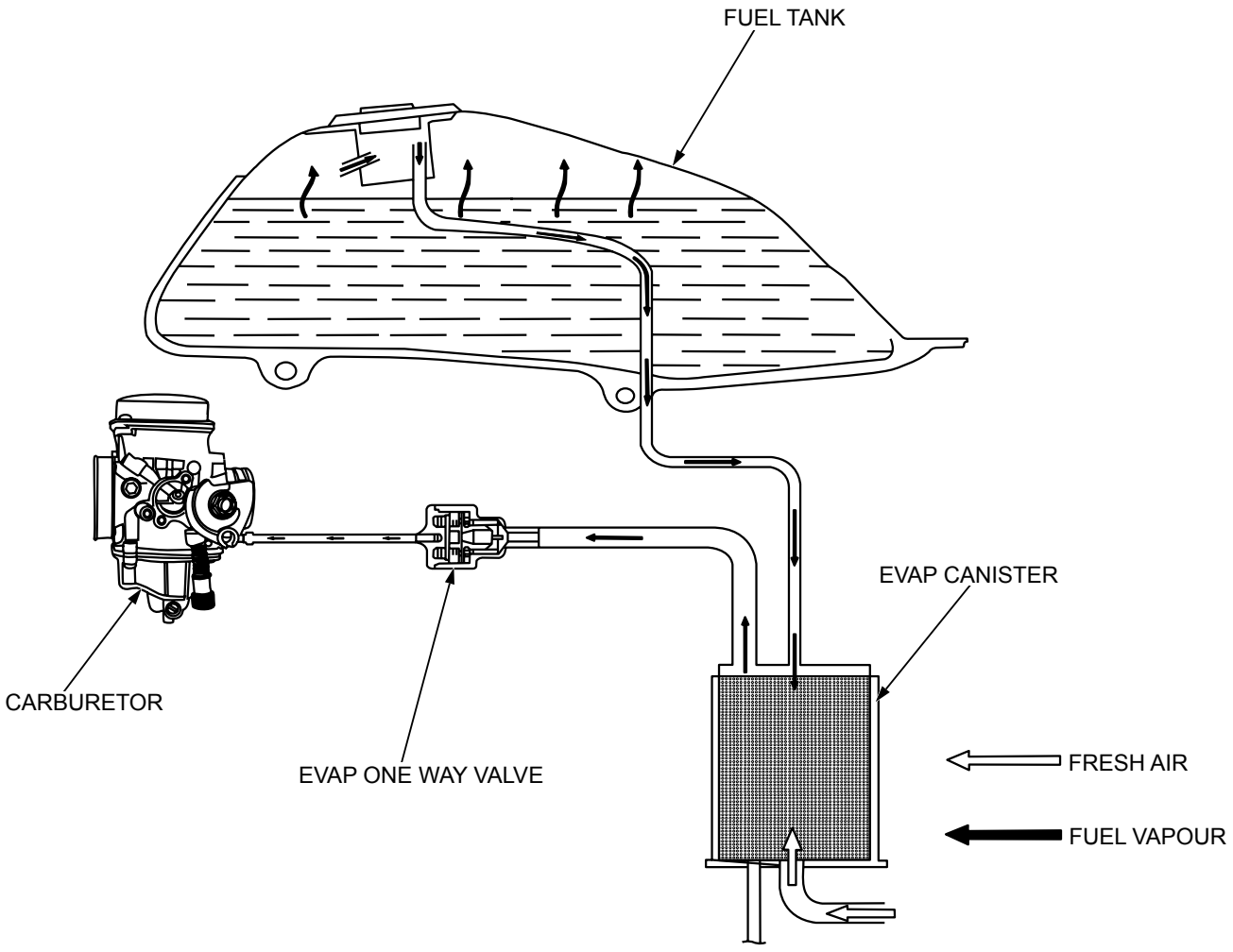

AMONG THOSE ACTS PRESUMED TO CONSTITUTE TAMPERING ARE THE ACTS LISTED BELOW:

1. Removal of or puncturing of the muffler, header pipes or any other component which conducts exhaust gases.
2. Removal of or puncturing of any parts of the intake system.
3. Lack of proper maintenance.
4. Replacing any moving parts of the vehicle, or parts of the exhaust or intake system, with parts other than those specified by the manufacturer.

2. FRAME/BODY PANELS/EXHAUST SYSTEM

SERVICE INFORMATION	2-1	FRONT FENDER	2-5
TROUBLESHOOTING	2-1	REAR GRIP	2-6
FRONT COWL	2-2	REAR GARNISH SET	2-7
FRONT COWL DISASSEMBLY	2-2	REAR COWL	2-7
COVER HEADLIGHT RR	2-2	REAR FENDER	2-7
SEAT	2-3	SARI GUARD	2-8
RIGHT SIDE COVER	2-3	SIDE STAND	2-8
LEFT SIDE COVER	2-3	EXHAUST PIPE/MUFFLER	2-8
FUEL TANK ASSEMBLY	2-3	MUFFLER PROTECTOR	2-9

SERVICE INFORMATION

GENERAL

- Work in a well ventilated area. Smoking or allowing flames or sparks in the work area or where the gasoline is stored can cause a fire or explosion.
- This section covers removal and installation of the body panels, fuel tank and exhaust system.
- Serious burns may result if the exhaust system is not allowed to cool before components are removed or serviced.
- Always replace the exhaust pipe gasket with a new one after loosening or removing the exhaust pipe joint nuts.
- When installing the exhaust system, loosely install all of the exhaust pipe/muffler fasteners, always tighten the exhaust pipe joint nuts first, then tighten the mounting bolt and nut, if you tighten the mounting bolt and nut first, the exhaust pipe may not seat properly.
- Always inspect the exhaust system for leaks after installation.

TORQUE VALUES

ITEM	PART NO.	QTY	THREAD DIA. (mm)	TORQUE N·m (kgf·m, lbf·ft)	REMARKS	PAGE NO.
Exhaust Pipe Stud bolt	90035 – KRM – 840	2	8	11 (1.1, 8)		Page 2-9
Muffler mounting bolt	90305 – KSP – 900	1	6	26 (2.6, 20)		Page 2-9
Sari Guard flange bolt	95701 – 08014 – 07	2	8	22 (2.2, 16)		Page 2-8
	95701 – 08040 – 07	1	8	22 (2.2, 16)		Page 2-8
Side stand pivot bolt	90107 – GN1 – 010	1	10	10 (1.0, 7.3)		Page 2-8
Side stand lock nut	90304 – KTE – 911	1	10	39 (3.9, 28.7)		Page 2-8

TROUBLESHOOTING

Excessive exhaust noise
- Broken exhaust system
- Exhaust gas leak

Poor performance
- Deformed exhaust system
- Exhaust gas leak
- Clogged muffler

FRONT COWL

REMOVAL/INSTALLATION

Align the grommet with front cowl

Remove the front cowl pan screws (4 nos.).

Disconnect 6P black connector (Headlight).

Carefully release the front cowl from the boss.

Remove the front cowl.

During the installation align boss with grommet in front cowl.

Installation is in the reverse order of removal.

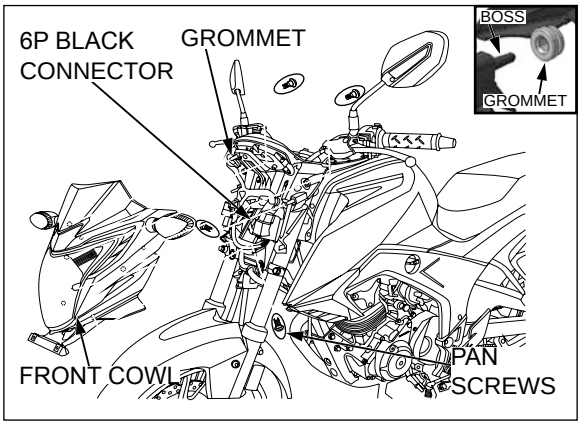

FRONT COWL DISASSEMBLY

REMOVAL/INSTALLATION

Remove the windscreen screw (1 no.) and release carefully from lugs.

Remove the headlight aim adjusting bolt (1 no.) and headlight mounting bolts (2 nos.).

Remove both the winkers from the stays by removing their bolts.

Remove the right and left garnish by removing screws (2 nos.) from both side and tabs carefully.

Remove the number plate stay by removing screws (4 nos.).

Installation is in the reverse order of removal.

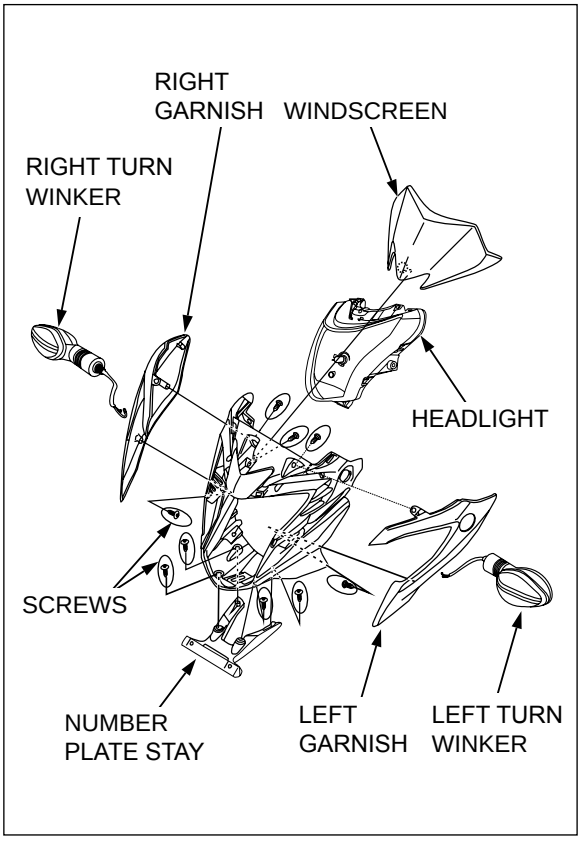

COVER HEADLIGHT RR

REMOVAL/INSTALLATION

Remove the 16P grey connector from combination meter.

Remove the 2P white winker relay connector.

Remove the 5P white passing relay connector.

Disconnect all connectors from the wiring harness.

Remove mounting bolts (4 nos) from cover headlight RR.

Installation is in the reverse order of removal.

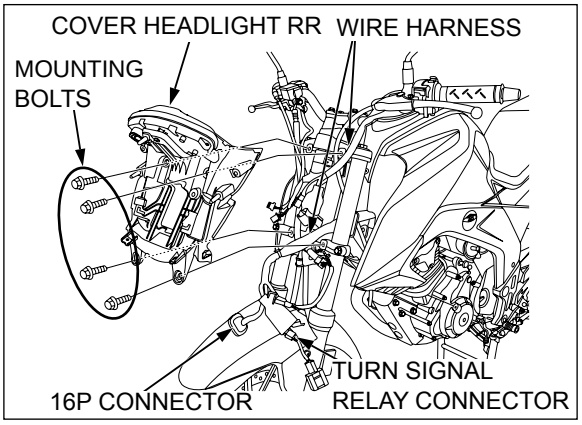

SEAT

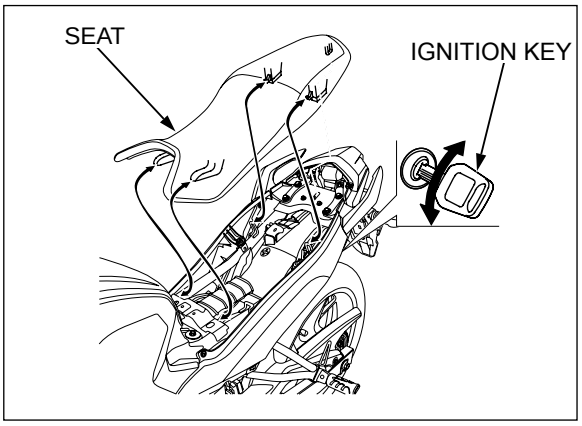

REMOVAL/INSTALLATION

Insert the ignition key into the seat lock and turn it clockwise.

Slide seat backward and remove the seat.

Install the seat, while aligning its hook with the bracket on the frame and press it to lock and remove the ignition key.

RIGHT SIDE COVER

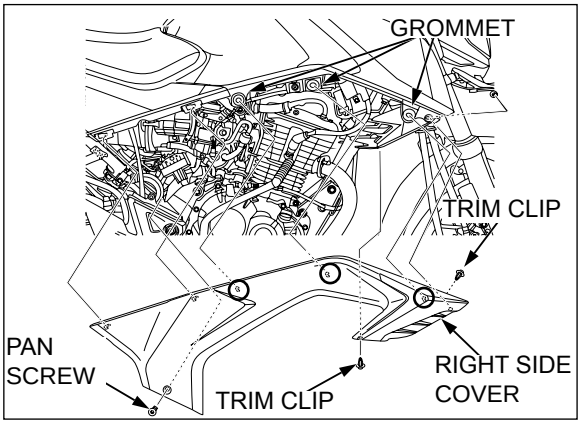

REMOVAL/INSTALLATION

Be careful not to damage the side cover boss.

Remove the right side cover pan screw (1 no.) and trim clips (2 nos.) from the fuel tank.

Carefully release the right side cover bosses (3 nos.) from the grommet and slide the cover towards rear wheel for easy removal.

Remove the right side cover.

Installation is in the reverse order of removal.

LEFT SIDE COVER

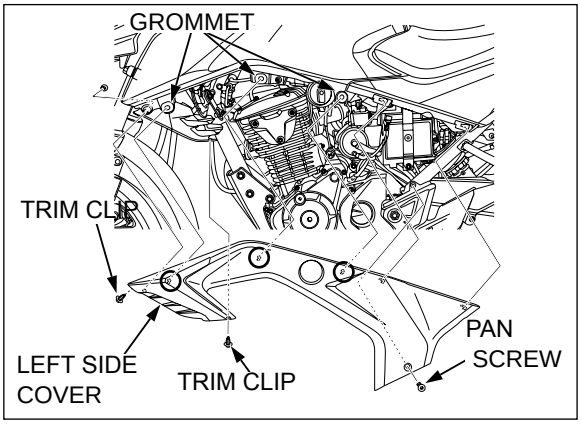

REMOVAL/INSTALLATION

Be careful not to damage the side cover boss.

Remove the left side cover pan screw (1 no.) and and trim clips (2 nos.) from the fuel tank.

Carefully release the left side cover bosses (3 nos.) from the grommet and slide the cover towards rear wheel for easy removal.

Remove the left side cover.

Installation is in the reverse order of removal.

FUEL TANK ASSEMBLY

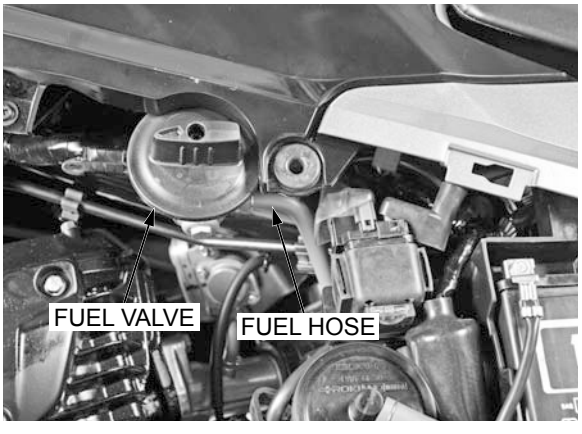

REMOVAL/INSTALLATION

Remove seat (page 2-3)

Remove the left side cover (page 2-3).

Remove the left side rear garnish set (page 2-6).

Turn the fuel valve to “OFF” position, and disconnect the fuel hose from the fuel valve.

FUEL TANK CENTER COVER

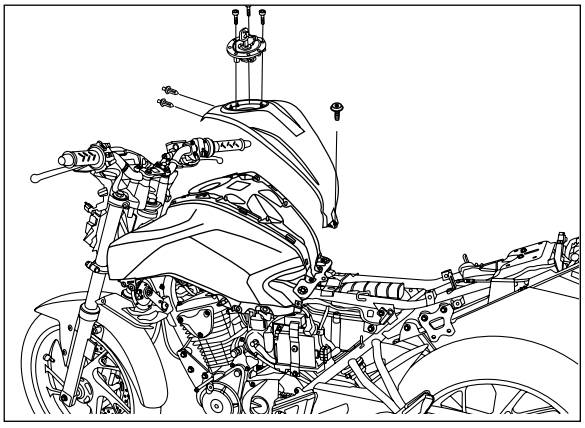

Remove the following :

– Socket bolt (3 nos.)from fuel tank cap
– Screw (1 nos.) from fuel tank center cover rear side
– Trim clip (2 nos.) from fuel tank center cover front side

After removing fuel filler cap cover the fuel tank opening with masking tape.

Unlock the fuel tank cap by using ignition key and remove the fuel filler cap.

Press the fuel tank side cover inwards and release the fuel center cover first from rear side and then from front side.

Installation of fuel tank center cover is in the reverse order of removal.

FUEL TANK LEFT & RIGHT SIDE COVER

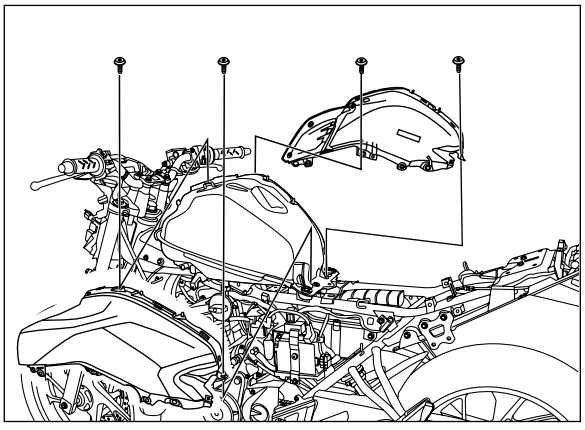

Remove the following :

– Fuel tank center cover
– Screws (4 nos. each) from both side covers

Disengage the rear garnish hook from fuel tank side covers.

Carefully liftup the side covers upwards and release from fuel tank mountings.

Installation of fuel tank left & right side cover is in the reverse order of removal.

FUEL TANK

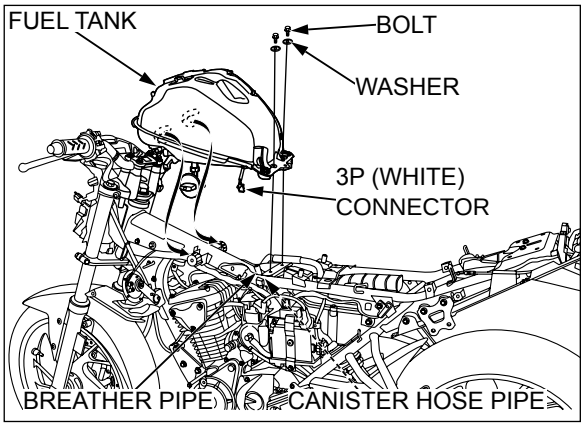

Remove the fuel tank mounting bolts/washers (2 nos.).

Wipe the spilled gasoline off at once.

While raising the fuel tank disconnect the fuel unit 3P (White) connector.

Disconnect the breather pipe, fuel tube and canister hose pipe from the fuel tank

Pull back and remove the fuel tank.

After installation, turn the fuel valve “ON”, and make sure that there are no fuel leaks.

Installation of fuel tank is in the reverse order of removal.

Install the fuel tank left & right side cover.

Install the fuel tank center cover.

FRONT FENDER

REMOVAL/INSTALLATION

Remove the front wheel (page 12–9).

Remove the pan screws (2 nos.) from both side and inner bolts (2 nos.) from the front fender mounted on the forks.

Remove the following :

– Inner bolts with washer (2 nos.)
– Front fender and stay

Installation is in the reverse order of removal.

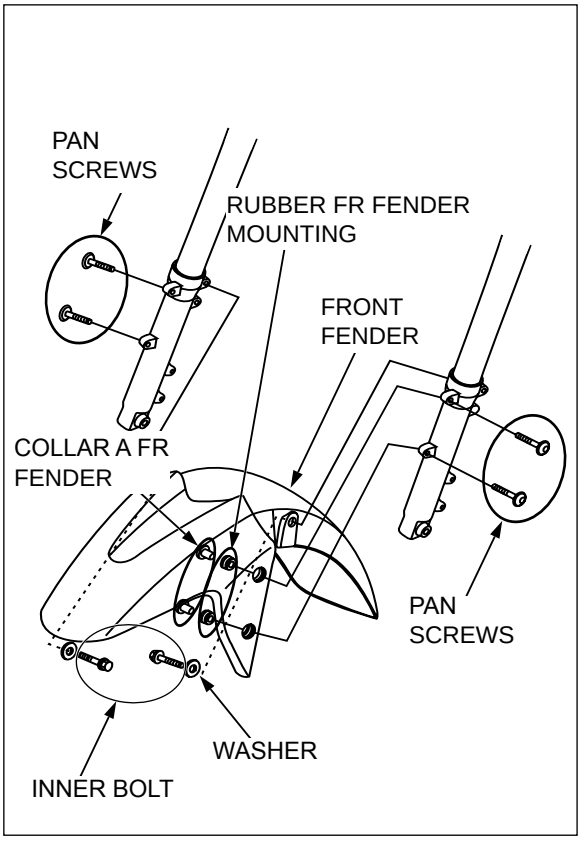

DISASSEMBLY/ASSEMBLY

Remove the front fender (page 2-5).

Remove the mounting screws (2 nos.) from front fender B and release front fender A.

Assembly is in the reverse order of disassembly.

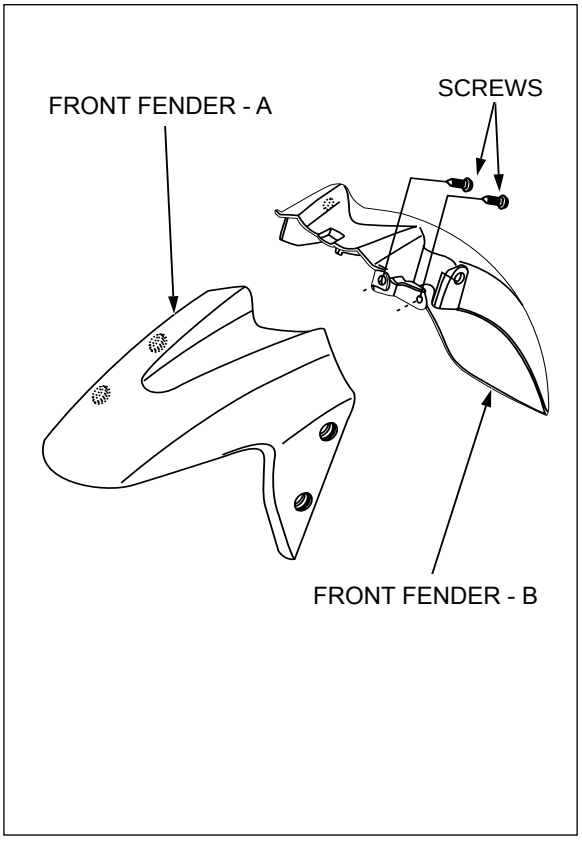

REAR GRIP

REMOVAL/INSTALLATION

Remove the seat (page 2-3).

Remove the mounting bolts (2 nos.) from right rear grip.

Remove the mounting bolts (2 nos.) from left rear grip.

Installation is in the reverse order of removal.

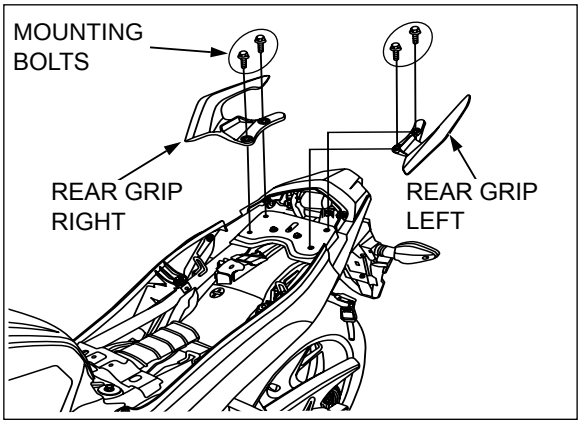

REAR GARNISH SET

REMOVAL/INSTALLATION

Carefully release the garnish from boss (metal) by tilting slightly.

Remove the following:

– Seat (page 2-3)

– Rear grip (page 2-6)

– Right side cover (page 2-3)

– Left side cover (page 2-3)

Remove the mounting bolts (1 no.) from the rear garnish from both side.

Remove the screw (1 no.) from the fuel tank of the rear garnish from both side.

Remove the screw (1 no.) from the bottom side of the rear garnish from both side.

Installation is in the reverse order of removal.

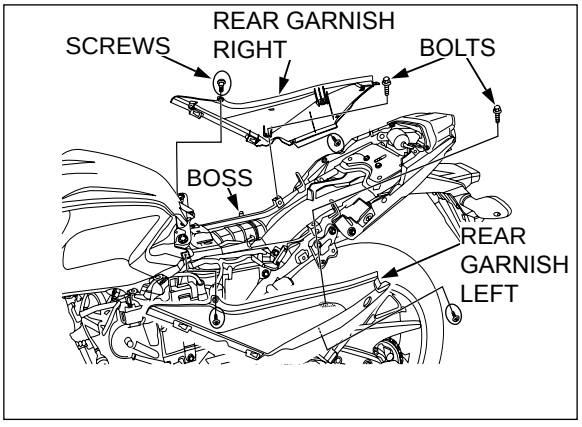

REAR COWL

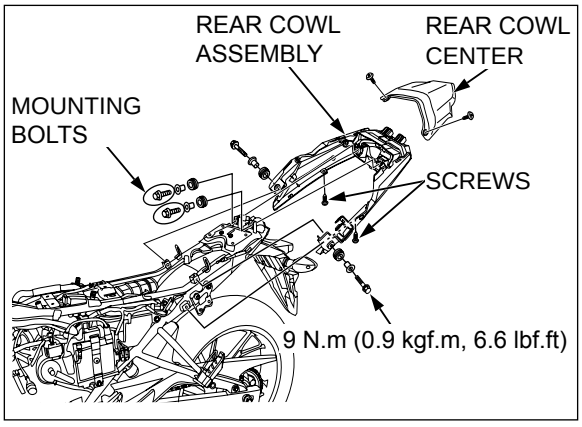

REMOVAL/INSTALLATION

While installing the rear cowl route the wire harness properly (page 1-15).

Remove the rear garnish from both side (page 2-6).

Remove the mounting bolts (4 nos.), collar (4 nos.), rubber (4 nos.).

Remove the screws (2 nos.) from the rear center cowl and slide it backward to remove from rear cowl assembly.

Carefully release set lock cable from the left side rear cowl.

Assembly is in the reverse order of disassembly.

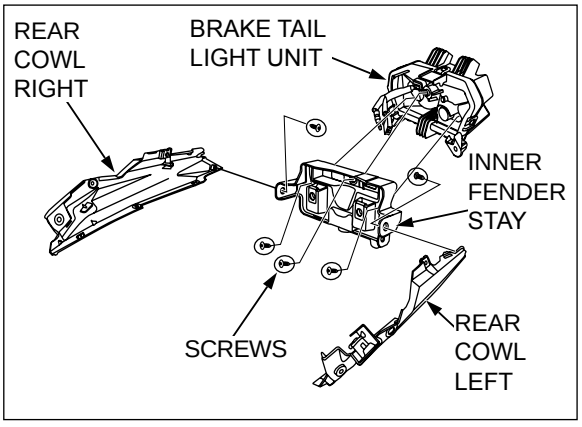

DISASSEMBLY/ASSEMBLY

While installing the rear cowl route the wire harness properly (page 1-15).

Remove mounting screw (1 no.) from inner fender stay from both side and remove both side rear cowl.

Remove screws (3 nos.) from inner fender stay and release rear tail light unit.

Assembly is in the reverse order of disassembly.

REAR FENDER

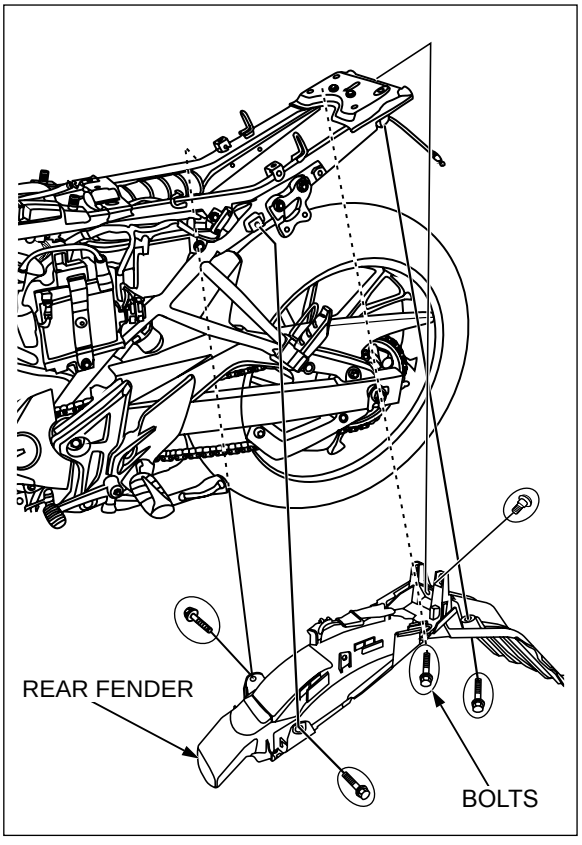

REMOVAL/INSTALLATION

Remove the rear cowl (page 2-7).

Disconnect the turn signal and licence plate light wire connectors.

Remove wire harness clamps (2 nos.).

Remove the bolts (5 nos.) and rear fender.

Installation is in the reverse order of removal.

DISASSEMBLY/ASSEMBLY

Remove mounting screws (2 nos.) from rear side fender set A and separate the rear side fender B.

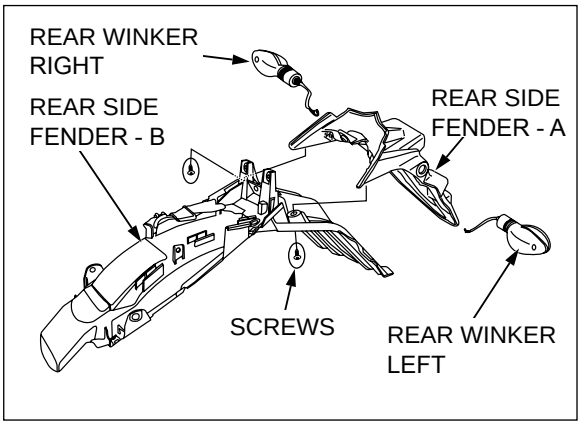

SARI GUARD

REMOVAL/INSTALLATION

Remove the mounting bolts (3 nos.) and sari guard.

Installation is in the reverse order of removal.

TORQUE: 22 N·m (2.2 kgf·m, 16 lbf·ft)

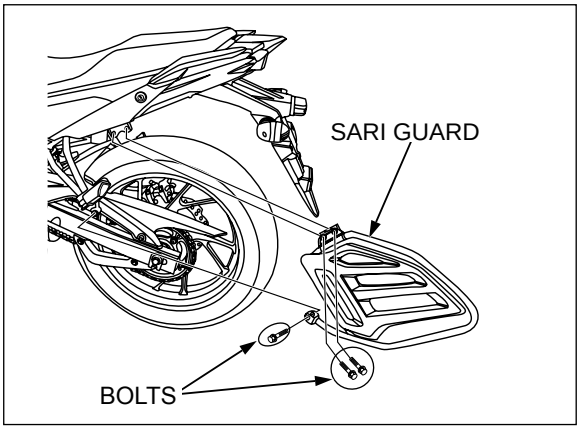

SIDE STAND

REMOVAL/INSTALLATION

Remove the spring.

Remove the pivot bolt/nut (1 nos.).

Installation is in the reverse order of removal.

TORQUE:

Side stand pivot bolt : 10 N·m (1.0 kgf·m, 7.3 lbf·ft)

Side stand lock nut: 39 N·m (3.9 kgf·m, 28.7 lbf·ft)

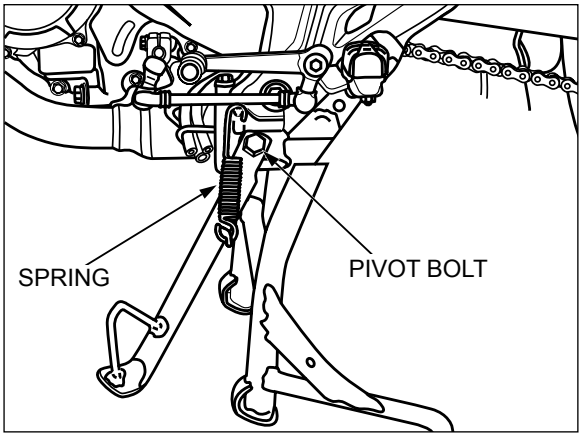

EXHAUST PIPE /MUFFLER

Remove the following:

- Exhaust pipe joint nuts.
- Muffler mounting bolts (1 no.), flange bolt (1 no.), washer, collar and nut
- Exhaust pipe/muffler
- Gasket

Install a new gasket into the exhaust port.

Always replace the exhaust pipe gasket with a new one when remove the exhaust pipe from the engine.

Install the exhaust pipe/muffler, then temporarily install the exhaust pipe joint nuts, muffler mounting bolts, washer, collar and nut.

Tighten the exhaust pipe joint nuts securely, then tighten the muffler mounting bolt to the specified torque.

TORQUE: 26 N·m (2.6 kgf·m, 20 lbf·ft)

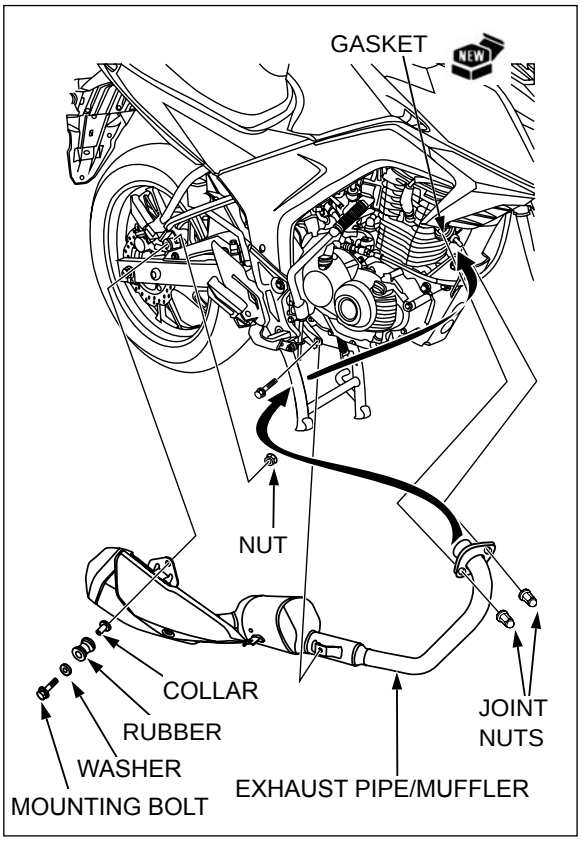

MUFFLER PROTECTOR

REMOVAL/INSTALLATION

The muffler protector can be serviced with the muffler installed on the engine. Always check for the condition of the rubber grommets on the muffler protector.

Remove the pan screw of muffler protector.

Slide muffler protector towards engine to take it out.

Installation is in the reverse order of removal.

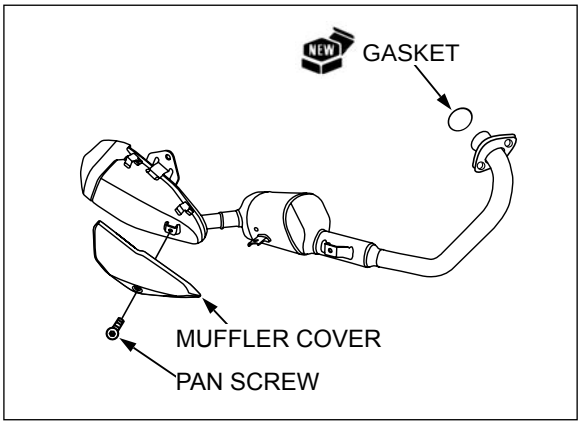

STUD BOLT REPLACEMENT

Thread two nuts onto the stud, and tighten them together, then use a wrench on them to turn the stud bolt out.

Install new stud bolts into the cylinder head as shown.

TORQUE: 11 N·m (1.1 kgf·m, 8 lbf·ft)

After installing the stud bolts, check that the length from the bolt head to the cylinder head surface is within specification.

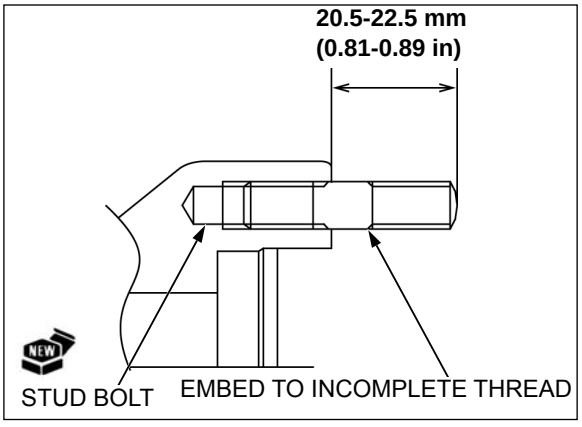

MEMO

SERVICE INFORMATION	3-1	EVAPORATIVE EMISSION CONTROL SYSTEM	3-15
MAINTENANCE SCHEDULE	3-3	DRIVE CHAIN	3-16
FUEL LINE	3-4	BATTERY	3-18
FUEL STRAINER SCREEN	3-4	BRAKE FLUID	3-18
THROTTLE OPERATION	3-5	BRAKE PADS WEAR	3-20
CHOKE OPERATION	3-5	BRAKE SYSTEM	3-21
AIR CLEANER	3-6	BRAKE LIGHT SWITCH	3-22
CRANKCASE BREATHER	3-7	HEADLIGHT AIM	3-22
SPARK PLUG	3-7	CLUTCH SYSTEM	3-22
VALVE CLEARANCE	3-8	SIDE STAND	3-23
ENGINE OIL	3-10	SUSPENSION	3-23
ENGINE OIL STRAINER SCREEN	3-12	NUTS, BOLTS, FASTENERS	3-24
ENGINE OIL CENTRIFUGAL FILTER	3-12	WHEELS/TIRES	3-24
ENGINE IDLE SPEED	3-14	STEERING HEAD BEARINGS	3-25
SECONDARY AIR SUPPLY SYSTEM	3-14		

SERVICE INFORMATION

GENERAL

- Support the motorcycle on a level surface before starting any work.
- Gasoline is extremely flammable and is explosive under certain conditions.
- Work in a well ventilated area. Smoking or allowing flames or sparks in the work area or where the gasoline is stored can cause fire or explosion.
- If the engine must be running to do some work, make sure the area is well ventilated. Never run the engine in an enclosed area.
- The exhaust contains poisonous carbon monoxide gas that may cause loss of consciousness and may lead to death. Run the engine in an open area or with an exhaust evacuation system in an enclosed area.

SPECIFICATIONS

ITEM			SPECIFICATIONS
Throttle grip free play			2 ~ 6 mm (0.07 – 0.2 in)
Spark plug		Standard	CPR8EA-9 (NGK)
Valve clearance		IN	0.08 mm (0.003 in)
		EX	0.24 mm (0.010 in)
Engine oil capacity		At draining	1.0 litre (1.0 US qt, 0.9 Imp qt)
		At disassembly	1.2 litre (1.3 US qt, 1.1 Imp qt)
Recommended engine oil			Honda 4-stroke oil or equivalent motor oil API service classification: MA Viscosity: SAE 10W–30
Engine Idle speed			1,400 ± 100 min^{-1} (rpm)
Drive chain		Size/link	428/132
		Slack	25 – 35 (0.984 – 1.37)
Clutch lever free play			10 – 20 (0.4 – 0.8)
Recommended brake fluid			DOT 3 or DOT 4
Cold tire pressure	Front	Driver only	175 kPa (1.75 kgf/cm², 25 psi)
		Driver and passenger	175 kPa (1.75 kgf/cm², 25 psi)
	Rear	Driver only	175 kPa (1.75 kgf/cm², 25 psi)
		Driver and passenger	200 kpa (2.00 kgf/cm², 29 psi)
Tire size		Front	100/80-17 M/C 52S
		Rear	140/70-17 M/C 66S
Minimum tire thread depth		Front	1.5 mm (0.06 in)
		Rear	2.0 mm (0.08 in)

TORQUE VALUES

ITEM	PART NO.	QTY	THREAD DIA. (mm)	TORQUE N·m (kgf·m, lbf·ft)	REMARKS	PAGE NO.
Spark plug	31916 – KRM – 841	1	10	16 (1.6, 12)		Page 3–7
Valve adjusting lock nut	90206 – 250 – 000	2	6	18 (1.8, 13.2)	NOTE 1	Page 3–9
Timing hole cap	90084 – MN8 – 010	1	14	10 (1.0, 7)		Page 3–10
Crankshaft hole cap	90087 – KSP – 860	1	32	15 (1.5, 11)	NOTE 4	Page 3–10
Oil drain bolt	90131 – KRM – 840	1	12	30 (3.0, 22)		Page 3–11
Oil filter rotor cover screw	93700 – 05012 – 0A	3	5	4 (0.4, 3.0)		Page 3–13
Rear axle nut	90305 – KYJ – 711	1	16	88 (8.8, 65)	U-Nut	Page 3-16
Air cleaner cover screw	93903 – 25580	4	5	1.2 (0.1,0.9)		Page 3-19
Headlight adjusting bolt	90102 – K43 – 900	1	4	2 (0.2,1.4)		Page 3-22
Drive sprocket fixing plate bolt	90084 – 041 – 000	2	6	12 (1.2, 9)		–
Side stand pivot bolt	90107 – GN1 – 010	1	10	10 (1.0, 7.3)		–
Side stand lock nut	90304 – KTE – 911	1	10	39 (3.9, 28.7)		–
Cylinder Head cover bolt	96001 – 06035 – 00	4	6	11 (1.1, 8.1)		–

TOOLS

Valve Adjustment, 10 mm 070SR–TKS–PO18 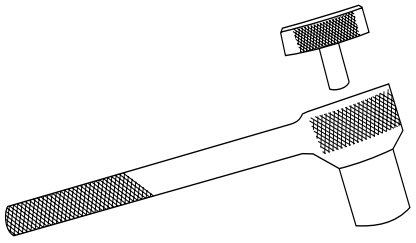	Gear Holder 07006–KRBT7900 

MAINTENANCE SCHEDULE

Perform the Pre-ride Inspection in the Owner's Manual at each scheduled maintenance period.
I: Inspect and Clean, Adjust, Lubricate or Replace if necessary.
C: Clean R: Replace A: Adjust L: Lubricate.

The following items require some mechanical knowledge. Certain items (particularly those marked * and **) may require more technical information and tools. Consult your Honda dealer.

WHICH EVER COMES FIRST

	FREQUENCY / ITEM	NOTE	PRE-RIDE CHECK	ODOMETER READING (NOTE 1)							ANNUAL CHECK	REGULAR REPLACE	REFER TO PAGE
				X1000Km	1	6	12	18	24	30	36			
				X1000mi	0.6	4	8	12	16	20	24			
				MONTHS	1	6	12	18	24	30	36			
*	FUEL LINE					I	I	I	I	I	I	I		Page 3-4
	FUEL LEVEL		I											Page 3-4
*	FUEL STRAINER SCREEN					C	C	C	C	C	C			Page 3-4
*	THROTTLE OPERATION		I			I	I	I	I	I	I	I		Page 3-5
*	CHOKE OPERATION					I	I	I	I	I	I	I		Page 3-5
*	AIR CLEANER	NOTE (2)						R			R			Page 3-6
	CRANKCASE BREATHER	NOTE (3)				C	C	C	C	C	C			Page 3-7
	SPARK PLUG					I	R	I	R	I	R			Page 3-7
*	VALVE CLEARANCE					I	I	I	I	I	I			Page 3-8
	ENGINE OIL		I		R	R	R	R	R	R	R	R		Page 3-10
**	ENGINE OIL STRAINER SCREEN				C		C		C		C			Page 3-12
**	ENGINE OIL CENTRIFUGAL FILTER						C		C		C			Page 3-12
*	ENGINE IDLE SPEED				I	I	I	I	I	I	I	I		Page 3-14
*	SECONDARY AIR SUPPLY SYSTEM							I			I			Page 3-14
*	EVAPORATIVE EMISSION CONTROL SYSTEM							I			I			Page 3-15
	DRIVE CHAIN		I	EVERY 1000 Kms (600 mi) I, L										Page 3-16
*	BATTERY VOLTAGE		I		I	I	I	I	I	I	I	I		Page 3-18
	BRAKE FLUID	NOTE (4)	I			I	I	I	I	I	I	I	2 YEARS	Page 3-18
	BRAKE PADS WEAR (CBS)		I			I	I	I	I	I	I	I		Page 3-20
	BRAKE SHOES/PADS WEAR (STD)		I			I	I	I	I	I	I	I		Page 3-20
	BRAKE SYSTEM (CBS)				I	I	I	I	I	I	I	I		Page 3-21
	BRAKE SYSTEM (STD)		I		I	I	I	I	I	I	I	I		Page 3-21
	BRAKE LIGHT SWITCH					I	I	I	I	I	I	I		Page 3-22
	HEAD LIGHT AIM					I	I	I	I	I	I	I		Page 3-22
	LIGHTS/HORN		I											–
	CLUTCH SYSTEM		I		I	I	I	I	I	I	I	I		Page 3-22
	SIDE STAND					I	I	I	I	I	I	I		Page 3-23
*	SUSPENSION					I	I	I	I	I	I	I		Page 3-23
*	NUTS, BOLTS, FASTENERS				I		I		I		I	I		Page 3-24
**	WHEELS/TIRES		I			I	I	I	I	I	I	I		Page 3-24
**	STEERING HEAD BEARINGS						I		I		I	I		Page 3-25

* Should be serviced by an authorized Honda dealer, unless the owner has proper tools and service data and is mechanically qualified. Refer to the official Honda Shop Manual

** In the interest of safety, we recommended these items be serviced only by your Honda dealer.

Notes:

1. At higher odometer readings, repeat at the frequency interval established here.
2. Service more frequently if the motorcycle is ridden in unusually wet or dusty areas.
3. Service more frequently when riding in rain or at full throttle.
4. Replacement requires mechanical skills.

FUEL LINE

Remove the left side cover (page 2–3).

Replace the fuel line if it is cracked, damaged or leaking. Inspect the fuel line routing, kinks and bends which can restrict the fuel flow. Also inspect the position of clips used for locking. Check fuel line and fuel strainer for blockage. Install the left side cover (page 2–3).



FUEL STRAINER SCREEN

Wipe the spilled gasoline off at once

Remove Left side cover (page 2–3)

Turn the fuel valve “OFF”.

Remove the fuel strainer cup and drain the contents of the cup into a suitable container.

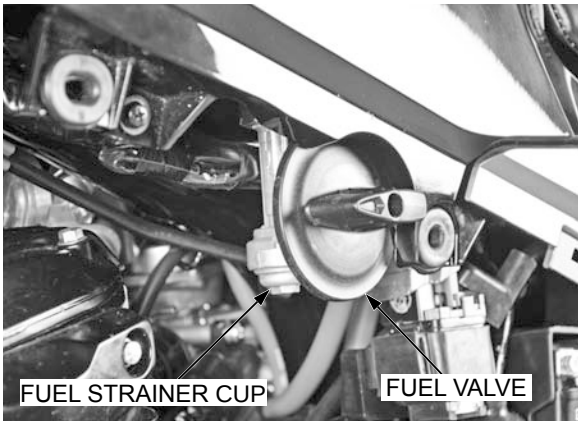

Remove the O-ring and strainer screen.

Wash the strainer screen and cup in clean non-flammable high flash point solvent.

Carefully install the strainer screen, new O-ring and fuel strainer cup in the fuel valve body, making sure that the O-ring is in place.

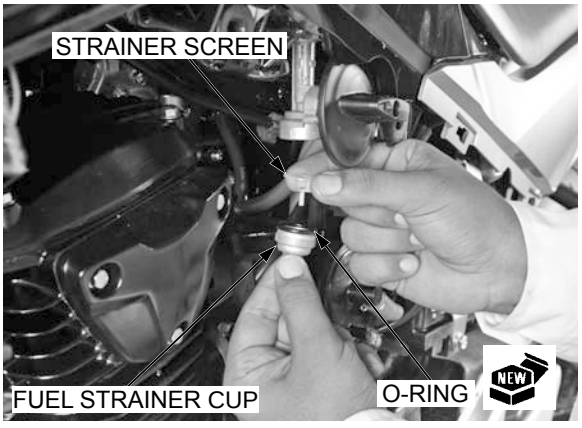

Tighten the fuel strainer cup.

Turn the fuel valve “ON” and be sure there are no fuel leaks.



THROTTLE OPERATION

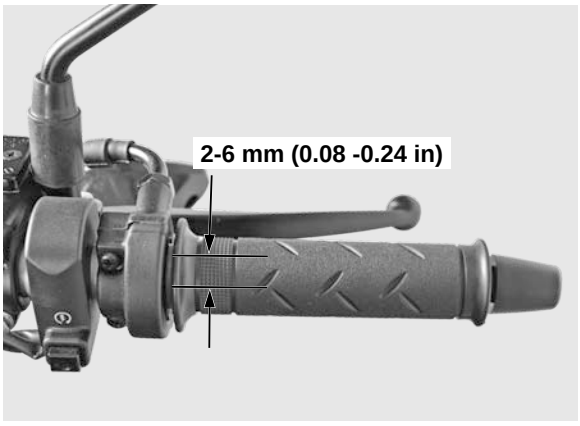

Check for smooth throttle grip full opening and automatic full closing in all steering positions.

Check the throttle cable and replace it if it is deteriorated, kinked or damaged.

Inspect the throttle cable, if throttle operation is not smooth.

Measure the free play at the throttle grip flange.

FREE PLAY: 2 ~ 6 mm (0.07 – 0.2 in)

Throttle grip free play can be adjusted at either end of the throttle cable.

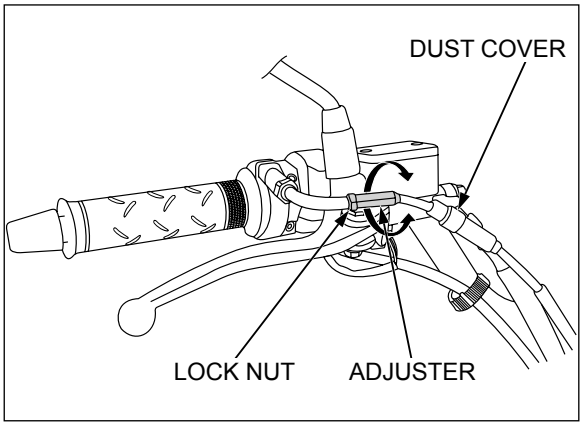

Minor Adjustment:

Minor adjustments are made with the upper adjuster at throttle housing adjuster.

Slide the dust cover from the adjuster.

Adjust the free play by loosening the lock nut and turning the adjuster.

After adjustment, tighten the lock nut and reposition the dust cover

Recheck the throttle operation.

Major Adjustment:

Major adjustment are made with the lower adjusting nut at the carburetor end.

Remove the right side cover (page 2–3).

Loosen the lock nut and turn the adjusting nut. After adjustment is complete, tighten the lock nut while holding the adjusting nut.

Recheck the throttle operation.

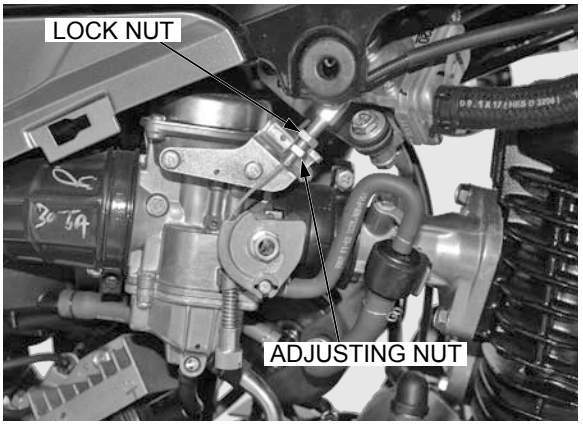

CHOKE OPERATION

- This motorcycle is equipped with a fuel enriching circuit controlled by a starting enrichment (SE) valve.
- The SE valve opens the enriching circuit via a choke cable when the choke lever is pulled.

Check for smooth operation of the choke lever.

Inspect the choke cable if the operation is not smooth.

Inspect the cable casing for cracks which could allow moisture to enter.

Replace the cable if necessary

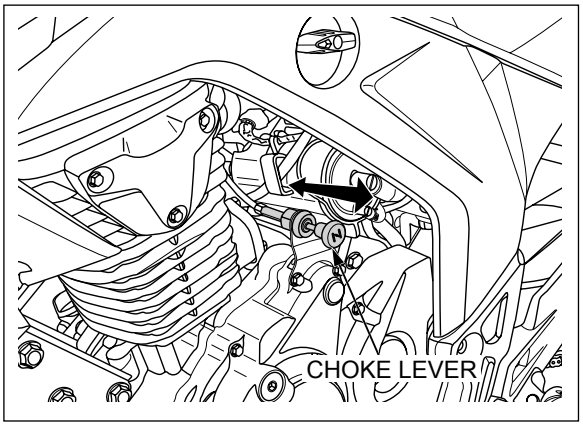

AIR CLEANER

AIR CLEANER ELEMENT

Remove the seat (page 2-3).

INSPECTION:

Air cleaner duct can be removed to do the visual inspection of air cleaner element.

Clean the surrounding area of air filter with high pressure air.

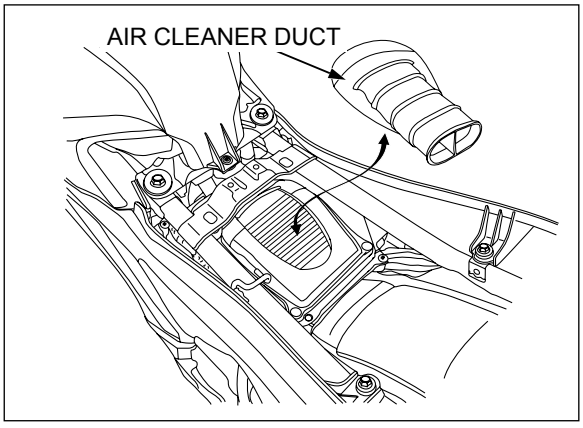

REPLACEMENT:

If found dirty, damaged or according to maintenance schedule (page 3-3) replace air cleaner element by removing the air cleaner cover screws (4 nos.).

Remove the air cleaner element and packing.

Check the packing are in good condition, and replace it if necessary.

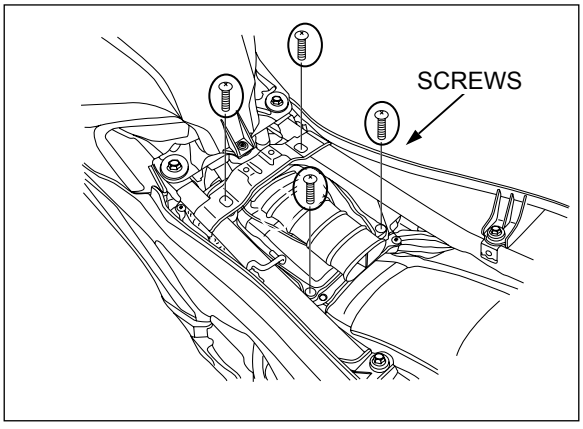

NOTICE

Do not clean with solvent to remove dust and also do not use forced air on it. The viscous oil will be lost and filter becomes dry. As the base filter paper is coarse, it cannot block fine dust when it becomes dry.

Replace the air cleaner if it is excessively dirty, torn or damage.

Do not place filter horizontally on any surface as dust can stick to the filter due to oil present. If necessary place vertically. Install immediately after inspection.

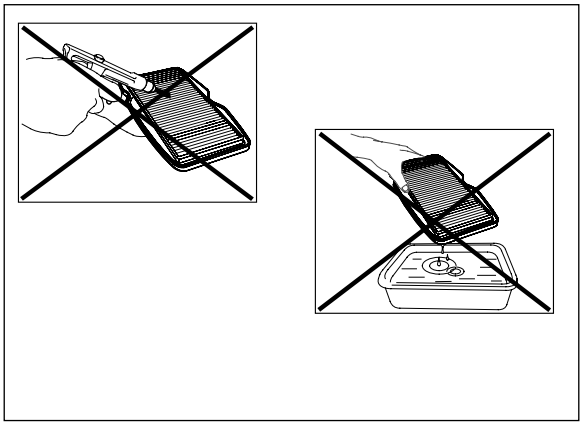

Install the packing to the groove of the air cleaner element, then install them by aligning its tab with the hole of the air cleaner element holder.

Install the removed parts in the reverse order of removal.

TORQUE

Air cleaner cover screw: 1.2 N.m (0.1 kgf.m, 0.9 lbf.ft)

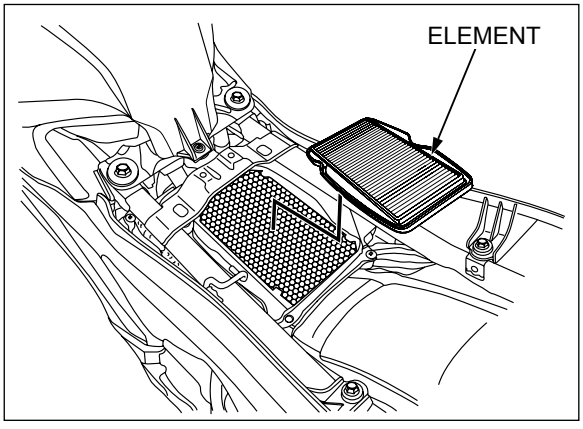

CRANKCASE BREATHER

Service more frequently when ridden in rain, at full throttle, or after the motorcycle is washed or overturned.

Check the crankcase breather hose for deterioration, damage or loose connection. Make sure that the hoses are not kinked, pinched or cracked.

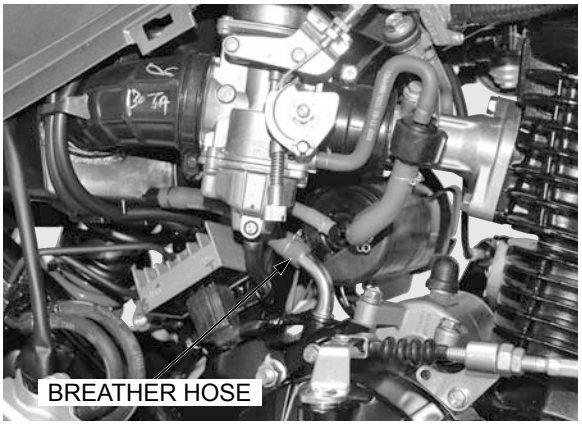

Loosen the drain hose clip and remove the drain hose from the air cleaner housing and drain deposits into a suitable container.

Reinstall the drain hose.

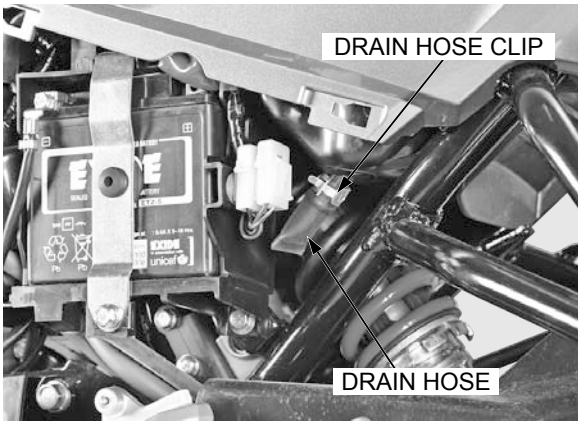

SPARK PLUG

REMOVAL

Clean around the spark plug base with compressed air before removing the spark plug cap, and make sure no debris is allowed to enter the combustion chamber.

Disconnect the spark plug cap.

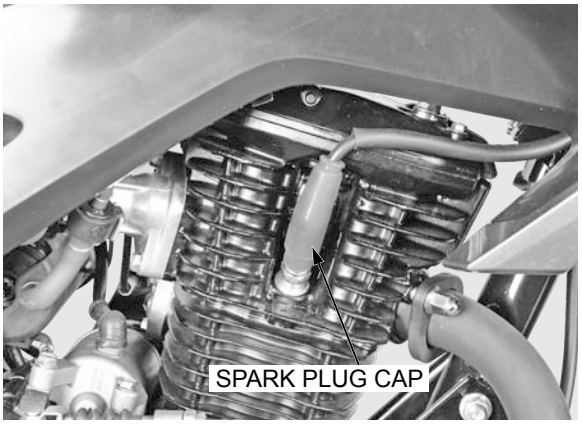

Remove the spark plug using a equipped spark plug wrench or an equivalent.

Inspect or replace the spark plug as described in the maintenance schedule (page 3-3).

Replace it if necessary.

RECOMMENDED SPARK PLUG:

Standard: CPR8EA–9 (NGK)

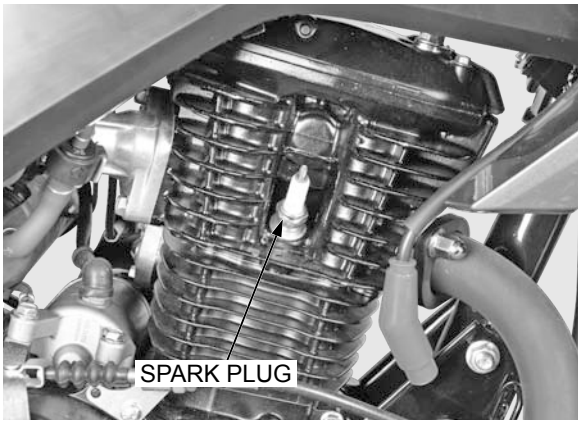

INSPECTION

Check the following and replace if necessary (recommended spark plug : page 3-7)

- Insulator for damage
- Electrodes for wear
- Burning condition, coloration
  - Dark to light brown indicates good condition
  - Excessive lightness indicates malfunctioning ignition system or lean mixture
  - Wet or black sooty deposit indicates over-rich mixture

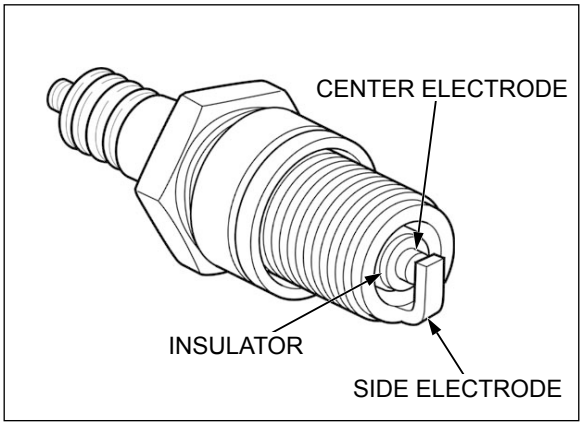

Clean the spark plug electrodes with a wire brush or special plug cleaner.

Check the gap between the center and side electrodes with a wire-type feeler gauge (wire gauge).

SPARK PLUG GAP: 0.8 ~ 0.9 mm (0.03 – 0.04 in)

If necessary, adjust the gap by bending the side electrode carefully by using the wire gauge.

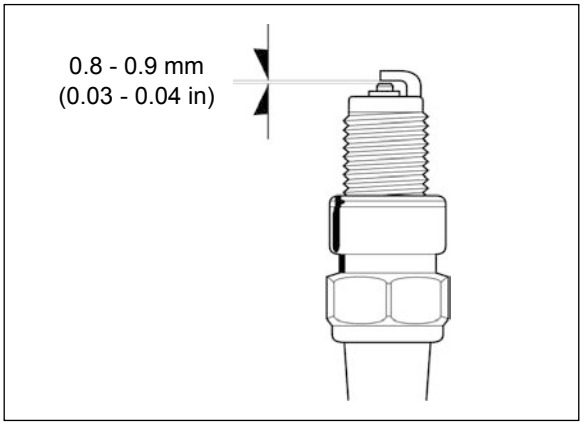

INSTALLATION

Install and hand tighten the spark plug to the cylinder head, then tighten the spark plug to the specified torque using a equipped spark plug wrench or an equivalent.

TORQUE: 16 N·m (1.6 kgf·m, 12 lbf·ft)

Connect the spark plug cap securely.

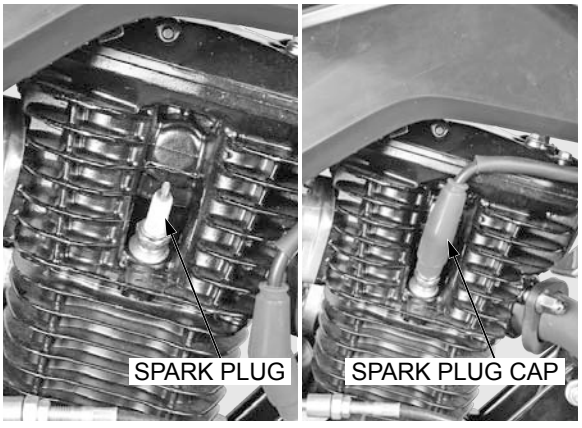

VALVE CLEARANCE

INSPECTION

Inspect and adjust the valve clearance while the engine is cold (below 35°C/95°F).

Remove the following:

– Cylinder head cover (page 7-4)
– Spark plug (page 3-7)

Remove the timing hole cap and crankshaft hole cap and O-rings.

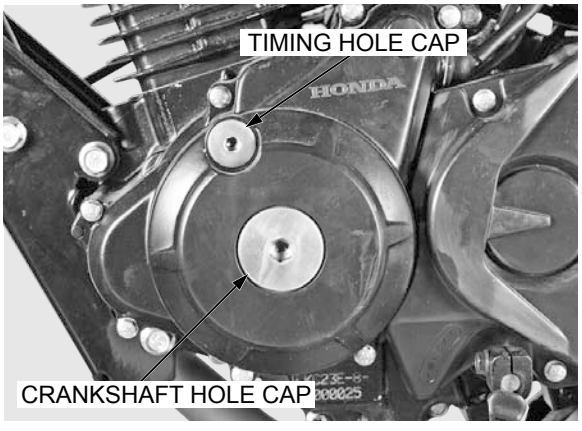

Rotate the crankshaft counter clockwise, and align the "⊣" mark on the flywheel with the index notch on the left crankcase cover.

Make sure the piston is at TDC (Top Dead Center) on the compression stroke.

This position can be obtained by confirming that there is slack in the rocker arm. If there is no slack, it is because the piston is moving through the exhaust stroke to TDC. Rotate the crankshaft one full turn counter clockwise and match up to the "⊣" mark again.

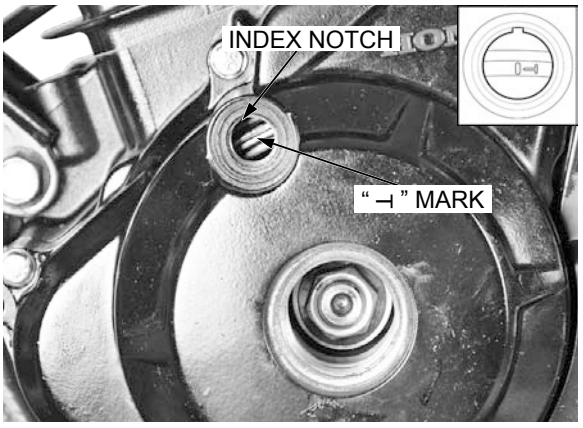

Clean the feeler gauge with a soft cloth before usage. When checking the clearance, slide the feeler gauge from the center toward the outside.

Check the valve clearance by inserting a feeler gauge between the adjusting screw and valve stem.

VALVE CLEARANCE:

IN: 0.08 ± 0.02 mm (0.003 ± 0.001 in)

EX: 0.24 ± 0.02 mm (0.010 ± 0.001 in)

Adjust by loosening the valve adjusting lock nut and turning the adjusting screw until there is slight drag on the feeler gauge.

TOOL: Valve adjusting 10 mm (070SR–TKS-PO18)

Apply clean engine oil to the valve adjusting lock nut threads and seating surface.

Hold the adjusting screw, and tighten the valve adjusting lock nut to the specified torque.

TORQUE: 18 N·m (1.8 kgf·m, 13 lbf·ft)

Recheck the valve clearance.

Install the cylinder head cover (page 7-5) and apply the specified torque.

TORQUE: 10 N·m (1.0 kgf·m, 7 lbf·ft)

Install the spark plug (page 3-8).

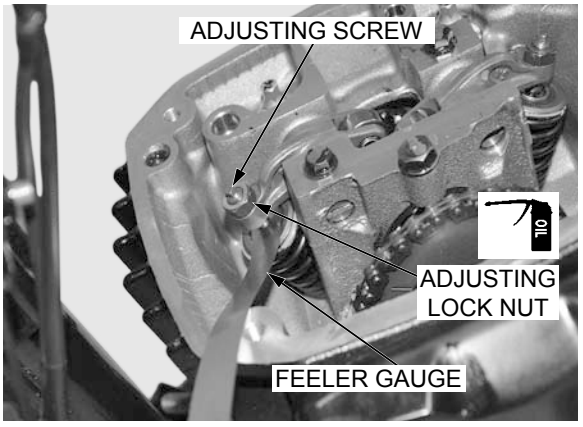

Apply clean engine oil to new O-rings, and install them to each hole cap.

Apply grease to the crankshaft hole cap threads.

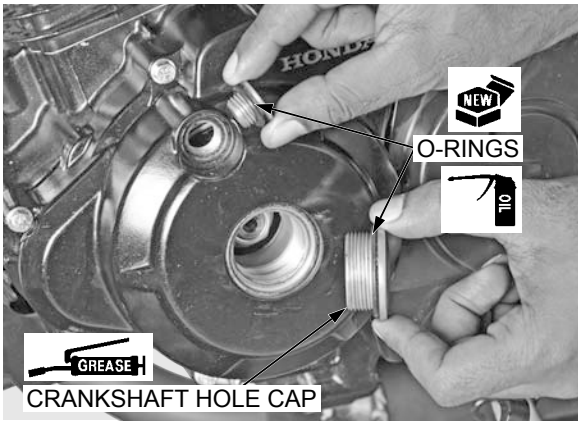

Install and tighten the crankshaft hole cap to the specified torque.

TORQUE: 15 N·m (1.5 kgf·m, 11 lbf·ft)

Install and tighten the timing hole cap to the specified torque.

TORQUE: 10 N·m (1.0 kgf·m, 7 lbf·ft)

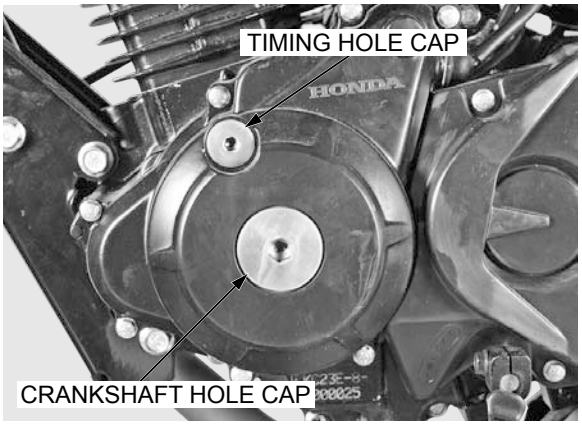

ENGINE OIL

OIL LEVEL INSPECTION

While checking oil level take into consideration not to screw dipstick.

Support the motorcycle on its center stand.

Start the engine and let it idle for 3 – 5 minutes.

Stop the engine and wait 2 – 3 minutes.

Remove the oil filler cap / dipstick, and wipe the oil from the dipstick with a clean shop towel.

Reinstall the oil filler cap / dipstick, but do not screw it.

Remove the oil filler cap / dipstick.

Check the oil level.

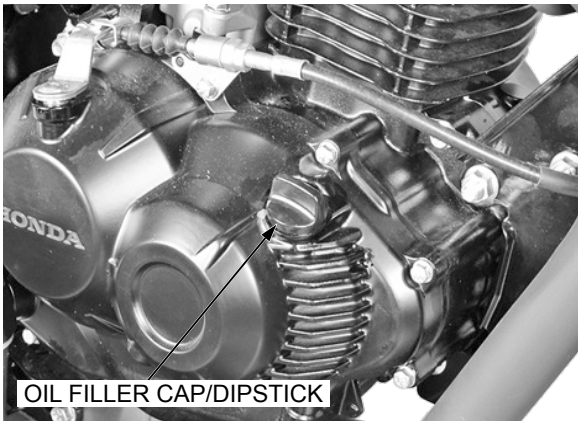

If the oil level is below or near the lower level line on the dipstick, fill the recommended engine oil to the upper level line through the oil filler hole.

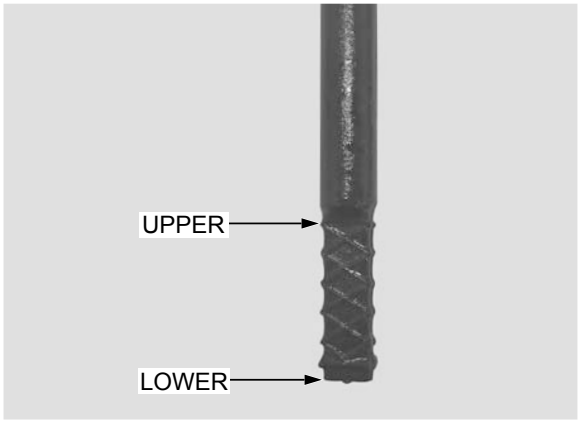

RECOMMENDED ENGINE OIL:
Honda 4 – Stroke oil or equivalent motor oil
API service classification: MA
Viscosity: SAE 10W–30

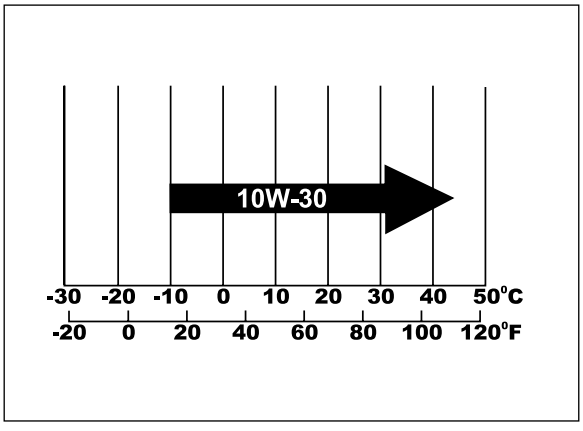

Apply clean engine oil to a new O-ring, and install it on oil filler cap / dipstick.

Reinstall and tighten the oil filler cap/dipstick securely.

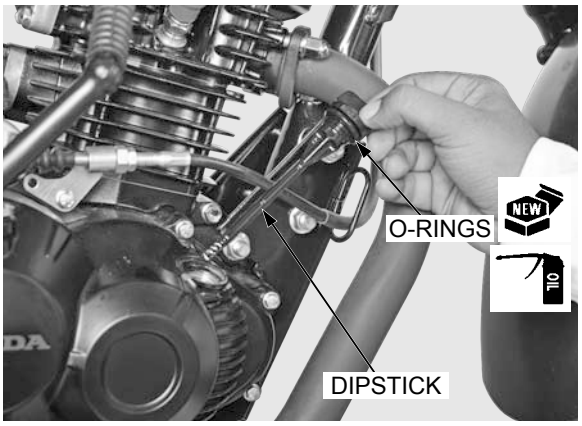

ENGINE OIL CHANGE

Change the oil with the engine warm and the motorcycle placed on its center stand to assure complete and rapid draining.

Warm up the engine to normal operating temperature.

Stop the engine, and remove the oil filler cap/dipstick.

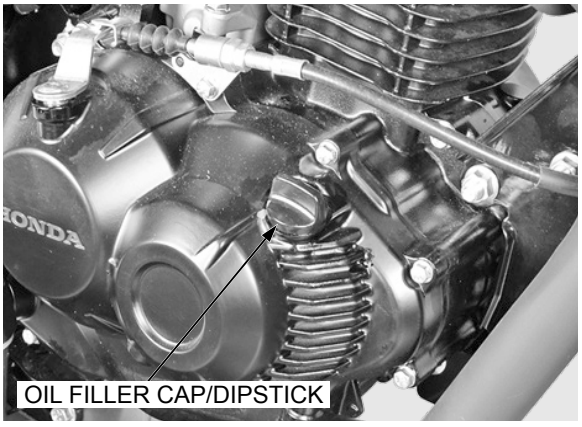

Place a clean container under the engine.

Remove the oil drain bolt and sealing washer.

Drain the engine oil completely.

Install the oil drain bolt with a new sealing washer, and tighten it to the specified torque.

TORQUE: 30 N·m (3.0 kgf·m, 22 lbf·ft)

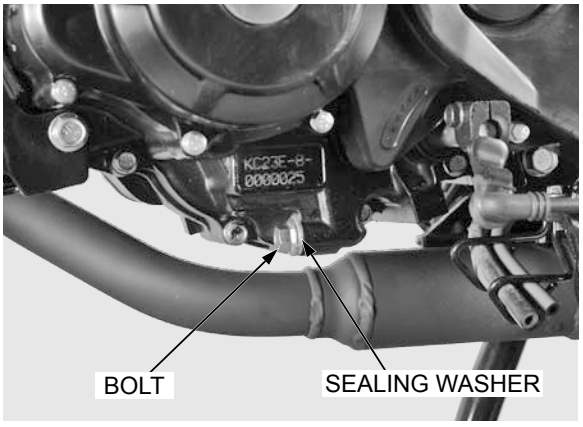

Fill the crankcase with the recommended engine oil (page 3-10).

ENGINE OIL CAPACITY:

1.0 liters (1.0 US qt, 0.9 Imp qt) at draining

1.2 liters (1.3 US qt, 1.1 Imp qt) at disassembly

Check the engine oil level (page 3-10).

Start the vehicle and check for no oil leaks.

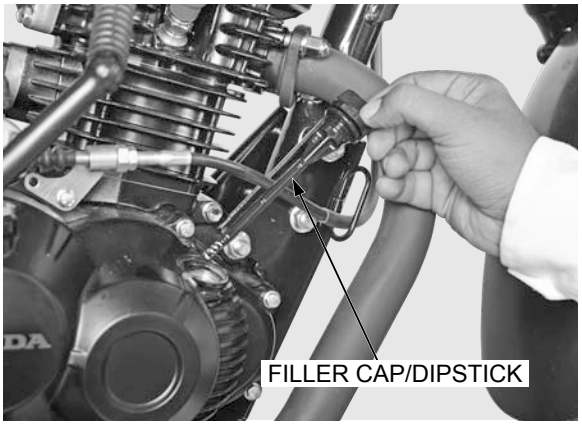

ENGINE OIL STRAINER SCREEN

REMOVAL/INSTALLATION

Be careful not to damage the Oil strainer screen.

Remove the right crankcase cover (page 9-3).

Pull the oil strainer screen out of the crankcase.

Wash the oil strainer screen thoroughly in nonflammable or high flash point solvent until all accumulated dirt has been removed.

Blow dry it with compressed air to clean completely. Before installing the strainer, it should be examined closely for damage, and make sure the sealing rubber is in good condition.

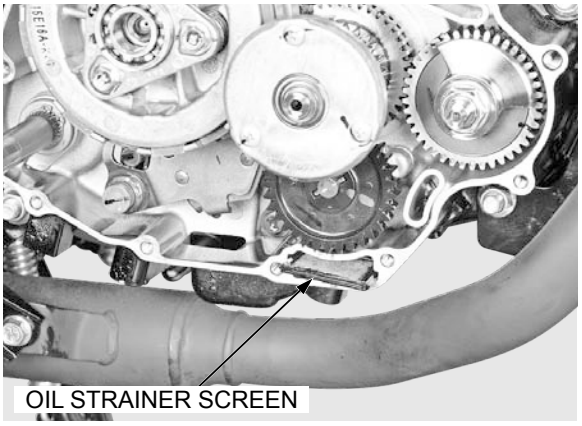

Install the oil strainer screen with the thin edge facing in and flange side facing up as shown.

Install the right crankcase cover (page 9-5)

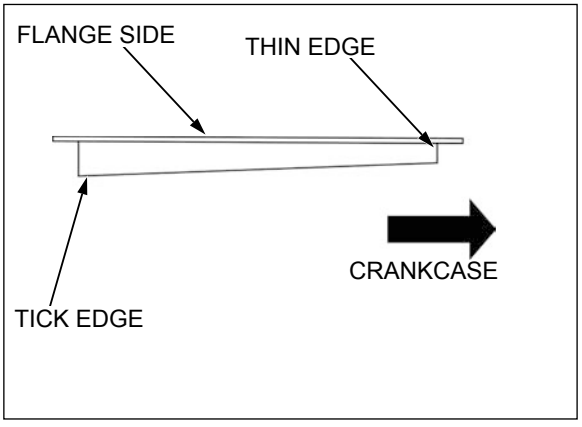

ENGINE OIL CENTRIFUGAL FILTER

Remove the right crankcase cover (page 9-3).

Remove the screws (3 Nos.) of oil filter by using gear holder between clutch gear and Gear Primary Drive. Also remove oil filter rotor cap and gasket.

TOOL: Gear Holder 07006–KRBT900

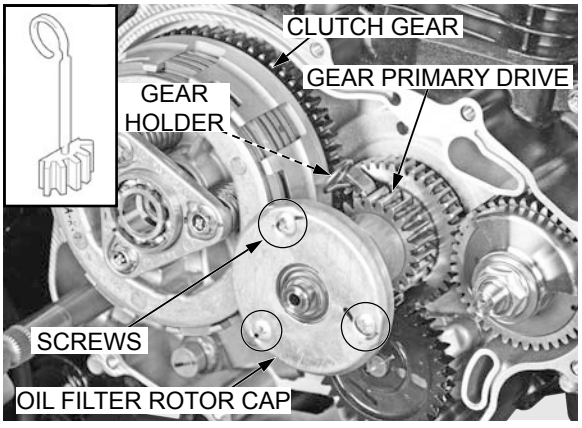

Do not allow dust and dirt to enter the oil passage in the crankshaft. Never use compressed air for cleaning.

Clean the oil filter rotor cover and inside of the oil filter rotor using a clean shop towel.

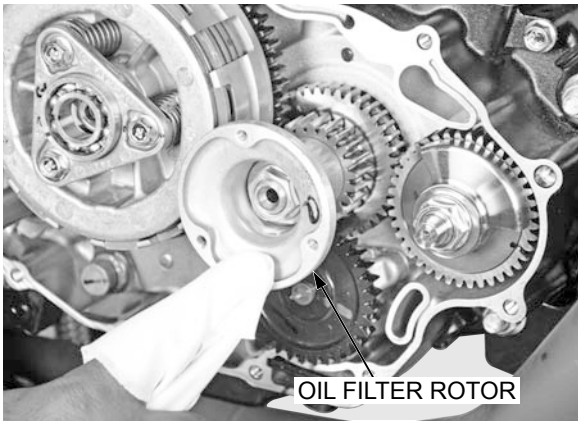

Remove the gasket from the oil rotor cover.

While pressing the oil through from the reverse side, then remove the clip.

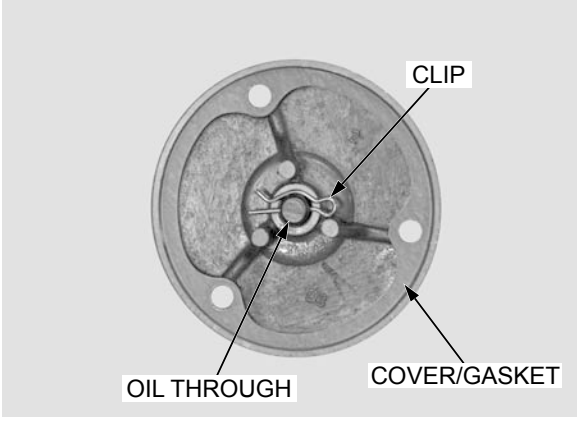

Remove the oil through and spring from the oil filter rotor cover.

Blow and clean the oil through using compressed air.

Apply clean engine oil to the oil through surface, and install the spring and oil through to the oil filter rotor cover.

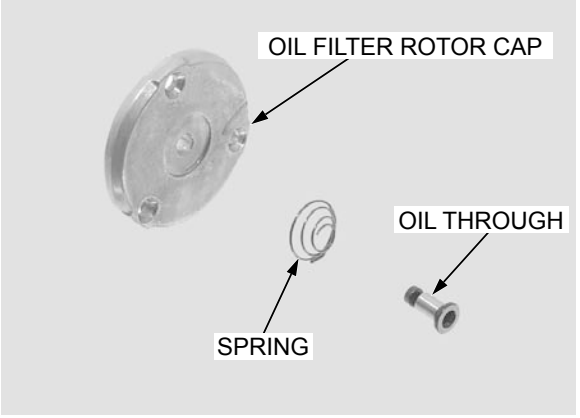

While pressing the oil through from the reverse side, install the clip.

Check the oil through operates freely, without binding.

Install a new gasket on to the oil rotor cover.

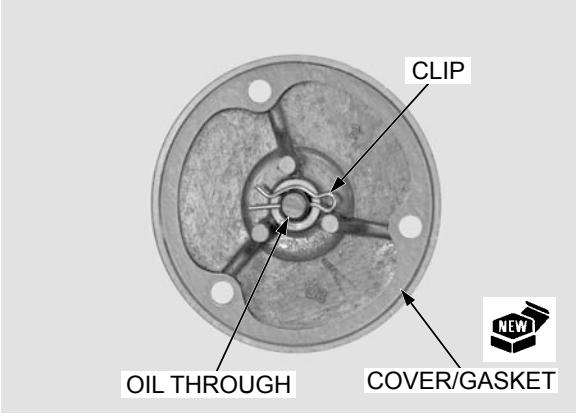

Install and tighten the oil filter rotor cover screws by using gear holder between clutch gear and Gear Primary Drive.

TORQUE: 4 N·m (0.4 kgf·m, 3.0 lbf·ft)

Install the right crankcase cover (page 9-5).

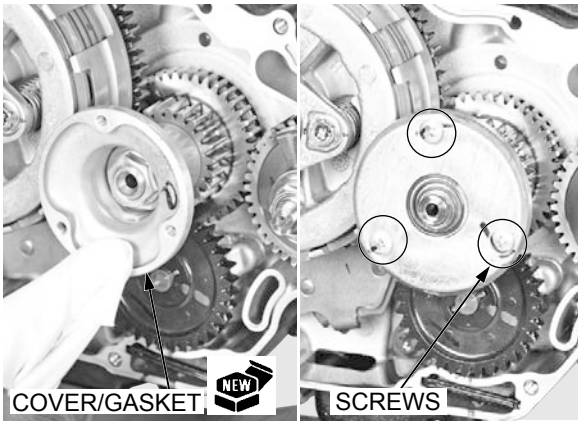

ENGINE IDLE SPEED

- Inspect and adjust the idle speed after all other engine maintenance items have been performed and are within specifications.
- The engine must be warm for accurate adjustment. Ten minutes of stop-and-go riding is sufficient.

Warm up the engine to normal operating temperature, shift the transmission into neutral and place the motorcycle on a level surface.



Connect a tachometer to the spark plug cable and select the mode according to its manufacturer's instructions.

Turn the throttle stop screw as required to obtain the specified idle speed.

IDLE SPEED: 1,400 ± 100 min^{-1} (rpm)

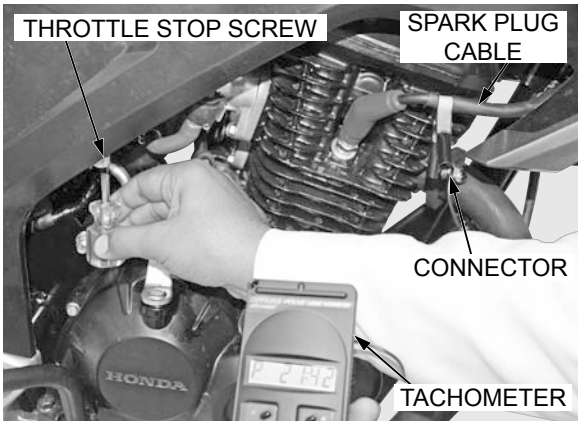

SECONDARY AIR SUPPLY SYSTEM

- The secondary air supply system introduces filtered air into the exhaust gases in the exhaust port. Fresh air is drawn into the exhaust port by the function of the PAIR control valve.
- This charged of fresh air promotes burning of the unburned exhaust gases, and changes a considerable amount of hydrocarbons and carbon monoxide into relatively harmless carbon dioxide and water vapour.

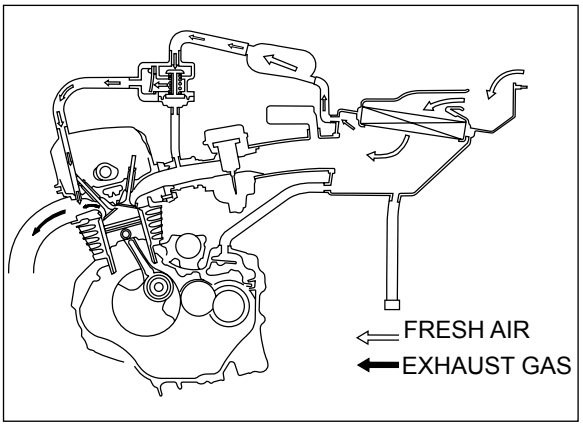

If the hoses show any signs of heat damage, inspect the PAIR check valve.

Remove the fuel tank (page 2-3).

Check the air supply hose and vacuum hose for deterioration, damage or loose connections.

Make sure that the hoses are not cracked.



Check the air suction hose between the PAIR control valve and air cleaner housing for deterioration, damage or loose connections.

Make sure that the hose is not cracked.

Remove and check the air suction hose.

If the carbon deposits in the air suction hose, check the PAIR check valve.

Installation is in the reverse order of removal.

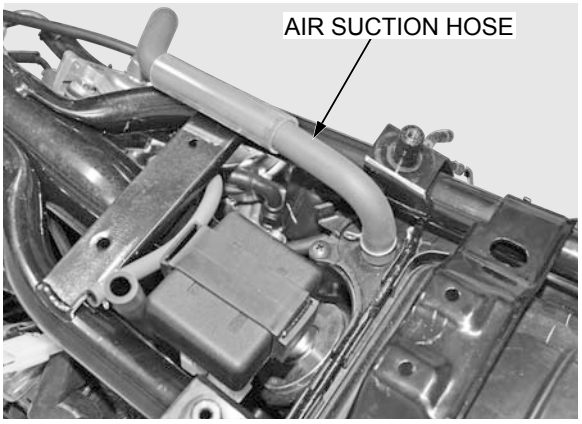

EVAPORATIVE EMISSION CONTROL SYSTEM

The evaporative emission control system collects the fuel vapor from the fuel tank and is stored in the canister with more fresh air when the engine is at a stand still. These vapours are directed to the engine via one way valve and the carburetor when the engine is running.

The device helps in avoiding the air pollution caused due to fuel vapours diffused into the air

The evaporative emission control system consist of two main components:

- Canister component
- One way valve

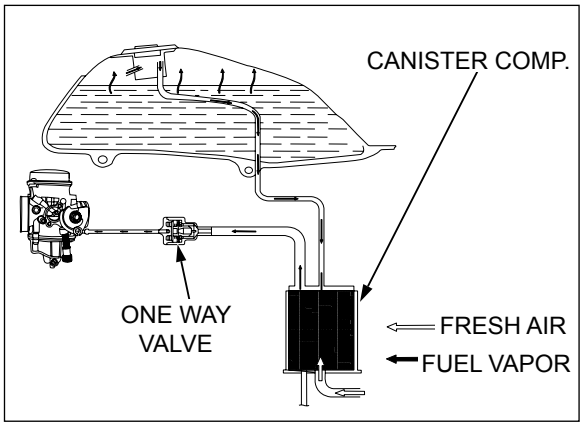

INSPECTION:

Remove the right side and left side cover.

Check the following hoses for deterioration, damage and loose connection:

– Fuel tank to EVAP canister hose.
– EVAP Canister to one way valve hose
– EVAP Canister breather hose
– EVAP Canister drain hose
– EVAP one way valve to carburetor hose.

Check also the EVAP canister and one way valve for cracks or other damage.

Installation is in the reverse order of removal.

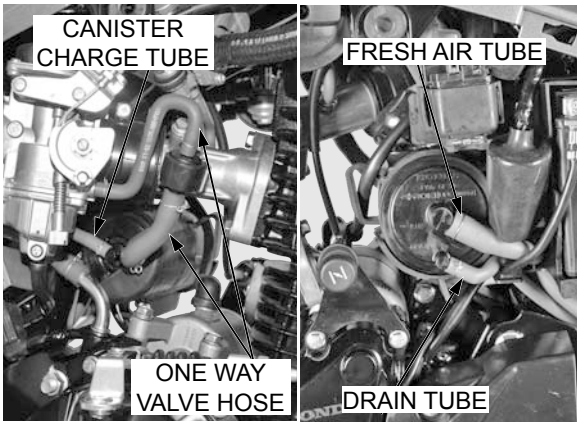

DRIVE CHAIN

DRIVE CHAIN SLACK INSPECTION

Never inspect the drive chain while the engine is running.

Turn the ignition switch “OFF”. Place the motorcycle on its center stand and shift the transmission into neutral.

Check the slack at three places in the drive chain lower run midway between the sprockets.

CHAIN SLACKNESS: 25 – 35 mm (0.9842 – 1.37 in)

NOTICE

Excessive chain slack, 50 mm (1.96 in) or more, may damage the frame.

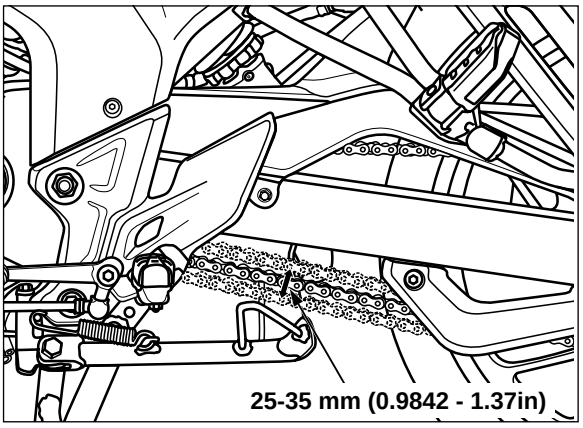

ADJUSTMENT

Never adjust the drive chain while the engine is running.

Loosen the lock nut and then the adjusting nut until the correct drive chain slack is obtained.

Align the chain adjuster index marks with the rear edge of the adjusting slots.

NOTICE

Adjust the drive chain at minimum slack point.

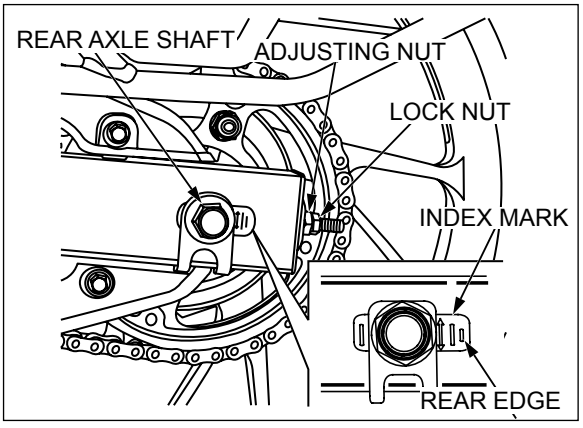

Tighten the rear axle nut to the specified torque.

TORQUE: 88 N·m (8.8 kgf·m, 65 lbf·ft)

Tighten both adjusting nuts and lock nuts.

Recheck the drive chain slack and free wheel rotation.

Check the rear brake pedal free play (page 3-20).

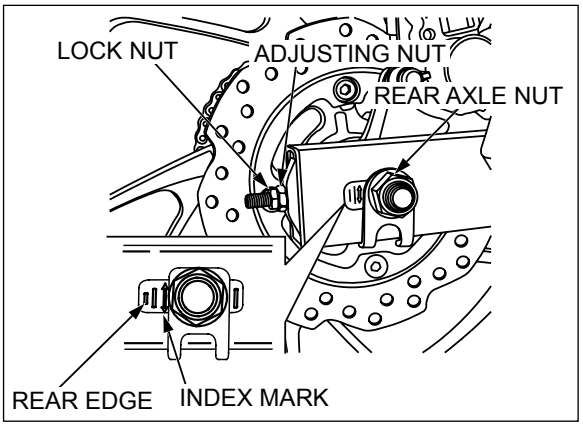

CLEANING AND LUBRICATION

Turn off the ignition switch, place the motorcycle on its center stand on a level ground and shift the transmission into neutral.

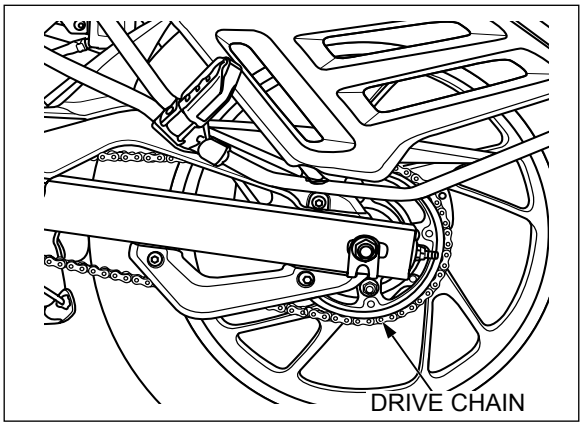

Use any one of the following methods for lubricating drive chain:

- **SAE 80 or 90 gear oil**
- **Honda recommended chain maintenance spray**
- **Molten grease in greaselator**

Saturate each chain link joint so that the lubricant penetrates between the link plates, pins, bushings, and rollers.

Wipe off the excess gear oil or grease.

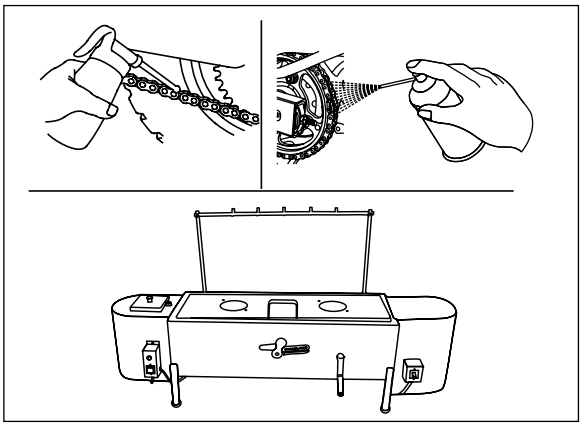

If the drive chain becomes extremely dirty, it should be removed and cleaned prior to lubrication.

Remove the drive chain case (page 3-16).

Carefully remove the retaining clip with pliers.

Remove the master link, link plate and drive chain.

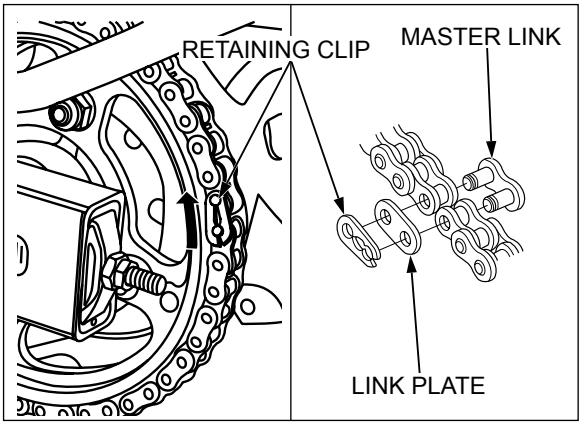

Clean the chain with non-flammable or high flashpoint solvent and wipe it dry.

Be sure the chain has dried completely before lubricating.

Lubricate the drive chain.

Wipe off the excess gear oil or grease.

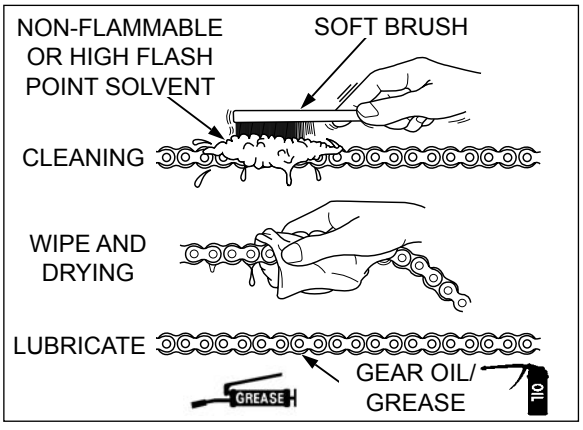

INSPECTION

DRIVE CHAIN

Inspect the drive chain for possible damage or wear.

Replace any chain that has damaged rollers, loose fitting links, or otherwise appears unserviceable.

Measure the drive chain length with the chain held so that all links are straight.

DRIVE CHAIN SPEC. :

NUMBER OF LINKS : 132

STANDARD LENGTH: 428 mm (16.85 in)

SERVICE LIMIT: 511 mm (20.11 in)

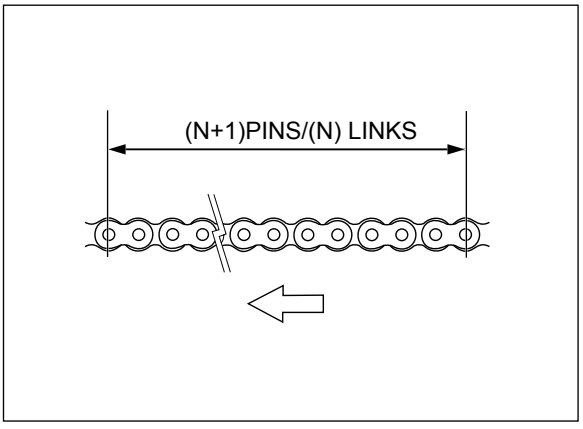

SPROCKET

Installing a new chain on badly worn sprockets will cause a new chain to wear quickly.

Inspect the drive and driven sprocket teeth for wear or damage, replace if necessary.

Never use a new drive chain on worn sprockets.

Both chain and sprockets must be in good condition, or the new replacement chain will wear rapidly.

Check the attaching bolts and nuts on the drive and driven sprockets.

If any are loose, torque them.

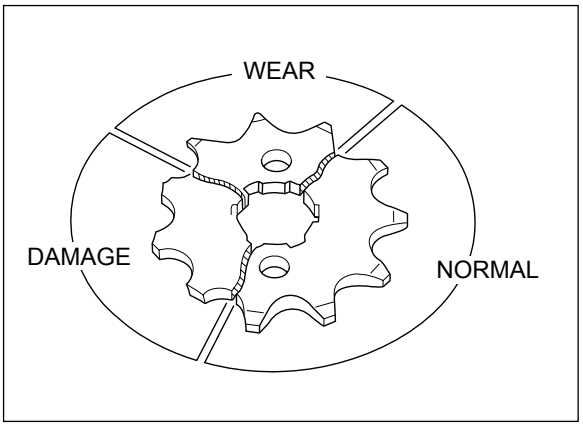

Install the drive chain onto the sprockets.

Install the master link and link plate.

Install the retaining clip with its open end opposite to the direction of chain travel.

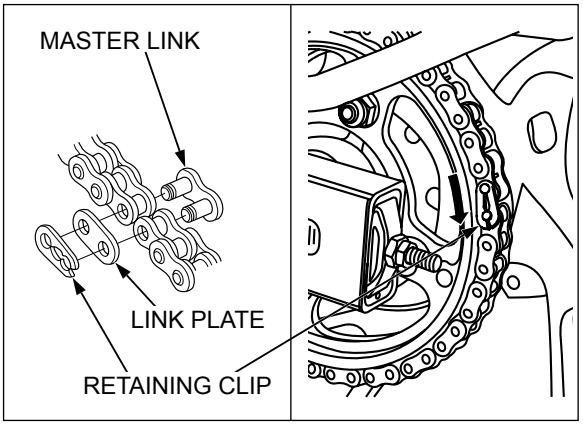

BATTERY

Remove the left side cover (page 2-3).

It is not necessary to check the battery electrolyte level or add distilled water as the battery is a maintenance free sealed type.

Check the voltage of battery with **FBT 50 tester** (page 15-3).

Charging the battery (page 15-5).

Install the battery (page 15-3).

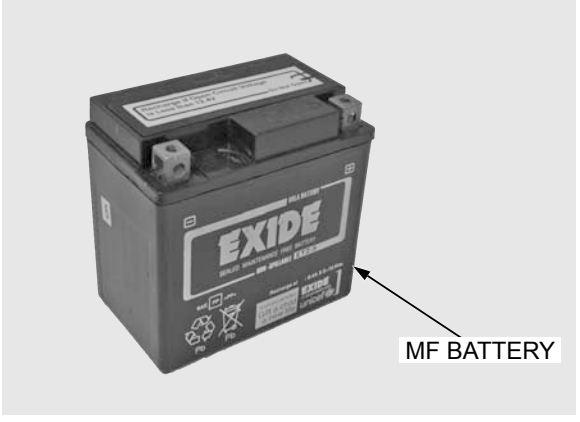

BRAKE FLUID

NOTICE

Spilled fluid can damage painted, plastic or rubber parts. Place a rag over these parts whenever the system is serviced. Keep a spray water bottle while working with brake fluid.

- Do not mix different types of fluid, as they are not compatible with each other.
- Do not allow foreign material to enter the system when filling the reservoir.

FRONT BRAKE FLUID LEVEL INSPECTION:

Support the motorcycle on its center stand.

Turn the handlebar to the left until the reservoir is parallel to the ground.

Check the brake reservoir level through the sight glass.

- When the fluid level is near the lower level line, check the brake pads for wear (page 3-20). A low fluid level may be due to worn brake pads. If the brake pads are worn, the caliper pistons are pushed out, and this causes a low reservoir level.
- If the brake pads are not worn and fluid level is near the lower level line, check entire system for leaks.

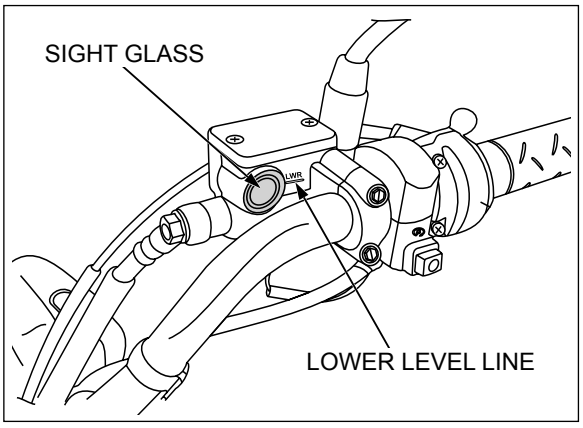

- As per maintenance schedule or if level found low re-fill DOT 3 or DOT 4 brake fluid in to the reservoir. For re-filling remove the following:
  - Screws
  - Reservoir cover
  - Set plate
  - Diaphragm

Install in the reverse order of removal and tighten the cover screws to the specified torque.

TORQUE: 1.5 N·m (0.1 kgf·m, 1.1 lbf·ft)

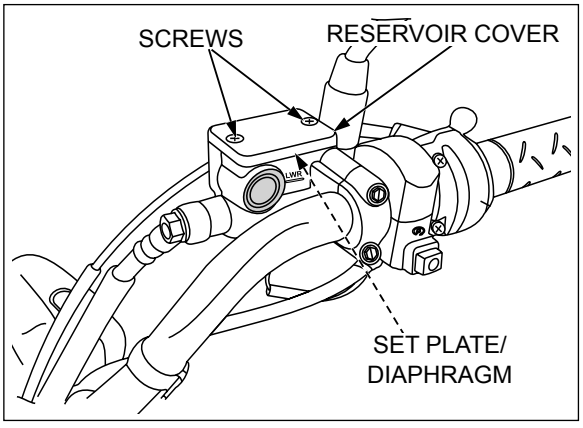

REAR BRAKE (CBS)

BRAKE FLUID LEVEL INSPECTION:

Support the motorcycle on its center stand.

Check the rear brake fluid level mounted in rear step pillion.

- When the fluid level is near the lower level line, check the brake pads for wear (page 3-20). A low fluid level may be due to worn brake pads. If the brake pads are worn, the caliper pistons are pushed out, and this causes a low reservoir level.
- If the brake pads are not worn and fluid level is near the lower level line, check entire system for leaks.

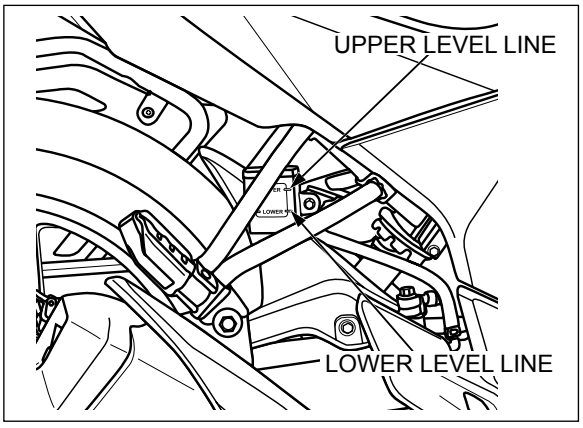

As per maintenance schedule or if level found low re-fill DOT 3 or DOT 4 brake fluid in to the reservoir. For re-filling remove the following:

- Right side cover (page 2-3)
- Screws
- Reservoir cover
- Set plate
- Diaphragm

Install in the reverse order of removal and tighten the cover screws to the specified torque.

TORQUE: 1.5 N·m (0.1 kgf·m, 1.1 lbf·ft)

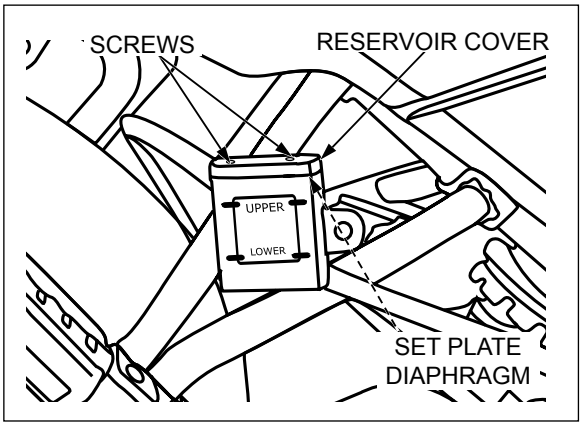

REAR BRAKE FREE PLAY ADJUSTMENT:

STD

No rear brake free play adjustment required in CBS varient due to rear disc brakes.

Check the brake pedal and brake rod for loose connections, excessive play, or other damage. Repair or replace if necessary.

Measure the rear brake pedal free play.

Free Play: 20 – 30 mm (0.787 – 1.178 in)

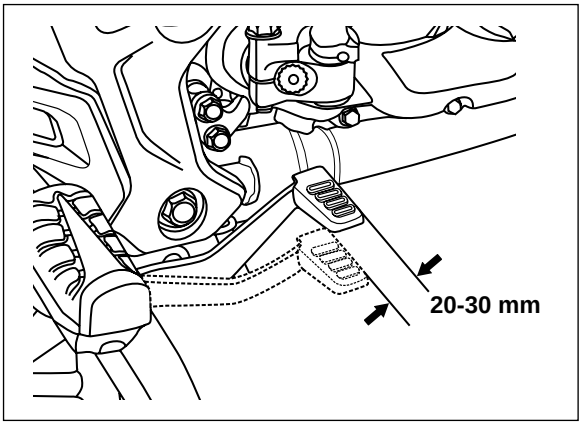

Adjust the rear brake pedal free play by turning the adjusting nut half-turn at a time.

Apply the brake several times and check for free wheel rotation after the brake pedal is released.

Recheck the free play and adjust the brake light switch (page 3-22).

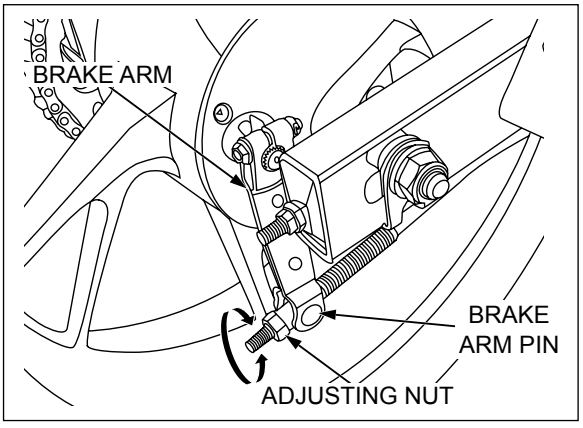

⚠ CAUTION

1. Make sure the cut-out on the adjusting nut is seated on the brake arm pin when adjusting the free-play.
2. Push the brake arm to confirm that there is a gap between the rear brake adjusting nut and brake arm pin.
3. Do not turn the adjuster beyond its natural limits.

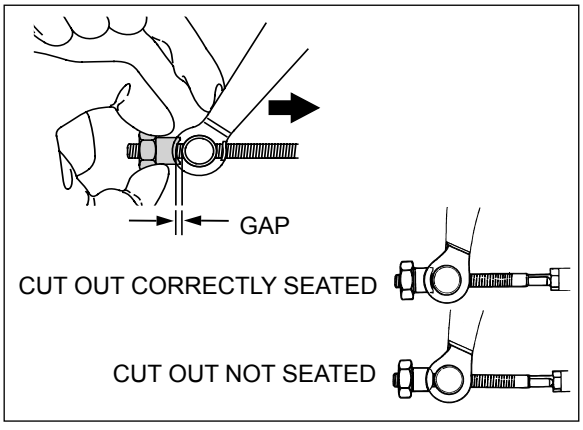

BRAKE PAD WEAR

FRONT BRAKE PADS (CBS)

Check the brake pads for wear by locking from the front side of the brake caliper.

Replace the brake pads if either pad is worn to the bottom of wear limit groove.

Refer to the brake pad replacement (page 14-7).

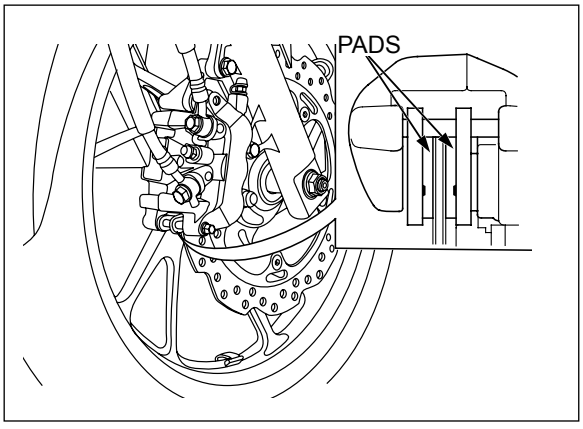

FRONT BRAKE PADS (DISC)

Check the brake pads for wear by locking from the front side of the brake caliper.

Replace the brake pads if either pad is worn to the bottom of wear limit groove.

Refer to the brake pad replacement (page 14-7).

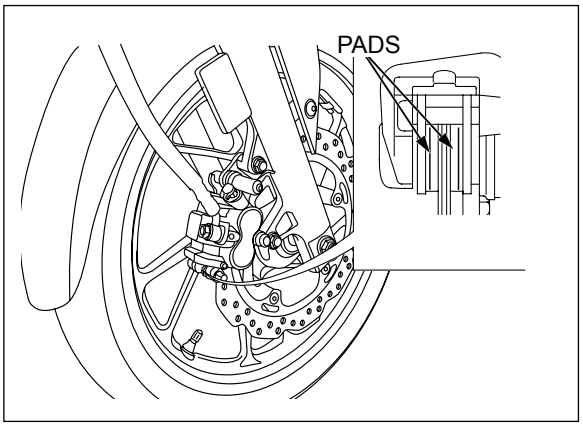

REAR BRAKE PADS (DISC)

Check the brake pads for wear by locking from the front side of the brake caliper.

Replace the brake pads if either pad is worn to the bottom of wear limit groove.

Refer to the brake pad replacement (page 14-19).

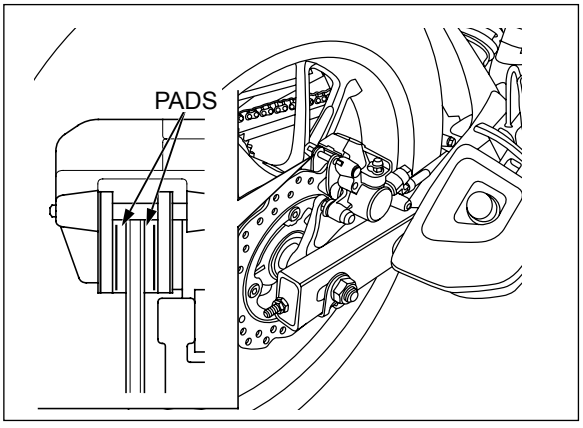

REAR BRAKE SHOES (DRUM)

Check the wear indicator position when the brake is applied.

If the arrow on the indicator plate aligns with the reference mark on the brake panel, inspect the brake drum (page 14-30).

Replace the brake shoes (page 14-31) if the drum I.D. is within the service limit.

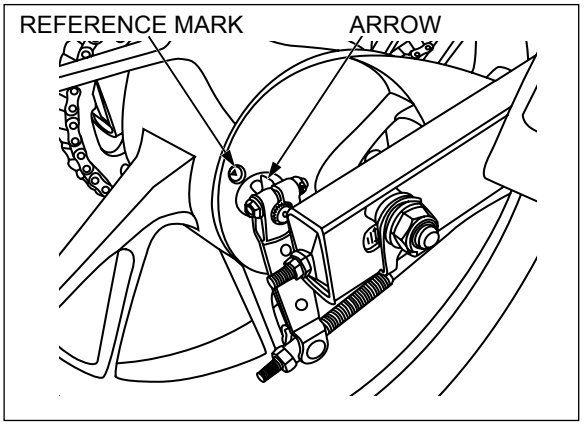

BRAKE SYSTEM

FRONT BRAKE

Inspect the brake hose and fittings for deterioration, cracks and signs of leakage.

Tighten any loose fittings.

Replace hoses and fittings as required.

Firmly apply the brake lever, and check that no air has entered the system.

If the lever feels soft or spongy when operated, bleed the air from the system.

Refer to the brake bleeding procedures (page 14-4).

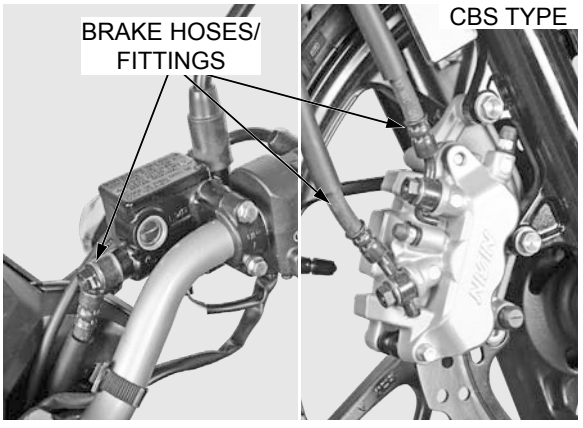

REAR BRAKE

DISC TYPE:

Inspect the brake hose and fittings for deterioration, cracks and signs of leakage.

Tighten any loose fittings.

Replace hoses and fittings as required.

Refer to the brake bleeding procedures (page 14-4).

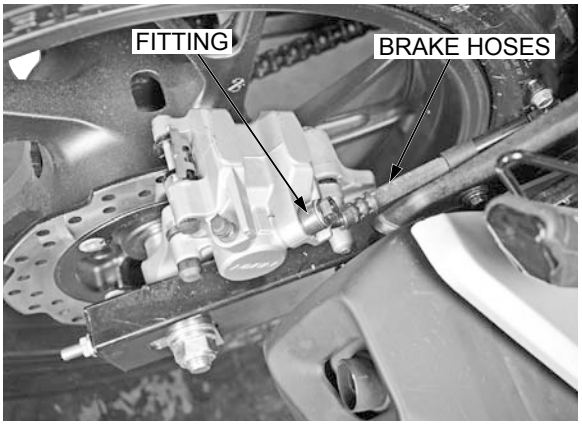

BRAKE LIGHT SWITCH

Hold the brake light switch body and turn the adjuster. Do not turn the brake light switch body.

- The front brake light switch does not require adjustment.
- Adjust the rear brake light switch.

Remove the right side cover.

Adjust the brake light switch so that the brake light comes on just prior to the to the brake actually being engaged.

If the light fails to come on, adjust the switch so that the light comes on at the proper time.

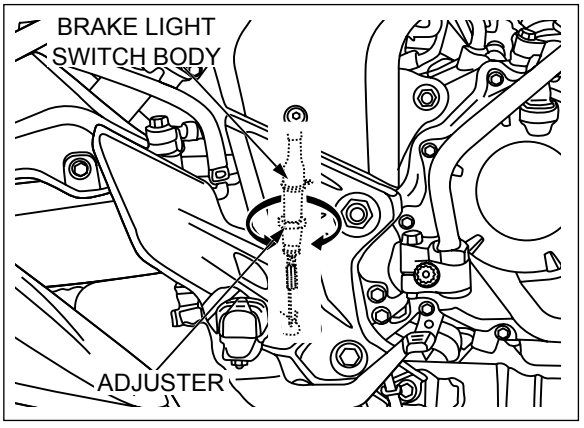

HEADLIGHT AIM

Adjust the headlight beam as specified by local laws and regulations.

Place the motorcycle on a level ground.

Adjust the headlight beam vertically by loosening the headlight adjusting bolt.

After adjusting the headlight aim, tighten the headlight adjusting bolt to the specified torque.

TORQUE: 2 N·m (0.2 kgf·m, 1.4 lbf·ft)

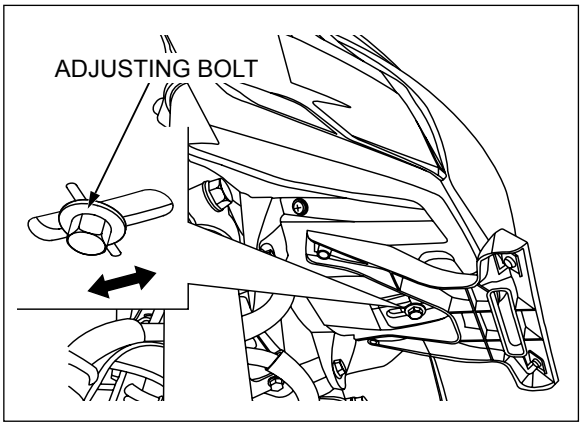

CLUTCH SYSTEM

INSPECTION

Check the cable and clutch lever for any looseness, excessive play, or other damage.

Replace or repair them if necessary.

Inspect the clutch cable for kinks or damage, and lubricate the cable.

Measure the clutch lever free play at the tip of the clutch lever.

FREE PLAY: 10 – 20 mm (0.4 – 0.8 in)

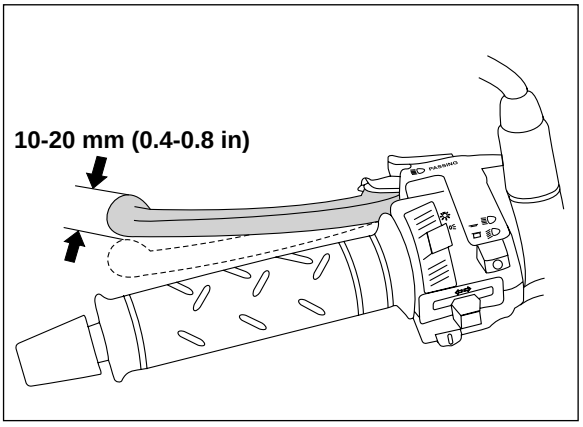

ADJUSTMENT

Adjustments are performed at the clutch lifter arm.

Loosen the lock nut, and turn the adjusting nut.

After adjustment, tighten the lock nut by holding adjusting nut.

Check the clutch operation.

If the proper free play cannot be obtained, or the clutch slips during the test ride, disassemble and inspect the clutch (page 9-8).

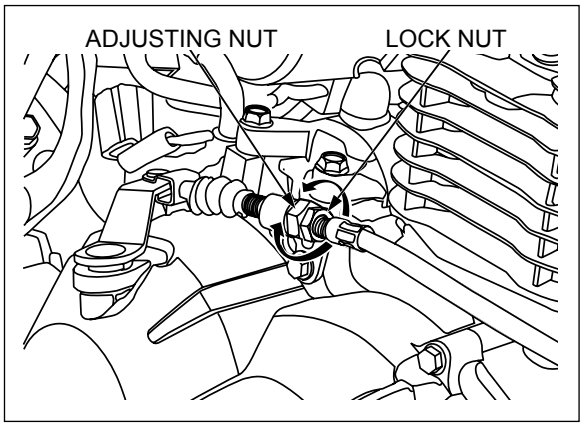

SIDE STAND

Support the motorcycle on its center stand.

Check the side stand spring for damage or loss of tension.

Check the side stand operation for freedom of movement and lubricate the side stand pivot if necessary.

Make sure the side stand is not bent.

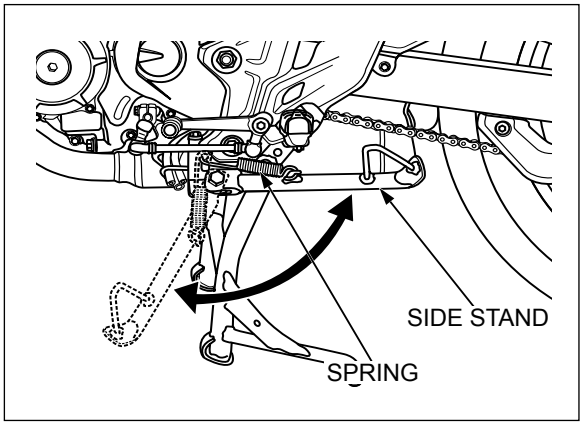

SUSPENSION

FRONT SUSPENSION INSPECTION

Loose, worn or damaged suspension parts impair motorcycle stability and control.

Check the action of the forks by operating the front brake, and pressing the front suspension several times.

Check the entire assembly for signs of leaks, damage or loose fasteners.

Replace the damaged components which cannot be repaired.

Tighten all nuts and bolts.

Refer to (page 12-14) for fork service.

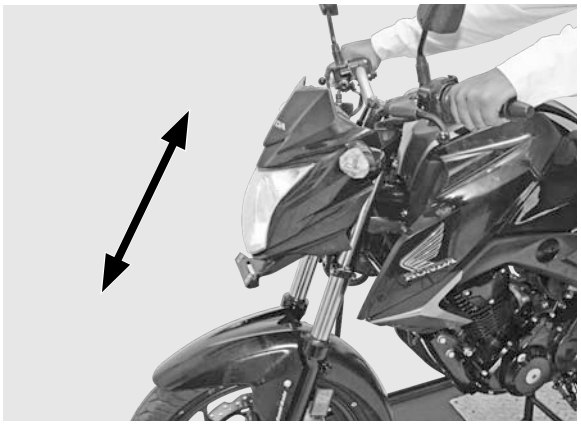

REAR SUSPENSION INSPECTION

Loose, worn or damaged suspension parts impair motorcycle stability and control.

Check the action of the rear shock absorber by pressing the rear end several times.

Check the entire shock absorber assembly for signs of leaks, damage or loose fasteners.

Replace the damaged components which can not be repaired.

Tighten all nuts and bolts.

Refer to (page 13-12) for shock absorber service.



Support the motorcycle securely and raise the rear wheel off the ground.

Check for worn swingarm bearings by grabbing the rear wheel and attempting to move the wheel and attempting to move the wheel side to side.

Replace the bearings if any looseness to noted.

Refer to (page 13-13) for swingarm service.

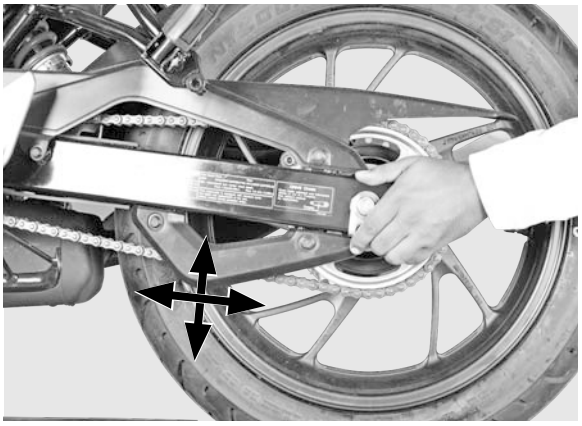

NUTS, BOLTS, FASTENERS

Check that all chassis nuts, bolts and screws are tightened to their correct torque values (page 1-10).

Check that all cotter pins, clips, hose clamps and cable stays are in place and properly secured.

WHEELS/TIRES

FRONT WHEEL

Support the motorcycle on its center stand, and raise the front wheel off the ground.

Check for worn wheel bearings by holding the fork leg, and attempting to move the wheel side to side.

Replace the bearings if any looseness is noted.

Refer to the front wheel bearings replacement (page 12-10).



REAR WHEEL

Support the motorcycle on its center stand.

Check for worn wheel and driven flange bearings by holding the swingarm, and attempting to move the wheel side to side.

Replace the bearings if any looseness is noted.

Refer to each bearing replacement:

– Rear wheel bearings (page 13-6)
– Driven flange bearing (page 13-10)



Check the tire pressure with a tire pressure gauge when the tires are cold.



RECOMMENDED TIRE PRESSURE AND TIRE SIZE:

		FRONT	REAR
Tire pressure kPa (kgf/cm^2, psi)	Driver only	175 (1.75,25)	175 (1.75,25)
	Driver and Passenger	175 (1.75,25)	200 (2.00,29)
Tire size		100/80-17M/C 52S	140/70-17M/C 66S

Check the tires for cuts, embedded nails, or other damage.

Check the trueness of each wheel:

– Front wheel (page 12-10)
– Rear wheel (page 13-4)

Replace the tires when the tread depth (TWI) reaches the following limits.



MINIMUM TREAD DEPTH:

FRONT: 1.5 mm (0.06 in)

REAR: 2.0 mm (0.08 in)

Measure the tread depth at the center of the tires.

STEERING HEAD BEARINGS

Support the motorcycle on its center stand, and raise the front wheel off the ground.

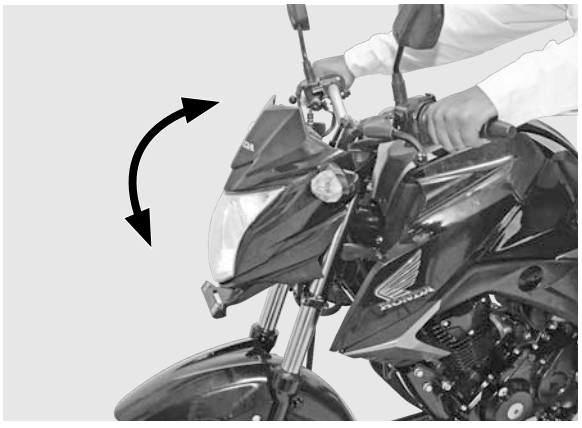

Check that the control cables do not interfere with handlebar rotation.

Check that the handlebar moves freely from side to side.

Check that the fork leg moves freely from forward to backward.

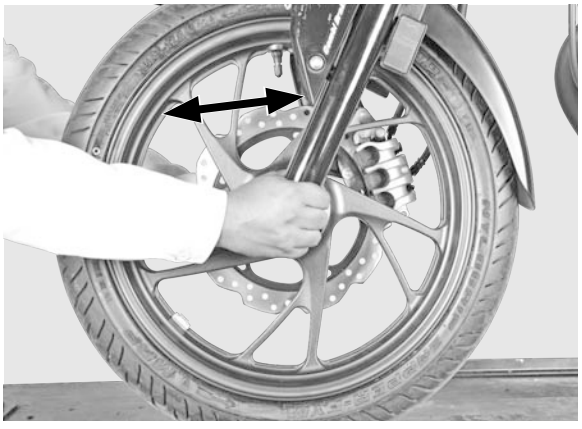

If the handlebar or fork moves unevenly, binds, or has vertical movement, inspect the steering head bearings (page 12-23).

LUBRICATION SYSTEM DIAGRAM

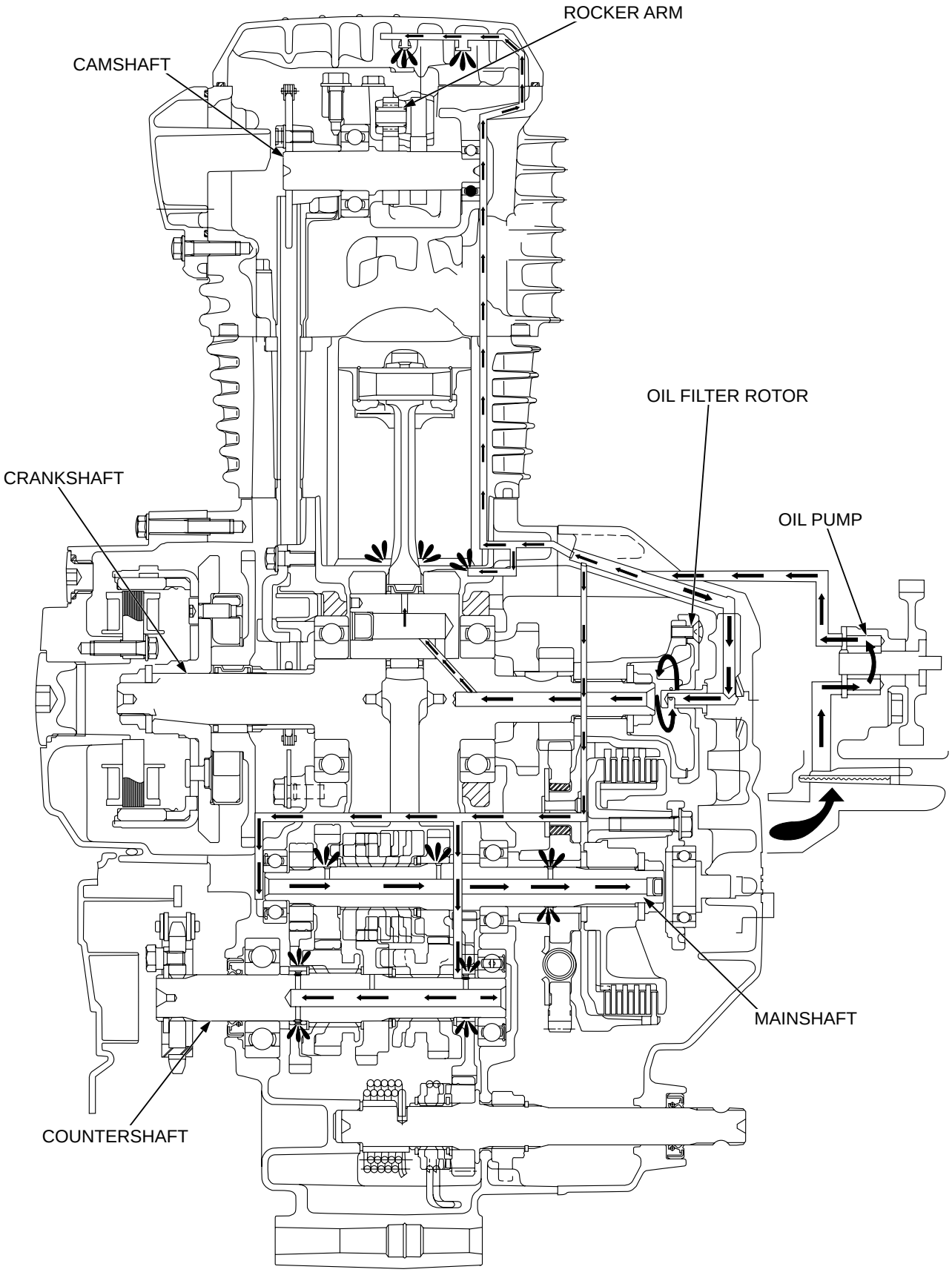

4. LUBRICATION SYSTEM

LUBRICATION SYSTEM DIAGRAM	**4-0**	**ENGINE OIL STRAINER SCREEN**	**4-2**
SERVICE INFORMATION	**4-1**	**OIL PUMP**	**4-2**
TROUBLESHOOTING	**4-1**		

SERVICE INFORMATION

GENERAL

⚠ CAUTION

Used engine oil may cause skin cancer if repeatedly left in contact with the skin for prolonged periods. Although this is unlikely unless you handle used oil on a daily basis, it is still advisable to thoroughly wash your hands with soap and water as soon as possible after handling used oil.

- The oil pump can be serviced with the engine installed in the frame.
- The service procedures in this section must be performed with the engine oil drained.
- When removing and installing the oil pump, use care not to allow dust or dirt to enter the engine.
- If any portion of the oil pump is worn beyond the specified service limits, replace the oil pump as an assembly.
- After the oil pump has been installed, check that there are no oil leaks.
- Refer to the following:
  - Engine oil level check (page 3-10)
  - Engine oil change (page 3-11)
  - Engine oil strainer screen cleaning (page 3-12)
  - Engine oil centrifugal filter cleaning (page 3-12)

SPECIFICATIONS

Unit: mm (in)

ITEM		STANDARD	SERVICE LIMIT
Engine oil capacity	At draining	1.0 liter (1.0 US qt, 0.9 lmp qt)	–
	At disassembly	1.2 liter (1.3 US qt, 1.1 lmp qt)	–
Recommended engine oil		Honda 4-stroke oil or equivalent motor oil API service classification: MA Viscosity: SAE 10W-30	–
Oil pump rotor	Tip clearance	0.15 (0.006)	0.20 (0.008)
	Body clearance	0.15 – 0.20 (0.006 – 0.008)	0.25 (0.010)
	Side clearance	0.05 – 0.10 (0.002 – 0.004)	0.15 (0.006)

TORQUE VALUES

ITEM	PART NO.	QTY	THREAD DIA. (mm)	TORQUE N·m (kgf·m, lbf·ft)	REMARKS	PAGE NO.
Oil pump plate screw	93901 – 34120	1	4	3 (0.3, 2.2)		Page 4-6
Oil pump mounting bolt	95701 – 06035 – 00	2	6	12 (1.2, 9)		Page 4-6

TROUBLESHOOTING

Engine oil level too low

- High Oil consumption
- External oil leaks
- Worn valve guide or seal
- Worn piston rings or incorrect piston ring installation
- Worn cylinder

Engine oil contamination

- Oil not changed often enough
- Clogged oil strainer
- Faulty cylinder head gasket
- Worn piston rings Poor performance
- Deformed exhaust system
- Exhaust gas leak
- Clogged muffler

ENGINE OIL STRAINER SCREEN

REMOVAL

Remove the right crankcase cover (page 9-3).

Remove the oil strainer screen.

Installation is in the reverse order of removal.

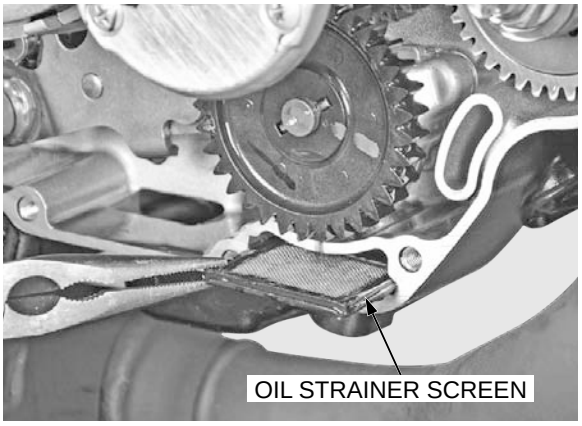

Coat the screen rubber with engine oil and install it at original direction.

Install the right crankcase cover (page 9-5).

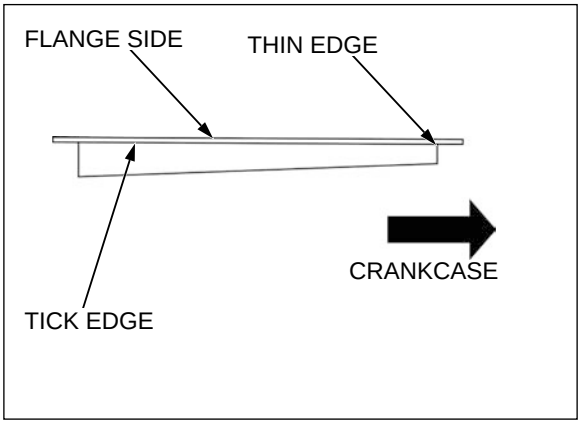

OIL PUMP

REMOVAL

Remove the right crankcase cover (page 9-3).

Remove the oil pump driven gear and rotor shaft assembly.

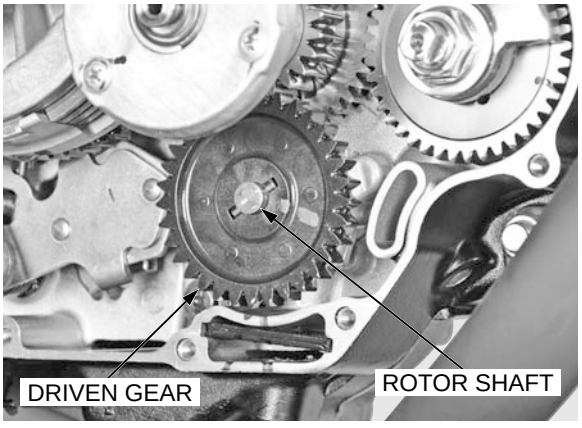

Remove the oil pump mounting bolts (2 nos.) and oil pump assembly.

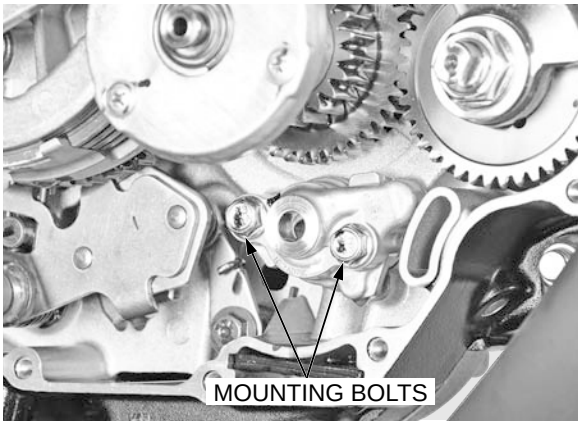

Remove the dowel pins (2 nos.).

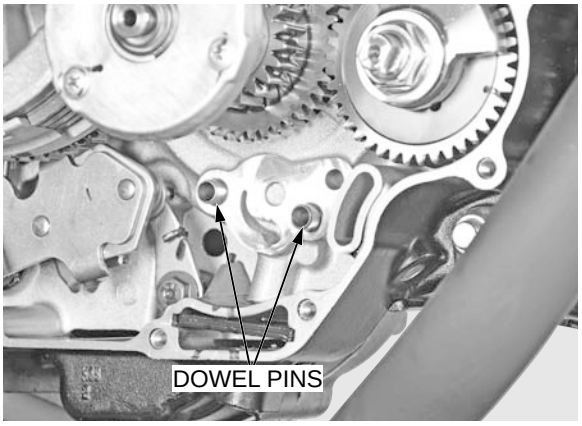

DISASSEMBLY

Remove the oil pump cover screw (1 no.) and oil pump cover.

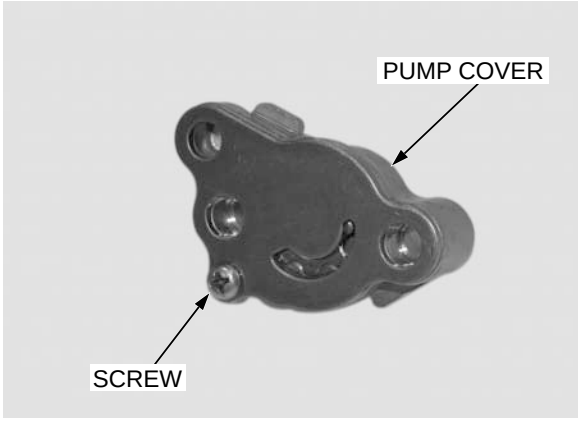

Remove the inner rotor.

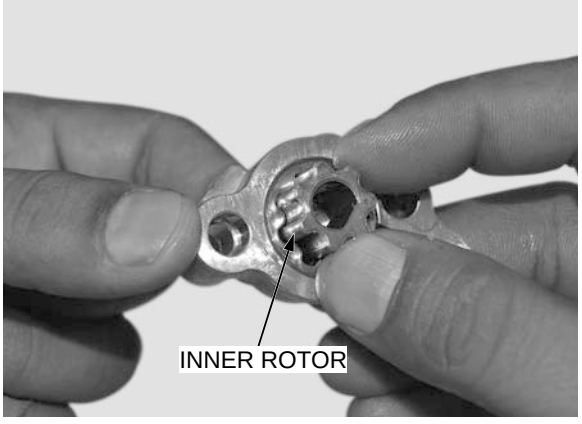

Remove the outer rotor from the oil pump body.

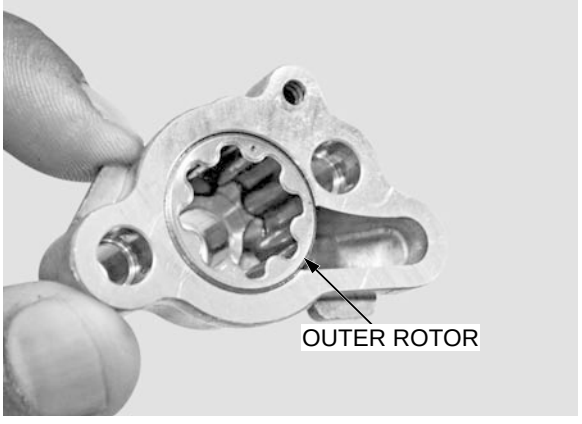

INSPECTION

- Measure at several places and use the largest reading to compare to the service limit.
- If any portion of the oil pump is worn beyond the specified service limits, replace the oil pump and oil pump cover as an assembly. Remove both side shroud pan screw (1 no.).

Temporarily install the outer rotor, inner rotor and rotor shaft into the oil pump body.

Measure the oil pump body clearance.

SERVICE LIMIT: 0.25 mm (0.010 in)

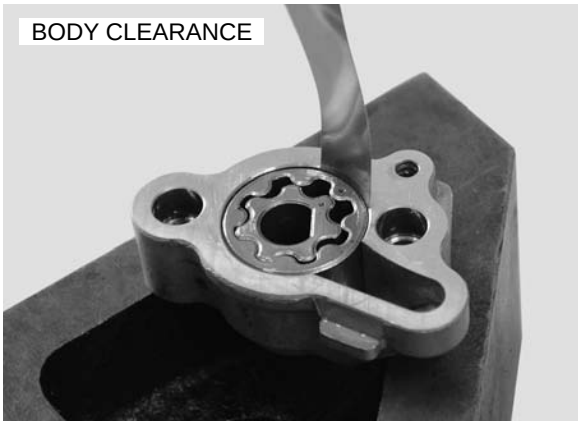

Measure the rotor tip clearance between the inner and outer rotors.

SERVICE LIMIT: 0.20 mm (0.008 in)



Remove the rotor shaft.

Measure the side clearance using a straight edge and feeler gauge.

SERVICE LIMIT: 0.15 mm (0.006 in)



OIL PUMP ASSEMBLY

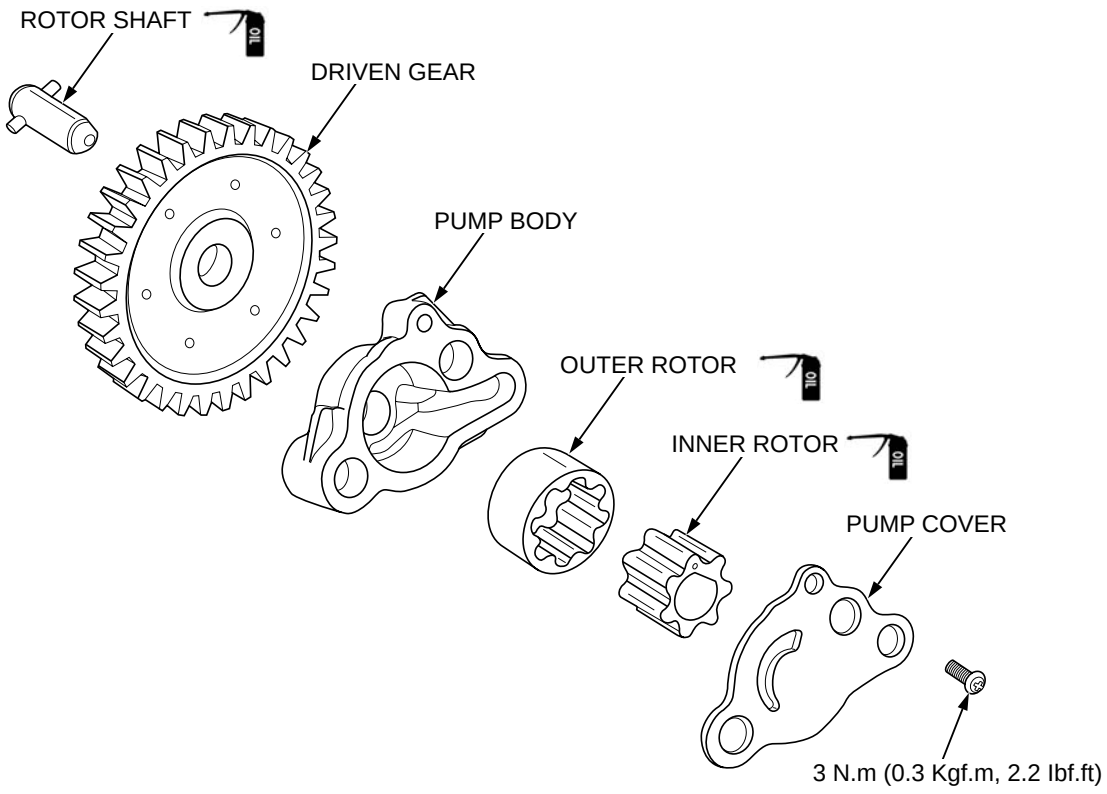

Apply clean engine oil to the outer rotor and install it into the oil pump body.

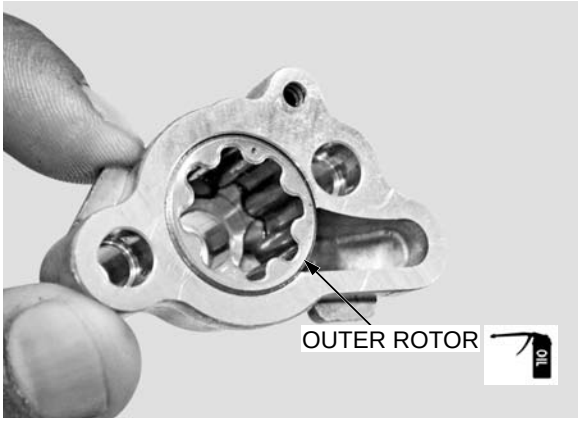

Apply clean engine oil to the inner rotor and install them.

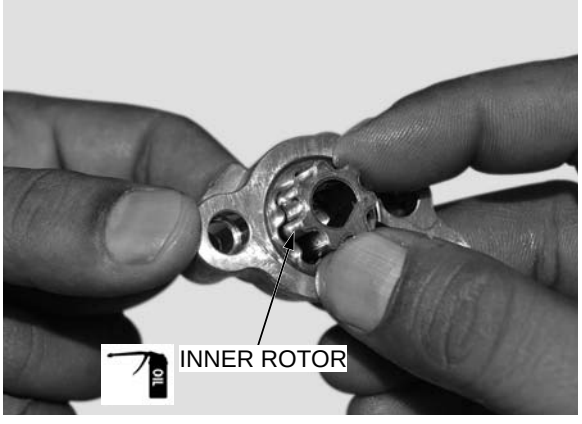

Install the oil pump cover and tighten the screw.

TORQUE: 3 N·m (0.3 kgf·m, 2.2 lbf·ft)

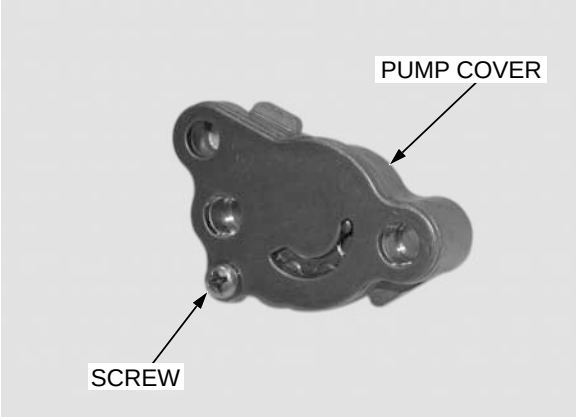

INSTALLATION

Install two dowel pins into the crankcase.

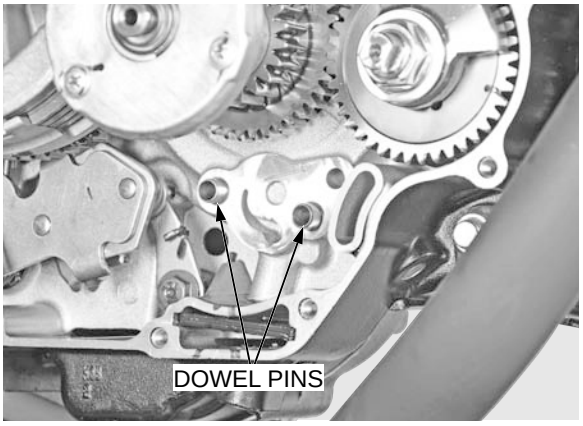

Install the oil pump and tighten the mounting bolts to the specified torque.

TORQUE: 12 N.m (1.2 kgf.m, 9 lbf.ft)

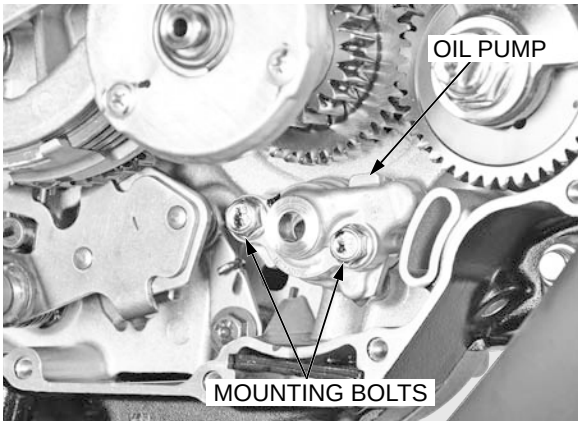

Apply clean engine oil to the oil pump driven gear teeth and rotor shaft then align and install it.

Install the right crankcase cover (page 9-5).

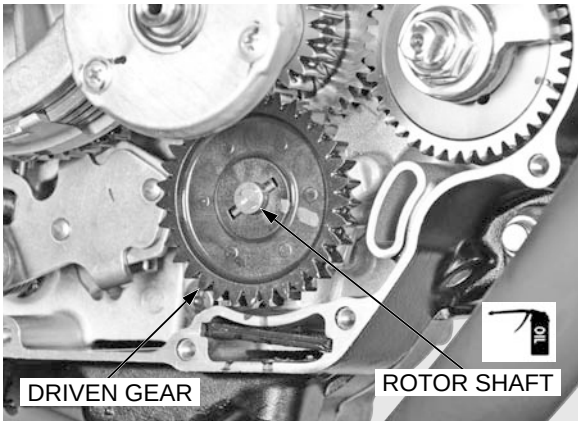

MEMO

COMPONENT LOCATION

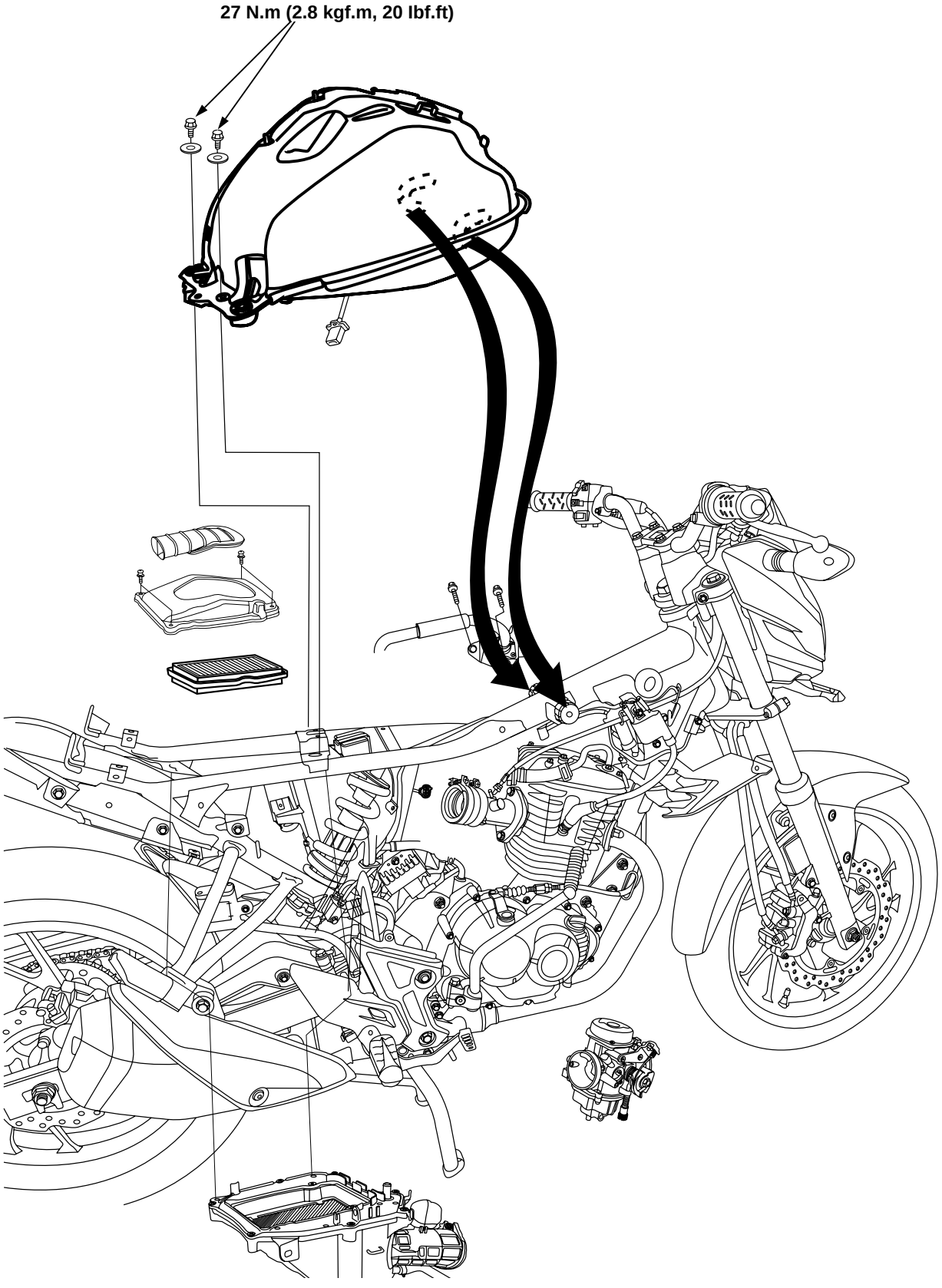

COMPONENT LOCATION	5-0	CARBURETOR	5-6
SERVICE INFORMATION	5-1	PILOT SCREW ADJUSTMENT	5-15
TROUBLESHOOTING	5-2	SECONDARY AIR SUPPLY SYSTEM	5-19
AIR CLEANER HOUSING	5-3	EVAPORATIVE EMISSION CONTROL SYSTEM	5-20
STARTING ENRICHMENT(SE) VALVE	5-5	FUEL STRAINER	5-22

SERVICE INFORMATION

GENERAL

- Bending or twisting the control cable will impair smooth operation of secondary air supply system, and could cause the cable to stick or bind, resulting in loss of vehicle control.
- Work in a well ventilated area. Smoking or allowing flames or sparks in the work area or where gasoline is stored can cause a fire or explosion.
- When disassembling the fuel system parts, note the locations of the O-rings. Replace them with new ones on reassembly.
- Before removing the carburetor, place an approved gasoline container under the carburetor drain tube, loosen the drain screw, and drain the fuel from the carburetor.
- After removing the carburetor, wrap the intake port of the engine with a shop towel or cover it with pieces of tape to prevent any foreign material from dropping into the engine.
- If the motorcycle is to be stored for more than one month, drain the float chamber. Fuel left in the float chamber may cause clogged jets, resulting in hard starting or poor driveability.

SPECIFICATIONS

ITEM	SPECIFICATIONS	Page NO.
Carburetor identification number	AVK6BA	Page 1–3
Main jet	#118	Page 5–11
Slow jet	#38	Page 5–11
Pilot screw initial opening	2 1/8	Page 5–18
Float level	13.0 mm (0.51in)	Page 5–12
Engine Idle speed	1,400 ± 100 min^{-1} (rpm)	Page 5–18
Throttle grip free play	2 ~ 6 mm (0.07 – 0.2 in)	Page 3–5
PAIR control valve specified vacuum	53.3 kPa (400 mm Hg)	Page 5–20

TORQUE VALUES

ITEM	PART NO.	QTY	THREAD DIA. (mm)	TORQUE N·m (kgf·m, lbf·ft)	REMARKS	PAGE NO.
Fuel tank mounting bolt	95701 – 06012 – 00	2	8	27 (2.8, 20)		–
SE valve lock nut	16046 – KVC – 901	1	10	2.3 (0.2, 1.7)		Page 5–6
Carburetor drain screw	–	1	6	1.5 (0.2, 1.1)		Page 5–6
Slow jet	16180 – K38 – 901	1	5	1.5 (0.1, 1.1)		Page 5–11
Needle jet holder	16165 – K21 – 901	1	7	2.5 (0.25, 1.8)		Page 5–11
Main jet	99101 – KTN – 118	1	5	2.1 (0.2, 1.6)		Page 5–11
Float chamber screw	93500 – 04012 – 0H	3	4	2.1 (0.2, 1.6)		Page 5–12
SE valve cover screw	93892 – 05012 – 18	2	5	3.4 (0.4, 2.5)		Page 5–13
Vacuum chamber cover screw	93500 – 04008 – 1H	2	4	2.1 (0.2, 1.6)		Page 5–14
Throttle cable stay screw	93500 – 05012 – 1H	2	5	3.4 (0.34, 2.5)		Page 5–14
Insulator band screw	16217 – KSP – 910	1	5	1 (0.1, 0.7)		Page 5–15
Fuel valve lock nut	16950 – K43 – 901	1	16	22 (2.2, 16)		Page 5–23

TOOLS

Carburetor float level gauge
070MJ-001-I110

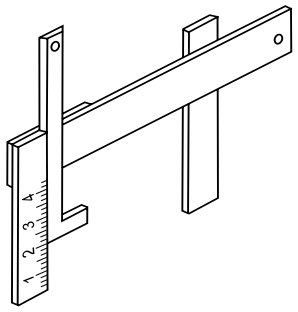

TROUBLESHOOTING

Engine won't start

- Too much fuel getting to the engine
  - – Air cleaner clogged
  - – Flooded carburetor
- Intake air leak
- Fuel contaminated/deteriorated
- No fuel to carburetor
  - – Fuel strainer clogged
  - – Fuel hose clogged
  - – Fuel valve stuck
  - – Float level faulty

Lean mixture

- Fuel jet clogged
- Float valve faulty
- Float level too low
- Fuel line restricted
- Clogged carburetor air vent hose
- Intake air leak
- Throttle valve faulty

Rich mixture

- SE valve in open position
- Float valve faulty
- Float level too high
- Air jets clogged
- Air cleaner element contaminated
- Flooded carburetor

Engine stall, hard to start, rough idling

- Fuel line restricted
- Ignition system malfunction (page 16-3)
- Fuel mixture too lean/rich (pilot screw adjustment)
- Fuel contaminated/deteriorated
- Intake air leak
- Idle speed misadjusted
- Float level faulty
- Pilot screw misadjusted

After burn when engine braking is used

- Lean mixture in slow circuit
- Faulty PAIR control valve
- Faulty PAIR check valve
- Clogged hose of the secondary air supply system
- Ignition system malfunction (page 16-3)

Backfiring or misfiring during acceleration

- Ignition system malfunction
- Fuel mixture too lean

Poor performance (driveability) and poor fuel economy

- Fuel system clogged
- Ignition system malfunction

AIR CLEANER HOUSING

REMOVAL

Remove the following:

– Fuel tank (page 2-3)

– Air cleaner element (page 3-6)

Disconnect the air vent hose (page 5-5) from the carburetor and remove the hoses (Breather and air vent) from the frame clamps.

Disconnect the RR brake switch 2P connector as well as remove the wire routing from the frame clamp.

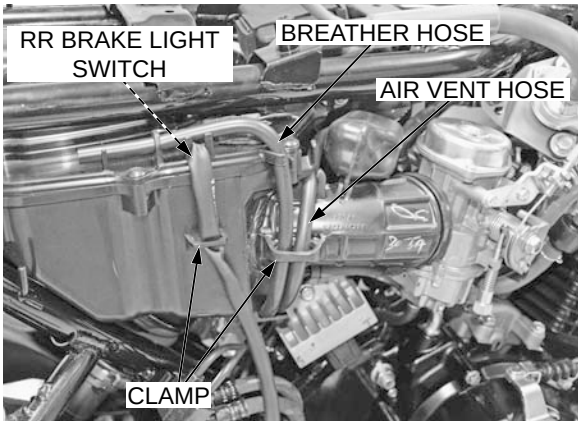

Disconnect the crank case breather hose.

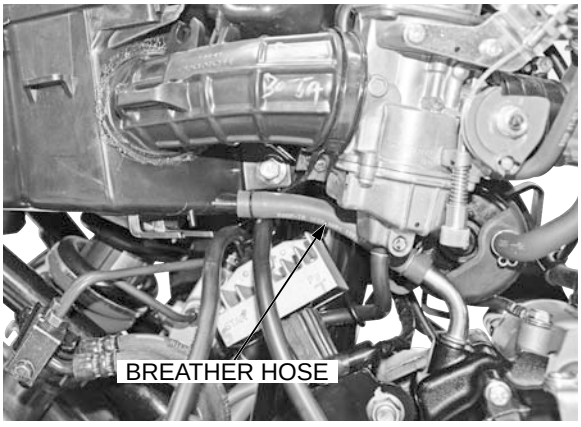

Disconnect the ASV hose.

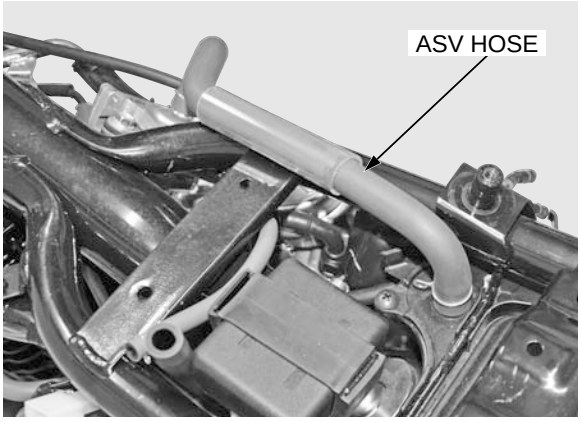

Loosen the air cleaner connecting boot band screw.

Remove the mounting bolts (2 nos.) from right side.

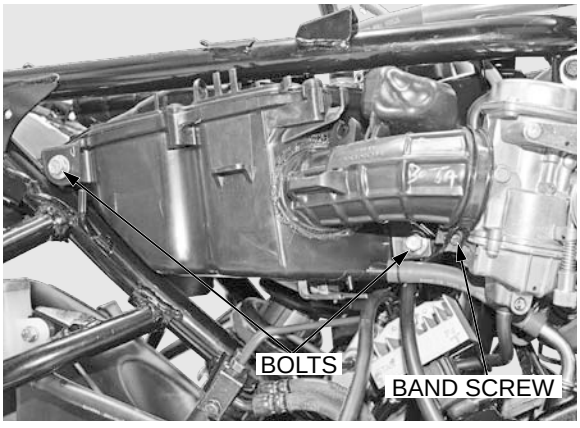

Remove the mounting bolt (1 no.) from left side.

Remove the air cleaner housing from right side.

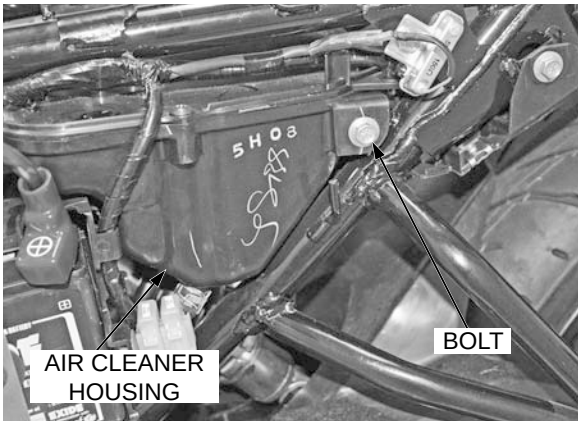

INSTALLATION

Install the air cleaner housing from right side to the frame.

Install and tighten the mounting bolt (1 no.) from left side.

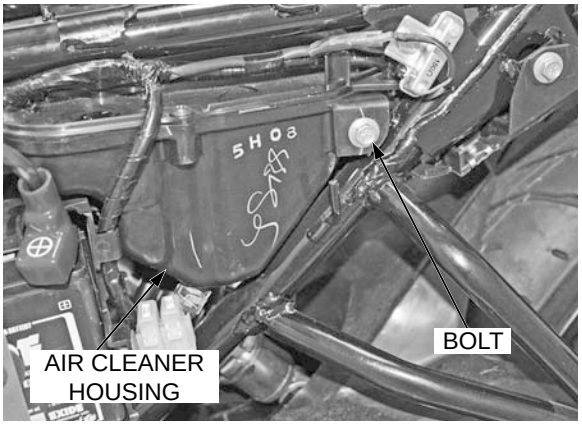

Install the mounting bolts (2 nos.) from right side.

Take care of the direction of the band screw while installing as shown.

Connect the crankcase breather hose.

Connect the air cleaner connecting boot and tighten the band screw.

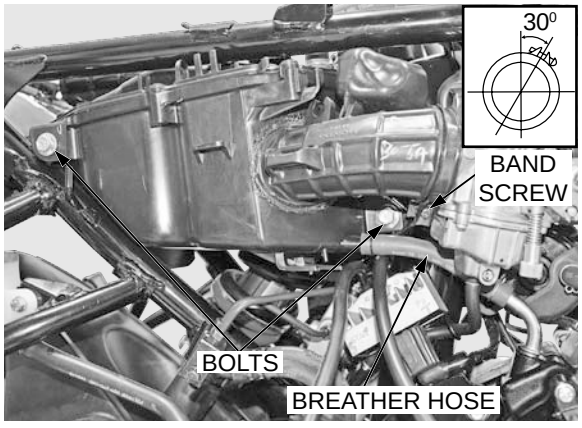

Route all hoses as shown on page (1-18 to 1-24).

Connect the air secondary valve (ASV) hose.

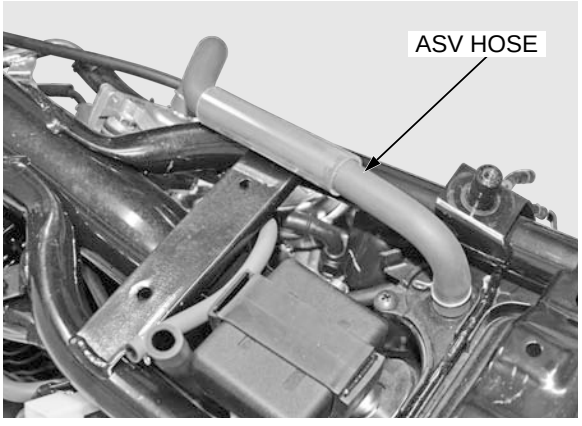

While installing the drain hose route the wire harness properly page (1-18)

Clamp the hose to the frame carefully and connect the air vent hose to the carburetor (page 5-16).

Carefully route the wire from the clamp on the air cleaner housing and connect the rear brake light switch 2P connector.

Install the following:

– Air cleaner element (page 3-6)
– Fuel tank (page 2-4)
– Left side cover (page 2-3)
– Right side cover (page 2-3)

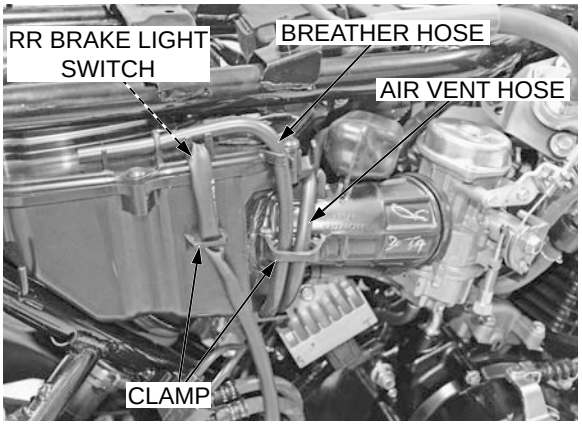

STARTING ENRICHMENT (SE) VALVE

REMOVAL/INSTALLATION

Remove the fuel tank right cover. (page 2-4).

Loosen the air cleaner connecting boot band screw and insulator band screw from carburetor.

Loosen the starting enrichment (SE) valve lock nut and remove the SE valve from the carburetor body.

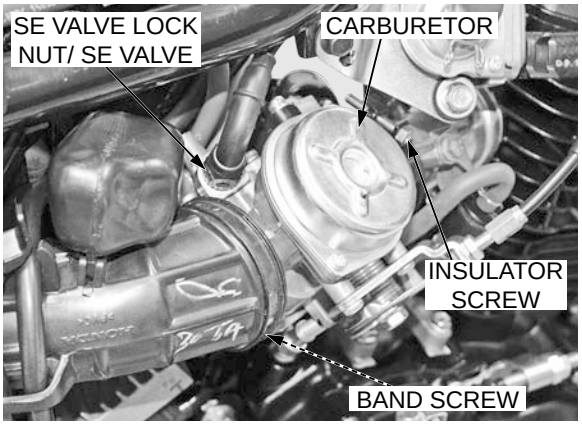

Check the SE valve for scoring , scratches or wear.

Check the seat at the tip of the SE valve for stepped wear.

Replace the SE valve set if necessary.



When installing new SE valve, compress the spring and release the choke cable and spring from the SE valve.

Install the SE valve to the choke cable.

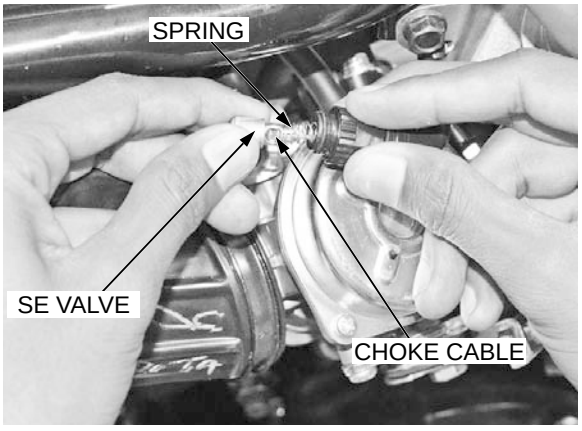

Handle the SE valve lock nut with care that can easily be damaged.

Install the SE valve to the carburetor body.

Tighten the SE valve lock nut.

TORQUE: 2.3 N·m (0.2 kgf·m, 1.7 lbf·ft)

After the installation, check for the smooth operation of the choke lever.

Install the fuel tank (page 2-4).

Install the left side cover (page 2-3)

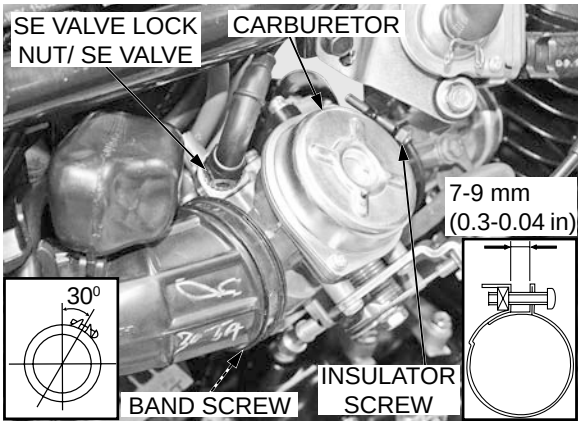

CARBURETOR

REMOVAL

Remove the fuel tank right side cover (Page 2-4).

Loosen the insulator band screw and air cleaner connecting boot band screw.

Disconnect the SE valve (page 5-5).

Disconnect the air vent hose and the throttle sensor 3P connector (page 16-7).

Turn the fuel valve “OFF”, and disconnect the fuel hose from the carburetor.

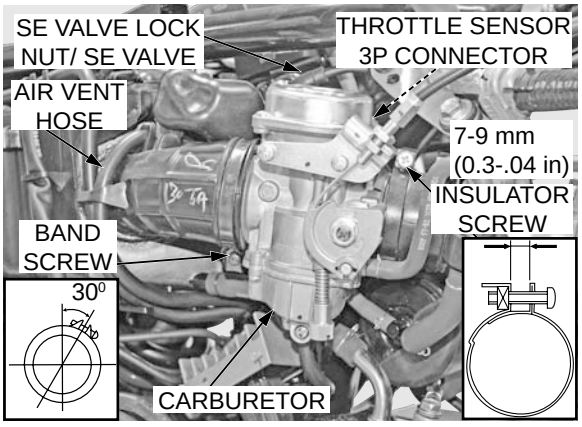

Loosen the drain screw and drain the fuel from the float chamber into the approved gasoline container.

Completely drain any residual fuel, tighten the drain screw to the specified torque.

TORQUE: 1.5 N·m (0.2 kgf·m, 1.1 lbf·ft)

Disconnect the drain hose from the carburetor.

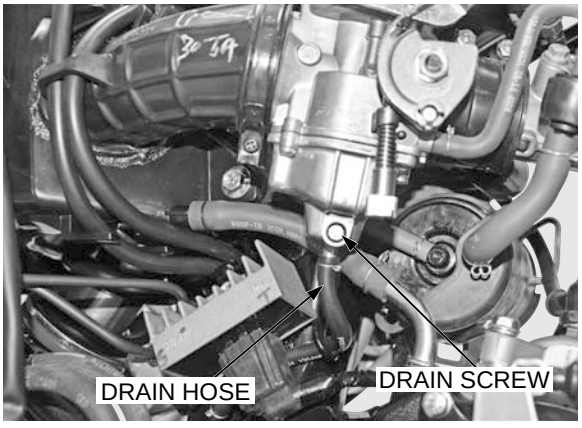

Loosen the throttle cable lock nut and disconnect the throttle cable end from the throttle drum.

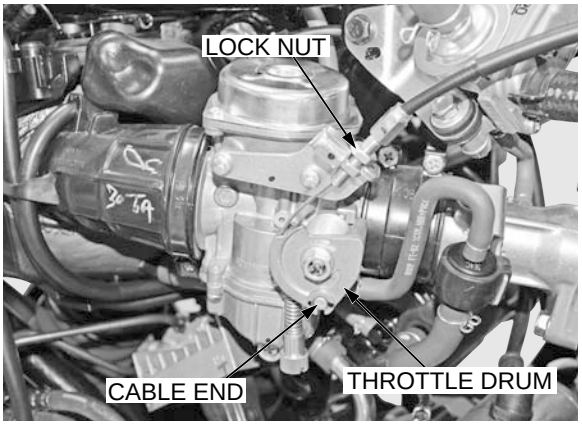

Disconnect the one way valve hose.

Remove the carburetor.

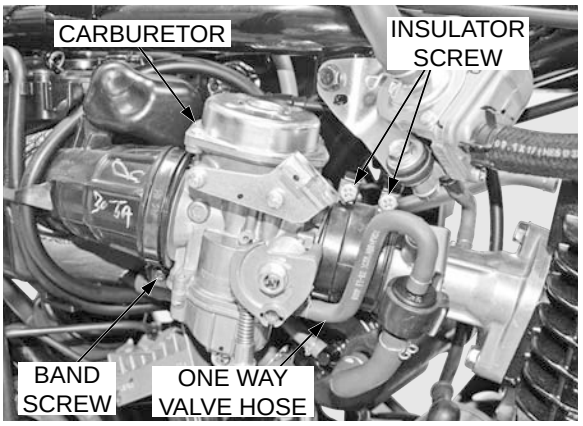

DISASSEMBLY

THROTTLE CABLE STAY

Remove the two screw and throttle cable stay.

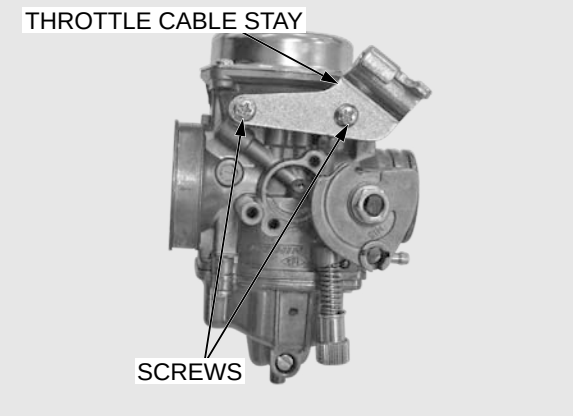

VACUUM CHAMBER

Take care of the spring as the compression spring is very long, it will jump out of the carburetor when the cover is removed.

Remove the two screws and vacuum chamber cover.

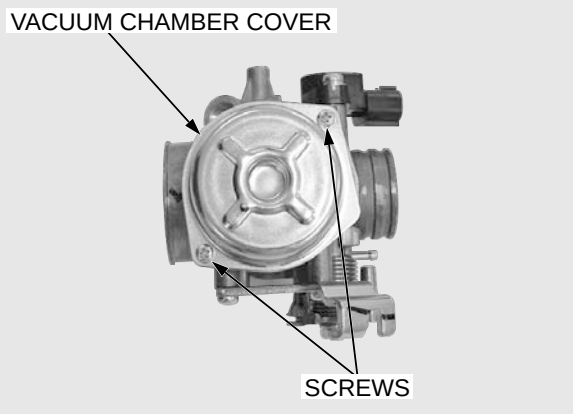

Remove the compression spring and diaphragm/ vacuum piston from the carburetor body.

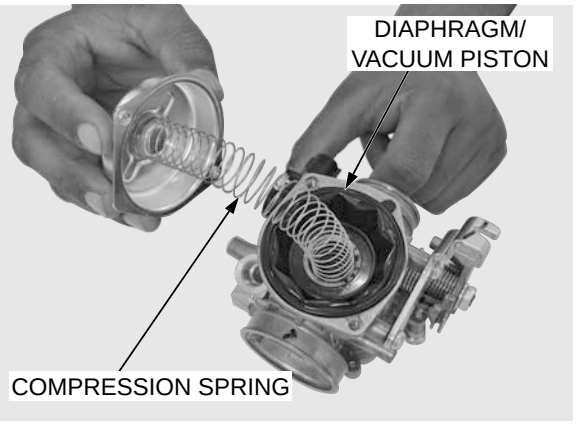

Turn the needle holder counterclockwise and remove it.

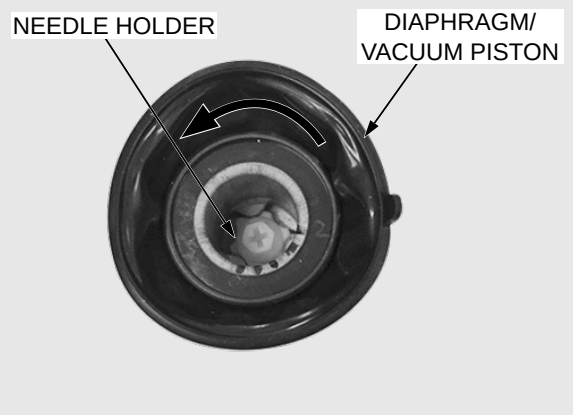

Be careful not to damage the diaphragm.

Remove the spring and jet needle from the vacuum piston.

Check the following:

– Jet needle for stepped wear
– Vacuum piston for wear or damage
– Diaphragm for pin holes, deterioration or damage
– Spring for wear or damage
– Needle holder for damage

Replace the damage parts, if necessary.

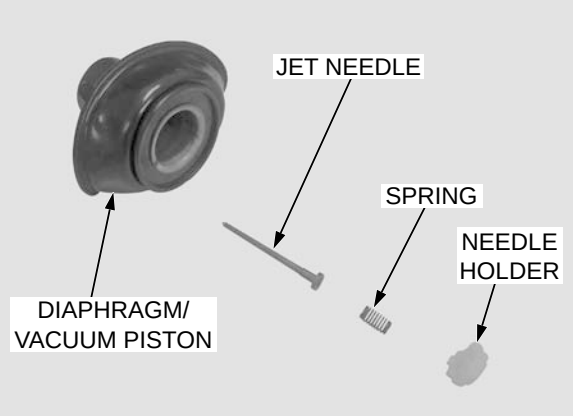

FLOAT

Remove the screws (3 nos) float chamber.

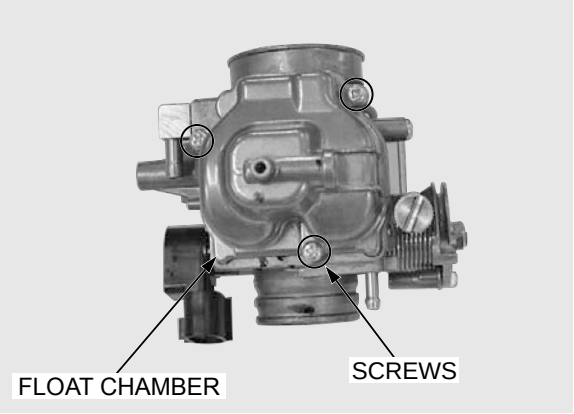

Pull out the float pin.

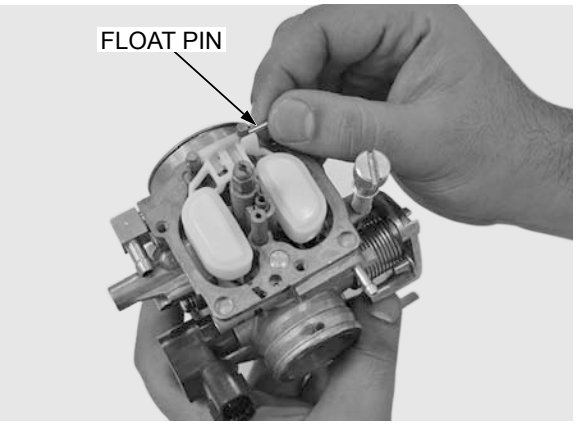

Remove the float and float valve.

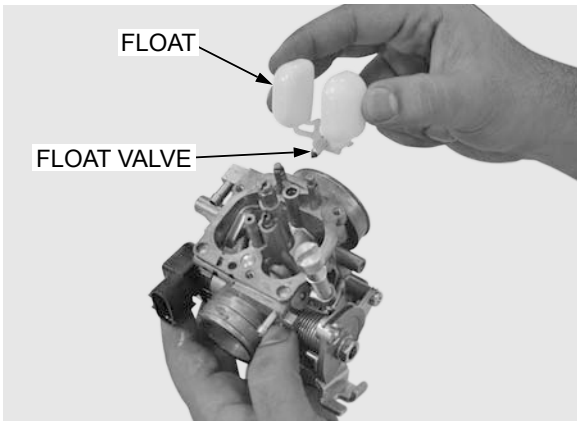

JETS

Damaged pilot screw seat will occur if the screw is tightened against the seat.

Remove the followings:

– Main jet
– Slow jet
– Needle jet holder

Before removing the pilot screw, record the number of turns until it seats lightly, then remove the pilot screw, spring, washer and O-ring

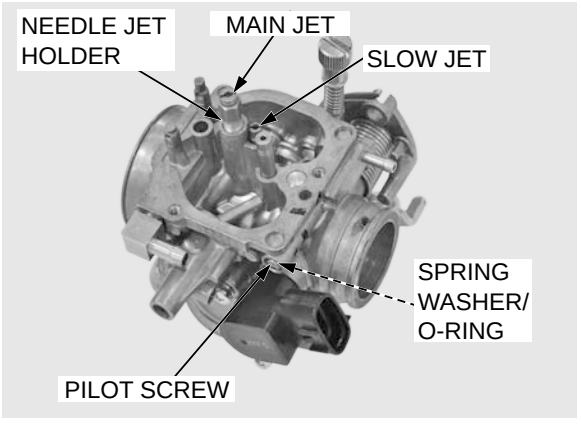

Check the each jet for wear of damage.

Check the pilot screw, spring washer and O-ring for wear or damage.

Replace the damaged parts, if necessary.

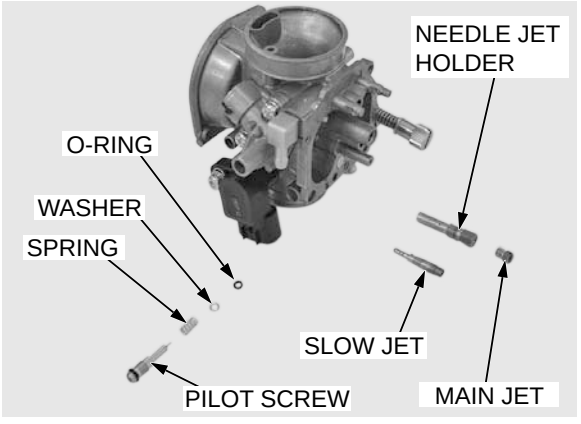

STARTING ENRICHMENT (SE) VALVE COVER

Remove the two screws/washers.

Remove the valve cover and O-ring.

Check the O-ring for deteriorated or damage.

Check the starting enrichment (SE) valve cover and SE valve air passage.

If air passage is clogged, blow open with compressed air.

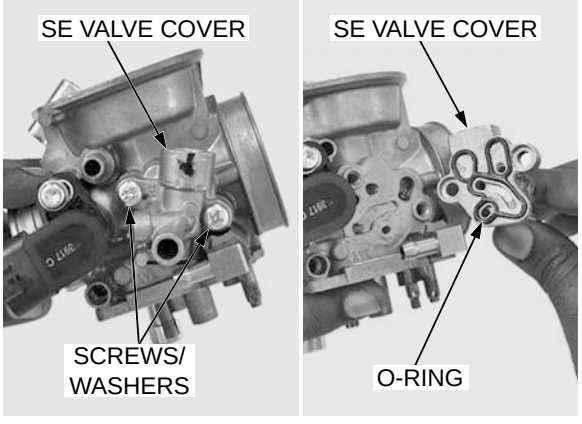

CARBURETOR CLEANING

Blow open the fuel passage from the valve seat side with compressed air and clean the strainer screen.

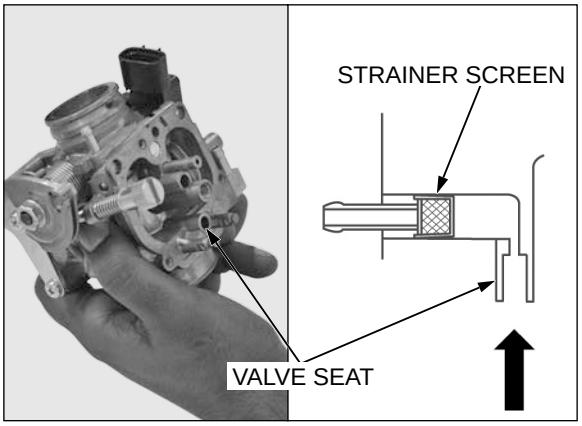

Blow open each air and fuel passages in the carburetor body using compressed air.

Check each part for wear or damage, and replace them if necessary.

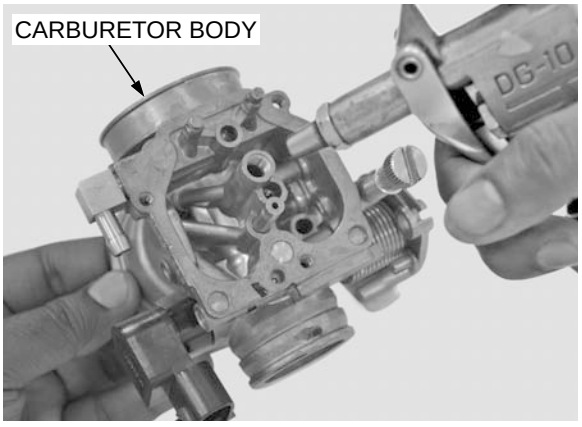

CARBURETOR ASSEMBLY

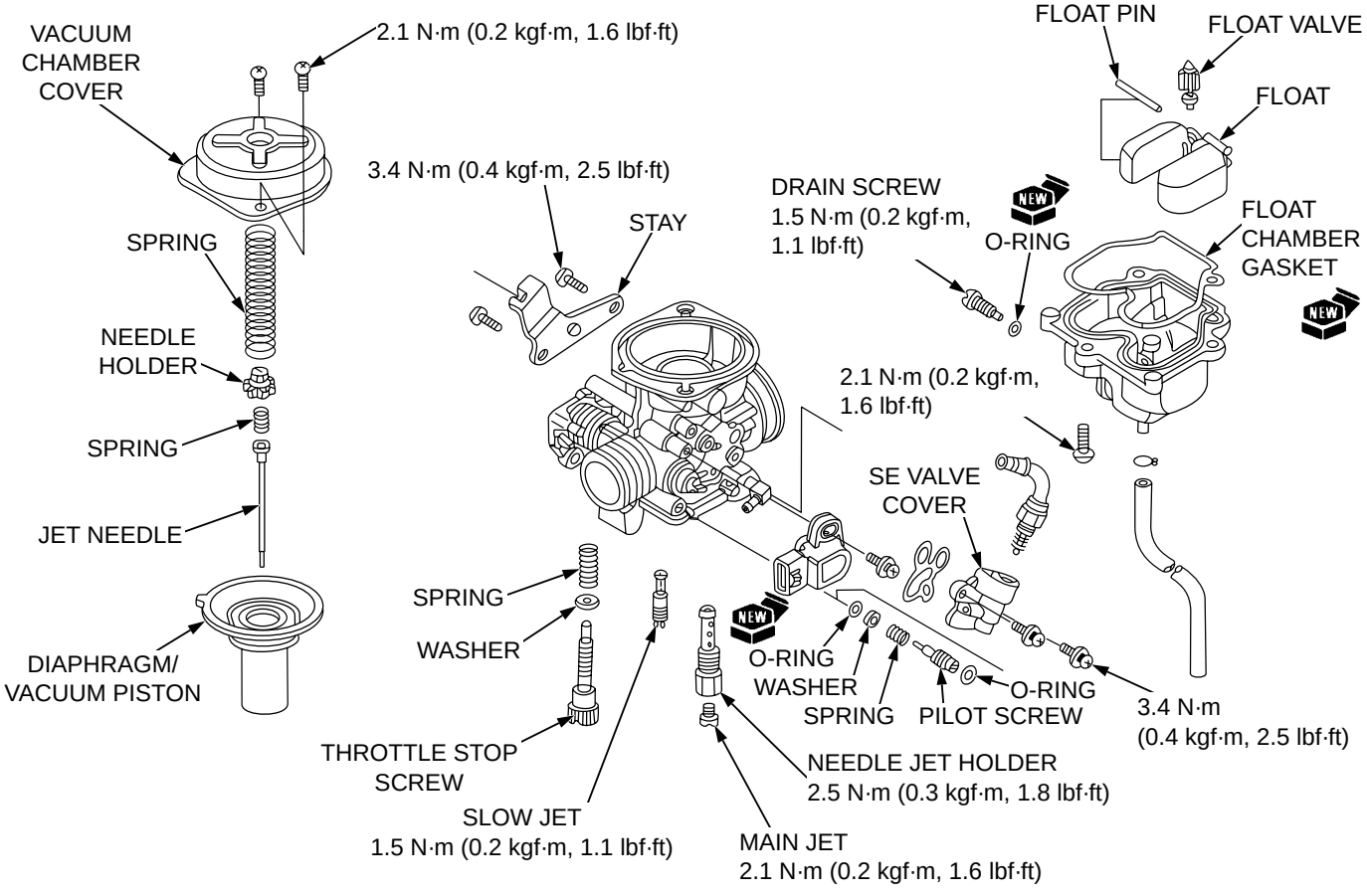

JETS

Damage to the pilot screw seat will occur if the pilot screw is tightened against the seat.

Install the pilot screw with the spring, washer and new O-ring, and return it to its original position as noted during removal.

Perform the pilot screw adjustment if a new pilot screw is installed (page 5-15).

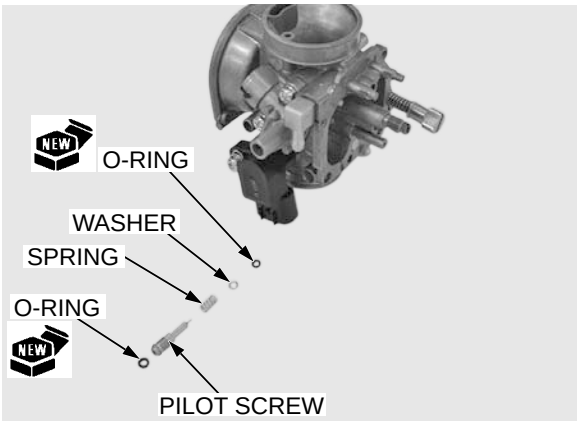

Handle the jets with care, they can easily be scored or scratched

Install the following:

– Needle jet
– Needle jet holder
– Main jet
– Slow jet

TORQUE:

Needle jet holder: 2.5 N·m (0.3 kgf·m, 1.8 lbf·ft)

Main jet: 2.1 N·m (0.2 kgf·m, 1.6 lbf·ft)

Slow jet: 1.5 N·m (0.1 kgf·m, 1.1 lbf·ft)

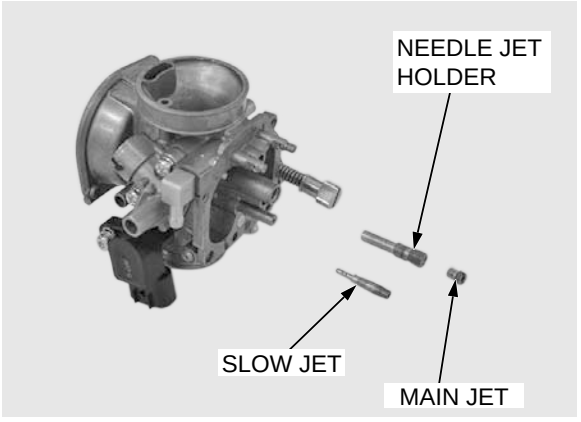

FLOAT

Check the tip of the float valve where it contacts the valve seat for stepped wear or contaminated.

Replace the valve if the tip is worn or contaminated.

Check the operation of the float valve.

Inspect the float valve seat for scores, scratches clogging and damage.

If the seat is damaged, replace the carburetor body.

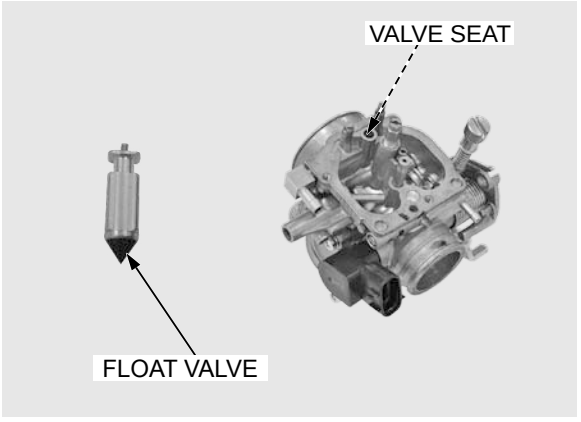

Install the float valve to the float.

Install the float to the carburetor body.

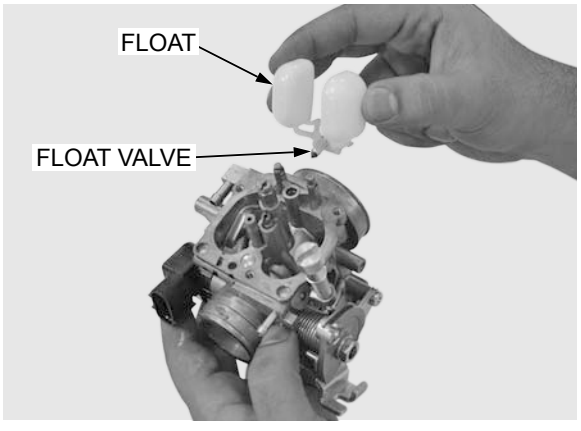

Install the float pin through the carburetor body and float.

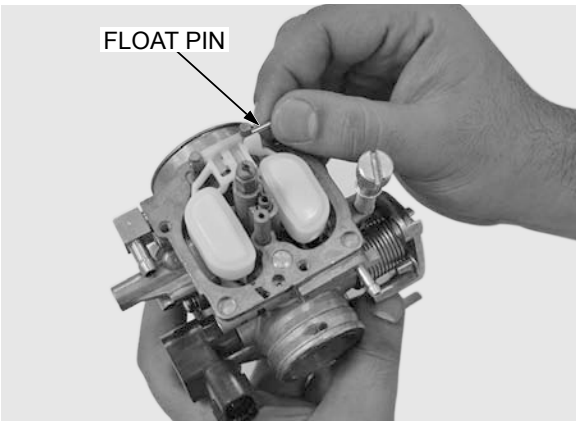

With the float valve seated and float arm just touching the valve, then measure the float level using the special tool as shown.

FLOAT LEVEL: 13.0 mm (0.51 in)

TOOL:

Carburetor float level gauge 070MJ–001–I110

The float cannot be adjusted.

Replace the float assembly if it the float level is out of specification.

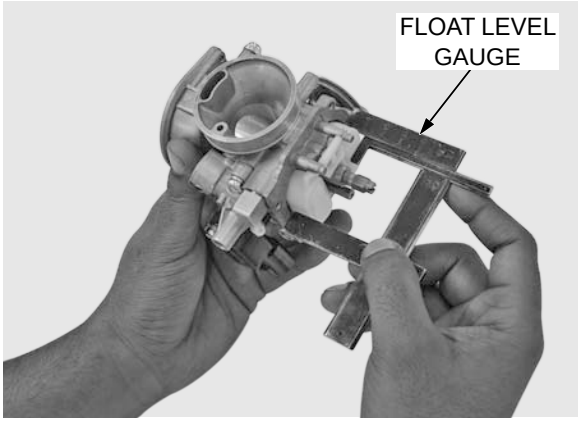

Install a new O-ring into the float chamber groove. Install the float chamber.

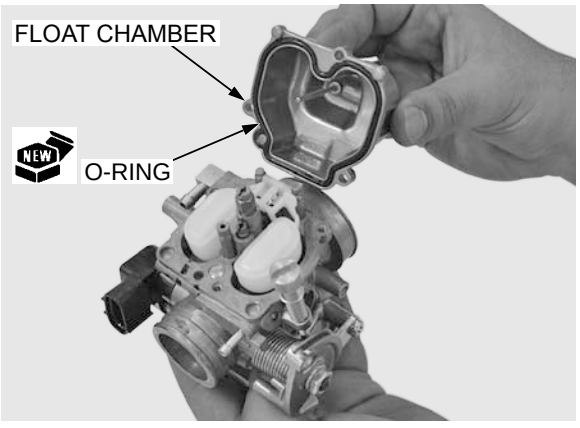

Install and tighten the float chamber screws to the specified torque.

TORQUE: 2.1 N·m (0.2 kgf·m, 1.6 lbf·ft)

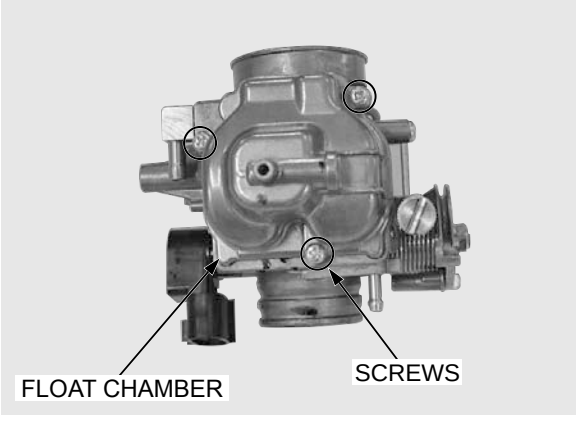

STARTING ENRICHMENT (SE) VALVE COVER

Install the the new O-ring and SE valve cover.

Install the two screws/washers.

Tighten the screws.

TORQUE: 3.4 N·m (0.4 kgf·m, 2.5 lbf·ft)

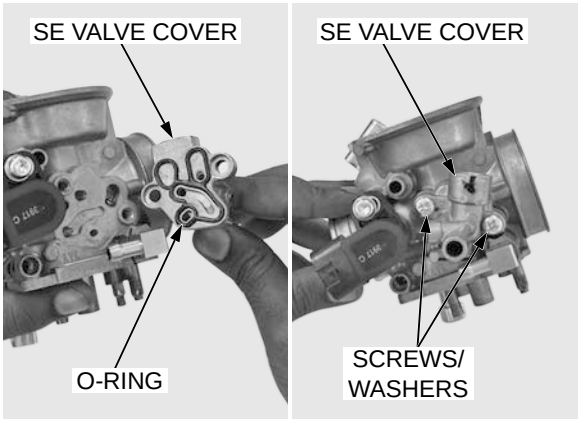

VACUUM CHAMBER

Install the jet needle into the diaphragm/vacuum piston.

Install the spring onto the needle holder and set the needle holder into the vacuum piston.

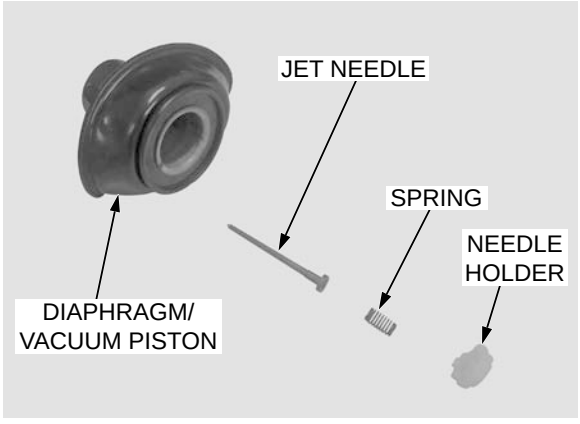

Turn the needle holder clockwise while pressing it until it locks.

Holder flanges and piston grooves should be fitted after turning.

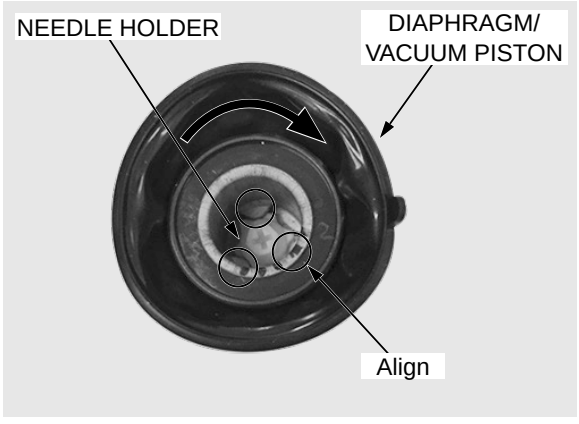

Be careful not to damage the jet needle.

Install the diaphragm/vacuum piston into the carburetor body by aligning the tab of the diaphragm with the groove of carburetor body.

Lift the bottom of the piston with your finger to set the diaphragm tab into the groove of the carburetor body.

Install the compression spring and vacuum chamber over by lifting the piston in place.

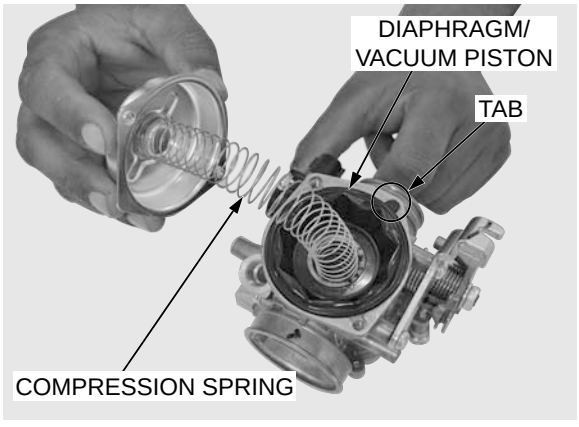

Be careful not to pinch the diaphragm under the chamber cover, and to keep the spring straight when compressing the spring.

Check that the spring installed correctly by pushing the bottom of the piston with your finger and make sure that the piston returns back in place smoothly.

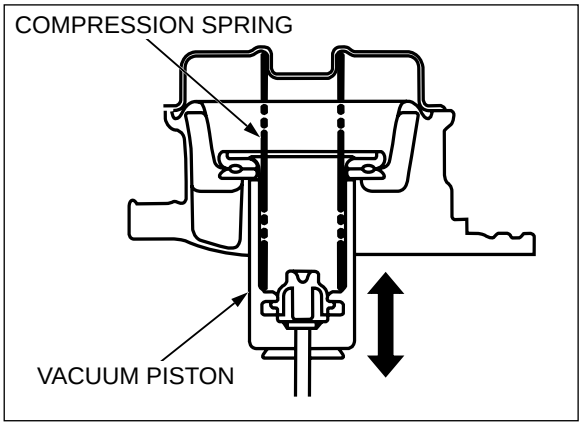

Install the 2 screws of the vacuum chamber cover before releasing the vacuum piston.

Tighten the two screws.

TORQUE: 2.1 N·m (0.2 kgf·m, 1.6 lbf·ft)

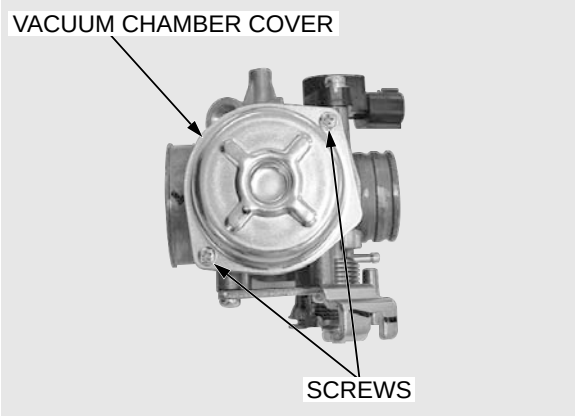

Install the two screws and throttle cable stay.

Tighten the two screws.

TORQUE: 3.4 N·m (0.4 kgf·m, 2.5 lbf·ft)

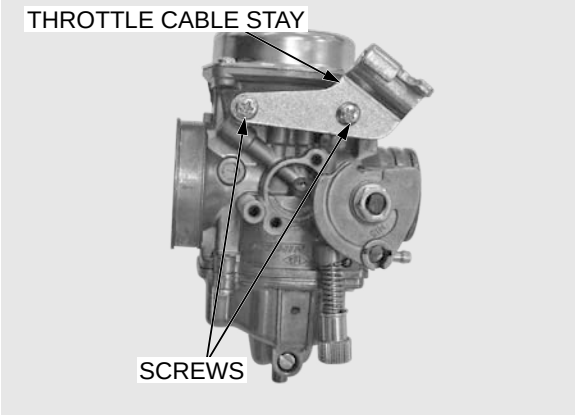

INSTALLATION

Take care of the direction of the band screw while installing as shown.

Install the carburetor to the connecting hose and insulator.

Loosely tighten the insulator band screw and air cleaner connecting boot band screw.

Connect the one way valve hose.

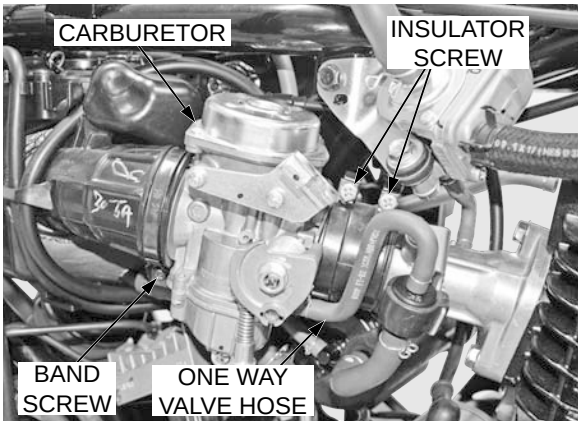

Connect the throttle cable end to the throttle drum and tighten the lock nut.

Check the throttle operation (page 3-5).

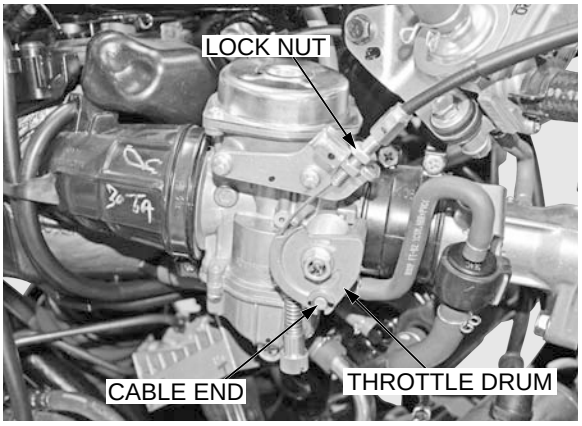

Connect the drain hose to the carburetor.

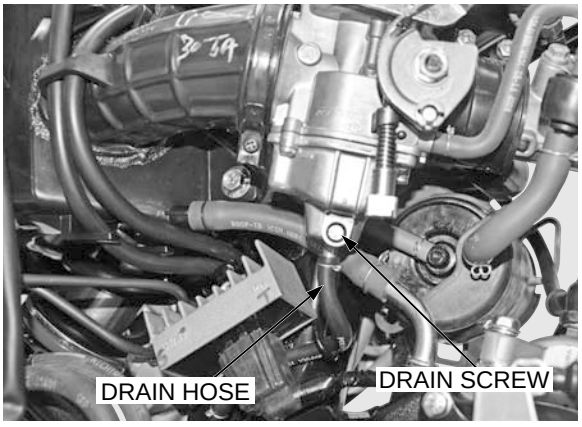

After installation turn the fuel valve "ON" and make sure these are no fuel leaks.

Connect the air vent hose and throttle sensor 3P connector to the carburetor.

Connect the fuel hose to the carburetor.

Install the SE valve (page 5-5).

Tighten the insulator band screw so that the band ends clearance is 7 - 9 mm (0.3 - 0.4 in).

TORQUE: 1 N·m (0.1 kgf·m, 0.7 lbf·ft)

Tighten the connecting boot band screw.

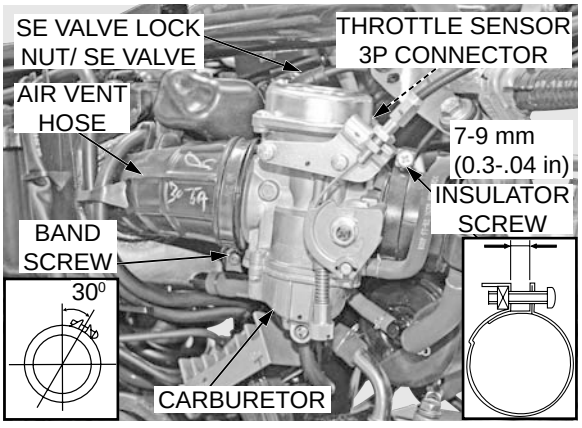

PILOT SCREW ADJUSTMENT

- The pilot screw is correctly adjusted at the factory. As the adjustment of the pilot screw is very critical for the emission of CO and HC gases, such an adjustment shall be carried out very carefully.
- Place the motorcycle on its center stand on a level surface.
- Use a tachometer with graduations of 50 min^{1} (rpm) or smaller with graduations of 50 min^{3} (rpm) change.
- If the CO measurement tool is available, perform the adjustment by CO concentration measurement procedure.

ADJUSTMENT BY CO CONCENTRATION MEASUREMENT

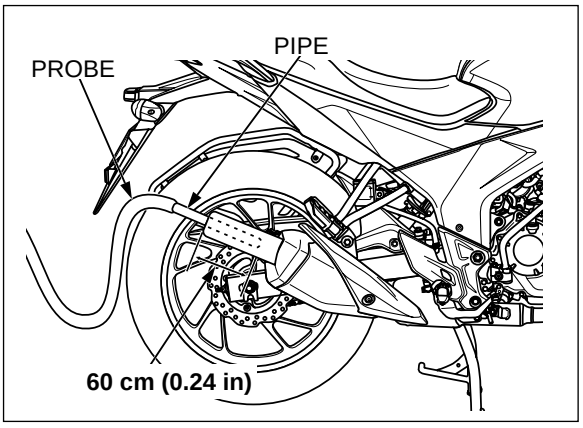

- Check the following items before inspection.
  - Air cleaner (page 3-6)
  - Spark plug (page 3-7)
  - Crankcase breather (page 3-7)
  - Secondary air supply system (page 5-19)
  - Ignition timing (page 16-5)

1. Connect an appropriate pipe or hose (heat-resistant, chemical-resistant) to the muffler so that the probe can be inserted by more than 60 cm (0.24 in)
2. Connect a tachometer according to the tachometer manufacturer's instructions.

Damage to the pilot screw seat will occur if the pilot screw is tightened against the seat.

3. Remove the left side cover (page 2-3).
4. Disengage the canister comp.

Turn the pilot screw clockwise until it seats lightly, and then back it out to the specification given.

INITIAL OPENING: 2 & 1/8 turns out.

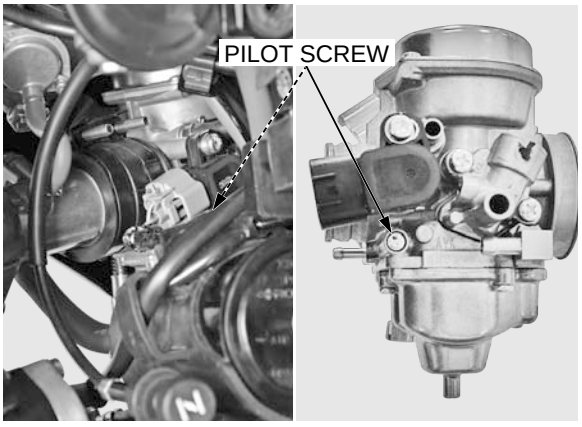

4. Warm up the engine for 10 minutes at idle speed.

- Do not warm up the engine by running the motorcycle. The catalytic converter will act and affect the measurement.

Be careful if using water thermometer, the measurement may be affected by the atmospheric temperature.

Measure the engine oil drain bolt temperature.

DRAIN BOLT TEMPERATURE: 60^0 - 65^0C

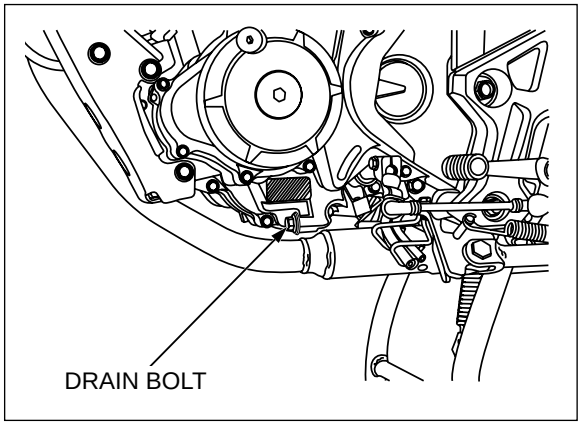

5. Adjust the idle speed with the throttle stop screw.

IDLE SPEED: 1,400 ± 100 min^{-1} (rpm)



6. Insert the probe into the muffler and measure the carbon-mono-oxide (CO%) concentration.

CO measurement at idle: 0.7 – 0.8%

If the CO concentration is exist, adjust the pilot screw as following.

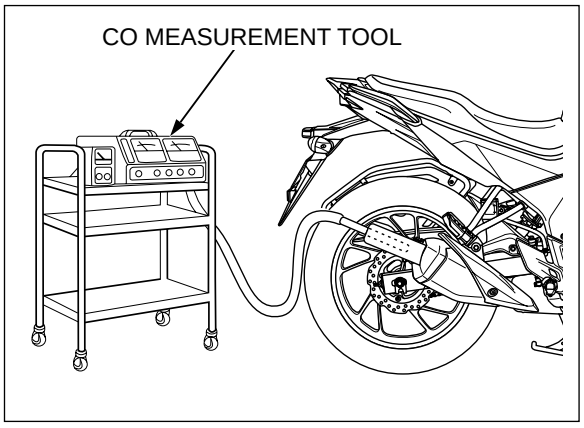

7. Disconnect the vacuum hose of PAIR control valve, then it connect the vacuum pump and plug the vacuum port.

Apply the specified vacuum to the PAIR control valve vacuum hose more than 53.3 kPa (400 mm Hg) (make sure the secondary air does not supply).

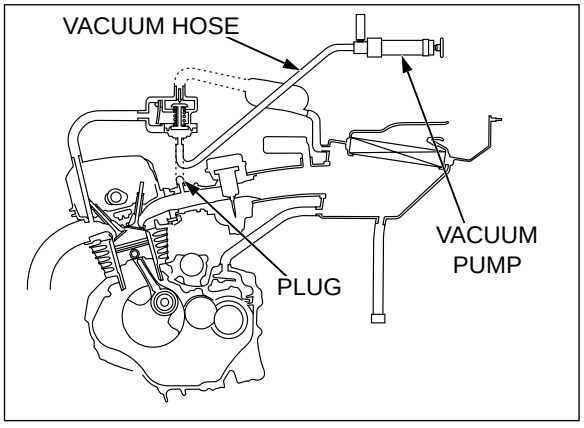

When PAIR system stop, idle speed will change.

8. Start the engine and check the idle speed.

IDLE SPEED: 1,400 ± 100 min^{-1} (rpm)

If the idle speed is out of specification, adjust the idle speed by turning the throttle stop screw with the PAIR system stopped.



9. Turn the pilot screw and adjust the CO concentration.

CO measurement at idle: (secondary air does not supply) 1.5 - 3.8 %

10. Disconnect the plug from the vacuum port, then remove the vacuum pump and connect the vacuum hose of PAIR control valve.

Start the engine.

Adjust the idle speed with the throttle stop screw if necessary.

IDLE SPEED: 1,400 ± 100 min^{-1} (rpm)

Measure the CO concentration again.

CO measurement at idle: 0.7 - 0.8%

If the CO concentration is exist, check the secondary air supply system (page 5-19).

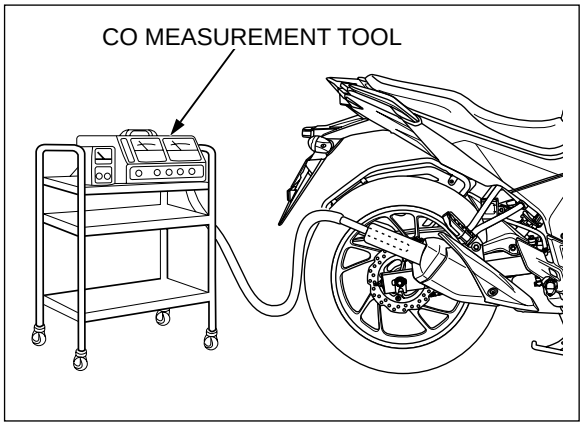

IDLE DROP PROCEDURE

Damage to the pilot screw seat will occur if the screw is tightened against the seat.

1. Remove the left side cover (page 2-3)

Turn the pilot screw until it seats lightly, then back it out to the specification given.

This is an initial setting prior to the final pilot "screw adjustment. "

INITIAL OPENING: 2 & 1/8 turns out

Reference engine oil temperature: 60° - 65°C

2. Warm up the engine to normal operating temperature.

3. Stop the engine and connect the tachometer, according to the manufacturer's instructions.

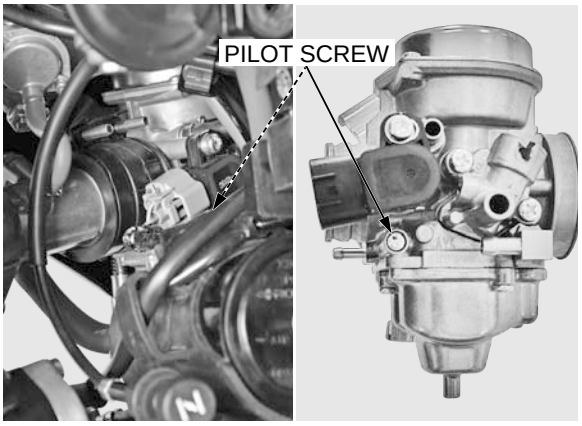

4. Disconnect the vacuum hose of PAIR control valve, then it connect the vacuum pump and plug the vacuum port.

Apply the specified vacuum to the PAIR control valve vacuum hose more than 53.3 kPa (400 mm Hg) (make sure the secondary air does not supply).

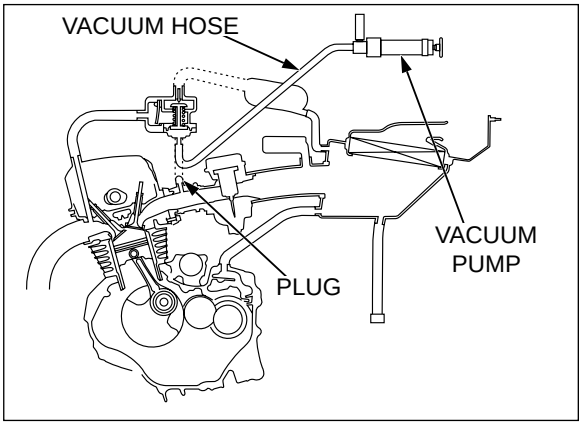

5. Start the engine and adjust the idle speed with the throttle stop screw.

IDLE SPEED: 1,400 ± 100 min^{-1} (rpm)

6. Turn the pilot screw in or out slowly to obtain the highest engine speed.

7. Lightly open the throttle 2–3 times, then adjust the idle speed with the throttle stop screw.

8. Turn the pilot screw in gradually until the engine speed drops by 100 min^{-1} (rpm).

9. Turn the pilot screw outward to final opening.

FINAL OPENING: 1/2 turns out from the position obtained in step 8



10. Disconnect the plug from the vacuum port, then remove the vacuum pump and connect the vacuum hose of PAIR control valve.

11. Readjust the idle speed with the throttle stop screw.

IDLE SPEED: 1,400 ± 100 min^{-1} (rpm)

SECONDARY AIR SUPPLY SYSTEM

SYSTEM INSPECTION

Warm up to the engine to normal operating temperature.

Disconnect the air suction hose from the air cleaner housing.

Check the air suction hose port is clean and free carbon deposits.

If the port is carbon fouled, check the PAIR control valve.

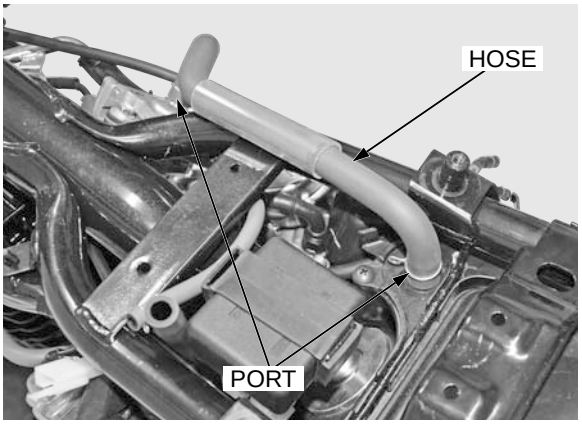

Disconnect the air suction hose from the resonator air chamber.

Then check the air suction hose is clean and free of carbon deposits.

Disconnect the vacuum hose of PAIR control valve then it connect the vacuum pump and plug the vacuum port

Start the engine and open the throttle slightly to be certain that air is sucked in through the air suction hose.

If the air is not drawn in, check the air suction hose for clogging.

With the engine running, gradually apply vacuum to the PAIR control valve vacuum hose.

Check that the air suction hoses stop drawing air and that the vacuum hose not bleed.

SPECIFIED VACUUM: 53.3 kPa (400 mm Hg)

If the air is drawn in or if the specified vacuum is not maintained, install a new PAIR control valve.

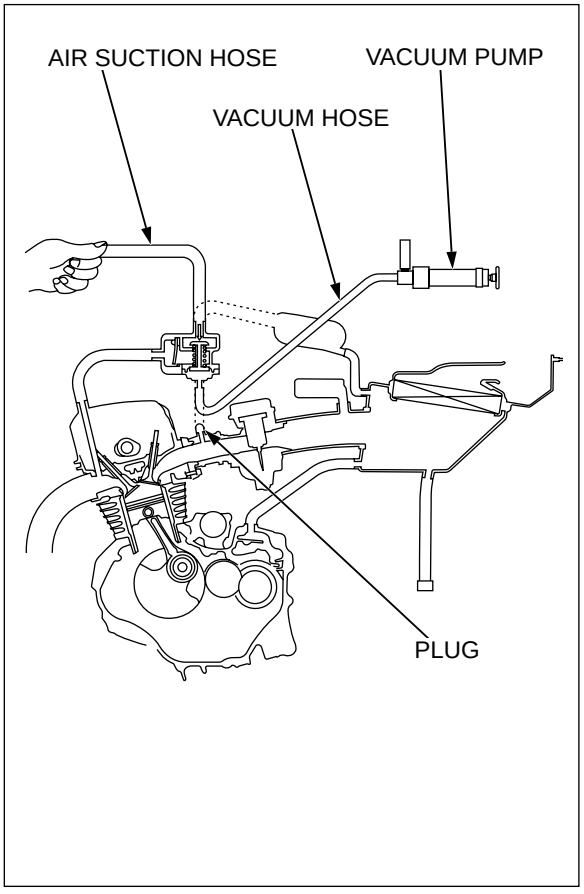

PAIR CHECK VALVE INSPECTION

- Remove the following:
  - PAIR control valve (page 5-20)
  - Two screws
  - Valve cover
  - Pair check valve.

Check the valve reed for fatigue or damage, replace the PAIR control valve if necessary.

Replace the PAIR control valve if the seat rubber is cracked, deteriorated or damaged, or if there is clearance between the reed and seat.

Installation is in the reverse order of removal.

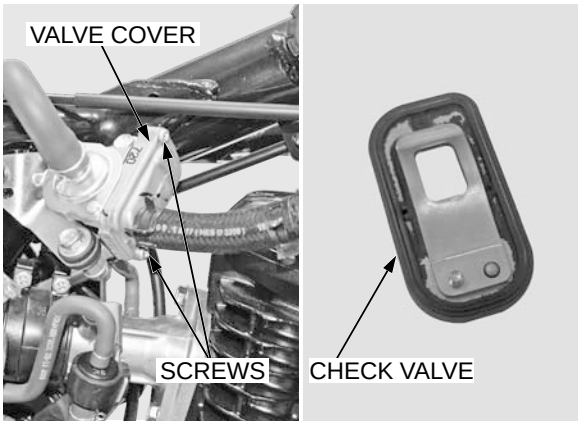

PAIR CONTROL VALVE

REMOVAL /INSTALLATION

Disconnect the PAIR control valve vacuum hose and air supply hose.



Disconnect the air suction hose.

Remove the bolts, nuts (2 nos.) and PAIR control valve.

Installation is in the reverse order of removal.

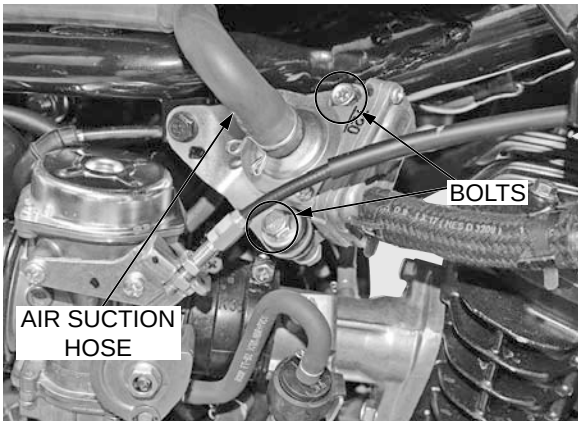

EVAPORATIVE EMISSION CONTROL SYSTEM

The evaporative emission control system consist of two main components:

- One way valve
- Canister component

ONE WAY VALVE

REMOVAL/INSTALLATION

Remove the right side cover (page 2-3).

Remove the both hoses of the one way valve.

Remove one way valve from stay.

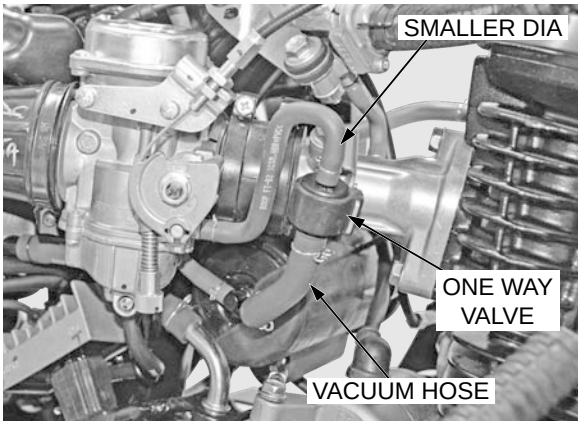

INSPECTION

Air must flow from bigger opening (from canister) to smaller opening (to carburetor) not in reverse direction.

⚠ CAUTION

- Don't use compressed high pressure air for inspection.
- Don't drop the one way valve, if dropped replace.

Connect one way valve to the hoses with its arrow mark facing upwards.

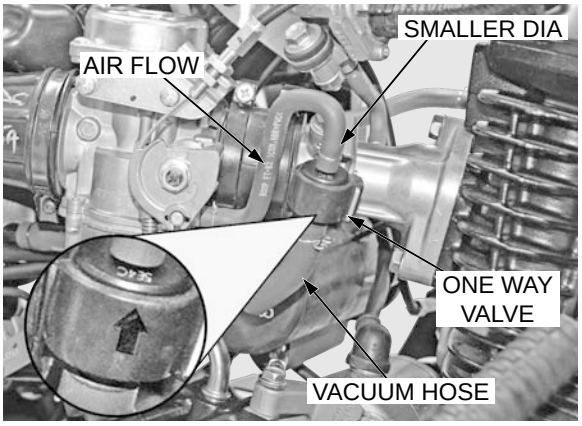

CANISTER COMPONENT REMOVAL/INSTALLATION

Remove the both side covers (page 2-3).

Disconnect the hoses from right side from the canister component.

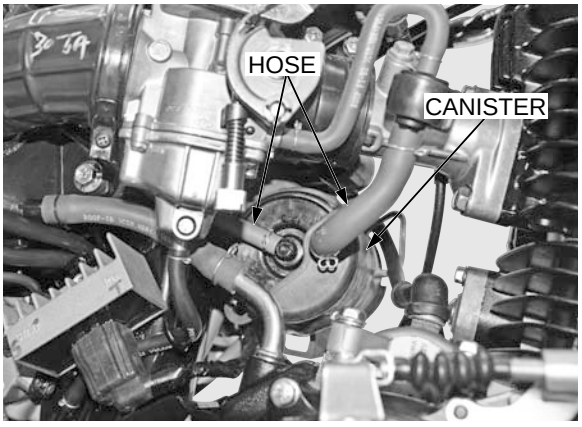

Remove the starter motor cable (page 10-8).

Pull out the canister from its stay.

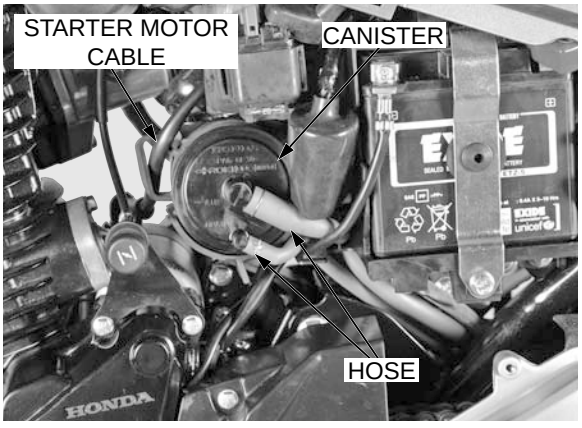

INSPECTION

check for cracks or fissures on the body of the canister component and replace if necessary if falling out of emission norms.

Installation is in the reverse order of removal.

⚠ CAUTION

- The canister must be installed at its original position to avoid damage of performance.
- Do not bend, twist or kink the tube.

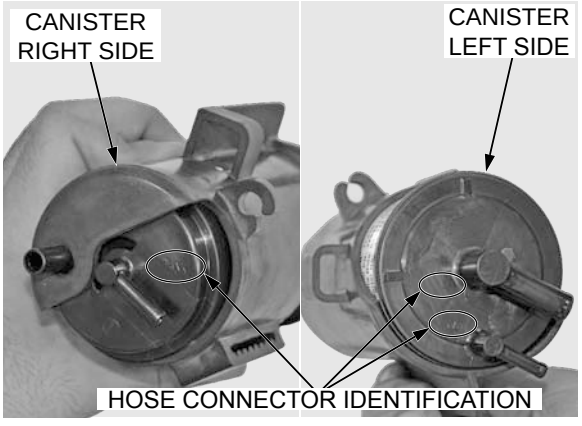

FUEL STRAINER

REMOVAL

Drain the fuel from the fuel tank into the approved gasoline container.

Remove the left side cover (page 2-3).

Remove the screw and plastic fuel valve knob.

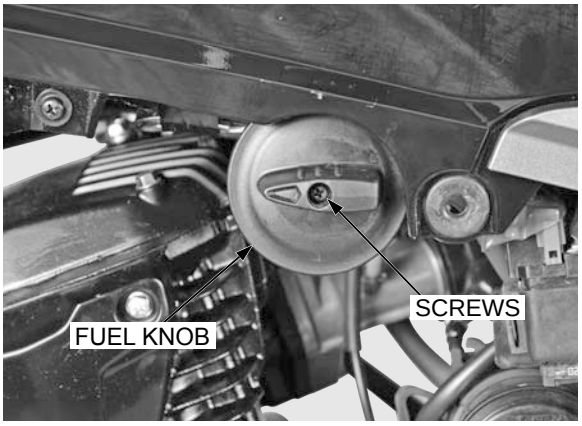

Make sure not to damage painted surface of fuel tank

Remove the fuel tank (page 2-4).

Loosen the fuel valve lock nut.

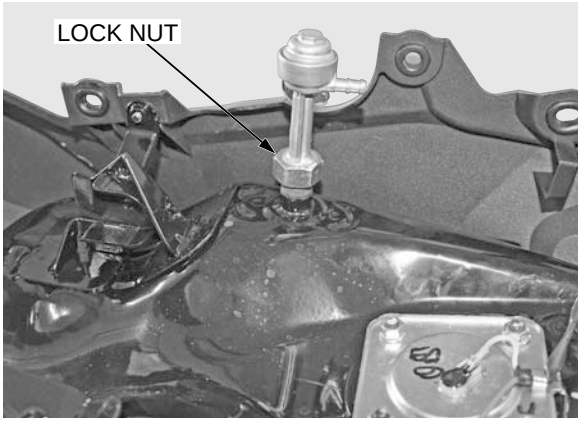

Remove the fuel strainer and fuel valve assembly from the fuel tank.

Remove the fuel strainer and O-ring from the fuel valve.

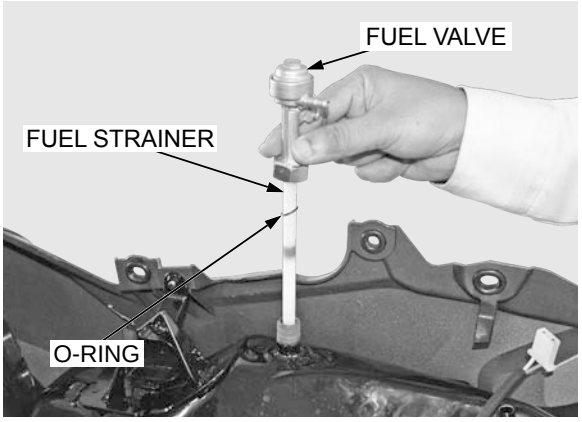

CLEANING

Clean the fuel strainer with compressed air.

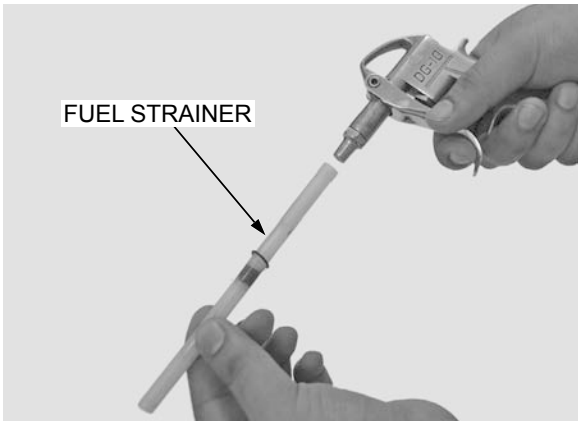

INSTALLATION

Install a new O-ring onto the fuel strainer, and install the fuel strainer into the fuel valve.

Install the fuel strainer and fuel valve assembly into the fuel tank.

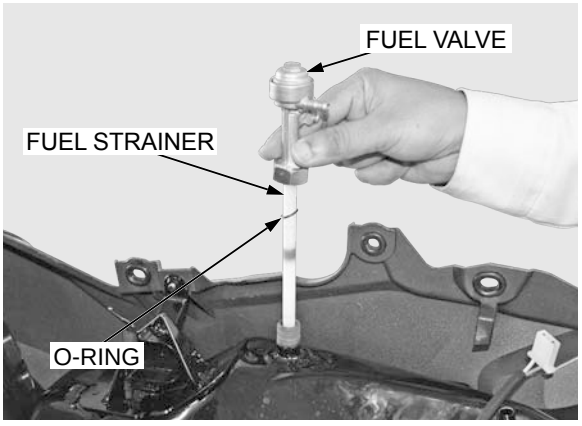

Tighten the fuel valve lock nut and apply the specified Torque.

TORQUE: 22 N·m (2.2 kgf·m, 16 lbf·ft)

Install the fuel tank (page 2-4).

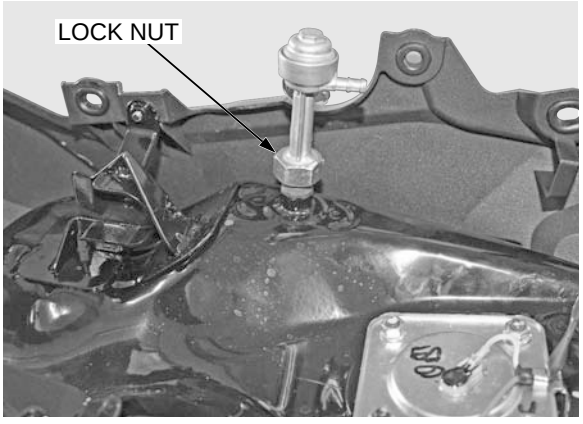

Install the fuel valve knob while aligning the fuel valve tab with the know hole.

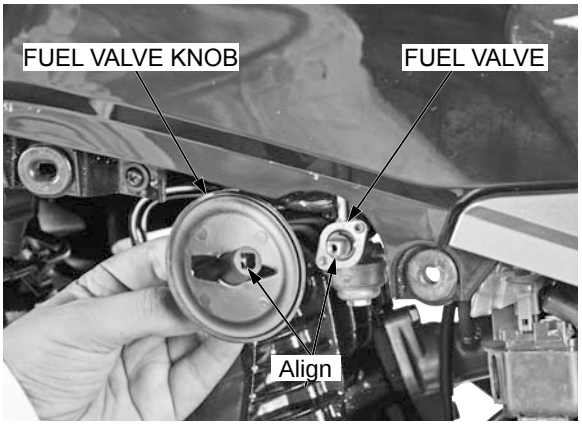

Install and tighten the screw.

Install the left side cover (page 2-3).

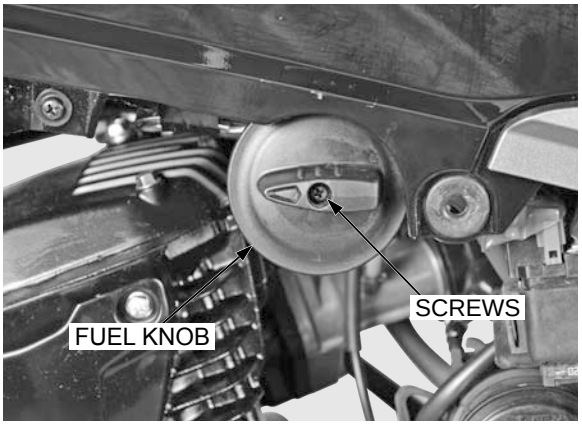

COMPONENT LOCATION

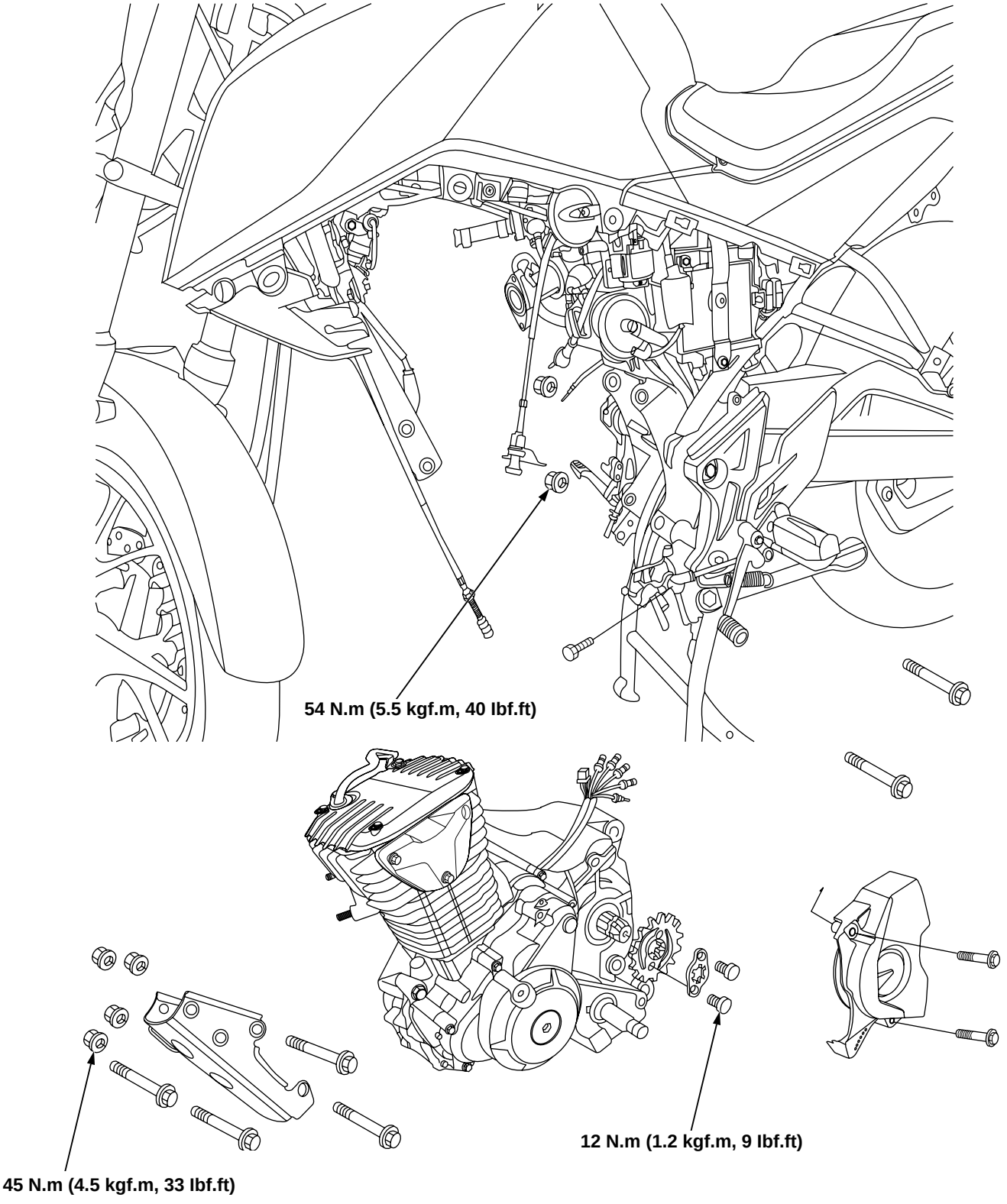

6. ENGINE REMOVAL/INSTALLATION

COMPONENT LOCATION	**6-0**	**ENGINE REMOVAL**	**6-2**
SERVICE INFORMATION	**6-1**	**ENGINE INSTALLATION**	**6-4**

SERVICE INFORMATION

GENERAL

- When removing/installing the engine, tape the frame around the engine beforehand for frame protection.
- The following components can be serviced with the engine installed in the frame.
  - Oil pump (page 4-2)
  - Cylinder head / valves (page 7-1)
  - Cylinder / piston (page 8-2)
  - Clutch (page 9-6)
  - Gearshift linkage (page 9-12)
  - Alternator (page 10-1)
- The following components require engine removal for service.
  - Crankcase/transmission/kickstarter (page 11-1)

SPECIFICATIONS

ITEM		SPECIFICATIONS	Page NO.
Engine oil capacity	After draining.	1.0 liter (1.0 US qt, 0.9 lmp qt)	Page 3–11
	After disassembly	1.2 liter (1.3 US qt, 1.1 lmp qt)	Page 3–11
Engine dry weight		29.4 kg (65.03 lbs)	–

TORQUE VALUES

ITEM	PART NO.	QTY	THREAD DIA. (mm)	TORQUE N·m (kgf·m, lbf·ft)	REMARKS	PAGE NO.
ENGINE REMOVAL/INSTALLATION						
Front engine hanger nut	95801 – 10090 – 00	4	10	45 (4.5, 33)		Page 6–5
Rear engine hanger nut	90019 – 399 – 010	2	10	54 (5.5, 37.6)		Page 6–5
Drive sprocket fixing plate bolt	90084 – 041 – 000	2	6	12 (1.2, 9)		Page 6–5

ENGINE REMOVAL

Support the motorcycle on its center stand.

Drain the engine oil (page 3-11).

Remove exhaust pipe/muffler (page 2-8)

Disconnect the following:

– Spark plug cap (page 3-7)
– Clutch cable (page 9-6)
– Carburetor (page 5-6)
– ASV air supply hose (page 3-14)

Disconnect the neutral switch wire connector, ignition pulse generator wire connector, alternator 2P (white) connector and VS sensor connector (3 nos.). Disconnect the crankcase breather hose.

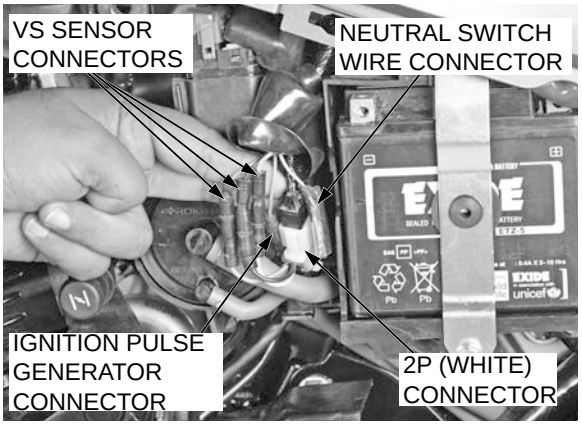

Disconnect the 2 terminals of the starter motor by removing nut and bolt.

Replace the bolt and nut after disconnecting the terminal.

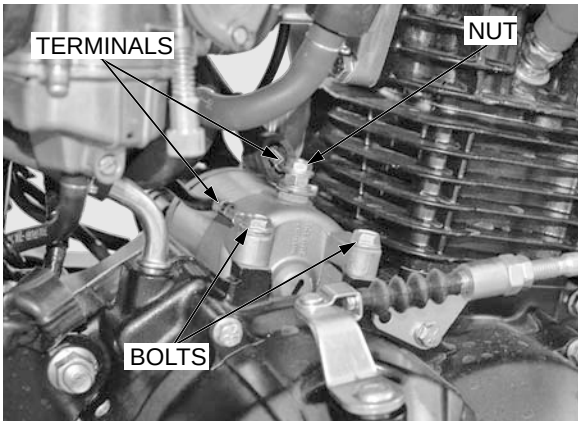

Loosen the rear axle nut.

Loosen the both side drive chain adjusting lock nut and adjusting nut.

Push the rear wheel forward and make a drive chain slack fully.

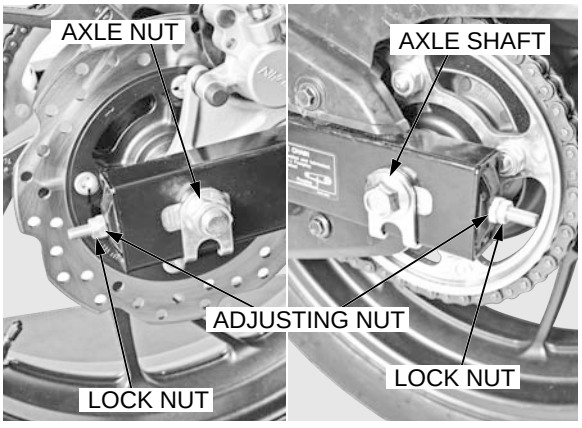

Remove the kickstarter pedal pinch bolt and kickstarter pedal.

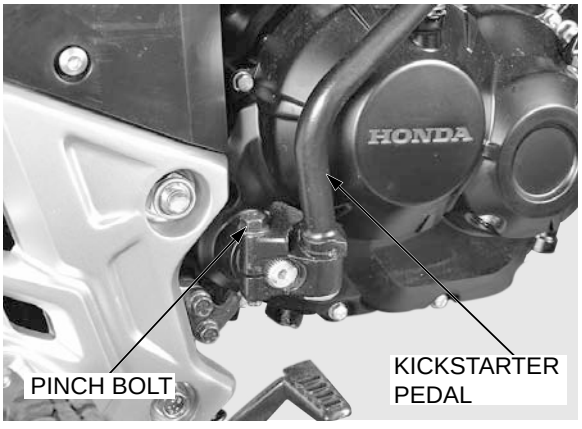

Remove the gear shift pedal pinch bolt and gear shift pedal.

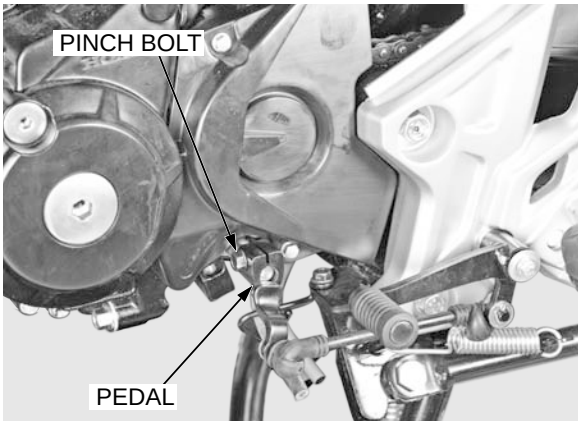

Remove the bolts (2 nos.) of choke cable stay.

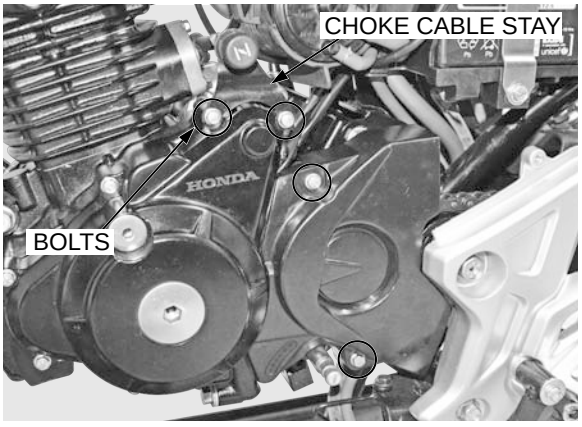

Remove the bolts (2 nos.) of left crankcase rear cover and remove it with bracket.

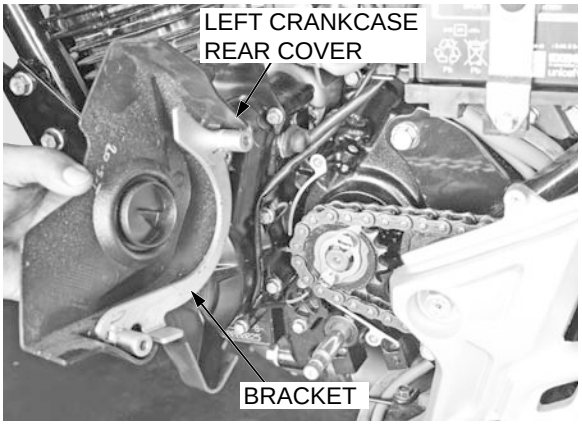

Remove the fixing plate bolts (2 nos.), fixing plate and drive sprocket with chain.

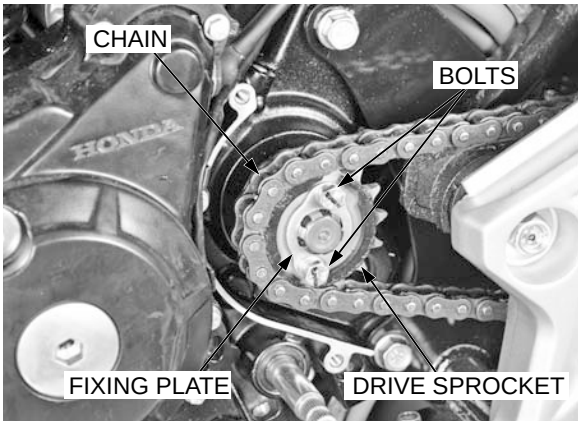

The jack height must be continually adjusted to relieve stress for ease of bolt removal.

Support the engine using a jack or other adjustable support to ease of engine hanger bolts removal.

Remove the following:

– Front engine hanger bolts and nuts
– Plate bolts and nuts
– Front engine hanger plate

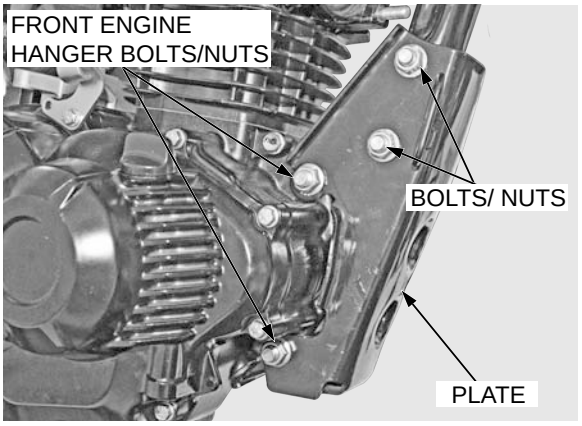

During engine removal, hold the engine securely not to damage the frame and engine. use masking tape on frame to save from scratches.

Remove the rear engine hanger bolts and nuts first lower then upper.

Remove the engine from the frame.

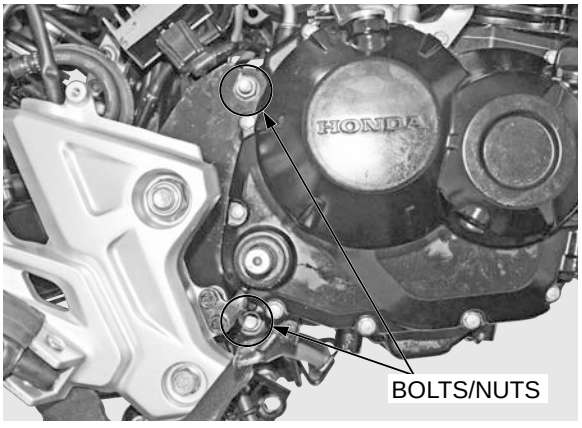

ENGINE INSTALLATION

- Place the jack or other adjustable support under the engine.
- The jack height must be continually adjusted to relieve stress for ease bolt installation.
- Carefully align the mounting points with the jack to prevent damage to engine, frame, wires and cables.
- All the engine mounting bolts and nuts loosely install, then tighten the bolts and nuts to the specified torque.
- Route the wires and cables properly.



During engine installation,hold the engine securely and be careful not to damage the frame and engine.

Place the engine in the frame.

Install the rear engine hanger bolts and nuts, but do not tighten it yet.

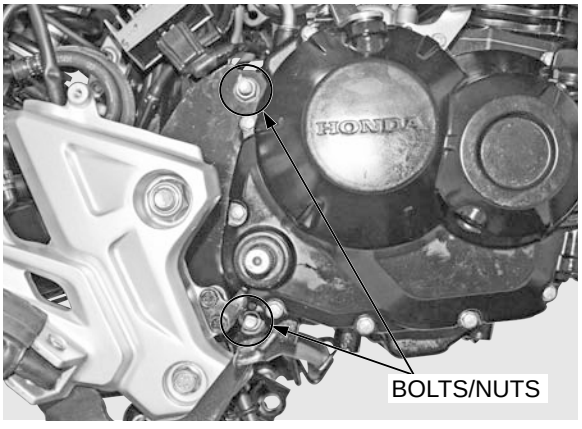

Install the plate, plate bolts and nuts.

Install the front engine hanger bolts and nuts.

Tighten the front and rear engine hanger nuts to the specified torque.

TORQUE:

Front engine hanger nut : 45 N·m (4.5 kgf·m, 33 lbf·ft)

Rear engine hanger nut : 54 N.m (5.5 kgf.m, 37.6 lbf·ft)

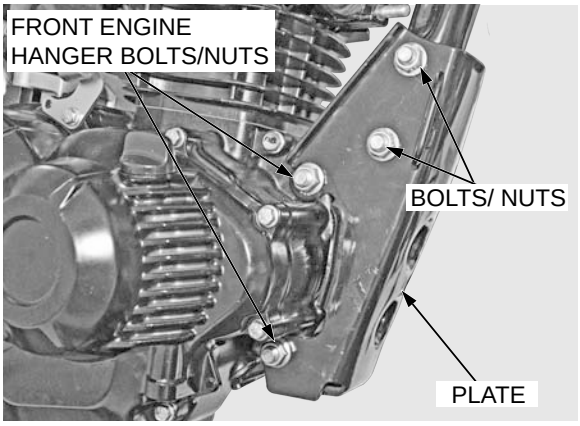

Install the drive chain onto the drive sprocket.

Install the drive sprocket to the counter shaft.

Install the fixing plate.

Rotate the fixing plate, and align the holes in the fixing plate with the bolts hole in the drive sprocket.

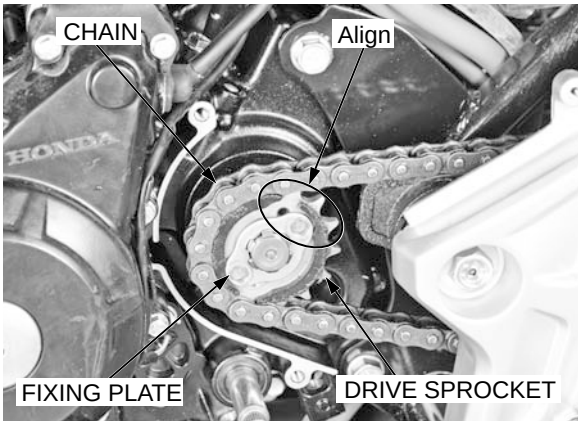

Tighten the drive sprocket fixing plate bolts (2 nos.) to the specified torque.

TORQUE: 12 N·m (1.2 kgf·m, 9 lbf·ft)

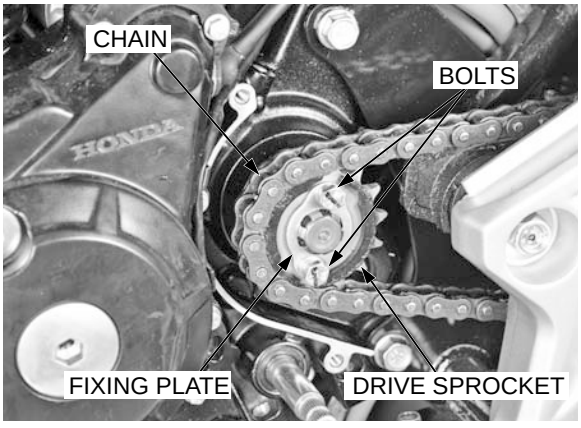

Install the left crankcase rear cover and bracket.

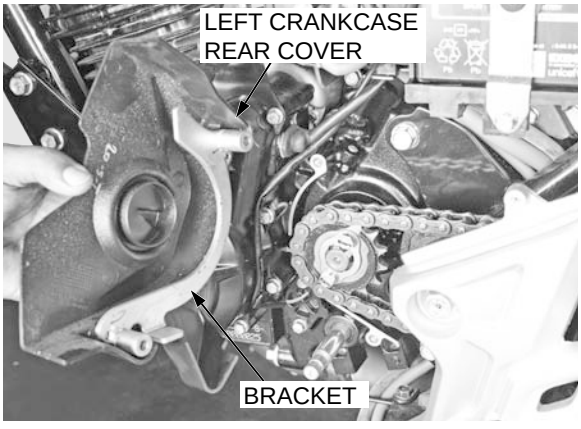

Install and tighten the bolts (2 nos.) on left crankcase rear cover.

Install the choke cable stay and tighten the bolts (2 nos.).

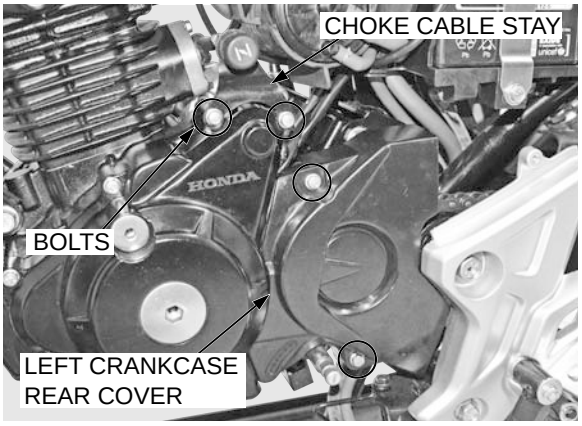

Install the gear shift pedal and tighten the pinch bolt.

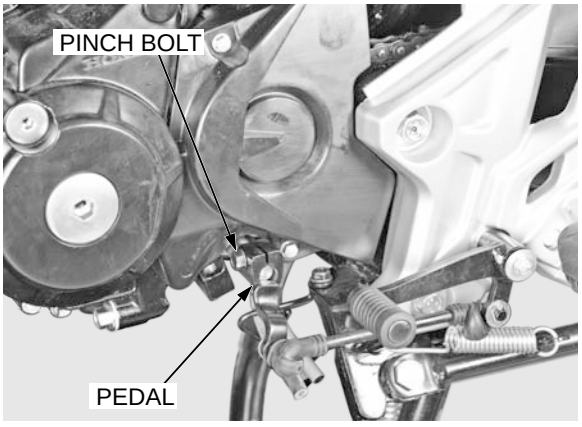

Install the kickstarter pedal by aligning mark on the kick spindle.

Install and tighten the pinch bolt.

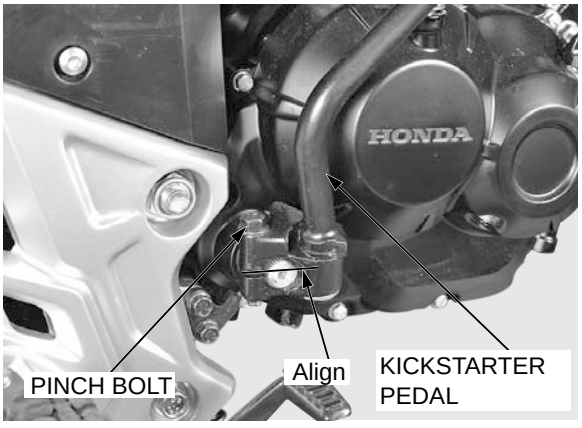

Connect the 2 terminals of the starter motor.

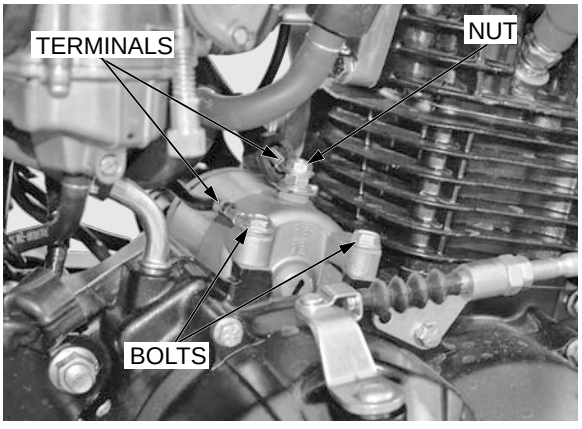

Connect the crank case breather hose.

Connect the neutral switch wire connector, pulse generator wire connector, alternator 2P (white) connector and VS sensor connectors.

Connect and install the following:

– ASV air supply hose (page 3-14)
– Exhaust pipe/muffler (page 2-8)
– Carburetor (page 5-14)
– Spark plug cap (page 3-7)

Inspect the following:

– Drive chain slack (page 3-15)
– Clutch lever free play (page 3-22)

Fill the crankcase with recommended engine oil to the proper level (page 3-10).

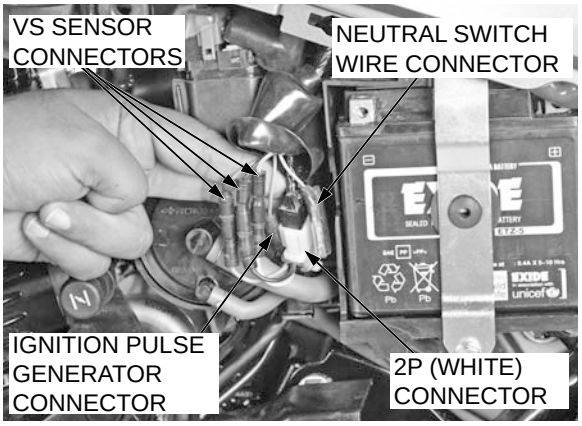

COMPONENT LOCATION

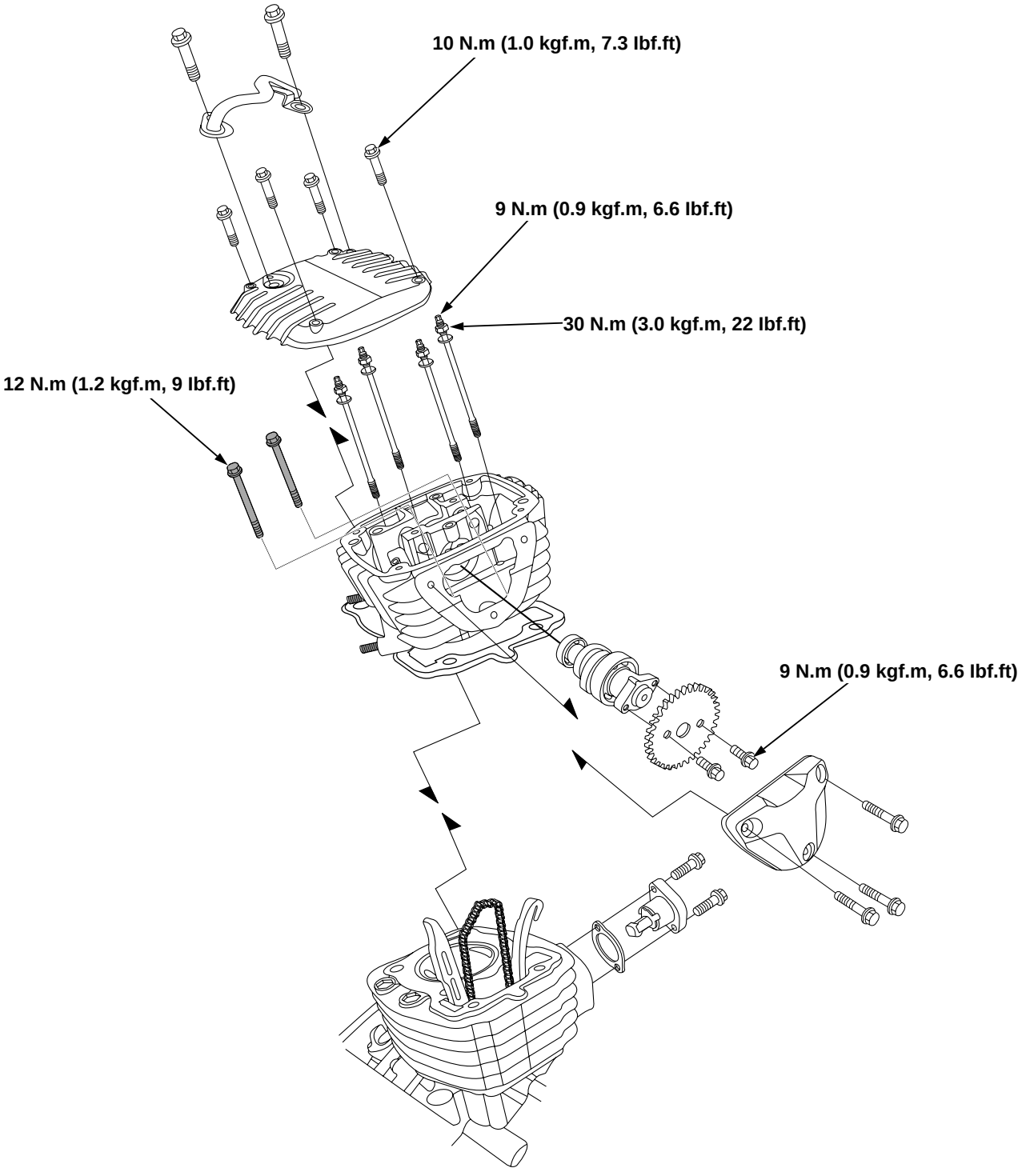

7. CYLINDER HEAD/VALVES

COMPONENT LOCATION	**7-0**	**CYLINDER HEAD REMOVAL**	**7-10**
SERVICE INFORMATION	**7-1**	**CYLINDER HEAD/ DISASSEMBLY/ASSEMBLY**	**7-12**
TROUBLESHOOTING	**7-2**	**CYLINDER HEAD INSTALLATION**	**7-19**
CYLINDER COMPRESSION	**7-4**	**CAM CHAIN TENSIONER LIFTER**	**7-21**
CYLINDER HEAD COVER	**7-4**		
CAMSHAFT REMOVAL/INSTALLATION	**7-6**		

SERVICE INFORMATION

GENERAL

- This section covers service of the cylinder head, valves, rocker arms and camshaft. These services can be done with the engine installed in the frame.
- Be careful not to damage the mating surfaces when removing the cylinder head cover and cylinder head. Do not strike the cylinder head cover and cylinder head too hard during removal.
- When disassembling, mark and store the disassembled parts to ensure that they are reinstalled in their original locations.
- Clean all disassembled parts with cleaning solvent, and dry them by blowing them off with compressed air before inspection.
- Camshaft and rocker arm lubricating oil is fed through oil passages in the cylinder head (stud bolt hole), camshaft holder and cylinder head cover. Clean the oil passages before assembling them.

SPECIFICATIONS

Unit: mm (in)

ITEM			STANDARD	SERVICE LIMIT	Page NO.
Cylinder compression at 650 min^{-1} (rpm)			1300 kPa (13.2 kgf/cm^2, 188.5 psi)	–	Page 7–4
Valve clearance		IN	0.08 (0.003)	–	Page 3–9
		EX	0.24 (0.010)	–	Page 3–9
Valve, valve guide	Valve stem O.D.	IN	4.975 – 4.990 (0.1958 – 0.1964)	4.92 (0.194)	Page 7–13
		EX	4.955 – 4.970 (0.1950 – 0.1956)	4.90 (0.193)	Page 7–13
	Valve guide I.D.	IN/EX	5.000 – 5.012 (0.1969 – 0.1973)	5.04 (0.198)	Page 7–14
	Stem-to-guide clearance	IN	0.010 – 0.037 (0.0004 – 0.0015)	0.07 (0.003)	Page 7–14
		EX	0.030 – 0.057 (0.0012 – 0.0022)	0.09 (0.004)	Page 7–14
	Valve seat width	IN/EX	0.9 – 1.1 (0.035 – 0.043)	1.5 (0.06)	Page 7–15
Valve spring	Free length	INNER	35.59 (1.415)	35.14 (1.383)	Page 7–13
		OUTER	39.46 (1.553)	38.60 (1.519)	Page 7–13
Rocker arm	Shaft O.D.	IN/EX	9.988 – 10.000 (0.3926 – 0.3936)	9.91 (0.390)	Page 7–11
	Arm to shaft clearance	OUTER	0.002 – 0.049 (0.0001 – 0.0019)	0.10(0.004)	Page 7–11
Camshaft	Cam lobe height	IN	34.46 – 34.54 (1.356 – 1.359)	32.96 (1.298)	Page 7–8
		EX	34.29 – 34.37 (1.349 – 1.353)	32.85 (1.293)	Page 7–8
Cylinder head warpage			–	0.05 (0.002)	Page 7–13

TORQUE VALUES

ITEM	PART NO.	QTY	THREAD DIA. (mm)	TORQUE N·m (kgf·m, lbf·ft)	REMARKS	PAGE NO.
Cylinder head cover bolt	96001 – 06035 – 00	4	6	10 (1.0, 7.3)		Page 7–6
Rocker arm shaft bolt	90002 – KRM – 840	2	5	5 (0.5, 3.7)		Page 7–12
Cam sprocket bolt	90083 – KRM – 840	2	5	9 (0.9, 6.6)		Page 7–9
Cylinder stud bolt nuts	90201 – KRE – G00	4	9	30 (3.0, 22)	NOTE 1	Page 7–19
Inlet pipe bolt	95701 – 06025 – 00	2	6	12 (1.2, 9)		Page 7–21
Cam chain tensioner lifter screw	90005 – K15 – 900	1	6	4 (0.4, 3.0)		Page 7–22
Cylinder stud bolt	90031 – KRE – G00	2	9	9 (0.9, 6.6)		Page 7–19
	90032 – KRE – G00	2	9	9 (0.9, 6.6)		Page 7–19

TROUBLESHOOTING

- Engine top-end problems usually affect engine performance. These problems can be diagnosed by a compression test, or by tracing top-end noise with a sounding rod or stethoscope.
- If the performance is poor at low speeds, check for white smoke in the crankcase breather hose. If the hose is smoky, check for a seized piston ring (page 3-7).

Compression too low, hard starting or poor performance at low speed

- Valves:
  - Incorrect valve adjustment
  - Burned or bent valve
  - Incorrect valve timing
  - Weak valve spring
  - Uneven valve seating
  - Valve stuck open
- Cylinder head:
  - Leaking or damaged cylinder head gasket
  - Warped or cracked cylinder head
  - Loose spark plug
- Cylinder/piston problem

Compression too high

- Excessive carbon buildup on piston head or combustion chamber

Excessive smoke

- Worn valve stem or valve guide
- Damaged stem seal
- Cylinder/piston problem

Excessive noise

- Incorrect valve adjustment
- Sticking valve or broken valve spring
- Excessive worn valve seat
- Worn or damaged camshaft
- Worn rocker arm and/or shaft
- Worn rocker arm roller and valve stem end
- Worn cam sprocket teeth
- Worn cam chain
- Worn or damaged cam chain tensioner
- Cylinder/piston problem

Rough idle

- Low cylinder compression

TOOLS

Valve guide driver 070-GD-0061150 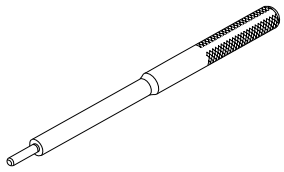	Valve spring compressor 070-GE-001-I100 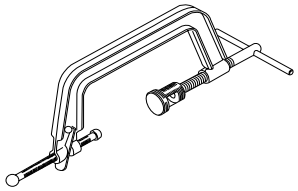	Valve Seat cutter, 27.5 mm (45° EX) 070GH-0031180 
Valve Seat cutter, 29 mm (45° IN) 07780-0010300 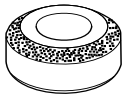	Flat cutter, 27 mm (32° EX) 07780-0013300 	Flat cutter, 30 mm (32° IN) 07780-0012200 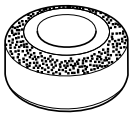
Interior cutter, 26 mm (60° EX) 07780-0014500 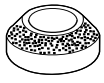	Interior cutter, 30 mm (60° IN) 07780-0014000 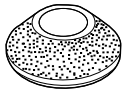	Cutter holder 070GH-0051150 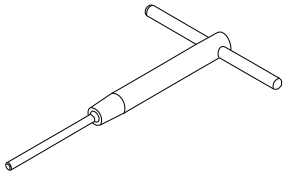
Valve guide reamer 070GH-0011160 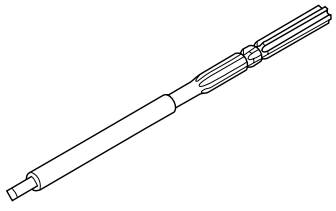	Tensioner lifter stopper 070MG-0010100 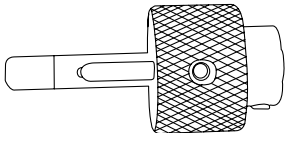	

CYLINDER COMPRESSION

Reference engine oil temperature: 60 – 65°C (140 –149°F)

Warm up the engine to normal operating temperature.

Stop the engine, disconnect the spark plug cap, and remove the spark plug (Page 3-7).

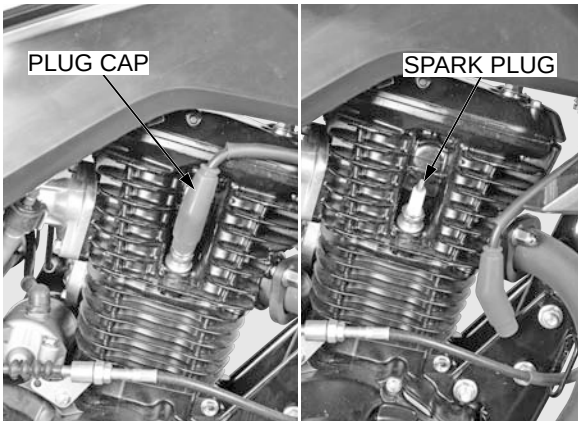

To avoid discharging the battery, do not operate the starter motor for more than 5 seconds. Ensure battery in fully charge state incase done by self start method.

Install a compression gauge attachment into the spark plug hole.

Connect a compression gauge to the attachment.

TOOL:

Compression gauge attachment 07RMJ-MY50100 or equivalent commercially available

Turn the ignition switch ON.
Shift the transmission into neutral.

Open the throttle all the way and crank the engine with the kickstarter until the gauge reading stops rising.

COMPRESSION PRESSURE:

1300 kPa (13.2 kgf/cm², 188.5 psi) at 650 min^{-1}(rpm)

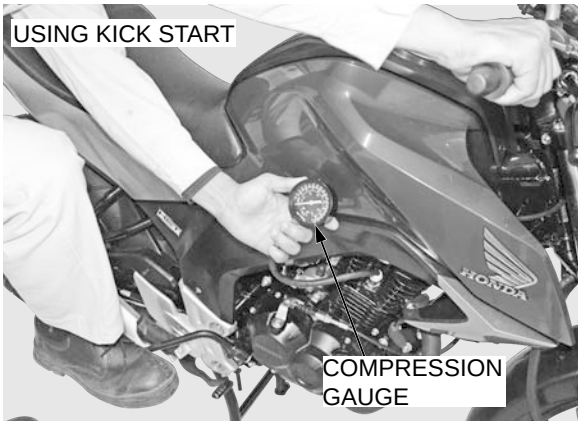

If compression is high, it indicates that carbon deposits have accumulated on the combustion chamber and/or the piston crown.

If compression is low, pour 3 – 5 cc (0.1 – 0.2 oz) of lean engine oil into the cylinder through the spark plug hole and recheck the compression.

If the compression increases from the previous value, check the cylinder, piston and piston rings.

– Blown cylinder head gasket
– Improper valve clearance adjustment
– Worn piston ring / Cylinder and piston

If compression is the same as the previous value, check the valves for leakage.

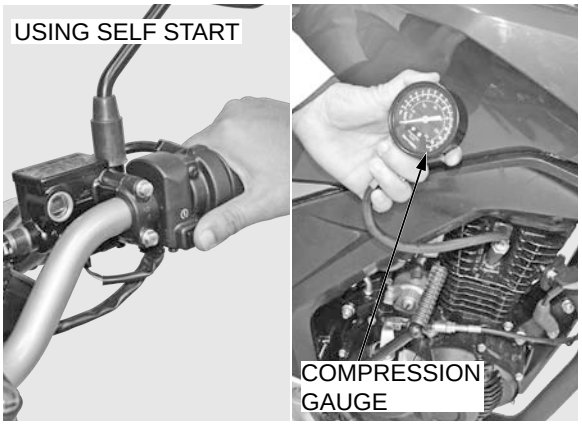

CYLINDER HEAD COVER

REMOVAL

Remove the both side covers (Page 2-3).

Disconnect the air supply hose (Page 3-14).

Remove the bolts (4 nos.).

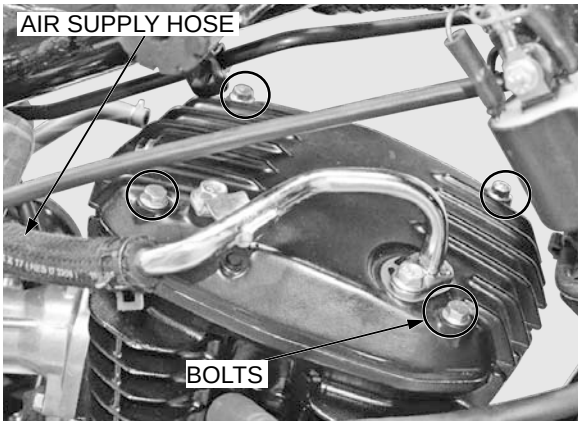

Remove the cylinder head cover and cover packing.

Remove the PAIR passage O-ring from the cylinder head cover.

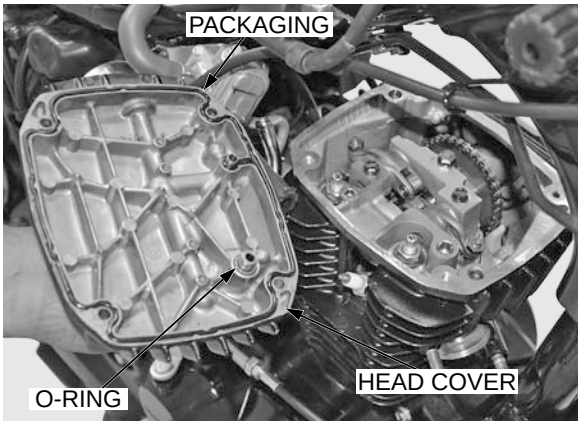

Remove the two bolts.

Remove the air supply pipe and O-ring.

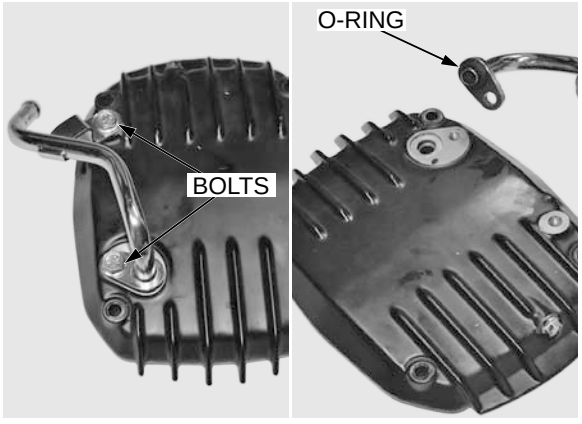

INSTALLATION

Apply clean engine oil to a new O-ring.

Install the new O-ring to the air supply pipe.

Install the air supply pipe to the cylinder head cover.

Install and tighten the two bolts.

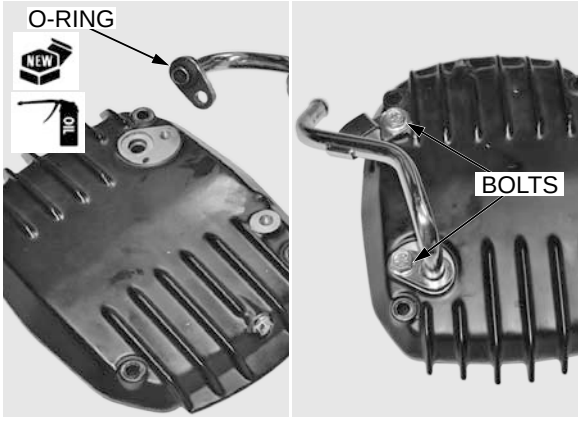

Clean the oil passages of the cylinder head cover using compressed air.

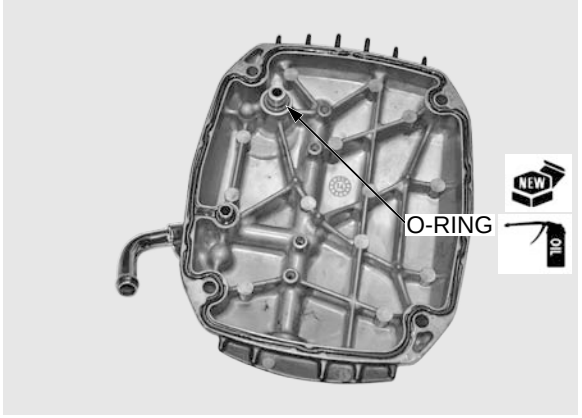

Install a new cover packing into the cylinder head cover groove.

Install the cylinder head cover onto the cylinder head.

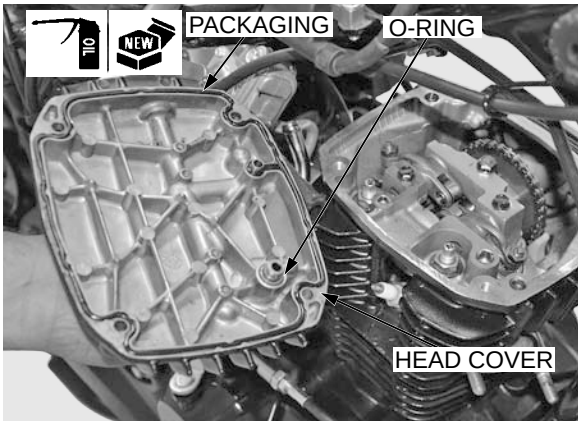

Install and tighten the head cover bolts to the specified torque.

TORQUE : 10 N.m (1.1 kgf.m, 7.3 lbf.ft)

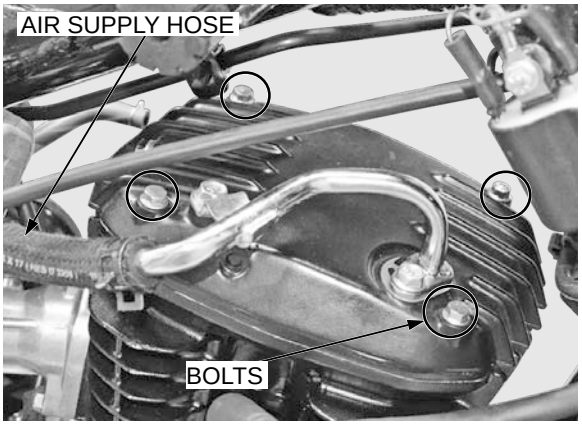

CAMSHAFT

REMOVAL

Remove the following:

– Spark plug (page 3-7)
– Choke cable stay (page 10-2)
– Cylinder head cover (page 7-4)

Remove the head cover cylinder L–side by removing bolts (3 nos.).

Make sure the piston is at TDC (Top Dead Center) on the compression stroke (page 3-9).

Remove the tensioner lifter plug and O-ring.

Turn the tensioner shaft clockwise with the stopper tool to retract the tensioner, then insert the stopper fully to hold the tensioner in the fully retracted position.

TOOL:

Tensioner lifter stopper 070MG-0010100

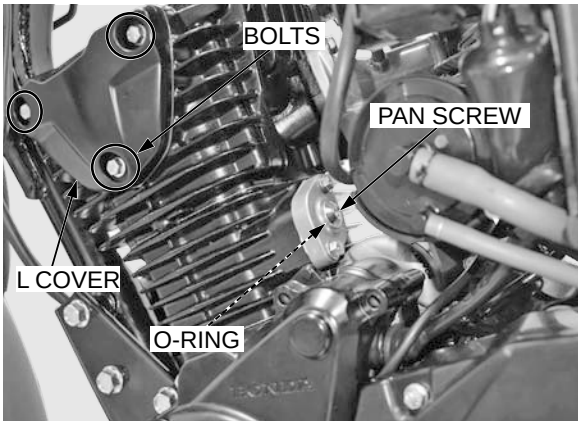

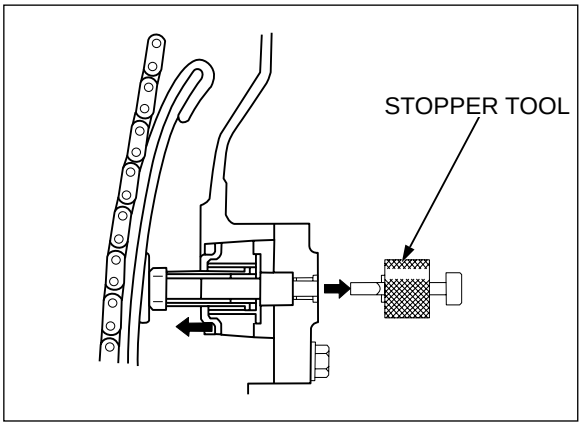

Remove the cam sprocket mounting bolts (2 nos.).

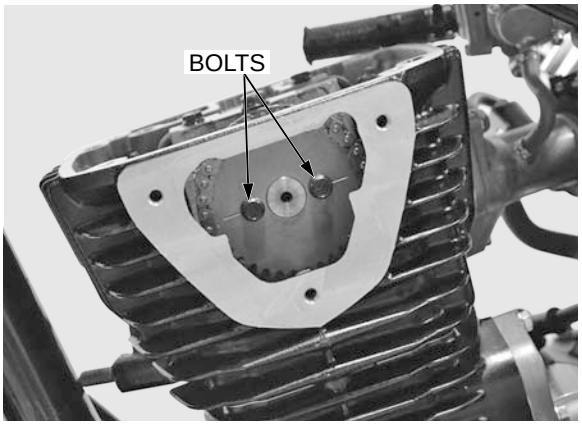

Be careful not to let the sprocket bolts fall into the crankcase.

Remove the cam sprocket off the camshaft flange.

Remove the sprocket from the cam chain.

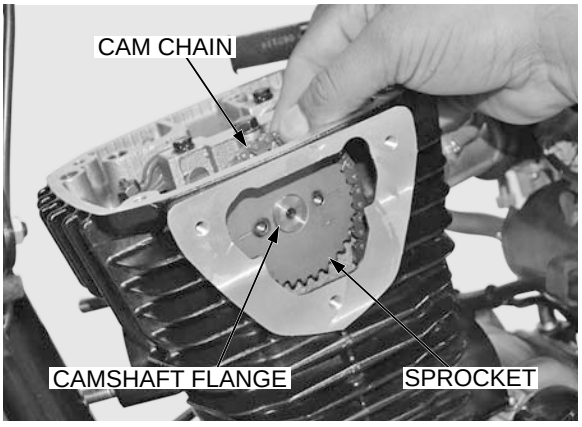

Hold the cam chain with a piece of wire to prevent it from falling into the crankcase.

Remove the camshaft retainer bolt (1 no.).

NOTE:

Do not hammer the cam shaft out as it can damage the camshaft.

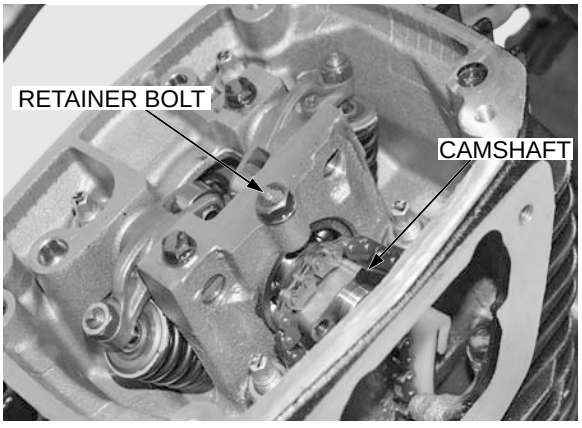

Remove the camshaft.

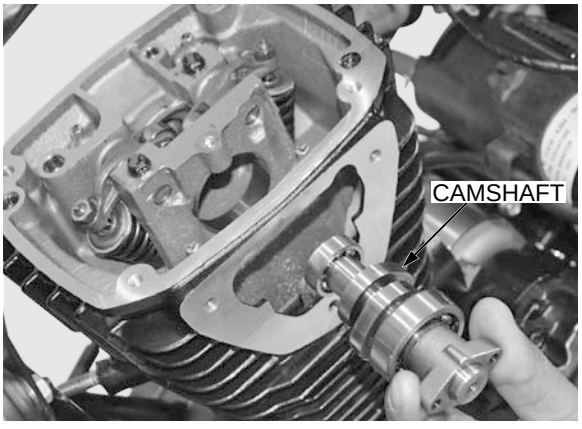

INSPECTION

CAMSHAFT BEARING

Turn the outer race of each bearing with your finger.

The bearings should turn smoothly and quietly. Also check that the bearing inner race fits tightly on the camshaft.

Replace the camshaft if the bearings do not turn smoothly, quietly, or if they fit loosely on the camshaft.

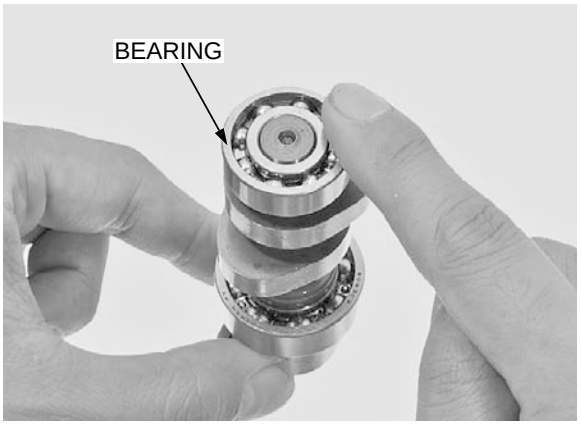

CAM LOBE

Measure the height of each cam lobe.

SERVICE LIMITS:

IN:	**32.96 mm (1.298 in)**
EX:	**32.85 mm (1.293 in)**

Inspect the cam lobe for damage or excessively worn.

Inspect the oil passages and rocker arms for wear or damage if necessary.

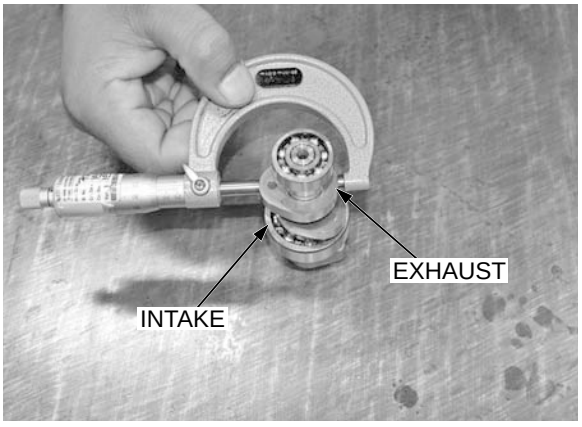

INSTALLATION

Apply clean engine oil to the camshaft bearings and cam lobes.

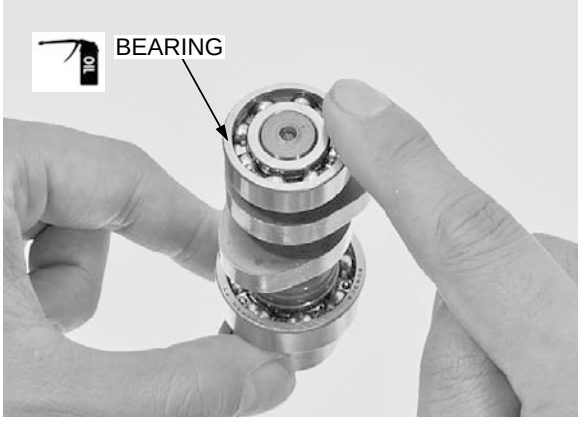

Make sure the tab of camshaft is facing upward.

Install the camshaft into the camshaft holder.

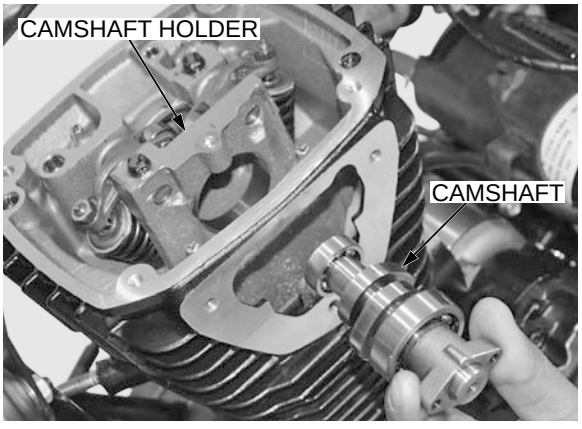

Install the camshaft retainer bolt and tighten it securely.

Install the cam sprocket to the cam shaft.

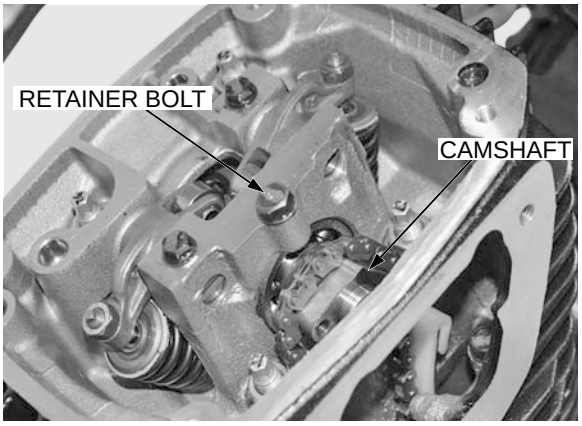

Install the cam chain on cam sprocket.

Install the cam sprocket on the camshaft flange.

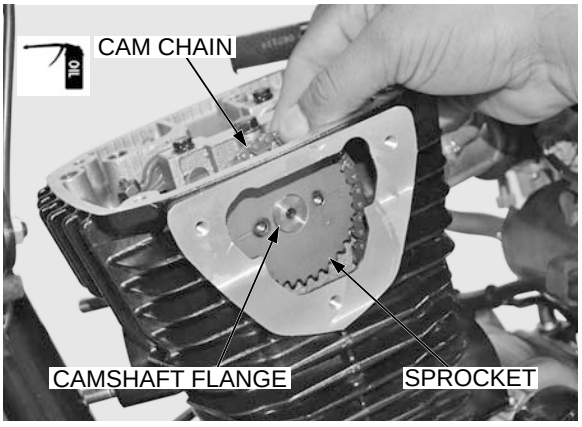

Install the cam sprocket mounting bolts (2 nos.) to the specified torque.

TORQUE : 9 N.m (0.9 kgf.m, 6.6 lbf.ft)

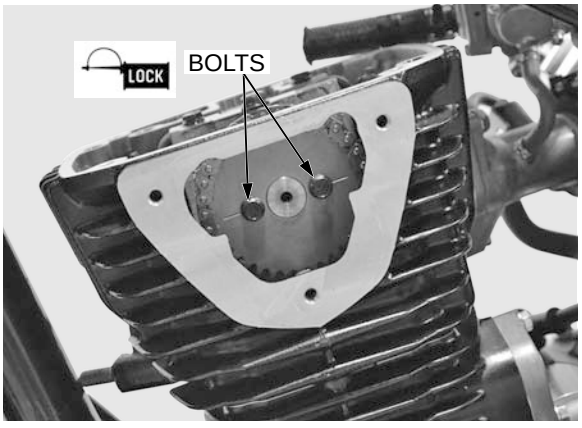

Install the following:

– Tensioner lifter plug and O-ring
– Cylinder head cover (page 7-5)
– Choke cable stay (page 10-3)
– Spark plug (page 3-8)

Install the head cover cylinder L–side by installing the bolts (3 nos.).

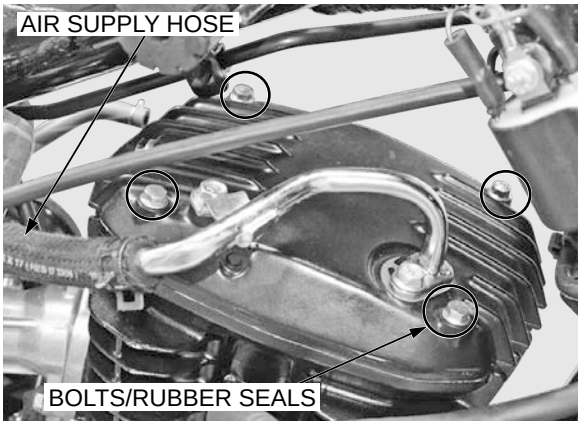

CYLINDER HEAD REMOVAL

Remove the following :

– Exhaust pipe (page 2-8)
– Fuel tank (page 2-4)
– Camshaft (page 7-6)

Remove bolts (2 nos.) of the intake manifold from cylinder head.

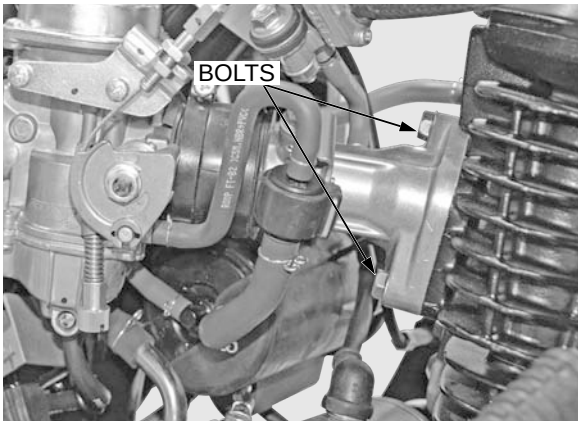

Remove flange bolts (2 nos.).

Loosen the nut (4 nos.) and loosen the stud bolt (4 nos.).

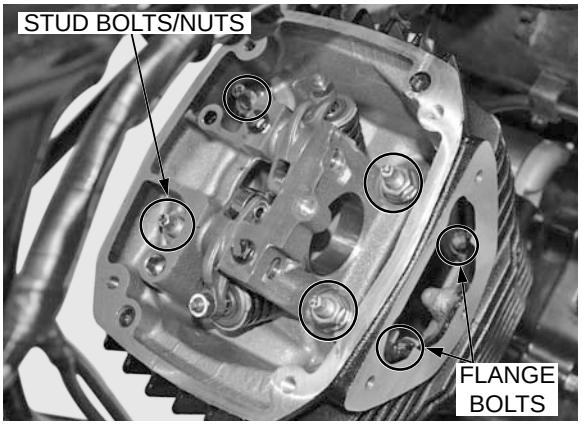

Remove the stud bolts, nuts and washers (4 nos. each).

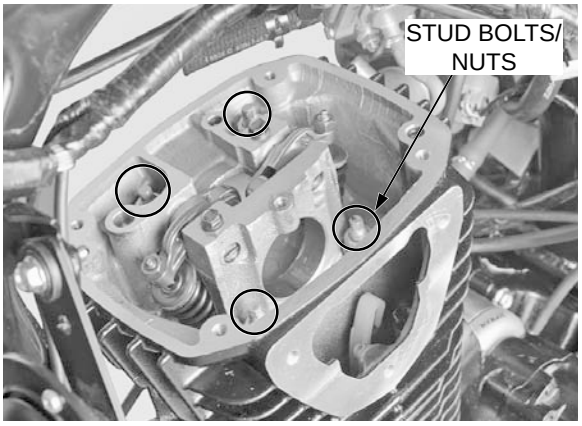

⚠ CAUTION

Place a shop towel over the cylinder head opening to avoid the washers to fall down into the crankcase.

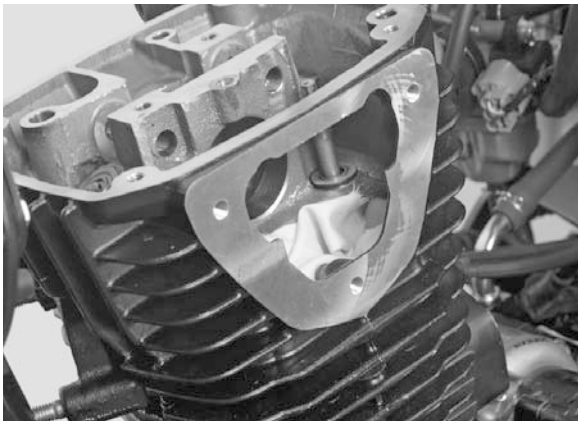

Remove the cylinder head.



Remove the gasket and dowel pins.

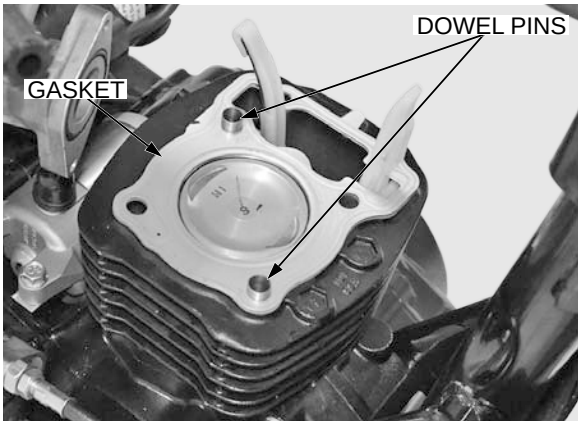

ROCKER ARM

REMOVAL

Remove the following :

- Spark plug (page 3-7)
- Exhaust pipe (page 2-8)
- Cylinder head cover (page 7-4)
- Remove Cam sprocket (page 7-7)
- Remove the camshaft (page 7-7)
- Head cover cylinder L-Side (page 7-6)

Remove the bolts (2 nos.) and rocker arms from the cylinder head.

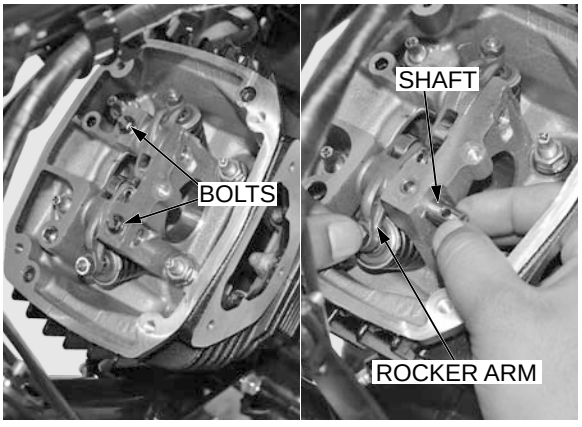

INSPECTION

ROCKER ARM/SHAFT

Inspect the sliding surface of each rocker arm and shaft for wear or damage.

Check the each rocker arm roller for scoring, scratches or evidence of insufficient lubrication and oil hole for clog.

Measure each rocker arm shaft O.D.:

SERVICE LIMIT: 9.91 mm (0.390 in)

Calculate the rocker arm-to-shaft clearance:

SERVICE LIMIT: 0.10 mm (0.004 in)

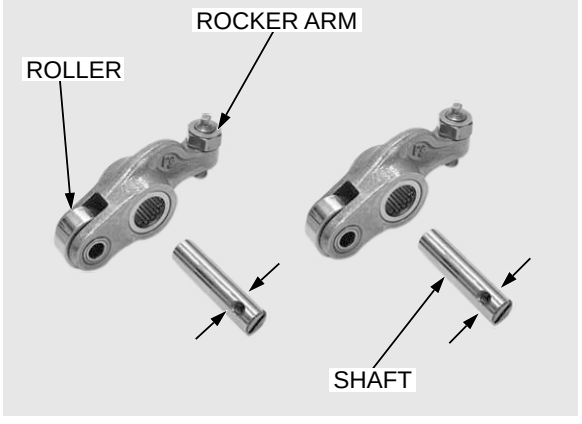

Clean the threads of each rocker arm shaft thoroughly.

Apply clean engine oil to each rocker arm inner, roller surface and rocker arm shaft rotating surface.

Set the rocker arm into the camshaft holder in the direction as shown, then install the rocker arm shaft with the threads facing the cam sprocket side into the cylinder head through the rocker arm.

Insert the rocker arms shaft fully into the grooves and tighten the bolts as per the specified torque.

TORQUE : 5 N.m (0.5 kgf.m, 3.7 lbf.ft)

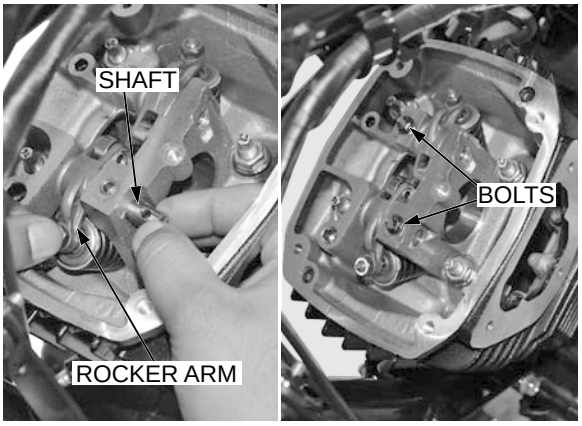

CYLINDER HEAD DISASSEMBLY/ ASSEMBLY

To prevent loss of tension,do not compress the valve spring more than necessary to remove the cotters.

While compressing the valve spring using the special tool, remove the valve cotters.

TOOL:

Valve spring compressor 070GE-001-I100

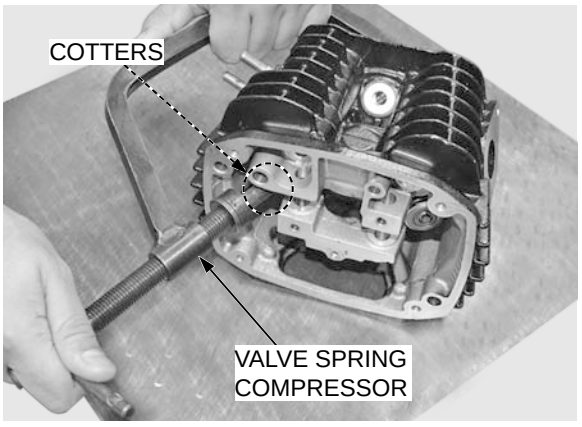

Arrange all the parts so they can be placed back in their original locations.

Loosen the valve spring compressor and remove the following:

– Cotters
– Spring retainers
– Valve spring
– Stem seals
– Spring seats
– Intake and exhaust valve

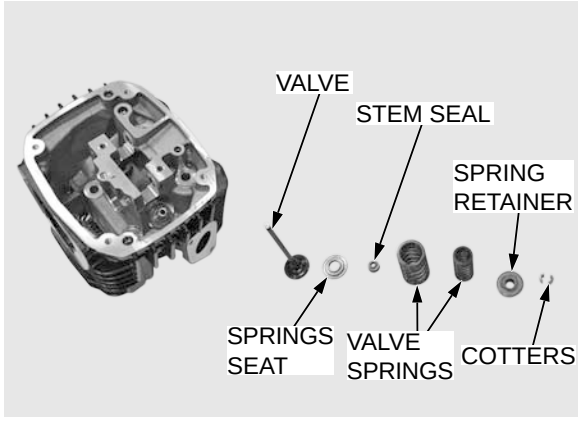

Remove the carbon deposits from the combustion chamber.

Clean off any gasket material from the cylinder head surface.

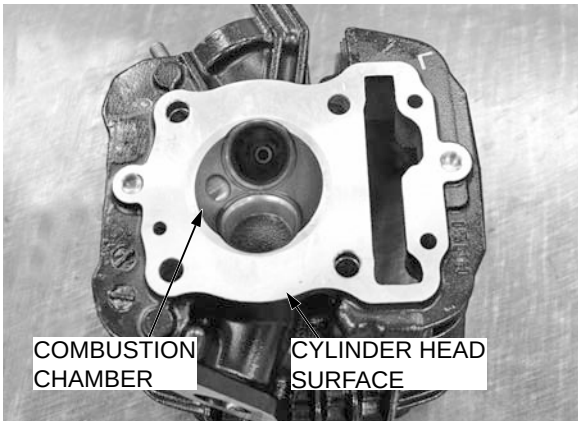

INSPECTION

VALVE SPRING

Measure the valve spring free length.

SERVICE LIMIT:

INNER: **35.14 mm (1.383 in)**

OUTER: **38.60 mm (1.519 in)**

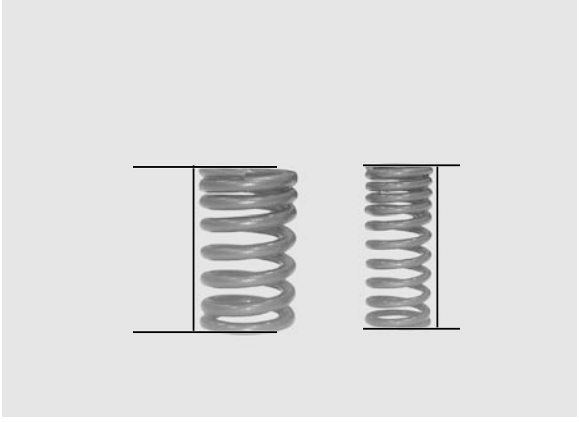

CYLINDER HEAD

Be careful not to damage the gasket surface.

Check the spark plug hole and valve area for cracks. Check the cylinder head for warpage with a straight edge and a feeler gauge.

SERVICE LIMIT: **0.05 mm (0.002 in)**

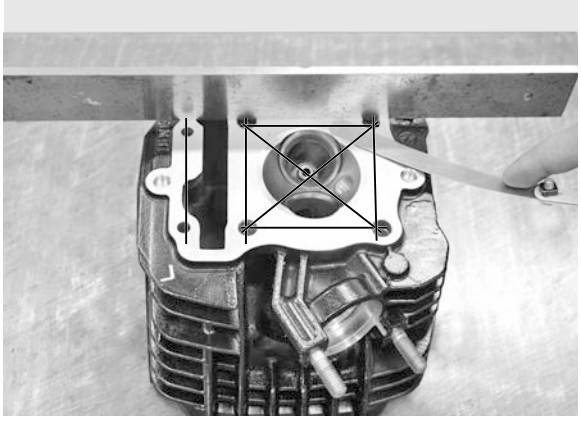

VALVE

Inspect the valve for trueness, burning scratches or abnormal stem wear.

Measure the valve stem O.D.

SERVICE LIMITS:

IN: **4.92 mm (0.194 in)**

EX: **4.90 mm (0.193 in)**

Insert each valve into the valve guide and check the valve movement in the guide.

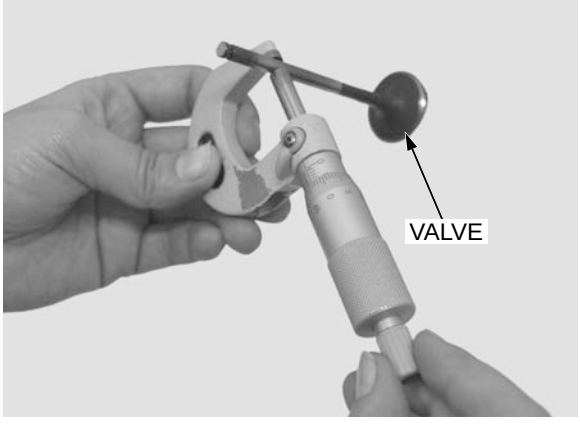

VALVE GUIDE

Always rotate the reamer clockwise,never counter clockwise when installing, removing and reaming.

Ream the valve guide to remove the carbon build-up before checking the valve guide.

TOOL:

Valve guide reamer **07984-MA60001**



Measure and record each valve guide I.D. with a ball gauge or inside micrometer.

SERVICE LIMIT: IN/EX: 5.04 mm (0.198 in)

Calculate the stem-to-guide clearance.

SERVICE LIMIT: IN: 0.07 mm (0.003 in)
EX: 0.09 mm (0.004 in)

- If the stem-to-guide clearance exceeds the service limit, determine if a new guide with standard dimensions would bring the clearance within tolerance. If so replace the guides as necessary and ream to fit.
- If the stem-to-guide clearance still exceeds the service limit with new guides, replace the valve and guide.
- Reface the valve seat whenever new valve guides are installed.

VALVE GUIDE REPLACEMENT

Chill the replacement valve guides in the freezer section of a refrigerator for about an hour.

Heat the cylinder head to 130°C – 140°C (275°F –290°F) with a hot plate or oven. Do not heat the cylinder head beyond 150°C (300°F). Use temperature indicator sticks, available from welding supply stores, to be sure the cylinder head is heated to the proper temperature.

- Wear insulated gloves to avoid burns when handling the heated cylinder head.
- Using a torch to heat the cylinder head may cause warping.
- Be careful not to damage the mating surface.



Support the cylinder head and drive the valve guides and clips out of the cylinder head from the combustion chamber side.

TOOL:

Valve guide driver 07942-8920000

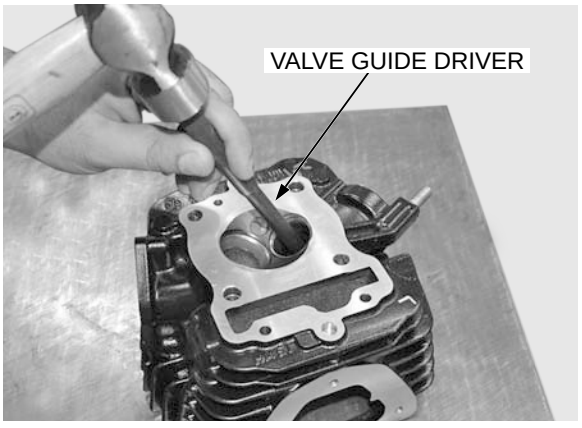

While the cylinder head is still heated, take off the new valve guides from the freezer and install the new clips to the new guides.

Drive new guides in the cylinder head from the camshaft side.

TOOL:

Valve guide driver 07942-8920000

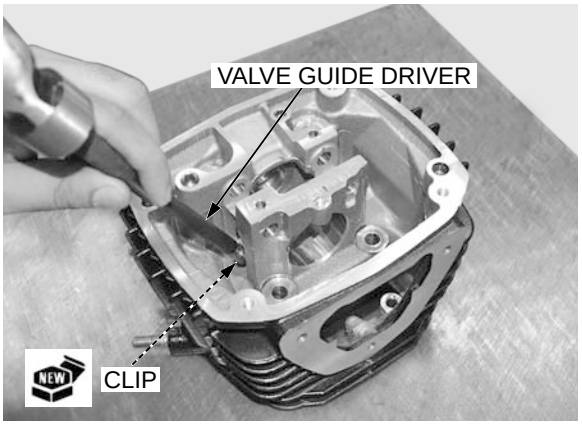

After installing the valve guides, measure the valve guide height from the cylinder head.

SPECIFIED HEIGHT: 16.8 – 17.0 mm (0.66 – 0.67 in)

Let the cylinder head cool to room temperature.

Ream the new valve guides.

TOOL:

Valve guide reamer 07984-MA60001

- Take care not to tilt or lean the reamer in the guide while reaming. Otherwise, the valve is installed slanted, that causes oil leaks from the stem seal and improper valve seat contact and results in the valve seat refacing not able to be performed.
- Insert the reamer from the combustion chamber side of the head and always rotate the reamer clockwise.
- Use cutting oil on the reamer during this operation.

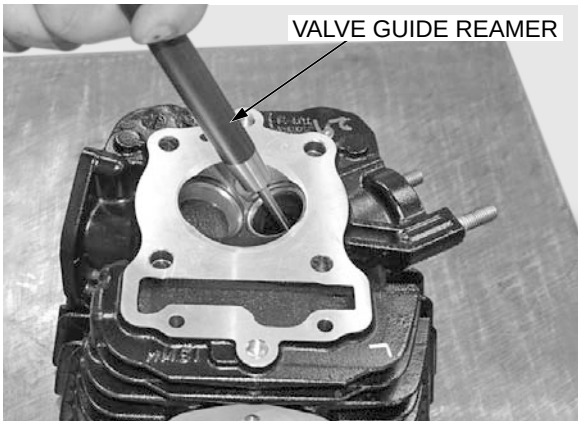

Clean the cylinder head thoroughly to remove any metal particles after reaming and reface the valve seat.

VALVE SEAT INSPECTION

Clean the intake and exhaust valves thoroughly to remove the carbon deposits.

Apply light coating of Prussian Blue to the valve seats.

Tap the valves and seats using a rubber hose or other hand lapping tool.

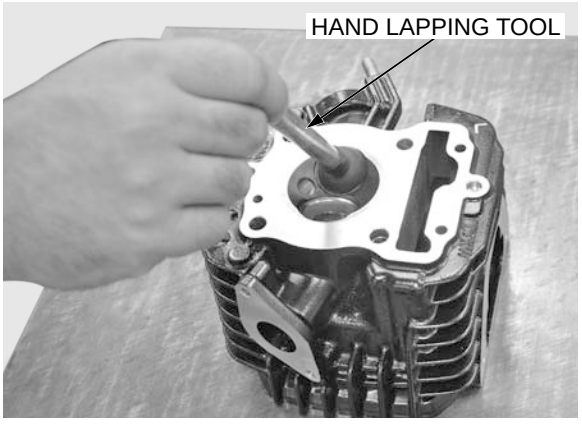

Remove the valve and inspect the width of each valve seat.

The valve seat contact should be within the specified width and even all around the circumference.

STANDARD: 0.9 – 1.1 mm (0.035 – 0.043 in)

SERVICE LIMIT: 1.5 mm (0.06 in)

Valve seat width is not within specification, reface the valve seat (page 7-16).

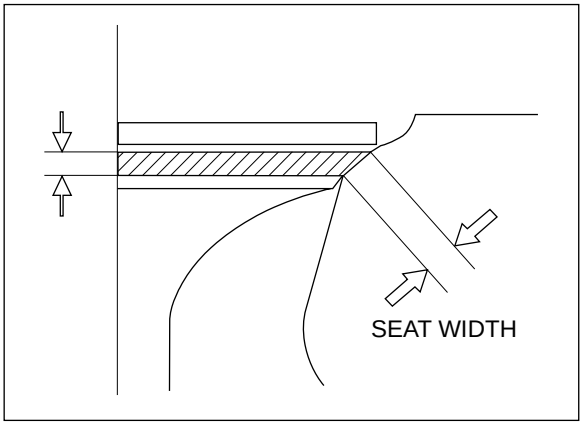

Inspect the valve seat face for:

- Damaged face:
  - Replace the valve and reface the valve seat.
- Uneven seat width:
  - Bent or collapsed valve stem;
  - Replace the valve and reface the valve seat.

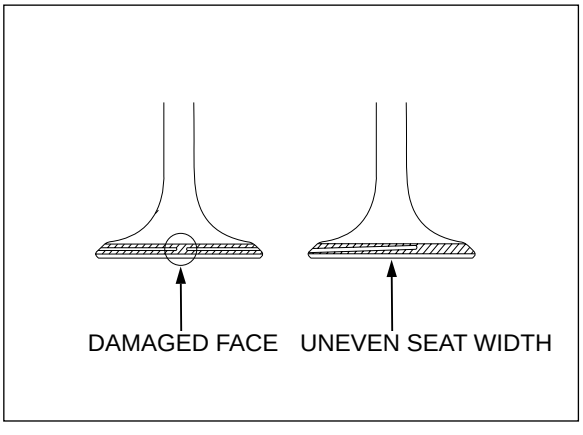

The valve cannot be grounded. If the valve face is burned or badly worn or if it contacts the seat unevenly, replace the valve.

- Contact area (too high or too low area)
  - Reface the valve seat.

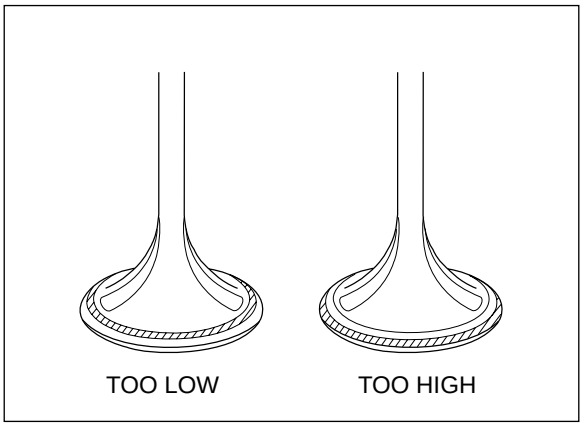

VALVE SEAT REFACING

Follow the refacing manufacture's operating instructions.

Valve Seat Cutters, a grinder or equivalent valve seat refacing equipment are recommended to correct a worn valve seat.

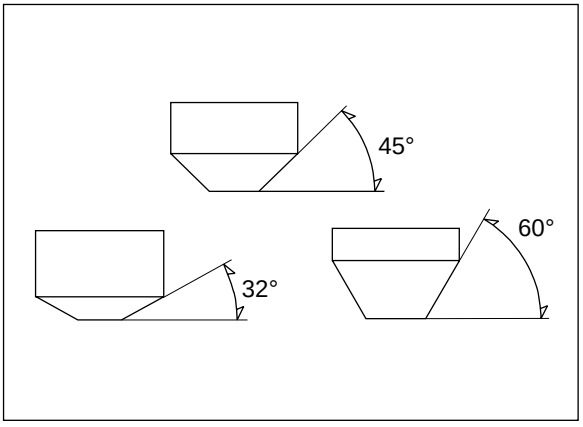

If the contact area is too high on the valve, the seat must be lowered using a 32 degree flat cutter.

If the contact area is too low on the valve, the seat must be raised using a 60 degree inner cutter.

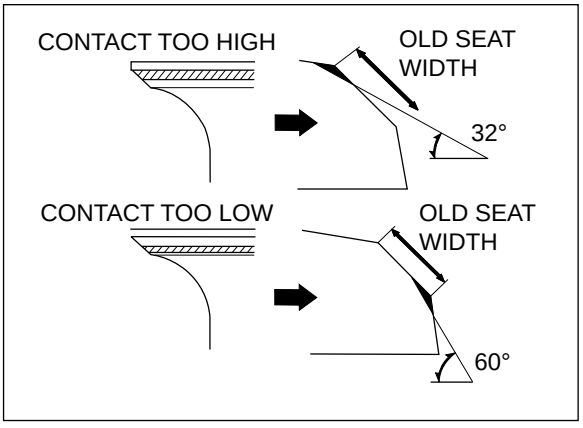

Reface the valve seat with a 45 degree cutter when a valve guide is replaced.

Use a 45 degree cutter to remove the roughness or irregularities from the seat.

TOOLS:

Seat cutter, 27.5 mm (EX)	**07780-0010200**
Seat cutter, 29 mm (IN)	**07780-0010300**
Cutter holder	**07781-0010400**

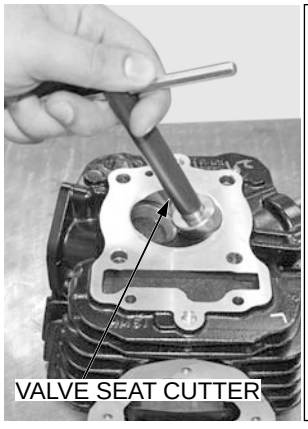

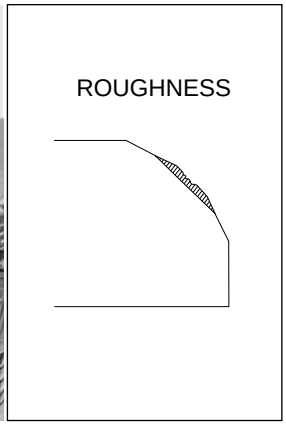

Using 32 degree cutter, remove top 1/4 of the existing valve seat material.

TOOLS:

Flat cutter, 27 mm (EX)	**07780-0013300**
Flat cutter, 30 mm (IN)	**07780-0012200**
Cutter holder	**07781-001040**

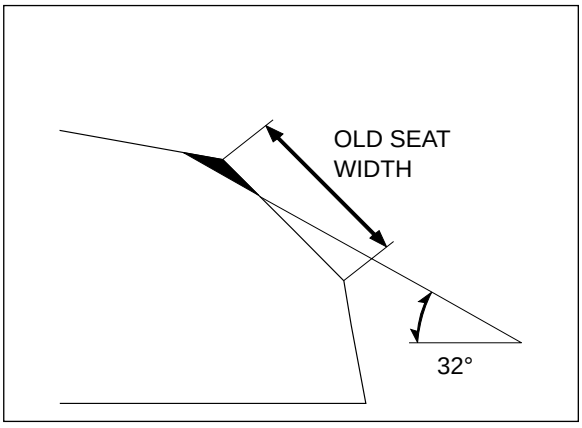

Using 60 degree cutter, remove the bottom 1/4 of the old seat.

Remove the cutter and inspect the area you have just removed.

TOOLS:

Interior cutter, 26 mm (EX)	**07780-0014500**
Interior cutter, 30 mm (IN)	**07780-0014000**
Cutter holder	**07781-001040**

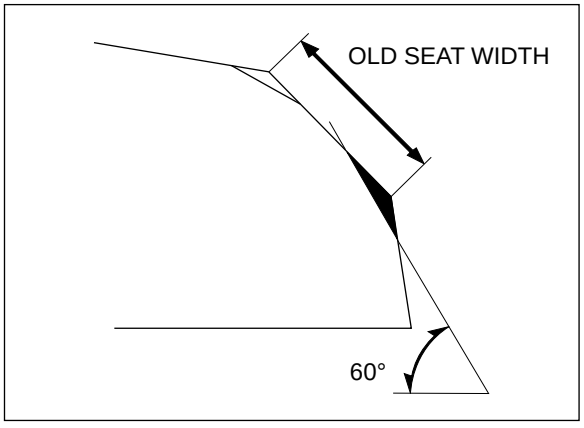

Install a 45 degree finish cutter and cut the seat to proper width.

Make sure that all pitting and irregularities are removed.

Refinish if necessary.

STANDARD SEAT WIDTH:

0.9 – 1.1 mm (0.035 – 0.043 in)

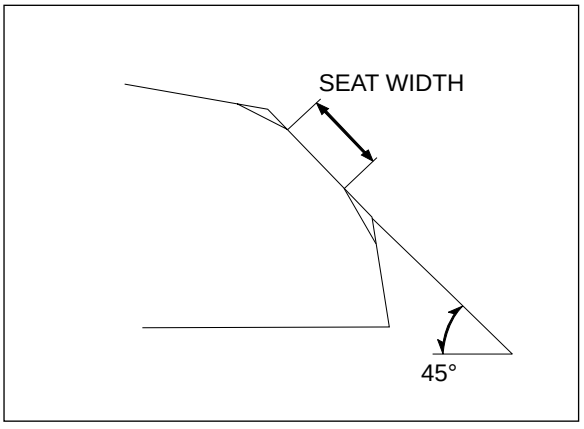

After cutting the seat, apply lapping compound to the valve face and lap the valve using light pressure.

- Excessive lapping pressure may deform or damage the seat.
- Change the angle of lapping tool frequently to prevent uneven seat wear.
- Lapping compound can cause damage if it enters between the valve stem and guide.

After lapping, wash any residual compound off the cylinder head and valve.

Recheck the seat contact after lapping.

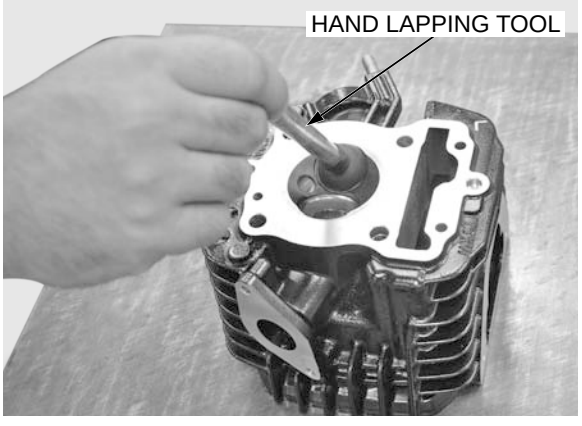

ASSEMBLY

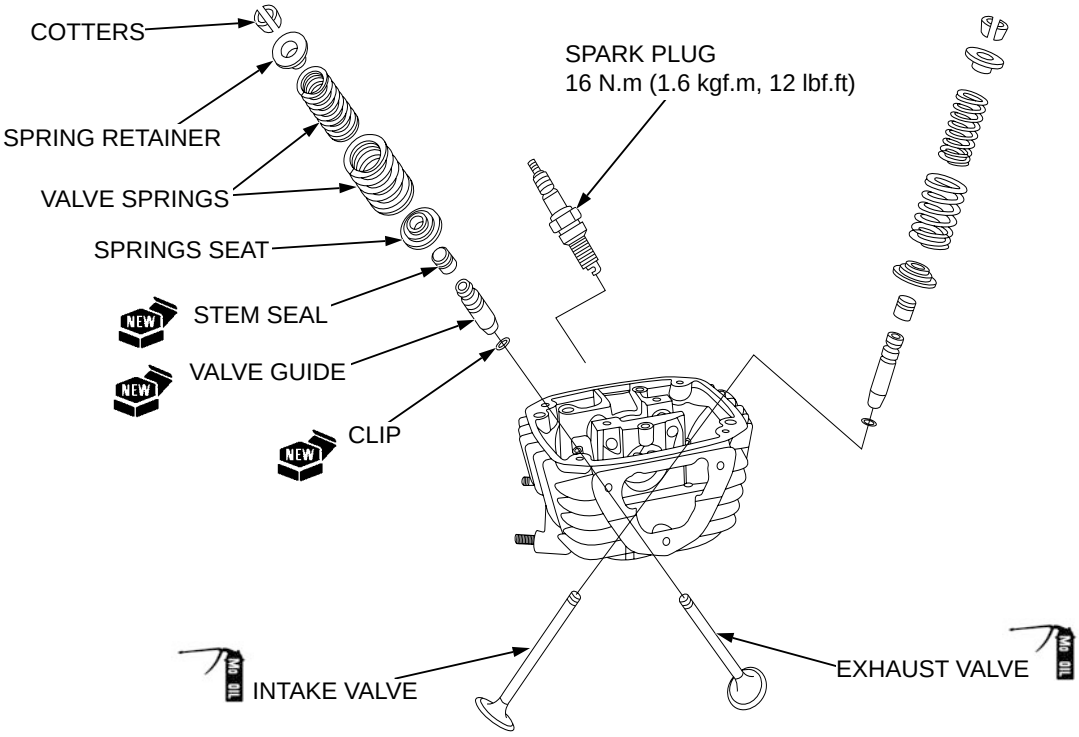

To avoid damage to the seal, turn the valve slowly when inserting.

Clean the cylinder head assembly with solvent and blow through all oil passage with compressed air.

Install the valve seats and new valve stem seals.

Lubricate each valve stem with molybdenum oil solution.

Insert the intake and exhaust valve into the valve guides.

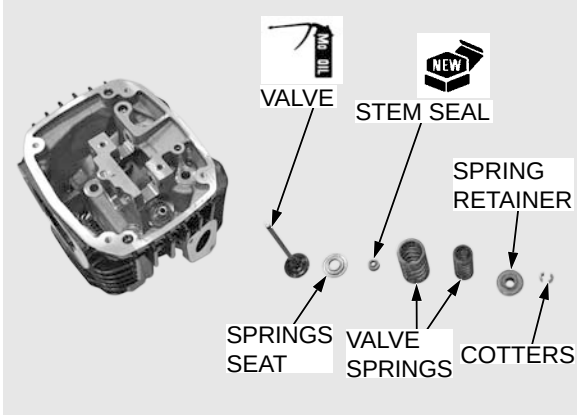

Install the valve springs and retainers. The springs tightly wound coils should face toward the combustion chamber.

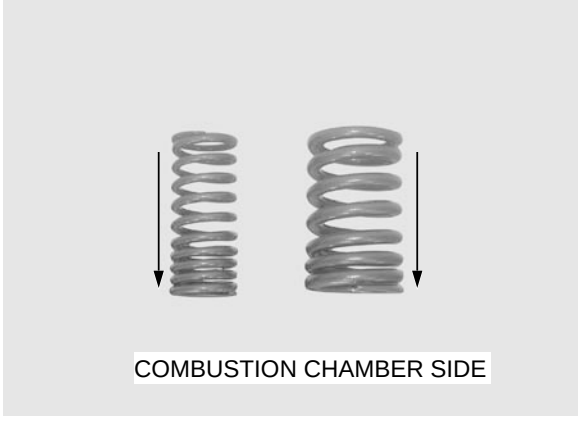

Grease the cotters to ease installation. To prevent loss of tension, do not compress the valve spring more than necessary.

Compress the valve spring and install the valve cotters.

TOOL:

Valve spring compressor: 070-GE-001-I100

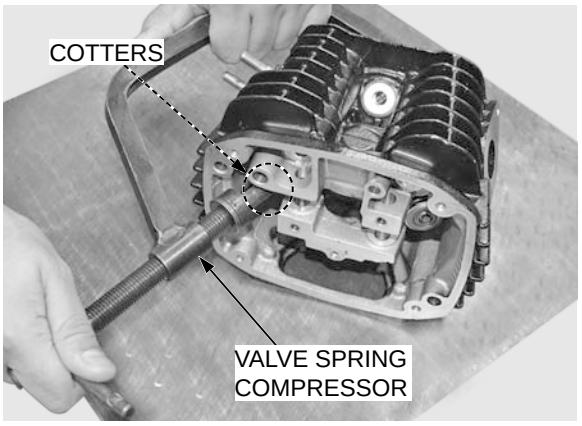

Support the cylinder head above the work bench surface to prevent valve damage.

Tap the stems gently with two plastic hammer to firmly seat the cotters.

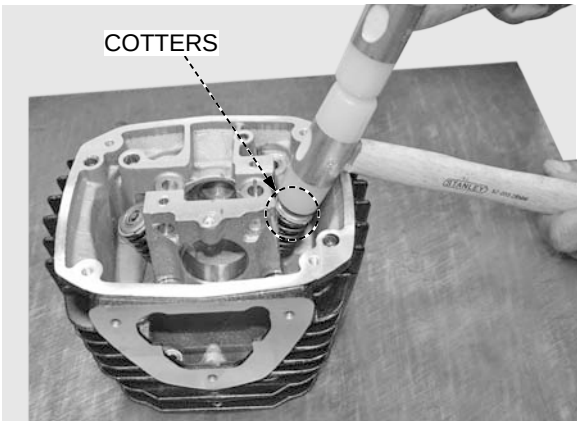

CYLINDER HEAD INSTALLATION

Do not allow dust and dirt to enter the engine.
If required replace the old intake manifold O-ring with a new one.

Install the dowel pins and new gasket.

Route the cam chain through the cylinder head, and place the cylinder head onto the cylinder.

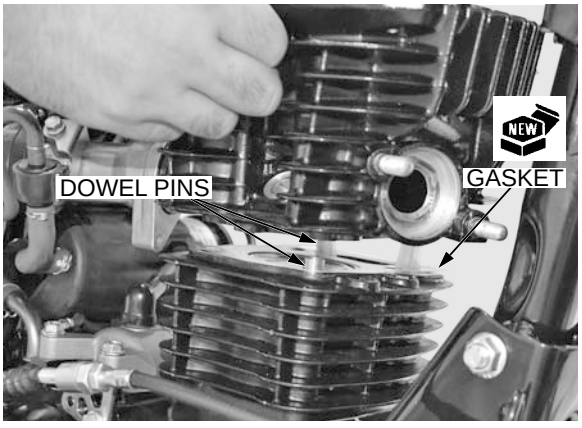

Install the stud bolts (4 nos.)in the cylinder head and tighten to the specified torque.

TORQUE: 9 N·m (0.9 kgf·m, 6.6 lbf·ft)

⚠ CAUTION

Dip the stud nuts & washer in the clean engine oil.

Install and tighten the nuts (4 nos.) on the stud bolts to the specified torque.

TORQUE: 30 N·m (3.0 kgf·m, 22 lbf·ft)

Install & tighten the flange bolts (2 nos.) to the specified torque.

TORQUE: 12 N·m (1.2 kgf·m, 9 lbf·ft)

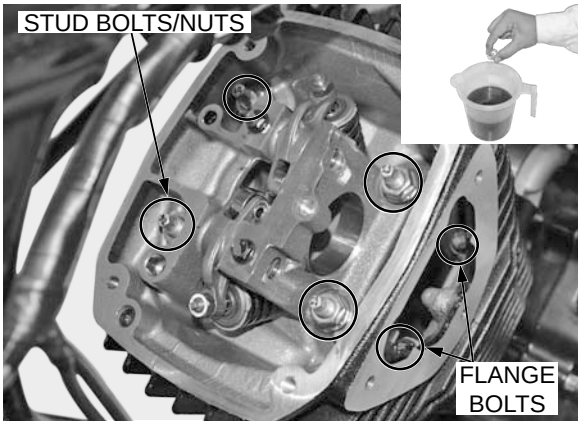

⚠ CAUTION

After tightening the stud bolts and nuts to the specified torque, it is mandatory to maintain distance between top of the stud bolts and top of the nuts between the specified limits as shown in illustration.

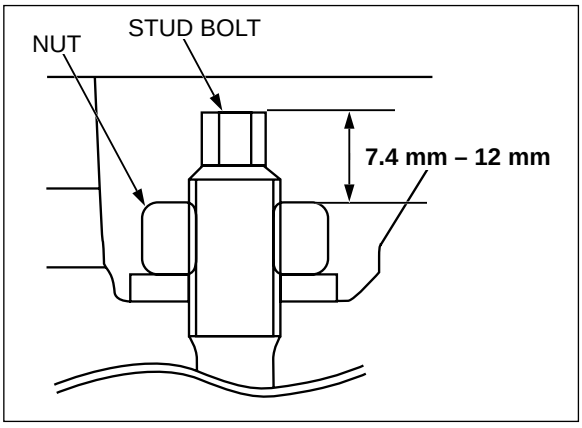

Be careful not to jam the cam chain and timing sprocket on the crankshaft when rotating the crankshaft.

Rotate crankshaft counterclockwise, and align the "⊣" mark on the flywheel with the index notch on the left crankcase cover.

Make sure the piston is at TDC (Top Dead Center) on the compression stroke.

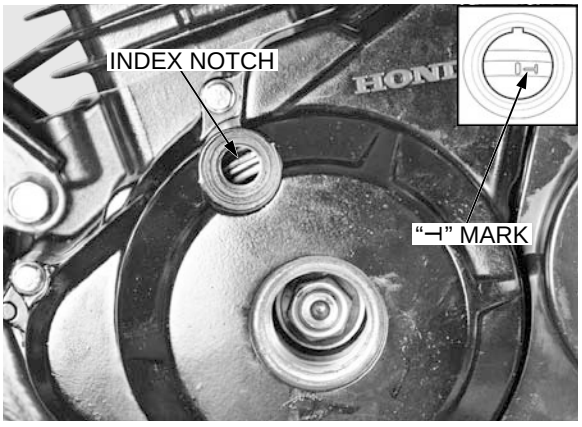

Apply clean engine oil to the cam chain entire surface.

Install the cam sprocket onto the cam chain so that the index lines of the cam sprocket are parallel with the cylinder head surface.

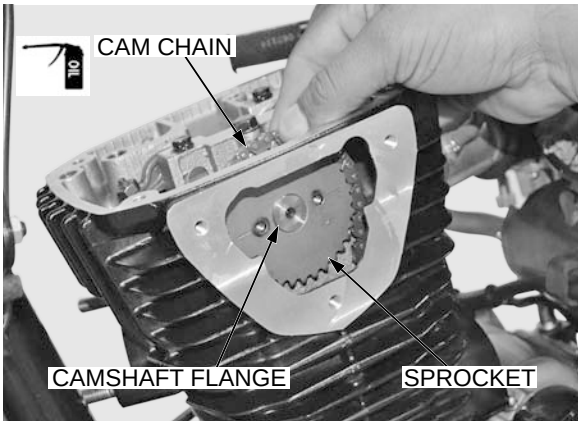

Cover the cam chain opening with a hop towel to prevent the cam sprocket bolts from falling into the crankcase.

Align the bolt hole and place the cam sprocket on to the groove of camshaft.

Install and tighten the cam sprocket bolt to the specified torque by holding the flywheel.

Apply clean engine oil to new O-ring & install on timing hole cap.

Install and tighten the timing hole cap to specified torque.

TORQUE : 9 N·m (0.9 kgf·m, 6.6 lbf·ft)

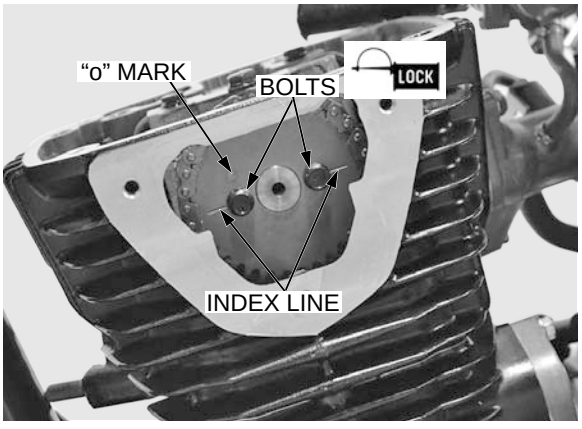

Install and tighten the intake manifold bolts (2 nos.) as per the specified torque.

TORQUE : 12 N·m (1.2 kgf·m, 9 lbf·ft)

Install the following:

– Cover cylinder head L-Side
– Cylinder head cover
– Exhaust pipe/muffler
– Spark Plug

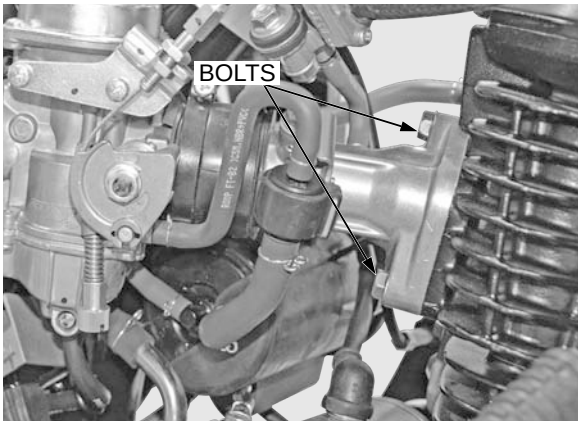

CAM CHAIN TENSIONER LIFTER

REMOVAL

Remove the bolts (2 nos.) and choke cable stay.

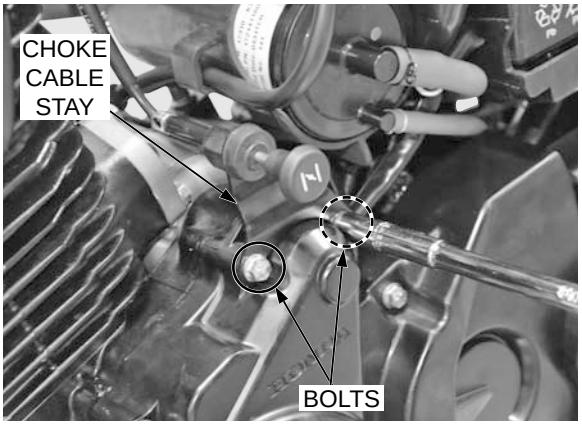

Remove the tensioner lifter plug pan screw.

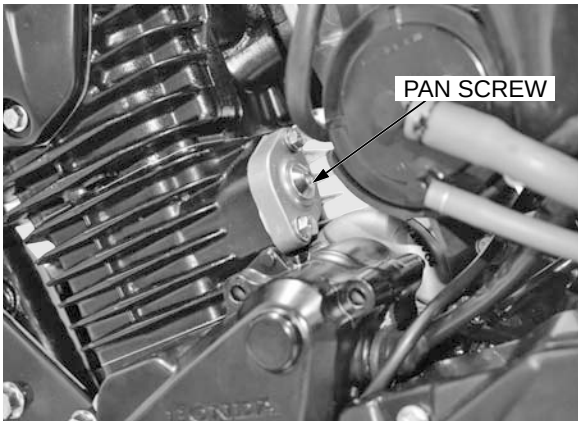

Remove the mounting bolts (2 nos.).

Remove the cam chain tensioner lifter and gasket.

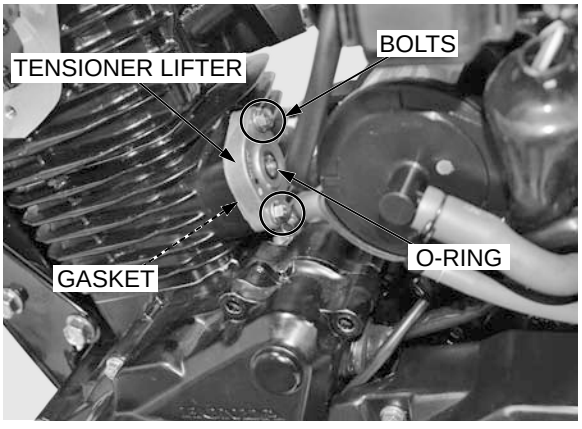

INSPECTION

Check the lifter operation:

- The tensioner shaft should not go into the body when it is pushed.
- When it is turned clockwise with a stopper tool (page 7-6), the tensioner lifter shaft should be pulled into the body. The shaft spring out of the body as soon as the stopper tool is released.

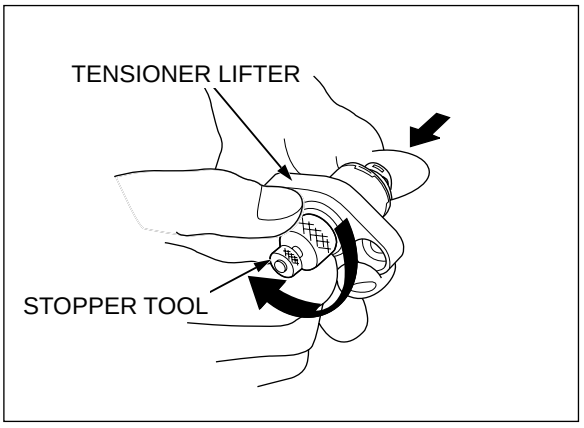

INSTALLATION

Turn the tensioner lifter shaft clockwise with the stopper tool to retract the tensioner lifter, then insert the stopper fully to hold the tensioner lifter in the fully retracted position.

Install a new gasket on the cam chain tensioner lifter.

TOOL:

Tensioner lifter stopper 070MG-0010100

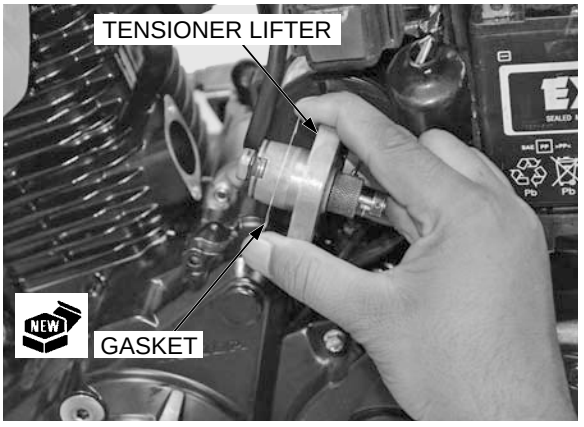

Install the cam chain tensioner lifter.

Install the two mounting bolts and tighten them.

Remove the stopper tool from the tensioner lifter.

Apply clean engine oil to a new O-ring and install it to the lifter.

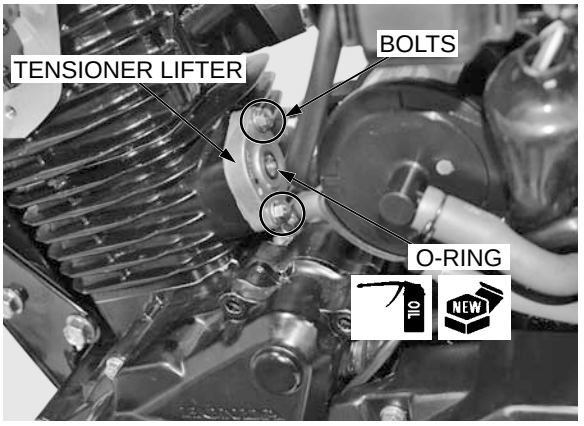

Install the tensioner lifter plug pan screw and tighten it to the specified torque.

TORQUE: 4 N·m (0.4 kgf·m, 3.0 lbf·ft)

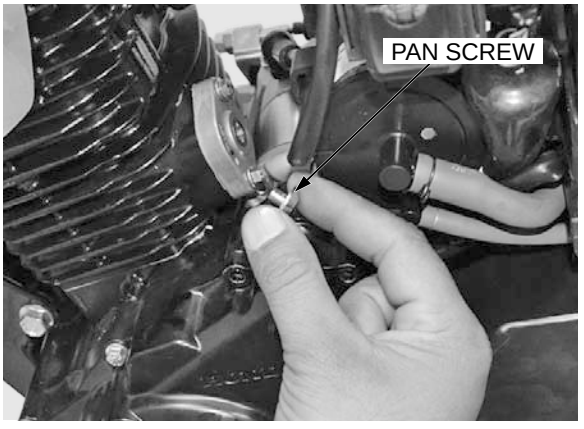

MEMO

COMPONENT LOCATION

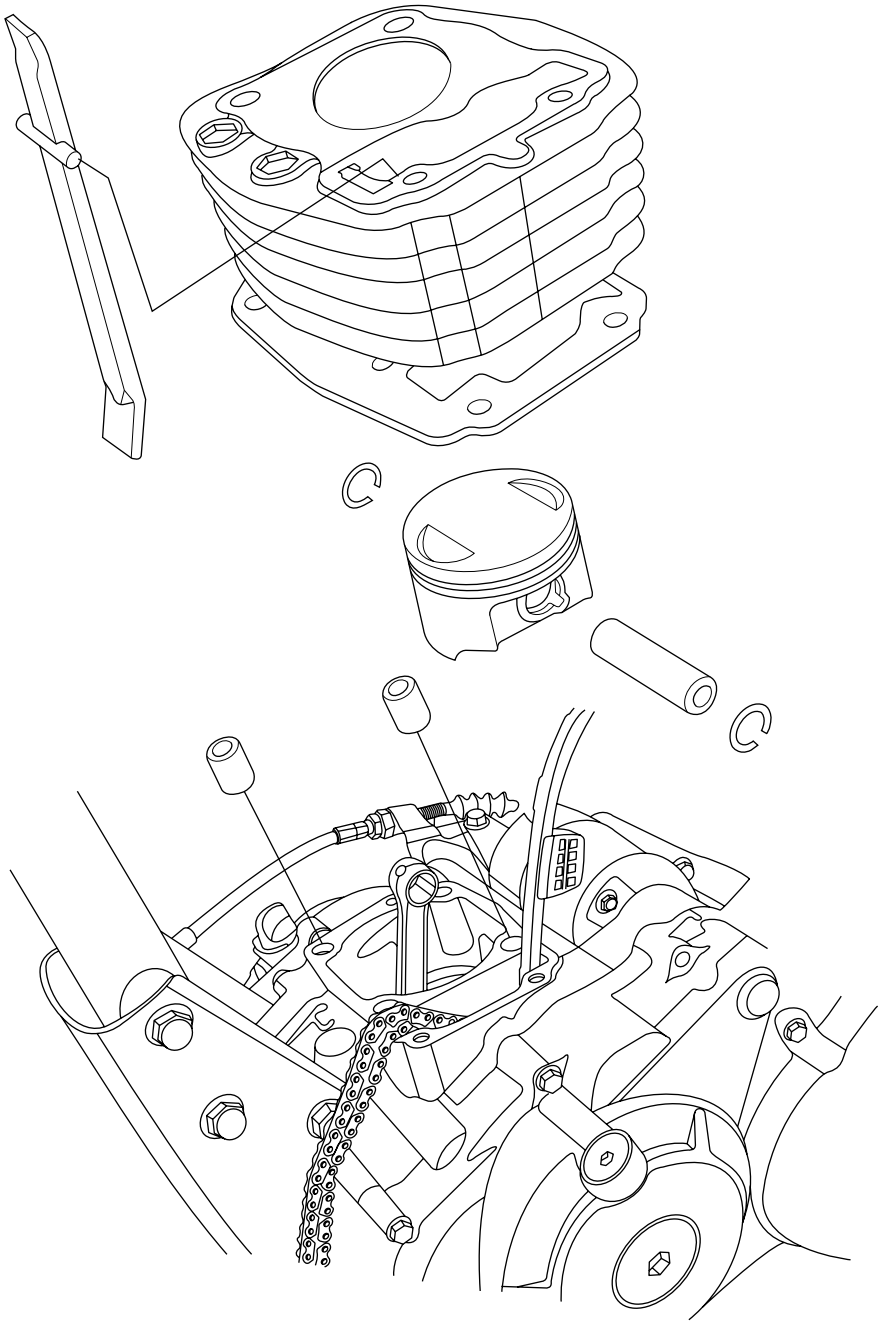

COMPONENT LOCATION	**8-0**	**TROUBLESHOOTING**	**8-1**
SERVICE INFORMATION	**8-1**	**CYLINDER/PISTON**	**8-2**

SERVICE INFORMATION

GENERAL

- The cylinder and piston services can be done with the engine installed in the frame.
- Take care not to damage the cylinder wall and piston.
- Be careful not to damage the mating surfaces when removing the cylinder. Do not strike the cylinder too hard during removal.
- Camshaft and rocker arm lubricating oil is fed through an oil passage in the cylinder. Clean the oil passage before installing cylinder.

SPECIFICATIONS

Unit: mm (in)

ITEM			STANDARD	SERVICE LIMIT
Cylinder	I.D.		57.300 – 57.310 (2.2559 – 2.2563)	57.40 (2.260)
	Out-of-round		–	0.10 (0.004)
	Taper		–	0.10 (0.004)
	Warpage		–	0.10 (0.004)
Piston, piston pin, piston ring	Piston O.D. at 10 (0.4) from bottom		57.280 – 57.295 (2.2551 – 2.2557)	57.20 (2.252)
	Piston pin hole I.D.		14.002 – 14.008 (0.5512 – 0.5514)	14.04 (0.553)
	Piston pin O.D.		13.994 - 14.000 (0.5510 - 0.5511)	13.96 (0.550)
	Piston-to-piston pin clearance		0.002 – 0.014 (0.0001 – 0.0006)	0.04 (0.002)
	Piston ring end gap	Top	0.07 - 0.17 (0.002 - 0.0066)	0.40 (0.016)
		Second	0.10 - 0.25 (0.004 - 0.010)	0.40 (0.016)
		Oil (side rail)	0.10 – 0.35 (0.008 – 0.013)	0.85 (0.033)
	Piston ring-to-ring groove clearance	Top	0.030 – 0.060 (0.0012 – 0.0024)	0.10 (0.004)
		Second	0.015 – 0.050 (0.0006 – 0.0020)	0.10 (0.004)
Cylinder-to-piston clearance			0.005 – 0.030 (0.0002 – 0.0012)	0.09 (0.004)
Connecting rod small end I.D.			14.010 – 14.028 (0.5516 – 0.5523)	14.06 (0.554)
Connecting rod-to-piston pin clearance			0.010 – 0.034 (0.0004 – 0.0013)	0.10 (0.004)

TROUBLESHOOTING

Compression too low, hard starting or poor performance at low speed

- Leaking cylinder head gasket
- Worn, stuck or broken piston rings
- Worn or damaged cylinder and piston

Compression too high, overheating or knocking

- Excessive carbon built-up on top of piston or combustion chamber

Excessive smoke

- Worn cylinder, piston or piston rings
- Improper installation of piston rings
- cored or scratched piston or cylinder wall

Abnormal noise (piston)

- Worn piston pin or piston pin hole
- Worn cylinder, piston or piston rings
- Worn connecting rod small end

TOOLS

Slider base piston
070SRTKSP008

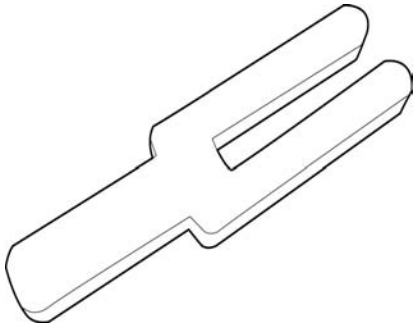

CYLINDER/PISTON

CYLINDER REMOVAL

The cylinder can be serviced with the engine installed in the frame

Remove the cylinder head (page 7-10).

Remove the gasket

Remove the cam chain guide.

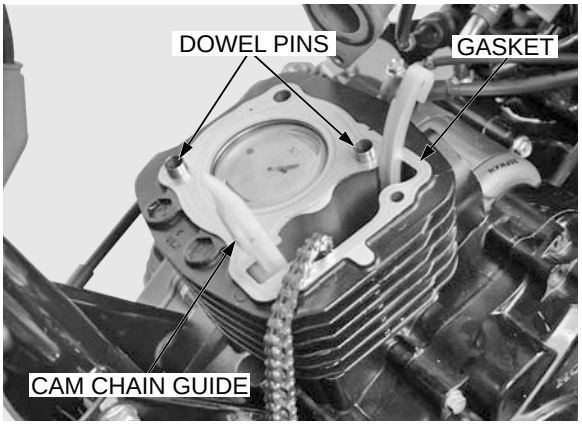

Do not strike the cylinder too hard and do not damage the mating surface with a screwdriver.

Lift the cylinder, and remove it, being careful not to damage the piston.

Clean the top of the cylinder thoroughly.

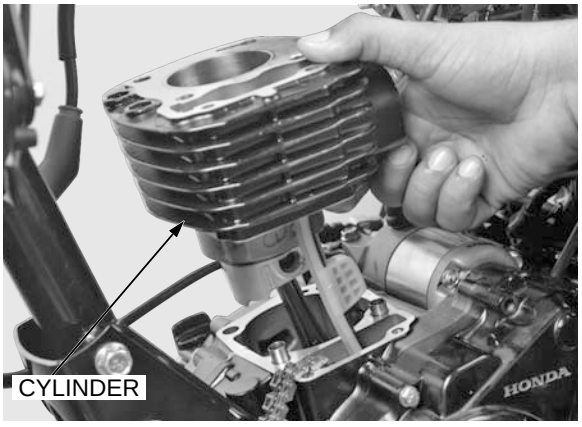

Remove the dowel pins and gasket.

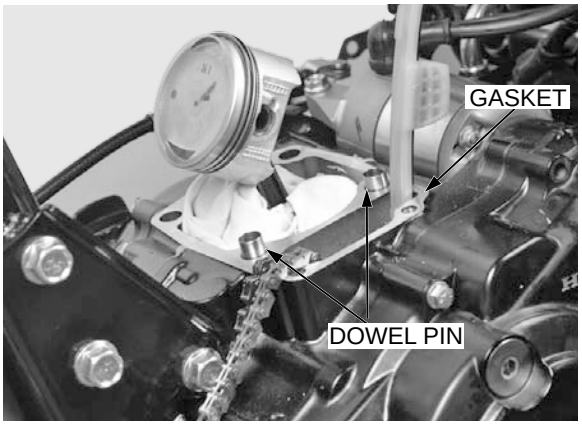

CYLINDER INSPECTION

Inspect the cylinder wall for scratches and wear.

Measure and record the cylinder I.D. with bore gauge at three levels in both the X and Y axes. Take the maximum reading to determine the cylinder wear.

SERVICE LIMIT: 57.40 mm (2.260 in)

Calculate the cylinder-to-piston clearance.

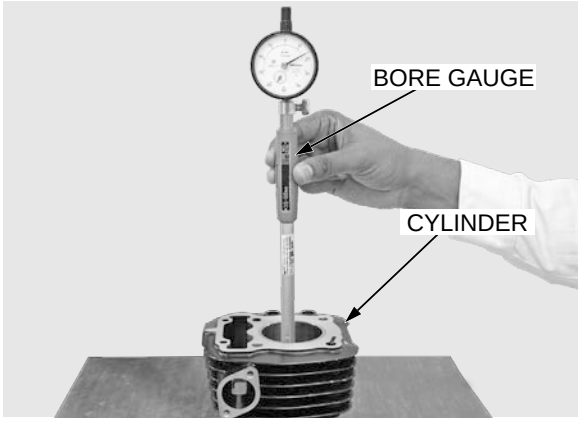

Calculate the cylinder for taper and out of round at three levels in an X and Y axis. Take the maximum reading to determine the out of round.

SERVICE LIMITS:

Taper:	**0.10 mm (0.004 in)**
Out of round:	**0.10 mm (0.004 in)**

The cylinder must be re-bored and an oversize piston fitted if the service limit is exceeded.

The following oversize pistons rings are available:
0.25 mm (0.010 in)
0.50 mm (0.019 in)
0.75 mm (0.029 in)
1.00 mm (0.039 in)

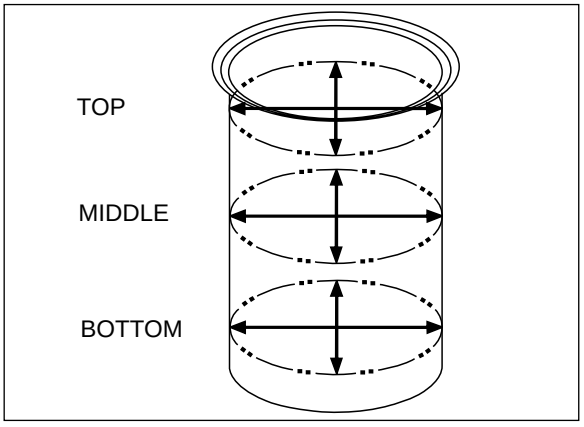

The cylinder must be re-bored so that the clearance for an oversize piston rings is:

0.005 – 0.030 mm (0.0002 – 0.0012 in).

Check the cylinder for warpage with a straight edge and feeler gauge across the studs and bolt holes as shown.

SERVICE LIMIT: 0.10 mm (0.004 in)

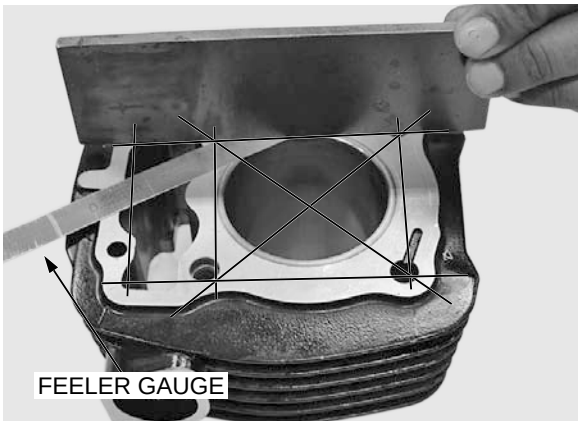

Place a clean shop towel in the crankcase opening to prevent the possibility of the piston pin clip falling into the crankcase.

PISTON REMOVAL

Remove the piston pin clips using the pliers.

TOOL:

Slider base piston **070SRTKSP008**

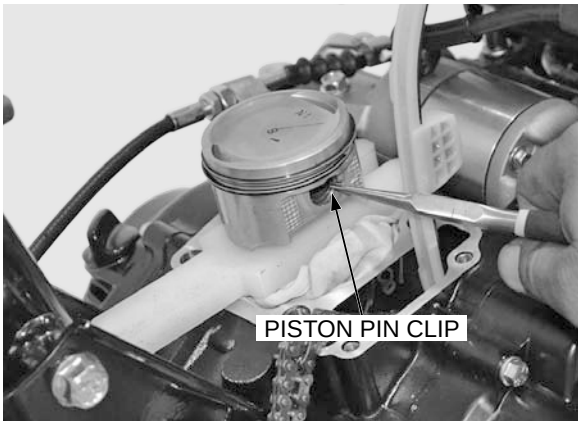

Remove the piston pin and remove the piston.

Inspect the piston rings for movement by pressing the rings. The rings should be able to move in its groove without catching.

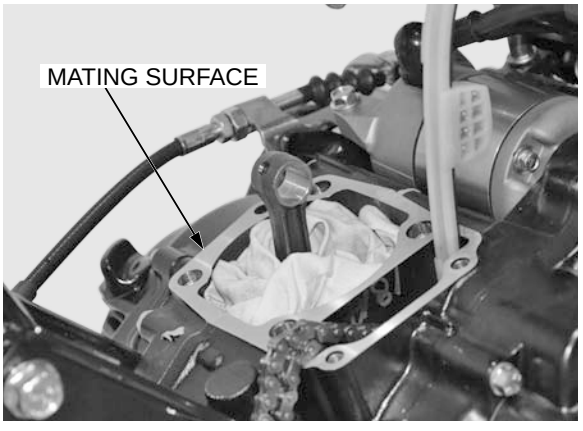

Spread each piston ring and remove it by lifting it up at a point just opposite and gap.

- Do not damage the piston ring by spreading the ends too far.
- Be careful not to damage the piston when the piston ring removal.

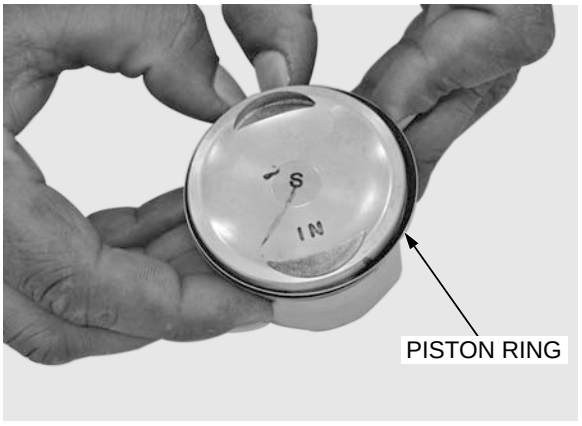

Never use a wire brush, it will scratch the grooves.

Clean carbon deposits from the piston ring grooves with a ring that will be discarded.

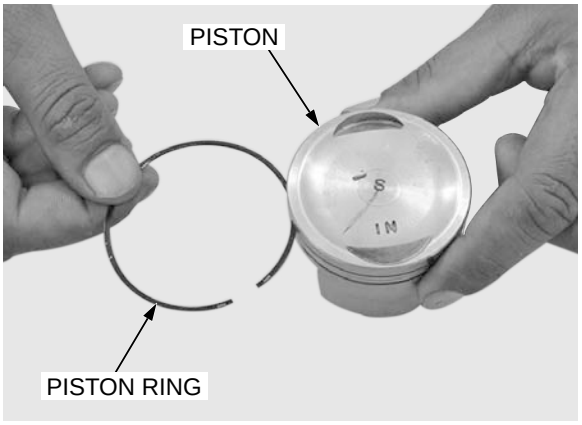

PISTON INSPECTION

Inspect the piston for cracks or other damage.

Inspect the ring grooves for excessive wear and carbon buildup.

Measure the piston O.D. at a point 10 mm (0.4 in) from the bottom and 90° to the piston pin hole.

SERVICE LIMIT: 57.20 mm (2.252 in)

Calculate the cylinder-to-piston clearance.

Take the maximum reading to determine the clearance (Cylinder I.D.:page 8-2).

SERVICE LIMIT: 0.09 mm (0.004 in)

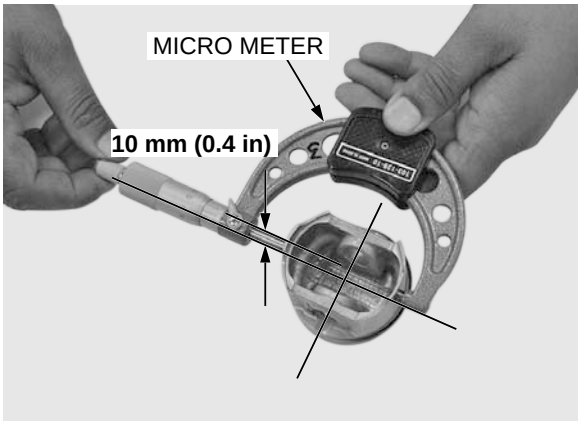

Measure the each piston pin hole I.D. in an X and Y axis. Take the maximum reading to determine I.D.

SERVICE LIMIT: 14.04 mm (0.553 in)



Measure the piston pin O.D. at three points.

SERVICE LIMIT: 13.96 mm (0.550 in)

Calculate the piston-to-piston pin clearance.

SERVICE LIMIT: 0.04 mm (0.002 in)

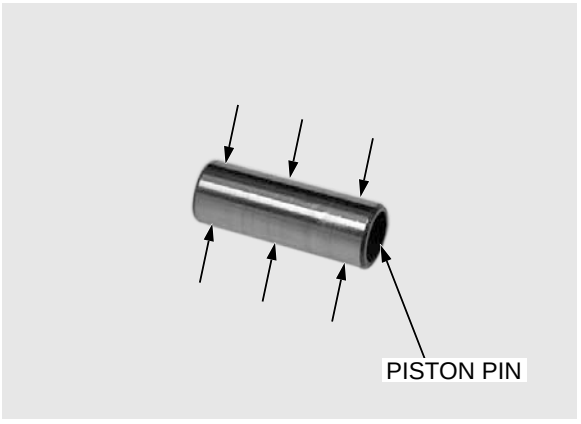

Measure the connecting rod small end I.D.

SERVICE LIMIT: 14.06 mm (0.554 in)

Calculate the connecting rod small end-to-piston pin clearance.

SERVICE LIMIT: 0.10 mm (0.004 in)

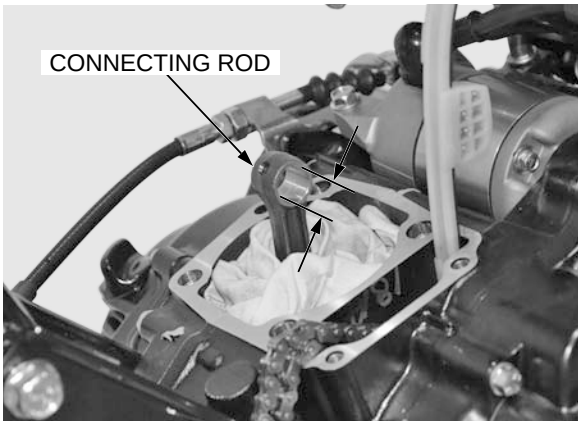

Using a piston, push the ring securely into the cylinder and measure the end gap using a feeler gauge.

SERVICE LIMITS:

Top: 0.40 mm (0.016 in)

Second: 0.40 mm (0.016 in)

Oil: 0.85 mm (0.033 in)

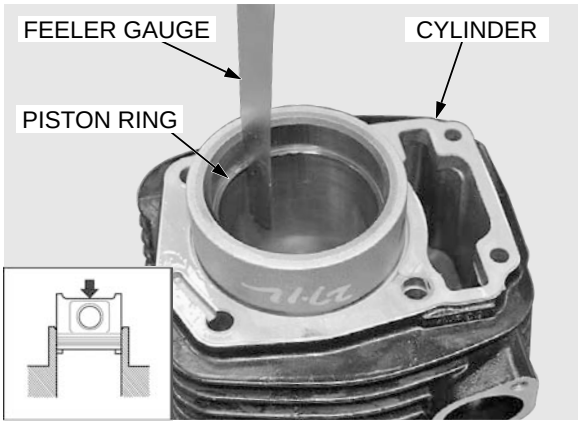

Always replace the piston rings as a set.

Inspect the piston rings, and replace them if they are worn.

Reinstall the piston rings into the piston grooves.

Push in the ring until the outer surface of the piston ring is nearly flush with the piston and measure the clearance using a feeler gauge.

SERVICE LIMITS:

Top: 0.10 mm (0.004 in)

Second: 0.10 mm (0.004 in)

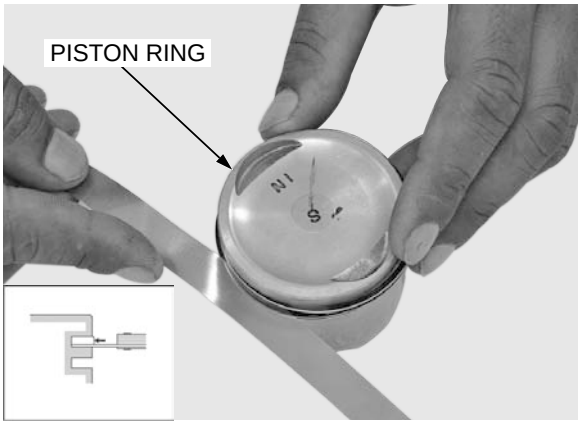

PISTON INSTALLATION

Clean the piston heads, ring lands and skirts.

Carefully install the piston rings onto the piston with their markings facing up:

- Do not damage the piston ring by spreading the ends too far.
- Be careful not to damage the piston when the piston ring installation.
- Do not confuse the top and second rings.
- After installing the rings they should rotate freely, without sticking.
- Space the ring end gaps 120 degrees apart.

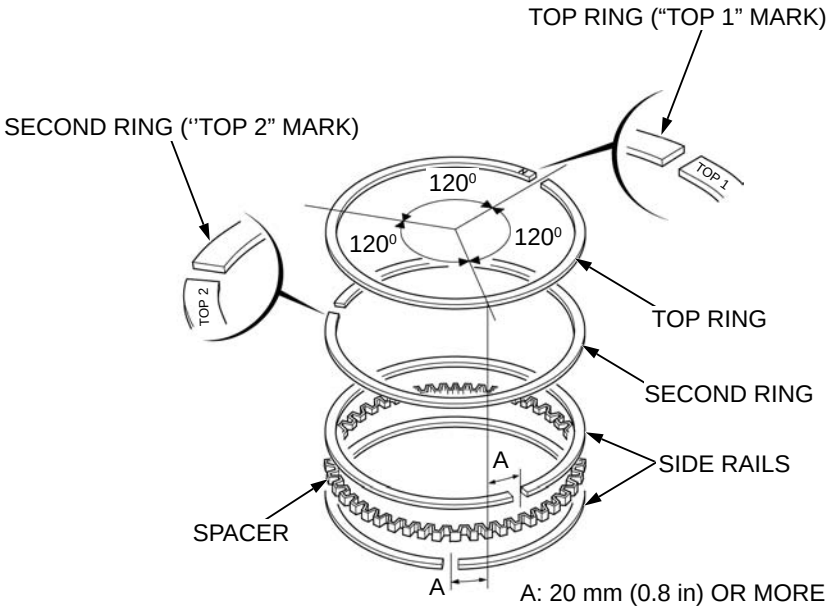

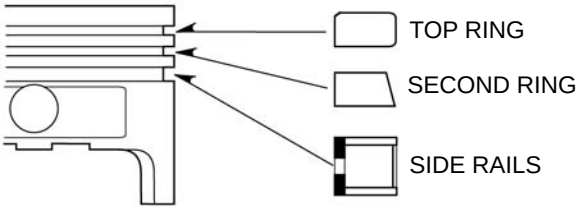



When cleaning the cylinder mating surface, place a shop towel over the cylinder opening to prevent dust or dirt enter the engine.

Clean any gasket material from the cylinder mating surface of the crankcase.

Place a shop towel over the crankcase opening to prevent piston pin clips from falling into the crankcase.

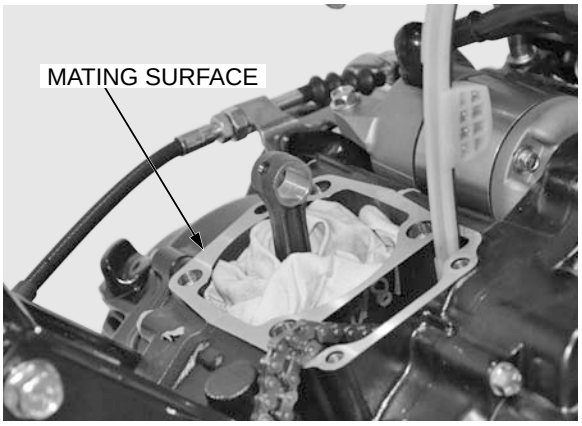

Apply molybdenum oil solution to the piston pin outer surface.

Install the piston with its “IN” mark facing the intake side.

Install the piston pin.

TOOL:

Slider base piston 070SRTKSP008

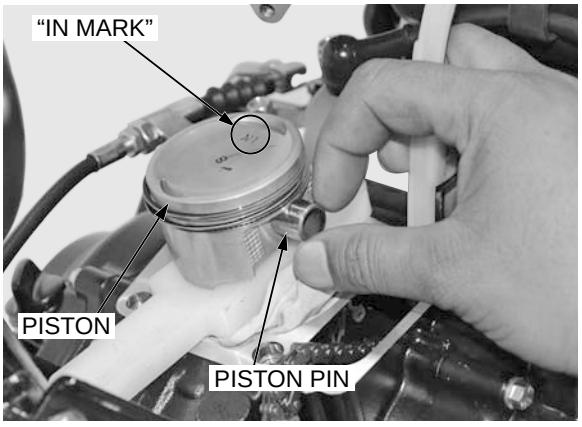

Install the new piston pin clips:

- Always use new piston pin clips. Reinstalling used piston pin clips may lead to serious engine damage.
- Set the piston pin clip in the groove properly.
- Do not align the clip’s end gap with the piston cutout.

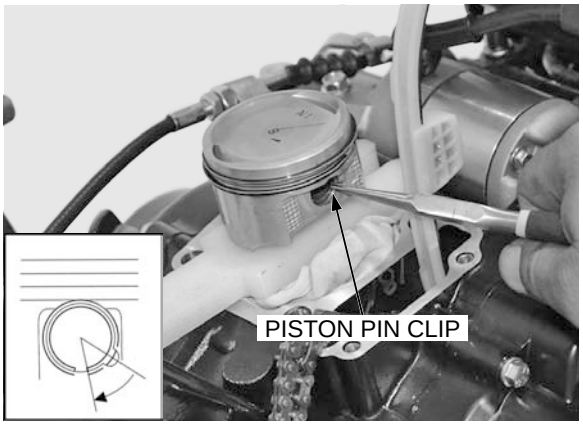

CYLINDER INSTALLATION

Do not reuse the gasket, replace with a new one.

Install the dowel pins and new gasket.

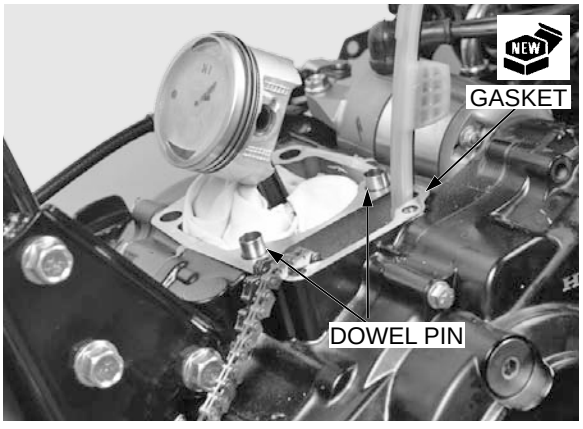

Be careful not to damage the piston rings and cylinder wall.

Apply clean engine oil to the cylinder inner surface, piston outer surface and piston rings.

Route the cam chain through the cylinder, and install the cylinder over the piston while compressing the piston rings with your fingers.

TOOL:

Slider base piston 070SRTKSP008

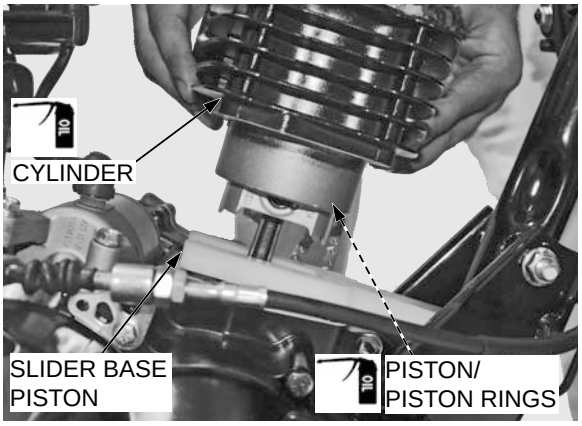

Insert the cam chain guide into the cylinder and crankcase groove.

Install the cylinder head (page 7-19).

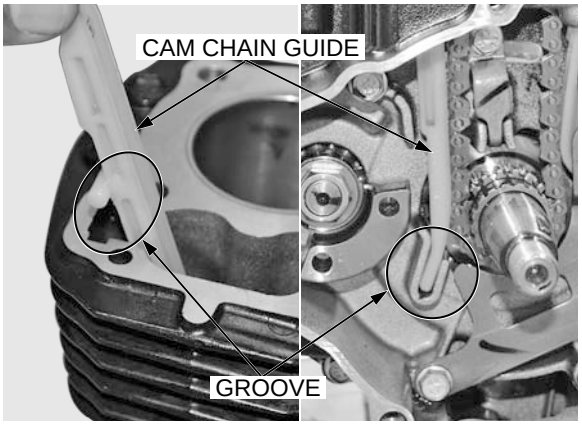

MEMO

COMPONENT LOCATION

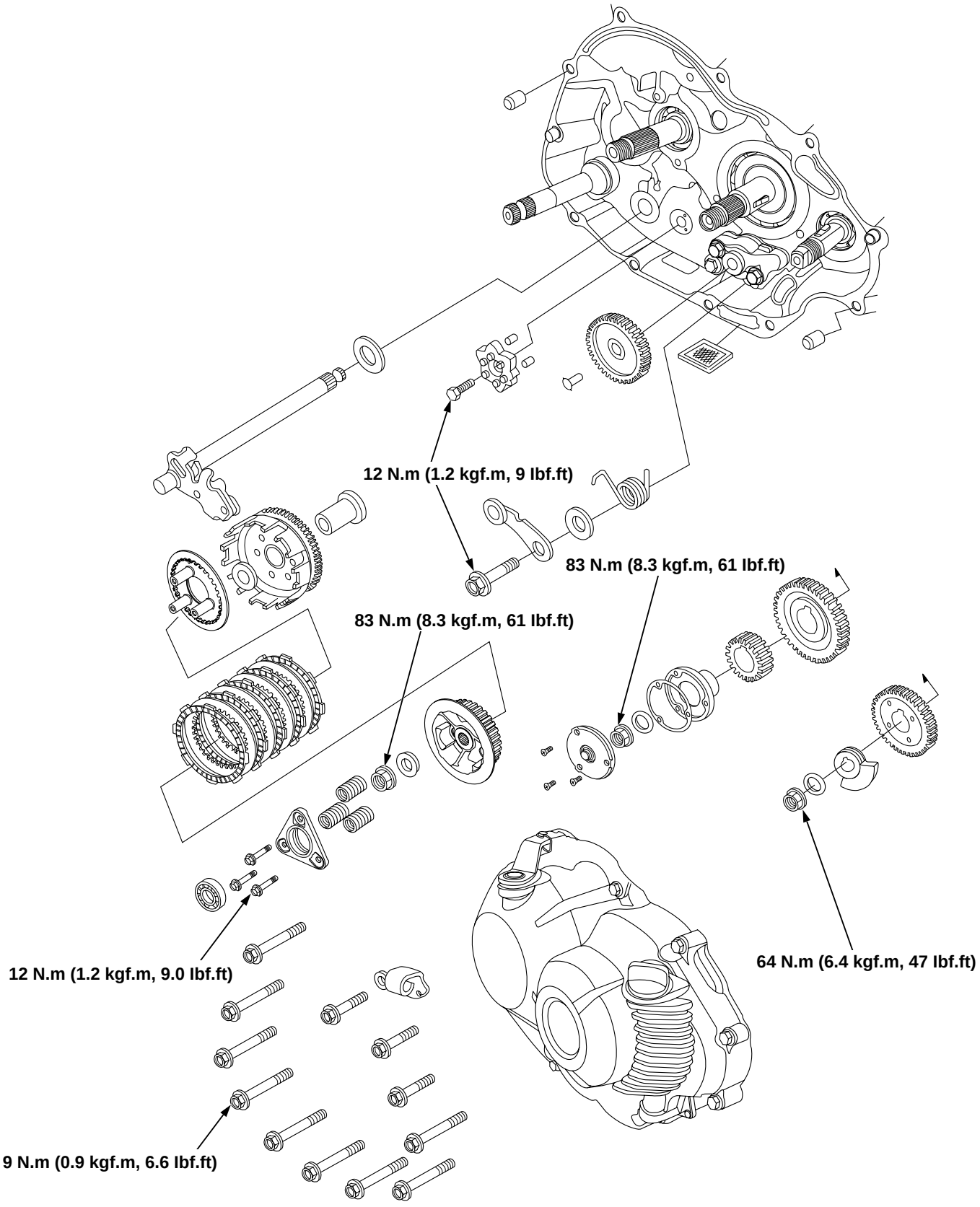

9. CLUTCH/GEARSHIFT LINKAGE

COMPONENT LOCATION	**9-0**	**CLUTCH**	**9-6**
SERVICE INFORMATION	**9-1**	**GEAR SHIFT LINKAGE**	**9-12**
TROUBLESHOOTING	**9-2**	**PRIMARY DRIVE GEAR**	**9-14**
RIGHT CRANKCASE COVER	**9-3**	**BALANCER DRIVE GEAR**	**9-15**

SERVICE INFORMATION

GENERAL

- This section covers service of the clutch, gearshift linkage, kick starter. All services can be done with the engine installed in the frame.
- Engine oil viscosity and level have an effect on clutch disengagement. When the clutch does not disengage or motorcycle creeps with clutch disengaged, inspect the engine oil level before servicing the clutch system.

SPECIFICATIONS

Unit: mm (in)

ITEM		STANDARD	SERVICE LIMIT
Clutch lever free play		10 – 20 (0.4 – 0.8)	–
Clutch	Spring free length	38.4(1.59)	37.5 (1.47)
	Disc thickness	2.92 – 3.08 (0.115 – 0.121)	2.6 (0.10)
	Plate warpage	–	0.20 (0.008)
Clutch outer I.D.		23.000 – 23.021 (0.9055 – 0.9063)	23.08 (0.909)
Clutch outer guide	O.D.	22.959 – 22.980 (0.9039 – 0.9047)	22.93 (0.903)
	I.D.	16.991 – 17.009 (0.6689 – 0.6696)	17.04 (0.671)
Mainshaft O.D. at clutch outer guide		16.966 – 16.984 (0.6680 – 0.6687)	16.95 (0.667)

TORQUE VALUES

ITEM	PART NO.	QTY	THREAD DIA. (mm)	TORQUE N·m (kgf·m, lbf·ft)	REMARKS	PAGE NO.
Clutch center lock nut	90202 – KRM – 840	1	14	83 (8.3, 61)	NOTE 1	Page 9–11
Clutch lifter plate bolt	90008 – KRM – 840	3	6	12 (1.2, 9)		Page 9–11
Oil filter rotor lock nut	90202 – KRM – 840	1	14	83 (8.3, 61)	NOTE 1	Page 9–12
Shift drum stopper arm bolt	90022 – KRM – 840	1	6	12 (1.2, 9)	NOTE 2	Page 9–13
Gearshift cam bolt	90003 – KVS – 900	1	6	12 (1.2, 9)	NOTE 2	Page 9–14

TOOLS

Gear holder 0706 - KRB - T7900 	Holder gear drum stopper arm 070SRTKSP010 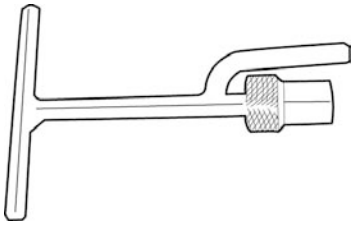	Clutch center holder 070SRTKSP011 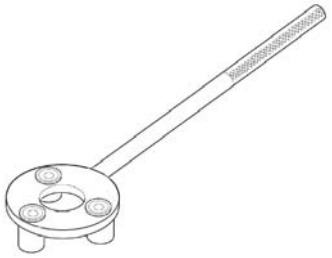

TROUBLESHOOTING

Faulty clutch operation can usually be corrected by adjusting the free play.

Clutch lever difficult to pull in

- Damaged, kinked or dirty clutch cable
- Improperly routed clutch cable
- Damaged clutch lifter mechanism
- Faulty clutch lifter plate bearing

Clutch will not disengage or motorcycle creeps with clutch disengaged

- Excessive clutch lever free play
- Clutch plate warped
- Oil level too high, improper oil viscosity, or additive used
- Check for oil additive

Clutch slips

- Clutch lifter sticking
- Worn clutch discs
- Weak clutch springs
- No clutch lever free play
- Check for oil additive

Hard to shift

- Misadjusted clutch cable
- Damaged or bent shift fork
- Bent shift fork shaft
- Incorrect engine oil viscosity
- Incorrect gearshift spindle assembly
- Damaged shift drum guide grooves

Transmission jumps out of gear

- Worn shift drum stopper arm
- Worn or broken gearshift spindle return spring
- Bent shift fork shaft
- Damaged shift drum guide grooves
- Worn gear dogs or dog holes

Gearshift pedal will not return

- Weak or broken gearshift spindle return spring
- Bent gearshift spindle

RIGHT CRANKCASE COVER

REMOVAL

The right crankcase cover can be serviced with the engine installed in the frame.

Drain the engine oil (page 3-11).

Remove the following:

– Kick starter pedal (page 6-2)

Loosen the lock nut and adjusting nut, then disconnect the clutch cable from the clutch lifter arm.

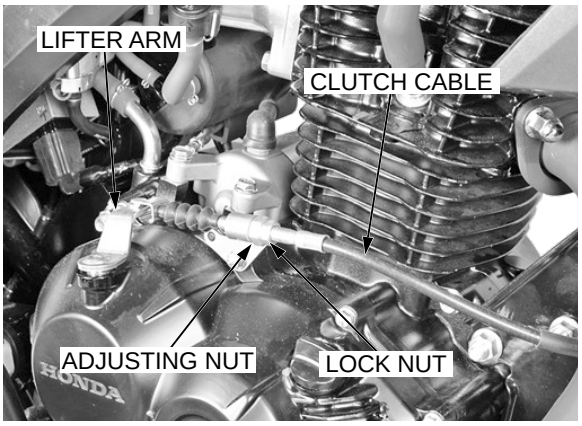

Remove the kick start stopper by removing bolts/nuts (2 nos.).

Loosen the right crankcase cover bolts (12 nos.) in a crisscross pattern in 2 or 3 steps, and remove the right crankcase cover bolts, clutch cable holder and right crankcase cover.

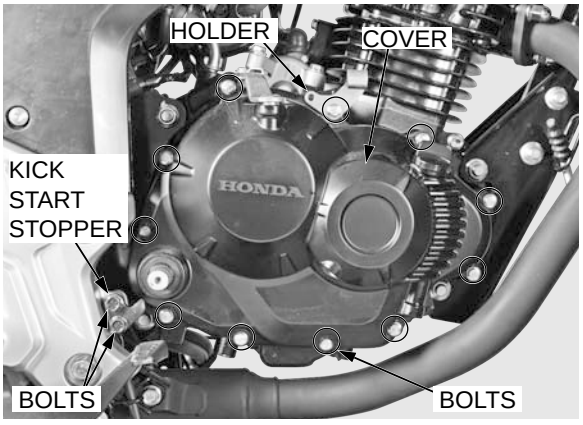

Remove the dowel pins (2 nos.) and gasket.

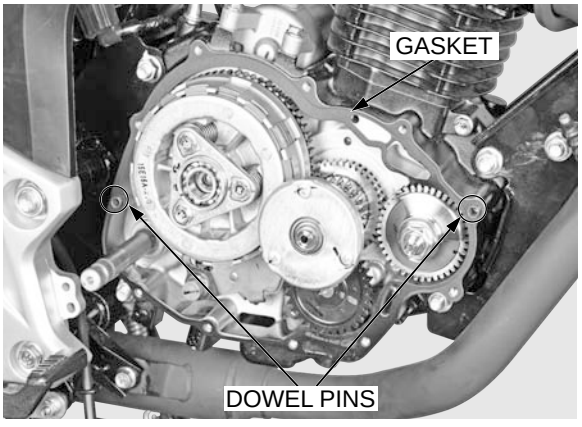

DISASSEMBLY

Remove the clutch lifter piece.

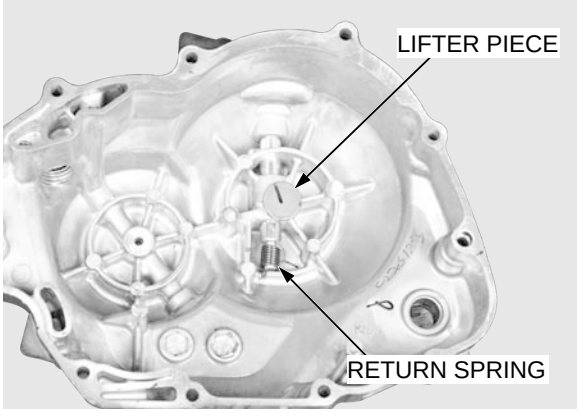

Rotate the lifter arm in anti clockwise direction then pull out the clutch lifter arm from the right crankcase cover, and remove the return spring.

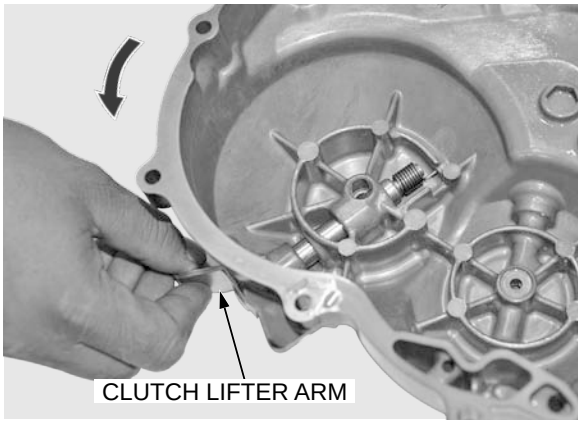

Remove the kick starter spindle dust seal.

Remove the clutch lifter arm and dust seal.

Check the clutch lifter arm for wear or damage.

Check the return spring for fatigue or damage.

Replace them if necessary.

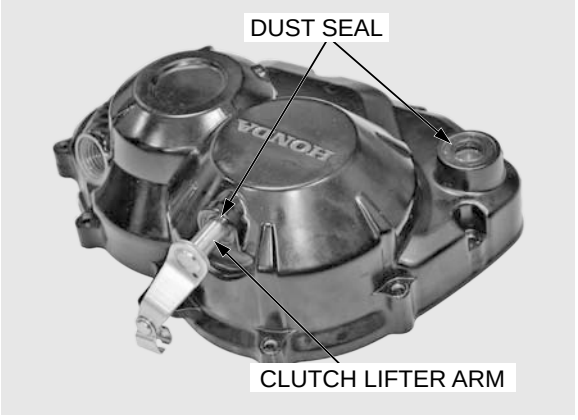

ASSEMBLY

Apply grease to a new kickstarter spindle dust seal lip and install it into the right crankcase cover.

Apply grease to a new clutch lifter arm dust seal lip and install it into the right crankcase cover.

Apply clean engine oil to the clutch lifter arm sliding surface, and install it into the right crankcase cover.

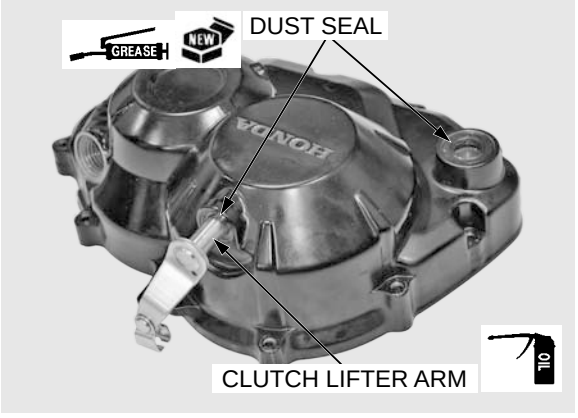

Install the return spring onto the lifter arm groove and and rotating the lifter arm in clockwise direction.

Hook the return spring ends as shown.

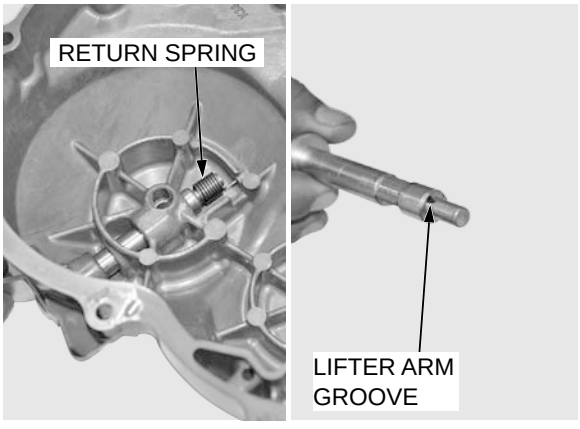

Install the clutch lifter piece into the clutch lifter arm groove by aligning the groove with the lifter piece hole.

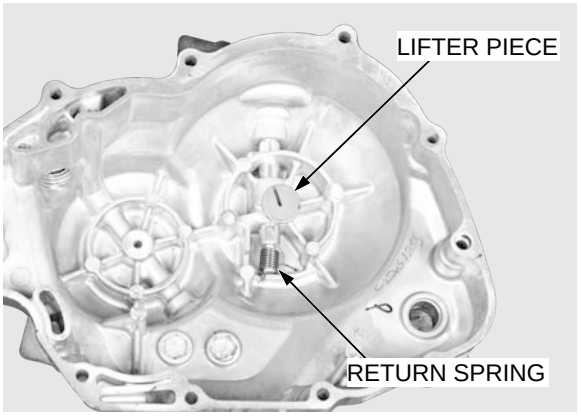

INSTALLATION

Be careful not to damage the mating surfaces.

Clean off any gasket material from the mating surfaces of the right crankcase and cover.

Install the dowel pins and new gasket.

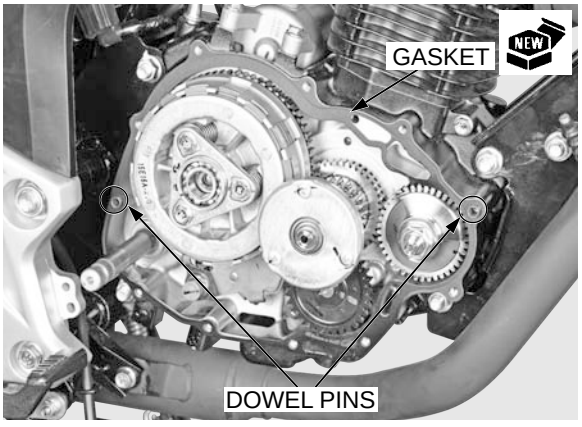

Install the right crankcase cover, clutch cable holder and right crankcase cover bolts.

Tighten the right crankcase cover bolts in a crisscross pattern in 2 or 3 steps.

TORQUE: 9 N·m (0.9 kgf·m, 6.6 lbf·ft)

Install the kick start stopper and tighten the bolts/nuts (2 nos.).

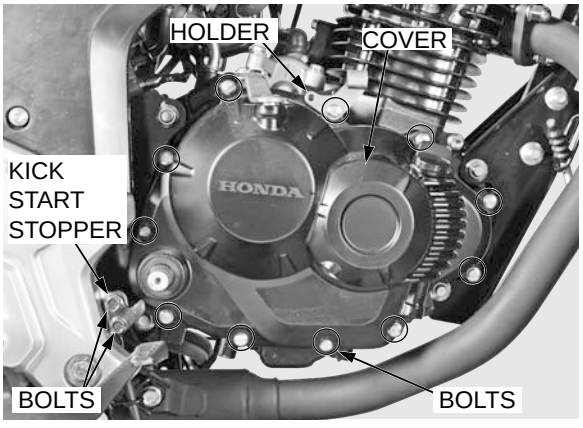

Connect the clutch cable to the clutch lifter arm.

Adjust the clutch lever free play (page 3-22).

Install the following:

– Kick starter pedal (page 6-6)

Fill the crankcase with the recommended engine oil (page 3-10).

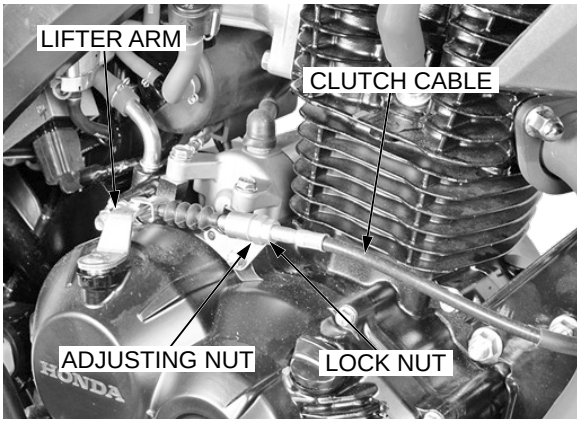

CLUTCH

REMOVAL

Remove the following:

– Right crankcase cover (page 9-3)
– Oil filter rotor cover (page 3-12)

Install the gear holder between the primary drive and driven gears as shown, and loosen the oil filter rotor lock nut using lock nut wrench.

TOOLS:

Gear holder 07006-KRBT900

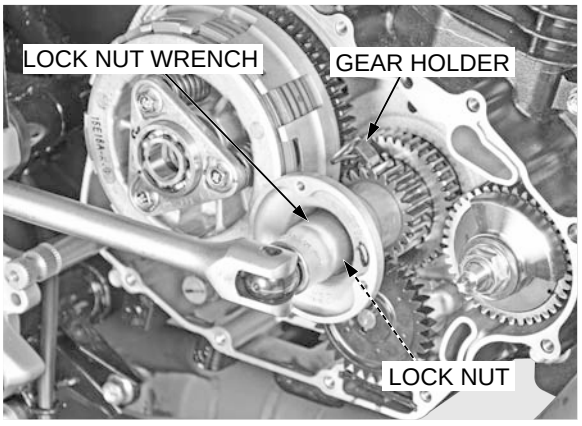

Remove the lock nut, lock washer and oil filter rotor.

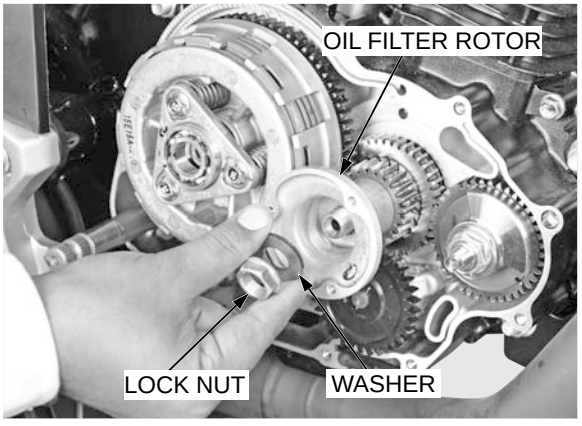

Loosen the clutch lifter plate bolts (3 nos.) in a crisscross pattern in several steps. Separate.

Remove the bolts, clutch lifter plate and clutch springs.

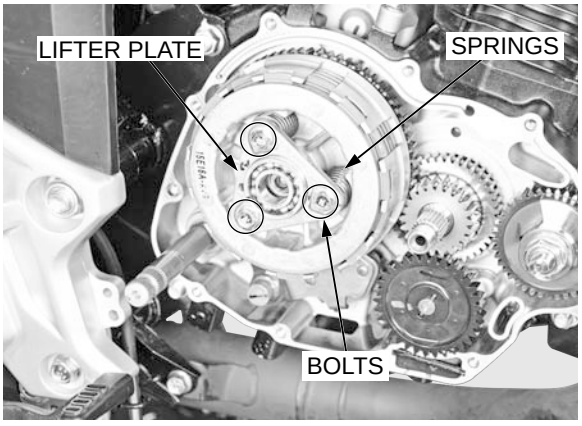

Attach the clutch center holder to the pressure plate using four clutch lifter plate bolts to hold the clutch center, then loosen the clutch center lock nut using the special tool.

TOOL:

Clutch center holder 070SRTKSP011

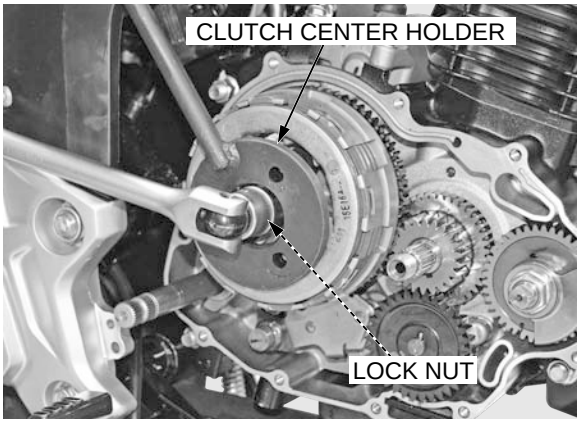

Remove the special tools, lock nut and lock washer.

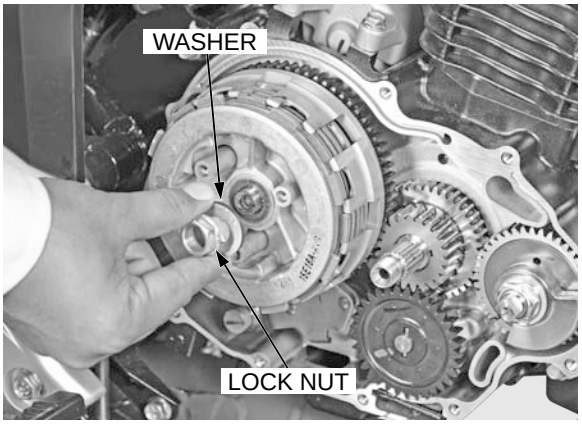

Remove the following:
- Clutch center
- Clutch disc A
- Clutch plates and discs B
- Pressure plate

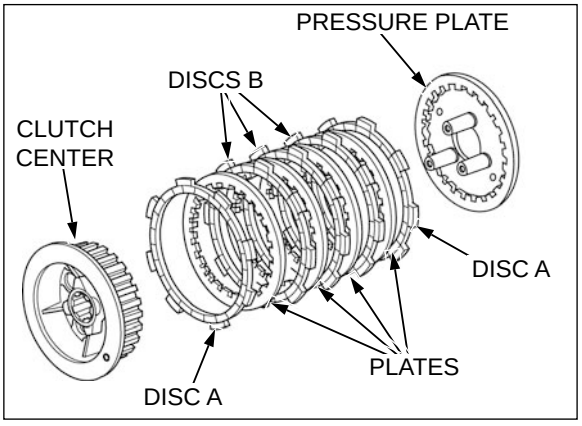

Remove the following:
- Washer
- Clutch outer

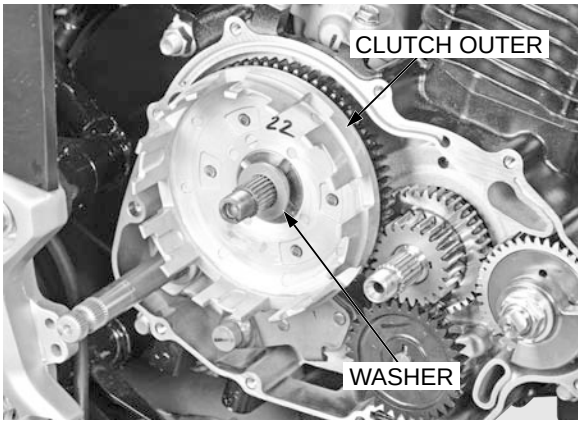

Remove the clutch outer guide.

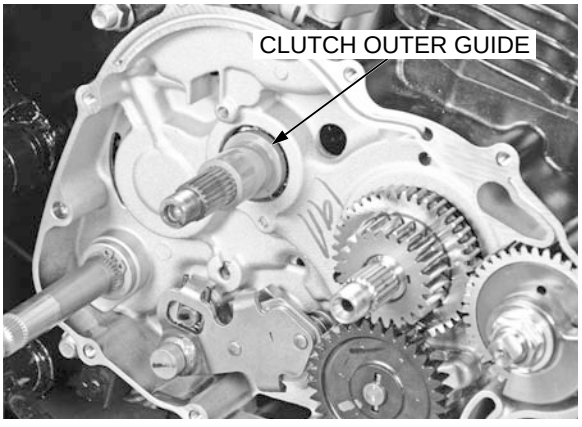

INSPECTION

CLUTCH LIFTER BEARING

Turn the inner race of the clutch lifter bearing with your finger.

The bearing should turn smoothly and quietly.

Also check that the bearing outer race fits tightly in the clutch lifter plate.

Replace the bearing if the inner race does not turn smoothly, quietly, or if the outer race fits loosely in the clutch lifter plate.

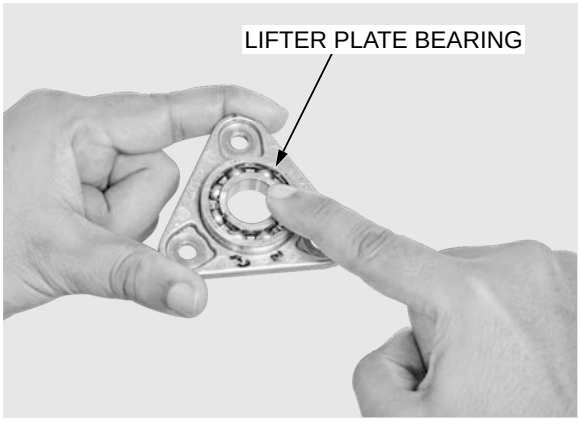

Replace the clutch springs as a set.

CLUTCH SPRING

Check the clutch spring for fatigue or damage.

Measure the clutch spring free length.

SERVICE LIMIT: 37.5 mm (1.47 in)

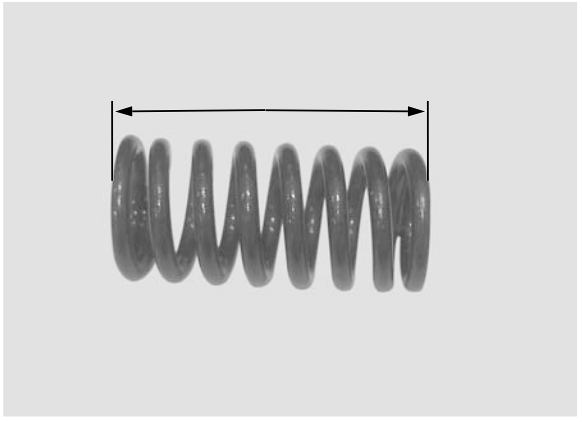

CLUTCH CENTER

Check the grooves of the clutch center for damage or wear caused by the clutch plates.

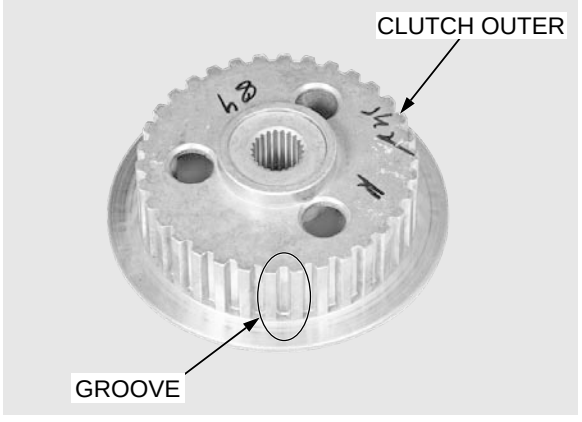

FRICTION DISC

Check the friction discs for signs of scoring or discolouration.

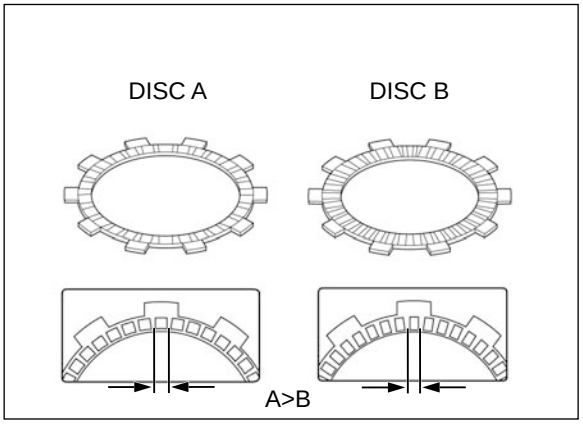

Replace the clutch discs and plates as a set.

Measure the friction disc thickness of each clutch disc.

SERVICE LIMIT:

Disc A, B: 2.6 mm (0.10 in)

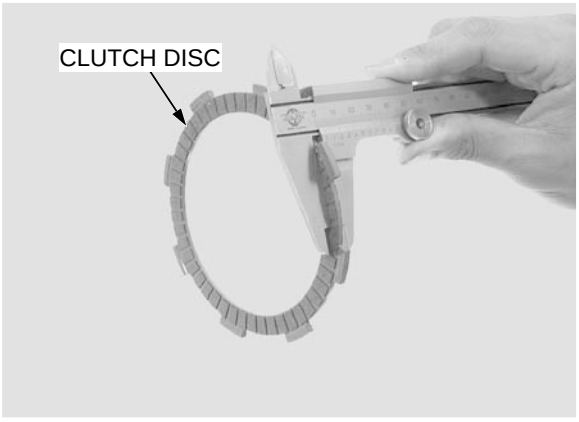

CLUTCH PLATE

Check the plate for discolouration.

Check the clutch plate for warpage on a surface plate using a feeler gauge.

SERVICE LIMIT: 0.20 mm (0.008 in)

Warped clutch plates prevent the clutch from disengaging properly.

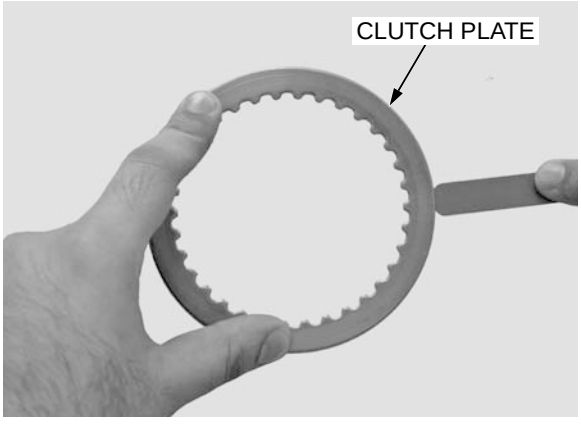

CLUTCH OUTER/OUTER GUIDE

Check the slots in the clutch outer for nicks, indentations or abnormal wear made by the clutch discs.

Check the primary driven gear teeth for wear or damage.

Measure the clutch outer I.D.

SERVICE LIMIT: 23.08 mm (0.909 in)

Check the clutch outer guide for damage or abnormal wear.

Measure the clutch outer guide I.D. and O.D.

SERVICE LIMITS:

I.D.: 17.04 mm (0.671 in)

O.D.: 22.93 mm (0.903 in)

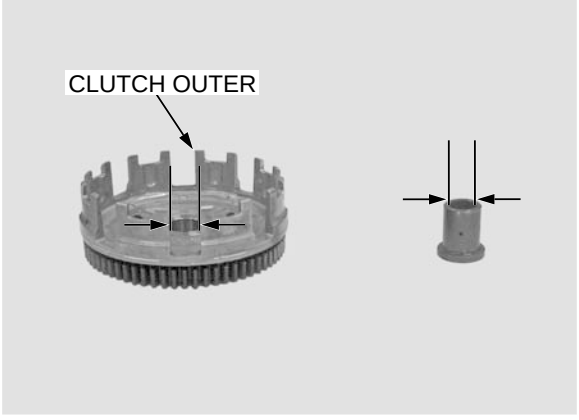

MAINSHAFT

Measure the mainshaft O.D. at the clutch outer guide.

SERVICE LIMIT: 16.95 mm (0.667 in).

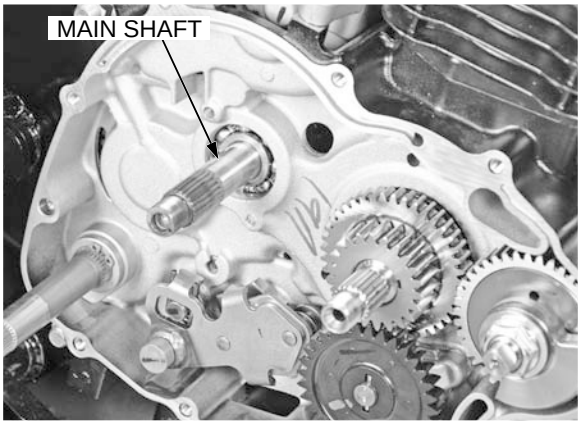

INSTALLATION

Apply molybdenum oil solution to the entire surface of the clutch outer guide, and install it onto the mainshaft .

Apply clean engine oil to the gear primary drive.

Install the oil pump driven gear.

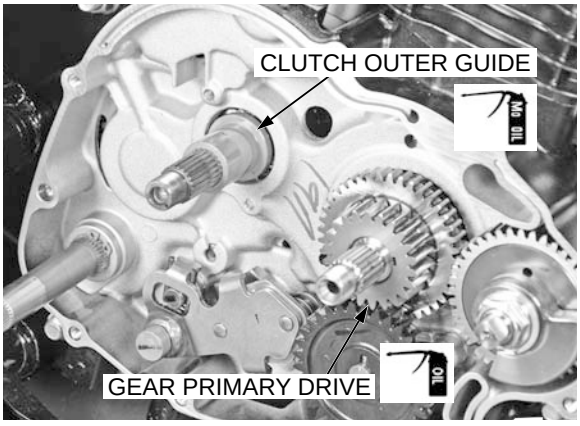

Install the clutch outer and washer.

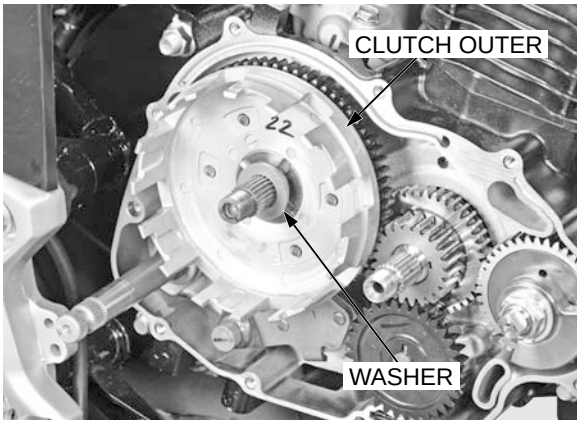

Coat the clutch discs with clean engine oil.

Assemble clutch disc A, disks B, clutch plates and pressure plate onto clutch center by aligning “O” mark of clutch center and pressure plate.

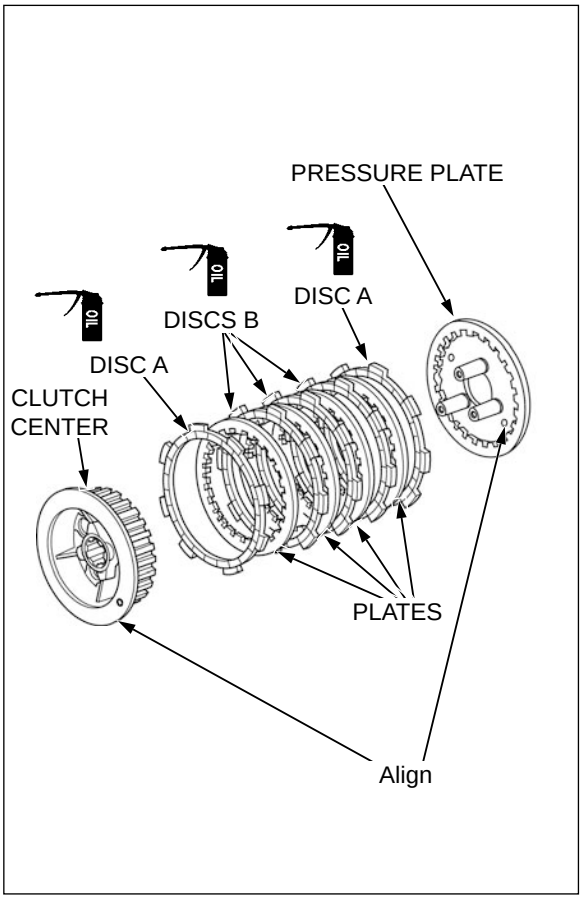

Install the tabs of clutch disc A (out side) to the shallow slots of the clutch outer.

Install the clutch center assembly into the clutch outer.

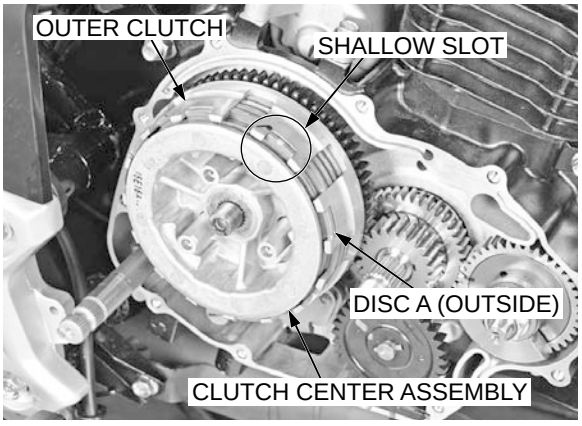

Install the lock washer.

Apply clean engine oil to the threads and seating surface of the clutch center lock nut, and install it.

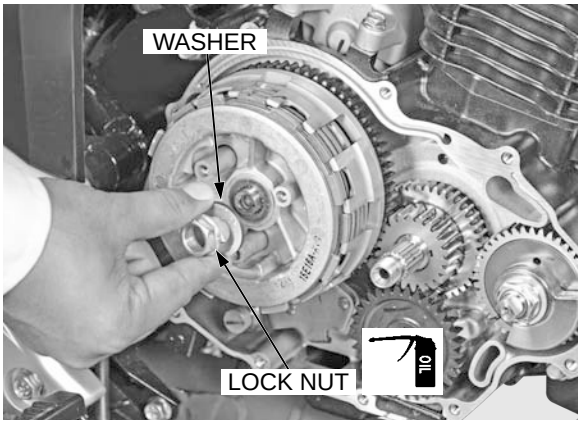

Attach the clutch center holder to the pressure plate using clutch lifter plate bolts to hold the clutch center, then tighten the clutch center lock nut to the specified torque using special tool.

TOOL:

Clutch center holder 070SRTKSP011

TORQUE: 83 N·m (8.3 kgf·m, 61 lbf·ft)

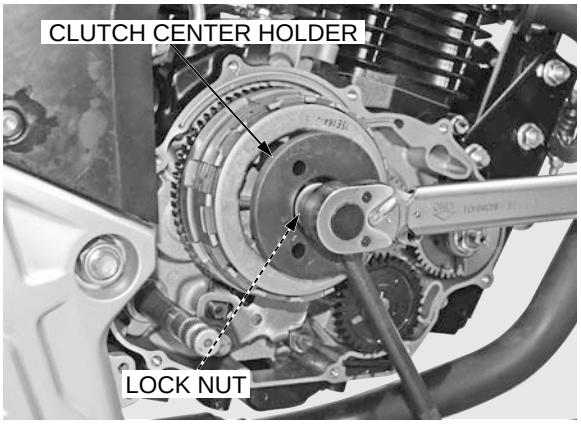

Install the clutch springs, clutch lifter plate and clutch lifter plate bolts.

Tighten the clutch lifter plate bolts to the specified torque in a crisscross pattern in several steps.

TORQUE: 12 N·m (1.2 kgf·m, 9 lbf·ft)

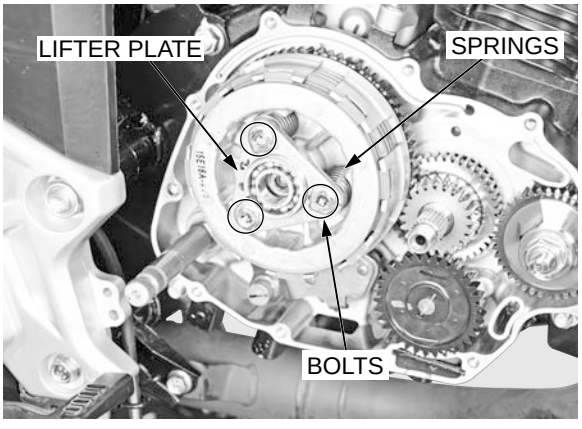

Clean the inside of the oil filter rotor.

Install the oil filter rotor and washer onto the crankshaft.

Apply clean engine oil to the threads and seating surface of the lock nut and install it with the chamfered side facing in.

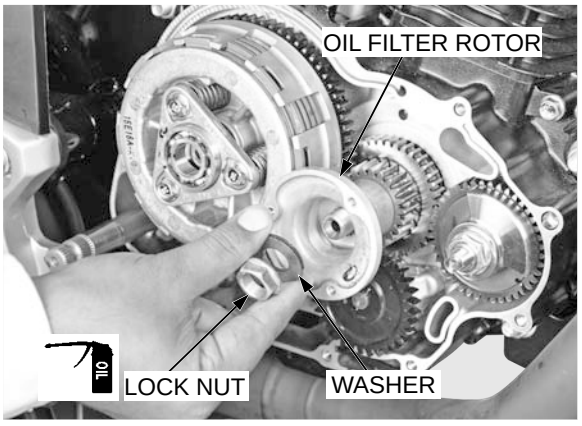

Install the gear holder between the primary drive and driven gears as shown, and tighten the oil filter rotor lock nut to the specified torque using the special tools.

TOOLS:

Gear holder 07006-KRBT900

TORQUE:83 N·m (8.3 kgf·m, 61 lbf·ft)

Install the following:

– Oil filter rotor cover (page 3-13)
– Right crankcase cover (page 9-5)

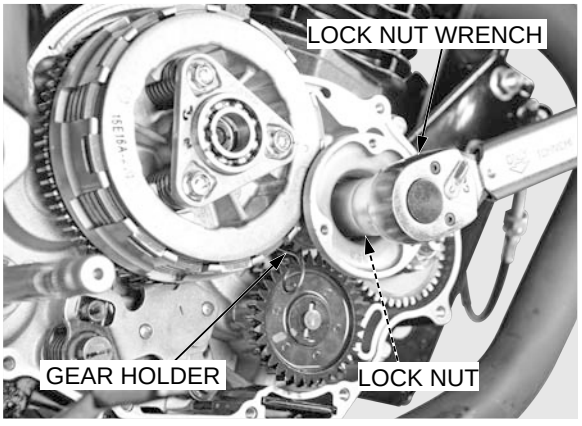

GEARSHIFT LINKAGE

REMOVAL

Remove the following:

– Clutch assembly (page 9-6)

Pull out the gearshift spindle from the crankcase.

Remove the thrust washer.

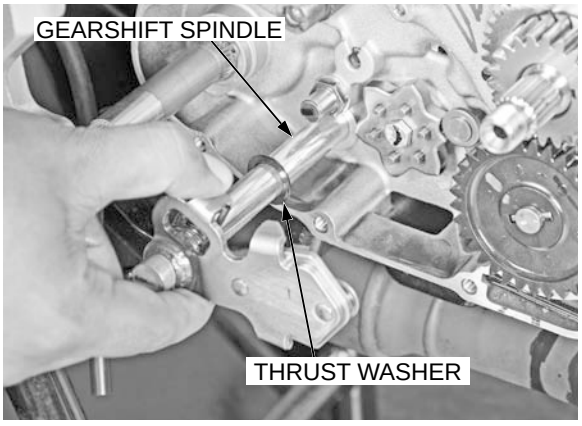

Remove the gearshift cam bolt by using special tool.

TOOL:

Holder gear drum stopper arm 070SRTKSP010

Remove the gearshift cam.

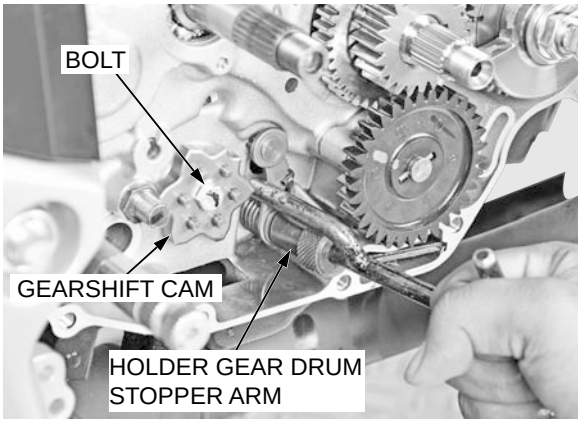

Remove the following:

– Dowel pins from the shift drum
– Stopper arm bolt
– Stopper arm
– Washer
– Return spring

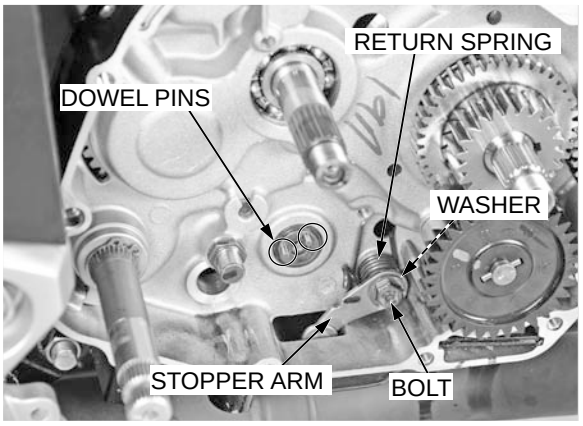

INSPECTION

Check the gearshift spindle for wear or bend.

Check the spindle plate for wear, damage or deformation.

Check the return spring for fatigue or damage.

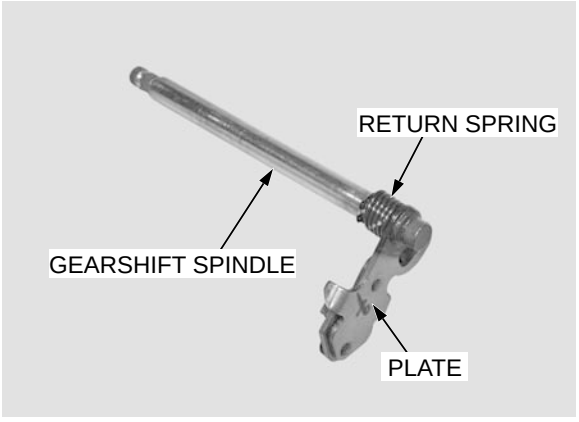

INSTALLATION

Apply locking agent to the stopper arm bolt threads.

Install the return spring, washer, stopper arm and bolt, and tighten the bolt to the specified torque.

TORQUE: 12 N·m (1.2 kgf·m, 9 lbf·ft)

Hook the return spring to the stopper arm groove.

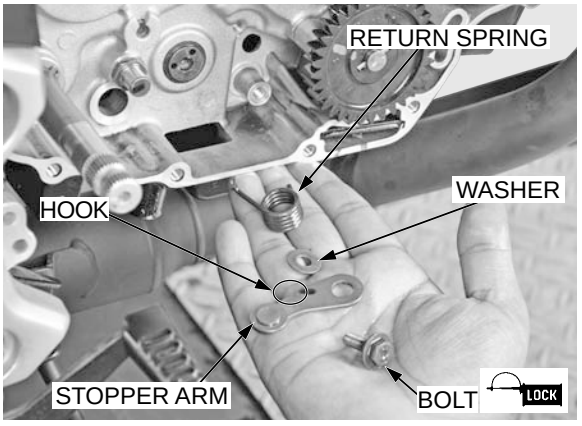

Install the dowel pins into the shift drum hole.

Hold the stopper arm using a special tool and install the gearshift cam, while aligning the pins hole with the dowel pins.

TOOL:

Holder gear drum stopper arm: 070SRTKSP010

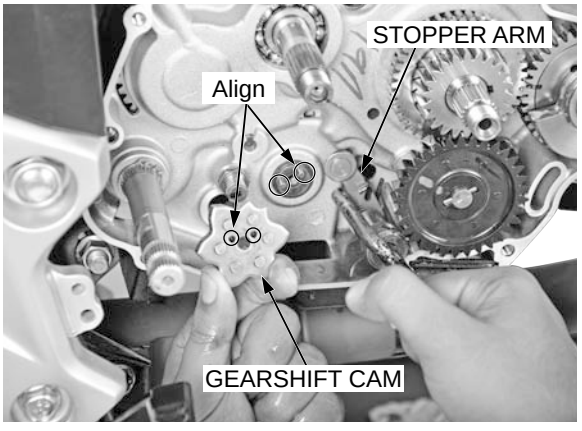

Apply a locking agent to the gearshift cam bolt threads.

Install and tighten the gearshift cam bolt to the specified torque.

TORQUE: 12 N·m (1.2 kgf·m, 9 lbf·ft)

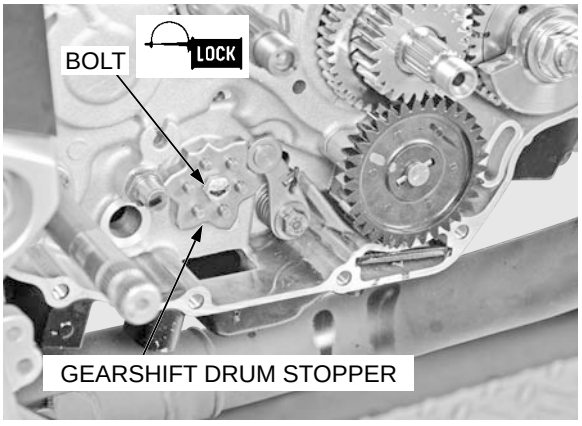

Apply clean engine oil to the gearshift spindle journal rotating area.

Install the thrust washer to the gearshift spindle, and insert the spindle into the crankcase.

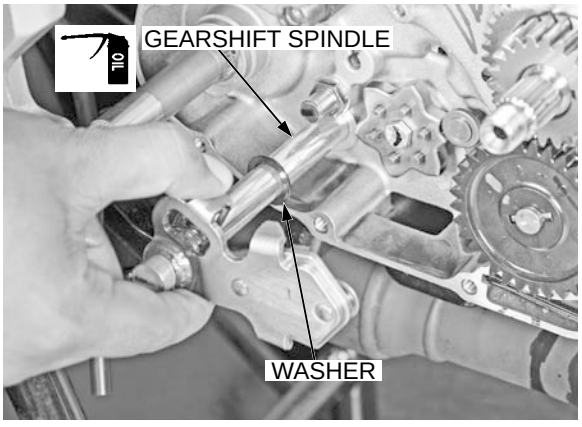

Install the gearshift spindle by aligning the return spring ends with the stopper pin.

Install the following:

– Clutch assembly (page 9-10)

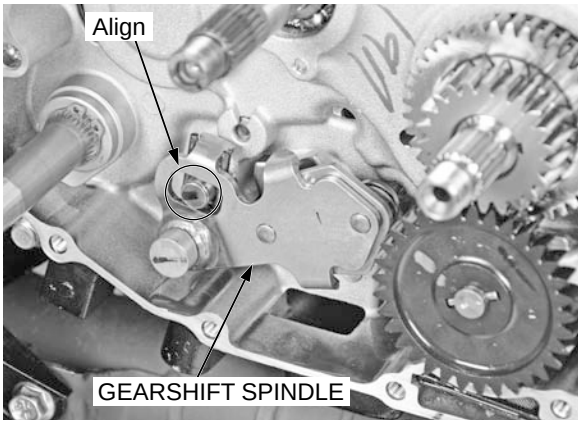

PRIMARY DRIVE GEAR

REMOVAL

Remove the clutch assembly (page 9-6).

Remove the primary drive gear.

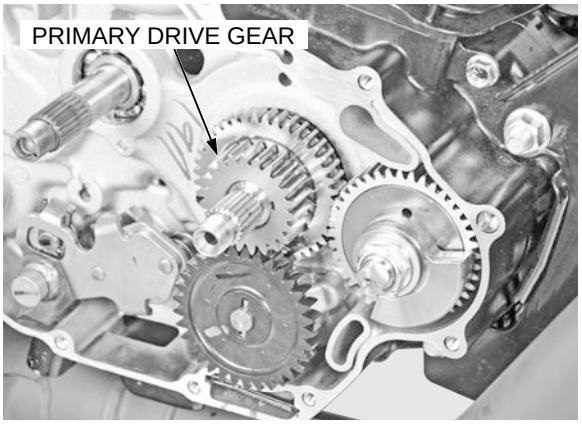

INSTALLATION

Apply clean engine oil to the primary drive gear.

Install the primary drive gear, while aligning the groove with the woodruff key.

Install the clutch assembly (page 9-10).

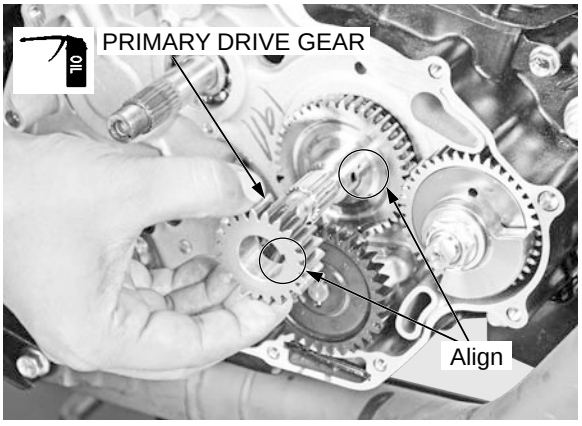

BALANCER DRIVE GEAR

REMOVAL

Remove the primary drive gear (page 9-14).

Remove the balancer drive gear.

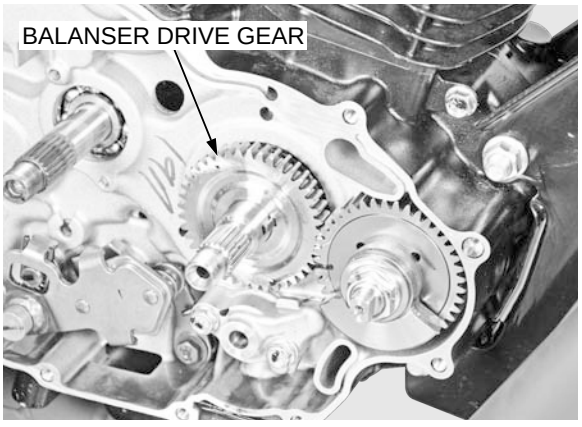

INSTALLATION

Apply clean engine oil to the balancer drive gear.

Install the balancer drive gear, while aligning the groove with the woodruff key.

Install the primary drive gear (page 9-15).

Install the clutch assembly (page 9-10).

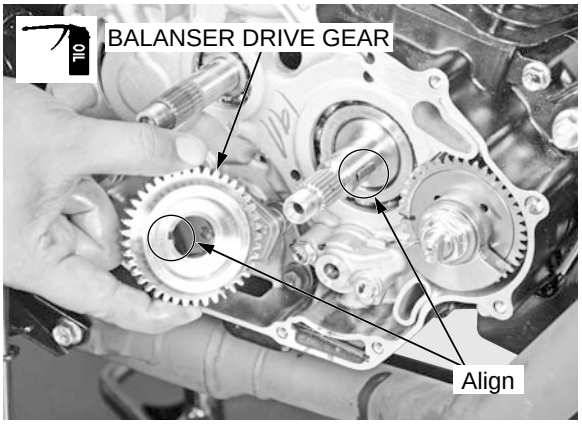

COMPONENT LOCATION

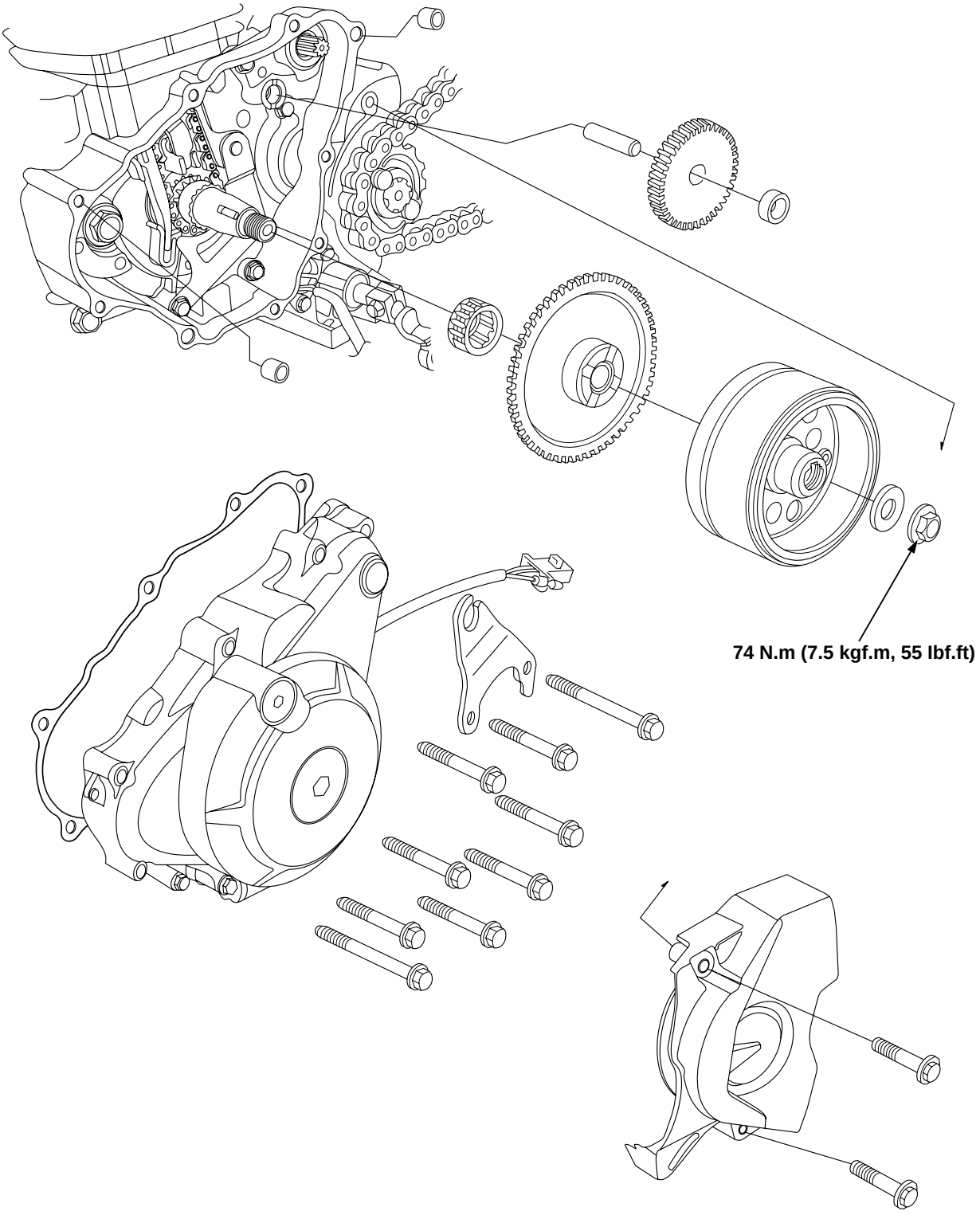

10. ALTERNATOR

COMPONENT LOCATION	10-0	STARTER CLUTCH	10-6
SERVICE INFORMATION	10-1	STARTER MOTOR	10-8
LEFT CRANKCASE COVER	10-2	STARTER / IGNITION PULSE GENERATOR	10-16
FLYWHEEL	10-4		

SERVICE INFORMATION

GENERAL

- This section covers the removal and installation of the flywheel and alternator stator. These services can be done with the engine installed in the frame.
- Refer to the alternator stator inspection (page 15-8).

SPECIFICATIONS

Unit: mm (in)

ITEM	STANDARD	SERVICE LIMIT
Starter driven gear boss O.D.	45.660 – 45.673 (1.7976 – 1.7981)	45.60 (1.795)
Starter motor brush length	10.00 – 10.05 (0.394 – 0.396)	6.5 (0.26)

TORQUE VALUES

ITEM	PART NO.	QTY	THREAD SIZE & TYPE	TORQUE VALUE N.m (kgf.m)	REMARKS	PAGE NO.
Flywheel lock nut	90201 – KRM – 840	1	14	74 (7.4, 55)	NOTE 1	Page 10–5
Starter clutch bolt	90085 – KSP – 901	6	6	16 (1.6, 12)	NOTE 2	Page 10–8
Ignition pulse generator mounting bolt	96001 – 06016 – 00	2	6	10 (1.0, 7)	NOTE 2	Page 10–17
Wire guide bolt	96001 – 06016 – 00	1	6	10 (1.0, 7)	NOTE 2	Page 10–17

TOOLS

Flywheel holder
070SRTKSP015

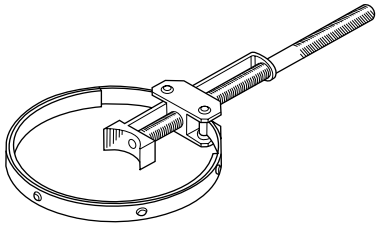

Flywheel puller
070SRTKSP014

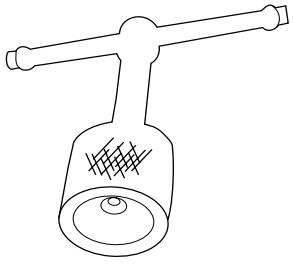

LEFT CRANKCASE COVER

REMOVAL

Remove the left side cover (page 2-3).

Disconnect the alternator 2P (White) connector and ignition pulse generator connector.

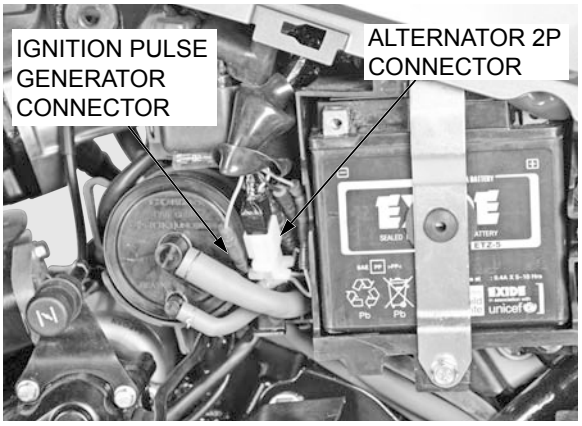

Remove the neutral switch wire from the left crankcase grooves.

Remove the choke cable stay bolts (2 nos) and choke cable stay.

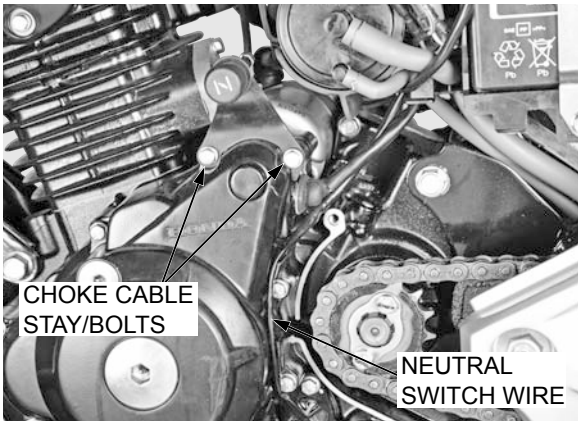

The left crankcase cover is magnetically attached to the flywheel, be careful to remove.

Remove the left crankcase rear cover (page 6-3).

Loosen the left crankcase cover bolts in a crisscross pattern in several steps.

Remove the left crankcase cover bolts and cover.

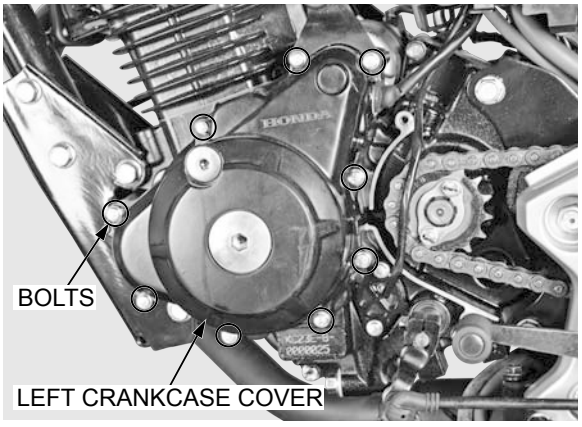

Remove the dowel pins (2 nos.) and gasket.

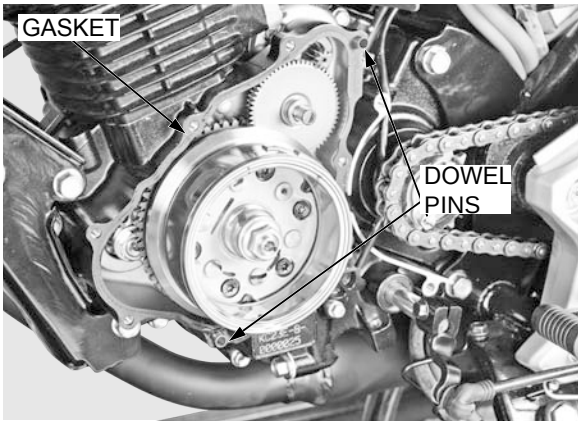

INSTALLATION

Install the new gasket and dowel pins.

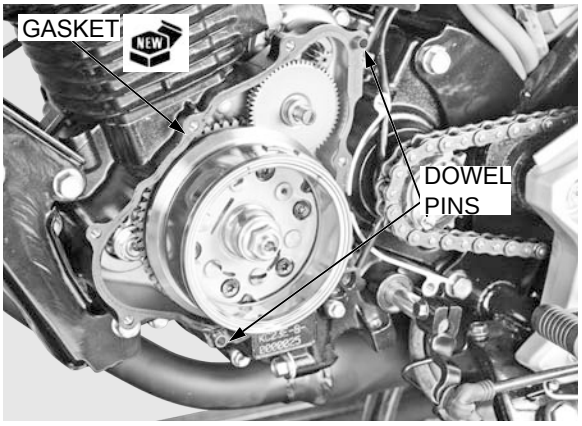

Install the left crankcase cover and tighten the bolt in a crisscross pattern in several steps.

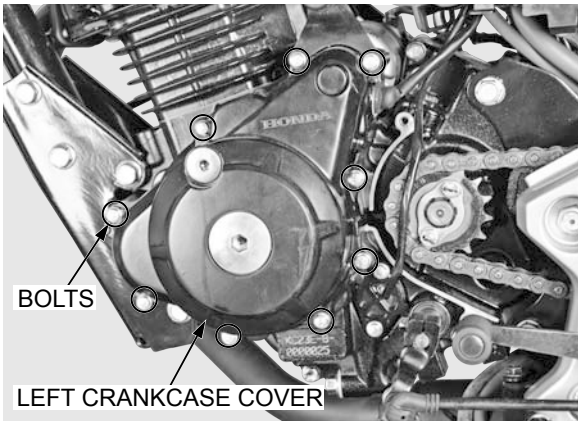

Tighten the choke cable stay bolts (2 nos.) to the specified torque.

TORQUE: 9 N.m (0.9 kgf.m, 6.6 lbf.ft)

Route the neutral switch wire to the left crankcase grooves.

Install the left crankcase rear cover (page 6-5).

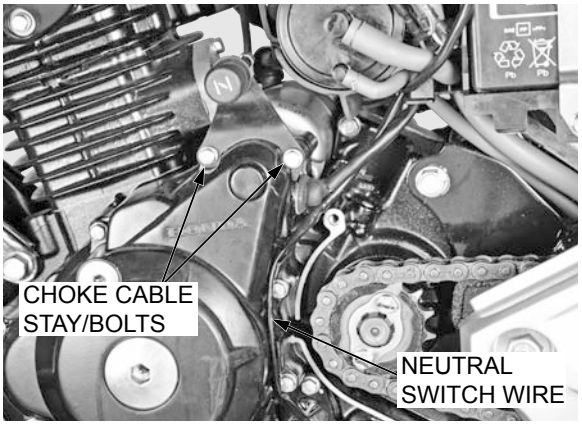

Connect the alternator 2P connector and ignition pulse generator wire connector.

Install the left side cover (page 2-3).

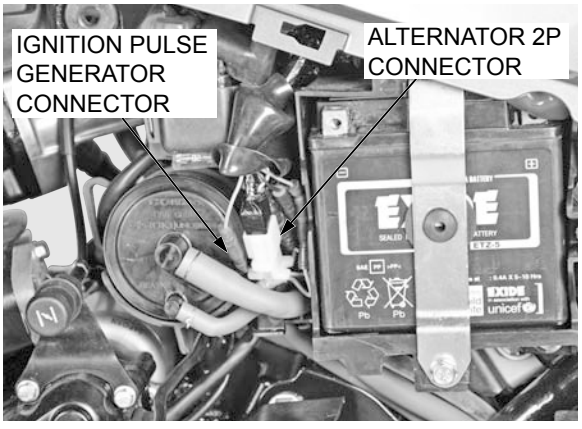

FLYWHEEL

REMOVAL

Remove the left crankcase cover (page 10-2).

Hold the flywheel with the flywheel holder and remove the flywheel lock nut and washer.

TOOL:

Flywheel holder 070SRTKSP015

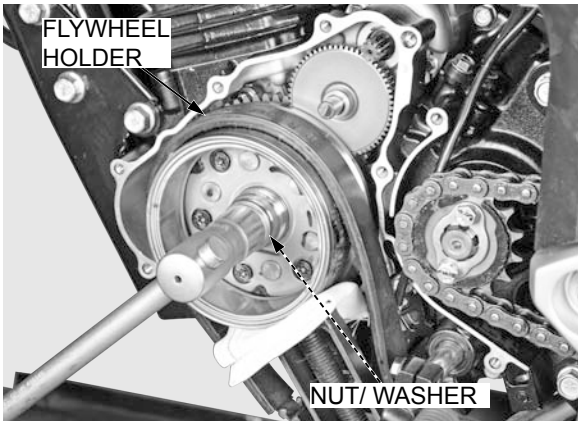

Remove the flywheel using the flywheel puller.

TOOL:

Flywheel puller 070SRTKSP014

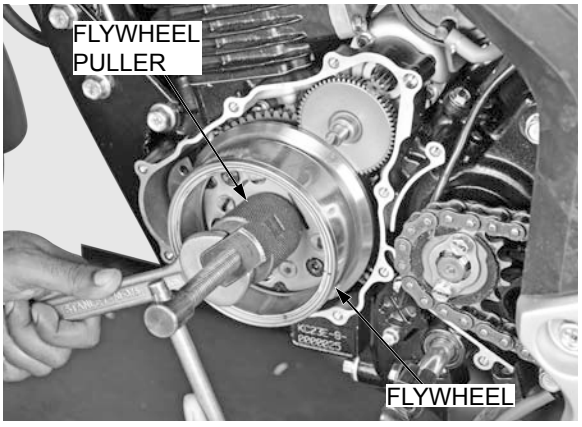

Remove the collar, shaft and starter idle gear.

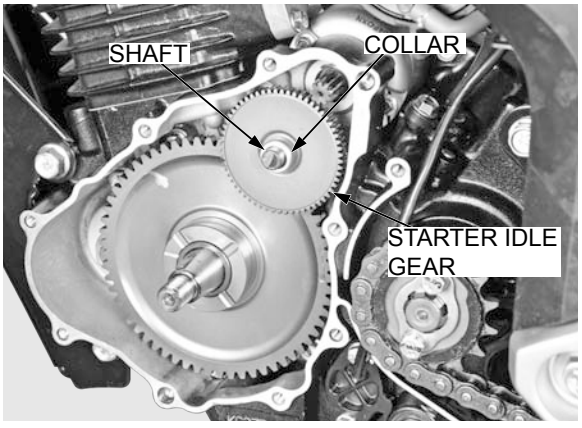

When remove the woodruff key be careful not to damage the key groove and crankshaft.

Remove the woodruff key and needle bearing.

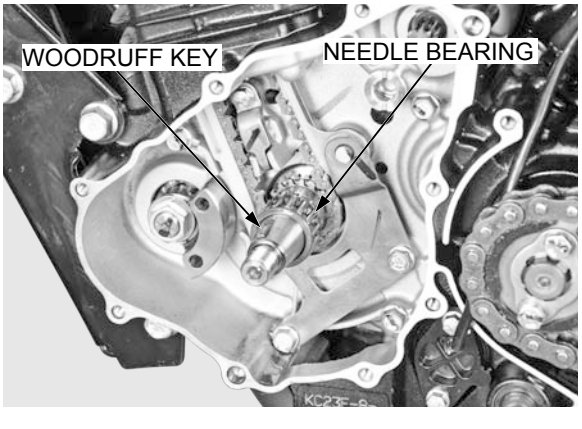

INSTALLATION

When install the woodruff key, be careful not to damage the key groove and crankshaft.

Apply clean engine oil on the crankshaft.

Install the needle bearing and woodruff key.

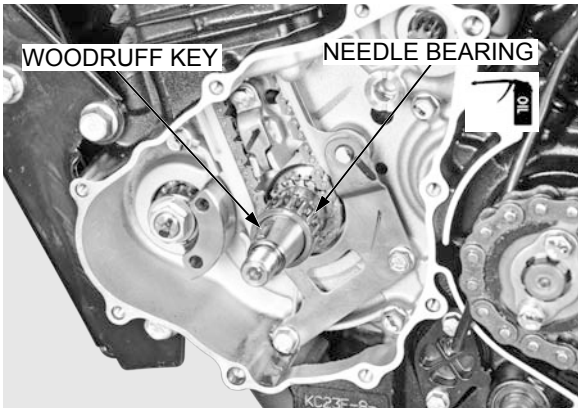

Install the flywheel with the oneway clutch assy., while aligning the woodruff key on the crankshaft.

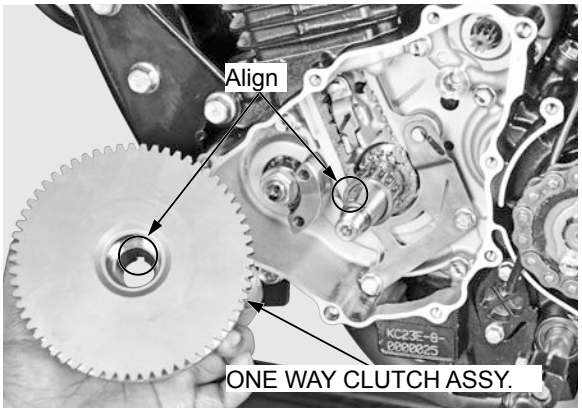

Apply clean engine oil to the flywheel lock nut threads and seating surface.

Install the washer and lock nut.

Hold the flywheel with the flywheel holder, tighten the lock nut to the specified torque.

TOOL:

Flywheel holder 070SRTKSP015

TORQUE: 74 N.m (7.4 kgf.m, 55 lbf.ft)

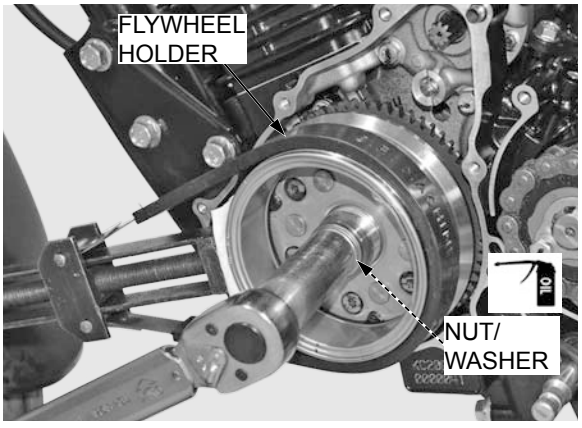

Apply clean engine oil to the starter idle gear and shaft.

Install the starter idle gear, shaft and collar.

Install the left crankcase cover (page 10-3).

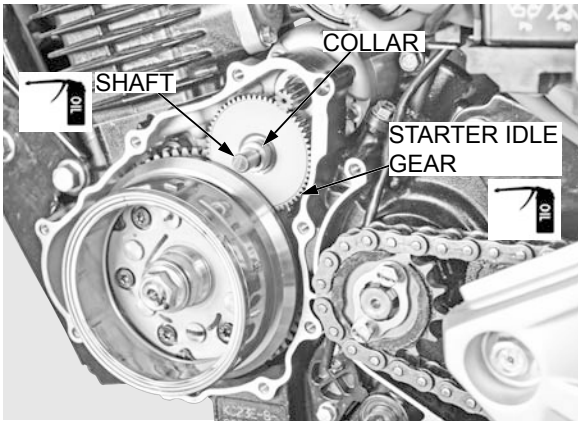

STARTER CLUTCH

DISASSEMBLY

Remove the flywheel (page 10-4).

Remove the starter driven gear from the flywheel while turning the driven gear counterclockwise.



Remove the starter clutch bolts while holding the flywheel with a flywheel holder.

Tool:

Flywheel holder 070SRTKSP015

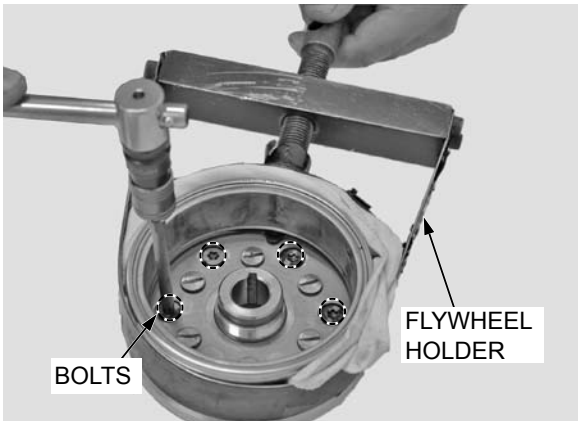

Remove the starter clutch assembly from the flywheel.

Remove the stater clutch cover.

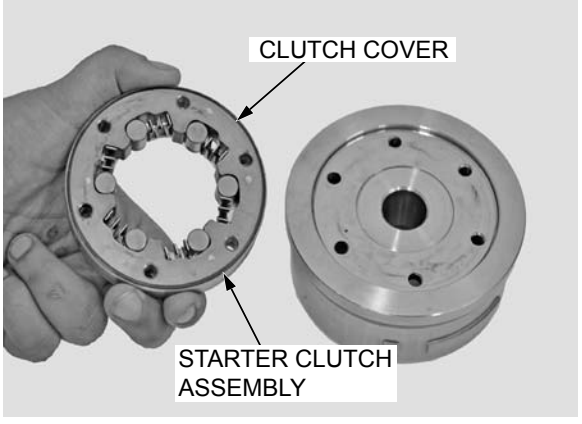

Do not bend or tap the plate when removing the spring guides.

Remove the following:

– Rollers
– Spring

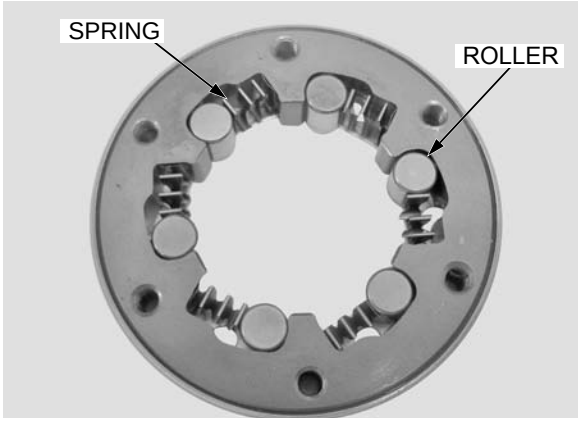

Check the spring for bend or damage.

Check the roller for wear or damage.

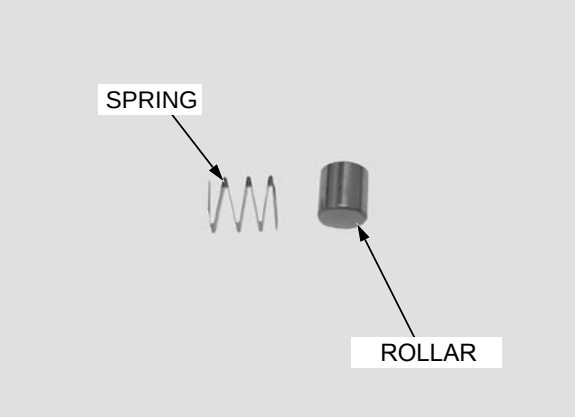

Check the roller contacting surface of the starter driven gear for abnormal wear or damage.

Measure the starter driven gear boss O.D.

SERVICE LIMIT: 45.60 mm (1.795 in)

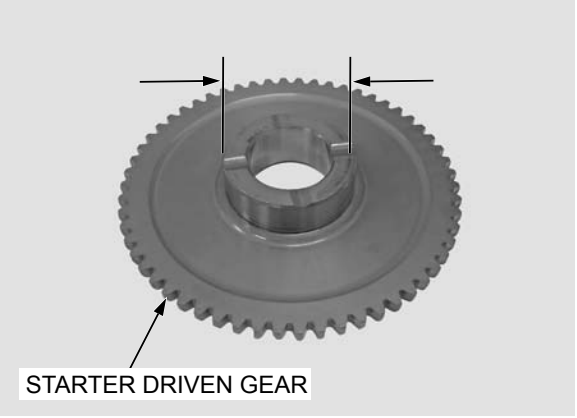

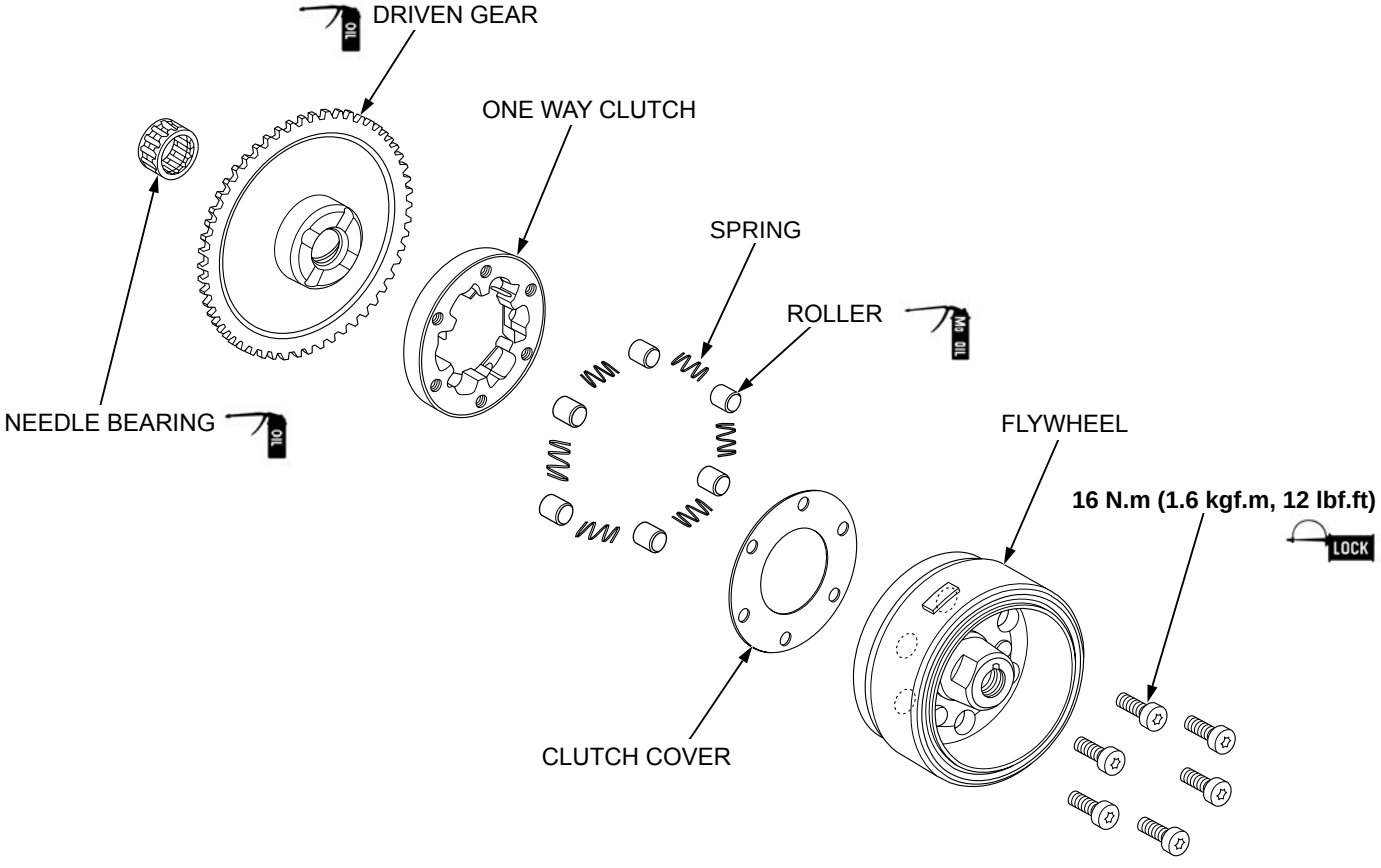

Install the clutch cover and starter clutch assembly to the flywheel, aligning the bolt hole of cover, starter clutch and flywheel.

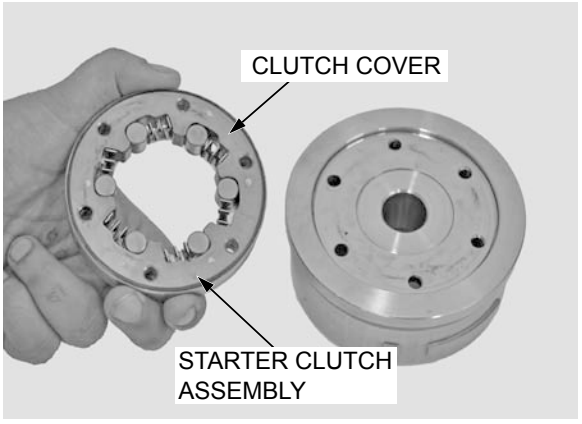

Hold the flywheel using the flywheel holder.

TOOL:

Flywheel holder 070SRTKSP015

Clean and apply a locking agent to the stater clutch bolts threads.

Install and tighten the starter clutch bolts to the specified torque.

TORQUE: 16 N.m (1.6 kgf.m, 12 lbf.ft)

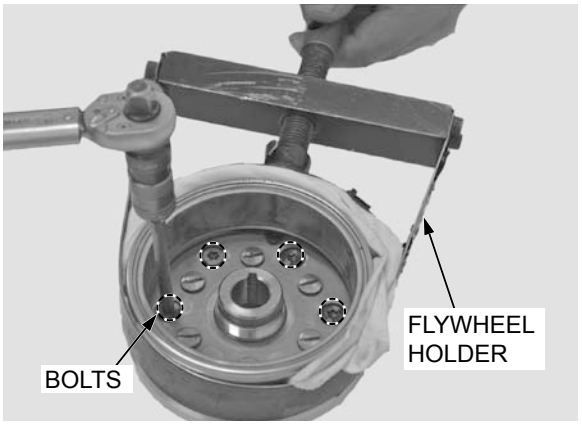

Apply clean engine oil to the starter driven gear teeth.

Install the starter driven gear to the flywheel while turning the driven gear counterclockwise.

Make sure that the starter driven gear turns counter clockwise smoothly and does not turn clockwise.

Install the flywheel (page 10-5).

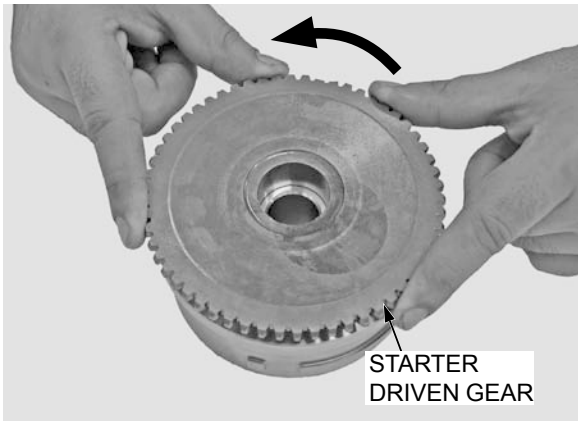

STARTER MOTOR

REMOVAL

Slide the rubber cap off the starter motor terminal, and remove the terminal nut and starter motor cable.

Remove the two mounting bolts, ground cable and starter motor from the crankcase.

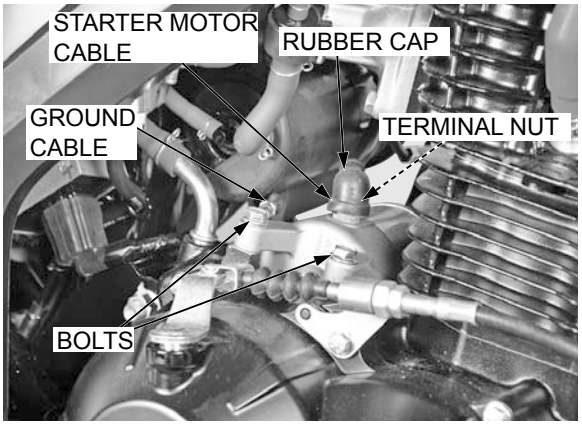

Remove the O-ring from the starter motor.

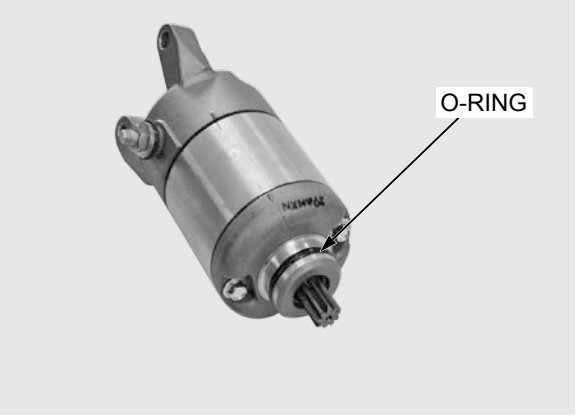

DISASSEMBLY/INSPECTION

Remove the starter motor case bolts and O-rings.

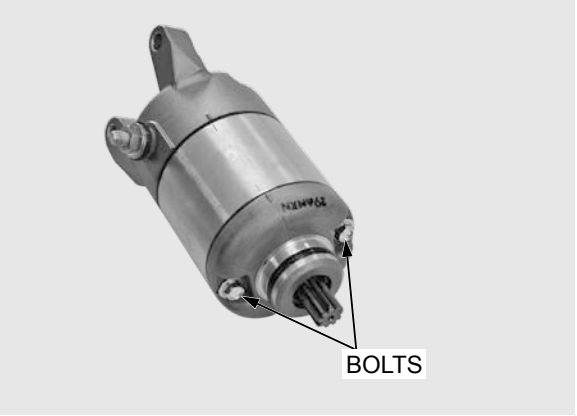

Remove the following:
- Front cover assembly
- Seal ring
- Lock washer
- Insulated washer
- Shims

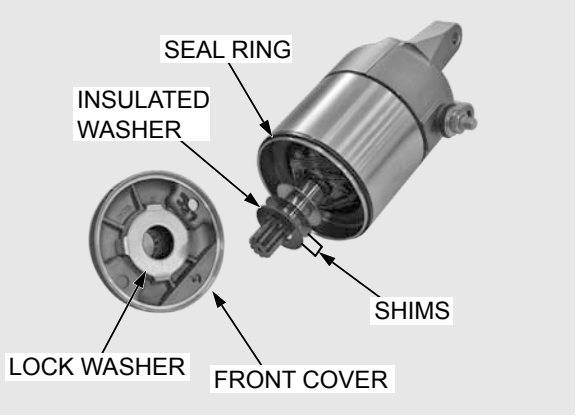

Record the location and number of shims. The number of the shims are different individually.

Remove the following:
- Rear cover assembly
- Seal ring
- Shims
- Armature

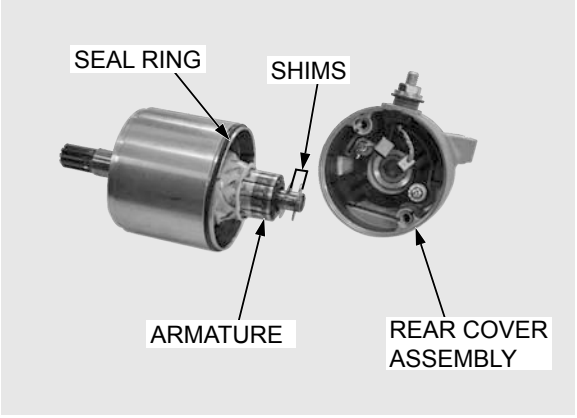

Check the dust seal and needle bearing in the front cover for deterioration, wear or damage.

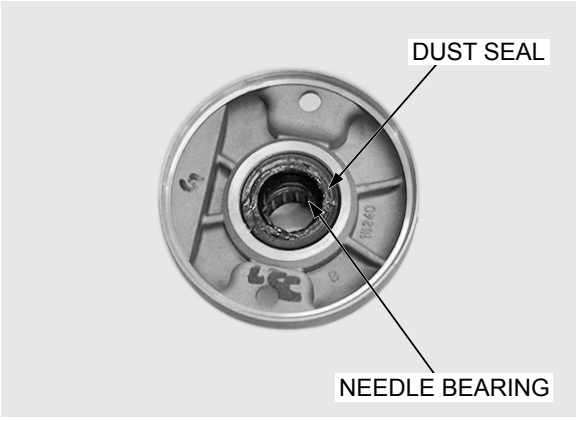

Check for continuity between the cable terminal and the insulated brush.

There should be continuity.

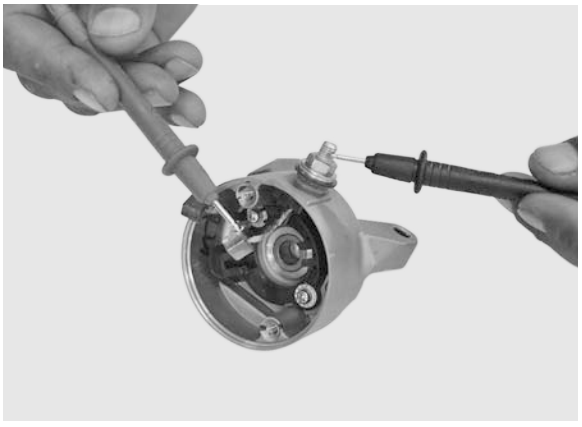

Check for continuity between the cable terminal and rear cover.

There should be no continuity.



Remove the following:

– Springs
– Screw/washers
– Brush wire
– Brush holder

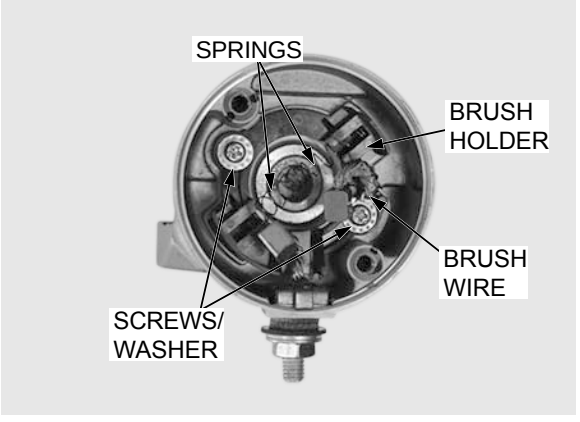

Remove the insulator plates.

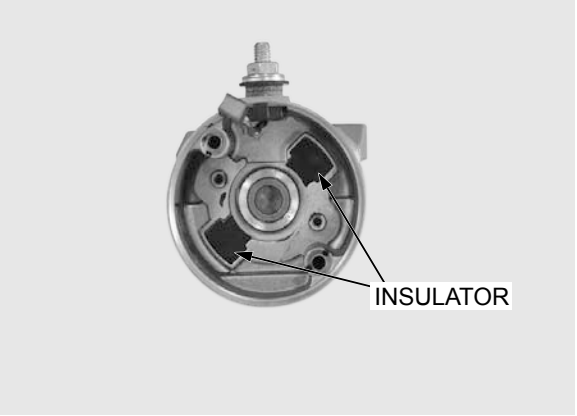

Remove the following:
- Nut
- Washer
- Insulators
- O-ring
- Insulator plate
- Brush terminal

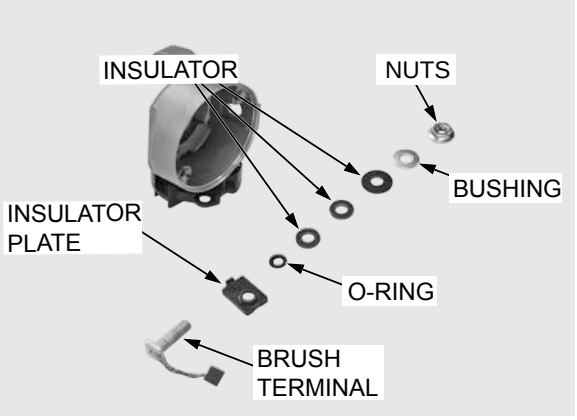

Check the bushing in the rear cover for wear or damage.

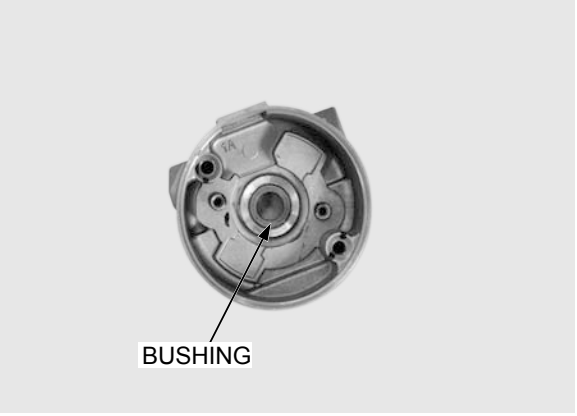

Measure the brush length.

SERVICE LIMIT: 6.5 mm (0.26 in)

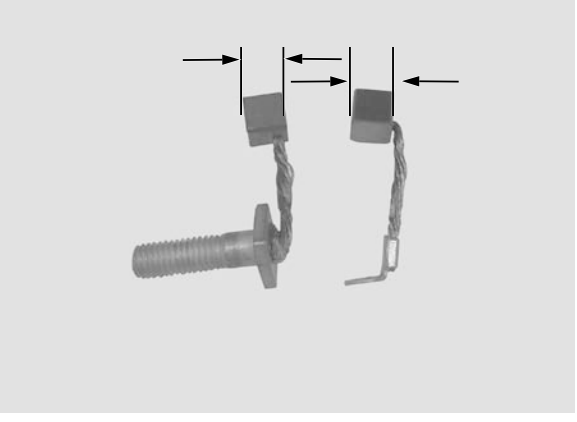

Inspect the brush spring for excessive wear, fatigue or damage, replace if necessary.

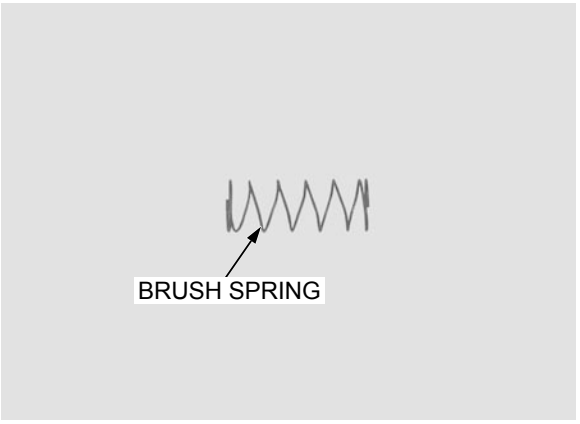

Do not use emery or sand paper on the commutator

Inspects the commutator bars of the armature for discolouration.

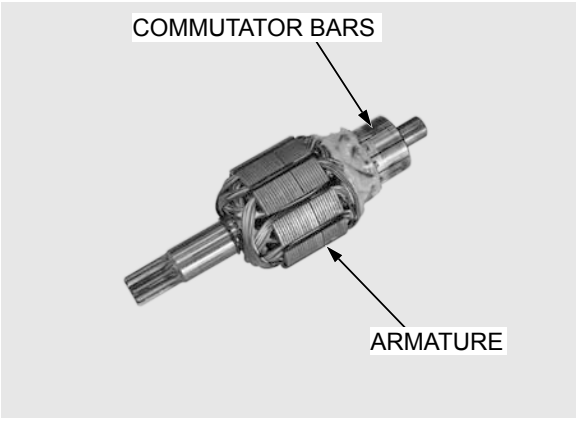

Check for continuity between pair of commutator bars.

There should be continuity.



Check for continuity between each commutator bar and the armature shaft.

There should be no continuity.

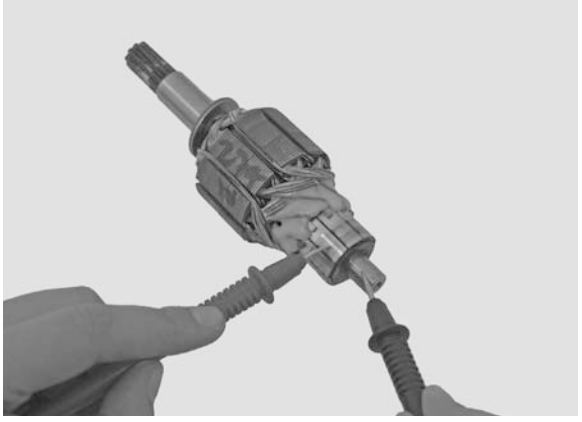

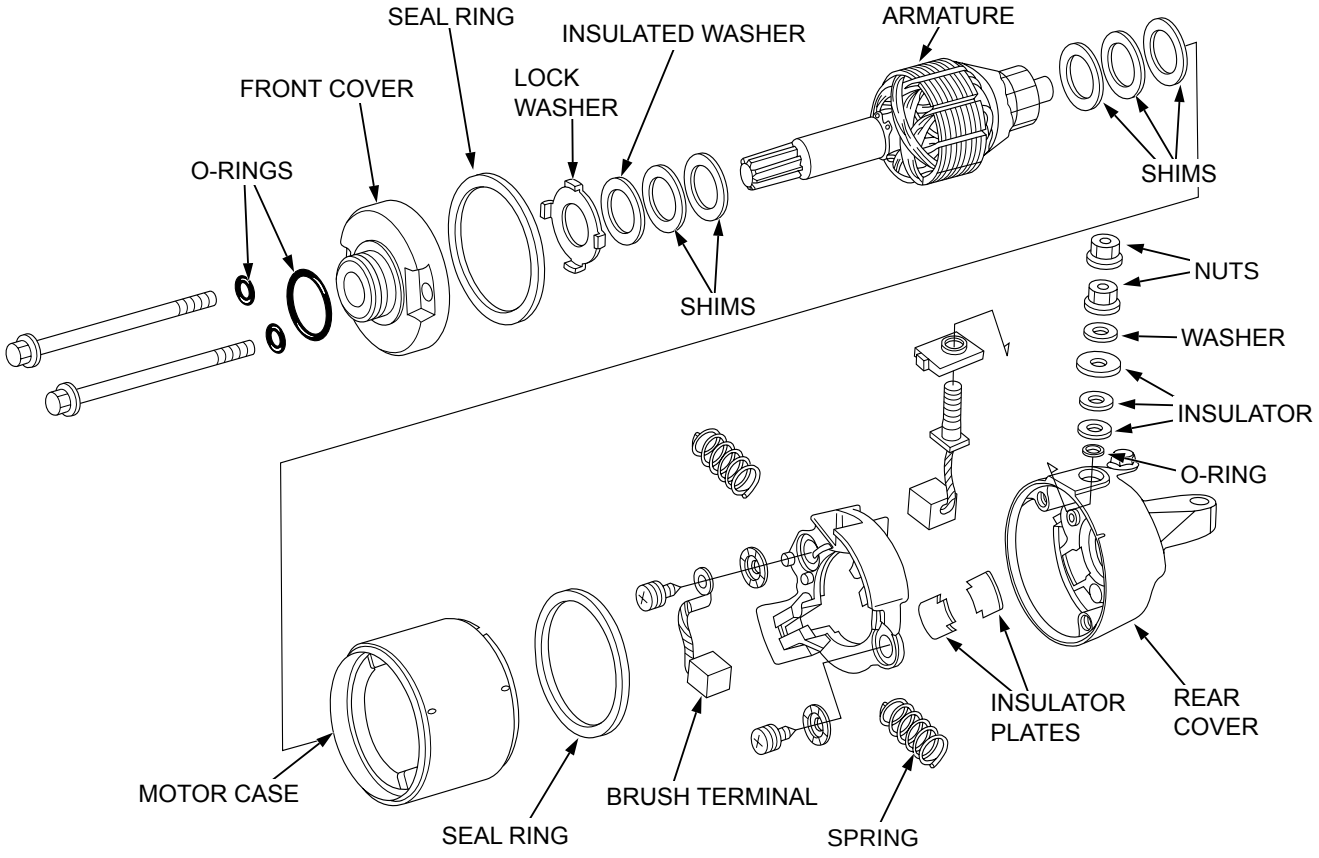

Install the following:

- Insulator plate
- Brush terminal
- New O-ring
- Insulators
- Washer
- Nut

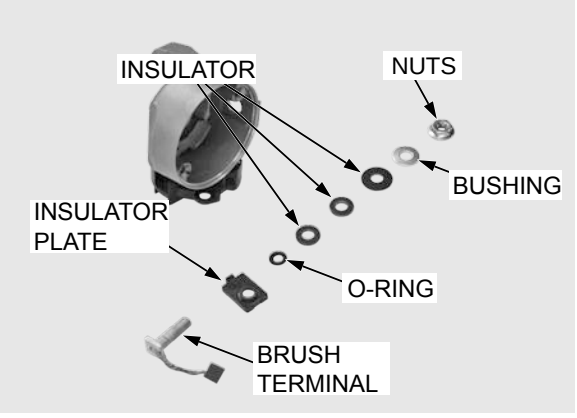

The insulators plate will be damaged easily. Be careful not to over tighten the nut.

Tighten the nut.

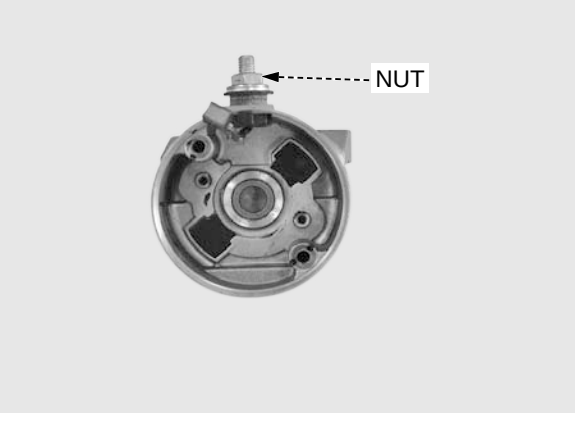

Install the insulator plates.

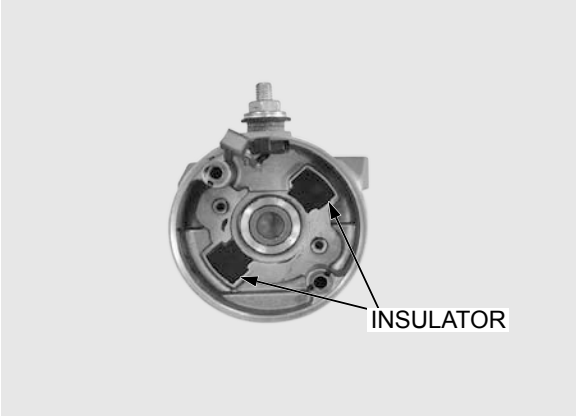

Install the brush holder, washer and tighten the screws with brush wire.

Install the springs into the brush holder.

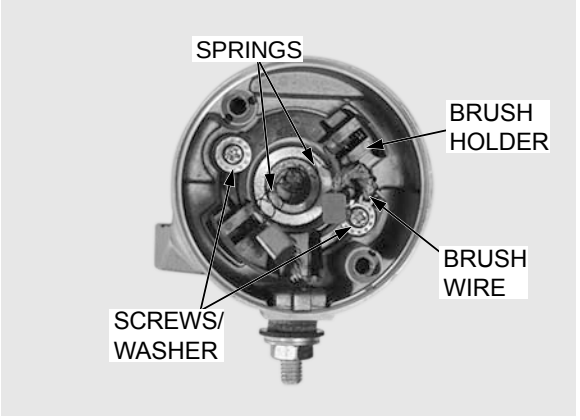

Install the shims onto the armature shaft.



Be careful not to damage the brush and armature.

Install the shims properly as noted during removal.

Apply a thin coat of grease to the armature shaft end.

Install the brushes into the brush holder.

Spread the brushes.

Install the armature into the rear cover assembly.

Install a new seal ring to the motor case.

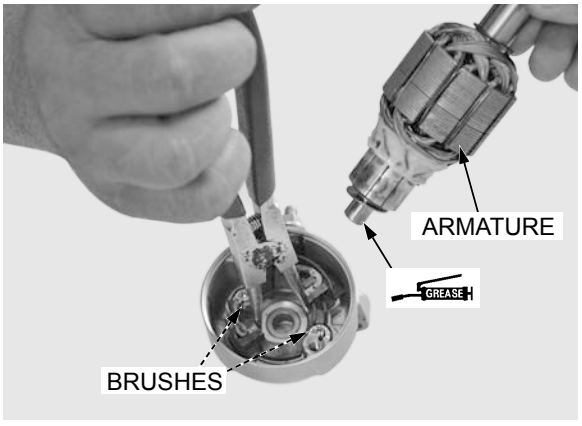

The coil may be damaged if the magnet pulls the armature against the case.

Align the rear cover tab with the motor case groove.

Install the armature/rear cover into the motor case while holding the armature tightly to keep the magnet of the case from pulling the armature against it.

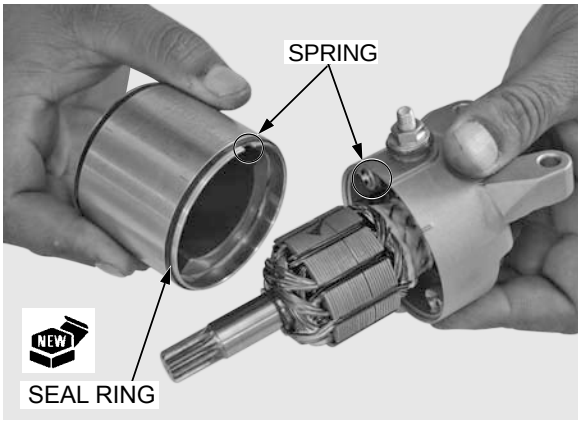

Install the shims properly as noted during removal.

Install the shims and insulated washer onto the armature shaft.

Install the new seal ring onto the motor case.

Apply grease to the dust seal lip and needle bearing in the front cover.

Install the lock washer onto the front cover.

Install the front cover being careful not to damage the dust seal lip.

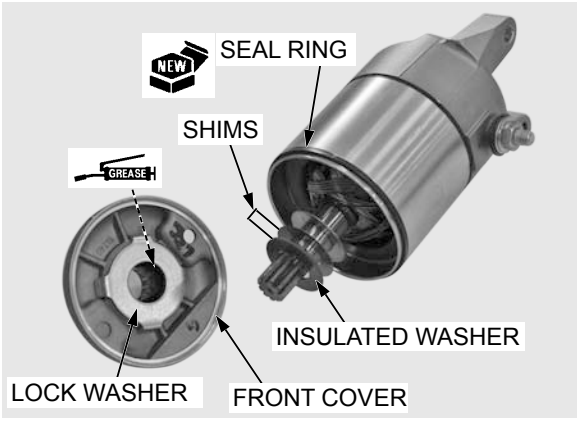

Align the index lines on the front cover and motor case.

Install the new O-rings onto the motor case bolts.

Install the motor case bolts and tighten them.

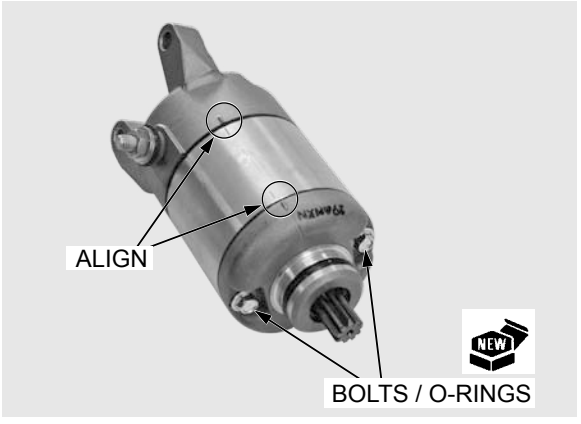

INSTALLATION

Coat a new O-ring with clean engine oil and install it into the starter motor groove.

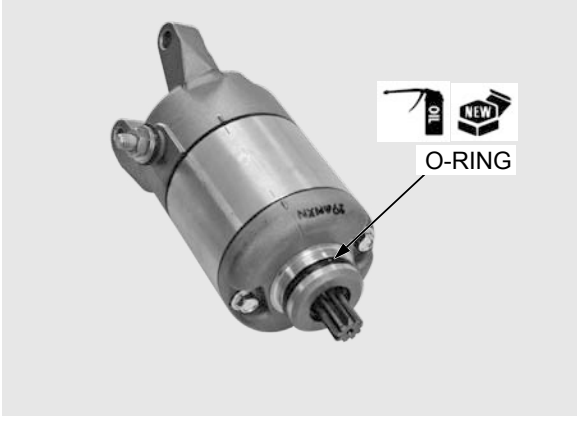

While installing the starter motor cable, route the wire harness properly.

Install the starter motor into the left crankcase cover and onto the crankcase .

Install the mounting bolts with the ground cable, and tighten the bolts.

Install the stater motor cable and terminal nut onto the motor terminal and tighten the nut.

Install the rubber cap over the motor terminal properly.

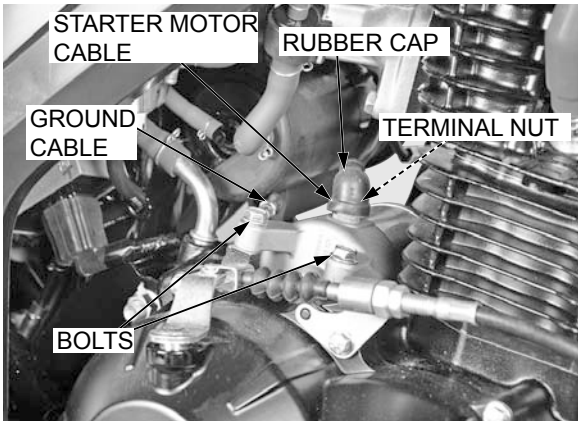

STATOR/IGNITION PULSE GENERATOR

REMOVAL

Remove the left crankcase cover (page 10-2).

Remove the flange bolts (3 nos.), wire guide and ignition pulse generator.

Remove the grommet.

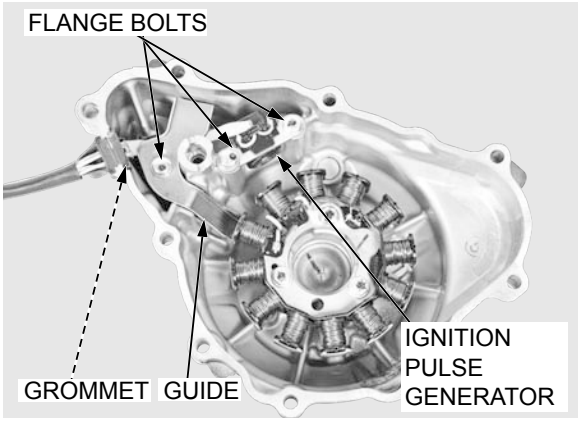

Remove the three flange bolts and stator from the left crankcase cover.

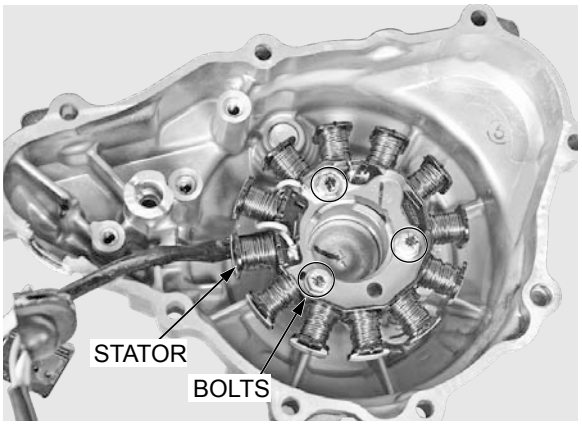

INSTALLATION

Install the stator.

Install the three bolts and tighten it.

TORQUE: 10 N·m (1.0 kgf·m, 7.3 lbf·ft)

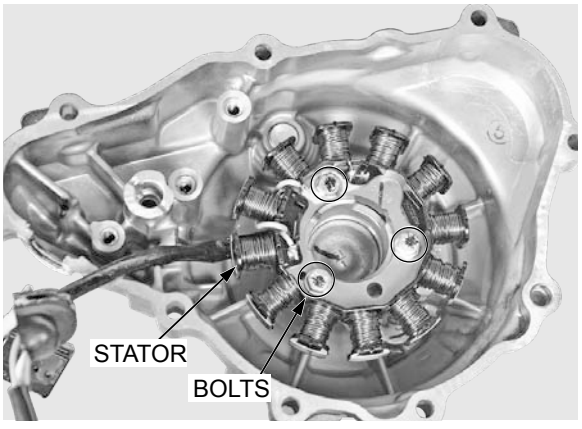

Apply liquid sealant to the wire grommet seating surface, and install the wire grommet into the groove.

Install the wire guide and ignition pulse generator.

Apply a locking agent to the three bolt threads.

Install the bolts and tighten it to the specified torque.

TORQUE: 10 N·m (1.0 kgf·m, 7.3 lbf·ft)

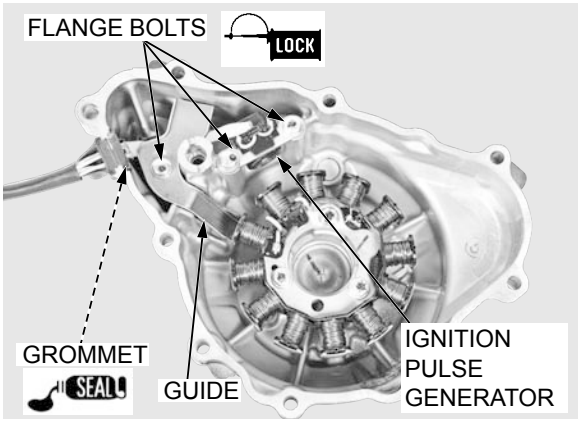

COMPONENT LOCATION

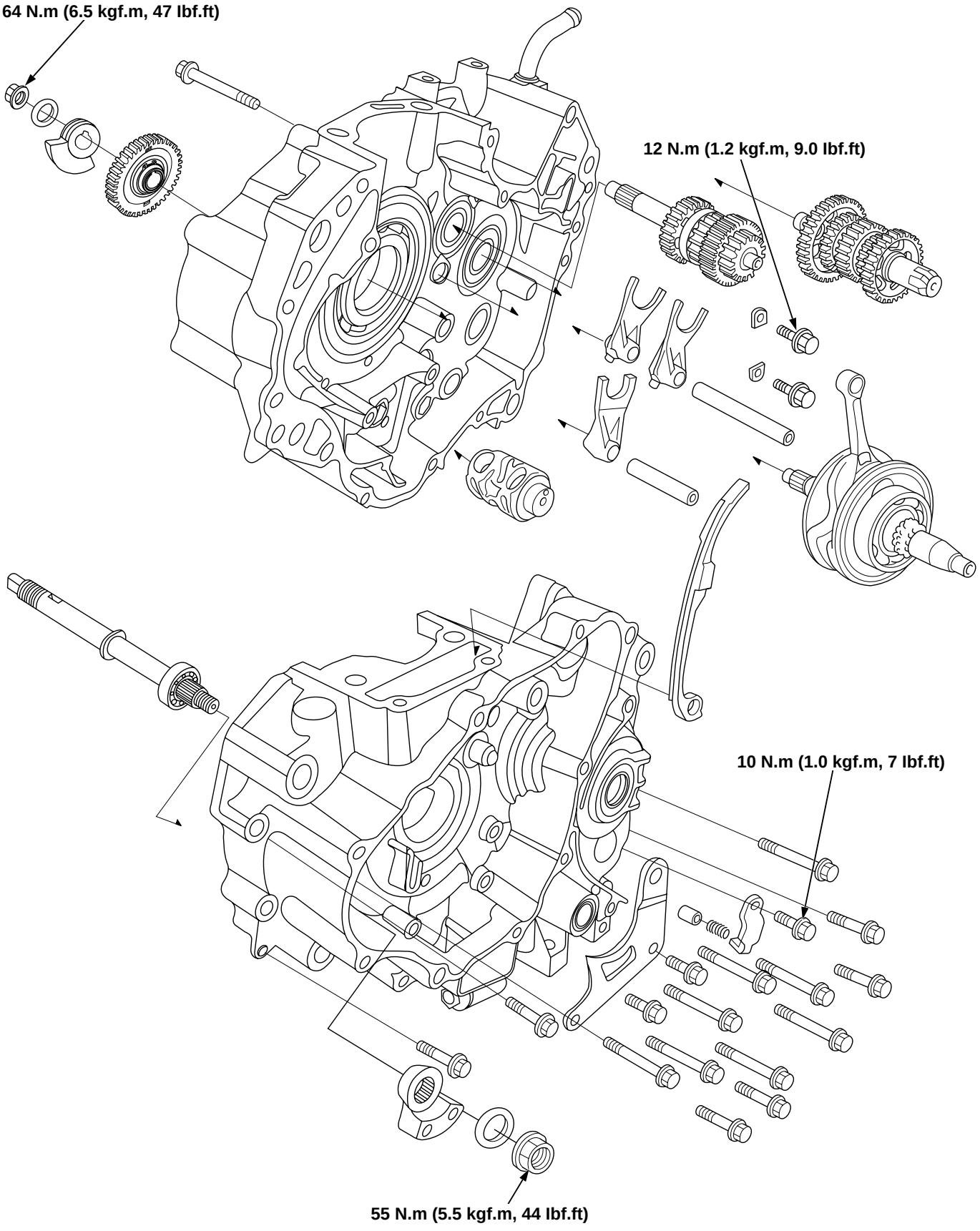

11. CRANKCASE/TRANSMISSION/KICKSTARTER

COMPONENT LOCATION	**11-0**	**TRANSMISSION**	**11-6**
SERVICE INFORMATION	**11-1**	**CRANKSHAFT**	**11-8**
TROUBLESHOOTING	**11-2**	**CRANKCASE ASSEMBLY**	**11-17**
CRANKCASE SEPARATION	**11-4**	**KICKSTARTER**	**11-21**

SERVICE INFORMATION

GENERAL

- The following components must be removed before separating the crankcase:
  - Engine (page 6-2)
  - Cylinder head cover (page 7-4)
  - Cylinder head (page 7-10)
  - Cylinder/piston (page 8-2)
  - Clutch (page 9-6)
  - Oil pump (page 4-2)
  - Gearshift linkage (page 9-12)
  - Flywheel (page 10-4)
  - Neutral switch (page 17-12)
  - Primary drive gear (page 9-14)
  - Remove vehicle speed sensor (page 17-7)
- Be careful not to damage the crankcase mating surfaces when servicing.
- Clean the oil passages before assembling the crankcase halves.

SPECIFICATIONS

Unit: mm (in)

ITEM			STANDARD	SERVICE LIMIT
Crankshaft	Runout		–	0.03 (0.0007)
	Connecting rod big end radial clearance		0 – 0.008 (0 – 0.0003)	0.05 (0.002)
	Connecting rod big end side clearance		0.10 – 0.35 (0.003 – 0.014)	0.80 (0.032)
Transmission	Gear I.D.	M4	20.000 – 20.018 (0.7874 – 0.7882)	20.05 (0.789)
		M5	17.000 – 17.018 (0.6692 – 0.6699)	17.05 (0.671)
		C1	20.500 – 20.521 (0.8071 – 0.8079)	20.55 (0.809)
		C2	23.020 – 23.041 (0.9063 – 0.9071)	23.07 (0.908)
		C3	20.020 – 20.038 (0.7881 – 0.7888)	20.07 (0.790)
	Bushing O.D.	C1	20.459 – 20.480 (0.8055 – 0.8063)	20.41 (0.804)
		C2	22.984 – 23.005 (0.9049 – 0.9057)	22.95 (0.904)
	Gear-to-bushing clearance	C1	0.020 – 0.062 (0.0008 – 0.0024)	0.10 (0.004)
		C2	0.015 – 0.057 (0.0006 –0.0022)	0.10 (0.004)
	Bushing I.D.	C1	17.000 – 17.018 (0.6693 – 0.6699)	17.04 (0.671)
		C2	20.020 – 20.041 (0.7882 – 0.7890)	20.07 (0.790)
	Mainshaft / countershaft O.D.	C1	16.966 – 16.984 (0.6680 – 0.6687)	16.93 (0.667)
		C2	19.978 – 19.989 (0.7865 – 0.7870)	19.94 (0.785)
		M4	19.968 – 19.980 (0.7861 – 0.7866)	19.94 (0.785)
		M5	16.968 – 16.980 (0.6679 – 0.6686)	16.93 (0.666)
	Bushing-to-shaft clearance	C1	0.016 – 0.052 (0.0006 – 0.0020)	0.10 (0.004)
		C2	0.031 – 0.063 (0.0012 – 0.0025)	0.20 (0.008)
Shift fork, shift fork shaft	Shift fork shaft O.D.		9.986 – 9.995 (0.3931 – 0.3935)	9.93 (0.391)
	Shift fork I.D.		10.000 – 10.018 (0.3937 – 0.3944)	10.05 (0.396)
	Shift fork claw thickness		4.930 - 5.000 (0.194 - 0.197)	4.500 (0.177)
Kickstarter drive gear I.D			20.00- 20.21 (0.7873 - 0.7956)	16.06 (0.632)
Kickstarter spindle O.D. at Kickstarter drive gear			19.959 - 19.980 (0.7875 - 0.7866)	15.94 (0.628)

TORQUE VALUES

ITEM	PART NO.	QTY	THREAD DIA. (mm)	TORQUE N·m (kgf·m, lbf·ft)	REMARKS	PAGE NO.
Balancer Shaft Nut (Right crankcase)	90202 – KRM – 840	1	14	64 (6.5, 47)		Page 11–19
Balancer Shaft Nut (Left crankcase)	94002 – 12200 – 0S	1	12	55 (5.5, 44)		Page 11–20
Push plug bolt	96001 – 06016 – 00	1	6	10 (1.0, 7)		Page 11–20

TROUBLESHOOTING

Excessive engine noise

- Worn, seized or chipped transmission gears
- Worn or damaged transmission bearings
- Worn or damaged connecting rod big end bearing
- Worn crankshaft bearing

Hard to shift

- Improper clutch operation
- Bent shift fork
- Bent shift fork shaft
- Damaged shift drum guide grooves
- Damaged shift fork guide pin

Transmission jumps out of gear

- Worn gear dogs or slots
- Worn shift drum guide groove
- Worn shift fork guide pin
- Worn shift fork groove in gear
- Worn shift fork shaft
- Bent shift fork shaft

TOOLS

Remover shaft, 12 mm 070MCKPLI410 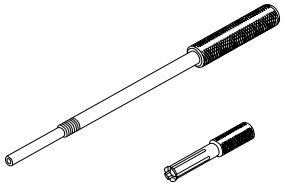 Remover shaft, 12 mm 070MCKPLI400	Remover weight 070MCKPLI300 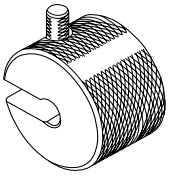	Driver 070GD004I100 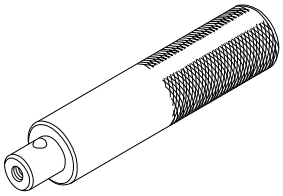
Pilot, 12 mm 070GD004I130 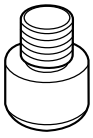	Pilot, 17 mm 070GD004I150 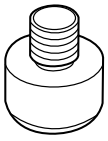	Pilot, 20 mm 070GD004I160 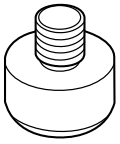
Oil seal remover 070SRTKSP002 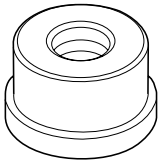	Fork seal driver 070SRTKSP001 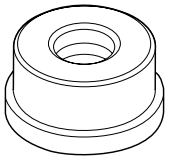	Socket wrench steering 070SRTKSP004 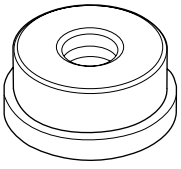
Assembly collar 070MFKPLI110 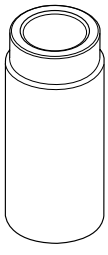	Remover head, 17 mm 070MFKPLI520 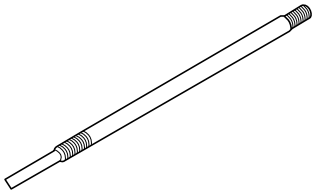	Gear Holder 07006–KRB–T7900 

CRANKCASE SEPARATION

BALANCER GEAR REMOVAL

Refer to service information (page 11-1) for removal of necessary parts before disassembling the crankcase.

Remove the cam chain tensioner set plate bolts (2 nos.) and tensioner set plate.

Remove cam chain tensioner guide.

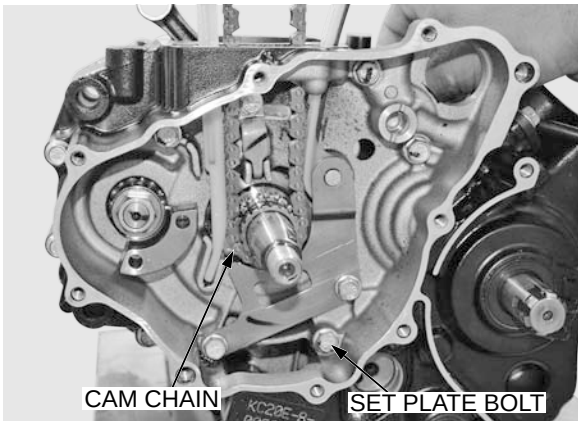

Remove the cam chain.

Remove the bolt and push plug plate.

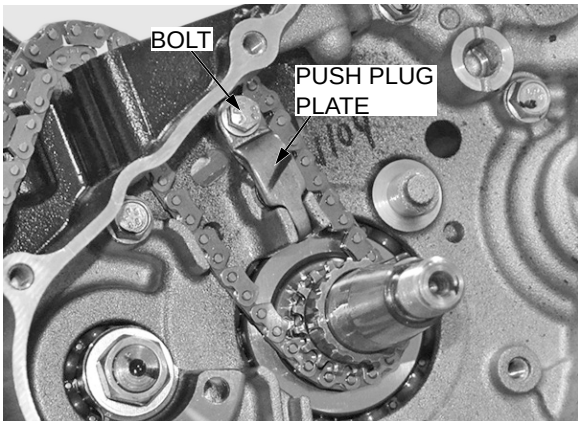

Remove the push plug and spring.

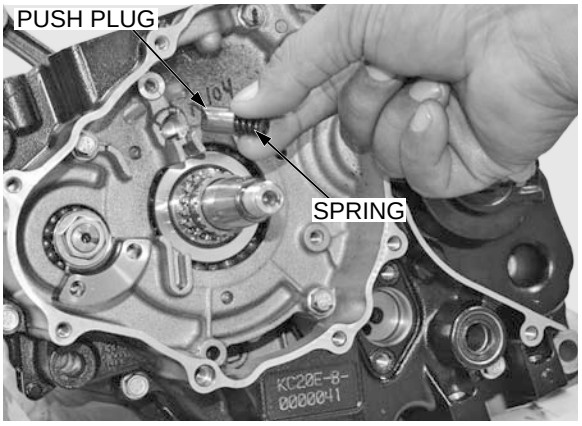

Hold the gear balancer drive and gear balancer driven using gear lock.

Remove the driven balancer gear and weight nut.

TOOLS:

Gear holder **07006-KRBT900**

Remove the driven balancer gear & weight.

Remove woodruff keys from the balancer shaft from right side.

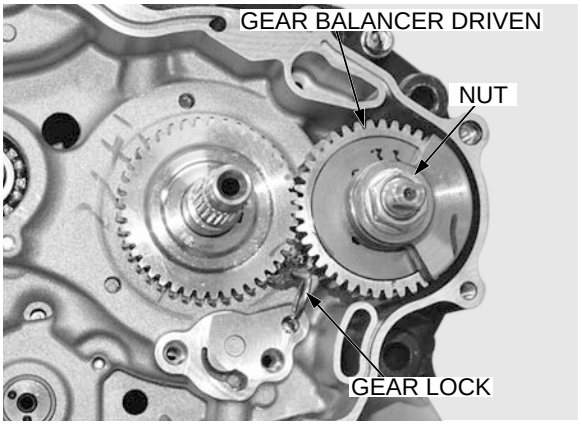

Remove the balancer weight nut from ACG (left) side.

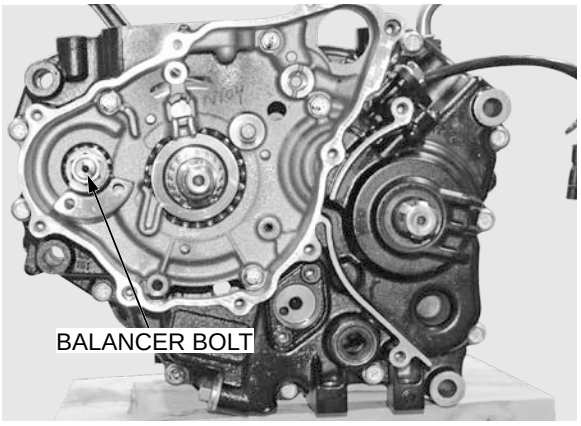

BALANCER GEAR INSPECTION

Check the balancer gear for wear or damage.



Remove the left crankcase bolts in a criss cross pattern in two or three step and remove them.

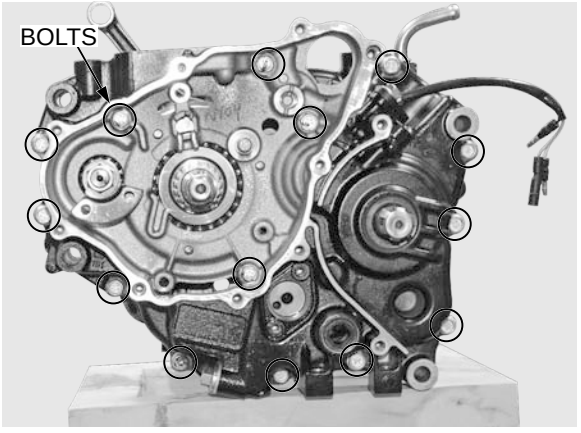

Do not pry the crankcase halves with a screw driver.

Place the crankcase assembly with the right side down.

Carefully separate the left crankcase from the right crankcase by tapping them at several locations with a soft hammer.

Remove the dowel pins (2 nos.).

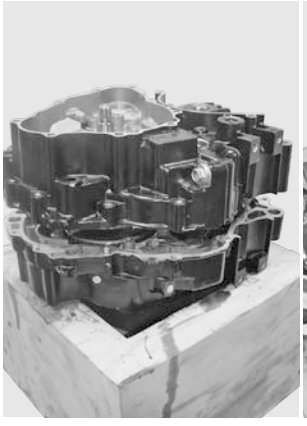

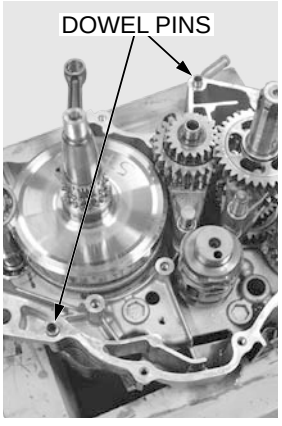

TRANSMISSION

DISASSEMBLY

Separate the crankcase halves (page 11-4).

Carefully remove the balancer shaft.

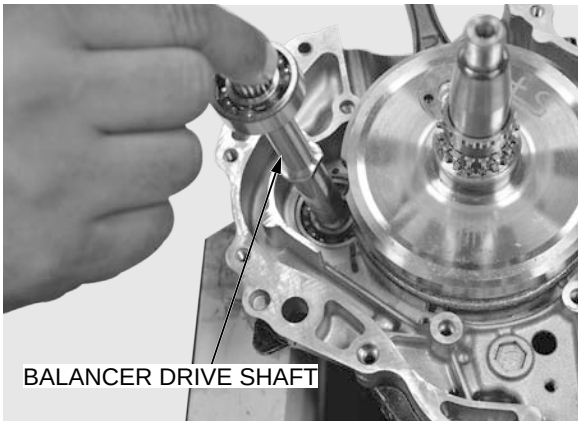

Pull out the shift fork shafts.

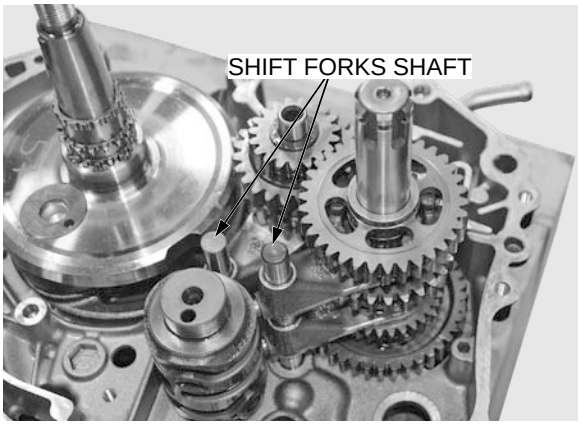

Remove the shift forks and shift drum.

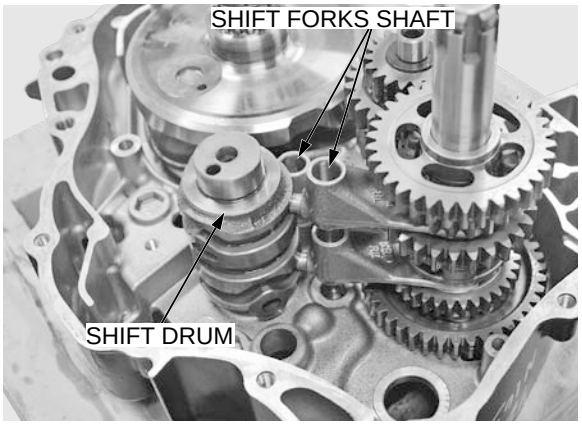

Remove the mainshaft and countershaft together.

Disassemble the mainshaft and countershaft.

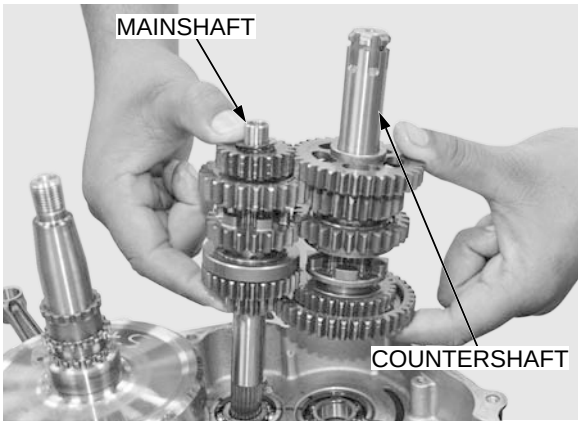

INSPECTION

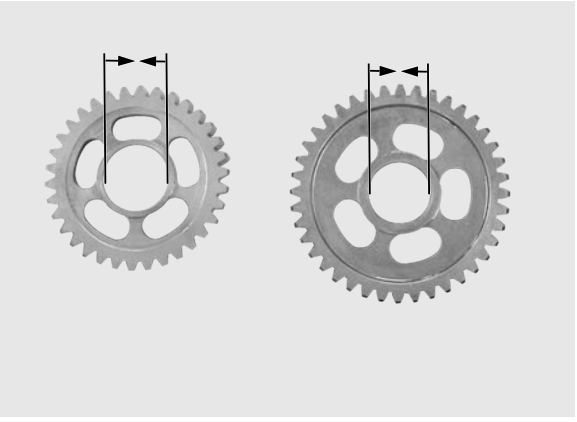

GEARS

Check the gear dogs, dog holes and teeth for damage of excessive wear.

Measure the I.D. of each gear.

SERVICE LIMIT:

M4:	**20.05 mm (0.789 in)**
M5:	**17.05 mm (0.671 in)**
C1:	**20.55 mm (0.809 in)**
C2:	**23.07 mm (0.908 in)**
C3:	**20.07 mm (0.790 in)**

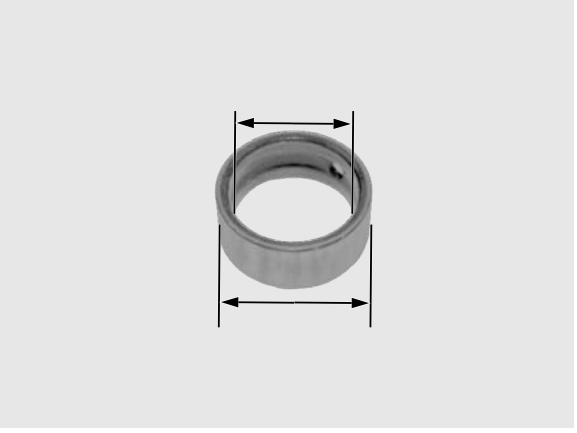

BUSHING

Check the bushings for wear or damage.
Measure O.D. of each bushing.

SERVICE LIMIT:

C1:	**20.41 mm (0.804 in)**
C2	**22.95 mm (0.904 in)**

Calculate the gear-to-bushing clearance.

SERVICE LIMIT:

C1:	**0.10 mm (0.004in)**
C2:	**0.10 mm (0.004 in)**

Measure I.D of each bushing.

C1:	**17.04 mm (0.6.71 in)**
C2:	**20.07 mm (0.790 in)**

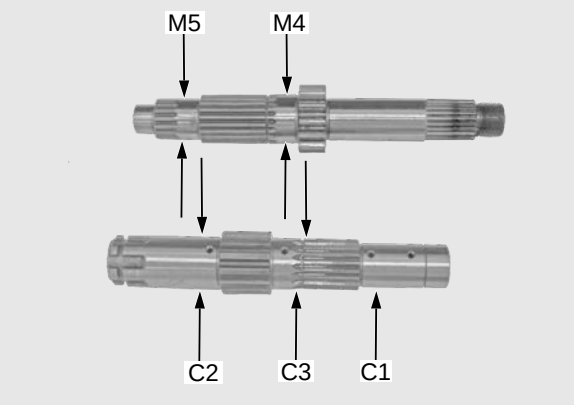

MAINSHAFT/COUNTERSHAFT

Check the spine grooves and sliding surfaces for abnormal wear or damage.

Measure the O.D of the mainshaft and countershaft at gear and bushing sliding areas.

SERVICE LIMIT:

Mainshaft	**(at M4 gear bushing):**
	19.94 mm (0.785 in)
	(at M5 gear bushing):
	16.93 mm (0.666 in)
Countershaft	**(at C1 gear bushing):**
	16.93 mm (0.667 in)
	(at C2 gear bushing):
	19.94 mm (0.785 in)

Calculate the bushing-to-shaft clearance.

SERVICE LIMIT:

C1:	**0.10 mm (0.004 in)**
C2:	**0.20 mm (0.008 in)**

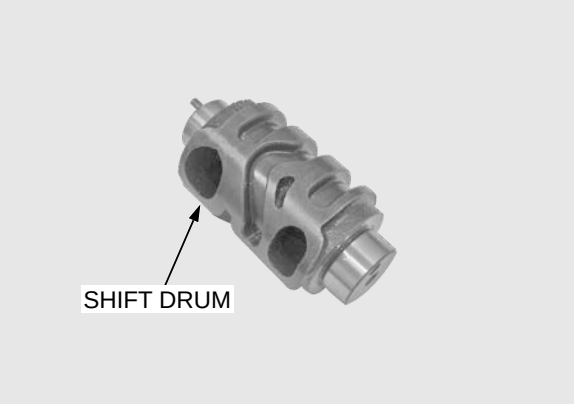

SHIFT DRUM

Inspect the shift drum end for scoring, scratches, or evidence of sufficient lubrication.

Check the shift drum grooves for abnormal wear or damage.

SHIFT FORK

Check the shift forks for deformation or abnormal wear.

Measure each shift fork claw thickness.

SERVICE LIMITS: 4.500 mm (0.177 in)

Measure I.D. of each fork.

SERVICE LIMITS: 10.05 mm (0.396 in)

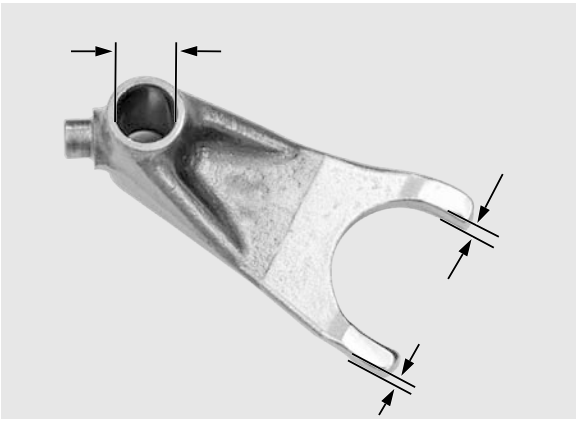

SHIFT FORK SHAFT

Check the shift fork shafts for damage and straightness.

Measure the shift fork shaft for O.D.

SERVICE LIMITS: 9.93 mm (0.391 in)

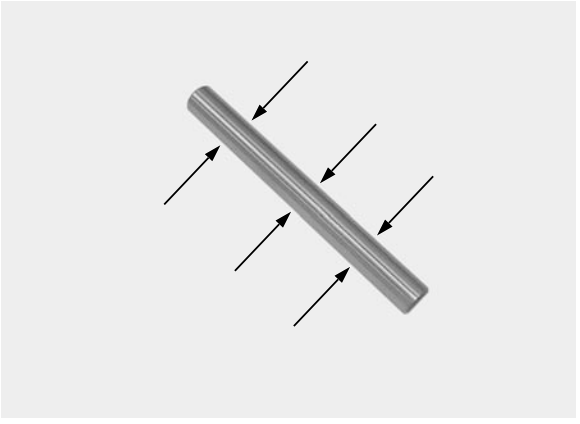

CRANKSHAFT

REMOVAL

Remove both crankcase (page 11-5).

Remove the transmission (page 11-6).

Remove the crankshaft from the right crankcase.

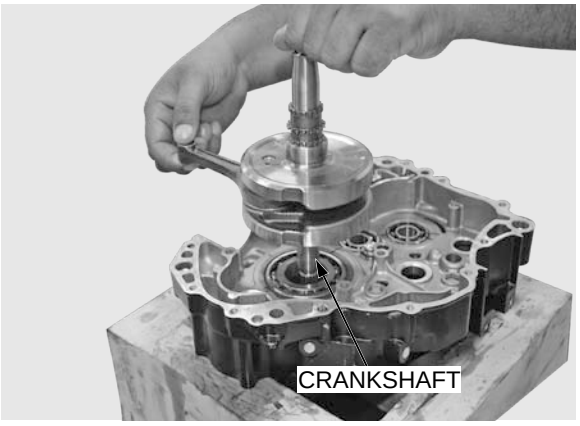

INSPECTION

CRANKSHAFT RUNOUT

Place the crankshaft on a stand or V-blocks.

Set the dial indicator on the shafts.

Rotate the crankshaft two revolutions and read the runout.

SERVICE LIMIT: 0.03mm (0.0007 in)

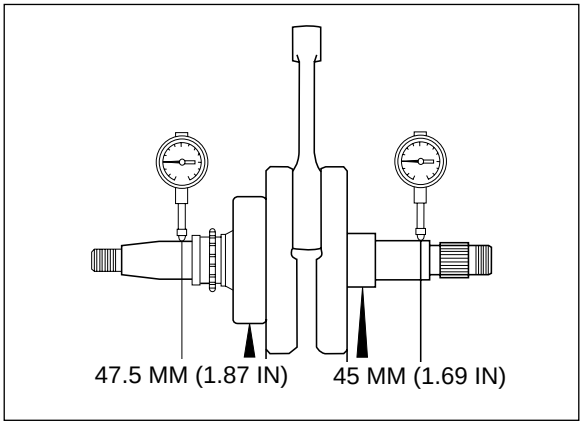

BIG END SIDE CLEARANCE

Measure the side clearance of the connecting rod big end with feeler gauge.

SERVICE LIMIT: 0.80 mm (0.032 in)



BIG END RADIAL CLEARANCE

Measure the radial clearance of the connecting rod big end.

SERVICE LIMIT: 0.05 mm (0.002 in)

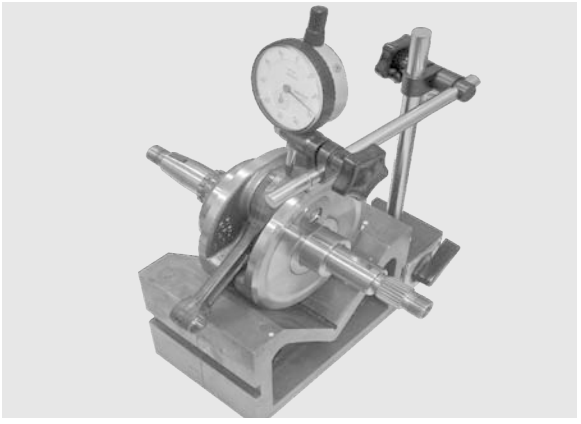

If the timing sprocket teeth are worn or damaged. Check the cam chain tensioner and cam sprocket

TIMING SPROCKET

Check the timing sprocket teeth for wear or damage.

Remove the timing sprocket if necessary.

When installing the timing sprocket, while align the center of the timing sprocket teeth with the center of the crank pin.

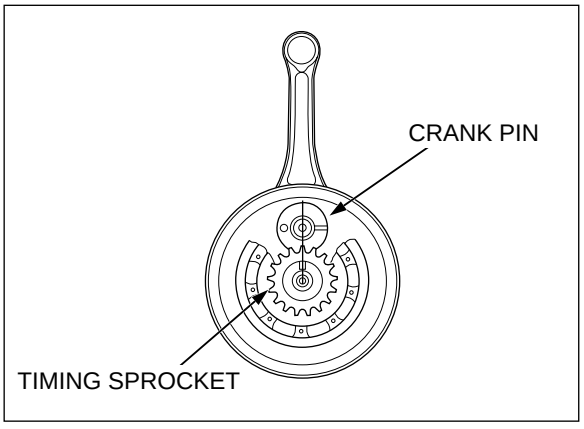

CRANKSHAFT/BALANCER BEARING INSPECTION

Turn the inner of each bearing with your finger. The bearings should turn smoothly and quietly.

Also check that bearing outer races fit tightly in the crankcase.

Replace bearing if the inner race do not turn smoothly, quietly or if they loosely fit in crankcase (page 11-10).

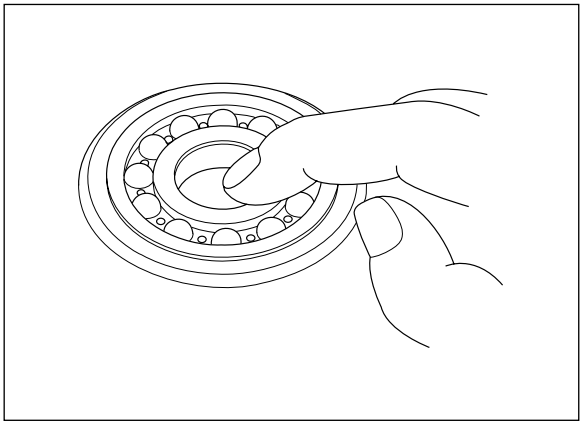

REMOVAL

Remove the setting plate bolts and mainshaft bearing setting plates from the right crankcase.

Drive out the mainshaft & countershaft bearing from the right crankcase.

with following tools.

TOOLS:

Remover shaft, 17mm	**07936-3710330**
Remover handle	**07936-3710100**
Remover weight	**070MC-KPLI300**

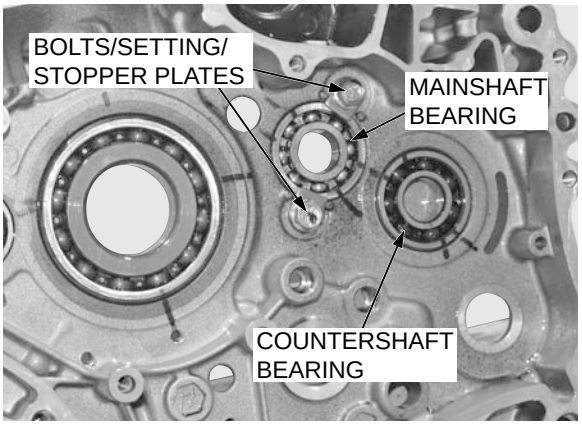

Remove the countershaft dust seal and gear shift spindle dust seal from the left crankcase.

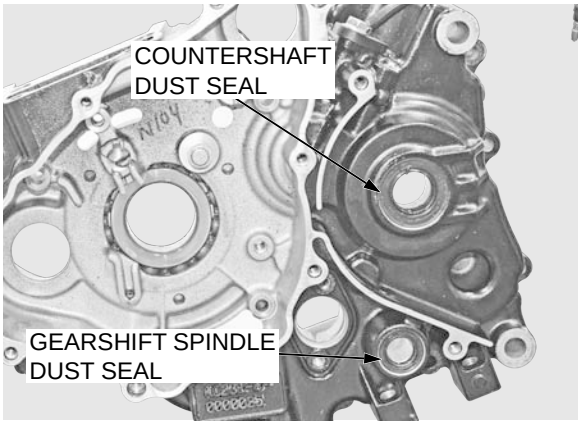

Drive out the countershaft bearing from the left crankcase.

Tools

Remover shaft, 17 mm	**07936-3710330**
Remover handle	**07936-3710100**
Remover weight	**070MC-KPLI300**

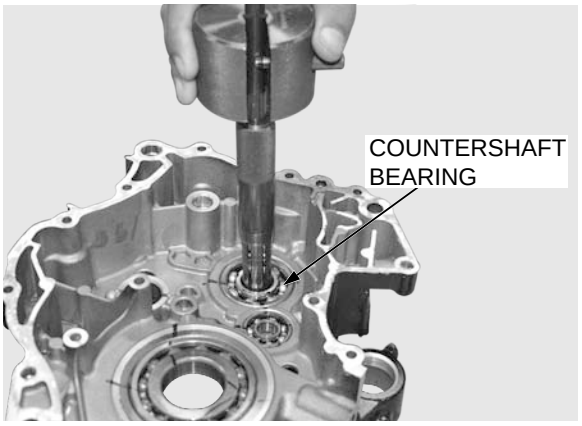

Drive out the mainshaft bearing from the left crankcase with following tools.

Tools

Remover head, 12mm	**070MC-KPLI410**
Remover shaft, 12mm	**070MC-KPLI420**
Remover weight	**070MC-KPLI300**

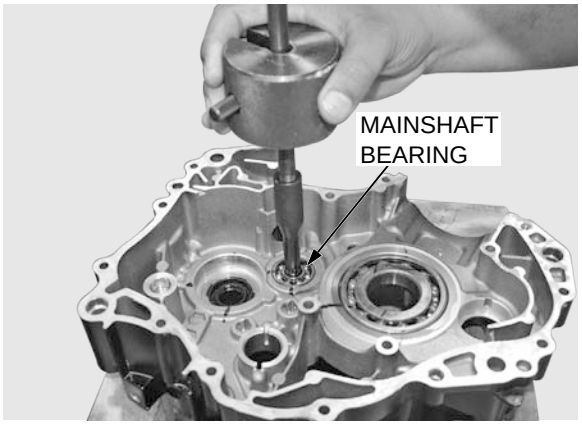

OIL PASSAGES INSPECTION

Clean the oil passages of each crankcase using the compressed air.

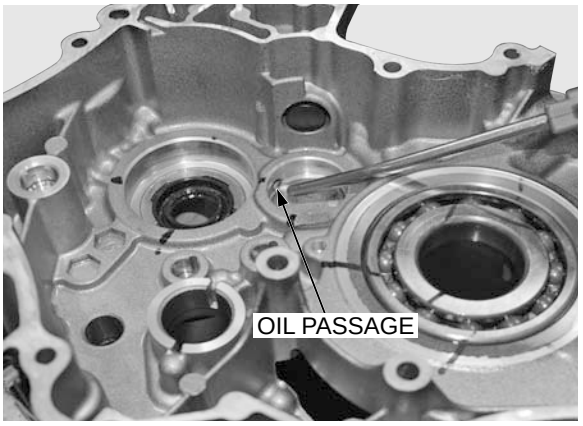

INSTALLATION

Lubricate the all bearing with engine oil.

Drive new bearings into the left crankcase with following tools:

TOOLS:

RIGHT CRANKCASE

Mainshaft bearing:

Driver	**070GD-001I100**
Attachment, 37x40 mm	**070GD-002I150**
Pilot, 17 mm	**070GD-004I150**

Mainshaft bearing:

Driver	**070GD-001I100**
Attachment, 37x40 mm	**070GD-002I150**
Pilot, 17 mm	**070GD-004I150**

LEFT CRANKCASE

Mainshaft bearing:

Driver	**070GD-001I100**
Attachment, 32x35 mm	**070GD-002I140**
Pilot, 12 mm	**070GD-004I130**

Countershaft bearing:

Driver	**070GD-001I100**
Attachment, 42x47 mm	**070GD-002I160**
Pilot,20 mm	**070GD-004I160**

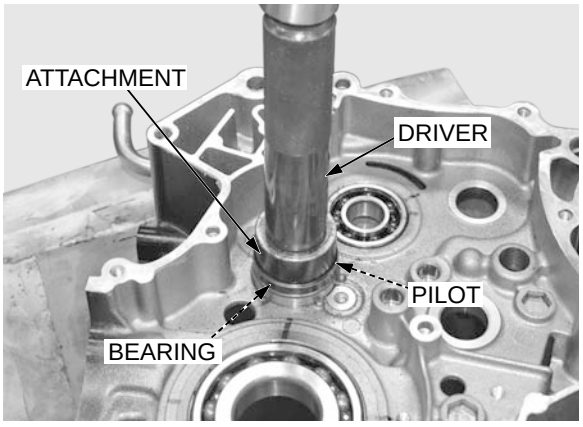

Apply grease to the new dust seal lips.

Install the countershaft and gearshift spindle dust seals with following tools as shown.

Tools:

Countershaft dust seal:

Driver	**070GD-001I100**
Attachment, 34 mm	**07JAD-PL60100**
Pilot,20 mm	**070GD-004I160**

Gearshift spindle dust seal:

Driver	**070GD-001I100**
Attachment, 22 x 24 mm:	**07746-0010800**
Pilot,20 mm	**07746-0041200**

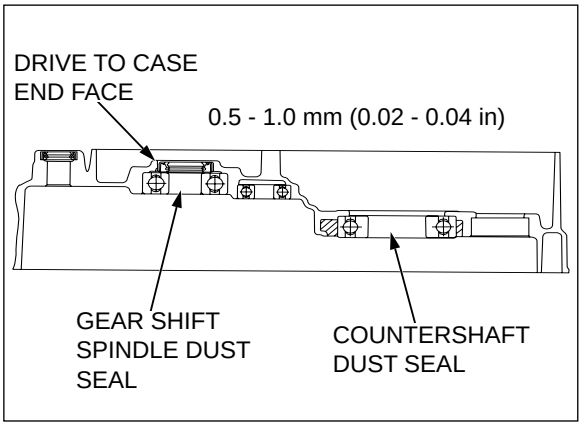

Apply locking agent to the threads of the setting plate bolt. Install the setting plates and bolts.

Install the setting plates and bolts.

Tighten the bolts to the specified torque.

TORQUE: 12 N.m (1.2 kgf. m, 9 lbf.ft)

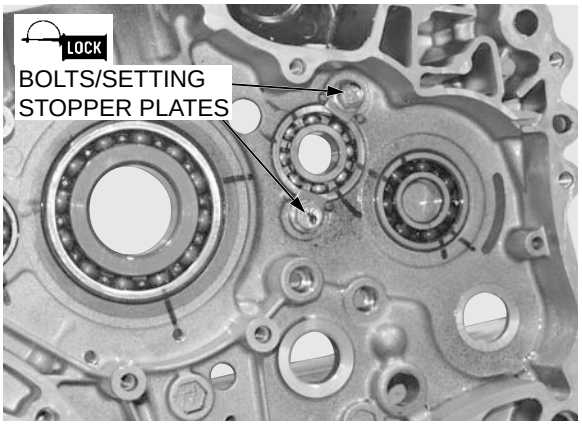

BEARING REPLACEMENT OF CRANKSHAFT

INSPECTION

Turn the inner race of bearing with your finger.

The bearing should turn smoothly and quietly.

Also check that bearing outer races fit tightly in the crankcase.

Replace bearing if the inner race do not turn smoothly, quietly or if they loosely fit in crankcase (page 11-10).

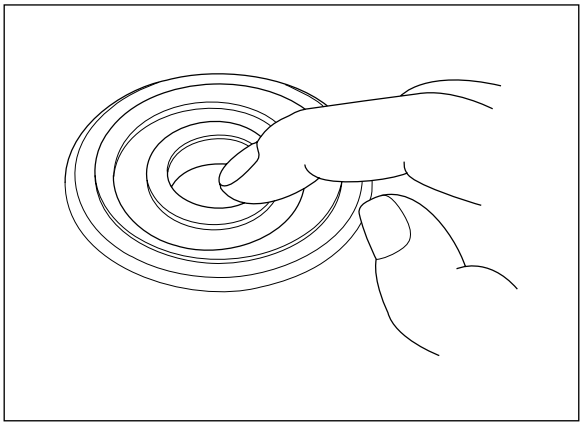

REMOVAL

Drive out the crankshaft bearing from the right crankcase.

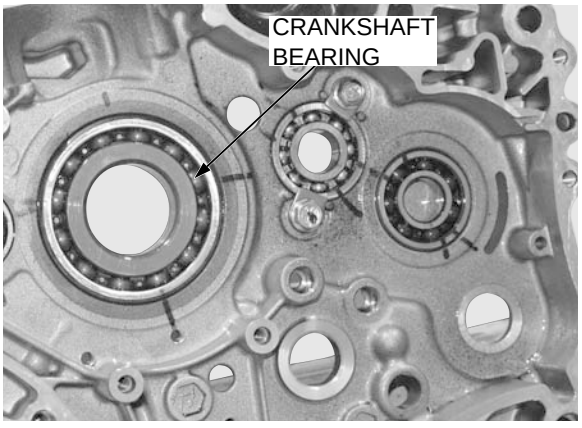

INSTALLATION

If the crankshaft bearing inner race is removed install it as shown.

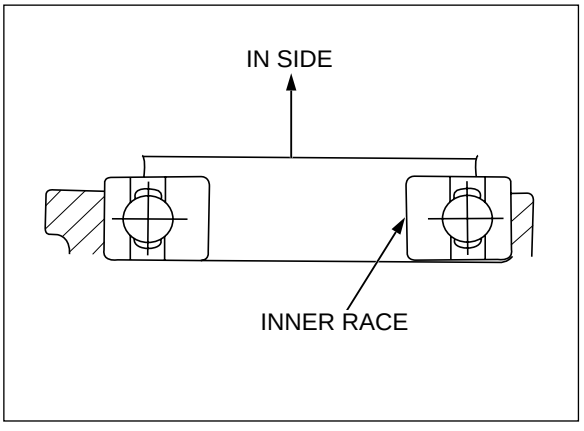

Lubricate the all bearings with engine oil.

Drive new bearings into the right crankcase with following tools.

TOOLS:

Crankshaft bearing:	
Driver	**070GD-001I100**
Attachment, 52 x 55 mm	**07NAD-P200100**
Pilot, 30 mm	**07746-0040700**

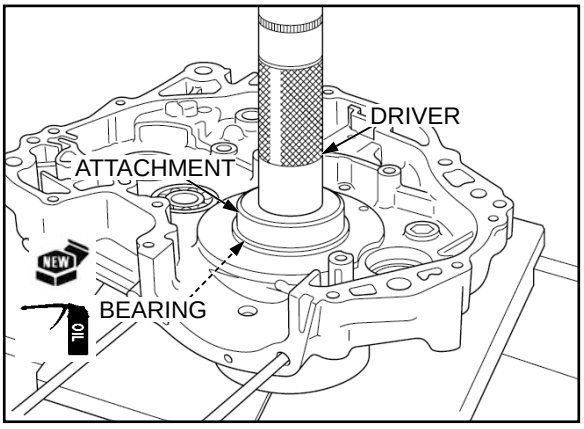

INSTALLATION

Install the crankshaft into the right crankcase.

Install the transmission.

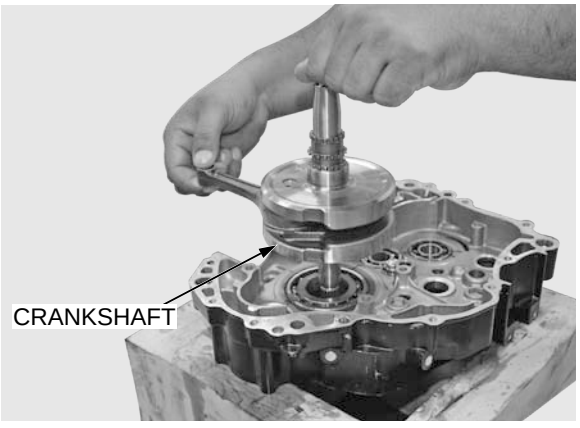

INSTALLATION

Clean all parts in solvent and dry them thoroughly.

Apply clean engine oil to each gear teeth.

Apply molybdenum oil solution to the bushing sliding surface to ensure initial lubrication.

Assemble all parts into their original positions.

- Check the gears for freedom of movement or rotation on the shaft.
- Install the washers and snap rings with the chamfered edge facing the thrust load side. Confirm the inner side of snap rings and washer when you detect the chamfered side.
- Do not reuse worn snap ring which could easily spin in the groove.
- Check that the snap rings are seated in the shaft grooves, and align their end gaps with the grooves of the spline.

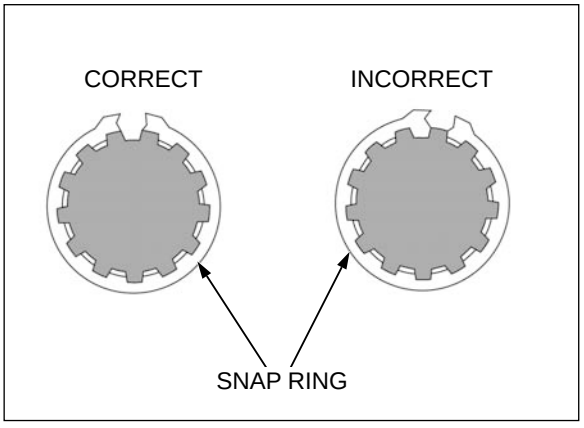

MAINSHAFT

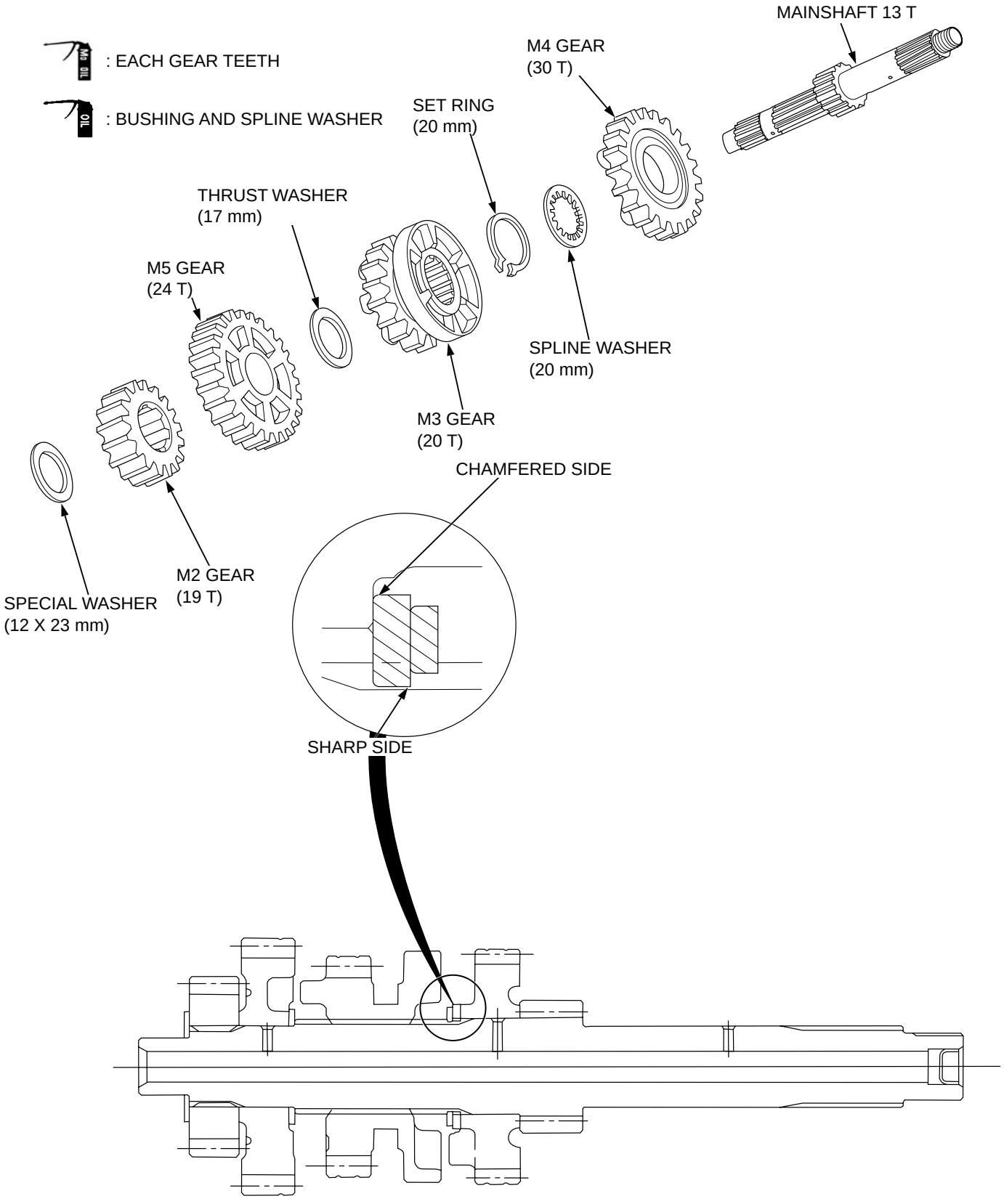
: EACH GEAR TEETH
: BUSHING AND SPLINE WASHER
MAINSHAFT 13 T
M4 GEAR
(30 T)
SET RING
(20 mm)
THRUST WASHER
(17 mm)
M5 GEAR
(24 T)
SPLINE WASHER
(20 mm)
M3 GEAR
(20 T)
CHAMFERED SIDE
SPECIAL WASHER
(12 X 23 mm)
M2 GEAR
(19 T)
SHARP SIDE

COUNTERSHAFT

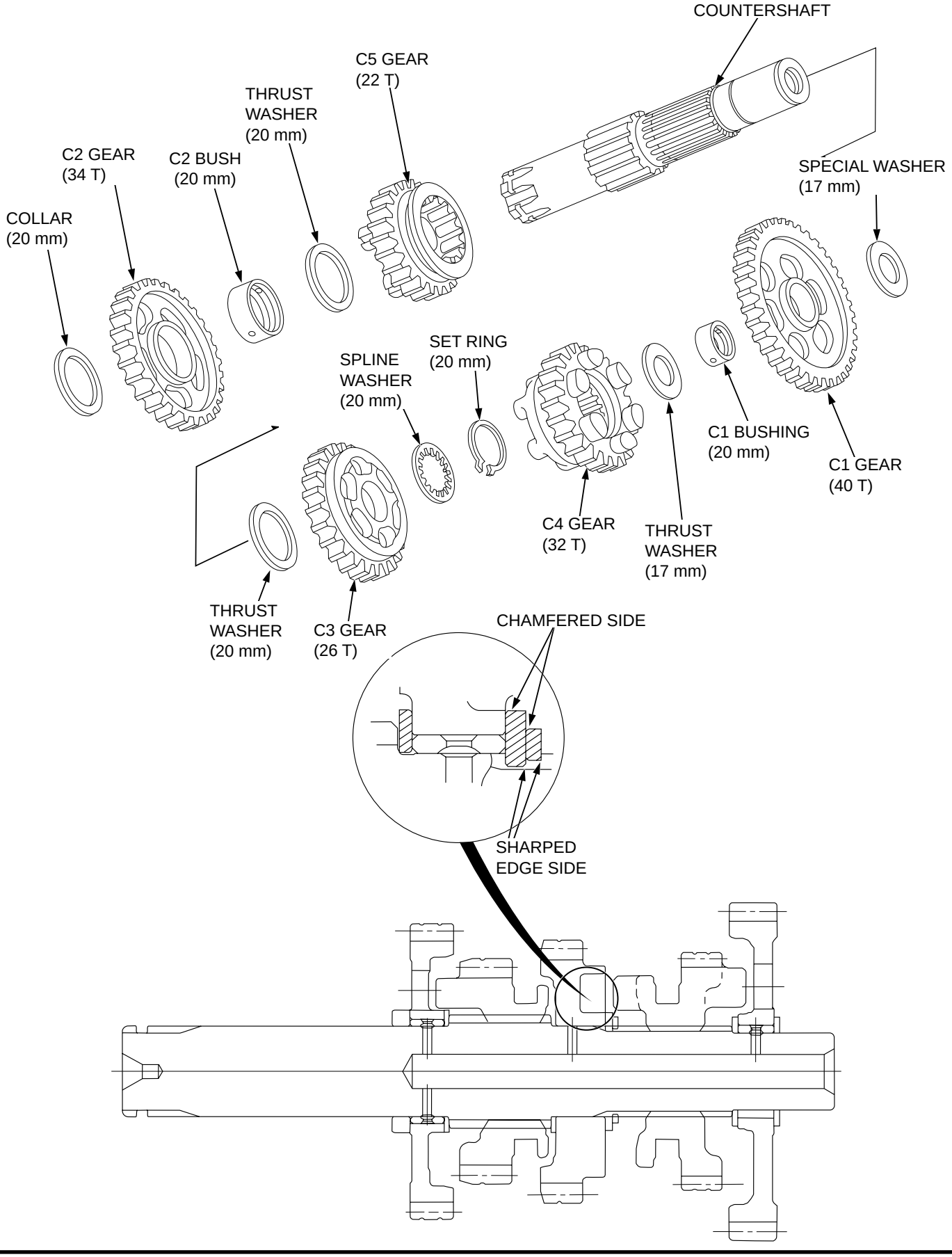

If the crankshaft removed, install the crankshaft first (page 11-13).

Apply molybdenum oil solution to the shift fork grooves.

Apply clean engine oil to the transmission gear teeth.

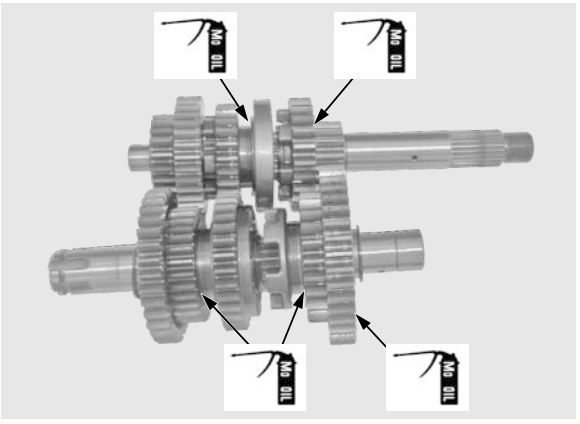

Install the mainshaft and countershaft together into the right crankcase. Be sure to install the three end washers (mainshaft, left only countershaft, both ends.)

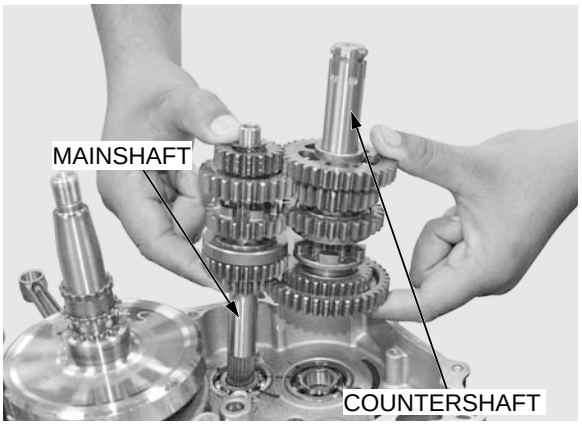

Each shift fork has an identification marks; " R/L" (right and left), "C" (center).

Install the shift forks into the shifter gear grooves with the marks facing up (left crankcase side).

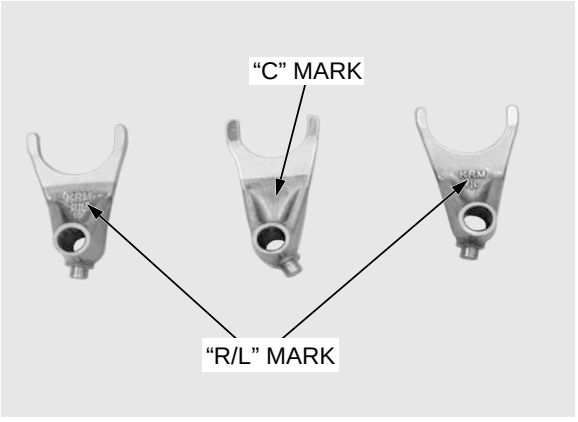

Apply clean engine oil to the guide grooves in the shift drum and install it, while aligning the shift fork guide pins with the guide grooves.

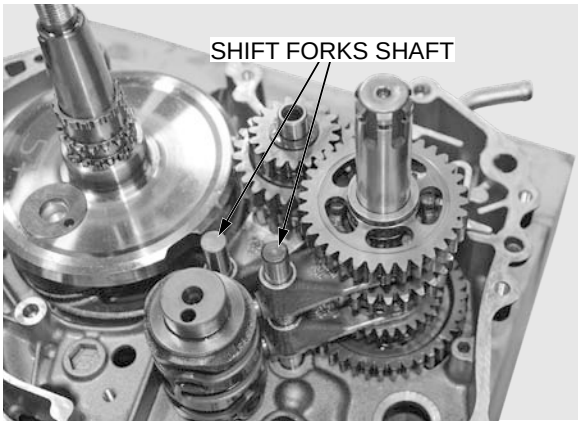

Apply clean engine oil to the shift fork shafts, and insert them through the shift forks into the right crankcase.

Rotate the mainshaft by hand to see the gears rotate freely.

Assemble the crankcase.

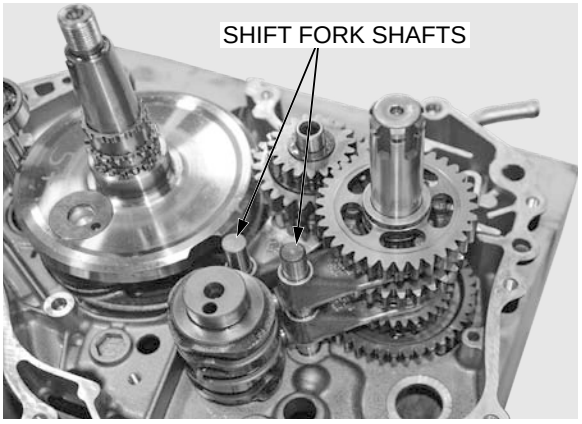

Carefully install the balancer shaft aligning with its groove with the groove given in the crankshaft.

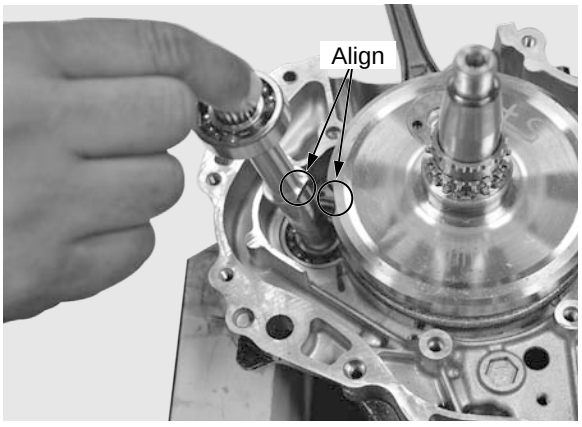

CRANKCASE ASSEMBLY

Clean the oil passages of crankcase using the compressed air.

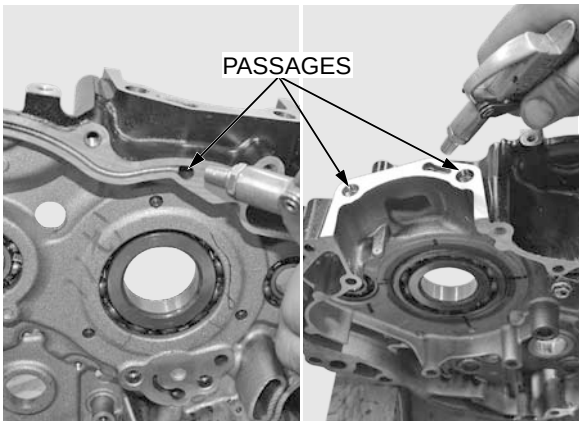

Clean the left and right crankcase mating surface thoroughly, being careful not to damage them and check for damage.

Apply a light but through coating of sealant to all crankcase mating surface except the oil passage area.

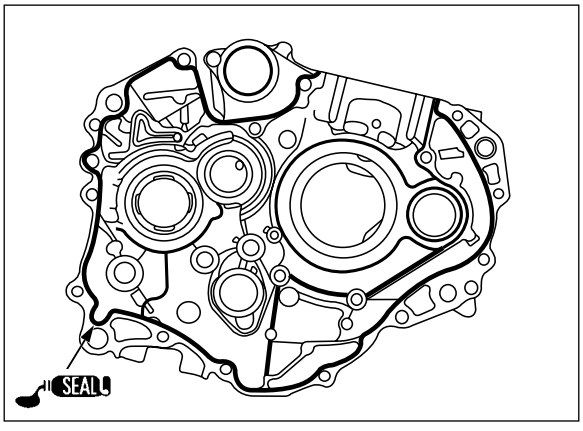

Install the dowel pins.

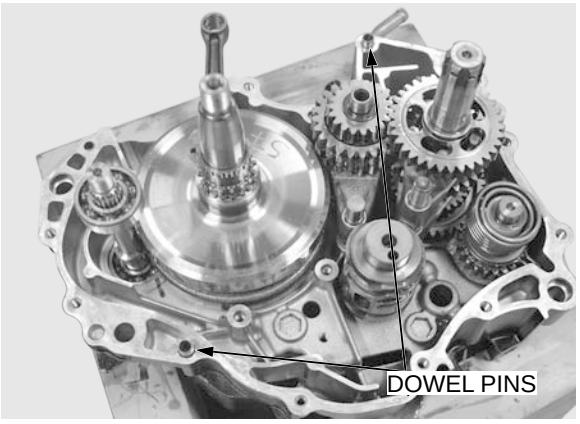

Do not force the crankcase halves together, if there is excessive force required, some thing is wrong. Remove the left crankcase and check for misaligned parts.

Install the left crankcase over the right crankcase.

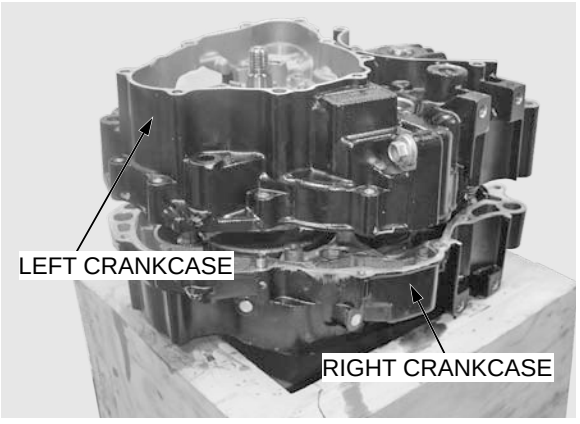

Install the crankcase bolts, and tighten the bolts in a crisscross pattern in 2-3 steps.

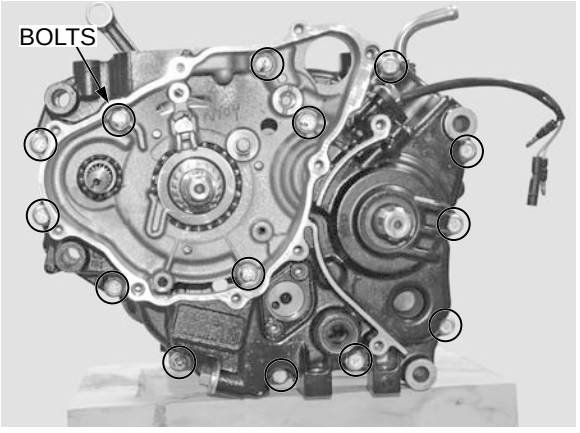

Install the tighten the right crankcase bolt.

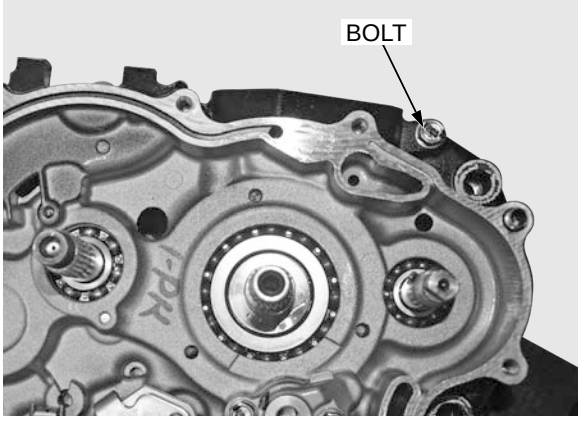

Install the balancer drive gear by aligning the keyway of the gear and the crankshaft.

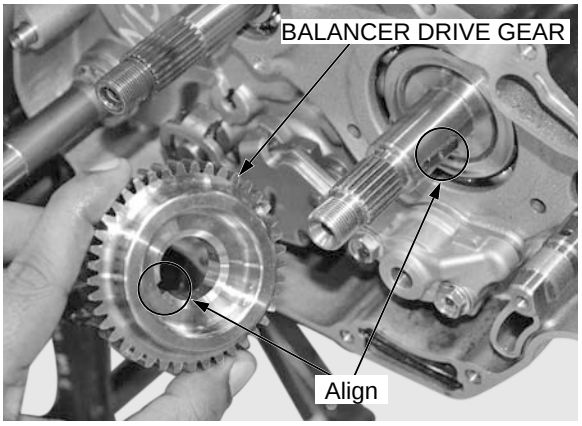

Install the balancer driven gear by aligning the keyway of the gear and the balancer shaft.

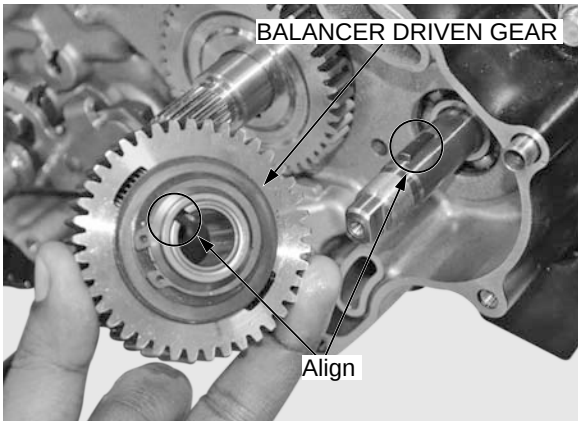

Align the punch marks on the balancer drive gear and balancer driven gear for arranging the final timing for the movement between the crankshaft and the balancer shaft.

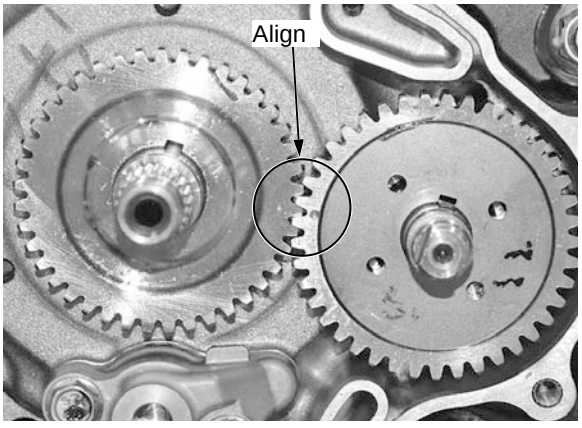

Install the balancer driven weight 'A' on to the balancer shaft by aligning its keyway.

Install and tighten the balancer driven gear nut and washer to the specified torque using the below mentioned special tool.

TORQUE : 64 N.m (6.5 kgf.m, 47 lbf.ft)

TOOLS:

Gear holder **07006-KRBT900**

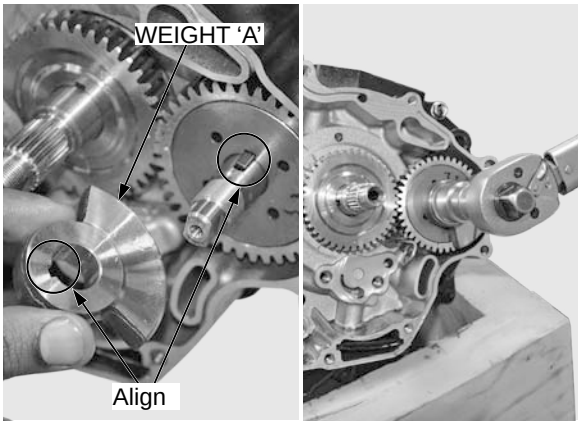

Install the second weight 'B' by aligning the spline on the weight with the spline on the balancer shaft.

Tighten the washer and nut to the specified torque.

TORQUE : 55 N.m (5.5 kgf.m, 44 lbf.ft)

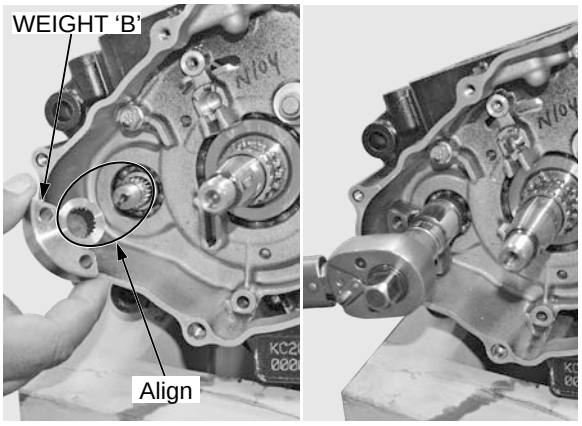

When installing the push plug, make sure the crankshaft bearing outer touches the taper part of push plug.

Apply molybdenum oil solution to the push plug.

Install the push plug and spring.

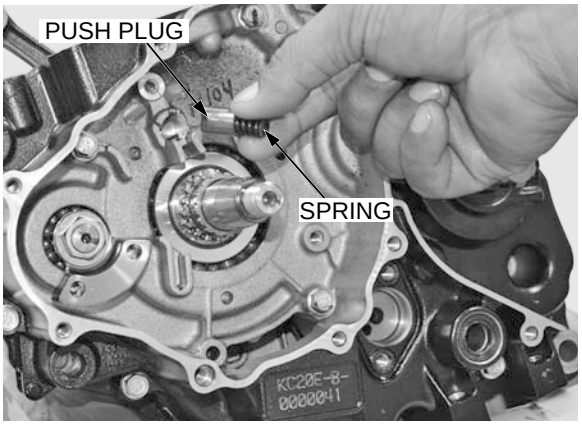

Apply locking agent to the threads of the push plug bolt.

Install the push plug plate and bolt.

Tighten the bolt to the specified torque.

TORQUE: 10 N.m (1.0 kgf.m, 7 lbf.ft)

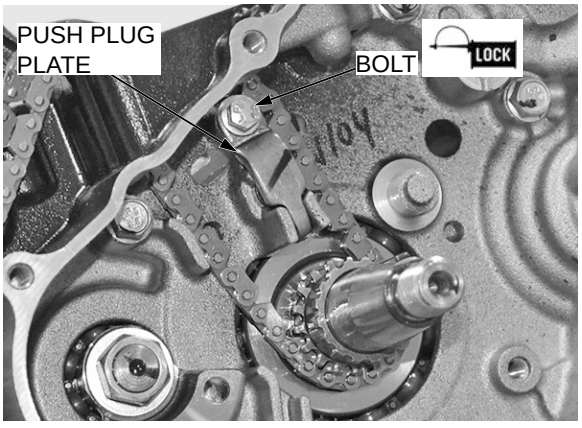

Install the cam chain through the crankcase.

Install the cam chain to the sprocket.

Install the tensioner guide and tensioner guide plate.

Install and tighten the tensioner guide plate bolts (2 nos).

Install the removed parts in the reverse order of removal.

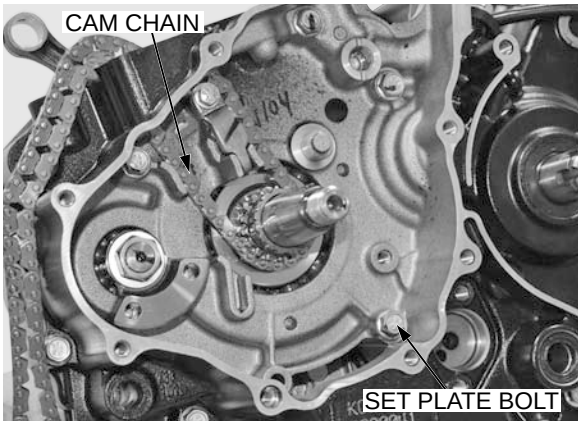

KICKSTARTER

REMOVAL

Remove the right hand side crankcase (page 11-4).

Remove the snap ring and spindle retainer.

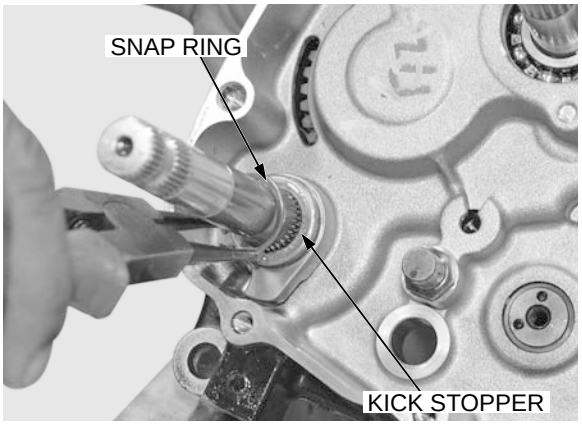

Pullout the kickstarter assembly to unhook the return spring from the crankcase.

DISASSEMBLY

Remove the following:

– Lock washer
– Collar Ratchet
– Return spring
– Snap ring
– Ratchet

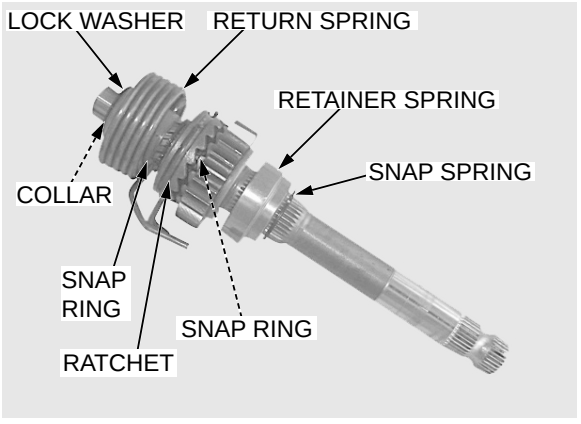

Remove the following:

– Snap ring
– Washer
– Drive gear
– Spindle

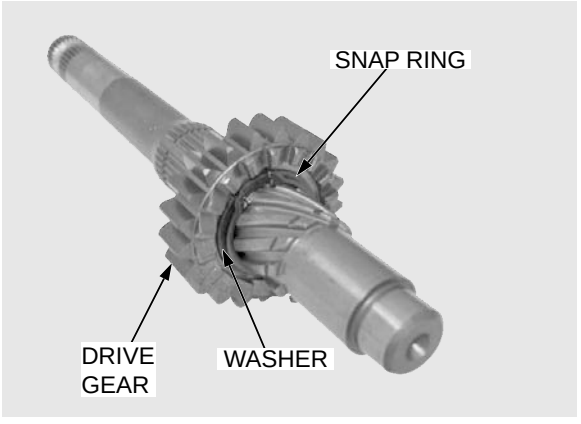

INSPECTION

Check the following:

– Starter ratchet and kickstarter drive gear for excessive wear or damage
– Spindle for vent or damage

Measure the kickstarter drive gear I.D. and spindle O.D. at the kickstarter drive gear.

SERVICE LIMITS:

Drive gear I.D.: 16.06 mm (0.632 in)

Spindle O.D.: 15.94 mm (0.628in)

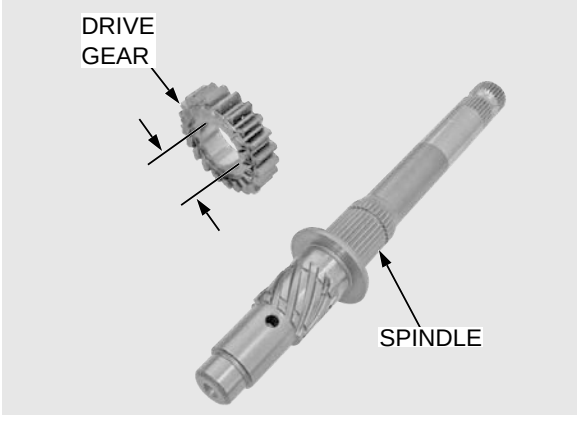

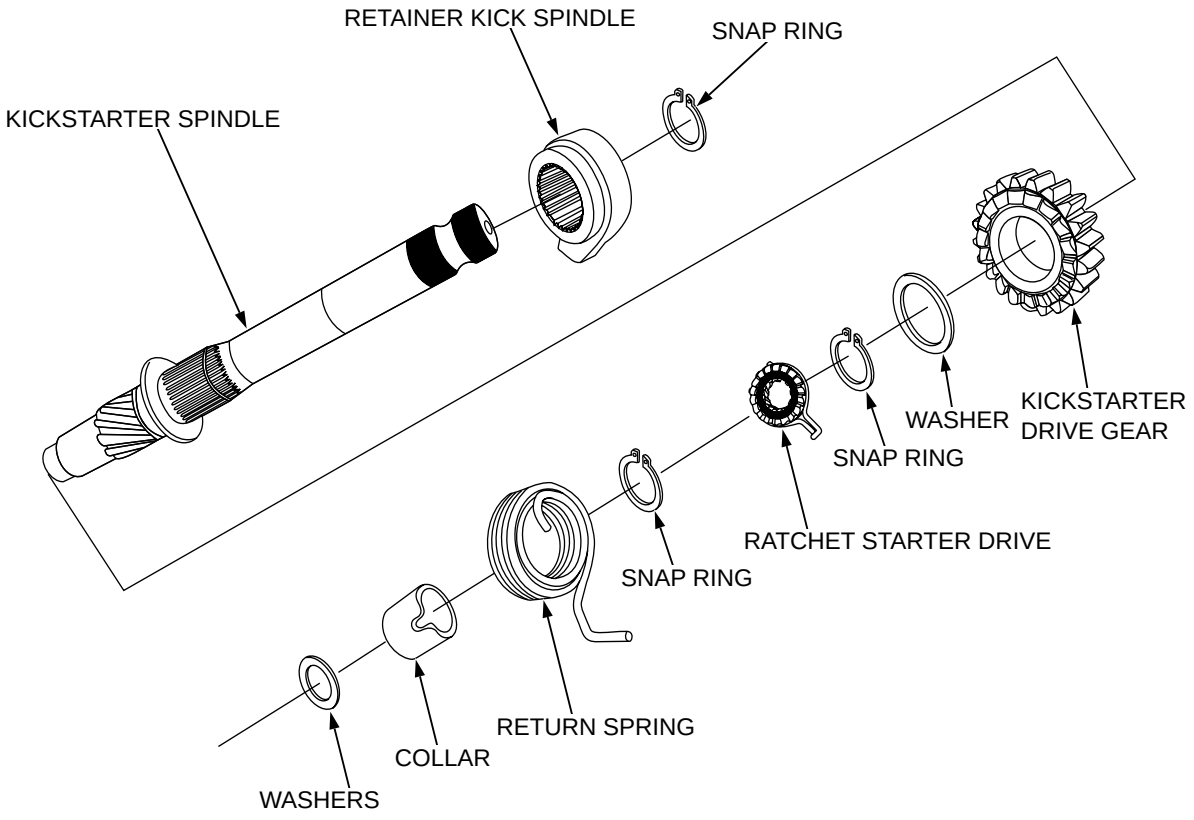

Apply molybdenum oil solution to the kickstarter drive gear inner surface, and install it.

Install the washer and snap ring.

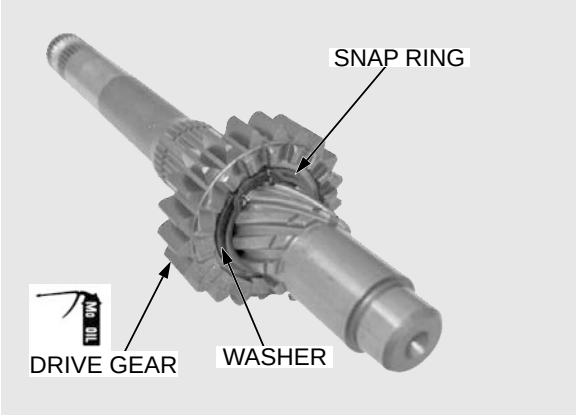

Apply molybdenum oil solution to the starter ratchet inner surface, and install it by on the kickstarter spindle.

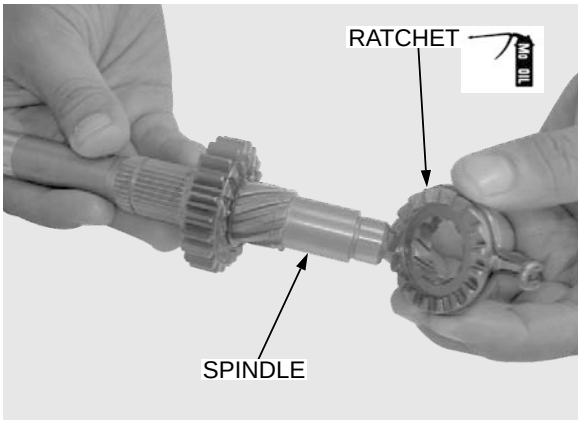

Hook the return spring to the hole of the kickstarter spindle, and there install the collar by aligning its cut-out with the spring.

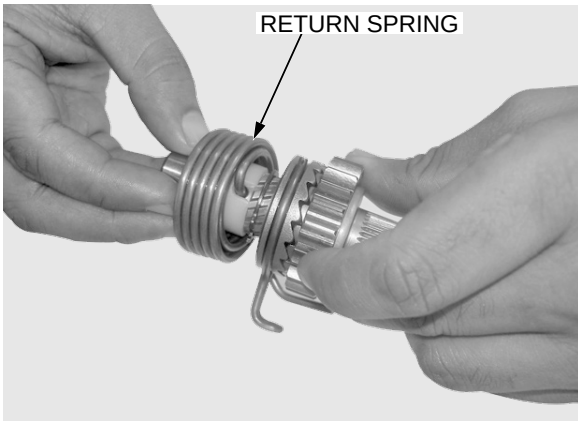

Install the lock washer, and press it.

Install the lock washer in the groove of the kickstarter spindle.

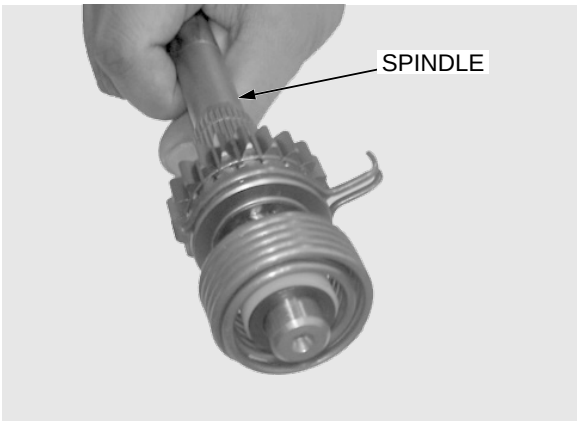

INSTALLATION

Apply molybdenum oil solution to the kickstarter drive gear teeth.

Install the kickstarter assembly and insert the ratchet stop into the right crankcase groove.

Hook the return spring to the crankcase right.

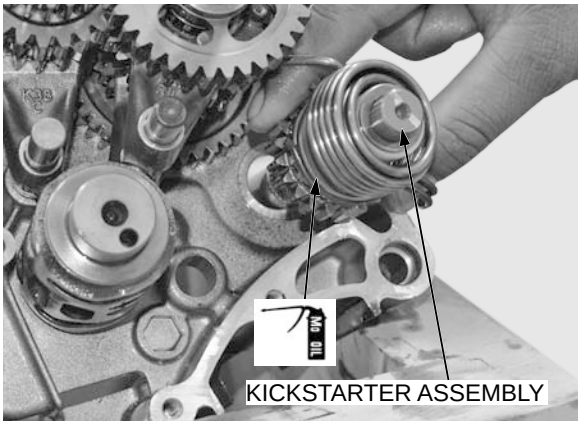

Rotate the return kickstarter clockwise, counter clockwise (if necessary) in order to ease the installation.

Install the kick stopper by aligning the punch marks on the stopper and kickstarter shaft.

Install the snap ring.

Install the right crankcase (page 11-17).

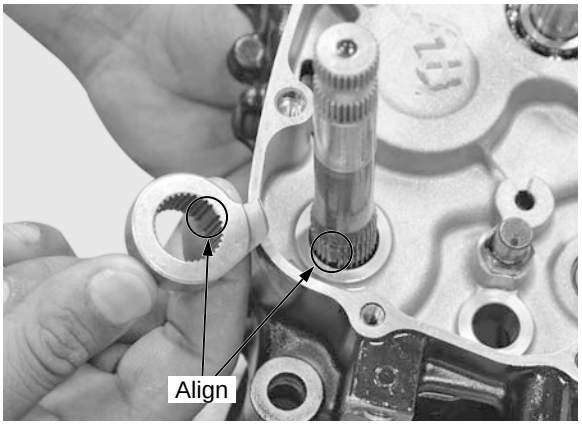

COMPONENT LOCATION

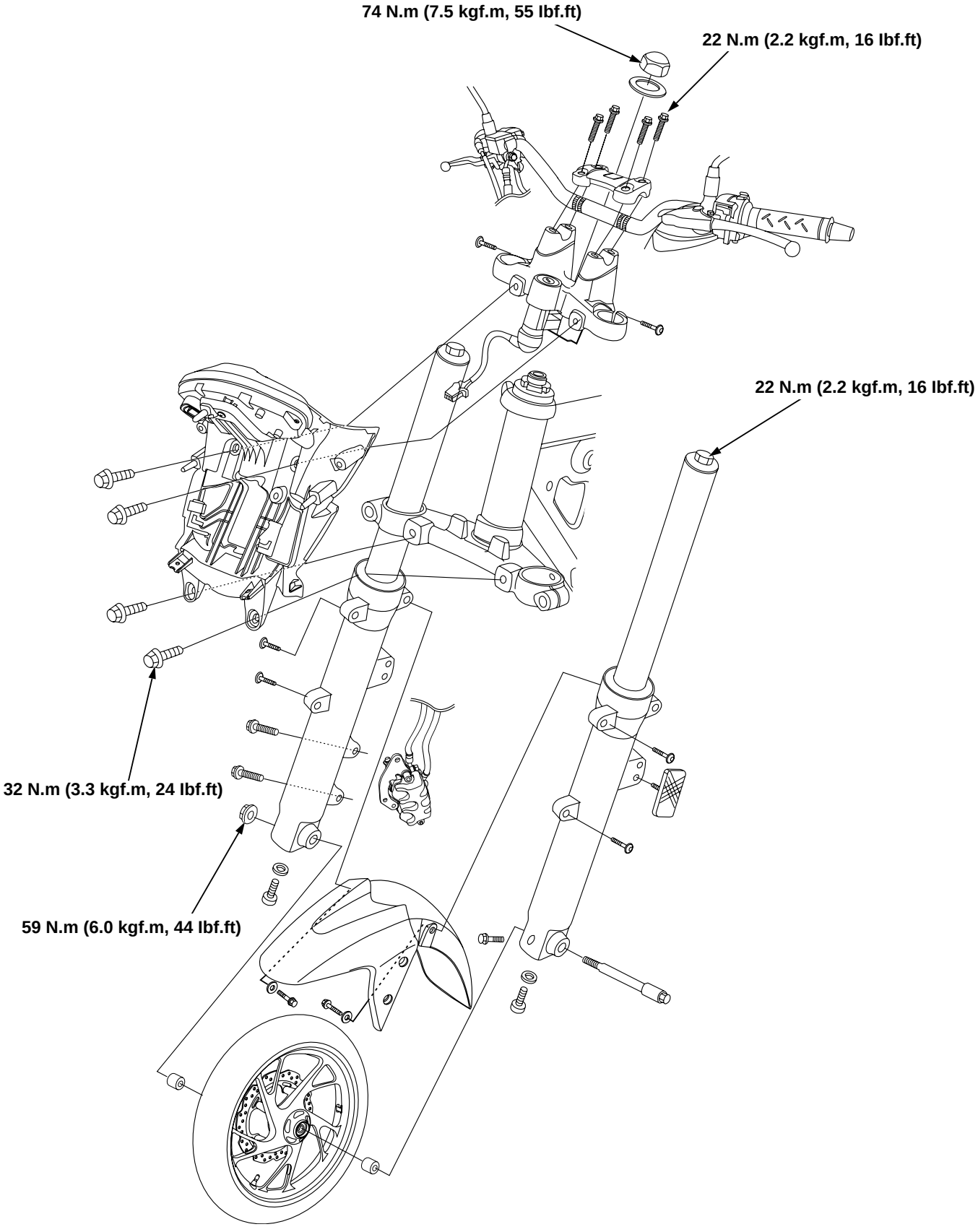

12. FRONT WHEEL/SUSPENSION/STEERING

COMPONENT LOCATION	**12-0**	**FRONT WHEEL**	**12-9**
SERVICE INFORMATION	**12-1**	**FORK**	**12-14**
TROUBLESHOOTING	**12-3**	**STEERING STEM**	**12-22**
HANDLEBAR	**12-4**		

⚠ CAUTION

Frequent inhalation of brake pad (shoe) dust, regardless of material composition could be hazardous to your health.

- Avoid breathing dust particles.
- Never use an air hose or brush to clean brake assemblies. Use an OSHA-approved vacuum cleaner.

SERVICE INFORMATION

GENERAL

- Riding on damaged rims impairs safe operation of the motorcycle.
- When servicing the front wheel, fork or steering stem, support the motorcycle using a center stand and hoist.
- A contaminated brake disc or pad (shoe) reduces stopping power. Discard contaminated pads (shoes), and clean a contaminated disc with a high quality brake de-greasing agent.
- After the front wheel installation, check the brake operation by applying the brake lever.
- Refer to the brake system information (page 14-1).
- This motorcycle is equipped with the tubeless tyre.
- Refer to the tubeless tyre repair (page 13-1).

SPECIFICATIONS

Unit: mm (in)

ITEM		STANDARD	SERVICE LIMIT
Minimum tire thread depth		–	1.5 (0.06)
Cold tire pressure	Driver only	175 kPa (1.75 kgf/cm², 25 psi)	–
	Driver and passenger	175 kPa (1.75 kgf/cm², 25 psi)	–
Axle runout		–	0.2 (0.01)
Wheel rim runout	Radial	–	0.3 (0.01)
	Axial	–	0.3 (0.01)
Fork	Spring free length	390.3 (15.366)	363 (14.291)
	Pipe runout	–	0.20 (0.008)
	Recommended fluid	Honda Ultra Cushion Oil No.10 (BAHA-RAT SS-8)	–
	Fluid level	144 mm (5.66 in)	–
	Fluid capacity	310 cm³ ± 2.5 cm³ (11.0 ± 0.08 USoz, 11.5 ± 0.09 UKoz)	–
Steering head bearing preload		0.7 – 1.3 kgf (1.64 – 2.81 lbf)	–

TORQUE VALUES

ITEM	PART NO.	QTY	THREAD DIA. (mm)	TORQUE N·m (kgf·m, lbf·ft)	REMARKS	PAGE NO.
Front brake disc bolt	90105 – KSP – 870	5	8	42 (4.3, 31)	NOTE 2	Page 12–12
Front axle nut	90306 – KTE – 911	1	12	59 (5.9, 43)	NOTE 3	Page 12–13
Handlebar upper holder bolt	90111 – 362 – 000	4	6	22 (2.2, 16)		Page 12–6
Master cylinder holder bolt	96001 – 06022 – 07	2	6	9 (0.9,6.6)		Page 12–9
Rear view mirror lock nut	90201 – MW3 – 620	2	10	34 (3.5, 26)		Page 12–9
Fork socket bolt	90116 – KV3 – 7010	2	8	20 (2.0, 15)	NOTE 2	Page 12–20
Fork cap	51450 – K43 – 901	2	33	22 (2.2, 16)		Page 12–22
Bottom bridge pinch bolt	95701 – 10032 – 07	2	10	32 (3.2, 23)		Page 12–22
Top bridge bolt	90101 – K43 – 900	2	8	22 (2.2, 16)		Page 12–22
Steering bearing adjustment nut	53220 – KSP – 860	1	26	2.5 (0.25, 1.8)		Page 12–26
Steering stem nut	90304 – KSP – 900	1	24	74 (7.5, 55)		Page 12–27

TOOLS

Attachment, 37x40 mm 070GD002I150 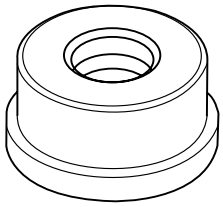	Attachment, 42x47 mm 07746-0010300 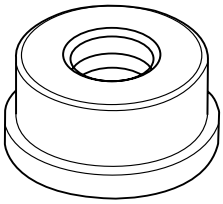	Pilot, 15 mm 07746-0040300 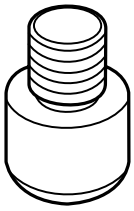
Driver 07749-0010000 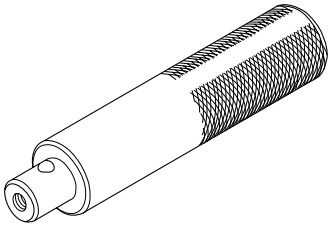	Bearing remover shaft 07746-0050100 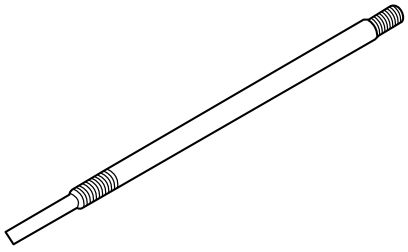	Bearing remover head, 15 mm 07746-0050400 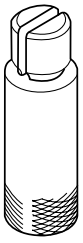
Piston remover front cushion 070SRTKSP003 	Fork seal driver 070SRTKSP001 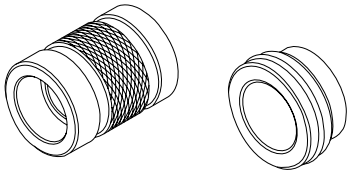	Socket wrench steering 070SRTKSP004 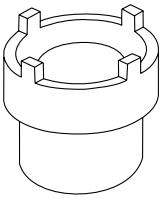
Ball race remover 070SRTKSP005 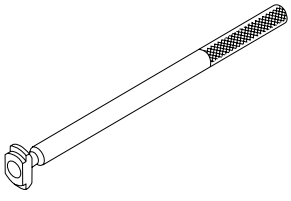	Steering cone installer (Frame) 070SRTKSP007 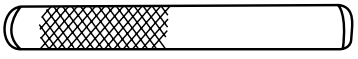	T-stem cone remover 07000TCR900 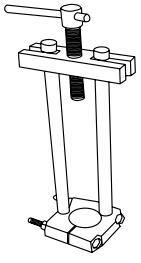

Steering cone installer
070SRTKSP006

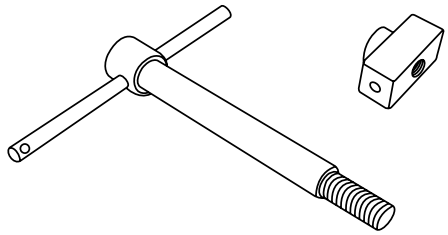

TROUBLESHOOTING

Hard steering

- Steering stem adjusting nut too tight
- Damaged steering head bearing/race
- Insufficient tire pressure
- Faulty tire

Steers to one side or does not track straight

- Bent fork
- Bent front axle
- Wheel installed incorrectly
- Faulty steering head bearings
- Bent frame
- Faulty wheel bearing
- Worn swing arm pivot components
- Unevenly assembled left and right fork legs
- Unequal oil quantity in each fork leg

Front wheel wobbling

- Bent rim
- Worn or damaged wheel bearings
- Faulty tire
- Axle not tightened properly

Wheel turns hard

- Faulty wheel bearings
- Bent axle
- Brake drag

Soft suspension

- Weak fork spring
- Insufficient fluid in fork
- Insufficient tire pressure

Hard suspension

- Incorrect fork fluid viscosity
- Bent or damaged fork tubes
- Clogged fluid passage
- Damaged fork tube and/or fork slider

Front suspension noisy

- Insufficient fluid in fork
- Loose fork fasteners

HANDLEBAR

REMOVAL

Remove the wire bands and rear view mirror.

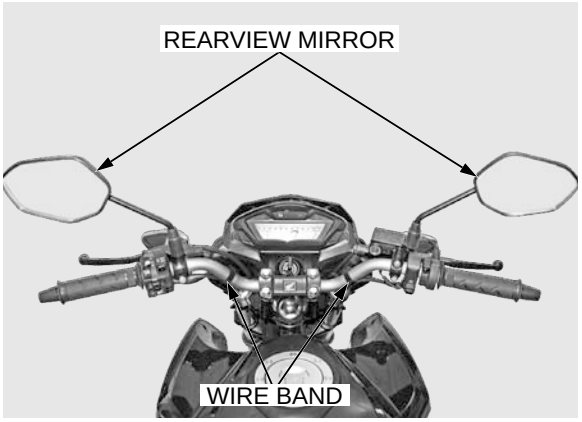

Disconnect the front brake light switch connectors.

Remove the bolts, holder and brake master cylinder.

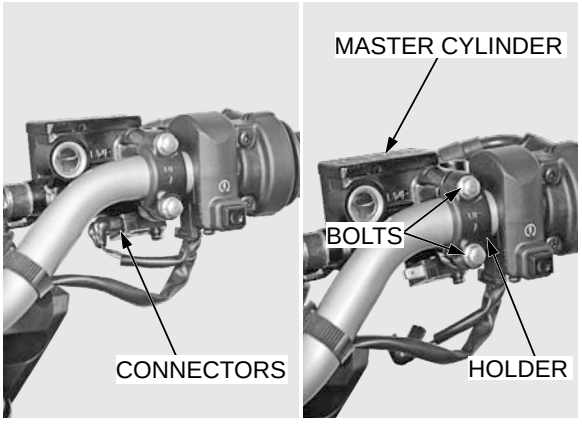

Remove the starter switch housing screws and remove the housing from the handle bar.

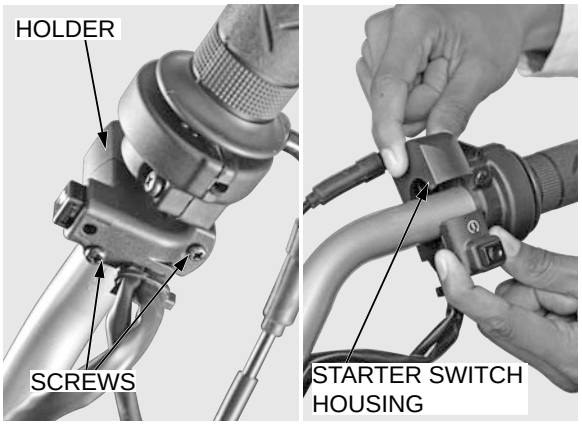

Remove handlebar throttle housing screws (2 nos.) on right hand side.

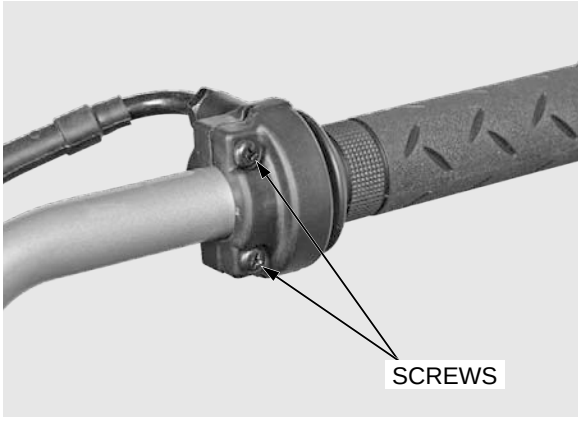

Disconnect the throttle cable from the throttle pipe, then remove the handlebar.



Remove the clutch wire connector.

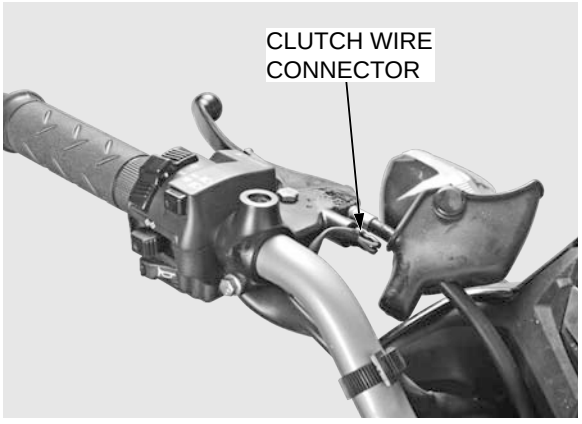

Remove the screws and separate the left handlebar switch housing.

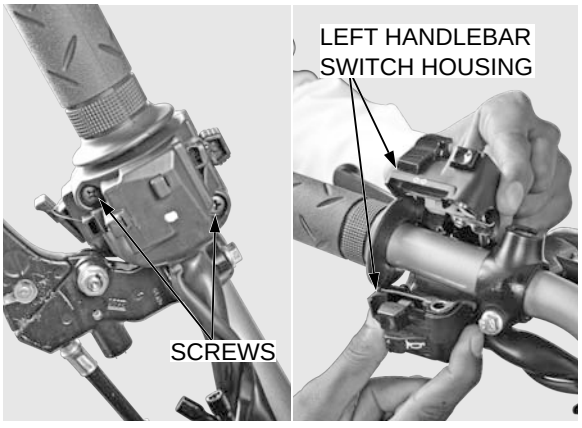

Pull out the handle bar grip with twisting movement in outward direction.

Remove the clutch cable.

Remove the clutch lever bracket bolt and slide the bracket out of the handle bar.

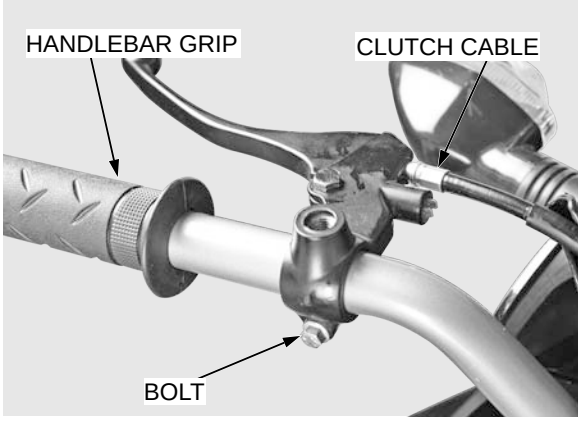

Remove the bolts, handlebar upper holders and handlebar from the top bridge.

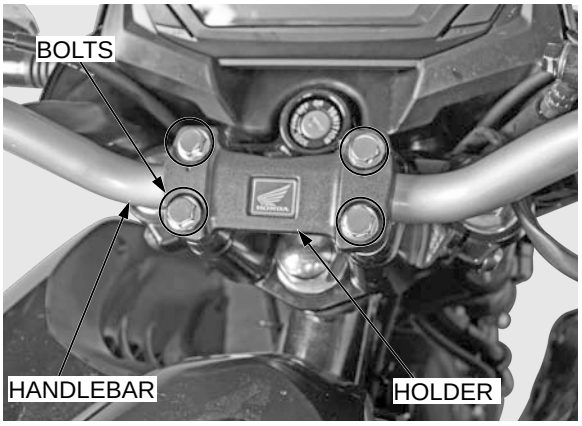

INSTALLATION

Place the handlebar to the top bridge.

Place the handlebar holders with the punch marks facing forward and install the holder bolts.

Align the punch mark on the handlebar with the mating surface of the lower holder.

Tighten the forward bolts first, then the rear bolts.

TORQUE: 22 N.m (2.2 kgf.m, 16 lbf.ft)

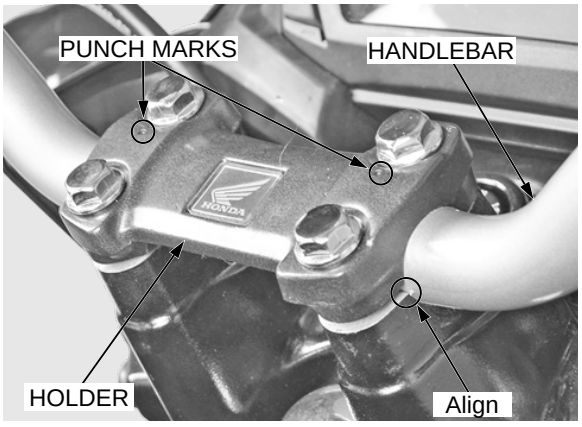

Slide and Install the clutch lever bracket by aligning the meeting surface of the bracket with the punch mark on the handle bar.

Tighten the clutch lever bracket bolt.

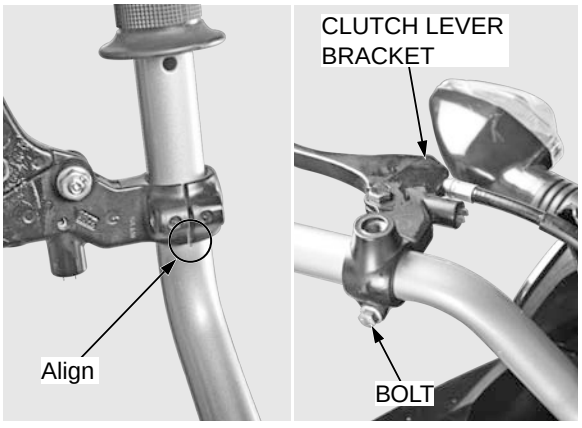

Allow the adhesive to dry for 1 hour before using.

Apply Honda Bond A or its equivalent to the inside surface of the grips and to the clean surface of the left handlebar.

Wait 3-5 minutes and install the grip.

Rotate the grips for even application of the adhesive.

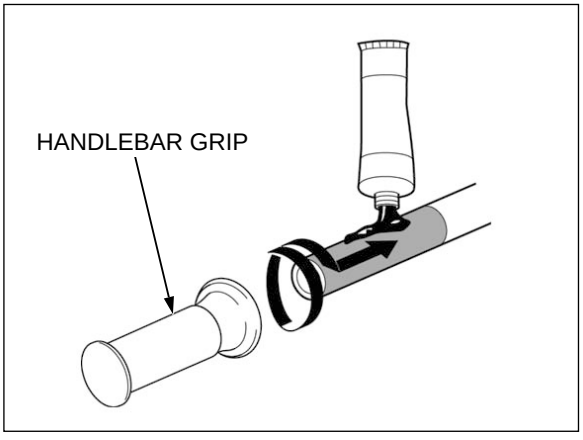

Install the left handlebar switch housing while aligning the locating pin in the housing with the hole in the handlebar.

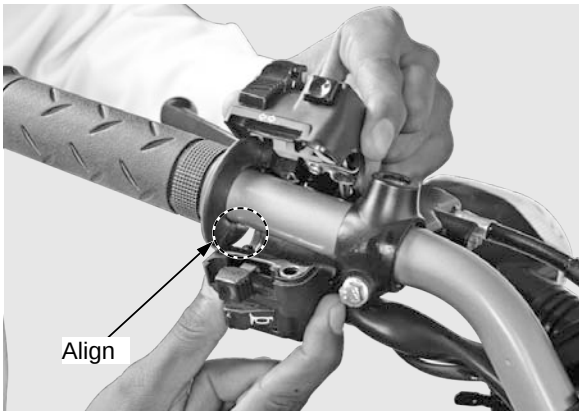

Install the screw and tighten the forward screw first, then the rear screw.

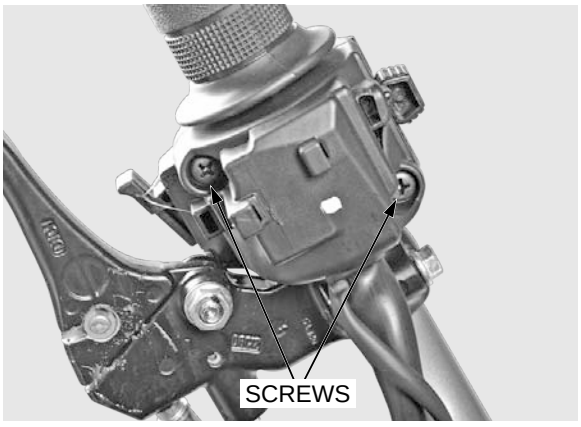

Connect the clutch wire connector.

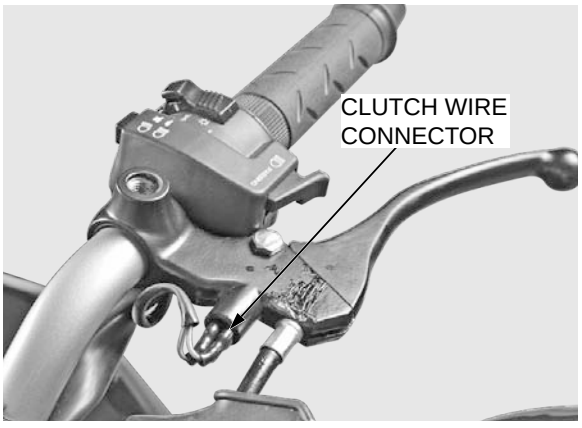

Apply grease to the throttle pipe rotating area of the handlebar and install the throttle grip on the handle bar.

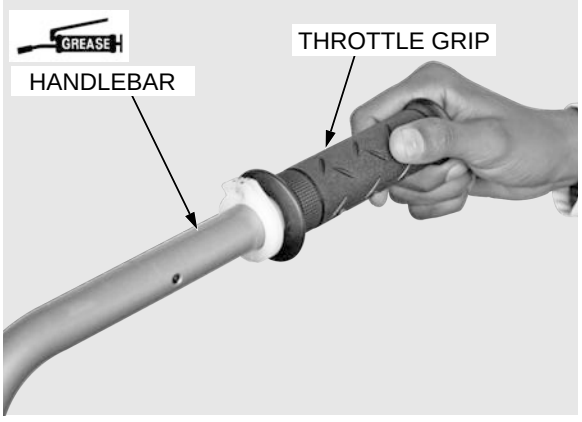

Apply silicon grease to the throttle cable end.

Connect the throttle cable end to the handlebar.

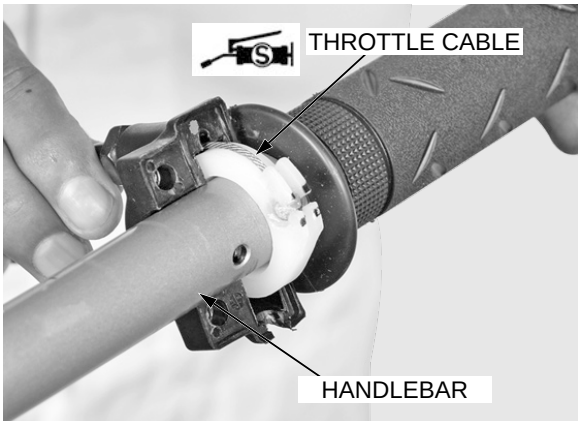

Install the right handlebar switch housing, while aligning its locating pin with the hole on the handlebar.

Install and tighten the throttle housing screws.

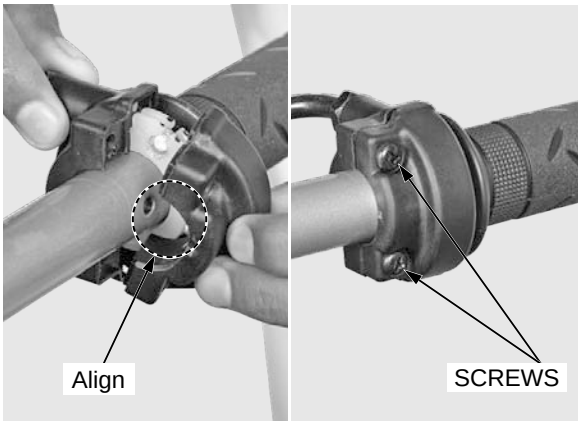

Install the starter switch housing on the handlebar while aligning it's locating pin.

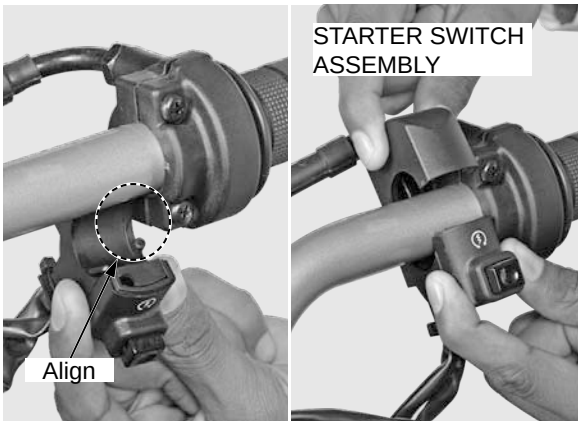

Install and tighten the starter switch housing screws.

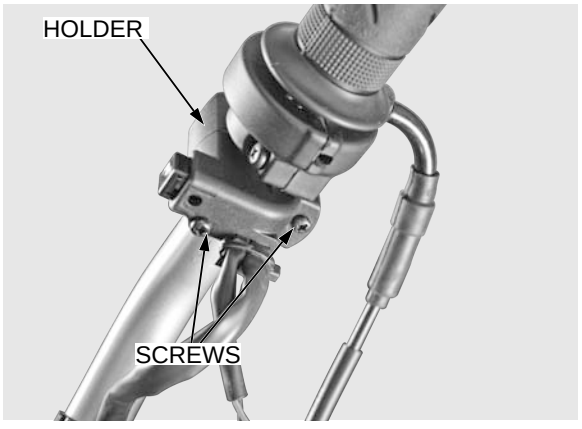

Install the master cylinder bracket & holder with “UP” mark facing up.

Aligning the mating surface of the bracket holder with the punch mark on the handle bar.

Tighten the holder bolt to the specified torque.

TORQUE: 9 N.m (0.9 kgf.m, 6.6 lbf.ft)

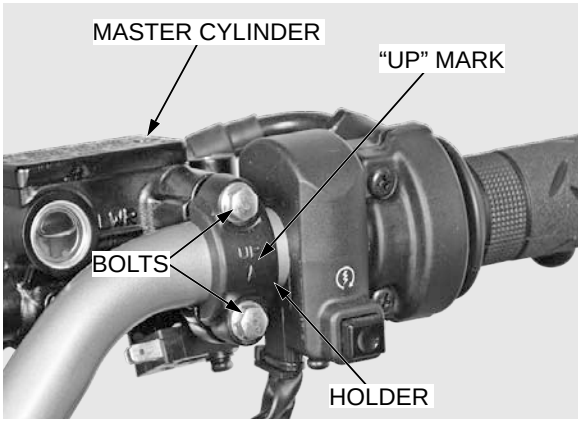

Also connect the front brake light switch connector.

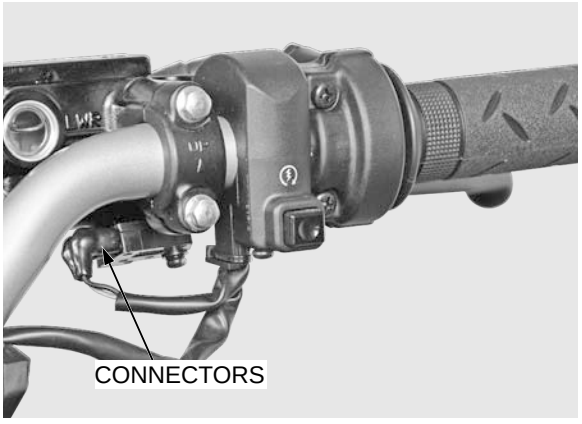

Install the wire bands and rear view mirrors.

Tighten the mirror mounting nuts to the specified torque.

TORQUE: 34 N.m (3.5 kgf.m, 26 lbf.ft)

Check & adjust the throttle grip free play (Page 3-5).

Adjust the clutch lever free play (Page 3-22).

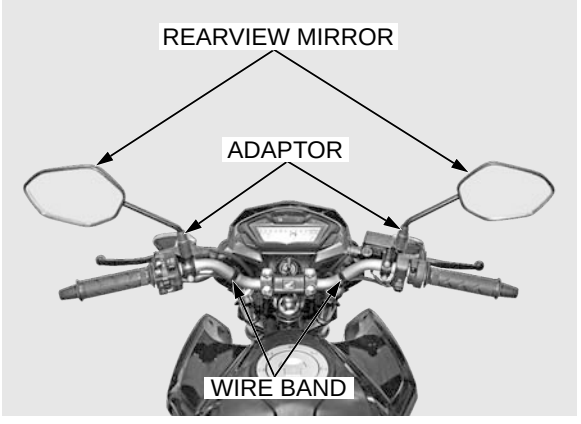

FRONT WHEEL

Tie down the vehicle from rear side by using tie down belt.

REMOVAL

Loosen the front axle nut.

Support the motorcycle using a safety stand or hoist, raise the front wheel off the ground.

Remove the front axle nut.

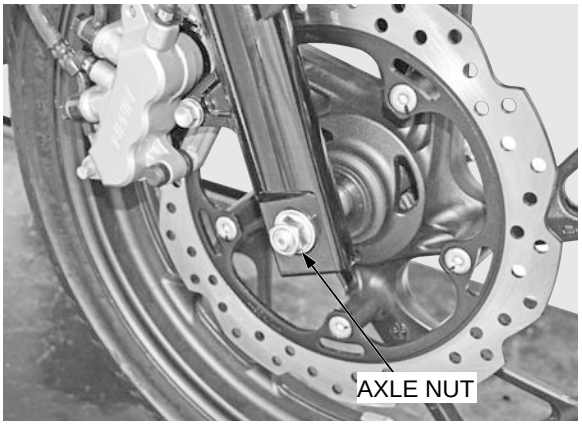

Do not operate the front brake lever after the front wheel is removed.

Loosen the front axle pinch bolt.

Remove the front axle and front wheel.

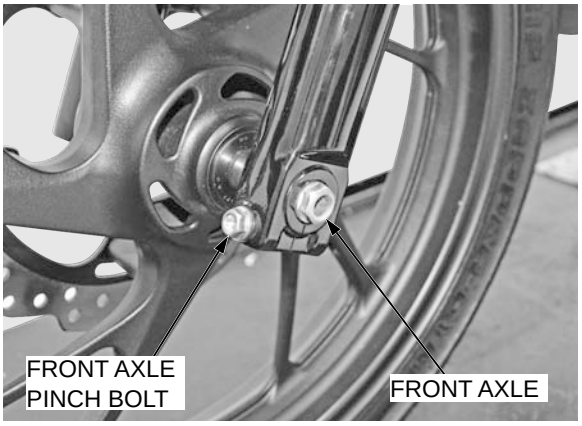

Remove the side collar from both side of front wheel.

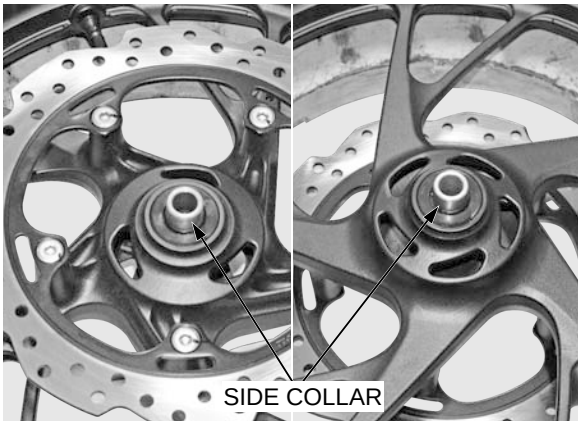

INSPECTION

AXLE

Place the axle on V-blocks. Turn the axle and measure the runout using a dial indicator.

Actual runout is 1/2 the total indicator reading.

SERVICE LIMIT: 0.2mm (0.01 in)

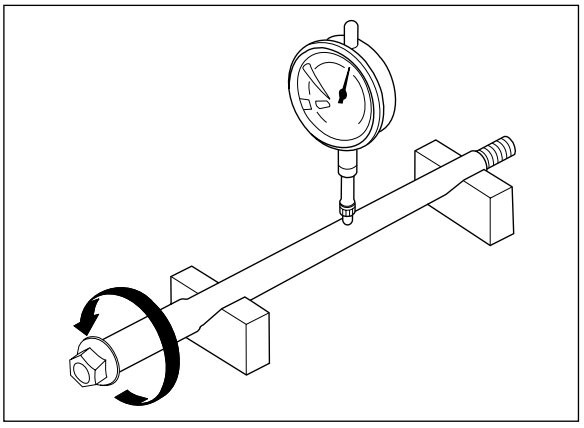

WHEEL BEARING

Turn the inner race of each bearing with your finger.

Also check that the bearing outer race fits tightly in the hub.

Remove and discard the bearings if the inner races do not turn smoothly, quietly, or if they fit loosely in the hub.

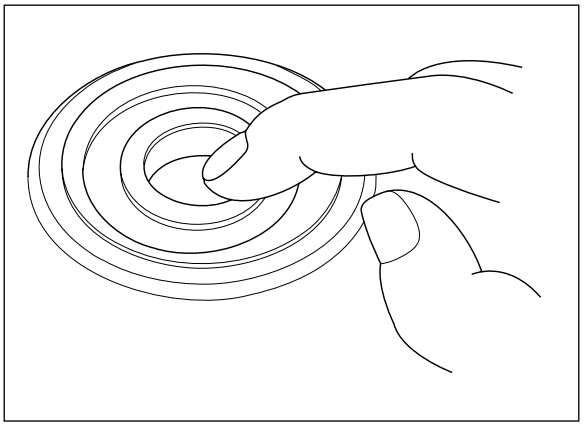

WHEEL RIM

Check the wheel rim runout by placing the wheel in a turning stand.
Turn the wheel by hand and read the runout using a dial indicator.
Actual runout is 1/2 the total indicator reading.

SERVICE LIMITS:
Axial: 0.3 mm (0.01 in)
Radial: 0.3 mm (0.01 in)

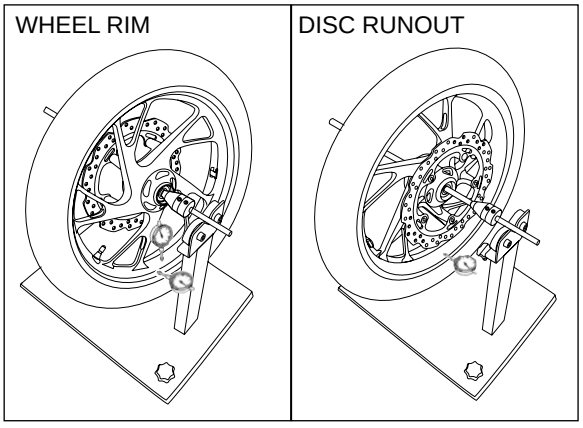

BRAKE DISC

Check the wheel rim runout by placing the wheel in a turning stand.
Spin then wheel by hand, and read the runout using a dial indicator.

SERVICE LIMITS:
Runout: 0.10 mm (0.004 in)

WHEEL BALANCE

Carefully check balance before installing the wheel.

The wheel balance must be checked when the tire is remounted.

For optimum balance the tire balance mark (light mass point: a paint dot on the side wall) must be located next to the valve stem. Remount the tire if necessary.

Note the rear direction marks on the tire, and upon tire installation, always fit the tire so the marks face the same direction.

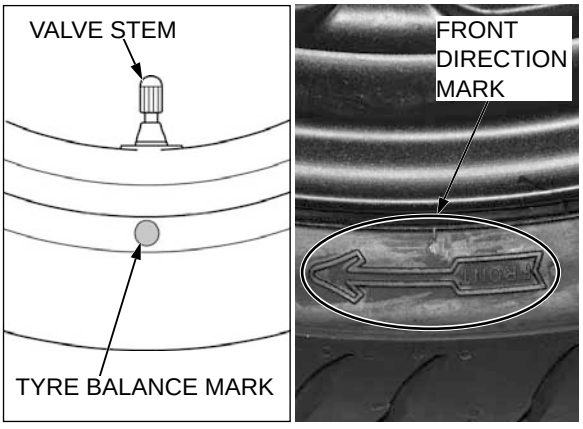

DISASSEMBLY

Place the wheel on a wooden platform. Do not reuse the bolts.

Remove the dust seal from the right wheel hub.

Loosen the brake disc mounting bolts in a crisscross pattern in 2 or 3 steps, and remove the brake disc.

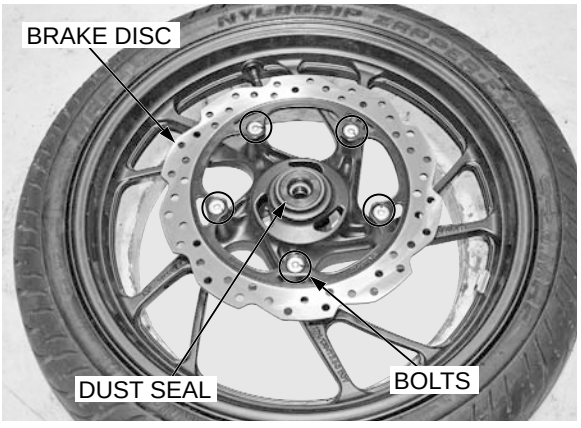

Never install the old bearing, once the bearing has been removed, the bearing must be replaced with new one.

Install the bearing remover head into the bearing.

From the opposite side, install the bearing remover shaft, and drive out the bearing from the wheel hub.

Remove the distance collar, and drive out the other bearing.

TOOLS:

Bearing remover head, 15 mm	**07746-0050400**
Bearing remover shaft	**07746-0050100**



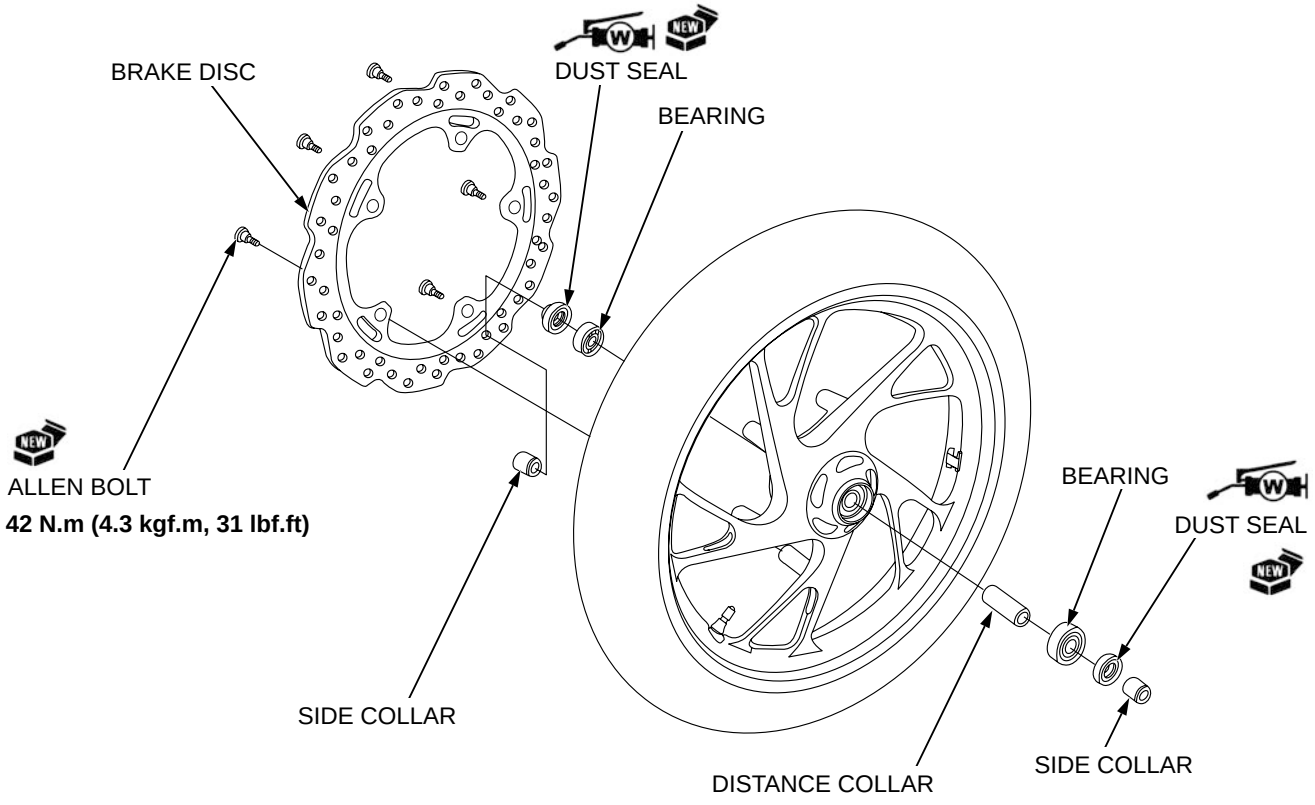

Never install the old bearing once the bearing has been removed, the bearing must be replaced with new ones.

Pack all bearing cavities with grease.

Drive in a new left bearing squarely with its sealed side facing up until it is fully seated.

Install the distance collar, then drive in a new left bearing squarely with its sealed side facing up.

TOOLS:

Driver	**07749-0010000**
Attachment, 42 x 47 mm	**07746-0010300**
Pilot, 15 mm	**07746-0040300**

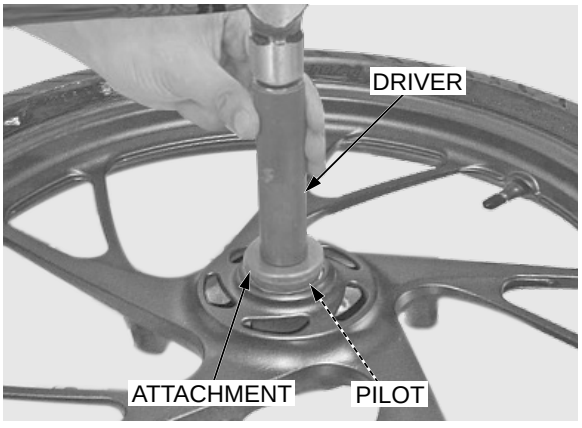

Do not apply grease on the brake disc or stopping power will be reduced

Install the brake disc onto the brake hub with the arrow mark facing out.

Install and tighten new brake disc mounting bolts to the specified torque in a crisscross pattern in 2 or 3 steps.

TORQUE: 42 N·m (4.3 kgf·m, 31 lbf·ft)

Apply grease to a new right dust seal lip.

Install the dust seal until it is flat surface with the right wheel hub.

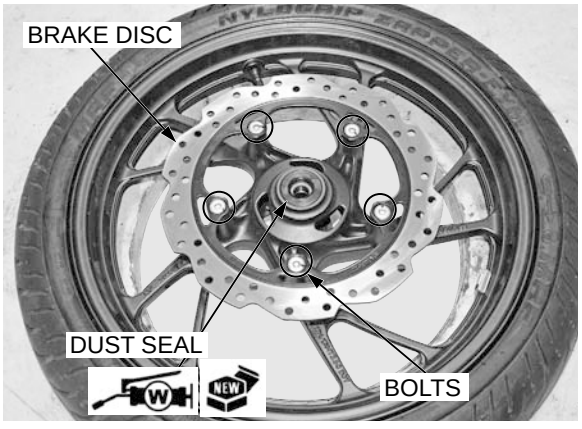

INSTALLATION

Install the side collars both side onto the wheel hub.

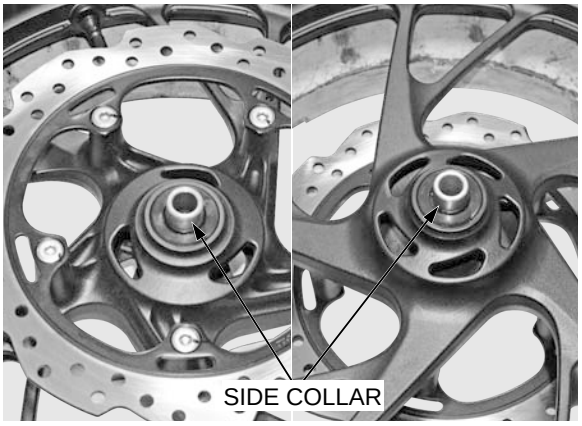

Be careful not to damage the pads.

Install the front wheel between the fork legs so that the brake disc is positioned between the pads.

Install the front axle from left side.



Install and tighten the axle nut to the specified torque.

TORQUE: 59 N.m (5.9 kgf.m, 43 lbf.ft)

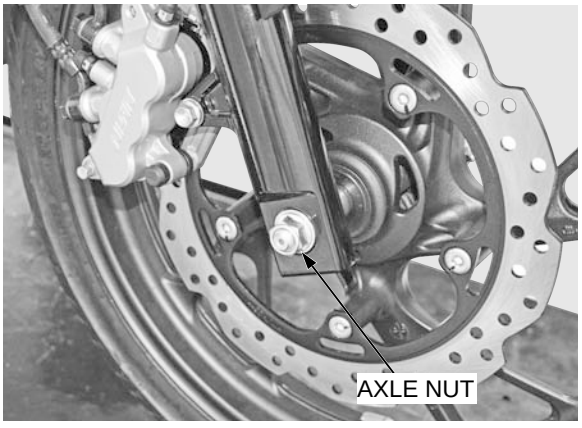

With the front brake applied, pump the forks up and down several times to seat the axle and check brake operation.

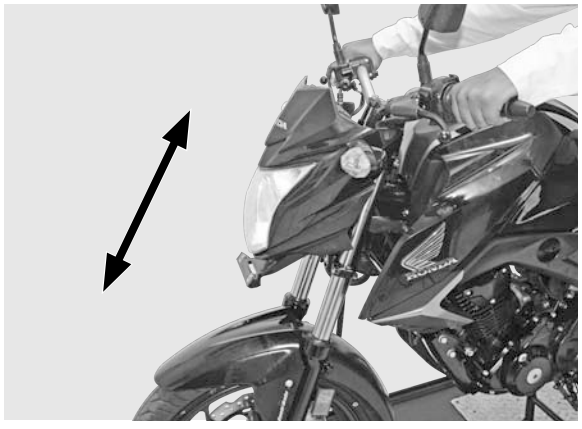

Tighten the front axle pinch bolt to the specified torque.

TORQUE: 22 N·m (2.2 kgf·m, 16 lbf·ft)

Check the brake operation.

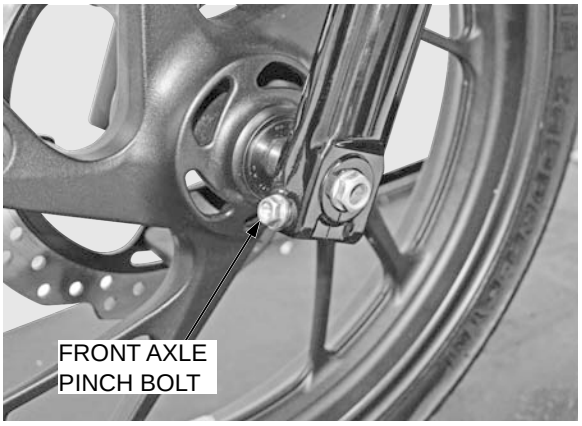

FORK

REMOVAL

Remove the following:

– Front wheel (page 12-9)
– Front fender (page 2-5)

Do not suspend the brake caliper/ bracket assembly from the brake hose. Do not twist the brake hose.

Remove the brake caliper mounting bolts and brake caliper/ bracket assembly.

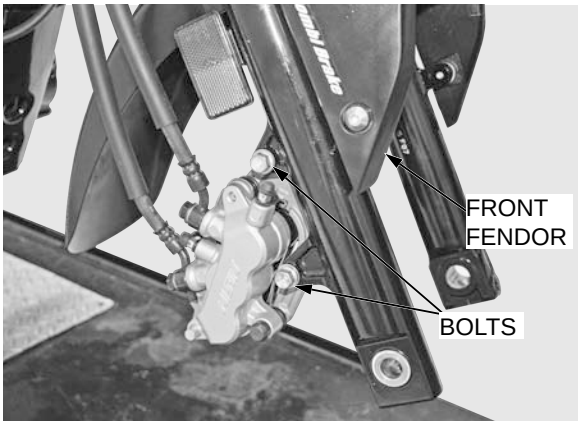

When the fork is ready to be disassembled, loosen the fork socket bolts.



Hold the fork legs and loosen the bottom bridge pinch bolts and lower the fork legs, then remove it.

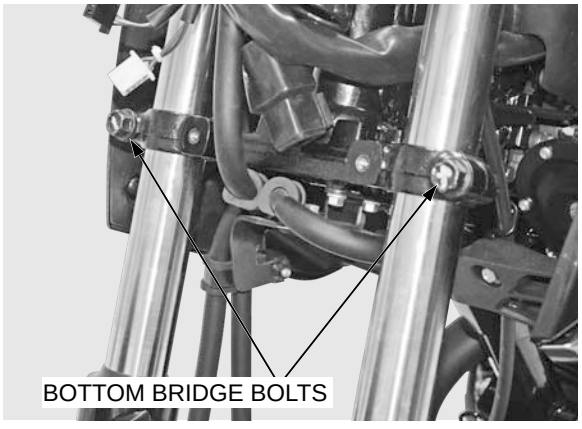

DISASSEMBLY

Be careful not to scratch the fork pipe.

Remove the dust seal and stopper ring.

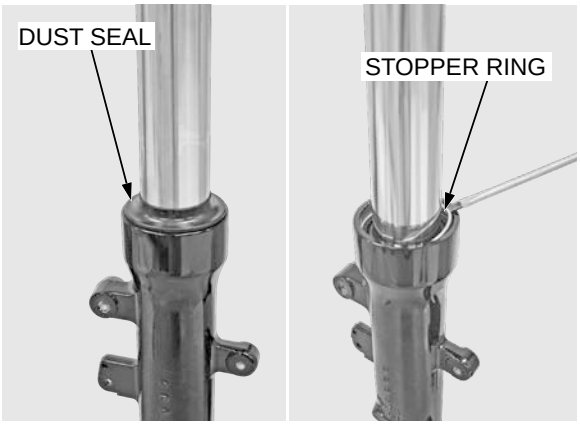

Remove the following:

- Fork bolt
- O-ring
- Spring collar
- Spring seat

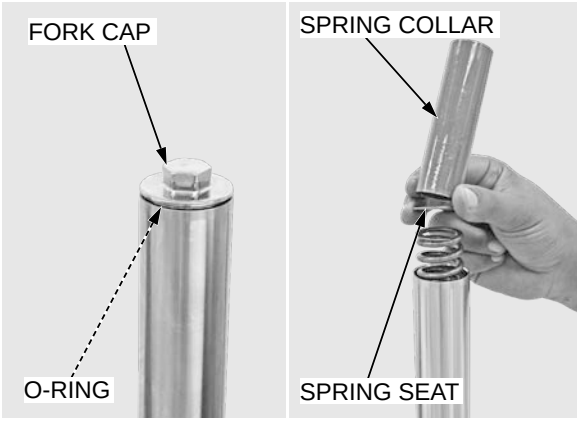

Remove the fork spring.

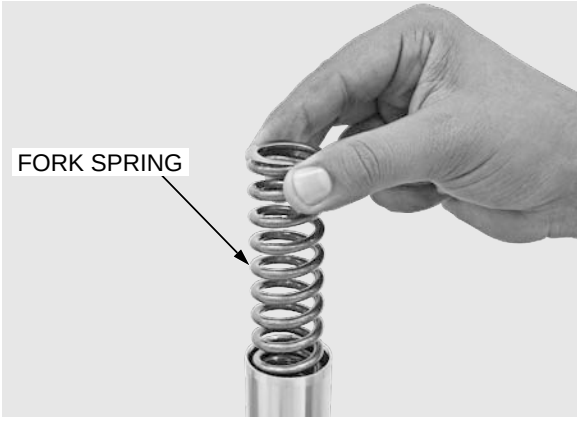

Drain the fork fluid by pumping the fork pipe several times in a clean tray.

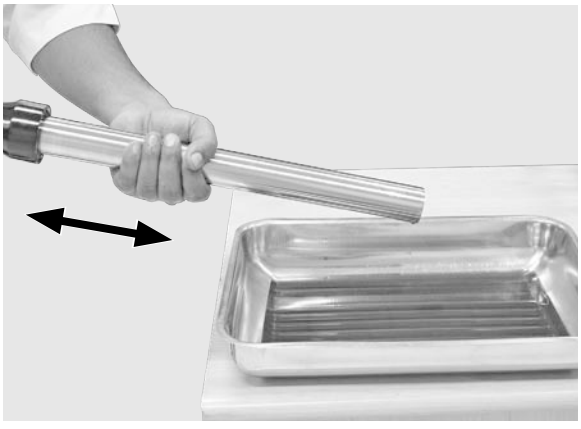

Do not overtighten the vise on the piston remover front cushion.

Set the piston remover front cushion in a vise with a piece of wood or soft jaws to avoid damage.

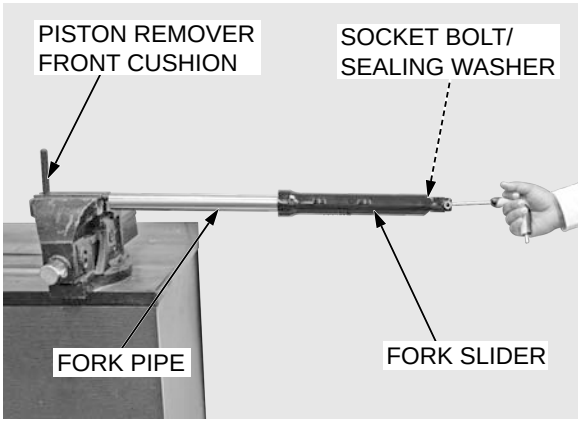

If the fork piston turns with the socket bolt, temporarily install the fork spring, spring seat, spring collar and fork cap.

Remove the fork socket bolt and sealing washer.

TOOL:

Piston remover front cushion: 070SRTKSP003

Using quick successive motions, pull the fork tube out of the fork slider.

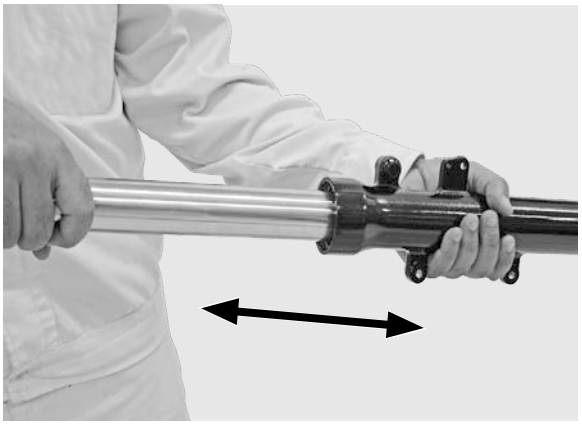

Remove the oil lock piece from the fork slider.

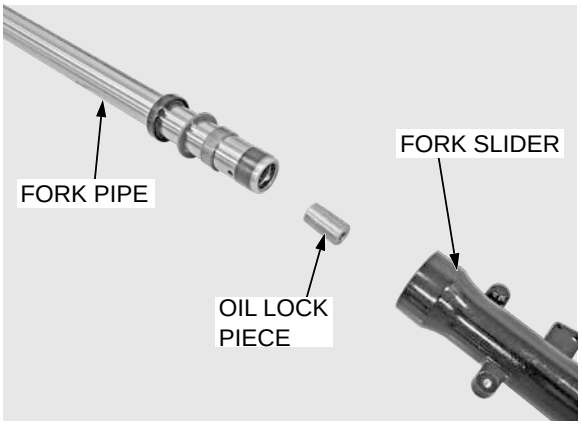

Remove the following:

– Oil seal
– Back-up ring
– Guide bushing

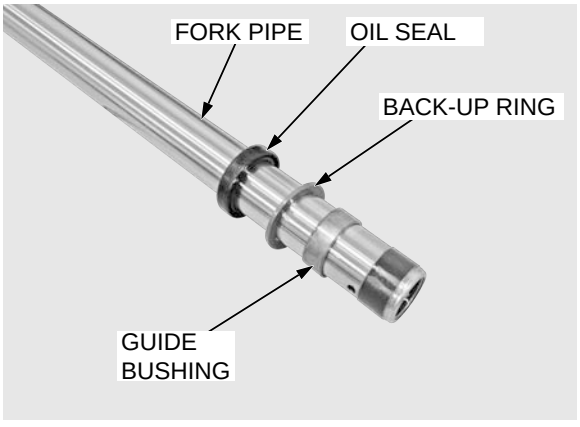

INSPECTION

FORK SPRING

Check the fork spring for fatigue or damage. Measure the fork spring free length.

STANDARD: 363 mm (14.291 in)



FORK PIPE/SLIDER

Check the fork pipe and slider for score marks, scratches, or excessive or abnormal wear.

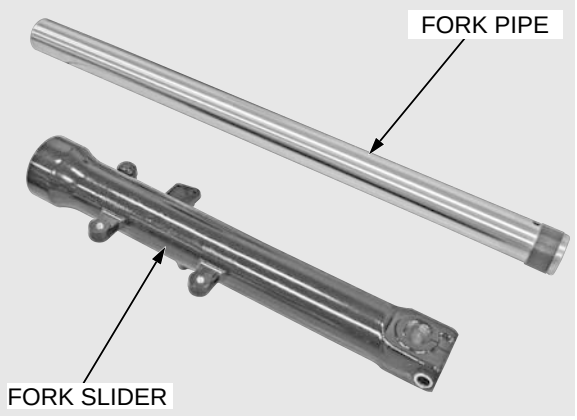

Place the fork pipe on V-blocks.

Turn the fork pipe and measure the runout using a dial indicator.

Actual runout is 1/2 of the total indicator reading.

SERVICE LIMIT: 0.20 mm (0.008 in)

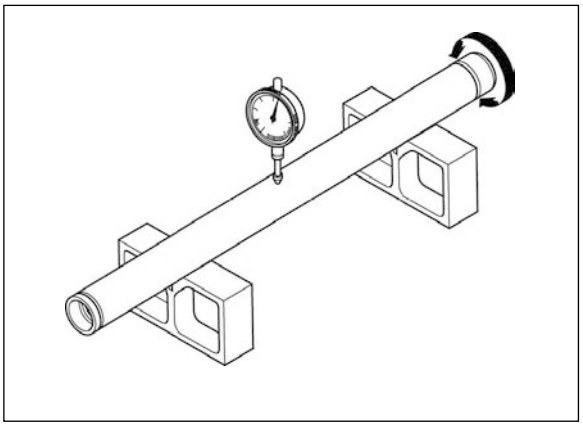

FORK PISTON/REBOUND SPRING/OIL LOCK PIECE

Check the fork piston, piston ring and oil lock piece for wear or damage.

Check the rebound spring for fatigue or damage.

Replace any components that are worn or damage.

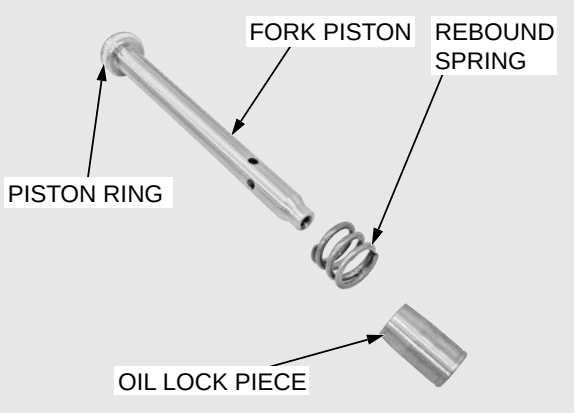

GUIDE BUSHING/SLIDER BUSHING/BACK-UP RING

Visually inspect the slider and guide bushings.

Replace the bushings if there is excessive scoring or scratching, or if the teflon is worn so the copper surface appears on more than 3/4 of the entire surface.

Check the back-up ring; replace it if there is any distortion at the points shown.

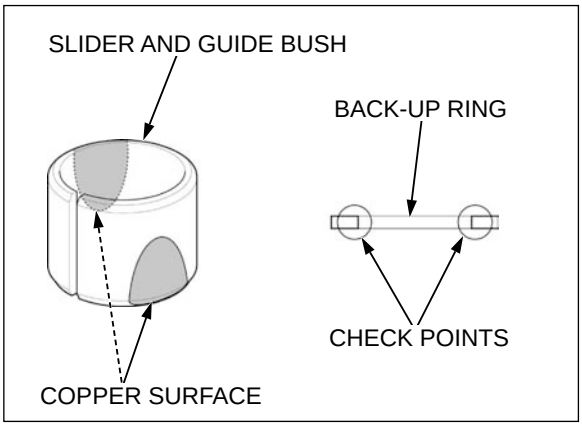

Do not damage the slider bushing, especially the sliding surface. To prevent loss of tension, do not open the bushing more than necessary.

If the slider busing will be removed, carefully remove the slider bushing by prying the bushing gap with a

screwdriver until the bushing can be pulled off by hand.

NOTE:

Do not remove the slider bushing, unless it is necessary to replace with a new one.

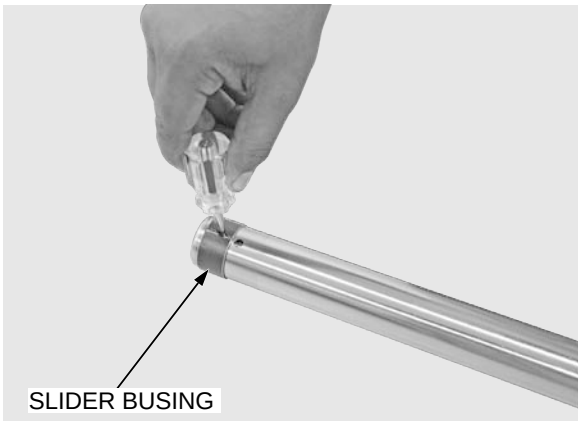

FORK ASSEMBLY

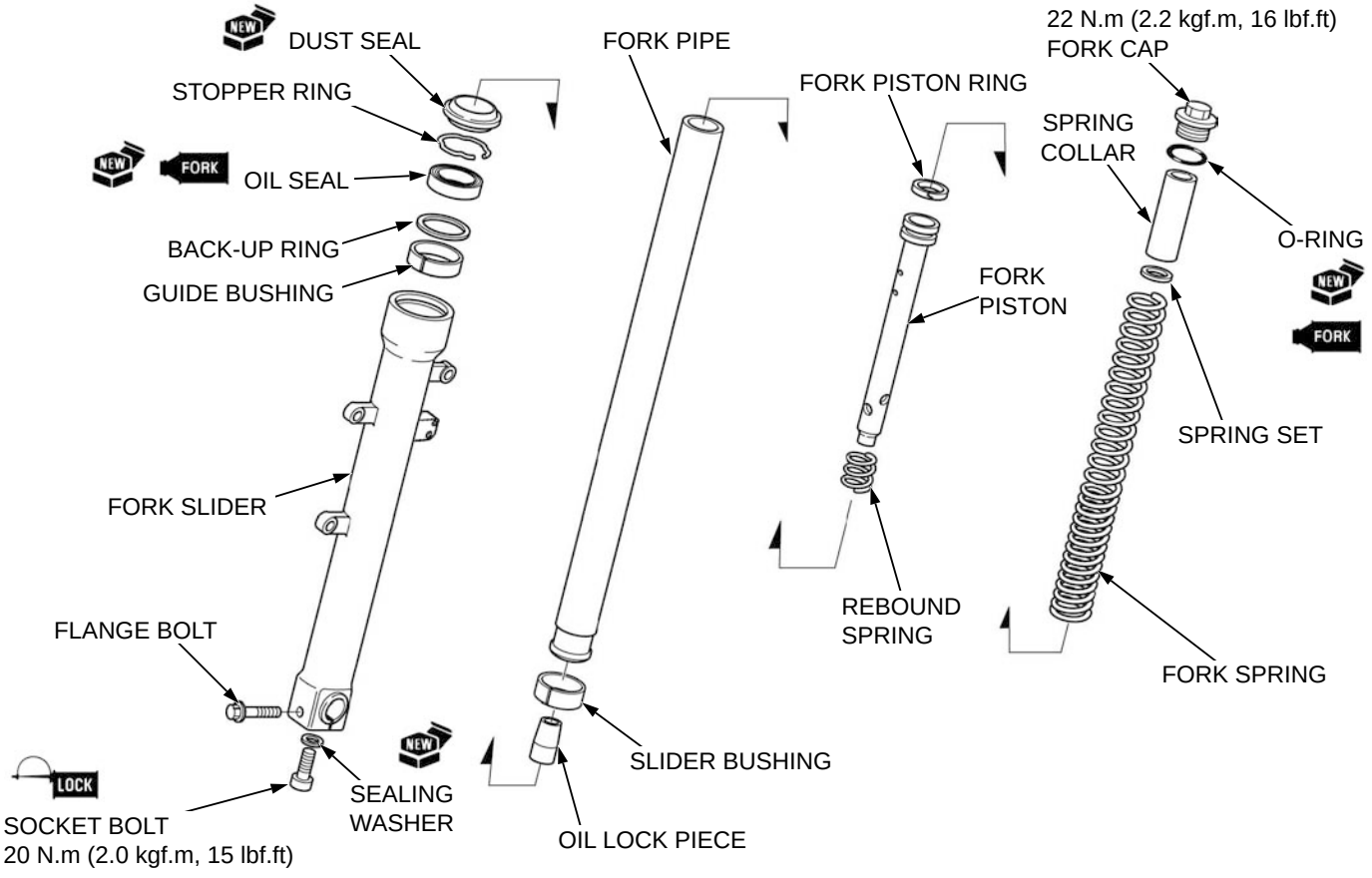

Do not open the bushing slit more than necessary.

Install the slider bushing being careful not to damage the coating of the bushing, if it has been removed.

Remove the burrs from the bushing mating surface, being careful not to peel off the coating.

Install the oil seal with its marked side facing up.

Apply fork fluid to a new oil seal lips.

Install the guide bushing, back-up ring and oil seal onto the fork tube.

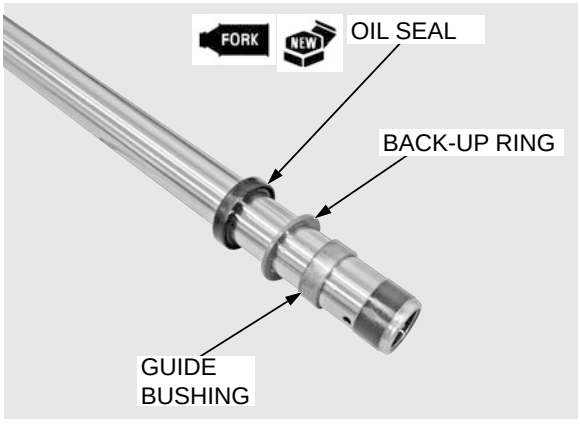

Install the rebound spring to the fork piston and install them into the fork pipe.

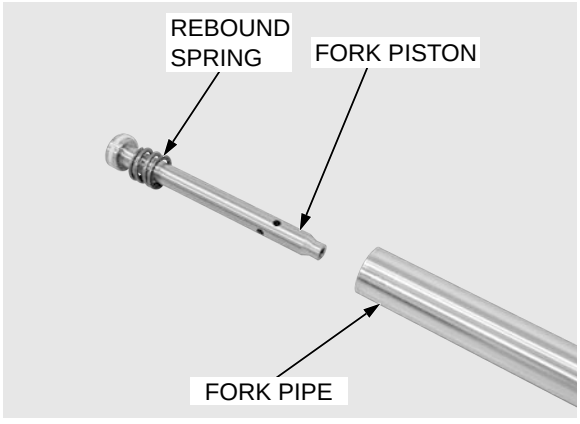

Install the oil lock piece onto the fork piston end.

Install the fork pipe into the fork slider.

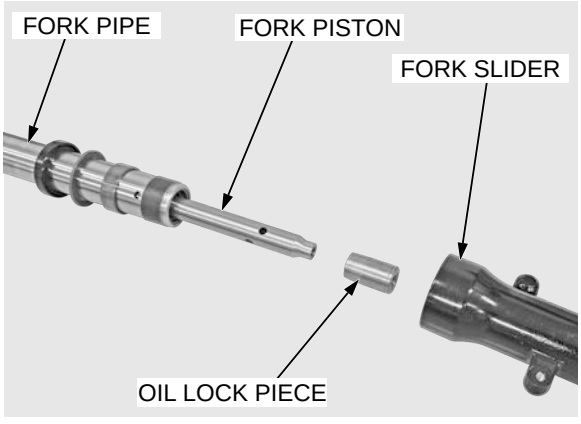

Do not over-tighten the vise on the piston remover front cushion.

Set the fork slider in a vise with a piece of wood or soft jaws to avoid damage.

Install a new sealing washer to the fork socket bolt.

Apply locking agent to the fork socket bolt threads and install it.

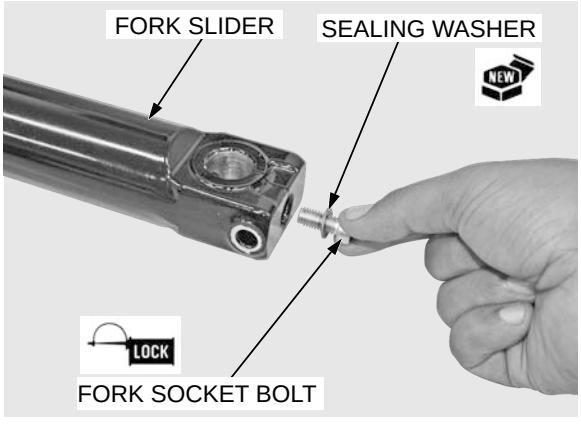

If the fork piston turns with the socket bolt, temporarily install the fork spring, spring seat, spring collar and fork bolt.

Tighten the fork socket bolt to the specified torque.

TORQUE: 20 N·m (2.0 kgf·m, 15 lbf·ft)

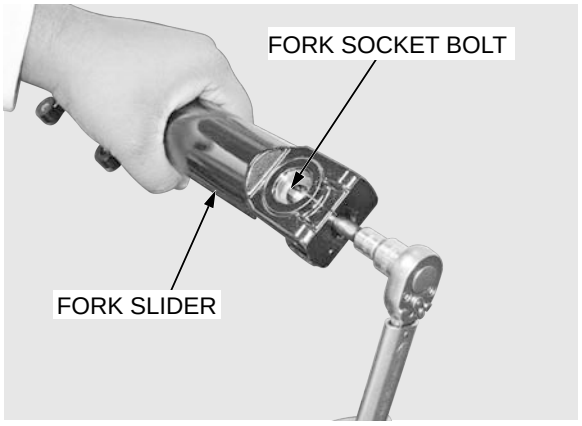

Drive the oil seal until the stopper ring groove is visible using the special tools.

TOOLS:

Fork seal driver	**07747-0010100**
Fork seal driver attachment	**07747-0010600**

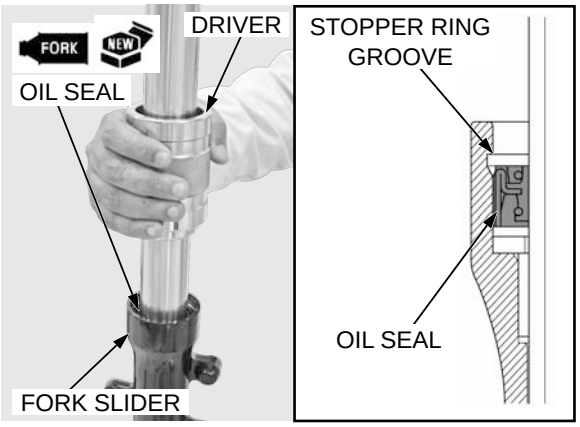

Install the stopper ring into the groove of the fork slider securely.

Apply fork fluid to a new dust seal lips.

Install the dust seal.

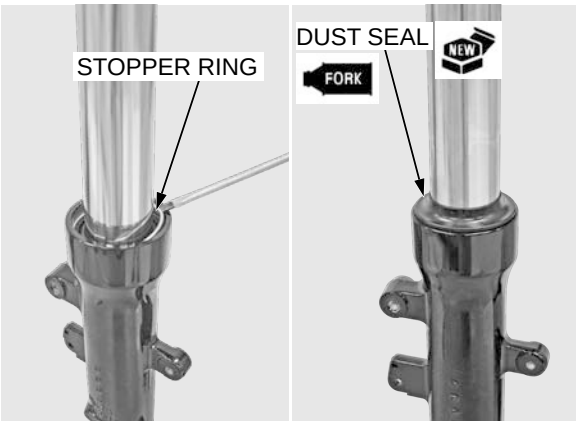

Pour the specified amount of recommended fork fluid into the fork pipe.

RECOMMENDED FORK FLUID:
Honda ULTRA CUSHION OIL No. 10 or equivalent

FORK FLUID CAPACITY:
310 ± 2.5 cm³ (11.0 ± 0.08 US oz, 11.5 ± 0.09 UK oz)

Slowly pump the fork pipe several times to remove any trapped air from the lower portion of the fork pipe.

Compress the fork pipe fully and measure the fluid level from the top of the fork pipe.

FLUID LEVEL: 144 mm (5.66 in)

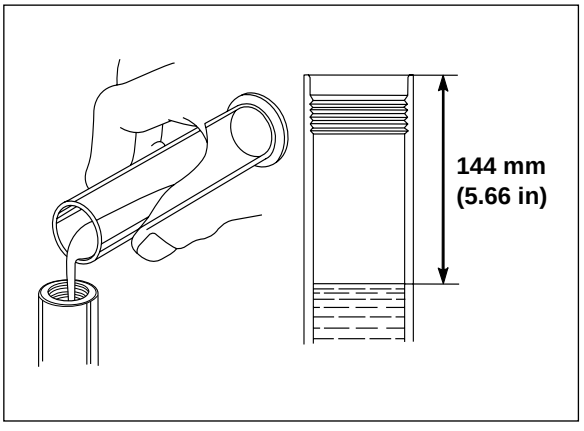

Pull the fork pipe up and install the fork spring with the tightly wound coil side facing down.

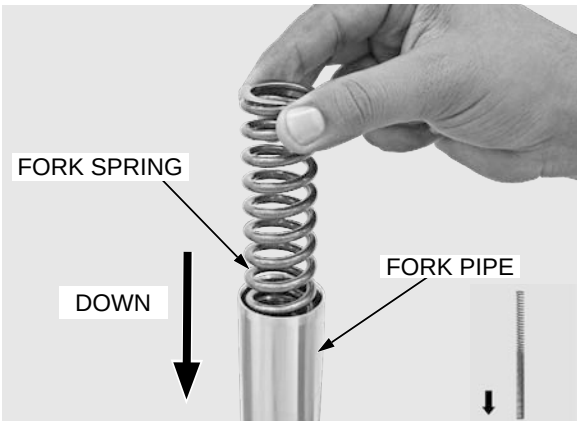

Install the spring seat and spring collar.

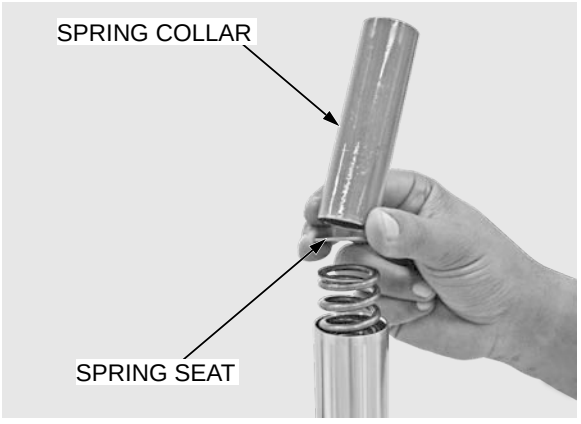

Tighten the fork bolt after installing the fork pipe into the fork bridges.

Apply fork fluid to a new O-ring and install it onto the fork bolt.

Loosely install the fork bolt by pushing it to the fork pipe.

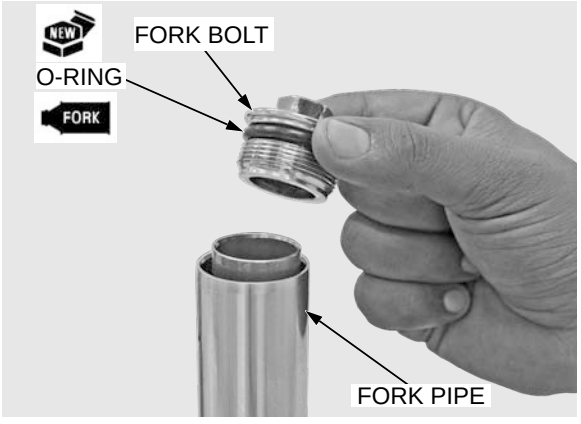

INSTALLATION

Route the wires and cables properly (page 1-15).

Install the fork leg through the bottom bridge and top bridge while aligning index line of fork pipe with the top surface of top bridge.

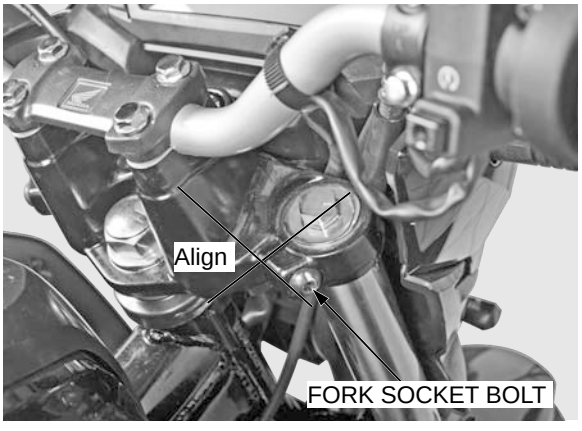

Tighten the bottom bridge and top bridge pinch bolts to the specified torque.

TORQUE:

Bottom bridge pinch bolt:

32 N·m (3.2 kgf·m, 23 lbf·ft)

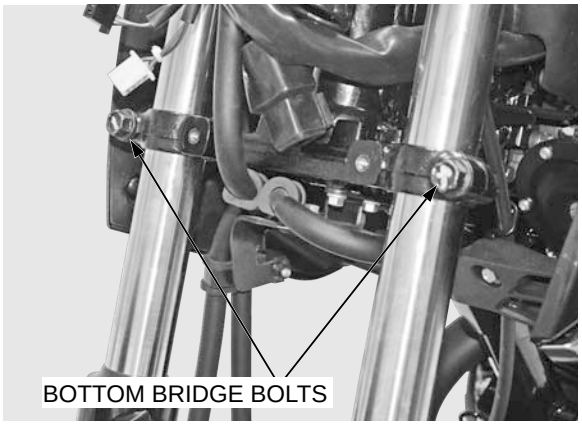

Top bridge fork socket bolt:

27 N·m (2.8 kgf·m, 20 lbf·ft)

If the fork bolt is loosened, tighten the fork bolt to the specified torque.

TORQUE: 22 N·m (2.2 kgf·m, 16 lbf·ft)

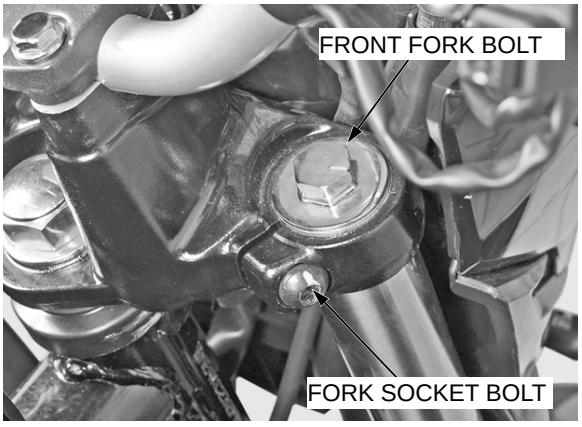

NOTE:

Route the wire properly (page 1-15).

Install the front brake caliper/bracket assembly and tighten new brake caliper mounting bolts to the specified torque.

TORQUE: 30 N·m (3.1 kgf·m, 22 lbf·ft)

Install the following:

– Front fendor (page 2-5)
– Front wheel (page 12-13)

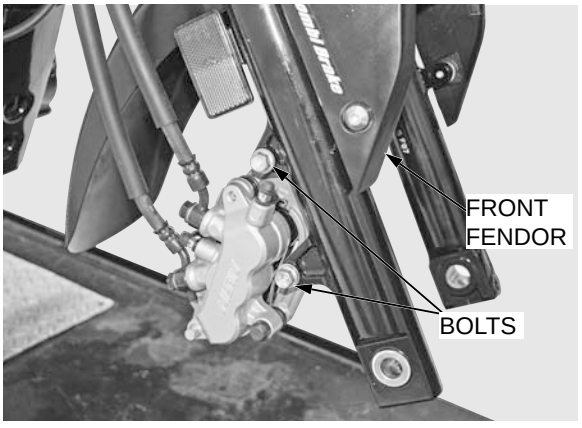

STEERING STEM

REMOVAL

Remove the following:

– Front headlight RR (page 2-2)
– Handlebar (page 12-9)
– Front Forks (page 12-14)

Remove the bolts (2nos.) and brake hose stay from the bottom bridge.

Disconnect the ignition switch 3P connector.

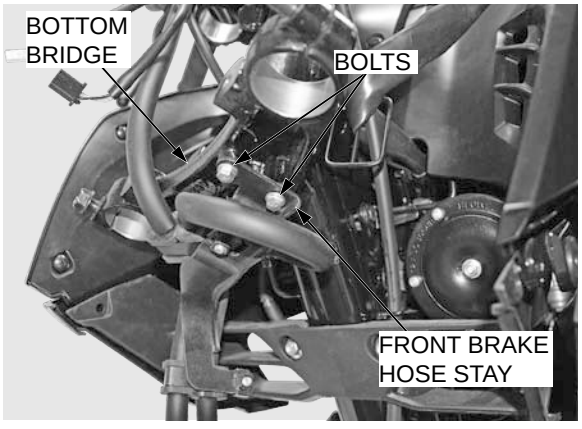

Remove the steering stem nut, washer and top bridge.

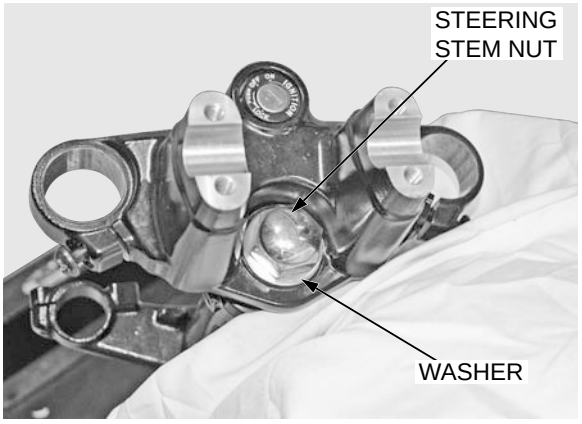

Loosen the adjusting nut using the special tool.

TOOL:

Socket wrench steering **070SRTKSP004**



Be careful not to loose the steel balls.

Hold the steering stem and remove the adjusting nut.

Remove the following top cone race





Remove the following:

– Upper steel ball (18)
– Lower steel ball (18)
– Bottom bridge

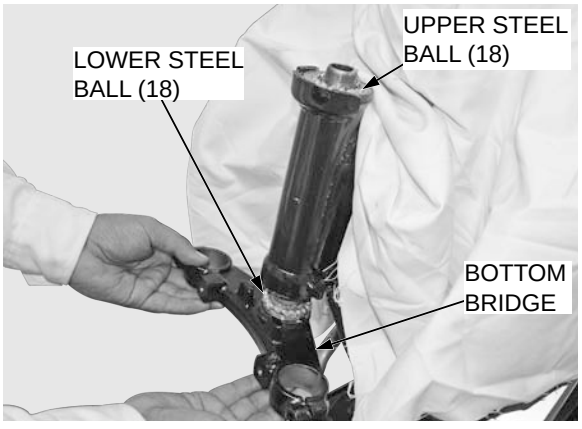

BALL RACE REPLACEMENT

Remove the top & bottom ball races using the special tool.

TOOL:

Ball race remover 070SRTKSP005



Install a new top ball race and new bottom ball race using the special tool.

TOOLS:

Steering cone installer 070SRTKSP006

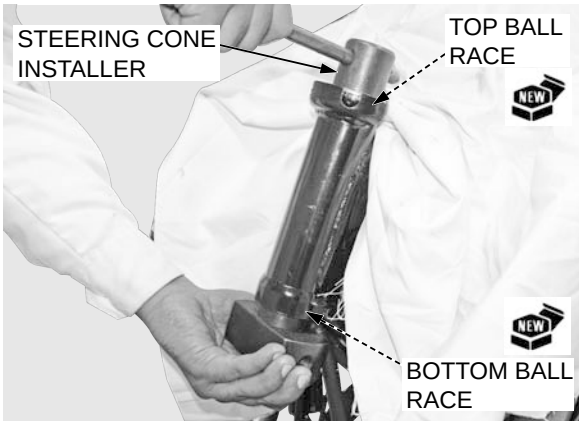

BOTTOM CONE RACE REPLACEMENT

Remove the dust seal.

Remove the bottom cone race with a T-stem cone remover MC tool, being careful not to damage the stem.

TOOL:

T-stem cone remover MC 07000TCR900

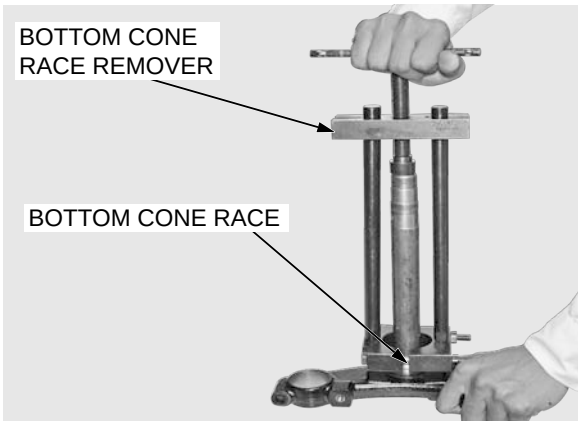

Press a new bottom cone race onto the steering stem using the special tool.

TOOL:

Steering bottom cone installer 070SRTKSP007

Install the dust seal.

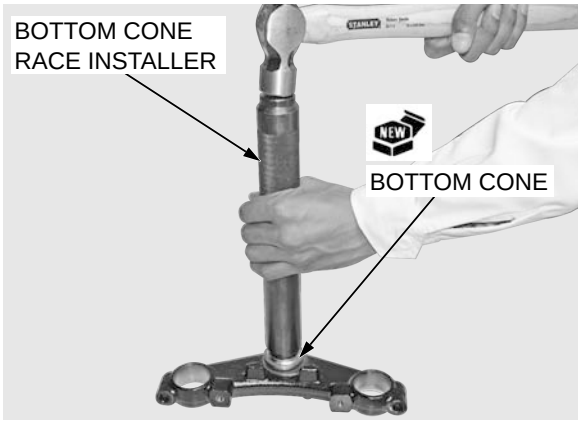

STEERING STEM ASSEMBLY

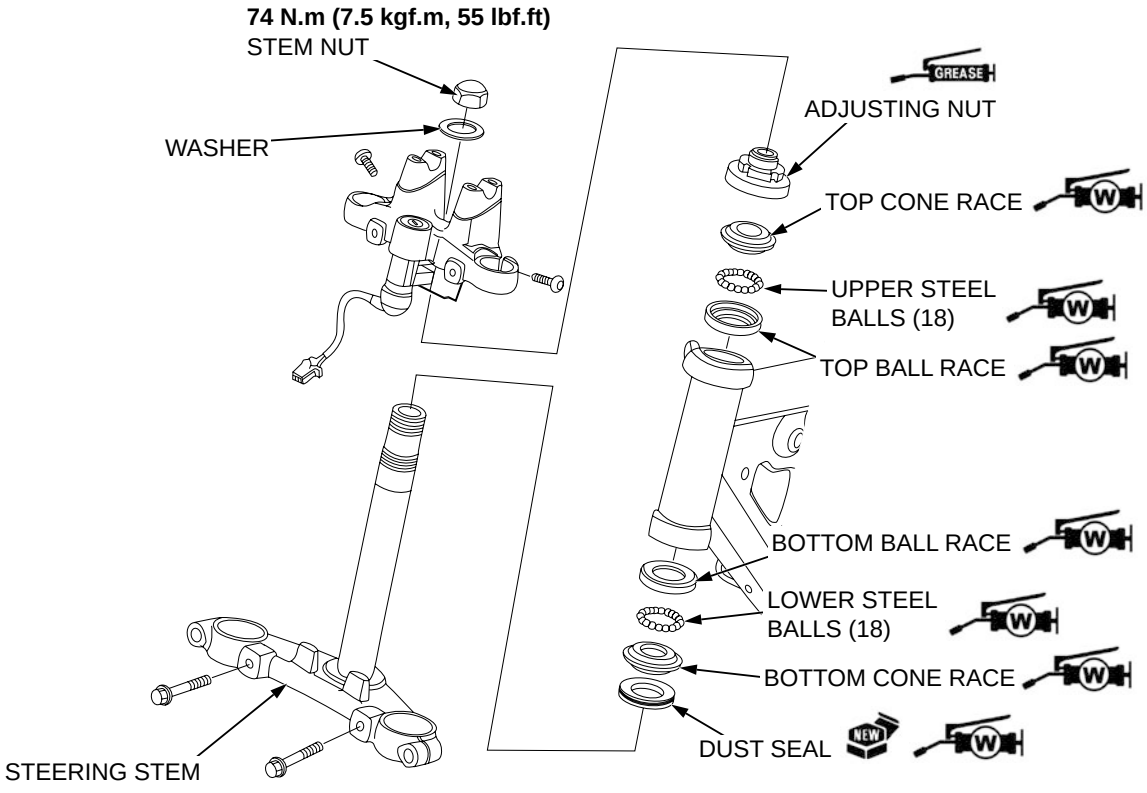

Apply grease properly to bottom cone race & top ball race and all other bearing area.

Install the steel balls in the bottom cone race and top ball race.

Upper steel ball: 18

Lower steel ball: 18

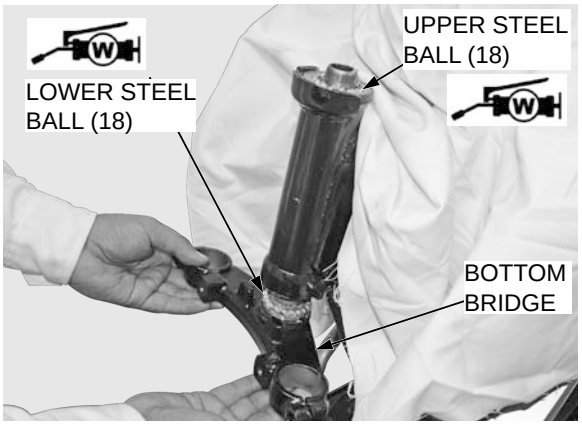

Install the steering stem and top cone race.

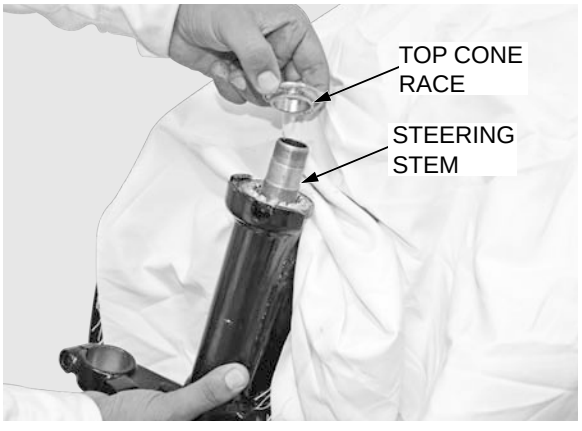

Install the adjusting nut and tighten it to the specified torque.

TOOL:

Socket wrench steering 070SRTKSP004

TORQUE: 24 N.m (2.4 kgf.m, 17.7 lbf.ft)

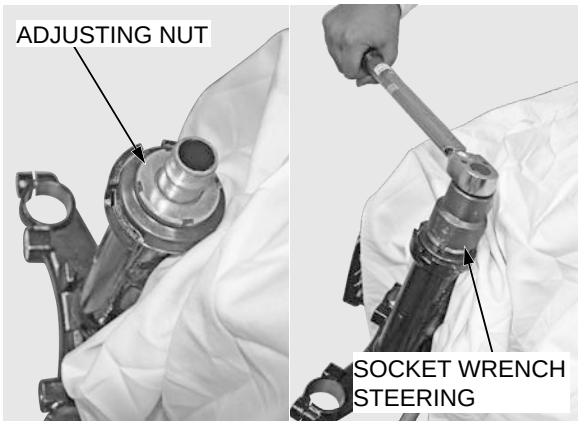

Turn the steering stem left and right several times.



Refer to torque wrench reading information on page 12-1 'Service information'.

Temporarily loosen the adjusting nut completely, then retighten the adjusting nut to the specified torque.

TOOL:

Socket wrench steering 070SRTKSP004

TORQUE:

Actual 2.5 N.m (0.25 kgf.m, 1.8 lbf.ft)

Check that there is no vertical play and that the steering stem rotates smoothly.

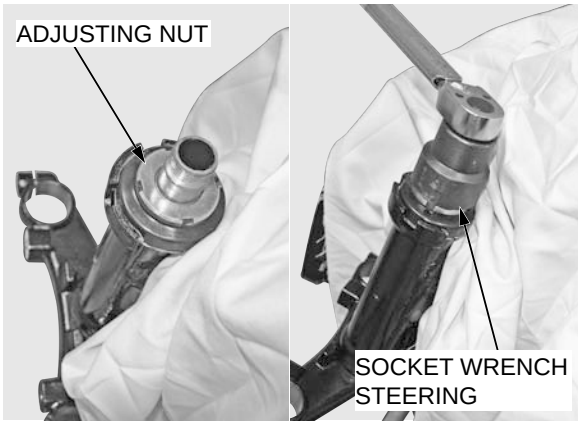

Install the top bridge.

Install the washer and steering stem nut.

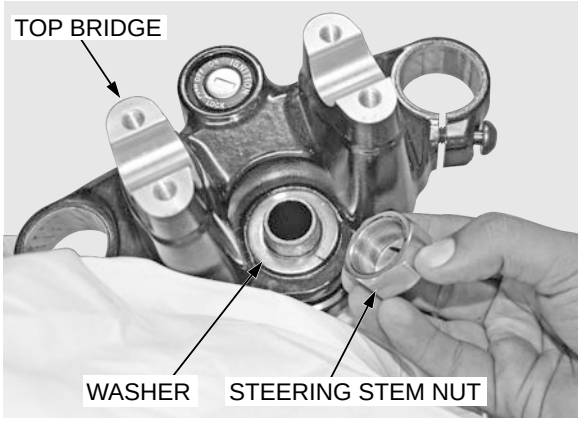

Loosen the bottom pinch bolts when tighten the stem nut.

Install the fork and temporarily tighten the top bridge bolts.

Tighten the steering stem nut to the specified torque.

TORQUE: 74 N.m (7.5 kgf.m, 55 lbf.ft)

Turn the steering stem left and right several times and recheck that there is no vertical play and that the steering stem rotates smoothly.

Install the following:

– Fork (page 12-21)
– Front wheel (page 12-13)
– Handlebar (page 12-6)
– Cover headlight RR (page 2-2)
– Front cowl (page 2-2)

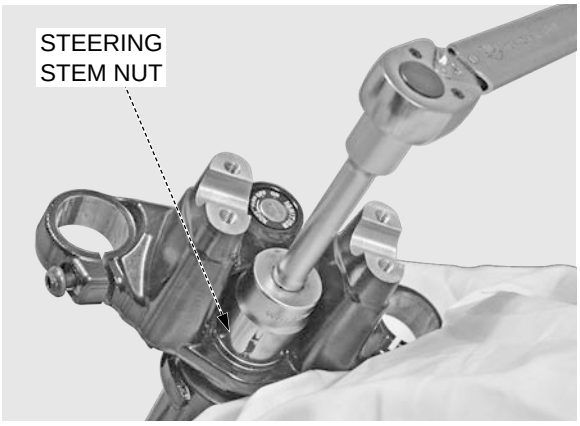

STEERING BEARING PRELOAD

Jack up the motorcycle to raise the front wheel off the ground.

Position the steering stem to the straight ahead position.

Make sure that there is no cable or wire harness interference.

Hook a spring scale to the fork tube and measure the steering head bearing preload.

Pull the spring scale keeping the scale at a right angle to the steering stem.

Read the scale at the point where the steering stem just starts to move.

STEERING BEARING PRELOAD:

STANDARD: 0.7 – 1.3 kgf (1.64 – 2.81 lbf)

If the readings do not fall within the limits, readjust the steering top thread.

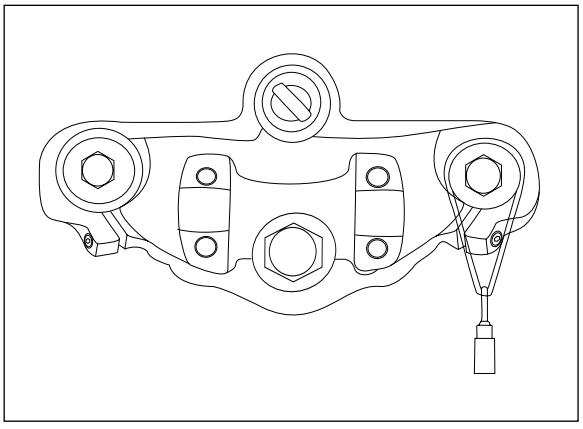

COMPONENT LOCATION

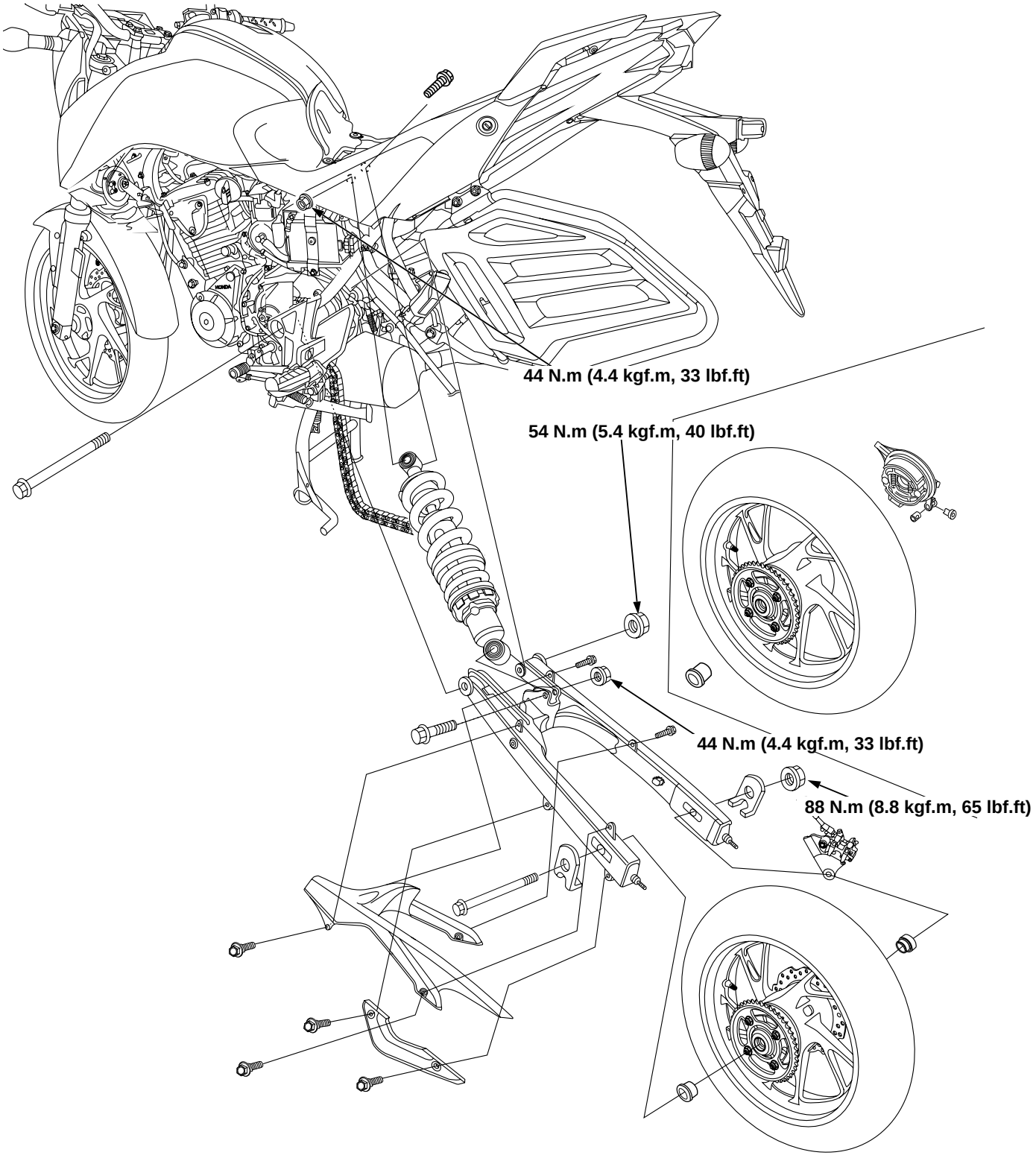

13. REAR WHEEL/SUSPENSION

COMPONENT LOCATION	13-0	DRIVEN FLANGE	13-9
SERVICE INFORMATION	13-1	SHOCK ABSORBER	13-12
TROUBLESHOOTING	13-3	SWINGRAM	13-13
REAR WHEEL	13-4		

SERVICE INFORMATION

GENERAL

⚠ CAUTION

Frequent inhalation of brake pad (shoe) dust, regardless of material composition could be hazardous to your health.

- Avoid breathing dust particles.
- Never use an air hose or brush to clean brake assemblies. Use an OSHA-approved vacuum cleaner.

- Riding on damaged rims impairs safe operation of the vehicle.
- When servicing the rear wheel and suspension, support the vehicle using a center stand or hoist.
- A contaminated brake drum or shoe reduces stopping power. Discard contaminated shoes, and clean a contaminated drum with a high quality brake degreasing agent.
- After the rear wheel installation, check the brake operation by applying the brake pedal.
- Refer to the brake system information (page 14-1).
- This vehicle is equipped with the TUBELESS tyre.
- The TUBELESS tyres does not use any inner tube, its inner layer (inner liner) used as instead of tube. Only tubeless tyre is mounted on the rim. Follow bellow caution:
  - Loose the tyre bid from rim with the help of bid breaker. Demount the tyre using a tyre demounting machine.
  - In nail hole puncture case drill the puncture hole to make the inner surface of the puncture hole smooth & to remove contamination
  - In pin hole puncture case mark the puncture hole on inner side. Clean the buffed area & apply chemical vulcanizing solution in the buffed area and in the hole.

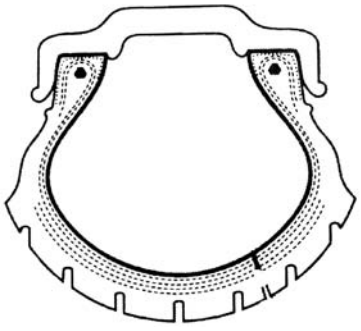

NOTICE

- *Apply soap water for smooth sliding -in of the wheel rim inside the tyre beading portion.*
- *When a tire rim is wet or a tire seems under-inflated, check for any abnormalities on the tire and repair if necessary.*
- *Do not use lever or hamrage for demounting the tyre otherwise it breaks the bid or damage the rim.*
- *Tyre mounting /demounting must be done only with machine to avoid rim damage.*
- *Always use a new TUBELESS tyre that is proper for tire size when replacing.*
- *Correct the tyre pressure as per specification.*

SPECIFICATIONS

Unit: mm (in)

ITEM		STANDARD	SERVICE LIMIT	Page NO.
Minimum tire thread depth		–	2.0 (0.08)	Page 3–25
Cold tire pressure	Driver only	175 kPa (1.75 kgf/cm², 25 psi)	–	Page 3–25
	Driver and passenger	200 kPa (2.00 kgf/cm², 29 psi)	–	Page 3–25
Axle runout		–	0.2 (0.01)	Page 13–5
Wheel rim runout	Radial	–	0.3 (0.04)	Page 13–6
	Axial	–	0.3 (0.04)	Page 13–6
Drive chain	Size/link	428/132	–	Page 3–17
	Slack	25 - 35 (0.984 - 1.37)	50 (1.96)	Page 3–16

TORQUE VALUES

ITEM	PART NO.	QTY	THREAD DIA. (mm)	TORQUE N·m (kgf·m, lbf·ft)	REMARKS	PAGE NO.
Rear brake arm	90302 – KTE – 911	1	6	10 (1.0, 7.3)	NOTE 3	–
Rear brake disc bolt	90105 – KSP – 870	4	8	42 (4.3, 31)		Page 13–12
Driven sprocket nut	90304 – KTE – 911	4	10	64 (6.4, 47)	NOTE 3	Page 13–12
Rear axle nut	90305 – KYJ – 711	1	16	88 (8.8, 65)	NOTE 3	Page 13–9
Shock absorber mounting nut	90304 – KTE – 911	2	10	44 (4.4, 32)	NOTE 3	Page 13–13
Shock absorber mounting bolt Upper	90153 – KYJ – 900	1	10	44 (4.4, 32)	NOTE 3	Page 13–13
Shock absorber mounting bolt Lower	90151 – KSP – 900	1	10	44 (4.4, 32)		Page 13–13
Swing arm pivot bolt	90121 – KSP – 900	1	14	54 (5.4, 40)	NOTE 3	Page 13–17

TOOLS

Pilot, 12 mm 070GD004I130 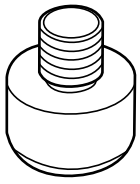	Pilot, 17 mm 070GD004I150 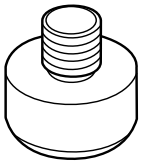	Attachment, 42x47 mm 07746-0010300 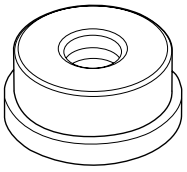
Bearing remover shaft 07746-0050100 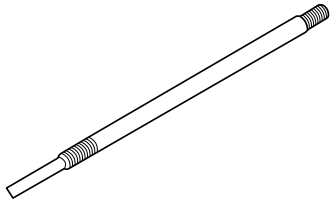	Bearing remover head, 15 mm 07746-0050400 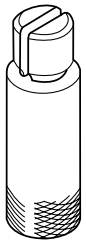	Driver 070GD001I100 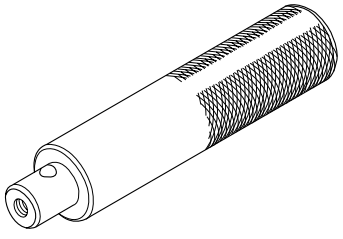

TROUBLESHOOTING

Rear wheel wobbling

- Bent rim
- Worn or damaged wheel bearings
- Worn or damaged driven flange bearing
- Faulty tire
- Worn or damaged swingarm bushings
- Bent frame or swingarm
- Axle not tightened properly
- Insufficient tire pressure

Wheel turns hard

- Brake drag
- Faulty wheel bearings
- Faulty driven flange bearing
- Bent axle
- Drive chain too tight (page 3-16)

Soft suspension

- Incorrect suspension adjustment
- Weak shock absorber springs
- Oil leakage from damper unit
- Insufficient tire pressure

Hard suspension

- Incorrect suspension adjustment
- Bent shock absorber damper rod
- Damaged suspension or swingarm pivot bushings
- Bent swingarm pivot or frame
- Insufficient tire pressure

Steers to one side or does not track straight

- Drive chain adjusters not adjusted equally
- Bent axle
- Bent frame and/or swingarm
- Damaged swingarm pivot bushings

Rear suspension noise

- Loose suspension fasteners
- Worn or damaged suspension pivot bushings
- Faulty shock absorber

REAR WHEEL

DISC TYPE

REMOVAL

Support the motorcycle on its center stand.

Loosen the lock nut, drive chain adjusting nut,and rear axle nut.

Push the real wheel forward and derail the drive chain from driven sprocket

Remove the rear axle nut, rear axle and adjusting plates.

Remove the rear wheel.

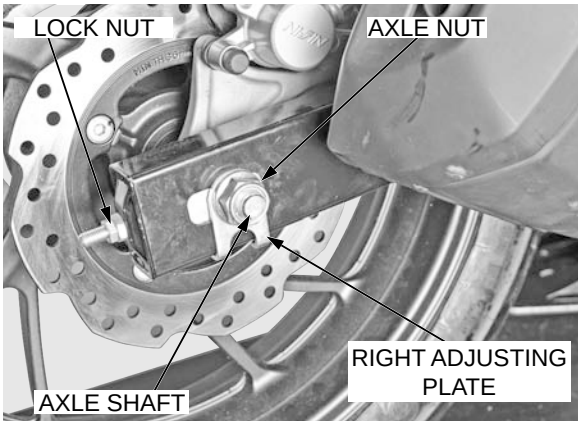

⚠ CAUTION

- Do not hang the caliper by the brake hose.
- Do not twist the brake hose.
- Do not operate the brake pedal after removing the rear wheel.

DISASSEMBLY

Inspect the brake disc before disassembly (page 13-5)

Remove driven flange (page 13-9)

Remove the brake disc mounting bolts, collar and brake disc.

Remove the dust seal.

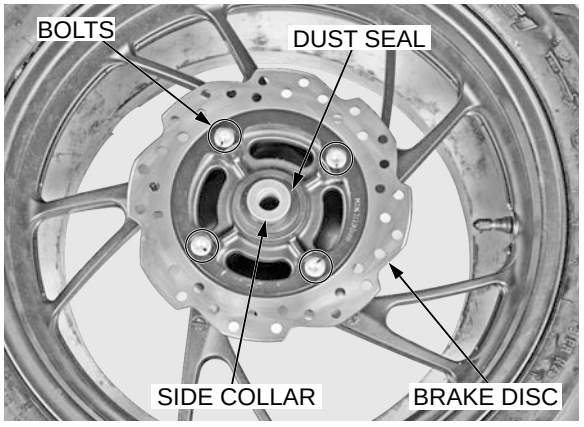

DRUM TYPE

REMOVAL

Remove the rear brake adjusting nut

Push the brake pedal down and remove the brake rod from the joint piece.

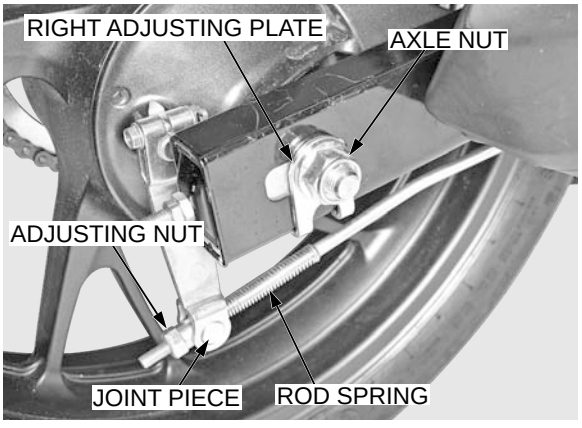

DISASSEMBLY

Remove driven flange (page 13-9)

Remove the brake panel assembly from the right side of wheel hub.



INSPECTION

Before inspection remove the wheel rubber dampers and wheel bearings.



WHEEL BEARING REMOVAL

Install the remover head into the bearing.

From the opposite side, install the bearing remover shaft and drive the bearing out of the wheel hub.

Remove the distance collar and drive out the other bearing.

TOOLS:

Bearing remover head, 15 mm	**07746-0050400**
Bearing remover shaft	**07746-0050100**

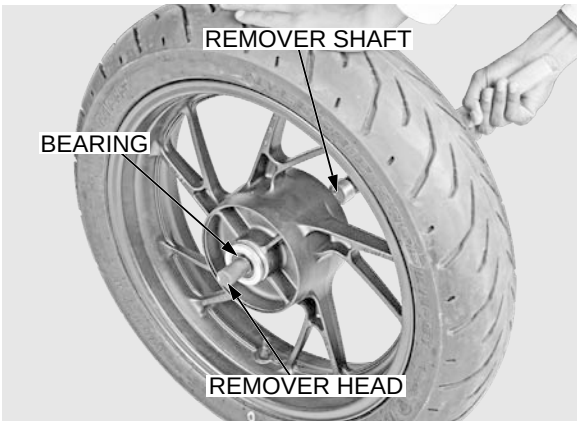

AXLE

Set the axle in V-blocks. Trun the axle and measure the runout using a dial indicator.

Actual runout is 1/2 the total indicator reading.

SERVICE LIMIT: 0.2 mm (0.01 in)

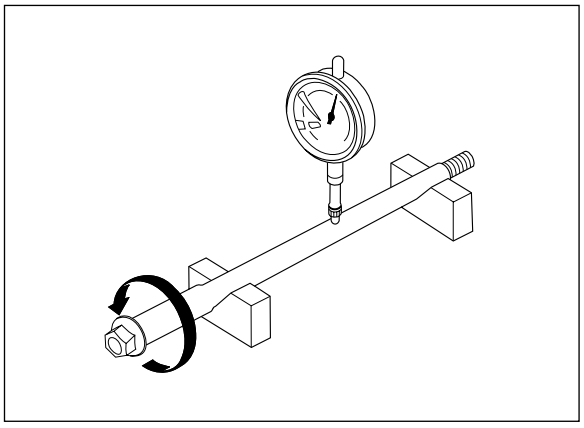

WHEEL BEARING

Replace the bearings in pairs.

Turn the inner race of each bearing with your finger.

The bearings should turn smoothly and quietly.

Also check that the bearing outer race fits tightly in the hub.

Remove and discard the bearings if the inner races do not turn smoothly, quietly, or if they fit loosely in the hub.

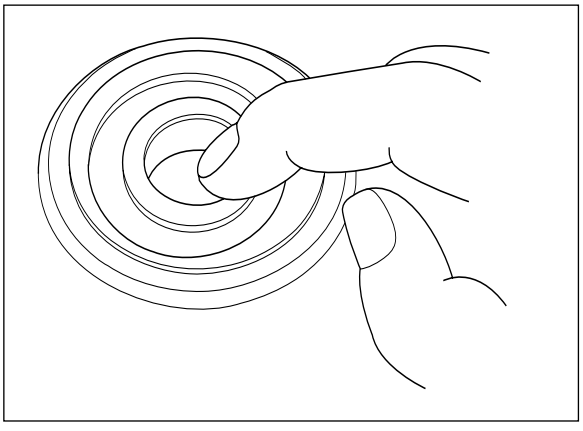

WHEEL RIM

Check the wheel rim runout by placing the wheel in a turning stand.

Spin then wheel by hand, and read the runout using a dial indicator.

SERVICE LIMITS:

Radial: 0.3 mm (0.04 in)

Axial: 0.3 mm (.04 in)

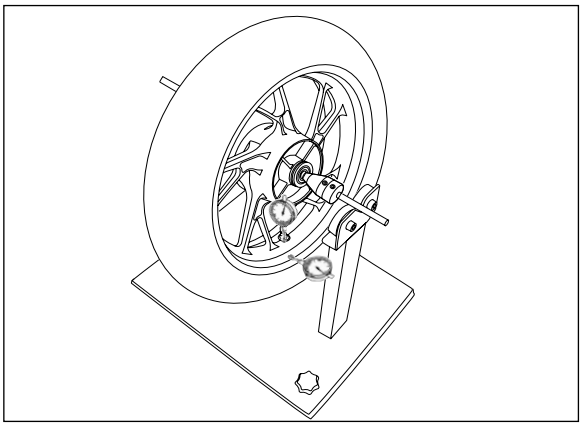

BRAKE DISC

Check the wheel rim runout by placing the wheel in a turning stand.

Spin then wheel by hand, and read the runout using a dial indicator.

SERVICE LIMITS:

Runout: 0.10 mm (0.004 in)

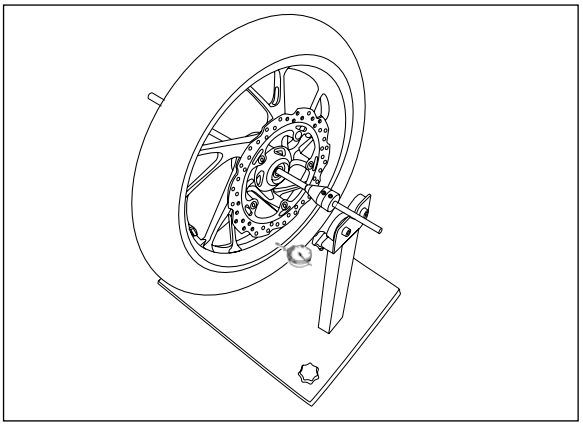

WHEEL BALANCE

Carefully check balance before installing the wheel.

The wheel balance must be checked when the tire is remounted.

For optimum balance the tire balance mark (light mass point: a paint dot on the side wall) must be located next to the valve stem. Remount the tire if necessary.

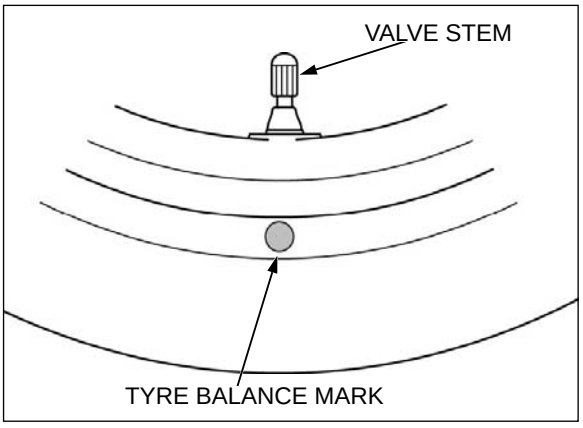

Note the rear direction marks on the tire, and upon tire installation, always fit the tire so the marks face the same direction.



ASSEMBLY OF DISC BRAKE

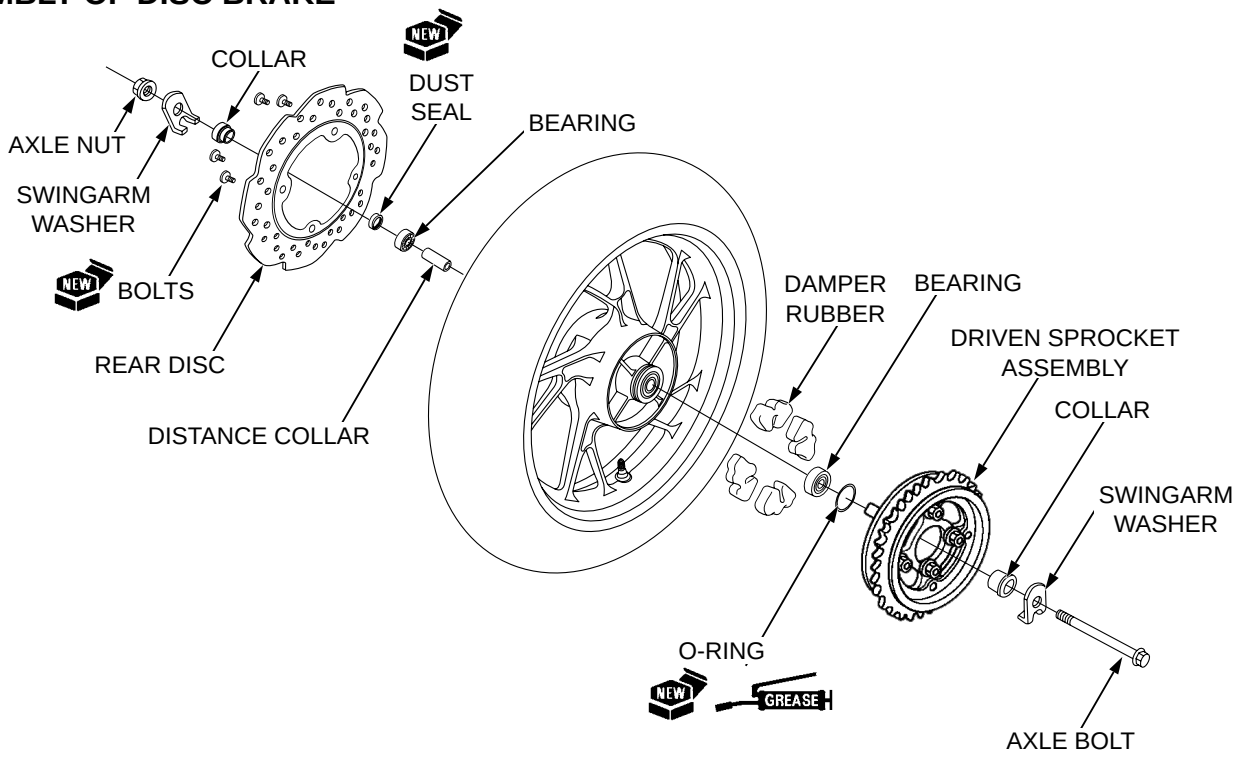

ASSEMBLY OF DRUM BRAKE

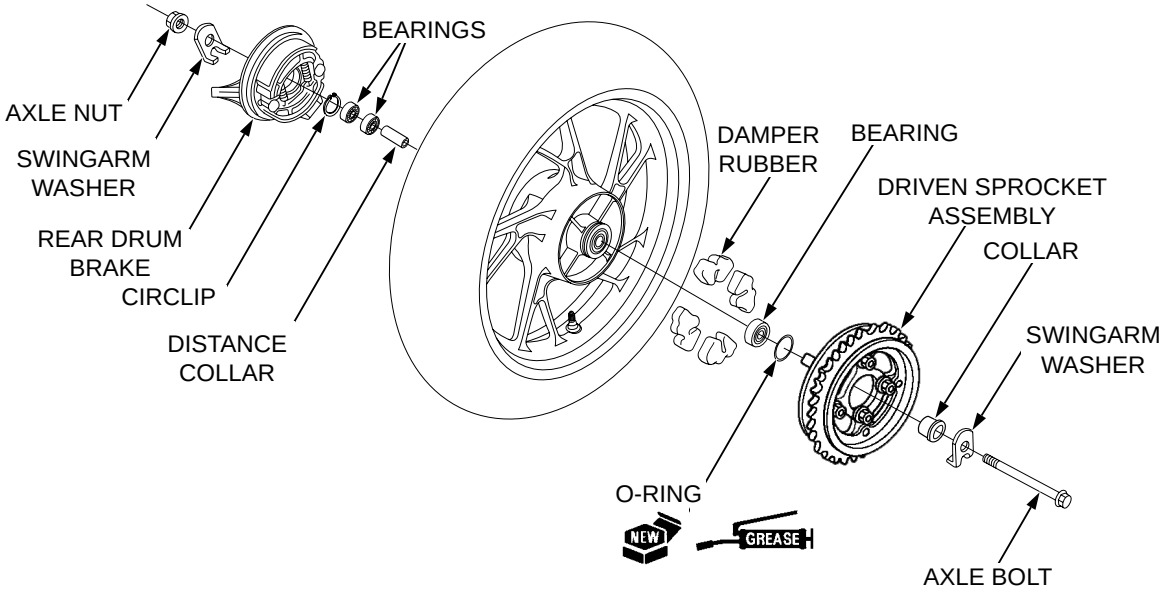

WHEEL BEARING

Pack new bearing cavities with grease.

Drive in a new left side bearing squarely with the sealed side facing up until it is fully seated.

Apply a thin coat of grease to the distance collar and install it.

Drive in a new left side bearing with the sealed side facing up.

TOOLS:

Driver	**070GD-001I100**
Attachment. 42 x 47 mm	**070GD-002I160**
Pilot, 15 mm	**07746-0040300**

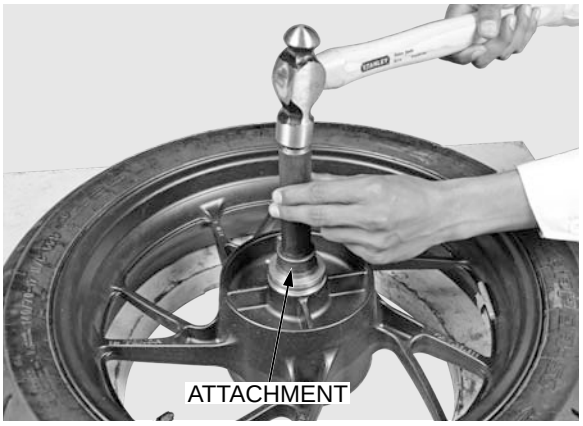

INSTALLATION

DISC TYPE

Install the brake disc.

Install and tighten the brake disc mounting bolts and apply thread lock in a crisscross pattern in 2 or 3 steps.

Install the side collar and dust seal.

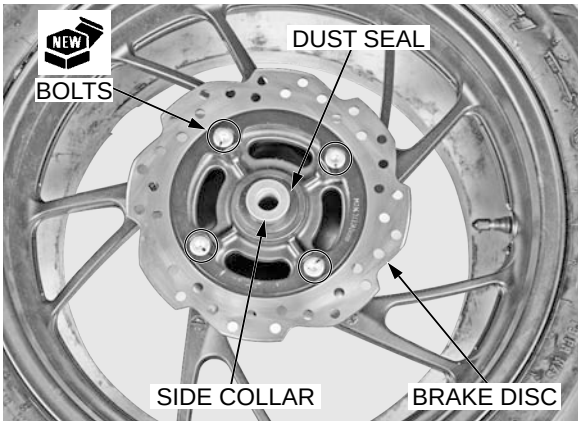

Install the wheel rubber dampers.



Be careful not to damage the brake pads while installation.

Carefully hold and slide the rear bracket assembly on the slot given on rear bracket assembly by aligning with the protrusion given on swingarm and install the rear wheel and drive chain.

Install the driven flange, adjusting bolts & swing-arm washer.

Slide the disk towards the engine to install rear wheel between the brake pads. Hold the wheel upwards and install axle shaft from swing-arm to the left side. Install axle nut and tighten to specified torque.

TORQUE: 88 N.m (8.97 kgf.m, 64.9 lbf.ft)

Check for the chain slackness.

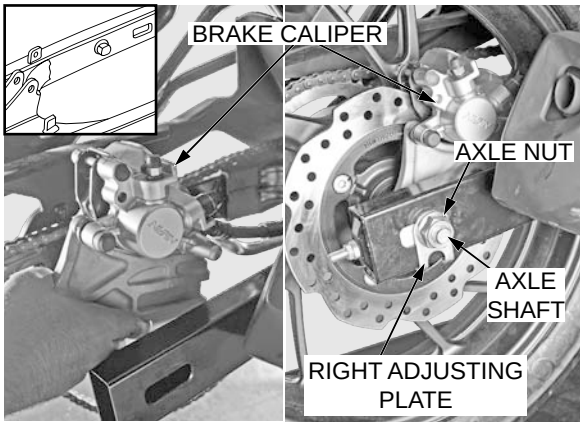

DRUM TYPE

Do not apply grease on the brake drum and shoe linings

Install the brake panel assembly from the right side of wheel hub.

Install the driven flange assembly (page 13-11).

Slide the rear wheel such that the slot given on panel could align with the protrusion given on swingarm and install the drive chain.

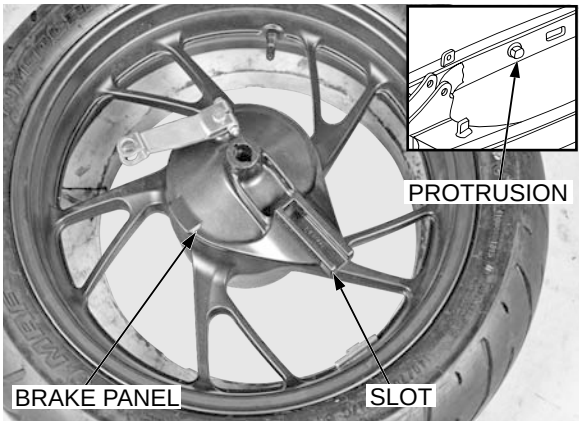

Hold the wheel up and Install rear Axle shaft from left hand side. Install Adjusting Plates and screw axle nut to specified torque.

TORQUE: 88 N.m (8.97 kgf.m, 64.9 lbf. ft)

Install rod spring and after pushing down the brake pedal connect the brake rod by inserting it into the Joint Piece. Tighten the adjusting nut at the end of the rod.

Adjust brake free play (page 3-22).

Install drive chain (page 3-18).

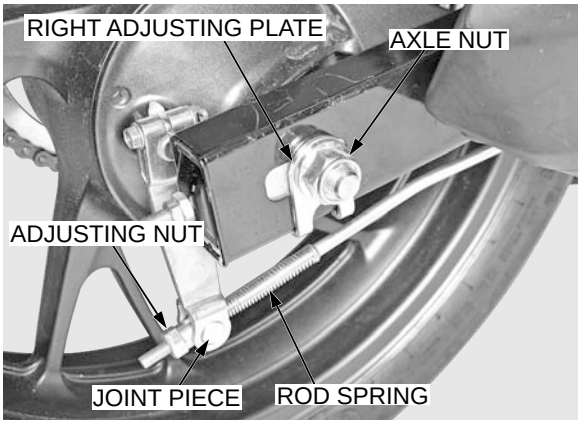

DRIVEN FLANGE

REMOVAL

Remove the rear wheel (page 13-4).

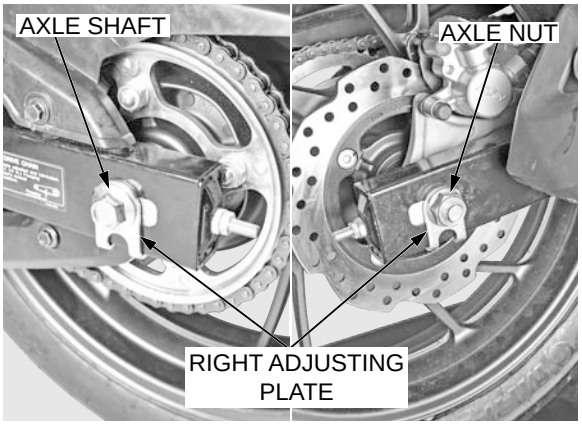

DISASSEMBLY/INSPECTION

DRIVEN SPROCKET

Remove the side collar and dust seal.



Remove the driven sprocket nuts and driven sprocket.

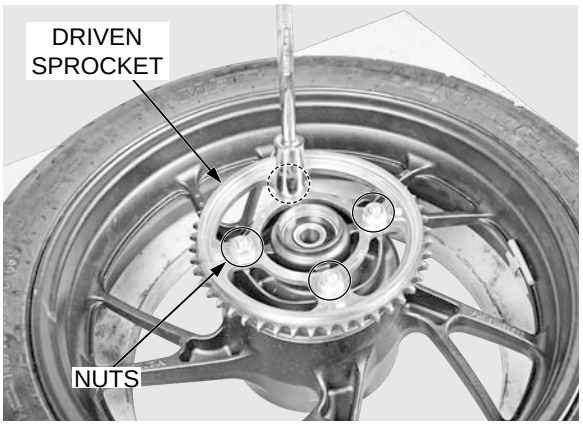

Check the condition of the driven sprocket teeth.

Replace the sprocket if it is worn or damaged.

- If the driven sprocket requires replacement inspect the drive chain and drive sprocket.
- Never install a new drive chain on a worn sprocket or a worn chain on new sprockets. Both chain and sprocket must be in good condition, or the replacement chain or sprocket will wear rapidly.

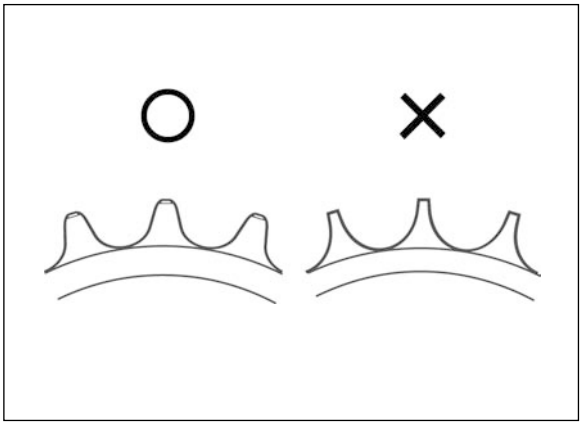

Drive out the driven flange bearing.

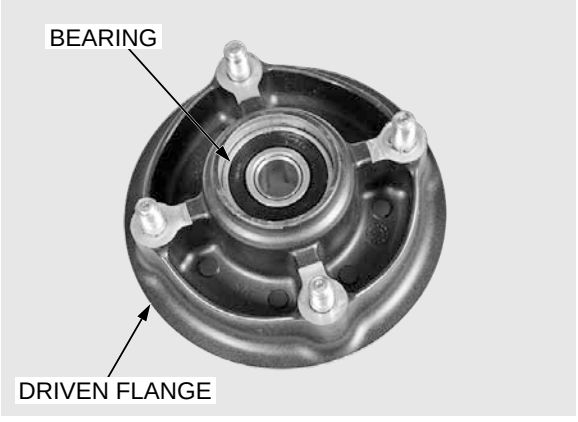

DRIVEN FLANGE BEARING

Turn the inner race of bearing with your finger.

The bearing should turn smoothly and quietly. Also check that the bearing outer race fits tightly in the driven flange.

Remove and discard the bearing if they do not turn smoothly, quietly, or if they fit loosely in the driven flange.

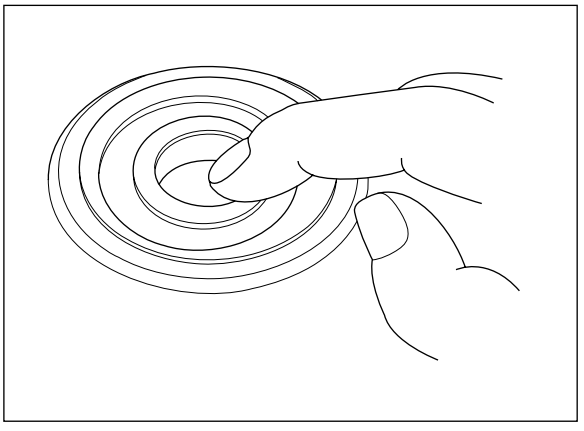

DRIVEN FLANGE ASSEMBLY

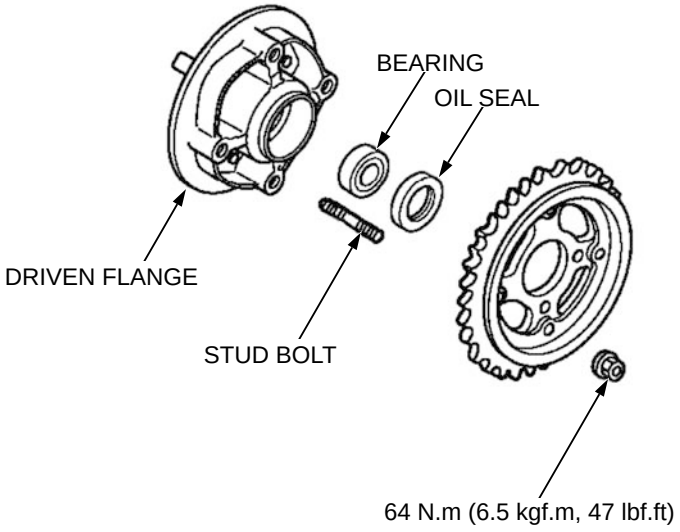

DRIVEN FLANGE BEARING

Pack new bearing cavities with grease.

Drive in a new bearing squarely until it is fully seated.

TOOLS:

Driver	**070GD-001I100**
Attachment. 42 x 47 mm	**070GD-002I160**
Pilot, 15 mm	**07746-0040300**



DRIVEN SPROCKET

Install the driven sprocket nuts with the chamfered side facing out.

Install the nuts and tighten them to the specified torque.

TORQUE: 64 N.m (6.5 kgf.m, 47 lbf. ft)

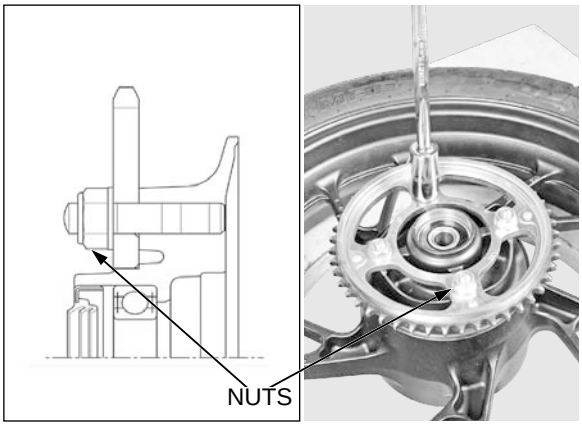

Apply grease to the lip of a new dust seal.

Install the dust seal.

Install the collar.

Install the rear wheel (page 13-8).

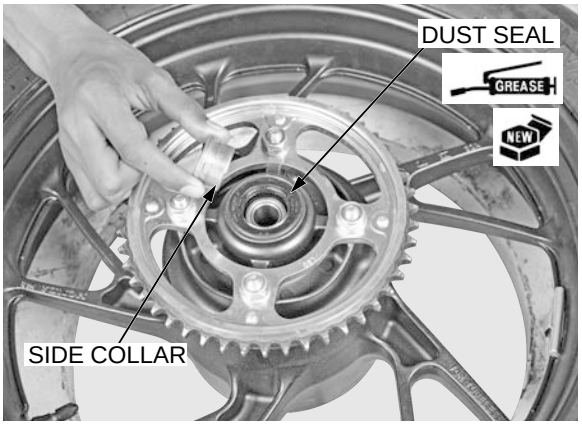

SHOCK ABSORBER

REMOVAL

Place the motorcycle on its center stand.

Remove the following:

– Drive chain case (page 13-0)
– Fuel tank (page 2-3)
– Remove rear wheel (page 13-4)

Remove the shock absorber lower mounting nut and bolt.

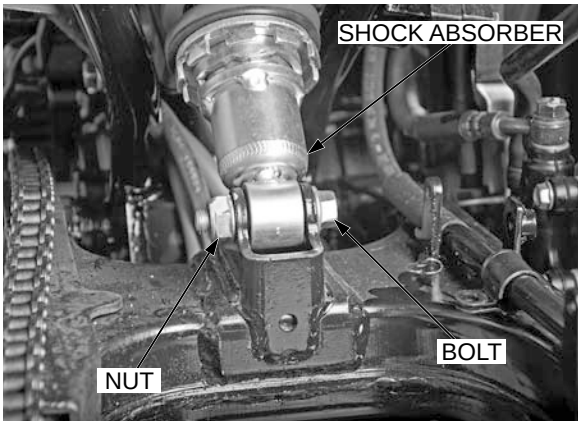

Remove the shock absorber upper mounting nut, bolt and shock absorber.

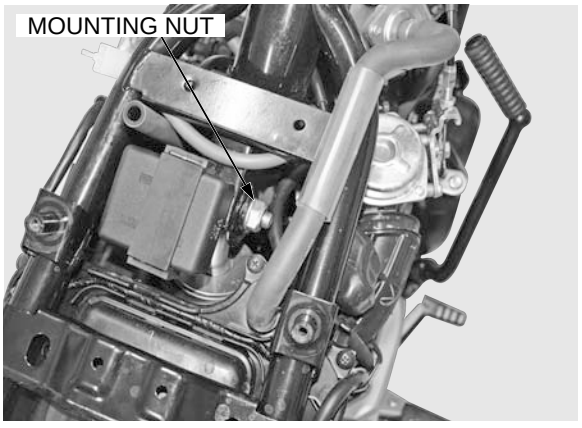

INSPECTION

Visually inspect the shock absorber for wear, leakage or damage.

Check the following:

– Damper rod for bend or damage.
– Damper unit for leakage or other damage.
– Bushing for wear or damage.

Replace the shock absorber as an assembly if necessary.

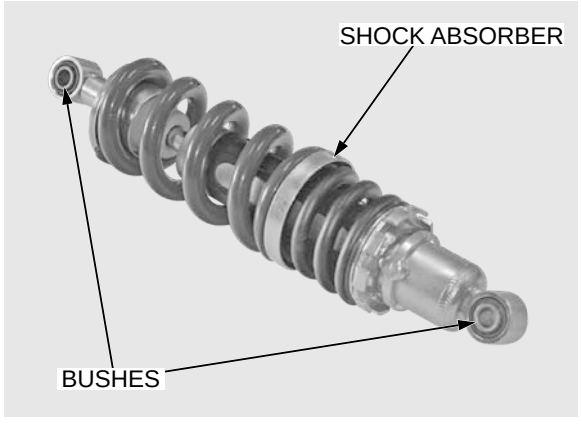

Shock absorber shall be installed with adjust label right side.

INSTALLATION

Install the shock absorber.

Install the upper mounting nut and bolt.

TORQUE: 44 N.m (4.5 kgf.m, 33 lbf. ft)

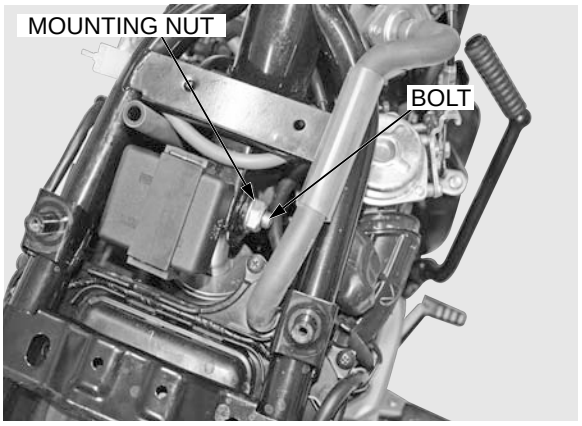

Install the lower bolt and nut.

Tighten the lower mounting nut to the specified torque.

TORQUE: 44 N.m (4.5 kgf.m, 33 lbf. ft)

Install the following:

– Fuel tank (page 2-3)
– Drive chain case (page 13-0)
– Rear wheel (page 13-8)

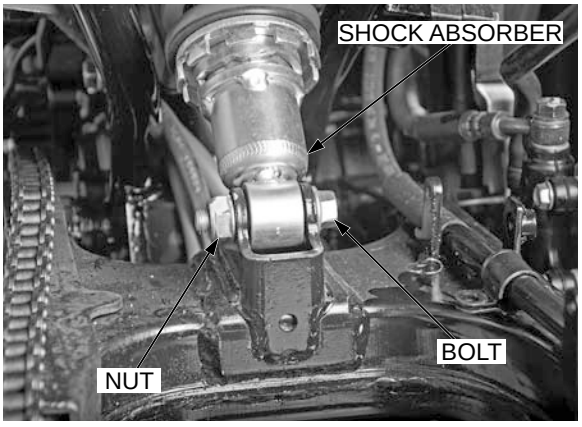

SWINGARM

Remove the rear wheel (page 13-4).

Remove the mounting bolts (4 nos.) and drive chain upper and lower case

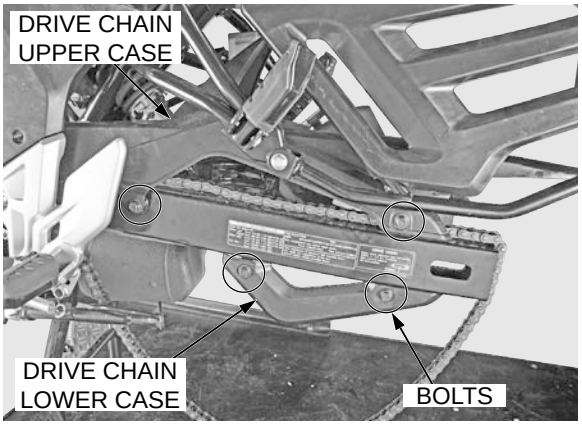

For Disc type:

Remove the rear brake calliper hose mounting bolts (2 nos.) and carefully hold the brake calliper slider.

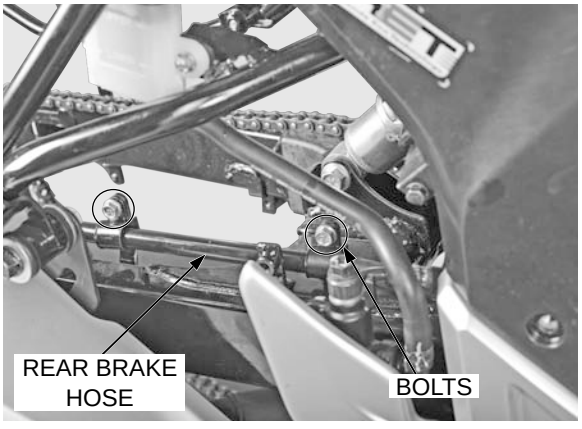

Carefully hold the brake calliper slider.



Remove the shock absorber lower mounting nut and bolt.

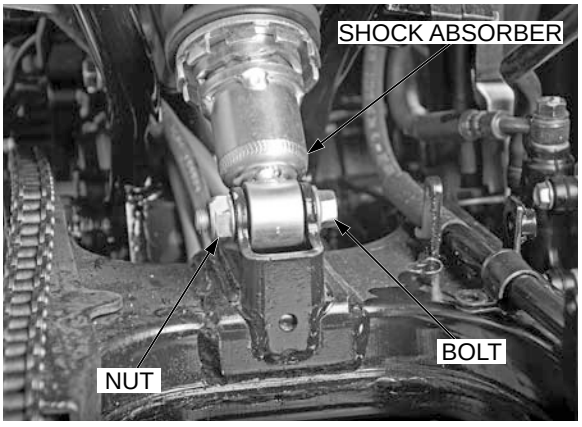

Remove the swingram pivot nut.

Remove the swingarm pivot bolt and swingarm.

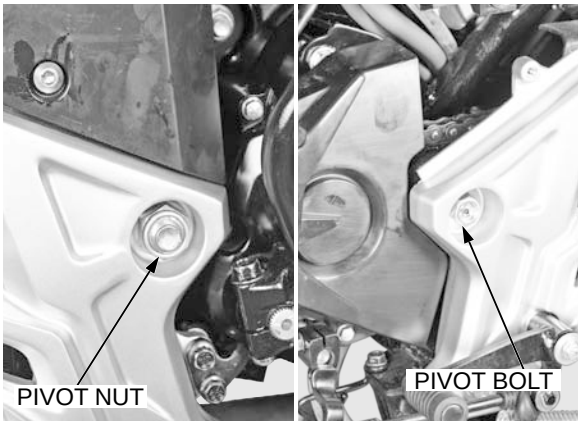

DISASSEMBLY

Remove the chain slider while releasing the bosses (3 nos.) from the tabs.

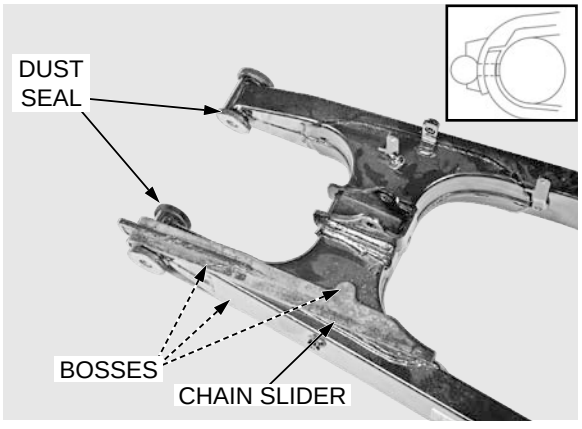

Check the chain slider for wear or damage.

The chain slider must be replaced if it is worn to the wear limit cutout.

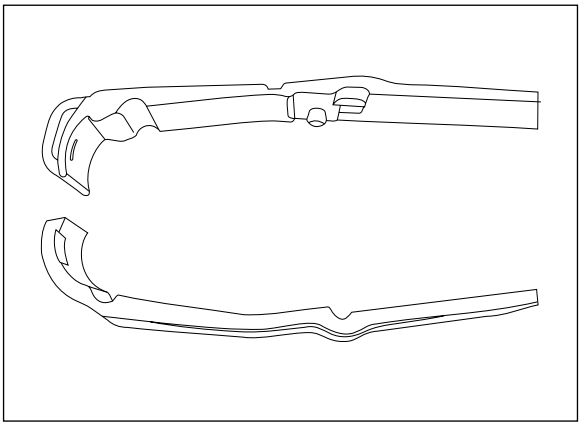

Remove the dust seal.

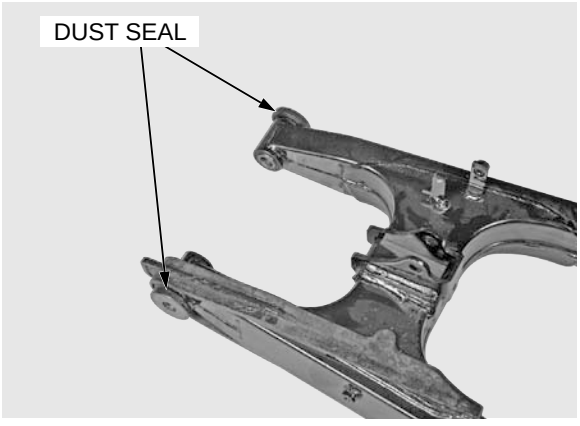

Remove the collars.

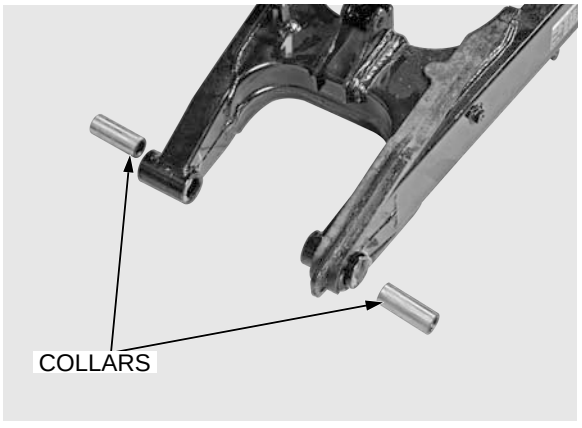

Inspect the swingarm dust seal, collar.

Check the swingarm for any damage.

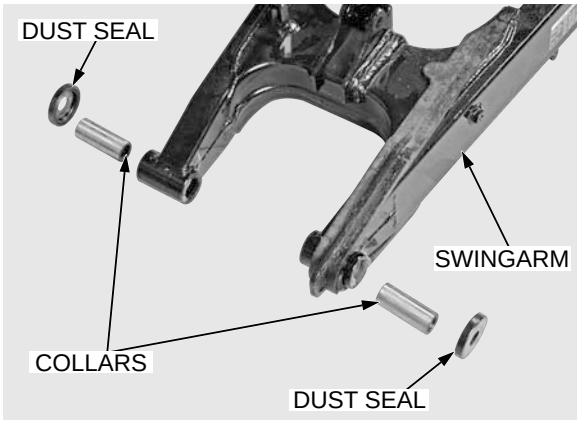

Remove the needle bearings from the swingarm.

TOOLS:

Bearing remover set, 20 mm	**07936-3710600**
Remover handle	**07936-3710100**
Remover weight	**070MC-KPLI300**

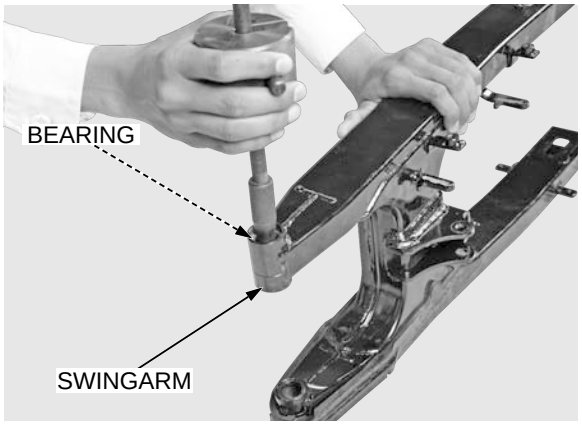

ASSEMBLY

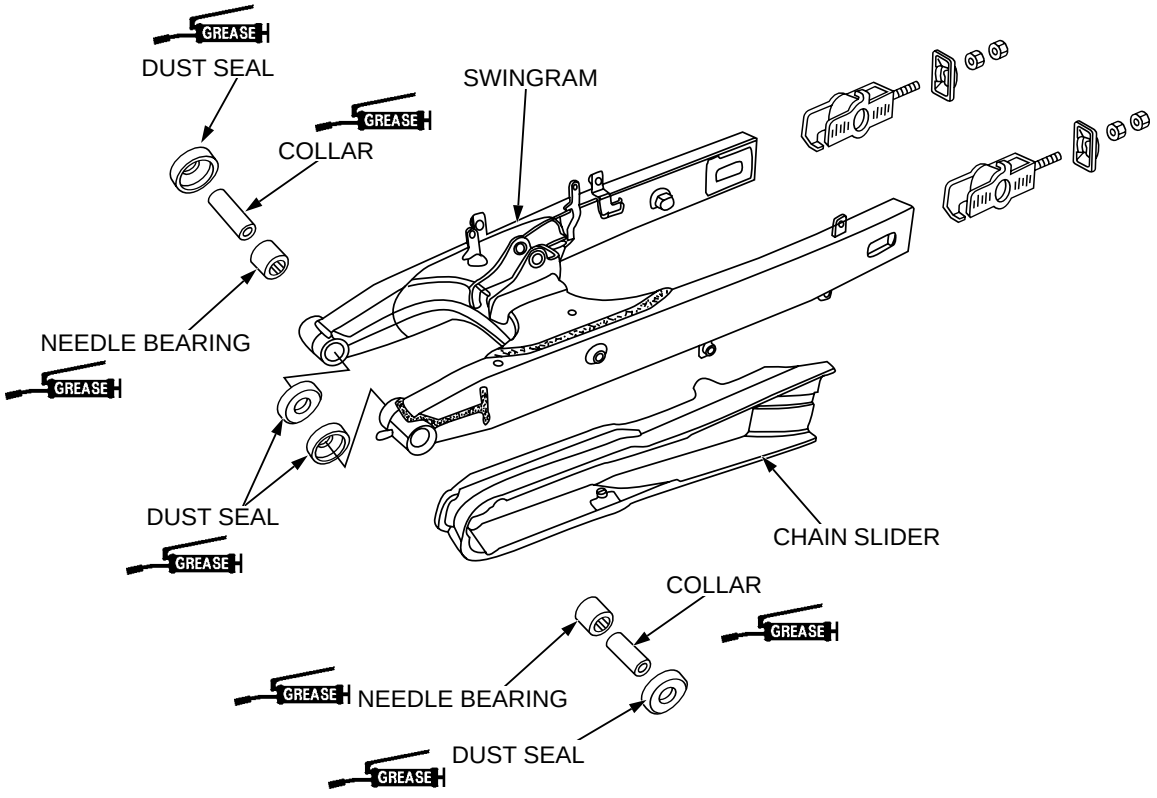

Apply grease to the new needle bearings.

Press the needle bearings into the swingarm so that the needle bearing surface is 7 mm (0.3 in) from the end of swingarm pivot, using the special tools and a hydraulic press.

TOOLS:

Driver	**070GD-001I100**
Attachment, 24 x 26 mm	**070GD-002I120**
Pilot, 20 mm	**070GD-004I160**

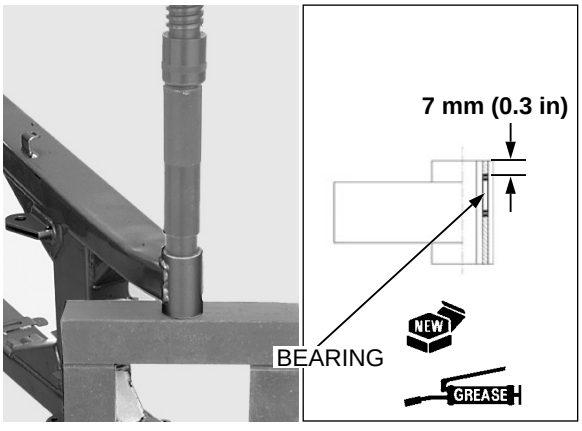

Apply grease to the collars surface and install them into swing arm pivots.

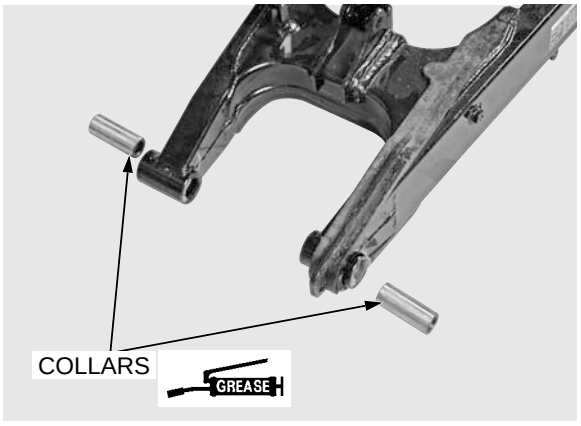

Apply grease to the dust seal.

Install the dust seal.

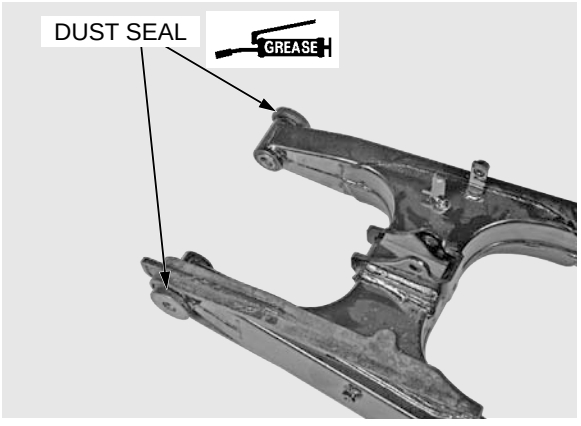

Install the chain slider while aligning the bosses (3 nos.) with tabs.

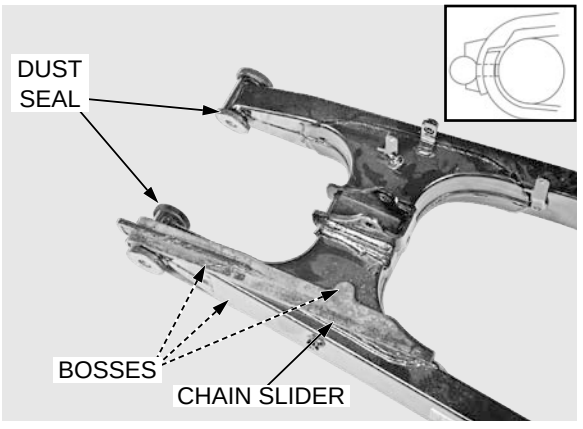

INSTALLATION

Install the swingram pivot bolt and nut.

Tighten the pivot nut to the specified torque.

TORQUE: 54 N.m (5.5 kgf.m, 40 lbf.ft)

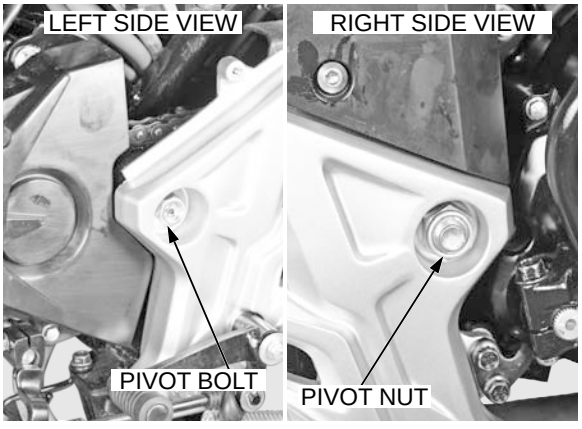

Install the shock absorber lower mounting bolt and nut.

Tighten the nut to the specified Torque.

TORQUE: 44 N.m (4.5 kgf.m, 33 lbf.ft)

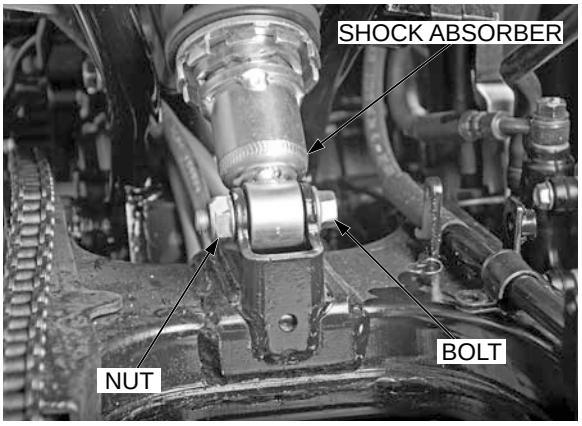

Install the rear brake caliper hose and tighten the bolts (2 nos.).

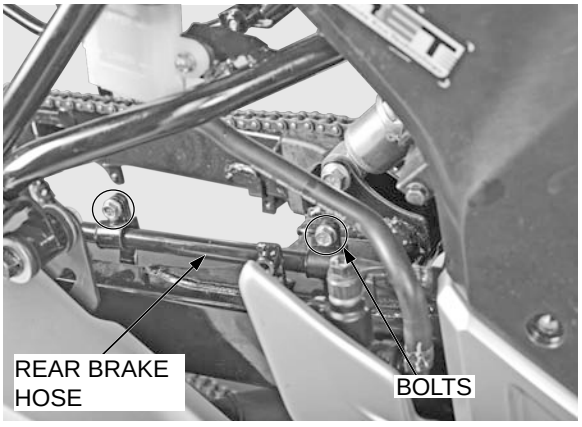

Install the drive chain upper and lower case and tighten the bolts (4 nos.).

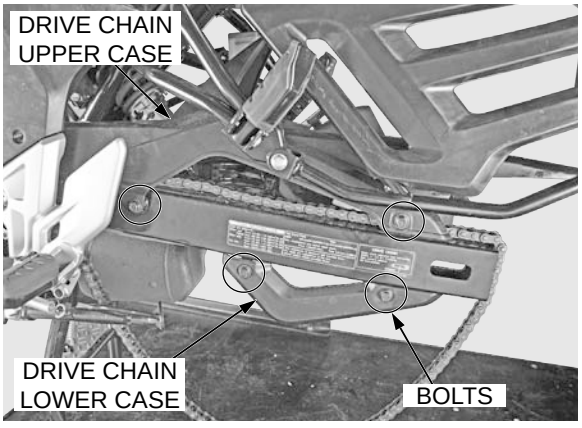

Install the rear wheel (page 13-8).

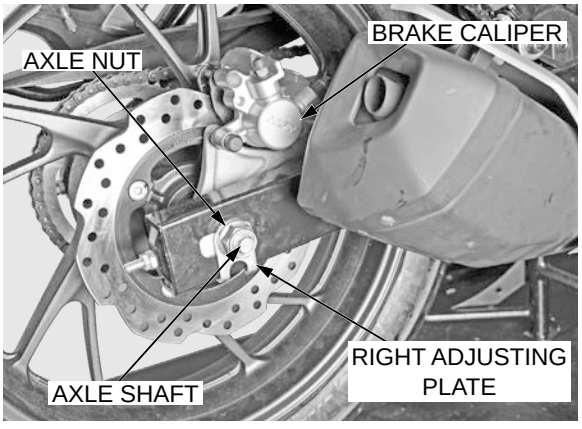

MEMO

COMPONENT LOCATION

CBS FRONT BRAKE:

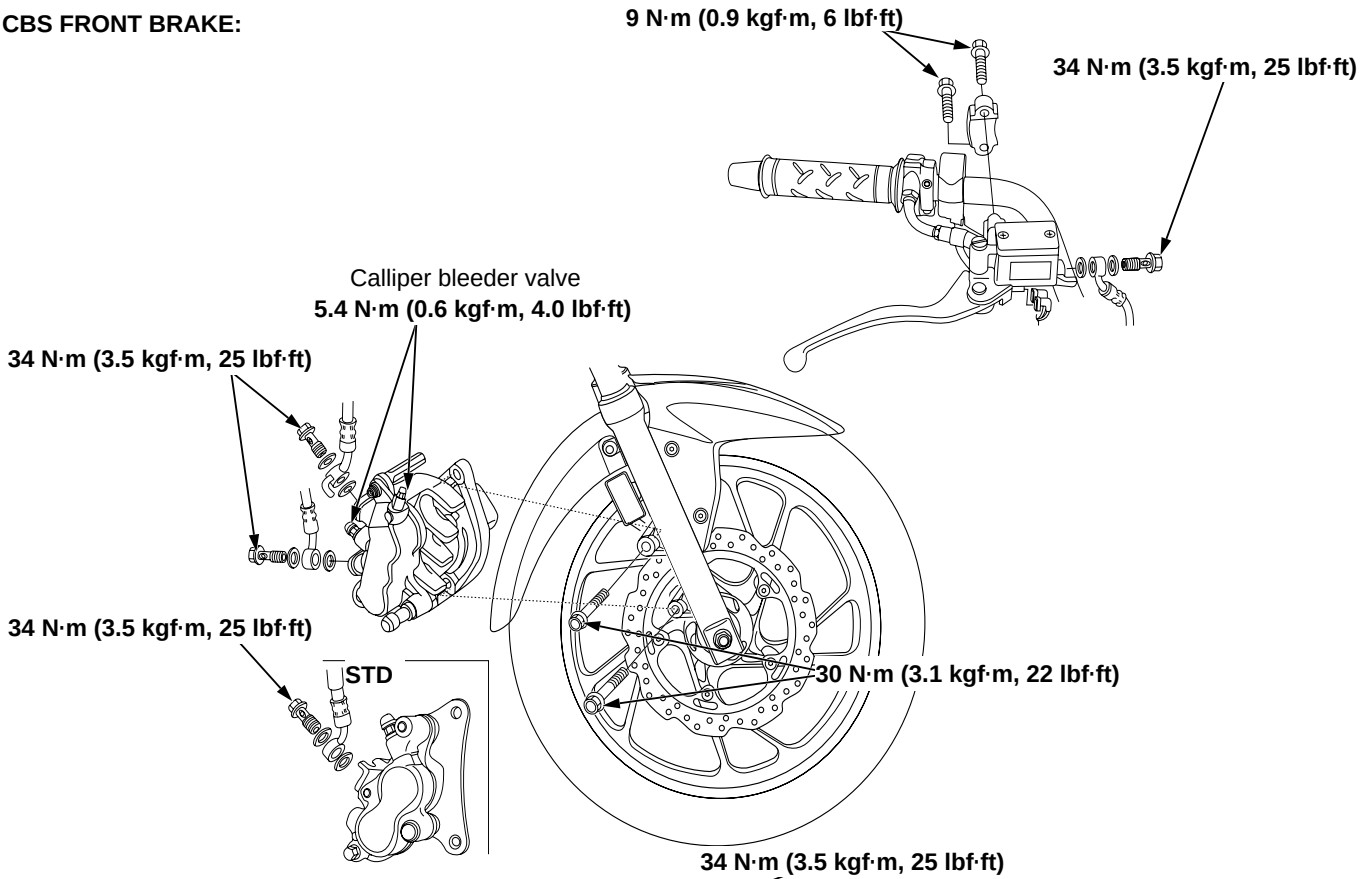

CBS REAR BRAKE:

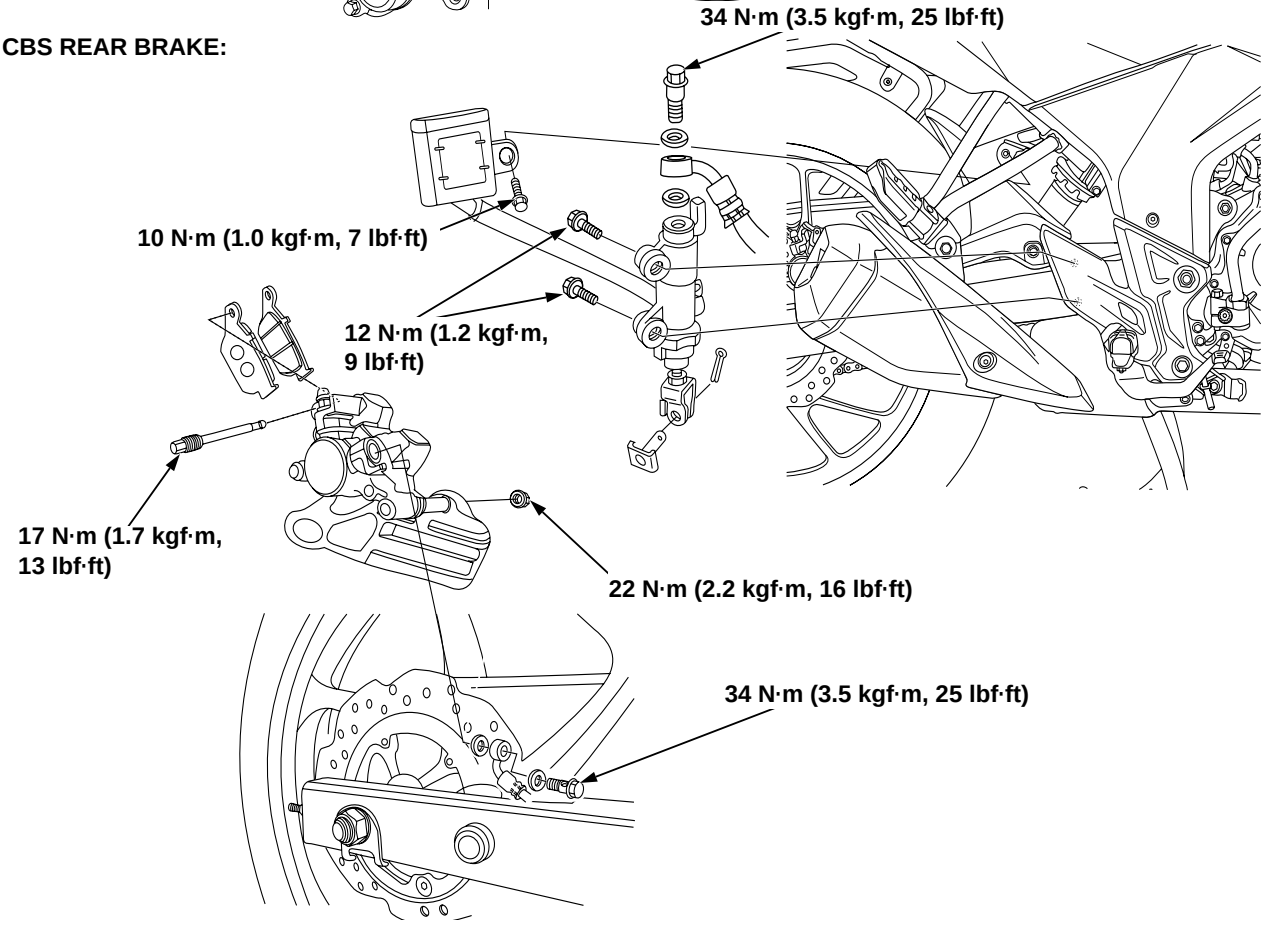

COMPONENT LOCATION	14-0	FRONT BRAKE CALIPER	14-14
SERVICE INFORMATION	14-1	REAR BRAKE	14-19
TROUBLESHOOTING	14-2	REAR MASTER CYLINDER(CBS ONLY)	14-21
BRAKE FLUID REPLACEMENT/ AIR BLEEDING	14-3	REAR BRAKE CALIPER	14-24
BRAKE PAD/DISK	14-7	BRAKE PEDAL	14-27
FRONT MASTER CYLINDER	14-9	REAR DRUM BRAKE	14-30

SERVICE INFORMATION

GENERAL

⚠ CAUTION

Frequent inhalation of brake pad (shoe) dust, regardless of material composition could be hazardous to your health.
- Avoid breathing dust particles.
- Never use an air hose or brush to clean brake assemblies. Use an OSHA - approved vacuum cleaner.

NOTICE

Spilling brake fluid will severely damage instrument lenses and painted surface. It is also harmful to some rubber parts.
Be careful whenever you remove the reservoir cover; make sure the front reservoir is horizontal first.

- A contaminated brake disc or pad reduces stopping power. Discard contaminated pads and clean a contaminated disc with a high quality brake de greasing agent.
- Check the brake system by applying the brake lever or pedal after the air bleeding.
- Never allow contaminates (dirt, water, etc.) to get into an open reservoir.
- Once the hydraulic system has been opened, or if the brake feels spongy, the system must be bleed.
- Always use fresh DOT 3 or DOT 4 brake fluid from a sealed container when servicing the system. Do not mix different types of fluid, they may not be compatible.
- Always check brake operation before riding the motorcycle.
- This section covers service of the combi brake components of the brake system.

SPECIFICATIONS

Unit: mm (in)

ITEM			STANDARD	SERVICE LIMIT	Page NO.
FRONT BRAKE AND MASTER CYLINDER	Specified brake fluid		DOT 3 or DOT 4	–	Page 14–5
	Brake disc thickness		3.8 – 4.6 (0.14 – 0.15)	3.5 (0.13)	Page 14–8
	Brake disc runout		–	0.10 (0.004)	Page 14–9
	Master cylinder I.D.	STD	12.700 – 12.743 (0.4999 – 0.5017)	12.775 (0.5029)	Page 14–11
		CBS	12.700 – 12.743 (0.4999 – 0.5017)	12.775 (0.5029)	Page 14–11
	Master piston O.D.	STD	12.657 – 12.684 (0.4983 – 0.4994)	12.645 (0.4978)	Page 14–11
		CBS	12.657 – 12.684 (0.4983 – 0.4994)	12.645 (0.4978)	Page 14–11
	Caliper cylinder I.D. (STD)		25.400 – 25.450 (1.0000 – 1.0020)	25.460 (1.0024)	Page 14–17
	Caliper cylinder I.D. (CBS)	Cylinder A	22.650 – 22.700 (0.8917 – 0.8937)	22.710 (0.8941)	Page 14–15
		Cylinder B	27.000 – 27.050 (1.0629 – 1.0649)	25.460 (1.0023)	Page 14–15
	Caliper piston O.D. (STD)		25.318 – 25.368 (0.9968 – 0.9987)	25.31 (0.996)	Page 14–17
	Caliper piston O.D. (CBS)	Piston A	22.585 – 22.618 (0.8891 – 0.8904)	22.577 (0.888)	Page 14–15
		Piston B	26.935 – 26.968 (1.0604 – 0.8905)	26.927 (1.060)	Page 14–15
REAR MASTER CYLINDER (CBS/ DISC TYPE)	Specified brake fluid		DOT 3 or DOT 4	–	Page 14–5
	Master cylinder I.D.		14.000 – 14.043 (0.5512 – 0.5529)	14.055 (0.5533)	Page 14–22
	Master piston O.D.		13.957 – 12.984 (0.5495 – 0.5529)	13.945 (0.5490)	Page 14–22
	Caliper cylinder I.D.		33.960 – 34.010 (1.3370 – 1.3389)	34.020 (1.3393)	Page 14–25
	Caliper piston O.D.		33.878 - 33.928 (1.3337 – 1.3357)	33.87 (1.333)	Page 14–25
	Brake pedal height		64.0 – 66.0 (2.51 – 2.59)	–	Page 14–23
REAR (Drum Type)	Brake pedal free play		20 – 30 (0.787 – 1.178)	–	Page 3–20
	Brake drum I.D.		130.0 - 130.2 (5.11 - 5.12)	131.0 (5.16)	Page 14–30
	Lining thickness			To the Indicator	–

TORQUE VALUES

ITEM	PART NO.	QTY	THREAD DIA. (mm)	TORQUE N·m (kgf·m, lbf·ft)	REMARKS	PAGE NO.
Caliper bleeder valve	43352 – 568 – 0030	1	8	5.4 (0.55, 4)		Page 14–5
FR Master cylinder cap	93600 – 04012 – 1G	2	4	1.5 (0.15, 1.1)		Page 14–6
RR Master cylinder cap	43516 – K43911	2	4	1.5 (0.15, 1.1)		–
Brake caliper mounting bolt	90131 – KYJ – 7101	2	8	30 (3.0, 22)		Page 14–16
FR brake light switch screw	90508 – K21 – 921	1	4	1.2 (1.2, 0.9)		Page 14–13
Brake lever pivot bolt(Disk)	90114 – 166 – 006	1	6	1.0 (0.1, 0.7)		Page 14–13
Brake lever pivot nut (Disk)	94050 – 06000	1	6	5.9 (0.59, 4.4)		Page 14–13
Brake hose oil bolt	90145 – GAZ – 981	2	10	34 (3.4, 25)		Page 14–16
FR caliper secondery pin (STD)	45131 – GZ0 – 006	1	8	17.2 (1.7, 12)		–
FR caliper hanger pin (STD)	45215 – KPH – 951	1	10	17.2 (1.7, 12)		–
FR brake caliper pin (CBS)	45131 – ML7 – 921	1	8	22 (0.6, 16)	NOTE 2	–
FR brake caliper hangar pin (CBS)	45215 – MBT – D51	1	10	17.2 (1.7, 12)		Page 14–8
CBS M/C joint nut	95701 – 06022 – 08	1	6	17.2 (1.7, 12)		–
CBS M/C holder bolts	90701 – 06022 – 08	2	6	12 (1.2, 8.8)		Page 14–23
Brake pipe joint nut	46312 – VMO – 770	1	10	14 (1.4, 10)		–

TROUBLESHOOTING

FRONT/ REAR DISC BRAKE

Brake lever soft or spongy

- Air in hydraulic system
- Leaking hydraulic system
- Contaminated brake pad/disc
- Worn caliper piston seal
- Worn master cylinder piston cups
- Worn brake pad/disc
- Contaminated caliper
- Contaminated master cylinder
- Caliper not sliding properly
- Low brake fluid level
- Clogged fluid passage
- Warped/deformed brake disc
- Sticking/worn caliper piston
- Sticking/worn master cylinder piston
- Bent brake lever

Brake lever hard

- Clogged/restricted brake system
- Sticking/worn caliper piston
- Caliper not sliding properly
- Worn caliper piston seal
- Sticking/worn master cylinder piston
- Bent brake lever

Brake drags

- Contaminated brake pad/disc
- Misaligned wheel
- Badly worn brake pad/disc
- Warped/deformed brake disc
- Caliper not sliding properly
- Clogged/restricted fluid passage
- Sticking caliper piston

REAR DRUM BRAKE

Poor brake performance

- Improperly adjusted brake
- Worn brake linings
- Worn brake drum
- Worn brake cam
- Improperly installed brake linings
- Brake cable sticking/needs lubrication
- Contaminated brake linings
- Contaminated brake drum
- Worn brake shoes at cam contact area
- Improper engagement between brake arm and serrations

Brake lever hard or slow return

- Worn/broken return spring
- Improperly adjusted brake
- Sticking brake drum due to contamination
- Worn brake shoes at cam contact area
- Brake cable sticking/needs lubrication
- Improperly installed brake linings

Brake squeaks

- Worn brake linings
- Worn brake drum
- Contaminated brake linings
- Contaminated brake drum

BRAKE FLUID LINE (CBS)

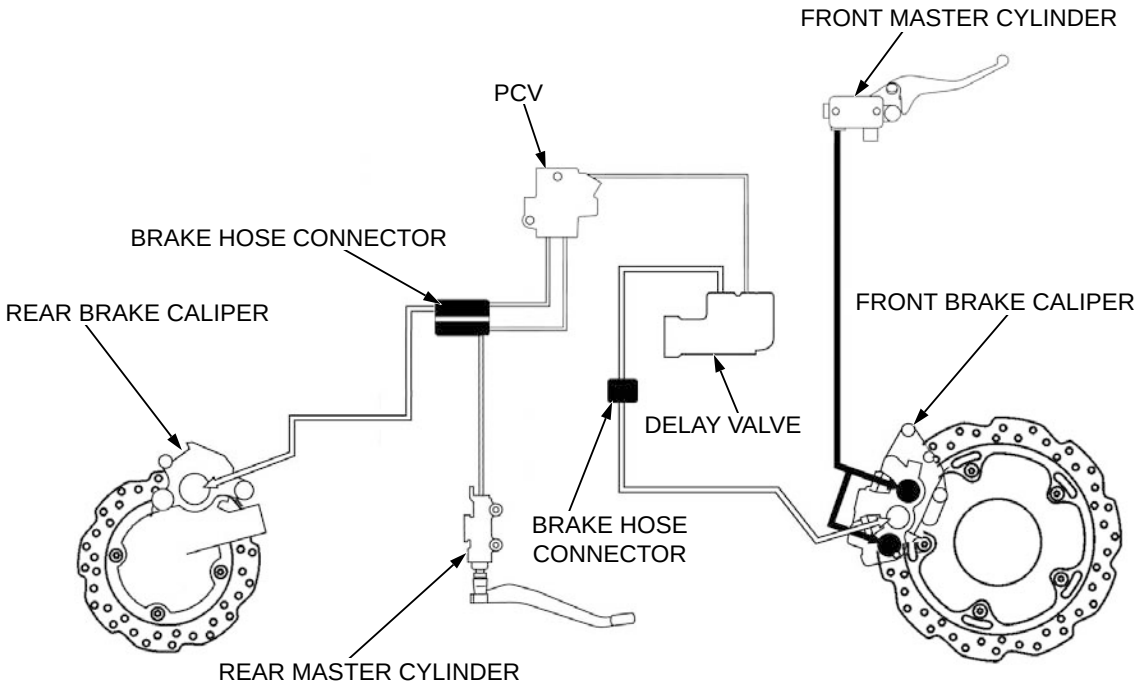

BRAKE FLUID REPLACEMENT/ AIR BLEEDING

Cover the painted parts and the surrounding area of master cylinder by shop cloth to avoid paint surface damage due to brake fluid seepage.

BRAKE FLUID DRAINING

FRONT DISC BRAKE:

Support the motorcycle on it's center stand.

Turn the handlebar until the reservoir is parallel to the ground.

Remove the reservoir cover screws, reservoir cover, set plate and diaphragm.

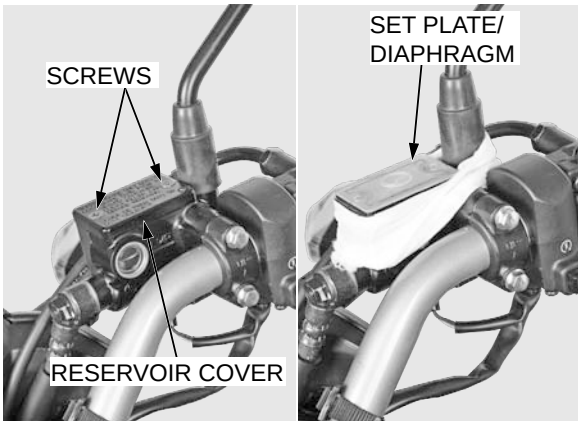

Connect bleed hose to the front brake caliper to bleed valve.

Loosen the bleed valve and pump the brake lever until no more fluid flows out of the bleed valve.

Tighten the bleed valve.

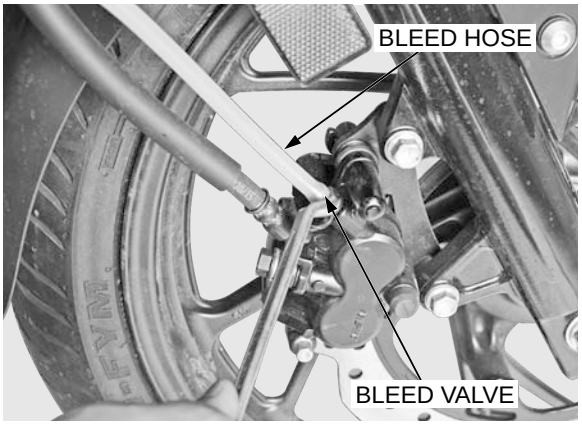

COMBI BRAKE SYSTEM:

Do not allow foreign material to enter the system when filling the reservoir. When using a commercially available brake bleeder, follow the manufacture's operating instructions.

Combine brake system (page 14-3) consist of two individual hydraulic circuit, the front brake line and CBS line.

- Front brake line - Draining procedure same as front brake non CBS
- CBS brake line & Rear brake line - Follow the below process:

CBS BRAKE LINE:

Remove the right side cover (page 2-3).

Remove the mounting bolt of brake fluid reservoir. Remove reservoir cover screw, reservoir cover, set-plate and diaphragm.

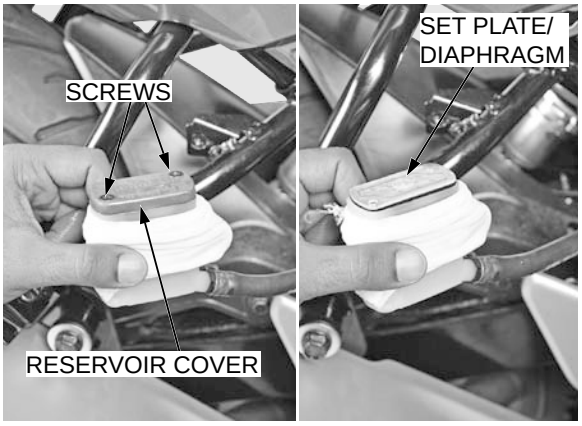

Connect the bleed hose to the CBS bleed valve of the front brake caliper.

Loosen the bleed valve and pump the rear brake padel until no more fluid flows out of the bleed valve.

Tighten the bleed valve.

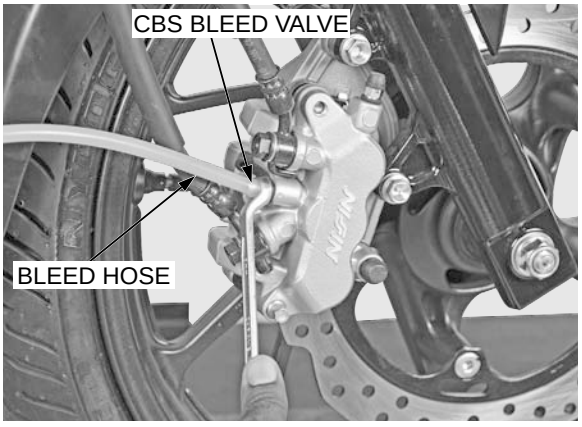

REAR BRAKE LINE:

Connect a bleed hose to the rear brake caliper bleed valve.

Loosen the bleed valve and pump the rear brake pedal until no more fluid flows out of the bleed valve.

Tighten the bleed valve.

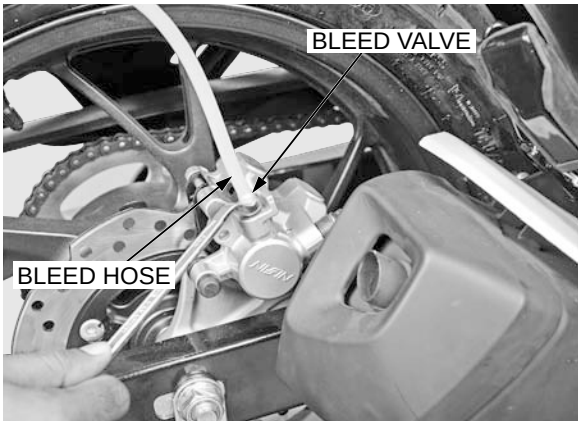

BRAKE FLUID FILLING/AIR BLEEDING FRONT BRAKE (DISC):

If a brake bleeder/automatic refill system is available then use the following steps:

Do not mix different types of fluid. These are not compatible

Connect the automatic refill system to the reservoir, follow the manufacturer's operation instruction.

Connect the commercially available brake bleeder to the front caliper bleed valve.

Perform the bleeding procedure until the system is completely flushed/ bleed.

After bleeding the air completely, tighten the brake caliper bleed valve to the specified torque.

TORQUE: 5.4 N.m (0.6 kgf.m, 4.0 lbf.ft)

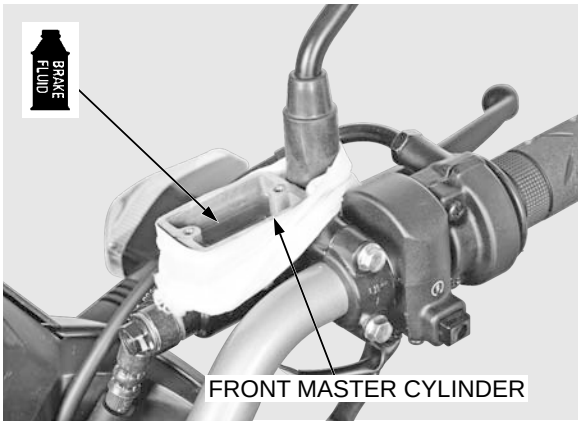

If a brake bleeder is not available then use the following steps:

Do not mix different types of fluid. These are not compatible

Fill the reservoir with DOT 3 or DOT 4 brake fluid from a sealed container.

Connect a bleed hose to the front brake caliper bleed valve.

STEP 1: Pressurize the system with the brake lever until lever resistance is felt.

STEP 2: Squeeze the brake lever, open the bleed valve ¼ turn and then close the valve.

NOTE:

- Do not release the lever until the bleed valve has been closed.
- If an automatic refill system is not used, add brake fluid when the fluid level in the reservoir is low.
- Check the fluid level often while bleeding the brakes to prevent air from being pumped into the system.
- If air is entering the bleeder from around the bleed valve threads, seal the threads with teflon tape.

Repeat **steps 1. and 2**. until air bubbles do not appear in the bleed hose.

After bleeding the air completely, tighten the brake caliper bleed valve to the specified torque.

TORQUE: 5.4 N·m (0.6 kgf·m, 4.0 lbf·ft)

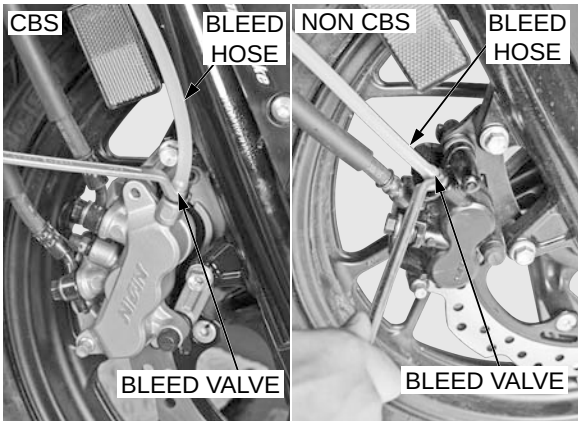

COMBI BRAKE SYSTEM (CBS)

Combine brake system (page 14-3) consist of two individual hydraulic circuit, the front brake line and CBS line.

- Front brake line - Bleeding procedure same as front brake non CBS
- Rear brake line and CBS brake line - Bleeding procedure follow the below process

Note: Always bleed the rear brake line first before bleeding the CBS brake line.



REAR BRAKE

If a brake bleeder/automatic refill system is available then use the following steps:

Connect the automatic refill system to the reservoir, follow the manufacturer's operation instruction.

Connect the commercially available brake bleeder to the Rear bleed valve.

Perform the bleeding procedure until the system is completely flushed/ bleed.

After bleeding the air completely, tighten the brake caliper bleed valve to the specified torque.

TORQUE: 5.4 N.m (0.6 kgf.m, 4.0 lbf.ft)

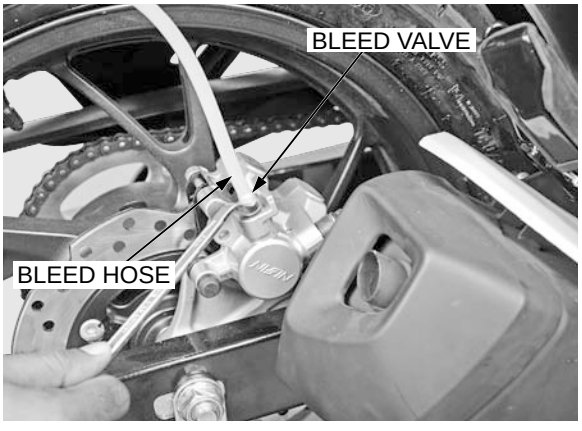

If a brake bleeder is not available then use the following steps:

Connect the bleed hose to the rear calliper bleed valve.

Add the brake fluid to the rear reservoir if the fluid level is below the lower mark.

STEP 1: Pressurize the system with the rear brake pedal until lever resistance is felt.

STEP 2: Squeeze the brake pedal and open the bleed valve ¼ turn and then close the valve.

NOTE:

- Do not release the pedal until the bleed valve has been closed.
- If an automatic refill system is not used, add brake fluid when the fluid level in the reservoir is low.
- Check the fluid level often while bleeding the brakes to prevent air from being pumped into the system.
- If air is entering the bleeder from around the bleed valve threads, seal the threads with teflon tape.

Repeat **steps 1. and 2**. until air bubbles do not appear in the bleed hose.

After bleeding the air completely, tighten the brake caliper bleed valve to the specified torque.

TORQUE: 5.4 N·m (0.6 kgf·m, 4.0 lbf·ft)





CBS BRAKE

Connect the bleed valve to the front caliper CBS bleed valve and follow the bleeding process as mention in rear brake bleeding process step 1 and step 2.

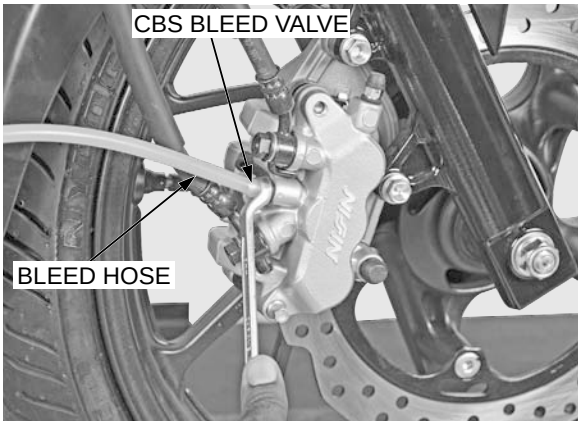

Install the diaphragm, set plate, reservoir cover and reservoir cover screws, then tighten the screws to the specified torque.

TORQUE: 1.5 N·m (0.2 kgf·m, 1.1 lbf·ft)

Install the reservoir and tighten reservoir mounting bolt.

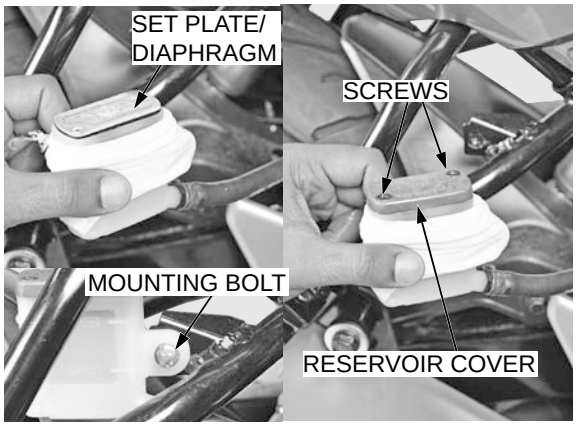

⚠ CAUTION

Make sure that rear brake rod is connected with pedal. Adjust brake pedal free play with 20-30 mm. After that, do the CBS brake bleeding.

BRAKE PAD/DISC

FRONT BRAKE PAD REPLACEMENT (CBS AND DISC)

Always replace the brake pads in pairs to assure even disc pressure.

Push the caliper pistons all the way in to facilitate installation of new brake pads (giving some space).

NOTE:

Check the brake fluid level in the brake master cylinder reservoir as this operation causes the level to rise.

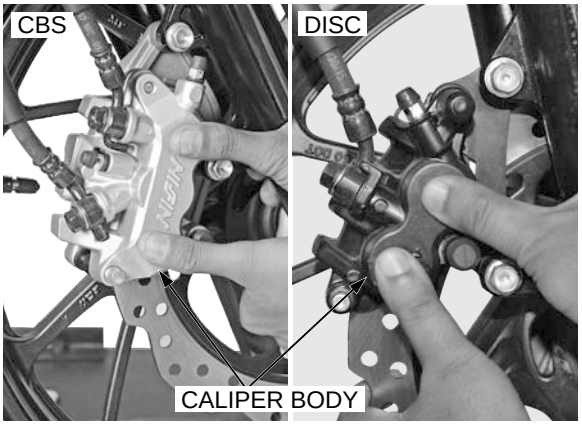

Remove the brake pad hanger pin by unscrewing it with the help of wrench.

Check the pad pin for abnormal wear or distortion.

Replace if necessary.

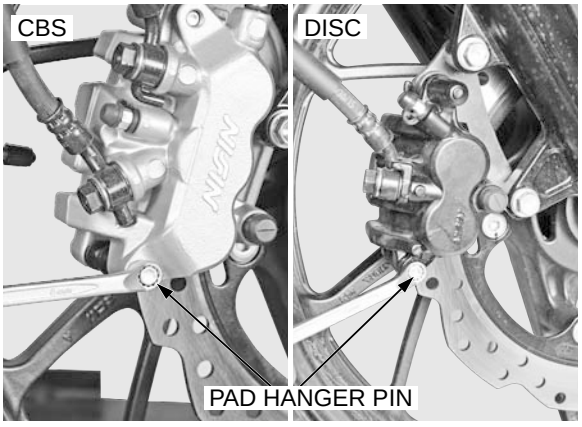

Do not operate the rear brake pedal or front brake lever after the brake pads are removed.

Remove the brake pads.

Clean the brake caliper inside especially around the piston.

Install new brake pads if found below specification.

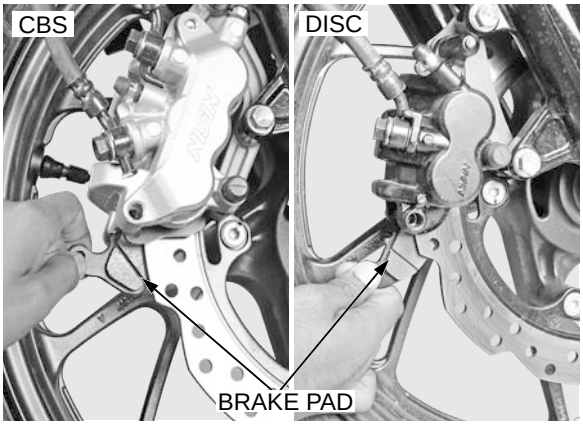

INSTALLATION

Make sure the pad spring is installed in position.

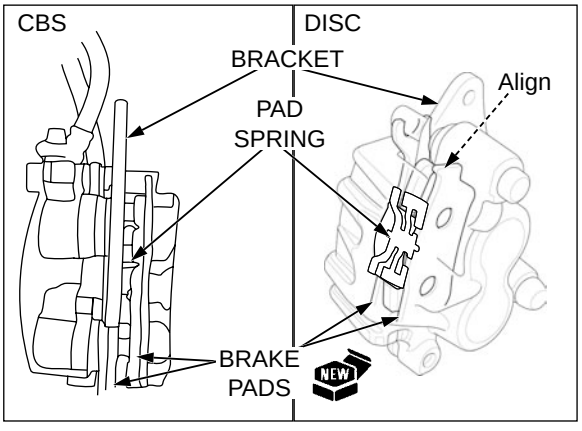

Be careful not to apply grease on brake pads.

Install the new brake pad into the caliper.

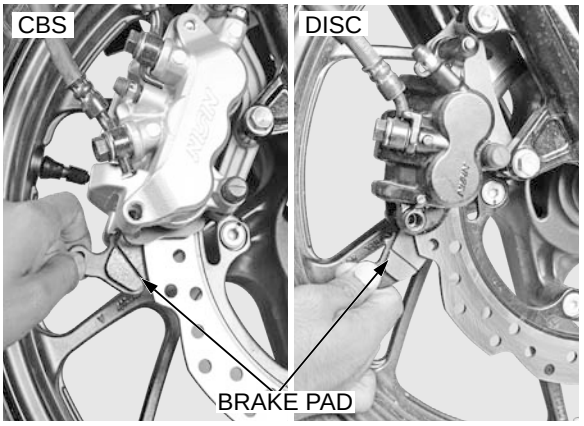

Lubricate the pad pin with silicone grease before installation.

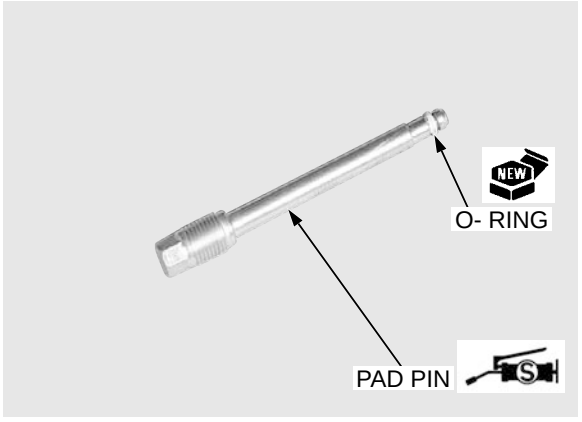

Install the brake pad pin by pushing the pads against the pad spring to align the pad pin holes in the pads and caliper.

Drive the pad pin into the caliper.

TORQUE:17.2 N·m (1.7 kgf·m, 12 lbf·ft)

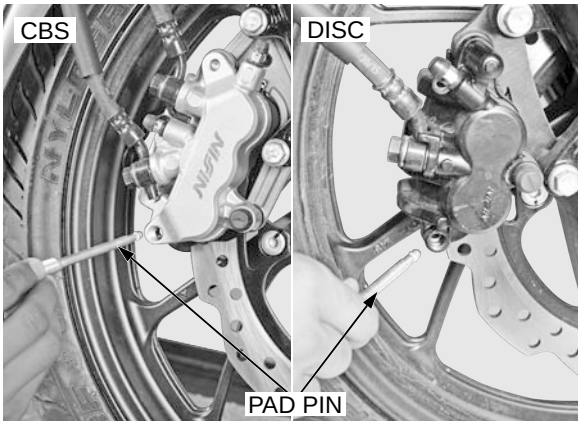

FRONT BRAKE DISC INSPECTION

Visually inspect the brake disc for damage or cracks.

Measure the brake disc thickness at several points.

SERVICE LIMIT: 3.5 mm (0.13 in)

Replace the brake disc if the smallest measurement is less than service limit.



Check the brake disc warpage using a dial indicator.

SERVICE LIMIT: 0.10 mm (0.004 in)

Check the wheel bearings for excessive play, if the warpage exceeds the service limit.

Replace the brake disc if the wheel bearings are normal.

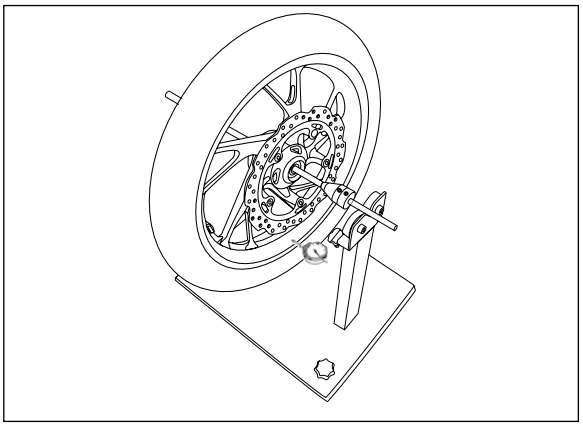

FRONT MASTER CYLINDER

REMOVAL

Remove the right rear view mirror with rear view mirror adapter (page 12-4).

Disconnect the brake light switch connectors (page 17-12).

Drain the brake fluid from the hydraulic system (page 14-3).

Remove the brake hose by removing the oil bolt and sealing washers.

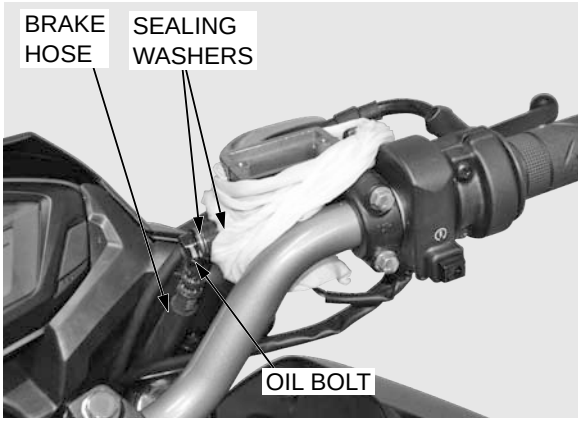

Remove the bolts, holder and master cylinder assembly.

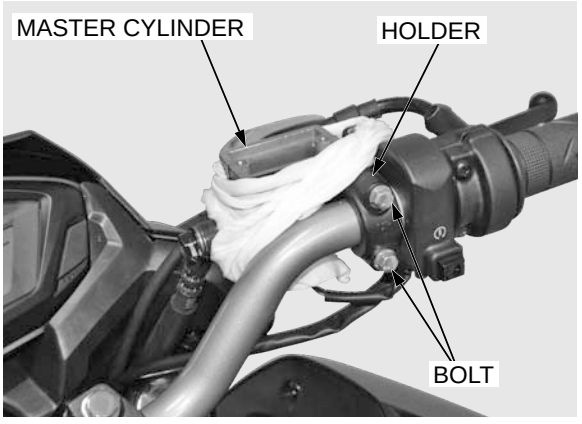

DISASSEMBLY

Remove the brake lever pivot nut, pivot bolt and brake lever.

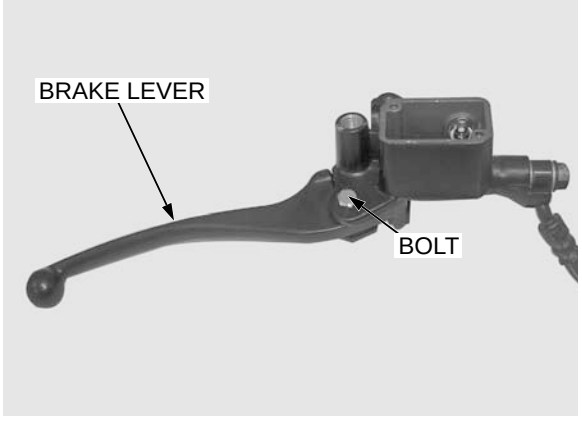

Remove the screw and brake light switch.

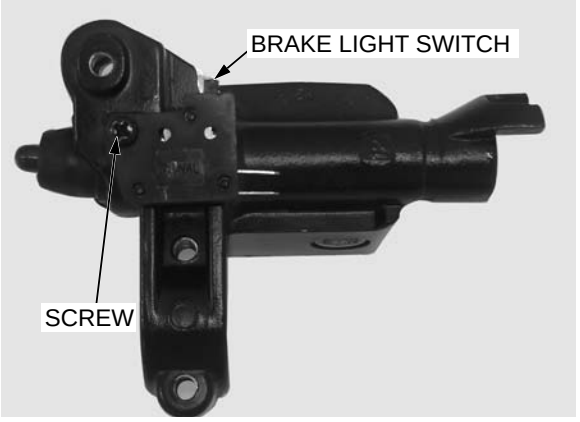

Remove the boot.

Remove the snap ring from the master cylinder body using snap ring pliers.

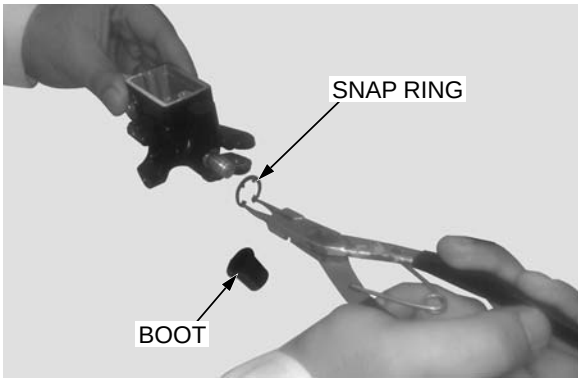

Remove the master piston and spring from the master cylinder.

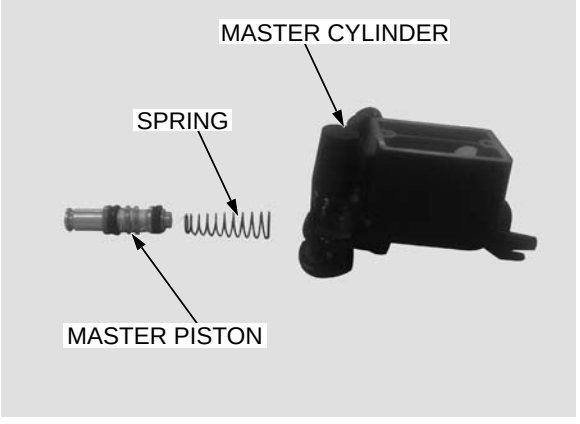

Clean the inside of the master cylinder and master piston with clean brake fluid.

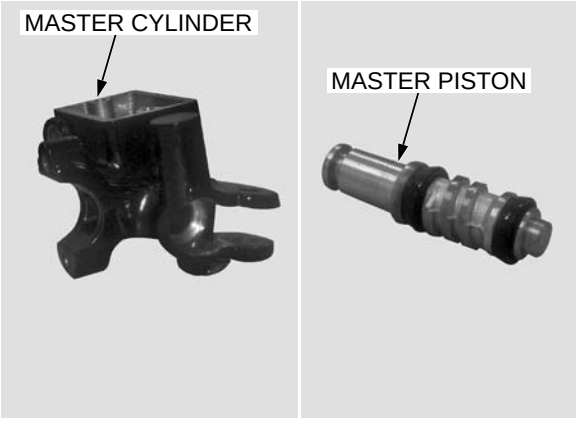

INSPECTION

Check the master piston for scoring, scratches or damage.

Measure the master piston O.D.

SERVICE LIMIT: DISC - 12.657 mm (0.4978 in)

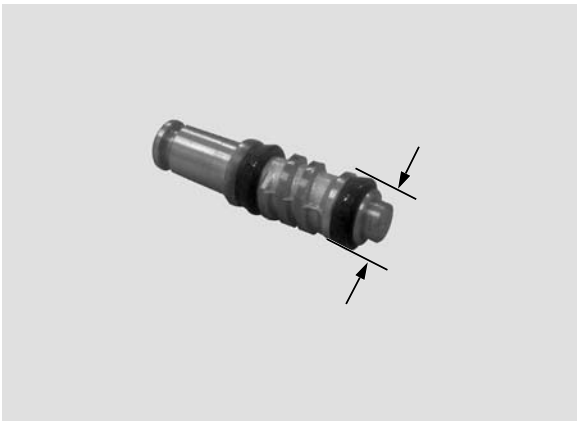

Keep the piston, spring, snap ring and boot as a set. Do not substitute individual part.

Check the master cylinder for scoring, scratches or damage.

Measure the master cylinder I.D.

SERVICE LIMIT: DISC - 12.755 mm (0.5022 in)



ASSEMBLY

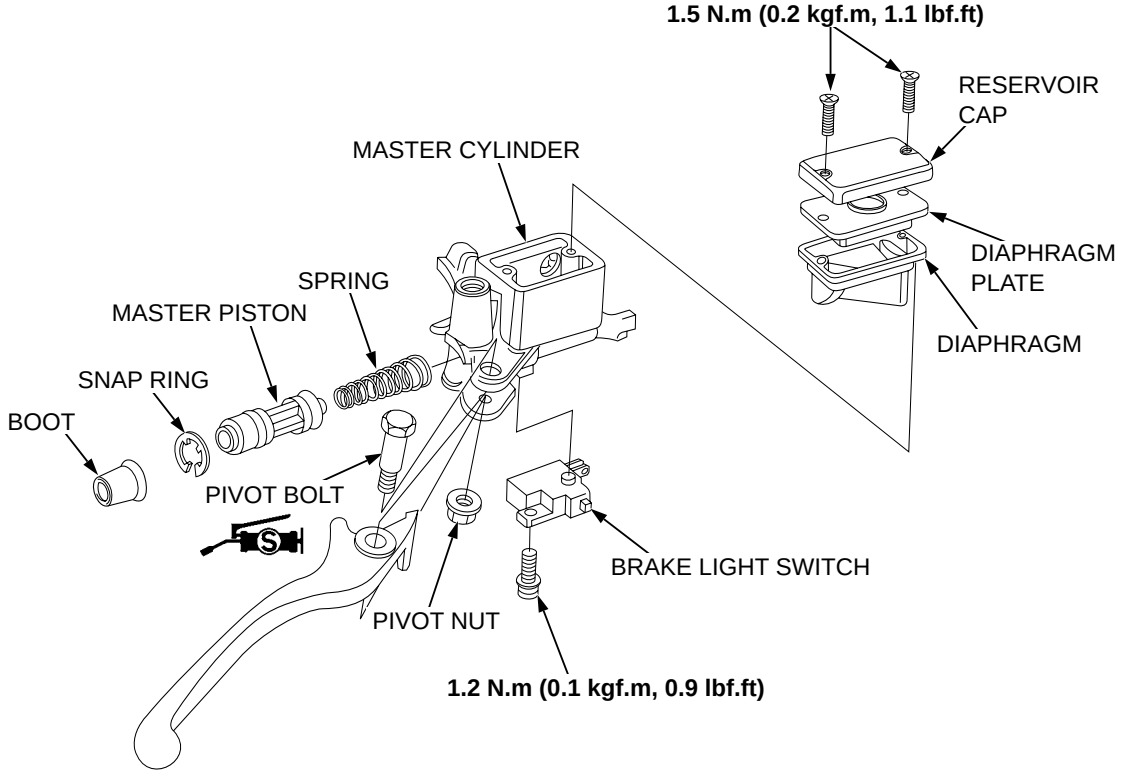

INSTALLATION

Apply clean brake fluid to the master piston.

Install the spring onto the piston end, and install it into the master cylinder.

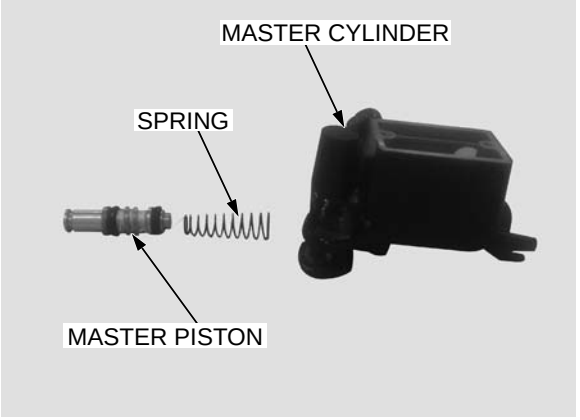

Be certain the snap ring is firmly seated in the groove

Install the snap ring into the groove in the master cylinder.

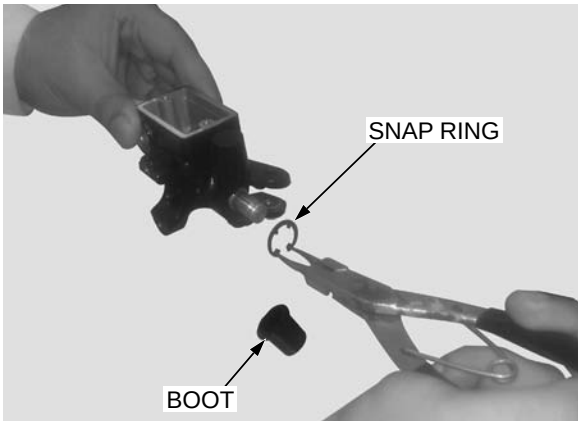

Apply grease to boot and install it to the master cylinder.

NOTE:

If seal is found damage replace the master cylinder piston set.

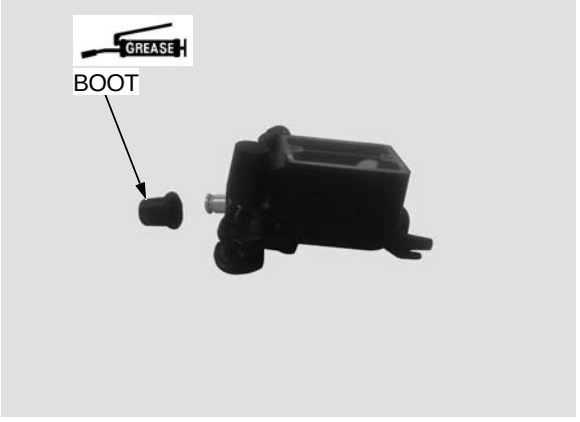

Install the brake light switch to the master cylinder by aligning the brake light switch boss with master cylinder hole.

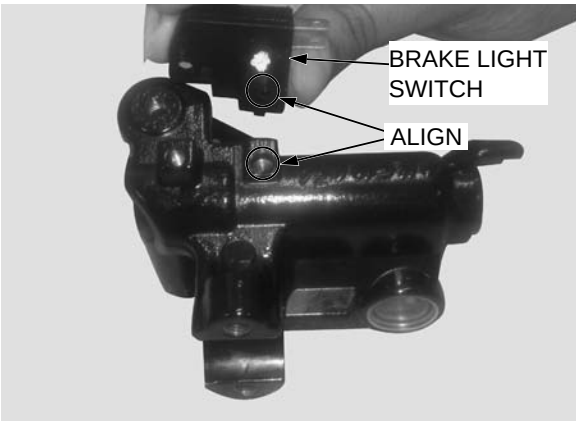

Install and tighten the brake light switch screw to the specified torque.

TORQUE: 1.2 N·m (0.1 kgf·m, 0.9 lbf·ft)

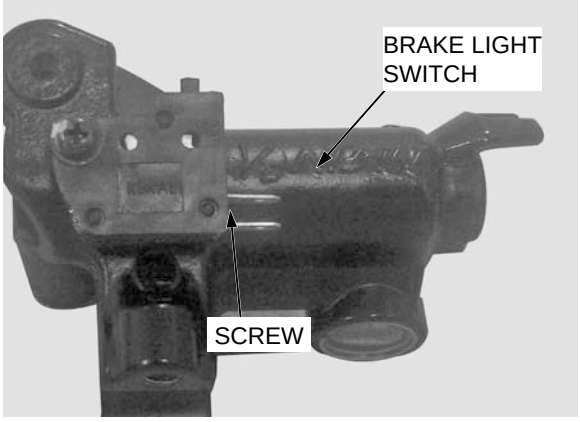

Apply grease to the brake lever pivot bolt rotating surface.

Install the brake lever to the master cylinder.

Install and tighten the pivot bolt to the specified torque.

TORQUE:1.0 N·m (0.1 kgf·m, 0.7 lbf·ft)

Install and tighten the pivot nut while holding the pivot bolt to the specified torque.

TORQUE: 6.0 N·m (0.6 kgf·m, 4 lbf·ft)

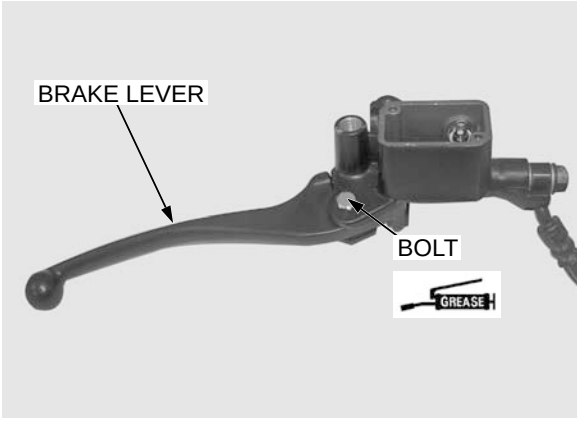

INSTALLATION OF MASTER CYLINDER

Place the master cylinder assembly on the handlebar.

Place the master cylinder holder with up mark facing forward, and install the bolts.

Align the end of the master cylinder with the punch mark on the handlebar.

Tighten the bolts to the specified torque.

TORQUE: 5.9 N·m (0.59 kgf·m, 4.4 lbf·ft)

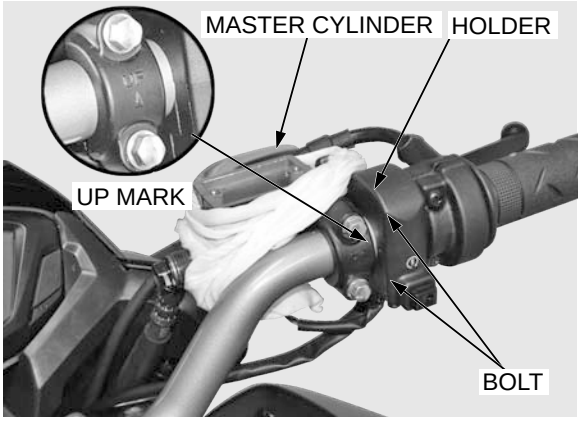

Rest the brake hose joint between the stoppers on the master cylinder.

Install the brake hose to the master cylinder with the oil bolt and new sealing washers.

Tighten the oil bolt to the specified torque.

TORQUE: 34 N·m (3.5 kgf·m, 25 lbf·ft)

Connect the brake light switch connectors.

Fill the brake fluid, and bleed the air for the hydraulic system (page 14-4).

Install the right rear view mirror.

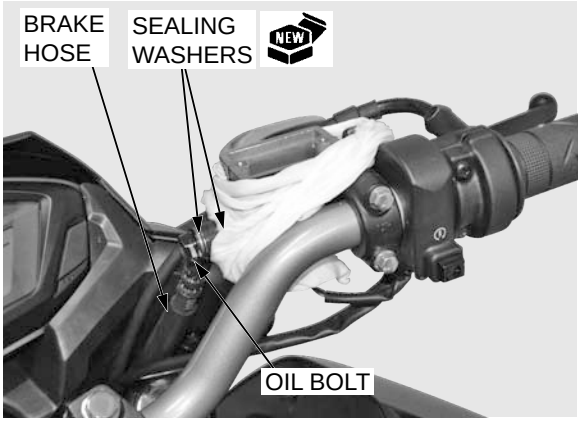

FRONT BRAKE CALIPER

CBS FRONT BRAKE

REMOVAL

Drain the brake fluid from the hydraulic system (page 14-3).

Remove the brake pads (page 14-7).

Remove the brake hose by removing the oil bolt and sealing washer.

Remove the brake caliper mounting bolts and brake caliper.

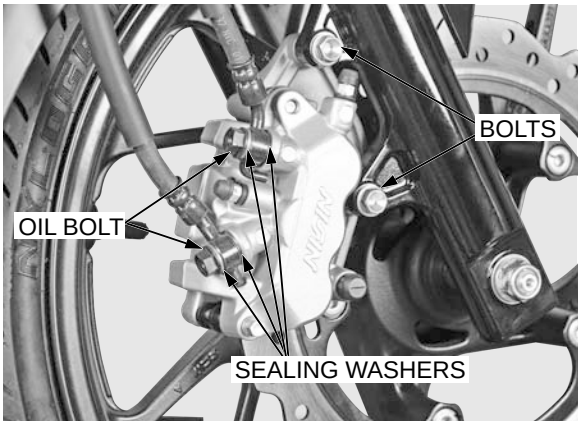

DISASSEMBLY

Remove the caliper bracket from the caliper body.

Remove the pad spring and bracket pin boot from the caliper body.

Remove the pad retainer and caliper pin boot from the caliper bracket.

If the bracket pin boot is hard or deteriorated, replace it with a new one.

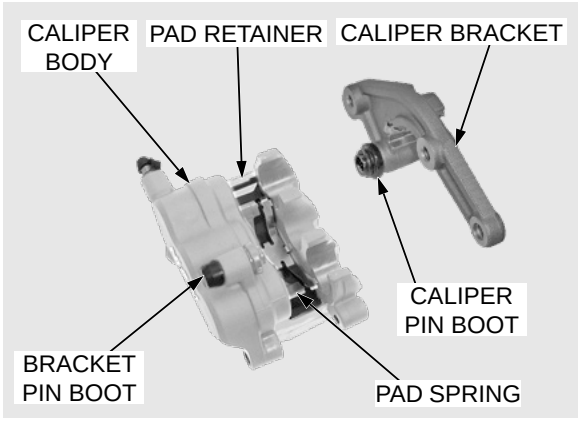

Do not use high pressure air or bring the nozzle too close to the inlet.

Place a shop towel over the caliper pistons.

Position the caliper body with the piston down, and apply small squirts of air pressure to the fluid inlet to remove the caliper pistons.



Be careful not to damage the piston sliding surface.

Push the dust seals and piston seals in, and lift them out.

Clean the seal grooves, caliper piston sliding surfaces and caliper pistons with clean brake fluid.

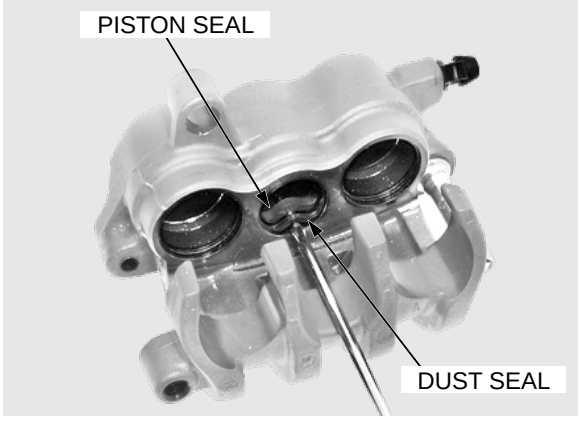

INSPECTION

Check the caliper cylinder for scoring, scratches or damage.

Measure the each caliper cylinder I.D.

SERVICE LIMIT:

Caliper Cylinder A: 22.710 mm (0.8941 in)

Caliper Cylinder B: 25.460 mm (1.0023 in)

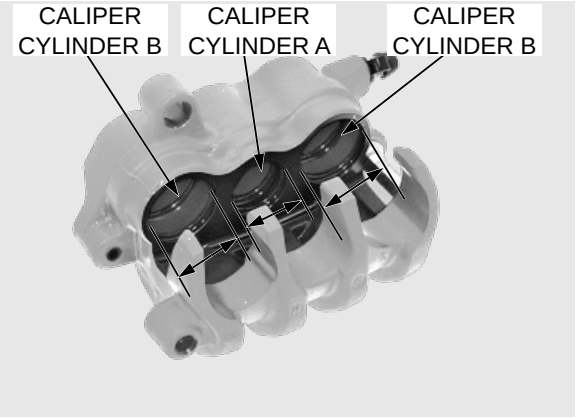

Check the caliper piston for scoring, scratches or damage.

Measure the each caliper piston O.D.

SERVICE LIMIT:

Caliper Cylinder A: 25.31 mm (0.996 in)

Caliper Cylinder B: 22.56 mm (0.888 in)

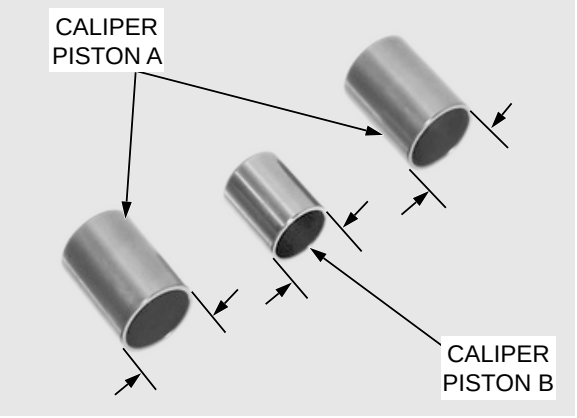

CBS FRONT BRAKE ASSEMBLY

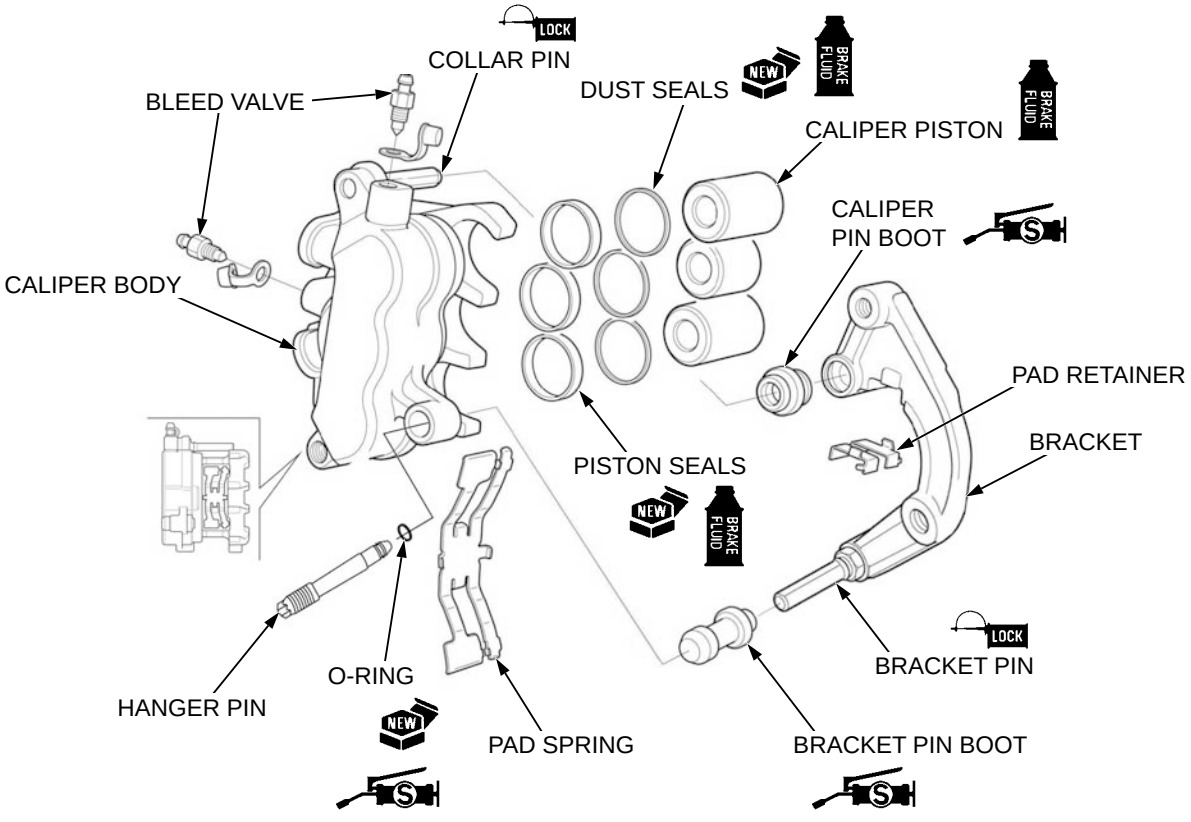

ASSEMBLY

Apply clean brake fluid to new piston and dust seals, and install them into the seal grooves in the caliper cylinder.

Apply clean brake fluid to the caliper pistons, and install them into the caliper cylinders with the opening side toward the pads

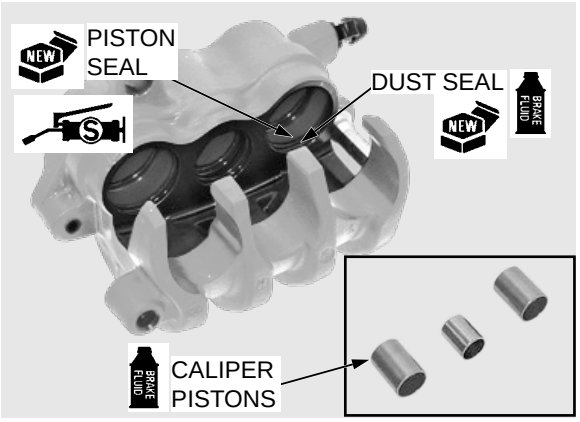

Install the pad spring onto the caliper body.

Apply grease to the inner surface of brake caliper pin boots, and install them into the caliper body.

Install the caliper bracket into the caliper body..

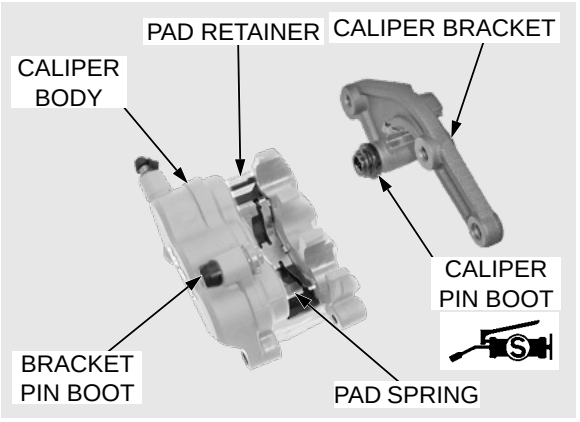

INSTALLATION

Install the brake caliper to the right fork leg so that the disc is positioned between the pads.

Install and tighten new brake caliper mounting bolts to the specified torque.

TORQUE: 30 N·m (3.1 kgf·m, 22 lbf·ft)

Install the brake hose to the brake caliper with the oil bolt and new sealing washers.

Rest the hose joint onto the stoppers, and tighten the oil bolt to the specified torque.

TORQUE: 34 N·m (3.5 kgf·m, 25 lbf·ft)

Install the brake pads (page 14-7).

Fill the brake fluid, and bleed the air for the hydraulic system (page 14-4).

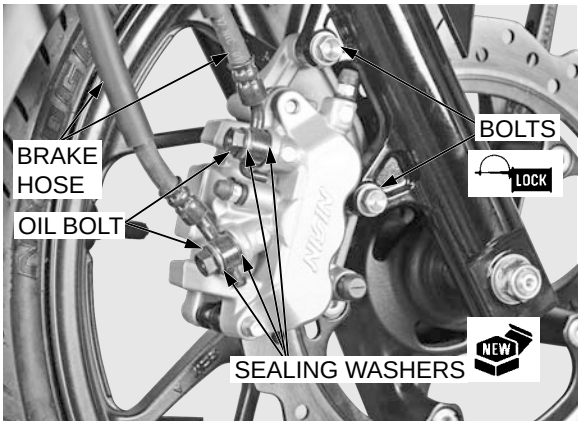

NON CBS FRONT BRAKE

REMOVAL

Drain the brake fluid from the hydraulic system (page 14-3).

Remove the brake pads (page 14-7).

Remove the brake hose by removing the oil bolt and sealing washer.

Remove the brake caliper mounting bolts and brake caliper.

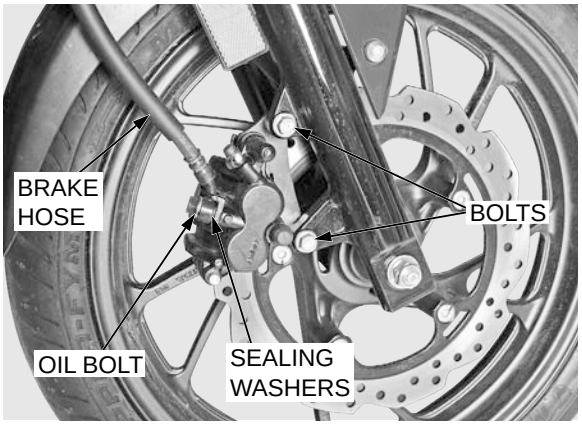

DISASSEMBLY

Remove the caliper bracket from the caliper body.

Remove the pad spring and bracket pin boot from the caliper body.

If the bracket pin boot is hard or deteriorated, replace it with a new one.

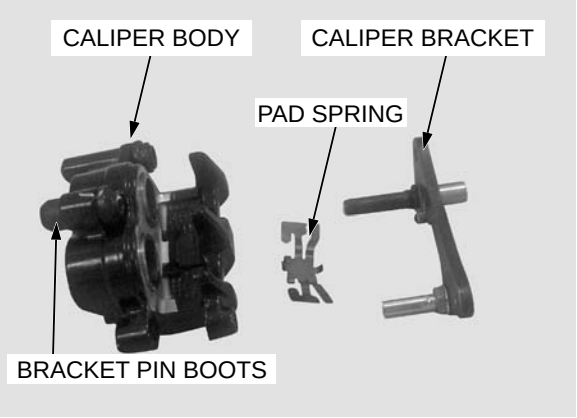

Do not use high pressure air or bring the nozzle too close to the inlet.

Place a shop towel over the caliper pistons.

Position the caliper body with the piston down, and apply small squirts of air pressure to the fluid inlet to remove the caliper pistons.

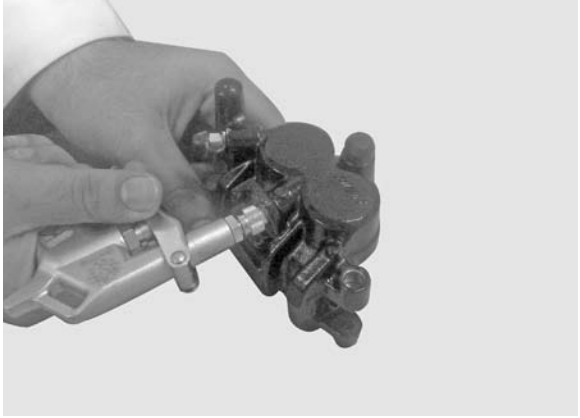

Be careful not to damage the piston sliding surface.

Push the dust seals and piston seals in, and lift them out.

Clean the seal grooves, caliper piston sliding surfaces and caliper pistons with clean brake fluid only.

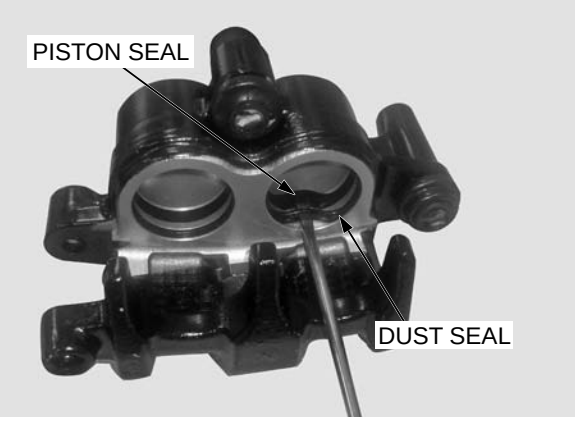

INSPECTION

Check the caliper cylinder for scoring, scratches or damage.

Measure the caliper cylinder I.D.

SERVICE LIMIT: 25.460 mm (1.0024 in)

Check the caliper piston for scoring, scratches or damage.

Measure the caliper piston O.D.

SERVICE LIMIT: 25.31 mm (0.9965 in)

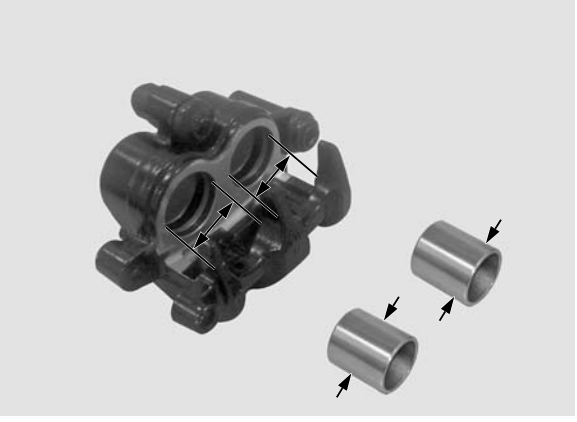

FRONT BRAKE (NON CBS) ASSEMBLY

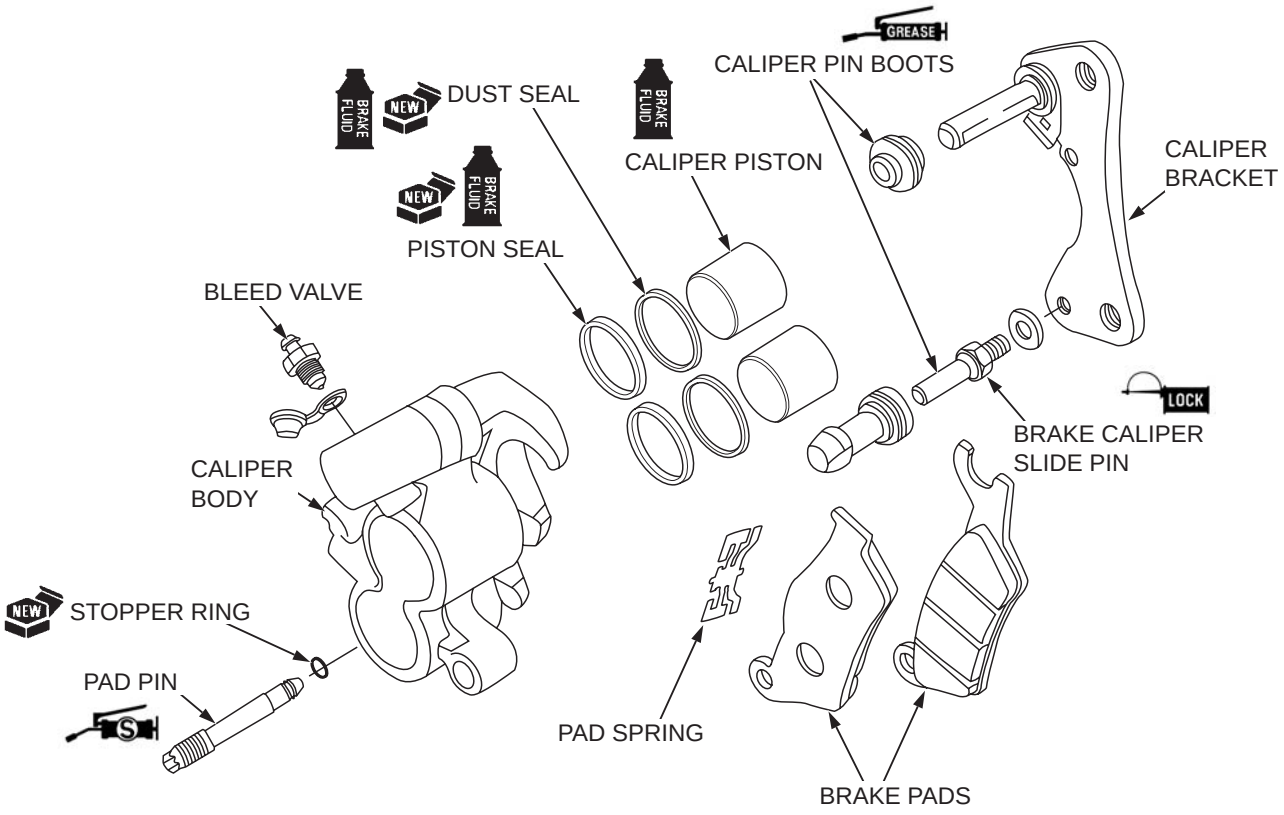

INSTALLATION

Apply clean brake fluid to new piston and dust seals, and install them into the seal grooves in the caliper cylinder.

Apply clean brake fluid to the caliper pistons, and install them into the caliper cylinders with the opening side toward the pads.

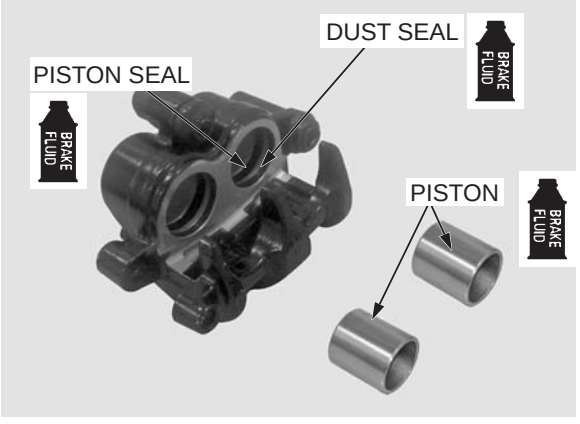

Install the pad spring onto the caliper body.

Apply silicon grease to the inner surface of brake caliper pin boots, and install them into the caliper body.

Install the caliper bracket into the caliper body.

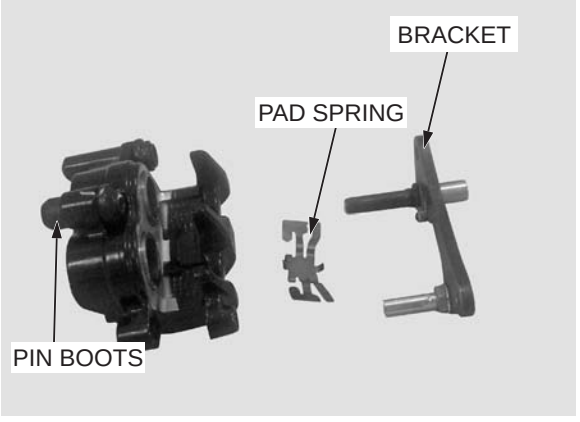

INSTALLATION

Install the brake caliper to the right fork leg so that the disc is positioned between the pads.

Be careful not to damage the pads.

Install and tighten new brake caliper mounting bolts to the specified torque.

TORQUE: 30 N·m (3.1 kgf·m, 22 lbf·ft)

Install the brake hose to the brake caliper with the oil bolt and new sealing washers.

Rest the hose joint onto the stoppers, and tighten the oil bolt to the specified torque.

TORQUE: 34 N·m (3.5 kgf·m, 25 lbf·ft)

Install the brake pads (page 14-7).

Fill the brake fluid, and bleed the air for the hydraulic system (page 14-4).

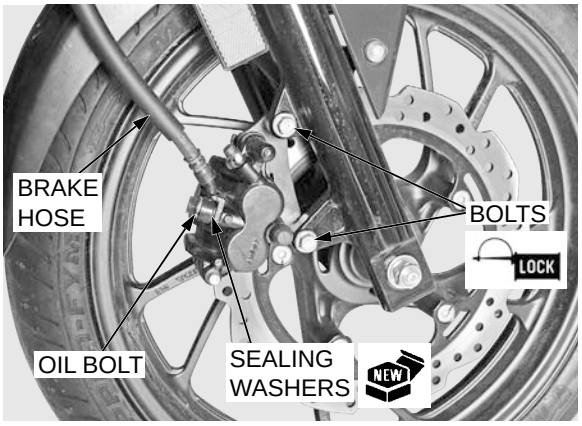

REAR BRAKE

REAR DISK BRAKE PAD REPLACEMENT

Check the fluid level in the master cylinder reservoir as this operation causes the fluid level to rise.

Push the caliper pistons all the way in by pushing the caliper body inward to facilitate installation of new brake pads.



Always replace the brake pads in pairs to assure even disc pressure.

Drive out the pad pin from the brake caliper.

Check the pad pin for abnormal wear or distortion, replace them if necessary.



Do not operate the front brake lever after the brake pads are removed.

Remove the brake pads.

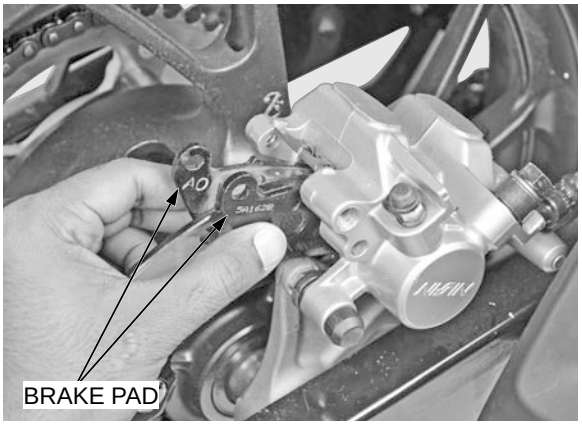

INSTALLATION

Install new brake pads so that their ends rest on the caliper bracket properly.

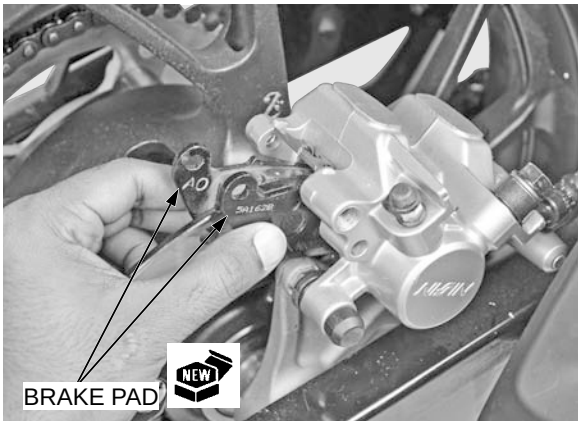

Install new O-ring on to the pad pin groove and apply silicone grease

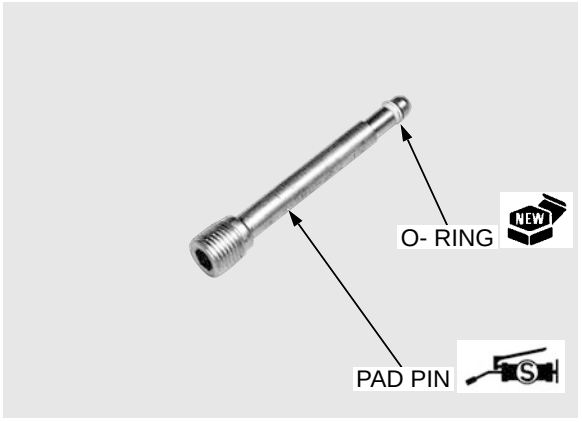

Install the brake pad pin by pushing the pads against the pad spring to align the pad pin holes in the pads and caliper.

Drive the pad pin into the caliper.

Tighten the rear brake pad pin to the specified torque.

TORQUE:17.2 N·m (1.7 kgf·m, 12 lbf·ft)

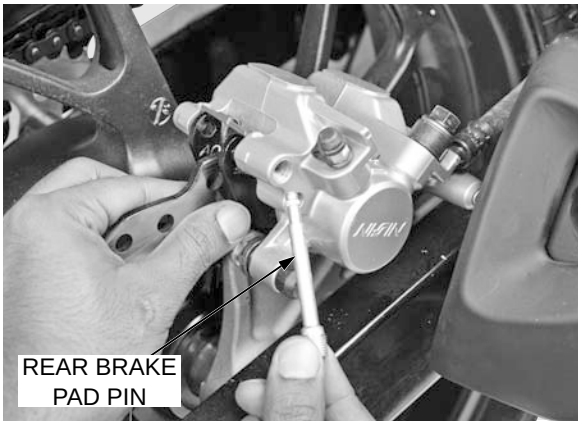

REAR BRAKE DISC INSPECTION

Visually inspect the brake disc for damage or cracks.

Measure the brake disc thickness at several points.

SERVICE LIMIT : 3.5 mm (0.14 in)

Replace the brake disc if the smallest measurement is less than service limit.

Check the brake disc warpage using a dial indicator.

SERVICE LIMIT : 0.10 mm (0.004 in)

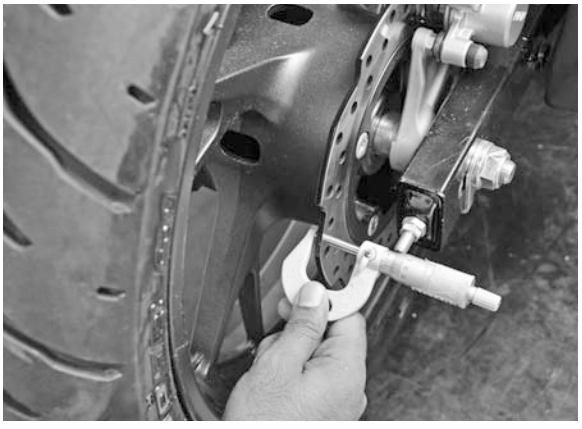

Check the wheel bearings for excessive play, if the warpage exceeds the service limit.

Replace the brake disc if the wheel bearings are normal.

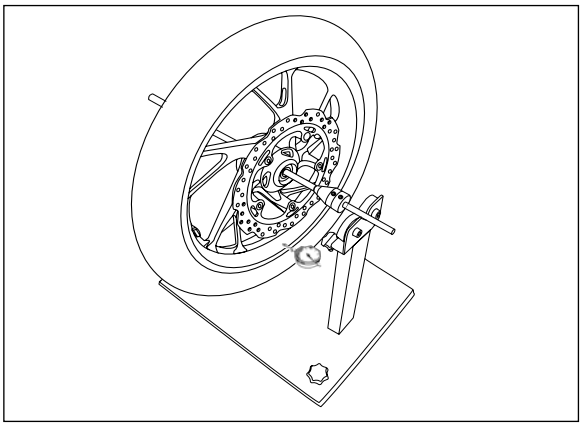

REAR MASTER CYLINDER (CBS ONLY)

REMOVAL

Support the motorcycle on its center stand.

Drain the brake fluid from the hydraulic system (page 14-3).

Remove the brake hose oil bolt and joint hose from rear master cylinder.

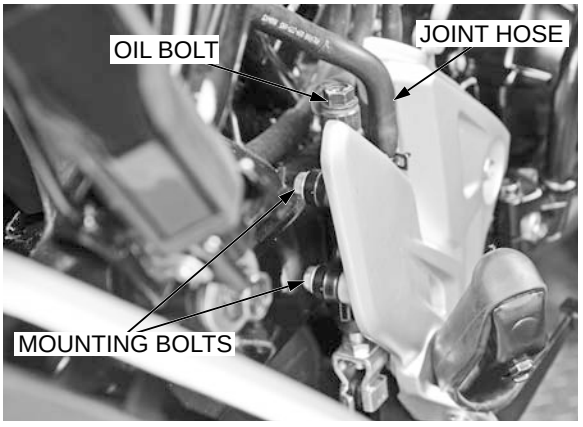

Remove the split pin from the joint pin in the rear brake pedal joint and remove the joint pin.

Remove the master cylinder mounting bolts (2 nos) and remove the master cylinder.

NOTICE

Spilled fluid can damage painted, plastic, or rubber parts. Place a rag over these parts whenever the system is serviced.

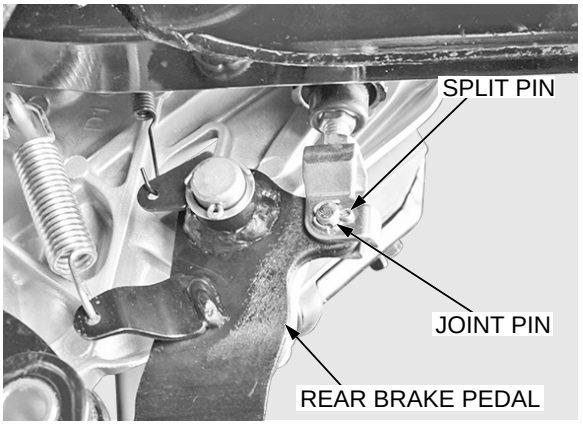

DISASSEMBLY

Remove the boot and circlip from the master cylinder body.

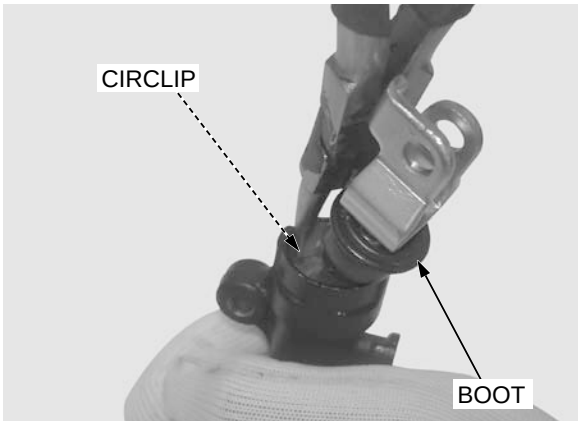

Remove the push rod assembly, master piston and spring.

Clean the inside of the cylinder with clean brake fluid.

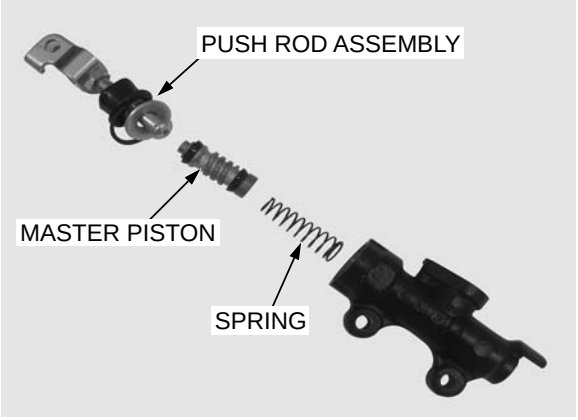

INSPECTION

Check the piston boot, primary cup and secondary cup for fatigue or damage.
Check the master cylinder and piston for abnormal scratches.

Measure the master cylinder I.D

SERVICE LIMIT:

CBS: 12.775 mm (0.5029 in)

Measure the master cylinder O.D

SERVICE LIMIT:

CBS: 12.645 mm (0.4978 in)

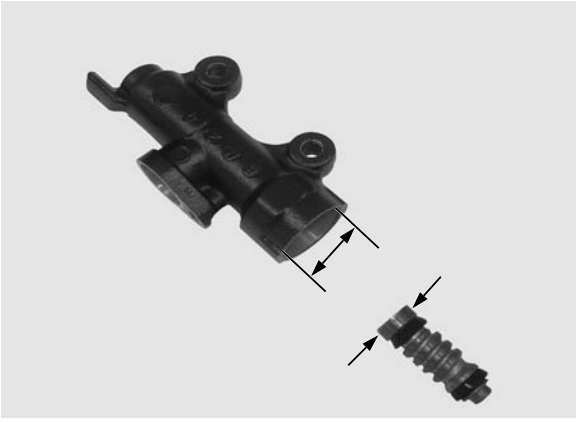

REAR MASTER CYLINDER ASSEMBLY

NOTE:

Replace the piston, spring and cup as a set.

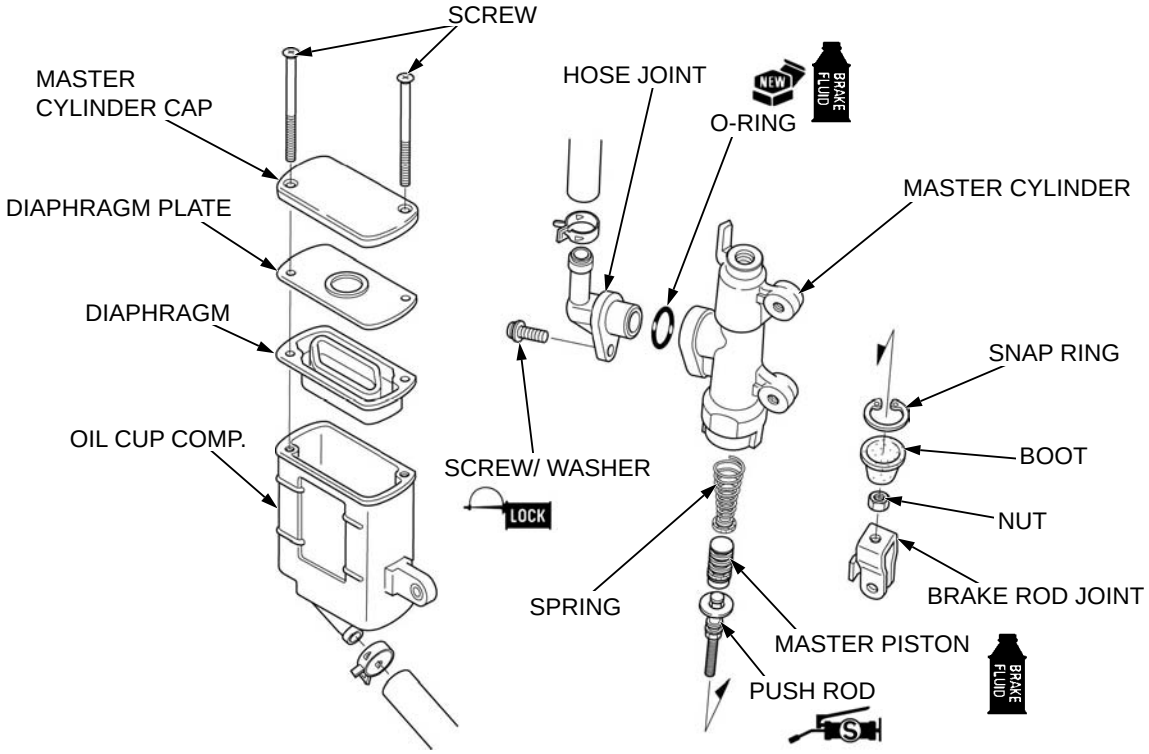

ASSEMBLY

- Keep the piston, cups, spring, snap ring and boot as a set, do not substitute individual.

Coat new piston cups and piston with clean brake fluid before assembly. Install the spring to the master piston.

Install the spring and master piston assembly into the master cylinder.

Apply silicone grease to the piston contact area of the push rod.

Install the push rod assembly into the master cylinder.

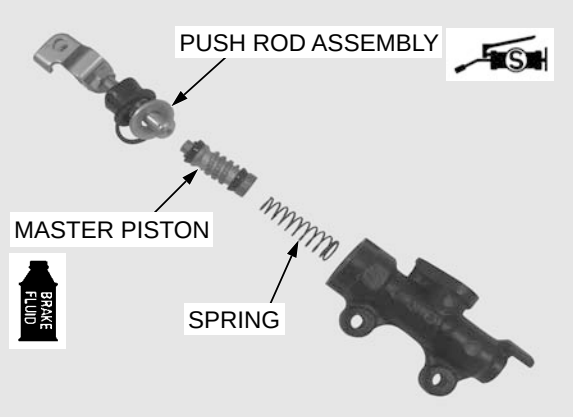

After installing the snap ring, always rotate it in its groove to be sure it is fully seated.

Install the snap ring.

Install the boot.

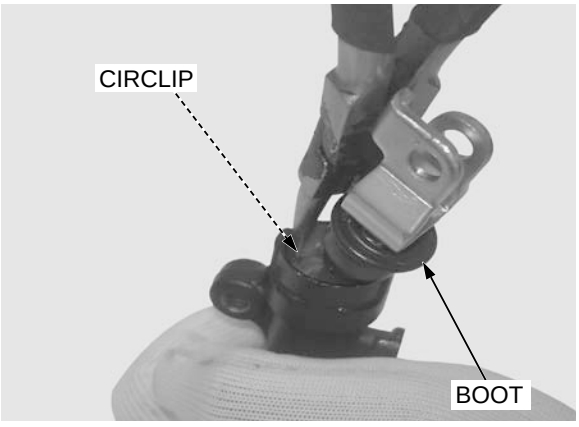

BRAKE PEDAL HEIGHT

If the push rod is disassembled, adjust the push rod length so that the distance between the center of the master cylinder lower mounting bolt hole and joint pin hole is 64 - 66 mm (2.51 - 2.59 in). After adjustment, tighten the lock nut.

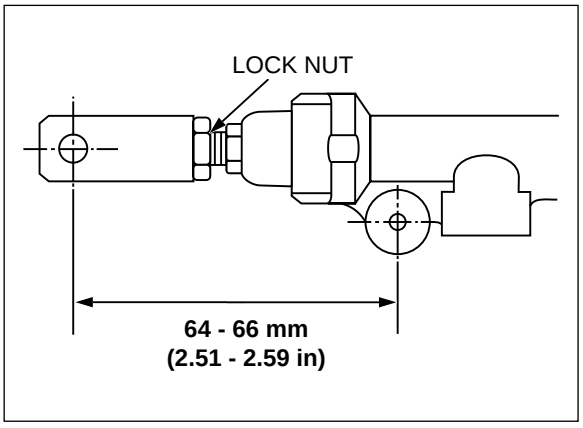

INSTALLATION

Connect the mounting bolt (2 nos). Connect the hose joint and rear brake hose oil bolt to the master cylinder and tighten it to the specified torque.

TORQUE:

Oil Bolt - 34 N·m (3.5 kgf·m, 25 lbf·ft)

Mounting Bolt : 12 N·m (1.2 kgf·m, 8.8 lbf·ft)

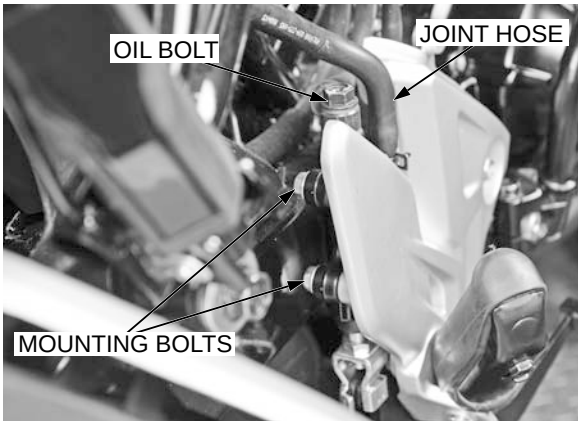

Install the brake rod joint on brake pedal by installing joint pin and split pin.

Install right side step cover and right side cover.

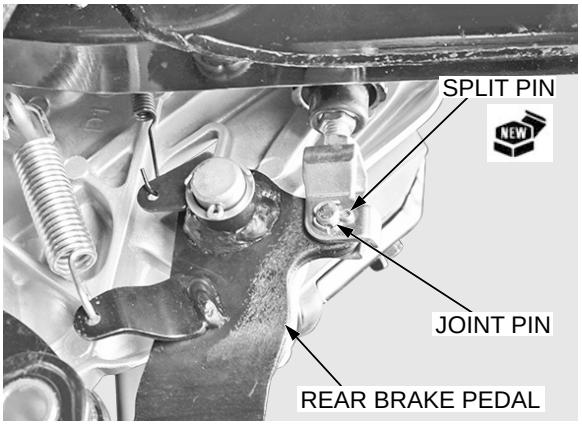

REAR BRAKE CALIPER

REMOVAL

Drain the brake fluid from the rear brake hydraulic system (page 14-3).

Remove the brake pads by removing pad pin from the caliper (page 14-7).

Remove the oil bolt, sealing washers and brake hose eyelet joint.

Remove the rear wheel (page 13-4).

Remove the brake caliper.

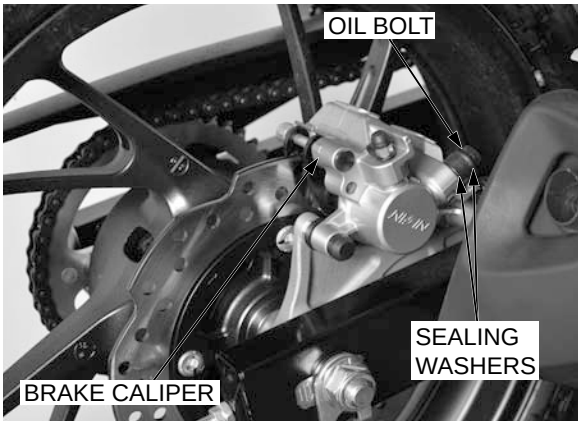

DISASSEMBLY

Remove the brake pad spring from the caliper body.

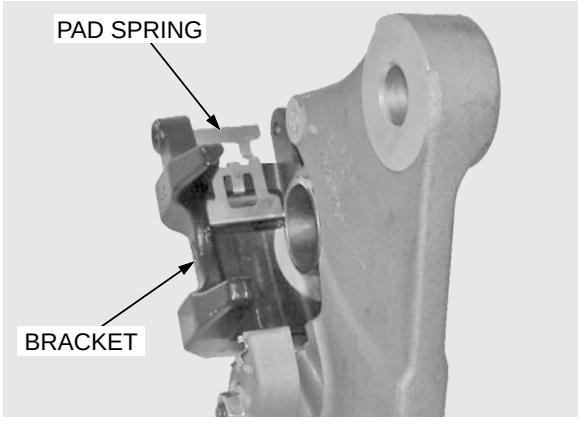

Remove the caliper bracket from the caliper body.

Remove the bracket pin boots.

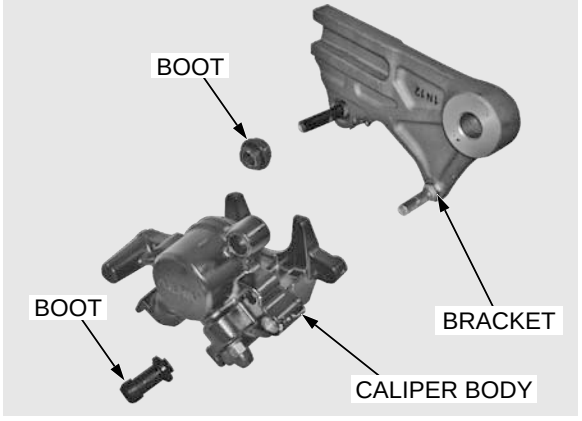

Do not bring the air nozzle too close to the inlet or the pistons may be forced out with excessive force that could cause injury.

Lightly apply compressed air to the fluid inlet to get the piston out.

Place the shop rag under the caliper to cushion the piston when it is expelled.

Use the air in short spurts.

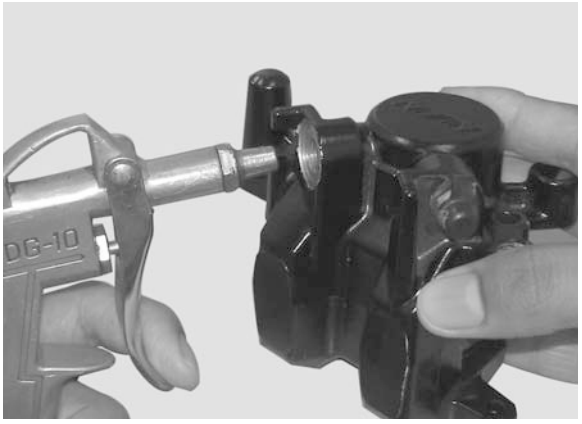

Be careful not to damage the piston sliding surface.

Push the dust seal and piston seal in and lift them out.

Clean the seal grooves, caliper piston and caliper piston sliding surface with clean brake fluid.

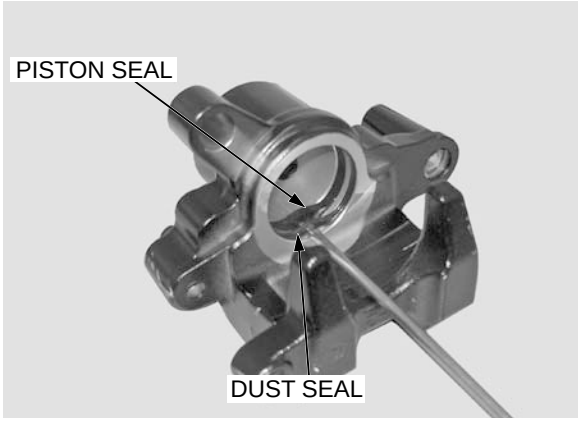

INSPECTION

Check the caliper cylinder and pistons for scoring, scratches or damage.

Measure the caliper cylinder I.D.

SERVICE LIMIT: 32.090 mm (1.2634 in)

Measure the caliper piston O.D.

SERVICE LIMITS: 31.94 mm (1.257 in)

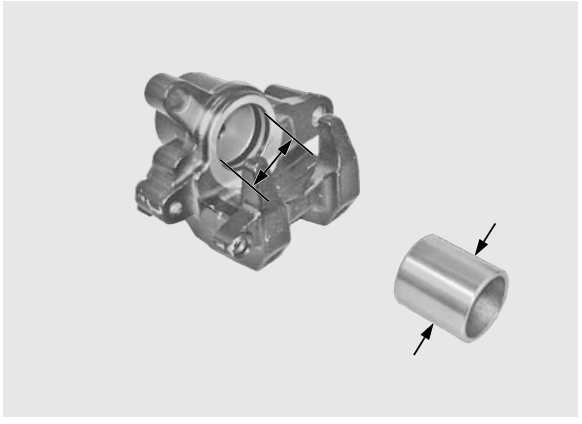

REAR BRAKE CALIPER ASSEMBLY

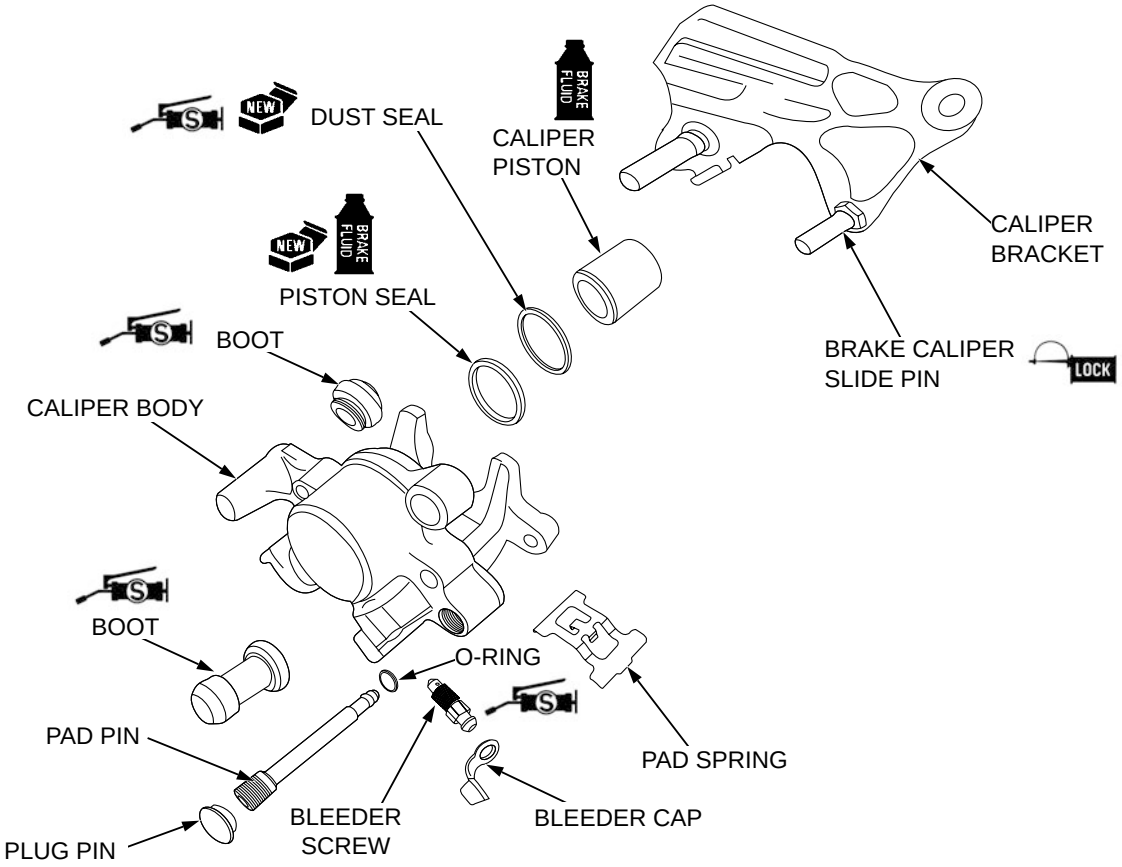

Coat the new piston seal and dust seal with clean brake fluid and install them in the seal grooves of the caliper.

Apply brake fluid to the caliper piston and install it into the caliper cylinder with the opening towards the pads.

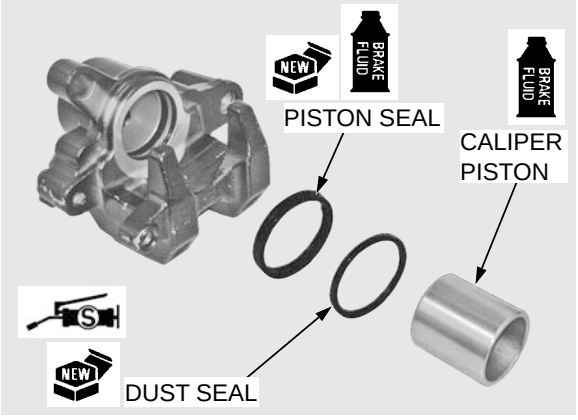

If the caliper and bracket pin boots are hard or deterio-rated, replace them with new ones.

Apply silicone grease to the bracket pin boots and bracket pins and install them.

Make sure the boots are securely seated into the pin grooves.

Assemble the caliper bracket and caliper body.

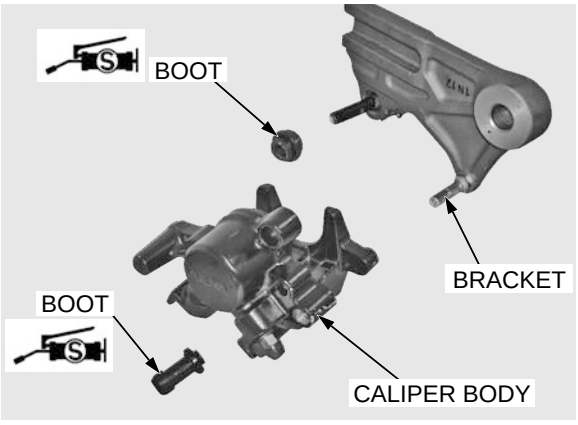

Check the pad spring for damage and replace it if necessary.

Install the pad spring onto the caliper body.

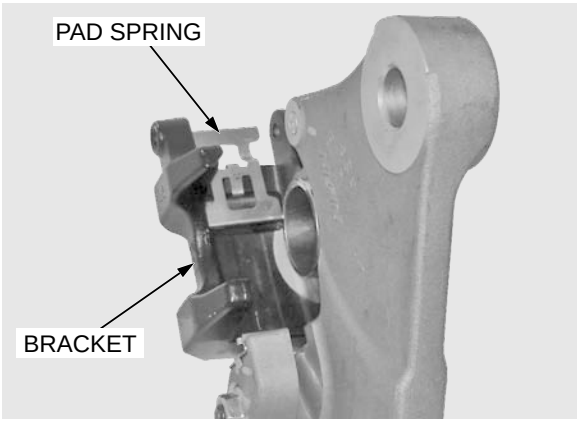

INSTALLATION

Lubricate the pad pin with silicone grease.

Install the rear brake caliper bracket assembly onto the swingarm by aligning the bracket slot with the boss on the swingarm.

Install the rear wheel (page 13-8).

Install the brake pads (page 14-7).

Fill and bleed the rear brake hydraulic system.

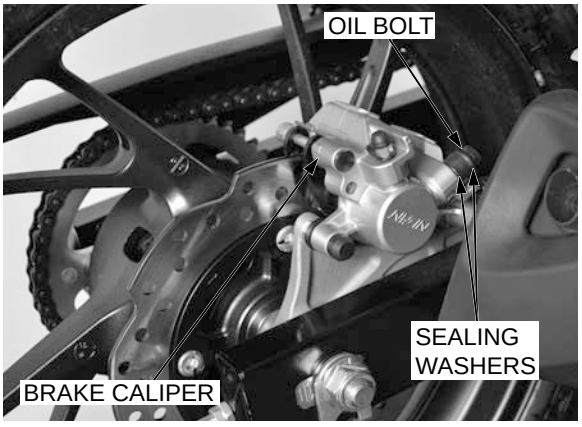

BRAKE PEDAL

REMOVAL (CBS)

Remove the right side step holder by removing swing arm pivot nut and right side step holder bolt.

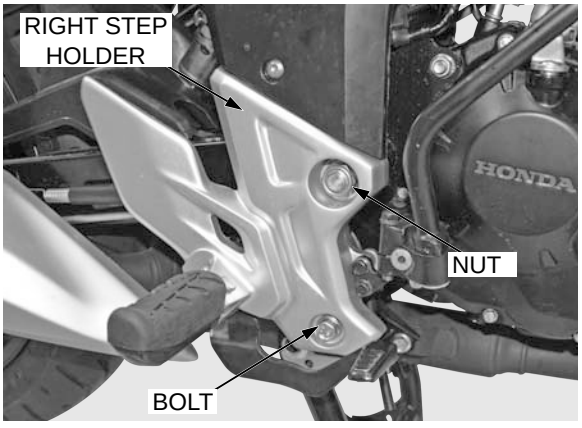

Unhook the rear brake pedal spring.

Unhook the rear brake light switch return spring.

Unhook the cotter pin from pin D joint and brake pad holder shaft.

Remove the brake pedal.

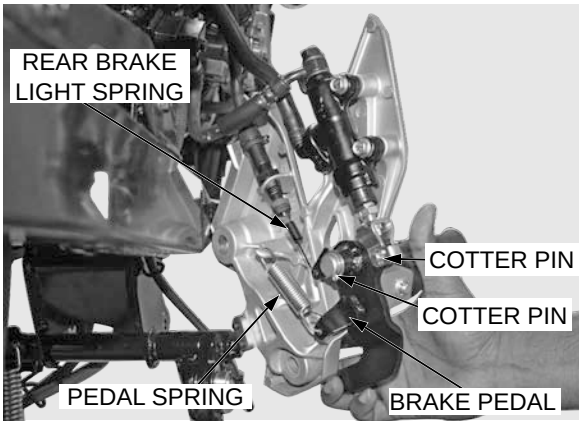

INSTALLATION

Align the brake pedal with holder shaft

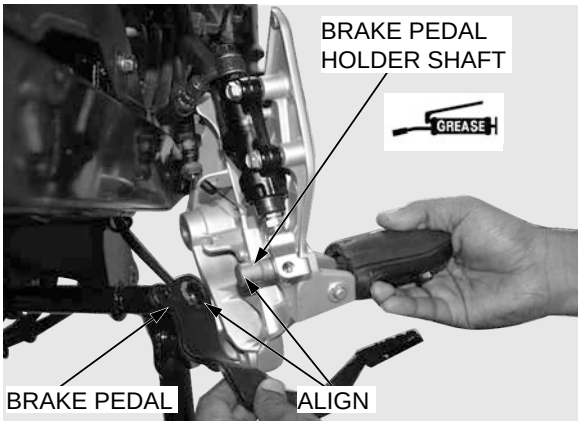

Hook the rear brake pedal spring.

Hook the rear brake light switch return spring.

Hook the cotter pin from pin D joint and brake pad holder shaft.

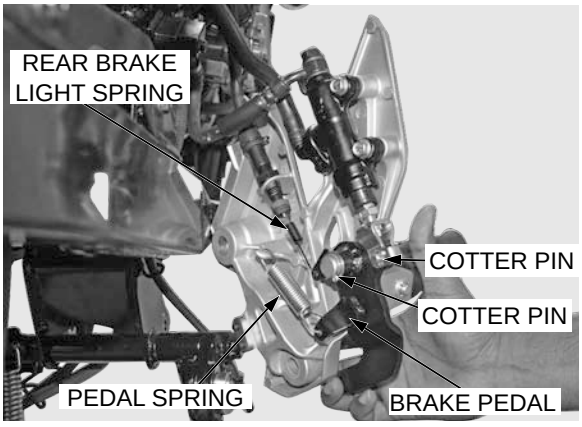

REMOVAL (STD)

Remove the rear brake rod (page 13-4).

Remove the right side cover (page 2-3).

Remove spring set from swing arm.

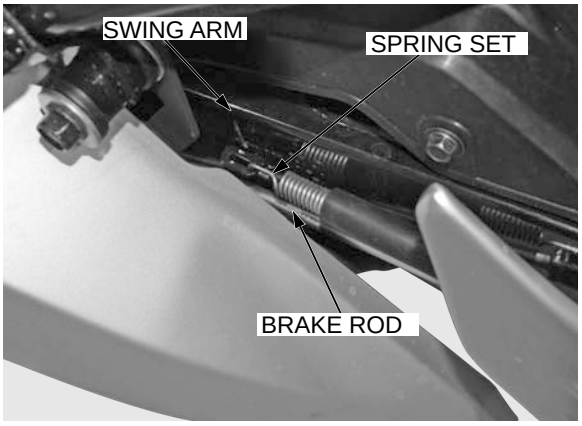

Remove the swing arm nut (1 no.), bolt (1 no.) and right step holder.

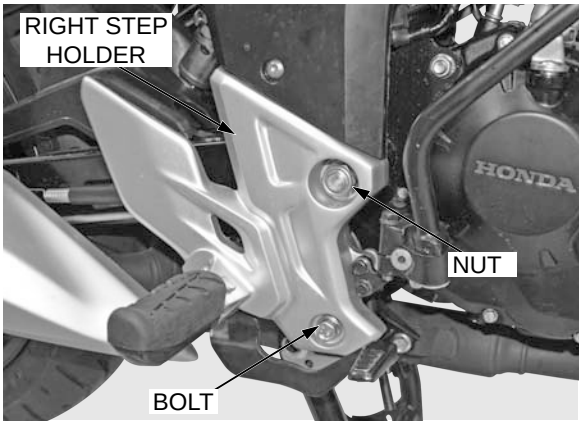

Remove the split pin, washer and brake pedal from the right step holder.

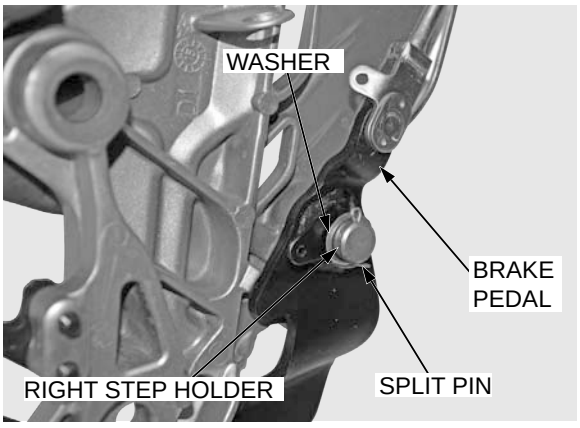

Remove the split pin and joint pin to separate brake pedal and brake rod.

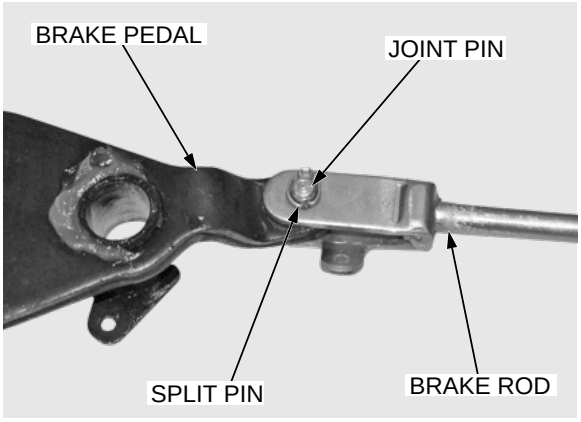

INSTALLATION

Connect the brake rod to the brake pedal, then install the joint pin and new split pin.

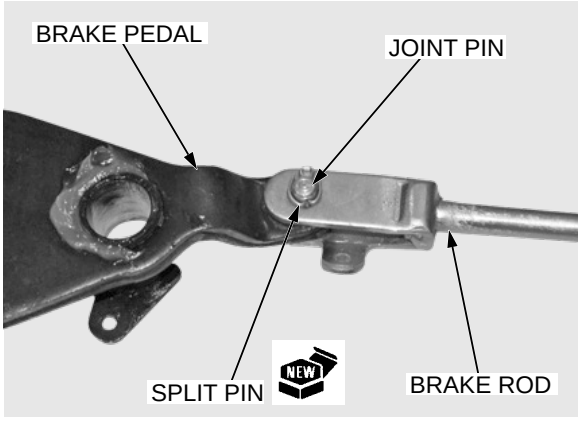

Apply grease to the right step holder shaft and insert brake pedal by aligning it.

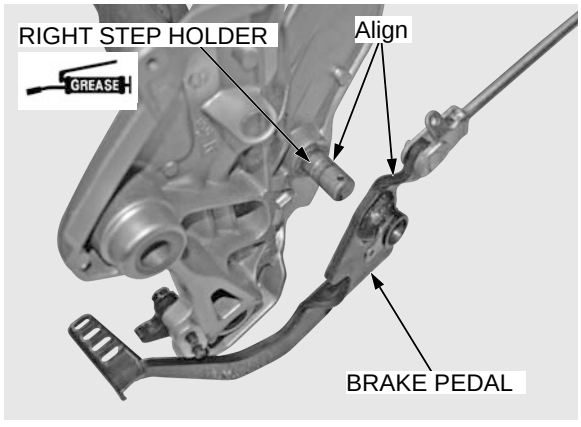

Install the washer and new split pin.

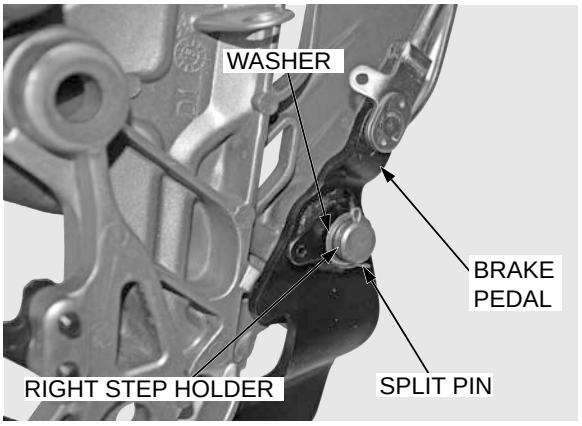

Route the brake light stop switch with spring and install the switch spring to the brake pedal.

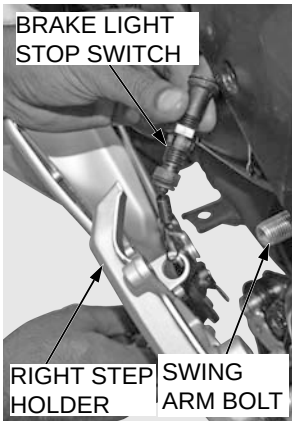

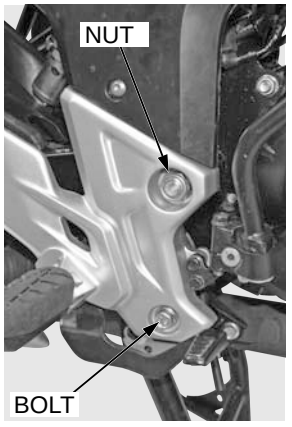

Install the spring set on to the brake rod and swing arm.

Install the rear brake rod (page 13-9).

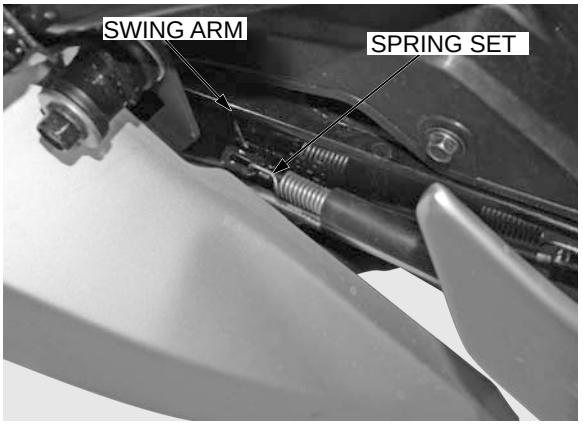

REAR DRUM BRAKE

INSPECTION

Remove the rear wheel and then remove the brake panel (page 13-4).

Measure the rear brake drum I.D.

SERVICE LIMIT: 131.0 mm (5.16 in)

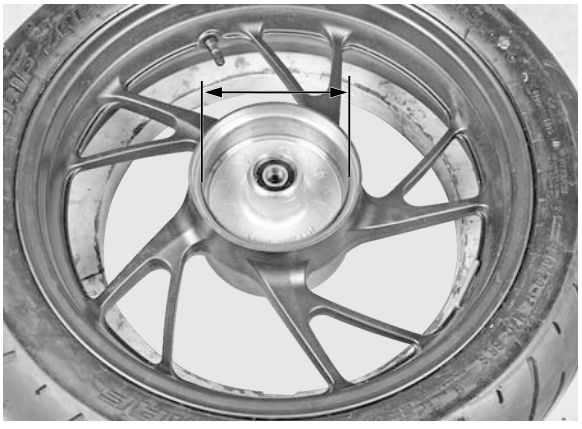

REAR DRUM BRAKE ASSEMBLY

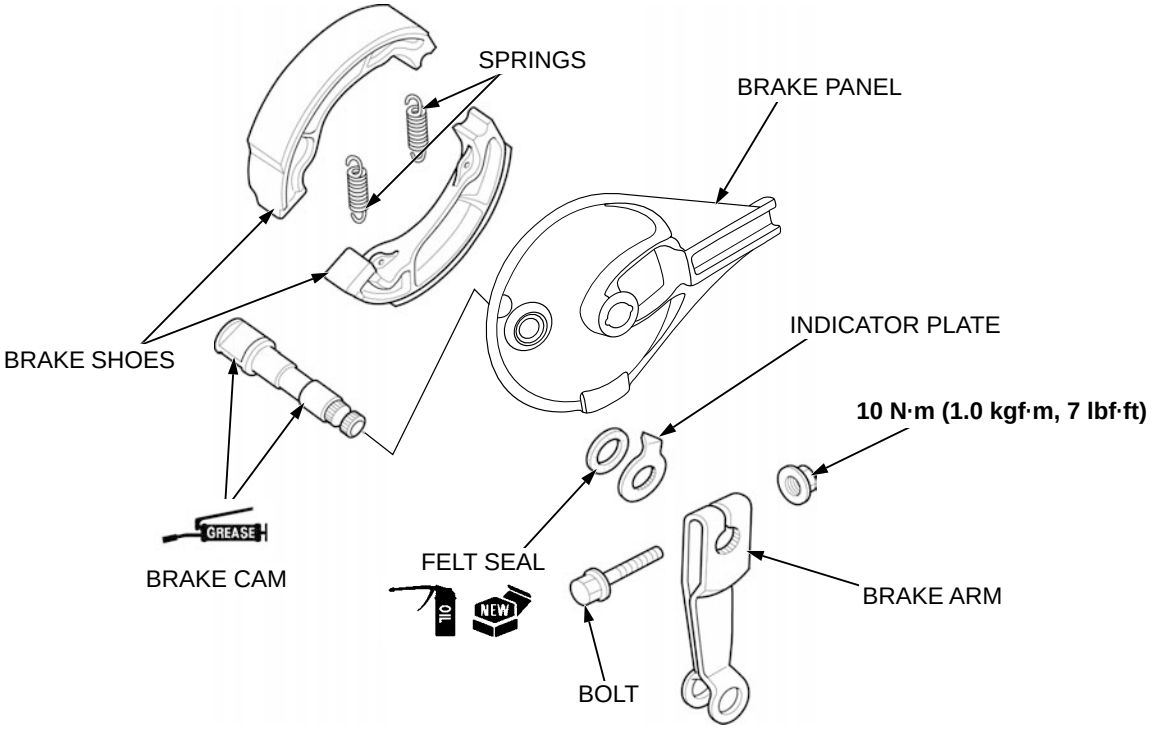

DISASSEMBLY

Do not apply grease on brake lining.

Expand the brake shoes and remove them from the brake panel.

Remove the shoe springs from the brake shoes.

- Always replace the brake shoes as a set.
- When the brake shoes are reused, mark all parts before disassembly so they can be installed in their original locations.

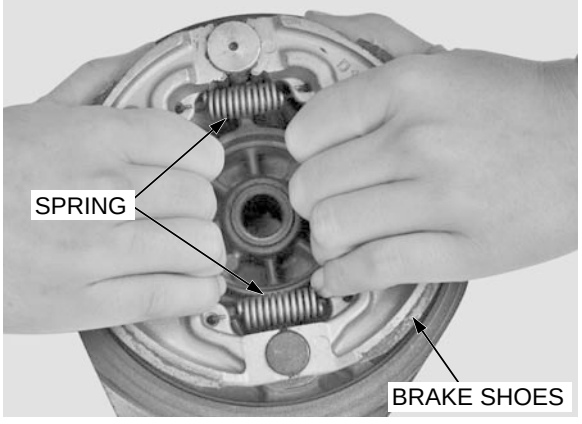

Remove the brake arm nut, bolt and brake arm.

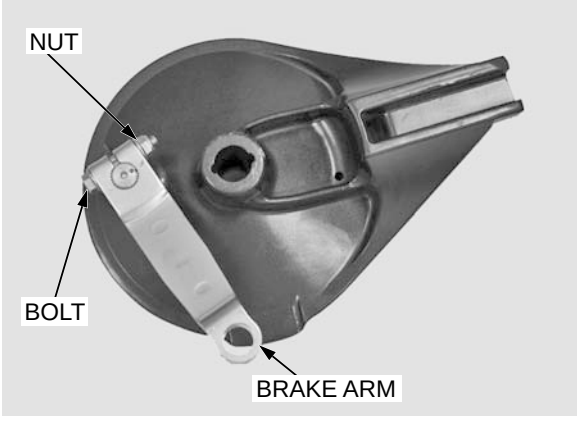

Remove the indicator plate, dust seal and brake cam.

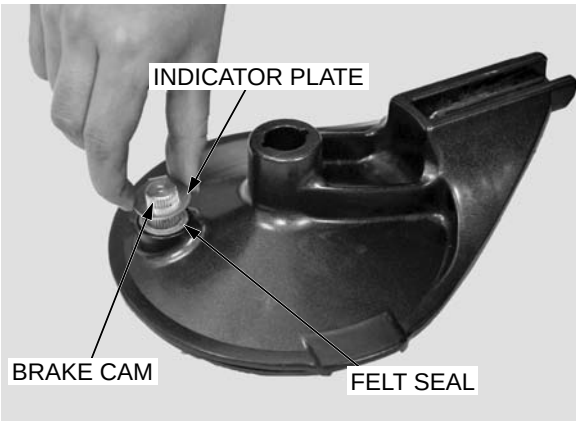

Apply grease to the brake cam sliding surface.

Install the brake cam to the brake panel.

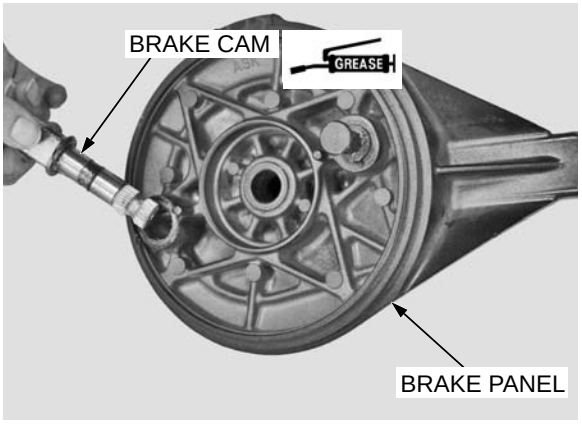

Apply gear oil to a new dust seal, and install it onto the brake panel.

Install the indicator plate onto the brake cam by aligning its wide tooth with the wide groove on the brake cam.

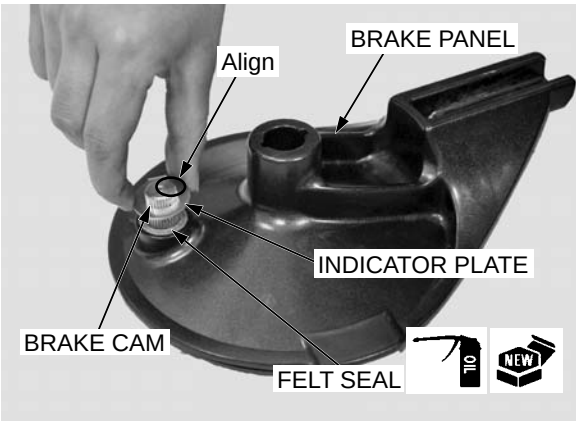

Install the brake arm by aligning the punch marks of the brake arm and brake cam.

Install the brake arm bolt and nut as shown, and tighten the nut to the specified torque.

TORQUE:10 N·m (1.0 kgf·m, 7 lbf·ft)

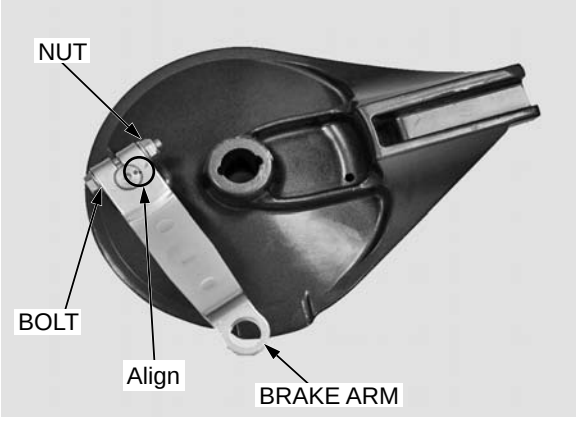

If the brake shoes are reused, the shoes and springs must be placed back in their original locations.

Apply grease to the anchor pin and brake cam shoe contacting area.

Assemble the brake shoes and springs as shown.

Install the shoe assembly onto the brake panel.

Wipe any excess grease off the brake cam and anchor pin.

Install the brake panel and then install the rear wheel (page 13-9).

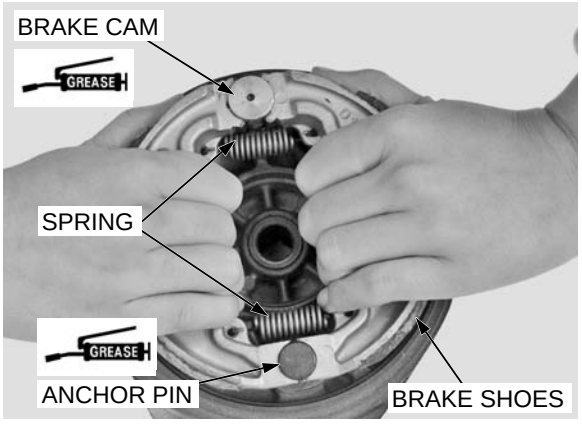

COMPONENT LOCATION

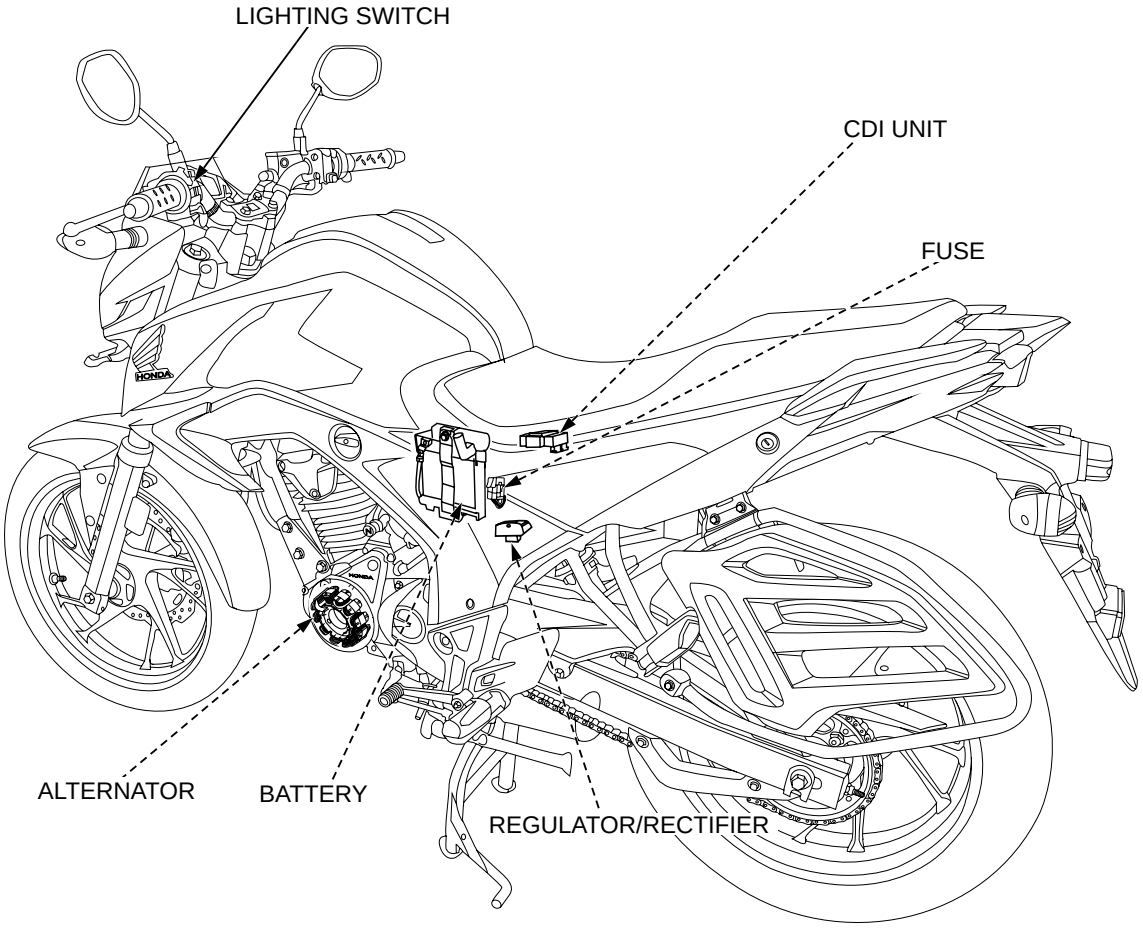

SYSTEM DIAGRAM

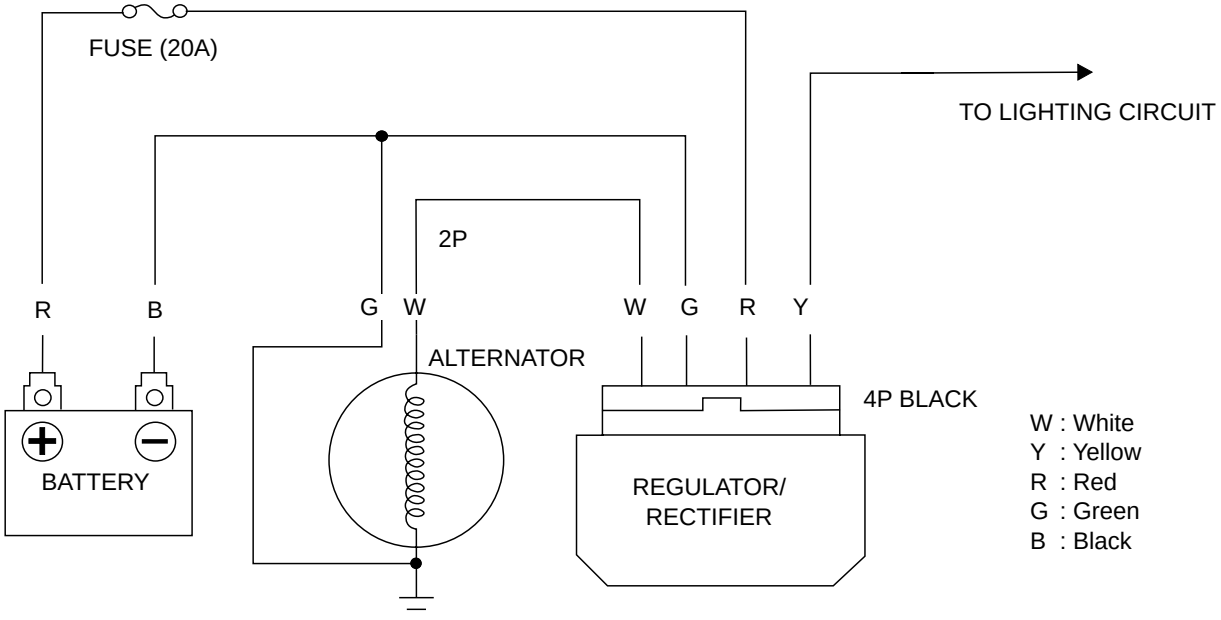

15. BATTERY/CHARGING SYSTEM

COMPONENT LOCATION	15-0	BATTERY CHARGING	15-5
SYSTEM DIAGRAM	15-0	INDICATION TABLE FOR MF BATTERY CHARGER	15-7
SERVICE INFORMATION	15-1	CHARGING SYSTEM INSPECTION	15-7
TROUBLESHOOTING	15-2	ALTERNATOR CHARGING COIL	15-8
BATTERY	15-3	REGULATOR/RECTIFIER	15-9
BATTERY TESTING PROCEDURE	15-3		

SERVICE INFORMATION

GENERAL

⚠ WARNING

- The battery gives off explosive gases; keep sparks, flames and cigarettes away. Provide adequate ventilation when charging.
- The battery contains sulfuric acid (electrolyte). Contact with skin or eyes may cause severe burns. Wear protective clothing and a face shield.
  - If electrolyte gets on your skin, flush with water.
  - If electrolyte gets in your eyes, flush with water for at least 15 minutes and call a physician immediately.
- Electrolyte is poisonous.
  - If swallowed, drink large quantities of water or milk and call your local Poison Control Center or a physician immediately.

NOTICE

- *Always turn "OFF" the ignition switch before disconnecting any electrical component.*
- *Some electrical components may be damaged if terminals or connectors are connected or disconnected by the ignition switch is "ON", and current is present.*
- For extended storage, remove the battery, give it a full charge, and store it in a cool, dry space. For maximum service life, charge the stored battery every two weeks.
- For a battery remaining in a stored motorcycle, disconnect the negative battery cable from the battery terminal.
- The battery can be damaged if overcharged or undercharged, or if left to discharge for a long period. These same conditions contribute to shortening the "life span" of the battery. Even under normal use, the performance of the battery deteriorates after 2–3 years.
- Battery voltage may recover after battery charging, but under heavy load, battery voltage will drop quickly and eventually die out. For this reason, the charging system is often suspected as the problem. Battery overcharge often results from problems in the battery itself, which may appear to be an overcharging symptom. If one of the battery cells is shorted and battery voltage does not increase, the regulator/rectifier supplies excess voltage to the battery. Under these conditions, the electrolyte level goes down quickly.
- The battery will self-discharge when the motorcycle is not in use. For this reason, charge the battery every two weeks to prevent salvation from occurring.
- When checking the charging system, always follow the steps in the troubleshooting flow chart (page 15-2).
- Refer to the alternator removal and disassembly (page 10-16).

BATTERY TESTING

Refer to instructions in the Operation Manual (page 15-3) for the recommended battery tester for details about battery testing. The recommended battery tester puts a "load" on the battery so that the actual battery condition can be measured.

Recommended battery tester: FBT-50

SPECIFICATIONS

ITEM		SPECIFICATION	Page NO.
Battery	Capacity	12 V – 4 Ah	Page 15–3
	Current leakage	0.02mA max	Page 15–7
	Fully charged	12.5 - 13.0 V	Page 15–3
	Needs charging	Below 12.4 V	Page 15–3
Alternator	Capacity	0.14kW / 5000 min-1(rpm)	Page 15–8
	Charging coil resistance (20^0C / 68^0F)	0.2 – 1.0 Ω	Page 15–8

TROUBLESHOOTING

BATTERY IS DAMAGED OR WEAK

1. **BATTERY TEST**
   Remove the battery (page 15-3).
   Check the battery condition using the recommended battery tester.
   RECOMMENDED BATTERY TESTER: FBT-50 or equivalent
   Is the battery in good condition?

   NO – Faulty battery
   YES – GO TO STEP 2.

2. **CURRENT LEAKAGE TEST**
   Install the battery (page 15-3).
   Check the battery current leakage (Leak test; page 15-7).
   Is the current leakage below 0.02 mA?

   YES – GO TO STEP 4.
   NO – GO TO STEP 3.

3. **CURRENT LEAKAGE TEST WITHOUT REGULATOR/RECTIFIER CONNECTOR**
   Disconnect the regulator/rectifier 4P connector, and recheck the battery current leakage.
   Is the current leakage below 0.02 mA?

   YES – Faulty regulator/rectifier
   NO – • Shorted wire harness
   • Faulty ignition switch

4. **CHARGING VOLTAGE INSPECTION**
   Start the engine.
   Measure the charging voltage (page 15-4).
   Compare the measurements to the results of the following calculation.
   STANDARD:
   Measured BV < Measured CV < 13.5V-14.5V
   - **BV = Battery Voltage**
   - **CV = Charging Voltage**

   Is the measured charging voltage within the standard voltage?

   YES – Faulty battery
   NO – GO TO STEP 5.

5. **ALTERNATOR CHARGING COIL INSPECTION**
   Check the alternator charging coil (page 15-8).
   Is the alternator charging coil resistance within 0.2 – 1.0 Ω (20°C/68°F)?

   NO – Faulty charging coil
   YES – GO TO STEP 6.

6. **REGULATOR/RECTIFIER SYSTEM INSPECTION**
   Check the voltage and resistance at the regulator/rectifier connector (page 15-9).
   Are the results of the checked voltage and resistance correct?

   YES – Faulty regulator/rectifier
   NO – • Open circuit in related wire
   • Loose or poor contacts of related terminal
   • Shorted wire harness

BATTERY

VOLTAGE INSPECTION

Remove the left side cover (page 2-3).

Measure the battery voltage using a commercially available **FBT 50** battery tester.

VOLTAGE (20°C/68°F):

Fully charged: **More than 12.4 V**

Under charged: **Below 12.4 V**

If the battery voltage is below 12.4 V, charge the battery.

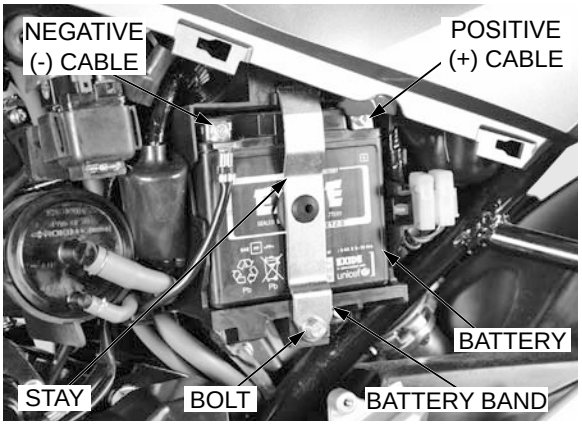

REMOVAL/INSTALLATION

Always turn the ignition switch OFF before removing the battery

Remove the left side cover (page 2-3).

Disconnect the negative (–) cable by removing the bolt.

Disconnect the positive (+) cable by removing the bolt.

Remove the bolt and open the battery band.

Remove the battery.

Install the battery in the reverse order of removal.

Connect the positive (+) cable first and then the negative (–) cable.

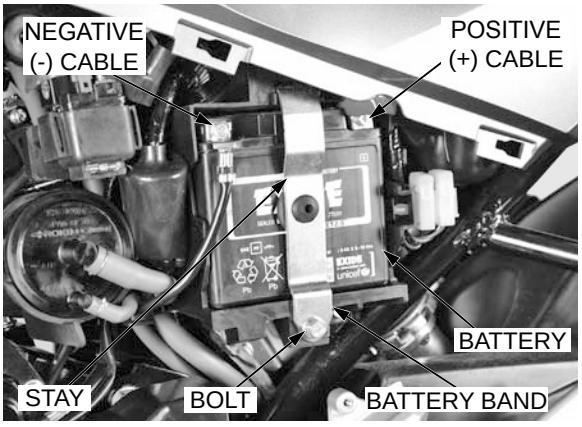

BATTERY TESTING PROCEDURE

Check the battery pin number on front of the battery suface and refer the table given below.

S.No.	Battery PIN No.	Ref. No.
1	ETZ 3	3
2	ETZ 4	4
3	ETZ 5	33
4	ETZ 7	5

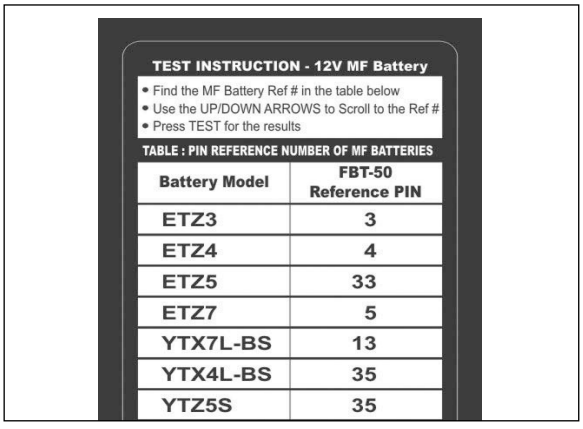

Connect the tester probes to the battery terminal.

NOTICE

Always connect red probe to positive and black probe to negative terminal.

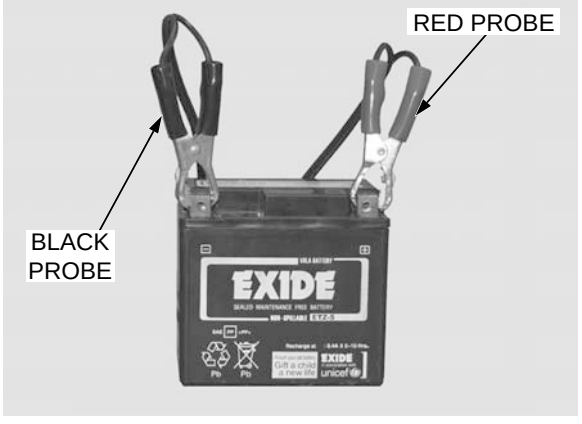

On connecting probes, the screen displays battery pin number.



Use yellow arrow buttons to select the correct pin number. According to the reference table given on page (15-3).



To check voltage press “V” button.

VOLTAGE (20°C/68°F):

Fully charged:	**More than 12.4 V**
Under charged:	**Below 12.4 V**



BATTERY LOAD TEST

Before doing the load test battery must be fully charged

To load test the battery press “TEST” button.

NOTICE

Device will take approx 3 seconds to display result.



BATTERY TEST RESULT

RESULT – 1

Result indicator shows “Green light” with “OK”.

This means battery is healthy ready to be used.



RESULT – 2

Result indicator shows “Orange light” with “LOW”.

This means battery is weak.

Battery needs bench charging.



RESULT – 3

Result indicator shows “Red light” with “X”.

This means battery is dead.

Battery can not be used any further in the vehicle.



BATTERY CHARGING

Always charge batteries showing “LOW” with orange LED on tester.



Avoid direct contact of battery with ground, use rubber mat or wodden block below the battery.

Connect charger red probe to positive and black to negative terminal.



Select the “New Battery” mode or “Used Battery” mode by the selector switch based on condition of the battery (New or Used) and switch on the charger.

After switching ON the Power, “MAINS LED” will glow instantly.

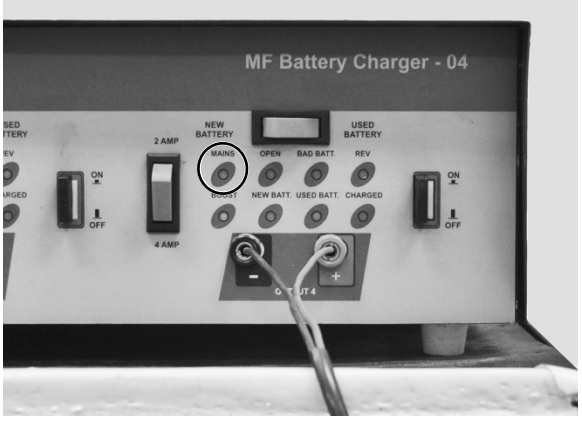

Main LED will be followed by Yellow LED (For New Battery) or Blue LED (For Used Battery) showing that the battery is getting charged properly.

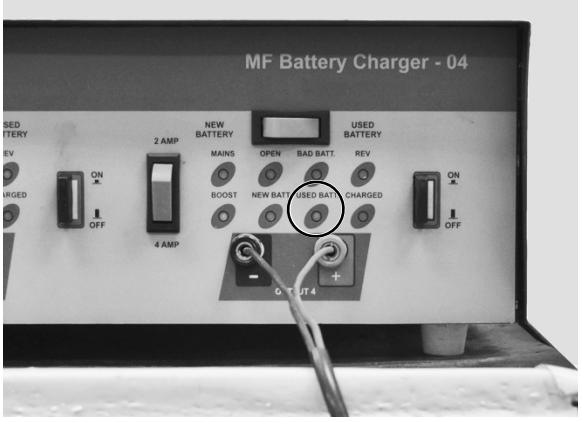

Green LED indicates, the battery is fully charged.

Again test the battery voltage (page 15-4).

NOTICE

Before testing, battery should be kept idle for atleast 30 minutes after charging.

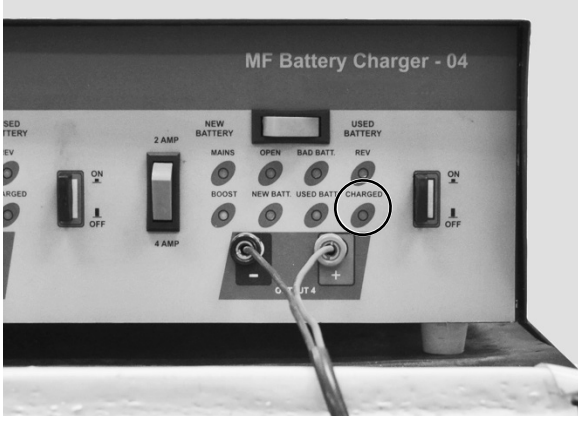

INDICATION TABLE FOR MF BATTERY CHARGER

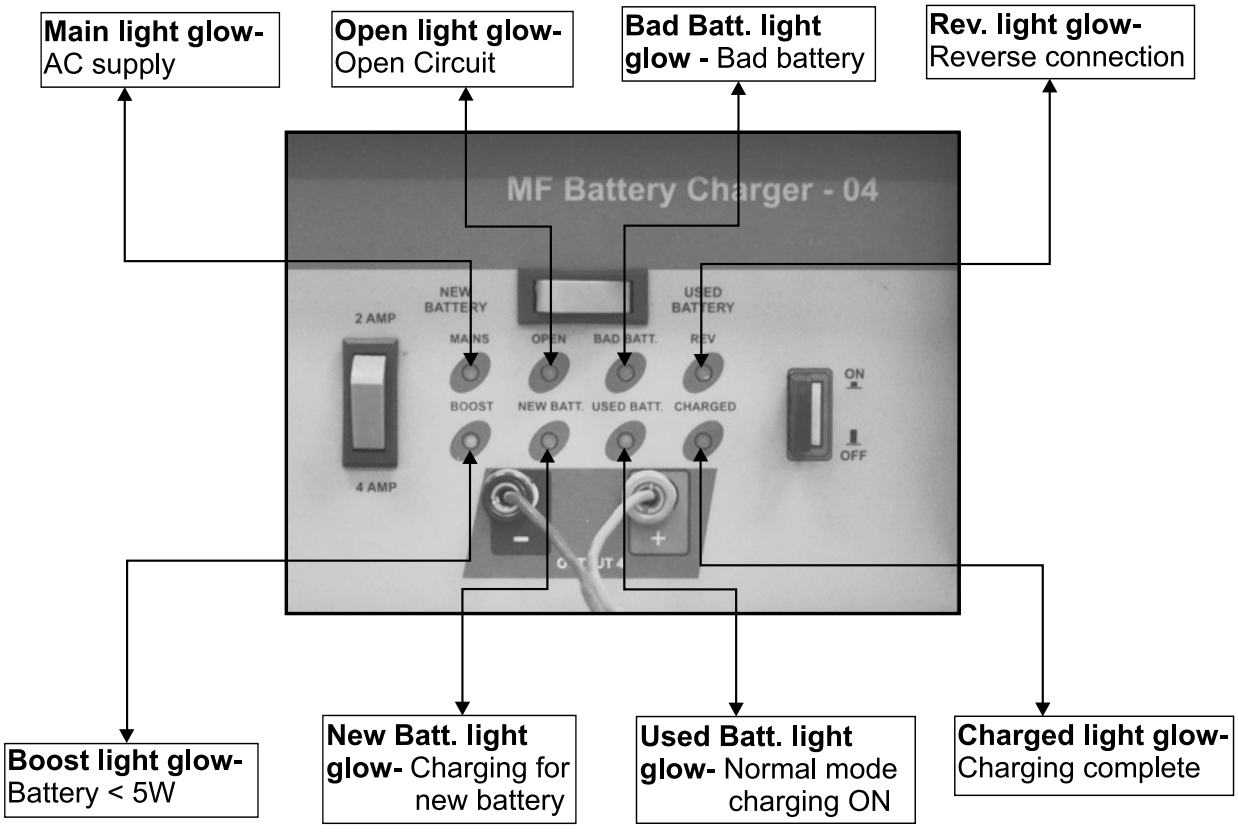

SYSTEM INSPECTION

CURRENT LEAKAGE INSPECTION

Remove the left side cover (page 2-3).

Turn the ignition switch “OFF”, and disconnect the negative (–) connector.

Connect the ammeter (+) probe to the wire harness negative (–) connector and ammeter (–) probe to the battery negative (–) connector.

With the ignition switch “OFF”, and check for current leakage.

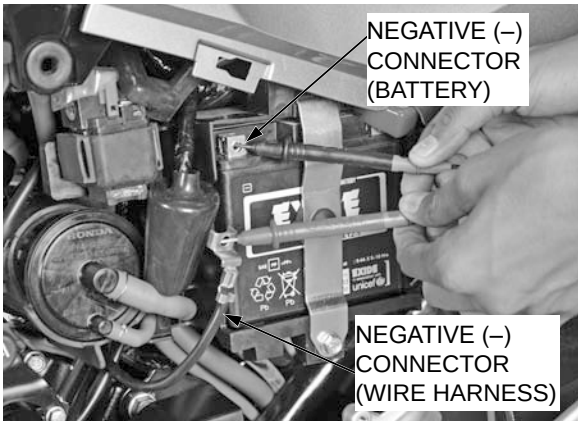

- When measuring current using a tester, set it to a high range, and then bring the range down to an appropriate level. Current flow higher than the range selected may blow out the fuse in the tester.
- While measuring current, do not turn the ignition switch “ON”. A sudden surge of current may blow out the fuse in the tester.

SPECIFIED CURRENT LEAKAGE: 0.02 mA max.

If current leakage exceeds the specified value, a short circuit already happen.

Locate the short circuit by disconnecting connections one by one and measuring the current.

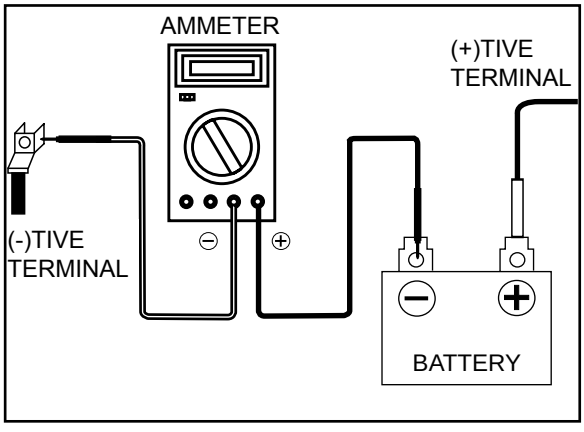

CHARGING VOLTAGE INSPECTION

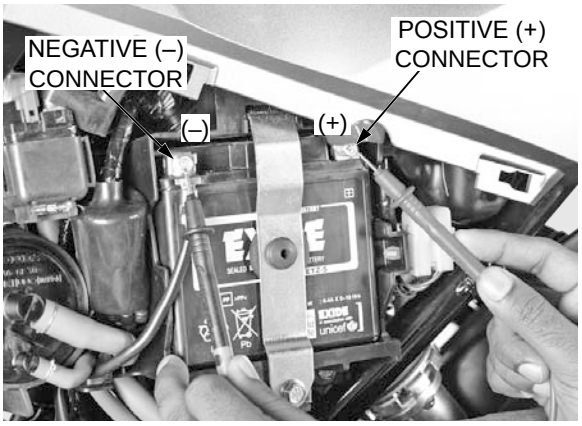

Remove the left side cover (page 2-3).

Reference engine oil temperature: 60⁰ – 65⁰C (140⁰ – 145⁰F).

Be sure the battery is in good condition before performing this test.

Warm up the engine to normal operating temperature and ensure engine idle rpm must be 1400+/-100

Stop the engine, and connect the multimeter between the battery positive (+) and negative (–) connector.

- To prevent a short, make absolutely certain which are the positive (+) and negative (–) connector.
- Do not disconnect the battery or any cable in the Charging system without first turning the ignition switch to “OFF”. Failure to follow this precaution can damage the tester or electrical components.

Connect a tachometer according to the tachometer manufacturer’s instructions.

Restart the engine.

With the headlight high beam in “ON” position, measure the voltage on the multimeter when the engine runs at 5,000 min^{-1} (rpm).

STANDARD:

Measured BV < Measured CV < 13.5V-14.5V

• BV = Battery Voltage

• CV = Charging voltage

ALTERNATOR CHARGING COIL

INSPECTION



Remove the left side cover (page 2-3).

Disconnect the alternator 2P (White) connector.

Measure the resistance between each wire terminal of the alternator side connector.

CONNECTION: White – Green

STANDARD: 0.2 – 1.0 Ω (20°C/68°F)



Replace the alternator stator if resistance is out of specification.

Refer to the alternator stator replacement (page 10-16).

REGULATOR/RECTIFIER

SYSTEM INSPECTION

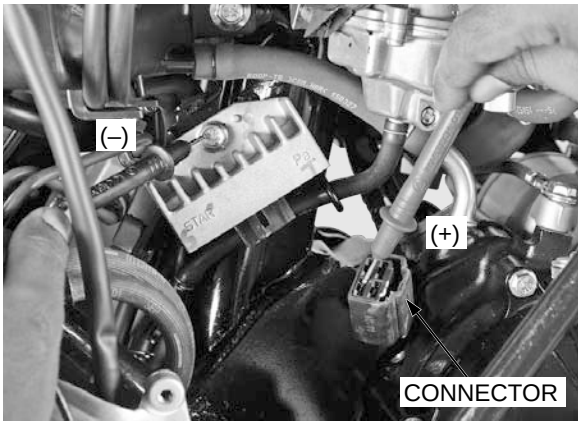

Remove the right side cover(page 2-3).

Disconnect the regulator/rectifier connector, and check it for loose contacts or corroded terminals.

If the charging voltage reading (page 15-4) is out of the specification, check the following at the wire harness side connector:

Item	Terminal	Specification
Battery charging line	Red (+) and ground (–)	Battery voltage should register
Charging coil line	White and ground	0.2 - 1.0 Ω (20^0C/68^0F)
Ground line	Green and ground	Continuity should exist

If all components of the charging system are normal, and there are no loose connections at the regulator/rectifier connector, replace the regulator/rectifier unit.

REMOVAL/INSTALLATION

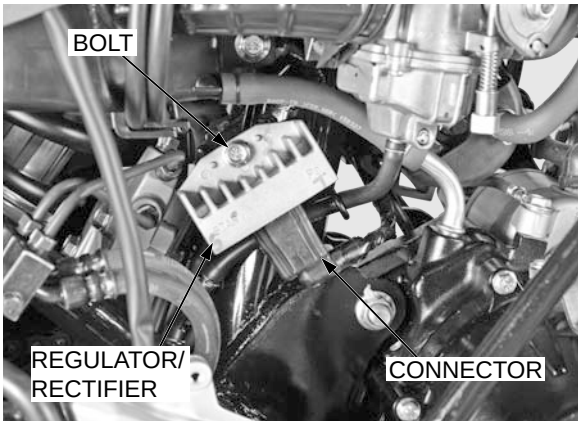

Remove the right side cover (page 2-3).

Remove the connector.

Remove the bolt and regulator/rectifier from the frame.

Install the regulator/rectifier in the reverse order of removal.

COMPONENT LOCATION

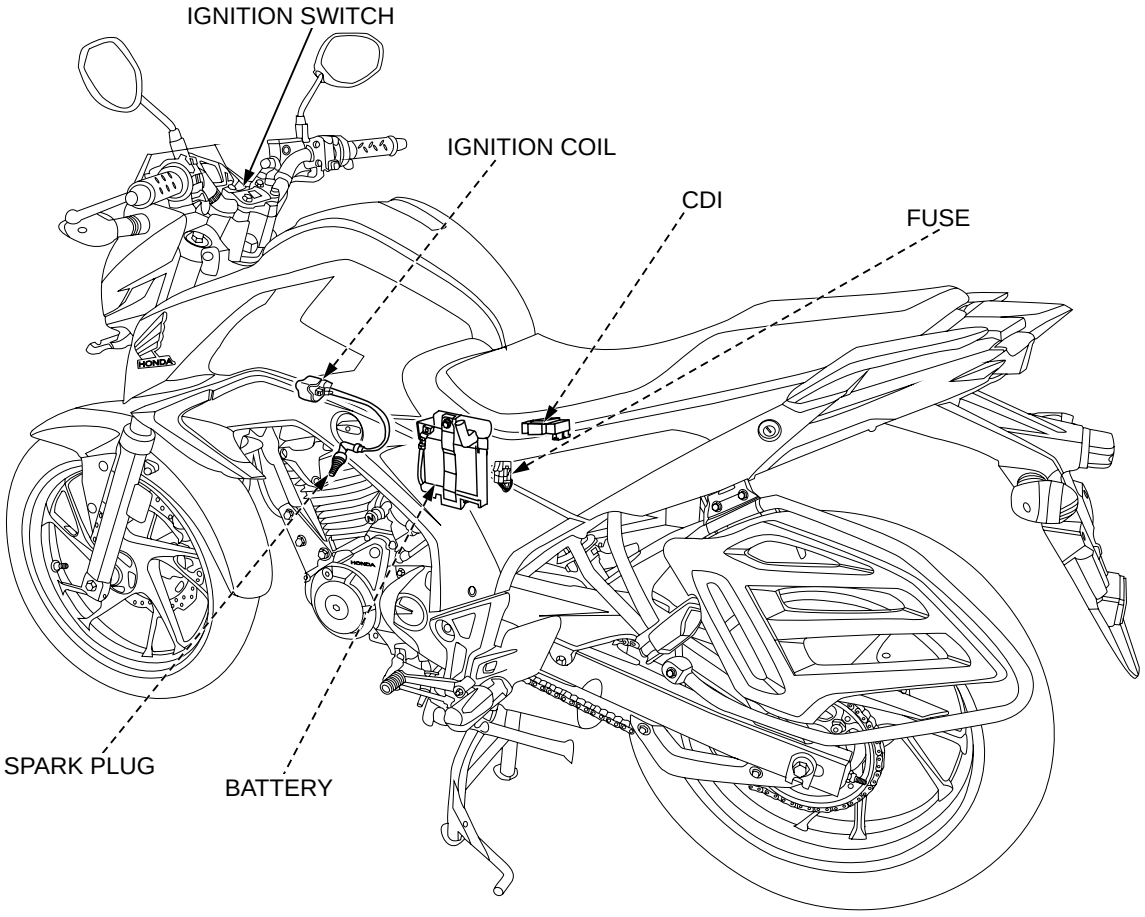

SYSTEM DIAGRAM

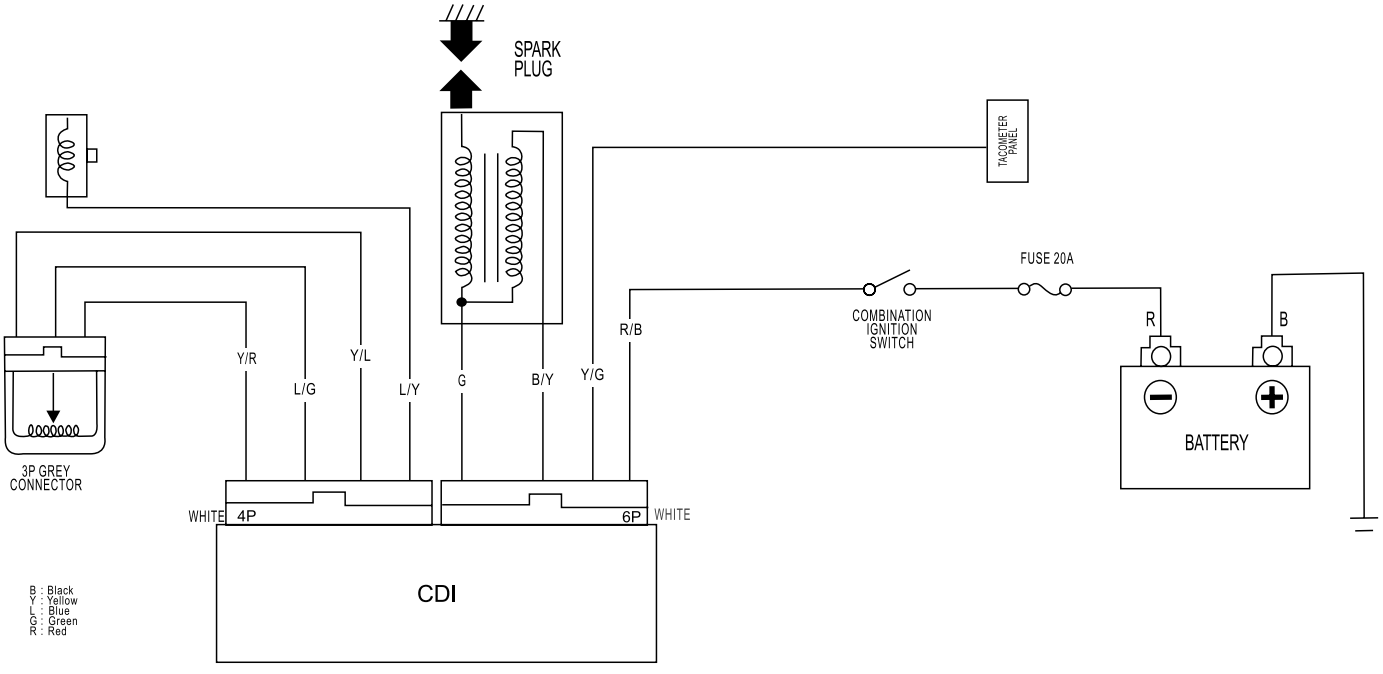

16. IGNITION SYSTEM

COMPONENT LOCATION	**16-0**	**IGNITION TIMING**	**16-5**
SYSTEM DIAGRAM	**16-0**	**IGNITION COIL**	**16-6**
SERVICE INFORMATION	**16-1**	**CAPACITIVE DISCHARGE IGNITION**	**16-6**
TROUBLESHOOTING	**16-2**	**THROTTLE POSITION SENSOR**	**16-7**
IGNITION SYSTEM INSPECTION	**16-3**		

SERVICE INFORMATION

GENERAL

NOTICE

- *The CDI may be damaged if dropped. Also if the connector is disconnected when current is flowing, the excessive voltage may damage the module. Always turn "OFF" the ignition switch before servicing.*
- Use spark plug of the correct heat range. Using a spark plug with an incorrect heat range can damage the engine.
- When servicing the ignition system, always follow the steps in the troubleshooting sequence on (page 16-2).
- The ignition timing cannot be adjusted since the CDI is factory preset.
- A faulty ignition system is often related to poor connections. Check those connections before proceeding.

SPECIFICATIONS

Unit: mm (in)

ITEM		SPECIFICATION	Page NO.
Spark plug	Standard	CPR8EA-9 (NGK)	Page 3–7
Spark plug gap		0.8 ~ 0.9 mm (0.03 – 0.04 in)	Page 3–7
Ignition coil peak voltage		100 V minimum	Page 16–4
Ignition pulse generator peak voltage		0.7 V minimum	Page 16–4
Ignition timing ("F" mark)		8° BTDC at 1400 rpm	Page 16–5
Throttle position sensor	Input voltage	5 V	Page 16–7
	Resistance (20^0C/68^0F)	4.0 –6.0 Ω	Page 16–7

TORQUE VALUES

ITEM	PART NO.	QTY	THREAD DIA. (mm)	TORQUE N·m (kgf·m, lbf·ft)	REMARKS	PAGE NO.
Timing hole cap	90084 – MN8 – 010	1	14	10 (1.0, 7)		Page 16–5
Throttle position sensor screw	16080 – KTN – 901	1	5	3.4 (0.4, 2.5)		Page 16–8

16

TOOL

Peak voltage adapter
07HGJ-0020100

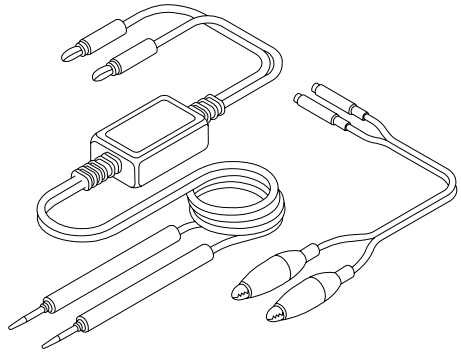

with commercially available digital multimeter (impedance 10 M /DCV minimum) or imrie diagnostic tester (model 625)

TROUBLESHOOTING

- Inspect the following before diagnosing the system.
  - Faulty spark plug
  - Loose spark plug cap or spark plug wire connections
  - Water got into the spark plug cap (Leaking the ignition coil secondary voltage)

No spark at spark plug

	Unusual condition	Probable cause (check in numerical order)
Ignition coil primary voltage	Low peak voltage	1. The multimeter impedance is too low; below 10 MΩ/DCV. 2. Cranking speed is too slow. 3. The sampling time of the tester and measured pulse were not synchronized. (System is normal if measured voltage is over the standard voltage at least once.) 4. Poorly connected connectors or an open circuit in the ignition system. 5. Faulty ignition coil. 6. Faulty capacitive discharge ignition (CDI) (in case when No.1-5 are normal).
	No peak voltage	1. Incorrect peak voltage adapter connections. 2. Battery is undercharged. 3. Faulty ignition switch. 4. Loose or poorly connected CDI connectors. 5. Open circuit or poor connection in the Red/Black wire of the CDI. 6. Open circuit or poor connection in the green wire of the CDI. 7. Faulty peak voltage adapter. 8. Faulty ignition pulse generator. (Measure the peak voltage.) 9. Faulty CDI (in case when above No.1 – 8 are normal).
	Peak voltage is normal. but no spark jumps at the plug.	1. Faulty spark plug or leaking ignition coil but no spark jumps at the plug secondary current. 2. Faulty ignition coil.
Ignition pulse generator	Low peak voltage	1. The multimeter impedance is too low; generator below 10 MΩ/DCV. 2. Cranking speed is too slow. 3. The sampling time of the tester and measured pulse were not synchronized. (System is normal if measured voltage is over the standard voltage at least once.) 4. Faulty ignition pulse generator (in case when above No.1 – 3 are normal).
	No peak voltage	1. Faulty peak voltage adapter. 2. Faulty ignition pulse generator.

IGNITION SYSTEM INSPECTION

- If there is no spark at the plug, check all connections for loose or poor contact before measuring the peak voltage.
- Use a recommended digital multimeter or commercially available digital multimeter with an impedance of 10 MΩ/DCV. minimum.
- The display value differs depending upon the internal impedance of the multimeter.
- If using the Imrie diagnostic tester (model 625), follow the manufacturer's instructions.

Connect the peak voltage adaptor to the digital multimeter, or use the Imrie diagnostic tester.

TOOL:

Imrie diagnostic tester (model 625) or

Peak voltage adaptor: 07HG-J-0020100

With commercially available digital multimeter (Impedance 10 MΩ/DCV minimum)

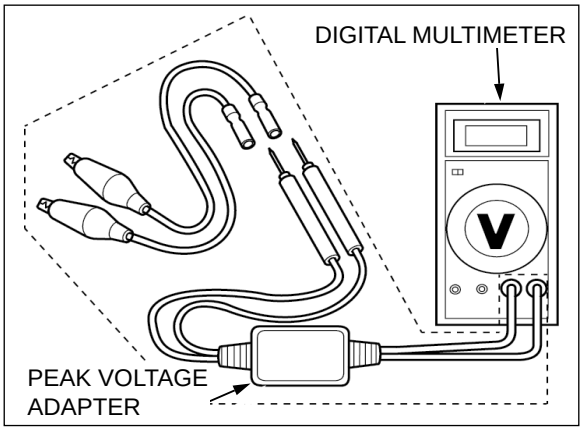

IGNITION COIL PRIMARY PEAK VOLTAGE

- Check all system connections before this inspection. Poor connected connectors can cause incorrect readings.
- If the system is disconnected, incorrect peak voltage might be measured.
- Check the cylinder compression, and check that the spark plug is installed correctly in the cylinder head.

Shift the transmission into neutral and disconnect the spark plug cap from the spark plug.

Connect a known-good spark plug to the spark plug cap, and ground it to the cylinder head as done in a spark test.

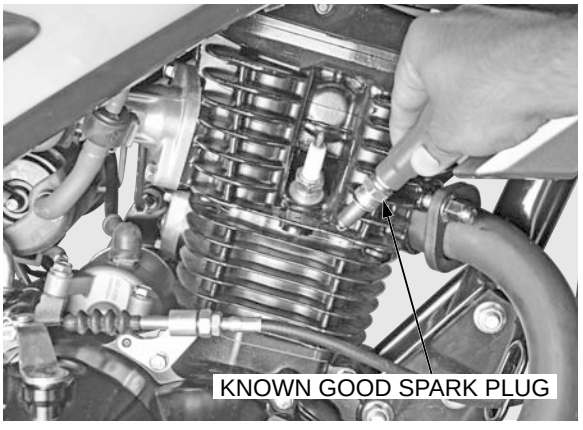

Remove the right side cover (page 2-3).

With the ignition coil primary wire connected, connect the peak voltage tester or adaptor probes to the ignition coil primary terminal and body ground.

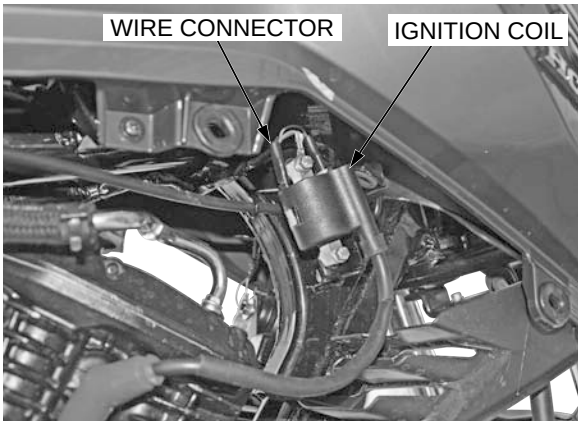

TOOL:

Imrie diagnostic tester (model 625) or

Peak voltage adaptor: 07HGJ-0020100

With commercially available digital multimeter (impedance 10 MΩ/DCV minimum)

CONNECTION: Black/Yellow (+) – Body ground (–)

Avoid touching the spark plug or tester probes to prevent electric shock.

Turn the ignition switch “ON”.

Crank the engine with the starter switch, and read ignition coil primary peak voltage.

PEAK VOLTAGE: 100 V minimum

If the peak voltage is lower than specified value, follow the checks described in the troubleshooting chart (page 16-2).

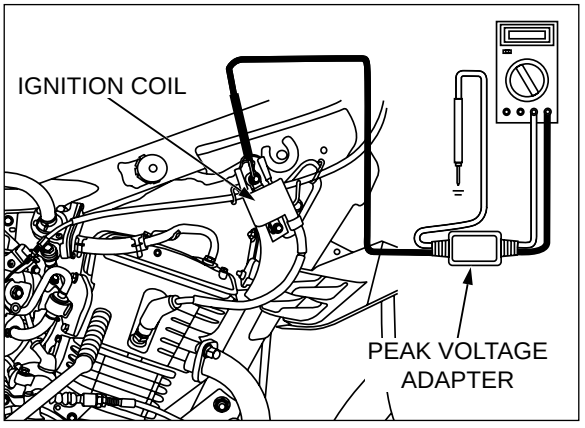

IGNITION PULSE GENERATOR PEAK VOLTAGE

- Check the cylinder compression, and make sure the spark plug is installed correctly in the cylinder head.

Remove the fuel tank (page 2-3).

Disconnect the CDI 4P White connector.

Connect the peak voltage tester or adaptor probes to the ignition pulse generator terminals (Blue/Yellow) of the 4P connector.

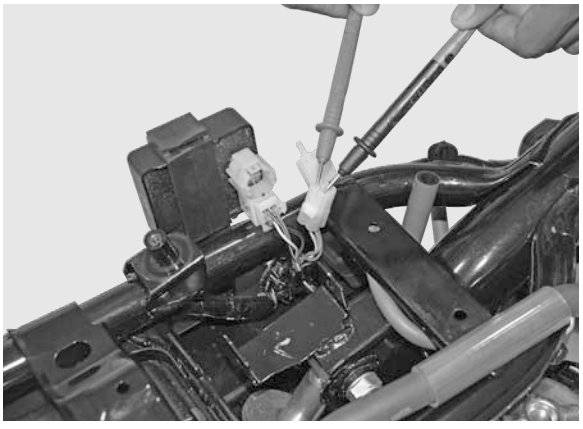

TOOL:

Imrie diagnostic tester (model 625) or

Peak voltage adaptor 07HGJ-0020100

With commercially available digital multimeter (impedance 10 MΩ/DCV minimum)

CONNECTION:
Blue/Yellow wire terminal (+) – Body Ground (–)

Shift the transmission into neutral.

Turn the ignition switch “ON”.

Crank the engine with the self starter, and read ignition pulse generator peak voltage.

PEAK VOLTAGE: 0.7 V minimum

If the peak voltage measured at the CDI 4P connector is abnormal, measure the peak voltage at the ignition pulse generator connector.

Remove the right side cover (page 2-3).

Disconnect the ignition pulse generator connector. (Blue/Yellow) and connect the tester or adaptor probes to the ignition pulse generator side connector and body ground.

In the same manner as at the CDI connector, measure the peak voltage and compare it to the voltage measured at the CDI connector.

- If the peak voltage measured at the CDI is abnormal and the one measured at the ignition pulse generator is normal, the wire harness has an open or short circuit, or loose connection.
- If both peak voltages are abnormal, follow the checks described in the troubleshooting chart (page 16-2). Ignition pulse generator replacement (page 10-16).

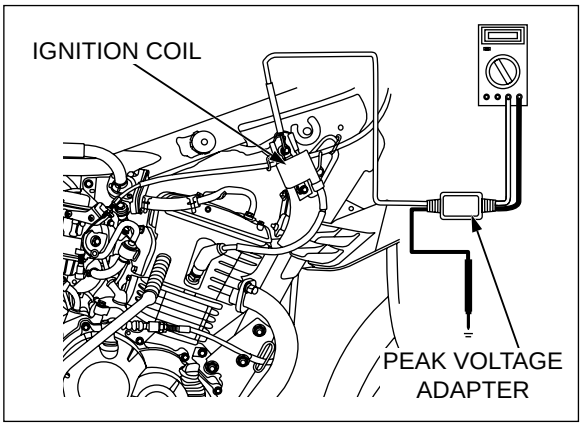

IGNITION TIMING

Warm up the engine to normal operating temperature.

Stop the engine, and remove the timing hole cap.

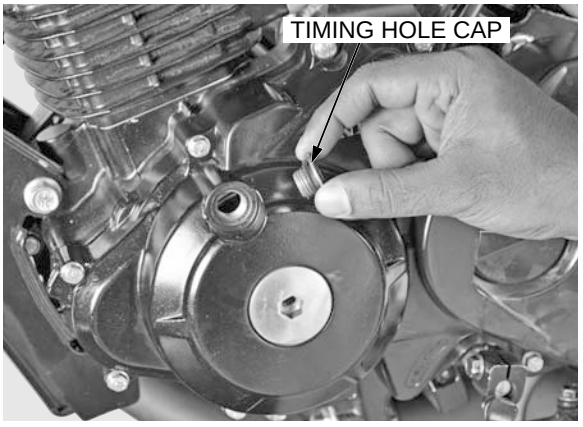

Read the instructions for timing light operation.

Connect a timing light to the spark plug wire.

Start the engine and let it idle.

IDLE SPEED:1,400 ± 100 min^{-1} (rpm)

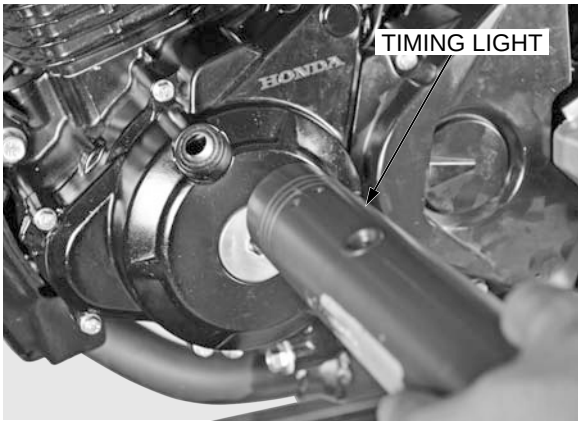

The ignition timing is correct if the “F” mark on the flywheel aligns with the index notch in the left crankcase cover.

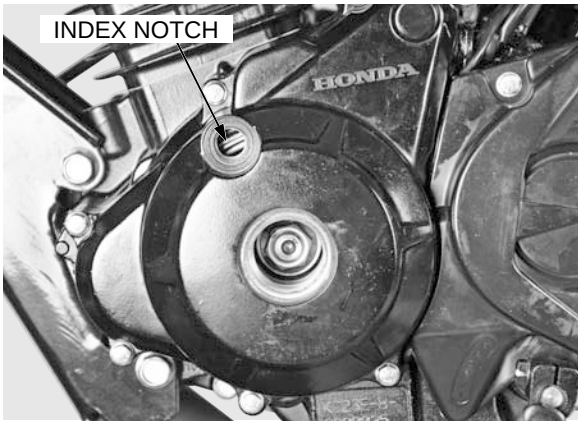

Coat a new O-ring with engine oil and install it onto the timing hole cap.

Install and tighten the timing hole cap to the specified torque.

TORQUE:10 N·m (1.0 kgf·m, 7 lbf·ft)

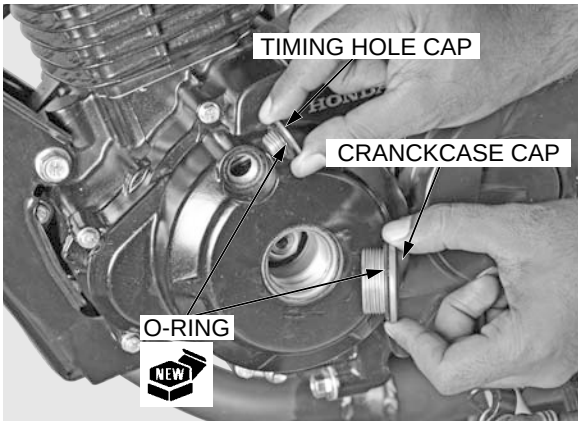

IGNITION COIL

REMOVAL/INSTALLATION

Remove the right side cover (page 2-3).

Disconnect the spark plug cap from the spark plug.

Disconnect the wire connector from the ignition coil.

Remove the bolts and ignition coil.

Installation is in the reverse order of removal.

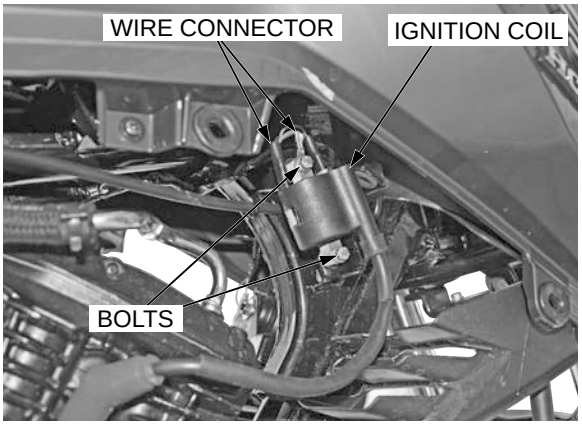

CDI (CAPACITIVE DISCHARGE IGNITION)

SYSTEM INSPECTION

Remove the fuel tank. (page 2-3).

Disconnect the CDI 6P White connector.

Turn the ignition switch “ON”.

Check the following at the wire harness side connector:

Item	Terminal	Specification
Battery line	Red/Black (+) and body ground (-)	Battery voltage should register
Ground line	Green and body ground	Continuity should exist

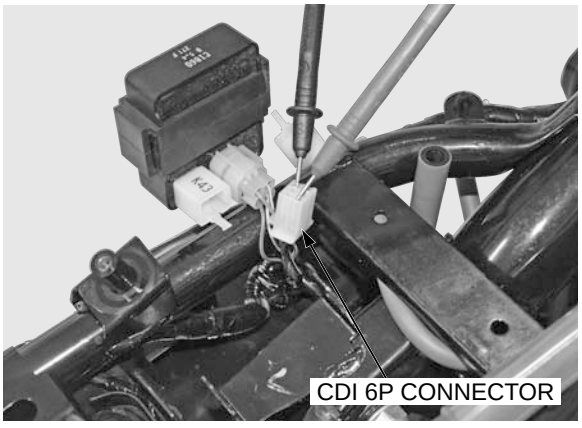

REMOVAL/INSTALLATION

Remove the fuel tank (page 2-3).

Disconnect the CDI 4P and 6P White connector.

Remove the CDI from the rubber bracket.

Installation is in the reverse order of removal.

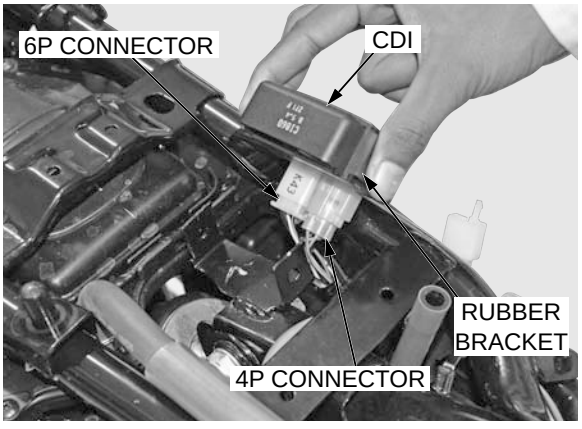

THROTTLE POSITION SENSOR

INSPECTION

INPUT VOLTAGE

Remove the left side cover (page 2-3).

Remove the rubber boot.

Disconnect the throttle position sensor 3P Grey connector from carburetor assembly.

Turn the ignition switch “ON”.

Check the following at the wiring harness side connector:

CONNECTION: Yellow/Red (+) – Blue/Green (–)

STANDARD: 4.75 – 5.25 V

If the measurement is out of specification, check the following:

– Loose connection of the CDI 4P connector
– Open circuit in wire harness

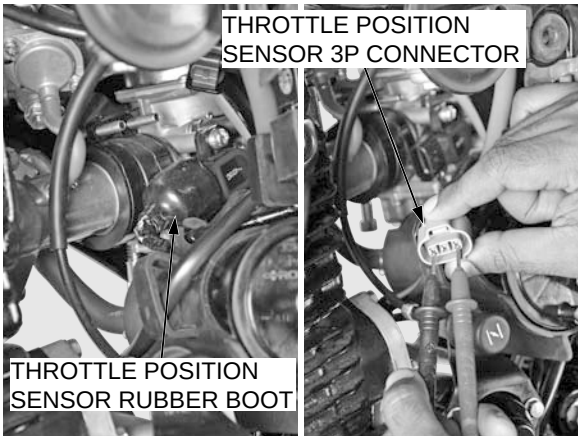

OPERATION INSPECTION

Connect the throttle position sensor 3P Grey connector.

Disconnect the CDI 4P connector.

Check that the resistance at the CDI 4P White connector terminals while operating the throttle grip.

CONNECTION: Yellow/Red – Yellow/Blue

RESISTANCE: 4.0 – 6.0 Ω (20°C/68°F)

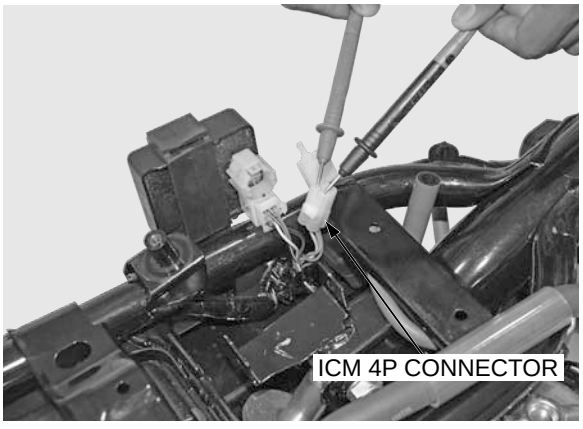

Item	Resistance
Full close to full open	Decreases
Full open to full close	Increases

If the resistance at the CDI 4P White connector is abnormal, measure the resistance at throttle position sensor 3P Grey connector.

Disconnect the TP sensor 3P Grey connector from the carburetor.

Check that the resistance at TP sensor 3P Grey connector terminals while operating the throttle grip.

CONNECTION: Yellow/Red (A) – Yellow/Blue (B)

STANDARD: 4.0 – 6.0 Ω (20°C/68°F)

Item	Resistance
Full close to full open	Decreases
Full open to full close	Increases

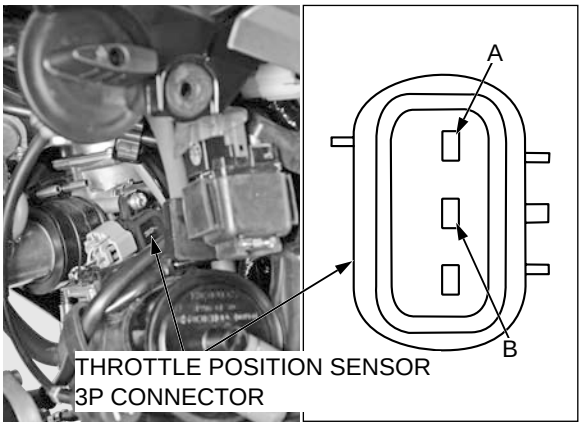

- If the resistance at throttle position sensor 3P Grey connector is normal, the wire harness has an open circuit or loose connection.
- If both measured resistance are abnormal, replace TP sensor (page 16-8).

REMOVAL/INSTALLATION

Remove the left side cover (page 2-3).

Remove the rubber boot.

Disconnect the throttle position sensor 3P Grey connector.

Remove the carburetor (page 5-6).

Remove the screw and throttle position sensor.

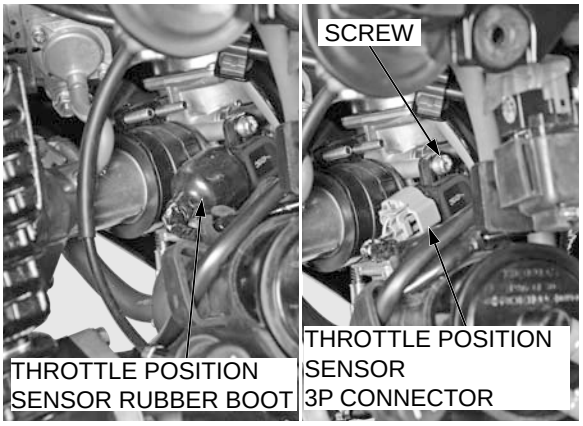

Install the throttle position sensor while aligning the groove of the sensor with the flat of the shaft as shown.

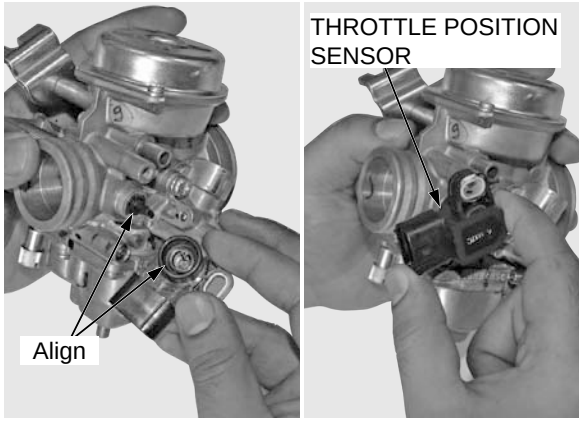

Rotate the throttle position sensor and align the hole in the sensor with the screw hole in the carburetor.

Install and tighten the screw.

TORQUE: 3.4 N·m (0.4 kgf·m, 2.5 lbf·ft)

Connect the throttle position sensor 3P Grey connectors.

Check the throttle operation (page 3-5)

Install the left side cover (page 2-3).

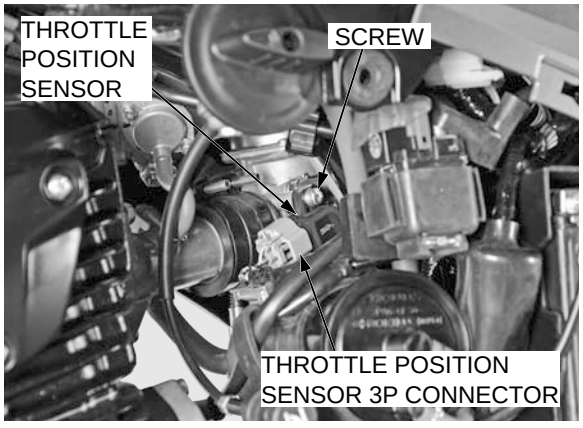

INITIALIZING PROCEDURE

- After replacing the CDI or throttle position sensor, perform the initializing procedure.
- If tachometer needle indicate the 10,000 r/min for 5 seconds in any step of the initializing procedure, turn the ignition switch “OFF” and repeat the procedures from the step1.
- The initializing procedure will fail automatically, if any step is not completed within 8 seconds.

If so, turn the ignition switch “OFF” and repeat the procedure from the step1.

Connect the positive terminal first and then the negative terminal.

Remove the left side cover (page 2-3).

Remove the fuel tank (page 2-3).

Disconnect the ignition pulse generator wire connector (page 10-16).

Connect the positive terminal first and then the negative terminal.

Connect the battery to the ignition pulse generator wire connector and body ground.

CONNECTION:

Blue/Yellow wire terminal (+)

Body ground (-)

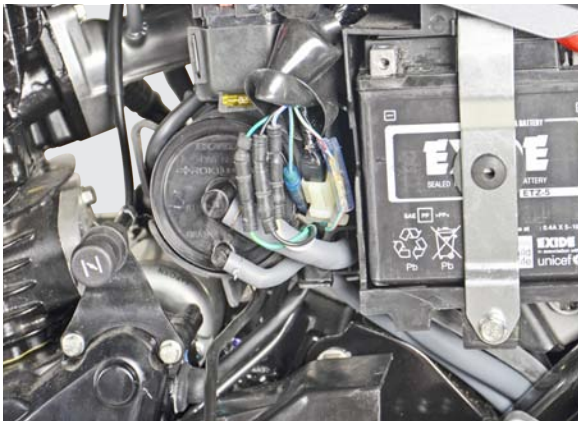

Complete each step within 8 seconds.

Turn the ignition switch “ON”, the tachometer should indicate the 1,000 r/min.

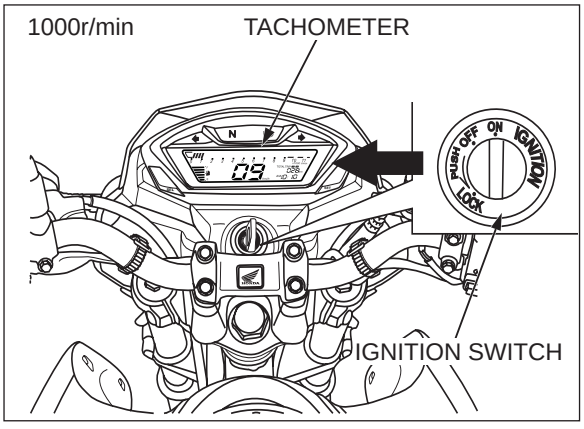

Complete each step within 8 seconds.

Turn the throttle grip to the fully opened position, the tachometer should indicate the 2,000 r/min.

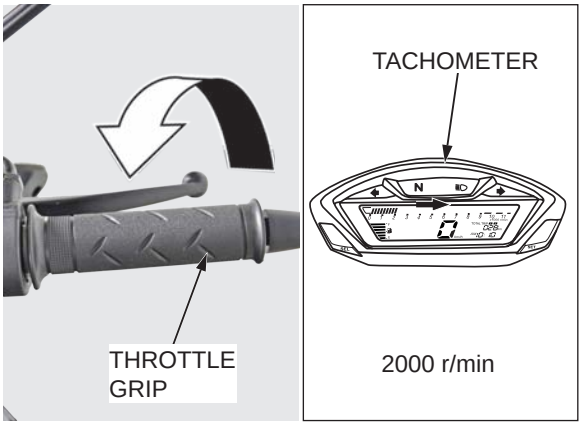

Complete each step within 8 seconds.

Turn the throttle grip to the fully closed position, the tachometer should indicate the 3,000 r/min.

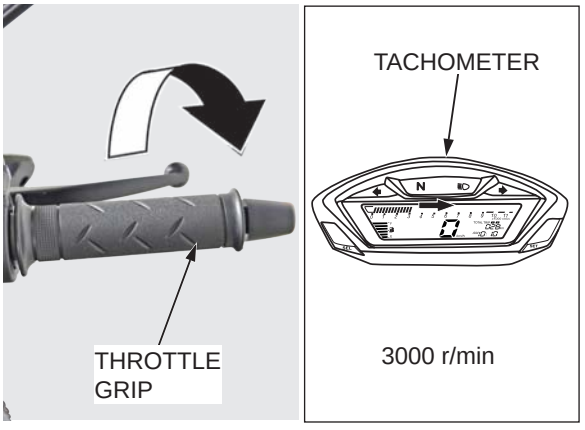

Complete each step within 8 seconds.

Turn the throttle grip to the fully opened position, the tachometer should indicate the 4,000 r/min.

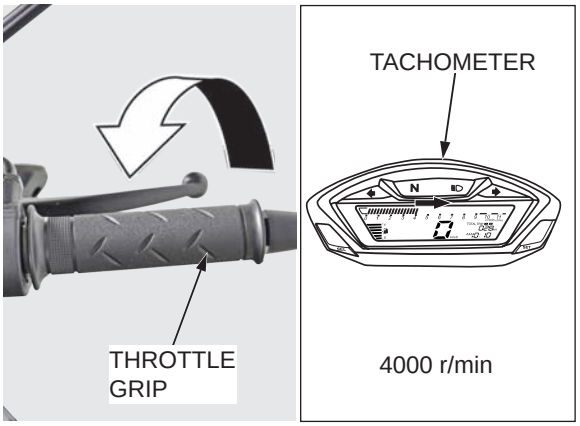

Complete each step within 8 seconds.

Turn the throttle grip to the fully closed position, the tachometer should indicate the 5,000 r/min.

When the tachometer indicates soon about 7,000 r/min, the initializing procedure is successful.

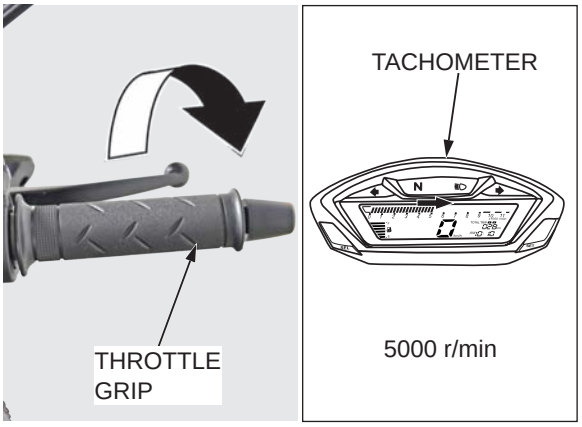

MEMO

COMPONENT LOCATION

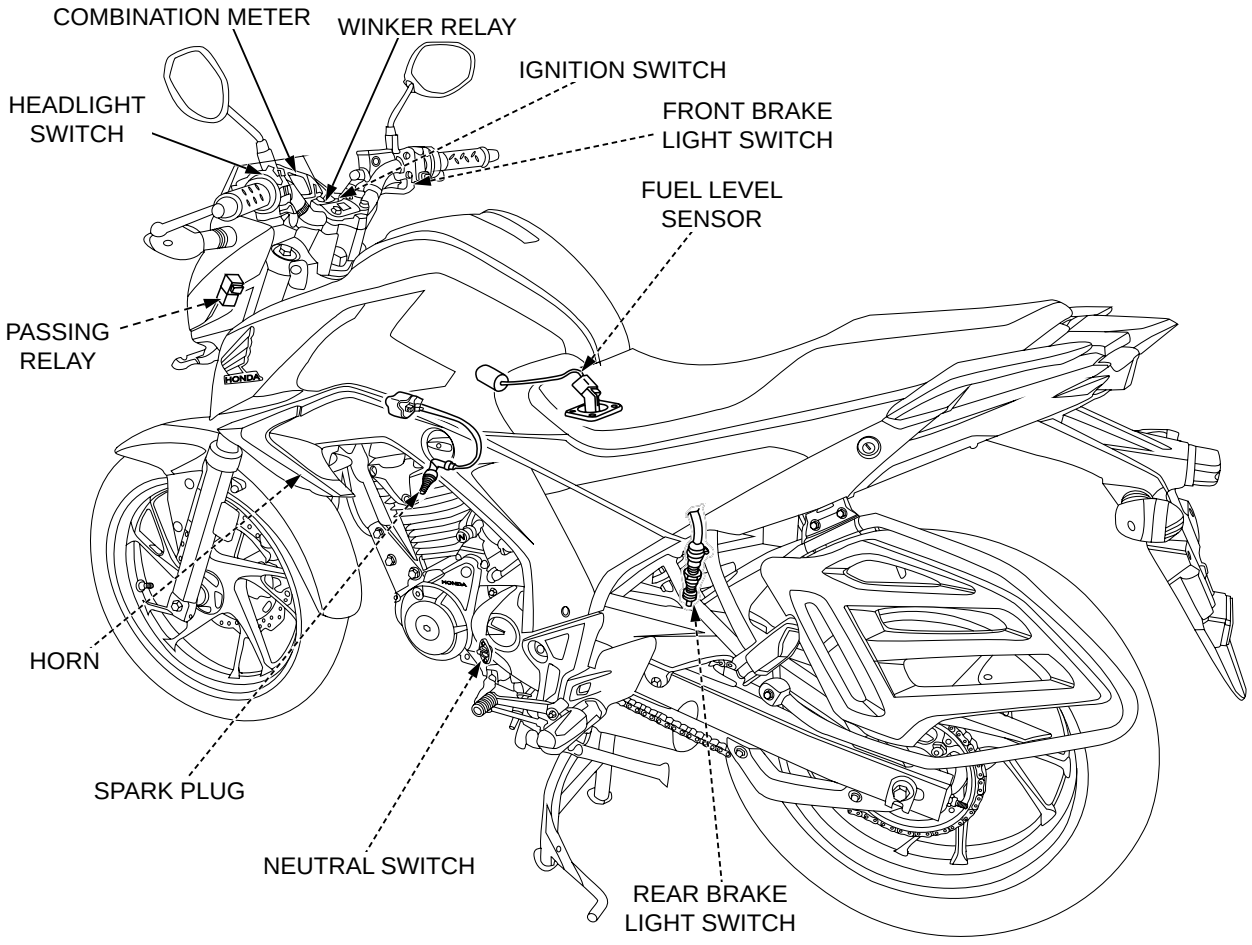

SYSTEM DIAGRAM

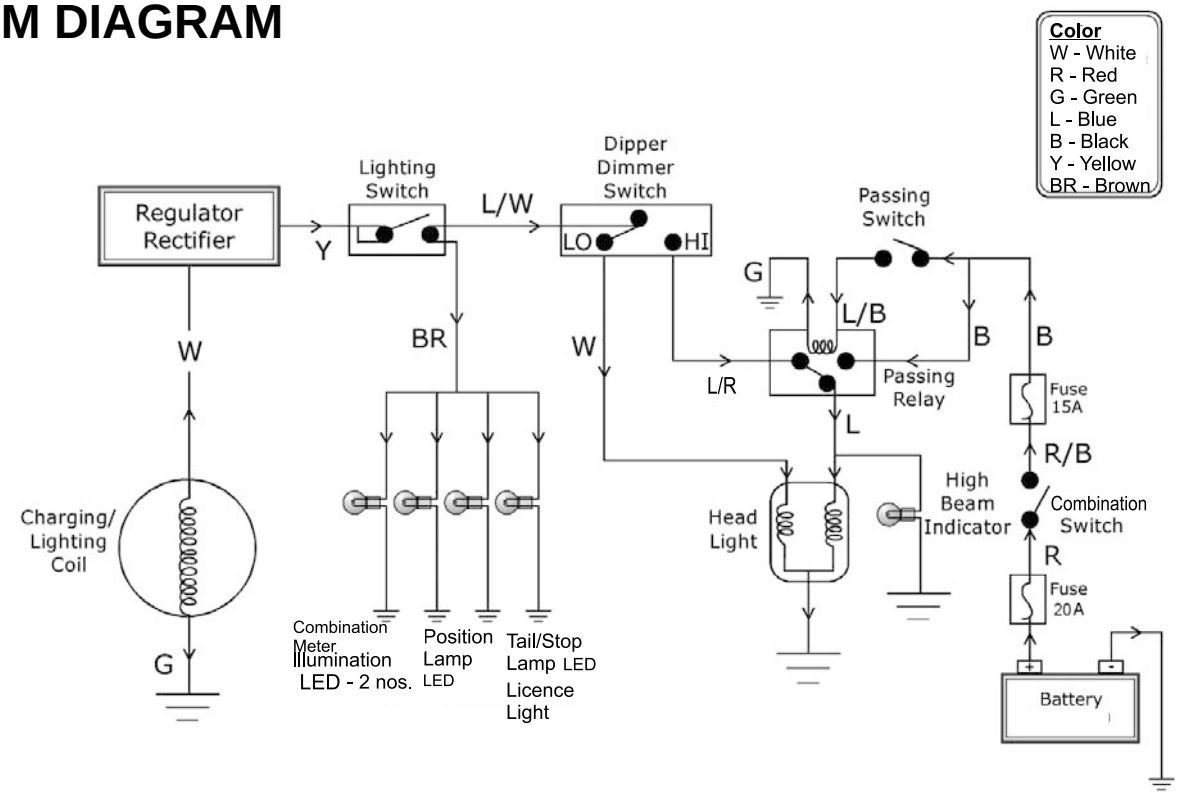

17. LIGHTS/METERS/SWITCHES

COMPONENT LOCATION	17-0	COMBINATION SWITCH	17-10
SYSTEM DIAGRAM	17-0	HANDLEBAR SWITCHES	17-11
SERVICE INFORMATION	17-1	LEFT HANDLEBAR SWITCH	17-11
HEADLIGHT	17-2	BRAKE LIGHT SWITCH	17-12
BRAKE /TAIL LIGHT	17-3	NEUTRAL SWITCH	17-12
TURN SIGNAL LIGHTS	17-4	FUEL GAUGE/FUEL LEVEL SENSOR	17-14
COMBINATION METER	17-5	HORN	17-16
SPEEDOMETER VS SENSOR	17-7	PASSING RELAY	17-16
TACHOMETER	17-8	TURN SIGNAL RELAY	17-17
DIGITAL METER RESET PROCEDURE	17-9	FUSE BOX	17-18

SERVICE INFORMATION

GENERAL

NOTICE

- *A halogen headlight bulb becomes very hot while the headlight is "ON", and remains hot for a while after it is turned "OFF".* Be sure to let it cool down before servicing.
- Note the following when replacing the halogen headlight bulb.
  - Wear clean gloves by replacing the bulb. Do not put finger prints on the headlight bulb, as they may create hot spots on the bulb and cause it to fail.
  - If you touch the bulb with your bare hands, clean it with a cloth moistened with alcohol to prevent its early failure.
  - Be sure to install the dust cover after replacing the bulb.
- Keep all flammable materials away from the electric heating element. Wear protective clothing, insulated gloves and eye protection.
- Check the battery condition before performing any inspection that requires proper battery voltage.
- A continuity test can be made with the switches installed on the motorcycle.
- The following color codes are used throughout this section.

L = Blue	G = Green	Lg = Light green	R = Red
B = Black	Gr = Gray	O = Orange	W = White
Br = Brown	Sb = Sky blue	P = Pink	Y = Yellow

SPECIFICATIONS

ITEM			SPECIFICATION	Page NO.
Bulb	Headlight (Hi/low beam)		12V – 35/35W	–
	Position light		12V - 5W X 2	–
	Brake/tail light (LED)		2 W (LED)*9	–
	Turn signal light		12V - 10W x 4	–
	Instrument light		140 mcd LED*6	–
	Turn signal indicator		56 mcd LED	–
	High-beam indicator		28 mcd LED	–
	Tail light		0.3 W (LED)*9	–
	Neutral indicator		56 mcd LED	–
Fuse		Main	20A	–
		Sub	15A & 5A	–
Fuel level sensor		Full	6 – 9 Ω	Page 17–14
		Empty	90 – 96 Ω	Page 17–14

TORQUE VALUES

Fuel level sensor mounting nut	9 N.m (0.9 kgf.m, 7 lbf.ft)	Page 17-16

HEADLIGHT

BULB REPLACEMENT

Remove the front cowl (page 2-2).

Disconnect the headlight connector.



Avoid touching halogen headlight bulb. Finger prints can create hot spots that cause a bulb to break.

Remove the dust cover.

Remove the bulb retainer.

Remove the headlight bulb.

Install the new bulb while aligning the tabs of the bulb with the slots of the headlight unit.

Hook the bulb retainer into the headlight unit groove.

Install the dust cover with the " ▲ " mark facing up.

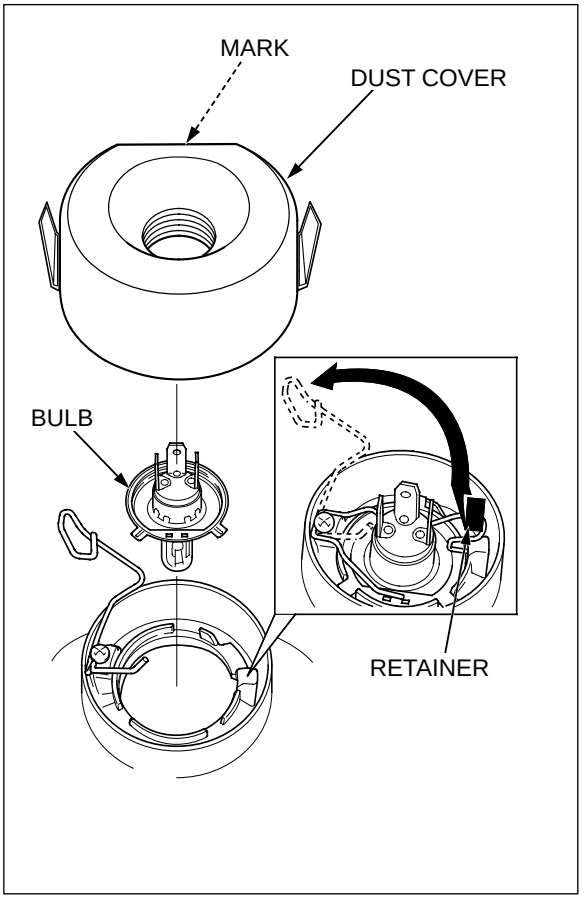

Connect the headlight connector.

Install the front cowl (page 2-2).



HEADLIGHT UNIT

REMOVAL/INSTALLATION

Remove the headlight adjusting bolt.

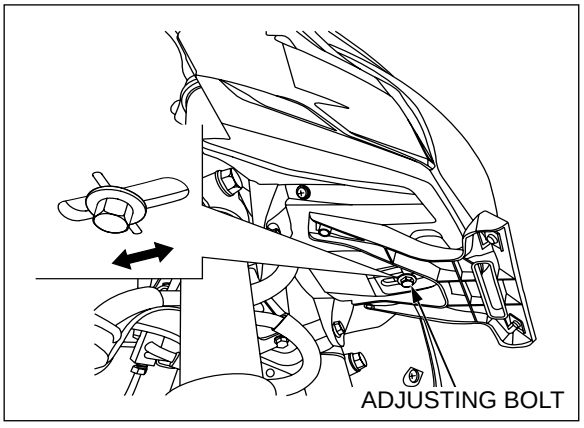

Remove the front cowl (page 2-2).

Disconnect the headlight connector.

Remove the clips and headlight unit.

Installation is in the reverse order of removal.

Adjust the headlight beam vertically (page 3-21)

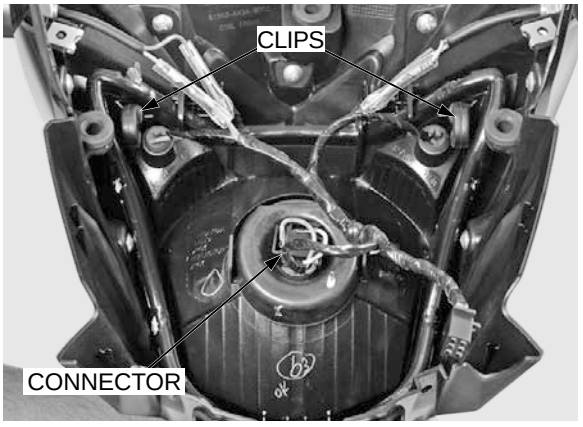

BRAKE/TAIL LIGHT

LED UNIT REPLACEMENT

Remove the LED brake/tail light by following the disassembly procedure as given in chapter 2 (page 2-5).

Replace the LED tail light assy. with a new one under warranty (As per conditions).

Installation is in the reverse order of removal.

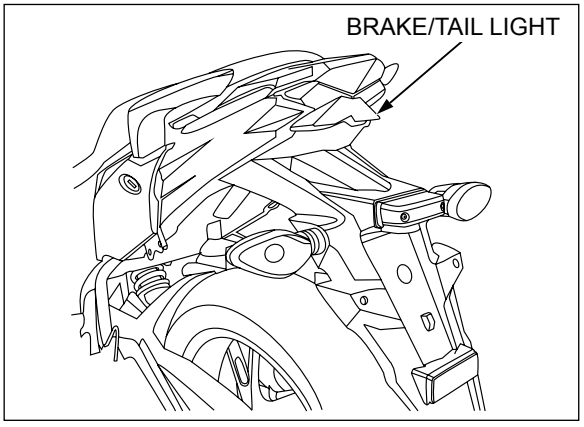

NUMBER PLATE LIGHT BULB

Remove the number plate light lens by removing the screws (2 nos.).

Slightly press the bulb and turn it counterclockwise.

Replace the bulb.

Installation is in the reverse order of removal.

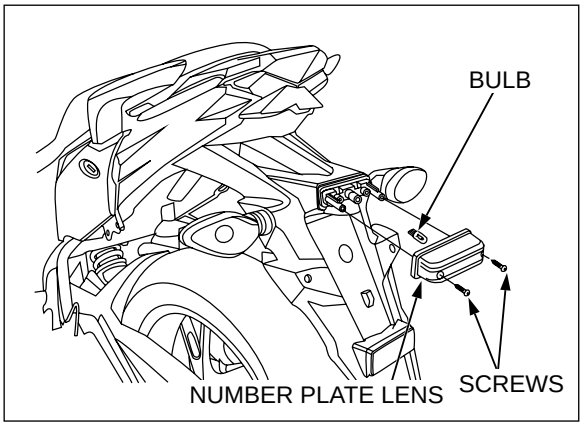

TURN SIGNAL LIGHTS

BULB REPLACEMENT

Remove the screw and remove signal light lens.

Push the bulb in turn it counterclockwise and remove it.

Replace the bulb with a new one.

Installation is in the reverse order of removal.

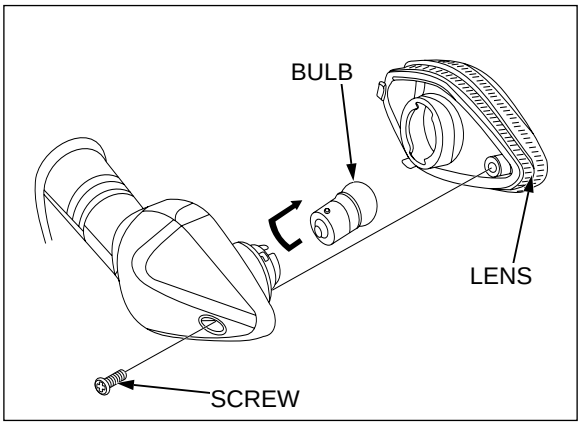

REMOVAL/INSTALLATION

FRONT

Remove the front cowl (page 2-2).

Disconnect the turn signal light connector.

Route the wires properly (page 1-14).

Remove the turn signal mounting nut and stay.

Remove the turn signal light assy.

Install the turn signal light by aligning the cut-out of the turn signal light with cut-out washer.

Installation is in the reverse order of removal.

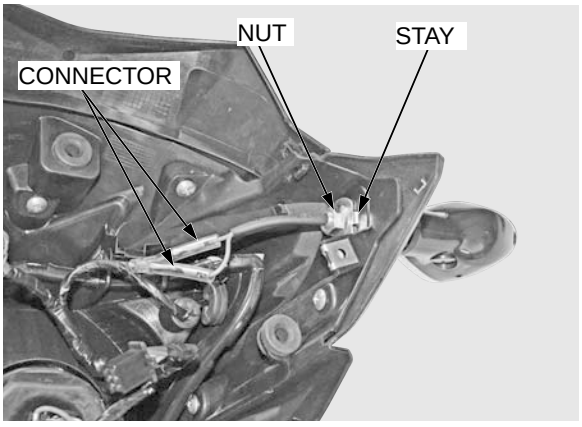

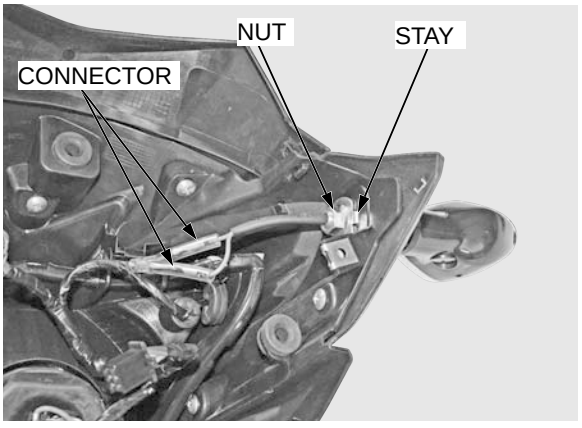

REAR

Remove the rear cowl set (page 2-7).

Disconnect the turn signal light connectors.

Remove the nuts (2 nos) and remove signal lights.

Route the wires properly (page 1-14).

Install the turn signal light by aligning the cut-out of the turn signal light with cut-out washer.

Installation is in the reverse order of removal.

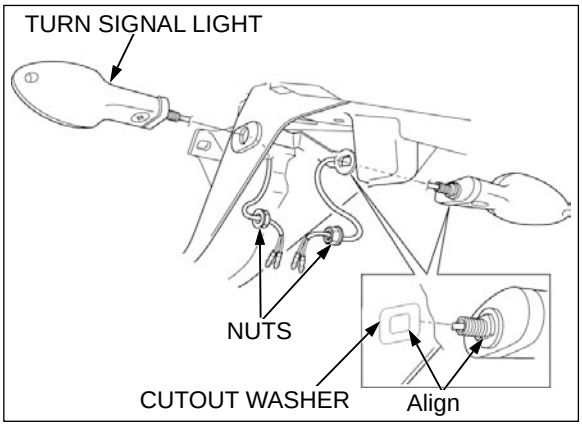

COMBINATION METER

POWER/GROUND LINE INSPECTION

If any indication in the combination meter is abnormal, check the following item.

Remove the front cowl (page 2-2).

Remove the dust cover.

Disconnect the combination meter 16P (Gray) connector.

Check the following at the wire harness side connector terminals of the combination meter.

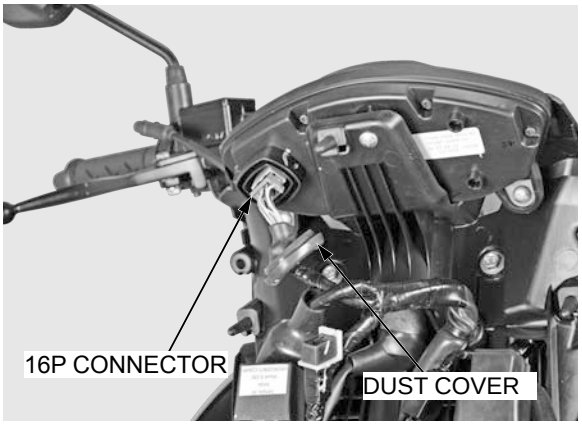

Power input line

Measure the voltage between the Black wire terminal (+) and body ground (–).

There should be battery voltage with the combination switch ON.

If there is no voltage, check the fuse (15 Amp) and open circuit in Black wire.

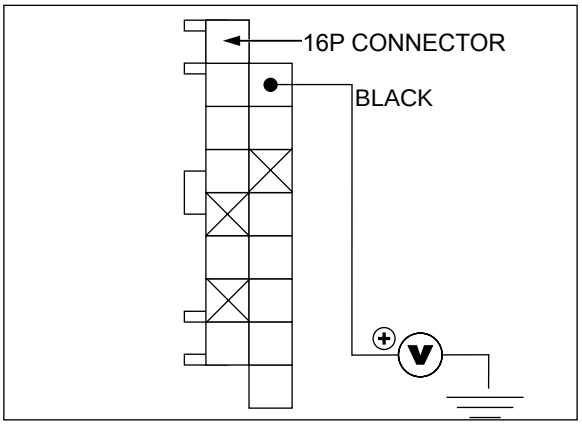

Back-up voltage line

Measure the voltage between the Red/white wire terminal (+) and body ground (–).

There should be battery voltage at all times.

If there is no voltage, check the fuse (10 Amp) and open circuit in Red / White wire.

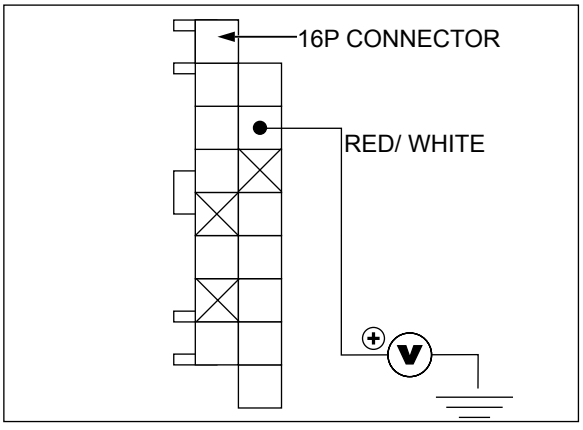

Ground line

Measure the continuity between the Green wire terminal and body ground.

There should be continuity.

If there is no continuity, check for open circuit in Green wire.

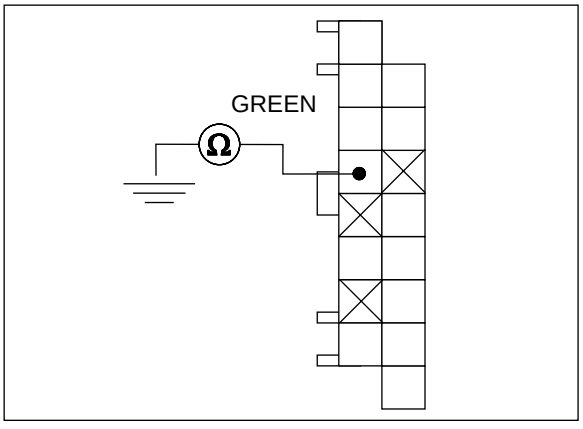

REMOVAL/ INSTALLATION

Remove front cowl (page 2-2).

Remove the dust cover.

Disconnect the combination meter Grey 16P connector assembly.

TORQUE: 4.0 N.m (0.4 kgf.m, 2.9 lbf.ft)

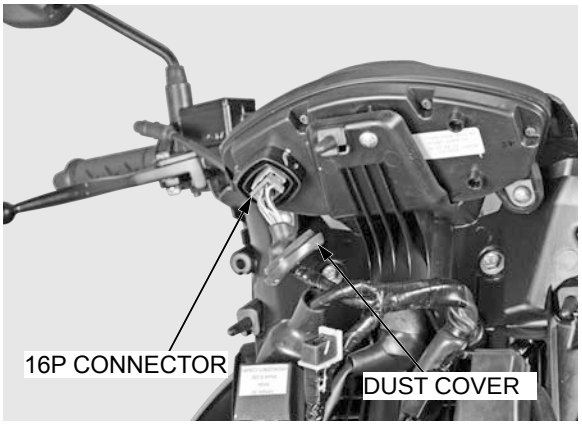

Remove the screws (3 nos.) and washers.

Remove the combination meter assembly from front cowl stay.

Installation is in the reverse order of removal.



DISASSEMBLY

Remove the screws (6 nos.), meter lower cover and upper cover.

NOTICE

Check that the indicators function properly.

If they do not function, perform the power and ground line inspection combination meter.

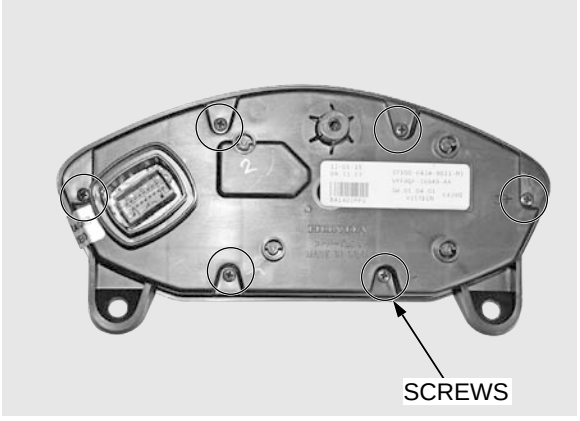

COMBINATION METER ASSEMBLY

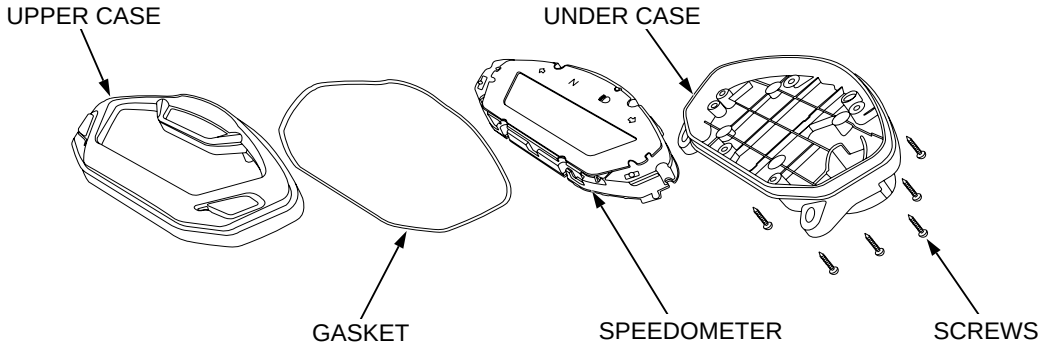

SPEEDOMETER VS SENSOR

SYSTEM INSPECTION

Check the combination meter functions properly.

If they do not function, perform the power and ground line inspection of the combination meter (page 17-5).

Remove the dust cover.

Check the connection/connector for correct fitment.

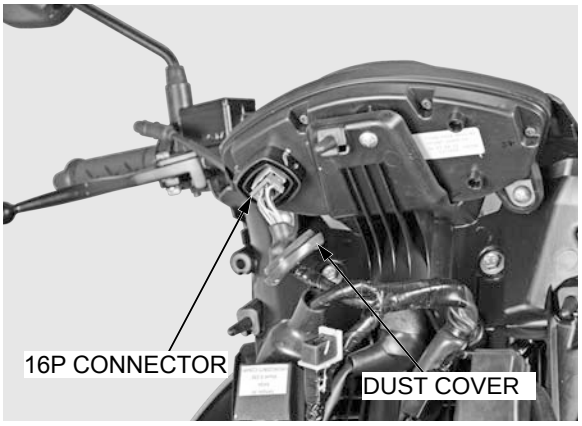

VEHICLE SPEED SENSOR

Disconnect the VS sensor 3 connectors.

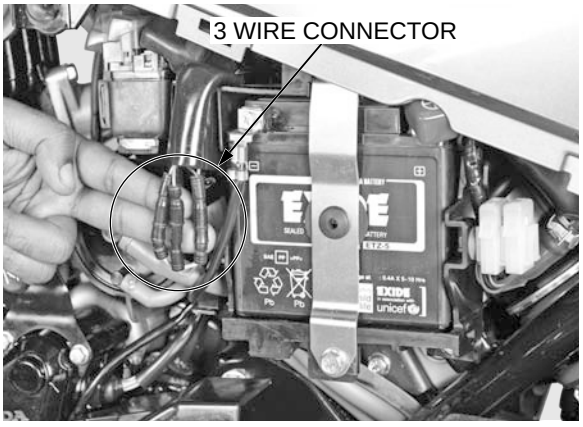

Turn the ignition switch to ON and measure the voltage between the Black (+) and Green (–) wire terminals at the harness side.

CONNECTION: **Black (+) – Green (–)**

STANDARD: **9 ± 0.5 V**

If there is no voltage, check for open circuit in related wires.

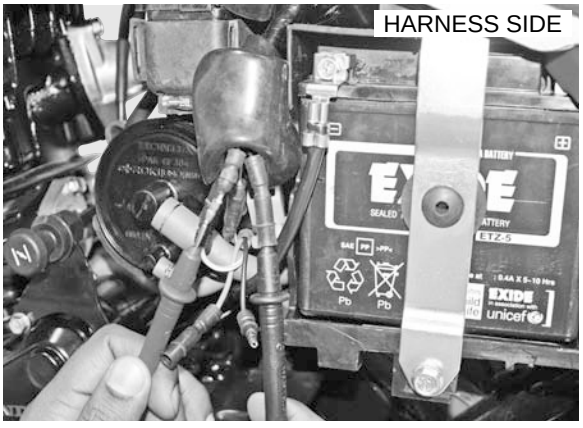

If voltage is as per specification, check the VS sensor as follows.

Measure the voltage between the White/Blue (+) and Green(–) wire terminals of the sensor side connector.

Slowly turn the rear wheel by hand.

There should be 0 to 5 V pulse voltage.

If pulse voltage does not appear, replace the VS sensor.

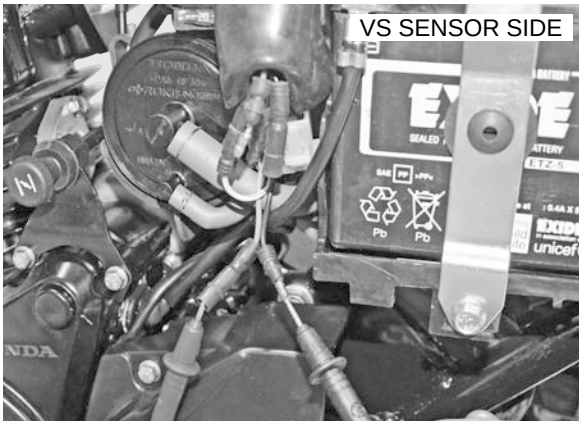

REMOVAL/INSTALLATION

Disconnect the VS sensor 3 connectors (page 17-7)..

Remove the VS sensor mounting bolt (1 nos.).

Remove the VS sensor assy from the crankcase.

Installation is in the reverse order of the removal.

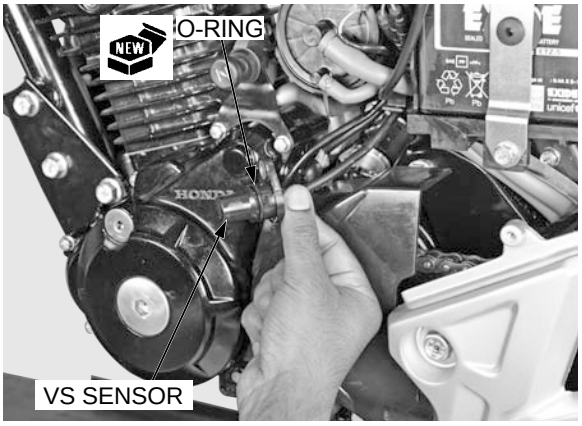

TACHOMETER

SYSTEM INSPECTION

Check for loose or poor contact terminals at the combination meter 16P (Gray).

Turn the combination switch ON, check that the tachometer needle moves to full scale and then returns to zero.

If the meter does not show initial function, check the combination meter power input line (page 17-5).

Remove the front cowl (page 2-2) with combination meter 16P (Gray) connector connected.

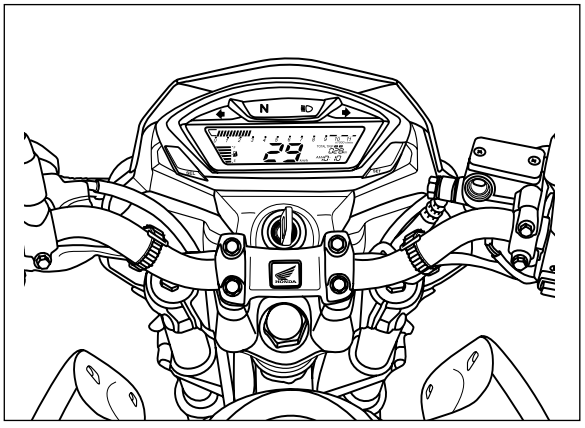

Connect the peak voltage adaptor to the combination meter terminal and ground.

TOOL:

Peak voltage adapter 07HGJ-0020100

Connection: Yellow/green (+) – Ground (–)

Start the engine and measure the tachometer input peak voltage.

PEAK VOLTAGE: 10.5 V minimum

If the peak voltage is normal, replace the combination meter assembly (page 17-5).

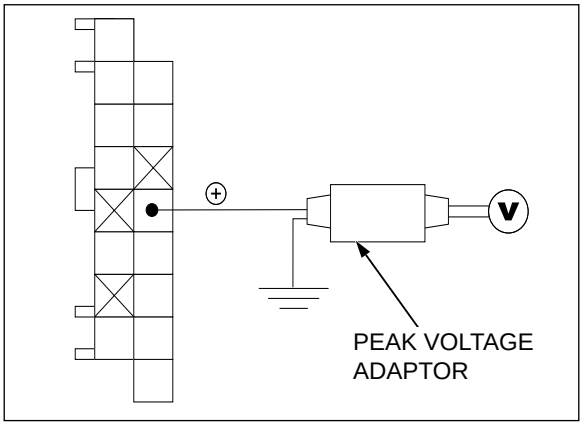

If the measured value is below 10.5 V, replace the CDI.

If the value is 0 V, check for continuity between the combination meter 16P (Gray) connector and CDI 4P (Red) connector Yellow/green terminals.

TOOL:

Test probe 07ZAJ-RDJA110

If there is no continuity, check the wire harness and combination meter.

If there is continuity, replace the combination meter (page 17-5).

DIGITAL METER RESET PROCEDURE

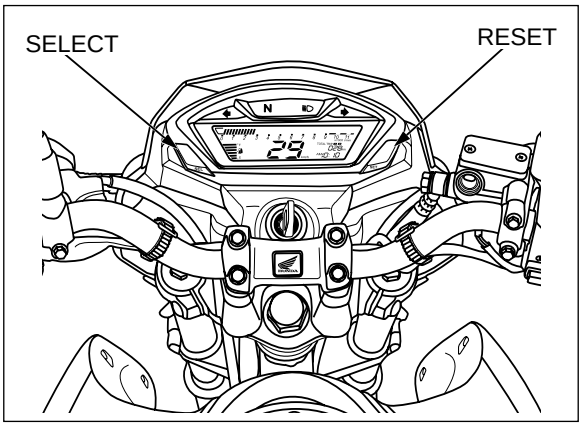

TRIPMETER

To reset the tripmeter proceed as follows:

Press the select button to select tripmeter.

- Reset button
- Select button

To reset the tripmeter, press and hold the reset button for more than 3 seconds when the display is in the “Trip”.

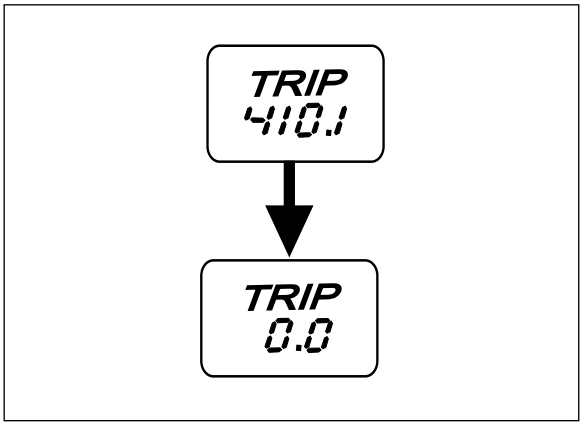

DIGITAL CLOCK

The digital clock will show hours and minutes up to 11:59 .

To adjust the time, proceed as follows:

1. Turn the combination switch ON.
2. Press and hold the Select button and Reset button for more than 3 seconds simultaneously. The clock will be set in the adjust mode with the hour flashing.
   - Reset button
   - Select button

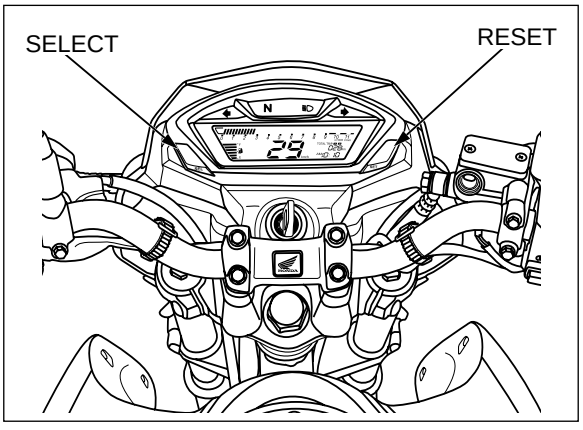

3. To set the hour, press the reset button until the desired hour is displayed.
   - Quick setting - press and hold the reset button until the desired hour appears.
4. Press the select button when the display reaches the desired hour.
5. After pressing the select button minute digit will start flashing

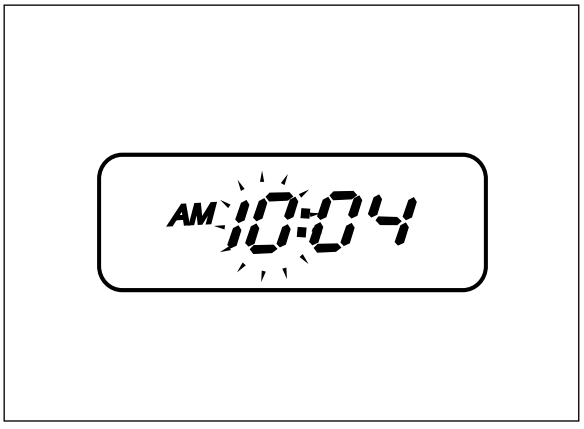

6. To set the minute, press the reset button until the desired minute appears.
   – Quick setting - press and hold the reset button until the desired minute appears.
7. Press the select button when the display reaches the desired minute.

The display will stop flashing.

If the combination switch is turned off or no operation is performed for 30 seconds during the time adjustment mode, the clock will be reset.

The clock will be reset at 1:00 hrs if the battery is disconnected.



COMBINATION SWITCH

INSPECTION

Remove the front cowl (page 2-2).

Disconnect the combination switch 3P White connectors.

Check for continuity between the combination switch connector terminal in each switch position according to the table.

	BAT1	BAT2
LOCK		
OFF		
ON	○	○
COLOR	R	R/B

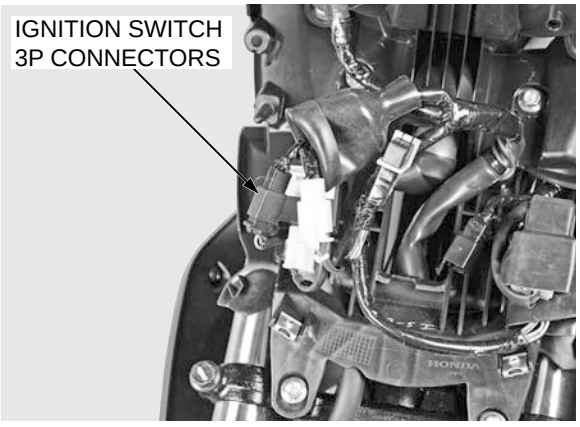

REMOVAL/INSTALLATION

Remove the combination meter (page 17-6).

Remove the top bridge (page 12-21).

Remove the following:
- combination switch mounting screws
- combination switch

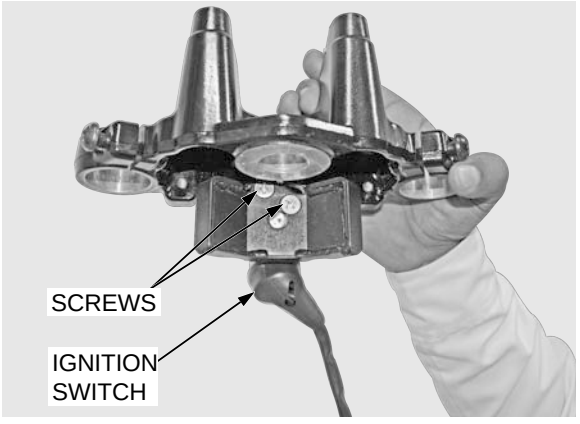

Apply a locking agent to the combination switch mounting screws threads before installing.

Install the following:
- combination switch
- combination switch mounting screws.

Install the top bridge (page 12-26).

Install the combination meter (page 17-6) in reverse order.

Install the front cowl (page 2-2).

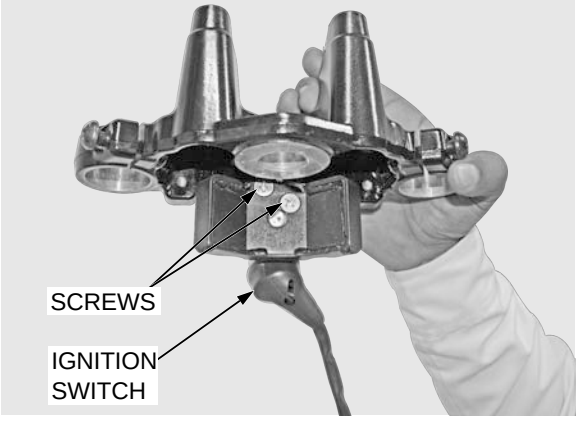

HANDLEBAR SWITCHES

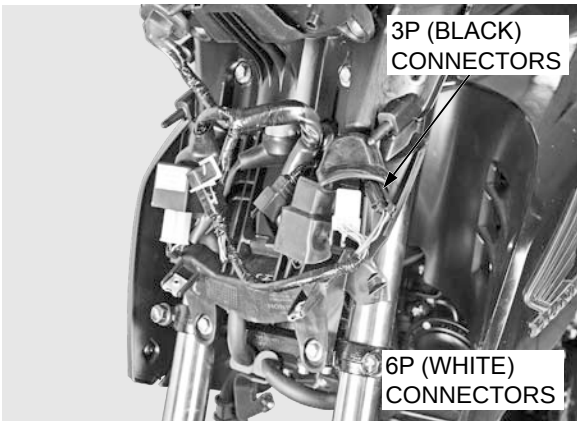

LEFT HANDLEBAR SWITCH

Remove the front cowl (page 2-2).

Disconnect the handlebar switches 9P White and 3P Black from left handlebar.

Check for continuity between the terminals in each switch position according to the table.

DIMMER SWITCH

	HL	LO	HI
LO	○	○	
(N)	○	○	○
HI	○		○
COLOR	L/W	W	L/R

TURN SIGNAL SWITCH

	W	R	L
R	○	○	
(N)			
L	○		○
COLOR	GR	SB	O

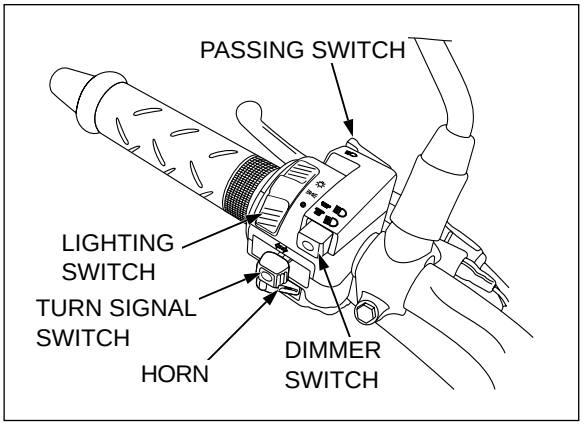

PASSING SWITCH

	BAT	HI
FREE		
PUSH	○	○
COLOR	B	L/B

HORN SWITCH

	BAT	HO
FREE		
PUSH	○	○
COLOR	B	LG

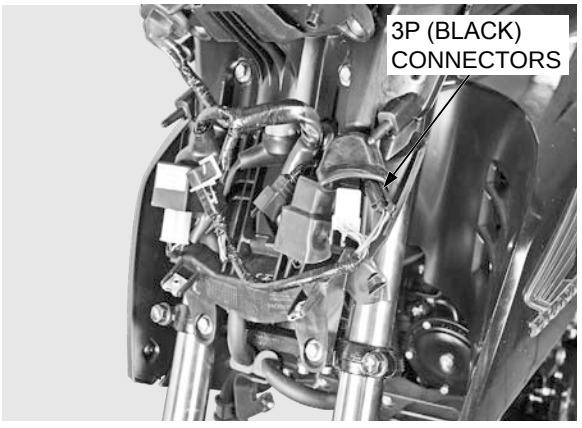

LIGHTING SW				
	HL	C1	TL	C2
OFF				
(N)			○	○
TL			○	○
(N)	○	○	○	○
HL	○	○	○	○

BRAKE LIGHT SWITCH

FRONT

Disconnect the front brake light switch connectors.

There should be continuity with the brake lever squeezed, and there should be no continuity when the brake lever is released.

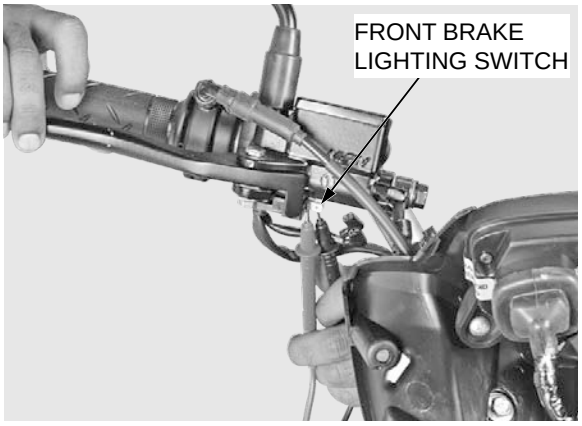

REAR

Remove the right side cover (page 2-3).

Disconnect the rear brake light switch connectors, and check for continuity between the terminals.

There should be continuity with the brake pedal squeezed, and there should be no continuity when the brake pedal is released.

Continuity : Green/ Yellow - Black

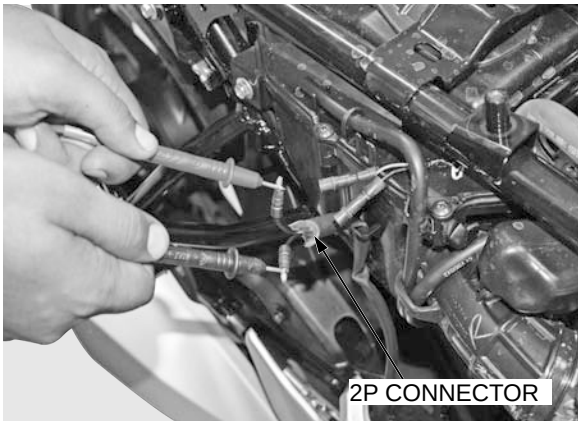

NEUTRAL SWITCH

INSPECTION

Remove the left side cover (page 2-3).

Disconnect the neutral switch connector.

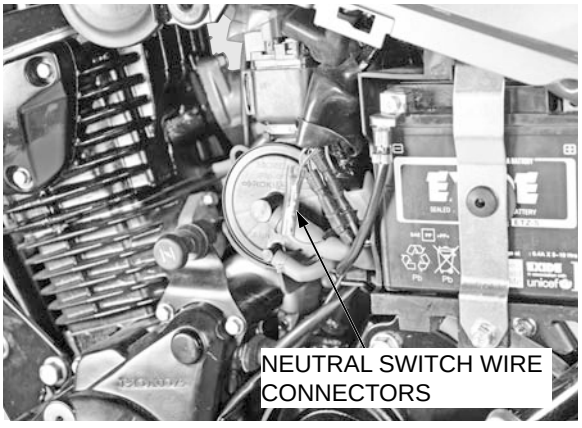

Shift the gear position into the neutral.

Check for continuity between the light green/red terminal and body ground.

There should be continuity with the transmission is in neutral, and no continuity when the transmission is into gear.

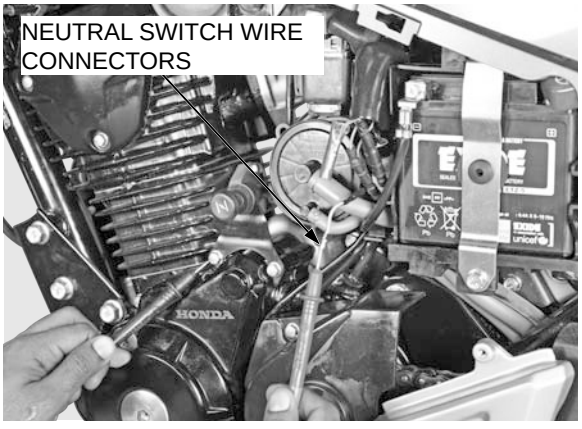

REMOVAL

Remove the left crankcase rear cover (page 11-4).

Disconnect the neutral switch connector.

Remove the neutral switch mounting bolts (2 nos.).

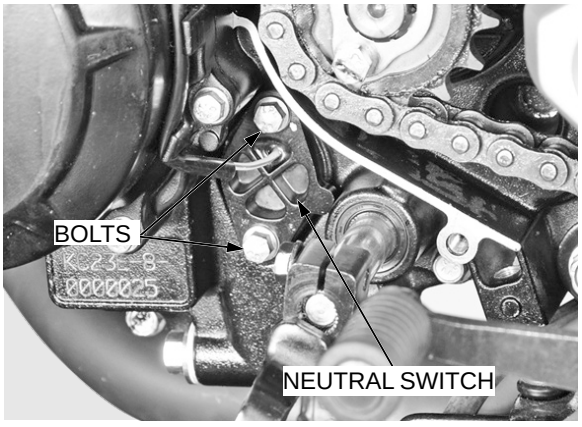

Remove the neutral switch and O-ring.

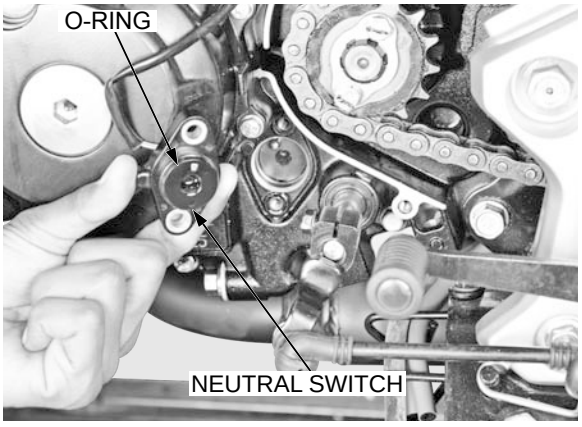

Remove the drive piece and spring.

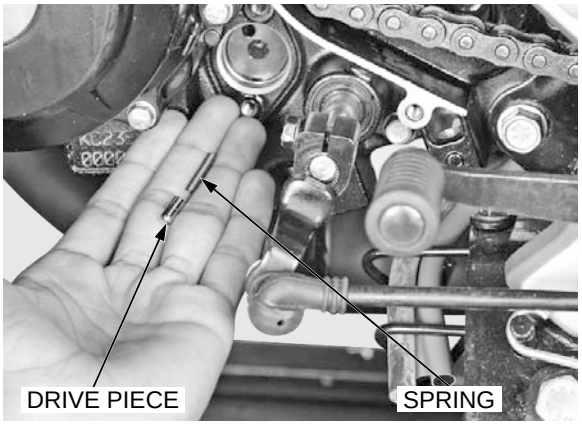

INSTALLATION

Check the drive piece and spring for wear or damage, replace them if necessary.

- Bending the drive piece by forcing or crushing the contact point will cause poor electricity connection.

Install the spring and drive piece.

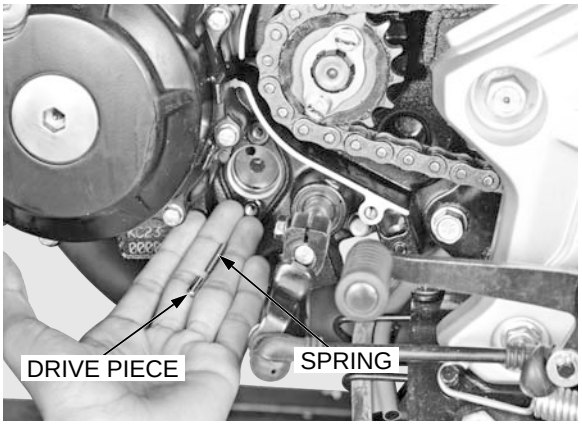

Apply clean engine oil to a new O-ring, and install it to the neutral switch.

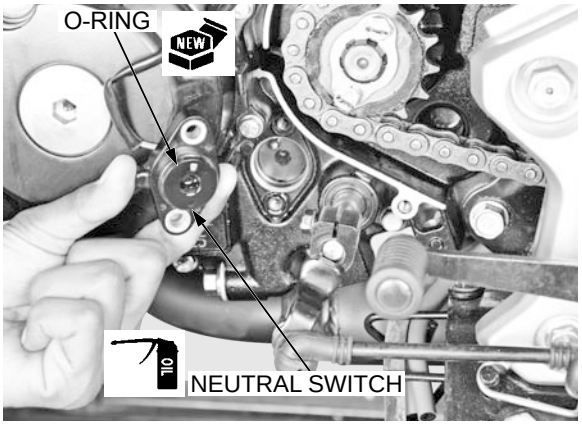

Carrying out as shown that the direction of the neutral switch tab.

Install the neutral switch.

Install the neutral switch mounting bolts (2 nos.) and tighten them.

Route the neutral switch wire to the left crankcase cover grooves properly.

Install the left crankcase rear cover (page 11-17).

Connect the neutral switch connector (page 17-13).

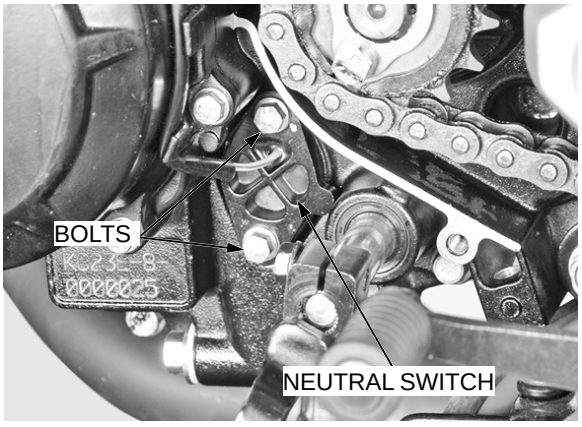

FUEL GAUGE/FUEL LEVEL SENSOR

SYSTEM INSPECTION

If the needle does not move:

1. Fuel Level Sensor Inspection

Remove the fuel tank (page 2-3).

Disconnect the fuel level sensor 3P (White) connector. Measure the resistance at the fuel level sensor terminals (Yellow/ White - Green).

STANDARD: 4 – 100 Ω (20°C/68°F)

Is the resistance within 4 – 100 Ω (20°C/68°F)?

NO – Inspect the fuel level sensor (page 17-14) closed.

YES – STEP 2.

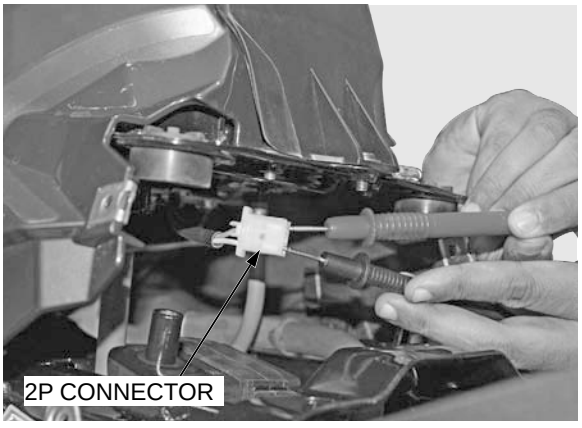

FUEL LEVEL SENSOR INSPECTION

Remove the fuel level sensor as described below.

Connect the ohmmeter to the fuel level sensor terminals.

Inspect the resistance of the float at the top and bottom positions.

	FULL	EMPTY
Resistance (20^0 C/68^0 F)	6-9 Ω	90-96 Ω

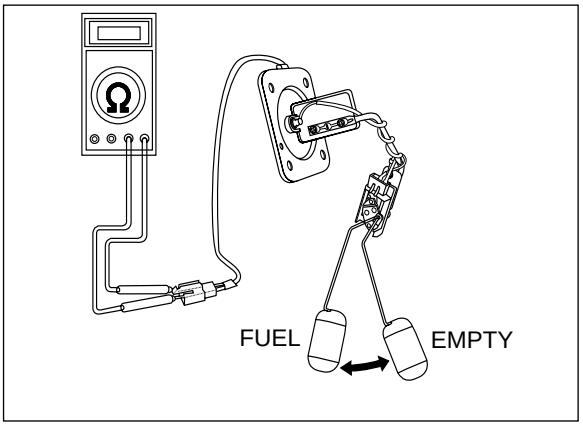

2. Fuel Level Sensor Output Line Inspection

Remove the right side cover (page 2-3).

Check the continuity between the fuel level sensor 2P (White) connector terminal and wire harness side of the combination meter.

CONNECTION:

Yellow/White – Yellow/White

Green – Green

Is there continuity?

NO – Open circuit in Yellow/White or Green wire

YES – Check the Speedometer.

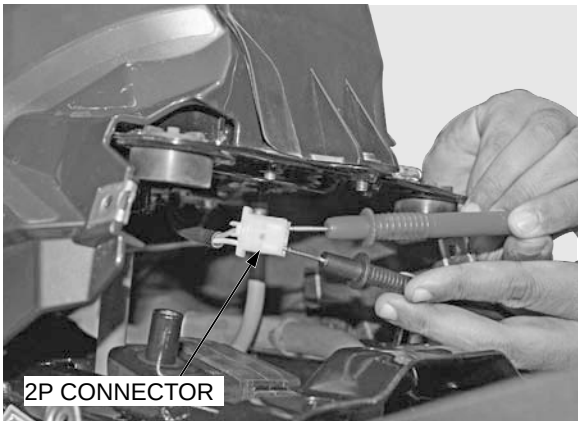

REMOVAL/INSTALLATION

Drain the fuel from the fuel tank into the approved gasoline container.

Remove the fuel tank (page 2-3).

Remove the nuts (4 nos.).

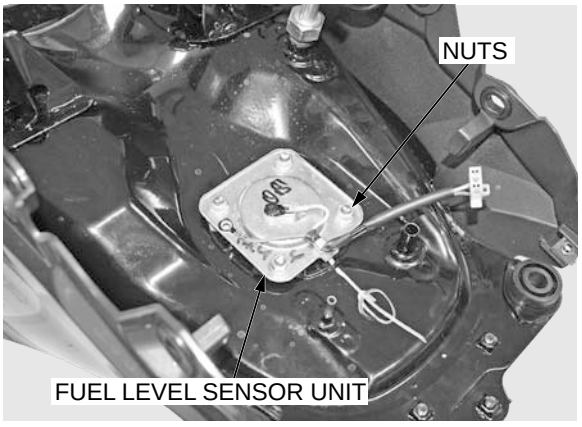

Remove the fuel level sensor unit and O-ring.

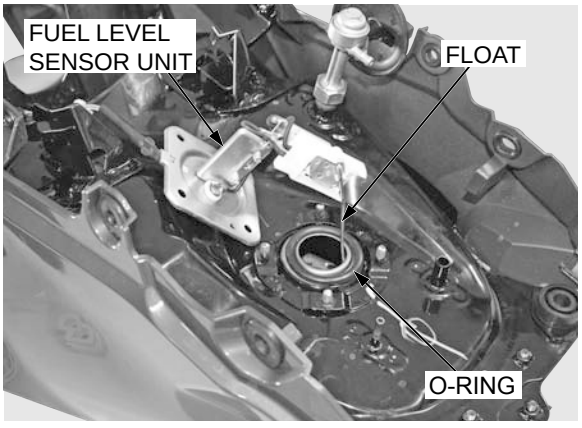

Be careful not to damage the float arm.

Install a new O-ring to the fuel tank.

Install the fuel level sensor unit into the fuel tank.

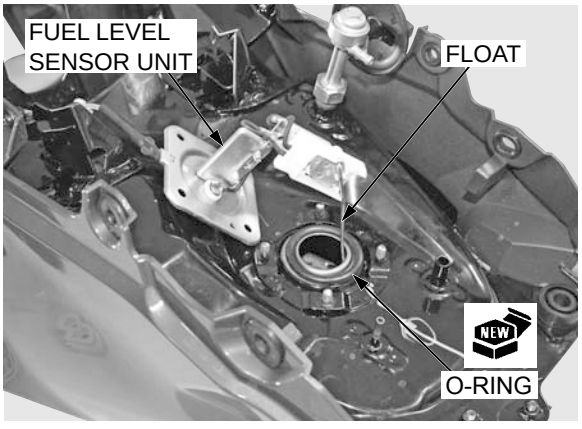

Install the nuts, then tighten them.

TORQUE: 9 N.m (0.9 kgf.m, 7 lbf.ft)

Install the fuel tank (page 2-3).

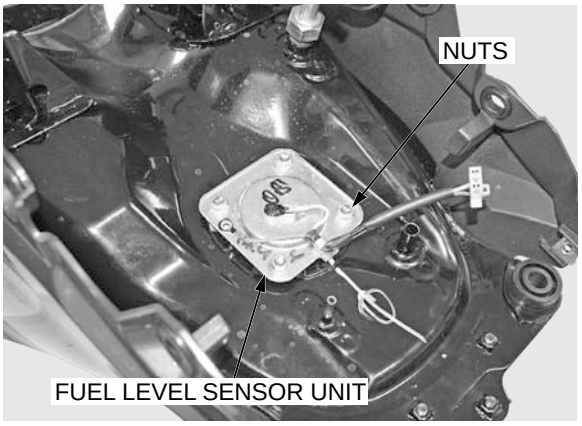

HORN

INSPECTION

Disconnect the wire connectors from the horn.

Connect the battery voltage to the horn terminals.

The horn is normal if it sounds when the battery voltage is connected across the horn terminals.

If horn sound is abnormal adjust the sound with adjusting screw

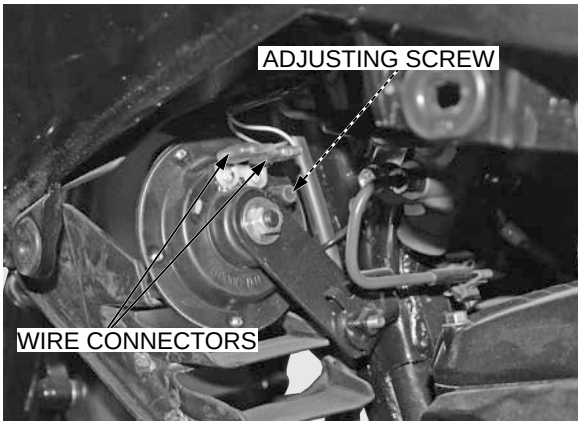

REMOVAL/INSTALLATION

Disconnect the wire connectors from the horn.

Remove the bolt and horn.

Installation is in the reverse order of removal.

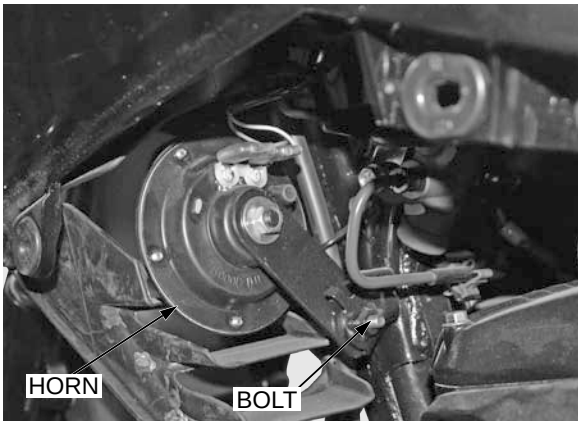

PASSING RELAY

REMOVAL/INSTALLATION

Remove the front cowl (page 2-5).

Disconnect the passing relay 5P connector from the relay.

Remove the passing relay from the bracket.

Installation is in the reverse order of removal.

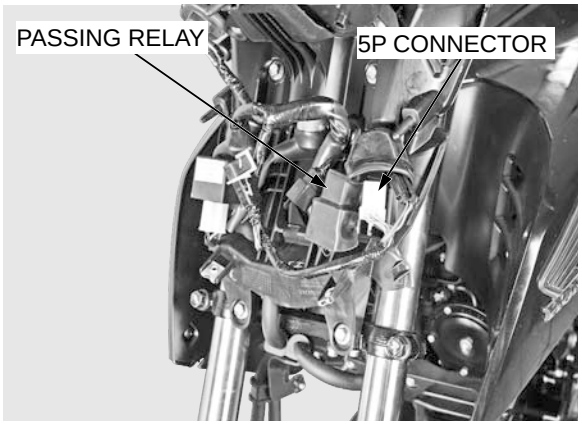

INSPECTION

Connect the ohmmeter to the passing relay connector terminals.

CONNECTION: **A – D**
A – E

Connect the battery to the passing relay connector terminals.

CONNECTION: **B – C**

Refer to the chart, and check for continuity between the terminals when 12V battery is connected.

	A – D	**A – E**
12V battery is connected	Continuity	No Continuity
12V battery is not connected	No Continuity	Continuity

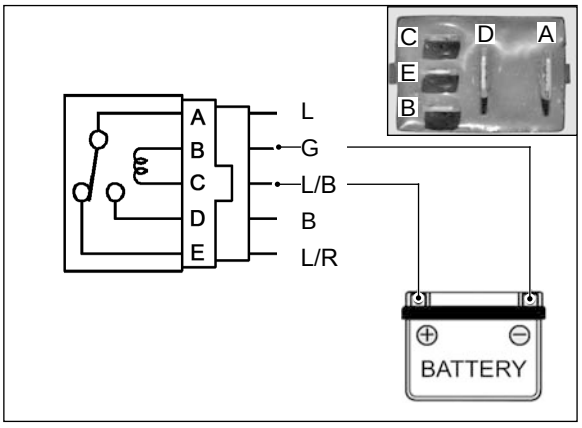

TURN SIGNAL RELAY

INSPECTION

1. Recommended Inspection

Check the following:

– Battery condition
– Burned out bulb or non - specified wattage
– Burned fuse
– Combination and turn signal switches function
– Loose connector

Are the above items in good condition?

NO – Replace or repair the malfunction part(s)

YES – GO TO STEP 2.

2. Turn Signal Circuit Inspection

Remove the front cowl (page 2-5).

Disconnect the turn signal relay 2P White connector from the turn signal relay.

Short the Black and Gray terminals of the turn signal relay connector with a jumper wire.

Start the engine and check the turn signal light by turning the switch “ON”.

Is the light come on?

YES – • Faulty turn signal relay
• Poor connection of the connector

NO – Open circuit in Black or Gray wires

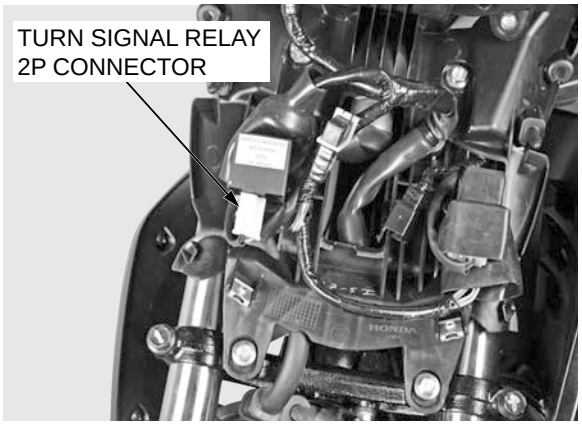

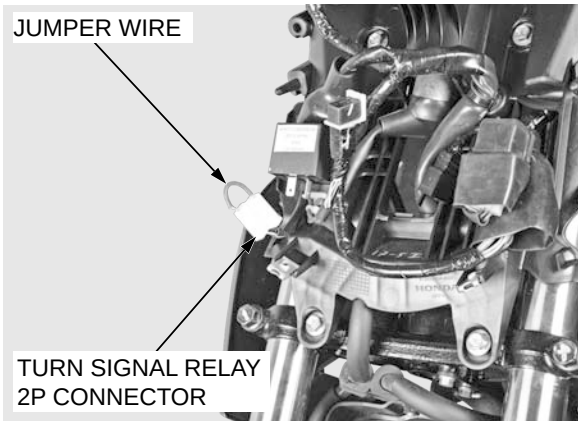

REMOVAL/INSTALLATION

Remove the front cowl (page 2-5).

Disconnect the turn signal relay 2P White connector from the relay.

Remove the turn signal relay from the bracket.

Installation is in the reverse order of removal.

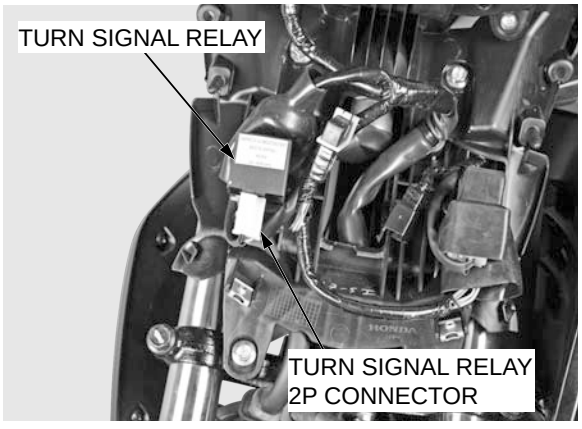

FUSE BOX

REMOVAL/ INSTALLATION

Remove the left side cover (page 2-3).

Unhook the fuse box by pulling the fuse box lock outside from the battery box.

⚠ CAUTION

Don’t pull the fuse box lock with excessive force, it may damage the lock permanently.

Installation is in the reverse order of removal.

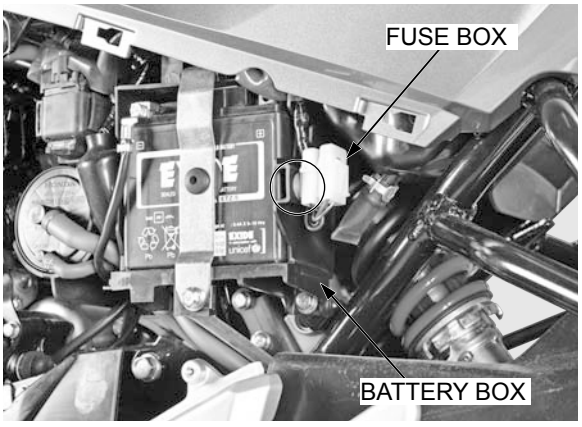

MEMO

ELECTRIC STARTER COMPONENT

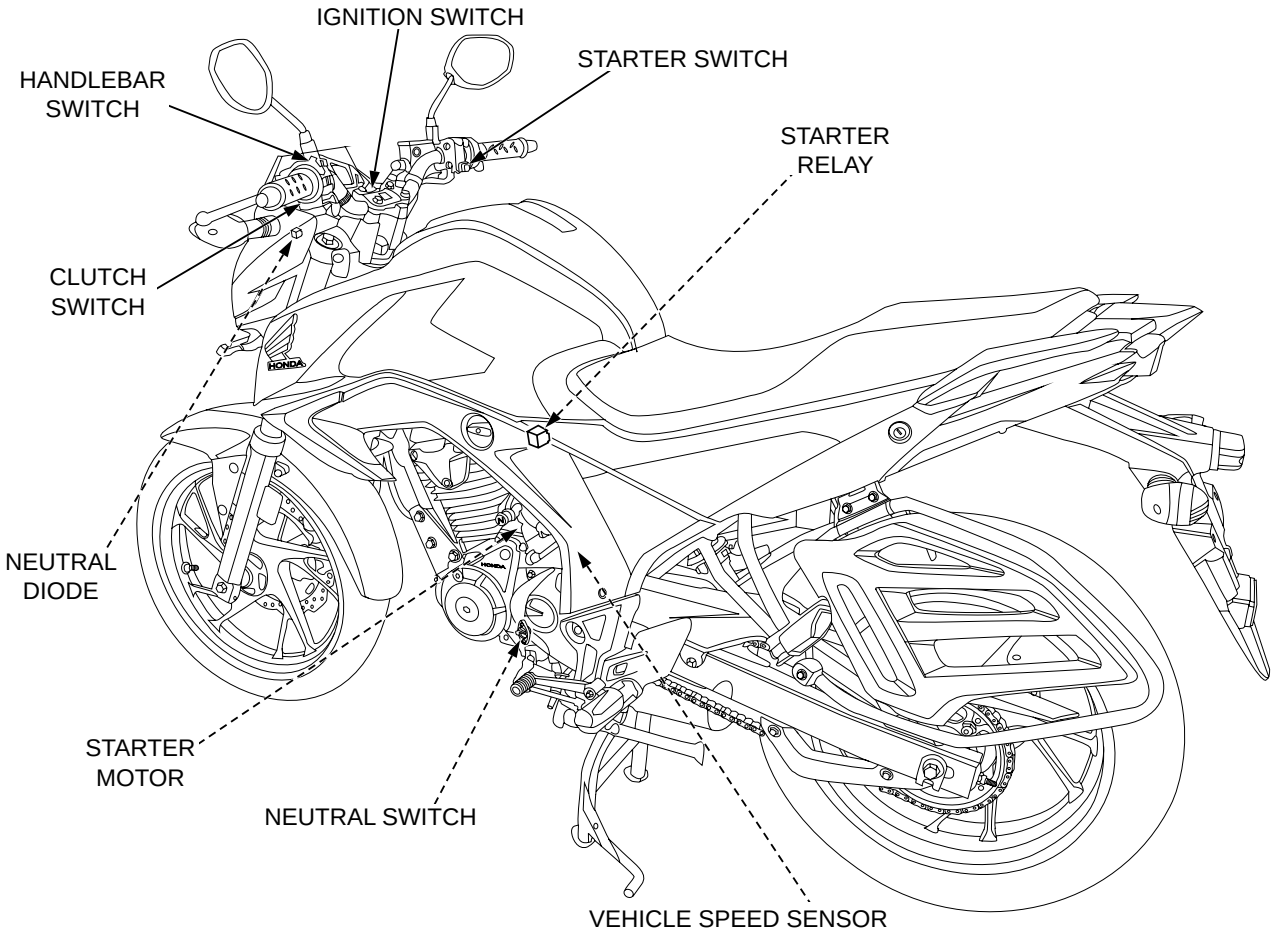

SYSTEM DIAGRAM

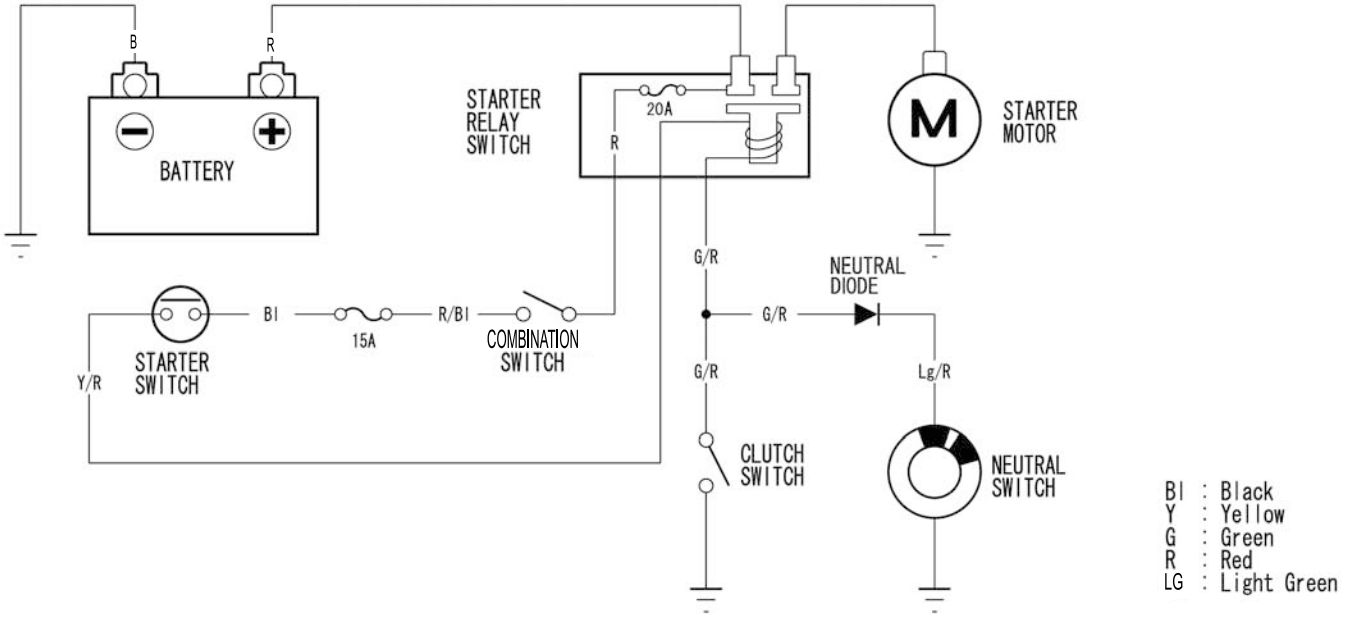

18. ELECTRIC STARTER SYSTEM

ELECTRIC STARTER COMPONENT	18-0	STARTER RELAY SWITCH	18-3
ELECTRIC STARTER DIAGRAM	18-0	NEUTRAL DIODE	18-4
SERVICE INFORMATION	18-1	CLUTCH SWITCH	18-5
TROUBLE SHOOTING	18-1	RIGHT HANDLEBAR SWITCH	18-5

SERVICE INFORMATION

GENERAL

If the current is kept flowing through the starter motor to turn it while the engine is not cranking over, the starter motor may be damaged.

- Always turn the ignition switch OFF before servicing the starter motor. The motor could suddenly start, causing serious injury.
- The starter motor can be serviced with the engine in the frame.
- When checking the starter system, always follow the steps in the troubleshooting (page 18-1).
- A weak battery may be unable to turn the starter motor quickly enough, or supply adequate ignition current.
- Refer to the following:
  - Starter clutch (page 10-6)
  - Combination switch (page 17-10)
  - Starter switch (page 18-3)
  - Neutral switch (page 17-12)
  - Clutch switch (page 18-5)

TROUBLESHOOTING

BATTERY IS DAMAGED OR WEAK

1. **Fuse Inspection**
   Check for blown main fuse or sub fuse.
   Is the fuse blown?

   YES – Replace the fuse.
   NO – GO TO STEP 2.

2. **Battery Inspection**
   Make sure the battery is fully charged and in good condition.
   Is the battery in good condition and fully charged?

   YES – GO TO STEP 3.
   NO – Change or replace the battery

3. **Battery cable Inspection**
   Check the battery cables for loose or poorly connected terminal, and for an open circuit.
   I*s the battery cable in good condition?*

   YES – Faulty regulator/rectifier
   NO – • Loose or poorly connected battery cables.
   • Open circuit in the battery cable.

4. **Starter Motor Cable Inspection**
   Check the starter motor cable for loose or poorly connected terminal, and for an open circuit.
   Is the starter motor cable in good condition?

   YES – GO TO STEP 5.
   NO – • Loose or poorly connected starter motor cable.
   – • Open circuit in the starter motor cable.

5. **Starter Relay Switch Operation Inspection**
   Check the operation of the starter relay switch (page 18-3)
   Does the starter relay switch click?

   YES – GO TO STEP 6.
   NO – GO TO STEP 7.

6. Starter Motor Inspection

Connect the starter motor terminal to the battery positive terminal directly.
(A large amount of current flows, so do not use a thin wire.)

Does the starter motor turn?

YES – GO TO STEP 9.
NO – GO TO STEP 7.

7. Relay Coil Ground Line Inspection

Check the ground line of the starter relay switch (page 18-3).

Is the ground line normal?

YES – GO TO STEP 8.
NO –
- Faulty neutral switch (page 17-12)
- Faulty neutral diode (page 18-4)
- Faulty clutch switch (page 18-5)
- Loose or poor contact of the related connector terminal.
- Open circuit in the wire harness.

8. Relay Coil Power Input Line Inspection

Check the power input line of the starter relay switch (page 18-3).

Is the power input line normal?

YES – GO TO STEP 9.
NO –
- Faulty ignition switch (page 17-10).
- Faulty starter switch (page 18-3).
- Loose or poor contact of the related connector terminal.
- Open circuit in the wire harness.

9. Starter Relay Switch Inspection

Check the function of the starter relay switch (page 18-3).

Does the starter relay switch function properly ?

YES – Faulty starter relay switch.
NO – Loose or poor contact of the starter relay switch connector.

Starter motor turns engine slowly

- Low battery voltage
- Poorly connected battery cable
- Poorly connected starter motor cable
- Faulty starter clutch
- Poorly connected ground cable terminal

Starter motor turns, but engine does not turn

- Starter motor is running backwards
- – Case assembled improperly
  – Terminals connected improperly
- Faulty starter clutch
- Damaged or faulty starter gear train

Starter relay switch clicks, but engine does not turn over

- Crankshaft does not turn due to engine problems

STARTER RELAY SWITCH

REMOVAL/INSTALLATION

Remove the left side cover (page 2-3).

Disconnect the negative (–) cable from the battery.

Pull the starter relay from the battery tray.

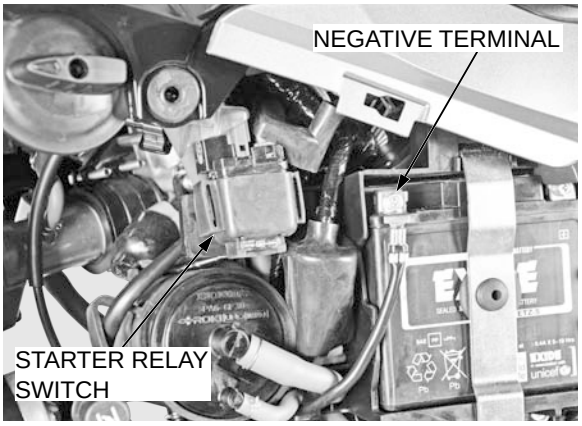

Disconnect the starter relay switch 4P (Red) connector.

Remove the socket bolts, battery cable and starter motor cable from the starter relay switch.

Remove the starter relay switch from the stay.

Installation is in the reverse order of removal.

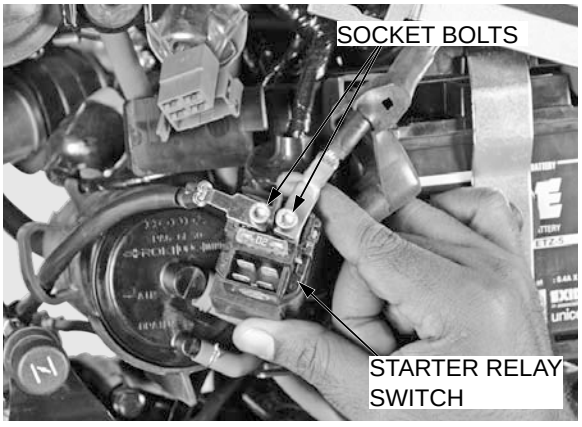

OPERATION INSPECTION

Remove the left side cover (page 2-3).

Shift the transmission into neutral.

Turn the ignition switch to “ON’ and push the starter switch.

The coil is normal if the starter relay switch clicks.

If you don’t hear the switch click, inspect the relay switch circuit.

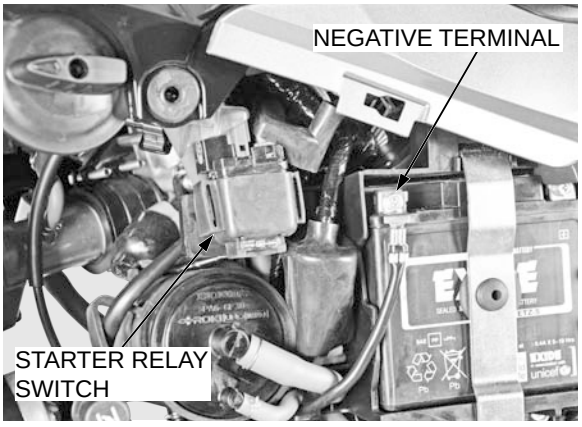

CIRCUIT INSPECTION

GROUND LINE

Turn the ignition switch to “OFF”.

Disconnect the starter relay switch 4P (Red) connector.

Check for continuity between the Green/Red wire terminal of the wire harness side connector and ground.

If there is continuity when the transmission is in neutral or when the clutch lever is squeezed, the ground circuit is normal.

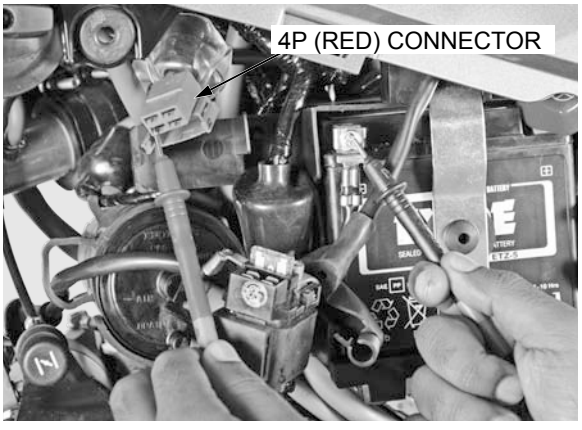

POWER INPUT LINE

Connect the starter relay switch 4P (Red) connector.

Turn the ignition switch to “ON”.

Measure the voltage between the yellow/Red wire terminal (+) and ground (–).

If the battery voltage appears only when the starter switch is pushed, the circuit is normal.

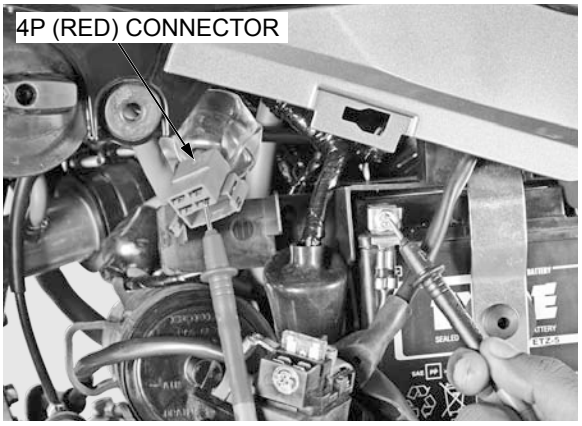

FUNCTION INSPECTION

Remove the starter relay switch (page 18-3).

Connect an ohmmeter to the starter relay switch cable terminals.

Connect the fully charged 12V battery to the starter relay switch connector terminals (A and B terminals).

There should be continuity between the cable terminals while the battery is connected and no continuity when the battery is disconnected.

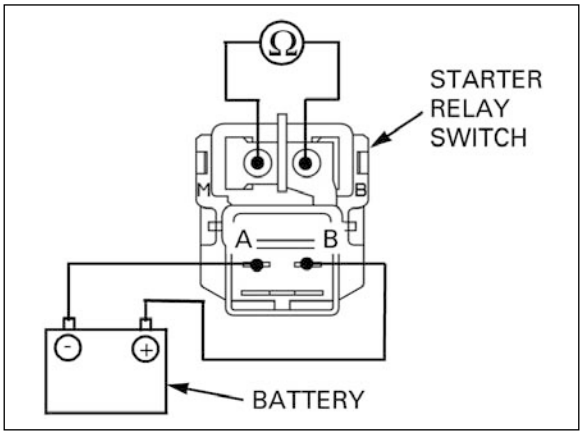

NEUTRAL DIODE

INSPECTION

Remove the front cowl (page 2-3).

Release the neutral diode.

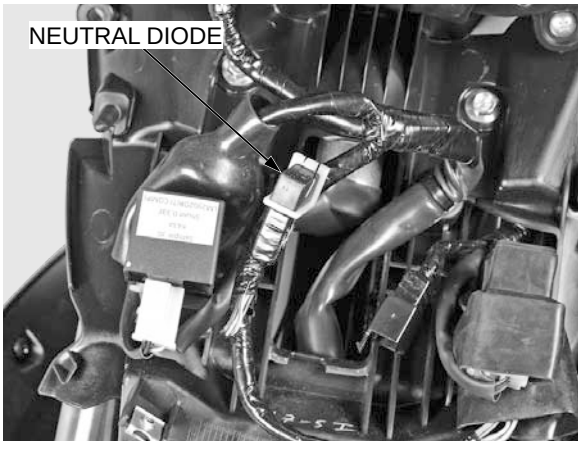

Check for continuity between the diode terminals.

When there is continuity, a small resistance value will register.

If there is continuity in one direction, the diode is normal.

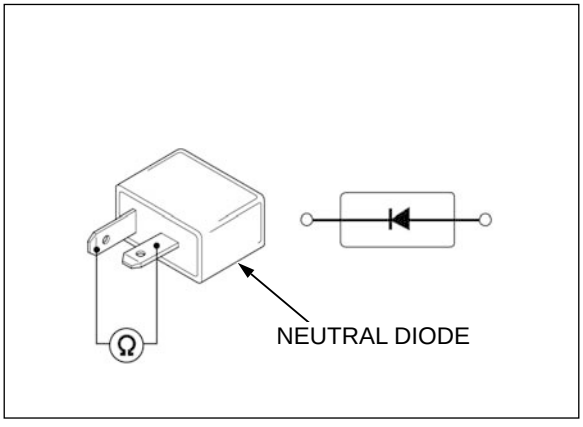

CLUTCH SWITCH

INSPECTION

Disconnect the clutch switch connectors.

There should be continuity with the clutch lever applied, and there should be no continuity when the clutch lever is released.

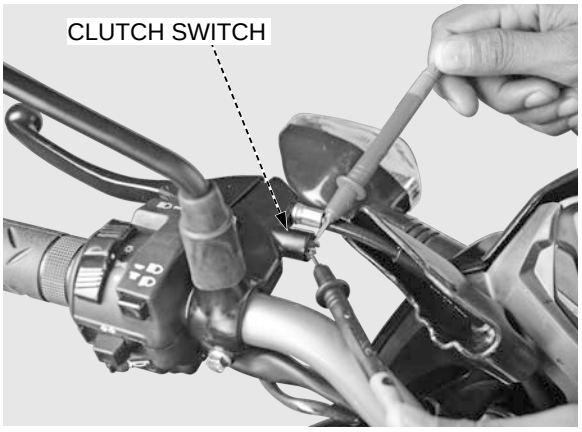

RIGHT HANDLEBAR SWITCHES

Remove the front cowl (page 2-2).

Disconnect the right handlebar switch 3P (Black) connector.

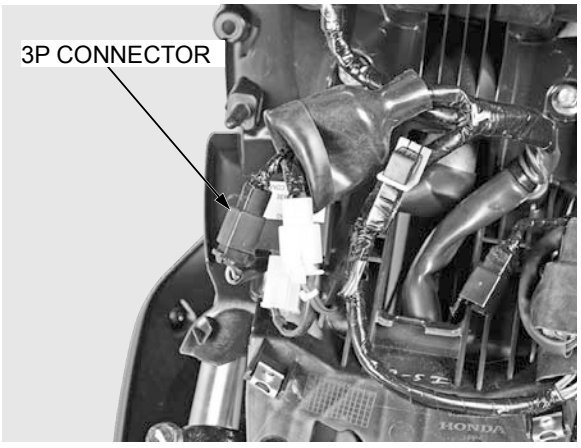

Check for continuity between the terminals in each switch position according to the table.

STARTER SWITCH

	BAT	ST
FREE		
PUSH	○———	———○
COLOR	B	Y/R

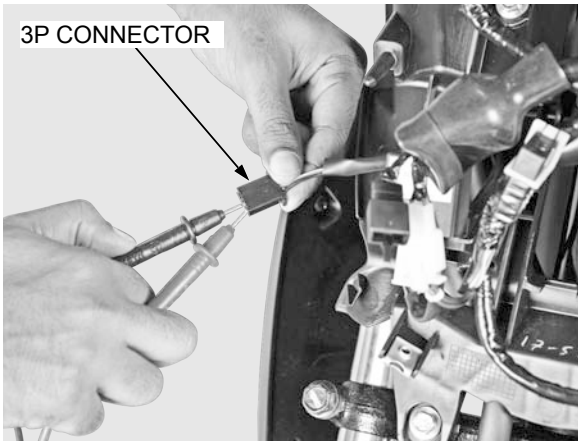

MEMO

STANDARD AND CBS (CB HORNET 160R)

19-1

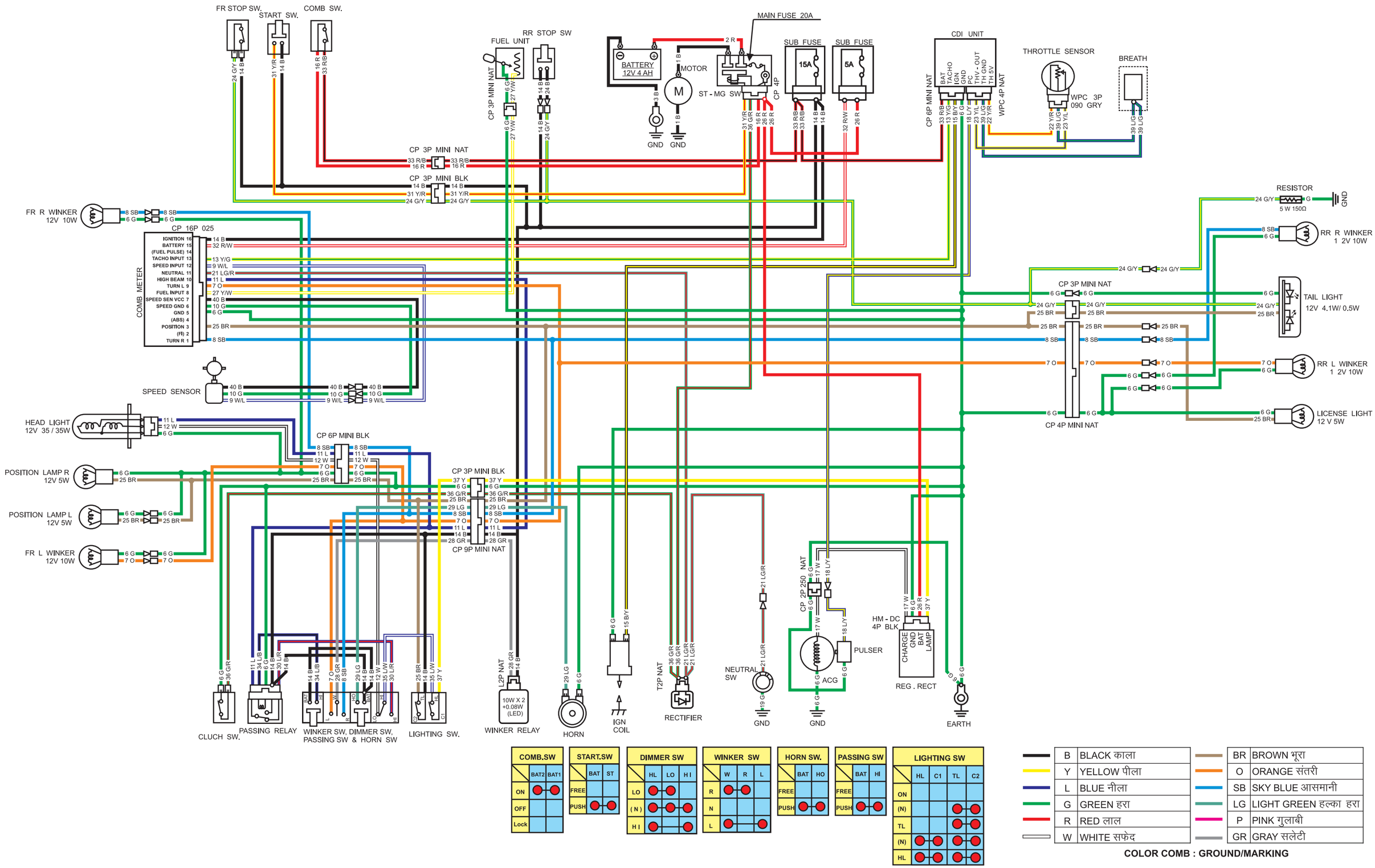

COMB.SW	BAT2	BAT1
ON	●	
OFF		
Lock		

START.SW	BAT	ST
FREE		
PUSH	●	

DIMMER SW	HL	LO	HI
LO	●	●	
(N)	●		●
HI		●	●

WINKER SW	W	R	L
R	●	●	
N			
L			●

HORN SW.	BAT	HO
FREE		
PUSH	●	●

PASSING SW	BAT	HI
FREE		
PUSH	●	●

LIGHTING SW	HL	C1	TL	C2
ON				
(N)			●	●
TL			●	●
(N)	●	●	●	●
HL	●	●	●	●

B	BLACK काला	BR	BROWN भूरा
Y	YELLOW पीला	O	ORANGE संतरी
L	BLUE नीला	SB	SKY BLUE आसमानी
G	GREEN हरा	LG	LIGHT GREEN हल्का हरा
R	RED लाल	P	PINK गुलाबी
W	WHITE सफेद	GR	GRAY सलेटी

COLOR COMB : GROUND/MARKING

20. TROUBLESHOOTING

ENGINE DOES NOT START OR IS HARD TO START	**20-1**	**POOR PERFORMANCE AT HIGH SPEED**	**20-5**
ENGINE LACKS POWER	**20-2**	**POOR HANDLING**	**20-5**
POOR PERFORMANCE AT LOW AND IDLE SPEED	**20-4**		

ENGINE DOES NOT START OR IS HARD TO START

1. **Fuel Line Inspection**
   Check fuel flow to carburetor..
   Does fuel reach the carburetor?
   NO – Faulty fuel system.
   YES – GO TO STEP 2.
2. **Spark Plug Inspection**
   Remove and inspect the spark plug.
   Is the spark plug wet?
   YES –
   - Flooded carburetor
   - Throttle valve open
   - Dirty air cleaner
   - Improperly adjusted pilot screw

   NO – GO TO STEP 3**.**
3. **Spark Test**
   Perform spark test.
   Is there weak or no spark?
   YES –
   - Faulty spark plug
   - Loose or disconnected ignition system wires
   - Broken or shorted spark plug wire
   - Faulty ignition coil
   - Faulty ignition pulse generator
   - Faulty ignition switch
   - Faulty CDI
   - Faulty regulator, rectifier Assembly
   - Shorted battery wire

   NO – GO TO STEP 4.
4. **Engine Starting Condition**
   Start by following normal procedure.
   Does the engine start then stops?
   YES –
   - Improper choke operation
   - Incorrectly adjusted carburetor
   - Leaking carburetor insulator
   - Improper ignition timing (Faulty CDI or ignition pulse generator)
   - Contaminated fuel

   NO – GO TO STEP 5.
5. **Cylinder Compression Inspection**
   Test cylinder compression.
   Is the compression low?
   YES –
   - Valve clearance too small
   - Valve stuck open
   - Worn cylinder and piston rings
   - Leaking/damaged cylinder head gasket
   - Seized valve
   - Improper valve timing
   - Loose spark plug
   - Carbon deposition on valves

ENGINE LACKS POWER

1. **Drive Train Inspection**
   Raise the wheels off the ground, and spin them by hand.
   Does the wheel spin freely?
   NO – • Brake dragging
   • Worn or damaged wheel bearings
   • Bent axle
   YES – GO TO STEP 2.
2. **Tire Pressure Inspection**
   Check tire pressure.
   Are the tire pressures low?
   YES – • Faulty tire valve
   • Punctured tire
   NO – GO TO STEP 3.
3. **Clutch Inspection**
   Accelerate rapidly from low to second.
   Does the engine speed change accordingly when clutch is engaged?
   NO – • Clutch slipping
   • Improperly adjusted clutch lever free play
   • Worn clutch discs/plates
   • Warped clutch discs/plates
   • Weak clutch spring
   • Additive in engine oil
   YES – GO TO STEP 4.
4. **Engine Performance Inspection**
   Accelerate lightly.
   Does the engine speed increase?
   NO – • Fuel/air mixture too rich or lean
   • Clogged air cleaner
   • Restricted fuel flow
   • Clogged muffler
   • Clogged fuel fill cap breather
   YES – GO TO STEP 5.
5. **Engine Performance Inspection**
   Accelerate or run at high speed.
   Is there knocking?
   YES – • Worn piston and cylinder
   • Use of poor quality fuel
   • Excessive carbon build–up in combustion chamber
   • Ignition timing too advance (Faulty CDI or ignition pulse generator)
   • Lean fuel mixture
   NO – GO TO STEP 6.
6. **Ignition Timing Inspection**
   Check the ignition timing.
   Is the ignition timing correct?
   NO – • Faulty CDI
   • Faulty ignition pulse generator
   YES – GO TO STEP 7.
7. **Engine Oil Inspection**
   Check the engine oil level and condition.
   Is there correct level and good condition?
   NO – • Oil level too high
   • Oil level too low
   • Contaminated oil
   YES – GO TO STEP 8.

8. Spark Plug Inspection
Remove and inspect the spark plug.
Are the spark plug in good condition?

NO – • Plugs not serviced frequently enough
• Incorrect spark plug used
• Incorrect spark plug gap

YES – GO TO STEP 9.

9. Cylinder compression Inspection
Test the cylinder compression.
Is the compression low?

YES – • Valve clearance too small
• Valve stuck open
• Worn cylinder and piston rings
• Leaking/damaged cylinder head gasket
• Seized valve
• Improper valve timing

NO – GO TO STEP 10.

10. Carburetor Inspection
Check carburetor for clogging.
Is the carburetor for clogged?

YES – Carburetor not serviced frequently enough.
NO – GO TO STEP 11.

11. Lubrication Inspection
Remove the cylinder head cover, and inspect lubrication.
Is the valve train lubricated properly?

NO – • Clogged oil passage
• Clogged oil strainer
• Broken gear oil pump
• Faulty oil pump

POOR PERFORMANCE AT LOW AND IDLE SPEED

1. **Pilot Screw Inspection**
   Check the pilot screw adjustment.
   Is the adjustment correct?
   NO – See page –19
   YES – GO TO STEP 2.
2. **Intake Air Leak Inspection**
   Check for leaking carburetor insulator.
   Is there leaking?
   YES – • Loose carburetor insulator bands
   • Damaged insulator
   NO – GO TO STEP 3.
3. **Spark Test**
   Perform spark test.
   Is there weak or no spark?
   YES – • Faulty spark plug
   • Fouled spark plug
   • Loose or disconnected ignition system wires
   • Broken or shorted spark plug wire
   • Faulty ignition coil
   • Faulty ignition pulse generator
   • Faulty ignition switch
   • Faulty CDI
   NO – GO TO STEP 4.
4. **Ignition Timing Inspection**
   Check the ignition timing.
   Is the ignition timing correct?
   NO – • Faulty CDI
   • Faulty ignition pulse generator

POOR PERFORMANCE AT HIGH SPEED

1. **Fuel Line Inspection**
   Disconnect the fuel line at carburetor.
   Does fuel flow freely?
   NO – Faulty fuel system
   YES – GO TO STEP 2.
2. **Carburetor Inspection**
   Check the carburetor for clogging.
   Is the carburetor clogged?
   YES – Carburetor not serviced frequently enough
   NO – GO TO STEP 3.
3. **Ignition Timing Inspection**
   Check the ignition timing.
   Is the ignition timing correct?
   NO – • Faulty CDI
   • Faulty ignition pulse generator
   YES – GO TO STEP 4.
4. **Valve Timing Inspection**
   Check the valve timing.
   Is the valve timing correct?
   NO – Cam sprocket not installed properly
   YES – GO TO STEP 5.
5. **Valve Spring Inspection**
   Check the valve springs.
   Are the valve spring free length as specified?
   NO – Faulty valve spring
   YES – Not weak

POOR HANDLING

Steering is heavy
- Steering bearing adjusting nut too tight
- Damaged steering head bearings

Either wheel is wobbling
- Excessive wheel bearing play
- Bent rim
- Improperly installed wheel hub
- Excessively worn swingarm pivot bushings
- Bent frame

Motorcycle pulls to one side
- Front and rear wheels not aligned
- Faulty shock absorber
- Bent fork
- Bent swingarm
- Bent axle
- Bent frame

MEMO

21. INDEX

AIR CLEANER....3-6
AIR CLEANER HOUSING....5-3
AIR BLEEDING(CBS)....14-3
ALTERNATOR CHARGING COIL....15-8
BALANCER....11-4
BATTERY
  BATTERY/CHARGING SYSTEM....15-5
  MAINTENANCE....3-18
BEARING REPLACEMENT OF CRANKCASE....11-10
BEARING REPLACEMENT OF CRANKSHAFT....11-12
BRAKE FLUID REPLACEMENT/
BRAKE FLUID FILLING/AIR BLEEDING(CBS)....14-4
BRAKE FLUID....3-18
BRAKE PEDAL....14-27
BRAKE PADS WEAR....3-20
BRAKE SYSTEM....3-21
BRAKE LIGHT SWITCH(MAINTENANCE)....3-22
BRAKE LIGHT SWITCH....17-12
BRAKE/TAIL LIGHT....17-3
BRAKE FLUID FILLING....14-5
CAPACITIVE DISCHARGE IGNITION(CDI)....16-6
CABLE & HARNESS ROUTING....1-15
CAM CHAIN TENSIONER LIFTER....7-21
CAM SHAFT HOLDER
  CYLINDER HEAD REMOVAL....7-10
  DISASSEMBLY/ASSEMBLY....7-12
  CYLINDER HEAD INSTALLATION....7-19
CARBURETOR....5-6
CHARGING SYSTEM INSPECTION....15-7
CHOKE OPERATION....3-5
CLUTCH....9-6
CLUTCH SYSTEM....3-22
CLUTCH SWITCH....18-5
COMBINATION METER....17-5
COVER HEADLIGHT RR....2-2
COMPONENT LOCATION
  ALTERNATOR....10-0
  BRAKE SYSTEM....14-0
  CLUTCH/GEARSHIFT LINKAGE....9-0
  CRANKCASE/TRANSMISSION/
  KICKSTARTER....11-0
  CYLINDER HEAD/VALVES....7-0
  CYLINDER/PISTON....8-0
  ENGINE REMOVAL/INSTALLATION....6-0
  FRONT WHEEL/SUSPENSION/STEERING....12-0
  FUEL SYSTEM....5-0
  REAR WHEEL/SUSPENSION....13-0
  BATTERY/CHARGING SYSTEM....15-0
  ELECTRIC STARTER SYSTEM....18-0
  IGNITION SYSTEM....16-0
  LIGHTS/METER/SWITCHES....17-0
  LUBRICATION SYSTEM....4-0
CRANKCASE ASSEMBLY....11-17
CRANKCASE BREATHER....3-7
CRANKSHAFT....11-8
CRANKCASE SEPARATION....11-4
CYLINDER COMPRESSION....7-4
CYLINDER HEAD COVER....7-4
CYLINDER HEAD DISASSEMBLY/ASSEMBLY....7-12
CYLINDER/PISTON....8-2
DIGITAL METER RESET PROCEDURE....17-9
DRIVE CHAIN....3-16
DRIVEN FLANGE....13-9
EMISSION CONTROL SYSTEMS....1-22
ENGINE & FRAME TORQUE VALUES....1-10
ENGINE IDLE SPEED....3-14
ENGINE INSTALLATION....6-4
ENGINE OIL....3-10
ENGINE OIL CENTRIFUGAL FILTER....3-12
ENGINE OIL STRAINER SCREEN....4-2
ENGINE REMOVAL....6-2
EXHAUST PIPE/MUFFLER....2-8
FLYWHEEL....10-4
FORK....12-14
FRONT BRAKE(CBS)....14-3
FRONT BRAKE PAD/DISC....14-7
FRONT DISC BRAKE....14-14
FRONT COWL DISASSEMBLY....2-2
FRONT FENDER....2-5
FRONT WHEEL....12-9
FRONT MASTER CYLINDER....14-9
FUEL GAUGE/FUEL LEVEL SENSOR....17-14
FUEL LINE....3-4
FUEL STRAINER....5-22
FUEL STRAINER SCREEN....3-4
FUEL TANK....2-3
GEARSHIFT LINKAGE....9-12
GENERAL SPECIFICATIONS....1-4
HANDLEBAR....12-4
RIGHT HANDLEBAR SWITCHES....18-5
HEADLIGHT....17-2
HEADLIGHT AIM....3-22
HORN....17-1
IGNITION COIL....16-6
IGNITION SYSTEM INSPECTION....16-3
IGNITION TIMING....16-5
KICKSTARTER....11-21
LEFT CRANKCASE COVER....10-2
LEFT HANDLEBAR SWITCH....17-11
LUBRICATION & SEAL POINTS....1-13
LIGHT/METER/SWITCHES....17-1
LEFT SIDE COVER....2-3
MAINTENANCE SCHEDULE....3-3
MAINTENANCE....3-1
MODEL IDENTIFICATION....1-2
NEUTRAL DIODE....18-4
NEUTRAL SWITCH....17-12
NUTS, BOLTS, FASTENERS....3-24
OIL PUMP....4-2
PASSING RELAY....17-16

PRIMARY DRIVE GEAR 9-14
PILOT SCREW ADJUSTMENT 5-15
REAR GRIP 2-6
REAR DRUM BRAKE 14-30
REAR FENDER 2-7
REAR COWL 2-7
REAR MASTER CYLINDER 14-21
REAR WHEEL 13-4
REGULATOR/RECTIFIER 15-9
RIGHT CRANKCASE COVER 9-3
RIGHT HANDLEBAR SWITCHES 18-5
RIGHT SIDE COVER 2-3
SARI GUARD 2-8
SEAT 2-3
SECONDARY AIR SUPPLY SYSTEM
  FUEL SYSTEM 5-19
  MAINTENANCE 3-14
SERVICE INFORMATION
  ALTERNATOR 10-1
  BATTERY/CHARGING SYSTEM 15-1
  BRAKE SYSTEM 14-1
  CLUTCH/GEARSHIFT LINKAGE 9-1
  CRANKCASE/TRANSMISSION/KICKSTARTER ... 11-1
  CYLINDER HEAD/VALVES 7-1
  CYLINDER/PISTON 8-1
  ELECTRIC STARTER SYSTEM 18-1
  ENGINE REMOVAL/INSTALLATION 6-1
  FRAME/BODY PANELS/EXHAUST SYSTEM 2-1
  FRONT WHEEL/SUSPENSION/STEERING 12-1
  FUEL SYSTEM 5-1
  IGNITION SYSTEM 16-1
  LIGHTS/METER/SWITCHES 17-1
  LUBRICATION SYSTEM 4-1
  MAINTENANCE 3-1
  REAR WHEEL/SUSPENSION 13-1
SERVICE RULES 1-1
SPECIFICATIONS
  ALTERNATOR/STARTER CLUTCH 1-6
  BATTERY/CHARGING SYSTEM 1-8
  CLUTCH/GEARSHIFT LINKAGE 1-6
  CRANKCASE/TRANSMISSION/KICKSTARTER 1-7
  CYLINDER HEAD/VALVES 1-5
  CYLINDER/PISTON 1-6
  ELECTRIC STARTER 1-9
  FRONT WHEEL/SUSPENSION/STEERING 1-7
  FUEL SYSTEM 1-5
  HYDRAULIC BRAKE 1-8
  IGNITION SYSTEM 1-9
  LIGHTS/METER/SWITCHES 1-9
  LUBRICATION SYSTEM 1-5
  REAR WHEEL/BRAKE/SUSPENSION 1-8
SHOCK ABSORBER 13-12
SIDE COVERS 2-3
SIDE STAND 3-23
SPARK PLUG 3-7
SPEEDOMETER VS SENSOR 17-7
STANDARD TORQUE VALUES 1-10
STARTER CLUTCH 10-6
STARTER MOTOR 10-8
STARTER RELAY SWITCH 18-3
STATOR/IGNITION PULSE GENERATOR 10-16
STEERING HEAD BEARINGS 3-25
STEERING STEM 12-22
STARTING ENRICHMENT(SE) VALVE 5-5
SUSPENSION 3-23
SWINGARM 13-13
SYSTEM DIAGRAM
  BATTERY/CHARGING SYSTEM 15-0
  IGNITION SYSTEM 16-0
TACHOMETER 17-8
THROTTLE OPERATION 3-5
THROTTLE POSITION SENSOR 16-7
TRANSMISSION 11-6
TROUBLESHOOTING
  BATTERY/CHARGING SYSTEM 15-2
  BRAKE SYSTEM 14-2
  CLUTCH/GEARSHIFT LINKAGE 9-2
  CRANKCASE/TRANSMISSION/KICKSTARTER 11-2
  CYLINDER HEAD/VALVES 7-2
  CYLINDER/PISTON 8-1
  ELECTRIC STARTER SYSTEM 18-1
  FRAME/BODY PANELS/EXHAUST SYSTEM 2-1
  FRONT WHEEL/SUSPENSION/STEERING 12-3
  FUEL SYSTEM 5-2
  IGNITION SYSTEM 16-1
  LUBRICATION SYSTEM 4-1
  REAR WHEEL/SUSPENSION 13-3
TURN SIGNAL LIGHTS 17-4
TURN SIGNAL RELAY 17-17
VALVE CLEARANCE 3-8
WHEELS/TIRES 3-24

HONDA

The Power of Dreams

© Honda Motor Co.,Ltd.2015
82K43P0

Published by Honda Motorcycle & Scooter India Pvt. Ltd.