Powertrain Management: Application and ID

VIN Information

MEANING OF VIN - JF1KA72AXKB700001

VIN Plate Location: Left side of instrument panel, visible through windshield, and under hood on firewall.

J ..... Manufacturer and make
F

1 ..... Type of vehicle (1 = passenger car)

K ..... Line (K = Fuji Subaru J Line)

A ..... Body type (A: 3-door hatchback, D: 5-door hatchback)

7 ..... Series and engine type (7: 1.2L engine, 8: 1.2L engine 4WD)

2 ..... Model (2: DL model, 3: GL model)

A ..... Weight class and restraint system

X ..... Check digit

K ..... Model year (L: 1990)

B ..... Plant of manufacturer and trans. type **[1]**

700001 ..... Sequential number **[2]**

[1] B: Gunma - 5MT, C: Gunma - ECVT, D: Gunma - 4WD 5MT, F: Gunma - 4WD ECVT.

[2] 700001 and after: 3-door hatchback. 750001 and after: 5-door hatchback.

Powertrain Management: Application and ID
Engine ID

ENGINE VIN [1]..... 8
DISPLACEMENT..... 1.2L (1189cc, 72.55cid)
CYLINDERS..... Inline 3
FUEL SYSTEM [2]..... MPFI
IGNITION CONTROL SYSTEM..... Electronic ECU Control
COMPUTER CONTROL SYSTEM..... ECU System

[1] The sixth digit of VIN denotes engine code.
[2] Multi-Point Fuel Injection

Powertrain Management: Application and ID
Emission System Application Chart

DISPLACEMENT..... 1.2L (1189cc, 72.55cid)

CYLINDERS..... Inline 3

DEVICES AND SYSTEMS:

EVAP ..... Evaporative Emission Control System
MPFI ..... Multi-point Fuel Injection
PCV ..... Positive Crankcase Ventilation System
TWC+OC ..... Three-Way Catalytic Converter and Oxidation Catalyst
FR ..... Fill Pipe Restrictor

Powertrain Management: Application and ID
Transmission ID

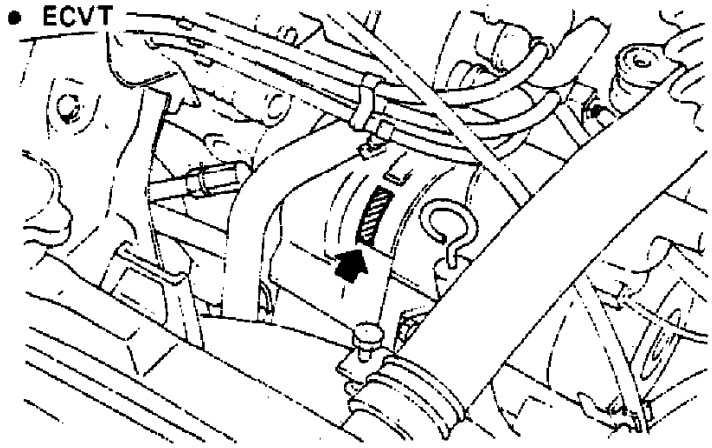

I.D. Number Location

Transmission type and plant of manufacture are the 11th digit of VIN. The VIN plate is located on the left side of the instrument panel, visible through the windshield, and on the firewall in the engine compartment.

JF1KA72AXK**B**700001

B: Gunma - 5MT
C: Gunma - ECVT
D: Gunma - 4WD 5MT
F: Gunma - 4WD ECVT

Powertrain Management: Application and ID
SAE J-1930 Information

Previous Standard		SAE Standard	
Abbreviation	**Name**	**Abbreviation**	**Name**
—	Accelerator Pedal	AP	Accelerator Pedal
—	Air Cleaner	ACH	Air Cleaner Housing
—	Air/Fuel (A/F) Solenoid Valve	MCS	Mixture Control Solenoid
—	Airflow Meter	VAF	Volume Airflow Sensor
—	Airflow Sensor	MAF	Mass Airflow Sensor
—	Alternator	ALT	Alternator
—	Atmospheric Pressure Sensor	BARO	Barometric Absolute Pressure Sensor
—	Carburetor	CARB	Carburetor
—	Catalytic Converter	OC	Oxidation Catalyst
		TWC	Three-Way Catalyst
		WU-TWC	Warm Up Three-Way Catalyst
—	Circuit Opening Relay	FPR	Fuel Pump Relay
—	Cooling Fan Control	CFC	Coolant Fan Control
—	Crank Angle Sensor	CPS	Crankshaft Position Sensor
—	Diagnosis Connector	DLC	Data Link Connector
—	Direct Ignition	DLI	Distributorless Ignition
EGI	Electronic Gasoline Injection System	CIS	Continuous Fuel injection System
—	Electronic Spark Ignition	EI	Electronic Ignition
—	EGR Modulator Solenoid	EGRC	EGR Function Control
—	EGR Gas Sensor	EGRS	EGR Function Sensor
	EGR Position Sensor		
	EGR Position Switch		
ECU	Engine Control Unit	PCM	Powertrain Control Module
		PCME	Powertrain Control Module (Engine)
—	Engine Modification	EM	Engine Modification
—	Engine Speed	RPM	Engine Speed
—	Evaporative Emission Control System	EVAP	Fuel Evaporative System
—	Exhaust Gas Recirculation System	EGR	Exhaust Gas Recirculation
—	Feedback System	CLS	Closed Loop System
—	Flexible Fuel	FF	Flexible Fuel
—	Fuel Pump	FP	Fuel Pump
—	IC Regulator	VR	Voltage Regulator

SAE Standards (Engine & Emission Systems, Part 1)

Previous Standard		SAE Standard	
Abbreviation	**Name**	**Abbreviation**	**Name**
—	Intake Air Thermosensor	IATS	Intake Air Temperature Sensor
—	Intercooler	CAC	Charge Air Cooler
—	ISC Solenoid Valve	IACV	Idle Air Control Valve
—	Knock Sensor	KS	Knock Sensor
—	Malfunction Indicator Light	MIL	Malfunction Indicator Light
—	Multiport Fuel Injection	MFI	Multiport Fuel Injection
—	Oxidizing Converter	OC	Oxidation Catalyst
—	Oxygen Sensor	HO2S	Heated Oxygen Sensor
		O2S	Oxygen Sensor
—	Open Loop	OL	Open Loop
PTC	Positive Temperature Coefficient Heater	EFE	Early Fuel Evaporation
—	Pressure Sensor	MAP	Manifold Absolute Pressure Sensor
		MVS	Manifold Vacuum Sensor
—	Reed Valve	SAPV	Secondary Air Pulse Valve
—	Relief 1 Solenoid Valve	SABV	Secondary Air Bypass Valve
—	Secondary Air Injection System	PAIR	Pulsed Secondary Air Injection
		AIR	Secondary Air Injection
—	Sequential Fuel Injection	SMFI	Sequential Multipoint Fuel Injection
—	Service Code(s)	DTC	Diagnostic Trouble Code(s)
—	Spark Ignition	DI	Distributor Ignition
—	Supercharger	SC	Supercharger
—	Switching Solenoid Valve	SASV	Secondary Air Switching Valve
—	Test Mode(s)	DTM	Diagnostic Test Mode(s)
—	Three-Way Catalyst	TWC	Three-Way Catalyst
—	Throttle Body	TB	Throttle Body
—	Throttle Sensor	TPS	Throttle Position Sensor
—	Turbocharger	TC	Turbocharger
—	VAC	MDP	Manifold Differential Pressure
—	Vacuum Switch	MVZS	Manifold Vacuum Zone Switch
—	Water Thermosensor	ECTS	Engine Coolant Temperature Sensor

SAE Standards (Engine & Emission Systems, Part 2)

Vehicle: Initial Inspection and Diagnostic Overview

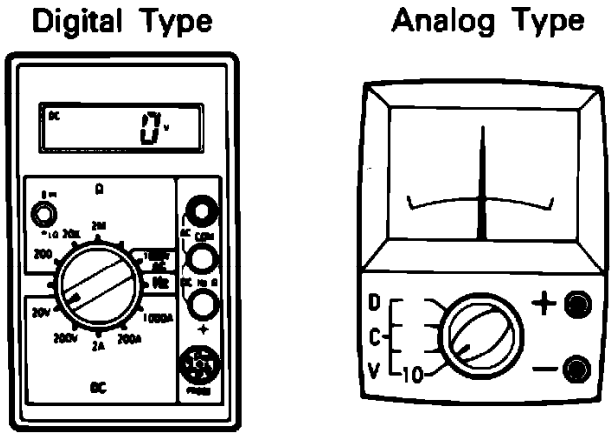

Meter Types

1. Use a digital or analog multimeter with a minimum 10k ohm resistance.
2. Remove the blown fuse and disconnect all loads for that circuit.

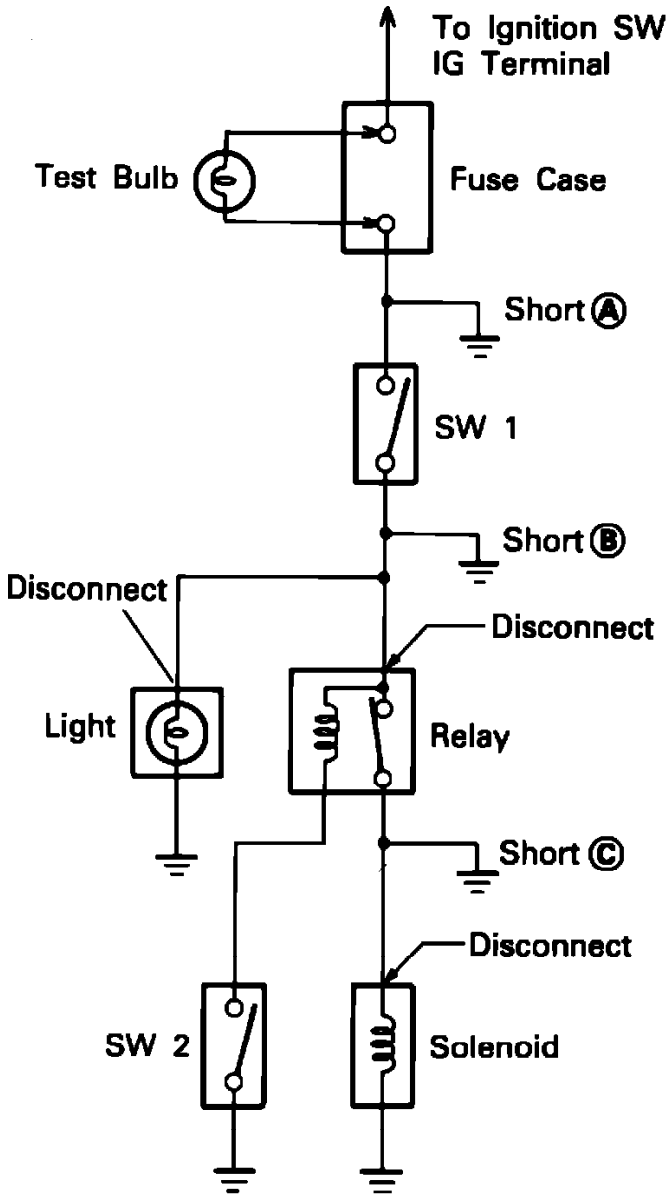

Finding A Short Circuit

3. Connect a test lamp in place of the fuse.
4. Establish conditions that turn the test lamp on.
   EXAMPLE
   a) Ignition SW ON

b) Ignition SW ON and SW 1 ON
c) Ignition SW, SW 1 and Relay ON (connect the relay)

5. Connect and disconnect the components or connectors in the circuit while watching the test light.
   a) The test light will come on when the shorted circuit or component is connected.
   b) The test light will go off when the circuit or component is disconnected

Vehicle: Component Tests and General Diagnostics

Continuity and Resistance Check

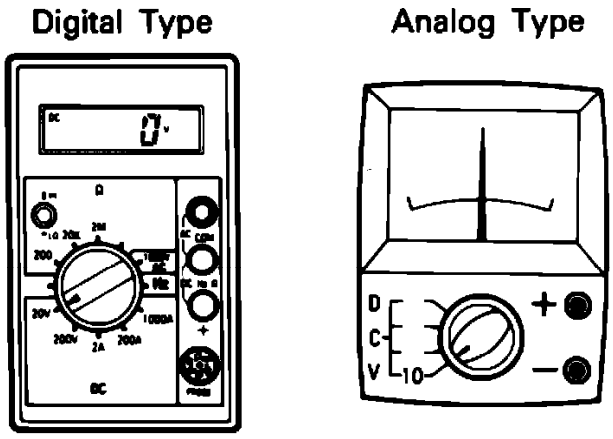

Meter Types

1. Use a digital or analog multimeter with a minimum 10k ohm resistance.
2. Disconnect the battery or connector so there is no power between the check points.
3. Set the ohmmeter to the appropriate range.

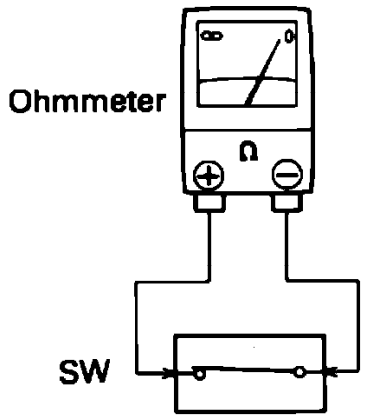

Continuity And Resistance Check

4. Connect the two leads of the meter to each of the check points.

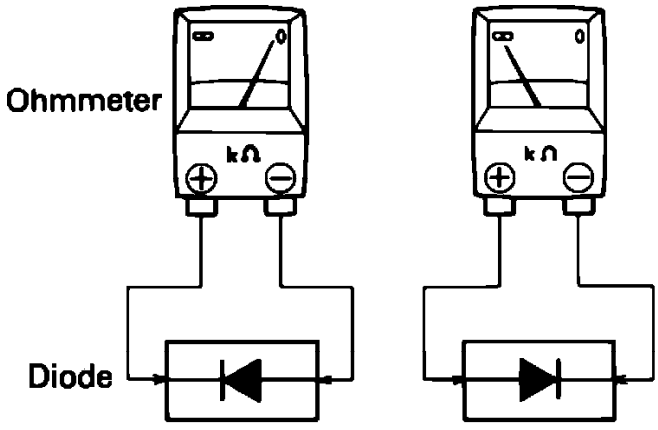

Diode Check

5. If the circuit or component has diodes, reverse the leads and check again.
   a. When contacting the negative lead to the diode's positive side and the positive lead to the negative side, there should be continuity.
   b. When connecting the two leads in reverse, there should not be continuity.

Voltage Check

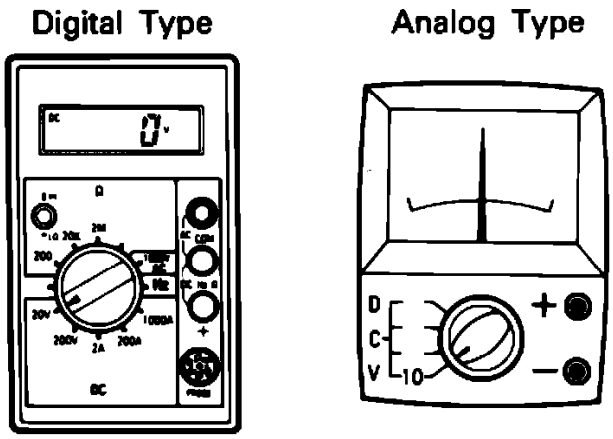

Meter Types

1. Use a digital or analog multimeter with a minimum 10k ohm resistance.

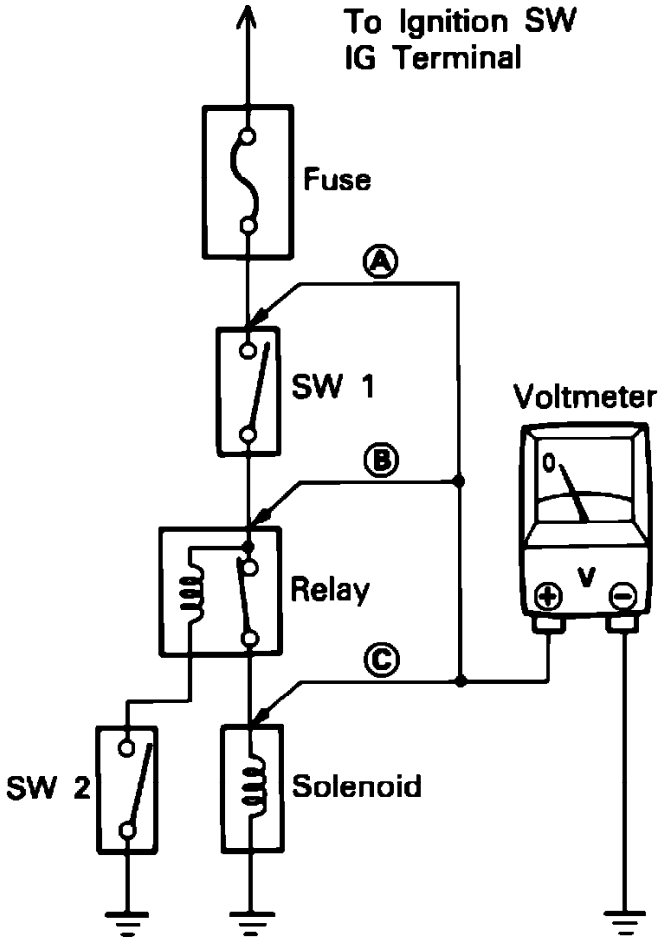

Voltage Check

2. Establish conditions in which voltage should be present at the check point.

   EXAMPLE:
   a) Ignition SW ON
   b) Ignition SW and SW 1 ON
   c) Ignition SW, SW1 and Relay ON (SW 2 OFF)

3. Set the volt meter set to the appropriate range for the circuit being tested.
4. Connect the negative lead to a good ground point or the negative battery terminal, and connect the positive lead to the connector or component terminal.

   NOTE: This test can be done with a test light if the circuit does not include sensitive electrical components, i.e. electrical control units.

Subaru Justy Hatchback 4WD L3-1.2L SOHC (MPFI)

Engine: Service and Repair

NOTE: The engine and transaxle are removed as an assembly on these vehicles.

1. Disconnect battery ground cable and drain cooling system.
2. Remove front bumper and grille.
3. Disconnect hoses and all electrical connections, then remove radiator.
4. Disconnect hood release cable, then remove upper radiator support.
5. Remove air cleaner assembly.
6. Disconnect hoses from carburetor, heater unit, brake booster and AWD to front wheel drive changeover, if equipped. Mark all hoses to aid installation.
7. Disconnect clutch cable from clutch housing and accelerator cable from carburetor.
8. Disconnect speedometer cable at transaxle.
9. Disconnect ignition coil to distributor electrical connections at distributor.
10. Remove pitching stopper rod from bracket.
11. Raise and support vehicle, then remove engine undercovers.
12. Disconnect exhaust pipes from manifold, then the gearshift rod from transaxle.
13. Disconnect propeller shaft from transaxle, if applicable. Cap opening to prevent loss of fluid.
14. Remove transverse link.
15. Using suitable drift, remove spring pin and disconnect front axle from transaxle.
16. Support engine using suitable hoist, then remove engine/transaxle mounting brackets.
17. Raise engine slightly, then remove center member and crossmember.
18. Lift engine/transaxle assembly out of vehicle.
19. Reverse procedure to install noting the following:

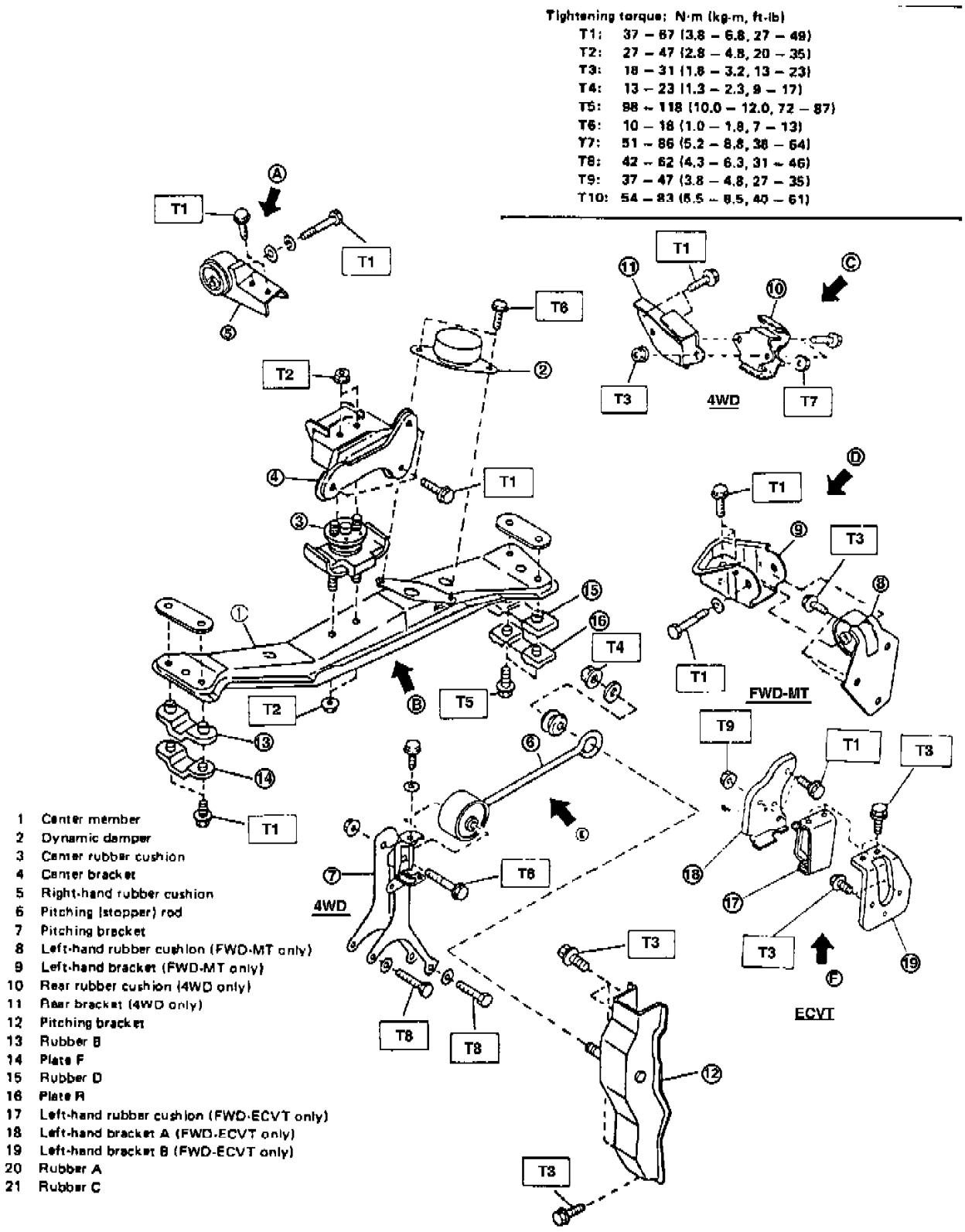

Fig. 1 Exploded View Of Engine Mount

a. Refer to **Specifications** and **Fig. 1** for tightening specifications.
b. Refer to **Drive Belt** for belt routing and tension data.
c. Refer to **Cooling System / Service and Repair** for drain and refill procedure.

Balance Shaft: Service and Repair

1. Remove timing belt cover, timing belt, rocker assembly, camshaft and cylinder head.
2. Remove oil filter, then the alternator, wiring harness and alternator bracket.
3. Remove engine mounting bracket and mounting stay.
4. Lock flywheel with suitable tool, then remove attaching bolts and flywheel.
5. Remove oil dipstick and dipstick tube, then the flywheel housing.
6. Remove oil pan attaching bolts and the oil pan.

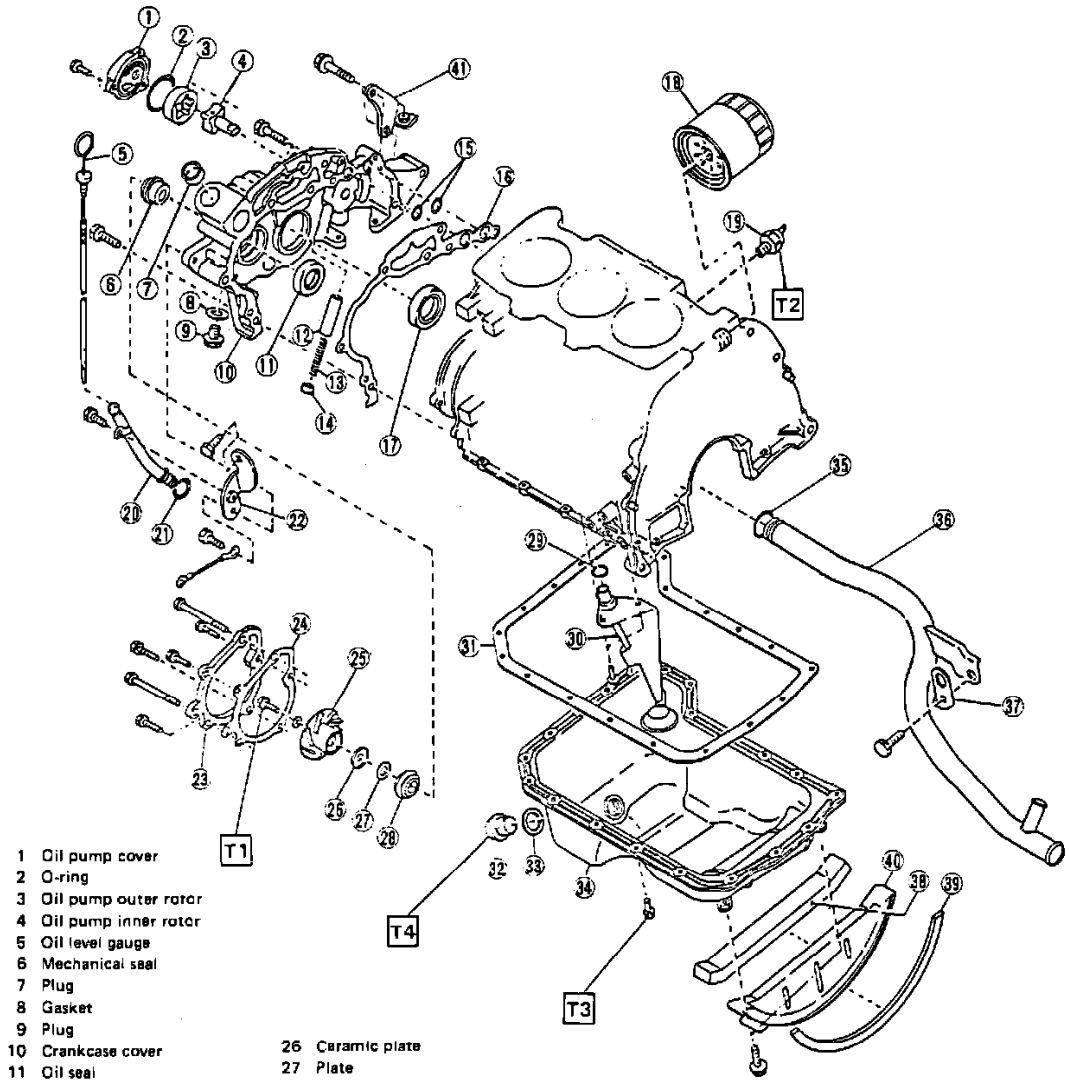

1 Oil pump cover
2 O-ring
3 Oil pump outer rotor
4 Oil pump inner rotor
5 Oil level gauge
6 Mechanical seal
7 Plug
8 Gasket
9 Plug
10 Crankcase cover
11 Oil seal
12 Oil relief valve
13 Relief valve spring
14 Oil pump relief plug
15 O-ring
16 Gasket
17 Oil seal
18 Oil filter
19 Oil pressure switch
20 Oil level gauge guide
21 O-ring
22 Engine mounting stay
23 Water pump cover
24 Gasket
25 Impeller
26 Ceramic plate
27 Plate
28 Mechanical seal
29 O-ring
30 Oil strainer
31 Gasket
32 Oil drain plug
33 Gasket
34 Oil pan
35 O-ring
36 Water pipe
37 Crankcase hanger
38 Rubber plate
39 Rubber plate 2
40 Flywheel housing
41 Bracket

Tightening torque: N·m (kg-m, ft-lb)
T1: 9.3 – 10.3 (0.95 – 1.05, 6.9 – 7.6)
T2: 17 – 23 (1.7 – 2.3, 12 – 17)
T3: 4.4 – 5.4 (0.45 – 0.55, 3.3 – 4.0)
T4: 44 – 49 (4.5 – 5.0, 33 – 36)

Fig. 31 Exploded View Of Crankcase, Oil Pump & Water Pump

7. Remove water pump cover and impeller, then the water pipe, **Fig. 31.** Use a screwdriver to prevent balancer shaft from rotating when removing impeller.
8. Remove oil pump cover attaching bolts, then the cover and inner and outer rotors.
9. Remove crankcase cover.
10. Remove connecting rod cap nuts, then tap piston/rod assemblies from underneath with hammer handle and remove assemblies from crankcase.

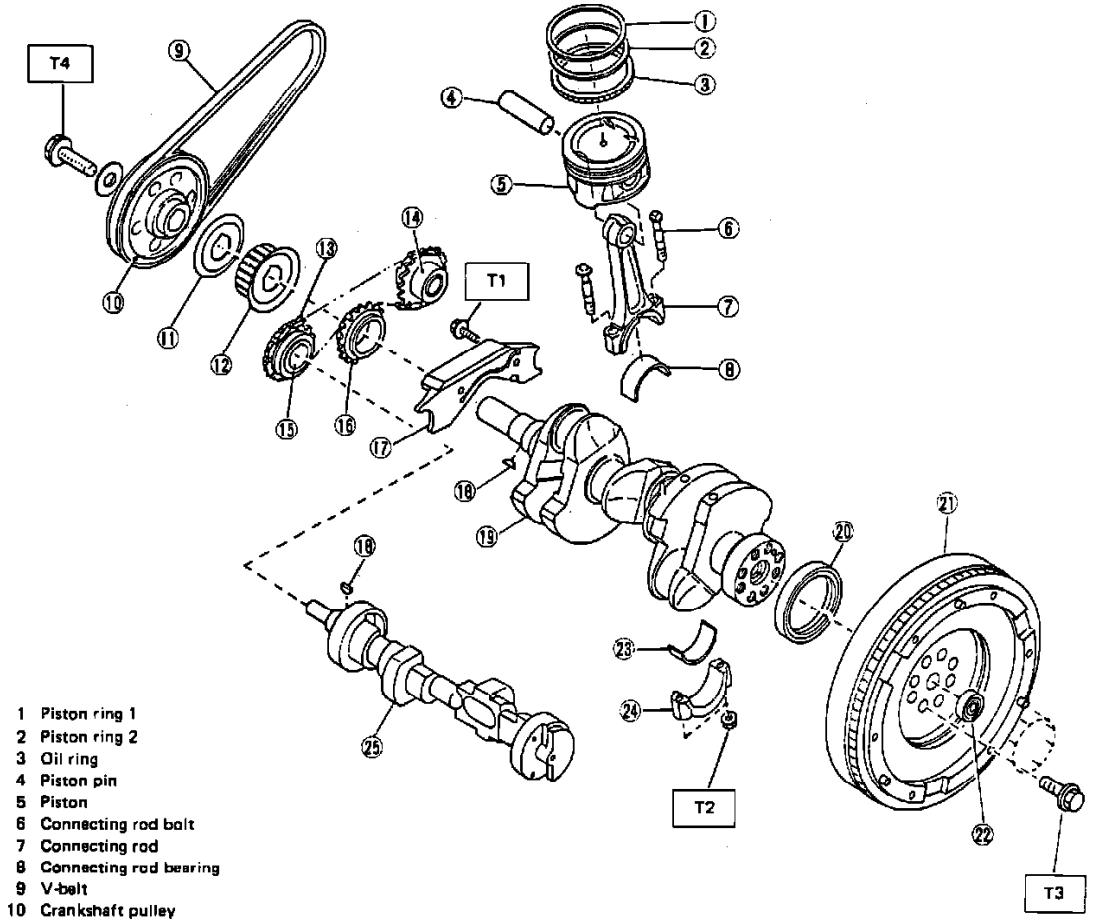

1 Piston ring 1
2 Piston ring 2
3 Oil ring
4 Piston pin
5 Piston
6 Connecting rod bolt
7 Connecting rod
8 Connecting rod bearing
9 V-belt
10 Crankshaft pulley
11 Crankshaft drive plate
12 Camshaft drive pulley
13 Balancer chain
14 Oil pump sprocket
15 Balancer shaft sprocket
16 Crankshaft sprocket
17 Chain guide
18 Woodruff key
19 Crankshaft
20 Oil seal
21 Flywheel
22 Ball bearing
23 Connecting rod bearing
24 Connecting rod cap
25 Balancer shaft

Tightening torque: N-m (kg-m, ft-lb)
T1: 6 – 7 (0.6 – 0.7, 4.3 – 5.1)
T2: 39 – 45 (4.0 – 4.6, 29 – 33)
T3: 88 – 98 (9.0 – 9.8, 65 – 71)
T4: 64 – 74 (6.5 – 7.5, 47 – 54)

Fig. 32 Exploded View Of Crankshaft, Pistons, & Balance Shaft

11. Remove balancer chain, chain guide and oil pump sprocket, **Fig. 32.**
12. Remove main bearing cap attaching bolts, then the caps and crankshaft.
13. Carefully remove balancer shaft from crankcase.
14. Press piston pins from connecting rod small end using suitable tool.
15. Ensure all components are clean and free from foreign material, and that oil passages are clear. Coat all friction surfaces with oil or suitable assembly lubricant.

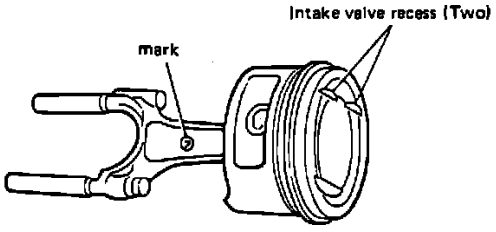

Fig. 33 Assembling Piston To Connecting Rod

16. Assemble piston to connecting rod so that intake valve recesses on piston and crescent mark on connecting rod are positioned as shown, **Fig. 33.**
17. Install rings onto pistons. **Ensure R1 (top ring) and R2 (second ring) marks on compression rings face upward.**
18. Install balancer shaft and oil pump sprocket, then temporarily install chain guide. If replacing chain and/or chain guide, always replace them in the following combinations:
    a. If replacing chain only, replacement chain should have green color identification.
    b. If replacing chain guide only, and original chain guide is white, replacement guide should have white color identification. If original chain guide is blue, replacement guide should have blue color identification. If original chain guide is green, replacement guide should have white or blue color identification.

c. If replacing chain and chain guide, and original chain guide is white or blue, replacement guide should be same as original, and replacement chain should have green color identification.

19. Install main bearing halves into crankcase.

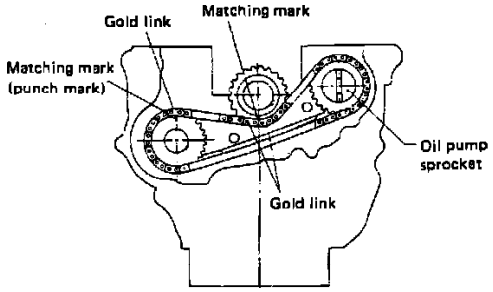

Fig. 34 Installing Drive Chain

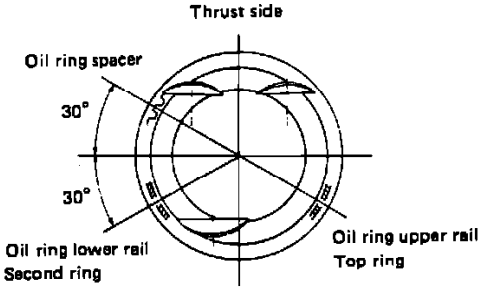

Fig. 35 Piston Ring Installation

20. Install chain and crankshaft, then align marks on sprockets with gold links on chain as shown in **Fig. 34.**
21. Install main bearing caps with arrows facing front of engine. Tighten bolts to specifications.
22. Position ring end gaps as shown, **Fig. 35,** then install piston/rod assemblies into cylinders. Ensure intake valve recesses on piston face intake manifold side of engine.
23. Install connecting rod bearing caps. Tighten nuts to specifications.
24. Install rear oil seal using suitable tools.
25. Install crankcase cover together with air suction manifold bracket.
26. Install oil pump inner rotor, outer rotor and cover. Ensure inner rotor shaft aligns with groove in sprocket.
27. **Water Pump installation:**
    a. Coat outer circumference of new water pump seal with Three-Bond 1303 sealant or equivalent, then drive seal into crankcase cover.
    b. Coat seal lip with coolant, then press pump impeller against balancer shaft and measure tip clearance. Tip clearance should be .012-.035 inch. If clearance is not as specified, add spacers as required.
    c. Position screwdriver between balancer shaft weight and crankcase, then install impeller attaching bolt and tighten to specifications.
    d. Install water pump cover using new gasket.
28. Install oil pan with new gasket. Tighten bolts to specifications.
29. Install flywheel housing.
30. Install oil dipstick tube and dipstick.
31. Install flywheel and attaching bolts. Lock flywheel using suitable tool and torque attaching bolts to specifications.
32. Install oil filter, engine mounting bracket and mounting stay.
33. Install alternator mounting bracket and alternator.
34. Install cylinder head, camshaft, rocker assembly, timing belt and timing belt cover as outlined previously.

Cylinder Head Assembly: Service and Repair

1. Remove timing belt cover, timing belt, rocker assembly and camshaft.
2. Remove exhaust manifold, then disconnect wiring harnesses from intake manifold.
3. Remove air suction valve and pipe, if applicable.
4. Remove intake manifold attaching bolts, then the intake manifold together with carburetor.

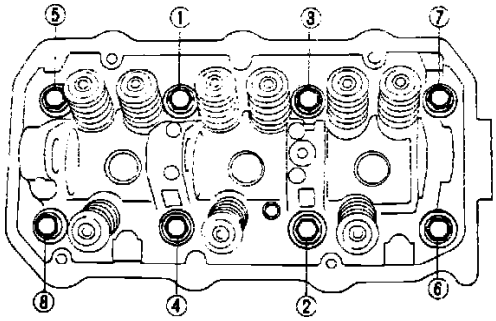

Fig. 30 Cylinder Head Bolt Tightening Sequence

5. Remove cylinder head bolts in reverse sequence as that shown in **Fig. 30,** then remove cylinder head from crankcase.
6. Using suitable valve spring compressor tool, compress valve springs and remove retainer keys.
7. Remove retainers, springs, valves and valve seals.
8. Coat valve seals with engine oil, then install seals using tool 398852100 or equivalent. **Intake and exhaust seals are not interchangeable. Intake seals measure .512 inch high, while exhaust seals are .425 inch high. Ensure seals are installed correctly.**
9. Coat valve stems with engine oil, then install valves into guides.
10. Install springs, with close-coiled end facing cylinder head, and retainers, then compress spring and install retainer key. Tap retainer lightly with mallet to seat key.
11. Install cylinder head onto crankcase using new gaskets.
12. Apply engine oil to head bolt threads, then install bolts through cylinder head and into crankcase.
13. Torque cylinder head bolts according to sequence shown, in 4 steps as follows:

    1. **39 Nm (29 ft.lbs)**
    2. **73 Nm (54 ft.lbs)**
    3. **Back head bolts off at least 90° in reverse order of tightening sequence.**
    4. **70 - 77 Nm (51 - 57 ft.lbs)**

14. Install intake manifold and carburetor assembly. Tighten bolts to specifications.
15. Install air suction valve and pipe, if applicable, then reconnect wiring harnesses at intake manifold.
16. Install exhaust manifold and tighten bolts to specifications.
17. Install camshaft, rocker assembly, timing belt and timing belt cover.

Drive Belt: Service and Repair

NOTE: Where applicable, always replace drive belts in pairs.

First Drive Belt

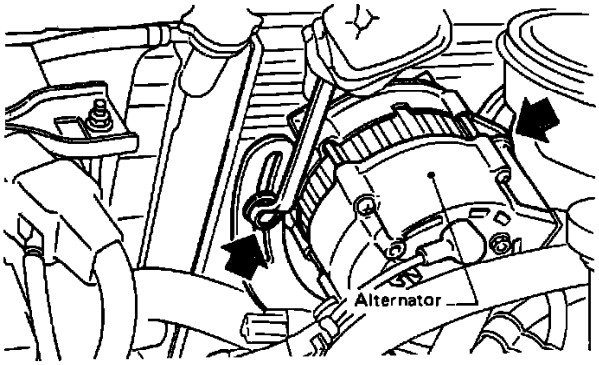

Fig. 62 Alternator Mount & Slide Bolt Location

Type	Pulley arrangement	Tension mm (in)/98 N (10 kg, 22 lb)	
		New belt	Existing belt
Basic model	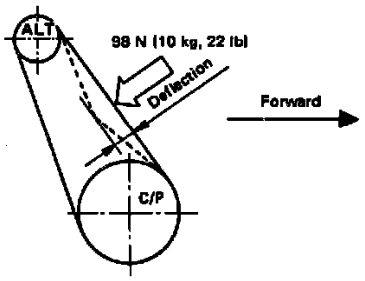	8 – 9 (0.31 – 0.35)	9 – 10 (0.35 – 0.39)
Air conditioner equipped model	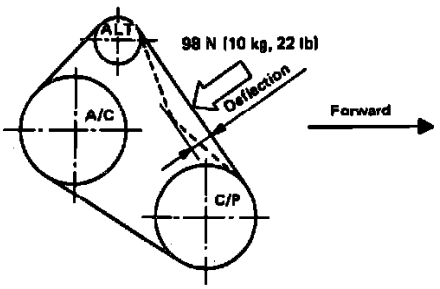	10 – 11 (0.39 – 0.43)	11.5 – 12.5 (0.453 – 0.492)

C/P: Crankshaft pulley
ALT: Alternator pulley
A/C: Air conditioner compressor pulley

Fig. 55 Drive Belt Routing & Tension Data

1. Loosen alternator mount and slide bolts, **Fig. 62.**
2. Remove drive belt.
3. Install drive belt. When proper belt tension is achieved, as specified in **Fig. 55** tighten alternator slide and mount bolts, **Fig. 62.**
4. For new belt installation, readjust belt tension to specifications after running engine for five minutes.

Second Drive Belt

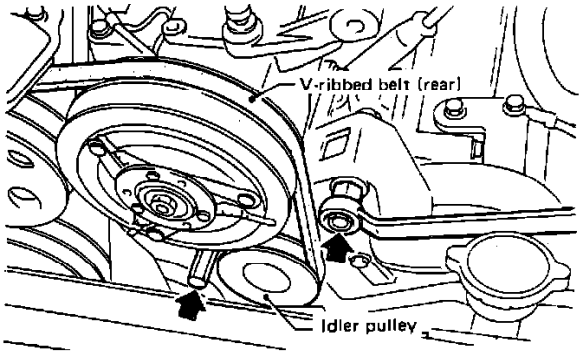

Fig. 63 Idler Pulley Retaining Bolt & Nut Location

1. Loosen idler pulley retaining bolt and nut, **Fig. 63.**
2. Remove drive belt.
3. Install drive belt. When proper belt tension is achieved, as specified in **Fig. 55** tighten idler pulley retaining bolt and nut, **Fig. 63.**
4. For new belt installation, readjust belt tension to specifications after running engine for five minutes.

Intake Manifold: Description and Operation

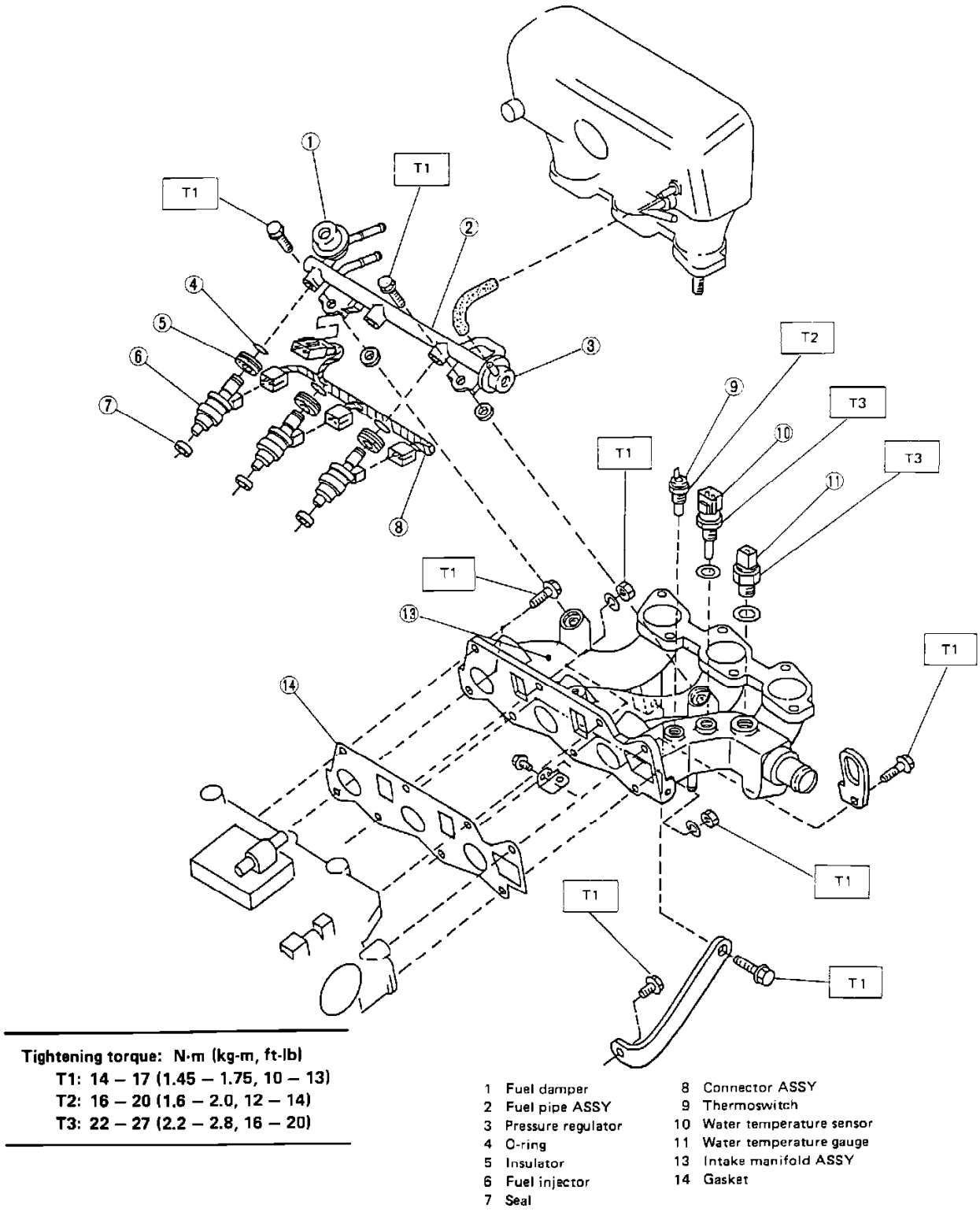

Tightening torque: N·m (kg-m, ft-lb)
T1: 14 – 17 (1.45 – 1.75, 10 – 13)
T2: 16 – 20 (1.6 – 2.0, 12 – 14)
T3: 22 – 27 (2.2 – 2.8, 16 – 20)

1 Fuel damper
2 Fuel pipe ASSY
3 Pressure regulator
4 O-ring
5 Insulator
6 Fuel injector
7 Seal
8 Connector ASSY
9 Thermoswitch
10 Water temperature sensor
11 Water temperature gauge
13 Intake manifold ASSY
14 Gasket

Intake Manifold

PURPOSE

Routes incoming air into combustion chambers and supports fuel injectors, air control valve, throttle chamber and various engine compartment components.

LOCATION

On top of the engine.

Intake Manifold: Service and Repair

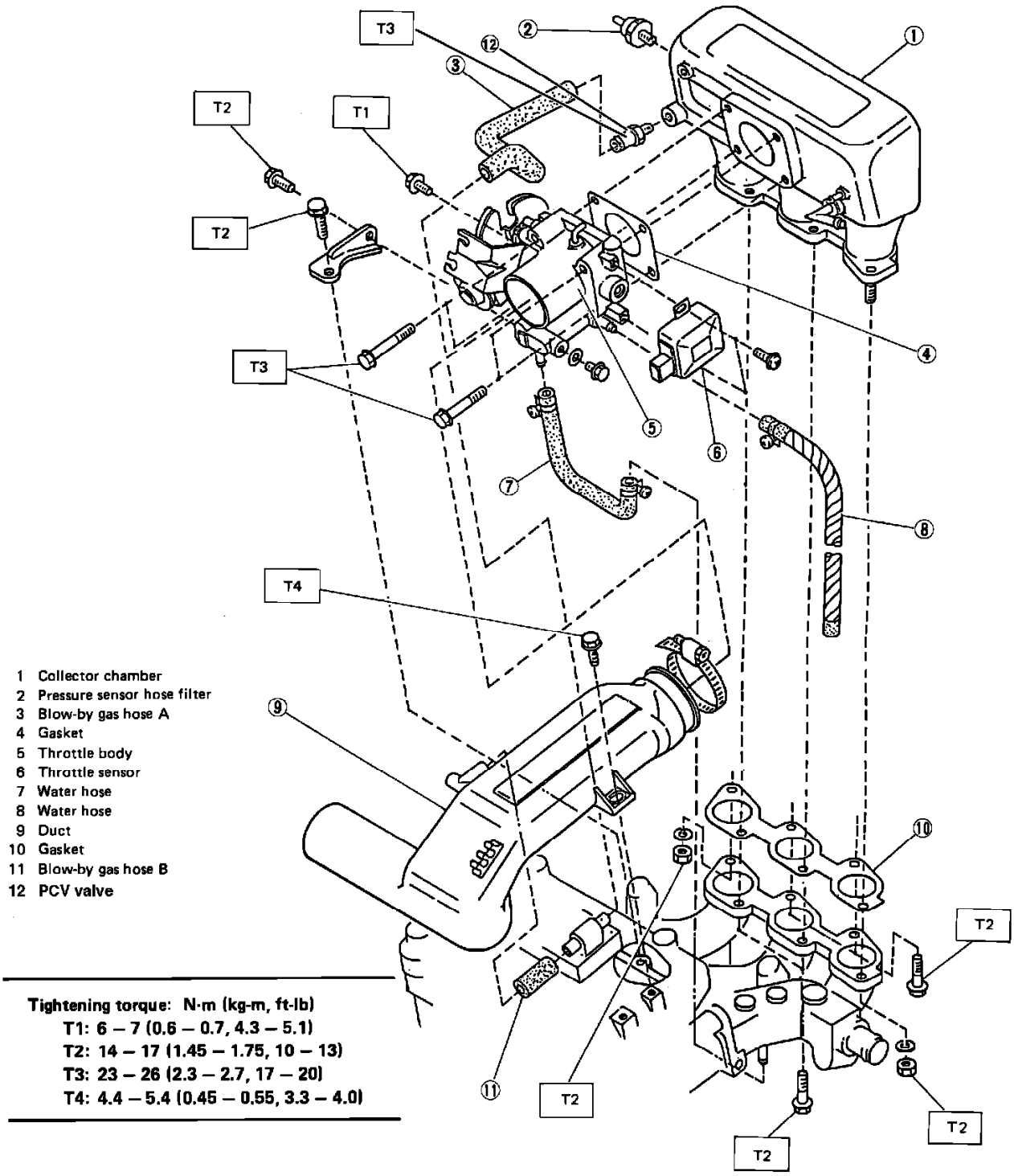

Throttle Chamber

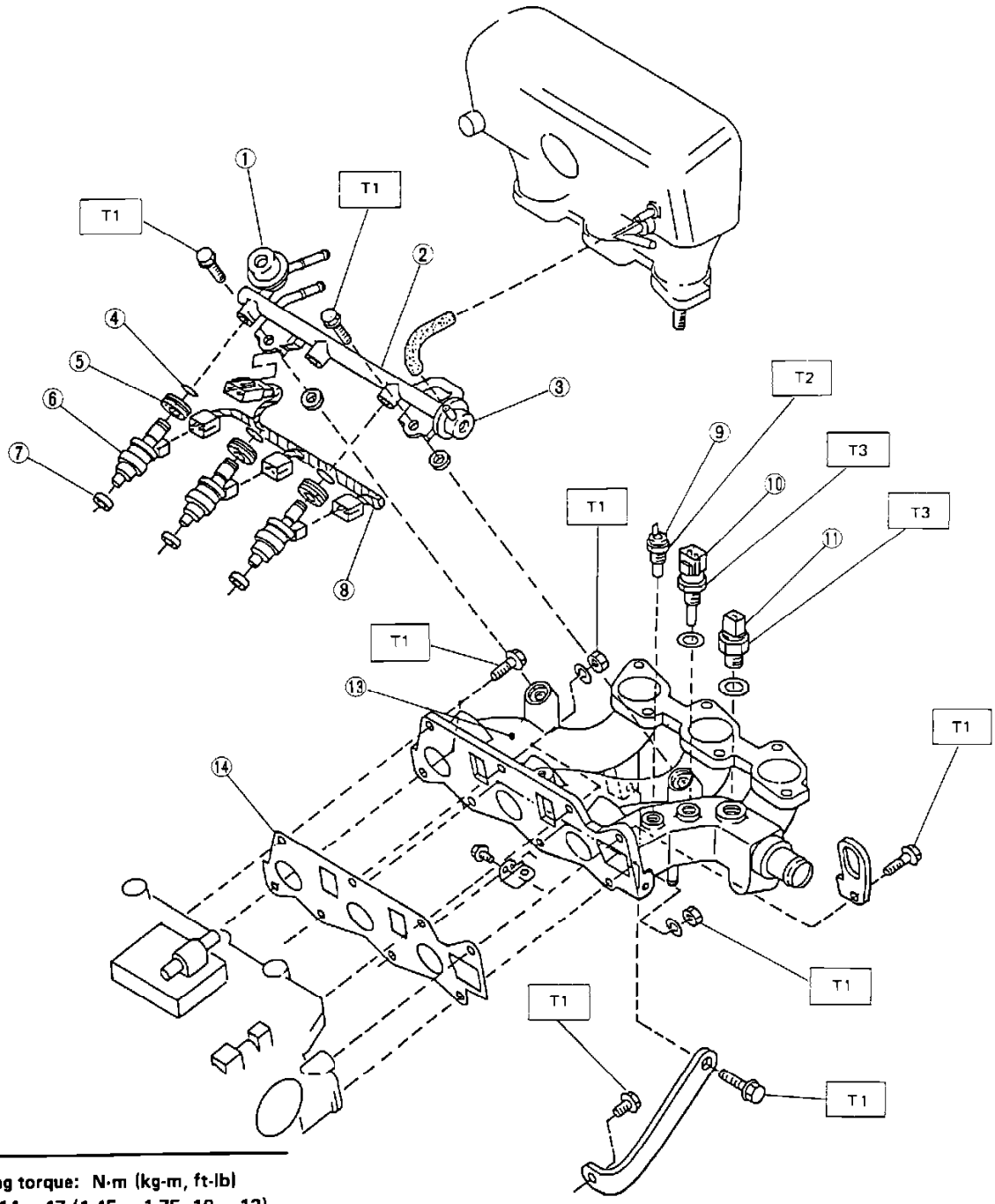

Tightening torque: N·m (kg-m, ft-lb)
T1: 14 – 17 (1.45 – 1.75, 10 – 13)
T2: 16 – 20 (1.6 – 2.0, 12 – 14)
T3: 22 – 27 (2.2 – 2.8, 16 – 20)

1 Fuel damper
2 Fuel pipe ASSY
3 Pressure regulator
4 O-ring
5 Insulator
6 Fuel injector
7 Seal
8 Connector ASSY
9 Thermoswitch
10 Water temperature sensor
11 Water temperature gauge
13 Intake manifold ASSY
14 Gasket

Intake Manifold

Refer to illustration for replacement.

Timing Belt: Service and Repair

REMOVAL

1) Loosen the bolts which secure the alternator, and remove the V-belt.
2) Using CRANK & CAMSHAFT PULLEY WRENCH (499205500), loosen the crankshaft bolts.

NOTE: Do not remove the crankshaft bolts.

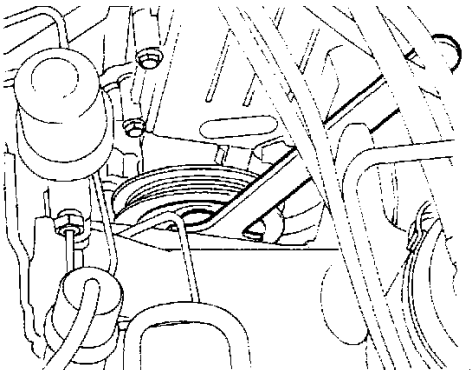

3) Turn the crankshaft pulley until the #3 piston is set at TDC.

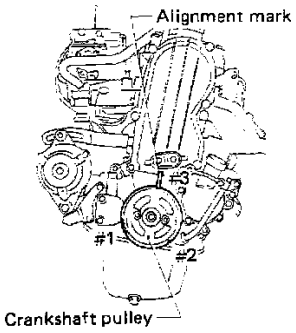

4) Remove the bolts which secure the crankshaft pulley, and remove the crankshaft pulley.

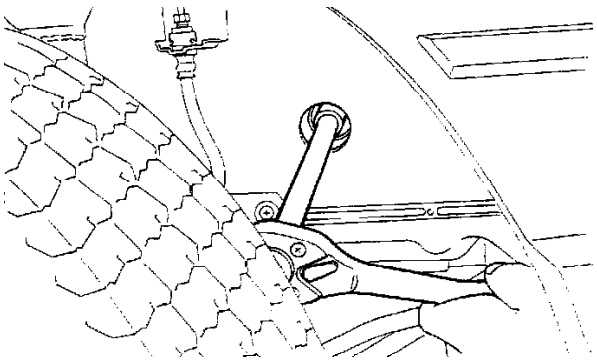

NOTE: Insert a 'T" wrench into the access hole in the wheelhouse to remove the bolts.

5) Remove the cam belt cover 2.

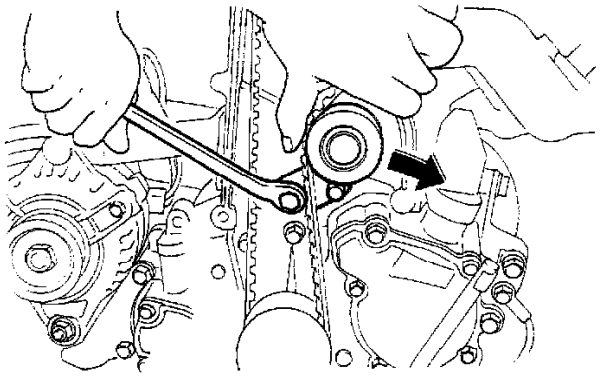

6) Using SOCKET WRENCH (4999858000), loosen the bolts which secure the tensioner. Move the tensioner in the direction of the arrow, and tighten the bolts.

7) Remove the camshaft drive pulley plate and camshaft drive belt.

NOTE: Before removing belt, scribe a mark indicating driving direction of the belt so that it can be reinstalled correctly.

INSTALLATION

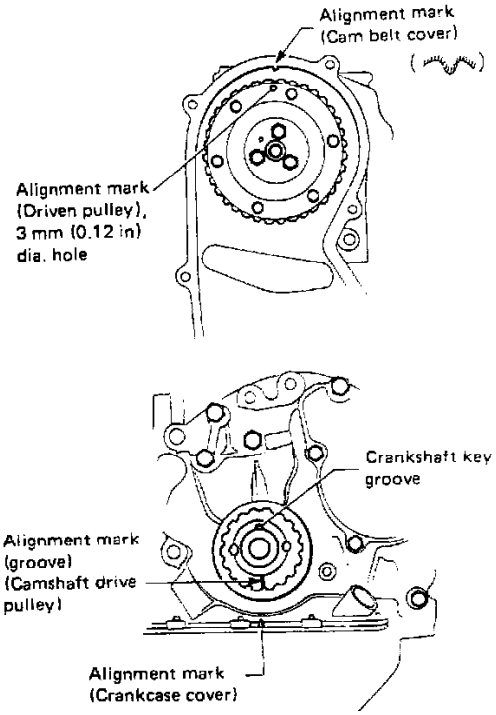

1) Using CRANK & CAMSHAFT PULLEY WRENCH (499205500), align the alignment marks on the camshaft drive and driven pulleys with their mating marks.
2) Remove the air cleaner and rocker cover.
3) Loosen the valve adjusting screw so that the rocker arm has free play.
4) Install the cam belt.
5) Loosen the bolts which secure the tensioner, and apply tension to the cam belt.

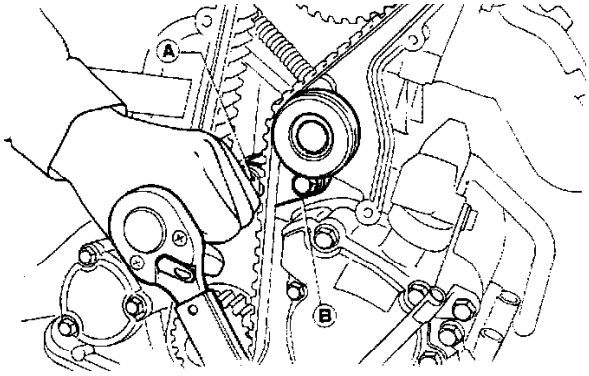

6) Tighten the bolts in the order of (A) and (B).

NOTE: Check that the alignment marks on the camshaft drive and driven pulleys are aligned with their respective mating marks. If the alignment marks are not aligned, remove cam belt and re-align.

7) Install the camshaft drive pulley plate.
8) Install the cam belt cover 2.
9) Install the crankshaft pulley. Using CRANK & CAMSHAFT PULLEY WRENCH (499205500), tighten the crankshaft bolts.

Tightening torque:
78 - 98 N-m (8.0 - 10.0 kg-m, 58 - 72 ft-lb)

10) Adjust valve clearances. Install the air cleaner and rocker cover.

Timing Component Alignment Marks: Locations

Caution: Incorrect removal or installation of the timing belt can result in damage to internal engine components.

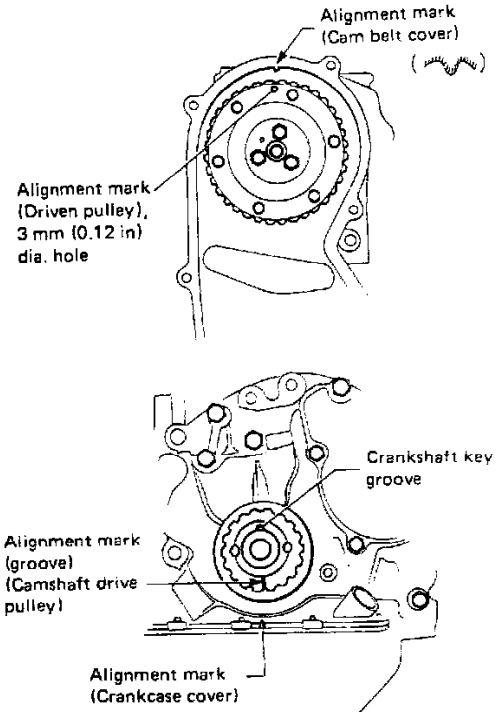

For complete Timing Belt Removal and Installation information: See: Timing Belt/Service and Repair

Water Pump: Service and Repair

1. Disconnect battery ground cable.
2. Drain cooling system. Refer to **Cooling System / Service and Repair**.
3. Drain engine oil.
4. Remove oil dipstick tube.
5. Loosen alternator mount and slide bolts, then remove drive belt. Refer to **Drive Belt**.
6. Remove alternator.
7. Refer to **Crankshaft** for removal of crankshaft pulley, cam belt cover No. 2, cam belt tensioner and spring, camshaft driveplate and belt, camshaft drive and driven pulleys, cam belt cover and mount, flywheel housing, oil pan and gasket.

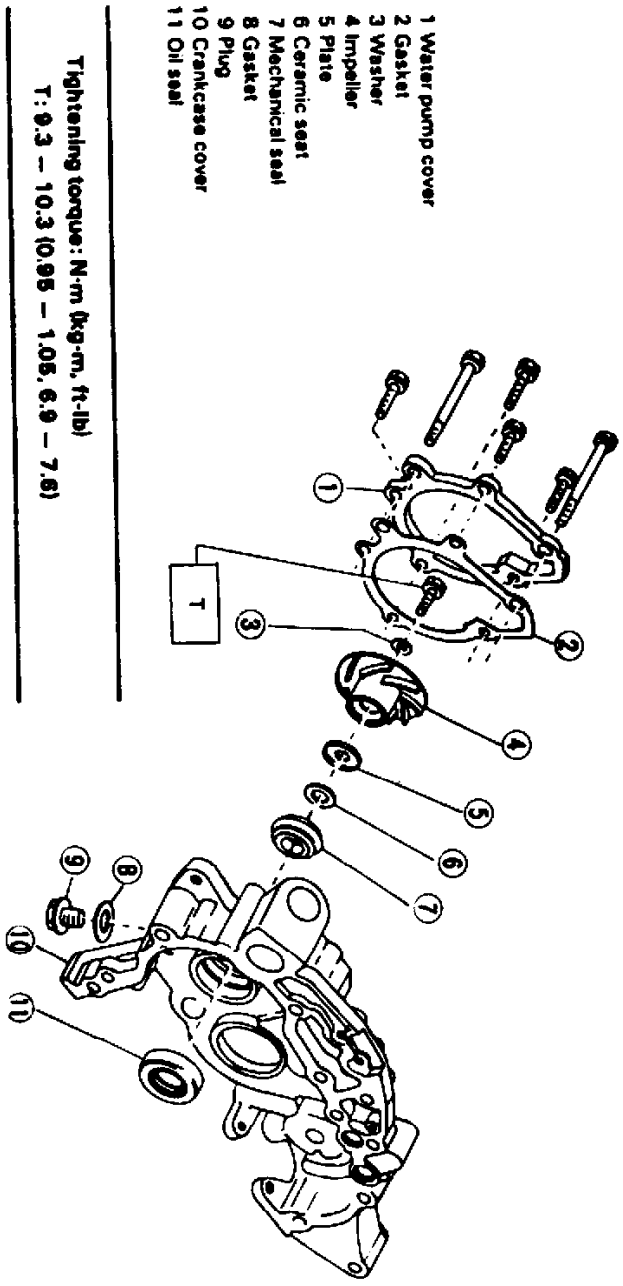

Fig. 64 Water Pump Assembly Replacement

8. Remove water pump and crankcase cover assembly, **Fig. 64**.
9. Reverse procedure to install. Tighten bolts to specifications.

Cooling System: Service and Repair

1. With engine cool, open radiator drain plug and drain coolant into a suitable container.
2. Remove radiator pressure cap. **Never open cap with engine hot**.
3. Remove and drain coolant reservoir.
4. If equipped, remove drain plug(s) from engine. When coolant is completely drained, install the plug(s).
5. Close radiator drain plug.
6. Install coolant reservoir.
7. Slowly add coolant to radiator until fluid level reaches filler neck.
8. Slowly add coolant to reservoir until fluid level reaches Full mark.
9. Install radiator and reservoir caps.
10. Start and run engine at 2000-3000 RPM. When operating temperature is achieved, stop the engine.
11. With engine cool, remove radiator and reservoir caps. **Never open cap with engine hot**.
12. Add coolant as needed until fluid level is as specified in steps 7 and 8.
13. Install radiator and reservoir caps.

Radiator Cooling Fan Motor: Service and Repair

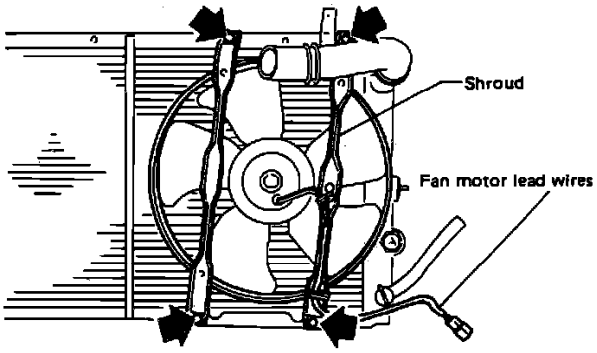

Fig. 1 Electric Cooling Fan Assembly

REMOVAL

1. Disconnect battery negative cable.
2. Disconnect fan motor electrical connector, then the harness from shroud, **Fig. 1,** if necessary.
3. Remove shroud retaining bolts, then the shroud.
4. Remove fan motor mounting nuts, then separate motor from shroud.
5. Remove cooling fan mounting nuts, then separate cooling fan blades fan motor.

INSTALLATION

1. Place cooling fan on fan motor, then install mounting nuts, **Fig. 1.** Apply a suitable locking compound to mounting nuts then securely tighten.
2. Place fan motor on shroud and install mounting nuts. **Ensure fan does not contact shroud when installed.**
3. Assemble shroud to radiator.
4. Connect fan motor electrical connector, then secure wiring harness to shroud.
5. Connect negative cable to battery.

Coolant Temperature Sensor/Switch (For Computer): Description and Operation

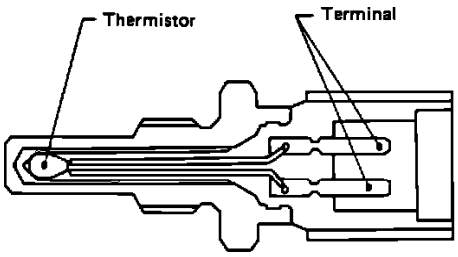

Coolant Temperature Sensor

PURPOSE

The coolant temperature sensor reports engine temperature to the ECU. Temperature information is used to properly compute air/fuel and ignition configurations.

LOCATION

The sensor is threaded into the water jacket on the bottom side of the intake manifold.

CONSTRUCTION

The sensor is constructed of a thermistor element in a sealed capsule, with an electrical connector.

OPERATION

Water temperature data is sent to the ECU whenever the ignition is on. Changes in sensor temperature alter the thermistor resistance. When a known voltage is passed through the sensor, the output voltage is dependant upon the resistance off the sensor.

Coolant Temperature Sensor/Switch (For Computer): Testing and Inspection

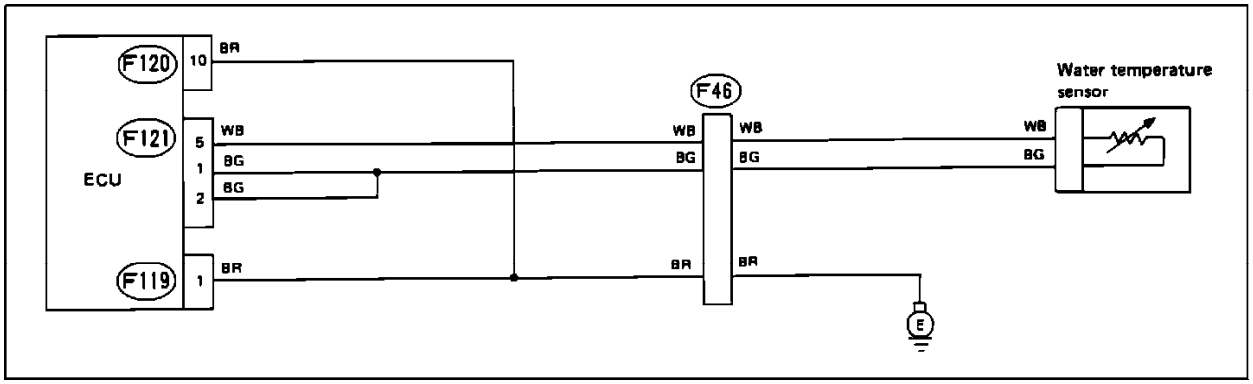

Coolant Temperature Sensor Schematic

A faulty coolant temperature sensor will set code 21 in the on-board diagnostic system. Refer to the schematic diagram and test the coolant sensor with the diagnostic chart.

Wire color code identification:

L: Blue
B: Black
Y: Yellow
G: Green
R: Red
W: White
Br: Brown
Lg: Light green
Gr: Gray

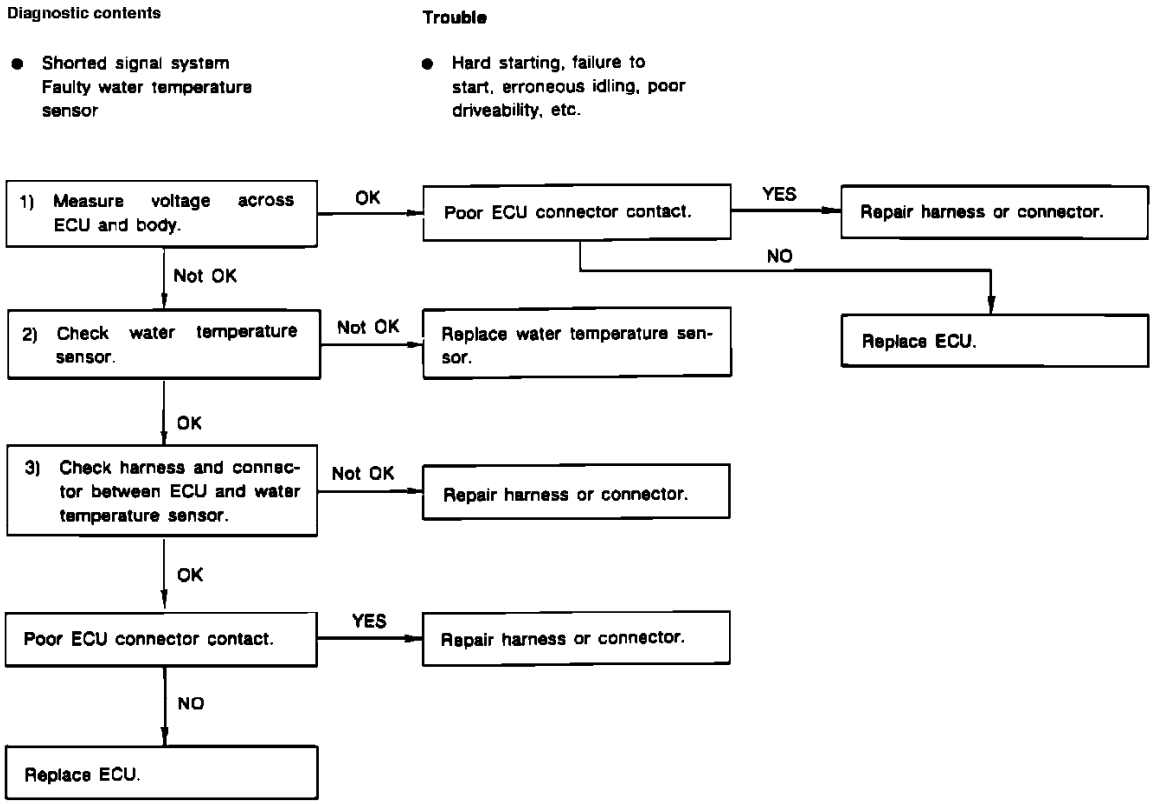

Coolant Temperature Sensor Diagnostic Chart

COOLANT TEMPERATURE SENSOR DIAGNOSTIC CHART

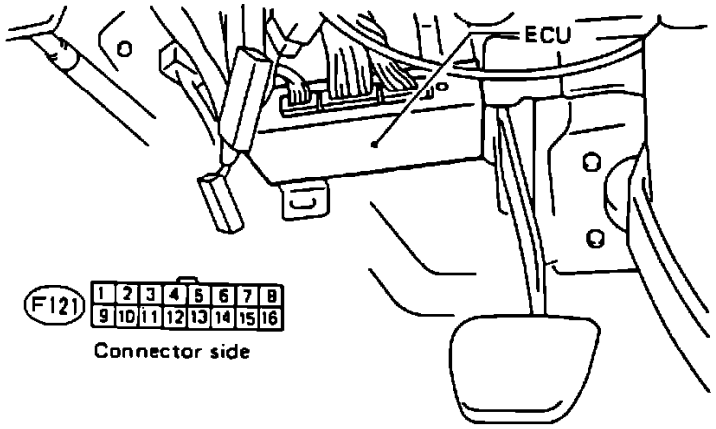

ECU/Coolant Temperature Sensor Harness Testing

CHECK ECU VOLTAGE

1. Turn ignition "ON" (engine "OFF").
2. Check ECU voltage between the following connector terminals:

Connector:	Terminal:	Voltage:
F121	5-1	0.15-4.85V
F121	5-2	0.15-4.85V

CHECK HARNESS BETWEEN ECU AND TEMPERATURE SENSOR

1. Disconnect ECU connector.
2. Measure resistance between ECU connector and sensor connector:

Connector & terminal:	Resistance:
(F121)5-(F22)2	Below 1 Ohm
(F121)1-(F22)1	Below 1 Ohm
(F121)2-(F22)1	Below 1 Ohm

3. Measure resistance between ECU connector and terminal (F121)5 and ground. Reading should be infinite.

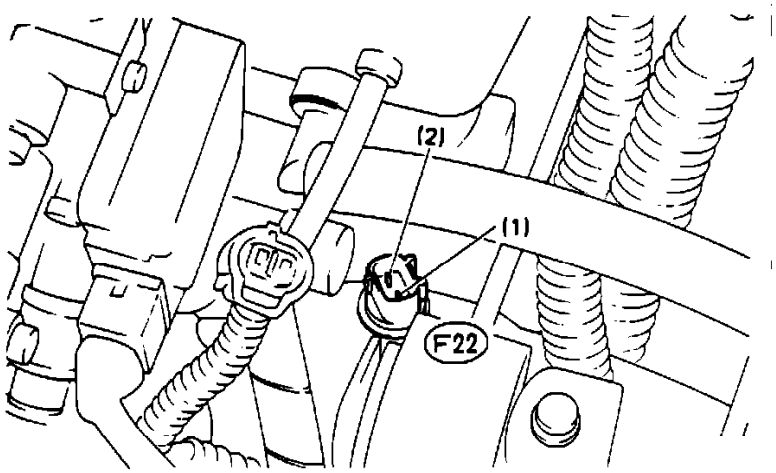

Coolant Temperature Sensor Testing

CHECK COOLANT TEMPERATURE SENSOR

1. Disconnect coolant temperature sensor connector.
2. Measure resistance between sensor terminals 1 and 2 (sensor side):

Resistance:	Temperature:
2 - 3K Ohms	20° C (68° F)
270 - 370 Ohms	80° C (176° F)

Heater Core: Service and Repair

Heater Core

1. Disconnect battery ground cable.
2. Remove radiator drain plug and allow coolant to drain.
3. Loosen heater hose clamps, then remove inlet and outlet hoses from the heater unit.
4. Separate left and right defroster ducts from nozzles and remove ducts from the heater unit.
5. Disconnect blower motor and fan switch electrical connectors.
6. Disconnect heater unit air mix and mode cables.
7. Remove heater unit to instrument panel attaching bolt.
8. Open glove compartment then, while pulling stopper clips inward, lower the glove compartment.
9. Disconnect inside-outside air control cable at blower assembly.
10. Remove instrument panel as follows:
    a. Remove steering wheel as outlined under **Steering Wheel**.
    b. Remove defroster duct.
    c. Disconnect heater control cable from inside-outside air selector rod at heater unit.
    d. Disconnect speedometer cable.
    e. Disconnect electrical harness connector.
    f. Remove instrument panel attaching bolt covers, the attaching bolts, then the instrument panel.
11. Remove blower assembly and heater unit attaching bolts.
12. Carefully remove heater unit.
13. Remove heater core cushion.
14. Loosen and remove heater core holder.
15. Remove heater core from heater unit.
16. Reverse procedure to install.

Radiator: Service and Repair

1. Drain engine coolant.

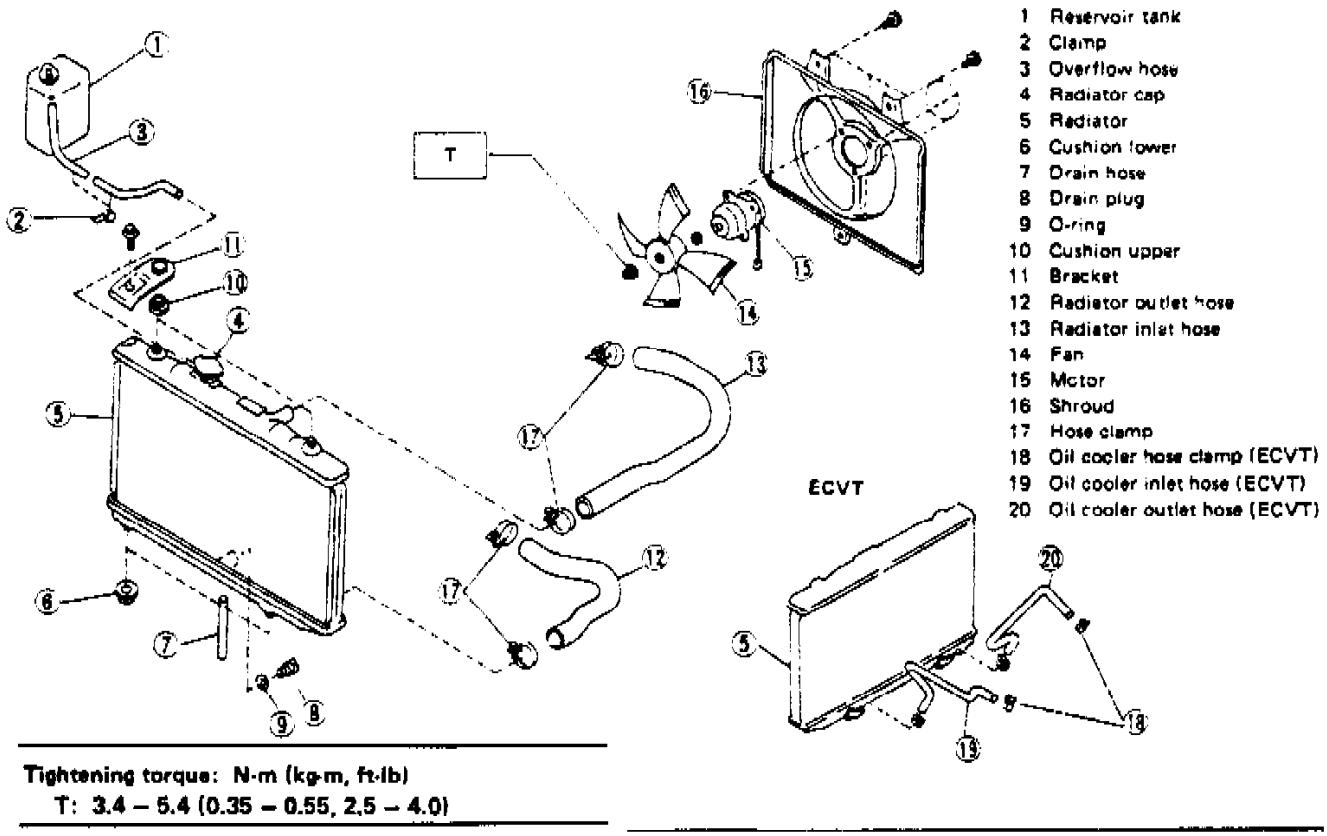

Fig. 74 Exploded View Of Radiator Assembly

2. Remove inlet and outlet hoses from radiator, **Fig. 74**.
3. Disconnect radiator fan electrical connection.
4. Remove radiator brackets.
5. **On models equipped with electronically controlled variable transaxles (ECTV)**, loosen oil cooler hose on transaxle side and disconnect hose from pipe.
6. Remove radiator. **On models equipped with ECTV**, remove radiator and oil cooler as an assembly.
7. Reverse procedure to install. Refill and bleed cooling system as outlined under **Cooling System / Service and Repair**.

Thermostat: Testing and Inspection

INSPECTION:

Replace the thermostat if the valve does not close completely at an ambient temperature or if the following test shows unsatisfactory results.

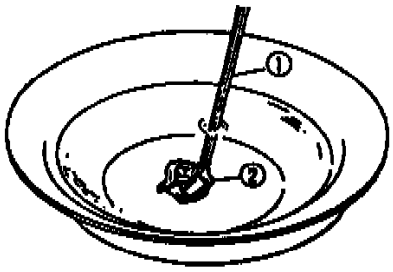

Thermostat Testing

- Immerse the thermostat and a thermometer in water.
- Raise water temperature gradually, and measure the temperature and valve lift when the valve begins to open and when the valve is fully opened.
- During the test, agitate the water for even temperature distribution.
- The measurement should be to the specification:

  Starts to open:

  MPFI model: 74.5-78.5°C (166-173°F)

  Fully open:

  MPFI model: 91°C (196°F)

Catalytic Converter: Description and Operation

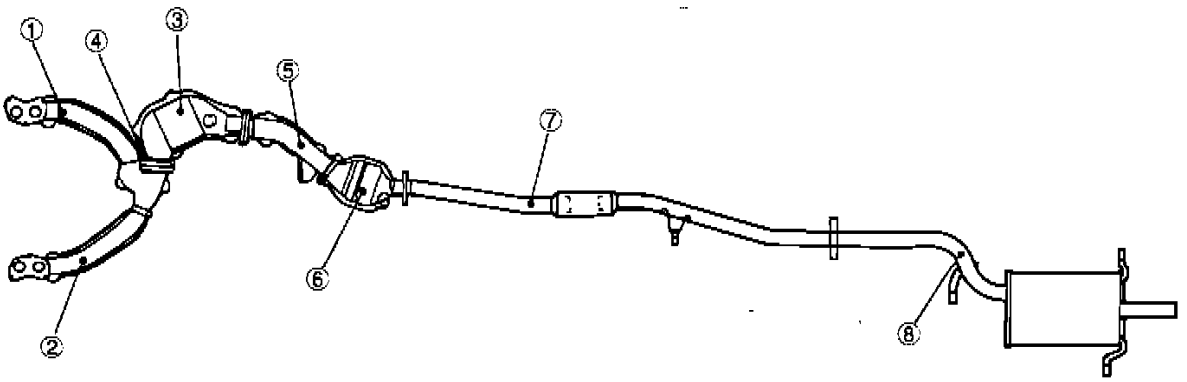

G2H0061

① Front exhaust pipe RH
② Front exhaust pipe LH
③ Front catalyst converter
④ Oxygen sensor
⑤ Center exhaust pipe
⑥ Rear catalyst converter
⑦ Rear exhaust pipe
⑧ Muffler

Exhaust System

PURPOSE

Catalytic converters are used to reduce emissions of hydrocarbons (HC), carbon monoxide (CO), and oxides of nitrogen (NOx).

OPERATION

The catalytic materials within the converter stimulate reactions that reduce the objectional components of exhaust gas to carbon dioxide and water vapor. For the converter to function properly, the air/fuel ratio must be controlled within a narrow range (as can be accomplished with electronic fuel injection).

CONSTRUCTION

The basic catalytic materials are platinum (Pt) and rhodium (Rh). A thin film of Pt/Rh mixture is applied to a porous, honeycomb ceramic carrier. The carrier is installed in a metal case with inlet and outlet for exhaust gas.

Ignition System: Description and Operation

PURPOSE

To produce a spark that will ignite the air/fuel mixture within an engine's cylinders, ignition systems generate high voltage and direct it to spark plugs at each cylinder. Voltage must be high enough to jump the spark plug gap under compression and it must be supplied at the correct time under a wide range of operating conditions.

DESCRIPTION

This vehicle uses an ECU controlled electronic ignition system. Components include:

1. Ignition coil.
2. Distributor with integral crank angle sensor.
3. Ignitor.
4. Distributor cap and high tension wiring for distributing high voltage to the spark plugs.

CRANK ANGLE SENSOR

The crank angle sensor provides the ECU with signals regarding engine rpm and #1 cylinder TDC (camshaft position). Together with other inputs, the ECU calculates ignition timing over the range of vehicle operating conditions.

IGNITER

An ECU controlled igniter is used as a switch to regulate current flow through the coil primary circuit. Each time current flow is interrupted, high voltage is induced to fire the spark plugs. Except for the initial setting, timing is determined by the ECU.

SECONDARY IGNITION COMPONENTS

A distributor cap, rotor and high tension wires are used to direct high voltage from the coil to each spark plug at the appropriate time as calculated by the ECU.

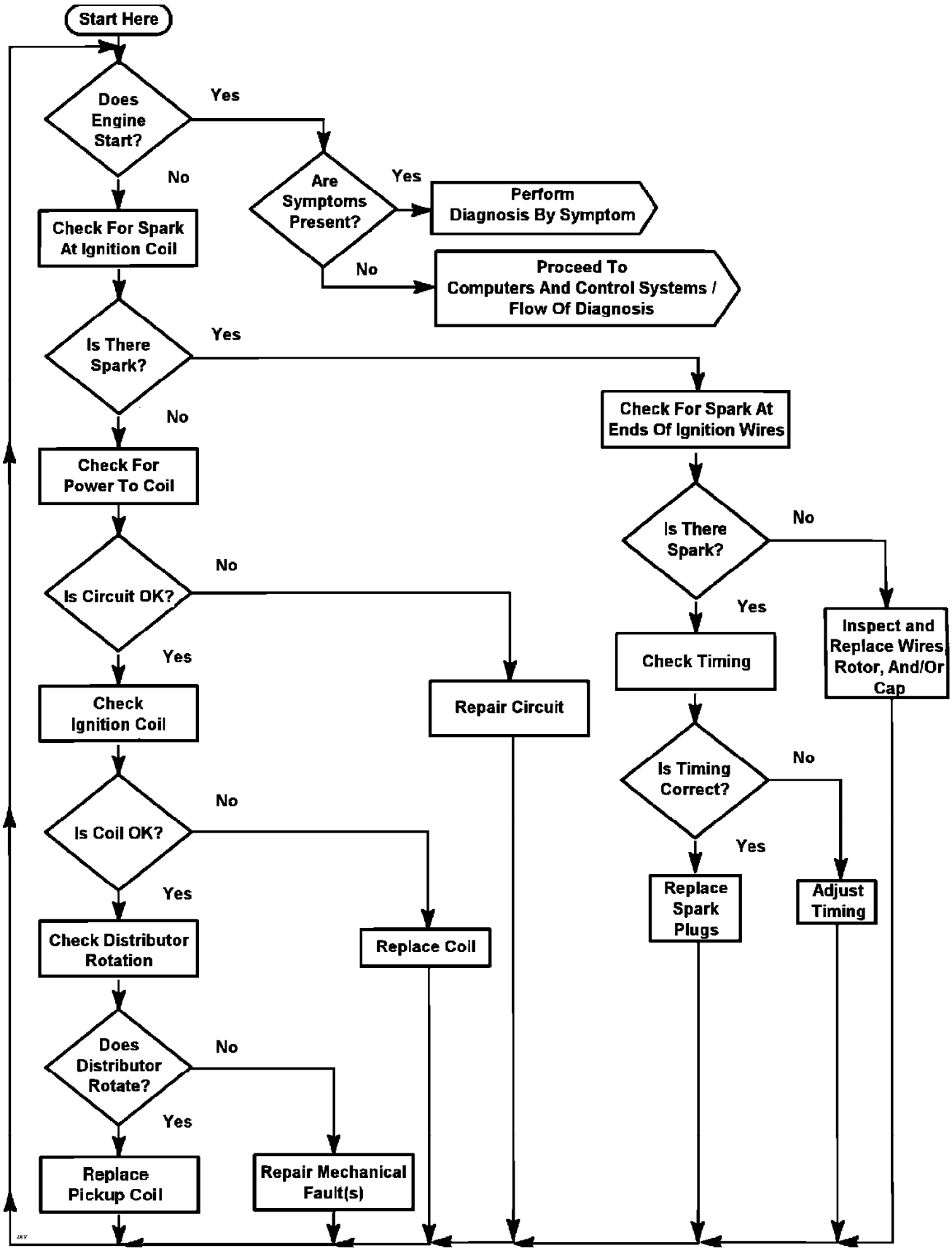
Start Here
Does Engine Start?
Yes
No
Are Symptoms Present?
Yes
Perform Diagnosis By Symptom
No
Proceed To Computers And Control Systems / Flow Of Diagnosis
Check For Spark At Ignition Coil
Is There Spark?
Yes
No
Check For Spark At Ends Of Ignition Wires
Check For Power To Coil
Is There Spark?
No
Yes
Is Circuit OK?
No
Yes
Inspect and Replace Wires, Rotor, And/Or Cap
Check Timing
Repair Circuit
Check Ignition Coil
Is Timing Correct?
No
Yes
Is Coil OK?
No
Yes
Replace Spark Plugs
Adjust Timing
Check Distributor Rotation
Replace Coil
Does Distributor Rotate?
No
Yes
Replace Pickup Coil
Repair Mechanical Fault(s)

Ignition System: Symptom Related Diagnostic Procedures

Backfire

DEFINITION:

Fuel ignites in intake manifold or exhaust system, making a loud popping noise.

CHECK:
- Ignition Timing. See Emission Control Information Label on car.
- EGR operation for being open all the time.
- Output voltage of ignition coil.
- For crossfire between spark plugs (distributor cap, spark plug wires, and proper routing of plug wires).
- For faulty spark plugs and/or plug wires or boots.

Perform a compression check - look for sticking or leaking valves.
- For proper valve timing.
- Broken or worn valve train parts or burned intake valve(s).

Cuts Out, Misses

DEFINITION:

Steady pulsation or jerking that follows engine speed, usually more pronounced as engine load increases. The exhaust has a steady spitting sound at idle or low speed.

Perform careful visual (physical) check.
If ignition system is suspected of causing a miss at idle or cutting out under load, check for missing cylinder by:

1. Start engine. Disconnect bypass air control valve. Remove one spark plug wire at a time using insulated pliers.
2. If there is an rpm drop on all cylinders, (equal to within 50 rpm), go to ROUGH, UNSTABLE, OR INCORRECT IDLE, symptom. Stop Engine. Reconnect bypass air control valve.
3. If there is no rpm drop on one or more cylinders, or excessive variation in drop, check for spark on the suspected cylinder(s). If there is spark, remove spark plug(s) in these cylinders and check for:
   - Cracks
   - Wear
   - Improper Gap
   - Burned Electrodes
   - Heavy Deposits

Check spark plug wire resistance (should not exceed 30,000 ohms).

Use a test light and check each injector control circuit. If OK, perform injector balance test.

If the previous checks did not find the problem:
- Visually inspect ignition system for moisture, dust, cracks, burns, etc. Spray plug wires and distributor cap with fine water mist to check for shorts or arcing.
- Fuel System - Plugged fuel filter, water, low pressure.
- Use "Scan" tool and check for erratic TPS voltage.
- Check Injector harness connectors for intermittent connections.
- Perform compression check, compression should not vary by more than 20% highest to lowest.
- Remove head covers. Check for broken or weak valve springs, worn camshaft lobes. Repair as necessary.

Detonation/Spark Knock

DEFINITION:

A mild to severe ping, usually worse under acceleration. The engine makes sharp metallic knocks that change with throttle opening.

CHECK for obvious overheating problems. Normal range is 85°C-100°C (185°F-215°F).
- Low coolant.
- Loose water pump belt.
- Restricted air flow to radiator, or restricted water flow thru radiator.
- Faulty or incorrect thermostat.
- Correct coolant solution - should be a 50/50 mix of anti-freeze/coolant and water.

CHECK:
- For poor fuel quality, proper octane rating.
- Spark plugs for correct heat range.
- Ignition timing. See Vehicle Emission Control Information Label.
- Distributor cap for arcing or carbon tracking inside cap.
- Fuel system for low pressure.
- Check EGR valve for not opening.

- For incorrect basic engine parts such as cam, heads, pistons, etc.
- Excessive oil entering combustion chamber.
- Carbon build-up on pistons or combustion chamber. Remove carbon with top engine cleaner. Follow instructions on can.

Dieseling, Run on

DEFINITION:

Engine continues to run after key is turned "OFF", but runs very roughly. If engine runs smoothly, check ignition switch and adjustment.

On engines with fuel injection, there should be no fuel delivery to the intake system and engine should stop immediately when the key is turned "OFF." If not, fuel may be leaking into the intake. Check injectors for leaking.

Hard Start

DEFINITION

Engine cranks OK, but does not start for a long time. Eventually starts, or may start but immediately dies.

CHECK:

- For water contaminated fuel.
- Fuel system pressure.
- TPS for sticking or binding.
- EGR operation. Valve should be fully seated closed with engine "OFF".
- For a faulty in-tank fuel pump check valve which would allow the fuel in the lines to drain back to the tank after the engine is stopped.

Check ignition system for:

- Proper sparking voltage and duration.
- Worn distributor shaft.
- Bare and shorted wires.
- Improper pickup coil resistance or poor connections.
- Loose ignition coil connections.
- Moisture in distributor cap.
- Spark plugs for wetting, cracks, wear, improper gap, burned electrodes, or heavy deposits.

Hesitation, Stumble

DEFINITION

Momentary lack of response as the accelerator is depressed. Can occur at all car speeds. Usually most severe when trying to drive away from a stop. May cause the engine to stall if severe enough.

Perform careful visual (physical) check.

CHECK:

- Vacuum hoses for splits, kinks, and proper connections, as shown on vehicle emission control label vacuum diagram.
- Air leaks at common chamber and intake manifold gaskets.
- Ignition wires for cracks, burned spots or burned ends, hardening, correct firing order, and proper resistance (no more than 30K Ohms per wire).
- Wiring harness for bare spots, pinches, cuts or corroded connections.

ALSO CHECK:

- Fuel pressure.
- Water contaminated fuel.
- TPS for binding or sticking.
- Ignition timing. See Vehicle Emission Control Information Label.
- Vacuum/atmospheric pressure sensor
- Alternator output voltage. Repair if less than 9 or more than 16 volts.
- For open ignition system ground.
- Canister purge system for proper operation.
- EGR valve operation.
- Perform injector balance test.

Lack of Power, Sluggish

DEFINITION:

Engine delivers less than expected power. Little or no increase in speed when accelerator pedal is partially depressed.

Compare customer's car to similar unit. Make sure the customer's car has an actual problem. Was the customer's old car much more powerful? Is vehicle operator under heavily loaded condition?

Check air filter element for contamination. Replace as necessary.

CHECK:
- Throttle linkage for interference and proper travel.
- Ignition timing. See Emission Control Information Label.
- Restricted air filter.
- For restricted fuel filter or improper fuel pressure.
- ECM Grounds.
- EGR operation for being open or partly open all the time.
- Generator output voltage. Repair if less than 9 or more than 16 volts.
- Engine valve timing and compression.
- Engine for proper or worn camshaft.
- Secondary ignition for correct sparking voltage and duration using a scope.
- Secondary air control system.
- Poor or contaminated gasoline (check for excessive alcohol content), suggest owner try different brand.
- Check exhaust system for restriction.

Poor Fuel Economy

DEFINITION:

Fuel economy, as measured by an actual road test, is noticeably lower than expected. Also, economy is noticeably lower than it was on this car at one time, as previously shown by an actual road test.

CHECK:
- Engine thermostat for being stuck open or for wrong heat range.
- Fuel pressure.

Check owner's driving habits.
- Is A/C "ON" full time?
- Are tires at correct pressure?
- Are excessively heavy loads being carried?
- Is acceleration too heavy, too often?
- Suggest driver read "Driving For Best Fuel Economy" in owner's manual.

Check air cleaner element for dirt contamination.
Check for proper calibration of speedometer.
Visually (physically) Check:
- Vacuum hoses for splits, kinks and proper connections as shown on vacuum hose routing diagram information label.
- Ignition wires for cracking, hardness and proper connections.

Check ignition timing. See Emission Control Information Label.
Remove spark plugs. Check for cracks, wear, improper gap, burned electrodes or heavy deposits. Repair or replace, as necessary.
Check compression.
Check for dragging brakes.
Suggest owner fill fuel tank and recheck fuel economy.
Check for exhaust system restriction.

Rough, Unstable, or Incorrect Idle, Stalling

DEFINITION:

The engine runs unevenly at idle. If bad enough, the car may shake. Also, the idle may vary in RPM (called "hunting"). Either condition may be severe enough to cause stalling.

Engine idles at incorrect speed.

CHECK:
- Perform the usual checks for obvious problems (vacuum leaks, vacuum and electrical circuits correctly connected arcing at distributor or plug wires etc.)
- Ignition timing. See Emission Control Information Label.
- Injector balance.
- Bypass air control valve.
- If a sticking throttle shaft or binding linkage causes a high TPS voltage (open throttle indication) the ECU will not control idle. Monitor TPS voltage. "Scan" and/or Voltmeter should read less than 1.2 volts with throttle closed.
- EGR "ON" while idling will cause roughness, stalling, and hard starting.
- Check PCV valve for proper operation.
- Battery cables and ground straps should be clean and secure. Erratic voltage will cause bypass air control valve to change its position resulting in poor idle quality.
- Power Steering - ECU should compensate for Power Steering loads. Loss of this signal would be most noticeable when parking and steering loads are high.
- Inspect oxygen sensor for silicone contamination from fuel, or use of improper RTV sealant. The sensor will have a white, powdery coating, and will result in a high but false signal voltage (rich exhaust indication). The ECU will then reduce the amount of fuel delivered to the

engine, causing a severe driveability problem.

Surges and/or Chugs

DEFINITION:

Engine power variation under steady throttle or cruise. Feels like the car speeds up and slows down with no change in the accelerator pedal.

Use a "Scan" tool to make sure reading of VSS matches vehicle speedometer.

CHECK:

- For intermittent EGR at idle.
- Ignition timing. See Emission Control Information Label.
- Inline fuel filter for dirt or restriction.
- Fuel pressure.
- Generator output voltage. Repair, if less than 9 or more than 16 volts.

Inspect Oxygen sensor for silicone contamination from fuel, or use of improper RTV sealant. The sensor may have a white, powdery coating and result in a high but false signal voltage (rich exhaust indication). The ECU will then reduce the amount of fuel delivered to the engine, causing a severe driveability problem.

Remove spark plugs. Check for cracks, wear, improper gap, burned electrodes, or heavy deposits. Also check the condition of the rest of the ignition system.

Ignition System: Component Tests and General Diagnostics

NO SPARK TEST AND INSPECTION

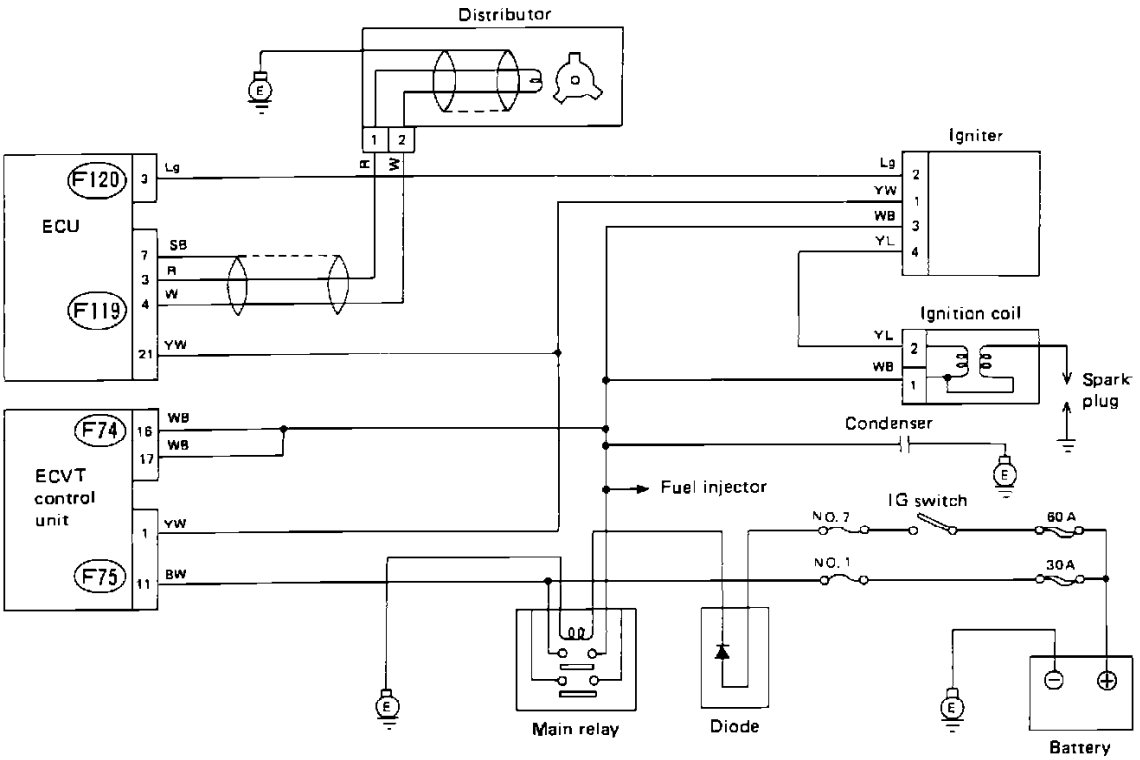

Ignition Control Circuit

The following procedure should be used to check for a "NO SPARK" condition. Refer to the schematic diagram and test the circuit with the diagnostic chart.

Wire color code identification:

L: Blue
B: Black
Y: Yellow
G: Green
R: Red
W: White
Br: Brown
Lg: Light green
Gr: Gray

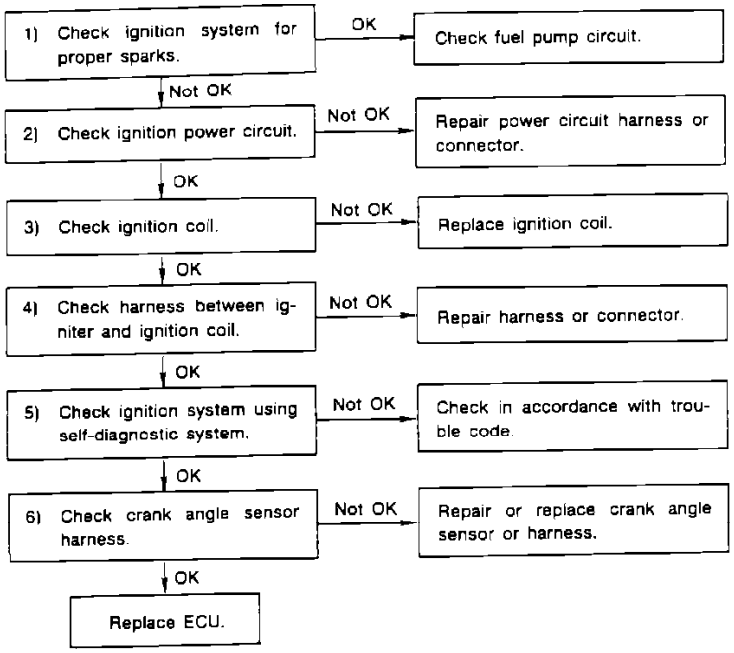

Ignition Control Circuit Diagnostic Chart

IGNITION CONTROL SYSTEM DIAGNOSTIC CHART

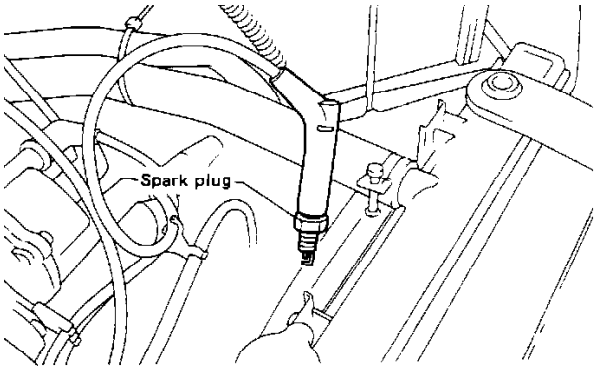

Checking For Spark

CHECK IGNITION SYSTEM FOR SPARK

1. Disconnect injector sub-harness.
2. Remove high tension wires from spark plugs.
3. Install **NEW** spark plug into wire terminal.
4. Ground threads of spark plug against engine.
5. Crank engine and confirm that spark occurs at each wire.

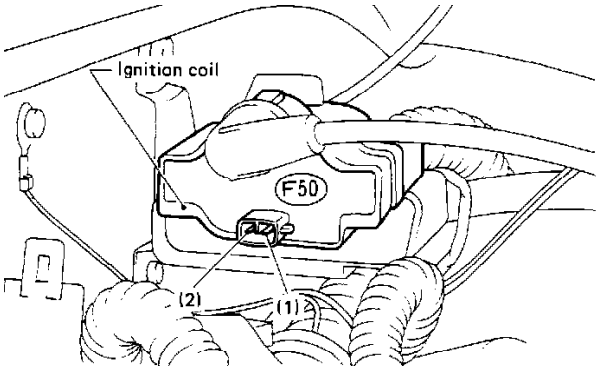

Primary Terminals

CHECK VOLTAGE AT POSITIVE TERMINALS OF COIL AND IGNITOR

1. Disconnect ignition coil and ignitor electrical connectors.
2. Turn ignition switch "ON".
3. Using a voltmeter, measure the voltage between ground and positive terminal of coil and ignitor (harness side).

Connector & terminal:	**Voltage:**
(F117)3-Ground	Above 9V
(F50)1-Ground	Above 9V

CHECK IGNITION COIL

1. Remove high tension cord from coil.
2. Using an ohmmeter, measure resistance between ignition coil terminals.

Connector & terminal:	**Resistance:**
(F50)1-(F50)2	0.9-1.1 Ohm @ 20° C (68° F)

3. Measure resistance between coil high tension terminal and connector terminal (F50)1. It should read 10-14K Ohms @ 20° C (68° F).

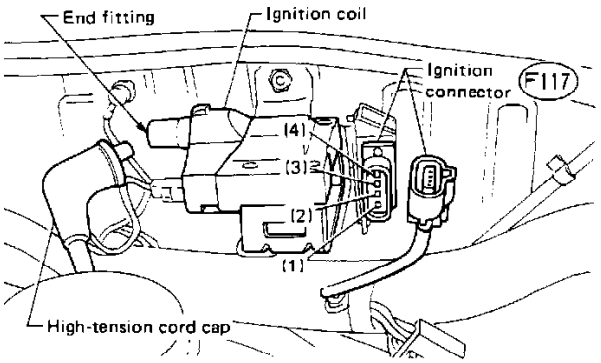

Ignitor Connector

CHECK HARNESS BETWEEN COIL AND IGNITOR

1. Using an ohmmeter, measure resistance between ignitor connector and coil connector.

Connector & terminal:	**Resistance:**
(F117)4-(F50)2	Below 1 Ohm

2. Reconnect all connectors.

CHECK FOR CODE 36 (FAULTY IGNITOR)

1. Make sure test mode and read memory connectors are disconnected.
2. Crank engine for five (5) seconds or more.
3. Turn key "ON" and connect read memory connector.
4. Code 36 should be in memory.

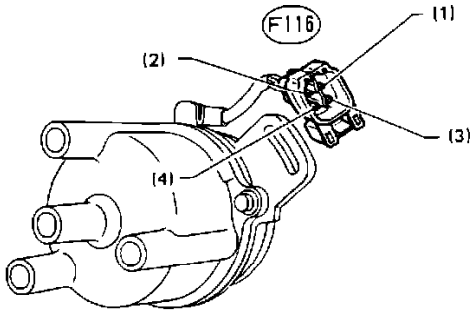

Crank Angle Sensor Connector

CHECK CRANK ANGLE SENSOR HARNESS

1. Disconnect distributor connector.
2. Using a voltmeter set below the 0.5 volt range, measure volatge between distributor terminals while cranking engine.

Connector & terminal:	**Voltage:**
(F116)1-2	Voltage changes in response to engine rpm.

Replace crank angle sensor if voltage remains constant or does not exist.

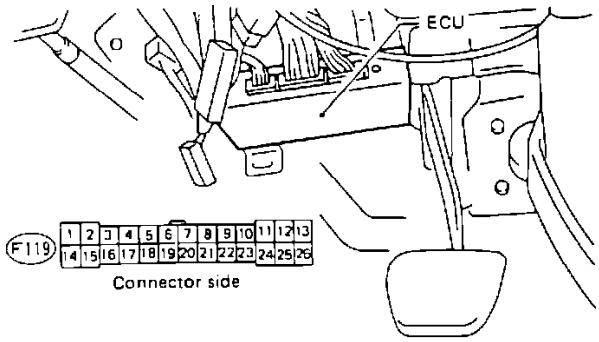

ECU Connector

3. Disconnect ECU connector.
4. Using an ohmmeter, measure resistance between ECU connector and distributor connector (harness side).

Connector & terminal:	**Resistance:**
(F119)3-(F116)1	Below 1 Ohm

(F119)4-(F116)2	Below 1 Ohm
(F119)3-ground	infinite Ohms
(F119)4-ground	infinite Ohms

5. Connect ECU connector.
6. Using an ohmmeter, back the ECU terminal and measure resistance.

Connector & terminal:	**Resistance:**
(F119)7-Ground	Below 10 Ohm

Firing Order: Specifications

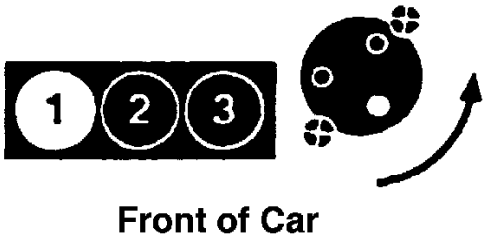

Firing Order: 1 - 3 - 2

Ignition Timing: Testing and Inspection

IGNITION TIMING

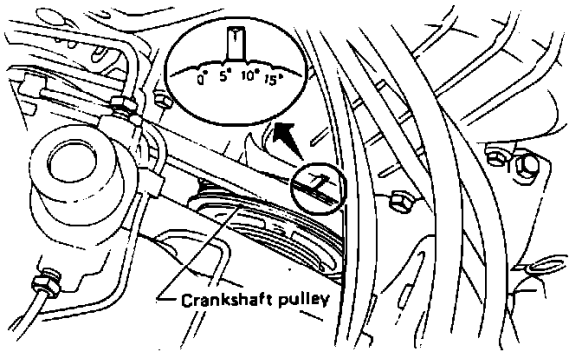

Timing Marks

1. Completely warm up engine.
2. Connect Test Mode connector (green connector under dash).
3. Ensure that transmission is in neutral and lights, rear defogger and heater fan are "OFF."
4. Hook up timing light, start engine and check timing.
5. If adjustment is necessary, loosen bolts and rotate distributor. Clockwise rotation advances timing and counterclockwise rotation retards timing. Retighten bolts when adjustment is complete.
6. Stop engine and disconnect Test Mode connector.

Ignition Timing (BTDC):

A/T: 5° @ 850 rpm
M/T: 5° @ 750 rpm

Timing Marks and Indicators: Locations

TIMING MARKS

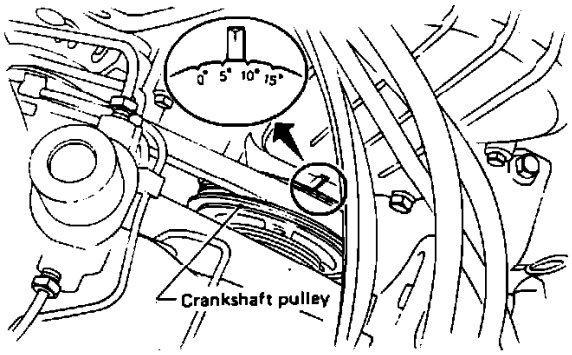

Timing Marks

CYLINDER NUMBERING

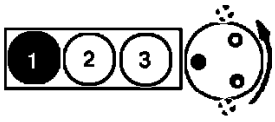

FRONT OF CAR

3-CYL. FIRING ORDER: 1 3 2

Fig. 1 Firing Order

Crankshaft Position Sensor: Description and Operation

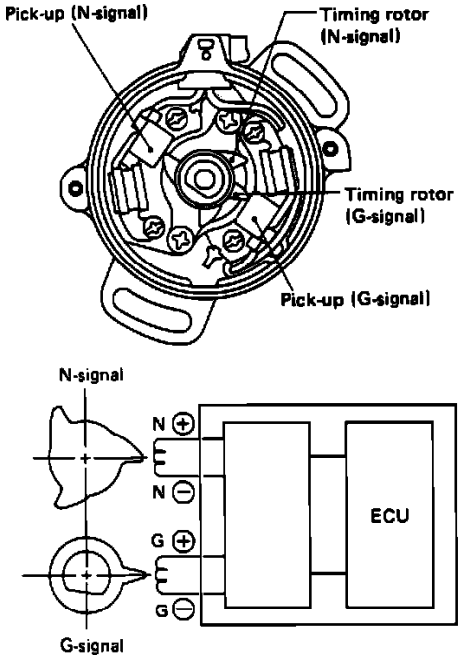

Crank Angle Sensor

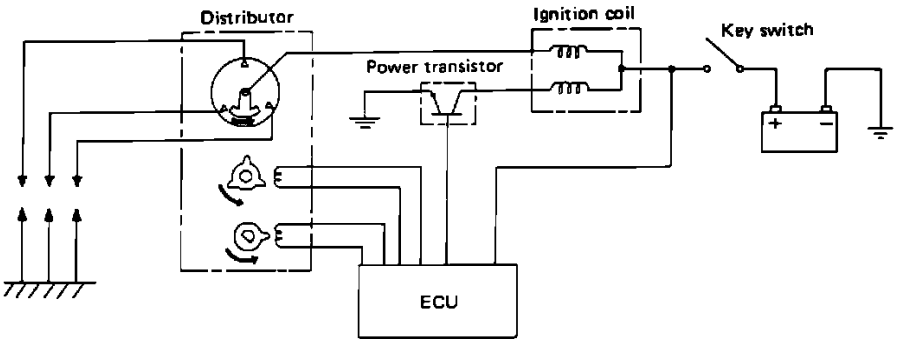

Crank Angle Sensor

N-SIGNAL SENSOR

PURPOSE

The N-signal is used to read crank angle and engine rpm. This signal is used for injection and ignition timing.

LOCATION

The signal generator is built into the distributor.

CONSTRUCTION

The sensor consists of a rotor (stator) and pick-up coil. Stator lobes are spaced at 120° to reference TDC of each cylinder.

OPERATION

A signal is generated whenever the engine is rotating. Each time a stator lobe passes the pick-up coil, a voltage pulse is generated. Due to lobe design, three pulses per revolution are produced. The pulses appear 120° apart, corresponding to TDC position of each cylinder.

G-SIGNAL SENSOR

PURPOSE

The G-signal is used to read cylinder #1 TDC. This signal is used to determine which cylinder is being referenced by the N-signal.

LOCATION

The signal generator is built into the distributor.

CONSTRUCTION

The sensor consists of a rotor (stator) and pick-up coil. The stator has a single lobe corresponding to cylinder #1 TDC.

OPERATION

A signal is generated whenever the engine is rotating. Each time a stator lobe passes the pick-up coil, a voltage pulse is generated. Due to lobe design, one pulse per revolution is produced. This pulse occurs only when cylinder #1 is at TDC.

Crankshaft Position Sensor: Testing and Inspection

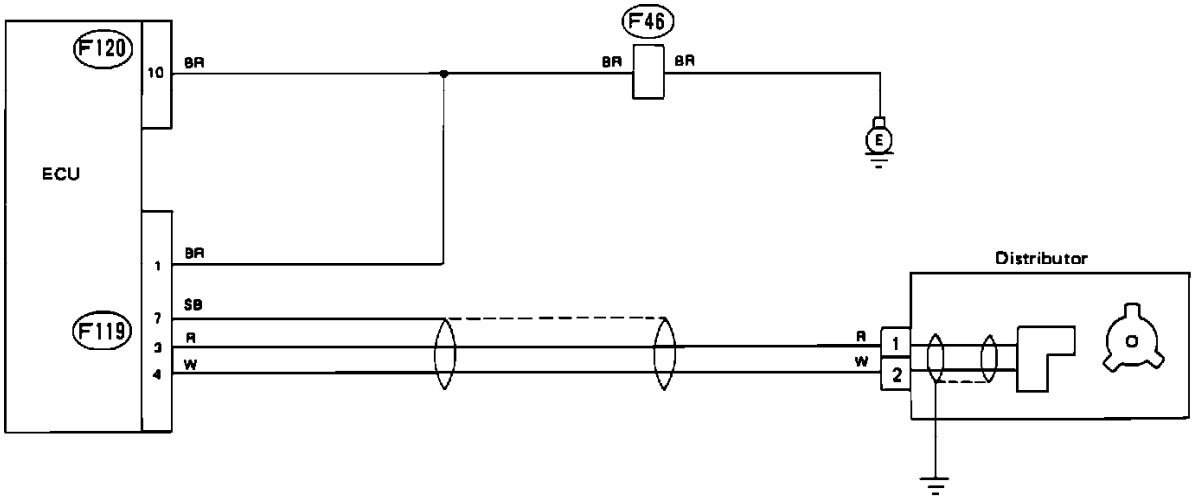

Crank Angle Sensor Schematic

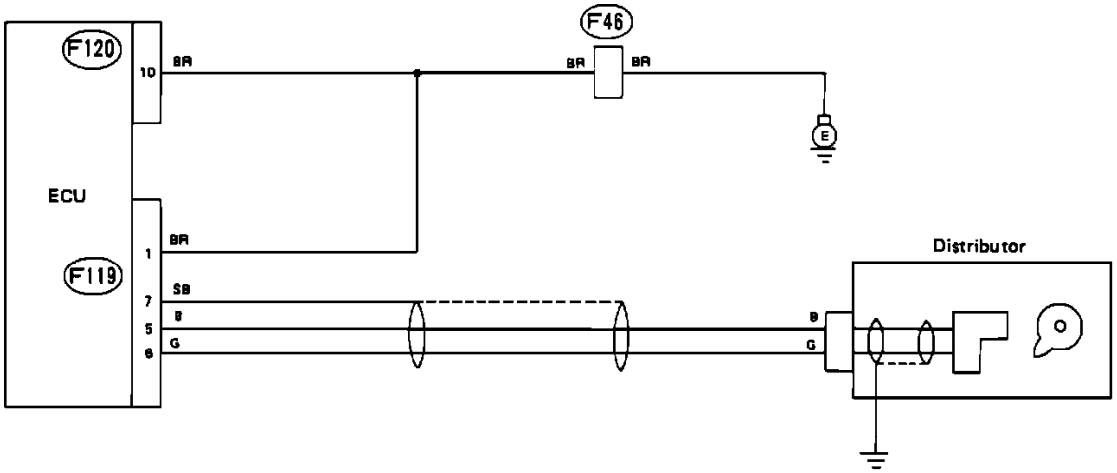

Cylinder Distinction Sensor Schematic

A faulty crank angle sensor will set code 11 in the on-board diagnostic system and the cylinder distinction sensor will set code 13. Refer to the schematic diagrams and test these sensors with the diagnostic charts.

Wire color code identification:

L: Blue
B: Black
Y: Yellow
G: Green
R: Red
W: White
Br: Brown
Lg: Light green
Gr: Gray

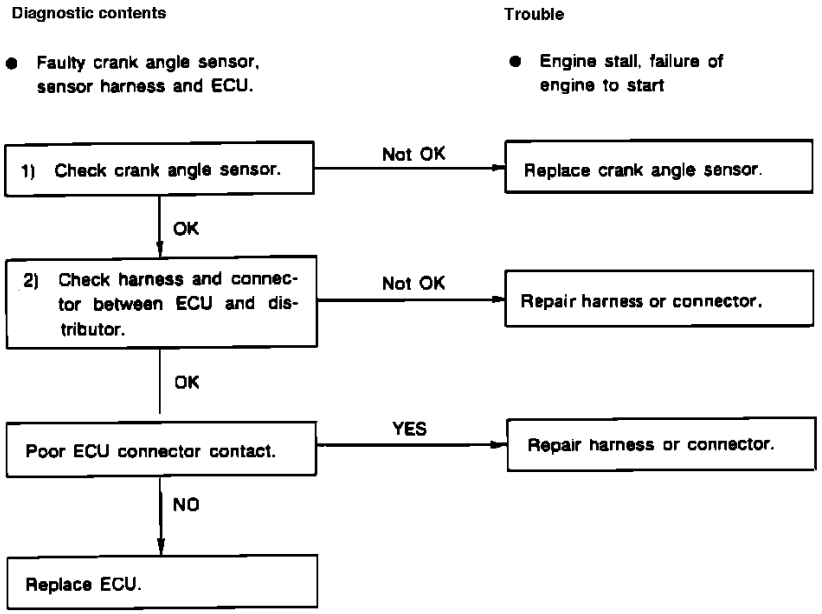

Crank Angle Sensor Diagnostic Chart

CRANK ANGLE SENSOR DIAGNOSTIC CHART

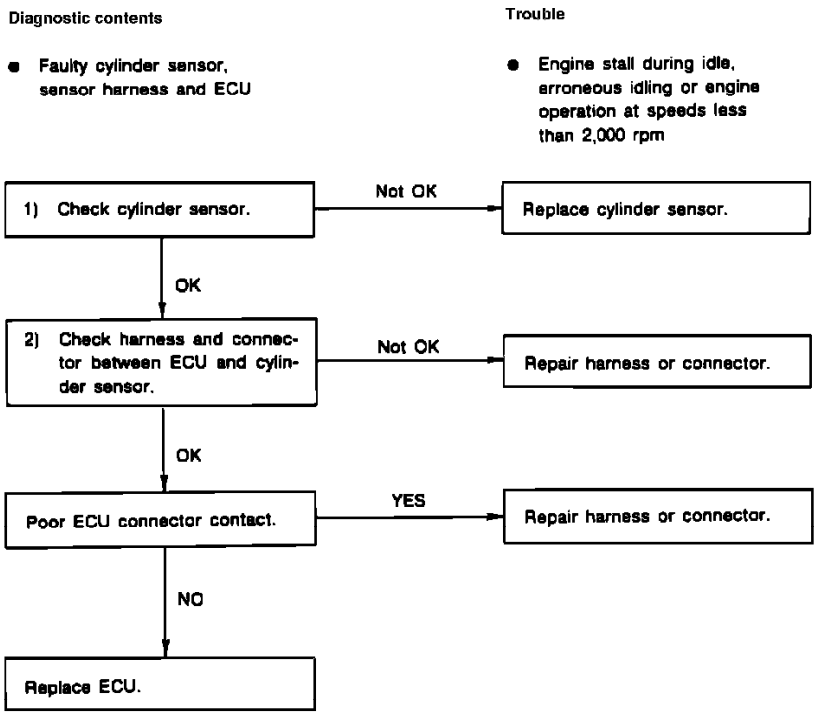

Cylinder Distinction Sensor Diagnostic Chart

CYLINDER DISTINCTION SENSOR DIAGNOSTIC CHART

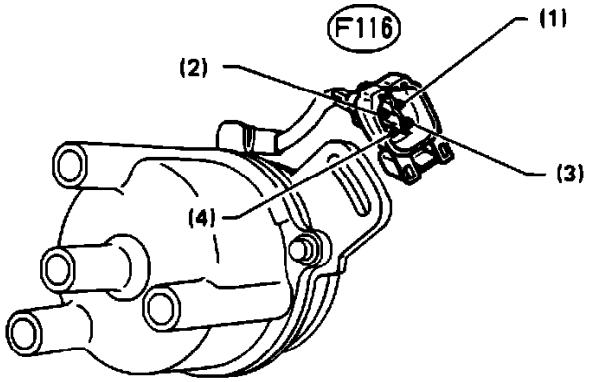

Crank Angle Sensor Testing

CHECK CRANK ANGLE SENSOR

1. Disconnect connector from distributor.
2. Measure voltage between distributor side connector terminals while cranking engine:

Connector & terminal:	**Voltage: [1]**
(F116)1-(F116)2	Varies with rpm

CHECK CYLINDER DISTINCTION SENSOR

1. Disconnect connector from distributor.
2. Measure voltage between distributor side connector terminals while cranking engine:

Connector & terminal:	**Voltage: [1]**
(F116)3-(F116)4	Varies with rpm

[1] Measure with a high impedance voltmeter set below the 0.5V range.

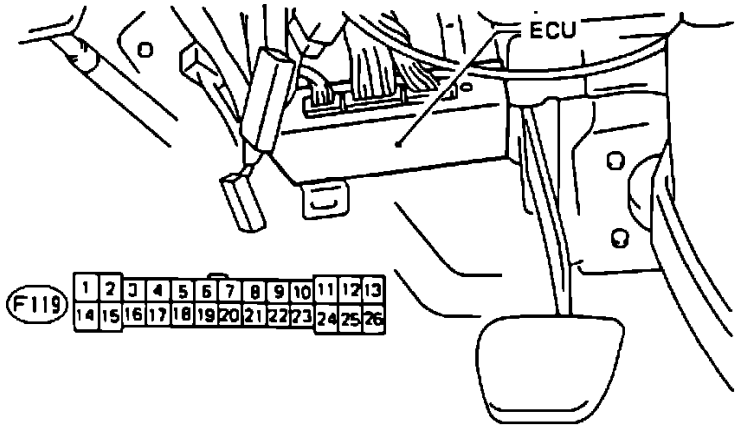

ECU/Crank Angle Sensor Harness Testing

CHECK HARNESS BETWEEN ECU AND DISTRIBUTOR

For crank angle sensor:

1. Disconnect ECU and distributor connectors.
2. Check resistance between ECU and distributor connectors and ground as follows:

Connector & terminal:	**Resistance:**
(F119)3-(F119)1	Below 1 Ohm
(F119)4-(F119)2	Below 1 Ohm
(F119)3-Ground	Infinite
(F119)4-Ground	Infinite

3. Reconnect ECU connector and measure resistance between (F119)7 and ground. Resistance should be below 10 Ohms.

For cylinder distinction sensor:

1. Disconnect ECU and distributor connectors.
2. Check resistance between ECU and distributor connectors and ground as follows:

Connector & terminal:	**Resistance:**
(F119)5-(F119)3	Below 1 Ohm
(F119)6-(F119)4	Below 1 Ohm
(F119)5-Ground	Infinite
(F119)6-Ground	Infinite

3. Reconnect ECU connector and measure resistance between (F119)7 and ground. Resistance should be below 10 Ohms.

Crankshaft Position Sensor: Service and Repair
Removal and Replacement

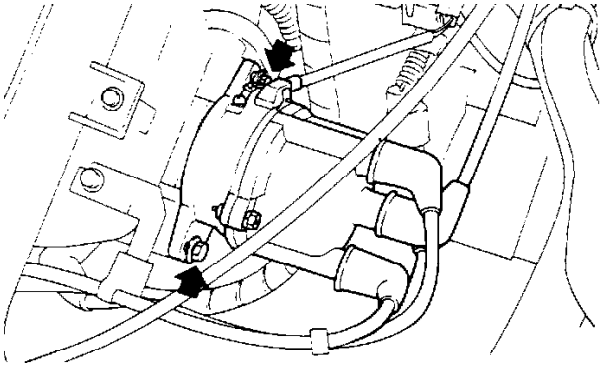

Distributor Fasteners

REMOVAL

1. Remove wires from distributor cap and remove cap.
2. Disconnect primary wire.
3. Remove distributor retaining bolt and remove distributor.
4. Remove O-ring.

INSTALLATION

1. Install O-ring onto distributor housing.
2. Lube distributor housing LIGHTLY with anti-seize compound.
3. Install distributor into cylinder and turn rotor to align.

   NOTE: Distributor and cam are keyed. Distributor can only be inserted one way.

4. Install hold down screw and tighten slightly.
5. Install distributor cap and wires.
6. Connect electrical connector.
7. Adjust timing.

Crankshaft Position Sensor: Service and Repair
Disassembly and Reassembly

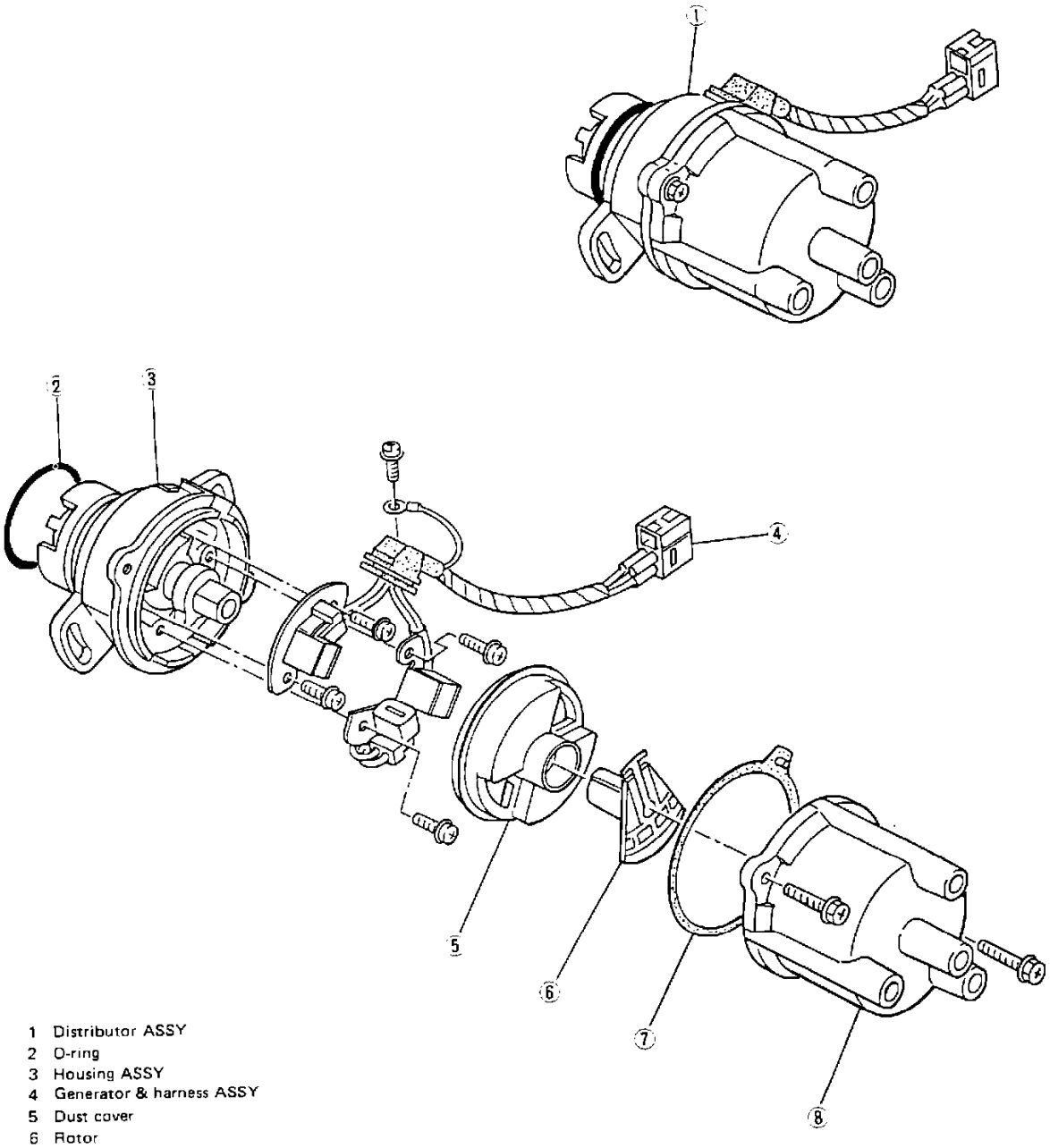

Distributor

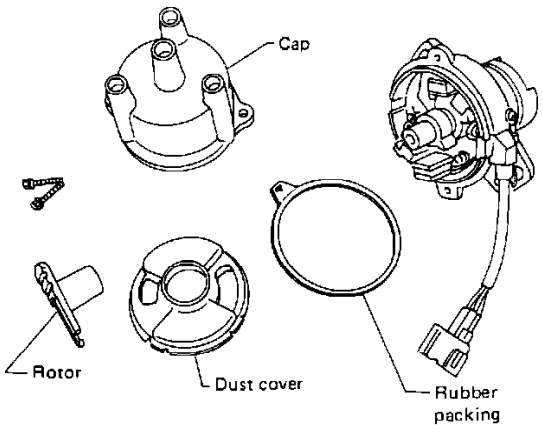

DIstributor Cap And Rotor

DISASSEMBLY

1. Remove the distributor cap and rotor.

2. Remove the dust cover and seal ring.

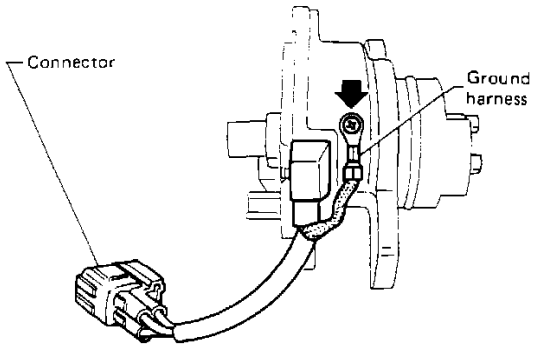

Ground Harness

3. Disconnect the ground harness.

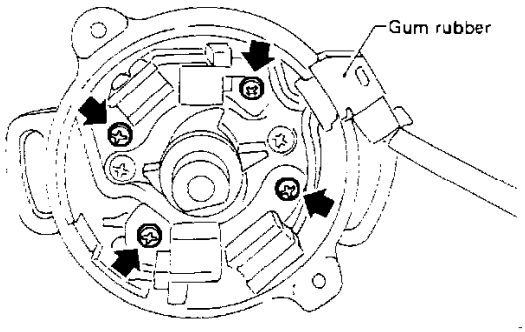

Pulse Generator Screws

4. Remove the screws securing the sensor assembly to the distributor housing.

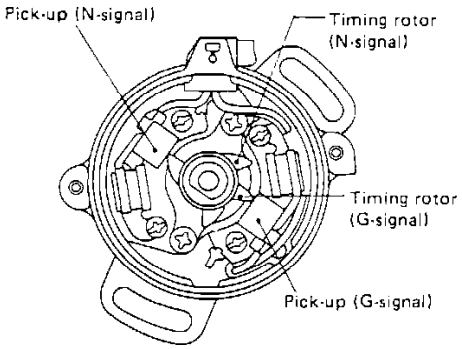

Top View Of Distributor

ASSEMBLY

1. Assemble in reverse order.

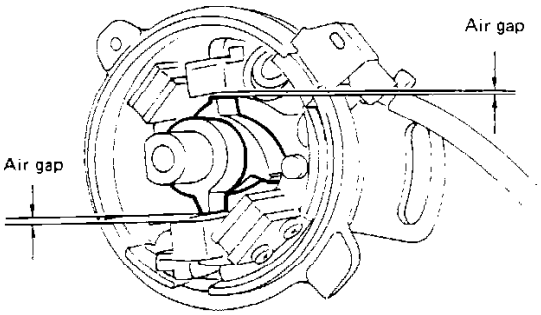

Air Gap

2. Adjust reluctor air gap as follows:
   a. Using a brass feeler gauge, measure the distance between the reluctor tips and each pole.
   b. Move reluctor until all gaps are equal.

AIR GAP CLEARANCE

0.008 - 0.016 in (0.2 - 0.4 mm)

Distributor: Description and Operation

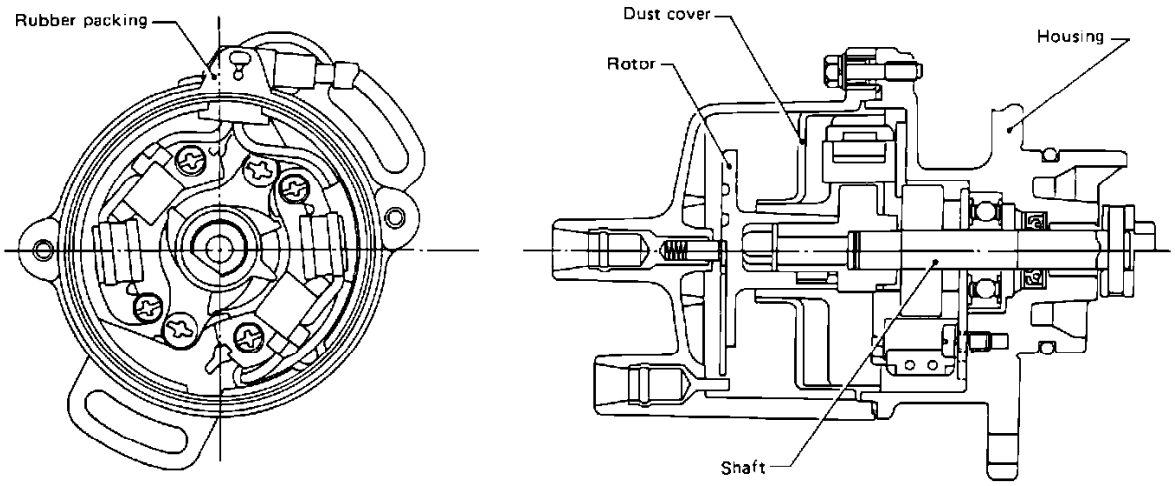

Distributor

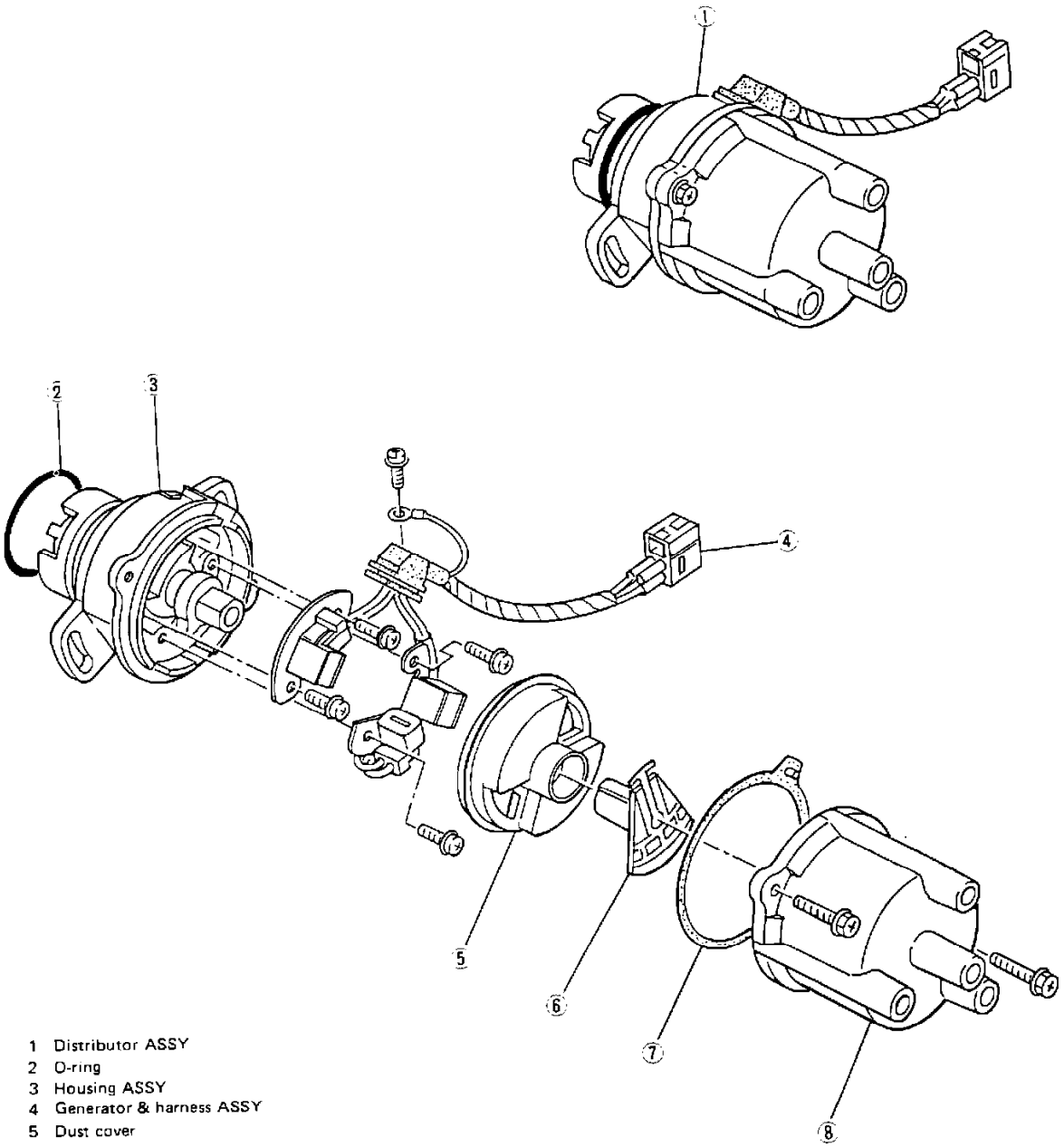

Distributor

PURPOSE

Distributes spark to the plug wires, contains the crank angle sensor.

Subaru Justy Hatchback 4WD L3-1.2L SOHC (MPFI)

LOCATION

At left side of cylinder head.

OPERATION

The distributor is operated by the camshaft. The distributor has a shaft that is connected to the cam. This shaft turns at the same speed as the cam. Mounted to the top of this shaft is the distributor rotor. Mounted to the top of the distributor housing is the distributor cap. High volatge enters the center electrode in the distributor cap and is conducted to the center elctrode of the distributor rotor. As the rotor turns, voltage passes through the rotor and to the nearest output electrode of the cap. It then passes through the igition wire to the spark plug. This distributor is equipped with a crank angle sensor. Refer to **Computers and Control Systems** for description and operation.

Distributor Cap: Description and Operation

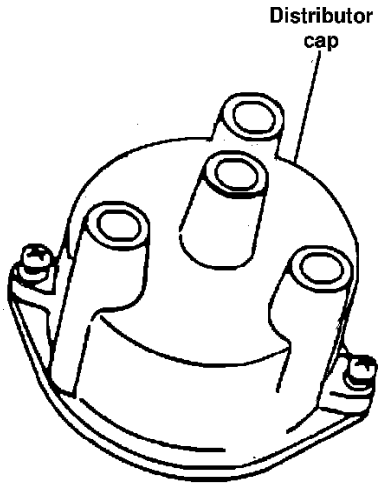

Distributor Cap

PURPOSE

Used to make the connection between the rotor and the correct spark plug wire.

LOCATION

On top of the distributor.

OPERATION

High tension current from the rotor is distributed to the towers of the distributor cap at a pre-set sequence and then to the spark plug wires which carry the current on to the spark plugs.

Ignition Rotor: Description and Operation

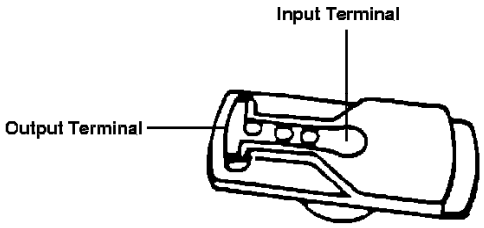

Distributor Rotor

PURPOSE

Directs incoming voltage to the correct output terminal of the diastributor cap.

LOCATION

On top of the diastributor shaft.

OPERATION

As the distributor shaft rotates, so does the rotor. Voltage passes from the center to the output electrode, jumping the gap to the nearest output terminal of the distributor cap.

Ignition Cable: Description and Operation

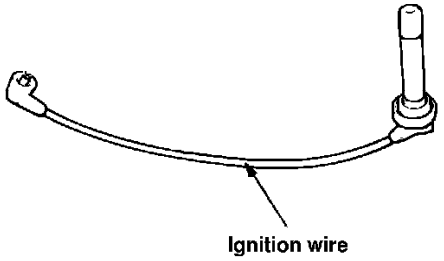

Ignition Wire

PURPOSE

Conduct high voltage from the ignition coil to distributor cap and from the distributor cap to the spark plugs.

CONSTRUCTION

The ignition wires have an internal resistance to suppress radio static and to eliminate static that may interfere with sensitive computer components.

Ignition Cable: Testing and Inspection

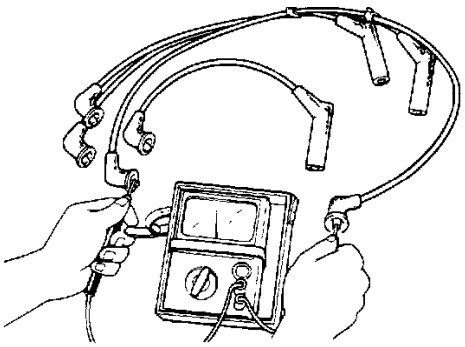

Ignition Wires

Using an ohmmeter, check ignition wire resistance. If resistance is not as specified, replace ignition wires as necessary.

WIRE	OHMS
Coil	4590 - 10710
#1	4580 - 10680
#2	4110 - 9590
#3	2900 - 6760

Ignition Coil: Description and Operation

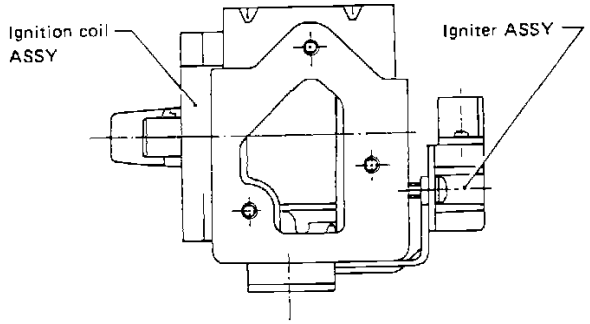

Ignition Coil

PURPOSE

Transforms battery voltage into ignition voltage and delivers it in the form of a high voltage surge to the secondary ignition components.

LOCATION

On firewall, near the brake master cylinder.

CONSTRUCTION

The ignition coil contains two sets of copper wire windings around a soft iron core. The primary winding is made of a hundred or so turns of a heavy gage wire. It is connected to the battery through the ignition relay. The secondary winding contains several thousand turns of wire wound directly onto the iron core. The ratio of the number of wraps in the secondary winding to the number of wraps in the primary windings determines the output voltage of the coil. The secondary winding is connected to the coil output tower through the iron core.

OPERATION

When current flow in the primary winding is stopped (by the ignitor), the collapse of the magnetic field causes a voltage to be induced in the secondary windings. Voltage flows out of the coil's secondary terminal, through the ignition cable, into the spark plug and jumps the electrode gap to ground causing a spark.

Ignition Coil: Testing and Inspection

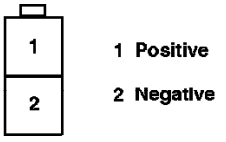

Ignition Coil Terminals

1. Disconnect coil connector.
2. Measure resistance of coil primary and secondary windings as follows:

PRIMARY

Terminal:	**Resistance:**
1 (+) & 2 (-)	0.81 - 0.99 Ohms

SECONDARY

Terminal:	**Resistance:**
1 (+) & secondary	8.5k - 11.0k Ohms

Ignition Control Module: Testing and Inspection

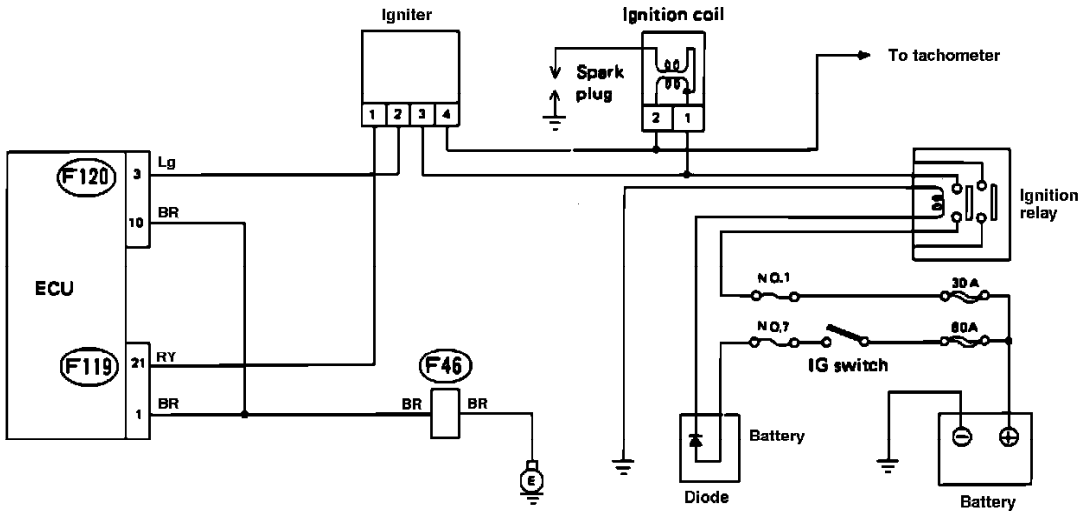

Ignition System Igniter Schematic

A faulty ignition system igniter will set code 36 in the on-board diagnostic system. Refer to the schematic diagram and test the igniter with the diagnostic chart.

Wire color code identification:

L: Blue
B: Black
Y: Yellow
G: Green
R: Red
W: White
Br: Brown
Lg: Light green
Gr: Gray

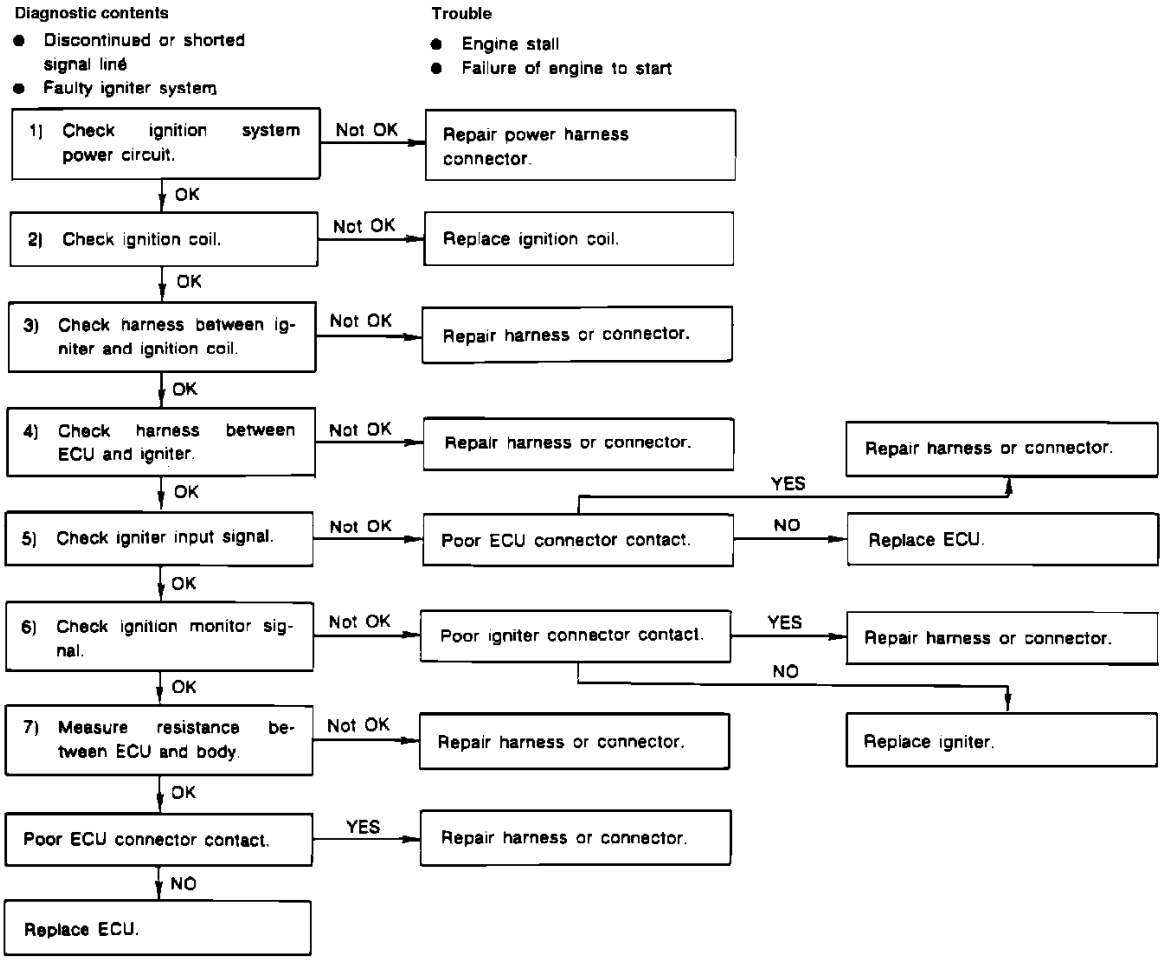

Ignition System Igniter Diagnostic Chart

IGNITION SYSTEM IGNITER DIAGNOSTIC CHART

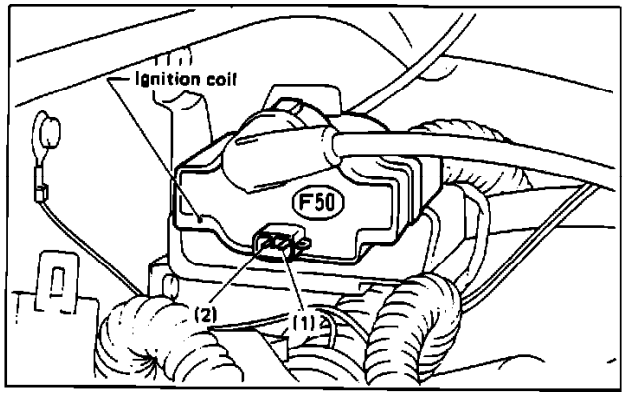

Ignition System Igniter Testing

CHECK VOLTAGE AND RESISTANCE OF COIL AND IGNITER

1. With ignition "OFF," disconnect coil and igniter connectors.
2. Turn ignition "ON" and measure voltage between harness positive terminal of coil and igniter and ground as follows:

Connector & terminal:	**Voltage:**
(F117)3-Ground	Above 9V
(F50)1-Ground	Above 9V

3. Remove high tension lead from coil.
4. Measure resistance between coil connector terminals as follows:

Connector & terminal:	**Resistance:**
(F50)1-(F50)2	0.9-1.1 Ohm @ 20° C (68° F)

5. Measure resistance between coil high tension terminal and connector terminal (F50)1. It should read 10-14K Ohms @ 20° C (68° F).

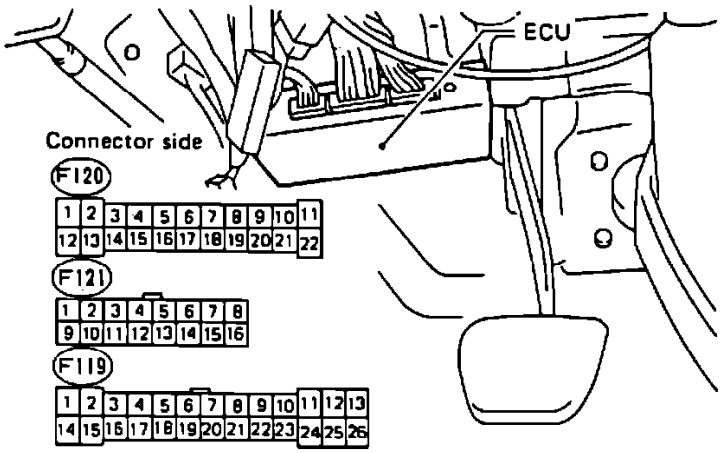

ECU Connectors

CHECK HARNESS BETWEEN IGNITER AND COIL

1. Measure resistance between igniter harness connector (F117)4 and coil harness connector (F50)2. It should be below 1 Ohm.
2. With ECU and igniter disconnected, measure resistance as follows:

Connector & terminal:	**Resistance:**
(F119)21-(F117)1	Below 1 Ohm
(F120)3-(F117)2	Below 1 Ohm

CHECK ECU HARNESS AND GROUND

1. Measure resistance between ECU and ground as follows:

Connector & terminal:	**Resistance:**
(F119)21-Ground	Infinite

(F120)3-Ground	Infinite

2. With ignition "OFF," disconnect ECU connector.
3. Measure resistance between ECU and ground as follows:

Connector & terminal:	**Resistance:**
(F119)1-Ground	Below 10 Ohms
(F120)10-Ground	Below 10 Ohms

CHECK IGNITER OUTPUT SIGNAL

1. With ignition "ON," measure voltage between ECU connector terminal (F119)21 and ground while engine is being cranked.
2. Voltage should fluctuate between 1V and 3V.

CHECK IGNITION MONITOR SIGNAL

1. With ignition "ON," measure voltage between ECU connector terminal (F120)3 and ground while engine is being cranked.
2. Voltage should fluctuate between 1V and 3V.

Pick-Up Coil: Adjustments

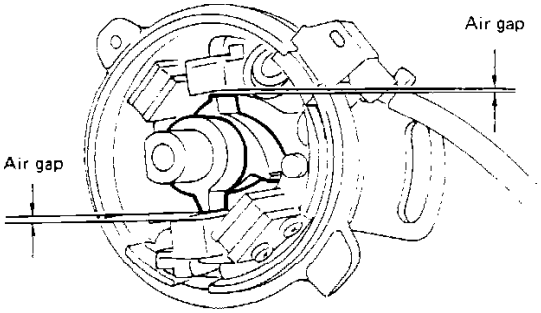

Air Gap

1. Remove distributor.
2. Loosen reluctor holddown screws.
3. Adjust reluctor air gap as follows:
   a. Using a brass feeler gauge, measure the distance between the reluctor tips and each pole.
   b. Move reluctor until all gaps are equal.

   AIR GAP CLEARANCE
   0.008 - 0.016 in (0.2 - 0.4 mm)

5. Tighten screws.
5. Re-install distributor, rotor and cap.
5. Adjust ignition timing.

Spark Plug: Description and Operation

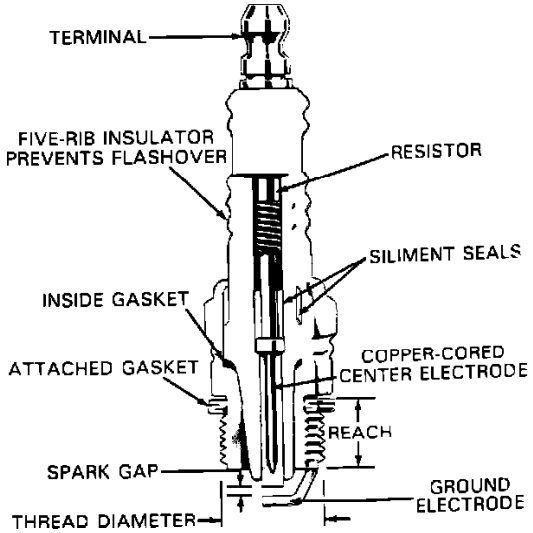

Spark Plug Cutaway View

PURPOSE

Spark plugs allow high-voltage secondary current to arc across a small air gap to ignite the air/fuel mixture in the combustion chamber.

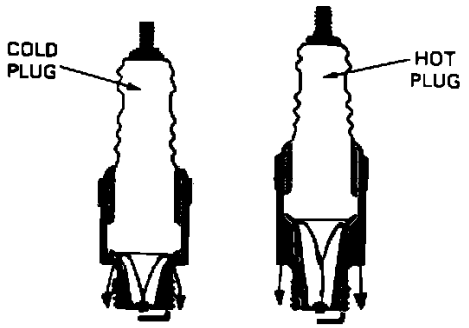

Spark Plug Temperature

HEAT RANGE

The temperature of the spark plug is determined by the length of the insulator and the size of the heatsink area. The longer the insulator, the smaller the heatsink area will be. This causes the spark plug to be hotter.

The heat range of the plug is determined by its ability to dissipate heat created during combustion. If too cold a plug is used, the possibility of fouling is increased. A plug that is too hot can cause preignition. Hotter plugs tend to burn cleaner with less deposit build-up. They can be used for stop-start city driving, but not for extended high speed or load conditions as engine damage can occur.

Spark Plug: Testing and Inspection

REMOVAL

1. Twist and pull to remove ignition wire from plug.
2. While wearing saftey glases, use compressed air to blow out debris from plug well.
3. Using a 5/8" (16mm) socket, remove plug.

CAUTION: Use care not to allow foreign matter to enter through plug holes.

INSPECTION

1. Check spark plugs for:
   - ^ Broken insulator
   - ^ Worn electrode
   - ^ Carbon deposits
   - ^ Damaged or broken gasket
   - ^ Burnt condition of porcelain insulator at spark gap.

NOTE: Dark deposits indicate too rich a fuel mixture. Light (white) deposits indicate too lean a fuel mixture, advanced ignition timing or insufficient plug tightening

2. Check plug gap and adjust to **0.039 - 0.043in (1.0 - 1.1mm).**

INSTALLATION

1. Adjust electrode gap to **0.039 - 0.043 in (1.0 - 1.1 mm).**
2. Lightly coat threads of plug with anti-seize compound.
3. Install and thread plug into cylinder head by hand.
4. Torque spark plug to **14 - 22 ftlb (20 - 29 Nm).**
5. Apply dielectric compound to the inside of ignition wire boot and install. A slight click will be heard when wire is properly connected.
6. Tighten spark plug to specified torque. Overtorqueing may damage cylinder head threads.

RECOMMENDED SPARK PLUGS

BRAND	PART NO.
NGK	BPR6ES-11
NIPPONDENSO	W20EPR-U11
CHAMPION	RC9YC-4

Fuel Delivery and Air Induction: Description and Operation

GENERAL DESCRIPTION

The fuel injection system delivers a precise amount of highly atomized fuel to the intake system to ensure optimum performance and emissions compliance. This is a multi-point sequential fuel injection system.

The fuel system consists of three major sub-systems:
^ The fuel storage system,
^ Fuel injectors with the supporting fuel injection control system, and
^ The fuel delivery and return system.

FUEL STORAGE

The fuel storage system consists of a fuel tank, fill spout and filler cap.

FUEL INJECTION AND CONTROL

The injectors are solenoid operated valves designed to deliver fuel in an appropriate spray pattern to promote total fuel atomization in the intake air stream

The fuel injection control system consists of the **ECU** (Electronic Control Unit) and all of the engine and operating condition sensors. Using the information from the sensors to determine the proper fuel amount and delivery time, the ECU varies the injectors "ON" time to adjust the amount of fuel delivered during each individual firing cycle.

For a more detailed description of the fuel injection system operation, refer to **Computers and Control Systems**.

FUEL DELIVERY AND RETURN

The fuel delivery system delivers fuel at a pressure and quantity high enough to allow the fuel regulator to maintain a constant fuel pressure in the fuel delivery rail (in reference to the intake manifold pressure) under all driving conditions. A check valve in the fuel pump holds pressure in the system after engine shutdown to prevent vapor lock and to ensure adequate pressure is available during warm engine re-start conditions.

The fuel delivery components consist of fuel supply lines, a high pressure fuel pump (mounted in the fuel tank), a fuel filter assembly and a fuel pressure regulator.

The fuel return system recovers excess fuel vented by the fuel pressure regulator (mounted on the fuel rail) and returns it to the fuel tank. The fuel return line is low pressure and returns directly to the fuel tank. The fuel return system consist of lines and couplings

FUEL VAPOR RECOVERY

The fuel vapor recovery system provides a route for the recovery of fuel vapors (from the fuel tank) either for storage in the charcoal canister, or for evacuation through the purge control system. The vapor recovery system also consists of lines and couplings. Additionally contained in the vapor recovery system are two components, an overfill limiter and a fuel check valve. These components function as evaporative emissions control devices and are therefore covered in detail in **Emission Control Systems**.

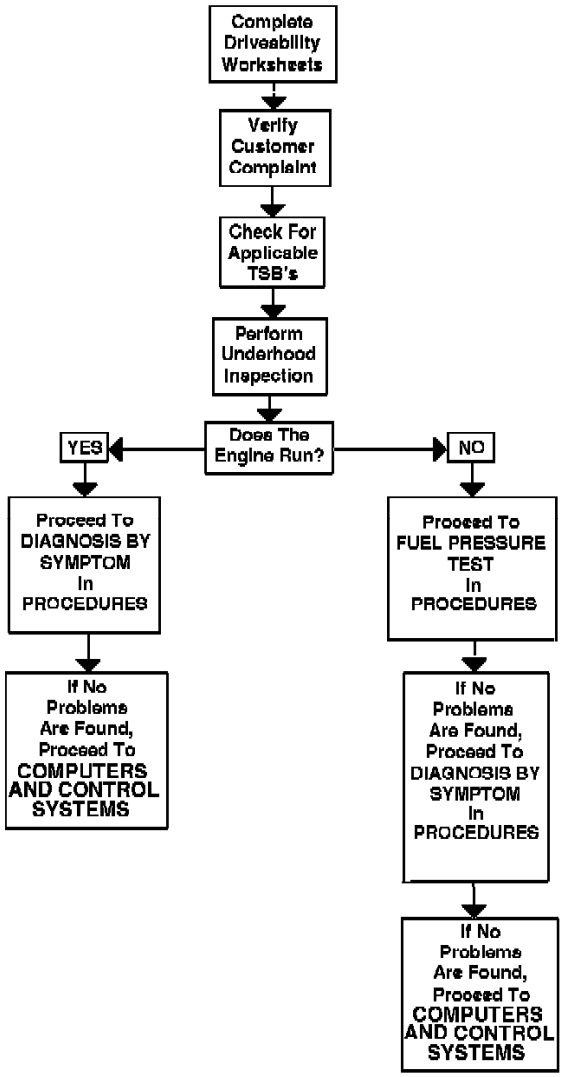

Flow Of Diagnosis

Fuel Delivery and Air Induction: Initial Inspection and Diagnostic Overview

All troubleshooting must begin by **"Checking the Basics"**. Certain basic faults can be undetectable by the self-diagnostic system of the ECCS control unit and in some cases can actually interfere with the self-checking and fault memory operation. Low battery voltage, for example, can cause erroneous faults to set in control unit fault memories or can cause a system to go "Fail Safe" without setting a fault in memory. On the other hand, system fault memories are cleared whenever the control unit or the battery is disconnected. Therefore, all fault memories should be read prior to any vehicle power interruption or troubleshooting. Prior to any teardown, repair or component replacement, the following steps should always be considered.

COMPLAINT VERIFICATION

Whenever possible the repairing technician should personally verify the complaint. Having experienced the malfunction, the technician is less likely to try to repair non-existent faults.

MALFUNCTION VERIFICATION

Today's sophisticated automotive systems are easily misunderstood, which can lead to repairs that attempt to force a particular system to perform in a way that it was never intended to operate. Therefore, the troubleshooting technician should compare the system operation to the nominal system operation as described in the section **Description and Operation**. Furthermore, the technician is also encouraged to compare the problem vehicle system operation with a known good vehicle.

PREVIOUS REPAIRS

The vehicle repair history can provide explanations to unusual complaints which seem to elude normal troubleshooting attempts. Incorrect components or unapproved repairs can have subtle influences on seemingly unrelated systems.

BATTERY STATE OF CHARGE

Batteries in a state of partial discharge can have a dramatic effect of ECCS control units and related components.

POSITIVE BATTERY CABLE INTEGRITY

All B+ connections must be in perfect condition for trouble-free electronic system operation. Refer to **Diagrams** for B+ interconnects.

FUSIBLE LINK INTEGRITY

Fusible links are employed to prevent possible damage to electrical components and wiring harnesses. These links and their connections must be without dynamic resistance. Dynamic resistance can only be checked using the voltage drop method of testing.

NEGATIVE GROUND CONNECTIONS

As all electrical circuits are a circle, all B- connections must also be checked and verified to be in perfect condition. A poor "common" ground point will cause seemingly unrelated systems to influence one another. High current systems which encounter a poor "common" ground can back feed through other electrical systems causing unusual operation and perhaps inexplicable component failure. As with the B+ side of the electrical system, the ground side should be checked dynamically using the voltage drop technique.

POWER TRAIN CABLE ATTACHMENTS

Metal cables attached to the engine or transmission which appear overheated and/or discolored indicate the need to thoroughly test all ground connections.

POWER SUPPLY RELAYS

Fuel pump and main relays as well as their plug connections can be a source of intermittent operation which will not set a fault code in ECM memory.

HIGH TENSION COIL AND SECONDARY COMPONENTS WIRING

The secondary ignition system should be checked visibly as well as with a suitable engine analyzer and scope. All components should be examined for tight connections and freedom from carbon tracking, moisture and corrosion.

FUEL DELIVERY AND FUEL RAIL PRESSURE

Fuel delivery must begin at once when cranking and the pressure in the fuel rails must be within specifications. Fuel pressure retention must be maintained between the fuel pump outlet and the pressure regulator after engine shutdown.

SPARK PLUG CLEARANCE

The spark plug gap, if out of specification, can significantly impair engine performance. Spark plug type, condition and gap must verified according to specification.

VACUUM AND VAPOR HOSE INTEGRITY

Vacuum and vapor hoses must be routed correctly and not leaking. Always use the underhood label for primary information and refer to **Diagrams** for verification.

AIR/FUEL RATIO

Adaptive engine management systems efficiently compensate for conditions which may affect the combustion process. However, when troubleshooting idle quality or driveability complaints, it is still necessary to consider the following:

- Injector spray pattern quality
- Presence of unmetered air leaks
- Evaporative purge system

- ^ Excessive engine oil dilution
- ^ Substandard fuel or unapproved additives
- ^ Carbon build-up

TESTING EQUIPMENT

High standard testing equipment is essential if accurate results are expected. The use of faulty equipment will result in erroneous test results. Use only suitable test leads, terminals and probe tips.

Fuel Delivery and Air Induction: Symptom Related Diagnostic Procedures

Backfires and Afterfires

Fuel ignites in the intake manifold, or in exhaust system, making a loud popping noise.

POSSIBLE CAUSE	ACTION
EGR open all the time, leaking gasket	Check EGR system in "Testing Procedures" in Emissions
Air management valves, Deceleration valve, Check valves malfunctioning	Check Air Injection system in "Testing Procedures" in Emissions

Detonation - Pings, Spark Knock

A mild to severe ping, usually worse under load or acceleration. Sounds like something is rattling or knocking in the engine.

POSSIBLE CAUSE	ACTION
EGR inoperative	Check EGR system in "Testing Procedures" in Emissions
Ignition timing advanced	Check Ignition Timing in "Adjustment Procedures" in Emissions
Air damper door binding, air cleaner temperature control malfunction	Check inlet air temperature system (TAC) in "Testing Procedures" in Emissions
Spark timing not retarding	Check Spark Controls in "Fuel Injection and Computerized Engine Controls"
Poor or contaminated fuel	Recommend higher grade fuel

Diagnostic Notes

This section is used to find the correct test procedure for a given symptom. The symptoms and actions in this section are **Fuel related only.** Refer to Fuel Injection and Computerized Engine Controls for complete Diagnosis By Symptom for Fuel, Ignition, Computerized Engine Controls and Emissions. Verify the correct system application to ensure that the vehicle has the given component(s).

Before proceding to the appropriate symptom perform the following visual inspection:

NOTE: It is essential that the vehicle has been properly warmed up and is at operating temperature (except when attempting to diagnosis a cold driveablity problem). The catalytic converter and feedback systems will not function as designed if this is not achieved. Failure to do so will result in inaccurate test results.

1 Vacuum hoses for splits, kinks and proper routing.
2 Ignition wires for cracking, hardness and proper connections at both the distributor and spark plugs.
3 All wiring for proper connections, pinches, routing, and cuts.

Engine Lacks Power and/or High Speed Performance

1. Pressure regulator regulating pressure too low.
2. Fuel injector filter clogged.
3. Throttle sensor out of adjustment or abnormal output signal.
4. Damaged gasket or loose screws.

5. Pressure regulator vacuum sensing hose incorrectly or disconnected or damaged.

Excessive Fuel Consumption

1. Pressure regulator regulating pressure too high.
2. Fuel leaks.
3. Throttle sensor improperly adjusted or abnormal output signal.

Excessive Odors - Fuel, Emissions

Vehicle has excessive "rotten egg" smell. Raw fuel (gasoline) can be smelled. Excessive odors do not necessarily indicate excessive emissions.

POSSIBLE CAUSE	ACTION
Faulty purge valve, liquid fuel in carbon canister, fuel tank vent system blocked, poor seal on gas cap	Check Evaporative system in "Testing Procedures" in Emissions
PCV valve plugged or stuck PCV hose blocked or plugged	Check PCV system in "Testing Procedures" in Emissions
Contaminated catalyst	Check for missing or worn fuel fillpipe restrictor
Excessive Emissions	Refer to High Emission Levels in "Diagnosis By Symptom" in Emissions

Fuel Leakage

1. Damaged O-ring in fuel injector.
2. Damaged O-ring in pressure regulator.
3. Damaged gasket or loose screws.
4. Pressure regulator vacuum sensing hose incorrectly or disconnected or damaged.

Hard Starting In Cold Weather

1. Lead wire broken or improperly contacting in air control valve.
2. Foreign matter caught in air control valve metering unit or contamination.
3. Fuel injector filter clogged.
4. Pressure regulator regulating pressure too low.
5. Throttle chamber throttle valve orifice clogged.

Hard to Start

Engine cranks OK, but does not start for a long time.

POSSIBLE CAUSE	ACTION
Bowl vent valve malfunction	Check Evaporative system in "Testing Procedures" in Emissions
Air cleaner restricted	Check inlet air temperature system (TAC) in "Testing Procedures" in Emissions
EGR malfunction, valve staying open, solenoid malfunction, leaking gasket	Check EGR system in "Testing Procedures" in Emissions
Defective EFE valve or heater	Check Early Fuel Evaporation system

in "Testing Procedures" in Emissions

Hesitation and/or Insufficient Acceleration Performance

1. Throttle sensor output signal abnormal.
2. Pressure regulator regulating pressure too low.
3. Fuel injector filter clogged.
4. Damaged gasket or loose screws.
5. Pressure regulator vacuum sensing hose improperly or disconnected or damaged.

High HC, Low or Normal CO - at Idle

This condition, at idle, is indicated by abnormally high hydrocarbon emissions while carbon monoxide content remains normal or low.

POSSIBLE CAUSE	ACTION
Electrical misfire	Inspect ignition system
Too much spark advance or initial timing	Check and adjust timing in "Adjustment Procedures" in Emissions
Air-Fuel mixture too lean	Adjust air/fuel ratio
Vacuum leak	Inspect vacuum hoses for proper routing and damaged lines Check intake manifold area
EGR at idle	Check EGR system in "Testing Procedures" in Emissions
Leaking exhaust valves or piston rings	Perform compression test and cylinder leak down test
Idle speed too low	Check and adjust idle speed in "Adjustment Procedures" in Emissions Check operation of any idle speed control devices

High CO, Low or Normal HC - at Idle

This condition, at idle, is indicated by abnormally high carbon monoxide emissions while the hydrocarbon emissions remain normal or low.

POSSIBLE CAUSE	ACTION
Rich Air-Fuel mixture	
Carbureted	Check Air/Fuel ratio, partially closed choke high fuel level (float) and dirty air bleeds
Fuel Injected	Check Air/Fuel ratio, perform injector balance test, test regulator operation (check vacuum line and return hose), check fuel pressure

Dirty air filter(s)	Clean or replace
Saturated fuel evaporative canister or malfunctioning vapor purge system	Check Evaporative system in "Testing Procedures" in Emissions
Malfunctioning Closed Loop fuel metering system - Exhaust leak or other false indicators "Fooling" oxygen sensor to sense a lean condition	Refer to "Fuel Injection and Computerized Engine Controls" for testing of the computer feedback system
Stuck or restricted PCV valve and/or hose	Check PCV system in "Testing Procedures" in Emissions

High CO and HC - at Idle

This condition, at idle, is indicated by abnormally high carbon monoxide AND hydrocarbon emissions.

POSSIBLE CAUSE	ACTION
VERY RICH Air-Fuel mixture	
Carbureted	Check Air/Fuel ratio, flooding or leaking carburetor, partially closed choke, high fuel level (float), and dirty air bleeds
Fuel Injected	Check Air/Fuel ratio, perform injector balance test, inspect regulator operation (check vacuum line and return hose), check fuel pressure
Malfunctioning air pump	Check Air Injection system in "Testing Procedures" in Emissions
Faulty Fuel Evaporative system, vapor lines, purge solenoid and valves	Check Fuel Evaporative system in "Testing Procedures" in Emissions
Fuel in crankcase being sucked through PCV valve	Remove PCV from crankcase and retest emissions
Engine misfire with Closed Loop fuel metering, causing system to go full rich	Refer to "Fuel Injection and Computerized Engine Controls" for rich trouble code, check fuel feedback (Oxygen sensor)

High HC - at High RPM

This condition is indicated by abnormally high hydrocarbon emissions with low or normal carbon monoxide emissions during cruise (2500 rpm).

POSSIBLE CAUSE	ACTION
Electrical misfires	Check ignition system
Vacuum leak	Check vacuum lines and routing in "Vacuum and Vapor Hose Routing" in Emissions - Check intake manifold and vacuum components
PCV malfunction	Check PCV system in "Testing Procedures" in Emissions
EGR malfunction	Check EGR system in "Testing Procedures" in Emissions
Initial timing incorrect	Check Ignition Timing in "Adjustment Procedures" in Emissions
Incorrect Spark Advance	Check Spark Controls in "Fuel Injection and Computerized Engine Controls"
Verify vehicle remains in Closed Loop at steady throttle (2500 rpm) and oxygen sensor is working	Refer to "Fuel Injection and Computerized Engine Controls" for Self-Diagnostic procedures

High CO - at High RPM

This condition is indicated by abnormally high carbon monoxide with low or normal hydrocarbon emissions during cruise (2500 rpm).

POSSIBLE CAUSE	ACTION
Faulty bowl vent/canister purge system	Check Evaporative System in "Testing Procedures" in Emissions
PCV malfunction	Check PCV system in "Testing Procedures" in Emissions
EGR malfunction	Check EGR system in "Testing Procedures" in Emissions
Restricted exhaust	Check Catalytic Converter in "Testing Procedures" in Emissions
Incorrect Spark Advance	Check Spark Controls in "Fuel Injection and Computerized Engine Controls"

Verify vehicle remains in Closed Loop at steady throttle (2500 rpm) and oxygen sensor is working	Refer to "Fuel Injection and Computerized Engine Controls" for Self-Diagnostic procedures
Fuel metering malfunction	
Carbureted	Check carburetor passages, bleeds and restrictors, internal leaks, float level, metering rods and gaskets Replace or rebuild if faults are found
Fuel Injected	Check fuel pressure Perform injector balance test Test regulator operation (check vacuum line and return hose), Service Fuel Injectors (Pressure cleaner)

High HC & CO - at High RPM

This condition is indicated by abnormally high carbon monoxide AND hydrocarbon emissions during cruise (2500 rpm).

POSSIBLE CAUSE	ACTION
Electrical misfires	Check ignition system
Vacuum leak	Check vacuum lines and routing in "Vacuum and Vapor Hose Routing" in Emissions - Check intake manifold and vacuum components
Faulty bowl vent/canister purge system	Check Evaporative System in "Testing Procedures" in Emissions
PCV malfunction	Check PCV system in "Testing Procedures" in Emissions
EGR malfunction	Check EGR system in "Testing Procedures" in Emissions
Restricted exhaust	Check Catalytic Converter in "Testing Procedures" in Emissions
Initial timing incorrect	Check Ignition Timing in "Adjustment Procedures" in Emissions
Incorrect Spark Advance	Check Spark Controls in "Fuel Injection and Computerized Engine Controls"

Verify vehicle remains in Closed Loop at steady throttle (2500 rpm), oxygen sensor operation is working	Refer to "Fuel Injection and Computerized Engine Controls" for Self-Diagnostic procedures
Fuel metering malfunction	
Carbureted	Check carburetor passages, bleeds and restrictors, internal leaks, float level, metering rods and gaskets Replace or rebuild if faults are found
Fuel Injected	Check fuel pressure Perform injector balance test Test regulator operation (check vacuum line and return hose), Service Fuel Injectors (pressure clean)

Lack of Power

Engine delivers less than expected power. Little or no increase in speed on slight acceleration.

POSSIBLE CAUSE	ACTION
Hot air tube not connected to air cleaner - air damper door binding or not opening	Check inlet air temperature system (TAC) in "Testing Procedures" in Emissions
EGR malfunction	Check EGR system in "Testing Procedures" in Emissions
Spark timing - excessive retard	Check Spark Controls in "Fuel Injection and Computerized Engine Controls"
Initial timing incorrect	Check Ignition Timing in "Adjustment Procedures" in Emissions
Restricted exhaust	Check Catalytic Converter in "Testing Procedures" in Emissions
Poor or contaminated fuel	Recommend higher grade fuel

No Fuel Is Injected

1. Lead wire broken or improperly contacting in fuel injector.
2. Fuel injector seized.
3. Pressure regulator regulating pressure too low.

Poor Fuel Economy

Fuel economy is noticeably lower than expected. Customer detects a significant reduction in fuel mileage.

POSSIBLE CAUSE	ACTION
EGR malfunction, Flange gasket leaking, solenoid and thermo valves malfunctioning	Check EGR system in "Testing Procedures" in Emissions
Ignition timing	Check Ignition Timing in "Adjustment Procedures" in Emissions
Spark timing	Check Spark Controls in "Testing Procedures" in Emissions
Air management valves	Check Air Injection system in "Testing Procedures" in Emissions
Air damper door binding, air cleaner temperature control malfunction	Check inlet air temperature system (TAC) in "Testing Procedures" in Emission
Restricted exhaust	Check Catalytic Converter in "Testing Procedures" in Emissions

Rough Idle

1. Damaged gasket or loose screws.
2. Pressure regulator vacuum sensing hose improperly or disconnected or damaged.
3. Improperly set or malfunctioning idle switch.
4. Lead wire broken or improperly contacting in air control valve.
5. Foreign matter in air control valve metering unit or contamination.
6. Fuel injector nozzle tip contaminated or deformed.
7. Fuel injector filter clogged.
8. Pressure regulator regulating pressure too low or unstable.
9. Throttle chamber throttle valve orifice clogged.

Rough Unstable Idle

The engine runs unevenly. In severe cases, the car may actually shake. The engine idle may hunt or fluctuate in rpm and may be bad enough to stall.

POSSIBLE CAUSE	ACTION
AT ALL TIMES	
EGR malfunction, Flange gasket leaking, valve open (valve should be closed at idle)	Check EGR system in "Testing Procedures" in Emissions
Air management valves malfunctioning, no air to ports while in closed loop	Check Air Injection system in "Testing Procedures" in Emissions
PCV valve malfunction	Check PCV system in "Testing Procedures" in Emissions

AT OPERATING TEMPERATURE	
Faulty canister purge and bowl vent valve	Check Evaporative system in "Testing Procedures" in Emissions
Restricted exhaust system	Check Catalytic Converter system in "Testing Procedure" in Emissions
Idle speed too low	Check idle load compensator devices in "Testing Procedures" and idle speed in "Adjustment Procedure" in Emissions

Stalls at Idle, Deceleration

Engine stalls at stops and on deceleration.

POSSIBLE CAUSE	ACTION
EGR valve loose or sticking plunger, flange gasket leaking, solenoid and thermo valves malfunctioning	Check EGR system in "Testing Procedures" in Emissions
Ignition timing	Check Ignition Timing in "Adjustment Procedures" in Emissions
Restricted exhaust system	Check Catalytic Converter system in "Testing Procedure" in Emissions
Idle speed too low	Check idle load compensator devices in "Testing Procedures" and idle speed in "Adjustment Procedure" in Emissions
Vacuum leak	Inspect vacuum hoses for routing and damaged lines Check intake manifold area

Starts, But Stalls

Engine starts but stalls when load is placed on the engine (A/C clutch engaged or transmission shifted into drive or reverse).

POSSIBLE CAUSE	ACTION
EGR malfunction flange gasket leaking, solenoid valve malfunctioning, valve sticking	Check EGR system in "Testing Procedures" in Emissions
Hot air tube not connected to air cleaner - air damper door binding or not opening	Check inlet air temperature system (TAC) in "Testing Procedures" in Emissions

Ignition timing	Check Ignition Timing in "Adjustment Procedures" in Emissions
Idle speed too low	Check idle load compensator devices in "Testing Procedures" and idle speed in "Adjustment Procedure" in Emissions
Poor or contaminated fuel	Recommend higher grade fuel

Surge, Hesitation, Stall on Acceleration

Engine hesitates or stumbles on acceleration, sometimes stalling. This condition can occur at any speed, but primarily from a stop. Vehicle may also experience a surge or rise and fall of engine speed at cruise or steady throttle.

POSSIBLE CAUSE	ACTION
EGR malfunction flange gasket leaking, excessive backpressure, loose valve	Check EGR system in "Testing Procedures" in Emissions
Spark timing	Check Spark Controls in "Fuel Injection and Computerized Engine Controls"
Air management valves	Check Air Injection system in "Testing Procedures" in Emissions
Hot air tube not connected to air cleaner, vacuum motor inoperative, air damper door binding or not opening	Check inlet air temperature system (TAC) in "Testing Procedures" in Emissions
Faulty canister purge liquid fuel in carbon canister	Check Evaporative system in "Testing Procedures" in Emissions
Ignition timing	Check Ignition Timing in "Adjustment Procedures" in Emissions
Restricted exhaust system	Check Catalytic Converter system in "Testing Procedure" in Emissions
Poor or contaminated fuel	Recommend higher grade fuel

Fuel Delivery and Air Induction: Component Tests and General Diagnostics

A fuel sample should be drawn from the bottom of the fuel tank so that any water present in the tank will be detected. The sample should be bright and clear.
If the sample appears cloudy, or contaminated with water (as indicated by a layer at the bottom of the sample), this procedure should not be used, and the fuel system should be cleaned.

1. Using a 100 ml cylinder with 1 ml graduation marks, fill to the 90 ml mark.
2. Add 10 ml of water to bring the total fluid volume to 100 ml and install a stopper.
3. Shake vigorously for 10 to 15 seconds.
4. Carefully loosen the stopper to release pressure.
5. Close the stopper and shake vigorously again for 10 to 15 seconds.
6. Put the graduated cylinder on a level surface for approximately 5 minutes to allow adequate liquid separation.

If alcohol is present in the fuel, the volume of the lower layer (which would now contain both alcohol and water) will be greater than 10 ml. For example, if the volume of the lower layer is increased to 15 ml, it will indicate at least 5 percent alcohol in the fuel. The actual amount of alcohol may be somewhat greater because this procedure does not extract all of the alcohol from the fuel.

Fuel Pressure: Testing and Inspection

NOTE: To obtain an accurate fuel pressure reading the engine must by running. Basic fuel pump operation can be verified in a no start condition by observing gauge reading while cranking engine. Fuel pressure should be approximately 21 psi (147 kPa).

RELEASE FUEL PRESSURE

1. Remove fuel pump fuse.
2. Start the engine and run it until it stalls.
3. After the engine stalls, crank it for five (5) more seconds.
4. Turn the key "OFF".
5. Reinstall fuel pump fuse.

CHECK FUEL PRESSURE

1. Disconnect fuel inlet hose at fuel rail hose.
2. Connect a fuel pressure gauge between hose and rail.
3. Start engine and idle.
4. Disconnect vacuum hose from pressure regulator.
5. **Momentarily** pinch return hose closed and observe gauge reading (this checks fuel pump max. output pressure). If not within specification, check all delivery lines and if not pinched or restricted, replace fuel pump.

   MAXIMUM FUEL PUMP PRESSURE: Approx. 43 psi (294 kPa)

6. Check engine vacuum reading at pressure regulator source hose. If not within specification, inspect for vacuum leak and/or clogged fitting at manifold.

   ENGINE VACUUM AT IDLE: More than 18.5 in Hg (62.7 kPa)

7. Reconnect hose and observe gauge reading at idle.

   CONTROLLED FUEL PRESSURE AT IDLE: 31 - 34 psi (216 - 235 kPa)

8. Disconnect pressure regulator vacuum hose. Fuel pressure should raise.
9. Apply more than 20.5 inHg vacuum to pressure regulator. Fuel pressure should be lower than observed in step 7.
10. If pressure reading was incorrect or did not vary and all previous tests were OK, replace pressure regulator.

Idle Speed: Adjustments

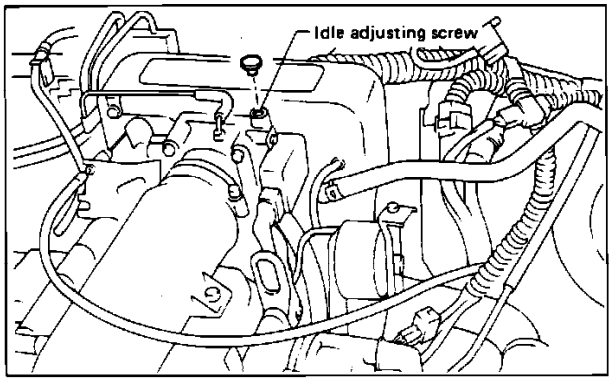

Idle Speed Adjustment (MPFI)

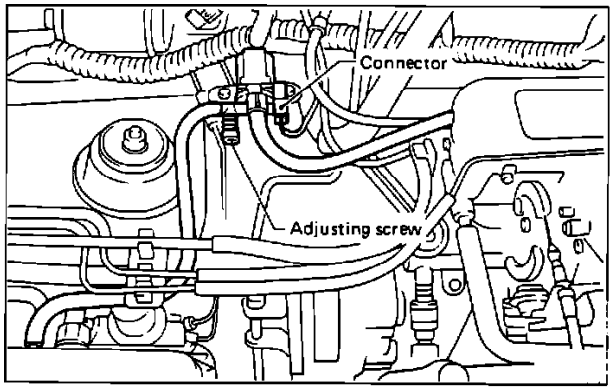

Idle Speed Adjustment (MPFI With A/C)

1. Connect test mode and read memory connectors.
2. On non-A/C model, set idle speed with the idle adjusting screw on throttle body.
3. On A/C model with A/C "ON," adjust idle speed with fast idle adjusting screw on FICD solenoid valve.
4. After adjusting idle speed, disconnect both Test Mode and Read Memory connectors.

IDLE SPEED (RPM)

Idle-up system "OFF:"	700 ± 50
Idle-up system "ON:"	800 ± 50

Accelerator Pedal Switch: Adjustments

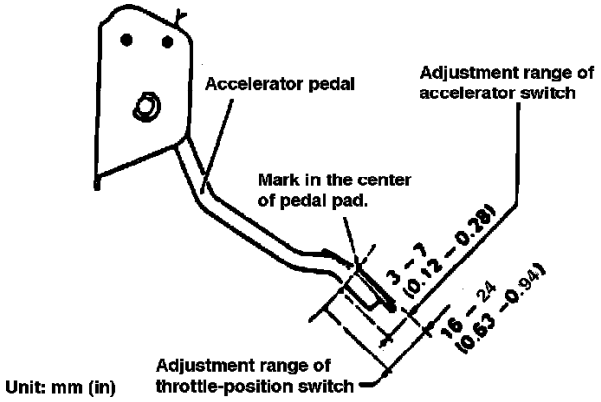

Fig. 12 Accelerator & Throttle-position Switch Adjustment

Type of switch	Problem	Cause
Accelerator switch	Vehicle "creeps" during idle.	Switch turns ON before pedal is depressed 3 mm (0.12 in). (There is no free play between switch and pedal.)
	Clutch is engaged abruptly, or clutch is not engaged in low-speed operation.	Switch turns ON when pedal is depressed at least 7 mm (0.28 in).
Throttle-position switch	Shock is felt when clutch is engaged.	Switch turns ON before pedal is depressed 16 mm (0.63 in).
	Clutch tends to slip during acceleration in low-speed range.	Switch turns ON when pedal is depressed at least 24 mm (0.94 in).

Ensure the carburetor throttle valve fully closes when the accelerator switch operates within the specified range.

Fig. 13 Accelerator & Throttle-position Switch Fault Chart

Refer to **Fig. 12,** when checking accelerator switch or throttle-position switch adjustment.

The accelerator switch should turn on .12-.28 inch from the accelerator pedal released position. The throttle position switch should turn on .63-.94 inch from the accelerator pedal released position. If either switch functions beyond specified ranges refer to chart, **Fig. 13.**

Air Filter Element: Description and Operation

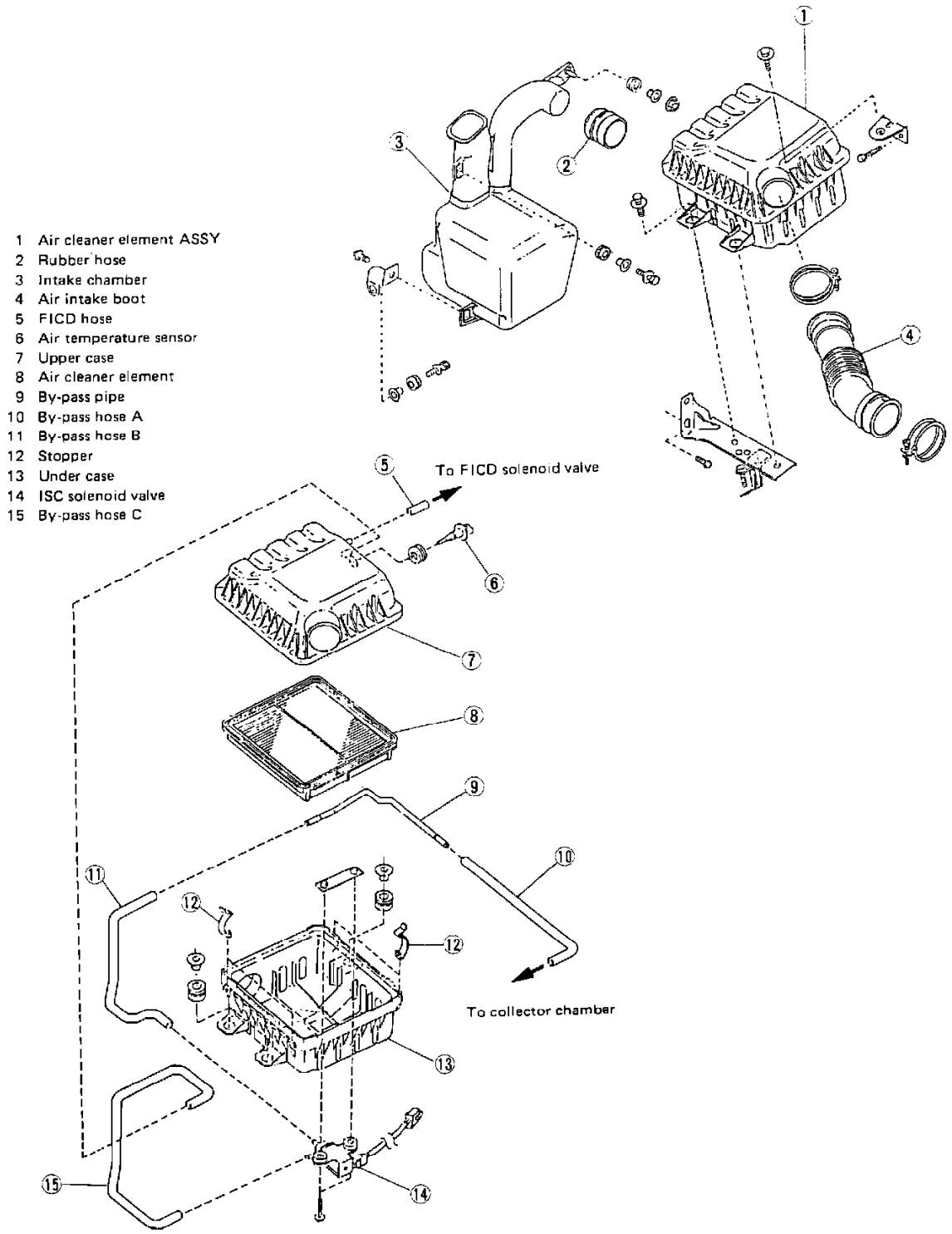

Air Cleaner

The air cleaner is mounted in the front right side of the engine compartment. It houses a rectangular, pleated paper filter. It filters all air entering the engine.

Fillpipe Restrictor: Testing and Inspection

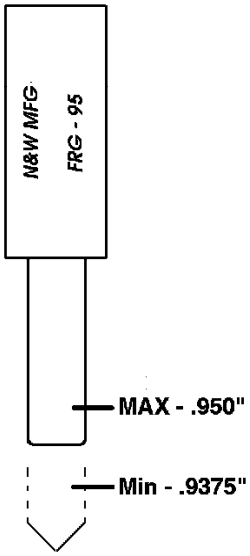

1. Using the special tool, confirm that it will not enter the fuel filler inlet.
2. If the tool enters, replace the fuel filler inlet (fillpipe restrictor).

Fillpipe Restrictor: Service and Repair

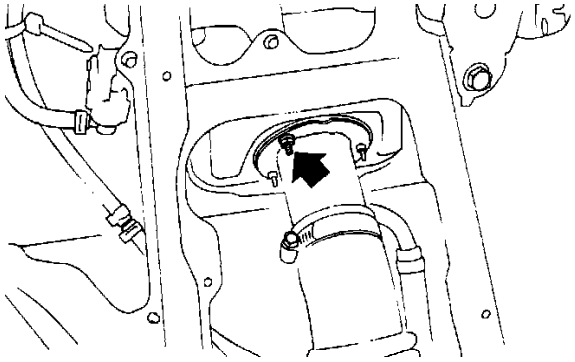

Fuel Filler Pipe

1. Remove rear seat.
2. Remove trim cover.
3. Remove filler pipe cover.
4. Open fuel door and remove two (2) screws.
5. Remove filler hose clamps.
6. Remove filler from body and then remove from hose.
7. Install in reverse order.

Fuel Filter: Description and Operation

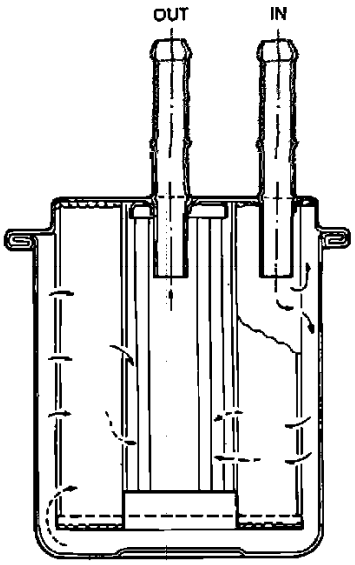

Fuel Filter

PURPOSE

Filters dirt and sediment, and to some extent, seperates water from the fuel.

LOCATION

In front of the L.R. tire, under the vehicle.

CONSTRUCTION

The fuel filter uses a pressure withstanding, cartridge design. It has a filter element built into the metal case. Fuel flows from the permimeter of the element to the interior of the filter, then to the fuel injection rails.

Fuel Filter: Testing and Inspection

RELEASE FUEL PRESSURE

1. Remove fuel pump fuse.
2. Start the engine and run it until it stalls.
3. After the engine stalls, crank it for five (5) more seconds.
4. Turn the key "OFF".
5. Reinstall fuel pump fuse.

REMOVAL

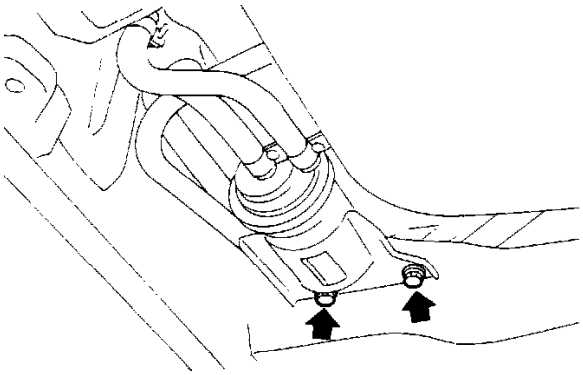

Fuel Filter Fasteners

1. Remove fuel filter fasteners.
2. Using needle-nose locking pliers to clamp fuel delivery hose (to prevent fuel spilage).
3. Remove hose clamps and hoses.
4. Remove filter.

INSPECTION

1. Inspect filter for dirt or water sediment.
2. If filter is clogged or cracked, or if replacement interval has been reached, replace filter.
3. If water is found in filter, shake filter with inlet facing down to expel water (inspection of the fuel tank is advised).

INSTALLATION

1. Inspect hoses for cracks or damage. Replace if necessary.
2. Inspect clamps for deformation or damage. Replace if necessary.
3. Tighten hose clamps to **1.0 - 1.5 Nm (0.7 - 1.1 ft lb).**
4. Place filter in bracket, making sure hoses are not twisted or kinked.
5. Install bracket fasteners.
6. Start engine and assure there are no leaks.

Fuel Injector: Description and Operation

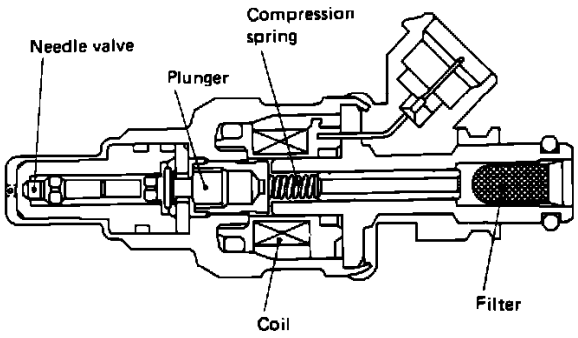

Fuel Injector

PURPOSE

Fuel injectors spray highly atomized fuel into the intake system to promote complete combustion of the air/fuel mixture.

LOCATION

Injectors are located on the intake manifold, near the cylinder head mating surface.

CONSTRUCTION

The injector is constructed of a metal housing containing a magnetic solenoid operated pintle. The injector inlet houses a fine mesh screen to filter out foreign particles. Top and bottom O-rings seal the outside of the injector to the intake manifold and fuel rail.

OPERATION

When the engine is cranking or running, constant voltage is supplied to the positive side of the solenoid valve from the fuel injection relay. The ECU grounds the solenoid valve to complete the circuit, energizing the magnetic winding and raising the injector pintle. When the pintle is raised, pressurized fuel sprays through a metered orifice into the intake system.

Fuel Injector: Testing and Inspection
Negative Circuit

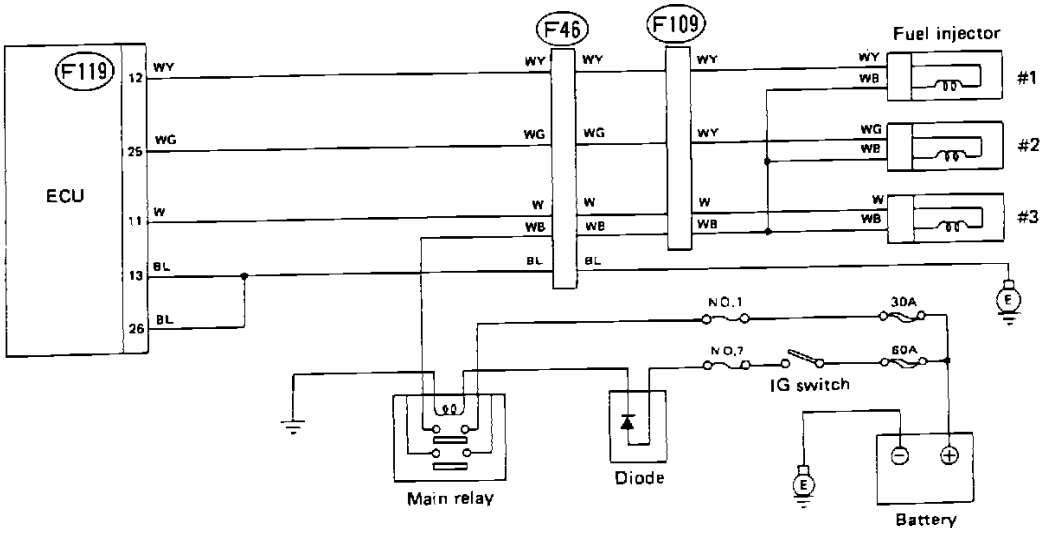

Fuel Injector Circuit

The following procedure should be used to check for a "NO POWER TO INJECTOR" condition. Refer to the schematic diagram and test the circuit with the diagnostic chart.

Wire color code identification:

L: Blue
B: Black
Y: Yellow
G: Green
R: Red
W: White
Br: Brown
Lg: Light green
Gr: Gray

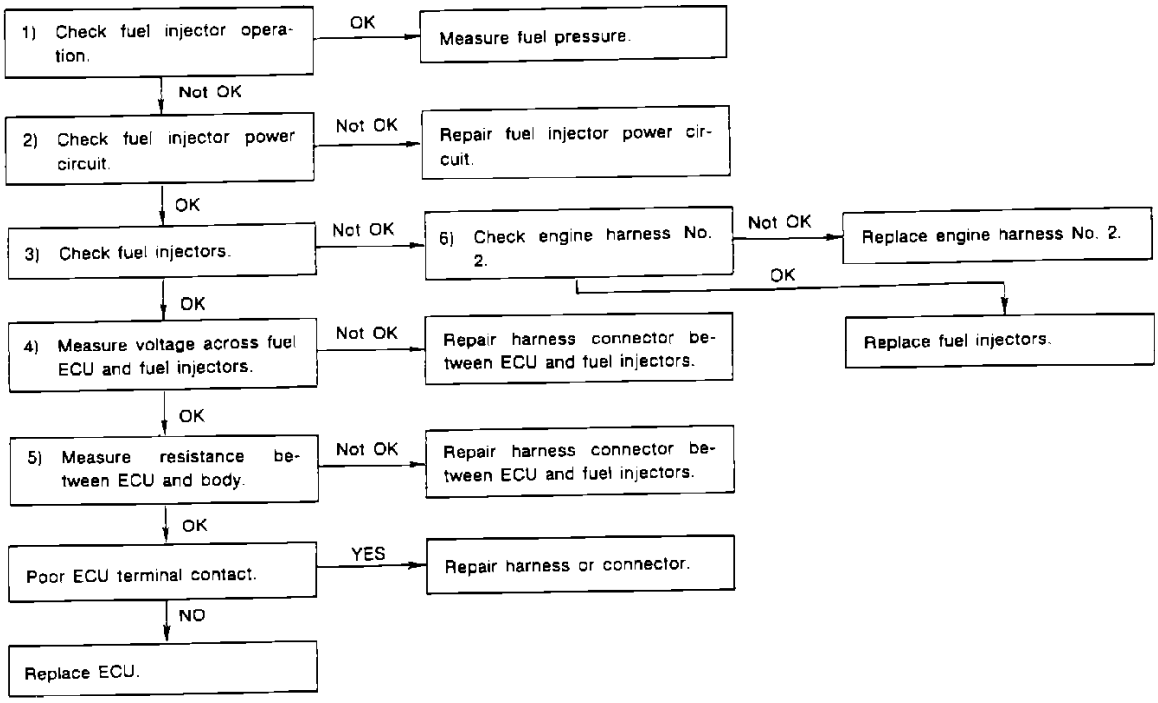

Fuel Injector Circuit Diagnostic Chart

FUEL INJECTOR CONTROL SYSTEM DIAGNOSTIC CHART

CHECK FUEL INJECTOR OPERATION

Using a stethoscope, confirm that all injectors "CLICK" while cranking the engine.

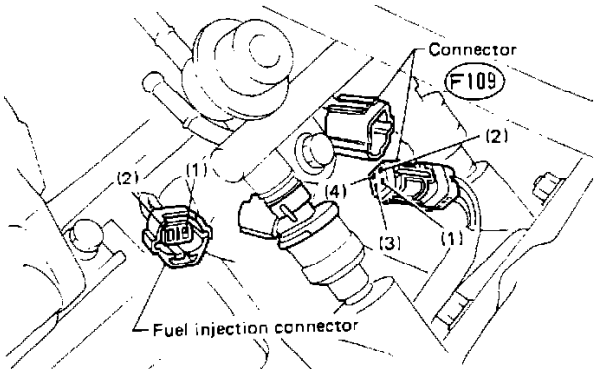

Fuel Injector Connector

CHECK VOLTAGE AT INJECTORS

1. Disconnect connector F109 (injector sub-harness).
2. Turn the key "ON".
3. Using a voltmeter, check voltage between male connector terminal and ground.

Connector & terminal:	**Voltage:**
(F109)1-Ground	Above 9V

CHECK FUEL INJECTORS

1. Turn the key "OFF".
2. Using an ohmmeter, check the resistance between fuel injector terminals.

Connector & terminal:	**Resistance:**
(F109)1-2	10 - 18 Ohm
(F109)1-3	10 - 18 Ohm
(F109)1-4	10 - 18 Ohm

If not within specification, proceed to **CHECK ENGINE HARNESS 2** below.

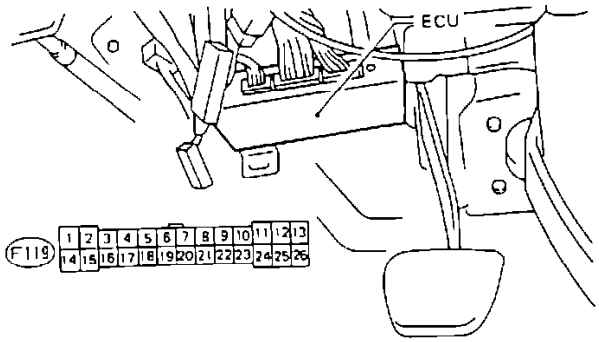

ECU Connector

CHECK VOLTAGE BETWEEN ECU AND FUEL INJECTORS

1. Connect connector F109.
2. Turn ignition key "ON".
3. Using a voltmeter, measure voltage between ECU connector terminal and body. (Back probe ECU connector.)

Connector & terminal:	**Voltage:**
(F119)12-Ground	Above 8V
(F119)25-Ground	Above 8V
(F119)11-Ground	Above 8V

4. Turn key "OFF".
5. Disconnect connector F119 from ECU.
6. Using and ohmmeter, check resistance between ECU harness connector terminal and ground.

Connector & terminal:	**Resistance:**
(F119)13-Ground	Below 10 Ohm
(F119)26-Ground	Below 10 Ohm

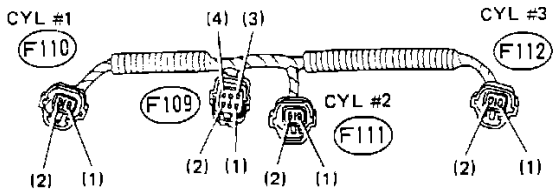

Engine Harness 2

CHECK ENGINE HARNESS 2

NOTE: Removal of the throttle chamber will improve access to the injector terminals.

1. Disconnect injector terminals.
2. Using an ohmmeter, check resistance between connector F109 and injector terminals F110, F111 and F112.

Connector & terminal:	**Resistance:**	**Cyl:**
(F109)2-(F110)2	Below 1 Ohm	#1
(F109)3-(F111)2	Below 1 Ohm	#2
(F109)4-(F112)2	Below 1 Ohm	#3
(F109)1-(F110)1	Below 1 Ohm	#1
(F109)1-(F111)1	Below 1 Ohm	#2
(F109)1-(F112)1	Below 1 Ohm	#3
(F110)1-2	Infinite Ohm	#1
(F111)1-2	Infinite Ohm	#2
(F112)1-2	Infinite Ohm	#3
(F109)2-3	Infinite Ohm	
(F109)2-4	Infinite Ohm	
(F109)3-4	Infinite Ohm	

Fuel Injector: Testing and Inspection
Positive Circuit

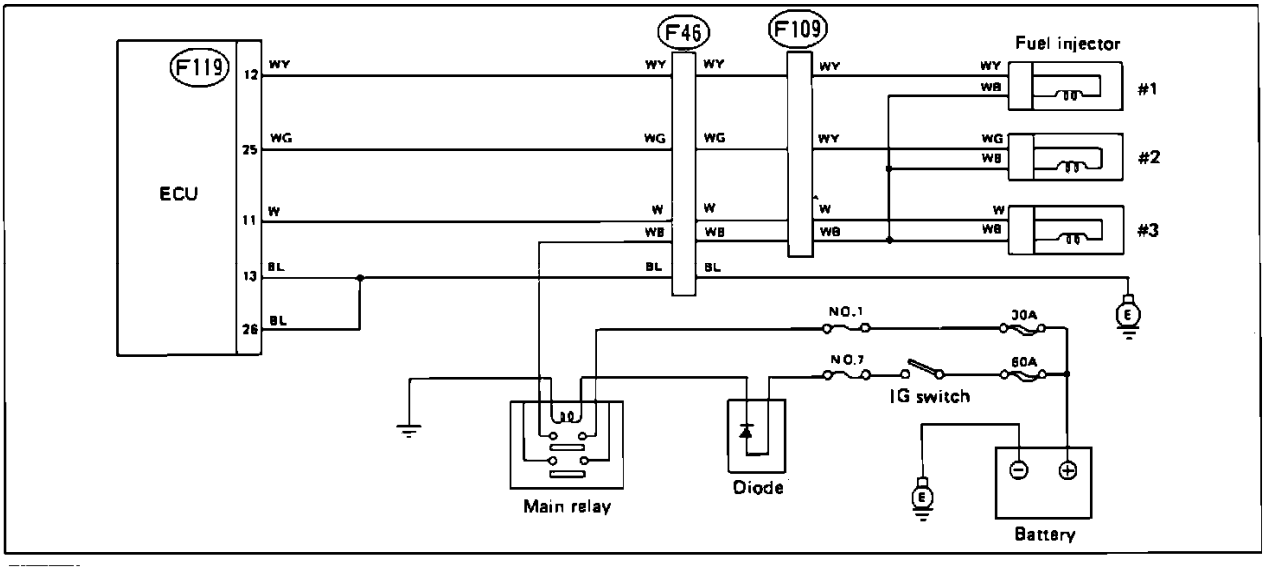

Fuel Injector Schematic

Faulty fuel injectors will set codes 14, 15 and 16 in the on-board diagnostic system. The codes correspond to injectors #1, #2 and #3. Refer to the schematic diagram and test the injectors with the diagnostic chart.

Wire color code identification:

L: Blue
B: Black
Y: Yellow
G: Green
R: Red
W: White
Br: Brown
Lg: Light green
Gr: Gray

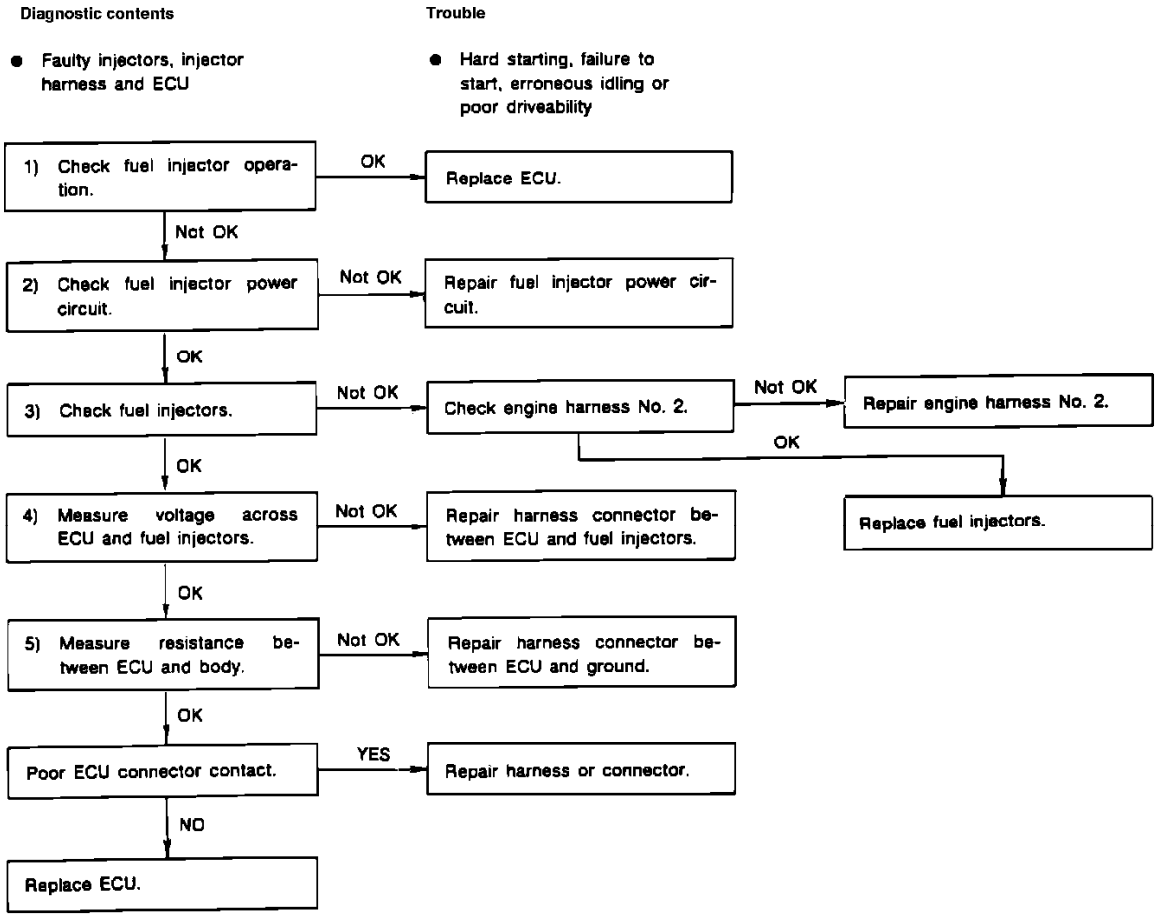

Fuel Injector Diagnostic Chart

FUEL INJECTOR DIAGNOSTIC CHART

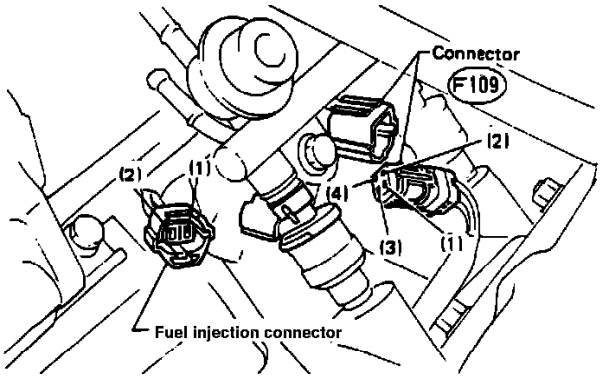

Fuel Injector Testing

CHECK INJECTOR OPERATION, VOLTAGE AND RESISTANCE

1. While cranking engine, check that each injector emits a clicking sound. Use a stethoscope or place a screwdriver on the injectors for this test.
2. Disconnect each injector connector (F109).
3. Turn ignition "ON" and measure voltage between male connector (F109)1 and ground. It should be above 9V.
4. Measure resistance between connector terminals as follows:

Connector & terminal:	**Resistance:**
(F109)1-(F109)2	10 - 18 Ohms
(F109)1-(F109)3	10 - 18 Ohms
(F109)1-(F109)4	10 - 18 Ohms

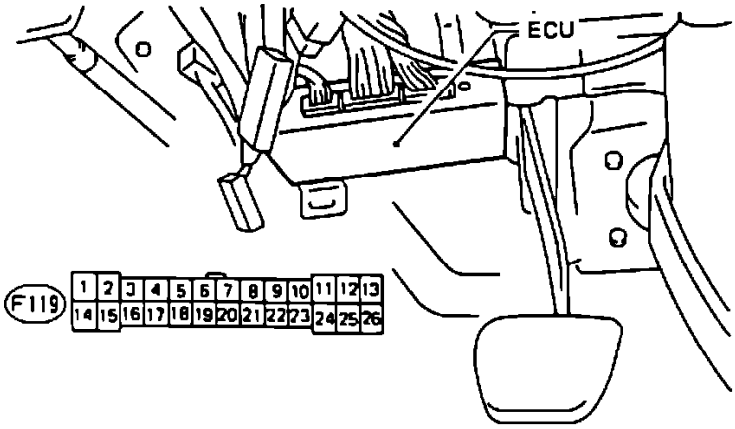

ECU/Crank Angle Sensor Harness Testing

CHECK ECU VOLTAGE AND RESISTANCE

1. Connect injector connector (F109) and turn ignition "ON."
2. Measure voltage between ECU connector terminals and ground as follows:

Connector & terminal:	**Voltage:**
(F119)12-Ground	Above 8V
(F119)25-Ground	Above 8V
(F119)11-Ground	Above 8V

3. Turn ignition "OFF" and disconnect ECU connector.
4. Measure resistance between ECU connector terminals and ground as follows:

Connector & terminal:	**Resistance:**
(F119)13-Ground	Below 10 Ohms
(F119)26-Ground	Below 10 Ohms

Fuel Pressure Regulator: Description and Operation

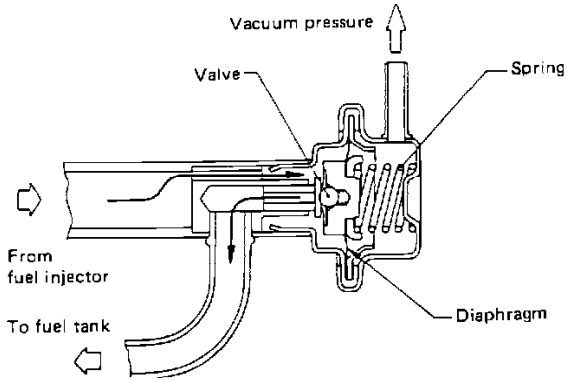

Fuel Pressure Regulator

PURPOSE

Maintains fuel pressure at 31.3 psi (216 kpa) above manifold pressure.

LOCATION

On the L.H. side of injector rail (has a vacuum fitting).

OPERATION

Fuel flows from the pump, through the lines, to the injectors and to the pressure regulator. Fuel pressure acting on the diaphragm opens the return line orfice to the fuel tank. As manifold vacuums lowers (during accel), the spring in the diaphragm closes the passage, increasing fuel pressure.

As manifold vacuum increases, the spring tension is overcome and the orfice is opened, allowing more fuel to return to the tank, lowering fuel pressure.

Fuel Pressure Pulsation Damper: Description and Operation

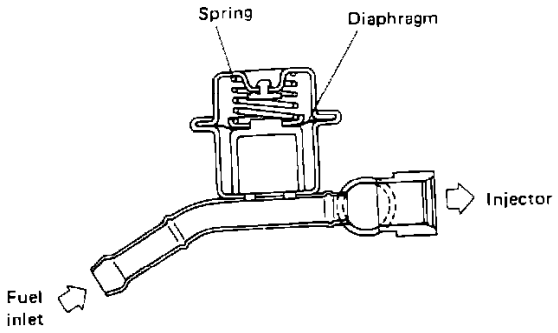

Fuel Dampener

PURPOSE

Reduces noise from fuel pressure pulsation.

LOCATION

On the fuel rail, on the R.H. side (does not have vacuum fitting).

OPERATION

While the injector opens and closes rapidly, pulsations are created in the fuel lines. Inside the dampener is a chamber with a diaphragm. The diaphragm is attatched to a spring. When the fuel pressure pulsates, the diaphragm absorbs the pulsations, reducing noise.

Fuel Pump: Description and Operation

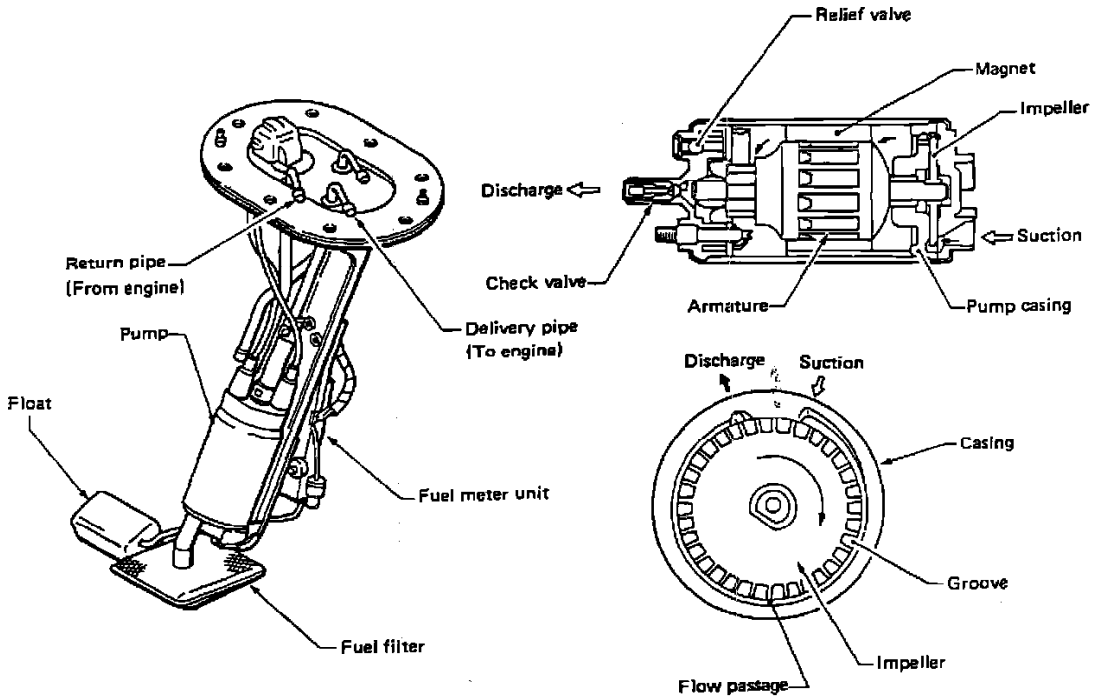

Fuel Pump

PURPOSE

Provides pressurized fuel to the MPI system.

LOCATION

The fuel pump is submerged in the fuel tank.

OPERATION

It consists of a motor, a vane roller pump, a fuel damper, and a check valve to prevent pressure bleed-off when the engine is off. The fuel pump shares its mounting cage with the fuel gauge sending unit.

Fuel Pump: Testing and Inspection

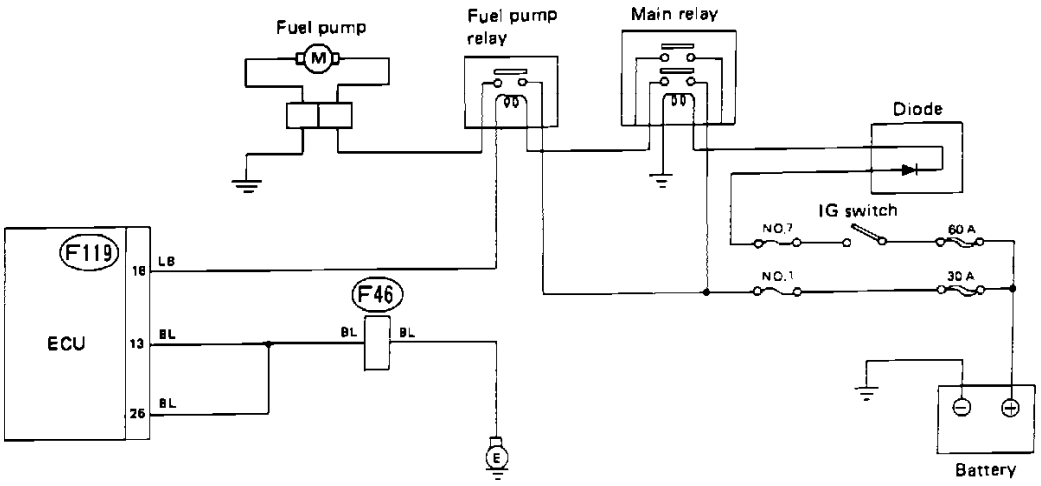

Fuel Pump Control Circuit Diagram

The following procedure should be used to check for a "NO FUEL" condition. Refer to the schematic diagram and test the circuit with the diagnostic chart.

Wire color code identification:

L: Blue
B: Black
Y: Yellow
G: Green
R: Red
W: White
Br: Brown
Lg: Light green
Gr: Gray

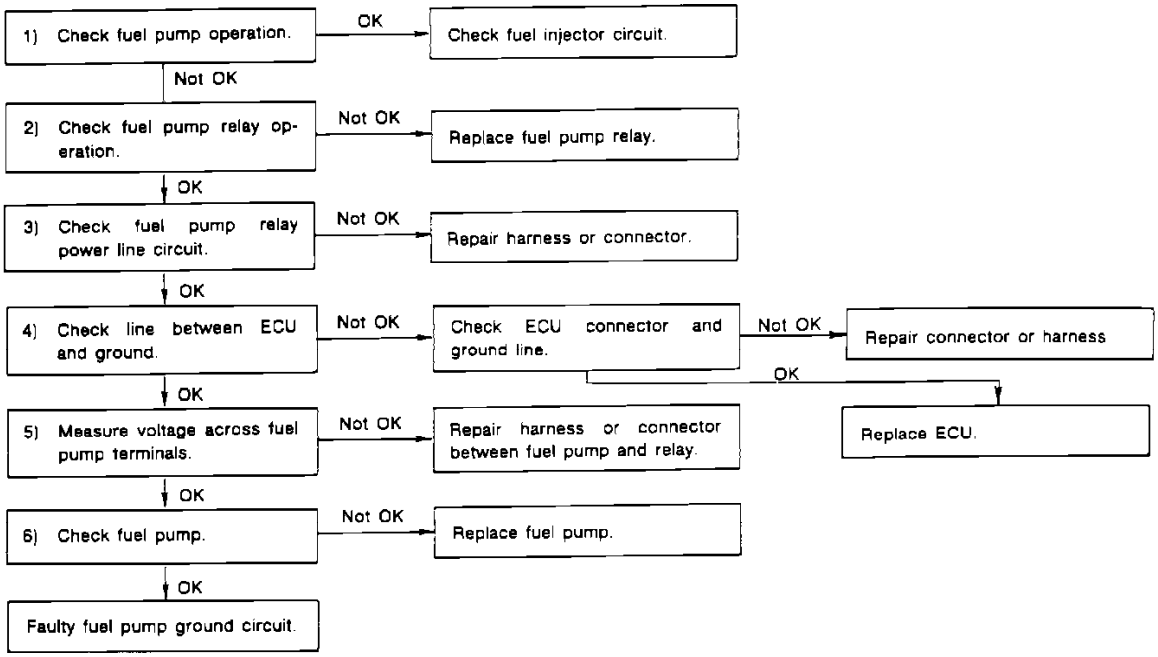

Fuel Pump Control Circuit Diagnostic Chart

FUEL PUMP CONTROL SYSTEM DIAGNOSTIC CHART

CHECK OPERATION OF FUEL PUMP

Turn the key "ON". Fuel pump should operate for two (2) seconds after turning the key from "Off" to "ON".

CHECK VOLTAGE AND RESISTANCE OF FUEL PUMP AND RELAY

1. Remove fuel pump relay.
2. Using an ohmmeter, check the resistance of relay coil.

Connector & terminal:	**Resistance:**
(F78)1-(F78)3	60 - 80 Ohm @ 20° C (68° F)

3. Connect 12 VDC to relay coil terminals and measure the resistance between the switched terminals.

Connector & terminal:	**Resistance:**
(F78)2-(F78)4	Below 1 Ohm

4. Reinstall the relay.

CHECK FUEL PUMP RELAY CIRCUIT

1. Turn key "ON".
2. Using a voltmeter, measure the voltage between fuel pump relay connector and ground.

Connector & terminal:	**Voltage:**
(F78)3-Ground	Above 9V

CHECK VOLTAGE BETWEEN ECU CONNECTOR AND GROUND

1. Turn key "ON".
2. Using a voltmeter, check the voltage for two (2) seconds after turning the key from "OFF" to "ON". (Back probe the ECU connector.)

Connector & terminal:	**Voltage:**
(F119)18-Ground	Above 9V

3. Check voltage AFTER key has been ON for two (2) seconds.

Connector & terminal:	**Voltage:**
(F119)18-Ground	Below 2.5V

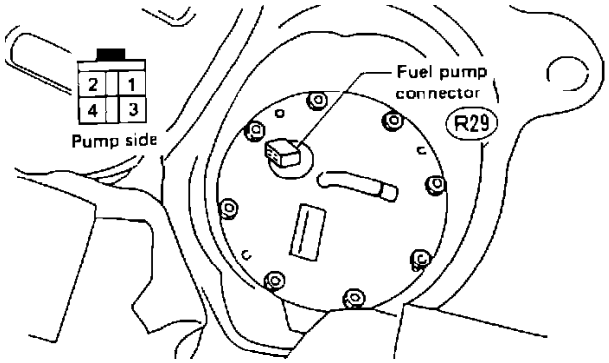

Fuel Pump Connector

CHECK TERMINAL VOLTAGE TO FUEL PUMP

1. Disconnect fuel pump connector.
2. Turn key "ON".
3. Using a voltmeter, check the voltage for two (2) seconds after turning the key from "OFF" to "ON".

Connector & terminal:	**Voltage:**
(R29)2-Ground	Above 9V

4. Check voltage AFTER key has been ON for two (2) seconds.

Connector & terminal:	**Voltage:**
(R29)2-Ground	Below 2.5V

CHECK FUEL PUMP

Connect 12V to fuel pump connector and confirm fuel pump operates.

Connector & terminal:	**Battery terminal**
(R29)2	Positive terminal
(R29)1	Negative terminal

Fuel Pump: Service and Repair

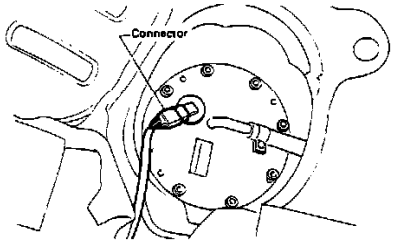

Fig. 2 Disconnecting Fuel Pump Electrical Connector

1. Remove rear seat assembly from vehicle.
2. Remove fuel tank access cover.
3. Disconnect the fuel pump connector.
4. To release fuel pressure, start engine and allow to run until in stalls, then crank engine for approximately five seconds and turn ignition switch Off.
5. Disconnect battery ground cable.
6. Disconnect fuel line hose from pump assembly, then remove fuel pump assembly retaining screws.
7. Reverse procedure to install.

Fuel Return Line: Description and Operation

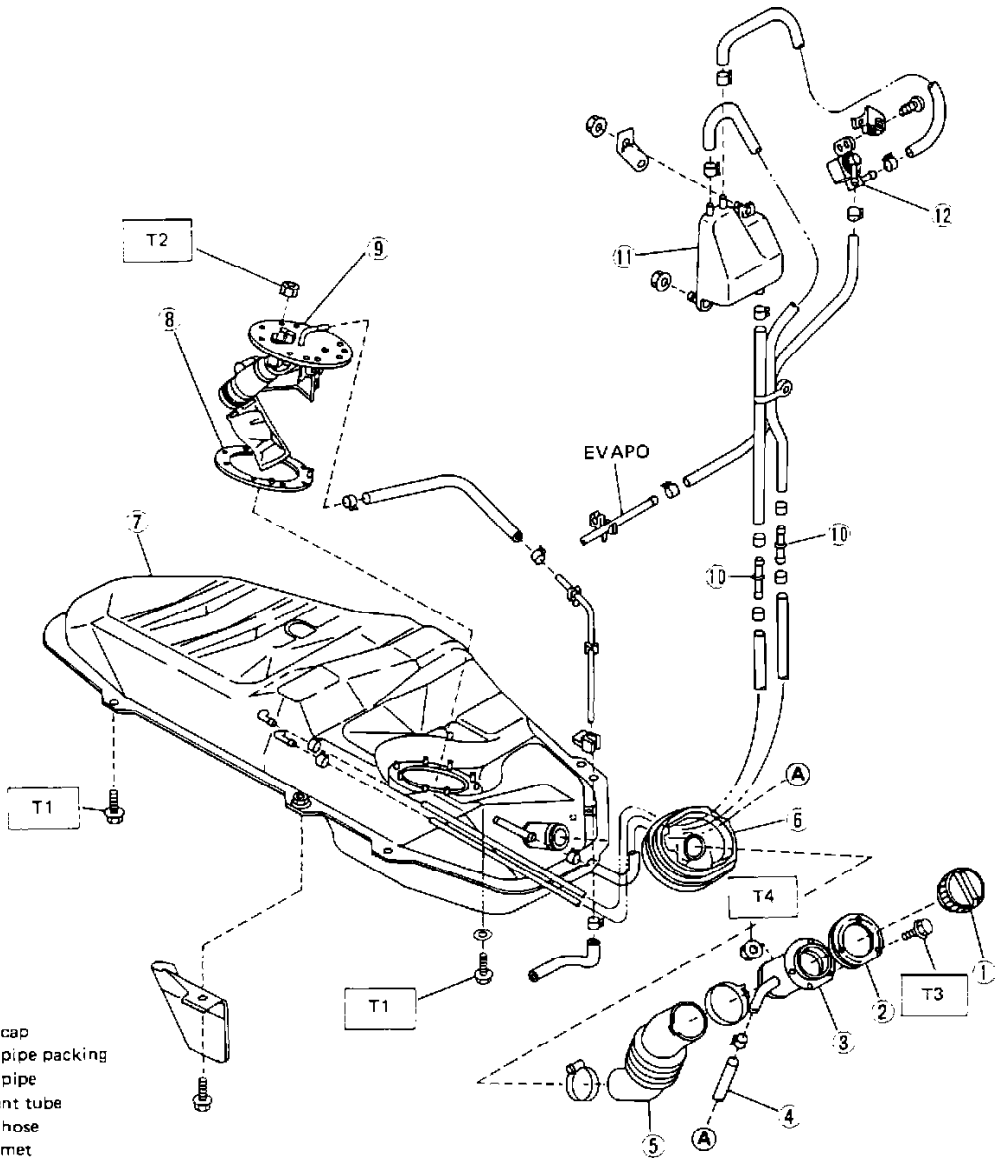

1 Filler cap
2 Filler pipe packing
3 Filler pipe
4 Air vent tube
5 Filler hose
6 Grommet
7 Fuel tank
8 Fuel pump packing
9 Fuel pump ASSY
10 Pipe joint
11 Separator
12 Roll over valve

Tightening torque: N·m (kg-m, ft-lb)
T1: 13 – 23 (1.3 - 2.3, 9 – 17)
T2: 1.8 – 3.1 (0.18 – 0.32, 1.3 – 2.3)
T3: 3 – 6 (0.3 – 0.6, 2.2 – 4.3)
T4: 1.5 – 2.5 (0.15 – 0.25, 1.1 – 1.8)

Fuel Tank

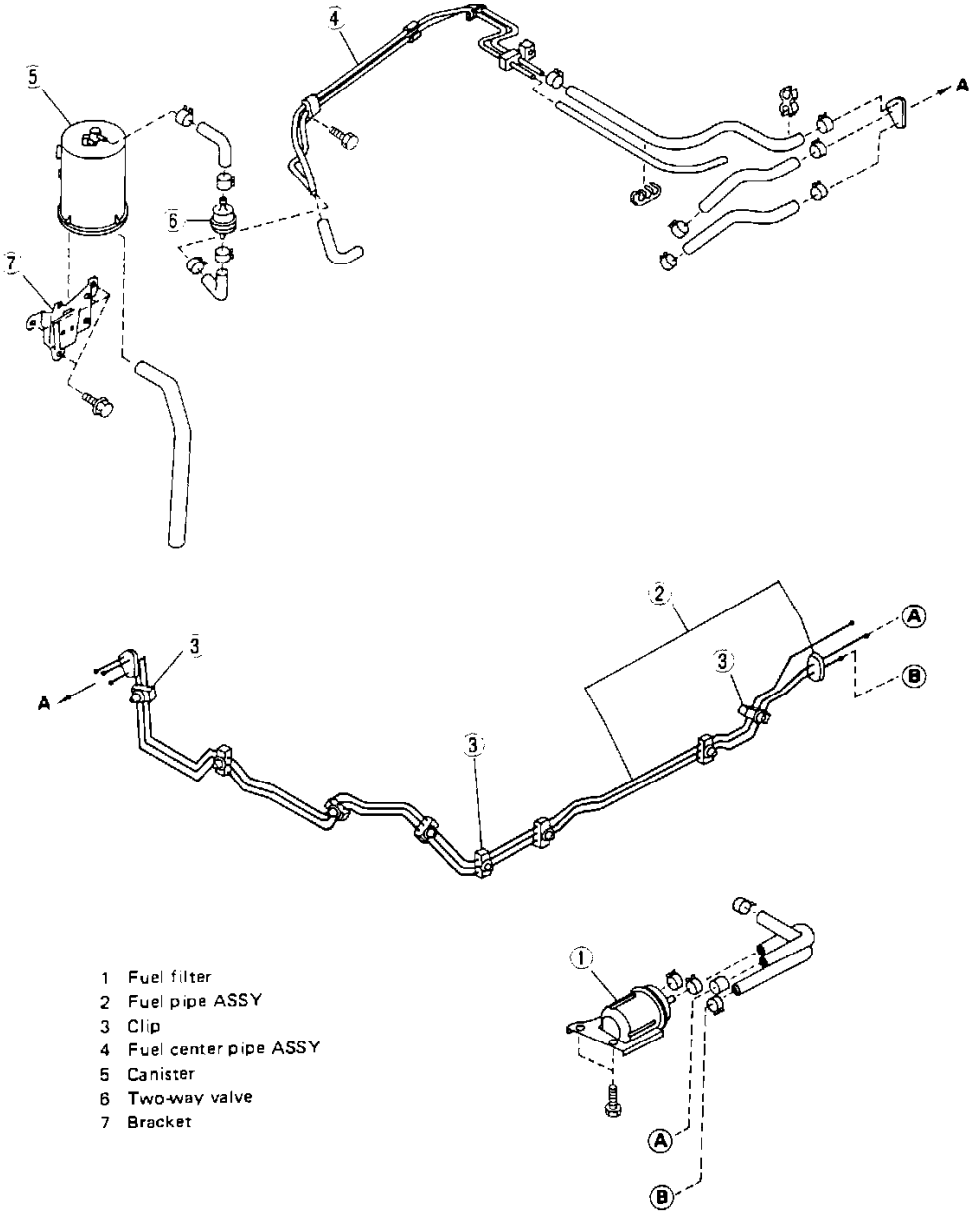

Fuel Lines

PURPOSE

Routes fuel between the fuel tank and engine.

OPERATION AND LOCATION

Fuel is supplied to the engine, and returned to the tank through steel fuel line running along the bottom of the vehicle. Where connections are made, high pressure fuel hose and steel clamps are used due to high fuel system pressure.

WARNING: Do not use standard rubber fuel line or worm type clamps, due to a risk of leakage or fire. Use only fuel line and clamps designed for fuel injection systems.

Fuel Return Line: Service and Repair

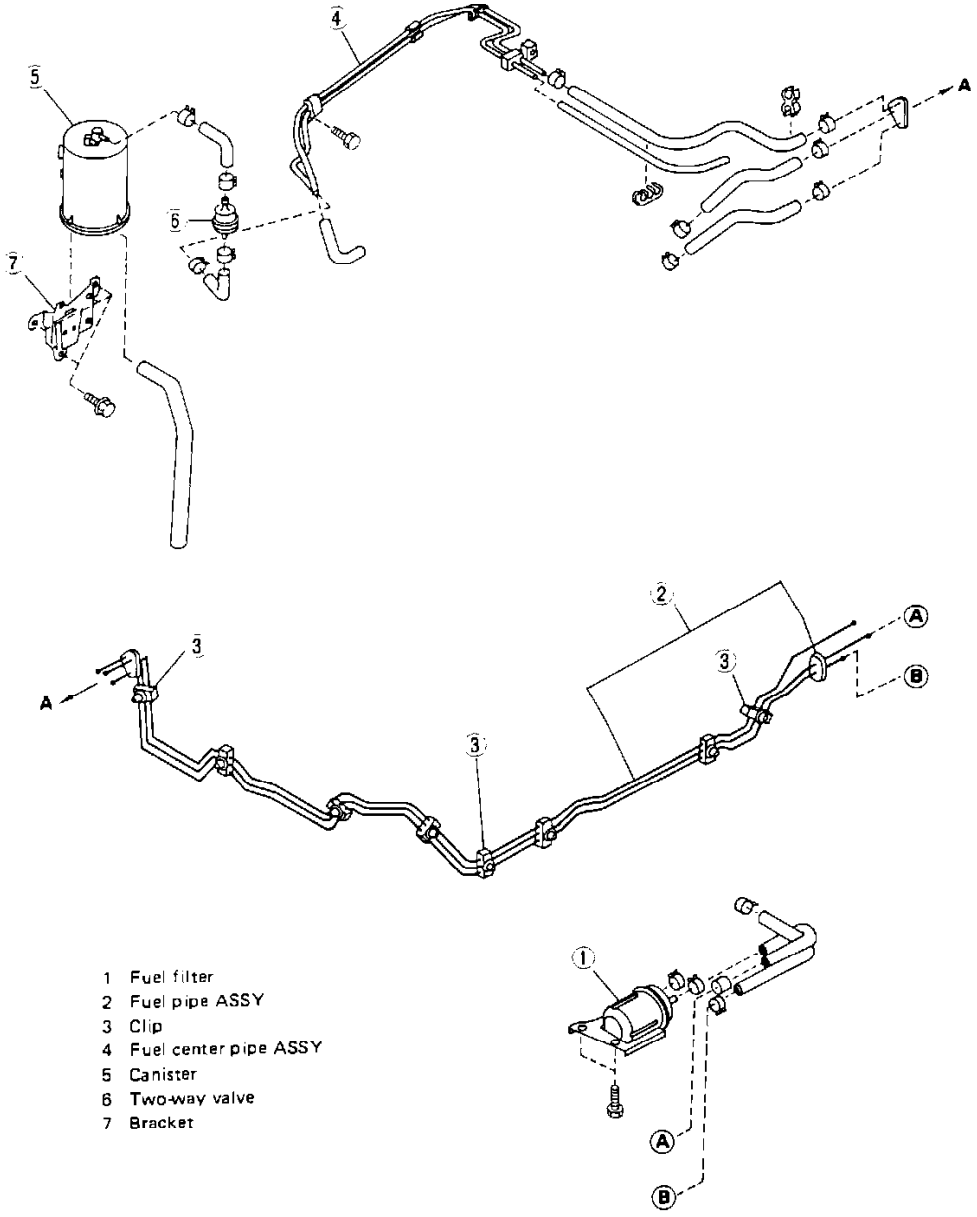

Fuel Lines

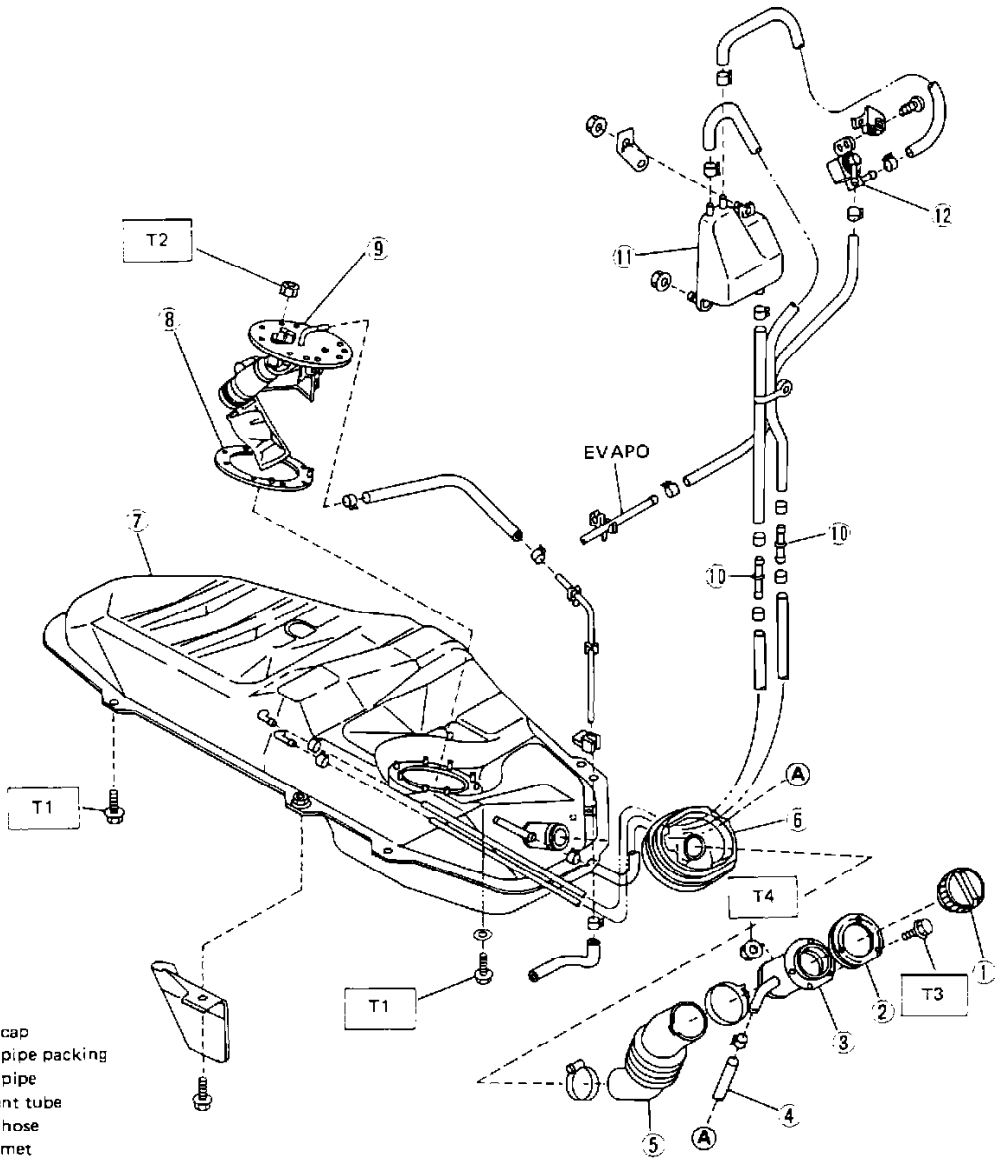

1 Filler cap
2 Filler pipe packing
3 Filler pipe
4 Air vent tube
5 Filler hose
6 Grommet
7 Fuel tank
8 Fuel pump packing
9 Fuel pump ASSY
10 Pipe joint
11 Separator
12 Roll over valve

Tightening torque: N·m (kg-m, ft-lb)
T1: 13 – 23 (1.3 - 2.3, 9 – 17)
T2: 1.8 – 3.1 (0.18 – 0.32, 1.3 – 2.3)
T3: 3 – 6 (0.3 – 0.6, 2.2 – 4.3)
T4: 1.5 – 2.5 (0.15 – 0.25, 1.1 – 1.8)

Fuel Tank

1. Loosen clips on hose and tube at front and rear of center pipe. Cap hose leading to tank to prevent fuel spillage.
2. Remove the following:
   - ^ Heater
   - ^ Carpet
   - ^ side sill cover
   - ^ Rear seat
   - ^ Fuel filler pipe cover
3. Remove three clamps securing pipe to firewall and remove grommet from firewall.
4. Remove five clamps securing pipe to front pillar and side sill. Remove grommet from bulkhead.
5. Remove tubing.
6. Reverse order to install.

Fuel Tank: Service and Repair
Fuel Tank Draining

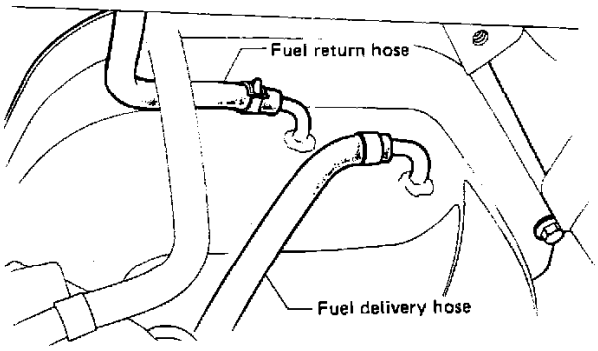

Fuel Line Removal

1. Raise vehicle on hoist.
2. Disconnect and drain fuel through fuel delivery hose.

Fuel Tank: Service and Repair
Fuel Tank Removal and Installation

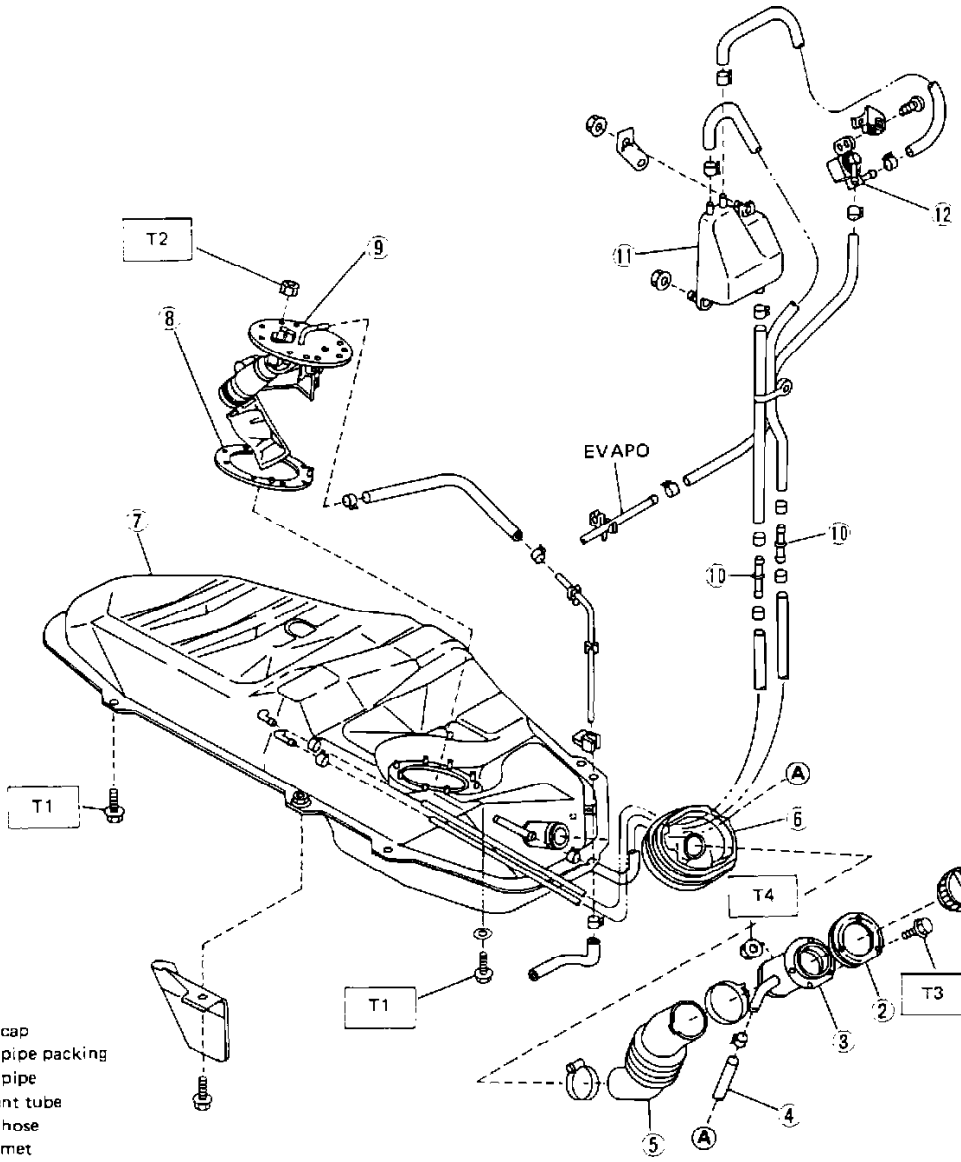

1 Filler cap
2 Filler pipe packing
3 Filler pipe
4 Air vent tube
5 Filler hose
6 Grommet
7 Fuel tank
8 Fuel pump packing
9 Fuel pump ASSY
10 Pipe joint
11 Separator
12 Roll over valve

Tightening torque: N·m (kg-m, ft-lb)
T1: 13 – 23 (1.3 - 2.3, 9 – 17)
T2: 1.8 – 3.1 (0.18 – 0.32, 1.3 – 2.3)
T3: 3 – 6 (0.3 – 0.6, 2.2 – 4.3)
T4: 1.5 – 2.5 (0.15 – 0.25, 1.1 – 1.8)

Fuel Tank

1. Disconnect negative battery cable.
2. Remove rear seat back and cushion.

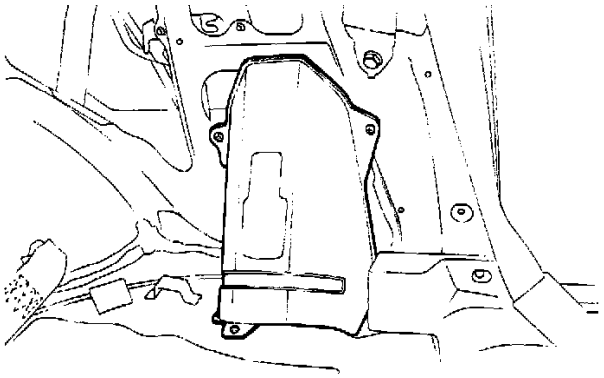

Trim Removal

3. With inside trim removed, remove fill pipe cover.

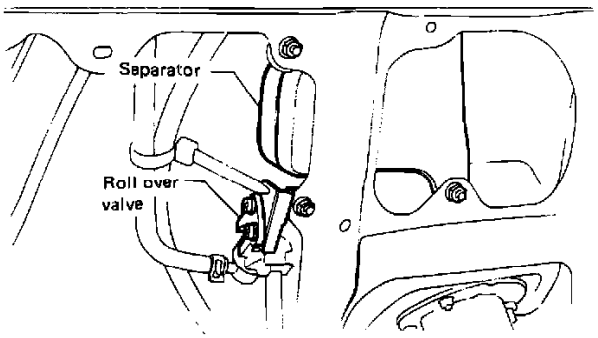

Separator And Roll Over Valve

4. Remove separator and roll over valve and remove hose from separator.
5. Remove access cover disconnect fuel sending unit electrical connector.

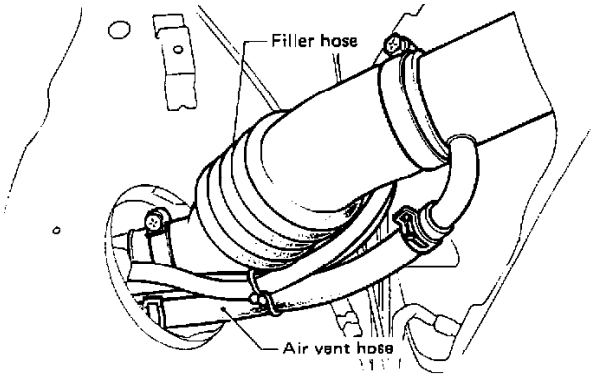

Filler Hose Removal

6. Disconnect filler hose from fuel tank.
7. Disconnect air vent hose at filler pipe.
8. Raise vehicle on hoist.

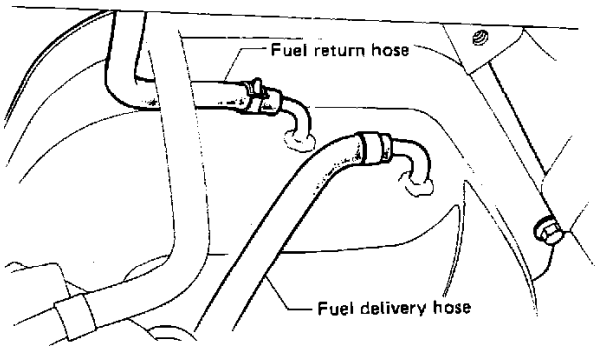

Fuel Line Removal

9. Disconnect and drain fuel through fuel delivery hose.
10. Remove two attaching bolts and remove parking brake cable.

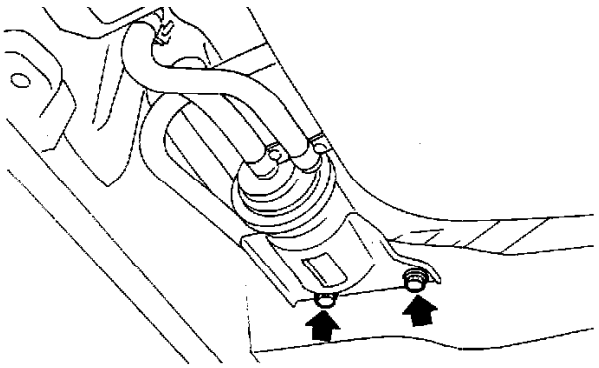

Fuel Filter Removal

11. Remove fuel filter and support bracket.
12. Disconnect fuel lines between filter and tank and between tank and return line.
13. Remove 6 tank attaching bolts.
14. Slide tank to the left side of the vehicle and remove.
15. Reverse procedure to install.

Fuel Filler Hose: Service and Repair

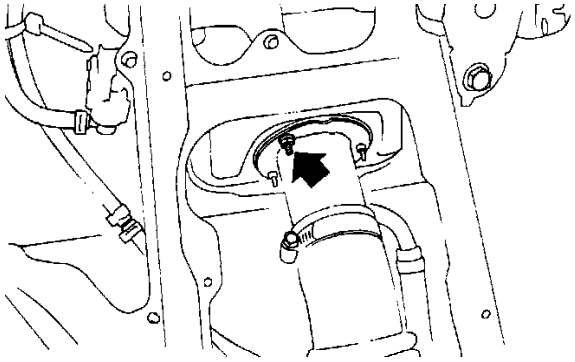

Fuel Filler Pipe

1. Remove rear seat.
2. Remove trim cover.
3. Remove filler pipe cover.
4. Open fuel door and remove two (2) screws.
5. Remove filler hose clamps.
6. Remove filler from body and then remove from hose.
7. Install in reverse order.

Idle Control Valve: Description and Operation

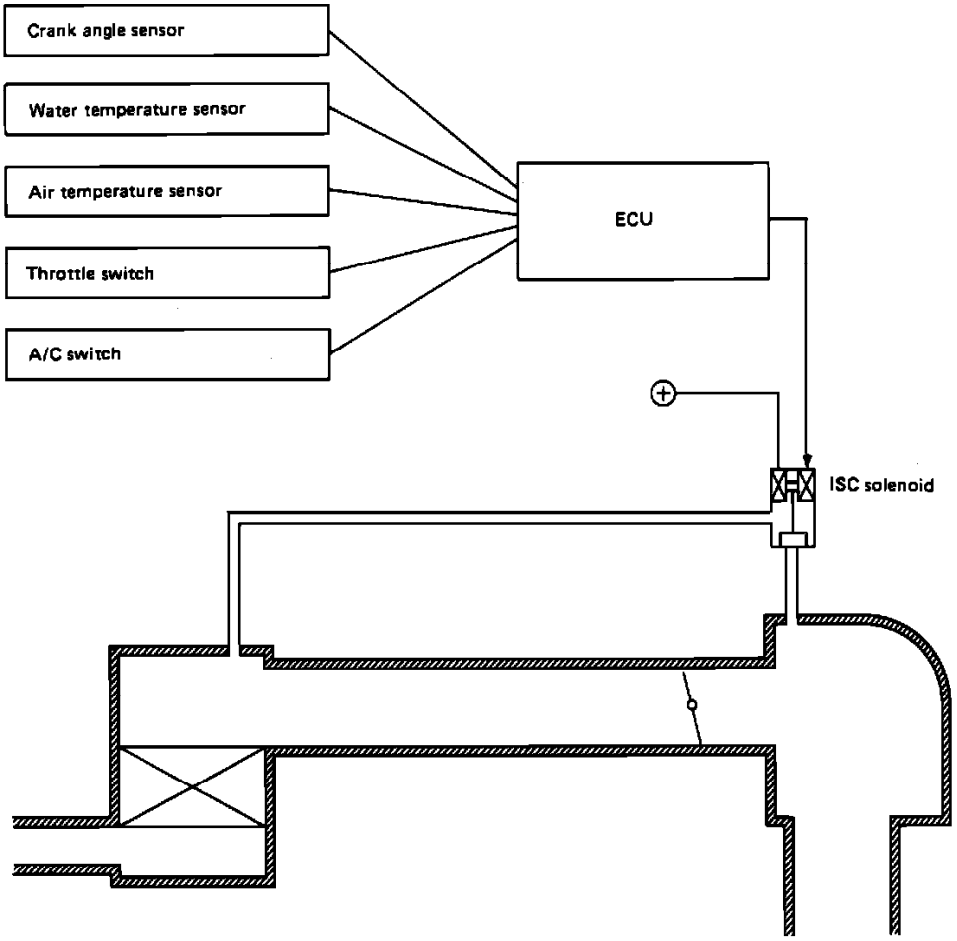

ISC Solenoid Valve

PURPOSE

The idle speed control (ISC) solenoid controls the amount of air allowed to bypass the throttle plate. Using this solenoid the ECU is able to accurately maintain correct idle speed.

LOCATION

The solenoid is located at the air cleaner on the right side of the engine compartment.

CONSTRUCTION

The ISC valve utilizes a duty solenoid design so that the amount of valve lift is determined by the operating frequency.

OPERATION

Whenever the engine is running, the ISC solenoid functions. The ECU uses a duty-cycle pulse to determine the rate of air flow through the solenoid.

Idle Control Valve: Testing and Inspection

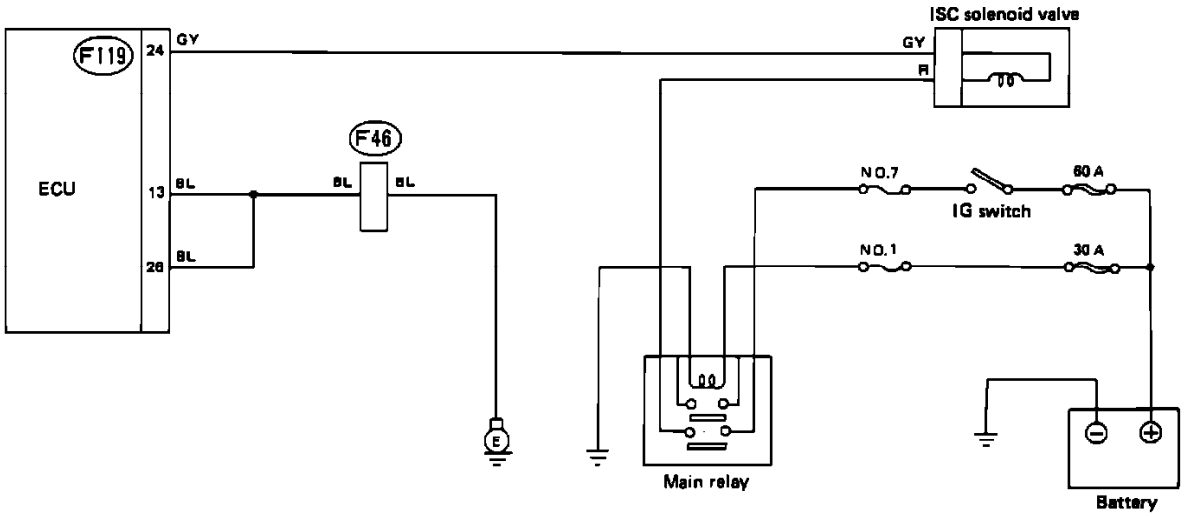

Idle Speed Control Solenoid Schematic

A faulty idle speed control (ISC) solenoid will set code 24 in the on-board diagnostic system. Refer to the schematic diagram and test the solenoid with the diagnostic chart.

Wire color code identification:

L: Blue
B: Black
Y: Yellow
G: Green
R: Red
W: White
Br: Brown
Lg: Light green
Gr: Gray

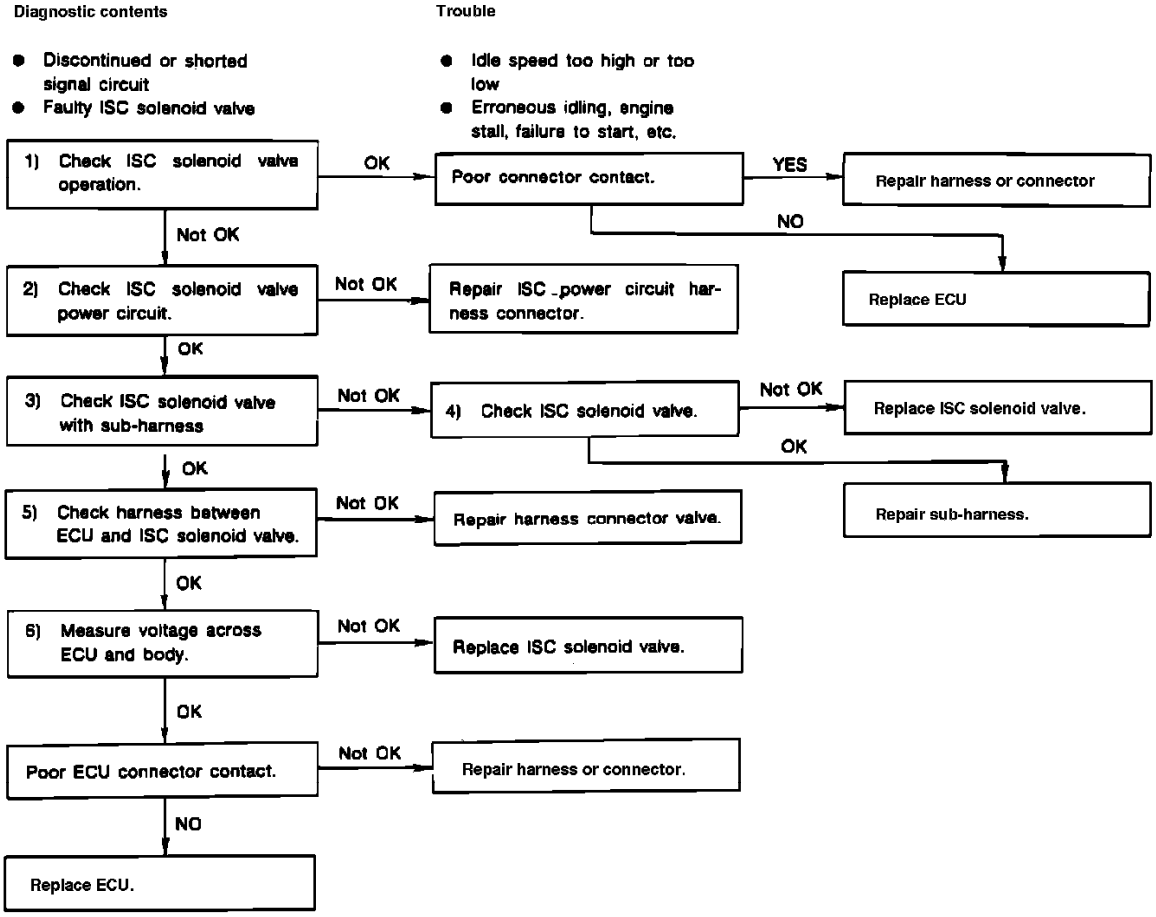

Idle Speed Control Solenoid Diagnostic Chart

ISC SOLENOID DIAGNOSTIC CHART

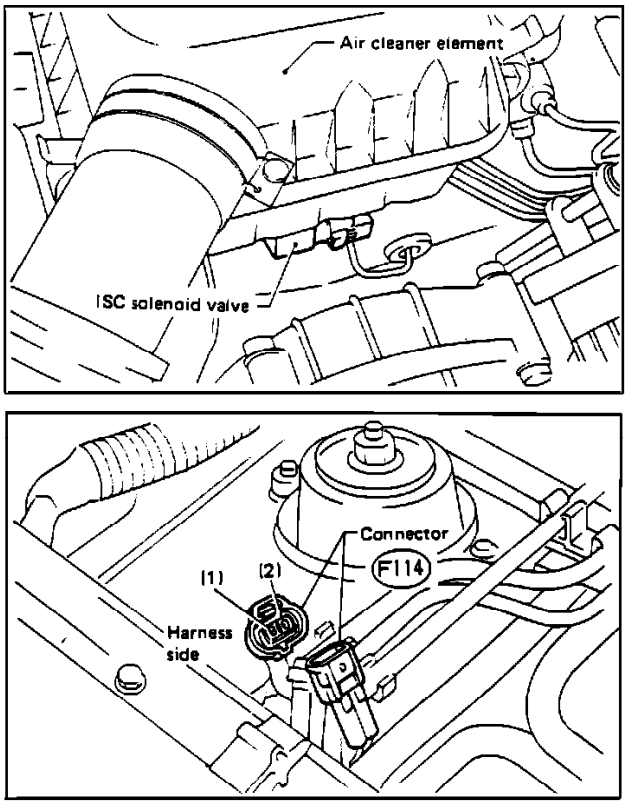

Idle Speed Control Solenoid Testing

CHECK ISC OPERATION, VOLTAGE AND RESISTANCE

1. Connect "Test Mode" connector of on-board diagnostic system.
2. Turn ignition "ON."
3. Check ISC solenoid valve for operating vibration at 0.5 second intervals. Do not confuse ISC solenoid sound with CPC solenoid sound.
4. Turn ignition "OFF" and disconnect ISC harness connector (F114).
5. Turn ignition "ON" and measure voltage across harness connector terminal (F114)2 and ground. It should be above 9V.
6. Turn ignition "OFF" and measure resistance across harness connector terminals (F114)1 and (F114)2. It should be 20-30 Ohms at 20° C (68° F).
7. Measure resistance between ISC solenoid valve connector terminals #1 and #2. It should be 20-30 Ohms at 20° C (68° F).

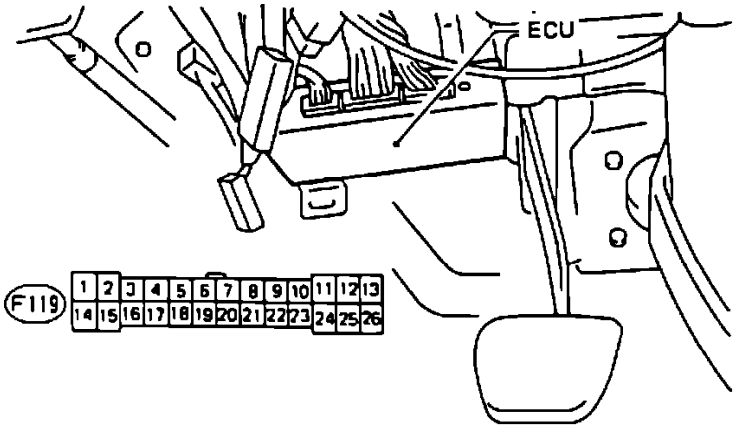

ECU/Crank Angle Sensor Harness Testing

CHECK ECU HARNESS

1. Disconnect ECU connector.
2. Measure resistance between ECU and ISC solenoid connectors as follows:

Connector & terminal:	**Resistance:**
(F119)24-(F114)1	Below 1 Ohm
(F119)24-Ground	Infinite

3. Measure resistance between ECU and ground as follows:

Connector & terminal:	**Resistance:**
(F119)13-Ground	Below 10 Ohms
(F119)26-Ground	Below 10 Ohms

CHECK ECU VOLTAGE

1. Connect ECU and ISC solenoid connectors.
2. Disconnect "Test Mode" connector.
3. Turn ignition "ON" and measure voltage between ECU connector terminal (F119)24 and ground. It should read above 8V.

Idle Up Control Valve: Description and Operation

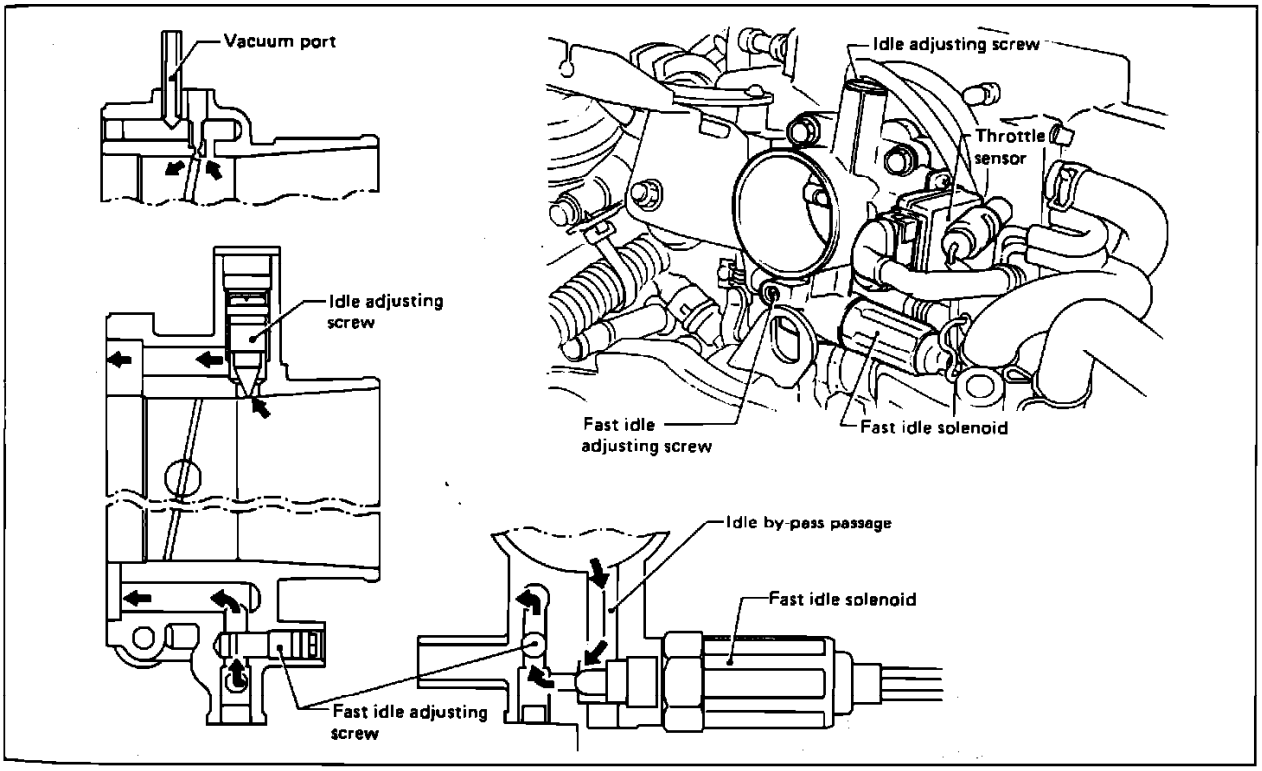

Idle Speed Adjustment

PURPOSE

The fast idle control device **(FICD)** allows additional air to bypass the throttle plate during air conditioning operation.

LOCATION

The FICD is located near the firewall on the right side of the engine compartment.

OPERATION

When the A/C compressor is turned ON, the ECU responds to the increased engine load by energizing the fast idle solenoid. When energized, the solenoid opens an idle bypass passage, allowing additional air around the throttle valve and raising the idle speed. An adjusting screw regulates the amount of bypass air. A faulty fast idle solenoid does not set a trouble code.

Intake Air Duct: Description and Operation

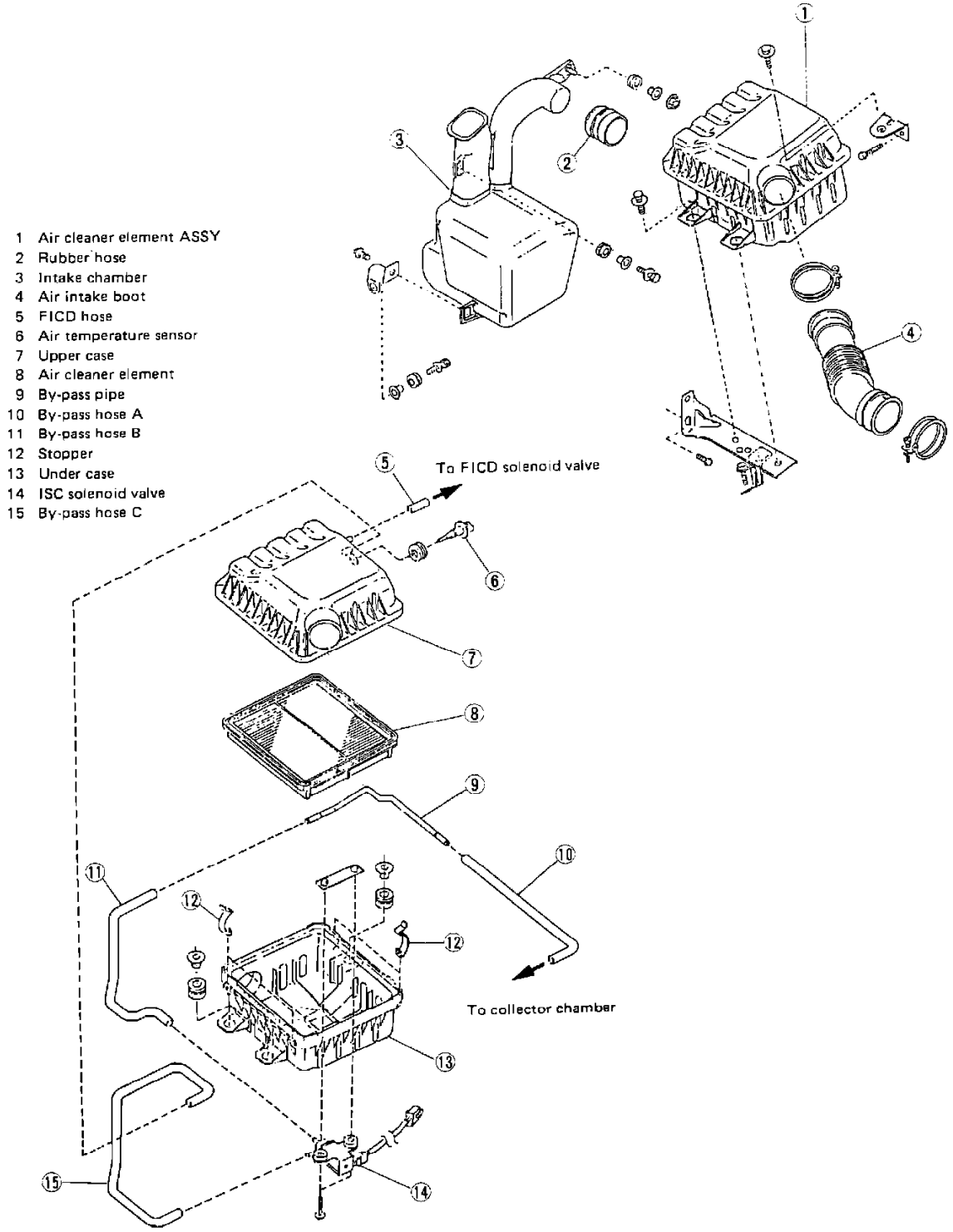

Air Cleaner

PURPOSE

Allows a closed path for intake air to flow into the throttle chamber from the air filter. Also used to route air through the turbocharger.

LOCATION

Between the throttle chamber and the air cleaner assembly.

Main Relay (Computer/Fuel System): Testing and Inspection

Connector & Terminal	Specified voltage
(F120) No. 1 – Body	Above 9 V
(F120) No. 12 – Body	Above 9 V
(F120) No. 2 – Body	Above 9 V

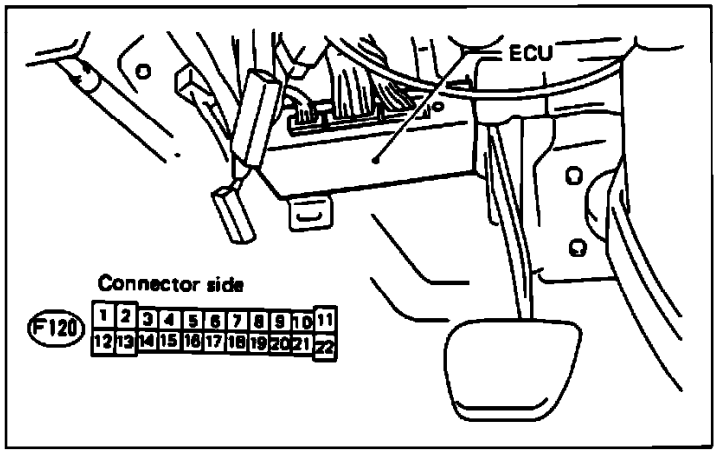

ECU Power Supply Testing

ECU POWER SUPPLY

1. Turn ignition switch "ON."
2. Measure voltage between ECU connector terminals and ground on vehicle body. Specified voltages and connector terminals are listed in the image table.

Two-Way Check Valve: Description and Operation

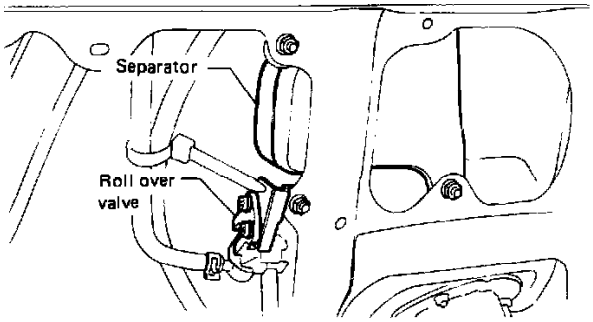

Fuel Separator And Rollover Valve

PURPOSE

Prevents fuel from flowing into the canister in the event of vehicle rollover.

LOCATION

In L.R. 1/4 panel.

OPERATION

The valve is constructed of passages and check balls. When the vehicle valve is tilted, the check balls cover the passages, preventing fuel flow through the valve.

Two-Way Check Valve: Testing and Inspection

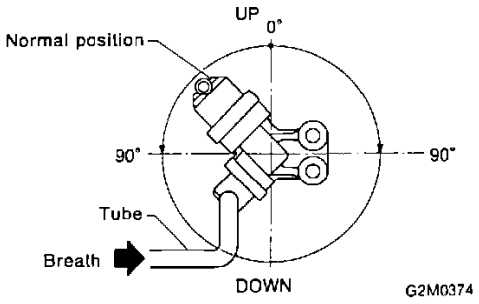

Roll-Over Valve

1. Connect hose to rollover valve as shown.
2. While blowing through the hose, tilt valve at least 90° left and right from normal position. Make sure air flows through valve.
3. Air should not flow through valve when it is tilted further than 90°.

Two-Way Check Valve: Service and Repair

REMOVAL

1. Disconnect negative battery cable.
2. Remove rear seat back and bottom cushions.
3. Remove left rear sill and side trim.

NOTE: On 5-door MPFI model, rollover valve is on right side.

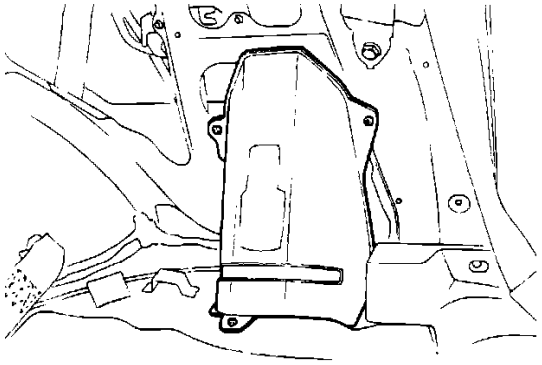

Fig. 7

4. Remove fill pipe cover.

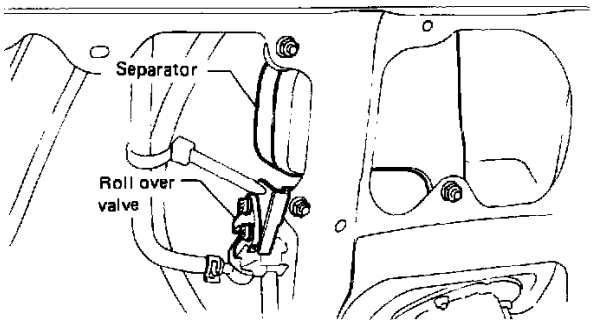

Fuel Separator And Rollover Valve

5. Remove seperator tank and rollover valve and seperate tube (between tank and seperator) from seperator by moving clip out of its place.

INSTALLATION

Use reverse order for installation.

Throttle Full Close Switch: Description and Operation

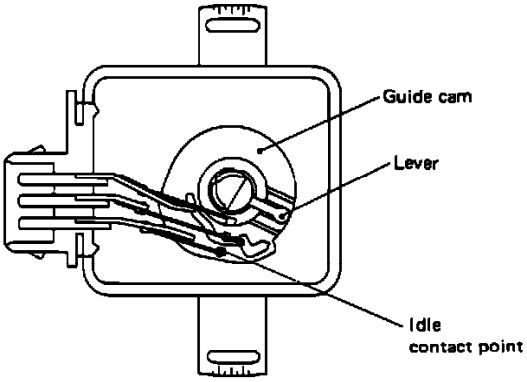

Idle/Throttle Switch

PURPOSE

The idle/throttle switch indicates to the ECU that the throttle is closed (at idle position), wide open (at least 50 degrees) or neither. This information allows the ECU to make calculations according to whether the engine is idling or under a loaded condition.

LOCATION

The sensor is mounted to the throttle body on the intake manifold.

OPERATION

This switch is readable whenever the ignition switch is ON. The contacts in this switch are either "ON" or "OFF" and not of the variable resistor type.

Throttle Full Close Switch: Testing and Inspection

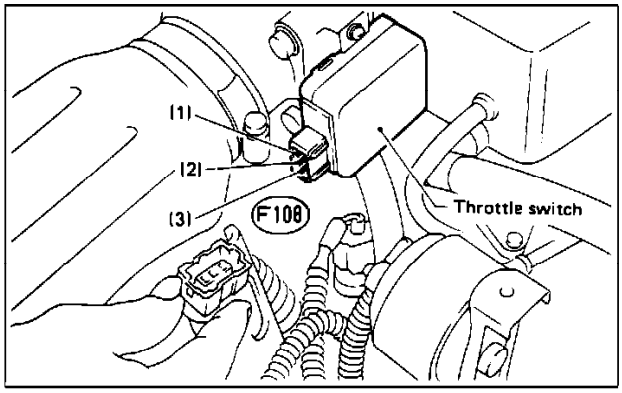

Idle/Throttle Switch Testing

1. With ignition OFF, disconnect switch connector.
2. Measure resistance between switch connector terminals as follows:

Connector & Terminal:	**Resistance:**
(F108)3 - (F108)2	Below 1 ohm (fully closed throttle)
(F108)3 - (F108)2	Infinite (fully open throttle)

Throttle Full Close Switch: Adjustments

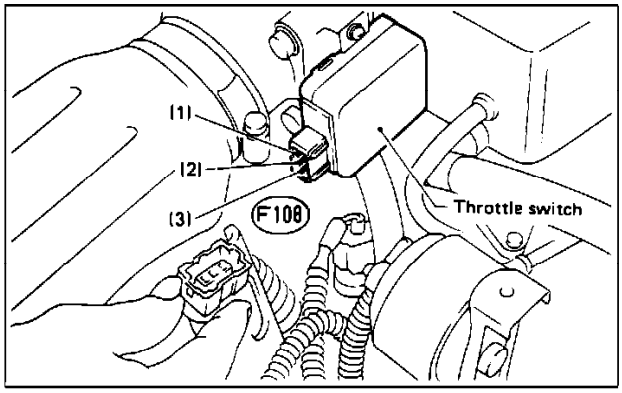

Idle/Throttle Switch Testing

1. With ignition "OFF," disconnect switch connector.
2. Measure resistance between switch connector terminals as follows:

Connector & terminal:	**Resistance:**
(F108)3-(F108)2	Below 1 Ohm (fully closed throttle)
(F108)3-(F108)2	Infinite (fully open throttle)

3. If necessary, loosen the screws and turn the switch until desired results are attained.

Throttle Full Close Switch: Service and Repair

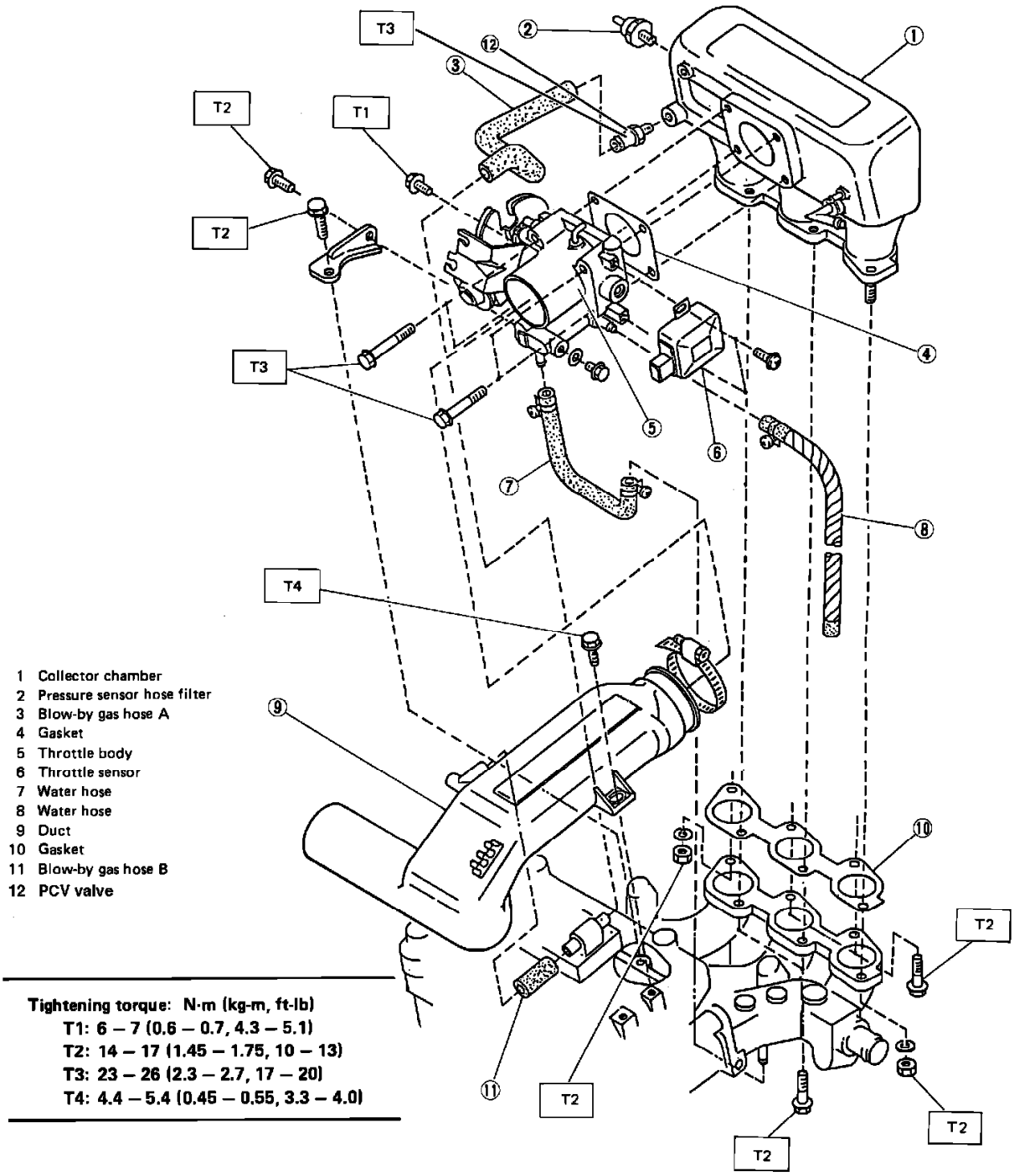

Throttle Chamber

1. Disconnect electrical connector from sensor.
2. Remove sensor fasteners.
3. Install in reverse procedure with a new O-ring.
4. Refer to **Adjustments**

Throttle Full Open Switch: Testing and Inspection

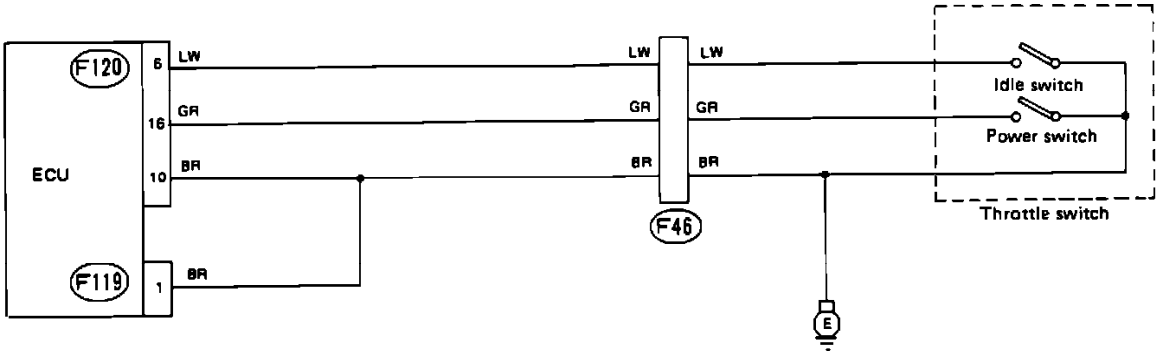

Idle/Throttle Switch Schematic

A faulty idle/throttle switch may set either of two codes in the on-board diagnostic system. Code 42 will set if the idle switch is defective and code 43 will set if the power switch is defective. Refer to the schematic diagram and test the sensor with the diagnostic chart.

Wire color code identification:

L: Blue
B: Black
Y: Yellow
G: Green
R: Red
W: White
Br: Brown
Lg: Light green
Gr: Gray

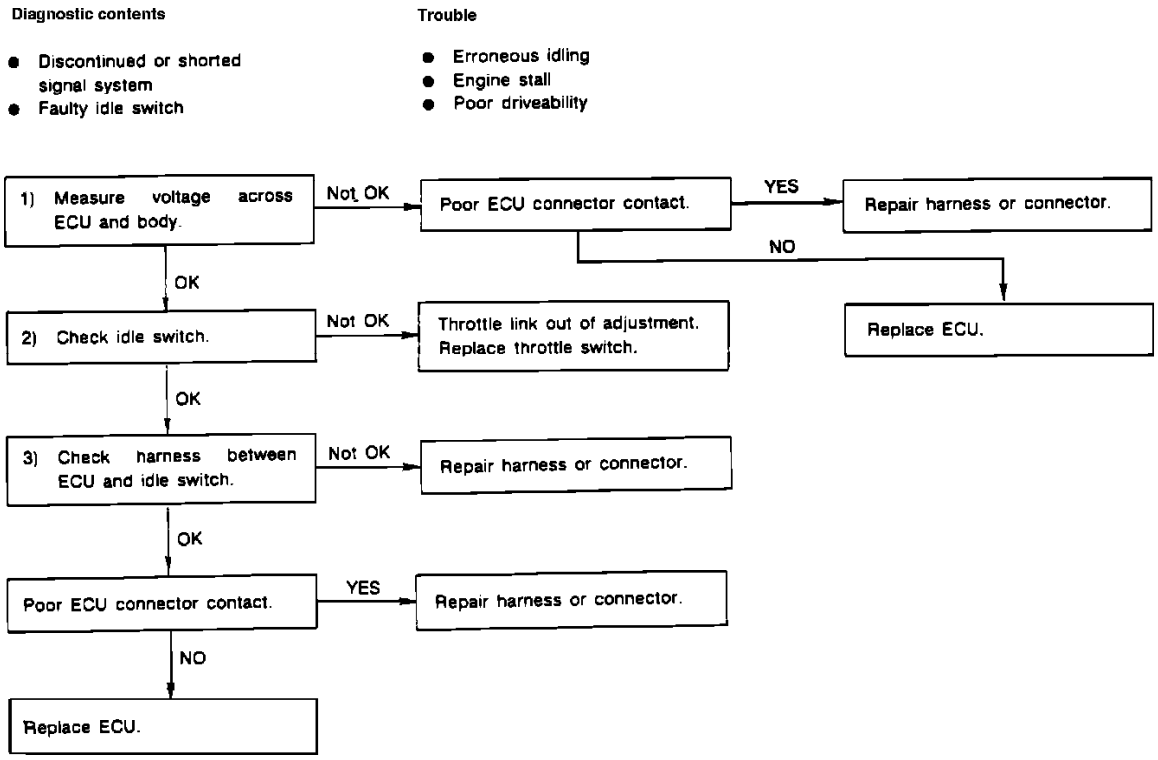

Idle/Throttle Switch Diagnostic Chart

IDLE/THROTTLE SWITCH DIAGNOSTIC CHART

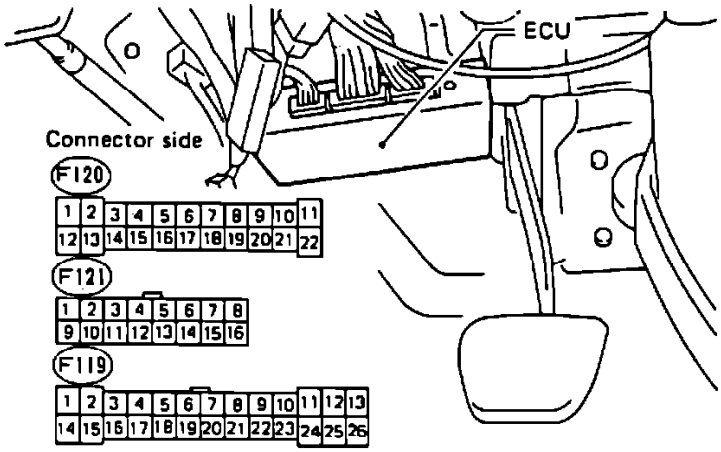

ECU Connectors

CHECK VOLTAGE AND RESISTANCE

1. With ignition "ON" and engine not running, measure voltage across ECU connector terminals as follows:

Connector & terminal:	**Voltage:**
(F120)6-(F121)1	Below 1V (fully closed throttle)
(F120)6-(F121)2	Above 8V (fully open throttle)

2. With ignition "OFF," disconnect ECU connector and measure resistance between ECU connector and switch connector as follows:

Connector & terminal:	**Resistance:**
(F120)6-(F108)3	Below 1 Ohm
(F119)1-(F108)2	Below 1 Ohm
(F120)10-(F108)2	Below 1 Ohm
(F120)6-Ground	Infinite
(F119)1-Ground	Below 10 Ohms
(F120)10-Ground	Below 10 Ohms

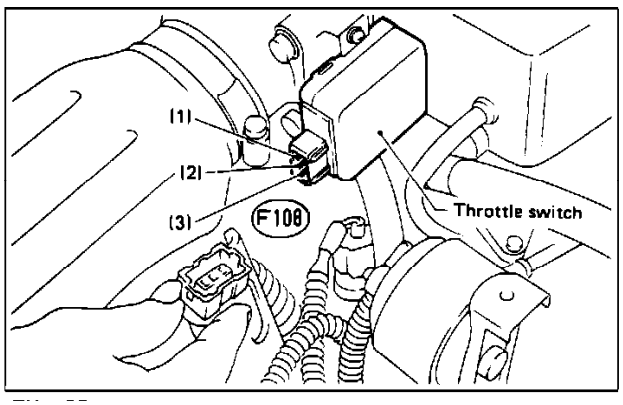

Idle/Throttle Switch Testing

CHECK IDLE/THROTTLE SWITCH

1. With ignition "OFF," disconnect switch connector.
2. Measure resistance between switch connector terminals as follows:

Connector & terminal:	**Resistance:**
(F108)3-(F108)2	Below 1 Ohm (fully closed throttle)
(F108)3-(F108)2	Infinite (fully open throttle)

Computers and Control Systems: Description and Operation
System Description

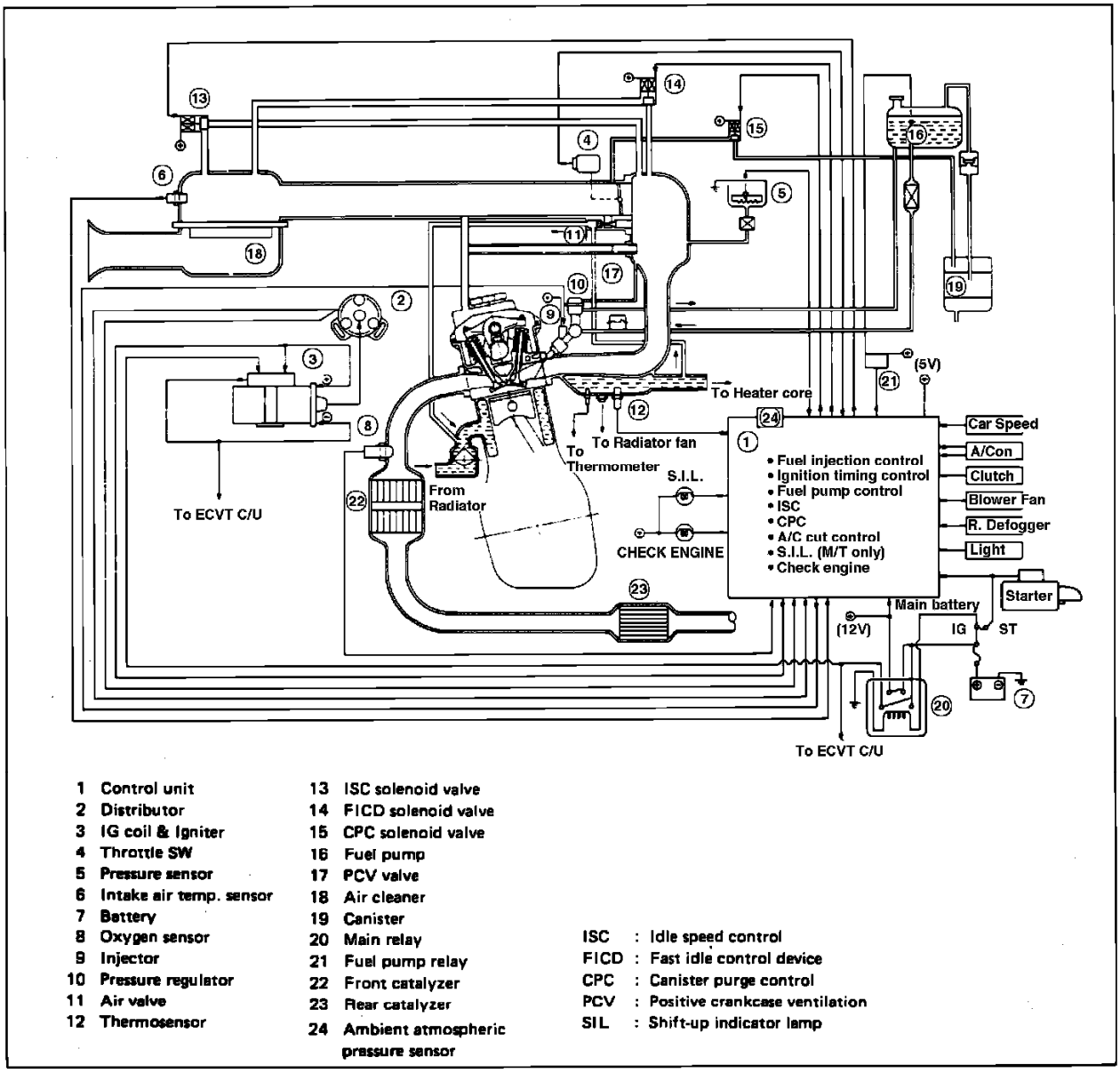

Computerized Engine Controls

PURPOSE

The vehicle ECU and sensor and output systems control virtually all aspects of engine operation. This combined control allows the engine to function at optimum performance while maintaining exceptable emission and fuel economy levels.

OPERATION

During normal vehicle operation, the ECU controls fuel, spark and emission systems. In the event of a sensor failure or inconsistency the unit switches to "Fail-Safe" mode. In this mode, certain sensor and output parameters become "fixed" allowing limited operation of the vehicle. In most cases the "Check Engine" lamp is illuminated and trouble codes are recorded in the ECU long term memory. These alert the operator that a system requires attention and guides the technician towards the failed system.

Computers and Control Systems: Description and Operation
On-Board Diagnostics

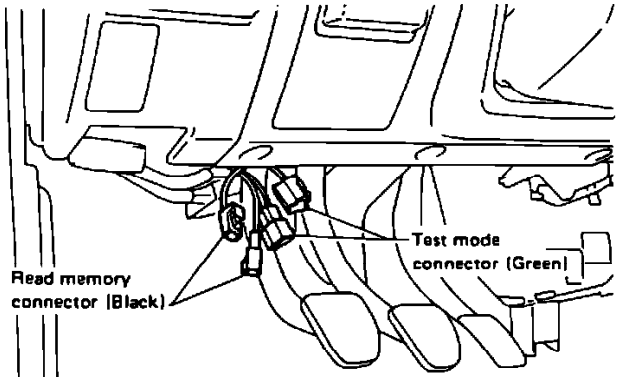

Diagnostic Connectors

Trouble code	Item	Contents of diagnosis	Fail-safe operation	U-check	D-check
11	Crank angle sensor	No signal entered from crank angle sensor, but signal entered from starter switch.	–	O	O
12	Starter switch	Starter switch signal remains "ON" or "OFF".	–	–	O
13	Cylinder distinction sensor	No signal entered from cylinder distinction sensor, but signal entered from crank angle sensor.	–	O	O
14	Injector #1	Fuel injector inoperative. (Abnormal signal emitted from monitor circuit.)	–	O	O
15	Injector #2				
16	Injector #3				
21	Water temperature sensor	Abnormal signal emitted from water temperature sensor.	• Operates at a definite water temperature. • Maintains constant ISC operation. • O_2 feedback function stops. • Changes A/C cut operation partially.	O	O
23	Pressure sensor	Abnormal signal emitted from pressure sensor.	• Operates at a definite intake manifold pressure. • O_2 feedback function stops. • Shift-indicator light is OFF (FWD/MT only).	O	O
24	ISC solenoid valve	ISC solenoid valve inoperative (Abnormal signal emitted from monitor circuit.)	–	O	O
26	Air temperature sensor	Abnormal signal emitted from air temperature sensor.	• Operates at a definite air temperature. • O_2 feedback function stops.	O	O
32	O_2 sensor	O_2 sensor inoperative.	O_2 feedback function stops.	O	O
33	Speed sensor	No signal entered from speed sensor, but vehicle is running.	• Maintains ISC operation constantly. • Changes A/C cut operation partially. • Shift-indicator light is OFF (FWD/MT only).	O	O
35	CPC solenoid valve	CPC solenoid valve inoperative. (Abnormal signal emitted from monitor circuit.)	–	O	O
36	Igniter	Abnormal signal emitted from monitor circuit.	Stops fuel injection.	O	O
41	A/F learning control	Faulty learning control function.	–	O	O
42	Idle switch	Abnormal signal emitted from idle switch.	• Maintains ISC operation constantly. • Charges the engine speed of releasing the fuel-cut.	O	O

43	Power switch	Abnormal signal emitted from power switch	Maintains power switch in "OFF".	O	O
45	Atmospheric pressure sensor	Abnormal signal emitted from atmospheric pressure sensor.	Operates at a definite atmospheric pressure.	O	O
52	Clutch switch*	Clutch switch signal remains "ON" or "OFF".	–	–	O
62	Electric load signal	Headlight HI/LO signal or rear defogger signal remains "ON" or "OFF".	–	–	O
63	Blower fan switch	Blower fan switch signal remains "ON" or "OFF".	–	–	O
65	Disconnect the hose of the vacuum pressure sensor	Abnormal signal emitted from vacuum pressure sensor (Hose disconnection, etc.)	• Operates at a definite intake manifold pressure. • O_2 feedback function stops. • Shift-indicator light is OFF (FWD/MT only).	O	O

*: FWD/MT model or ECVT model only

Fail - Safe Mode

PURPOSE

The self-diagnosis system detects, stores and has provision for reading codes indicating various faults with electronic engine and emission controls. A "CHECK ENGINE" light on the instrument panel indicates the presence of trouble codes and flashes the codes. The system has a fail-safe function which will default to a preset value when a part is judged defective, thereby maintaining minimal driveability until repairs can be made.

OPERATION

For accessing codes, two connectors (Read Memory and Test Mode) and the "CHECK ENGINE" are used. The connectors are for mode selection and the lamp monitors the type of problem. Read Memory connectors are black and Test Mode connectors are green. Both connectors are under the dash.

The self-diagnosis system has four modes:

^ U-Check Mode:
Only components necessary for proper starting and drive operation are monitored. The "CHECK ENGINE" light will come on when a fault is detected, indicating the need for further diagnosis. Parts which do not significantly affect starting or driveability are not monitored in this mode.

^ Read Memory Mode:
This mode is used to read codes of past problems stored in memory and can be accessed when the "CHECK ENGINE" light is off. It is effective for detecting poor contact or loose electrical connections.

^ D-Check Mode:
This mode checks the entire system and displays any trouble codes currently being monitored.

^ Clear Memory Mode:
This mode removes trouble codes from memory after repairs are made.

RELATIONSHIP BETWEEN MODES AND CONNECTORS

^ U-CHECK MODE:
Ignition "ON," Read Memory disconnected, Test Mode disconnected.

^ READ MEMORY MODE:
Ignition "ON," Read Memory connected, Test Mode disconnected.

^ D-CHECK MODE:
(engine on)
Ignition "ON," Read Memory disconnected, Test Mode connected.

^ CLEAR MEMORY MODE:
(engine on)
Ignition "ON" (engine on), Read Memory connected, Test Mode connected.

A/C Signal: Adjustments

NOTE: This series of adjustments should be performed in the order given.

IGNITION TIMING

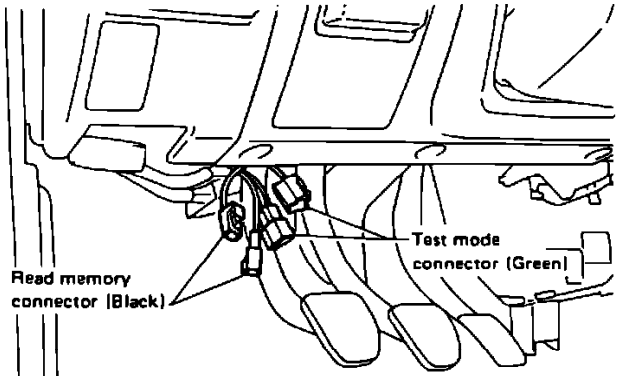

Diagnostic Connectors

1. Warm up engine, then connect green test mode connector.
2. Connect timing light to #1 plug wire and aim at timing mark on crank pulley. Timing should be **5° BTDC.**
3. If adjustment is needed, loosen distributor. Turn clockwise to advance timing and counterclockwise to retard timing.
4. Tighten distributor and disconnect test mode connector.

ENGINE IDLE SPEED

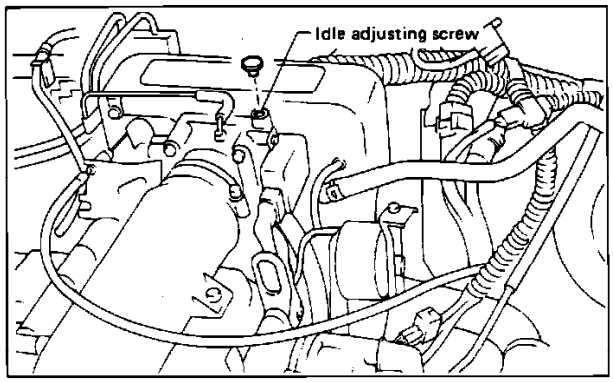

Idle Speed Adjustment (MPFI)

1. First check and adjust timing as needed.
2. Then connect black read memory connector and check idle speed. It should be **700 ± 50 rpm.**

NOTE: Light, blower fan, and rear defogger switches must be OFF. Radiator fan should not be running.

3. Turn adjusting screw clockwise to lower rpm, or counterclockwise to raise rpm.
4. Disconnect test mode and read memory connectors.

A/C FAST IDLE

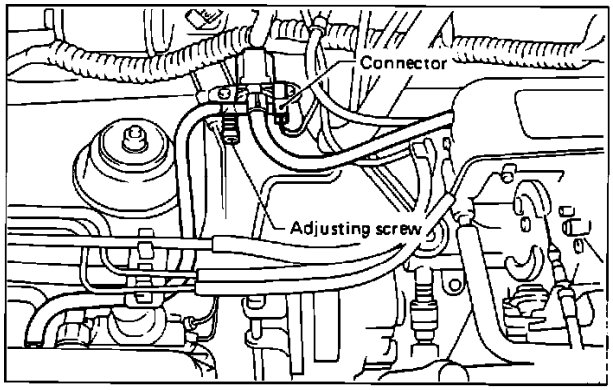

Idle Speed Adjustment (MPFI With A/C)

1. First check idle speed.

2. With test mode and read memory connectors still hooked up, turn A/C on and set blower switch to medium position.
3. Fast idle should be set at **800 ± 50 rpm.**

   NOTE: Light and rear defogger switches must both be OFF.

4. If adjustment is needed, turn adjusting screw clockwise to lower rpm or counterclockwise to raise rpm. Disconnect test mode and read memory connectors.
5. Confirm adjustment. With A/C OFF, idle speed should be **800 ± 50 rpm.** With A/C ON, idle speed should be **900 ± 50 rpm.**

Accessory Signal: Testing and Inspection
Blower Fan

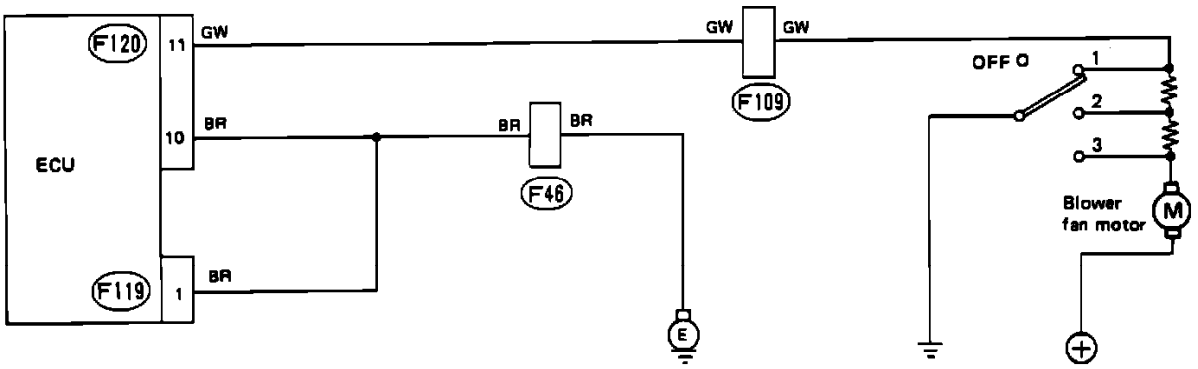

A/C Fan Switch Schematic

A faulty air conditioning/blower fan switch will set code 63 in the on-board diagnostic system. Refer to the schematic diagram and test the switch with the diagnostic chart.

Wire color code identification:

L: Blue
B: Black
Y: Yellow
G: Green
R: Red
W: White
Br: Brown
Lg: Light green
Gr: Gray

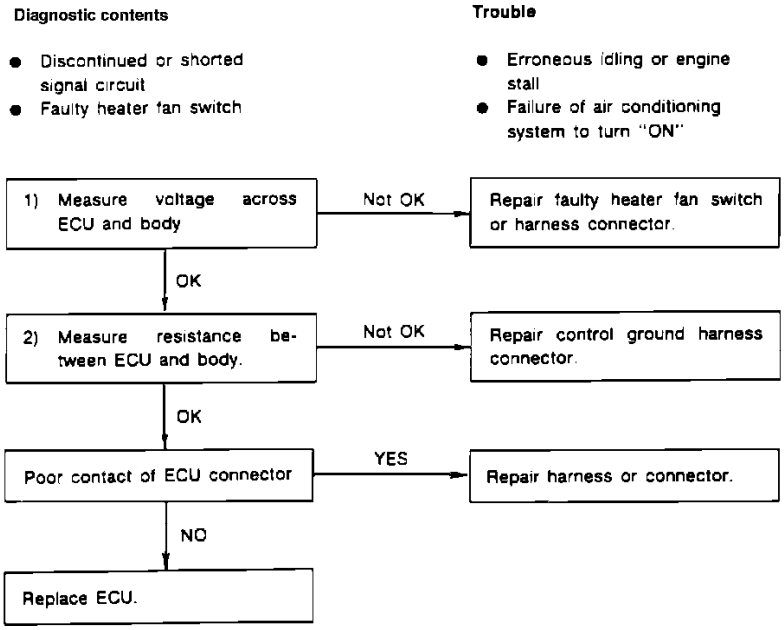

A/C Fan Switch Diagnostic Chart

A/C AND BLOWER FAN SWITCH DIAGNOSTIC CHART

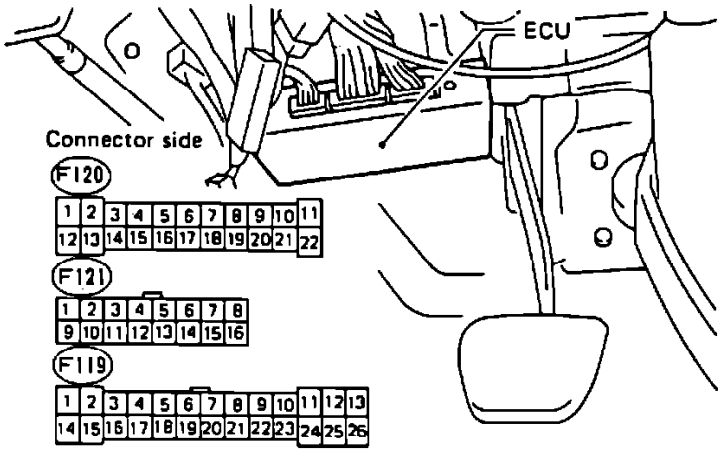

ECU Connectors

CHECK VOLTAGE AND RESISTANCE

1. With ignition "OFF," disconnect ECU connector.
2. Measure voltage across ECU connector terminals and ground as follows:

Connector & terminal:	**Voltage:**
(F120)11-Ground	Above 8V (heater fan "OFF")
(F120)11-Ground	Below 2V (heater fan 3rd speed)

2. With ignition "OFF," measure resistance between ECU connector and ground as follows:

Connector & terminal:	**Resistance:**
(F119)1-Ground	Below 10 Ohms
(F120)10-Ground	Below 10 Ohms

Accessory Signal: Testing and Inspection
Headlights and Rear Defogger

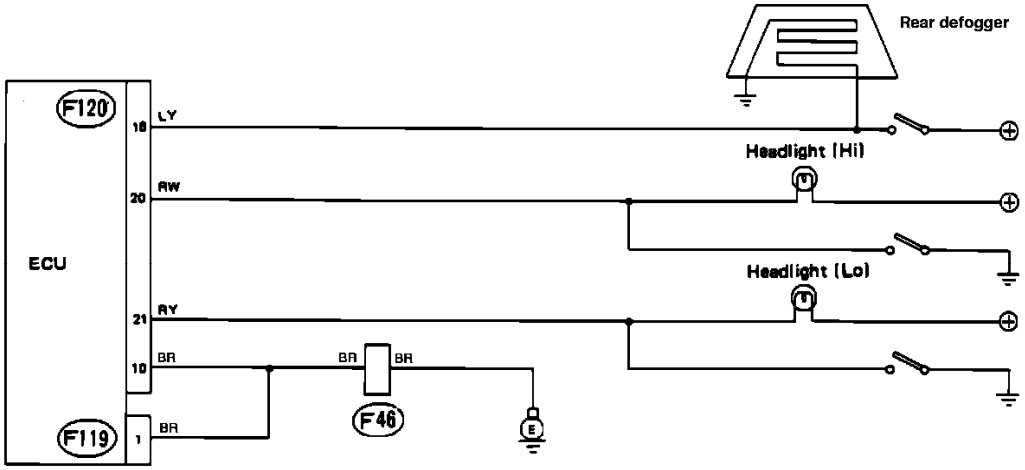

Electrical Load Signal Schematic

The ECU monitors electrical loads from the headlights and rear window defogger. Problems in these systems will set code 62 in the on-board diagnostic system. Refer to the schematic diagram and test the systems with the diagnostic chart.

Wire color code identification:

L: Blue
B: Black
Y: Yellow
G: Green
R: Red
W: White
Br: Brown
Lg: Light green
Gr: Gray

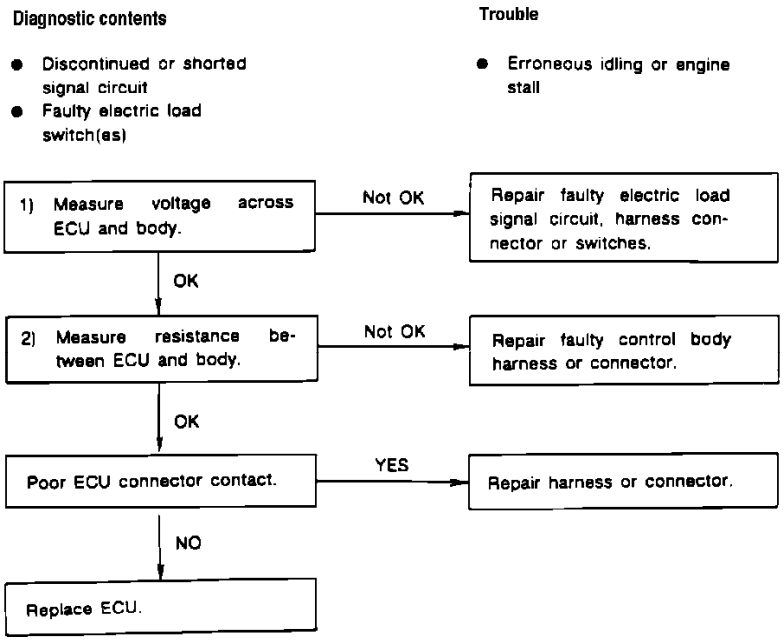

Electrical Load Signal Diagnostic Chart

ELECTRICAL LOAD SIGNAL DIAGNOSTIC CHART

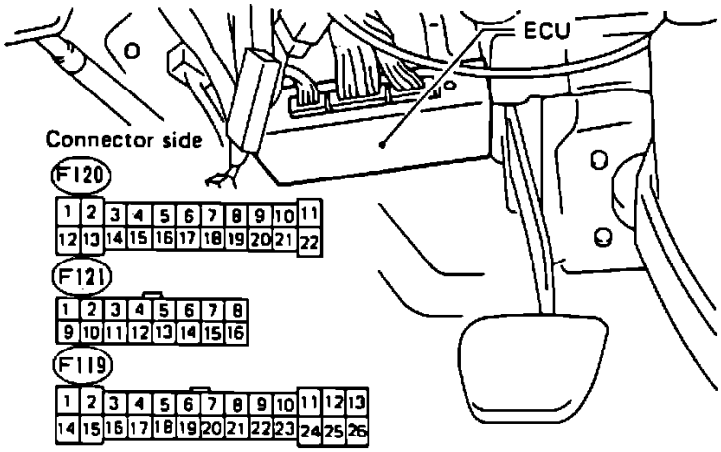

ECU Connectors

CHECK VOLTAGE AND RESISTANCE

1. With ignition "OFF," disconnect ECU connector.
2. Turn ignition "ON" and measure voltage between ECU connector terminals and ground as follows:

Connector & terminal:	**Voltage:**
(F120)18-Ground	Below 2V (defogger "OFF")
(F120)18-Ground	Above 8V (defogger "ON")
(F120)20-Ground	Above 8V (headlights "OFF")
(F120)20-Ground	Above 8V (headlights "HI")
(F120)21-Ground	Above 8V (headlights "OFF")
(F120)21-Ground	Above 8V (headlights "LO")

3. With ignition "OFF," measure resistance between ECU connector and ground as follows:

Connector & terminal:	**Resistance:**
(F119)1-Ground	Below 10 Ohms
(F120)10-Ground	Below 10 Ohms

Intake Air Temperature Sensor: Description and Operation

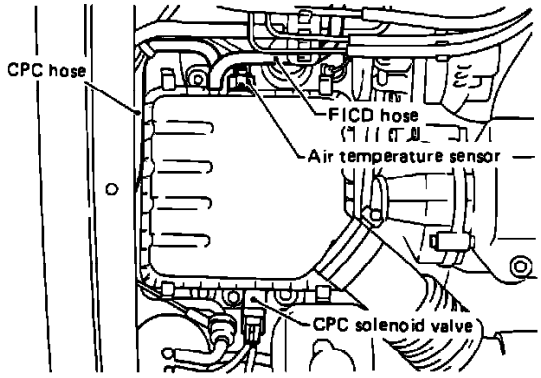

Air Temperature Sensor

PURPOSE

The air temperature sensor is used to measure the temperature of intake air.

LOCATION

The air temperature sensor is mounted on the air cleaner assembly.

OPERATION

The ECU sends a reference voltage to the sensor thermistor and measures the voltage variation due to temperature induced resistance changes in the sensor. The ECU enters this information into its calculations determining injection quantity.

Intake Air Temperature Sensor: Testing and Inspection

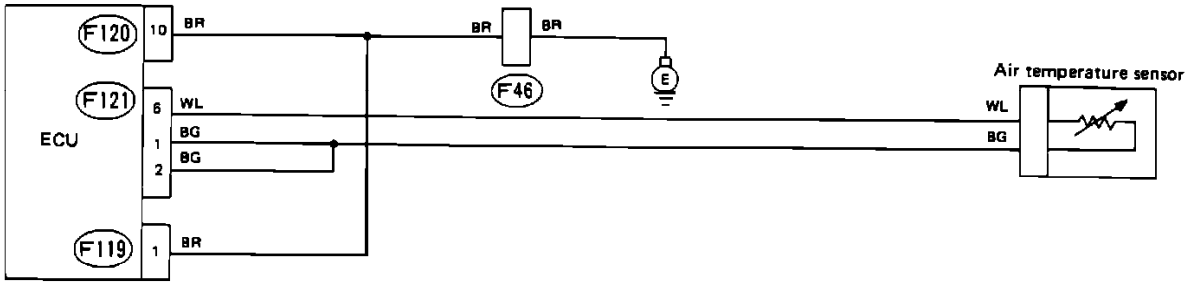

Air Temperature Sensor Schematic

A faulty air temperature sensor will set code 26 in the on-board diagnostic system. Refer to the schematic diagram and test the sensor with the diagnostic chart.

Wire color code identification:

L: Blue
B: Black
Y: Yellow
G: Green
R: Red
W: White
Br: Brown
Lg: Light green
Gr: Gray

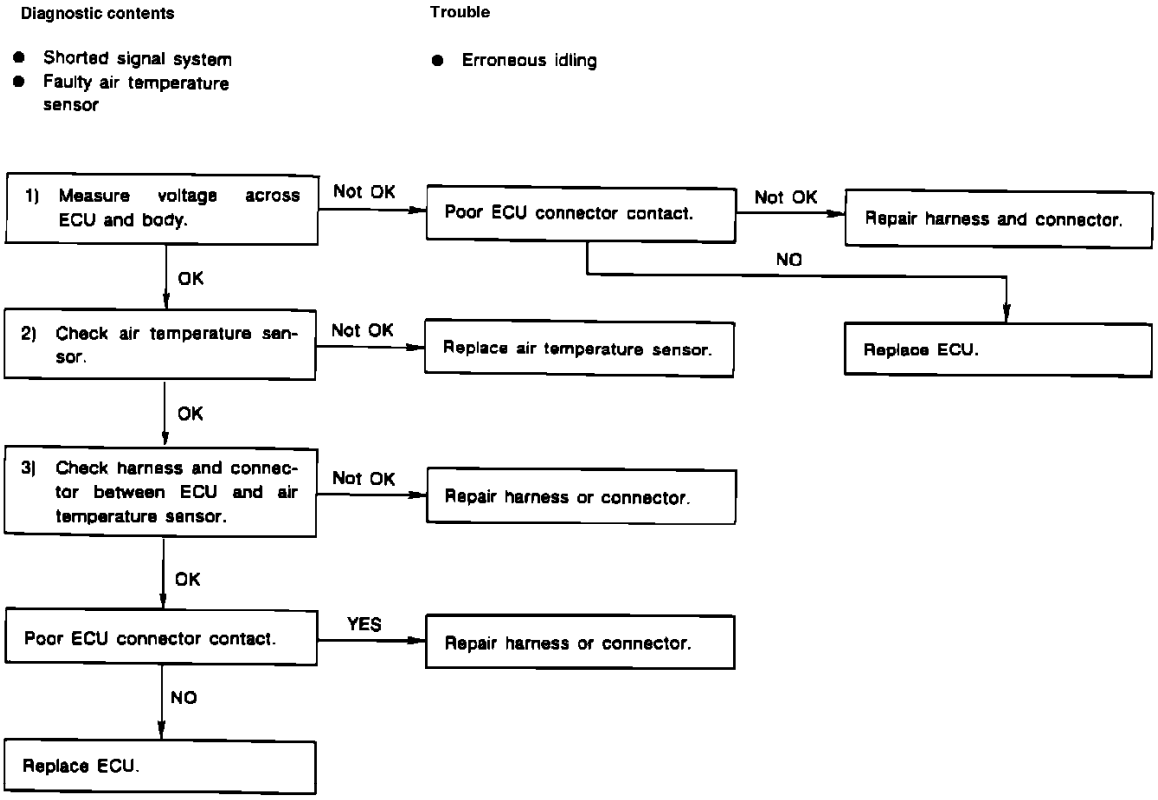

Air Temperature Sensor Diagnostic Chart

AIR TEMPERATURE SENSOR DIAGNOSTIC CHART

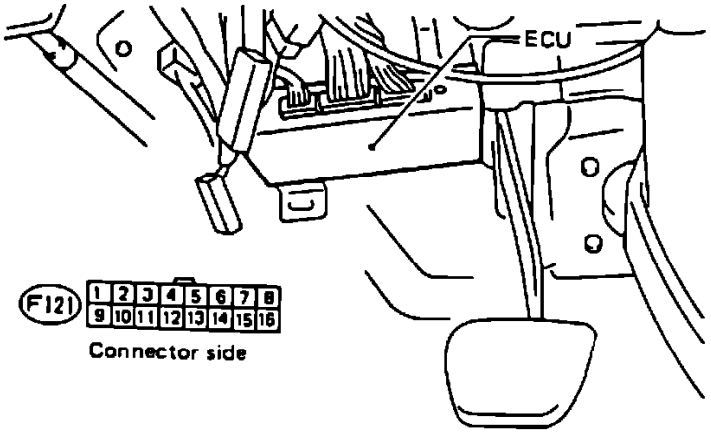

Pressure Sensor Harness

CHECK VOLTAGE AND RESISTANCE

1. With ignition "ON" and engine not running, measure voltage across ECU connector terminals as follows:

Connector & terminal:	**Voltage:**
(F121)6-(F121)1	0.15-4.85V
(F121)6-(F121)2	0.15-4.85V

2. With ignition "OFF," disconnect ECU connector and measure resistance between ECU connector and sensor connector as follows:

Connector & terminal:	**Resistance:**
(F121)6-(F113)2	Below 1 Ohm
(F121)1-(F113)1	Below 1 Ohm
(F121)2-(F113)1	Below 1 Ohm

3. Measure resistance between ECU connector terminal (F121)6 and ground. It should be infinite.

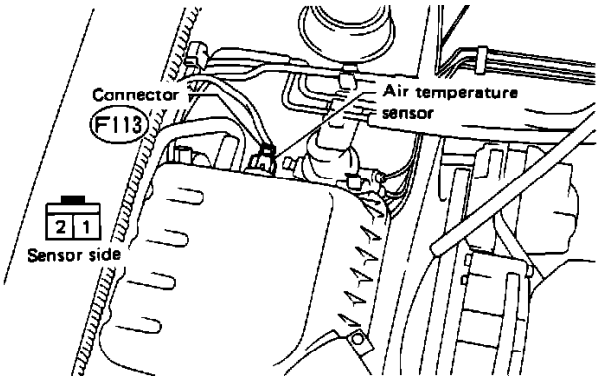

Air Temperature Sensor Testing

CHECK AIR TEMPERATURE SENSOR

1. With ignition switch "OFF," disconnect sensor connector.
2. Measure resistance between sensor terminals (F113)1 and (F113)2 for these resistance values:

Resistance:	**Temperature:**
2 - 3K Ohms	20° C (68° F)
270 - 370 Ohms	80° C (176° F)

Clutch Switch: Testing and Inspection

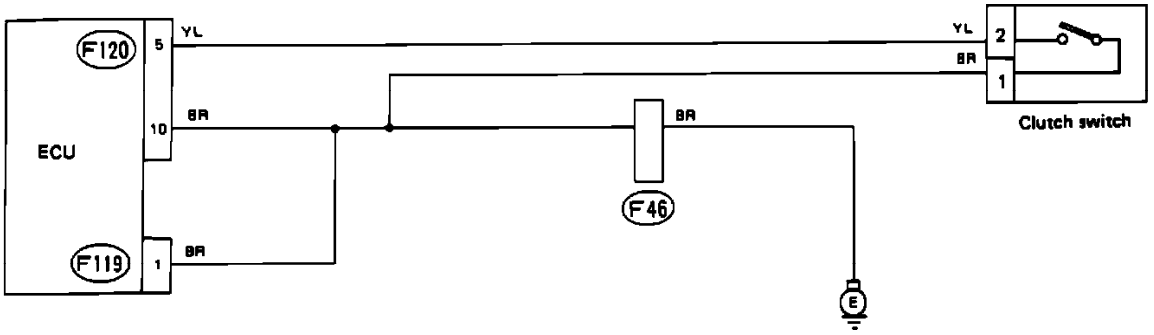

Clutch Switch Schematic

A faulty clutch switch will set code 52 in the on-board diagnostic system. Refer to the schematic diagram and test the coolant sensor with the diagnostic chart.

Wire color code identification:

L: Blue
B: Black
Y: Yellow
G: Green
R: Red
W: White
Br: Brown
Lg: Light green
Gr: Gray

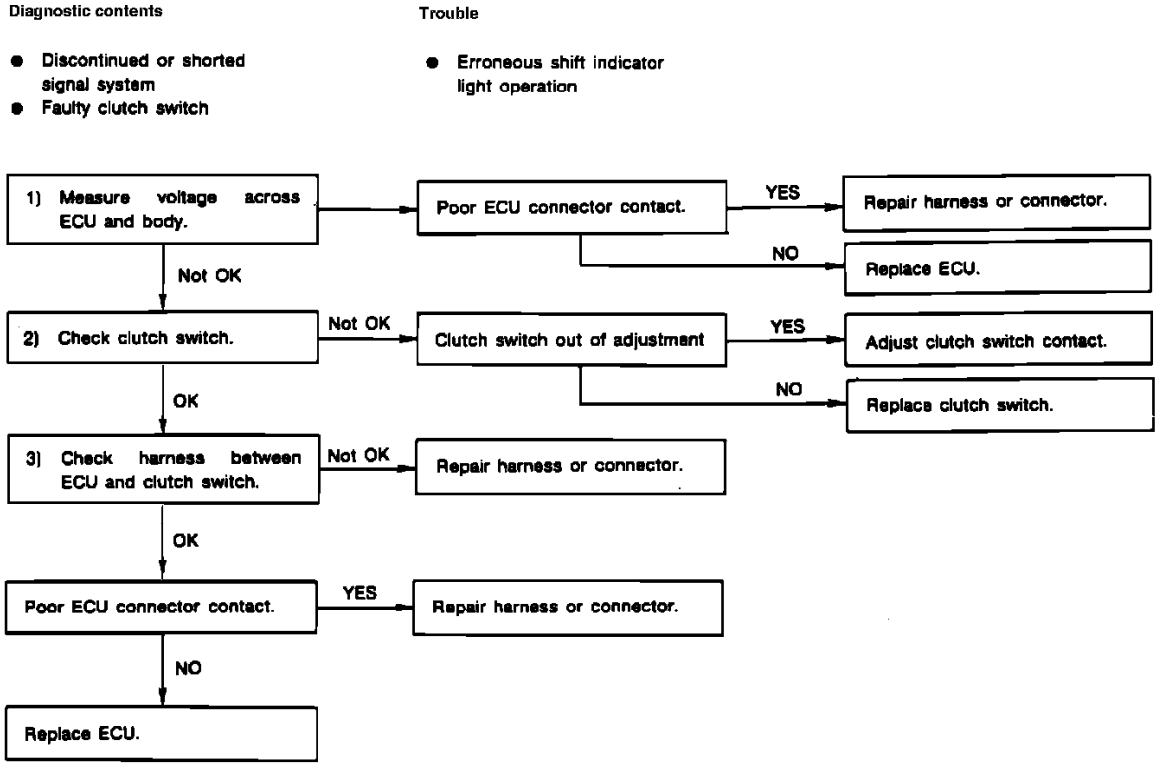

Clutch Switch Diagnostic Chart

CLUTCH SWITCH DIAGNOSTIC CHART

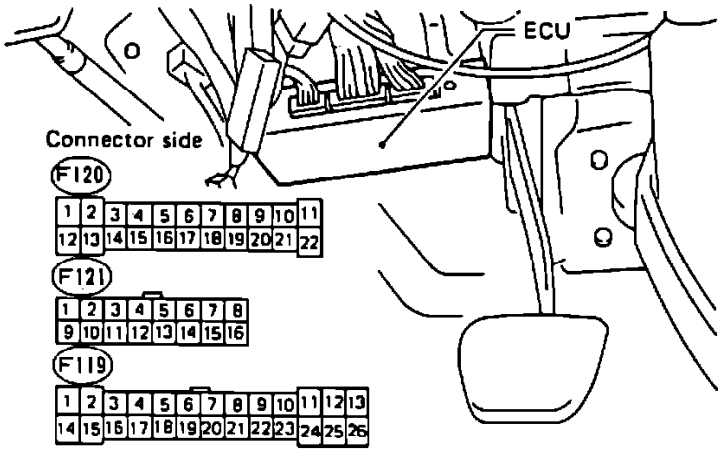

ECU Connectors

CHECK ECU AND CLUTCH SWITCH VOLTAGE AND RESISTANCE

1. With ignition switch "ON," measure voltage between ECU connector terminal and ground as follows:

Connector & terminal:	**Voltage:**
(F120)5-Ground	Below 1V (clutch released)
(F120)5-Ground	Above 8V (clutch depressed)

2. Turn ignition "OFF" and disconnect clutch switch connector.
3. Measure resistance between clutch switch connector terminals as follows:

Connector & terminal:	**Resistance:**
(F82)1-(F82)2	Below 1 Ohm (pedal released)
(F82)1-(F82)2	Infinite (pedal depressed)

CHECK ECU HARNESS

1. With ignition "OFF," disconnect ECU connector.
2. Measure resistance between ECU and clutch switch harness connector and between ECU connector and ground:

Connector & terminal:	**Resistance:**
(F120)5-(F82)2	Below 1 Ohm
(F119)1-(F82)1	Below 1 Ohm
(F120)10-(F82)1	Below 1 Ohm
(F120)5-Ground	Infinite
(F119)1-Ground	Below 10 Ohms
(F120)10-Ground	Below 10 Ohms

Engine Control Module: Testing and Inspection

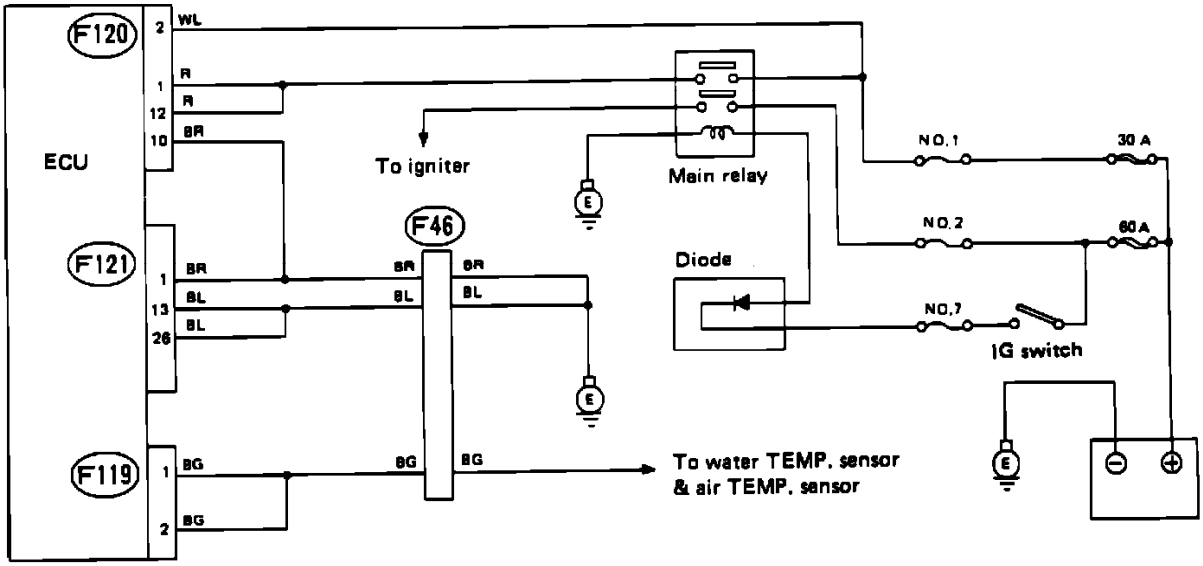

ECU Power Supply And Ground Circuit

NOTE: Never connect or disconnect the control unit or any sensors with the ignition "ON" unless specifically instructed to do so by a test procedure. Failure to follow this precaution could result in damage to electronic components.

While there is no specific test for the ECU, nor does it set a trouble code if a fault occurs in its own circuitry, many of the component tests lead to the ECU if no other problems are detected.

Connector & Terminal	Specified voltage
(F120) No. 1 — Body	Above 9 V
(F120) No. 12 — Body	Above 9 V
(F120) No. 2 — Body	Above 9 V

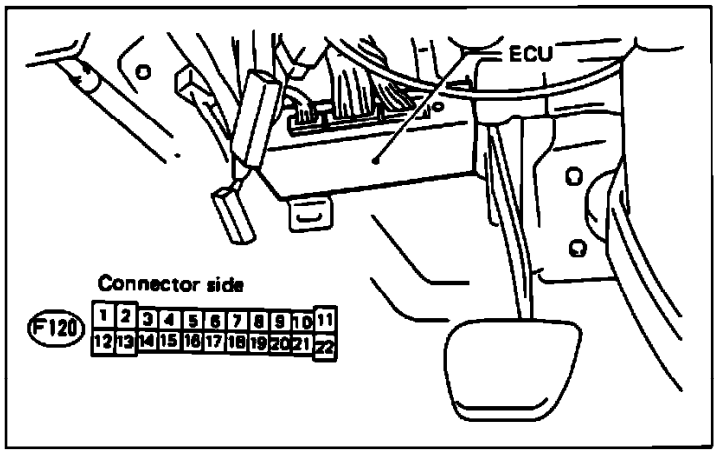

ECU Power Supply Testing

ECU POWER SUPPLY

1. Turn ignition switch "ON."
2. Measure voltage between ECU connector terminals and ground on vehicle body. Specified voltages and connector terminals are listed in the image table.

Connector & Terminal	Specified resistance
(F121) No. 1 – Body	Below 10 Ω
(F121) No. 2 – Body	Below 10 Ω
(F119) No. 1 – Body	Below 10 Ω
(F120) No. 10 – Body	Below 10 Ω
(F119) No. 13 – Body	Below 10 Ω
(F119) No. 26 – Body	Below 10 Ω

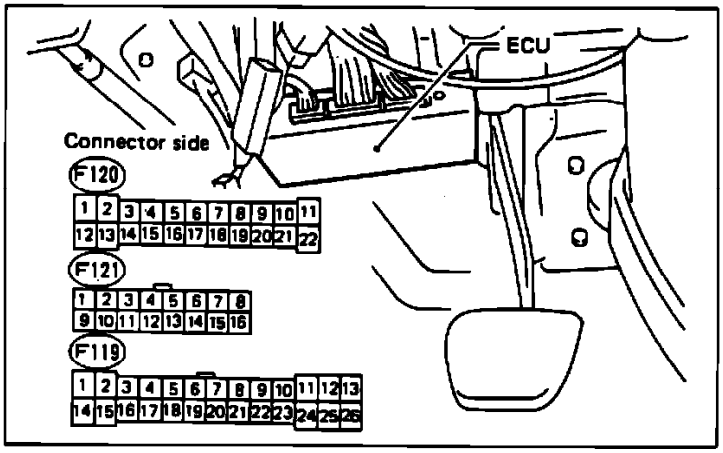

ECU Ground Circuit Testing

ECU GROUNDING CIRCUIT

1. Turn ignition switch "OFF."
2. Measure resistance between ECU connector terminals and body. Specified resistances and connector terminals are listed in the image table.

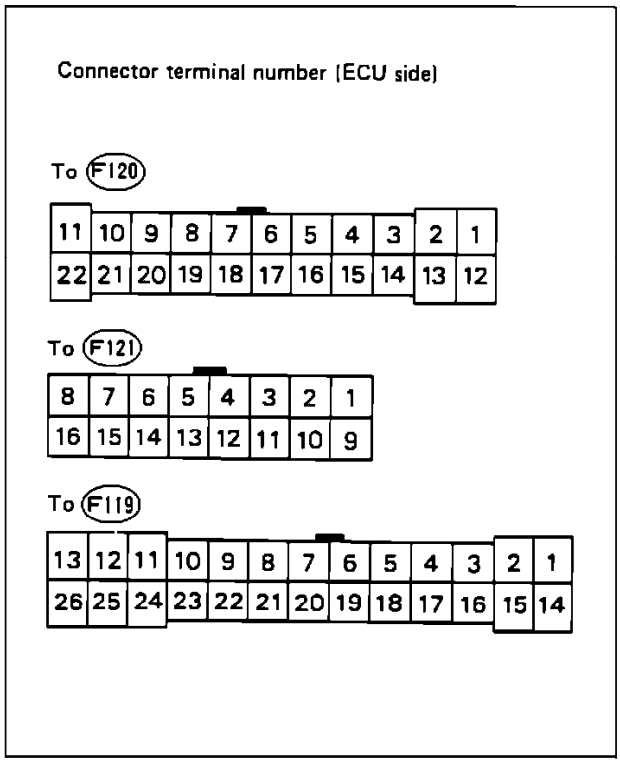

F120

1	R	Power (Battery)
2	WL	Standby power (for memory backup)
3	Lg	Ignition monitor
4	LgB	Speed sensor
5	YL	Clutch switch (FWD or ECVT only)
6	LW	Idle switch
7	LG	Serial monitor RX
8	Y	Serial monitor CLOCK
9	GL	Serial monitor TX
10	BR	Ground (Control)
11	GW	Blower fan signal
12	R	Power
13	–	
14	L	A/C signal
15	GB	Radiator fan signal
16	GR	Power switch
17	BW	Starter switch
18	LY	Rear defogger switch
19	–	
20	BW	Headlight high (Hi) signal
21	RY	Headlight low (Lo) signal
22	–	

ECU Connector Table (a)

(F121)

1	BG	Ground (Sensor)
2	BG	Ground (Sensor)
3	YR	Vacuum pressure sensor
4	(B)	O_2 sensor
5	WB	Water temperature sensor
6	WL	Air temperature sensor
7	–	O_2 sensor (Shield)
8	YB	High altitude signal II (ECVT only)
9	LgW	Read memory connector
10	Br	Test mode connector
11	BR	Identification of MT or ECVT
12	BL	Identification of Cal.
13	–	
14	BR	Identification of FWD or 4WD
15	–	
16	–	

(F119)

1	BR	Ground (Control)
2	RY	Power (Vacuum pressure sensor)
3	(R)	Crank angle signal N+
4	(W)	Crank angle signal N–
5	(B)	Cylinder distinction signal G+
6	(G)	Cylinder distinction signal G–
7	–	Crank angle & cylinder distinction sensor (Shield)
8	WR	High altitude signal I (ECVT only)
9	BrB	Torque signal (ECVT only)
10	BrW	Water temperature signal (ECVT only)
11	W	Injector #3
12	WY	Injector #1
13	BL	Ground (Power)
14	–	
15	GW	A/C cut signal
16	–	
17	–	
18	LB	Fuel pump
19	Lg	Check engine light
20	Or	Shift-up indicator light (FWD/MT only)
21	YW	Ignition signal
22	LR	Canister purge control
23	BrR	A/C compressor
24	GY	ISC signal
25	WG	Injector #2
26	BL	Ground (Power)

If disconnecting the ECU connector for checking, disconnect all connectors (F119, F120, F121).

ECU Connector Table (b)

ECU CONNECTOR TABLE

Wire color code identification:

L: Blue
B: Black
Y: Yellow
G: Green
R: Red
W: White
Br: Brown
Lg: Light green
Gr: Gray

Malfunction Indicator Lamp: Testing and Inspection

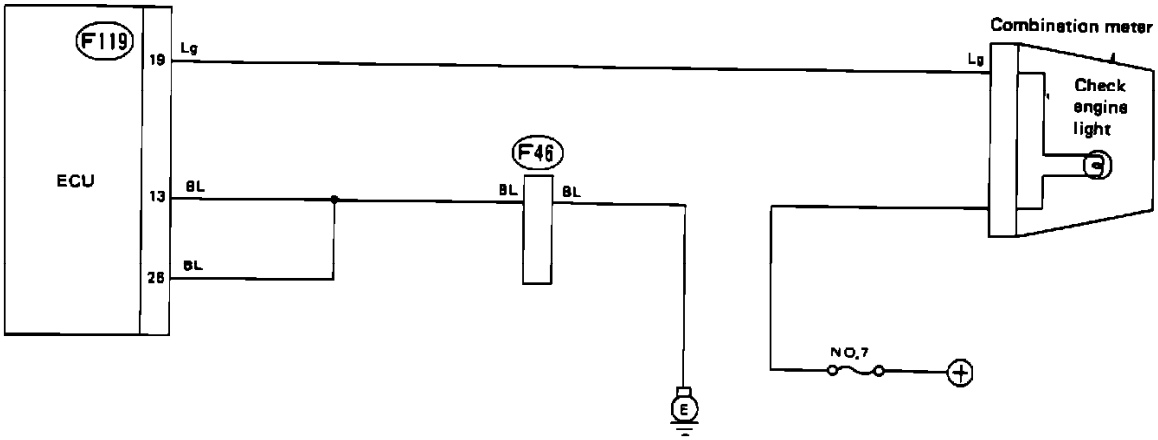

"Check Engine" Light Schematic

A faulty "Check Engine" light system does not set a code in the on-board diagnostic system. However, if the system does not operate properly, troubleshooting can identify the problem. Refer to the schematic diagram and test the "Check Engine" light with the diagnostic chart.

Wire color code identification:

L: Blue
B: Black
Y: Yellow
G: Green
R: Red
W: White
Br: Brown
Lg: Light green
Gr: Gray

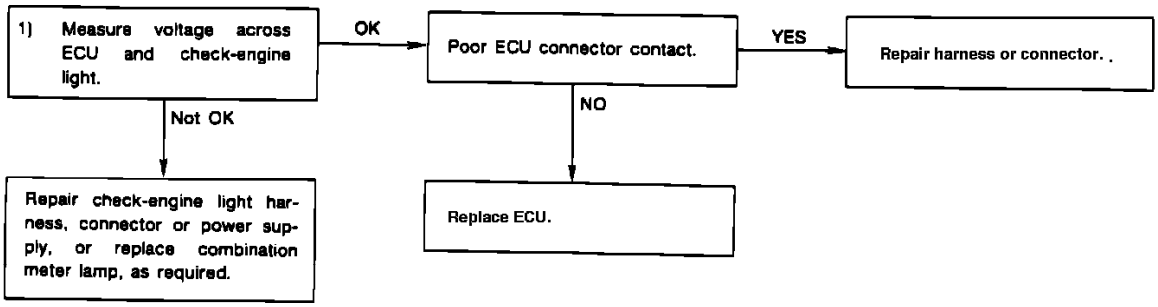

"Check Engine" Light Diagnostic Chart

"CHECK ENGINE" LIGHT DIAGNOSTIC CHART

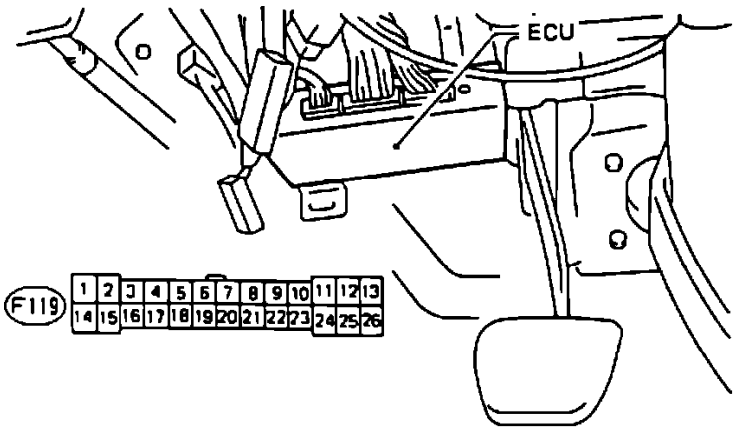

ECU/Crank Angle Sensor Harness Testing

"CHECK ENGINE" LIGHT VOLTAGE

Subaru Justy Hatchback 4WD L3-1.2L SOHC (MPFI)

1. With ignition switch "OFF," disconnect ECU connector.
2. Turn ignition switch "ON."
3. Check voltage between ECU connector terminal (F119)19 and "Check Engine" light. Voltage should be above 9V.

Manifold Pressure/Vacuum Sensor: Description and Operation

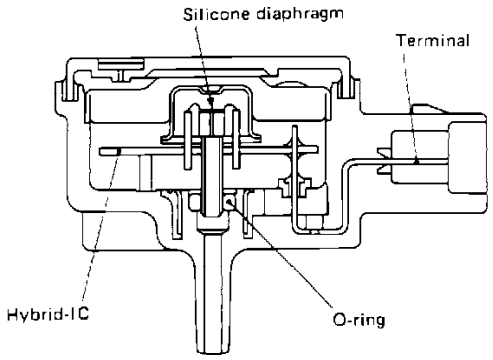

MAP Sensor

PURPOSE

Determines intake air flow volume.

LOCATION

On the firewall, near the wiper motor.

OPERATION

The sensor measures the air pressure within the intake manifold. The voltage signal provided to the ECU from the sensor will rise in proportion to the reise in manifold pressure (reduction of vacuum). This signal is used by the ECU to determine ignition timing and injector pulse width.

Manifold Pressure/Vacuum Sensor: Testing and Inspection

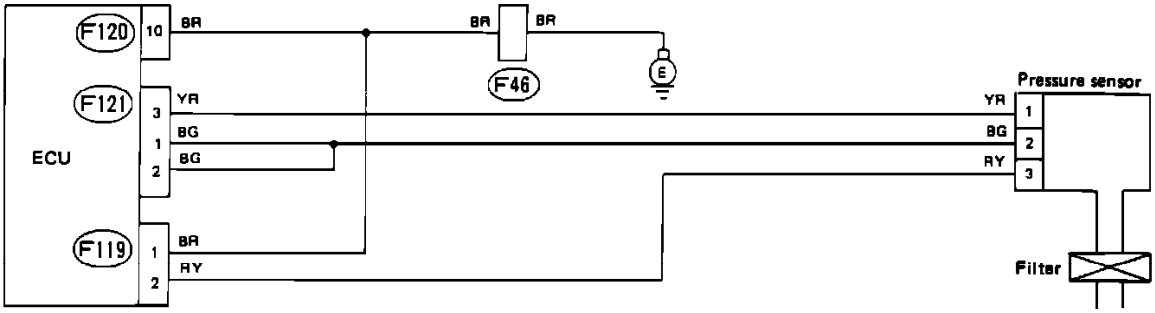

Pressure Sensor Schematic

The intake air flow measuring system is a pressure sensor connected with a hose to the intake plenum. A faulty pressure sensor will set code 23 in the on-board diagnostic system. A disconnected or broken pressure sensor hose will set code 65. Refer to the schematic diagram and test the sensor with the diagnostic chart.

Wire color code identification:

L: Blue
B: Black
Y: Yellow
G: Green
R: Red
W: White
Br: Brown
Lg: Light green
Gr: Gray

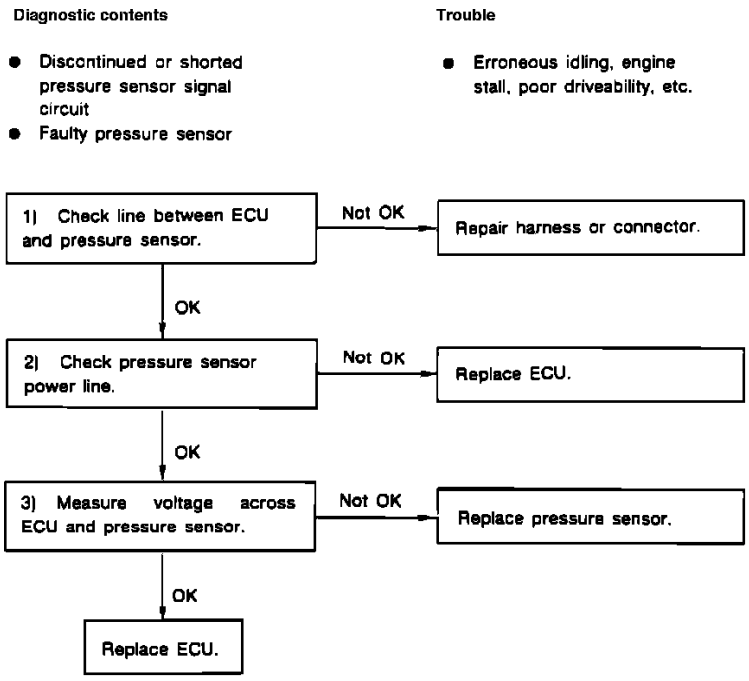

Pressure Sensor Diagnostic Chart

PRESSURE SENSOR DIAGNOSTIC CHART

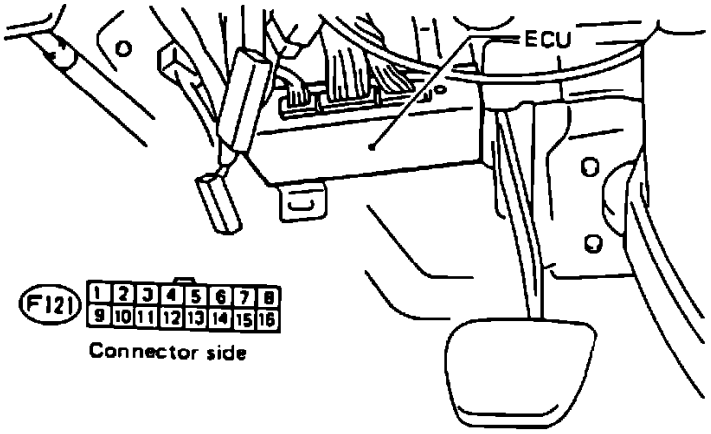

Pressure Sensor Harness

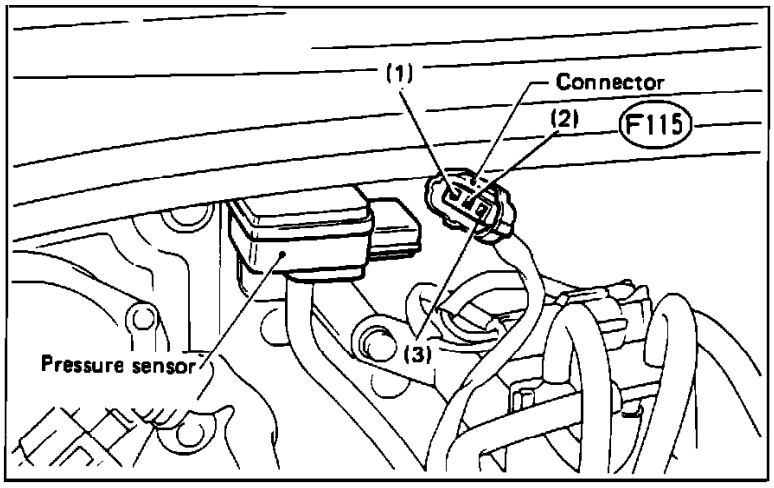

Pressure Sensor Testing

CHECK ECU HARNESS

1. With ignition switch "OFF," disconnect ECU connector.
2. Measure resistance between ECU connector and pressure sensor connector as follows:

Connector & terminal:	**Resistance:**
(F121)1-(F115)2	Below 1 Ohm
(F121)2-(F115)2	Below 1 Ohm
(F121)3-(F115)1	Below 1 Ohm
(F121)2-(F115)3	Below 1 Ohm

3. Connect ECU connector and measure resistance between pressure sensor connector (F115) terminals:

Connector & terminal:	**Resistance:**
(F115)1-(F115)2	Infinite
(F115)3-(F115)2	Infinite

CHECK PRESSURE SENSOR VOLTAGE

1. With ignition "ON," voltage across pressure sensor connector terminals should be as follows:

Connector & terminal:	**Voltage:**
(F115)3-(F115)2	4.5-5.5V

2. Connect pressure sensor connector and turn ignition "ON."
3. Measure voltage across ECU connector terminals as follows:

Connector & terminal:	**Voltage: [1]**
(F121)3-(F121)1	3.4-3.8V
(F121)3-(F121)2	3.4-3.8V

4. Start and idle engine. Measure voltage across ECU connector terminals as follows:

Connector & terminal:	**Voltage: [1]**

(F121)3-(F121)1	1.6-2.1V
(F121)3-(F121)2	1.6-2.1V

[1] With atmospheric pressure at 760mmHg (29.92 inHg).

Oxygen Sensor: Description and Operation

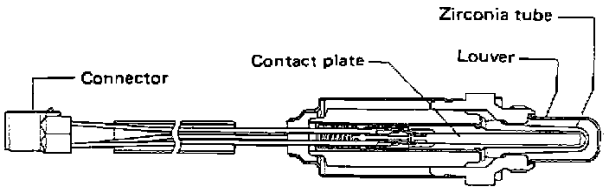

Oxygen Sensor

PURPOSE

The oxygen sensors (2) measure the oxygen content in the exhaust and sends a voltage signal to the ECU.

LOCATION

The oxygen sensor is mounted in the exhaust manifold.

CONSTRUCTION

The sensor consists of a steel housing, sensor tip and its protective sleeve. The sensor tip itself is made from a platinum covered zirconium-oxide pipe.

OPERATION

This sensor produces a measureable voltage by comparing the amount of oxygen in the exhaust gas with the amount in the ambient air.

The sensor operates only within a certain temperature range of approx. 545 - 1530°F (285 - 850°C).

The exhaust gases reach the outer surface of the oxygen sensor tip via the openings in the protective sleeve. Ambient air reaches the sensor's inner surface via channels. The differance in oxygen content produces a voltage read by the ECU.

Oxygen Sensor: Testing and Inspection

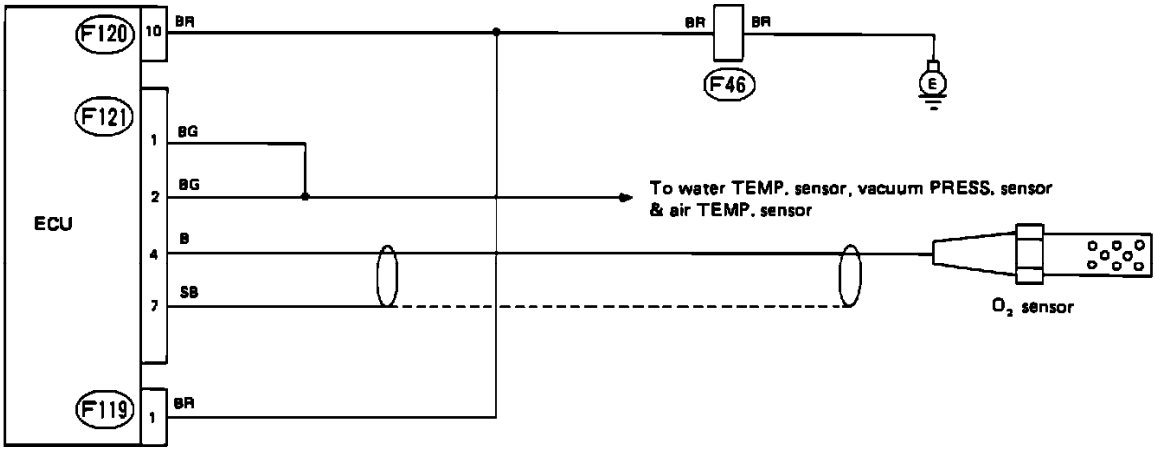

Oxygen Sensor Schematic

A faulty oxygen sensor will set code 32 in the on-board diagnostic system. Refer to the schematic diagram and test the sensor with the diagnostic chart.

Wire color code identification:

L: Blue
B: Black
Y: Yellow
G: Green
R: Red
W: White
Br: Brown
Lg: Light green
Gr: Gray

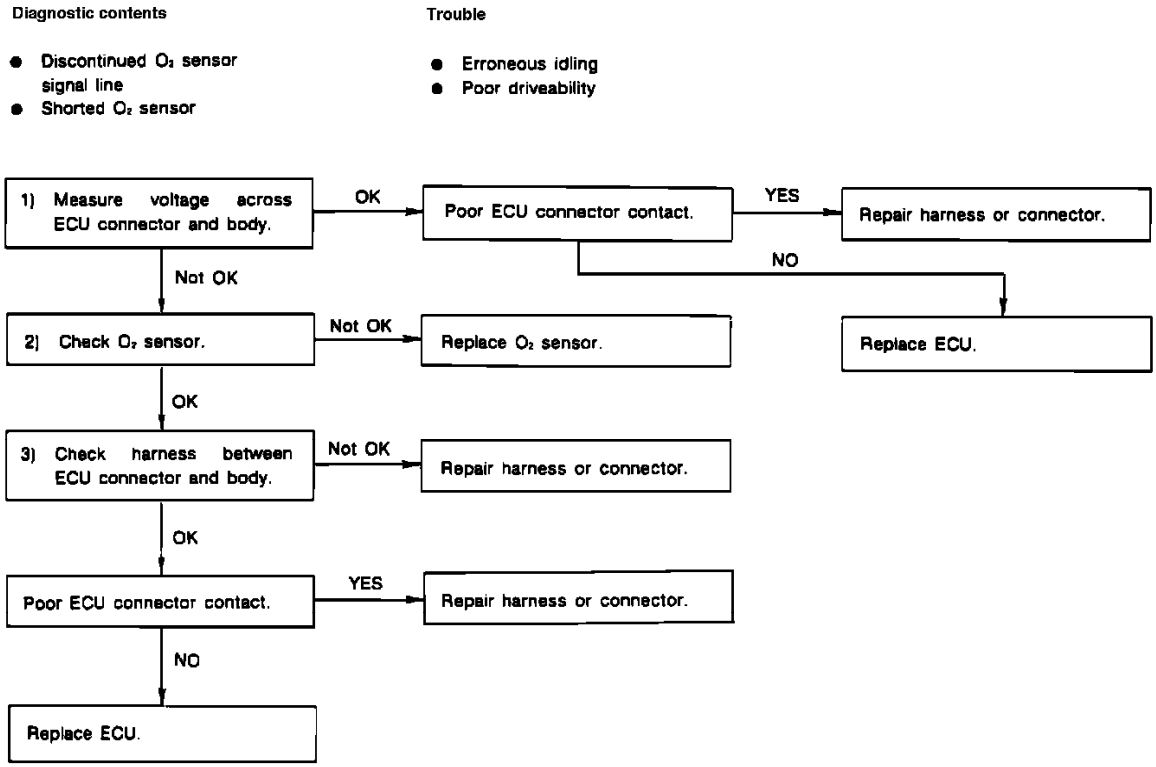

Oxygen Sensor Diagnostic Chart

OXYGEN SENSOR DIAGNOSTIC CHART

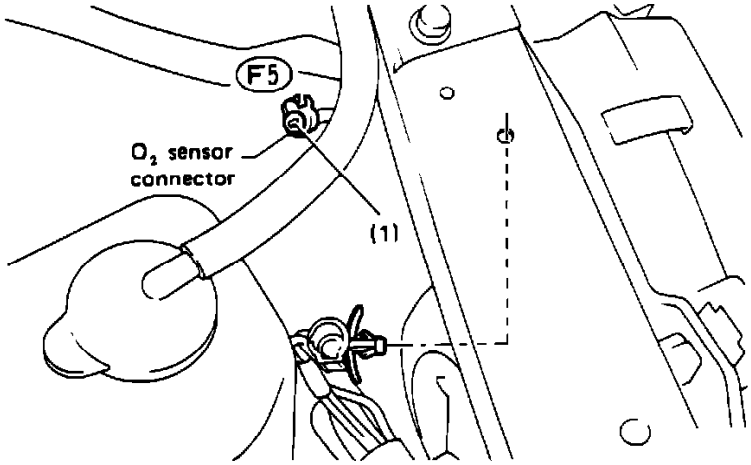

Oxygen Sensor Testing

CHECK ECU VOLTAGE AND OXYGEN SENSOR

1. With engine completely warmed up and idling, measure voltage between ECU connector (F121)4 and ground. Voltage should alternate between 0.3V and 0.6V.
2. Disconnect oxygen sensor and measure voltage between sensor connector (F5)1 and ground. Voltage should remain above .47 volts most of the time.

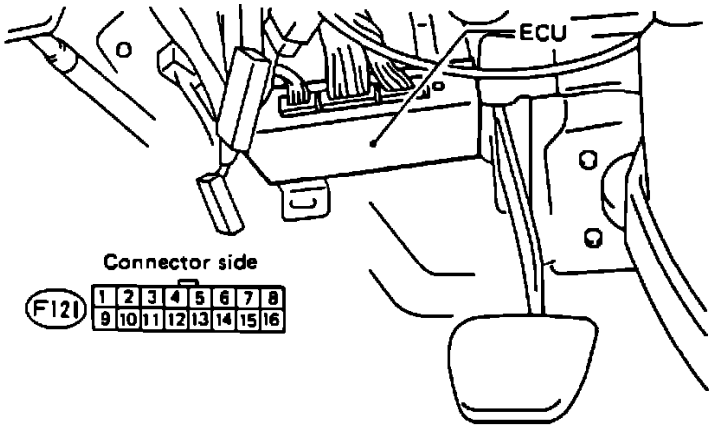

Oxygen Sensor Harness Testing

CHECK ECU HARNESS

1. With ignition "OFF," disconnect ECU and oxygen sensor connector.
2. Measure resistance between ECU connector and oxygen sensor connector:

Connector & terminal:	**Resistance:**
(F121)4-(F5)1	Below 1 Ohm

3. Connect ECU and oxygen sensor connectors.
4. Measure resistance between ECU connector and ground:

Connector & terminal:	**Resistance:**
(F121)1-Ground	Below 10 Ohms
(F121)2-Ground	Below 10 Ohms

Oxygen Sensor: Service and Repair

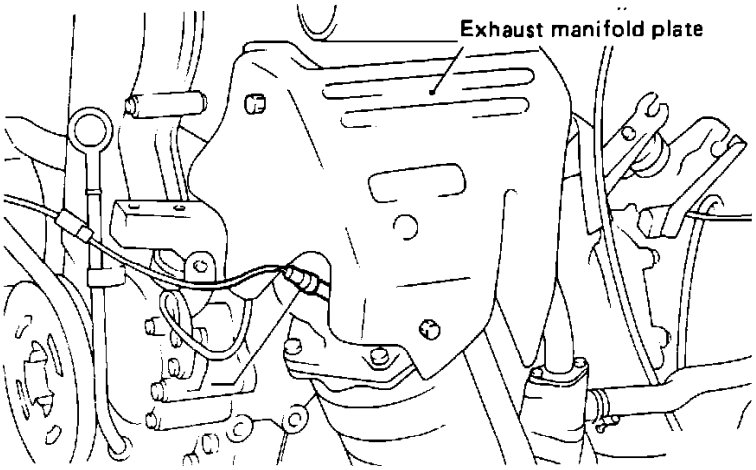

Oxygen Sensor Replacement

REMOVAL

NOTE: Do not use excessive force to remove the oxygen sensor, especially when the exhaust manifold is cold. Damage to the manifold may result.

1. Disconnect sensor harness connector.
2. Remove exhaust manifold cover plate.
3. Apply SUBARU CRC (004301003) or equivalent to oxygen sensor threads and let stand for at least one minute.
4. Loosen oxygen sensor by turning it 10 to 40 degrees with an appropriate tool.
5. Repeat application of SUBARU CRC (004301003) or equivalent and let stand again for at least one minute.
6. Finish removing the sensor.

INSTALLATION

NOTE: Never apply anti-seize compound to the louvered end of the oxygen sensor.

1. Apply anti-seize compound only to threaded portion of oxygen sensor.
2. Install sensor in manifold with an appropriate tool and torque to **25 - 34 Nm (18 - 25 ft lb).**

3. Replace exhaust manifold cover plate.
4. Connect sensor harness connector.

Vehicle Speed Sensor: Description and Operation

PURPOSE

Vehicle speed sensor 2 provides vehicle road speed information to the ECM. The ECM uses this data to properly determine ignition and fuel delivery curves.

LOCATION

The speed sensor is located in the speedometer assembly.

CONSTRUCTION

It consists of a reed switch and magnetic rotor turned by the speedometer cable. One rotation of the magnetic rotor opens and closes the reed switch four times, producing a digital signal which is converted to vehicle speed by the ECM.

OPERATION

The sensor operates whenever the vehicle is moving with ignition ON. As the transmission rotates, the speed sensor sends a pulsed on/off signal to the ECM.

Vehicle Speed Sensor: Testing and Inspection

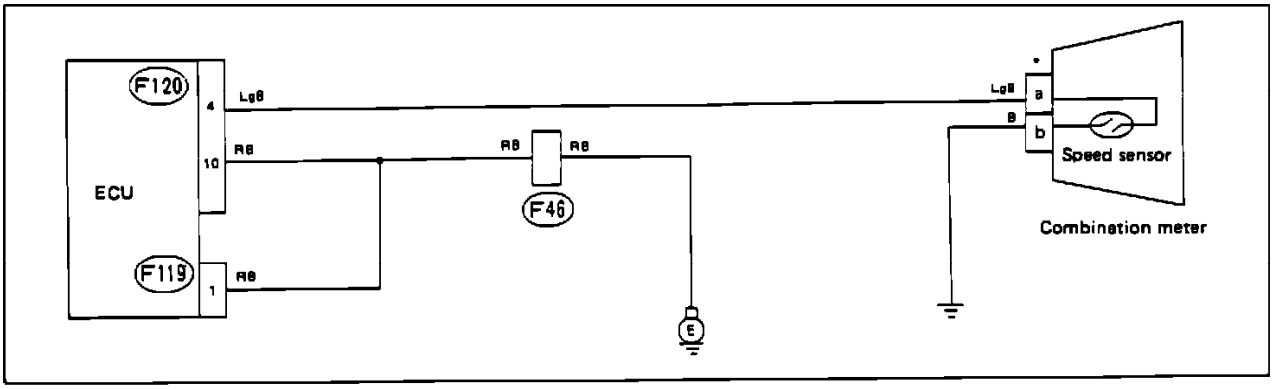

	Mode 1	Connector & Terminal
a	EFC/MT	(i10) No. 8
	MPFI/MT	(i10) No. 11
	ECVT	(i10) No. 12
b	EFC/MT	(i10) No. 6
	MPFI/MT	(i16) No. 21
	ECVT	(i16) No. 21

Vehicle Speed Sensor Schematic

A faulty vehicle speed sensor will set code 33 in the on-board diagnostic system. Refer to the schematic diagram and test the sensor with the diagnostic chart.

Wire color code identification:

L: Blue
B: Black
Y: Yellow
G: Green
R: Red
W: White
Br: Brown
Lg: Light green
Gr: Gray

Diagnostic contents	Trouble
● Discontinued or shorted vehicle speed sensor ● Faulty vehicle sensor and disconnected meter cable	● Erroneous idling

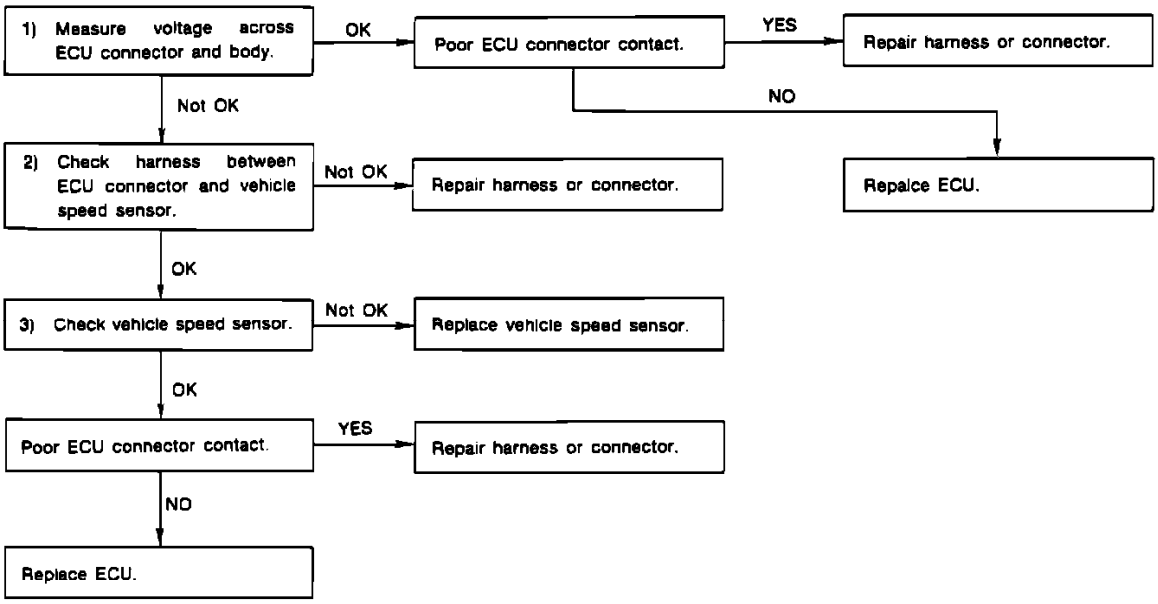

Vehicle Speed Sensor Diagnostic Chart

VEHICLE SPEED SENSOR DIAGNOSTIC CHART

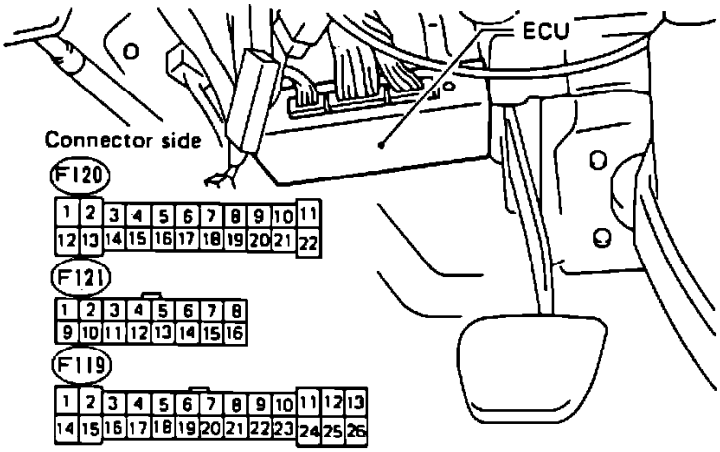

ECU Connectors

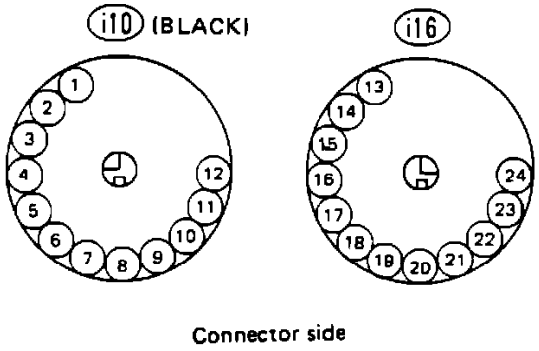

Combination Meter Connectors

CHECK ECU VOLTAGE

1. While slowly moving vehicle, measure voltage between ECU connector (F120)4 and ground.
2. Voltage should fluctuate above and below 2.5V.

CHECK HARNESS BETWEEN ECU AND SPEED SENSOR

1. With ignition "OFF," disconnect ECU and combination meter connectors.
2. Measure resistance between ECU connector (F120)4 and combination meter connector "a." **[1]** Resistance should be less than 1 Ohm.

3. Measure resistance between ECU connector and ground, and between combination meter connector and ground. Readings should be as follows:

Connector & terminal:	**Resistance:**
(F120)4-Ground	Infinite
"b" **[1]**-Ground	Below 10 Ohms
(F119)1-Ground	Below 10 Ohms
(F120)10-Ground	Below 10 Ohms

CHECK SPEED SENSOR

1. Remove combination meter from instrument panel.
2. While slowly moving vehicle, measure resistance between combination meter terminals "a" and "b."**[1]** Tester pointer should deflect, indicating that the speed sensor switch is opening and closing.

[1] Refer to **VEHICLE SPEED SENSOR DIAGNOSTIC CHART** to determine which pins are "a" and "b."

Clutch Disc: Service and Repair

Clutch Disc and Cover

REMOVAL

1. Install crankshaft stopper on flywheel using special tool: (498497100).
2. Remove clutch cover and clutch disc.

   a. Take care not to allow oil on the clutch disc facing.
   b. Do not disassemble either clutch cover CP or clutch disc CP.

3. Remove flywheel.

INSPECTION

CLUTCH DISC

1. Facing wear

   Measure the depth of rivet head from the surface of facing. Replace if facings are worn locally or worn down to less than the specified value.

   Depth of rivet head Standard value **1.4 mm (0.055 in)**Limit of sinking **0.3 mm (0.012 in)**

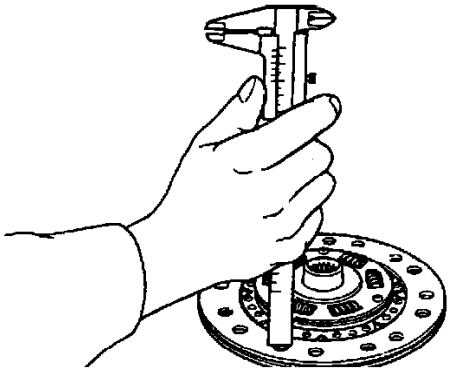

   Do not wash clutch disc with any cleaning fluid.

2. Hardened facing: Correct by using emery paper or replace.
3. Oil soakage on facing: Replace clutch disc and inspect transmission front oil seal, transmission case mating surface, engine rear oil seal and other points for oil leakage.

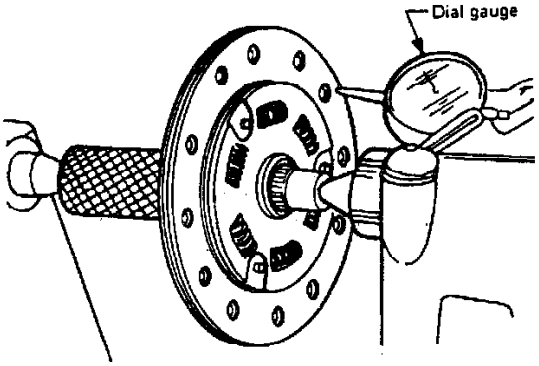

4. Deflection on facing: If deflection exceeds the specified value at the outer circumference of facing, repair or replace.

   Limit for deflection: **1.0 mm (0.039 in) at R = 107 mm (4.21 in)**

5. Worn spline, loose rivets and torsion spring failure Replace defective parts.

CLUTCH COVER

Visually check for the following items without disassembling, and replace or repair if defective.

1. Loose thrust rivet.
2. Damaged or worn bearing contact area at center of diaphragm spring.
3. Damaged or worn disc contact surface of pressure plate.

4. Loose strap plate setting bolt.
5. Worn diaphragm sliding surface.

FLYWHEEL

Since this bearing is grease sealed and is of a nonlubrication type, do not wash with gasoline or any solvent.

1. Damage of facing and ring gear If defective, replace flywheel.
2. Smoothness of rotation

Rotate ball bearing applying pressure in thrust direction. If noise or excessive play is noted, replace ball bearing as follows:

1. Drive out ball bearing from flywheel.
2. Press bearing into flywheel until bearing end surface is flush with clutch disc contact surface of flywheel. Do not press inner race.

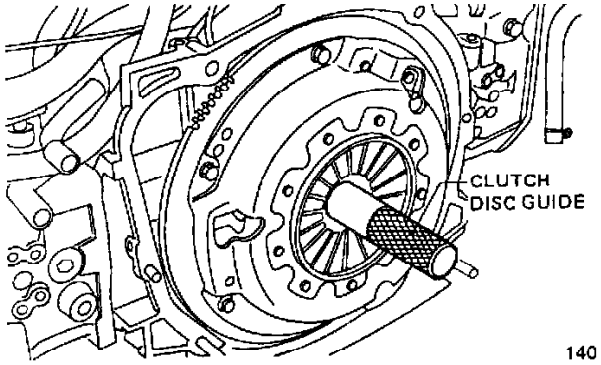

Special tool: SNAP RING PRESS (899754112)

INSTALLATION

1. Install flywheel.
2. Install crankshaft stopper, and tighten the flywheel attaching bolts to the specified torque.

Tightening torque: **69 - 75 Nm (7.0 - 7.6 kg-m, 51 - 56 ft-lb)**

3. Insert clutch disc guide into the clutch disc and install them on the flywheel by inserting the guide end into the pilot bearing, using special tool: 499747100.
4. Install clutch cover CP on flywheel and tighten bolts to the specified torque.

Tightening torque: **14.2 - 17.2 Nm (1.45- 1.75 kg-m, 10.5 - 12.7 ft-lb)**

a. When installing the clutch cover on the flywheel, position the clutch cover so that there is a gap of **120°** or more between "0" marks on the flywheel and clutch cover. ("0" marks indicate the directions of residual unbalance.)
b. Note the front and rear of the clutch disc when installing.
c. Tighten clutch cover installing bolts gradually. Each bolt should be tightened in a crisscross fashion to the specified torque.

Continuously Variable Transmission/Transaxle: Application and ID
Application Chart

Model	**Transmission**
Justy	Electronic Controlled Variable Transmission **(ECVT)**
Loyale	3-Speed Automatic
Loyale	4-Speed Electronically Controlled
Legacy	4-Speed Electronically Controlled
SVX	4-Speed Electronically Controlled
Impreza	4-Speed Electronically Controlled

Continuously Variable Transmission/Transaxle: Application and ID
Transmission Identification

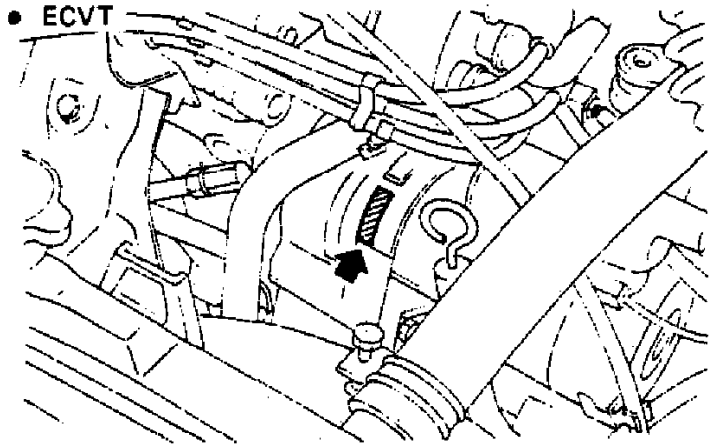

I.D. Number Location

Transmission type and plant of manufacture are the 11th digit of VIN. The VIN plate is located on the left side of the instrument panel, visible through the windshield, and on the firewall in the engine compartment.

JF1KA72AXK**B**700001

B: Gunma - 5MT
C: Gunma - ECVT
D: Gunma - 4WD 5MT
F: Gunma - 4WD ECVT

Continuously Variable Transmission/Transaxle: Description and Operation

System Description

The Electronic Controlled Variable Transmission **(ECVT)** combines an electronically controlled magnetic clutch with a variable transmission that is driven by steel belt pulleys to provide high running performance, low fuel consumption and ease of control. Hydraulic line pressure can be changed from high to low or vice versa, in response to engine load and output. The ECU and clutch are optimally controlled by a microcomputer to enhance high transmitting efficiency and excellent driveability.

Rationalization of the system is accomplished by controlling the electromagnetic clutch through coolant temperature and ignition advance signals which are transmitted from the ECU while line pressure is regulated through a torque signal.

The AWD model is equipped with a hydraulically operated selective transfer unit at the rear of the front differential.

Continuously Variable Transmission/Transaxle: Symptom Related Diagnostic Procedures

First check the voltage and the specific gravity of the battery and make sure that they are as specified.

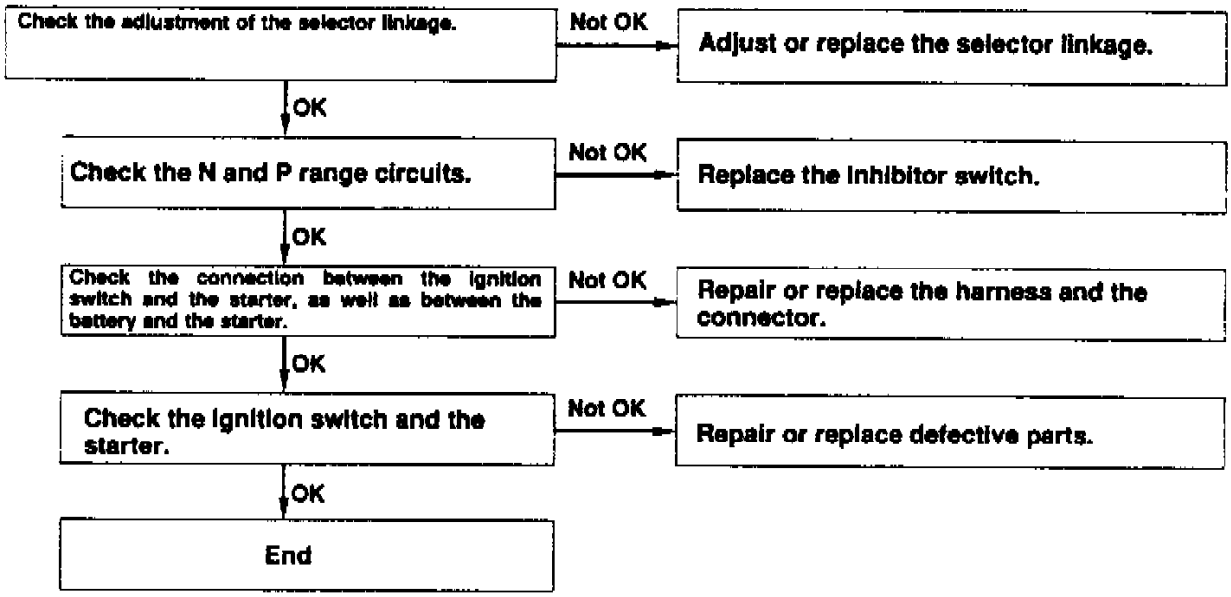

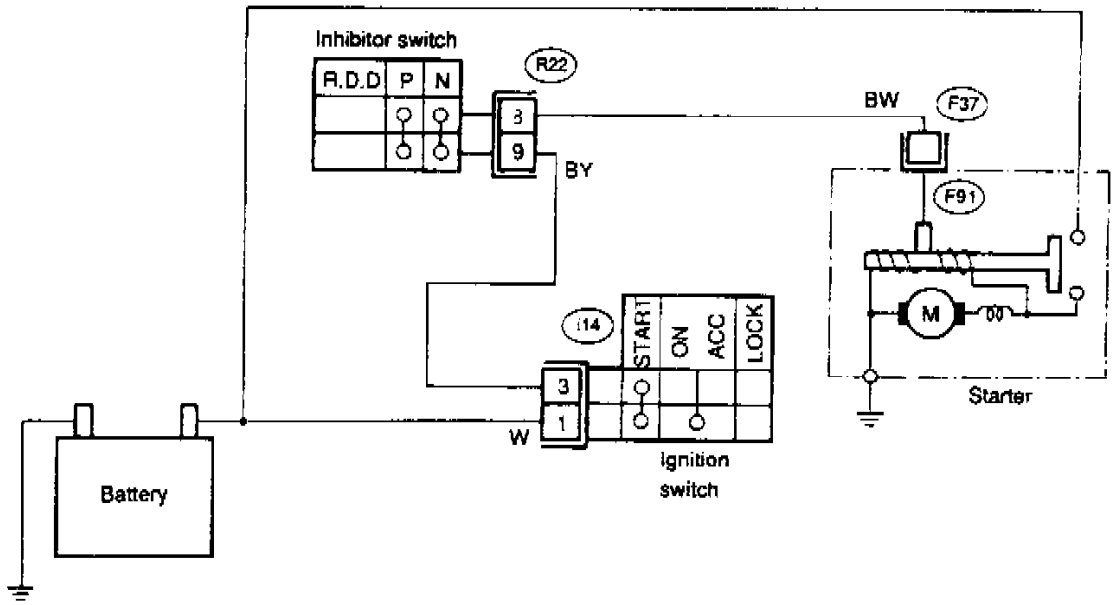

Fig. 4 Vehicle Will Not Start In N Or P Range

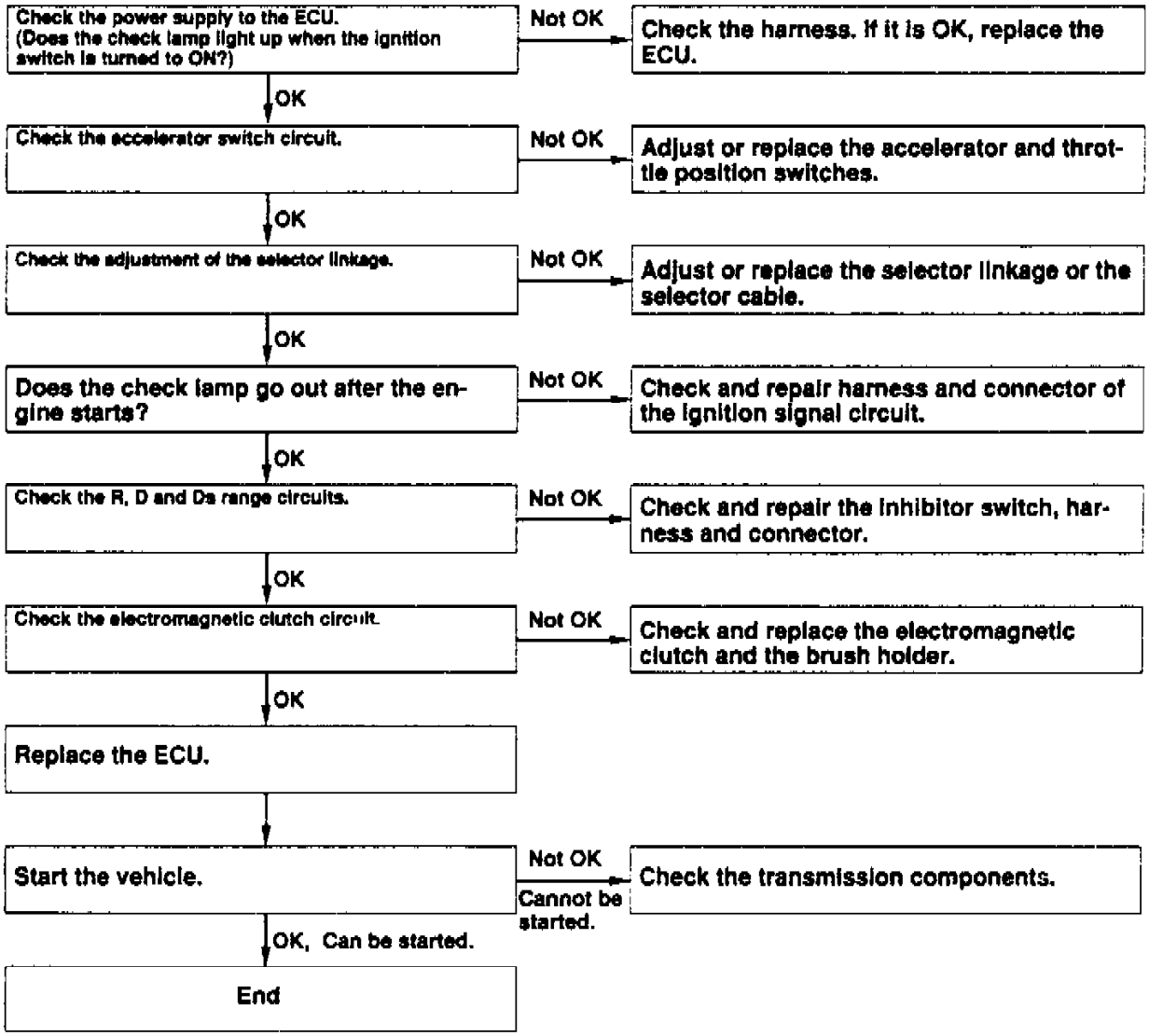

Fig. 5 Vehicle Will Not Start

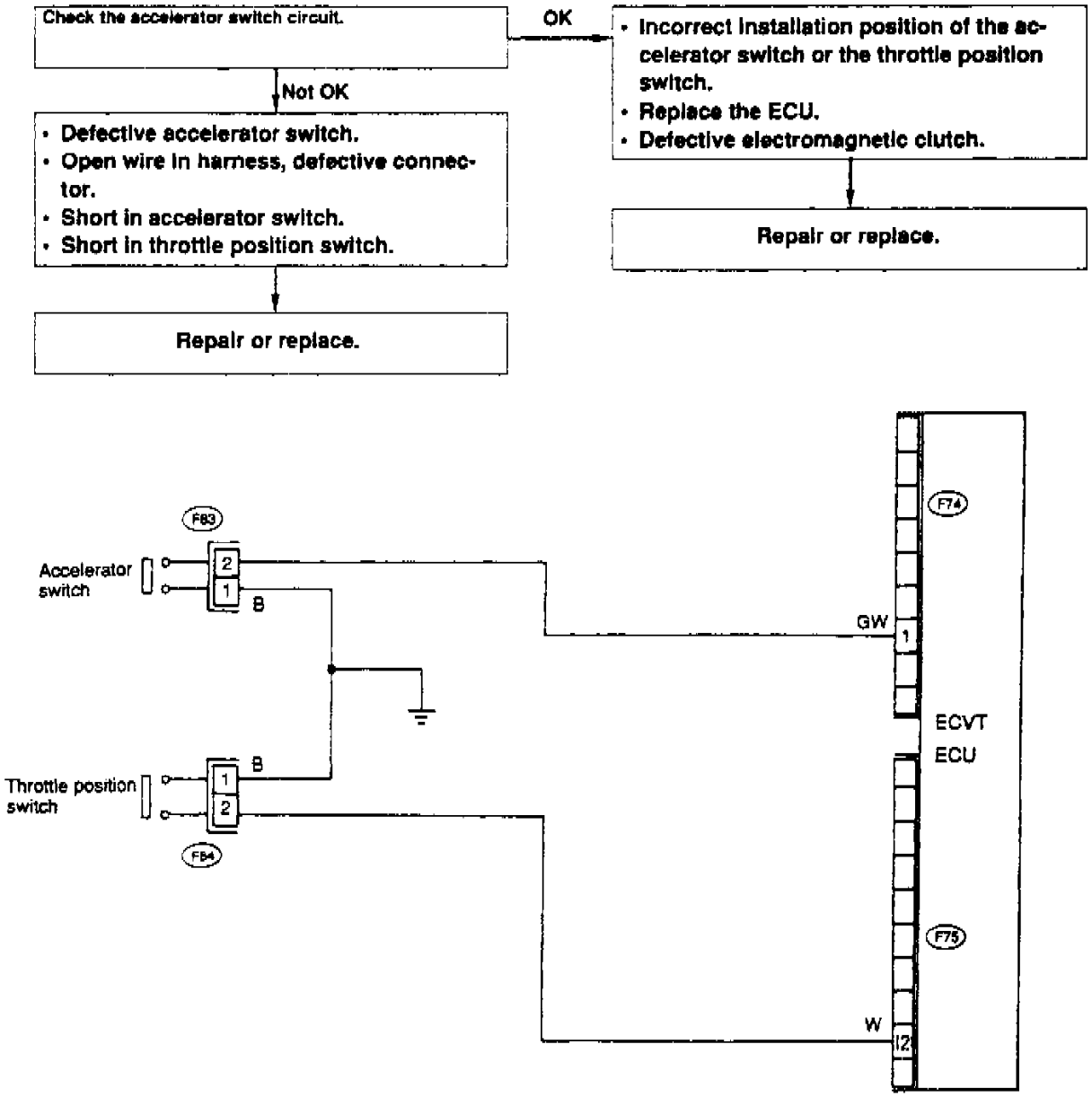

Fig. 6 Vehicle Creeps

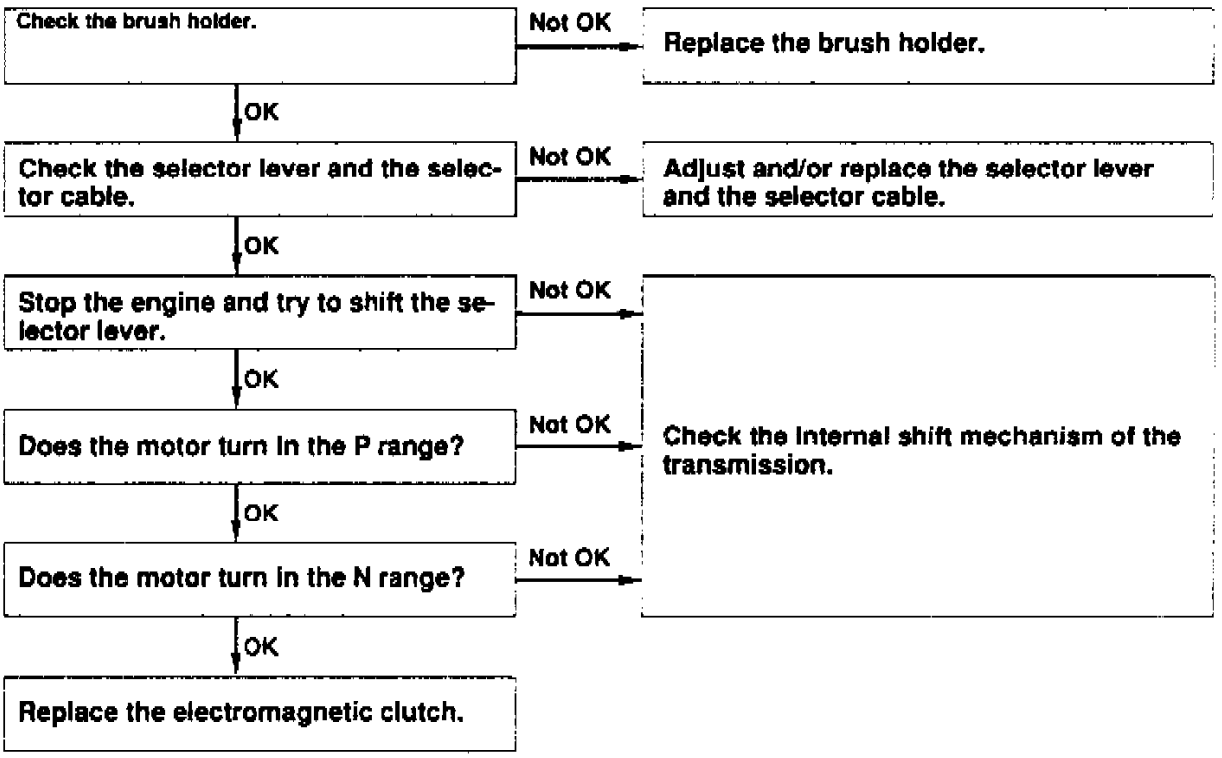

Fig. 7 Selector Lever Is Hard To Shift

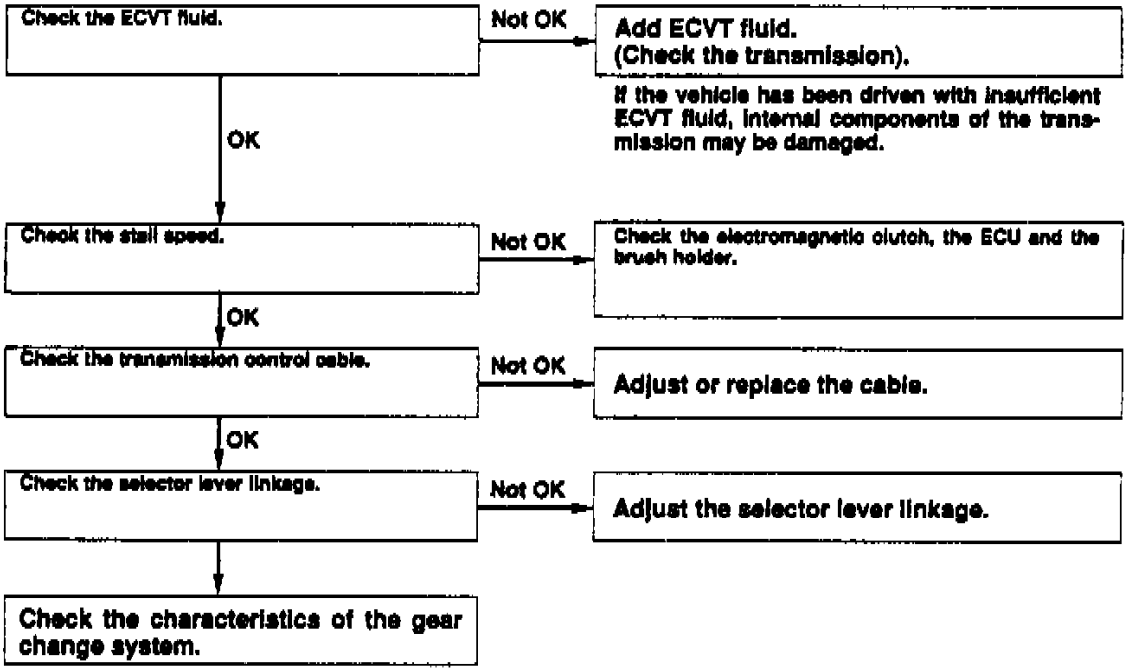

Fig. 8 Gear Change System Rough

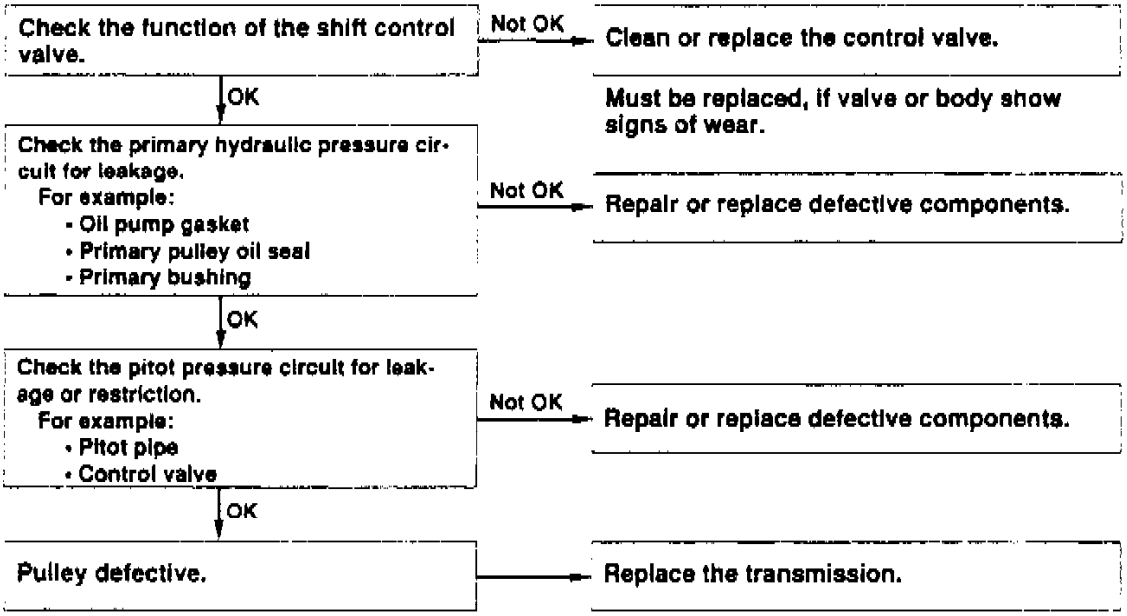

Fig. 9 Vehicle Remains In LOW

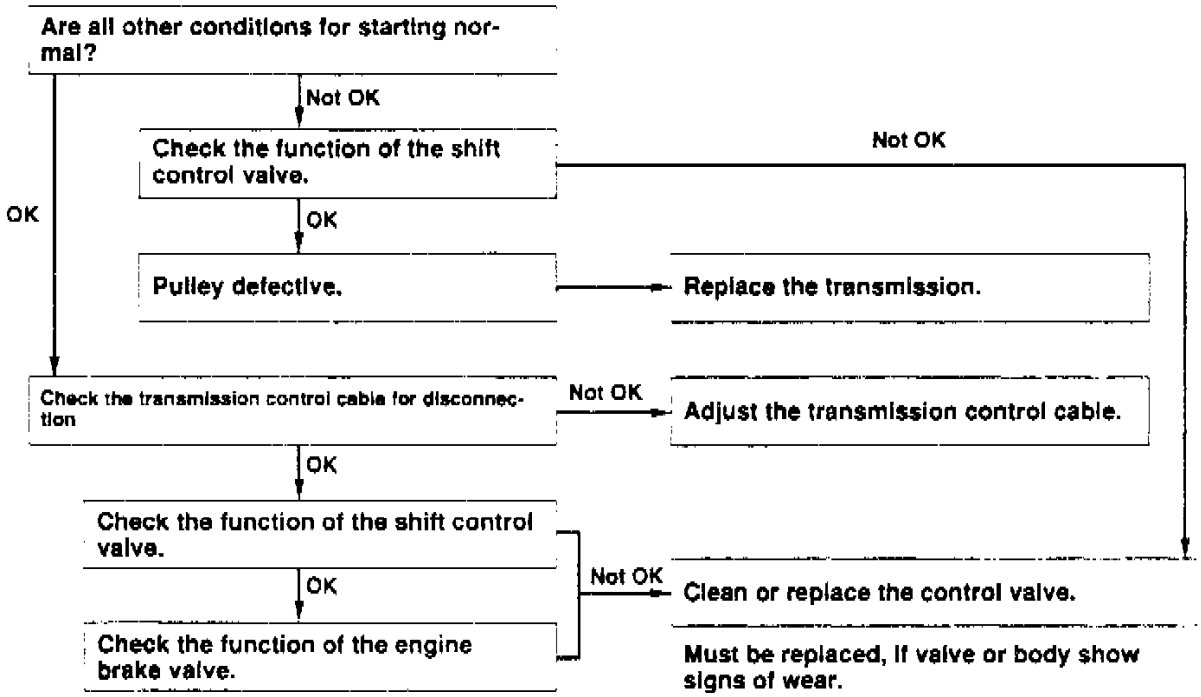

Fig. 10 Vehicle Remains In OD

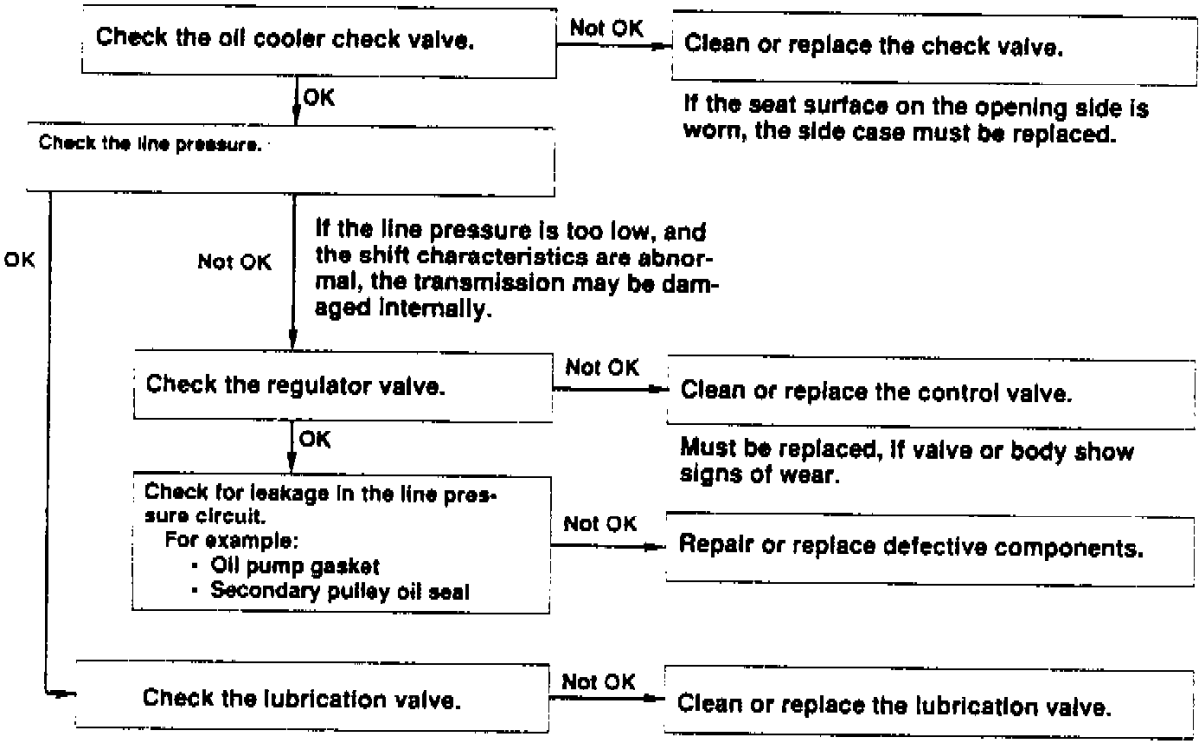

Fig. 11 Engine Brake Is Suddenly Activated While Driving In D

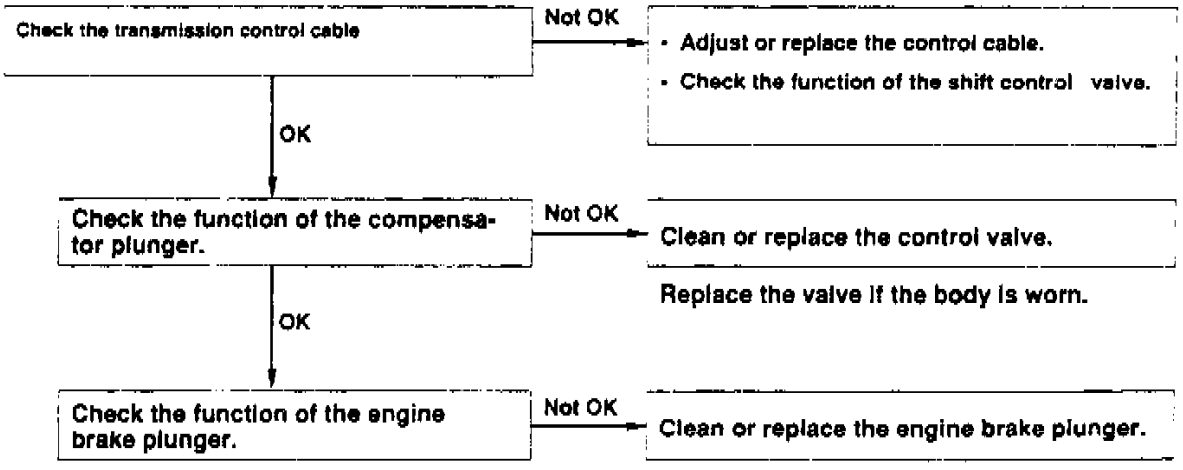

Fig. 12 Engine Brake Is Too Effective In D

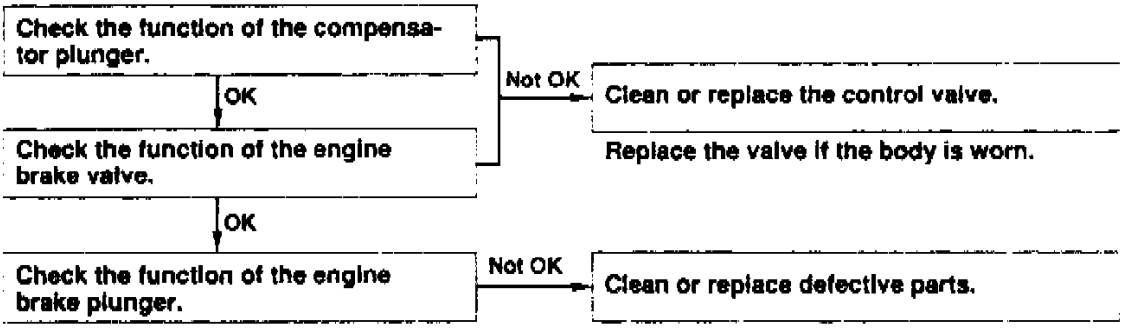

Fig. 13 Engine Brake Does Not Work In D

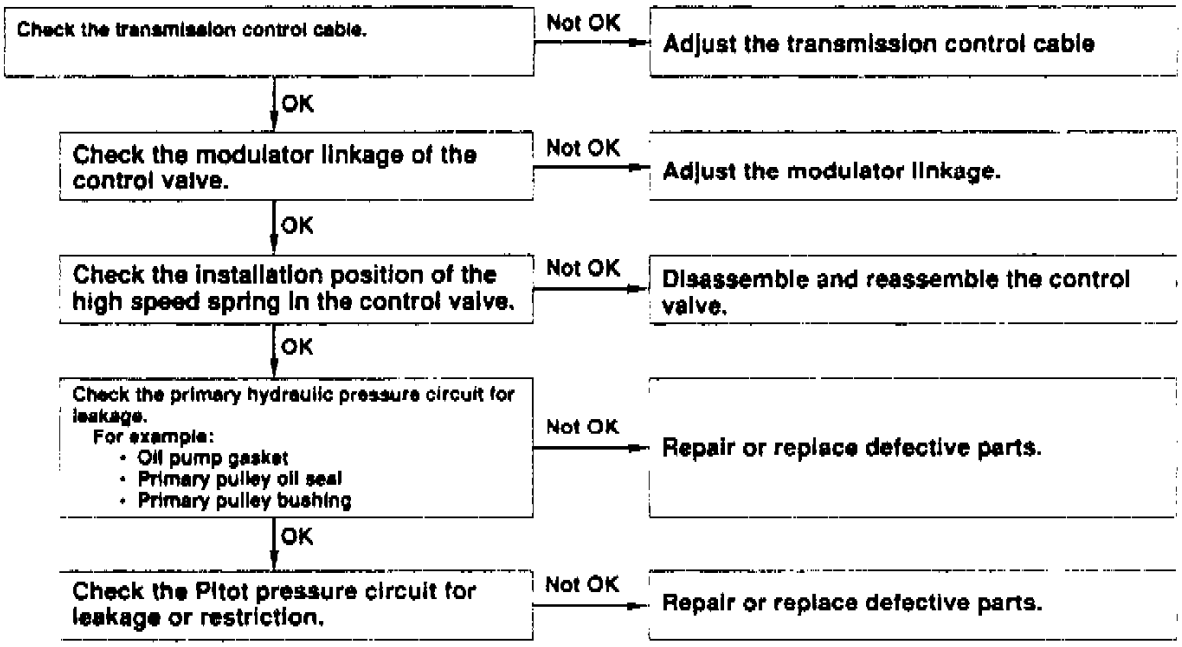

Fig. 14 Gear Change Line Is Too High In Relation To Accelerator Pedal Position

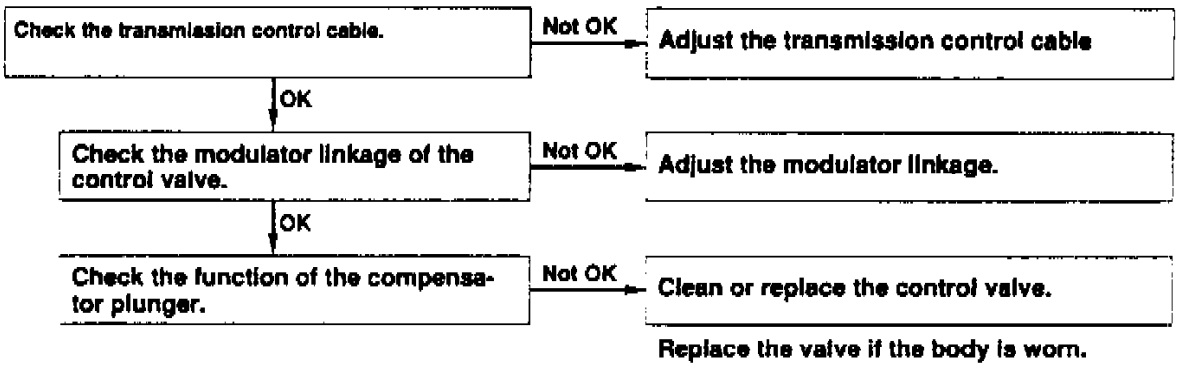

Fig. 15 Gear Change Line Is Too Low In Relation To Accelerator Pedal Position

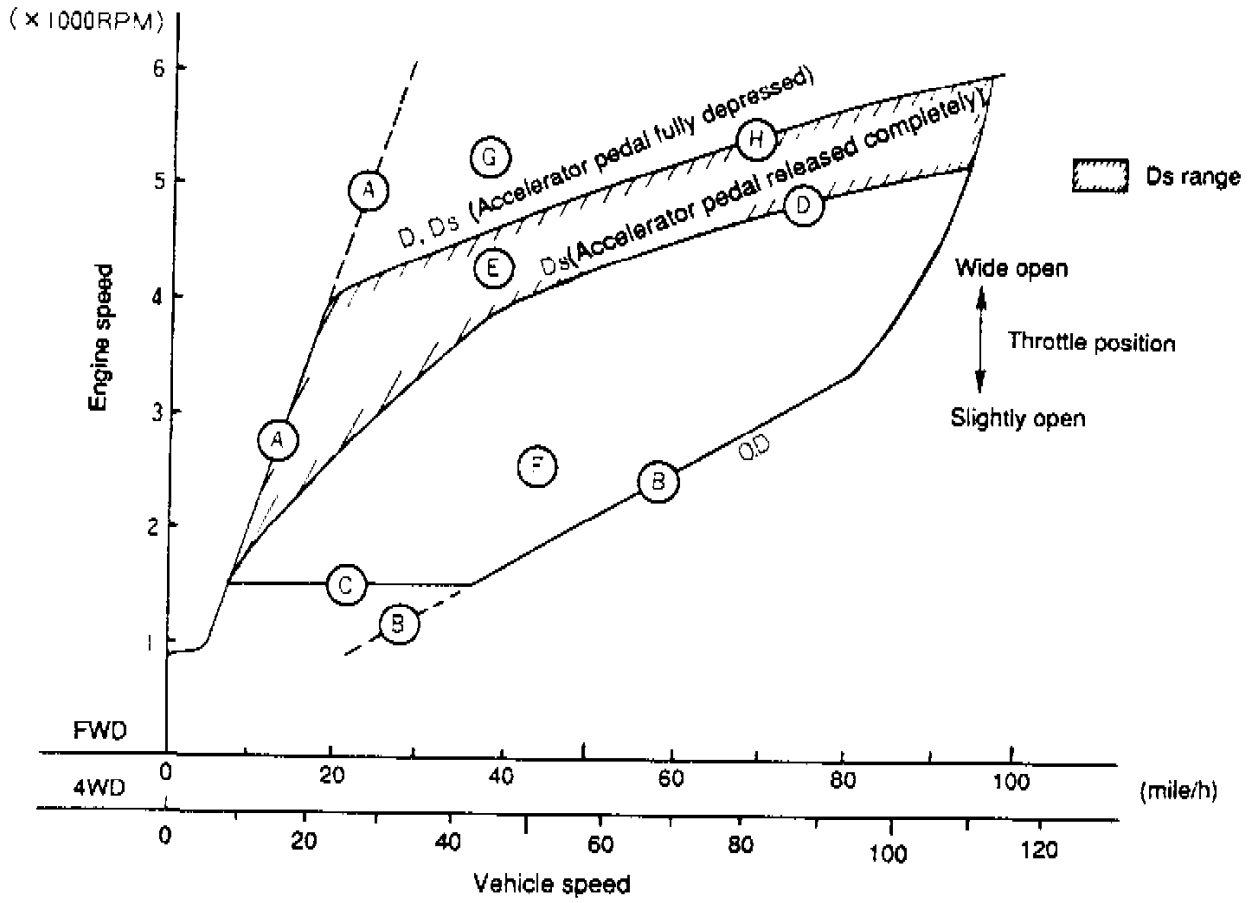

Fig. 16 Gear Change System Shift Point Characteristics

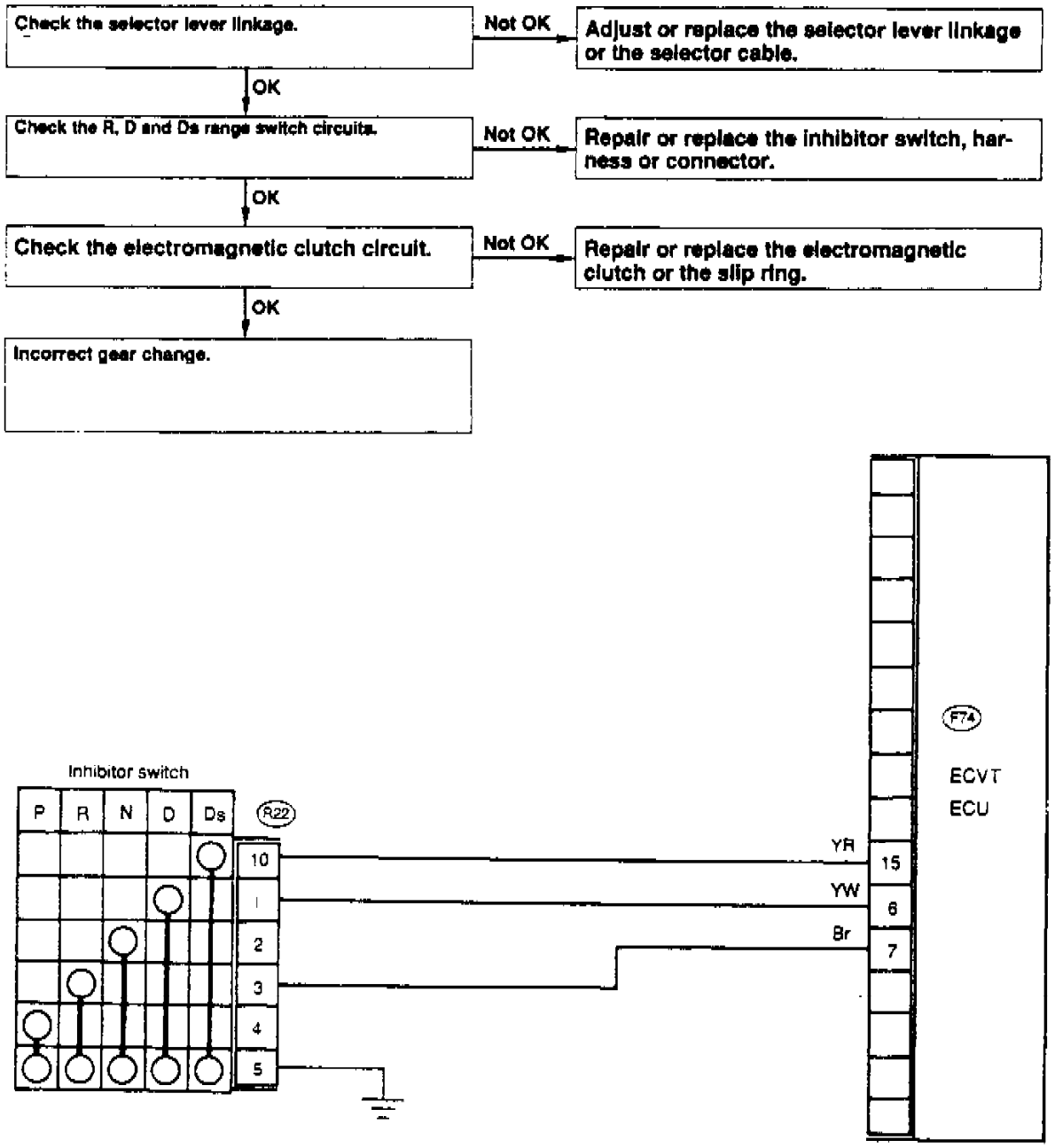

Fig. 17 Engine Speed Increases Abruptly While Driving

Symptom	Probable cause		Part to check
Stalling	Brake light switch circuit Vehicle speed switch circuit		Check and repair defective parts.
Clutch temperature warning buzzer sounds (4WD)	Slip ring dirty, causing overheating of the clutch. Intermittent noise may occur (excessive friction in the clutch system).		If intermittent noise occurs, the clutch system is defective.
Poor acceleration	Perform the stall test.	If the stall speed is too high, the clutch torque is too low.	Check and repair the clutch.
		If the stall speed is normal, the ECVT pulley is sticking on the over-drive side.	Check and repair the control valve.
		If the stall speed is too low, the engine torque is too low or clutch torque is too high.	Check the engine. Check and replace the clutch.
Clutch does not disengage	Short between the negative terminal of the clutch circuit and body ground.		Check the clutch circuit.
Irregular engine speed above 30km/h (19 mile/h).	Clutch torque is too low. Defective vehicle speed switch or speedometer cable.		Check the clutch. Check the vehicle speed switch and the speedometer cable.
Clunking noise when accelerating after coasting at speeds between 10 and 20km/h (6 and 13 mile/h).	Lowest speed line does not correspond to specifications.		Repair or replace the control valve.
Clutch disengages slowly after deceleration.	Defective vehicle speed switch.		Check the vehicle speed switch signal circuit.
Clutch disengages when the accelerator pedal is released at speeds above 20km/h (13 mile/h).	Defective brake light switch.		Check the brake light switch.
Switching between FWD and 4WD is not possible.	Defective line pressure solenoid system. Defective 4WD selector switch. Defective 4WD switch. Defective hydraulic circuit.		Check and repair defective parts.

Fig. 2 Troubleshooting Inspection Chart 1

The encircled numbers represent the sequence of inspection for this component.

Shift lever position	Symptom \ Possible cause	On-vehicle inspection: Manual linkage	Transmission control cable	Brush holder	Vehicle speed sensor circuit	Accelerator switch and throttle position switch	Range switches for P, R, N, D and Ds	Control unit	ECVT fluid	Line pressure control solenoid valve	4WD solenoid valve	Off-vehicle inspection: Electromagnetic clutch	Forward and reverse selector and park lock mechanism	Pulleys and steel belt	Oil pump	Control valve	Final reduction gear	Pilot pressure system	FWD-4WD selector actuator
D or R	Starter can be activated.	①					②												
	Vehicle does not start.	②	③	④		①	⑤	⑦				⑤	⑨	⑩	⑥	⑪	⑫		
	Stalls soon after starting.							②				①							
	Clutch engages too early.			②		①		④				③							
	Excessive clunking noise when starting.					②			①	⑦		③		④	⑥	⑤			
	Creeping			②		①		④				③							
	Transmission remains in low gear.								①					②		②			
	Engine cannot be increased with the kick-down switch (remains in OD).		①												③	②		④	
	Stall speed is too low.			①								②							
	Stall speed is too high.			①								②							
	Engine speed increases abruptly while driving.	②		④		①	③					⑤			⑥	⑤		⑦	
	Gear noise when shifting from N to P or N to R.	②		④		①	③					⑤	⑥						
	Impossible to shift from N to D or N to R.											①	②						
	Clutch cannot be disengaged below 20km/h (13 mile/h).				②	①		④				③							
Ds	Starter rotates.	①					②												
	Engine brake does not work while shifting from D to Ds.	①														②			
	Excessive clunking noise while shifting from D to Ds.					①	②							③					
	Engine surges while shifting from D to Ds.	①					②												
	Impossible to shift from D to Ds.	①											②						
P	Starter does not rotate.	①					②												
	Vehicle does not come to a complete stop.	①											②						
	Impossible to shift between P and R.	①											②						
	Stuck in any other range.												①						
General	Vehicle speed too low. Poor acceleration.		①					②				③			⑥	④		⑤	
	Impossible to shift between FWD and 4WD (4WD vehicles).							③		②	①					⑤			④

Fig. 3 Troubleshooting Inspection Chart 2

Continuously Variable Transmission/Transaxle: Component Tests and General Diagnostics

Line Pressure Test

When a slipping belt and pulley system is noted as a result of the road and stall-speed tests or when inadequate vehicle speed is encountered during shift operations, check the line pressure.

TEST METHOD

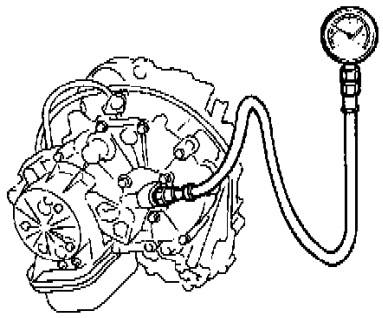

ECVT Line Pressure Gauge Installation

1. Remove the outlet plug (for a pressure gauge) from the side case and connect OIL PRESSURE GAUGE ADAPTER (498895400) instead. Connect the tip of OIL PRESSURE GAUGE (498575400) to the ADAPTER.

   NOTE: Discard the old plug after removal; replace with a new one.

   TIGHTENING TORQUE
   Engine cold: 20 - 26 Nm (2.0 - 2.7 kg-m, 14 - 20 ft lb)
   Engine hot: 14 - 18 Nm (1.4 - 1.8kg-m, 10 - 13 ft lb)

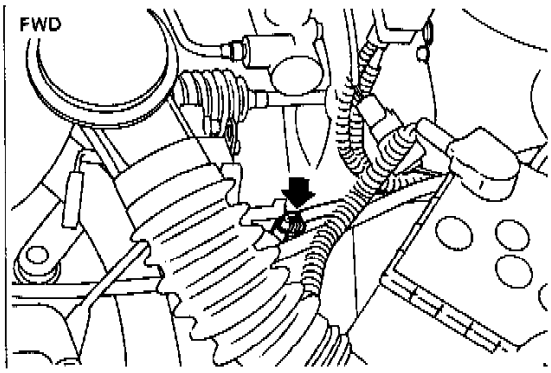

ECVT Line Pressure Control Solenoid Valve Connector

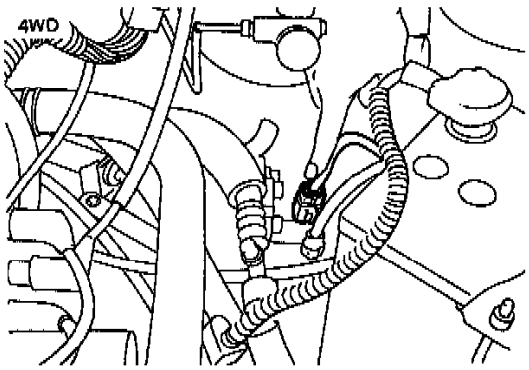

ECVT Line Pressure Control Solenoid Valve Connector (4WD)

2. Remove the line pressure control solenoid valve connector.

   NOTE: Low line pressure is produced while idling the engine or when vehicle is stopped (solenoid "ON").

3. Shift selector lever to the N range while idling the engine, and measure line pressure. It should be **2305 kPa (23.5 kg/cm2, 334 psi).**

   NOTE: Before measuring line pressure, ensure engine is warmed up completely. After measuring line pressure, connect line pressure control solenoid valve connector.

Stall Test

Measurement of the engine stall speed in the D range determines whether or not the transmission belt and pulley system, electromagnetic powder clutch, engine, etc. function properly.

TEST METHOD

Before conducting a stall test, check to ensure the levels of engine oil, coolant and ATF are correct, and warm up the engine completely.

1. Install an engine tachometer in a place visible from the driver's compartment.
2. Chock the front and rear of all wheels and apply the parking brake.
3. Shift the selector lever to the D range.
4. While forcefully depressing the brake pedal with one foot, slowly depress the accelerator pedal to the full-throttle position with the other.
5. When the engine reaches constant speed, immediately read that speed (stall rpm) within five seconds.
6. Shift the selector lever to the N range, and idle the engine for at least one minute to cool down.
7. Record the measured stall speed: **2000 - 2600 rpm**

Throttle Position Sensor

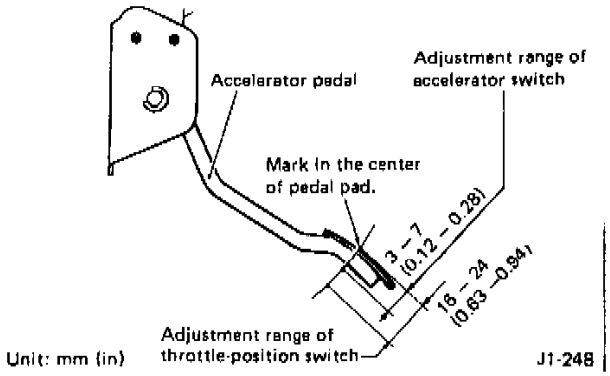

Accelerator And Throttle-Position Switch Inspection

ACCELERATOR SWITCH

Switch must turn ON within a range from **3 to 7 mm (0.12 to 0.28 in)** from the released position of the accelerator pedal.

THROTTLE-POSITION SWITCH

Switch must turn ON within a range from **16 to 24 mm (0.63 to 0.94 in).**

INSPECTION

Type of switch	Problem	Cause
Accelerator switch	Vehicle "creeps" during idle.	Switch turns ON before pedal is depressed 3 mm (0.12 in). (There is no free play between switch and pedal.)
	Clutch is engaged abruptly, or clutch is not engaged in low-speed operation.	Switch turns ON when pedal is depressed at least 7 mm (0.28 in).
Throttle-position switch	Shock is felt when clutch is engaged.	Switch turns ON before pedal is depressed 16 mm (0.63 in).
	Clutch tends to slip during acceleration in low-speed range.	Switch turns ON when pedal is depressed at least 24 mm (0.94 in).

Ensure the carburetor throttle valve fully closes when the accelerator switch operates within the specified range.

Switch Troubleshooting Chart

Beyond these specified ranges, both switches must turn OFF. When either switch operates beyond the specified range, problems listed in the chart will occur.

Continuously Variable Transmission/Transaxle: Adjustments
Throttle Position Sensor

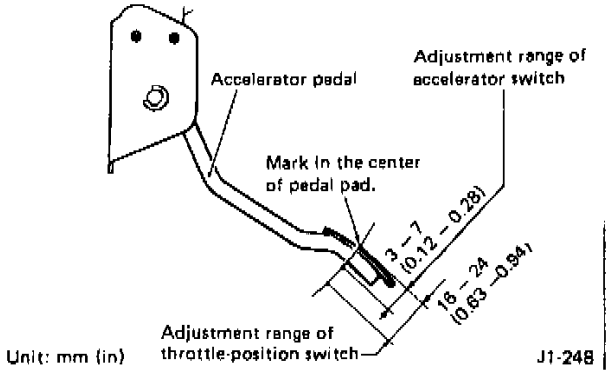

Accelerator And Throttle-Position Switch Inspection

ACCELERATOR SWITCH

Switch must turn ON within a range from **3 to 7 mm (0.12 to 0.28 in)** from the released position of the accelerator pedal.

THROTTLE-POSITION SWITCH

Switch must turn ON within a range from **16 to 24 mm (0.63 to 0.94 in).**

Continuously Variable Transmission/Transaxle: Service and Repair

Checking Fluid Level

1. Drive the vehicle to allow transmission fluid to reach operating temperature of 140-176°F.
2. Park vehicle on a level surface, then with engine idling and selector lever in park, remove dipstick and check fluid level.
3. Fluid level will vary between the HOT mark (140-176°F), and COOL mark (68-104°F), depending on engine temperature.
4. Add either Subaru ECVT, or Dexron II automatic transmission fluid as necessary to bring level within limits.

Continuously Variable Transmission/Transaxle: Service and Repair

Drain and Refill

Transmission fluid should be changed at 30 month or 30,000 mile intervals.

1. Remove transmission oil pan drain plug, and allow the fluid to drain.
2. Install drain plug with gasket, and **torque** to 18 ft. lbs.
3. Add approximately 2 quarts of Subaru ECVT, or Dexron II automatic transmission fluid through transmission dipstick filler tube.
4. Check transmission fluid level as described previously.

Continuously Variable Transmission/Transaxle: Service and Repair

Transmission/Transaxle Removal and Installation

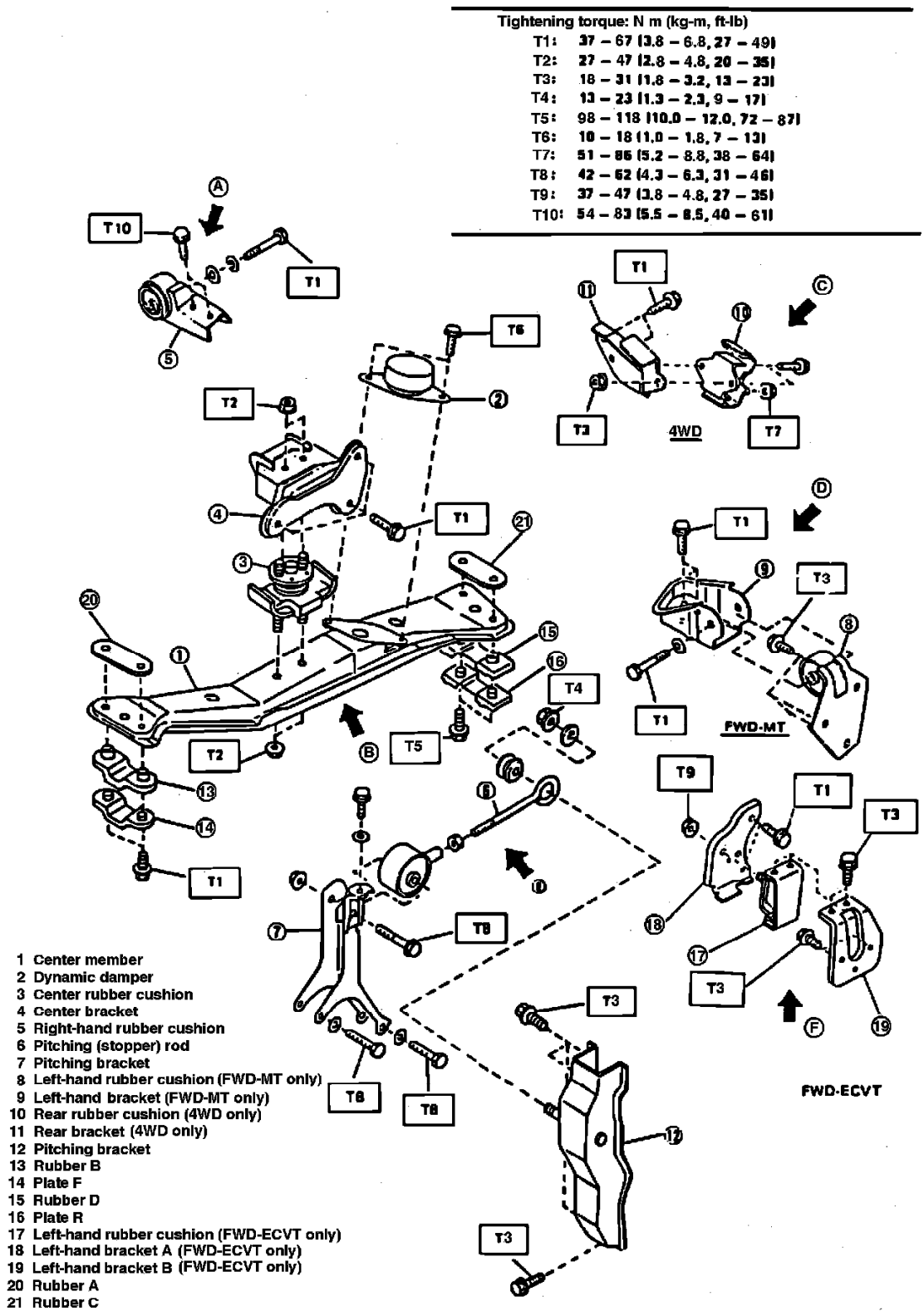

Fig. 14 Exploded View Of Transmission & Engine Mounting Components

Note position of all parts as they are removed, so they can be properly installed. Always remove ECVT transmission with the engine, or the oil shaft may be damaged. Refer to **Fig. 14,** when performing the following procedure.

1. Open hood wider than normal and support with stay.
2. Relieve fuel system pressure as follows:
   a. Remove rear seat assembly.
   b. Remove fuel pump cover and disconnect fuel pump connector.
   c. Run engine until it stalls.
   d. Crank starter for 5-10 seconds to relieve remaining fuel pressure. Turn ignition switch to Off position.
   e. After fuel system service, connect fuel pump connector and install fuel pump cover and rear seat assembly.
3. Disconnect battery then remove battery and tray assembly.
4. Drain cooling system and disconnect radiator electrical connectors, then remove the radiator.

5. Disconnect hood release cable, then remove upper radiator member.
6. Disconnect horn.
7. Disconnect air clearer hoses and cables, then remove the air cleaner assembly. **Cover throttle body to prevent contamination.**
8. Disconnect all throttle body, intake manifold, heater and brake booster hoses.
9. Disconnect clutch cable and accelerator linkages.
10. Disconnect speedometer cable from transmission.
11. Disconnect ignition coil-to-distributor electrical cable.
12. Mark and disconnect 4WD/FWD change-over hoses.
13. Position select lever to N range, then remove attaching clip and detach selector cable from bracket.
14. Remove snap and clevis pins, then separate selector cable from transmission.
15. Disconnect pitching stopper from bracket.
16. Disconnect starter cable positive electrical connector.
17. Disconnect two engine wiring harness electrical connectors.
18. Disconnect engine and transmission ground lead connectors.
19. Disconnect brush holder harness connector.
20. Remove rear transmission hanger, then raise and support vehicle.
21. Remove under covers.
22. Remove air suction pipe, then the front and rear exhaust pipe.
23. Remove propeller shaft, then the transverse link.
24. Remove spring pin, then separate the front axle shaft.
25. Remove right hand mounting bracket-to-engine retaining bolts.
26. Remove left hand mounting bracket-to-left hand bracket B retaining bolts.
27. Using a suitable engine lift, raise engine slightly.
28. Remove the center member and crossmember.
29. Remove engine with transmission from vehicle.
30. Reverse procedure to install.

Belt / Chain: Description and Operation

BELT AND PULLEY SYSTEM

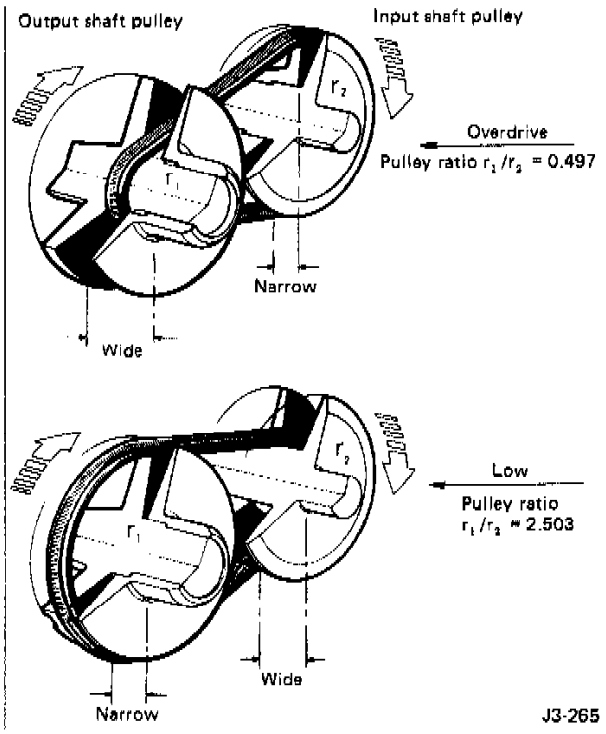

ECVT Belt And Pulley Mechanism

PURPOSE

The belt and pulley system is part of the ECVT transaxle stepless speed change mechanism.

OPERATION

The belt and pulley mechanism consists of a pair of pulleys whose groove width can be changed freely in the axial direction and a steel belt consisting of steel blocks and a steel band. The speed is changed continuously from low (pulley ratio 2.503) to overdrive (pulley ratio 0.497) according to the steel belt and pulley contact radius. The pulley groove width is controlled by the hydraulic pressure of the input shaft and output shaft pulleys.

CONSTRUCTION

Both the primary pulley and the secondary pulley consist of a moving sheave with 11° sloping sides and a shaft. A hydraulic pressure chamber is provided for both parts at the back of the moving sheave. Pulley groove width is changed by sliding the moving sheave on the shaft by a ball spline.

STEEL BELT

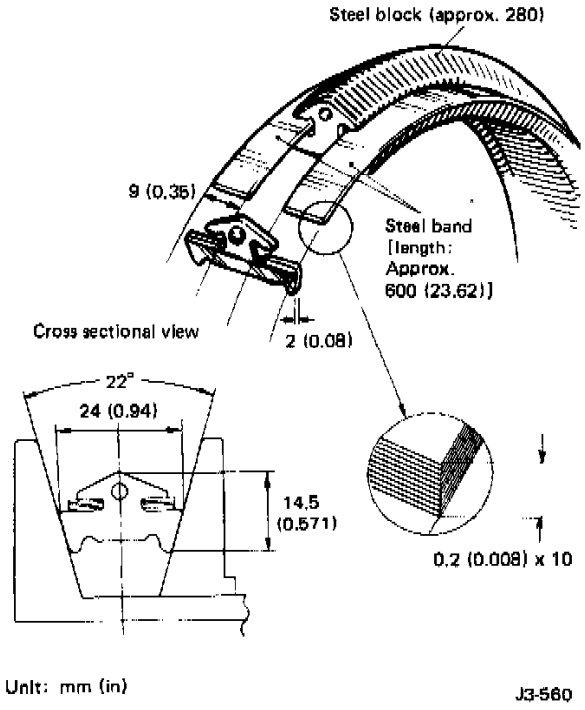

ECVT Steel Belt

PURPOSE

The steel belt is part of the ECVT transaxle stepless speed change mechanism.

OPERATION

The steel belt consists of approximately 280 steel blocks and two steel bands made up of 10 laminated steel strips. The feature of this steel band is that where the conventional rubber belt, etc. transmit power by tension, the steel belt transmits power by the compression of steel blocks.

The marging steel band consists of 10 laminated steel strips and is divided into thin parts so that it can withstand small bending, thus preventing fatigue breakage caused by bending. For the steel blocks to transmit power, there must be a friction force between the blocks and the sloped sides of the pulleys. This friction force is generated by the mechanism described below. When hydraulic pressure is applied to the secondary pulley, the steel blocks are squeezed between the sides of the pulley and forced outward. As a result, tension is generated at the band and friction force is generated between the steel blocks and the primary pulley. The steel blocks transmit power by compression, and the steel band maintains the friction force to do this.

CONSTRUCTION

The steel belt consists of approximately 280 steel blocks and two steel bands made up of 10 laminated steel strips.

Control Module: Description and Operation

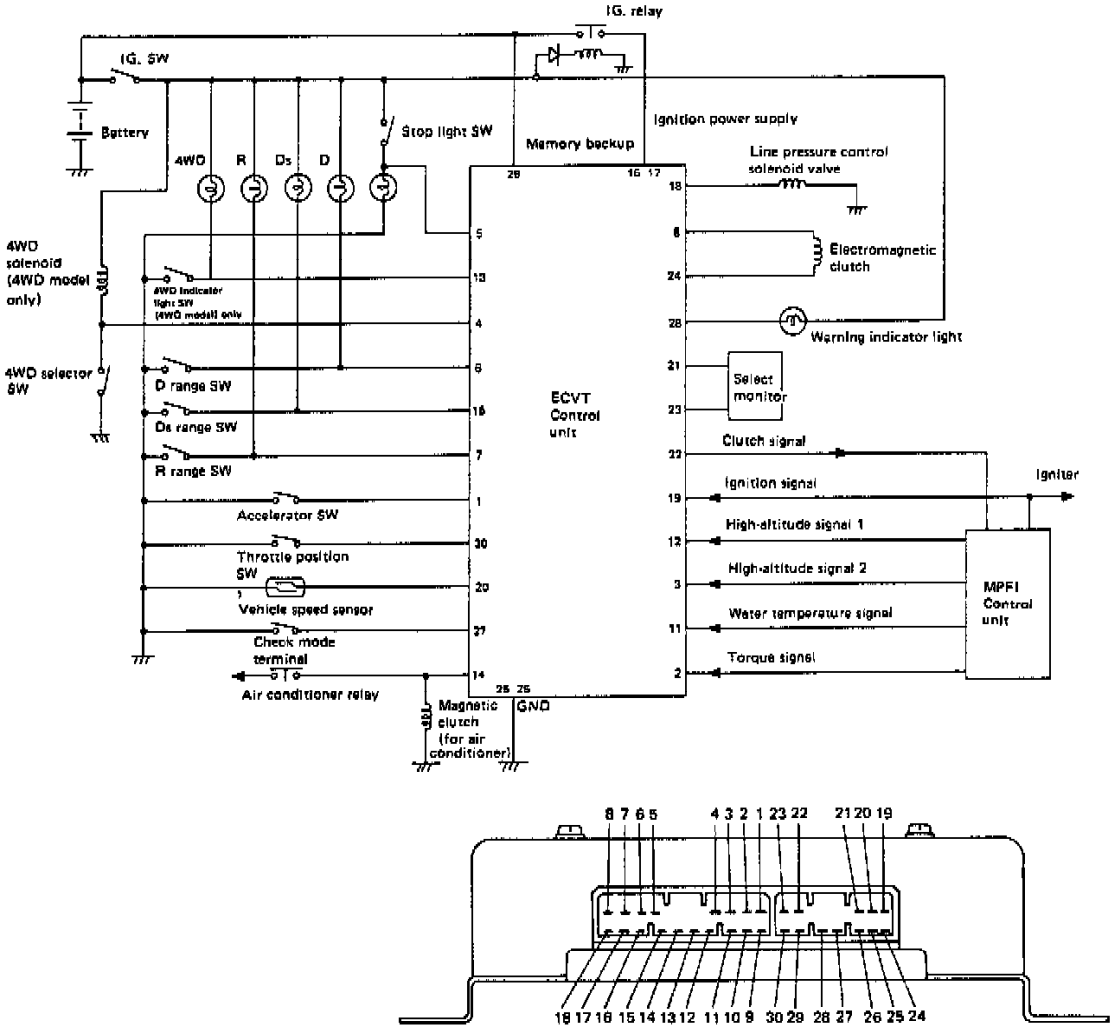

ECVT Control Unit Wiring Schematic

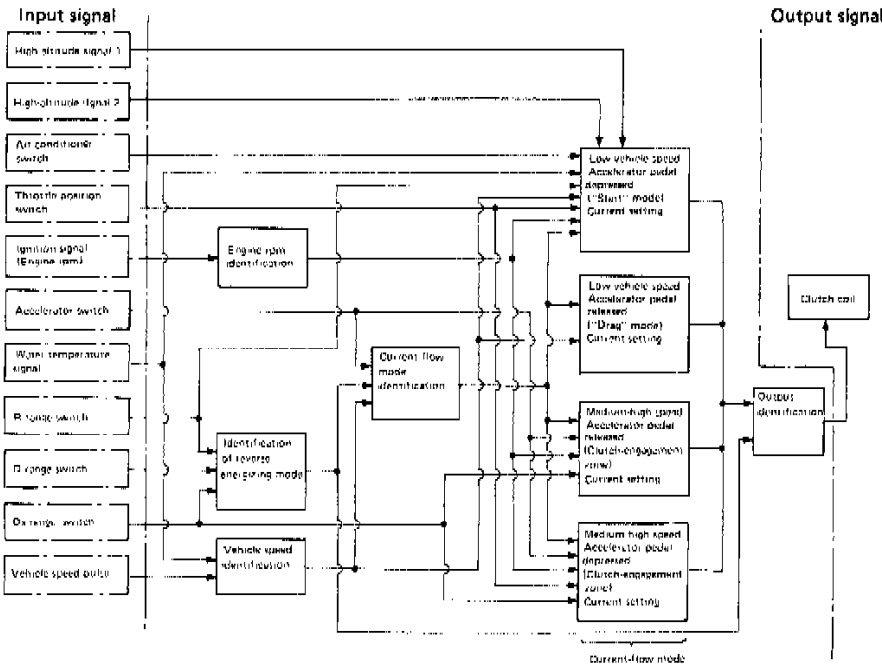

ECVT Clutch Current Control Block Diagram

ECVT CONTROL UNIT

The ECVT control unit is an 8-bit 16K byte microcomputer.

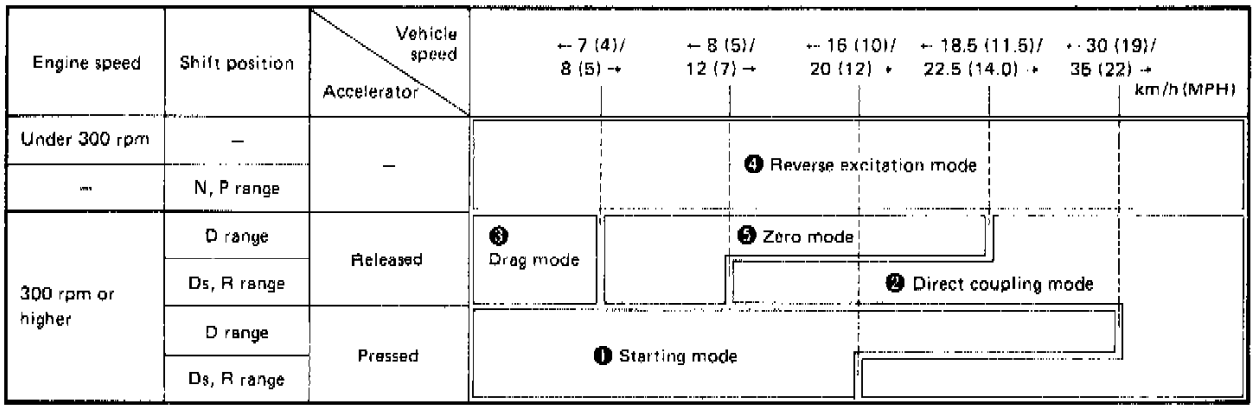

ECVT Output Modes

OUTPUT MODES

The five output modes shown in the table are provided for smooth electromagnetic power clutch operation.

Starting mode

This mode controls the clutch torque at starting by increasing the clutch current in proportion to the engine speed and its rate of increase when the accelerator pedal is pressed.

When the vehicle is started by pressing the accelerator pedal lightly at a high idling speed, such as when the choke is used, the engine speed rises at a comparatively low rate and, therefore, the increase in clutch torque is also small and the vehicle starts slowly and smoothly.

When the stall speed is in the 1,900 to 2,500 rpm range, the starting characteristic is stable.

Clutch torque characteristic is also modified to compensate for low engine output during high-altitude operation. This enables the engine to start easily at high altitude as it does at low altitude.

When releasing and applying the accelerator pedal at a vehicle speed of 20 km/h (12 mph) or slower immediately after starting, the shock is absorbed so that the clutch is applied after its output side (pulley input shaft) speed almost coincides with engine speed.

Direct-coupling mode

This mode directly-couples the clutch by passing the rated current through it when the vehicle has reached a preset speed.

The rated current is divided into three steps, according to how the accelerator pedal Is pressed.

Accelerator pedal released: 0.4 - 1.8 amp

Accelerator pedal pressed lightly: 3.0 amp *1

Accelerator pedal press heavily: 3.51 amp *2

*1: Only accelerator switch operated

*2: Accelerator switch and throttle-position switch operated

Drag mode

To maintain good operating characteristics when starting and when driving siowly at a speed of 7 km/h (4 mph) or less, including stopping, in a running ("D", "Ds", "P") position, a drag torque is applied by passing a small current (approximately O.2 amp) through the clutch when the accelerator pedal is released.

To prevent a lowering of the idling speed by dispersion in the drag torque and to prevent the vehicle from creeping, the idling speed (ignition pulse) is fed back to control unit.

Reverse excitation mode

For demagnetization, the clutch enters the reverse excitation mode under the following four conditions:

^ **Selector lever in "N" or "P" position** - The reverse excitation mode is entered to turn off the clutch. When the selector lever is Set to the "D", "Ds", or "R" position, current does not flow in the starter and the engine does not start, even if the ignition key is turned to the "START" position.

^ **Engine speed is 300 rpm or less** - The reverse excitation mode is entered to prevent starting the engine by pushing the vehicle.

^ **For 0.4 to 0.8 seconds after selector lever set to "D" or "P" position** - The reverse excitation mode is entered to make selector lever operation easier.

^ **For approximately one second when accelerator is released at low vehicle speed** - The reverse excitation mode is entered to remove the residual magnetism.

Zero mode
This mode de-energizes the clutch while the output mode is being shifted from the direct-coupled mode to the drag mode when the accelerator is released in "D", "Ds", or position.

Transition response control
This mode controls the clutch torque transition response for smooth coupling of the clutch when the clutch is directly coupled, the selector lever is set to the "Ds" position, and when accelerating and decelerating at a very low speed.

SELF-DIAGNOSIS FUNCTION
The self-diagnosis function includes four modes; a U-check mode, read-memory mode, D-check mode and memory-clear mode. With these control modes, various systems are diagnosed and problems are identified when the "CHECK ECVT" (FWD model) or the "CLUTCH TEMP" (4WD model) warning indicator light is illuminated.

FAIL-SAFE FUNCTION
When sensor trouble occurs, the following fail-safe functions are performed:

^ When clutch current does not flow because of accelerator switch trouble, throttle-position switch and engine speed 1,000 rpm are sensed and the clutch is energized.

^ When the vehicle speed pulse is not input because of speedometer trouble, engine speed 1,200 rpm or higher is sensed and the clutch is energized with the accelerator released.

^ In the 2-phase line pressure control, when line pressure is not properly shifted due to a faulty torque signal circuit, high line pressure will be maintained.

Electromagnetic Powder Clutch: Description and Operation

Principle of Operation

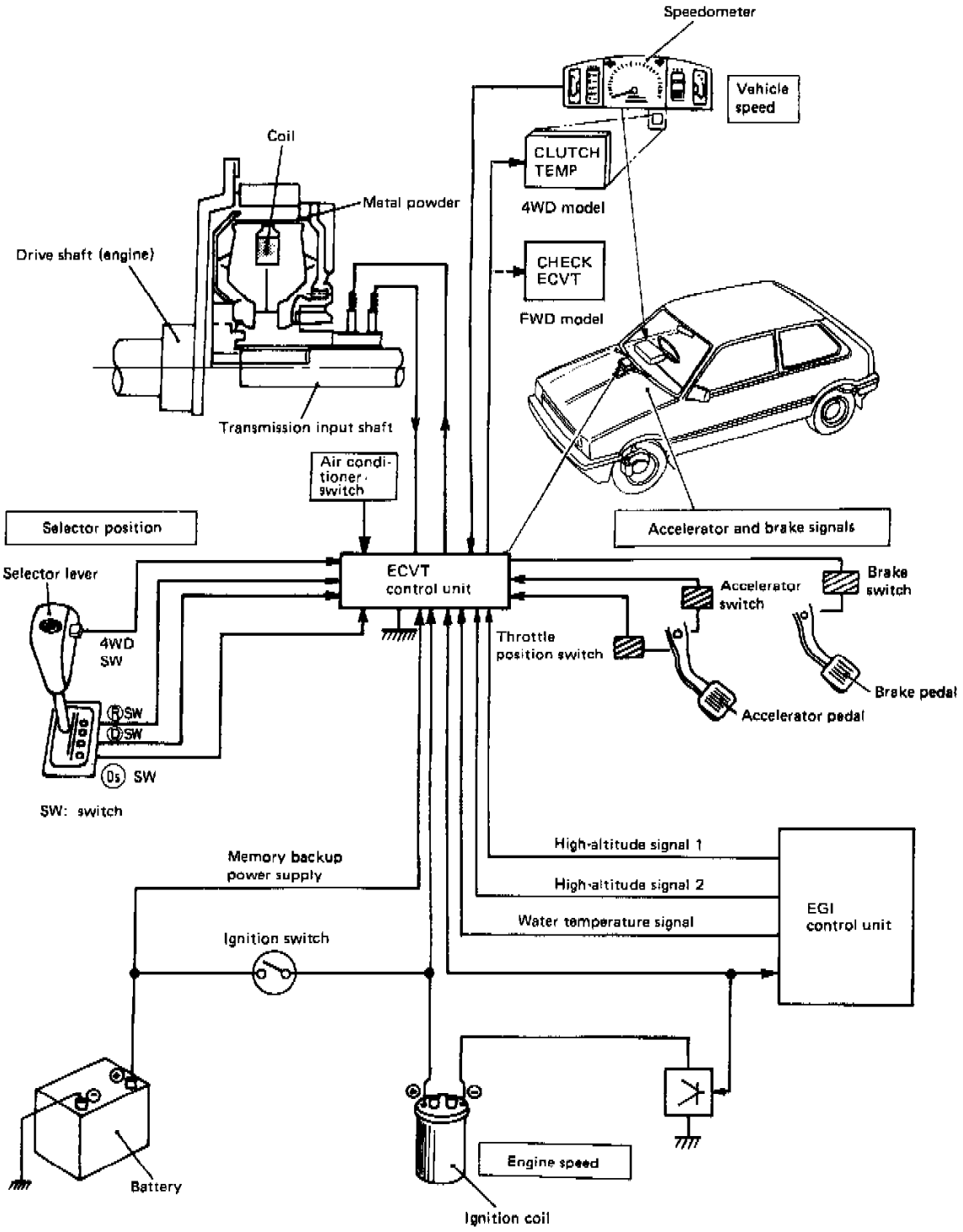

Electromagnetic Powder Clutch System

When metal powder is brought near a magnet, the metal particles are linked in chain fashion and a transmission torque is generated. The electromagnetic powder clutch uses this principle.

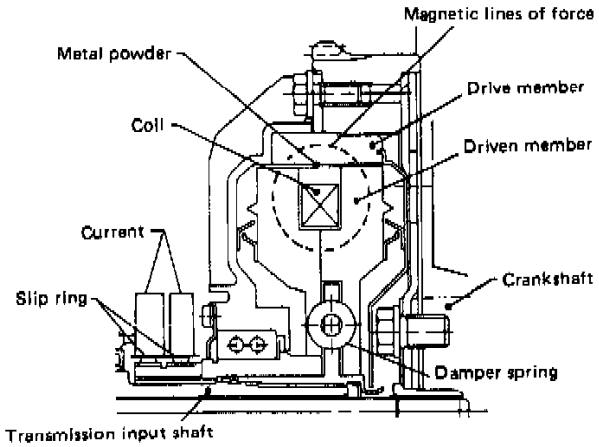

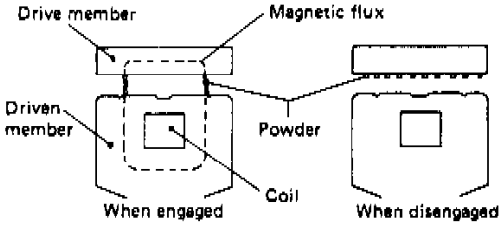

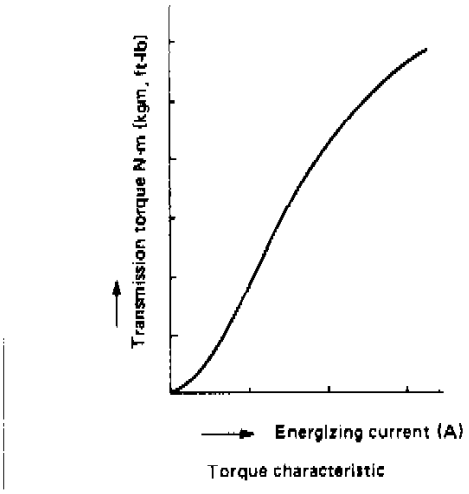

Electromagnetic Powder Clutch Operation

A small gap is provided between the inside edge of the drive member and the outside edge of the driven member of the clutch. This gap is filled with a magnetic powder and magnetic force is applied to this powder and the drive member and driven member are coupled together.

A coil provided at the driven member acts as the magnet. When current is passed through this coil, the coil becomes an electromagnet and generates a magnetic force.

The magnetic powder linked in a chain fashion by this magnetic force transmits the power from the drive member to the driven member. Transmission torque is proportional to the strength of the current. When current flow is cut off, transmission torque disappears.

Electromagnetic Powder Clutch: Description and Operation
Clutch Control

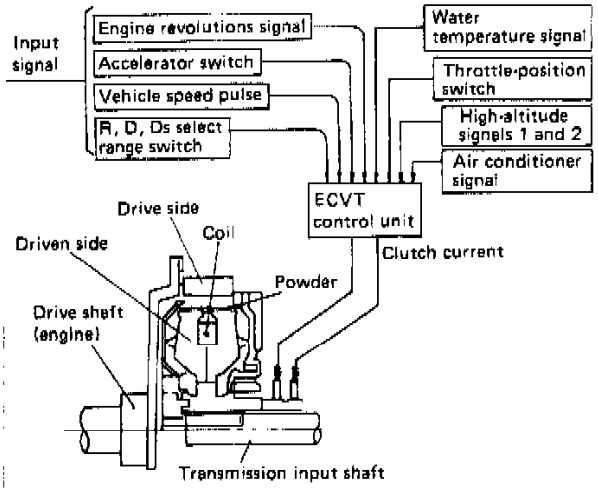

ECVT Clutch Control Diagram

CLUTCH CONTROL

The clutch is applied and released and power is transmitted by controlling the current to the clutch electromagnetic coil. Signals are input to the clutch control unit and clutch current which controls starting, stopping, and switching output.

Clutch control also controls damping of the shock when the clutch is directly coupled and recoupled and when the engine brake is applied in the "Ds" position.

Safety is increased by adding a hill holder function when stopping on small grades and with a function which prevents sudden starting when the choke is used. The circuit has a self-diagnosis function and a fail-safe function.

Engine speed signal
At starting, the ignition pulse from the minus terminal of the ignition coil is detected and a clutch current proportional to the engine speed is obtained.

Accelerator switch
Operation of the accelerator pedal is detected by a microswitch attached to the accelerator pedal and, at starting, the clutch current is turned on. At stopping, this signal is used with the vehicle speed pulse to prevent the engine from stalling.

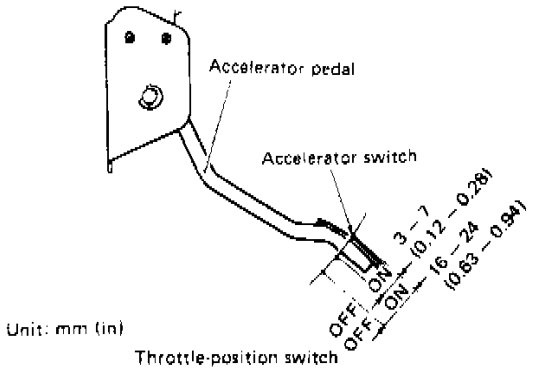

Throttle Position Switch

Throttle-position switch
The amount the accelerator is pressed [approximately 20 mm (0.79 in) stroke] is sensed and the current required to directly couple the clutch is determined.

"D," "Ds," and "R" position switches
These switches are used to sense the "D", "Ds", and "R" positions.

Vehicle speed pulse
This pulse is built into the speedometer and is used to sense the vehicle speed and obtains a clutch current proportiona to the engine speed. This signal also controls power to the slow cut valve.

Water temperature switch
When this switch senses a "cold" engine, clutch current "rise" characteristic is changed so that the stall point is changed to the high side.

Stall point
Point at which the clutch torque curve crosses the engine full speed torque curve. Below this point, the clutch slips. Above this point, the clutch is directly coupled.

High-altitude signals (1 and 2)
A signal which varies with atmospheric pressure is emitted by the EFC control unit. This signal changes the clutch current "rise" characteristic to provide a stall point equivalent to that obtained during low-altitude operation so that the starting ability of the engine is improved at high altitudes.

Air conditioner signal
This signal senses the air conditioner operation and changes the clutch current "rise" characteristic so that the stall point is changed to the high side.

Electromagnetic Powder Clutch: Description and Operation

Clutch Temperature Warning System (4WD)

Since the 4WD model is often operated on severe road surfaces (such as sandy or snowy roads, etc.), the clutch is subjected to appreciable loads. A clutch warning system, which consists of a "CLUTCH TEMP" lamp and a buzzer, is located on the meter panel of the 4WD model. The "CLUTCH TEMP" lamp also functions as the FWD model's "CHECK ECVT" lamp.

The higher the clutch coil temperature, the greater the clutch coil resistance. Based on this principle, the clutch temperature measuring system determines temperature after the control unit computes coil resistance from the relationship between current and voltage.

Electromagnetic Powder Clutch: Testing and Inspection

Handling Precautions

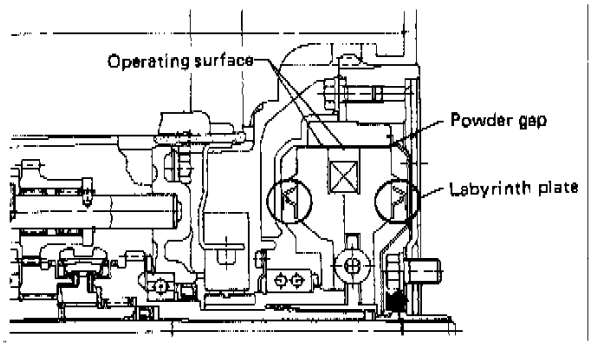

Electromagnetic Powder Clutch Cross Section

1. When storing or moving the electromagnetic powder clutch from one place to another, handle it with the slip rings facing upward. Otherwise, powder contained in the clutch may flow out of the powder gap. However, because of the labyrinth structural design, powder will return to the powder gap. During the clutch rotation, powder is collected at the powder gap by centrifugal force and will not flow out of the powder gap.
2. Do not apply impact to the clutch; this may cause the powder to flow out of the powder gap.
3. Do not allow oil, grease, water, etc. to come in contact with the powder clutch. Keep service tools, workbench, and workers' hands clean and dry.
4. Be extremely careful not to scratch or deform the labyrinth plate, as well as the operating surface located opposite the powder gap.
5. Avoid rolling the powder clutch as this may cause powder to flow out of the gap.

Electromagnetic Powder Clutch: Testing and Inspection

Inspection

BEARINGS

Check the bearing for seizure, wear, noise or improper rotation. Before checking for noise or improper rotation, apply ATF and spin.

SLIP RINGS

Wipe foreign particles (such as sand, dust, oil, etc.) off the slip ring using a volatile oil (thinner, trichloroethylene, etc.) and check the slip ring for damage.

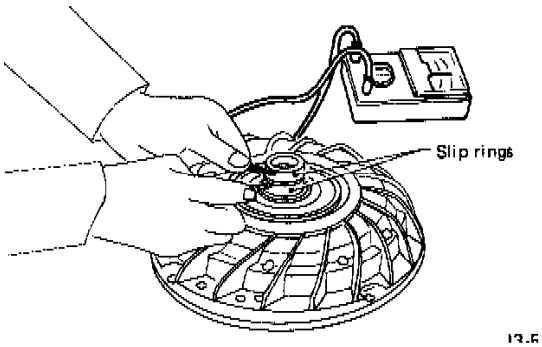

Slip Ring Continuity Check

Continuity check - Measure resistance between the slip rings using a circuit tester. If it is in the 2 to 4 ohms range, the slip rings are functioning properly. If continuity does not exist or resistance is extremely low, replace the driven member.

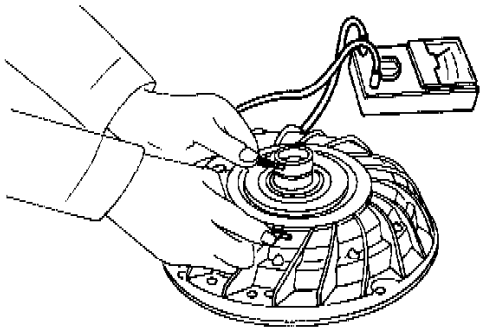

Insulation Check

Insulation check - Check insulation resistance between each slip ring and aluminum bracket of the electromagnetic powder clutch using a circuit tester (set in the max. ohm range). If continuity exists, replace the electromagnetic powder clutch. Do not attach the test probes to the slip ring as this may scratch it.

Electromagnetic Powder Clutch: Testing and Inspection
ECVT Brush Holder

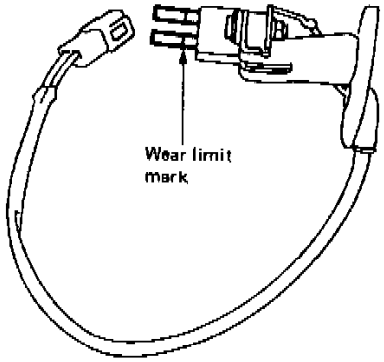

ECVT Brush Holder Inspection

1. Check tip of brush to see if it is worn close to the wear limit mark. If so, replace brush holder.

   NOTE: Also consider whether brush will still be serviceable by the time of the next specified inspection.

2. Check bolts for looseness.
3. Check to ensure the harness is properly insulated from the two 5 mm screws and bracket.

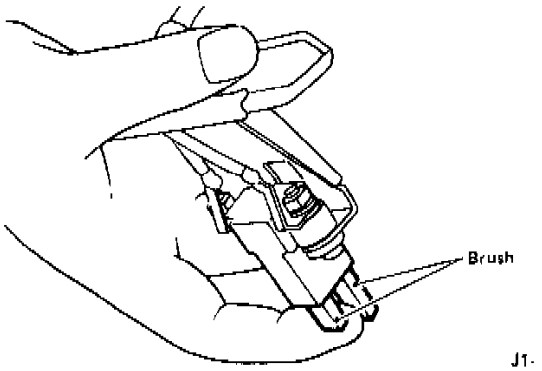

Check Brush Function

NOTE: Do not move brush up and nown unnecessarily as this may break the lead.

Fluid - CVT: Testing and Inspection

TRANSMISSION

Preparation

^ Idle hot engine after driving. Note that a true fluid level cannot be checked without driving the vehicle.
^ Use a clean cloth when checking the fluid level to prevent dirt or dust from coming in contact with the level gauge.
^ Position the vehicle on a flat surface.
^ Set the selector lever to the P range and check the fluid level using the level gauge. The engine must be idling.

Inspection

1. If fluid needs to be added frequently, carefully check for leakage.
2. Use only genuine Subaru ECVT fluid or DEXRON II.

FLUID CAPACITY (INCL. OIL COOLER)
FWD: Approx. 3.35 L (3.5 US qt, 2.9 Imp qt)
4WD: Approx. 4.15 L (4.4 US qt, 3.7 Imp qt)

3. Mixing different brands of fluid with genuine fluid may cause ECVT malfunction.
4. If ATF is found to be contaminated during inspection, the problem may be inside the transmission. Immediately check the condition of the transmission. ATF must be red without stickness.

Fluid level gauge

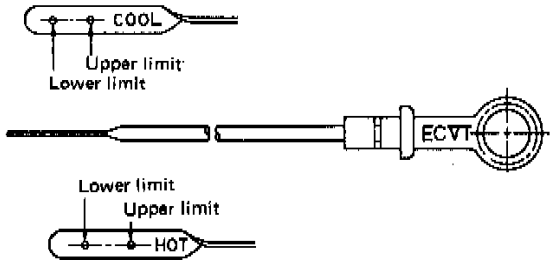

ECVT Fluid Level Check

^ The center fluid level varies with changes in fluid temperature. Note that if fluid is replenished to the HOT level mark without the engine being warmed up sufficiently, the fluid level will be higher than the specified level under normal operating conditions.
^ Pay particular attention to the fluid temperatue which greatly affects the fluid level. The level gauge is marked with "HOT" [60°C - 80°C (140° - 176°F)] and "COOL" [20°C - 40°C (68 - 104°F)].

DIFFERENTIAL

^ Check differential fluid by removing filler plug on the carrier left hand side. Fluid level should be no less than .20 inch below filler plug hole.
^ Add SAE 80W, 85W or 90 gear oil as necessary to bring fluid within limits.
^ Reinstall drain plug with gasket, and torque to **22 - 28 ft lb.**

Transmission Position Switch/Sensor: Testing and Inspection

Terminal No.	P	R	N	D	Ds
1	○	○	○	○	○
2	○				
3		○			
4			○		
5				○	
6					○
7	○		○		
8	○		○		
9		○			
10		○			

ECVT Inhibitor Switch Continuity Chart



ECVT Inhibitor Switch Connector

1. Ensure that the relative positions of the selector lever and respective inhibitor switches are correct. Check the relative positions of the selector lever and that shift cams (on the transmission side) are aligned properly.
2. Check to ensure the starter starts when the ignition switch is turned ON with the selector lever set at P or N, and that the back-up lights come on when the selector lever is shifted into R.
3. Check continuity of inhibitor switch as shown on image chart.

Transmission Position Switch/Sensor: Adjustments

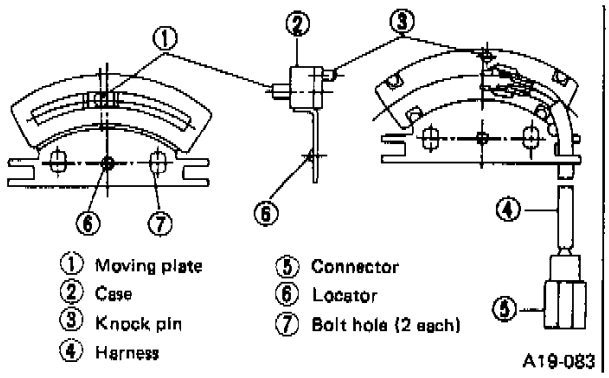

ECVT Inhibitor Switch Adjustment

1. Loosen the two bolts which secure the inhibitor switch.
2. At the position where the selector lever is shifted in the "N" range and pushed to the "P" side lightly, match the locator to bracket hole, the moving plate pin to arm hole, then tighten the bolts to the specified torque.
3. While lightly pushing the selector lever toward P, tighten the bolts.

Shift Cable: Testing and Inspection

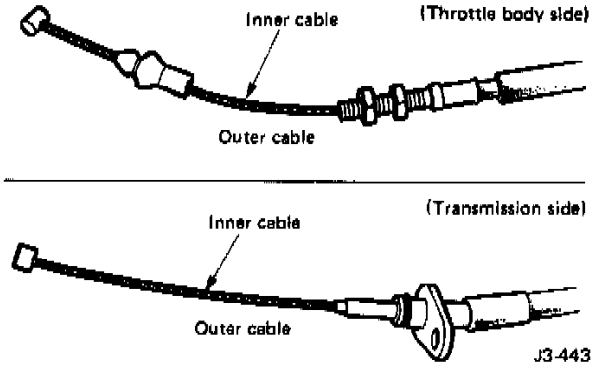

ECVT Transmission Control Cable Inspection

1. Ensure inner cable moves smoothly. Check for wear or damage.
2. Check outer cable clinched portion for looseness.
3. Also check outer cable for wear or damage.

Shift Cable: Adjustments
Selector Cable Neutral Position

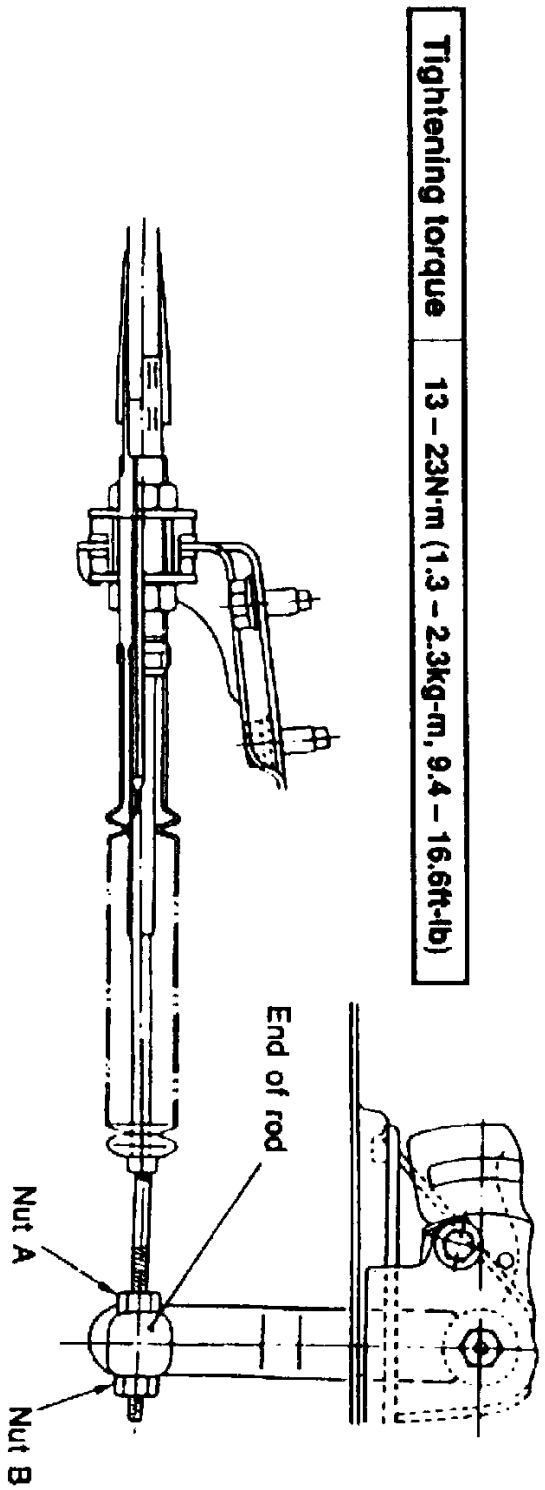

Fig. 20 Selector Cable Neutral Position Adjustment

1. Position select lever to N range.
2. Push nut (A) toward the lever end **Fig. 20**, then adjust inner cable with nut (B).
3. Check for proper operation.

Shift Cable: Adjustments
Transmission Control Cable

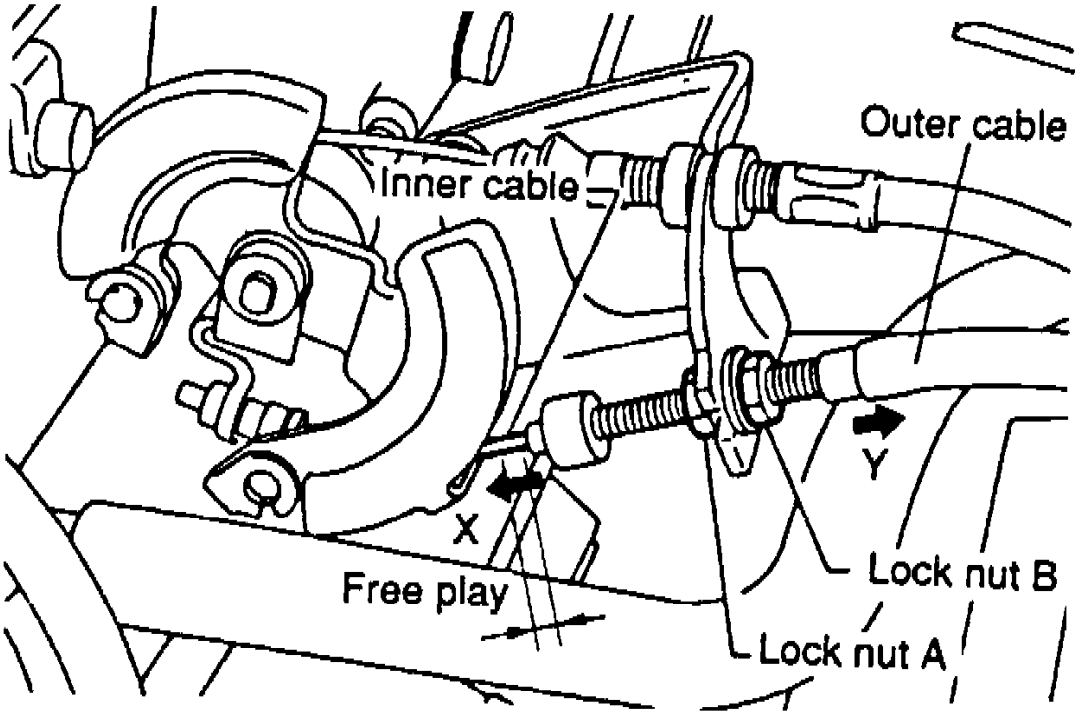

Fig. 19 Transmission Control Cable Adjustment

1. Loosen locknuts 1 and 2, **Fig. 19**.
2. Pull inner cable with throttle valve, to the fully open position so there is zero freeplay.
3. Tighten locknuts 1 and 2.
4. Loosen locknut 1, one and one half revolutions, then tighten locknut 2.
5. Fully open carburetor throttle valve, and lightly pull transmission control cable. freeplay should be 0.020-0.059 inch.
6. Install rubber boot.

Shift Cable: Service and Repair

REMOVAL

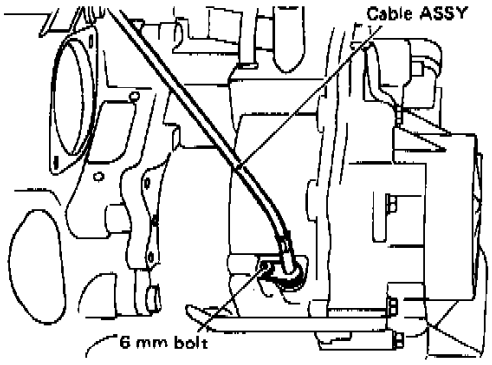

ECVT Transmission Control Cable Removal

1. Completely drain ATF and remove oil pan.
2. Remove end of cable from pulley; remove bolt.
   ^ Discard O-ring and replace with new one.
   ^ To facilitate oil pan removal, remove grille and radiator in advance.

INSTALLATION

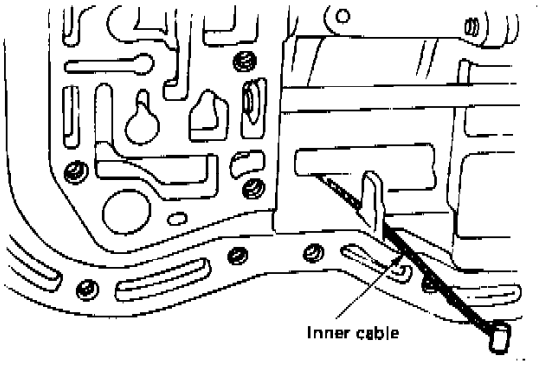

ECVT Transmission Control Cable Installation

1. Install the 0-ring onto the cable, insert the cable into the hole in the transmission case, and tighten with the bolt and washer. Torque to **4.4 - 5.4 Nm (0.45 - 0.55 kg-m, 3.3 - 4.0 ft lb).**
2. Route the inner cable along the rib on the transmission case, as shown in the figure. Secure the end of the cable to the hole on the shift control lever and place the cable on the perimeter of the lever.

   NOTE: Ensure the inner cable moves smoothly without disturbing the inner wall fo the transmission case and control valve body assembly when pulled from the outside.

Shift Interlock: Testing and Inspection

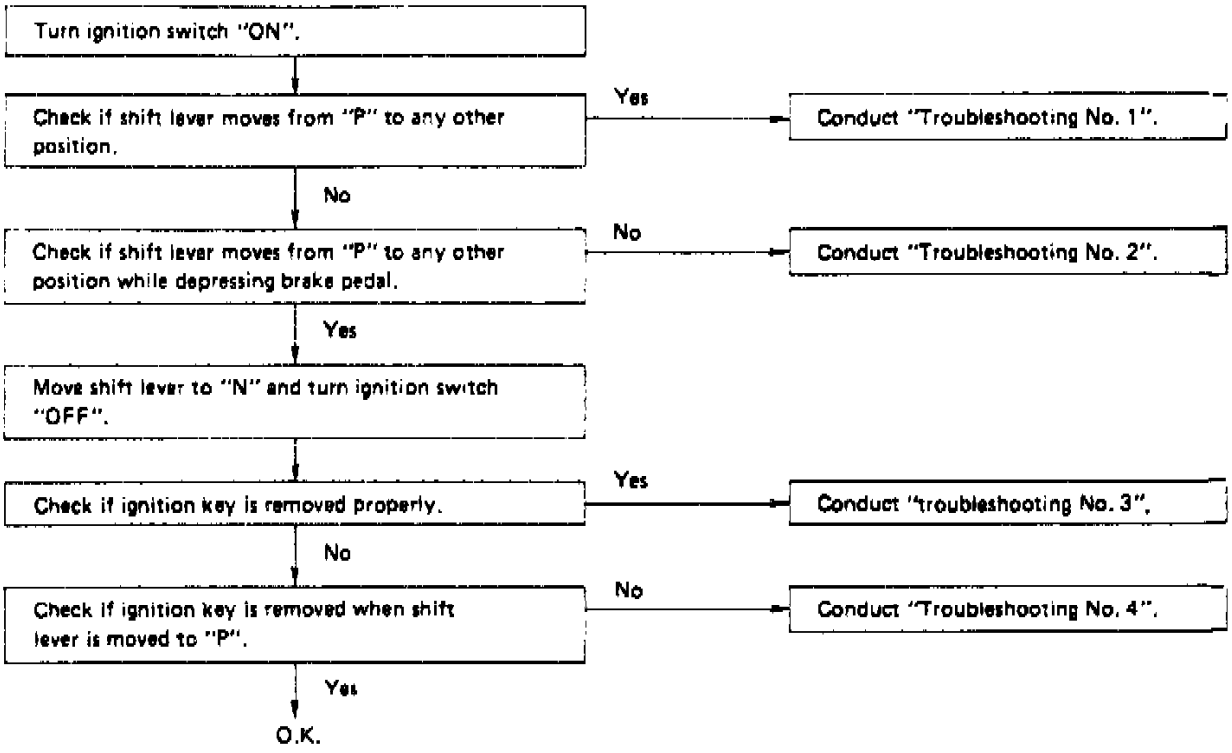

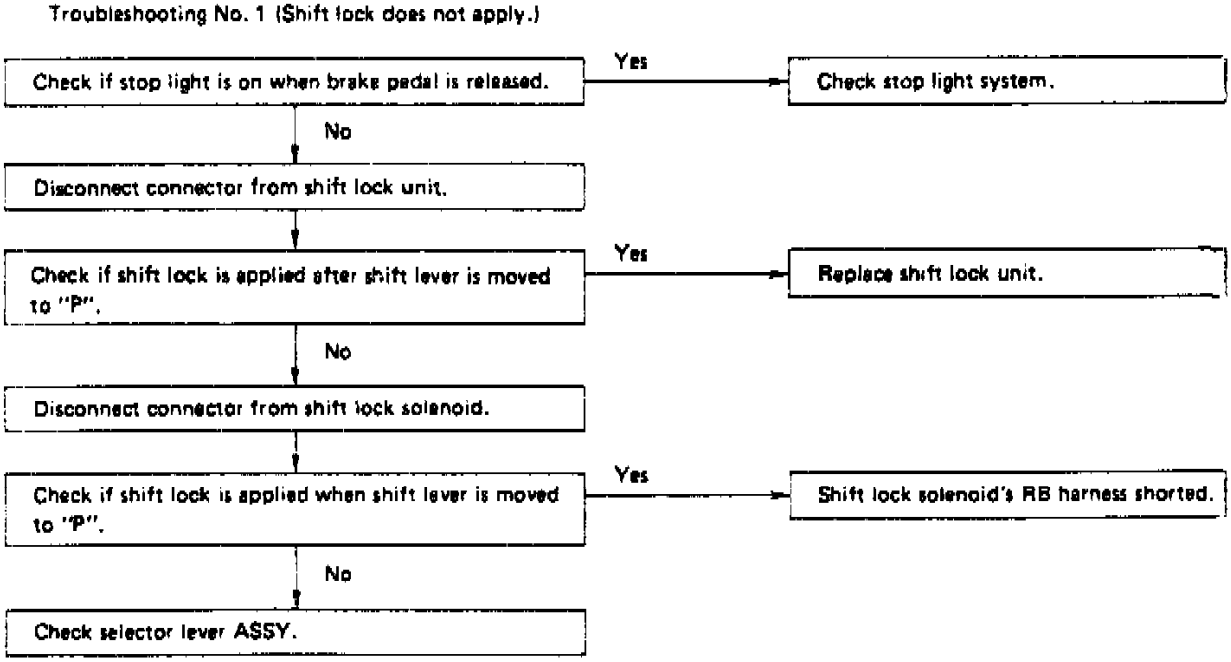

Fig. 18 Shift Lock System Troubleshooting (Part 1 Of 4)

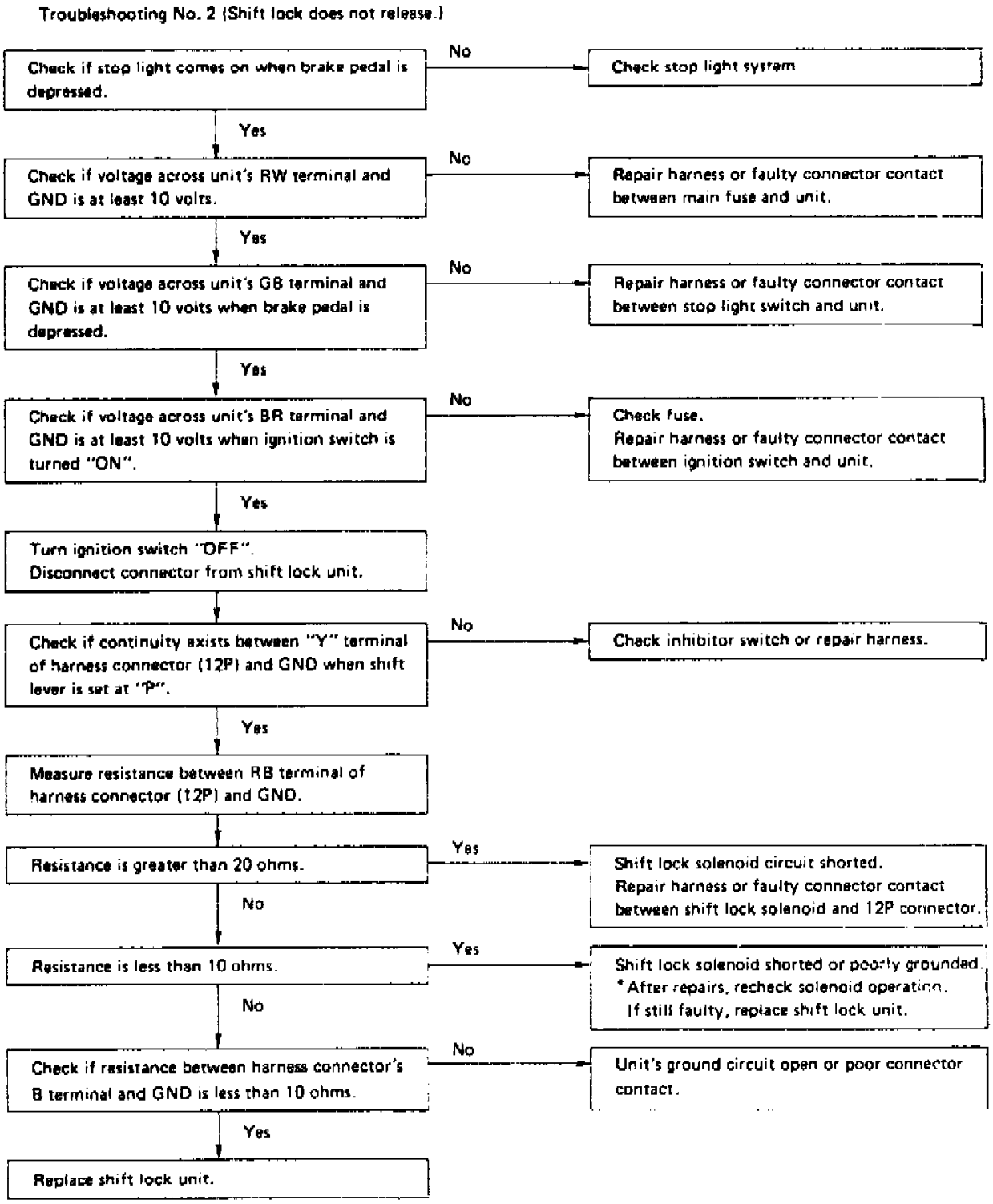

Fig. 18 Shift Lock System Troubleshooting (Part 2 Of 4)

3) Troubleshooting No. 3 (Key interlock does not operate.)

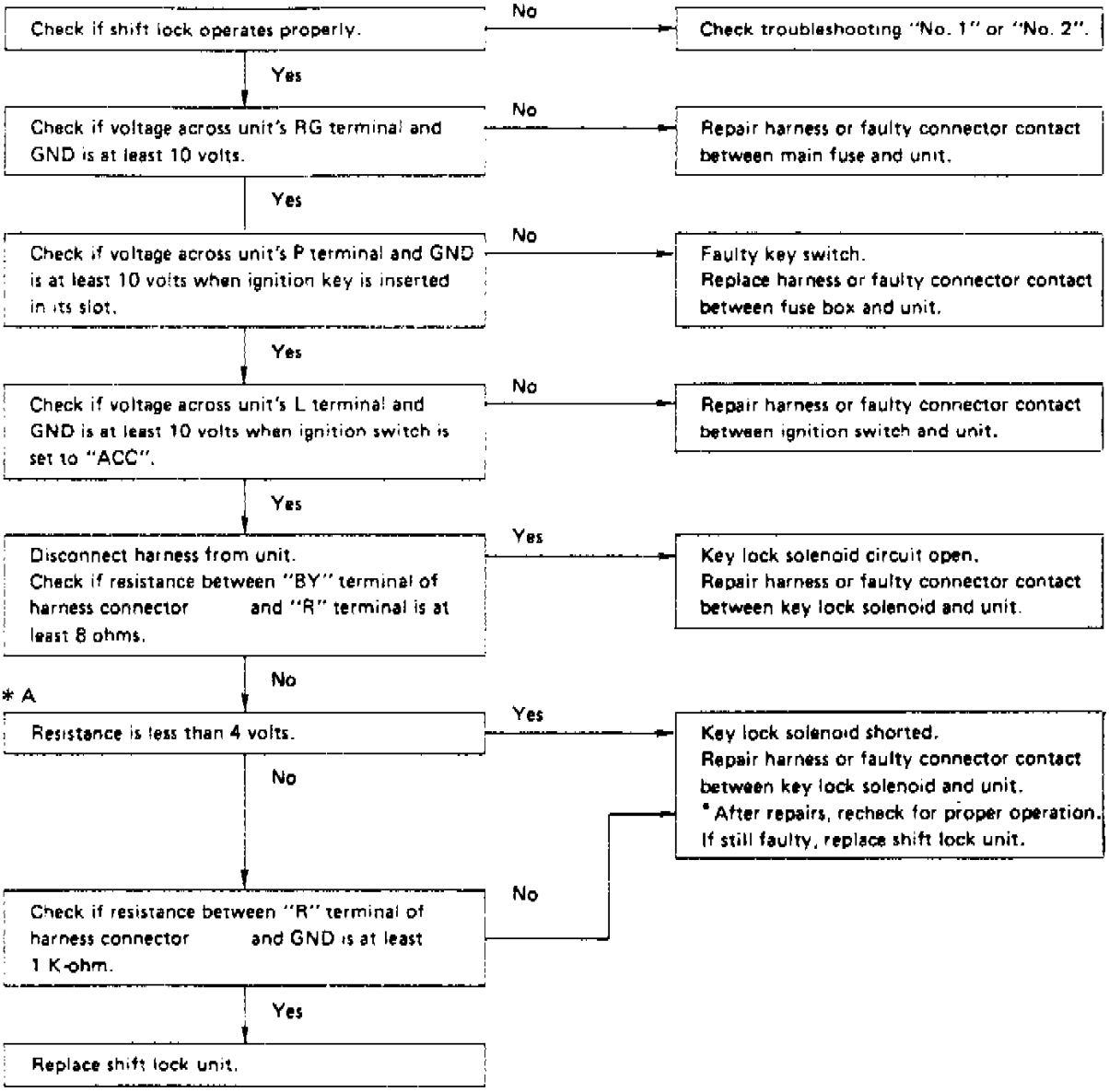

When conducting operational checks of the key lock solenoid, do not apply 12 volts, to solenoid for more than one second since this may break solenoid circuit.

Fig. 18 Shift Lock System Troubleshooting (Part 3 Of 4)

4) Troubleshooting No. 4 (Key interlock does not release.)

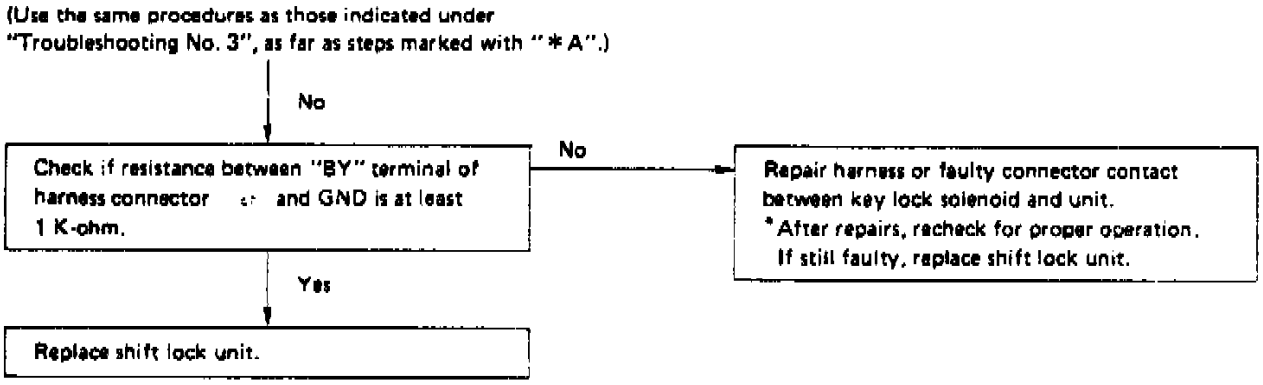

Fig. 18 Shift Lock System Troubleshooting (Part 4 Of 4)

Transmission Cooler: Description and Operation

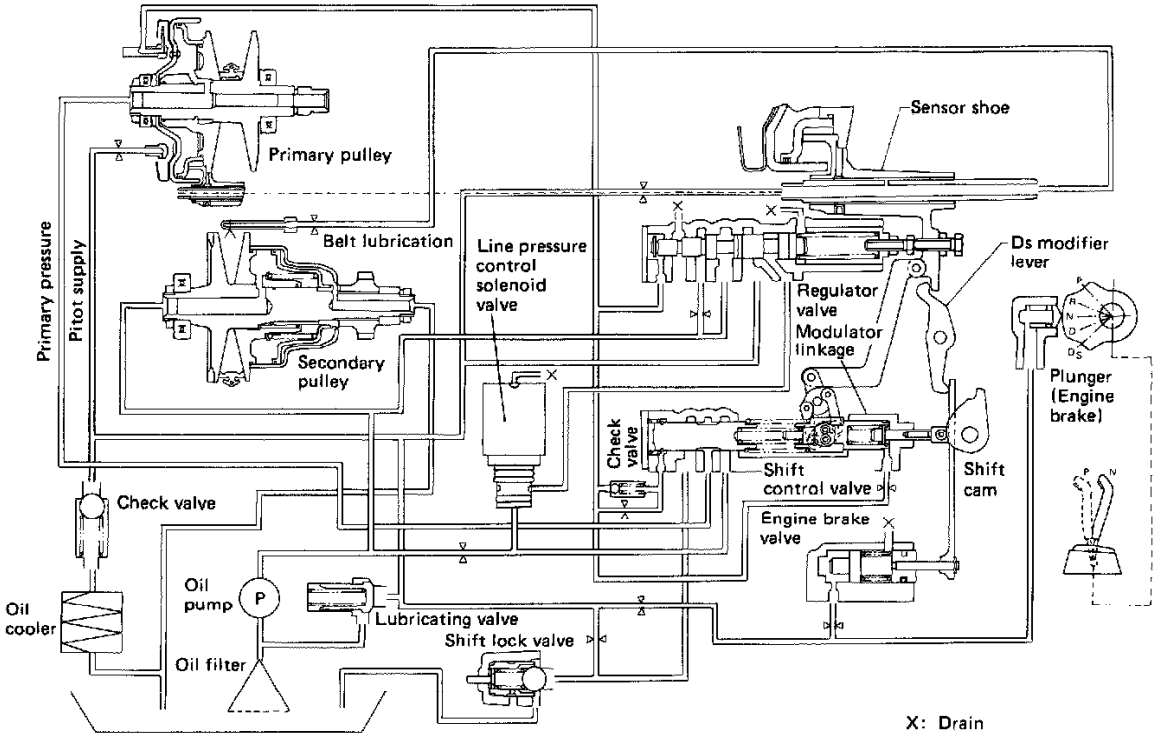

ECVT Fluid Cooling System

PURPOSE

Maintains transmission oil at proper operating temperature.

OPERATION

Heated oil under lubricating oil pressure is delivered to the oil cooler where it is cooled by coolant.

CONSTRUCTION

This system consists of an oil cooler, which is built into the radiator, pipes and hoses.

Differential Assembly: Service and Repair

Differential Service

DISASSEMBLY

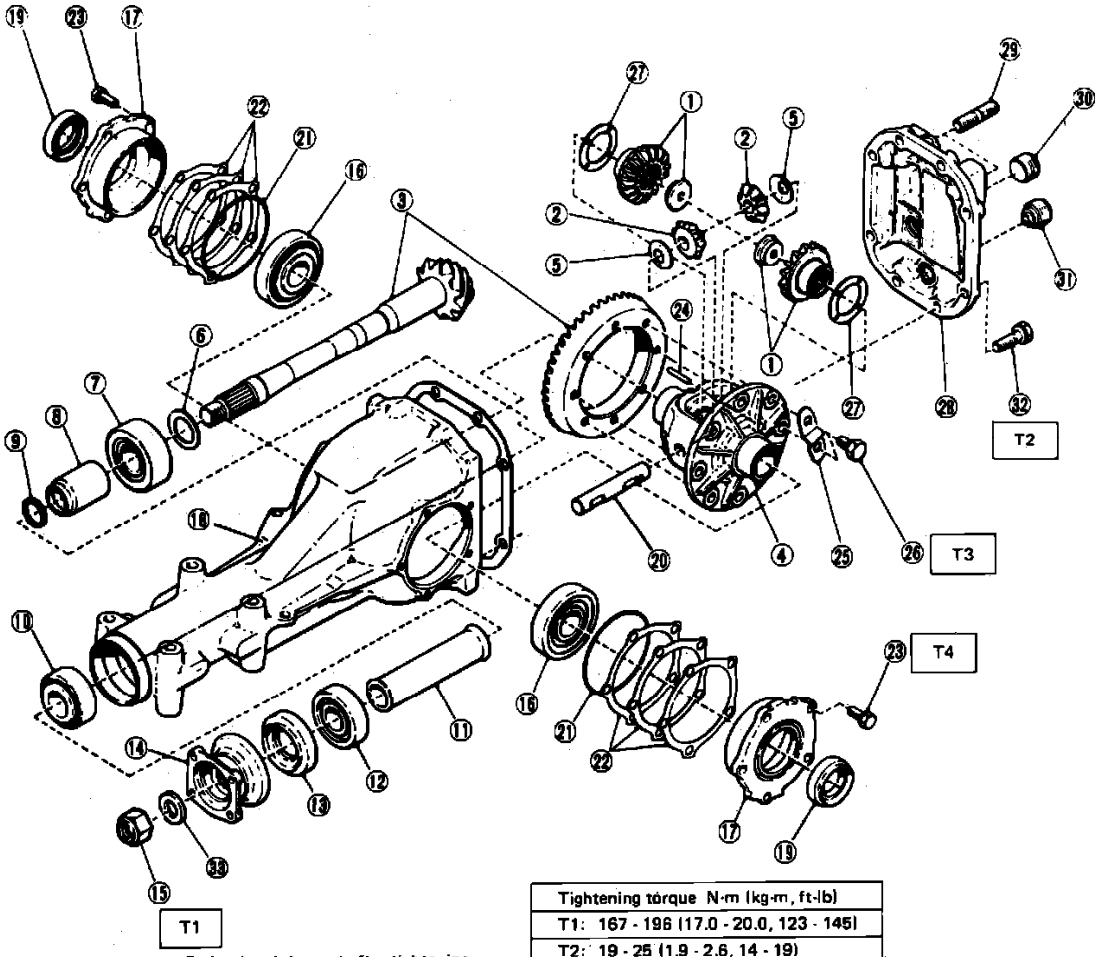

Tightening torque N·m (kg-m, ft-lb)
T1: 167 - 196 (17.0 - 20.0, 123 - 145)
T2: 19 - 25 (1.9 - 2.6, 14 - 19)
T3: 69 - 78 (7.0 - 8.0, 51 - 58)
T4: 9 - 12 (0.9 - 1.2, 6.5 - 8.7)

1 Side gear
2 Pinion mate gear
3 Pinion crown gear set
4 Differential carrier
5 Pinion mate gear washer
6 Pinion height adjusting washer
7 Rear bearing
8 Bearing preload adjusting spacer
9 Bearing preload adjusting washer
10 Front bearing
11 Spacer
12 Pilot bearing
13 Front oil seal
14 Companion flange
15 Drive pinion nut
16 Side bearing
17 Side bearing retainer
18 Differential case
19 Side oil seal
20 Pinion mate shaft
21 Side bearing retainer O-ring
22 Side bearing retainer shim
23 Bolt (8x20x14 mm)
24 Pinion shaft lock pin
25 Lock plate
26 Bolt (10x20x12 mm)
27 Side gear thrust washer
28 Rear cover
29 Stud bolt
30 Plug
31 Plug cp.
32 Bolt (10x30x18 mm)
33 Washer

Fig. 2 Exploded View Of Drive Axle Assembly. 4WD Models

1. Place attachment tool No. 398217700 in a suitable vise, then attach drive axle assembly to tool.
2. Remove plug, then drain differential gear oil.
3. Loosen attaching bolts, then remove spindles, using a suitable tool.
4. Mark position of left and right side retainers to facilitate installation, then attach tool No. 398457700 to differential case and remove retainers, using a suitable puller, **Fig. 2.**
5. Remove differential carrier. Ensure teeth do not contact case. **When replacing side bearing, pull bearing cup from side bearing retainer.**
6. Remove bearing cone from differential carrier, using puller tool No. 399527700.
7. Remove drive gear by straightening lock plates and removing retaining bolts.
8. Drive out pinion shaft lockpin using a suitable punch. **Lockpin is staked to the differential case, do not drive out before unstaking.**

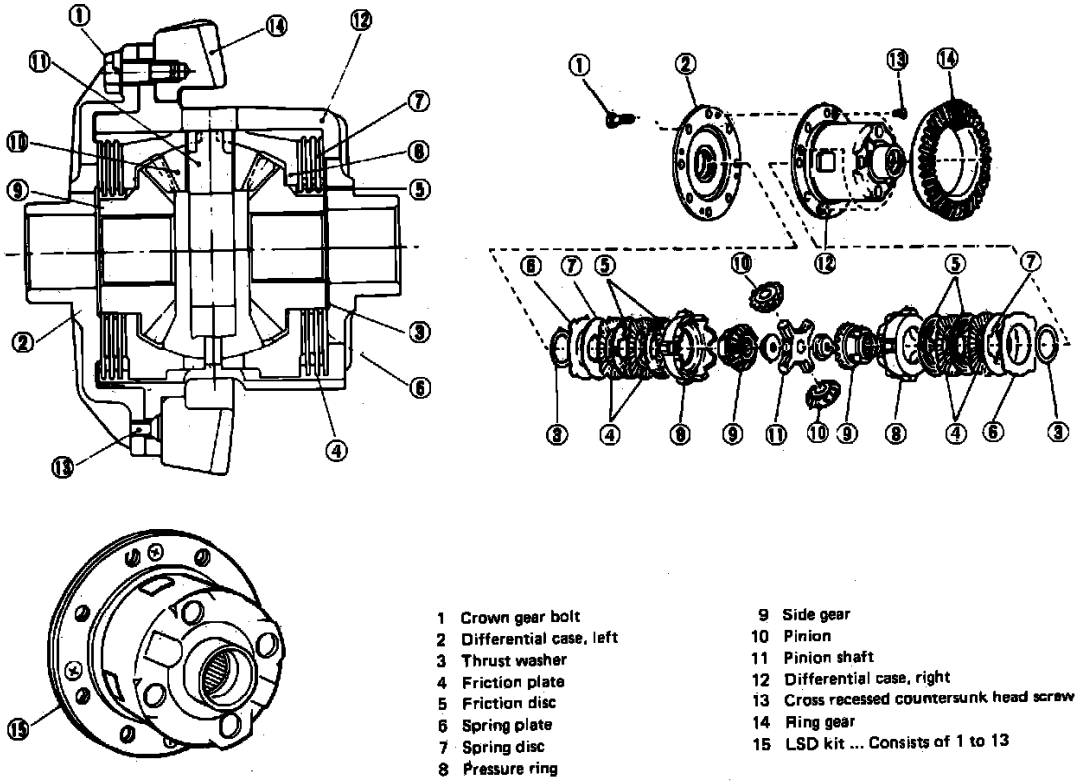

1 Crown gear bolt
2 Differential case, left
3 Thrust washer
4 Friction plate
5 Friction disc
6 Spring plate
7 Spring disc
8 Pressure ring
9 Side gear
10 Pinion
11 Pinion shaft
12 Differential case, right
13 Cross recessed countersunk head screw
14 Ring gear
15 LSD kit ... Consists of 1 to 13

Fig. 3 Exploded View Of Limited Slip Differential Case Assembly. 4WD Models

9. Remove pinion shaft, pinion gears, side gears and thrust washers. **On models with limited slip differential, replacement differential case components, Fig. 3, are not available, therefore disassembly is not recommended.**
10. Hold companion flange using tool No. 398427700, then remove drive pinion nut.
11. Remove companion flange using a suitable puller.
12. Using a suitable drift, press end of pinion shaft and remove with bearing inner race, spacer and washer.
13. Press rear bearing inner race from drive pinion by supporting inner race with tool No. 398517700.
14. Remove oil seal from differential carrier.
15. Remove pilot bearing with front bearing inner race using a suitable drift.
16. When replacing pinion bearings, tap front bearing outer race and rear bearing outer race using a brass drift.

ASSEMBLY

1. Reverse procedure to assemble, **Fig. 2.**
   a. Apply gear oil when installing bearings and thrust washers.
   b. Ensure left and righthand races of bearings are installed in correct positions.
2. Adjust pinion bearing preload as follows:
   a. Adjust pinion bearing preload with a spacer and washer between front and rear bearings. The adjustment must be carried out without the oil seal.
   b. Press front and rear bearing outer races into differential carrier using a suitable drift.
   c. Insert dummy pinion shaft No. 398507702 with pinion height adjusting washer and rear bearing inner race into carrier.
   d. Install preload adjusting spacer and washer, front bearing inner race, dummy collar No. 398507703 and companion flange.

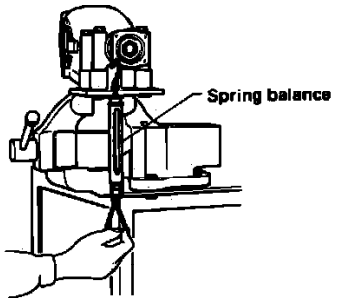

Fig. 4 Measuring Pinion Bearing Preload

Part No.	Length In In. (mm)
383695201	2.213 (56.2)
383695202	2.220 (56.4)
383695203	2.228 (56.6)
383695204	2.236 (56.8)
383695205	2.244 (57.0)
383695206	2.252 (57.2)

Fig. 5 Pinion Bearing Preload Adjusting Spacer Identification Chart

Part No.	Thickness In In. (mm)
383705200	.1020 (2.59)
383715200	.1012 (2.57)
383725200	.1004 (2.55)
383735200	.0996 (2.53)
383745200	.0988 (2.51)
383755200	.0980 (2.49)
383765200	.0972 (2.47)
383775200	.0965 (2.45)
383785200	.0957 (2.43)
383795200	.0949 (2.41)
383805200	.0941 (2.39)
383815200	.0933 (2.37)
383825200	.0925 (2.35)
383835200	.0917 (2.33)
383845200	.0909 (2.31)

Fig. 6 Pinion Bearing Preload Adjusting Washer Identification Chart

e. Rotate drive pinion by hand to seat bearings and tighten pinion nut while measuring preload, **Fig. 4.** Select the adjusting washer and spacer so that specified preload is obtained when nut is **torqued** to 123-145 ft. lbs., **Figs. 5 and 6.**

3. Adjust drive pinion height as follows:
   a. Adjust pinion height with a washer installed between rear bearing inner race and back of pinion gear.

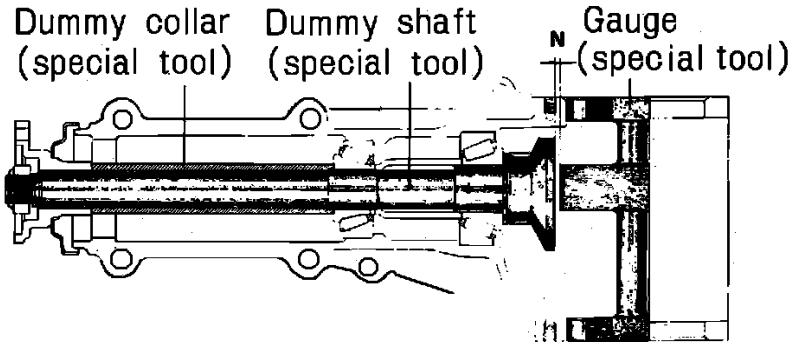

Fig. 7 Installation Position Of Tools For Adjusting Drive Pinion Height

   b. Install dummy shaft, collar and gauge, tool set No. 398501600, and apply specified preload on bearings, **Fig. 7.**
   c. Measure clearance between end of gauge and end surface of dummy shaft by using a feeler gauge.

Part No.	Thickness In In. (mm)
383495200	.1217 (3.09)
383505200	.1228 (3.12)
383515200	.1240 (3.15)
383525200	.1252 (3.18)
383535200	.1264 (3.21)
383545200	.1276 (3.24)
383555200	.1287 (3.27)
383565200	.1299 (3.30)
383575200	.1311 (3.33)
383585200	.1323 (3.36)
383595200	.1335 (3.39)
383605200	.1346 (3.42)
383615200	.1358 (3.45)
383625200	.1370 (3.48)
383635200	.1382 (3.51)
383645200	.1394 (3.54)
383655200	.1406 (3.57)
383665200	.1417 (3.60)
383675200	.1429 (3.63)
383685200	.1441 (3.66)

Fig. 8 Pinion Height Adjusting Washer Identification Chart

d. Obtain thickness of pinion height adjusting washer, **Fig. 8,** to be installed from the following formula: T = To + N - (H X .01) - .20mm when T = thickness of pinion height adjusting washer in mm, To = thickness of washer temporarily inserted in mm, N = reading of thickness gauge in mm and H = figure marked on drive piston head.
e. Install selected pinion height washer on drive pinion and press rear bearing inner race into position using tool No. 398177700.
f. Insert drive pinion into gear carrier, installed previously, selected preload adjusting spacer, washer, oil seal, companion flange and tighten with pinion nut. **Torque** pinion nut to 123-145 ft. lbs.

4. Assemble differential case as follows:
   a. Install side gears and pinion gears with thrust washers and pinion shaft into differential case. **Apply gear oil on both sides of thrust washers and side gears before installing.**
   b. Measure clearance between differential case and back of side gear.

Part No.	Thickness In In. (mm)
383445201	.0295-.0315 (.75-.80)
383445202	.0315-.0335 (.80-.85)
383445203	.0335-.0354 (.85-.90)

Fig. 9 Side Gear Thrust Washer Identification Chart

   c. Adjust clearance as specified by selecting the side gear thrust washer. Side gear back clearance should be .004-.008 inch, **Fig. 9.**
   d. Check condition of rotation after applying oil to gear tooth surfaces and thrust surfaces.
   e. After driving in pinion shaft lockpin, stake both sides of hole to prevent pin from falling out.
   f. Install drive gear on differential case. **Torque** attaching bolts to 51-58 ft. lbs., then lock washer. **Tighten diagonally while tapping bolt heads.**

5. Measure width of side bearing as follows:

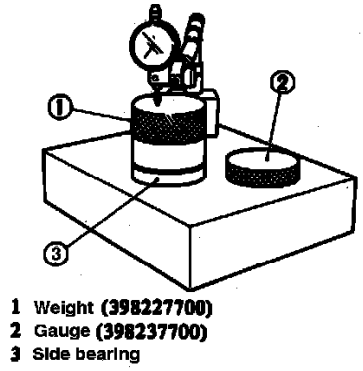

Fig. 10 Measuring Side Bearing Width

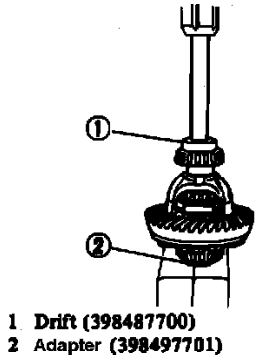

Fig. 11 Installing Side Bearing

a. Before installing side bearings, measure bearing width by using a weight block of about 5.5 lbs., **Fig. 10.** Standard bearing width is .787 inch.
b. Press side bearing inner race onto differential case using a suitable drift and tool No. 398497701 included in puller set No. 399527700, **Fig. 11.**

6. Adjust side gear preload as follows:
   a. The gear backlash and side gear preload can be determined by side retainer shim thickness.

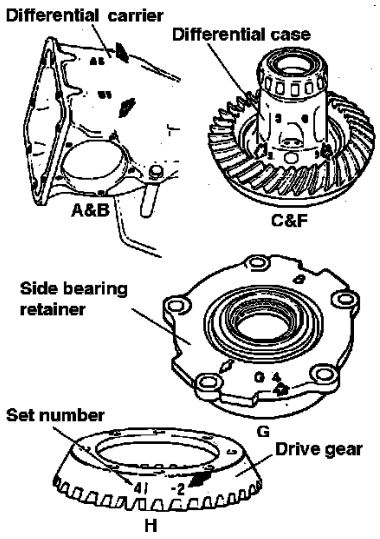

Fig. 12 Differential Markings Positions

Part No.	Thickness In In. (mm)
383475201	.0079 (.20)
383475202	.0098 (.25)
383475203	.0118 (.30)
383475204	.0158 (.40)
383475205	.0197 (.50)

Fig. 13 Side Retainer Adjusting Shim Identification Chart

b. When replacing differential carrier, differential case, side bearing and side retainer, **Fig. 12,** obtain left and right retainer shim thicknesses, **Fig. 13,** by the following formula: T1 (left) = (A + C + G - D - E + H) X .01 + .76mm; T2 (right) = (B + D + G - F - H) X .01 + .76mm. when T1 & T2 = thickness of left and right retainer adjusting shims in mm, A & B = figure mark on differential carrier, C & D = figure mark on differential case, E & F = difference of width of left and right side bearings from standard width 20mm expressed in a unit of 1/100mm, G = figure marked on side retainer and H = figure marked on drive gear. **If figure is not marked, regard as zero.**
c. Use several shims to obtain calculated thickness.
d. Reverse disassembly procedure to install differential case to differential carrier.

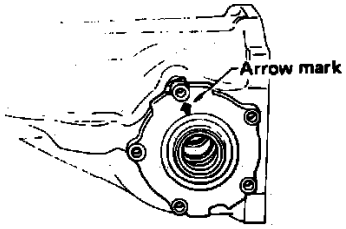

Fig. 14 Side Bearing Retainer Position

e. Install selected shim and O-ring on side retainer, then install retainer on carrier with arrow on retainer facing as shown in **Fig. 14. Torque** to 7-9 ft. lbs.
f. Measure drive gear to drive pinion backlash. Backlash should be .004-.008 inch. If reading is not within limits, correct by decreasing shim thickness on one side and increasing shim thickness on the other side by the same amount. Total shim thickness must be the same to maintain proper preload.
g. At the same time measure rotating resistance of drive pinion. Compare with resistance when differential case was not installed, if the increase in resistance is not within .07-.43 ft. lbs., readjust side retainer shim.

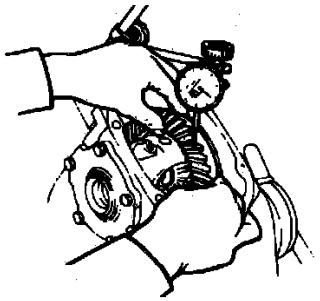

Fig. 15 Measuring Backlash

h. Recheck backlash between drive gear and pinion after readjusting shims, **Fig. 15.**

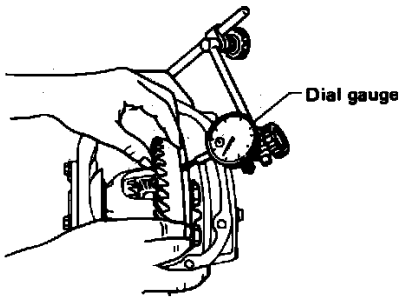

Fig. 16 Measuring Runout

i. Check drive gear runout and pinion and drive gear rotation for smoothness, **Fig. 16.**

7. Check and adjust tooth contact of drive gear, proceed as follows:
   a. Apply red lead to both sides of three of four drive gear teeth.
   b. Check the contact pattern after rotating drive gear several times. **Ensure red lead is completely removed after inspection.**
8. Using a suitable drift install oil seal and rear cover. **Apply chassis grease to seal lips before installation.**
9. After installation in vehicle, fill differential as described under **Checking and Changing Fluid**. **Torque** differential assembly nut to 51-58 ft. lbs., propeller shaft flange yoke to companion flange to 13-18 ft. lbs. and spindle retaining bolt to 23.1-27 ft. lbs.

Axle Shaft Assembly: Service and Repair
Front Axle Shaft

Removal and Installation

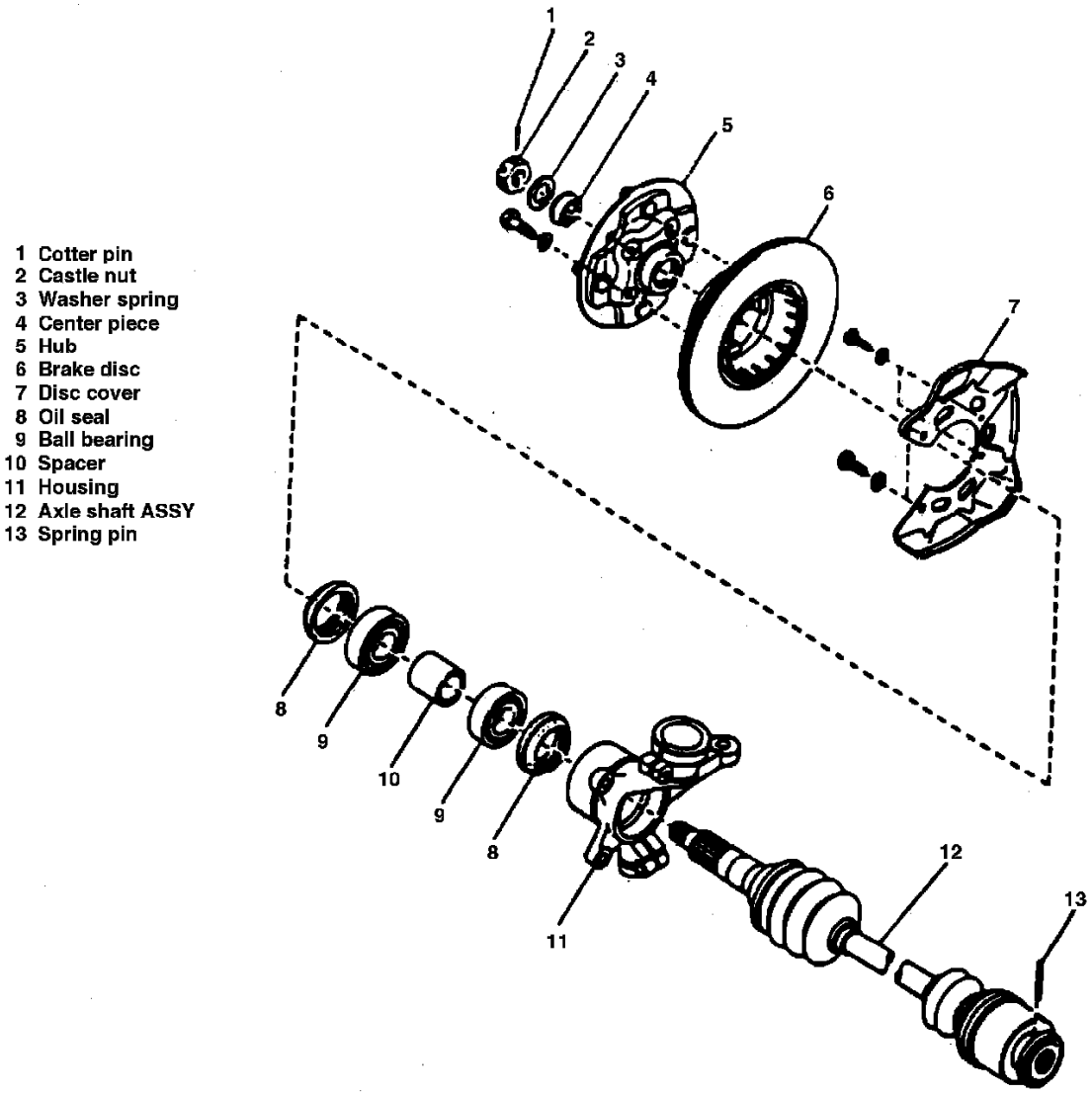

Fig. 1 Exploded View Of Front Drive Axle

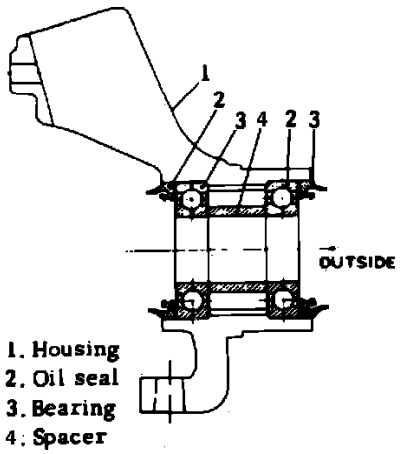

Fig. 2 Bearing & Seal Installation

1. Raise and support vehicle.
2. Remove front wheels.
3. Remove parking brake cable bracket from transverse link and disconnect cable from disc brake caliper.
4. Using a drift and hammer, remove and discard driveshaft spring pin, **Fig. 1.**
5. Remove caliper support retaining bolts and the disc brake assembly. Suspend assembly from strut.
6. Disconnect tie-rod end, transverse link and damper strut from axle housing.

7. Remove axle shaft with housing from differential.
8. Separate axle shaft from housing using a suitable puller. **Check axle housing bearing for wear or damage and replace oil seals, Fig. 2.**
9. Reverse procedure to install.

Disassembly and Assembly

DISASSEMBLY

1. Remove axle shaft as described previously.
2. Straighten bent claw of large end of boot on DOJ side of axle shaft, then loosen boot band.
3. Remove boot band on small end of DOJ side in same manner, then slide boot away from joint.
4. Remove round circlip at neck of outer race on DOJ side with screwdriver.
5. Remove outer race on DOJ side from shaft assembly.
6. Remove balls and move cage to boot side, then turn cage by 1/2 pitch to track groove of inner race and remove snap ring, inner race, cage and boot. **The CVJ is not to be disassembled.**

INSPECTION

1. Check DOJ and CVJ for seizure, corrosion, damage, or excessive wear.
2. Check shaft for bending, twisting, damage and wear.
3. Check boot for wear, warping and cracking.

ASSEMBLY

1. Install boot on CVJ side and fill with 2-2.5 oz. of special constant velocity joint grease Molylex No. 2 or equivalent.
2. Position boot from DOJ side at center of shaft, then insert cage of DOJ with recess facing outward.
3. Install inner race of DOJ onto shaft and secure with snap ring.
4. Install cage, which was previously positioned, with protruding part aligned with track on inner race and then turn by 1/2 pitch. Apply 0.75-1 oz. of special grease to cage pocket and insert 6 balls into cage pocket, then fill interior of outer race with 0.75-1 oz. of special grease.
5. Align outer race track and ball positions, then fit outer race to inner race and cage.
6. Install circlip into groove on outer race of DOJ, then pull shaft to ensure circlip is seated in groove.
7. Apply 0.75-1 oz. of grease to interior of DOJ and shaft area, then fill boot with 0.75-1 oz. of grease and install. **When installing boot, position outer race of DOJ at center of its travel.**
8. Install new boot bands using suitable tool and tighten until it cannot be moved by hand. **While tightening band, be sure there is enough air within boot.**
9. Tap on clip of band with suitable punch at end of tightening tool and cut off excess band at about 0.4 inch (10mm) from clip, then bend band over clip.
10. Fill CVJ boot and CVJ with special grease and install in same manner as D.O.J. boot.

Axle Shaft Assembly: Service and Repair
Rear Axle Shaft

Removal and Installation

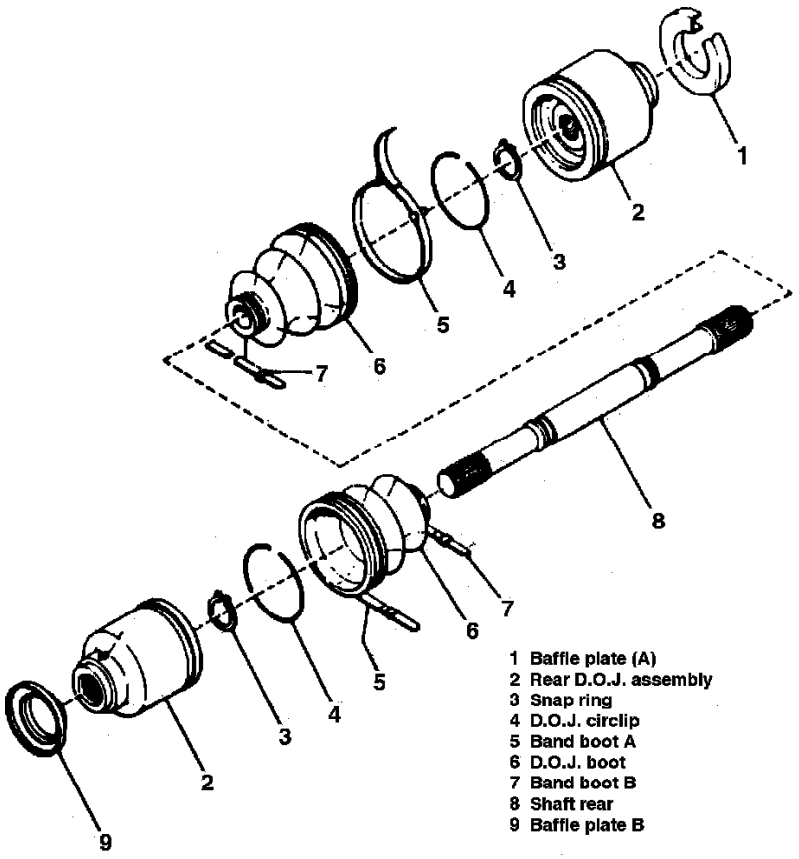

Fig. 1 Exploded View Of Rear Drive Axle

1. Raise and support vehicle.
2. Remove rear wheels.
3. Remove strut-to-inner arm retaining bolts, then separate strut from inner arm.
4. Remove inner trailing arm-to-body retaining bolts, then separate inner arm from body.
5. Using a drift and hammer, drive out spring pins at both ends of drive axle, **Fig. 1.**
6. Separate outer DOJ from rear axle spindle by pushing inner DOJ toward rear differential while pushing brake drum downward, then remove drive axle.
7. Reverse procedure to install.

Disassembly and Assembly

DISASSEMBLY

1. Remove axle shaft as described previously.
2. Straighten bent claw of large end of boot on DOJ side of axle shaft, then loosen boot band.
3. Remove boot band on small end of DOJ side in same manner, then slide boot away from joint.
4. Remove round circlip at neck of outer race on DOJ side with screwdriver.
5. Remove outer race on DOJ side from shaft assembly.
6. Remove balls and move cage to boot side, then turn cage by 1/2 pitch to track groove of inner race and remove snap ring, inner race, cage and boot. **The CVJ is not to be disassembled.**

INSPECTION

1. Check DOJ and CVJ for seizure, corrosion, damage, or excessive wear.
2. Check shaft for bending, twisting, damage and wear.
3. Check boot for wear, warping and cracking.

ASSEMBLY

1. Install boot on CVJ side and fill with 2-2.5 oz. of special constant velocity joint grease Molylex No. 2 or equivalent.
2. Position boot from DOJ side at center of shaft, then insert cage of DOJ with recess facing outward.
3. Install inner race of DOJ onto shaft and secure with snap ring.
4. Install cage, which was previously positioned, with protruding part aligned with track on inner race and then turn by 1/2 pitch. Apply 0.75-1 oz. of special grease to cage pocket and insert 6 balls into cage pocket, then fill interior of outer race with 0.75-1 oz. of special grease.
5. Align outer race track and ball positions, then fit outer race to inner race and cage.
6. Install circlip into groove on outer race of DOJ, then pull shaft to ensure circlip is seated in groove.

Subaru Justy Hatchback 4WD L3-1.2L SOHC (MPFI)

7. Apply 0.75-1 oz. of grease to interior of DOJ and shaft area, then fill boot with 0.75-1 oz. of grease and install. **When installing boot, position outer race of DOJ at center of its travel.**
8. Install new boot bands using suitable tool and tighten until it cannot be moved by hand. **While tightening band, be sure there is enough air within boot.**
9. Tap on clip of band with suitable punch at end of tightening tool and cut off excess band at about 0.4 inch (10mm) from clip, then bend band over clip.
10. Fill CVJ boot and CVJ with special grease and install in same manner as D.O.J. boot.

Wheel Bearing: Adjustments

1. **Torque** axle nut to approximately 29 ft. lbs.
2. Loosen axle nut 1/8 to 1/10 turn.

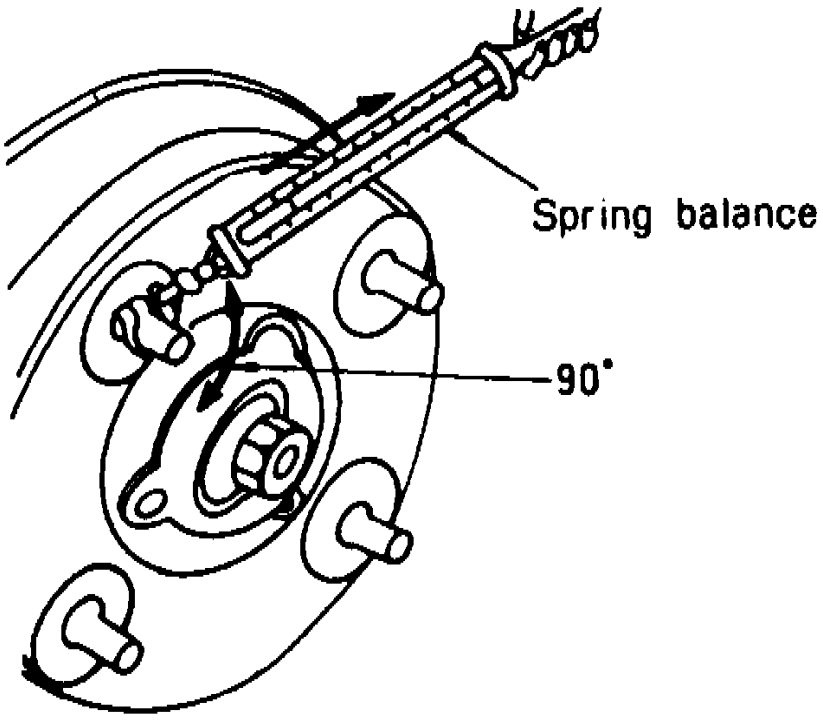

Fig. 1 Checking Rear Wheel Bearing Adjustment

3. Measure starting force using a spring scale as shown in **Fig. 1**. Reading should be 3.1-4.4 lbs.
4. Bend lock plate to locknut in position, then install bearing cap and gasket.

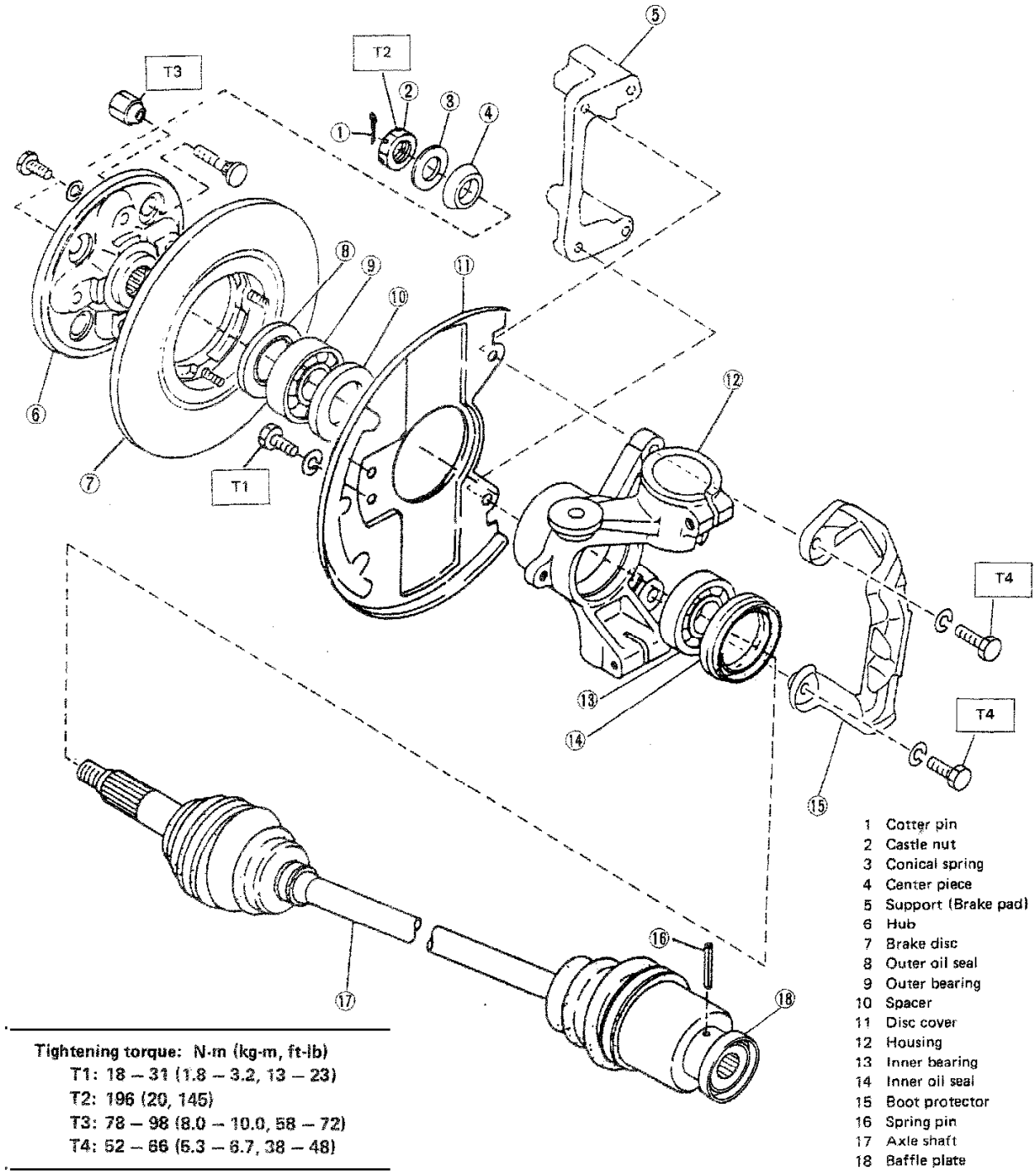

Tightening torque: N·m (kg-m, ft-lb)
T1: 18 – 31 (1.8 – 3.2, 13 – 23)
T2: 196 (20, 145)
T3: 78 – 98 (8.0 – 10.0, 58 – 72)
T4: 52 – 66 (5.3 – 6.7, 38 – 48)

Front Axle

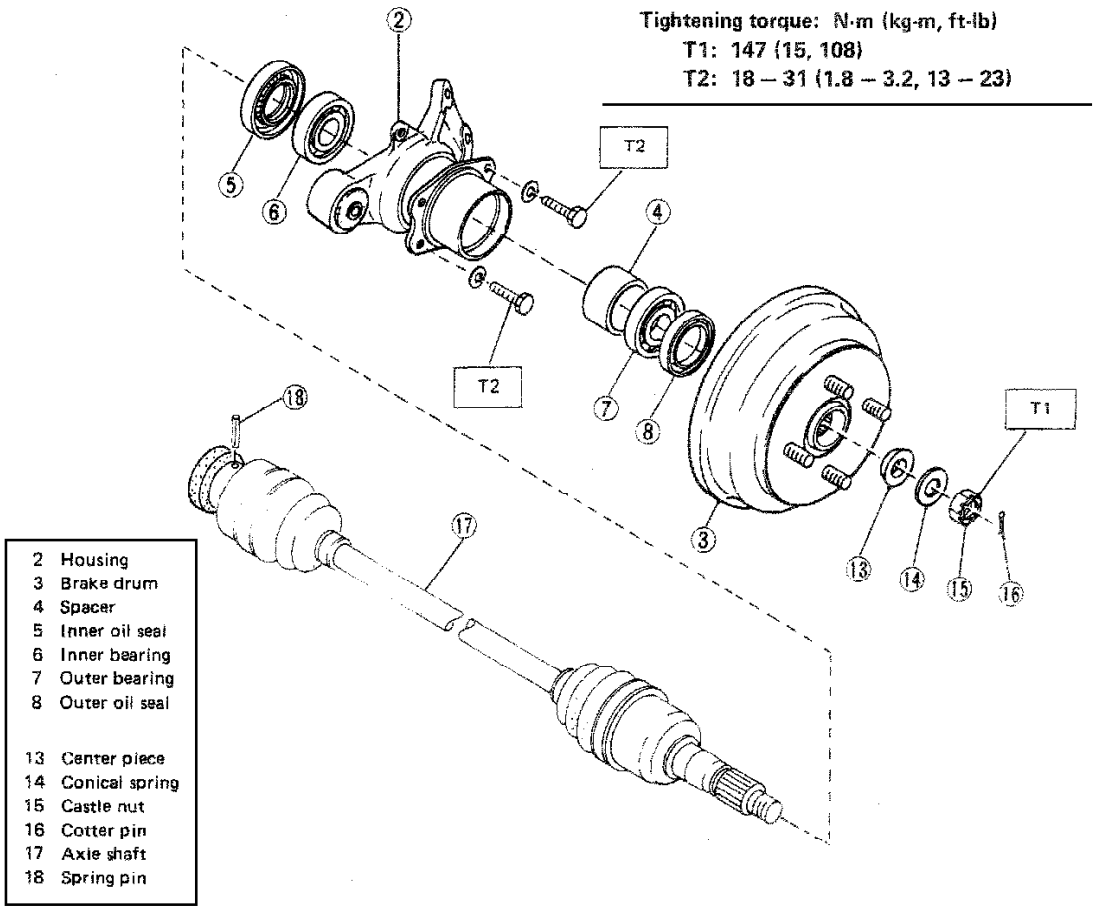
Tightening torque: N·m (kg-m, ft-lb)
T1: 147 (15, 108)
T2: 18 – 31 (1.8 – 3.2, 13 – 23)
T2
T2
T1
2 Housing
3 Brake drum
4 Spacer
5 Inner oil seal
6 Inner bearing
7 Outer bearing
8 Outer oil seal
13 Center piece
14 Conical spring
15 Castle nut
16 Cotter pin
17 Axle shaft
18 Spring pin

Rear Axle

Manual Transmission/Transaxle: Service and Repair

1. Disconnect battery ground cable, then remove air cleaner.
2. Disconnect starter electrical connections and remove starter.
3. Disconnect hoses at changeover actuator.
4. Disconnect speedometer cable and all electrical connections at transaxle.
5. Disconnect distributor to ignition coil high tension lead.
6. Disconnect clutch cable from transaxle, then remove cable bracket and attach lifting hook where bracket was positioned.
7. Remove pitching stopper and brackets between transaxle and body.
8. Support engine using suitable tools, then raise vehicle.
9. Support transaxle with suitable jack, then remove undercovers.
10. Disconnect rear exhaust pipe from front pipe and vehicle body.
11. Remove center member and transverse link.

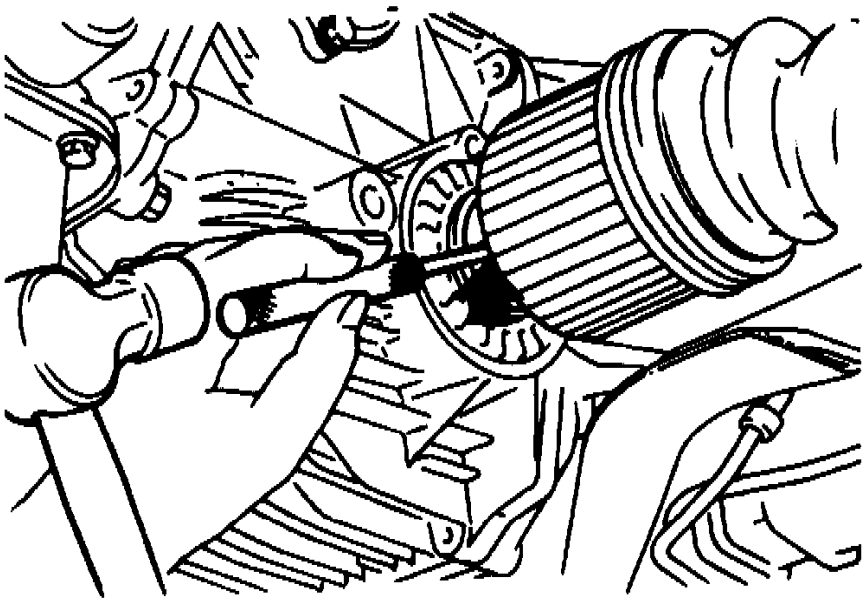

Fig. 2 Spring Pin Removal

12. Using a drift and hammer, drive out spring pin, then disconnect axle shafts from transaxle, **Fig. 2**.
13. Remove attaching bolts, then transaxle mounting bracket.
14. Disconnect gearshift rod, stay and propeller shaft, if applicable, from transaxle
15. Remove transaxle to engine attaching bolts, then disengage transaxle from engine.
16. Lift transaxle carefully and remove from vehicle.
17. Reverse procedure to install.

Gear Sensor/Switch: Description and Operation

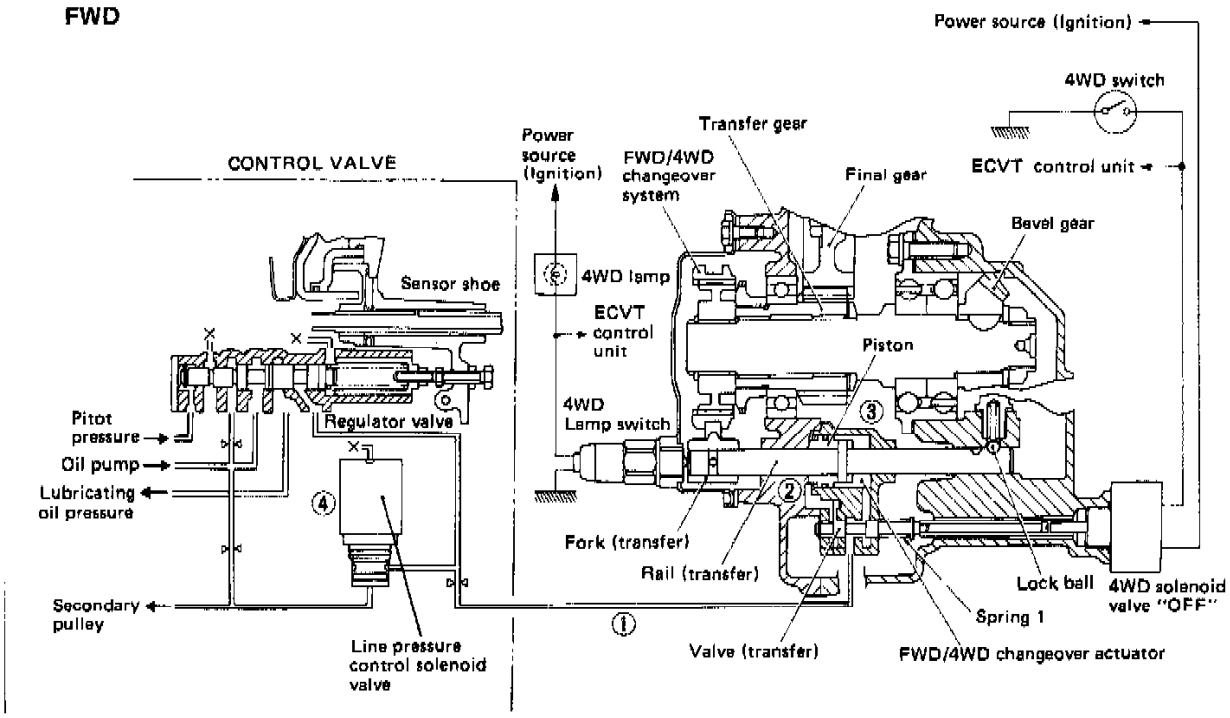

ECVT Shift Mechanism (FWD)

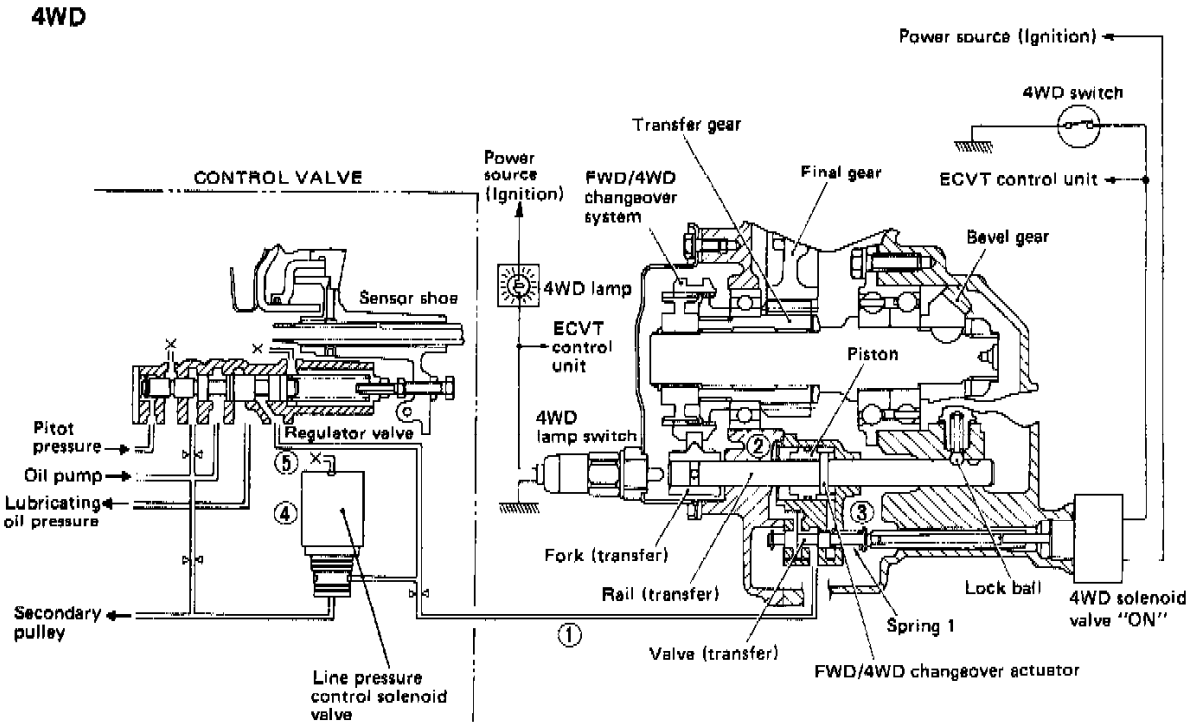

ECVT Shift Mechanism (4WD)

PURPOSE

Shifting from FWD (front-wheel drive) to 4WD (4-wheel drive), or vice versa, is accomplished by a button switch. This switch controls the line pressure to move the fork via the piston and rail.

OPERATION

When current does not flow through the 4W0 solenoid valve ("OFF"), the transfer valve moves to the right due to tension from spring 1. This causes line pressure to flow from circuit "1" to oil chamber "3" so that the piston moves to the left. Movement of the piston disengages the FWD-4WD clutch to set the circuit in the FWD mode.

When current flows through the 4WD solenoid valve ("ON"), the solenoid valve overcomes the tension of spring 1. This causes the transfer valve to move to the left. Line pressure then flows from circuit "1" to oil chamber "2" so that the piston moves to the right. Movement of the piston engages the sleeve and coupling to set the circuit in the 4WD mode.

However, when the line pressure control solenoid valve "4" is "OFF" (i.e., current does not flow through it), line pressure in circuit "1" is

discharged from drain port "5" of line-pressure control solenoid valve "4". As a result, shifting between FWD and 4WD cannot be accomplished.

Transfer Case: Service and Repair

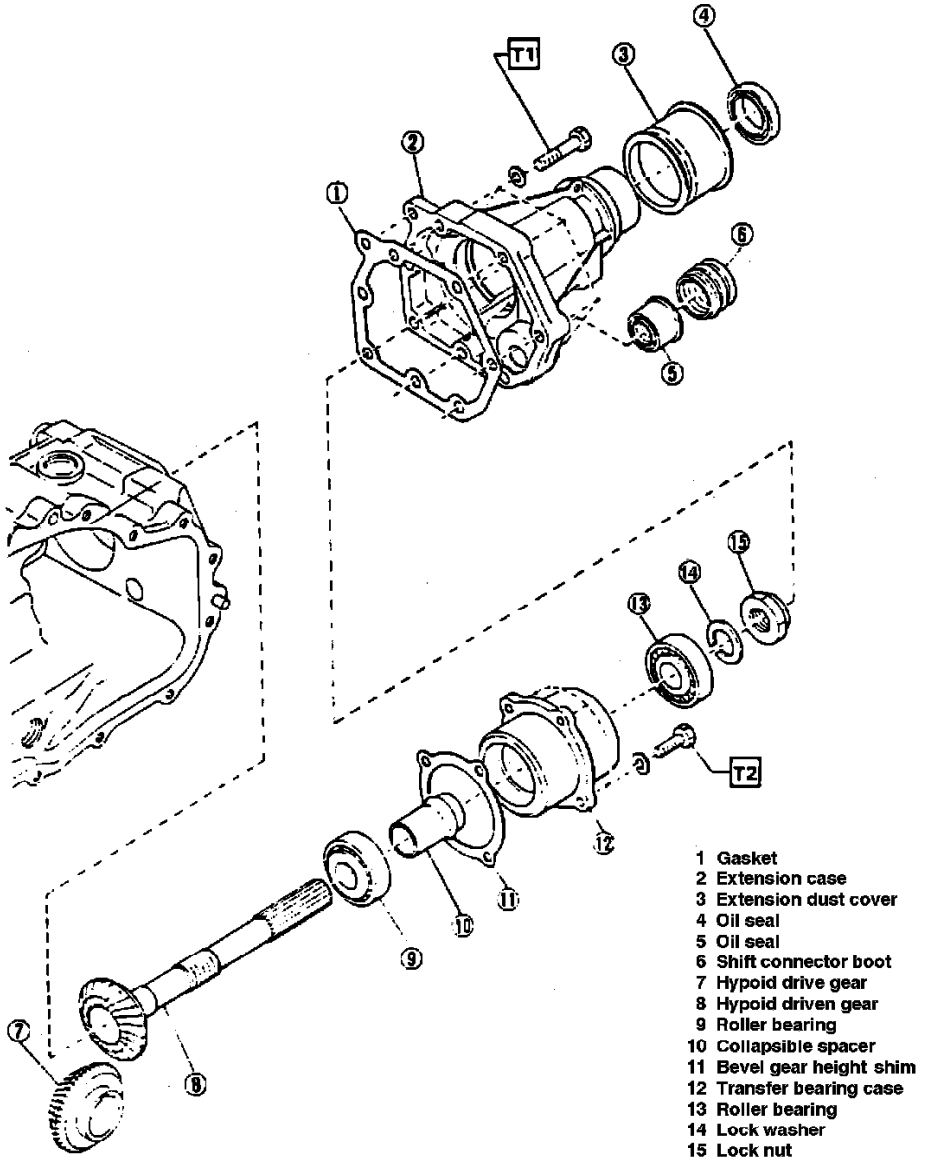

Fig. 9 Extension Case & Components

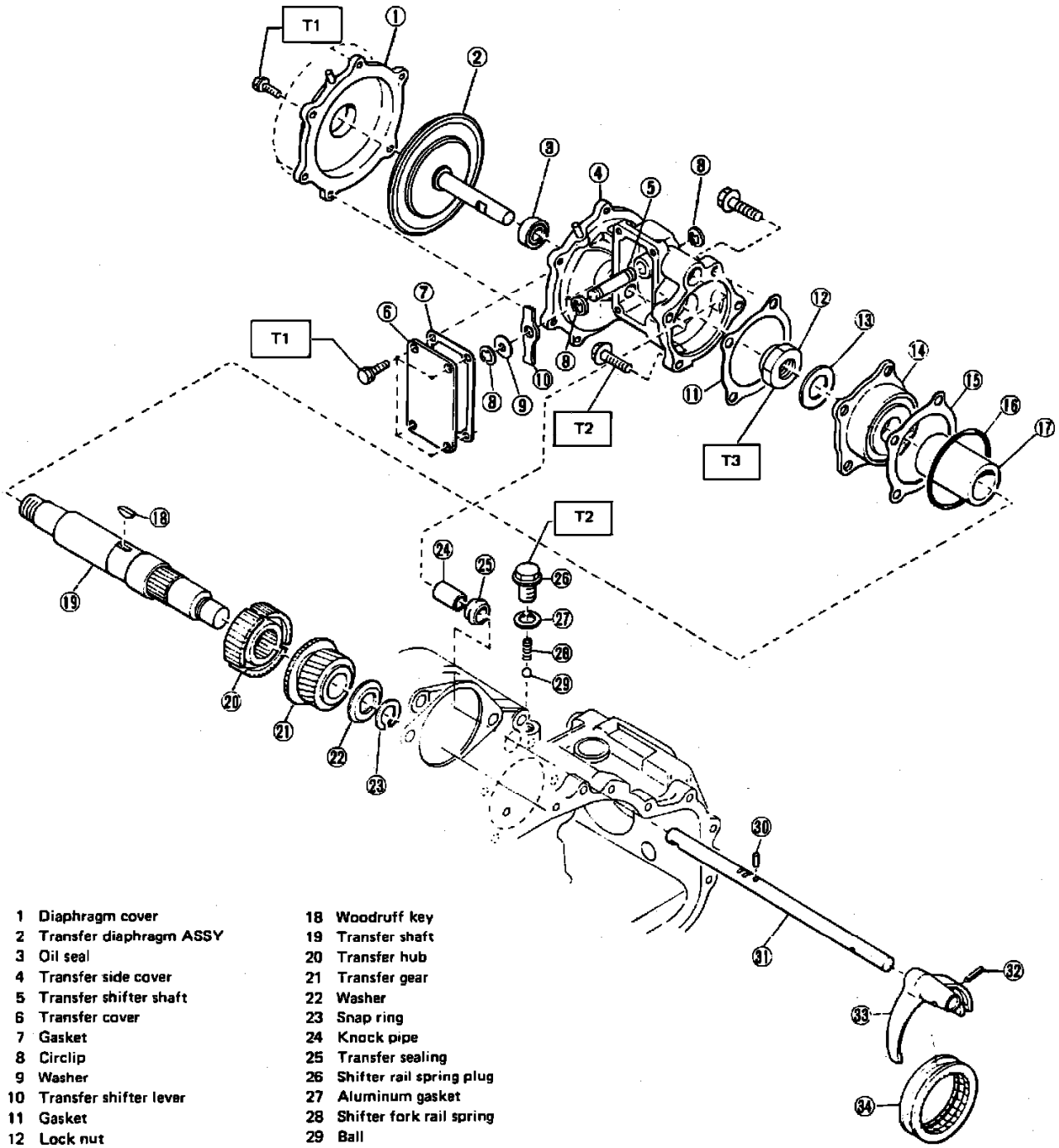

1 Diaphragm cover
2 Transfer diaphragm ASSY
3 Oil seal
4 Transfer side cover
5 Transfer shifter shaft
6 Transfer cover
7 Gasket
8 Circlip
9 Washer
10 Transfer shifter lever
11 Gasket
12 Lock nut
13 Lock washer
14 Ball bearing
15 Drive pinion shim
16 O-ring
17 Transfer gear coller
18 Woodruff key
19 Transfer shaft
20 Transfer hub
21 Transfer gear
22 Washer
23 Snap ring
24 Knock pipe
25 Transfer sealing
26 Shifter rail spring plug
27 Aluminum gasket
28 Shifter fork rail spring
29 Ball
30 Straight pin
31 Transfer shifter rail
32 Straight pin
33 Transfer shifter fork
34 Synchronizer sleeve

Tightening torque: N·m (kg-m, ft-lb)
T1: 9.0 – 10.6 (0.92 – 1.08, 6.7 – 7.8)
T2: 18 – 22 (1.8 – 2.2, 13 – 16)
T3: 73 – 84 (7.4 – 8.6, 54 – 62)

Fig. 10 Transfer Case & Components

Refer to **Figs. 9 and 10,** when performing the following procedure.

REMOVAL

1. Remove transmission as outlined previously.
2. Remove side cover and main case.
3. Remove attaching bolts, then separate extension case and transfer bearing case from clutch housing.
4. Remove attaching bolts, then the transfer cover and gasket from transfer case side cover.
5. Remove circlip from shifter shaft, then remove washer and shifter lever.
6. Remove side cover attaching bolts, then the diaphragm cover and diaphragm.
7. Remove side cover attaching bolts, then the side cover and gasket.
8. Remove shifter rail spring plug, spring and ball from housing.
9. Remove shifter rail, together with synchronizer, through case side.
10. Tap transfer shaft assembly from case using suitable mallet.

INSTALLATION

1. Install transfer shaft assembly, together with drive pinion shim and O-ring into case. **Torque** attaching bolts to 13-16 ft. lbs.

2. Install bearing case and height shim, then **torque** bearing case attaching bolts to 20-24 ft. lbs. Ensure backlash is between .0039-.0059 inch. Adjust backlash by changing shim as required.
3. Press new seal into extension case using suitable tool.
4. Install extension case using new gasket, then **torque** attaching bolts to 17-20 ft. lbs.
5. Press oil seal and knock pipe into side case, then install shifter shaft into side cover.
6. Attach seal to knock pipe, then align knock pipe with transfer rail hole in clutch housing.
7. Install side cover, adjusting shim, transfer shaft bearing and gasket, then **torque** attaching bolts to 13-16 ft. lbs.
8. Install shifter rail and synchronizer into side cover from main case side.
9. Install diaphragm, then assemble shifter lever and washer to shifter shaft and retain with clip.
10. Install diaphragm cover to side cover.
11. Install transfer cover and gasket to clutch housing, then **torque** attaching bolts to 7 ft. lbs.
12. Install ball, spring and shifter rail spring plug into clutch housing and **torque** plug to 14 ft. lbs.

Transmission Control Systems: Description and Operation
General System Description

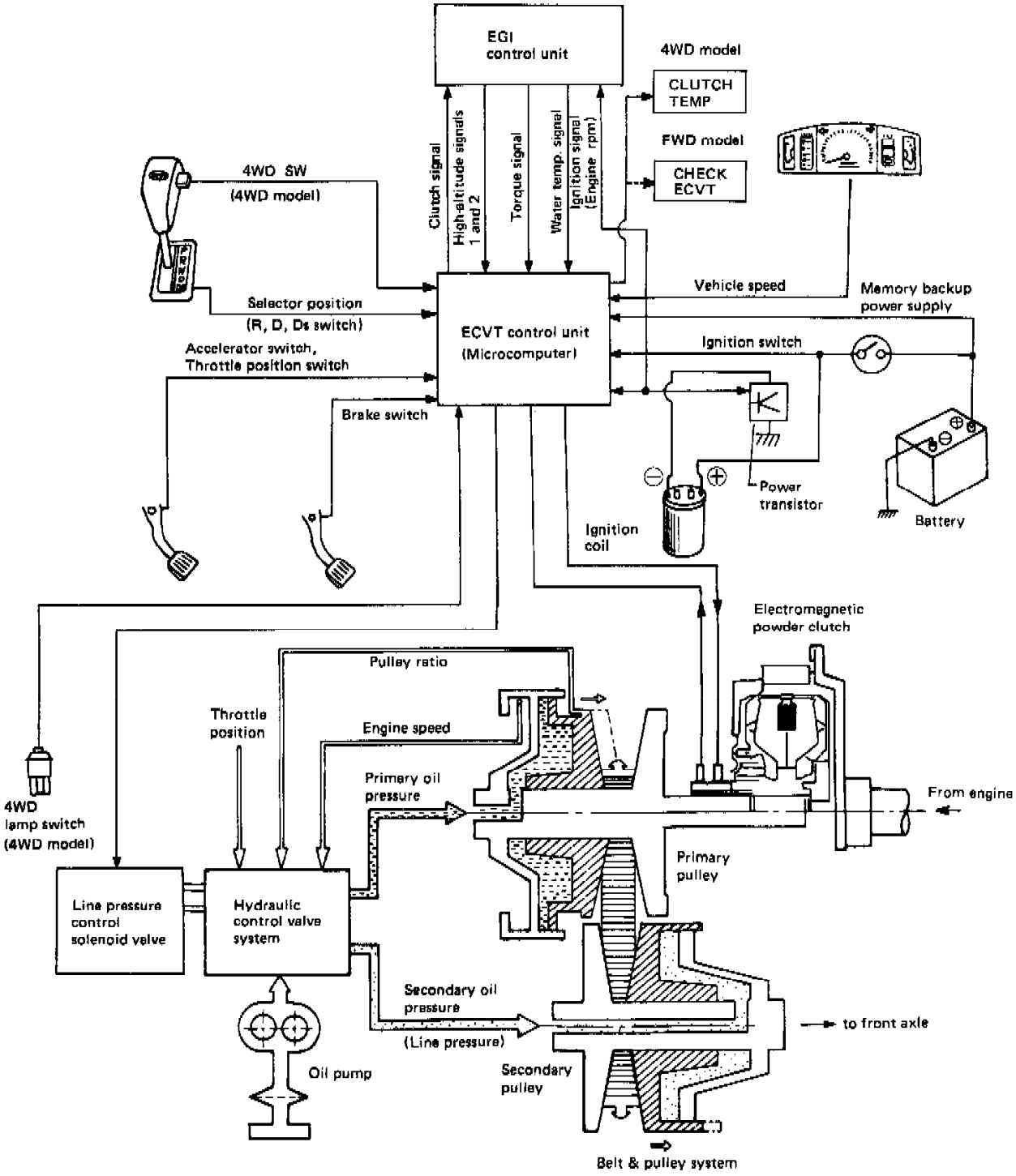

ECVT System Diagram

FWD

The ECVT combines an electronically controlled magnetic clutch with a variable transmission that is driven by steel belt pulleys to provide high running performance, low fuel consumption and ease of control.

Hydraulic line pressure can be changed from "high" to "low" or vice versa, in response to engine load and output. In addition, the ECU and the clutch are controlled by microcomputer to enhance high transmitting efficiency and excellent driveability.

In the data communication between ECU and clutch control, rationalization of the system is accomplished by controlling the electromagnetic clutch through coolant temperature and ignition advance signals which are emitted from the ECU. Line pressure is regulated through a torque signal.

The magnetic clutch is designed for exclusive use with the ECVT. It is a "standing-start" clutch that uses magnetic powder and is controlled by a microcomputer which constantly evaluates engine-speed, car-speed, and throttle-position signals.

The variable transmission consists of a steel belt and a set of pulleys. Groove width is controlled by hydraulic pressure to provide stepless

speed changes from a standing start to maximum speed without a shifting "shock", thus enhancing high running performance.

4WD

The 4WD model is equipped with a hydraulically operated selective transfer unit at the rear of the front differential, as well as with the same type of ECVT installed in the FWD model.

CONSTRUCTION

The Subaru ECVT consists of the following five systems: electromagnetic powder clutch, forward-and-reverse changeover, belt-and-pulley, hydraulic control, and final reduction systems.

The electromagnetic powder clutch couples the engine to, or uncouples the engine from, the transmission. Its operation is regulated by a control unit (microcomputer) which receives signals corresponding to engine speed, vehicle speed, accelerator pedal depression, etc.

The forward and reverse changeover system uses a dog clutch provided with a synchromesh mechanism. It is linked with the selector lever via a push-pull cable.

The belt-and-pulley system provides an automatic and stepless speed change for the final reduction system in response to power transmitted from the electromagnetic powder clutch. Control of oil pressure applied to the input and output shafts of this system is accomplished depending upon engine torque, engine speed, accelerator pedal depression, pulley ratio, etc.

FEATURES

^ Stepless speed changeover from a standing start to high speeds permits ready "high-performance" driving for any driver.
^ Unlike the "L" and "2" ranges of a conventional automatic transmission, the Ds range uses the engine's high-speed range which allows driving capabilities such as a standing start to achieve maximum speed. It is also provided with an engine brake effect.
^ The electromagnetic powder clutch eliminates the slip loss which is encountered with a conventional torque converter, resulting in low fuel costs.
^ The electromagnetic powder clutch remains off during vehicle stop, eliminating an abrupt movement even when the brakes are released with the selector lever set to the "D", "Ds" or "R" range.
^ Shock-free shifting, combined with frequent use of overdrive, assures quiet operation and smooth driving.
^ Changeover from "FWD" to "4WD" or vice versa is accomplished simply by pressing a pushbutton switch that uses low line pressure (4WD model only).

Transmission Control Systems: Description and Operation
FWD-4WD Shift Mechanism (4WD)

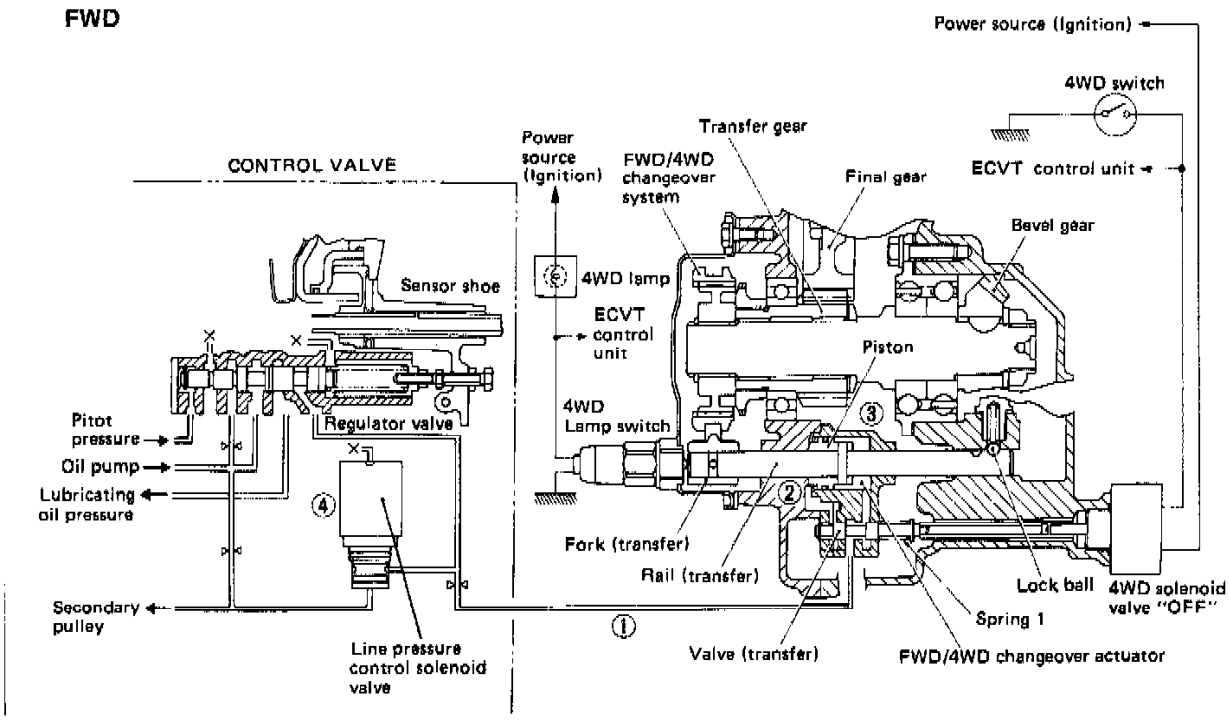

ECVT Shift Mechanism (FWD)

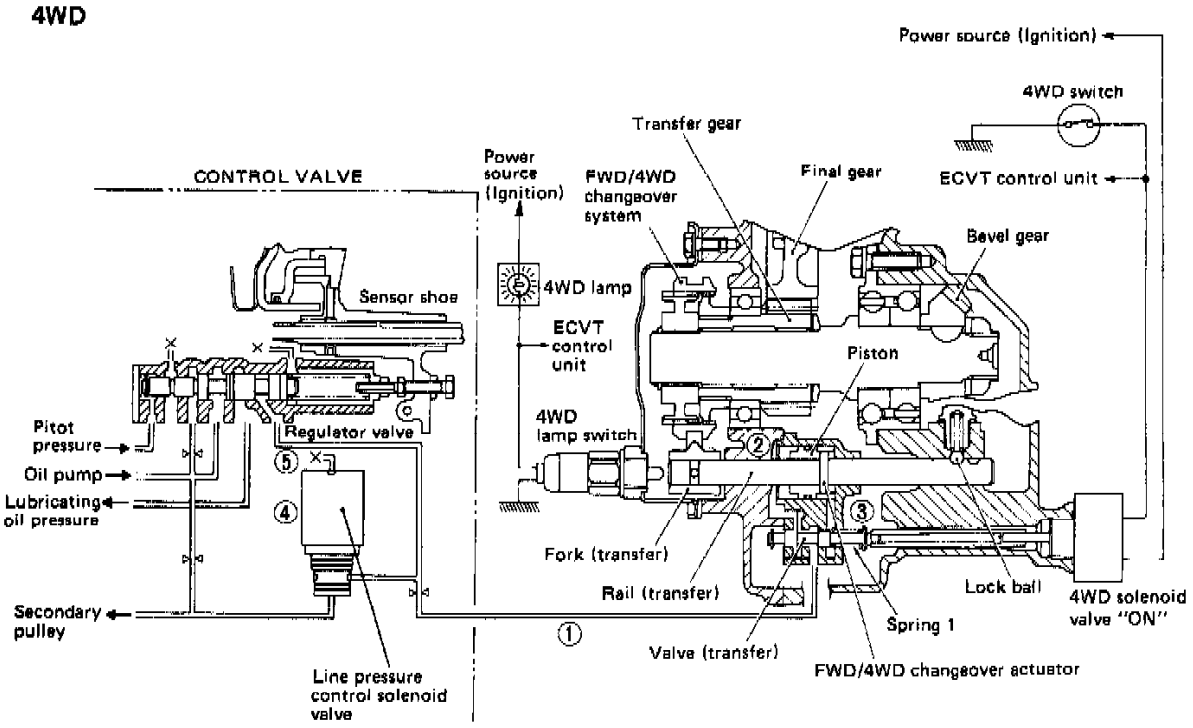

ECVT Shift Mechanism (4WD)

OPERATION

Shifting from FWD (front-wheel drive) to 4WD (4-wheel drive), or vice versa, is accomplished by a button switch. This switch controls the line pressure to move the fork via the piston and rail.

When current does not flow through the 4W0 solenoid valve ("OFF"), the transfer valve moves to the right due to tension from spring 1. This causes line pressure to flow from circuit "1" to oil chamber "3" so that the piston moves to the left. Movement of the piston disengages the FWD-4WD clutch to set the circuit in the FWD mode.

When current flows through the 4WD solenoid valve ("ON"), the solenoid valve overcomes the tension of spring 1. This causes the transfer valve to move to the left. Line pressure then flows from circuit "1" to oil chamber "2" so that the piston moves to the right. Movement of the piston engages the sleeve and coupling to set the circuit in the 4WD mode.

However, when the line pressure control solenoid valve "4" is "OFF" (i.e., current does not flow through it), line pressure in circuit "1" is discharged from drain port "5" of line-pressure control solenoid valve "4". As a result, shifting between FWD and 4WD cannot be accomplished.

Transmission Control Systems: Flow of Diagnosis

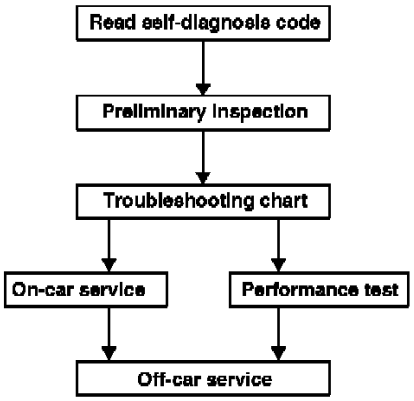

Flow Of Diagnosis

^ ECVT system problems may be caused by failure of the engine, the electronic control system, the transmission, or by a combination of these. These causes must be distinguished clearly when troubleshooting.

^ Troubleshooting should be conducted by rotating with simple, easy operations and proceding to complicated operations. The most important thing in troubleshooting is to understand the customer's complaint, and distinguish between these causes.

Transmission Control Systems: Initial Inspection and Diagnostic Overview

Problems which occur in the ECVT are often solved by conducting the basic inspection and adjustment procedures. Before troubleshooting the ECVT, always conduct the following preliminary checks to save time and labor.

In diagnosing the problem, it is best to first locate the part of the ECVT system (such as clutch, control unit, switches, hydraulic control valve, transmission, etc.) that is causing the problem.

Instruments required for checks. It is recommended that tachometer and circuit tester be located inside the driver compartment to facilitate measurements.

^ Engine tachometer
^ Circuit tester
^ Oil pressure gauge [0 - 3,432 kPa (0 - 498 psi) range]
^ Boost meter (used to measure intake manifold vacuum pressure)
^ Timing light

Preliminary checks.

^ Ensure that the necessary engine adjustments are made properly. Ensure idle speed, idle boost and ignition timing are all checked. Check engine rpm when the dashpot and lever come in contact with each other. If the engine operates erratically, check the stall engine speed.
^ Ensure the accelerator pedal, transmission control cable and carburetor linkages operate properly (Confirmation of the full-open and full-close functions).
^ Ensure the accelerator switch and throttle-position switch operate within the specified ranges in relation to the depression of the accelerator pedal.
^ Ensure the selector cable linkage is adjusted to the specified position and the inhibitor switch operates at the specified position.
^ Ensure the clutch control unit connector and the brush holder harness connector are connected properly.
^ Ensure the clutch control unit is self-diagnosed properly.
^ Ensure no leakage occurs at and around the transmisson.
^ Ensure the ATF level is in the specified range.

Transmission Control Systems: Reading and Clearing Diagnostic Trouble Codes

Display of Self-Diagnostic Items

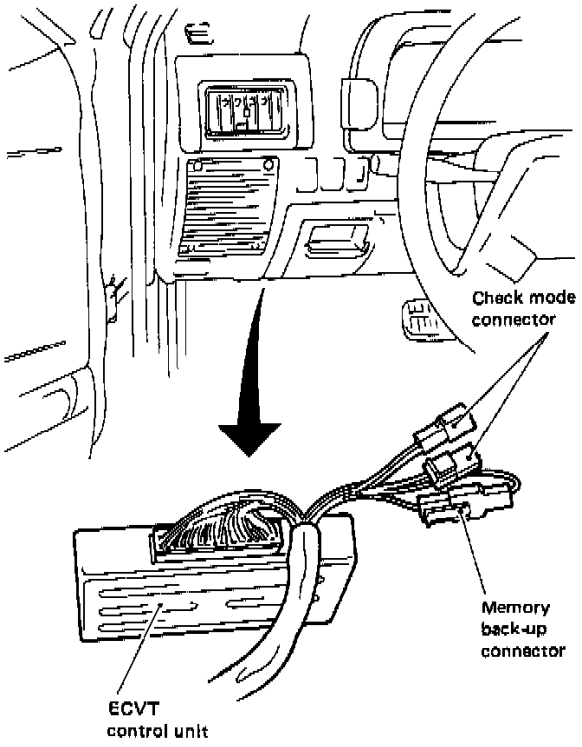

ECVT Control Unit And Test Connectors

When a problem occurs in the ECVT, the "CHECK ECVT" warning indicator light will illuminate. (On 4WD models, the "CLUTCH TEMP" light performs this function.)

(When there is no problem in the ECVT, the "CHECK ECVT" warning indicator light will go out soon after the engine starts.) When the warning indicator light illuminates, connect the CHECK MODE connector, determine the cause of the problem in accordance with the call-up procedure and repair the faulty part as per the troubleshooting chart. (After repairs, recheck that the problem has been eliminated and then clear the memory.)

WARNING DISPLAY READOUT

Mode	CHECK ECVT warning indicator light				CHECK MODE connector	MEMORY BACK-UP connector
	Normal condition		Abnormal condition			
	Ignition switch "ON"	After engine starts	Ignition switch "ON"	After engine starts		
U-check	Remains "ON"	OFF	Remains "ON"	Remains "ON"	Disconnect at all times	Connect at all times
Read memory	Same as above	Emits vehicle and OK codes	Same as above	*Emits vehicle and trouble codes	Connect	Same as above
D-check	Same as above	Same as above	Same as above		Same as above	Same as above
(Clear memory)	—	—	—	—	Disconnect at all times	Disconnect for at least one minute before reconnecting

*Remains "ON" when ignition signal system is in trouble.

CHECK ECVT Warning Display Readout

EXAMPLE OF CODE DISPLAY

- **Vehicle code (Vehicle type identification code)**

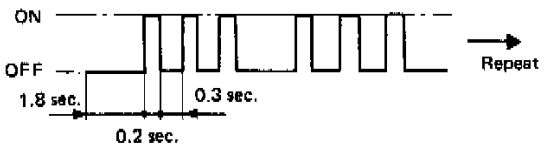

- **Trouble code**

When one part becomes inoperative:
e.g.: Trouble code "13"

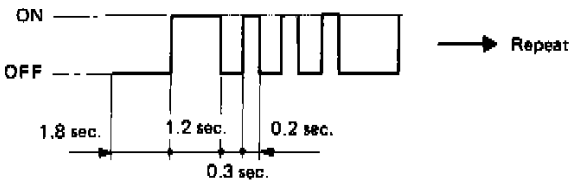

- **OK code**

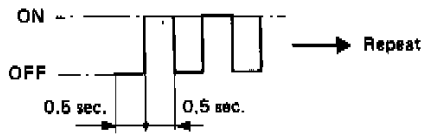

When two or more parts become inoperative:
e.g.: Trouble codes "13" and "21"

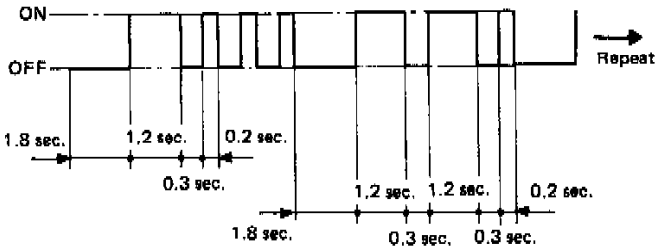

ECVT Code Display

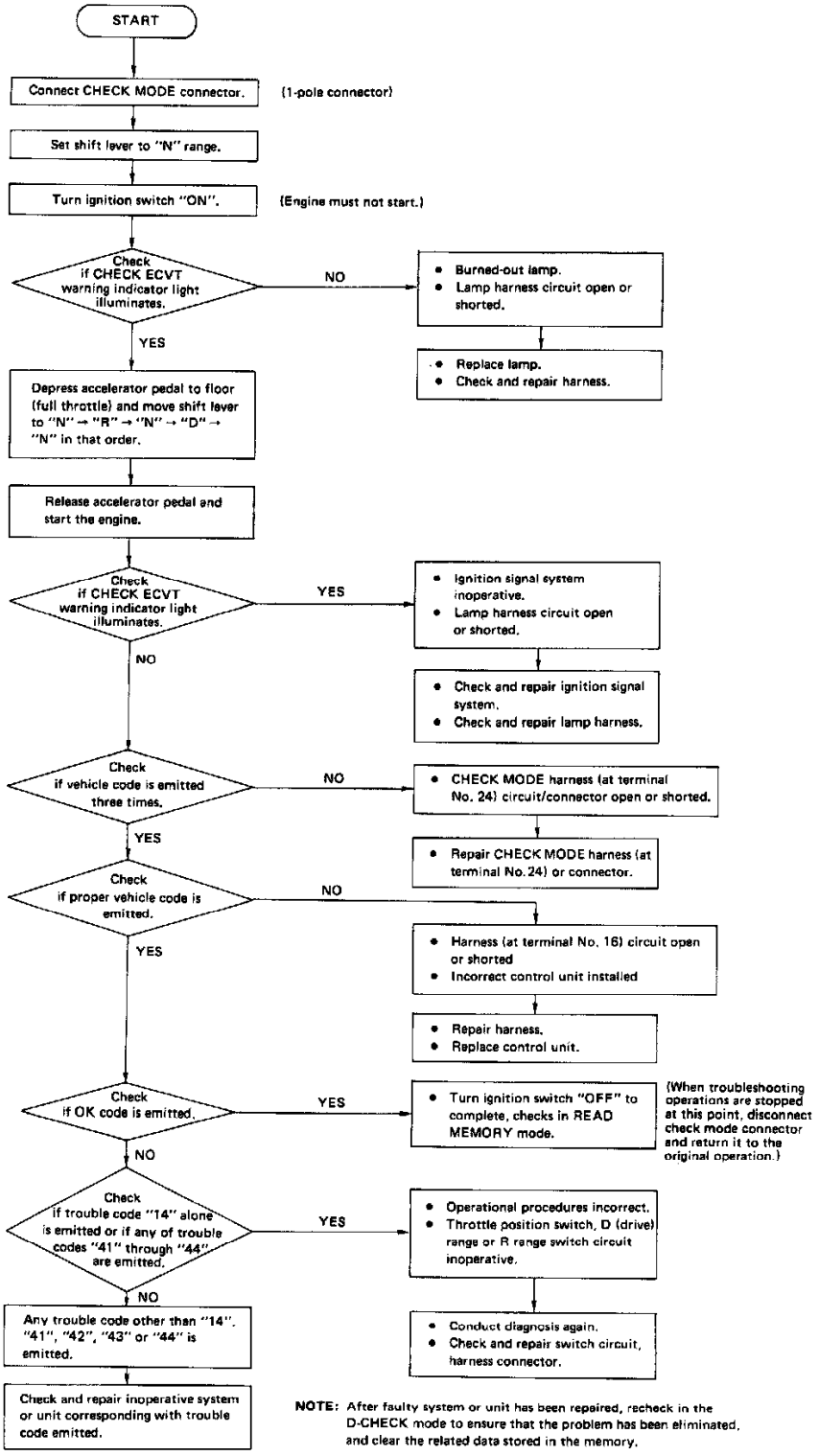

ECVT "Read Memory" Mode

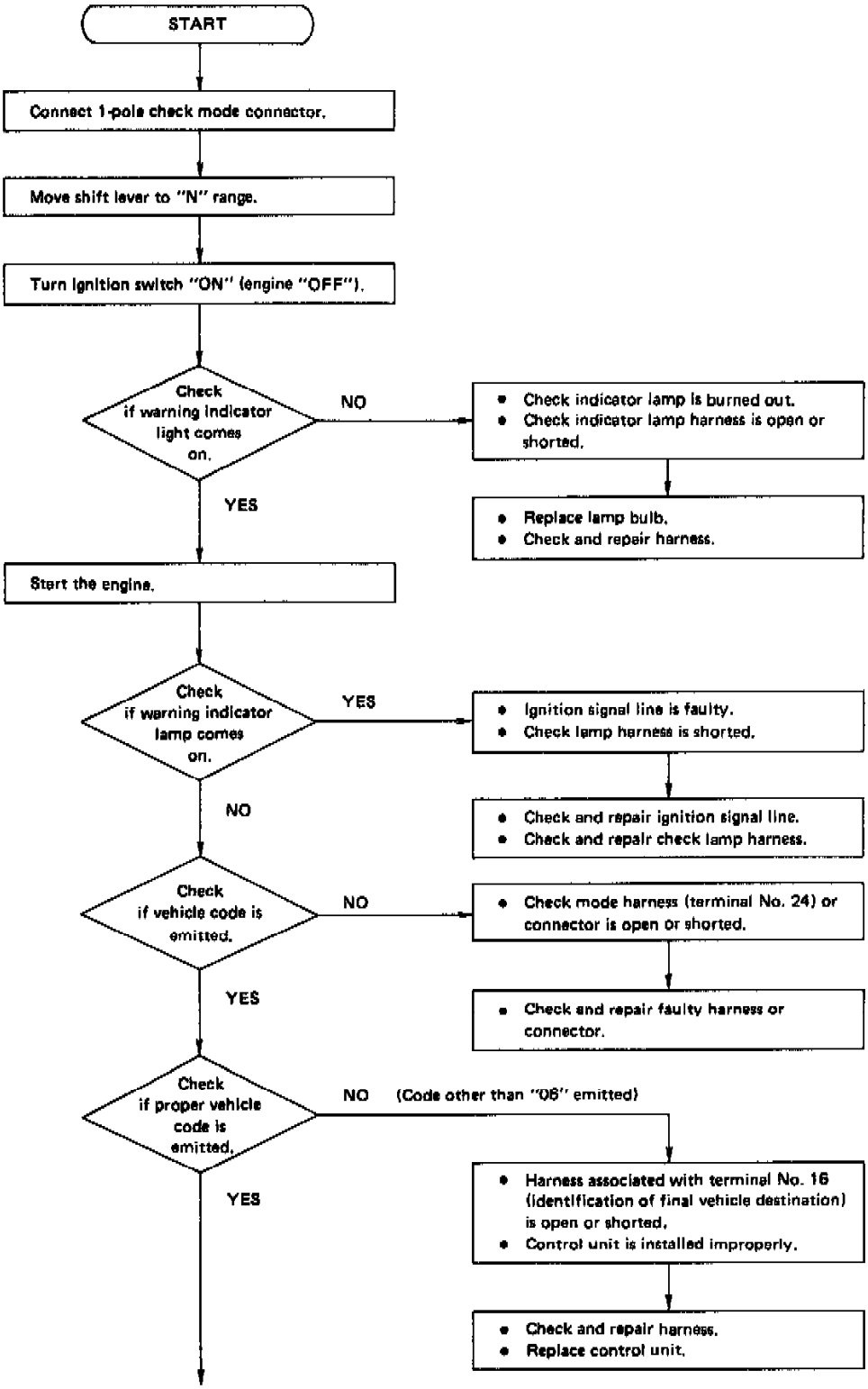

ECVT D-Check Mode (Part 1)

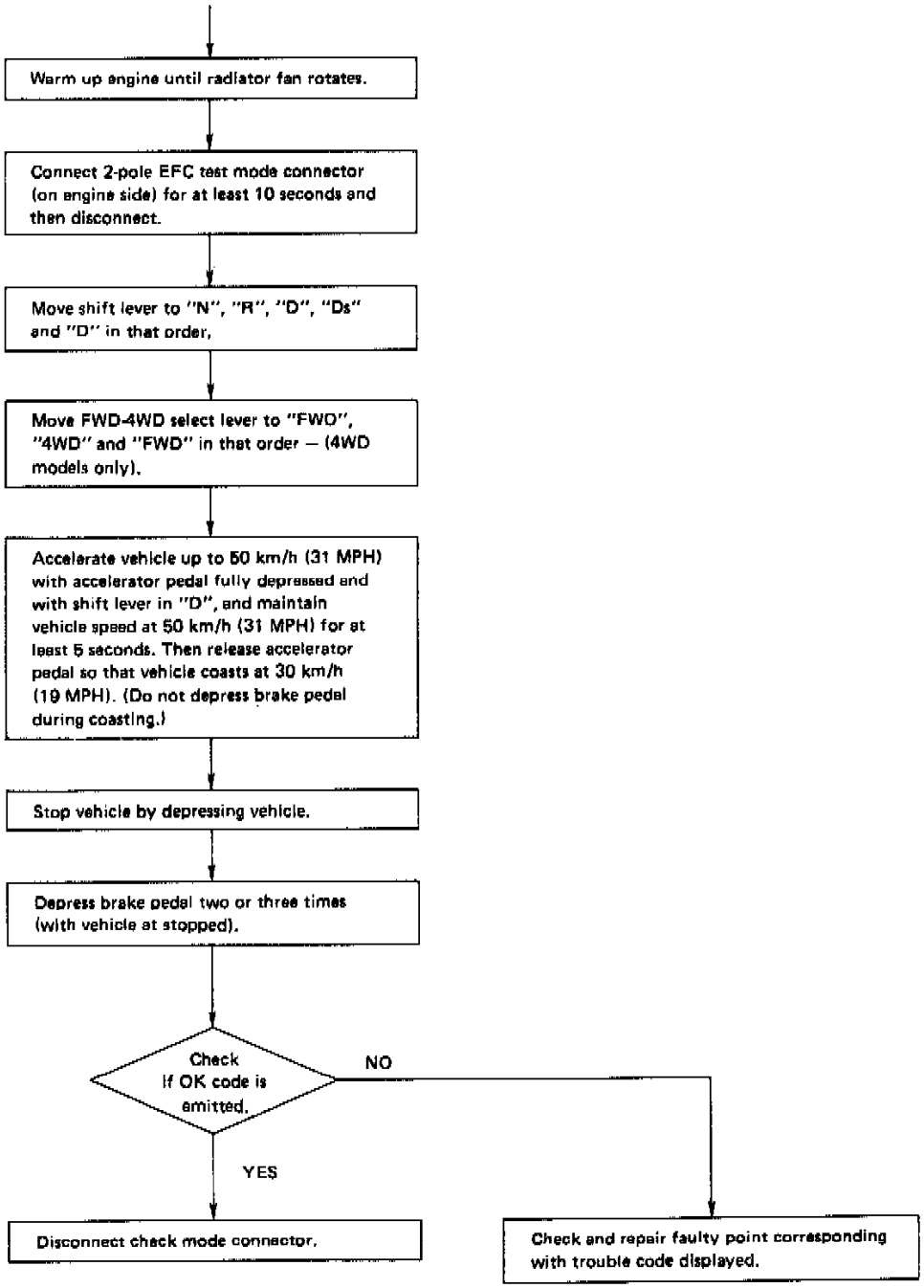

ECVT D-Check Mode (Part 2)

Memory Clear

To cancel previous trouble codes stored in memory. set the self-diagnostic system in the CLEAR MEMORY mode and disconnect the 2-pole MEMORY BACK-UP connector for at least one minute.

NOTE: After cancelling previous trouble codes, re-connect the MEMORY BACK-UP connector.

Trouble code (Blinks)	System in trouble	Probable cause	Parts to check
13	D-range switch signal system	D-range switch signal circuit open or shorted.	① Wire harness and connector ② D-range inhibitor switch ③ Control unit
14	Ds-range switch signal system	Ds-range switch signal circuit open or shorted.	① Wire harness and connector ② Ds-range inhibitor switch ③ Control unit
15	R-range switch signal system	R-range switch signal circuit open or shorted.	① Wire harness and connector ② R-range inhibitor switch ③ Control unit
21 (*1)	Torque signal system	Torque signal remains "ON" or "OFF".	① Wire harness and connector ② Control unit ③ EFC control unit
22	Water temperature signal system	Signal remains "ON" or "OFF".	① Wire harness and connector ② Control unit ③ EFC control unit
26	Slow cut solenoid system	Slow cut output circuit open or shorted.	① Wire harness and connector ② Slow cut solenoid ③ Control unit
31	Accelerator switch signal system	Accelerator switch signal circuit open or shorted.	① Wire harness and connector ② Accelerator switch ③ Control unit
32	Throttle position signal system	Throttle position signal circuit open or shorted.	① Wire harness and connector ② Throttle position switch ③ Control unit
33	Vehicle speed signal system	Vehicle speed signal not entered.	① Wire harness and connector ② Speedometer cable ③ Vehicle speed switch ④ Control unit
34	Clutch coil system	Current control does not occur for at least 3 seconds during standing start.	① Wire harness and connector ② Brush holder ③ Clutch ④ Control unit
35	Line pressure solenoid system	Line pressure solenoid output circuit open or shorted.	① Wire harness and connector ② Line pressure solenoid ③ Control unit
41	High altitude signal 1	High altitude signal 1 remains "ON" or "OFF".	① Wire harness and connector ② Control unit ③ EFC control unit
42	High altitude signal 2	High altitude signal 2 remains "ON" or "OFF".	① Wire harness and connector ② Control unit ③ EFC control unit

Trouble Code Chart (Part 1)

Trouble code (Blinks)	System in trouble	Probable cause	Parts to check
45 (*2)	Brake switch signal system	Brake signal switch circuit open or shorted.	1 Wire harness and connector 2 Brake switch 3 Control unit

*1: When torque signal circuit becomes inoperative, check EFC control unit sensor system (including pressure sensor, vehicle speed sensor, etc.). Also check air conditioner harness and switch signal connector.

*2: When vehicle-speed pulse circuit becomes inoperative while driving, brake signal circuit problem may also be stored in memory.

Trouble Code Chart (Part 2)

Transmission Control Systems: Symptom Related Diagnostic Procedures

Trouble Diagnosis Chart

DIAGNOSIS CHART

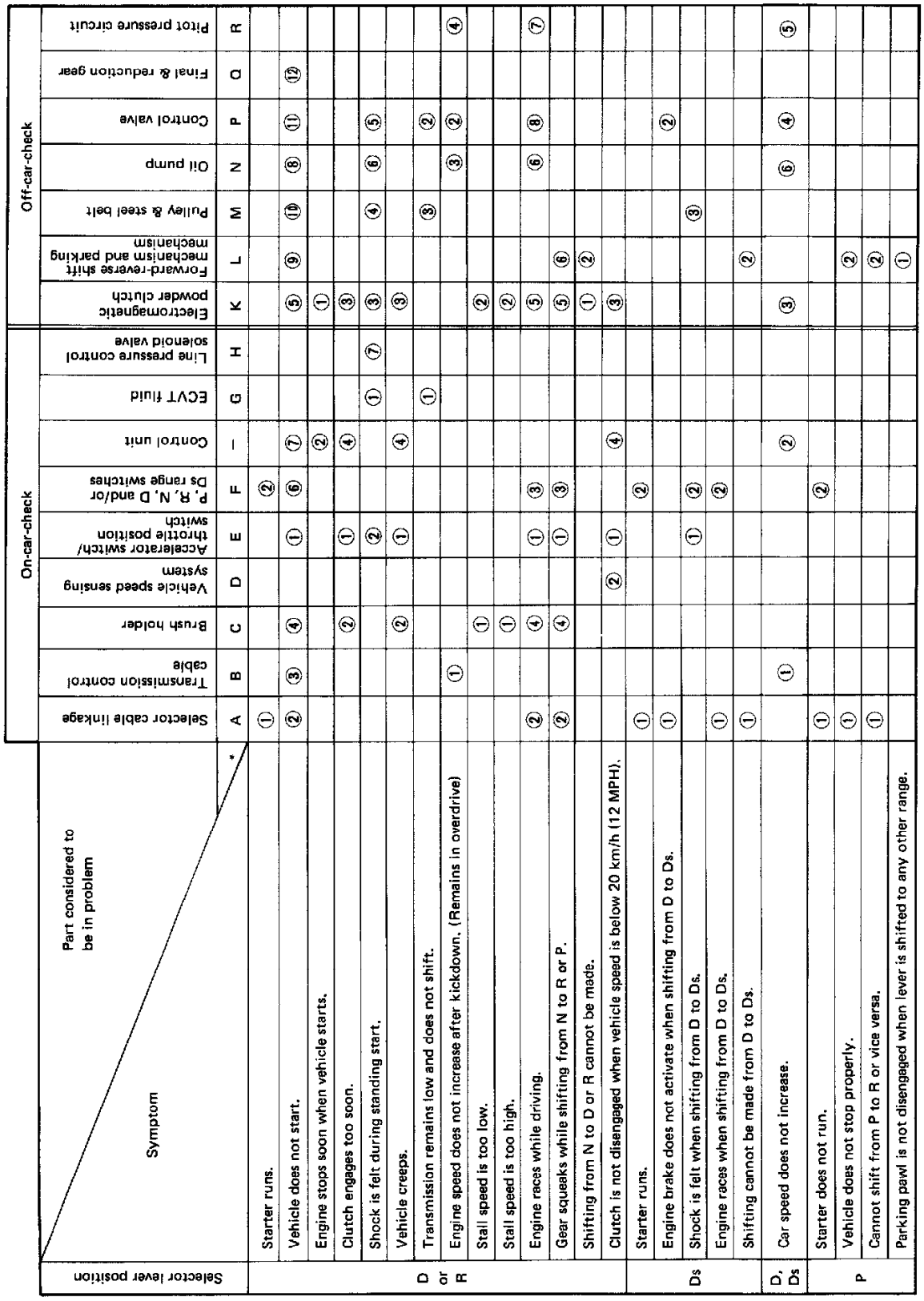

Selector lever position	Symptom \ Part considered to be in problem	*	On-car-check: A Selector cable linkage	B Transmission control cable	C Brush holder	D Vehicle speed sensing system	E Accelerator switch/ throttle position switch	F P, R, N, D and/or Ds range switches	– Control unit	G ECVT fluid	H Line pressure control solenoid valve	Off-car-check: K Electromagnetic powder clutch	L Forward-reverse shift mechanism and parking mechanism	M Pulley & steel belt	N Oil pump	P Control valve	Q Final & reduction gear	R Pitot pressure circuit
D or R	Starter runs.		①					②										
	Vehicle does not start.		②	③	④		①	⑥	⑦			⑤	⑨	⑩	⑧	⑪	⑫	
	Engine stops soon when vehicle starts.								②			①						
	Clutch engages too soon.				②		①		④			③						
	Shock is felt during standing start.						②			①	⑦	③		④	⑥	⑤		
	Vehicle creeps.				②		①		④			③						
	Transmission remains low and does not shift.									①				③		②		
	Engine speed does not increase after kickdown. (Remains in overdrive)			①											③	②		④
	Stall speed is too low.				①							②						
	Stall speed is too high.				①							②						
	Engine races while driving.		②		④		①	③				⑤			⑥	⑧		⑦
	Gear squeaks while shifting from N to R or P.		②		④		①	③				⑤	⑥					
	Shifting from N to D or R cannot be made.											①	②					
	Clutch is not disengaged when vehicle speed is below 20 km/h (12 MPH).					②	①		④			③						
Ds	Starter runs.		①					②										
	Engine brake does not activate when shifting from D to Ds.		①													②		
	Shock is felt when shifting from D to Ds.						①	②						③				
	Engine races when shifting from D to Ds.		①					②										
	Shifting cannot be made from D to Ds.		①										②					
D, Ds	Car speed does not increase.			①					②			③			⑥	④		⑤
P	Starter does not run.		①					②										
	Vehicle does not stop properly.		①										②					
	Cannot shift from P to R or vice versa.		①										②					
	Parking pawl is not disengaged when lever is shifted to any other range.												①					

*: Symbols "A" through "R" refer to probable causes which are indicated on the next page.
○: Figures in a circle refer to diagnostic procedures.

Trouble Diagnosis Chart

PROBABLE CAUSE CHART

Symbol	Probable cause
A	1) Selector cable linkage improperly adjusted.
B	1) Improperly adjusted 2) Cable end broken 3) Inner cable broken 4) Liner degraded
C	1) Faulty insulation 2) Brush broken, worn or seized
D	1) Speedometer cable broken or improperly assembled 2) Reed switch faulty 3) Vehicle speed sensing circuit open, shorted or poorly connected
E F	1) Improperly adjusted 2) Circuit open, shorted or poorly connected
G	1) Fluid level too low.
H	1) Solenoid valve faulty 2) Harness open or shorted
K	1) Faulty insulation 2) Bearing locked 3) Oil on slip ring
L	1) Fork broken 2) Baulk ring worn 3) Parking mechanism faulty
M	1) Movable sheave of primary or secondary pulley inoperative 2) O-ring broken
N	1) Excessive tightening torque to side case 2) Gear, oil pump and housing gouged 3) Seal ring worn
P	1) Valve stick (Shift control valve, Compensation plunger, Pressure regulator valve) 2) Oil circuit leakage
Q	1) Drive pinion shaft broken 2) Reduction gear broken 3) Final gear broken 4) Differential gear broken
R	1) Oil circuit leakage 2) Improper pitot pressure

Trouble Diagnosis Cause Chart

1) Starter does not run when selector lever is in N or P.

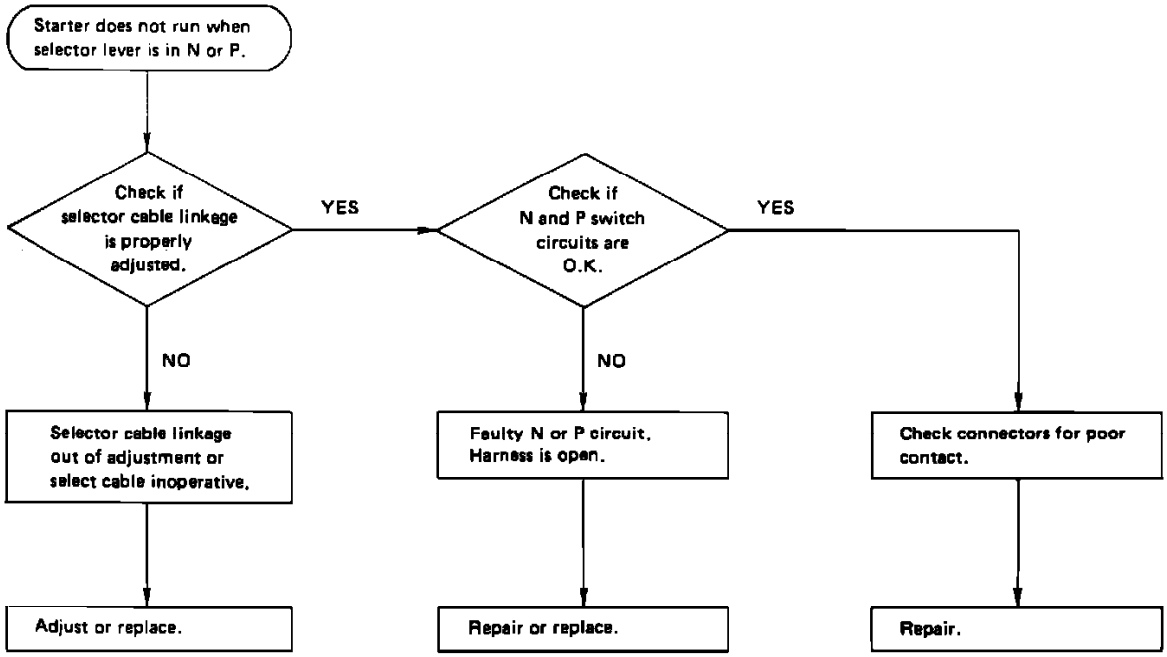

Fig. 2 Diagnostic Flow Chart. Starter Will Not Run With Selector Lever In N Or P Range

2) Vehicle does not start.

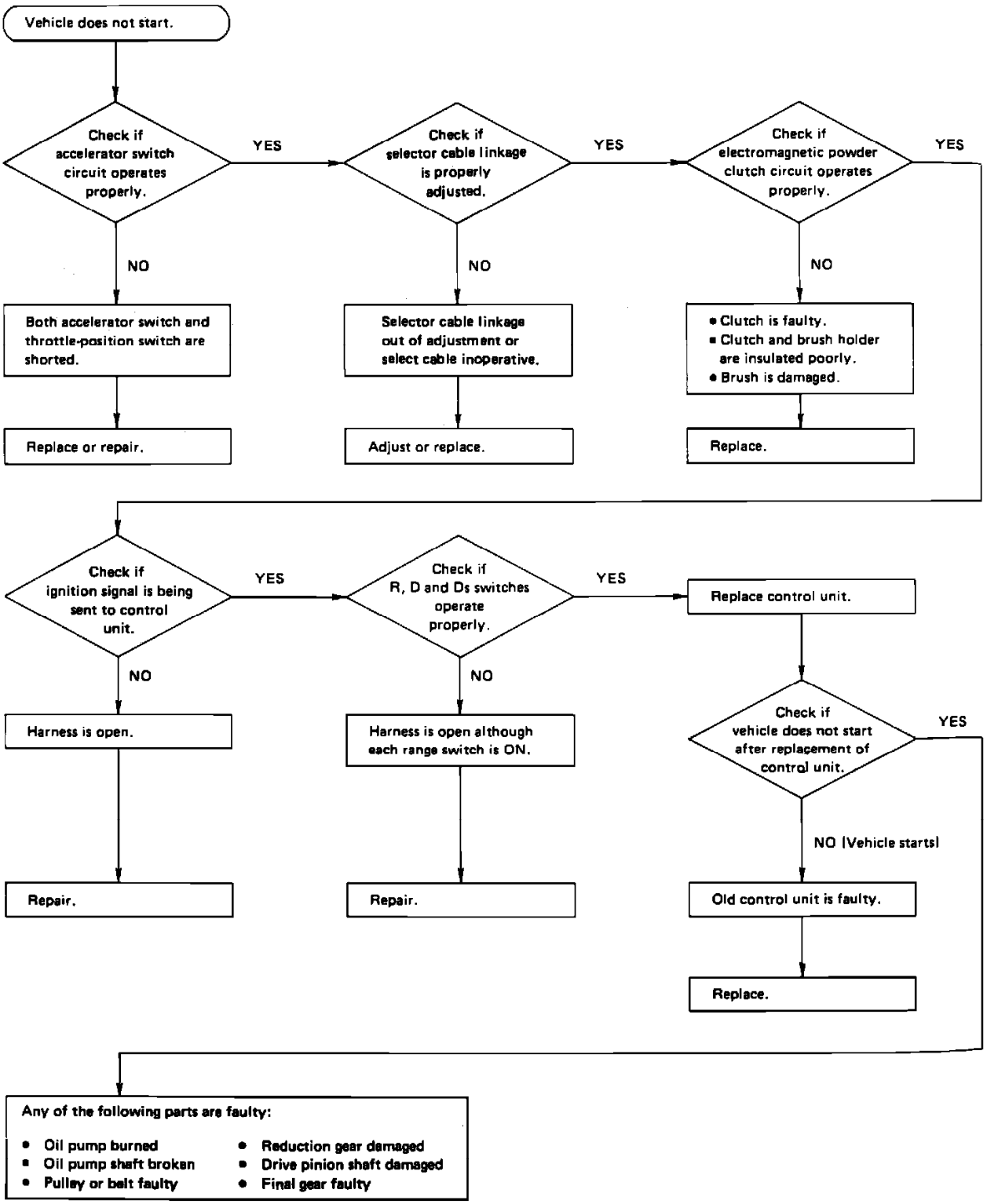

Fig. 3 Diagnostic Flow Chart. Vehicle Will Not Start

3) Vehicle creeps.

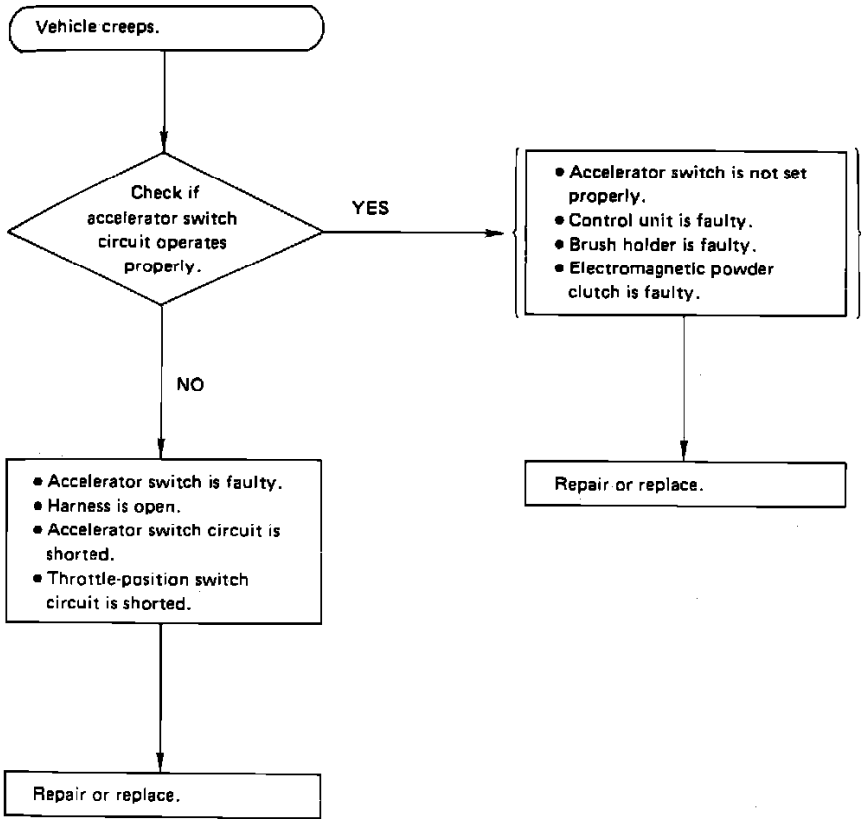

Fig. 4 Diagnostic Flow Chart. Vehicle Creeps

4) Selector lever system does not operate properly.

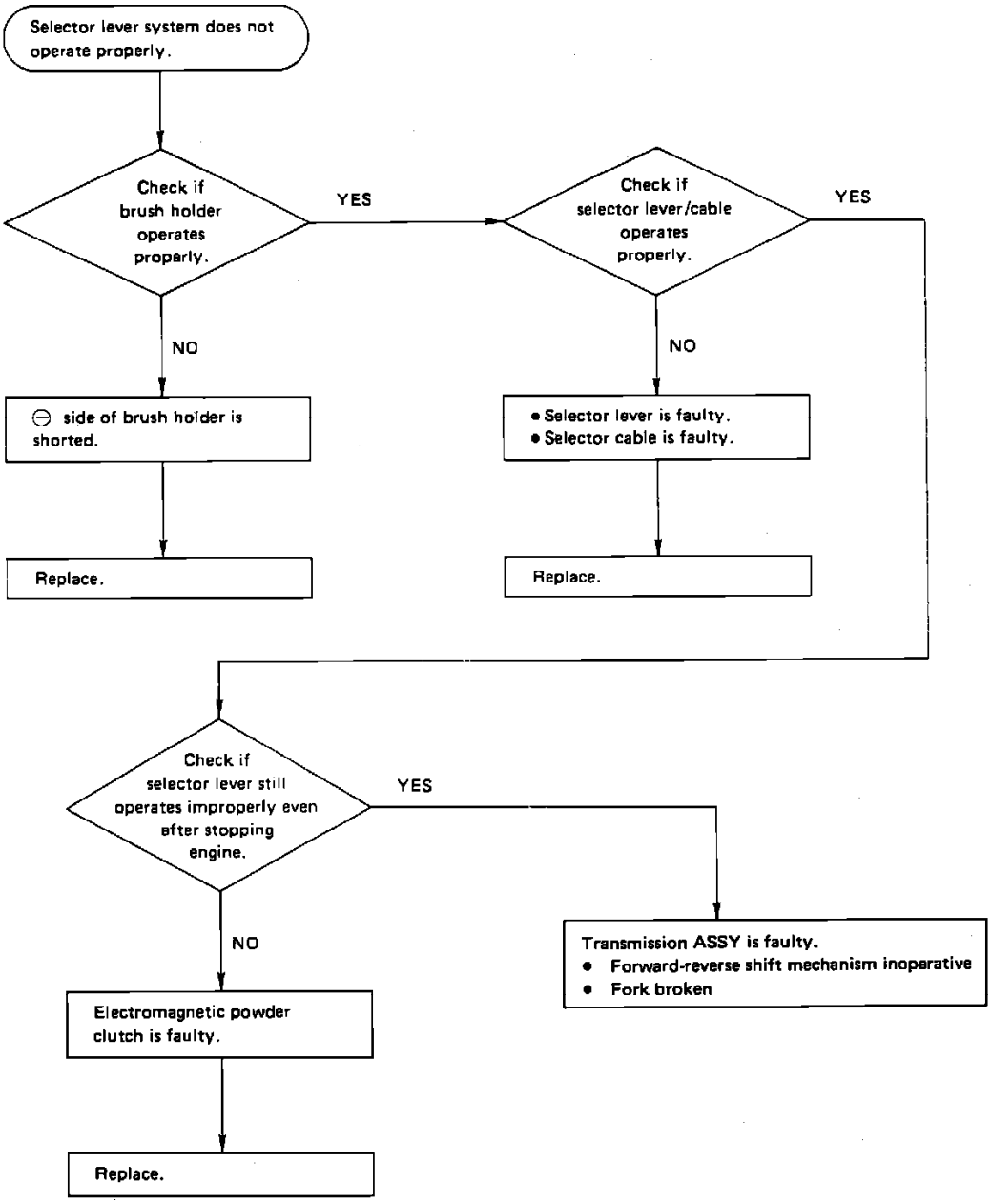

Fig. 5 Diagnostic Flow Chart. Selector Lever Will Not Operate Properly

5 - Transmission Will Not Shift Properly

5) Transmission does not shift properly.*

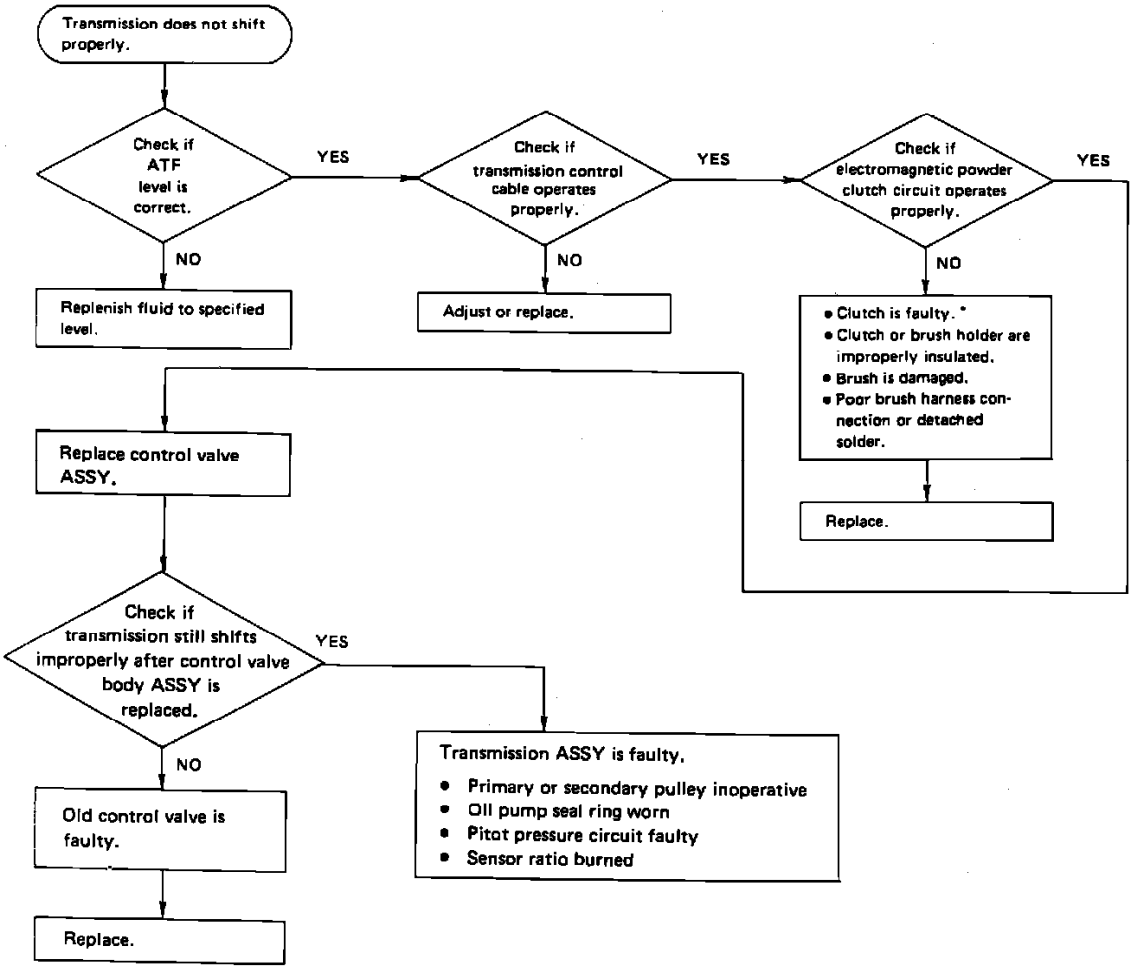

Fig. 6 Diagnostic Flow Chart. Transmission Will Not Shift Properly

Symptoms of improper shifting and their judgement methods (after engine warm-up):

1. Pulley ratio remains in LOW range and cannot be shifted to overdrive.

   ^ Vehicle speed does not increase with an increase in engine speed.
   ^ Engine reaches 5000 rpm or greater when vehicle speed is approximately 22 mph (35 km/h). (Under normal conditions engine speed is less than 4300 rpm when vehicle speed is 22 mph (35 km/h) with engine at full throttle. When operating at a constant speed in the 6 - 31 mph (10 - 50 km/h) range, engine speed is approximately 1500 rpm.)

2. Vehicle speed does not increase in response to depression of accelerator pedal immediately after starting.

   ^ Engine speed is between 2000 - 3000 rpm even when accelerator pedal is fully depressed (full-throttle) in the 12 - 37 mph (20 - 60 km/h) range. Beyond that range, engine speed increases slowly, which gives the driver the sensation of driving with the manual transmission in 5th gear.

3. Engine speed does not increase even when kicked down.

   ^ Engine speed remains unchanged when selector lever is shifted from D to Ds position (The Ds function does not activate).
   ^ Engine speed is less than 3500 rpm even when the accelerator pedal is fully depressed or does not decrease relative to the release of accelerator pedal.

6) Engine races while driving the vehicle.

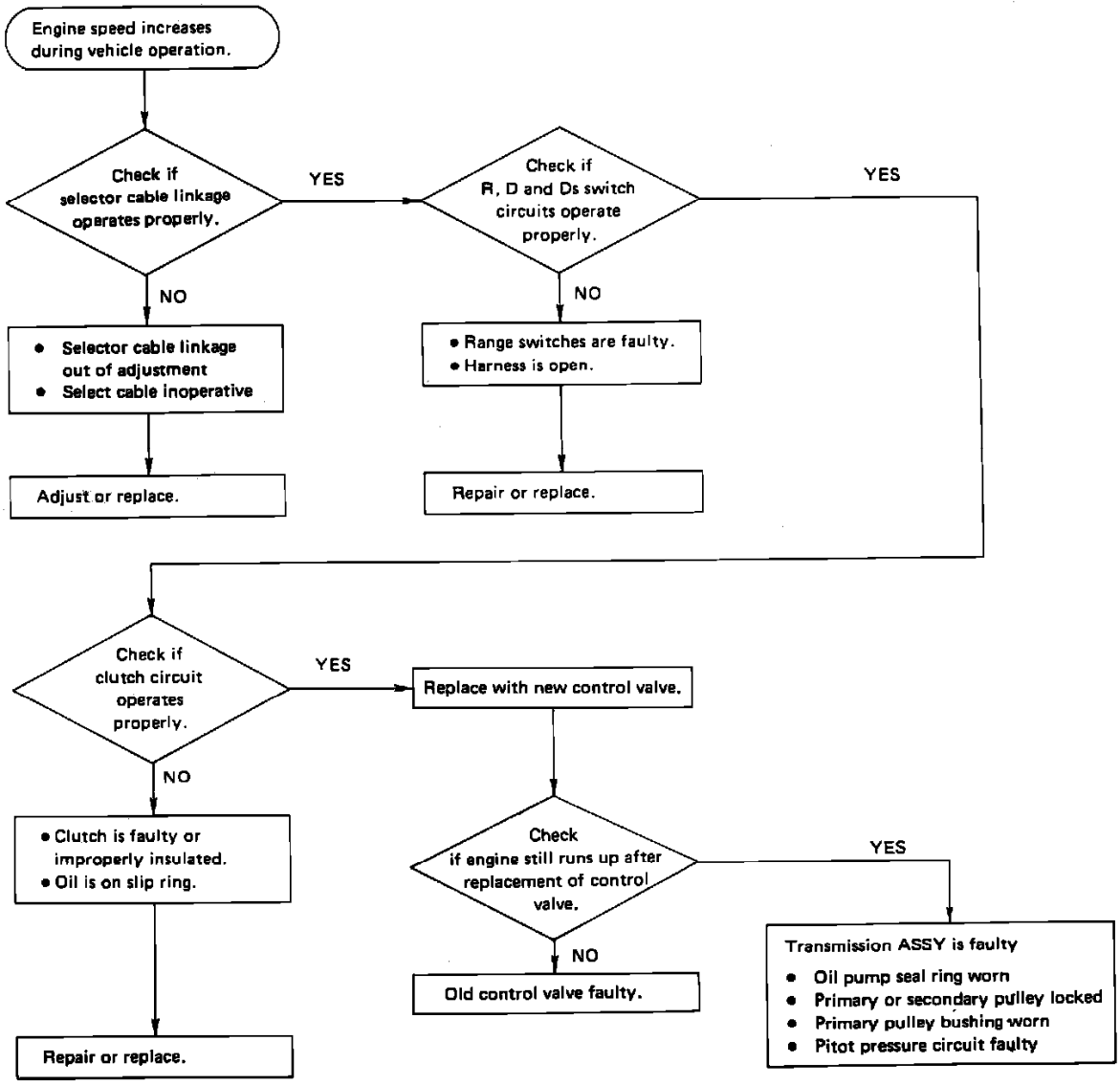

Fig. 7 Diagnostic Flow Chart. Engine Races When Driving Vehicle

Vehicle: Specifications

OHC Engines, Rated and Test Output

OHC Engines, Rated and Test Output

Rated Output	55 A
Test Output	30 A at 2500 rpm
	55 A at 5000 rpm

Canister Purge Solenoid

RESISTANCE

Between terminals ..... 30 - 50 ohms

Clutch Switch

IGNITION TIMING..... 5° BTDC/700 ± 50 rpm

FIRING ORDER..... 1-3-2

RESISTANCE SPECIFICATIONS

Air temperature sensor:
- 20° C (68° F)..... 2-3K ohms
- 80° C (176° F)..... 270-370 ohms

Atmospheric pressure sensor:
- Between terminals 1 & 2..... Infinite
- Between terminals 3 & 4..... Infinite

Canister purge solenoid..... 30-50 ohms @ 20° C (68° F)

Clutch switch:
- Between terminals 1 & 2..... Below 1 ohm (clutch pedal released)
- Between terminals 1 & 2..... Infinite (clutch pedal depressed)

Coolant temperature sensor:
- 120° C (248° F)..... 14.9-17.3 ohms
- 100° C (212° F)..... 26.2-29.3 ohms
- 80° C (176° F)..... 47.5-56.8 ohms
- 50° C (122° F)..... 133.9-178.9 ohms

Fuel injectors..... 10-18 ohms

Idle/throttle switch:
- Between terminals 3 & 2..... Below 1 ohms (throttle fully closed)
- Between terminals 3 & 2..... Infinite (throttle fully opened)

Idle speed control solenoid..... 20-30 ohms @ 20° C (68° F)

ignitor/ignition coil:
- Between coil terminals 1 & 2..... 0.9-1.1 ohms @ 20° C (68° F)
- Between coil terminal 1 & high tension connection..... 10-14K ohms @ 20° C (68° F)
- Between ignitor terminal 2 & coil terminal 4..... Below 1 ohm

Clutch Switch, ECM

RESISTANCE BETWEEN TERMINALS

Clutch pedal released ..... Below 1 ohm
Clutch pedal depressed ..... Infinity

Coolant Temperature Sensor/Switch (For Computer)

TEMPERATURE/RESISTANCE

120° C (248° F)..... 14.9 - 17.3 ohms
100° C (212° F)..... 26.2 - 29.3 ohms
80° C (176° F)..... 47.5 - 56.8 ohms
50° C (122° F)..... 133.9 - 178.9 ohms

Electromagnetic Powder Clutch, CVT

CLUTCH COIL RESISTANCE

Between slip rings ..... 1.64 ohms @ 20°C (68°F)

Fuel Injector

RESISTANCE..... 10 - 18 ohms

Fuel Pump

RESISTANCE

Between terminals..... other than 0 or infinity

Idle Speed/Throttle Actuator - Electronic

RESISTANCE..... 20 - 30 ohms @ 20° C (68° F)

Ignition Cable

RESISTANCE

Cylinder #1 ..... 4.58 - 10.68 K ohms
Cylinder #2 ..... 4.11 - 9.59 K ohms
Cylinder #3 ..... 2.90 - 6.76 K ohms
Coil wire ..... 4.59 - 10.71 K ohms

Ignition Coil

RESISTANCE

Primary ..... 0.81 - 0.99 ohm
Secondary ..... 8.5 - 11.0 K ohms

Ignition Control Module

RESISTANCE

Between coil terminals 1 & 2..... 0.9 - 1.1 ohms @ 20° C (68° F)

Between coil terminal 1
and high tension connection..... 10 - 14K ohms @ 20° C (68° F)

Between igniter terminal 2 & coil terminal 4..... Below 1 ohm

Ignition Timing

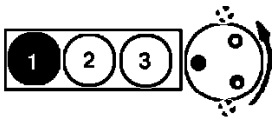

FRONT OF CAR
3-CYL. FIRING ORDER: 1 3 2

Fig. 1 Firing Order

TIMING [1] ..... 5° @ 700 rpm

FIRING ORDER ..... 1 - 3 - 2

IDLE SPEED

Idle-up system OFF ..... 700 ± 50 rpm
Idle-up system ON ..... 800 ± 50 rpm

SPARK PLUG GAP ..... 1.0 - 1.1 mm (0.039 - 0.043 in)

SPARK PLUG TORQUE ..... 18 - 24 Nm (13 - 17 ft lb)

[1] Connect test mode connector. Transmission in neutral (ECVT in N or P). Lights, rear defogger, and heater fan OFF.

Intake Air Temperature Sensor

RESISTANCE

At 20° C (68° F)..... 2 - 3 K ohms
At 80° C (176° F)..... 270 - 370 ohms

Oxygen Sensor

RESISTANCE

Between connector and ground ..... Below 10 ohms

Pick-Up Coil, Ignition

RESISTANCE

Across connector terminals ..... Above 100 ohms

Starter Motor

Ident. No. ..... N/A **[01]**
No Load Test:
- Amperes 45
- Volts 11.5
- RPM 5500

Torque Test:
- Amperes 200
- Volts 8
- Ft. Lbs. 3.5

Ident. No. ..... N/A **[02]**
No Load Test:
- Amperes 60
- Volts 11.5
- RPM 6600

Torque Test:
- Amperes 200
- Volts 8
- Ft. Lbs. 3.5

[01] -- Except ECVT.
[02] -- With ECVT.

Throttle Full Close Switch

RESISTANCE
- Between terminals 3 & 2..... Below 1 ohm (throttle fully closed)
- Between terminals 3 & 2..... Infinite (throttle fully opened)

Throttle Full Open Switch

RESISTANCE
- Between terminals 1 & 2..... Below 1 ohm (throttle fully closed)
- Between terminals 1 & 2..... Infinite (throttle fully opened)

System Operating Voltage

System Operating Voltage

Identification Number A866X21271	14.2-14.8 V at 68 deg F
Identification Number TR1Z-56	14.2-14.8 V at 68 deg F
Identification Number TR1Z-56	14.2-14.8 V at 68 deg F
Identification Number TR1Z-102	14.1-14.7 V at 68 deg F

Front Wheel Alignment Specifications

Caster Angle, Degrees:
- Limits ..... +1 1/2 to +3 1/2
- Desired ..... +2 1/2

Camber Angle, Degrees:
- Limits ..... - 1/3 to +1 2/3
- Desired ..... +2/3

Toe, Inch **[01]** 0.08
Ball Joint Inspection:
- Upper ..... **[02]**
- Lower ..... **[02]**

[01] -- Toe-in (+); toe-out (-).
[02] -- Refer to **Ball Joint, Lower** for procedure and specification.

Rear Wheel Alignment Specifications

Camber Angle, Degrees:
Limits ..... -1 to +1
Desired 0
Toe, Inch **[01]** ..... -.12 to +.12

[01] -- Toe-in (+); Toe-out (-).

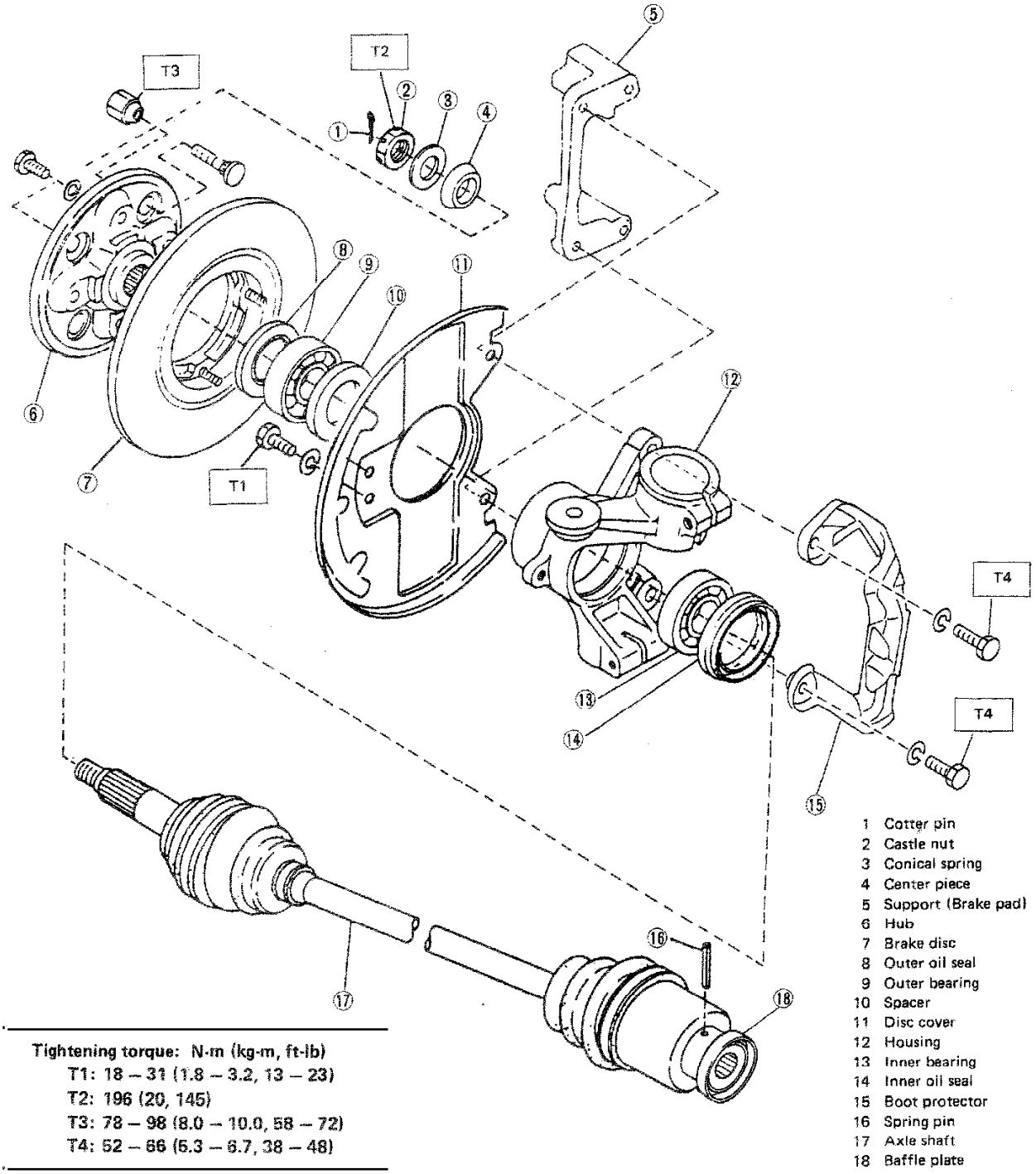

Front Axle

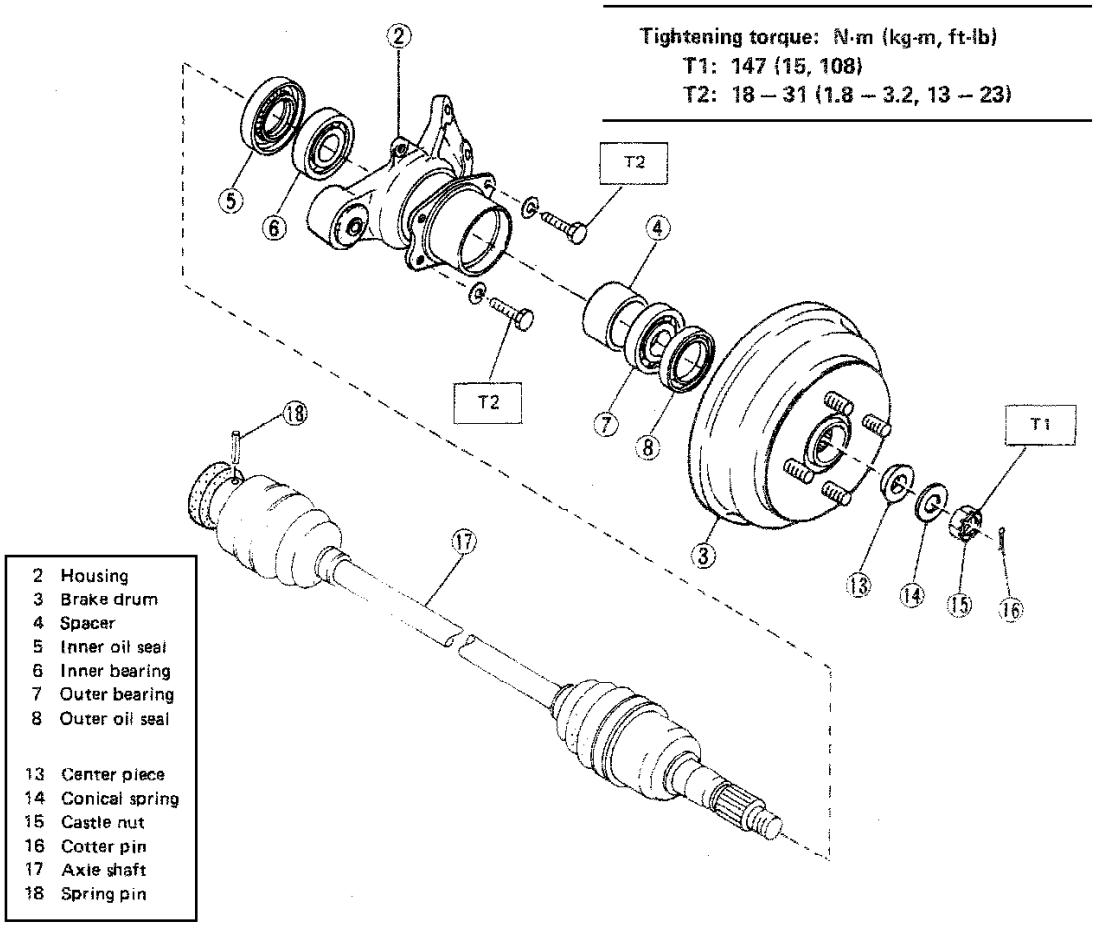

Rear Axle

Air Bleeder Screw	5-6 ft.lb
Caliper Body Retaining Bolts	16-23 ft.lb
Guide Pin	25-33 ft.lb

Caliper Bore Diameter	2.012 in

Brake Drum Inside Diameter	7.09 in
Maximum Refinish Diameter	7.17 in

Front	Nominal Thickness	0.71 in
	Minimum Refinish Thickness	0.61 in
	Lateral Runout (T.I.R.)	0.0059 in

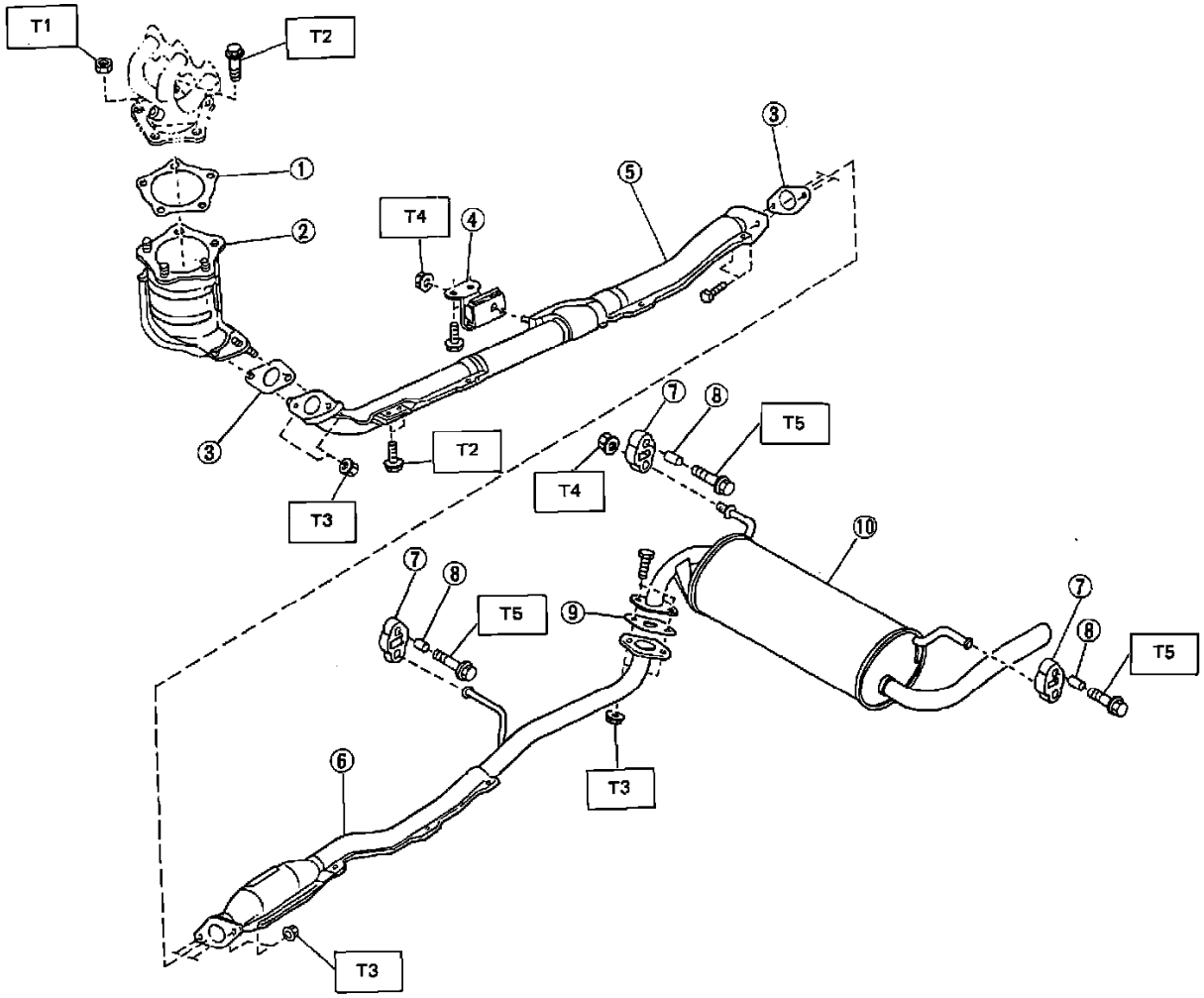

1 Front exhaust gasket
2 Front exhaust pipe
3 Rear exhaust gasket
4 Exhaust pipe cushion
5 Rear exhaust pipe A
6 Rear exhaust pipe B
7 Cushion rubber
8 Spacer
9 Muffler gasket
10 Muffler

Tightening torque: N·m (kg-m, ft-lb)
T1: 16 - 25 (1.6 - 2.6, 12 - 19)
T2: 23 - 42 (2.3 - 4.3, 17 - 31)
T3: 51 - 86 (5.2 - 8.8, 38 - 64)
T4: 13 - 23 (1.3 - 2.3, 9 - 17)
T5: 18 - 31 (1.8 - 3.2, 13 - 23)

J2-586

Catalytic Converter Configuration

Clutch, M/T

Component	**Torque/Ft. Lbs.**
Clutch Release Fork Pivot	11-18
Flywheel	65-71
Pressure Plate	7-8
Speedometer Gear	10-13

Coolant Temperature Sensor/Switch (For Computer)

TORQUE ..... 22 - 27 Nm (16 - 20 ft lb)

Crankshaft Position Sensor

RELUCTOR AIR GAP ..... 0.008 - 0.016 in (0.2 - 0.4 mm)

Type	Internal damper rotating coil type
Rated torque	142 N·m (14.5 kg-m, 105 ft-lb)/3.5 A
Power consumption	34.4 W
Metal powder	65 g (2.29 oz)
Weight	8.5 kg (18.7 lb)
Control system	Electronic control

Powder Clutch Specifications

ECVT Brush Holder

SERVICE LIMIT OF BRUSH ..... 4 mm (0.16 in)(wear limit)

MOUNT BOLT TIGHTENING TORQUE ..... 3.3 - 4.0 ft lb (4.4 - 5.4 Nm)

Service Specifications

SPECIFICATIONS AND SERVICE DATA

Type		In-line, three-cylinder, one balancer shaft type
Valve arrangement		Single OHC, V type
Displacement		1,189 cm^3 (1,189 cc, 72.55 cu in)
Bore x stroke		78 x 83 mm (3.07 x 3.27 in)
Compression ratio		9.1
Piston ring		Pressure ring: 2, Oil ring: 1
Intake valve timing	Open	BTDC 19°
	Closed	ABDC 57°
Exhaust valve timing	Open	BBDC 64°
	Closed	ATDC 24°
Valve clearance	Intake	0.13 – 0.17 mm (0.0051 – 0.0067 in)
	Exhaust	0.23 – 0.27 mm (0.0091 – 0.0106 in)
Firing order		1 – 3 – 2
Ignition timing at idling speed		BTDC 5° (With test mode connector connected)
Idling speed (at neutral position)		MT 700±50 rpm (With test mode connector and read memory connector connected) ECVT 700±50 rpm
Spark plug	Model and manufacturer	BPR6ES-11 (NGK) (BPR7ES-11) W20EPRU-11 (NIPPONDENSO) (W22EPR-V11) RN9YC-4 (CHAMPION)
	Spark gap	1.0 – 1.1 mm (0.039 – 0.043 in)
Air cleaner type		Dry paper filter

Engine Specifications

Cylinder head			
Surface warpage limit			0.05 mm (0.0020 in)
Surface grinding limit			0.2 mm (0.008 in)
Standard height			111.5 mm (4.39 in)
Valve seat	Refacing angle		90°
	Contacting width	STD	In. 1.0 mm (0.039 in) Ex. 1.3 mm (0.051 in)
		Limit	In. 0.5 mm (0.020 in) Ex. 0.8 mm (0.031 in)
Valve guide	Inner diameter		7.000 – 7.015 mm (0.2756 – 0.2762 in)
	Fit allowance with cylinder head		0.031 – 0.060 mm (0.0012 – 0.0024 in)
	Overall length		55 mm (2.17 in)
	Protrusion above head		20.5 mm (0.807 in)
Valve stem			
Overall length		Intake	108.2 mm (4.26 in)
		Exhaust	108.5 mm (4.27 in)
Head edge thickness	Intake	STD	1.0 mm (0.039 in)
		Limit	0.5 mm (0.020 in)
	Exhaust	STD	1.0 mm (0.039 in)
		Limit	0.5 mm (0.020 in)
Stem		Intake	6.965 – 6.980 mm (0.2742 – 0.2748 in)
		Exhaust	6.945 – 6.960 mm (0.2734 – 0.2740 in)
Stem oil clearance		Intake	0.020 – 0.050 mm (0.0008 – 0.0020 in)
		Exhaust	0.040 – 0.070 mm (0.0016 – 0.0028 in)
Valve spring			
Free length		STD	46.51 mm (1.8311 in)
		Limit	45.5 mm (1.791 in)
Tension/maximum spring height			501.63 – 577.14 N (51.15 – 58.85 kg, 112.79 – 129.76 lb)/31.7 mm (1.248 in)
Valve rocker			
Clearance between arm and shaft			0.016 – 0.052 mm (0.0006 – 0.0020 in)
Crankcase			
Surface warpage limit (mating with cylinder head)			0.05 mm (0.0020 in)
Surface grinding limit			0.2 mm (0.008 in)
Standard height			200 mm (7.87 in)
Cylinder bore	Inner diameter		78.000 – 78.024 mm (3.0709 – 3.0718 in)
	Taper limit		0.05 mm (0.0020 in)
	Out-of roundness limit		0.05 mm (0.0020 in)
	Honing allowance		0.02 mm (0.0008 in)
	Piston clearance		0.038 – 0.072 mm (0.0015 – 0.0028 in)
	Enlarging (boring) limit		1.0 mm (0.039 in)

(Abbreviation) STD: Standard

Piston and piston pin			
Piston	Outer diameter	STD	77.952 – 77.962 mm (3.0690 – 3.0694 in)
		0.5 mm (0.020 in) OS	78.452 – 78.462 mm (3.0887 – 3.0890 in)
		1.0 mm (0.039 in) OS	78.952 – 78.962 mm (3.1083 – 3.1087 in)
	Pin hole inner diameter		18.000 – 18.006 mm (0.7087 – 0.7089 in)
	Clearance between pin hole and pin		0.004 – 0.008 mm (0.0002 – 0.0003 in)
Piston pin	Outer diameter		17.994 – 18.000 mm (0.7084 – 0.7087 in)
Piston ring			
Tension		Top ring	5.00 – 8.73 N (0.51 – 0.89 kg, 1.12 – 1.96 lb)
		Second ring	9.12 – 13.63 N (0.93 – 1.39 kg, 2.05 – 3.06 lb)
		Oil ring (combined)	27.46 – 41.19 N (2.80 – 4.20 kg, 6.17 – 9.26 lb)
Piston ring			
End gap		Top ring	0.2 – 0.35 mm (0.0079 – 0.0138 in)
		Second ring	0.2 – 0.35 mm (0.0079 – 0.0138 in)
		Oil ring (rail only)	0.3 – 0.9 mm (0.012 – 0.035 in)
Ring-to-groove clearance		Top ring	0.035 – 0.075 mm (0.0014 – 0.0030 in)
		Second ring	0.025 – 0.065 mm (0.0010 – 0.0026 in)
		Oil ring	0 mm (0 in)
Connecting rod			
Bend or twist per 100 mm (3.94 in) in length		Limit	0.1 mm (0.004 in)
Thrust clearance		STD	0.07 – 0.30 mm (0.0028 – 0.0118 in)
		Limit	0.35 mm (0.0138 in)
Clearance between small end and piston pin			0.005 – 0.021 mm (0.0002 – 0.0008 in)
Connecting rod bearing			
Thickness at center		STD	1.487 – 1.497 mm (0.0585 – 0.0589 in)
		0.05 mm (0.0020 in) US	1.512 – 1.520 mm (0.0595 – 0.0598 in)
		0.25 mm (0.0098 in) US	1.612 – 1.620 mm (0.0635 – 0.0638 in)
Crankshaft			
Bend limit			0.03 mm (0.0012 in)
Thrust clearance		STD	0.08 – 0.177 mm (0.0031 – 0.0070 in)
		Limit	0.3 mm (0.012 in)
Crank journal	Out-of-roundness limit		0.03 mm (0.0012 in)
	Taper limit		0.02 mm (0.0008 in)
	Grinding limit		0.25 mm (0.0098 in)
	Outer diameter	STD	41.974 – 41.985 mm (1.6525 – 1.6529 in)
		0.05 mm (0.0020 in) US	41.924 – 41.935 mm (1.6505 – 1.6510 in)
		0.25 mm (0.0098 in) US	41.724 – 41.735 mm (1.6427 – 1.6431 in)
	Oil clearance	STD	0.014 – 0.045 mm (0.0006 – 0.0018 in)
		Limit	0.060 mm (0.0024 in)
Crankpin	Outer diameter	STD	41.989 – 42.000 mm (1.6531 – 1.6535 in)
		0.05 mm (0.0020 in) OS	41.939 – 41.950 mm (1.6511 – 1.6516 in)
		0.25 mm (0.0098 in) OS	41.739 – 41.750 mm (1.6433 – 1.6437 in)
	Oil clearance	STD	0.020 – 0.053 mm (0.0008 – 0.0021 in)
		Limit	0.075 mm (0.0030 in)

(Abbreviation) STD: Standard OS: Oversize US: Undersize

Crankshaft bearing	STD (1)	1.505 – 1.508 mm (0.0593 – 0.0594 in)
Thickness at center	STD (2)	1.511 – 1.514 mm (0.0595 – 0.0596 in)
	0.05 mm (0.0020 in) US	1.527 – 1.535 mm (0.0601 – 0.0604 in)
	0.25 mm (0.0098 in) US	1.627 – 1.635 mm (0.0641 – 0.0644 in)
Camshaft		
Thrust clearance	STD	0.03 – 0.038 mm (0.0012 – 0.0150 in)
	Limit	0.5 mm (0.020 in)
Cam lobe height	STD	36.88 – 36.90 mm (1.4520 – 1.4528 in)
	Wear limit	0.3 mm (0.012 in)
Balancer shaft		
Thrust clearance limit		0.5 mm (0.020 in)

(Abbreviation) STD: Standard US: Undersize

Part 3 Of 3

Maintenance Standards

Torque Specifications

TORQUE SPECIFICATIONS

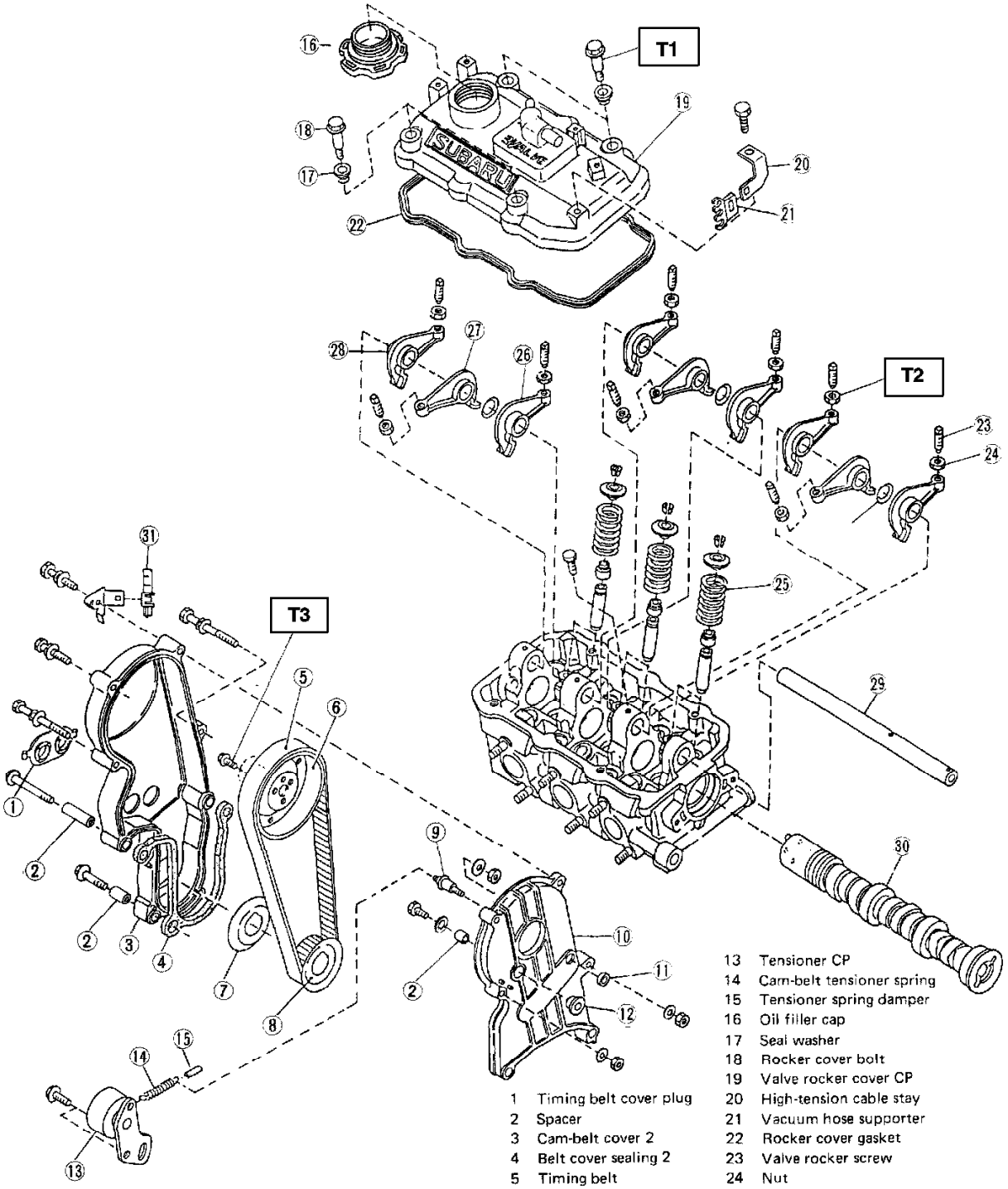

Tightening torque: N·m (kg-m, ft-lb)
T1: 6.9 – 7.8 (0.70 – 0.80, 5.1 – 5.8)
T2: 17 – 23 (1.7 – 2.3, 12 – 17)
T3: 11.3 – 12.3 (1.15 – 1.25, 8.3 – 9.0)

1 Timing belt cover plug
2 Spacer
3 Cam-belt cover 2
4 Belt cover sealing 2
5 Timing belt
6 Camshaft sprocket
7 Camshaft drive plate
8 Crankshaft sprocket
9 Tensioner spring bolt
10 Belt cover
11 Cam-belt cover mount
12 Belt cover mount CP
13 Tensioner CP
14 Cam-belt tensioner spring
15 Tensioner spring damper
16 Oil filler cap
17 Seal washer
18 Rocker cover bolt
19 Valve rocker cover CP
20 High-tension cable stay
21 Vacuum hose supporter
22 Rocker cover gasket
23 Valve rocker screw
24 Nut
25 Valve spring
26 Valve rocker arm No. 2
27 Valve rocker arm No. 3
28 Valve rocker arm
29 Valve rocker shaft
30 Camshaft
31 Stay

Valve System

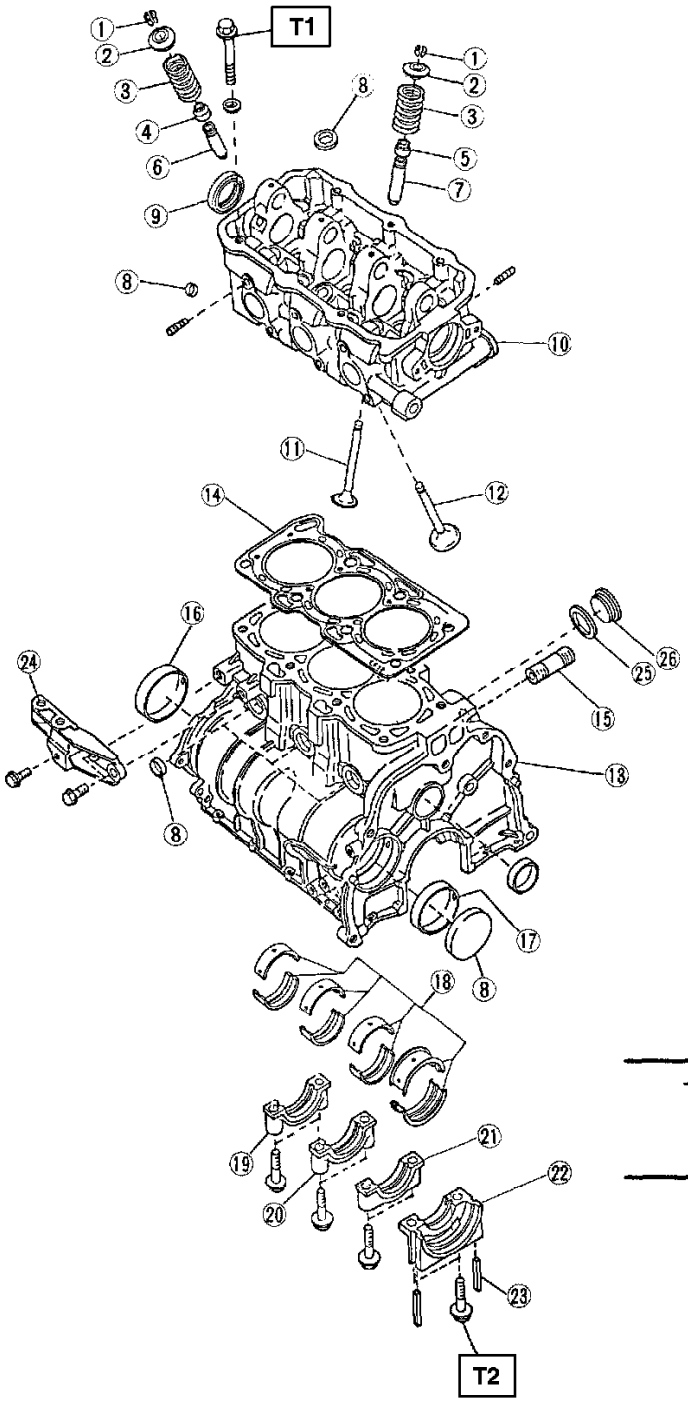

1 Valve spring retainer key
2 Valve spring retainer
3 Valve spring
4 Exhaust valve oil seal
5 Intake valve oil seal
6 Exhaust valve guide
7 Intake valve guide
8 Plug
9 Oil seal
10 Cylinder head
11 Intake valve
12 Exhaust valve
13 Crankcase
14 Cylinder head gasket
15 Oil filter stud
16 Balancer shaft bearing
17 Balancer shaft bearing 2
18 Crankshaft bearing
19 Crankcase cap
20 Crankcase cap 2
21 Crankcase cap 3
22 Crankcase cap 4
23 Bearing cap seal
24 Engine mounting bracket
25 Gasket
26 Plug

Tightening torque: N·m (kg-m, ft-lb)
T1: 70 – 77 (7.1 – 7.9, 51 – 57)
T2: 41 – 47 (4.2 – 4.8, 30 – 35)

Crankcase and Cylinder Head

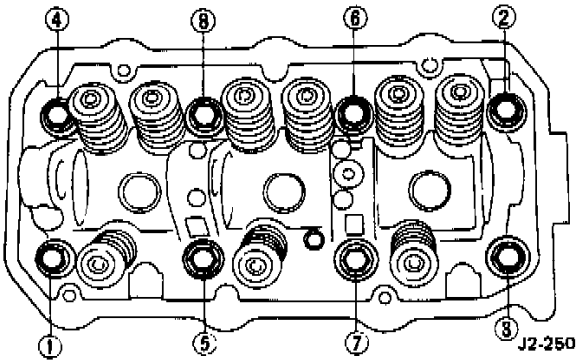

Cylinder Head Removal

Subaru Justy Hatchback 4WD L3-1.2L SOHC (MPFI)

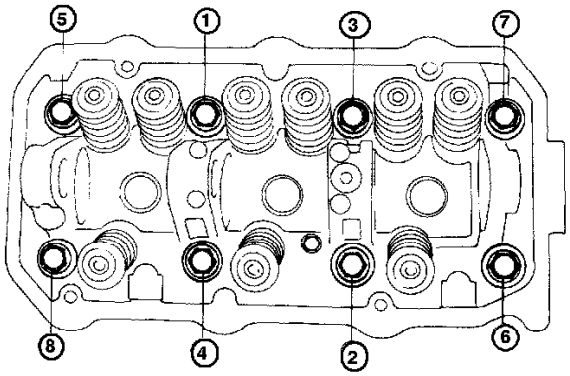

STEP 1. Torque to 29 ft.lbs.
STEP 2. Torque to 54 ft.lbs.
STEP 3. Back off head bolts 90 deg.
STEP 4. Torque to 51 - 57 ft.lbs.

Head Bolt Torque Sequence

Head Bolt Torque/Sequence

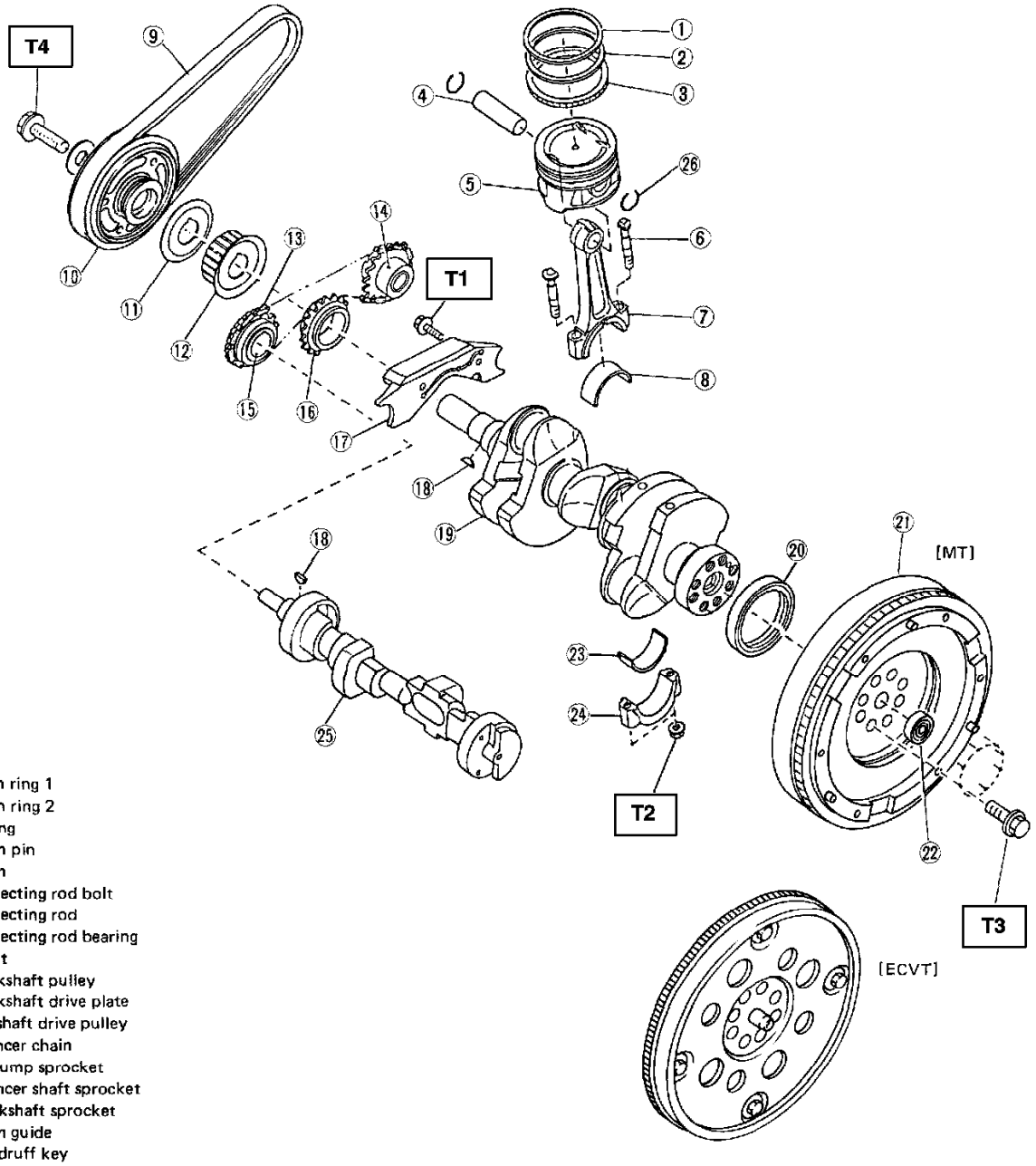

1 Piston ring 1
2 Piston ring 2
3 Oil ring
4 Piston pin
5 Piston
6 Connecting rod bolt
7 Connecting rod
8 Connecting rod bearing
9 V-belt
10 Crankshaft pulley
11 Crankshaft drive plate
12 Camshaft drive pulley
13 Balancer chain
14 Oil pump sprocket
15 Balancer shaft sprocket
16 Crankshaft sprocket
17 Chain guide
18 Woodruff key
19 Crankshaft
20 Oil seal
21 Flywheel
22 Ball bearing
23 Connecting rod bearing
24 Connecting rod cap
25 Balancer shaft
26 Piston pin circlip

Tightening torque: N·m (kg-m, ft-lb)
T1: 6 – 7 (0.6 – 0.7, 4.3 – 5.1)
T2: 39 – 45 (4.0 – 4.6, 29 – 33)
T3 (MT): 88–96 (9.0 – 9.8, 65 – 71)
(ECVT): 74 – 83 (7.5 – 8.5, 54 – 61)
T4: 78 – 98 (8 – 10, 58 – 72)

Crankshaft, Piston and Flywheel

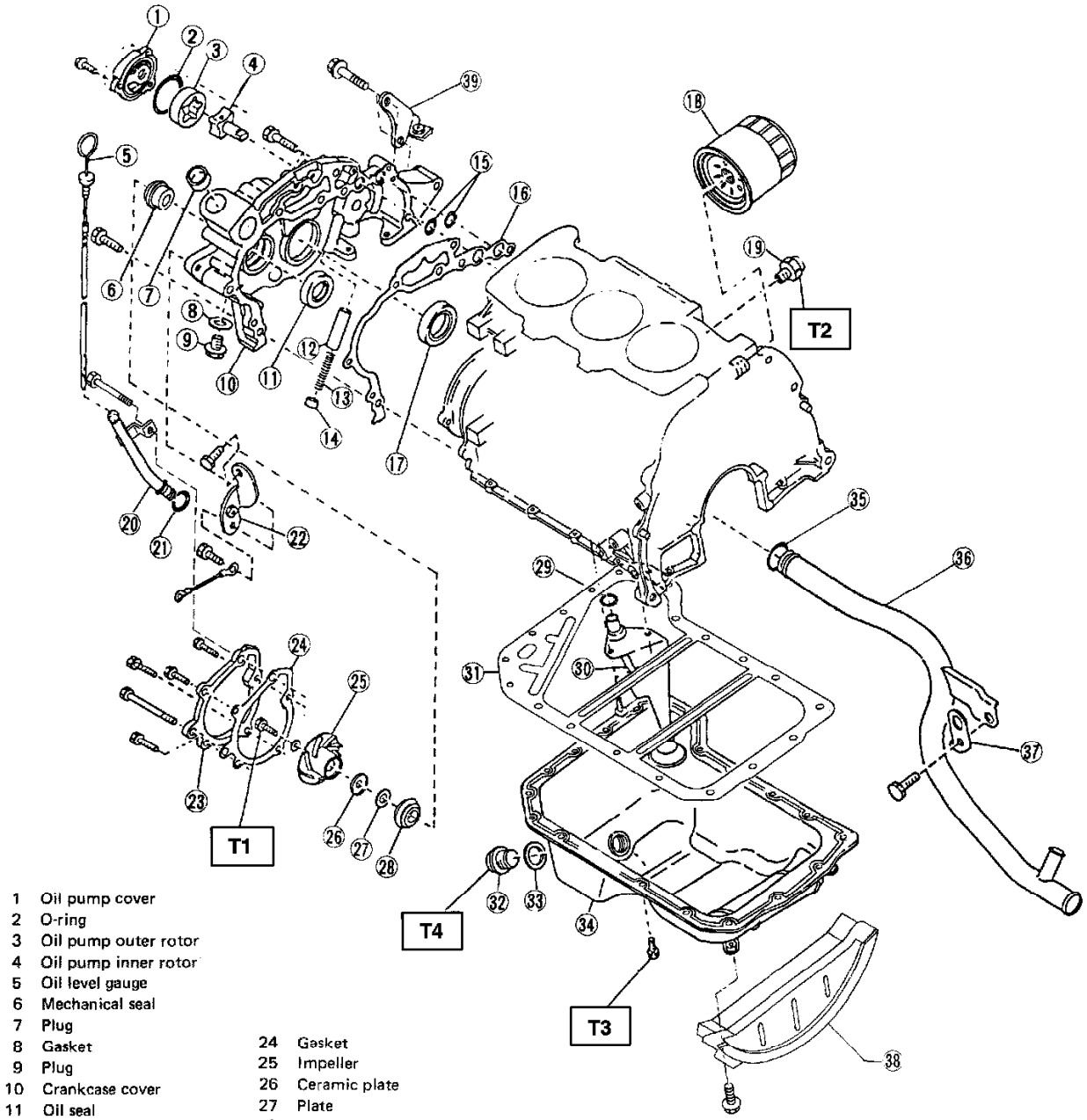

1 Oil pump cover
2 O-ring
3 Oil pump outer rotor
4 Oil pump inner rotor
5 Oil level gauge
6 Mechanical seal
7 Plug
8 Gasket
9 Plug
10 Crankcase cover
11 Oil seal
12 Oil relief valve
13 Relief valve spring
14 Oil pump relief plug
15 O-ring
16 Gasket
17 Oil seal
18 Oil filter
19 Oil pressure switch
20 Oil level gauge guide
21 O-ring
22 Engine mounting stay
23 Water pump cover
24 Gasket
25 Impeller
26 Ceramic plate
27 Plate
28 Mechanical seal
29 O-ring
30 Oil strainer
31 Oil pan plate
32 Oil drain plug
33 Gasket
34 Oil pan
35 O-ring
36 Water pipe
37 Crankcase hanger
38 Flywheel housing
39 Bracket

Tightening torque: N·m (kg-m, ft-lb)
T1: 9.3 – 10.3 (0.95 – 1.05, 6.9 – 7.6)
T2: 17 – 23 (1.7 – 2.3, 12 – 17)
T3: 4.4 – 5.4 (0.45 – 0.55, 3.3 – 4.0)
T4: 44 – 49 (4.5 – 5.0, 33 – 36)

Lubrication and Cooling System

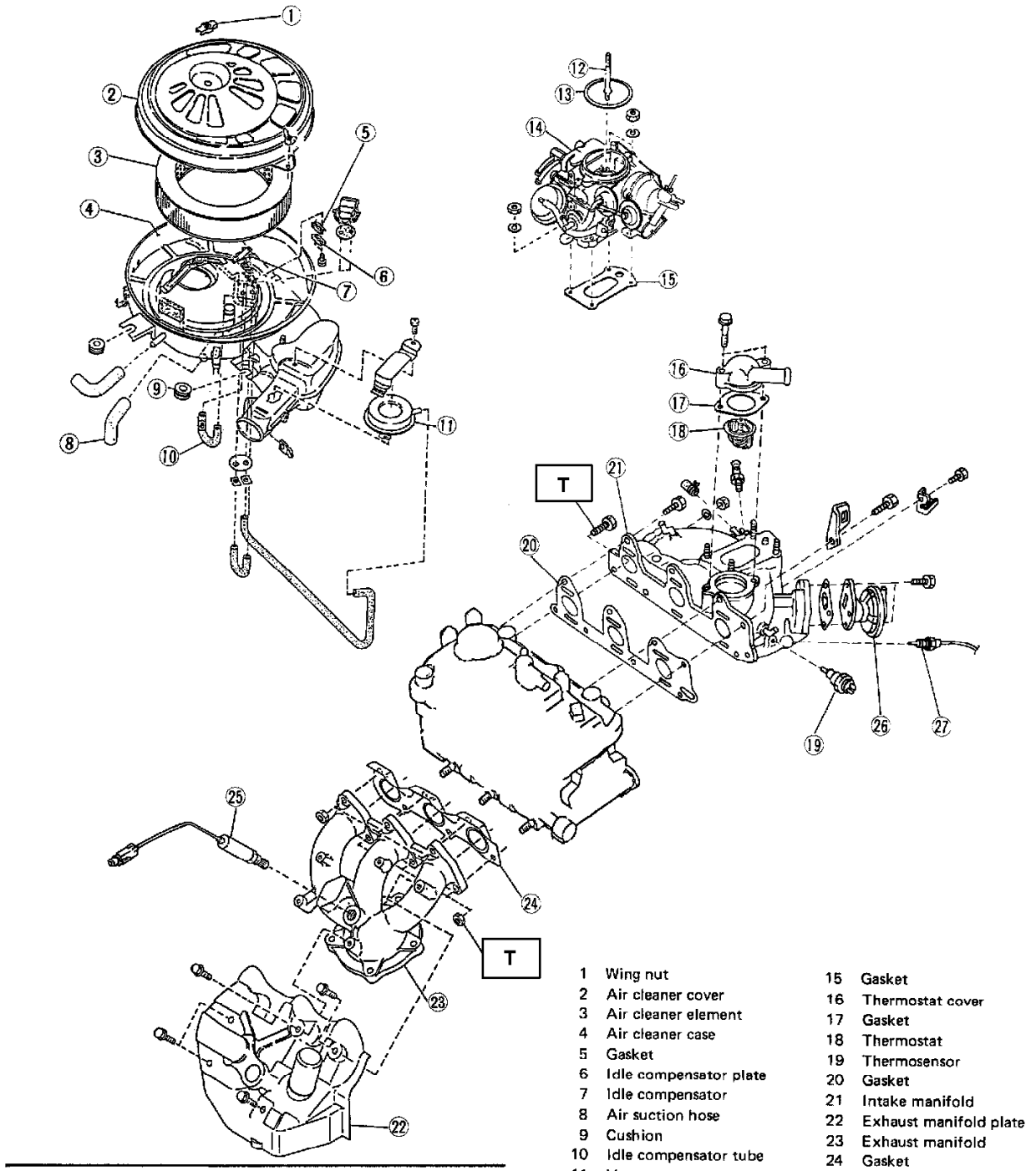

Tightening torque: N·m (kg-m, ft-lb)
T: 20 — 29 (2.0 — 3.0, 14 — 22)

1 Wing nut
2 Air cleaner cover
3 Air cleaner element
4 Air cleaner case
5 Gasket
6 Idle compensator plate
7 Idle compensator
8 Air suction hose
9 Cushion
10 Idle compensator tube
11 Vacuum motor
12 Carburetor bolt
13 Gasket
14 Carburetor
15 Gasket
16 Thermostat cover
17 Gasket
18 Thermostat
19 Thermosensor
20 Gasket
21 Intake manifold
22 Exhaust manifold plate
23 Exhaust manifold
24 Gasket
25 Oxygen sensor
26 EGR valve
27 EGR sensor (CAL. only)

Intake and Exhaust Manifolds

System Specifications

Refer to Engine Specifications for Camshaft/Lifter service and torque specifications.
See: Engine, Cooling and Exhaust/Engine/Specifications/Mechanical Specifications

Camshaft, Engine

Camshaft Journal Diameter	N/A
Bend Limit	N/A
Camshaft Bearing Clearance	N/A
Thrust Clearance	.0012-.0150
Cam Lobe Height	1.4520-1.4528
Valve Lash Adjuster:	
O.D.	**[01]**

[01] -- Valve rocker clearance between arm & shaft, .0006-.0020 inch.

System Specifications

Refer to Engine Specifications for Cylinder Block Assembly service and torque specifications.
See: Engine, Cooling and Exhaust/Engine/Specifications

Connecting Rod Bearing

Crankshaft:
- Standard Diameter:
  - Main Bearing 1.6525-1.6529
  - Crank Pin 1.6531-1.6535
- Out Of Round All 0.0012
- Taper All 0.008

Bearing Clearance:
- Main Bearings ..... .0006-.0018
- Connecting Rod Bearings ..... .0008-.0021
- Thrust Bearing Clearance ..... .0031-.0070

Connecting Rod, Engine

Crankshaft:
- Standard Diameter:
  - Main Bearing 1.6525-1.6529
  - Crank Pin 1.6531-1.6535
- Out Of Round All 0.0012
- Taper All 0.008

Bearing Clearance:
- Main Bearings ..... .0006-.0018
- Connecting Rod Bearings ..... .0008-.0021
- Thrust Bearing Clearance ..... .0031-.0070

Crankshaft Main Bearing

Crankshaft:
- Standard Diameter:
  - Main Bearing 1.6525-1.6529
  - Crank Pin 1.6531-1.6535
- Out Of Round All 0.0012
- Taper All 0.008

Bearing Clearance:
- Main Bearings ..... .0006-.0018
- Connecting Rod Bearings ..... .0008-.0021
- Thrust Bearing Clearance ..... .0031-.0070

Crankshaft, Engine

Crankshaft:
- Standard Diameter:
  - Main Bearing 1.6525-1.6529
  - Crank Pin 1.6531-1.6535
- Out Of Round All 0.0012
- Taper All 0.008

Bearing Clearance:
- Main Bearings ..... .0006-.0018
- Connecting Rod Bearings ..... .0008-.0021
- Thrust Bearing Clearance ..... .0031-.0070

Piston Pin, Engine

- Piston Std. Diameter 3.0690-3.0694
- Piston Clearance ..... .0015-.0028
- Piston Pin Diameter ..... .7084-.7087
- Piston Pin To Piston Clearance ..... .0002-.0003
- Piston Ring End Gap:
  - Comp. ..... .0079-.0138
  - Oil ..... .012-.035

Piston Ring Side Clearance:
Comp. ..... **[01]**
Oil 0

[01] -- Top ring, .0014-.0030 inch; second ring .0010-.0026 inch.

Piston Ring, Engine

Piston Std. Diameter 3.0690-3.0694
Piston Clearance ..... .0015-.0028
Piston Pin Diameter ..... .7084-.7087
Piston Pin To Piston Clearance ..... .0002-.0003
Piston Ring End Gap:
Comp. ..... .0079-.0138
Oil ..... .012-.035

Piston Ring Side Clearance:
Comp. ..... **[01]**
Oil 0

[01] -- Top ring, .0014-.0030 inch; second ring .0010-.0026 inch.

Piston, Engine

Piston Std. Diameter 3.0690-3.0694
Piston Clearance ..... .0015-.0028
Piston Pin Diameter ..... .7084-.7087
Piston Pin To Piston Clearance ..... .0002-.0003
Piston Ring End Gap:
Comp. ..... .0079-.0138
Oil ..... .012-.035

Piston Ring Side Clearance:
Comp. ..... **[01]**
Oil 0

[01] -- Top ring, .0014-.0030 inch; second ring .0010-.0026 inch.

Head bolt tightening is done in 4 steps in the following sequence.

1st Step	29 ft.lb
2nd Step	54 ft.lb
3rd Step	Back off the head bolts 90 deg. or more in the reverse order of the tightening sequence.
4th Step	51 - 57 ft.lb

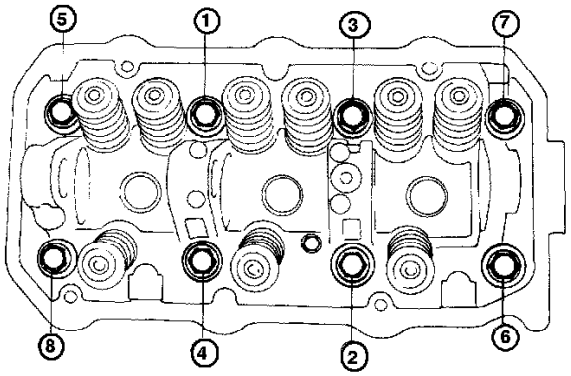

STEP 1. Torque to 29 ft.lbs.
STEP 2. Torque to 54 ft.lbs.
STEP 3. Back off head bolts 90 deg.
STEP 4. Torque to 51 - 57 ft.lbs.

Head Bolt Torque Sequence

Service Specifications

Refer to Engine Specifications for Cylinder Head Assembly service and torque/sequence specifications.
See: Engine, Cooling and Exhaust/Engine/Specifications

Valve Clearance

Stem Diameter:
- Intake ..... .2742-.2748
- Exhaust ..... .2734-.2740

Overall Length ..... **[01]**
Face Angle Degrees 45
Margin 0.039
Valve Clearance:
- Intake ..... .006C
- Exhaust ..... .010C

[01] -- Intake, 4.26 inch; exhaust, 4.27 inch.

Valve Guide

Cylinder Head:
- Warpage Limit 0.002
- Grinding Limit 0.008
- Standard Height 4.39

Valve Guides:
- Standard Inside Diameter ..... .2756-.2762
- Protrusion Above Head 0.807
- Stem To Guide Clearance:
  - Intake ..... .0008-.0020
  - Exhaust ..... .0016-.0028

Valve Seats:
- Seat Angle Degrees 45
- Seat Width:
  - Intake 0.039
  - Exhaust 0.051

Valve Seat

Cylinder Head:
- Warpage Limit 0.002
- Grinding Limit 0.008
- Standard Height 4.39

Valve Guides:
- Standard Inside Diameter ..... .2756-.2762
- Protrusion Above Head 0.807
- Stem To Guide Clearance:
  - Intake ..... .0008-.0020

Exhaust ..... .0016-.0028

Valve Seats:
Seat Angle Degrees 45
Seat Width:
Intake 0.039
Exhaust 0.051

Valve Spring

Free Length 1.8311
Seated Pressure Pounds @ Inches ..... N/A
Compressed Pressure Pounds @ Inches ..... **[01]**
Out Of Square Limit ..... N/A

[01] -- 112.79-129.76 lbs. @ 1.248 inch.

Valve, Intake/Exhaust

Stem Diameter:
Intake ..... .2742-.2748
Exhaust ..... .2734-.2740

Overall Length ..... **[01]**
Face Angle Degrees 45
Margin 0.039
Valve Clearance:
Intake ..... .006C
Exhaust ..... .010C

[01] -- Intake, 4.26 inch; exhaust, 4.27 inch.

System Specifications

Refer to Engine Specifications for Engine Lubrication torque specifications.
See: Engine, Cooling and Exhaust/Engine/Specifications

Oil Pump, Engine

Rotor:
Inner Rotor O.D. 1.1693-1.1709
Outer Rotor O.D. 1.5957-1.5968

Relief Valve Spring, Inch ..... **[01]**

[01] -- Free length, 1.843 inch.

Intake Manifold

Refer to Engine Specifications for Intake Manifold torque specifications.
See: Engine, Cooling and Exhaust/Engine/Specifications

Evaporative Fuel Vapor Return Hose

Fuel/Vapor Line Clamp
Torque value..... 0.7 - 1.1 ft lb (1.0 - 1.5 Nm)

Exhaust Manifold

Refer to Engine Specifications for Exhaust Manifold torque specifications.
See: Engine, Cooling and Exhaust/Engine/Specifications

Flex Plate

Refer to Engine Specifications for Flex Plate torque specifications.
See: Engine, Cooling and Exhaust/Engine/Specifications

Flywheel

Refer to Engine Specifications for Flywheel torque specifications.
See: Engine, Cooling and Exhaust/Engine/Specifications

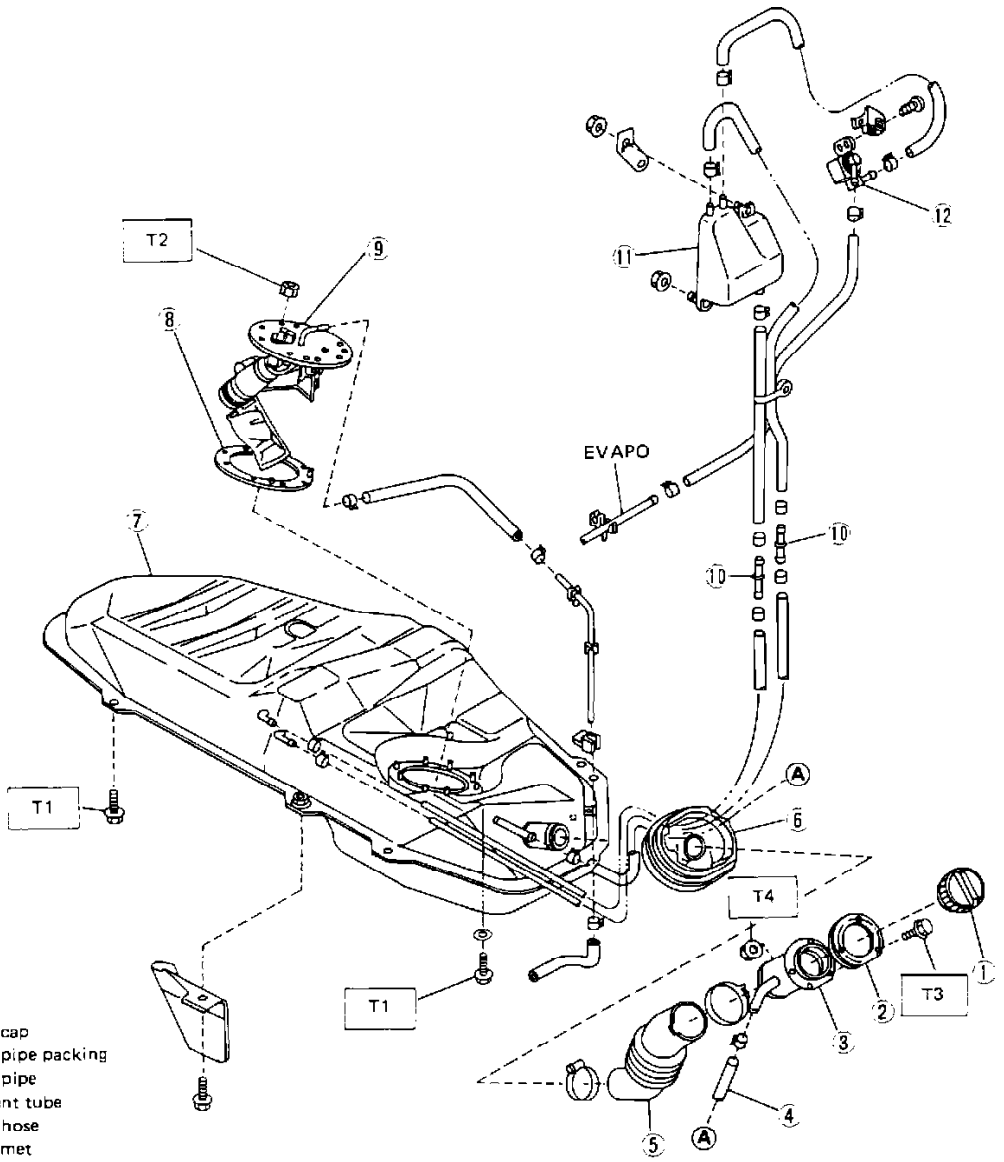

1 Filler cap
2 Filler pipe packing
3 Filler pipe
4 Air vent tube
5 Filler hose
6 Grommet
7 Fuel tank
8 Fuel pump packing
9 Fuel pump ASSY
10 Pipe joint
11 Separator
12 Roll over valve

Tightening torque: N·m (kg-m, ft-lb)
T1: 13 – 23 (1.3 - 2.3, 9 – 17)
T2: 1.8 – 3.1 (0.18 – 0.32, 1.3 – 2.3)
T3: 3 – 6 (0.3 – 0.6, 2.2 – 4.3)
T4: 1.5 – 2.5 (0.15 – 0.25, 1.1 – 1.8)

Fuel Tank

Fuel Return Line

FUEL LINE CLAMPS

Torque ..... 0.7 - 1.1 ft lb (1.0 - 1.5 Nm)

Fuel Supply Line

FUEL LINE CLAMPS

Torque ..... 0.7 - 1.1 ft lb (1.0 - 1.5 Nm)

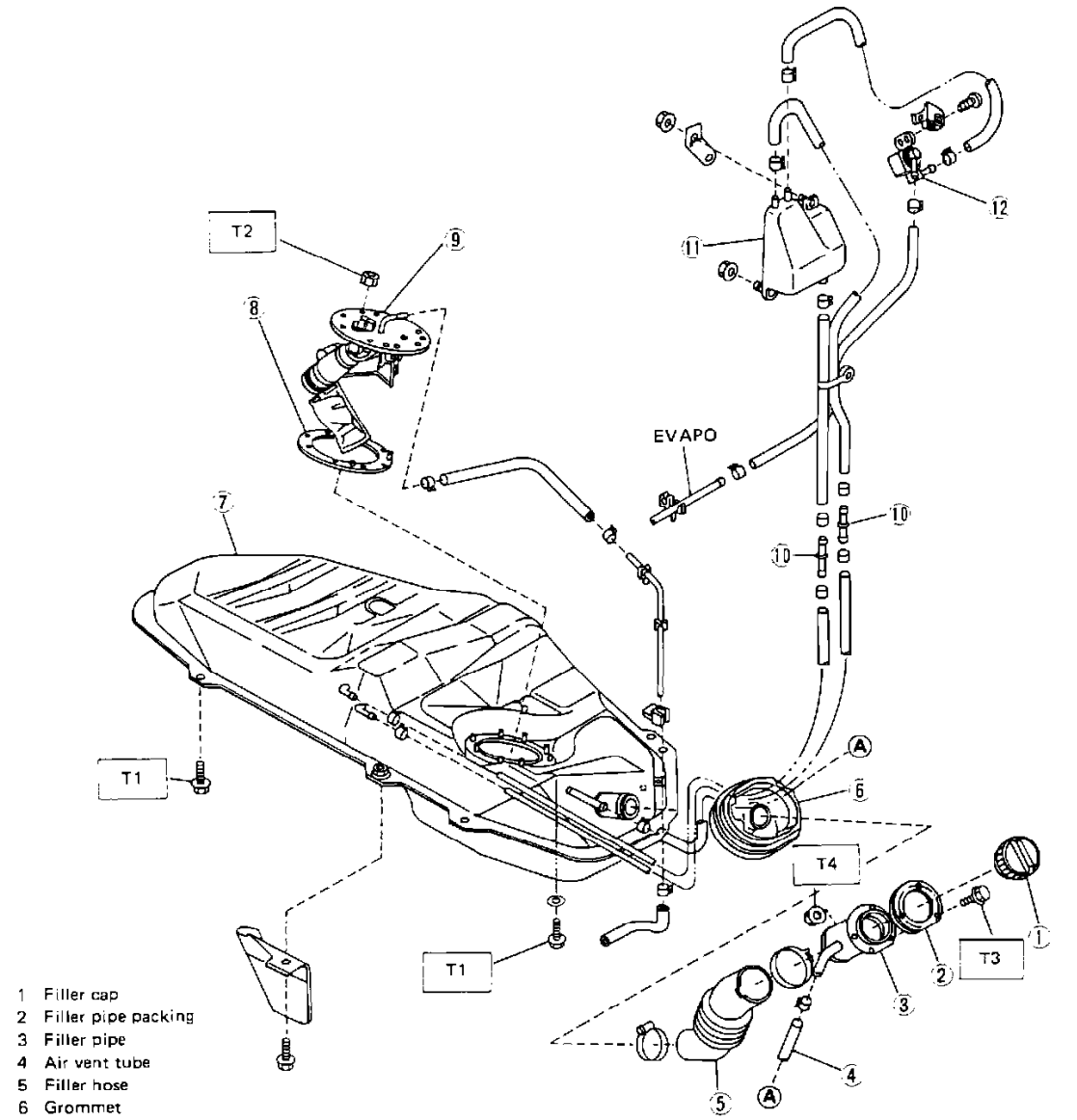

1 Filler cap
2 Filler pipe packing
3 Filler pipe
4 Air vent tube
5 Filler hose
6 Grommet
7 Fuel tank
8 Fuel pump packing
9 Fuel pump ASSY
10 Pipe joint
11 Separator
12 Roll over valve

Tightening torque: N·m (kg-m, ft-lb)
T1: 13 – 23 (1.3 - 2.3, 9 – 17)
T2: 1.8 – 3.1 (0.18 – 0.32, 1.3 – 2.3)
T3: 3 – 6 (0.3 – 0.6, 2.2 – 4.3)
T4: 1.5 – 2.5 (0.15 – 0.25, 1.1 – 1.8)

Fuel Tank

Idle Speed

Idle-up system "OFF:"	700 ± 50
Idle-up system "ON:"	800 ± 50

System Specifications

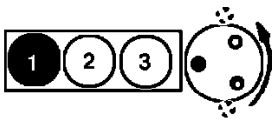

FRONT OF CAR
3-CYL. FIRING ORDER: 1 3 2

Fig. 1 Firing Order

TIMING [1]	5° @ 700 rpm
FIRING ORDER	1 - 3 - 2
IDLE SPEED	

Idle-up system OFF	700 ± 50 rpm
Idle-up system ON	800 ± 50 rpm

SPARK PLUG GAP ..... 1.0 - 1.1 mm (0.039 - 0.043 in)

SPARK PLUG TORQUE ..... 18 - 24 Nm (13 - 17 ft lb)

[1] Connect test mode connector. Transmission in neutral (ECVT in N or P). Lights, rear defogger, and heater fan OFF.

Distributor, Ignition

RELUCTOR AIR GAP ..... 0.008 - 0.016 in (0.2 - 0.4 mm)

Firing Order

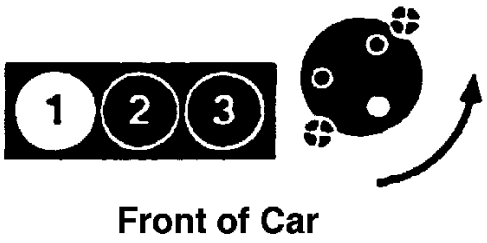

Firing Order: 1 - 3 - 2

Pick-Up Coil, Ignition

RELUCTOR AIR GAP ..... 0.2 - 0.4 mm (0.008 - 0.016 in)

Manual Transmission/Transaxle

Component	**Torque/Ft. Lbs.**
Clutch Release Fork Pivot	11-18
Flywheel	65-71
Pressure Plate	7-8
Speedometer Gear	10-13

Oxygen Sensor

TORQUE..... 25 - 34 Nm (18 - 25 ft lb)

Positive Crankcase Ventilation Valve

TORQUE VALUE ..... 14 - 19 ft lb (20 - 35 Nm)

System Specifications

Component	**Torque/Ft. Lbs.**
Axle Nut	**[01]**
Caliper Mount Bracket **[05]**	38-48
Driveshaft Nut	**[02]**
Hub Nut **[01]**	[02]
Lug Nuts	58-72
Power Steering Line Fittings To Valve Housing Lower	7-12
Power Steering Line Fittings To Valve Housing Upper	7-14
Speed Sensor	14-29
Steering Gear Clamp Bolts **[02]**	48
Steering Gear Retaining Clamps and Bolts **[03]**	35-52
Tie Rod End	18-22
Universal Joint Pinch Bolt **[02]**	17
Universal Yoke	16-19

[01] -- 145 ft. lbs. and within 30° to next slot for cotter key installation.
[02] -- Manual Steering Gear.
[03] -- Power Steering Gear.

Steering Gear

Component	**Torque/Ft. Lbs.**
Adjusting Screw Locknut	36-47
Lug Nuts	58-72
Steering Column Upper Retaining Bolt	14-22
Steering Rack Retaining Clamp Bolts	33-43

Steering Shaft Pinch Bolts	16-19
Tie Rod End Locknut	36-47
Tie Rod End To Steering Knuckle	18-22 **[01]**

[01] -- Castle nut may be tightened an additional 60° to align cotter pin.

Front Steering and Suspension Tightening Specifications

Component	**Torque/Ft. Lbs.**
Axle Nut	**[01]**
Caliper Mount Bracket **[05]**	38-48
Driveshaft Nut	**[02]**
Hub Nut **[01]**	[02]
Lug Nuts	58-72
Power Steering Line Fittings To Valve Housing Lower	7-12
Power Steering Line Fittings To Valve Housing Upper	7-14
Speed Sensor	14-29
Steering Gear Clamp Bolts **[02]**	48
Steering Gear Retaining Clamps and Bolts **[03]**	35-52
Tie Rod End	18-22
Universal Joint Pinch Bolt **[02]**	17
Universal Yoke	16-19

[01] -- 145 ft. lbs. and within 30° to next slot for cotter key installation.
[02] -- Manual Steering Gear.
[03] -- Power Steering Gear.

Rear Suspension Tightening Specifications

Component	**Torque/Ft. Lbs.**
Axle nut	145
Hill Holder Adjustment Nut	22-39 **[02]**
Hub Nut	145
Lug Nuts	58-72
Parking Brake Adjustment Locknut	40-65 **[02]**
Stabilizer Clamps	13-28
Stabilizer Link To Mount	6-10
Stabilizer Link To Stabilizer	6-10
Strut Assembly	**[01]**
Suspension Assembly	**[01]**

[01] -- Refer to **Wheel Bearing** for procedure and specifications.
[02] -- Inch lbs.

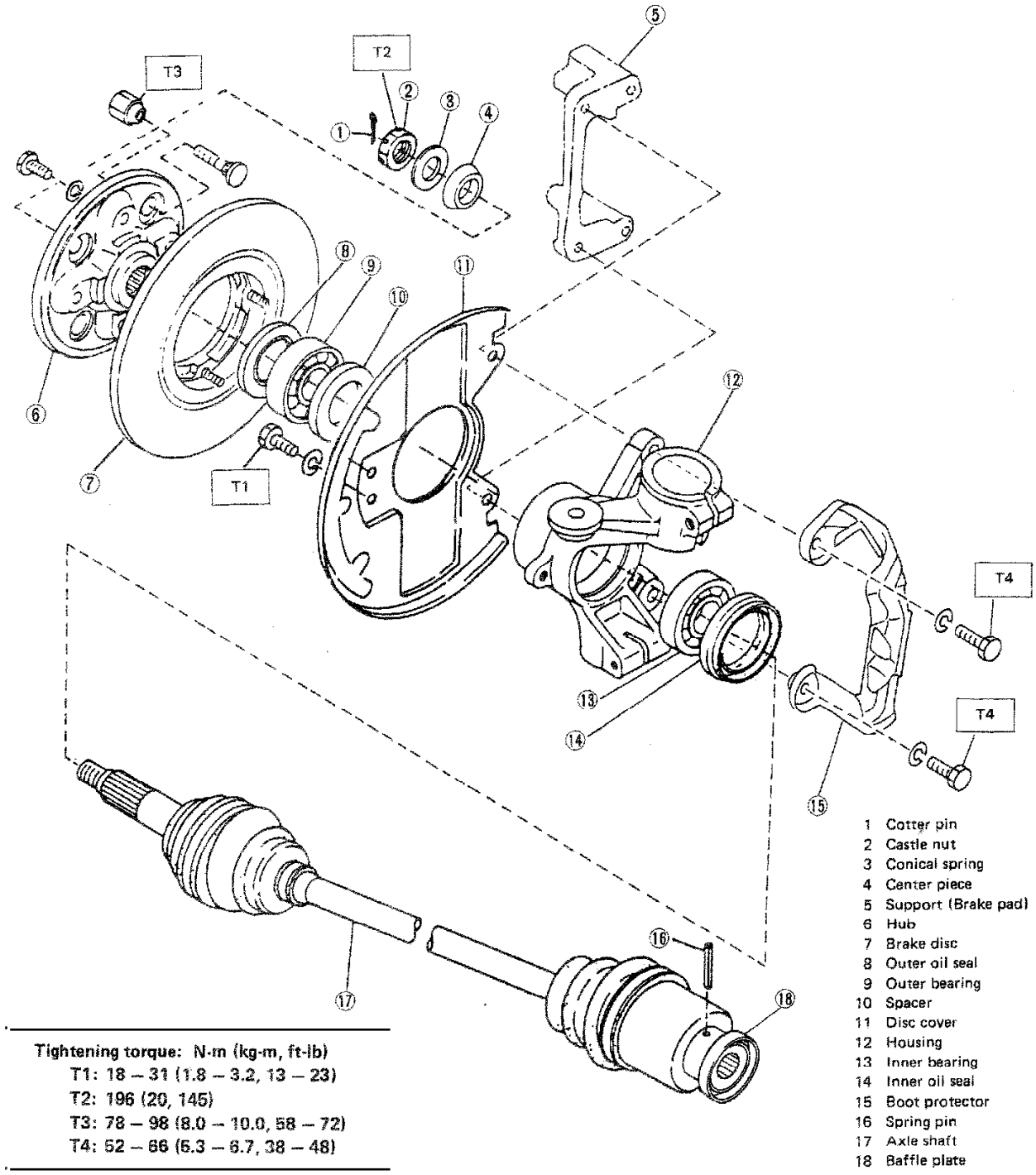
T1
T2
T3
T4
T4
1 Cotter pin
2 Castle nut
3 Conical spring
4 Center piece
5 Support (Brake pad)
6 Hub
7 Brake disc
8 Outer oil seal
9 Outer bearing
10 Spacer
11 Disc cover
12 Housing
13 Inner bearing
14 Inner oil seal
15 Boot protector
16 Spring pin
17 Axle shaft
18 Baffle plate
Tightening torque: N·m (kg-m, ft-lb)
T1: 18 – 31 (1.8 – 3.2, 13 – 23)
T2: 196 (20, 145)
T3: 78 – 98 (8.0 – 10.0, 58 – 72)
T4: 52 – 66 (5.3 – 6.7, 38 – 48)

Front Axle

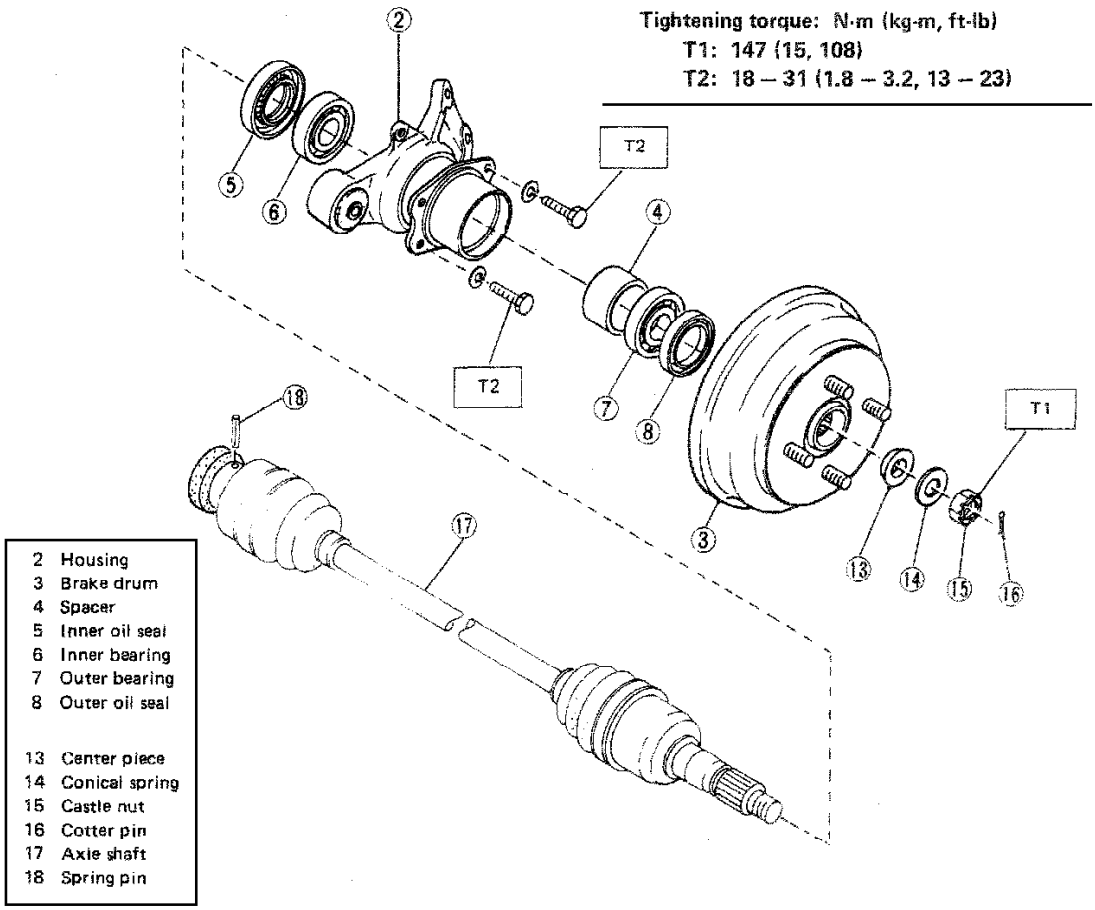
Tightening torque: N·m (kg-m, ft-lb)
T1: 147 (15, 108)
T2: 18 – 31 (1.8 – 3.2, 13 – 23)
T2
T2
T1
2 Housing
3 Brake drum
4 Spacer
5 Inner oil seal
6 Inner bearing
7 Outer bearing
8 Outer oil seal
13 Center piece
14 Conical spring
15 Castle nut
16 Cotter pin
17 Axle shaft
18 Spring pin

Rear Axle

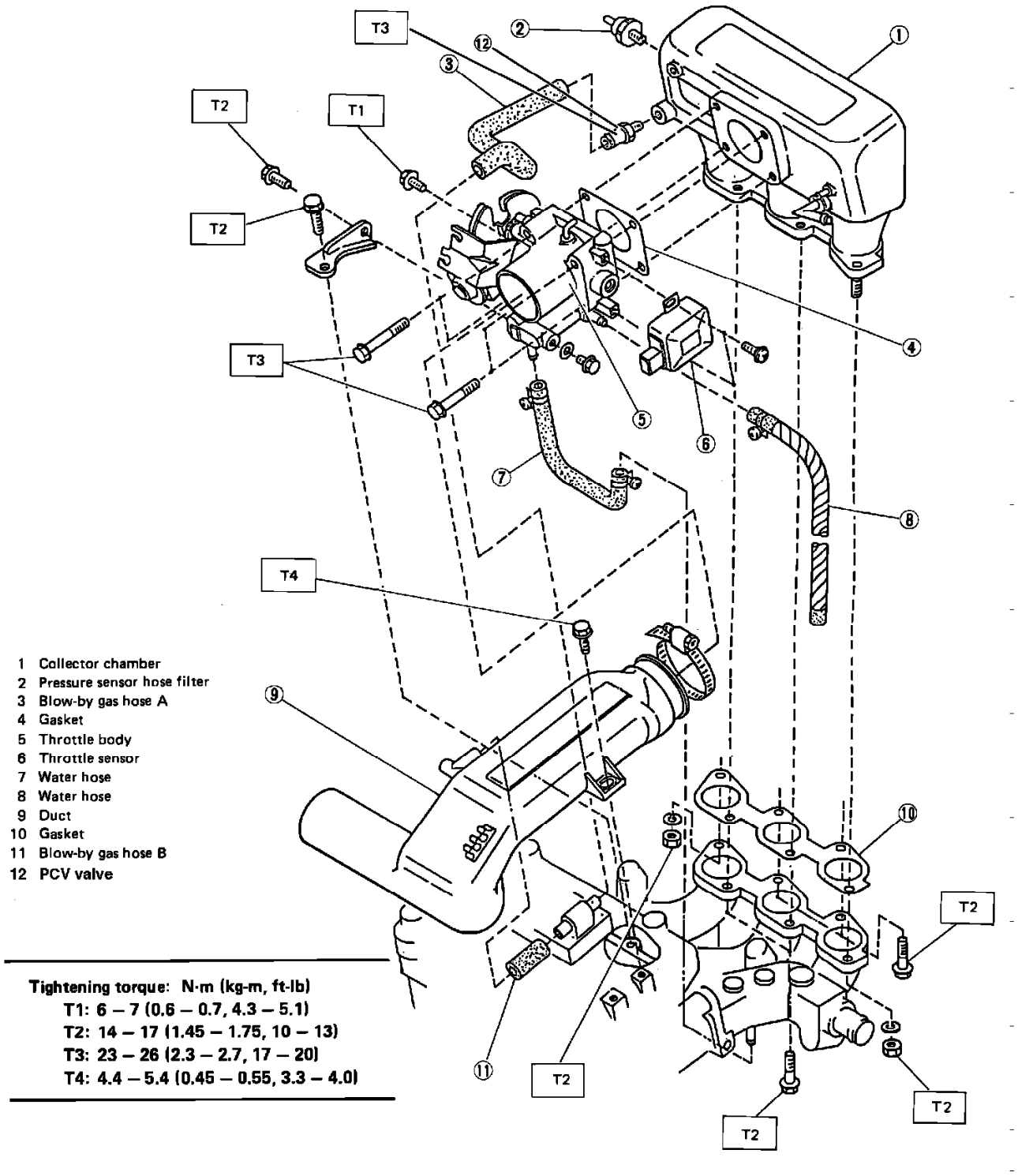

Throttle Chamber

Throttle Cable/Linkage

ACCEL. PEDAL FREE PLAY ..... 0.04 - 0.20 in (1 - 5 mm)

Vehicle model		FWD model	4WD model
Type		Continuously variable	
Speed ratio	Forward	2.503 – 0.497	
	Reverse	2.475	
Front reduction ratio	1st	1.275	1.35
	2nd	4.666	
Rear reduction ratio	1st	—	1.266
	2nd	—	0.947
	Final (rear differential)	—	3.900
Oil pump	Type	External gear pump	
	Drive system	Direct drive by engine	
Lubricating oil	Quality	Genuine SUBARU ECVT fluid or DXRON II	
	Approximate lubricating oil quantity (incl. oil cooler)	Approx. 3.35 ℓ (3.5 US qt, 2.9 Imp qt)	Approx. 4.15 ℓ (4.4 US qt, 3.7 Imp qt)
Rear differential gear oil	Quality	—	GL-4 or GL-5
	Amount	—	0.8 ℓ (0.8 US qt, 0.7 Imp qt)
Selector system	Operating system	Direct shift by cable	
	Forward and reverse switching mechanism	Synchromesh dog clutch	
	Selector positions	P : Output shaft locked, engine starting possible R : Reverse N : Neutral, engine starting possible D : Forward, automatic stepless Ds : Forward, automatic stepless (engine brake & sporty range)	

ECVT Specifications

Air Bleeder Screw	5-7 ft.lb
Adjuster Nut	9-11 ft.lb
Backing Plate Nuts	14-22 ft.lb
Wheel Cylinder Nuts	5-8 ft.lb

Engine

Idle vacuum ..... 62.7 - 66.7kPa (18.50 - 19.69 in Hg)

System Specifications

ENGINE IDLE VACUUM ..... more than 18.50 - 19.69 in Hg (62.7 - 66.7 kPa)

FUEL PRESSURE

Maximum ..... 37 psi (250 kPa)
Controlled at idle ..... 26 - 30 psi (177 - 206 kPa)

Fuel Pressure

With vacuum to regulator ..... 26 - 30 psi (177 - 206 kPa)
With no vacuum to regulator ..... 34 - 38 psi (235 - 265 kPa)

Fuel Pressure Regulator

REGULATED FUEL PRESSURE

At idle ..... 31 - 34 psi (216 - 235 kPa)

Radiator Cap

Radiator Cap Relief Pressure ..... 13 lbs.

Thermostat, Engine Cooling

Thermostat Opening Temperature ..... 185°F

System Specifications

TYPE ..... **AF**

Does not include front differential.

CAPACITY, Initial Refill*:
All ex. ECVT ..... **2.5 Liters 2.6 Quarts**

ECVT:
2WD ..... **1.8 Liters 1.9 Quarts**
4WD ..... **1.9 Liters 2.0 Quarts**

*With engine at operating temperature, shift transmission through all gears. Check fluid level in PARK and add fluid as needed.

Fluid - CVT

TYPE ..... **AF**

Does not include front differential.

CAPACITY, Initial Refill*:
All ex. ECVT ..... **2.5 Liters 2.6 Quarts**

ECVT:
2WD ..... **1.8 Liters 1.9 Quarts**
4WD ..... **1.9 Liters 2.0 Quarts**

*With engine at operating temperature, shift transmission through all gears. Check fluid level in PARK and add fluid as needed.

Coolant

Coolant Capacity, Quarts 5.2

System Specifications

Engine Oil Refill Quarts 3.2

Engine Oil Refill	3.2 qt (US)

Differential, Front W/at

1987-93 ..... 75W-90, 80W-90 **GL-5**

Above 30°F (0°C) 90
Above -20°F (-30°C) 85W
Below 90°F (32°C) 80W

CAPACITY, Refill:
Ex. XT-Coupe ..... **1.2 Liters 2.6 Pints**

XT-Coupe ..... **1.4 Liters 3.0 Pints**

Differential-Rear

Standard 75W-90, 80W-90 **GL-5**

Above 30°F (0°C) 90
Above -20°F (-30°C) 85W
Below 90°F (32°C) 80W

Limited-Slip 80W-90 **GL-5***

CAPACITY, Refill:
All models ..... **0.8 Liters 1.6 Pints**

Fluid - M/T

Justy 75W-90 **GL-4**

All others 75W-90, 80W-90 **GL-5**

Above 30°F (0°C) 90
Above -20°F (-30C) 85W
Below 90°F (32 °C) 80W

CAPACITY, Refill:

Brat & Hatchback:
2WD ..... **2.5 Liters 5.2 Pints**
4WD ..... **2.8 Liters 6.0 Pints**

Impreza:
2WD ..... **2.6 liters 5.4 pints**
4WD ..... **3.5 liters 6.8 pints**

Justy:
2WD ..... **2.1 Liters 4.4 Pints**
4WD ..... **2.8 Liters 6.0 Pints**

Legacy:
2WD ..... **3.3 Liters 7.0 Pints**
4WD ..... **3.5 Liters 7.4 Pints**

Loyale:
2WD ..... **2.6 Liters 5.4 Pints**
4WD ..... **3.3 Liters 7.0 Pints**

XT Coupe:
4-cyl. 2WD ..... **2.6 Liters 5.4 Pints**
4-cyl. 4WD ..... **3.3 Liters 7.0 Pints**
6-cyl. 4WD ..... **3.5 Liters 7.4 Pints**

Positive Crankcase Ventilation

TYPE ..... **SF, SG**

CAPACITY Refill:*
3-cyl. 1189cc ..... **2.8 Liters 3.0 Quarts**

4-cyl.:
1595cc ..... **3.5 Liters 3.7 Quarts**
1781cc ..... **4.0 Liters 4.2 Quarts**
1820cc ..... **4.0 liters 4.2 quarts**
2212cc ..... **4.5 Liters 4.8 Quarts**

6-cyl.:
2672cc ..... **5.0 Liters 5.3 Quarts**
3318cc ..... **6.0 Liters 6.3 Quarts**

*Capacity shown is without filter. When replacing filter, additional oil may be needed.

1988-93:
Warm climate & H.D. applications 30, 40, 10W-50, 20W-40, 20W-50
-5° to 95°F (-21° to 35°C) 10W-30, 10W-40
Below 32°F (0°C) 5W-30*

*Not recommended for sustained high-speed driving.

Fluid Type	FMVSS No. 116, DOT 3 or DOT 4

System Specifications

Automatic Transmission Fluid ..... Dexron II/IIE **[01]**

[01] -- Final Drive, 80W-90 GL-5

Fluid - CVT

Automatic Transmission Fluid ..... Dexron II/IIE **[01]**

[01] -- Final Drive, 80W-90 GL-5

Fluid - Differential

Rear Axle Gear Oil 80W-90 GL-5

Fuel

FUEL TYPE ..... Regular unleaded gasoline

Positive Crankcase Ventilation

TYPE ..... **SF, SG**

CAPACITY Refill:*

3-cyl. 1189cc ..... **2.8 Liters 3.0 Quarts**

4-cyl.:

- 1595cc ..... **3.5 Liters 3.7 Quarts**
- 1781cc ..... **4.0 Liters 4.2 Quarts**
- 1820cc ..... **4.0 liters 4.2 quarts**
- 2212cc ..... **4.5 Liters 4.8 Quarts**

6-cyl.:

- 2672cc ..... **5.0 Liters 5.3 Quarts**
- 3318cc ..... **6.0 Liters 6.3 Quarts**

*Capacity shown is without filter. When replacing filter, additional oil may be needed.

1988-93:

Warm climate & H.D. applications 30, 40, 10W-50, 20W-40, 20W-50
-5° to 95°F (-21° to 35°C) 10W-30, 10W-40
Below 32°F (0°C) 5W-30*

*Not recommended for sustained high-speed driving.

Power Steering Fluid

Power Steering Fluid ..... Dexron II/IIE

Transmission Control Systems

Manual Transmission Oil 80W-90 GL-5

Vehicle: Diagrams

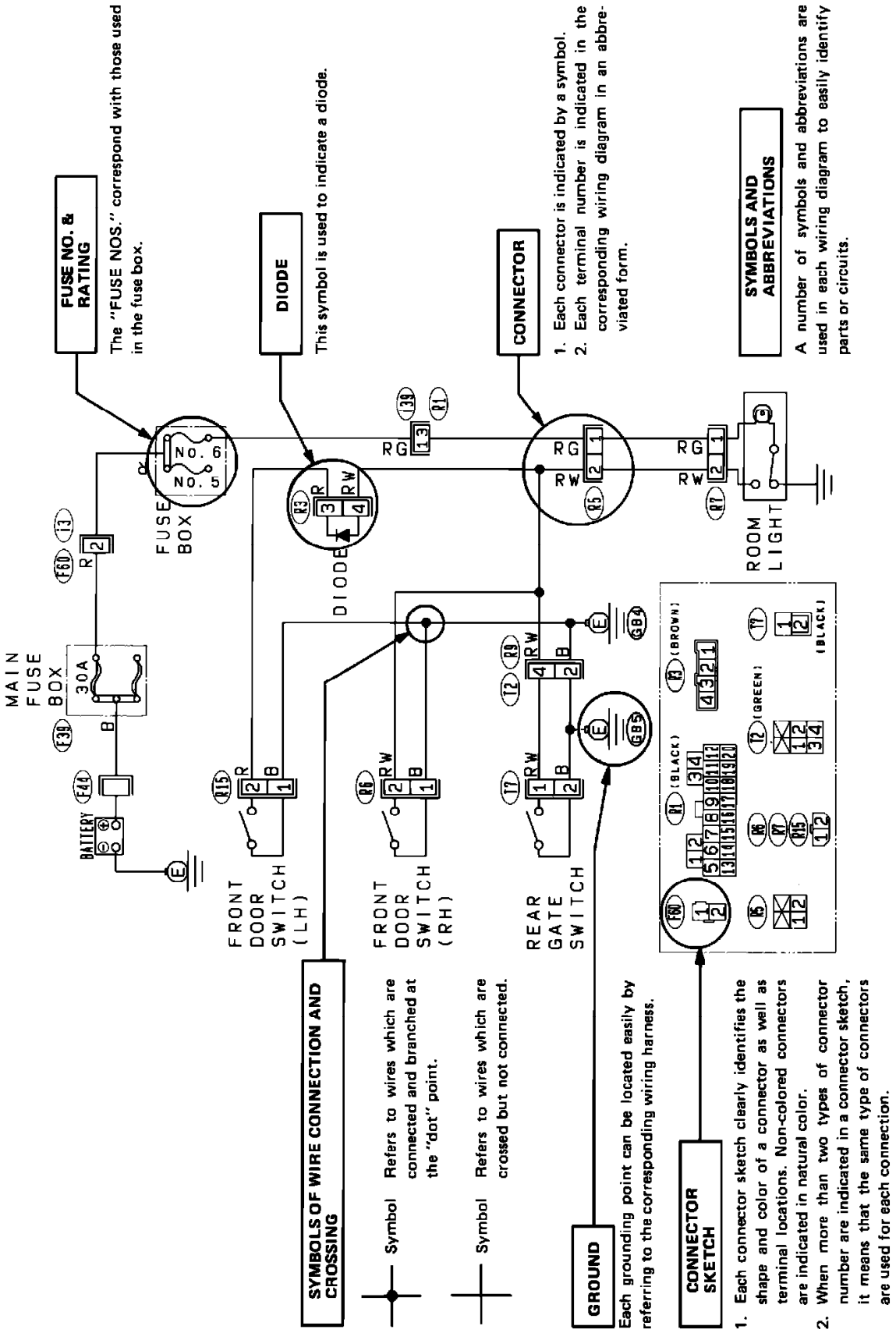

Symbol Identification

RELAY

A symbol used to indicate a relay.

POWER SUPPLY ROUTING

A symbol is used to indicate the power supply in each wiring diagram.
"MB-5", "MB-6," etc., which are used as power-supply symbols throughout the text, correspond with those shown in the POWER SUPPLY ROUTING in the wiring diagram.
Accordingly, using the POWER SUPPLY ROUTING and wiring diagrams permits service personnel to understand the entire electrical arrangement of a system.

SYMBOLS OF WIRE CONNECTION AND CROSSING

Symbol — Refers to wires which are connected and branched at the "dot" point.

Symbol — Refers to wires which are crossed but not connected.

SYMBOLS AND ABBREVIATIONS

A number of symbols and abbreviations are used in each wiring diagram to easily identify parts or circuits.

S.M.J.

A symbol is used to indicate the terminal arrangement of the super multiple junction. The S.M.J. is not shown in respective wiring diagrams but is indicated on the next page.

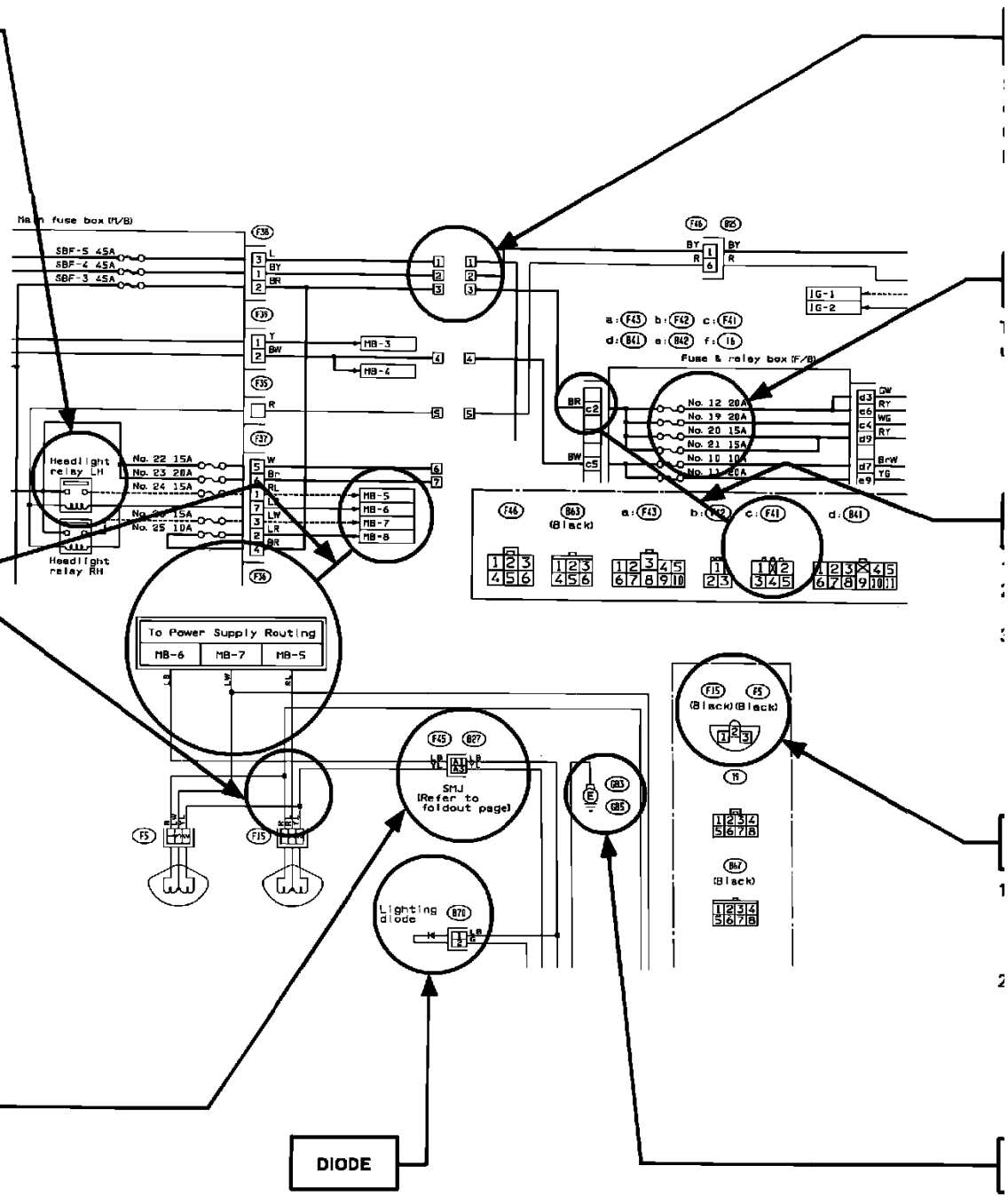

DIODE

A symbol is used to indicate a diode.

WIRING CONNECTION

Some wiring diagrams are indicated in foldouts for convenience. Wiring destinations are indicated where necessary by corresponding symbols (as when two pages are needed for clear indication), as shown below.

FUSE NO. & RATING

The "FUSE NO. & RATING" corresponds with that used in the fuse box (main fuse box, fuse and joint box.)

CONNECTOR

1. Each connector is indicated by a symbol.
2. Each terminal number is indicated in the corresponding wiring diagram in an abbreviated form.
3. For example, terminal number "C2" refers to No. 2 terminal of connector (C:F41) shown in the connector sketch.

CONNECTOR SKETCH

1. Each connector sketch clearly identifies the shape and color of a connector as well as terminal locations. Non-colored connectors are indicated in natural color.
2. When more than two types of connector number are indicated in a connector sketch, it means that the the same type connectors are used.

GROUND

Each grounding point can be located easily by referring to the corresponding wiring harness.

Key To Wiring Diagram

Wire Color Code Identification

Black	B
Blue	L
Brown	BR
Brown	Br
Gray	Gr
Green	G
Light Blue	LB
Light Green	LG
Light Green	Lg
Orange	OR
Pink	P
Red	R
Shielded Wire (inner)	SA
Shielded Wire (Outer)	SB
White	W
Yellow	Y

Battery Precautions

CAUTION:

- Never use a booster/starter which has a voltage rating above 12 volts to start engine.
- Always ensure the battery is properly connected to the vehicle prior to attempting to start engine.
- Don't disconnect the battery when the engine is running.
- When charging a battery, be sure battery cables are disconnected.
- The battery contains acid and produces explosive gas (hydrogen). Avoid creating sparks near battery.

Electrical Connections and Circuits

CAUTION:

- Prior to disconnecting, fully release connector locks.
- Ensure connectors are fully seated and all insulators and shields are in place when installed.
- Never connect or disconnect electrical connections with the ignition switch ON, unless directed to do so by a test procedure.
- Do not test continuity with a self powered test lamp.
- Avoid arcing when checking circuit continuity.

Electronic Component Handling

STATIC DISCHARGE

- Before handling electronic parts discharge static charges by touching ground or maintaining a ground connection to a bare skin area.
- Never touch control unit connector pins, integrated circuit connector pins, or soldered components on the control unit circuit board.

TESTING

- When measuring voltage at the control unit harness connector disconnect harness connector with the ignition OFF then turn ignition ON as necessary.
- To prevent deforming control unit harness connectors do not probe terminals directly. Instead insert a pin from the harness side and perform measurements through pin.

CONTROL UNIT DAMAGE

- Do not try to disassemble the control unit.
- Before performing electrical welding disconnect the battery, climate control, injection, cruise control, control unit, and radio.
- If temperatures may exceed **176°F (80°C)** remove all control units.
- Avoid getting water on any fuel and engine control system components.
- Never apply battery power to a component unless directed to do so in a test procedure.

Electronic Component Replacement

NOTE: Before disconnecting battery ground, access trouble codes and radio presets. Control unit memory is erased when ground is removed.

CAUTION:

^ Disconnect battery ground before servicing electronic components.

^ To avoid induced voltage spikes, all fuel and engine control system wiring should be at least 4 inches away from ignition wires.

Electrostatic Discharge

ELECTROSTATIC DISCHARGE DAMAGE

^ Automotive computers and related component operate at low voltages (3 to 5 V) and are extremely susceptible to damage from static electrical discharge.

^ Voltages as low as 12V can damage electronic circuits. For a person to feel a static discharge "ZAP," it takes up to 4,000V.

^ There is no way to know whether the charge is positive or negative.

COMMON METHODS OF STATIC CHARGING

Friction

Friction between organic materials (such as cotton or leather) and synthetics (such as plastic, vinyl, or glass) will generate static charges as great as 25,000 volts. This can happen by simply sliding across a car seat or by wearing a cotton shirt under a coat made of synthetic materials.

Induction

Charging by induction occurs when a person standing near a highly charged object (strong magnetic field such as a transformer) momentarily touches ground. Like charges are displaced to ground, leaving the person highly charged with opposite polarity.

STATIC PRECAUTIONS

Static charges are gradually equalized by moisture in the air, but are retained much longer when humidity is low. Use care when handling and testing electronic components.

Circuit Protection Devices

PURPOSE

The purpose of circuit protection is to protect the wiring assembly during normal and overload conditions. An overload is defined as a current requirement that is higher than normal. This overload could be caused by a short circuit or system malfunction. The short circuit could be the result of a pinched or cut wire or an internal device short circuit, such as an electronic module failure.

The circuit protection device is only applied to protect the wiring assembly, and not the electrical load at the end of the assembly. For example, if an electronic component short circuits, the circuit protection device will assure a minimal amount of damage to the wiring assembly. However, it will not necessarily prevent damage to the component.

CIRCUIT PROTECTION DEVICES

There are three basic types of circuit protection devices: Circuit Breaker, Fuse and Fusible Link.

CIRCUIT BREAKERS

A circuit breaker is a protective device designed to open the circuit when a current load is in excess of rated breaker capacity. If there is a short or other type of overload condition in the circuit, the excessive current will open the circuit between the circuit breaker terminals. There are two basic types of circuit breakers used in this vehicle: cycling and non-cycling.

Cycling Circuit Breaker

The cycling breaker will open due to heat generated when excessive current passes through it for a period of time. Once the circuit

breaker cools, it will close again after a few seconds. If the cause of the high current is still present it will open again. It will continue to cycle open and closed until the condition causing the high current is removed.

Non-Cycling Circuit Breaker

There are two types of non-cycling circuit breakers. One type is mechanical and is nearly the same as a cycling breaker. The difference is a small heater wire within the non-cycling circuit breaker. This wire provides enough heat to keep the bimetallic element open until the current source is removed. The other type is solid state, known as an Electronic Circuit Breaker (ECB). This device has a Positive Temperature Coefficient. It increases its resistance greatly when excessive current passes through it. The excessive current heats the ECB. As it heats, its resistance increases, therefore having a Positive Temperature Coefficient. Eventually the resistance gets so high that the circuit is effectively open. The EC13 will not reset until the circuit is opened, removing voltage from its terminals. Once voltage is removed, the circuit breaker will re-close within a second or two.

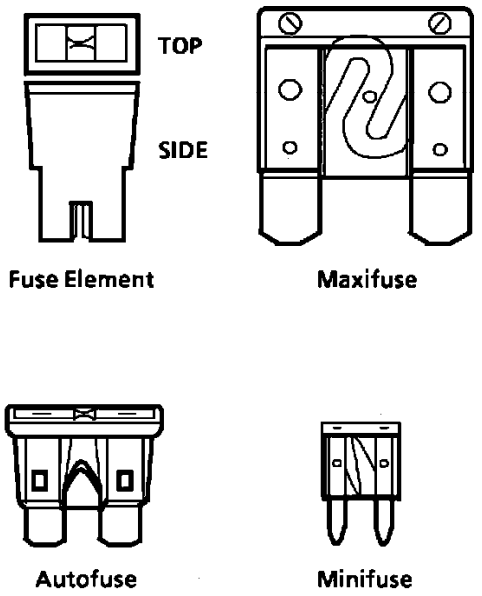

Fig. 1 Fuse Devices

AUTOFUSE

CURRENT RATING	COLOR
3	VIOLET
5	TAN
7.5	BROWN
10	RED
15	BLUE
20	YELLOW
25	NATURAL
30	GREEN

MAXIFUSE

CURRENT RATING	COLOR
20	YELLOW
30	GREEN
40	AMBER
50	RED
60	BLUE
70	BROWN
80	NATURAL

MINIFUSE

CURRENT RATING	COLOR
5	TAN
7.5	BROWN
10	RED
15	BLUE
20	YELLOW
25	WHITE
30	GREEN

PACIFIC FUSE ELEMENT

CURRENT RATING	COLOR
30	PINK
40	GREEN
50	RED
60	YELLOW

Fig. 2 Fuse Rating and Color

FUSES

The most common method of automotive wiring circuit protection is the fuse, **Fig. 1.** A fuse is a device that, by the melting of its element, opens an electrical circuit when the current exceeds a given level for a sufficient time. The action is non-reversible and the fuse must be replaced each time a circuit is overloaded or after a malfunction is repaired. Fuses are color coded. The standardized color identification and ratings are shown in **Fig. 2.** For service replacement, non-color coded fuses of the same respective current rating can be used. Examine a suspect fuse for a break in the element. If the element is broken or melted, replace the fuse with one of equal current rating. There are additional specific circuits with in-line fuses. These fuses are located within the individual wiring harness and will appear to be an open circuit if blown.

Autofuse

The Autofuse, normally referred to simply as "Fuse," is the most common circuit protection device in today's vehicle. The Autofuse is most often used to protect the wiring assembly between the Fuse Block and the system components.

Maxifuse

The Maxifuse was designed to replace the fusible link and Pacific Fuse Elements. The Maxifuse is designed to protect cables, normally between the Battery and Fuse Block, from both direct short circuits and resistive short circuits. Compared to a fusible link or a Pacific Fuse Element, the Maxifuse performs much more like an Autofuse, although the average opening time is slightly longer. This is because the Maxifuse was designed to be a slower blowing fuse, with less chance of nuisance blows.

Minifuse

The Minifuse is a smaller version of the Autofuse and has a similar performance. As with the Autofuse, the Minifuse is usually used to protect the wiring assembly between a Fuse Block and system components. Since the Minifuse is a smaller device, it allows for more system specific fusing to be accomplished within the same amount of space as Autofuses.

Pacific Fuse Element

The Pacific Fuse Element was developed to be a replacement for the fusible link. Like a fusible link, the fuse element is designed to protect wiring from a direct short to ground. Though the element is easier to service and inspect than a fusible link, it has limited use and will be replaced by Maxifuses in future vehicles.

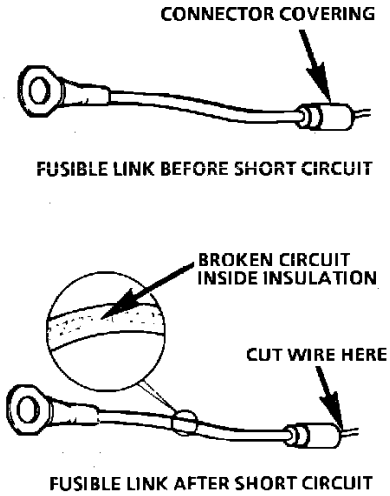

Fig. 3 Good and Damaged Fusible Links

METRIC WIRE SIZES (mm^2)	AWG SIZES
.22	24
.35	22
.5	20
.8	18
1.0	16
2.0	14
3.0	12
5.0	10
8.0	8
13.0	6
19.0	4
32.0	2

Fig. 6 Wire Size Conversion Table

FUSIBLE LINKS

In addition to circuit breakers and fuses, some circuits use fusible links to protect the wiring. Like fuses, fusible links are "one-time" protection devices that will melt and create an open circuit, **Fig. 3.** Not all fusible link open circuits can be detected by observation. Always inspect that there is battery voltage past the fusible link to verify continuity.

Fusible links are used instead of a fuse in wiring circuits that are not normally fused, such as the ignition circuit. For AWG sizes, each fusible link is four wire gage sizes smaller than the wire it is designed to protect. For example: to protect a 10 gage wire use a 14 gage link or for metric, to protect a 5 sq mm wire use a 2 sq mm link, **Fig. 6.** Links are marked on the insulation with wire gage size because the heavy insulation makes the link appear to be a heavier gage than it actually is. The same wire size fusible link must be used when replacing a blown fusible link.

Fusible links are available with three types of insulation: Hypalon(R), Silicone/GXL (SIL/GXL) and Expanded Duty. All future vehicles that use fusible links will utilize the Expanded Duty type of fusible link. When servicing fusible links, all fusible links can be replaced with the Expanded Duty type. SIL/GXI fusible links can be used to replace either SIL/GXI or Hypalon(R) fusible links. Hypalon(R) fusible links can only be used to replace Hypalon(R) fusible links.

Determining characteristics of the types of fusible links:

- ^ Hypalon(R) (limited use): only available in .35 sq mm or smaller and its insulation is one color all the way through.
- ^ SIL/GXL (widely used): available in all sizes and has a white inner core under the outer color of insulation.
- ^ Expanded Duty: available in all sizes, has an insulation that is one color all the way through and has three dots following the writing on the insulation.

Service fusible links are available in many lengths. Choose the shortest length that is suitable. If the fusible link is to be cut from a spool, it should be cut 150-225 mm (approx 6-9 in.) long.

NEVER make a fusible link longer than 225 mm (approx 9 in.).

CAUTION: Fusible links cut longer than 225 mm (approx 9 in.) will not provide sufficient overload protection.

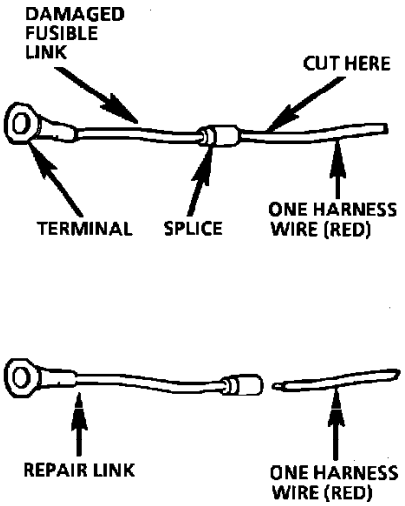

Fig. 4 Single Wire Feed Fusible Link

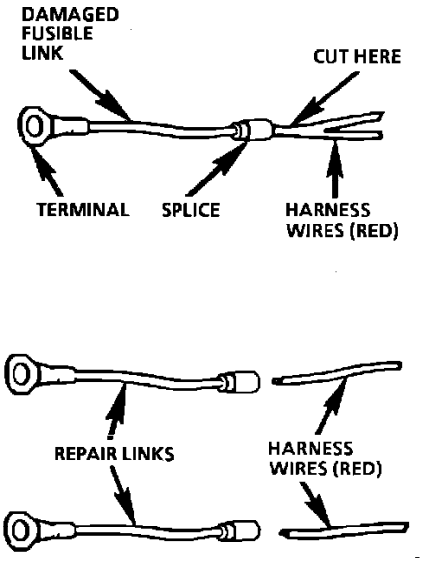

Fig. 5 Double Wire Feed Fusible Link

SERVICE PROCEDURE

- To replace a damaged fusible link, **Fig. 4**, cut it off beyond the splice. Replace with a repair link. When connecting the repair link, strip wire and use staking-type pliers to crimp the splice securely in two places. For more details on splicing procedures, see **SPLICING COPPER WIRE.** Use Crimp and Seal splices whenever possible.
- To replace a damaged fusible link which feeds two harness wires, cut them both off beyond the splice. Use two repair links, one spliced to each harness wire, **Fig. 5.**

Repairing Connectors

The following general repair procedures can be used to repair most types of connectors. The repair procedures are divided into three general groups: Push-to-Seat and Pull-to-Seat and Weather Pack.

^ See **CONNECTOR TERMINAL I.D.** to determine which type of connector is to be serviced.
^ Use the proper Pick(s) or Tool(s) that apply to the terminal.

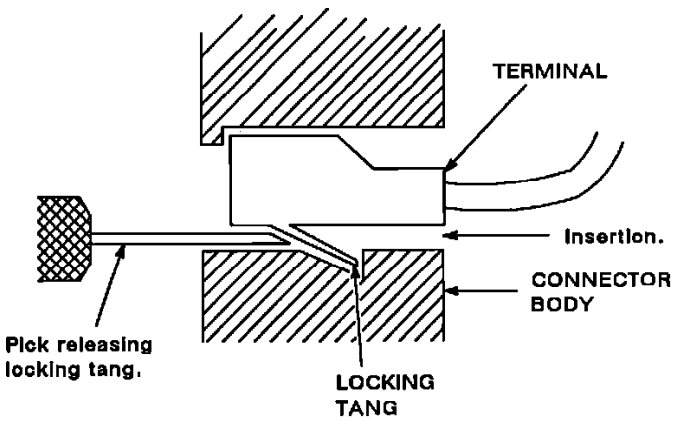

Figure 1 - Typical Push-To-Seat Connector

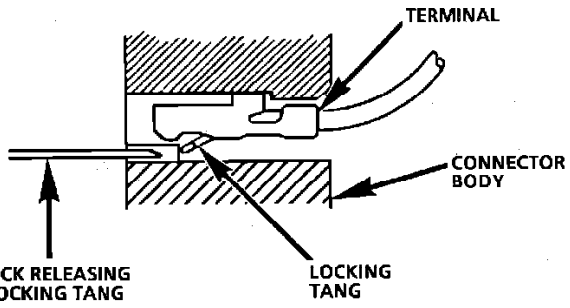

Fig. 20 Typical Pull-to-Seat Connector and Terminal

PUSH-TO-SEAT AND PULL-TO-SEAT

Follow the steps below to repair Push-to-Seat or Pull-to-Seat connectors, **Figs. 19 and 20.** The steps are illustrated with typical connectors. Your connector may differ, but the repair steps are similar. Some connectors do not require all the steps shown. Skip those that don't apply.

1. Remove any CPA (Connector Position Assurance) Locks. CPAs are designed to retain connectors when mated.
2. Remove any TPA (Terminal Position Assurance) Locks. TPAs are designed to keep the terminal from backing out of the connector.

NOTE: The TPA must be removed prior to terminal removal and must be replaced when the terminal is repaired and reseated.

3. Open any secondary locks. A secondary lock aids in terminal retention and is usually molded to the connector.
4. Separate the connector halves and back out seals.
5. Grasp the lead and push the terminal to the forward most position. Hold the lead at this position.
6. Locate the terminal lock tang in the connector canal.
7. Insert the proper size pick straight into the connector canal at the mating end of the connector.
8. Depress the locking tang to unseat the terminal.
   Push-to-Seat - Gently pull on the lead to remove the terminal through the back of the connector.
   Pull-to-Seat - Gently push on the lead to remove the terminal through the front of the connector.

NOTE: Never use force to remove a terminal from a connector.

9. Inspect terminal and connector for damage. Repair as necessary, see **TERMINAL REPAIR.**

10. Reform lock tang and reseat terminal in connector body. Apply grease if connector was originally equipped with grease.
11. Install any CPAs or TPAs, close any secondary locks and join connector halves.

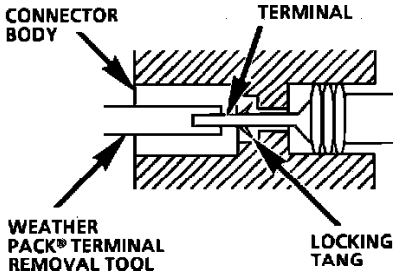

Fig. 21 Typical Weather Pack Connector and Terminal

WEATHER PACK

Follow the steps below to repair Weather Pack(R) connectors, **Fig. 21.**

1. Separate the connector halves.
2. Open secondary lock. A secondary lock aids in terminal retention and is usually molded to the connector.
3. Grasp the lead and push the terminal to the forward most position. Hold the lead at this position.
4. Insert the Weather Pack(R) terminal removal tool into the front (mating end) of the connector cavity until it rests on the cavity shoulder.
5. Gently pull on the lead to remove the terminal through the back of the connector.

NOTE: Never use force to remove a terminal from a connector.

6. Inspect the terminal and connector for damage. Repair as necessary, see **TERMINAL REPAIR.**
7. Reform the lock tang and reseat terminal in connector body.
8. Close secondary locks and join connector halves.

Splicing Copper Wire Using Crimp and Seal Splice Sleeves

Crimp and Seal splice sleeves may be used on all types of insulation except tefzel and coaxial to form a one to one splice. They are to be used where there are special requirements such as moisture scaling.

Step 1: Open the Harness

If the harness is taped, remove the tape. To avoid wire insulation damage, use a sewing "seam ripper" to cut open the harness (available from sewing supply stores). The Crimp and Seal splice sleeves may be used on all types of insulation except tefzel and coaxial and may only be used to form a one to one splice.

Step 2: Cut the Wire

Begin by cutting as little wire off the harness as possible. You may need the extra length of wire later if you decide to cut more wire to change the location of a splice. You may have to adjust splice locations to make certain that each splice is at least 40 mm (1.5 in.) away from other splices, harness branches or connectors. This will help prevent moisture from bridging adjacent splices and causing damage.

METRIC WIRE SIZES (mm^2)	AWG SIZES
.22	24
.35	22
.5	20
.8	18
1.0	16
2.0	14
3.0	12
5.0	10
8.0	8
13.0	6
19.0	4
32.0	2

Fig. 6 Wire Size Conversion Table

Step 3: Strip the Insulation

If it is necessary to add a length of wire to the existing harness, be certain to use the same size as the original wire, see **Fig. 6.**
To find the correct wire size either find the wire on the schematic and convert the metric size to the equivalent AWG size or use an AWG wire gage. If unsure about the wire size, begin with the largest opening in the wire stripper and work down until a clean strip of the insulation is removed. Strip approximately 7.5 mm (5/16 in.) of insulation from each wire to be spliced. Be careful to avoid nicking or cutting any of the wires. Check the stripped wire for nicks or cut strands. If the wire is damaged, repeat this procedure after removing the damaged section.

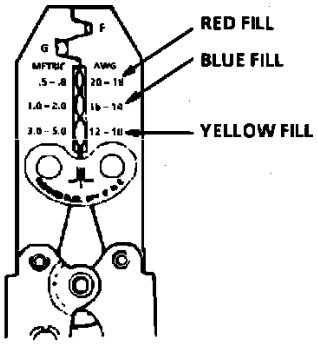

Fig. 13 Hand Crimp Tool

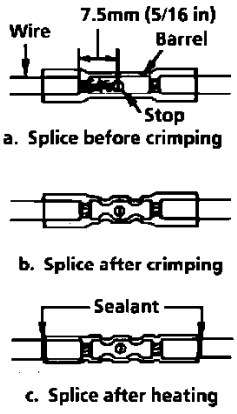

Fig. 14 Seal Splice Sequence

Step 4: Select and Position the Splice Sleeve

Select the proper splice sleeve according to wire size. The splice sleeves and tool nests are color coded.
Using a crimp tool, **Fig. 13,** position the splice sleeve in the proper color nest of the hand crimp tool. Place the splice sleeve in the nest so that the crimp falls midway between the end of the barrel and the stop.

The sleeve has a stop in the middle of the barrel to prevent the wire from going further, **Fig. 14.** Close the hand crimper handles slightly to hold the splice sleeve firmly in the proper nest.

Step 5: Insert Wires into Splice Sleeve and Crimp

Insert the wire into the splice sleeve until it hits the barrel stop and close the handles of the crimper tightly until the crimper handles open when released. The crimper handles will not open until the proper amount of pressure is applied to the splice sleeve. Repeat steps 4 and 5 for opposite end of the splice.

Step 6: Shrink the Insulation around the Splice

Using a suitable heat gun, apply heat where the barrel is crimped. Gradually move the heat barrel to the open end of the tubing, shrinking the tubing completely as the heat is moved along the insulation. A small amount of sealant will come out of the end of the tubing when sufficient shrinking is achieved, **Fig. 14.**

Splicing Copper Wire Using Splice Clips

The Splice Clip is a general purpose wire repair device. It may not be acceptable for applications having special requirements such as moisture sealing.

Step 1: Open the Harness

If the harness is taped, remove the tape. To avoid wire insulation damage, use a sewing "seam ripper" to cut open the harness (available from sewing supply stores). If the harness has a black plastic conduit, simply pull out the desired wire.

Step 2: Cut the Wire

Begin by cutting as little wire off the harness as possible. You may need the extra length of the wire later if you decide to cut more wire off to change the location of a splice. You may have to adjust splice locations to make certain that each splice is at least 40 mm (1-1/2") away from other splices, harness branches or connectors.

METRIC WIRE SIZES (mm^2)	AWG SIZES
.22	24
.35	22
.5	20
.8	18
1.0	16
2.0	14
3.0	12
5.0	10
8.0	8
13.0	6
19.0	4
32.0	2

Fig. 6 Wire Size Conversion Table

Step 3: Strip the Insulation

When replacing a wire, use a wire of the same size as the original wire or larger. The schematics list wire size in metric units. See table, **Fig. 6,** for the commercial (AWG) wire sizes that can be used to replace each metric wire size. Each AWG size is either equal to or larger than the equivalent metric size. To find the correct wire size either find the wire on the schematic and convert the metric size to the AWG size, or use an AWG wire gage. If you aren't sure of the wire size, start with the largest opening in the wire stripper and work down until a clean strip of the insulation is removed. Be careful to avoid nicking or cutting any of the wires.

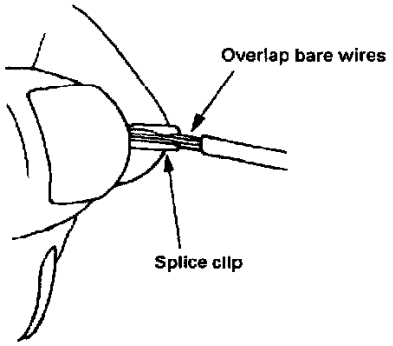

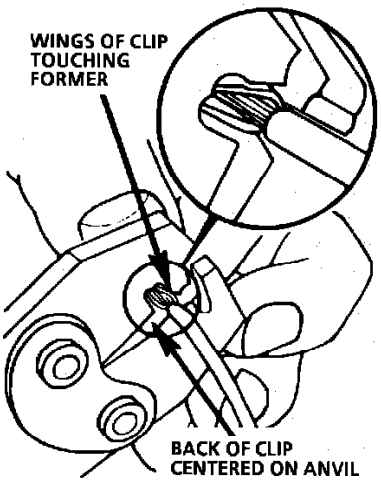

Fig. 8 Crimping the Splice Clip

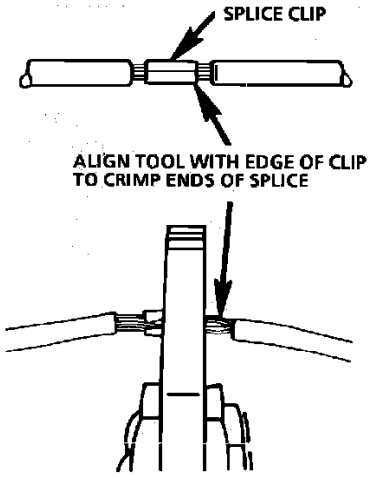

Fig. 9 Completing the Crimp

Step 4: Crimp the Wires

Select the proper clip to secure the splice. To determine the proper clip size for the wire being spliced, follow the directions included in the J 38125-A Terminal Repair Kit. Select the correct anvil on the crimper. On most crimpers your choice is limited to either a small or large anvil. Overlap the stripped wire ends and hold them between your thumb and forefinger as shown in **Fig. 7.** Then, center the splice clip under the stripped wires and hold it in place.

^ Open the crimping tool to its full width and rest one handle on a firm flat surface.

^ Center the back of the splice clip on the proper anvil and close the crimping tool to the point where the former touches the wings of the clip.

^ Make sure that the clip and wires are still in the correct position. Then, apply steady pressure until the crimping tool closes, **Fig. 8.**

^ Before crimping the ends of the clip, be sure that:

- The wires extend beyond the clip in each direction.
- No strands of wire are cut loose, and
- No insulation is caught under the clip. Crimp the splice again, once on each end. Do not let the crimping tool extend beyond the edge of the clip or you may damage or nick the wires, **Fig. 9.**

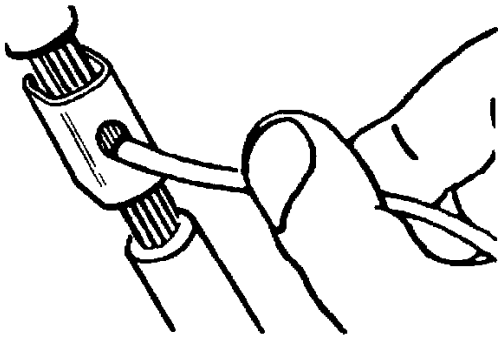

Step 5: Solder

Apply 60/40 rosin core solder to the opening in the back of the clip, **Fig. 10.**

Follow the manufacturer's instruction for the solder equipment you are using.

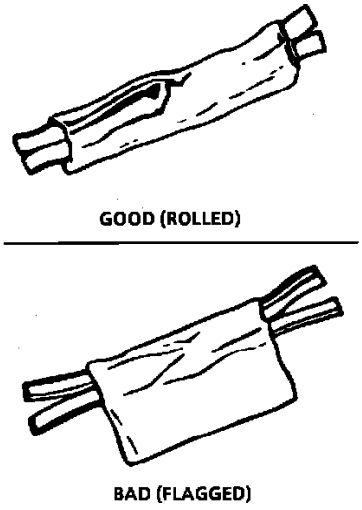

Fig. 11 Proper First Taping



Fig. 12 Proper Second Taping

Step 6: Tape the Splice

Center and roll the splicing tape. The tape should cover the entire splice. Roll on enough tape to duplicate the thickness of the insulation on the existing wires. Do not flag the tape. Flagged tape may not provide enough insulation, and the nagged ends will tangle with the other wires in the harness, **Fig. 11.**

If the wire does not belong in a conduit or other harness covering, tape the wire again. Use a winding motion to cover the first piece of tape, **Fig. 12.**

Splicing Twisted/Shielded Cable

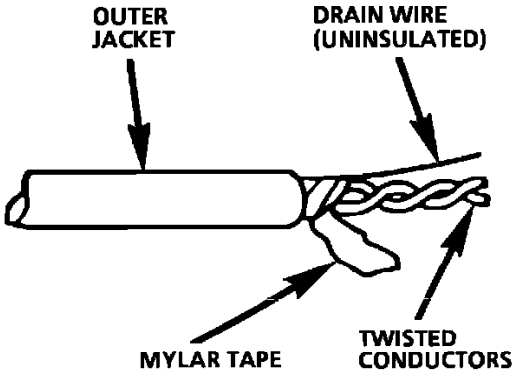

Fig. 15 Twisted/Shielded Cable

Twisted/shielded cable is sometimes used to protect wiring from electrical noise (stray signals). For example, two-conductor cable of this construction is used between the ECM and the distributor. See **Fig. 15** for a breakdown of twisted/shielded cable construction.

Step 1: Remove Outer Jacket

Remove the outer jacket and discard it. Be careful to avoid cutting into the drain wire or the mylar tape.

Step 2: Unwrap the Tape

Unwrap the aluminum/mylar tape, but do not remove it. The tape will be used to rewrap the twisted conductors after the splices have been made.



Fig. 16 The Untwisted Conductors

Step 3: Prepare the Splice

Untwist the conductors. Then, prepare the splice by following the splicing instructions for copper wire presented earlier. Remember to stagger splices to avoid shorts, **Fig. 16.**

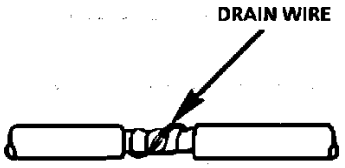

Fig. 17 The Re-assembled Cable

Step 4: Re-assemble the Cable

After you have spliced and taped each wire, rewrap the conductors with the mylar tape. Be careful to avoid wrapping the drain wire in the tape. Next, splice the drain wire following the splicing instructions for copper wire. Then, wrap the drain wire around the conductors and mylar tape, **Fig. 17.**



Fig. 18 Proper Taping

Step 5: Tape the Cable

Tape over the entire cable using a winding motion, **Fig. 18.** This tape will replace the section of the jacket you removed to make the repair.

Terminal Repair

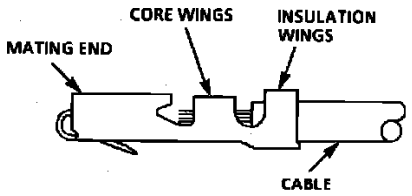

TYPICAL PUSH-TO-SEAT TERMINAL

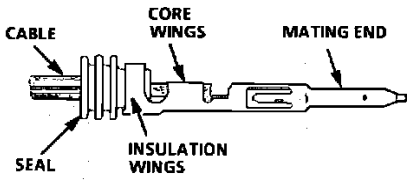

TYPICAL WEATHER PACK® TERMINAL

Fig. 22 Terminal Repair

The following repair procedures can be used to repair Push-to-Seat, Pull-to-Seat or Weather Pack(R) terminals, **Fig. 22**. Some terminals do not require all steps shown. Skip those that don't apply. (Refer to Kent-Moore Terminal Repair Kit J 38125-A for further information.)

1. Cut off terminal between core and insulation crimp (minimize wire loss) and remove seal for Weather Pack(R) terminals.
2. Apply correct seal per gauge size of wire and slide back along wire to enable insulation removal (Weather Pack(R) terminals only).
3. Remove insulation.
4. Align seal with end of cable insulation (Weather Pack(R) terminals only).
5. Position strip (and seal for Weather Pack(R)) in terminal.
6. Hand crimp core wings.
7. Hand crimp insulation wings (non-Weather Pack(R)). Hand crimp insulation wings around seal and cable (Weather Pack(R)).
8. Solder all hand crimped terminals.

Typical Electrical Repair

An open circuit is an incomplete circuit. Power cannot reach the load or reach ground. If a circuit is open, active components do not energize. A short circuit is an unwanted connection between one part of the circuit and either ground or another part of the circuit. A short circuit causes a fuse to blow or a circuit breaker to open.

SHORT CIRCUITS CAUSED BY DAMAGED WIRE INSULATION

- Locate the damaged wire.
- Find and correct the cause of the wire insulation damage.
- For minor damage, tape over the wire. If damage is more extensive, replace the faulty segment of the wire (Refer to the splicing instructions for copper or shielded cable for the correct splicing procedure).

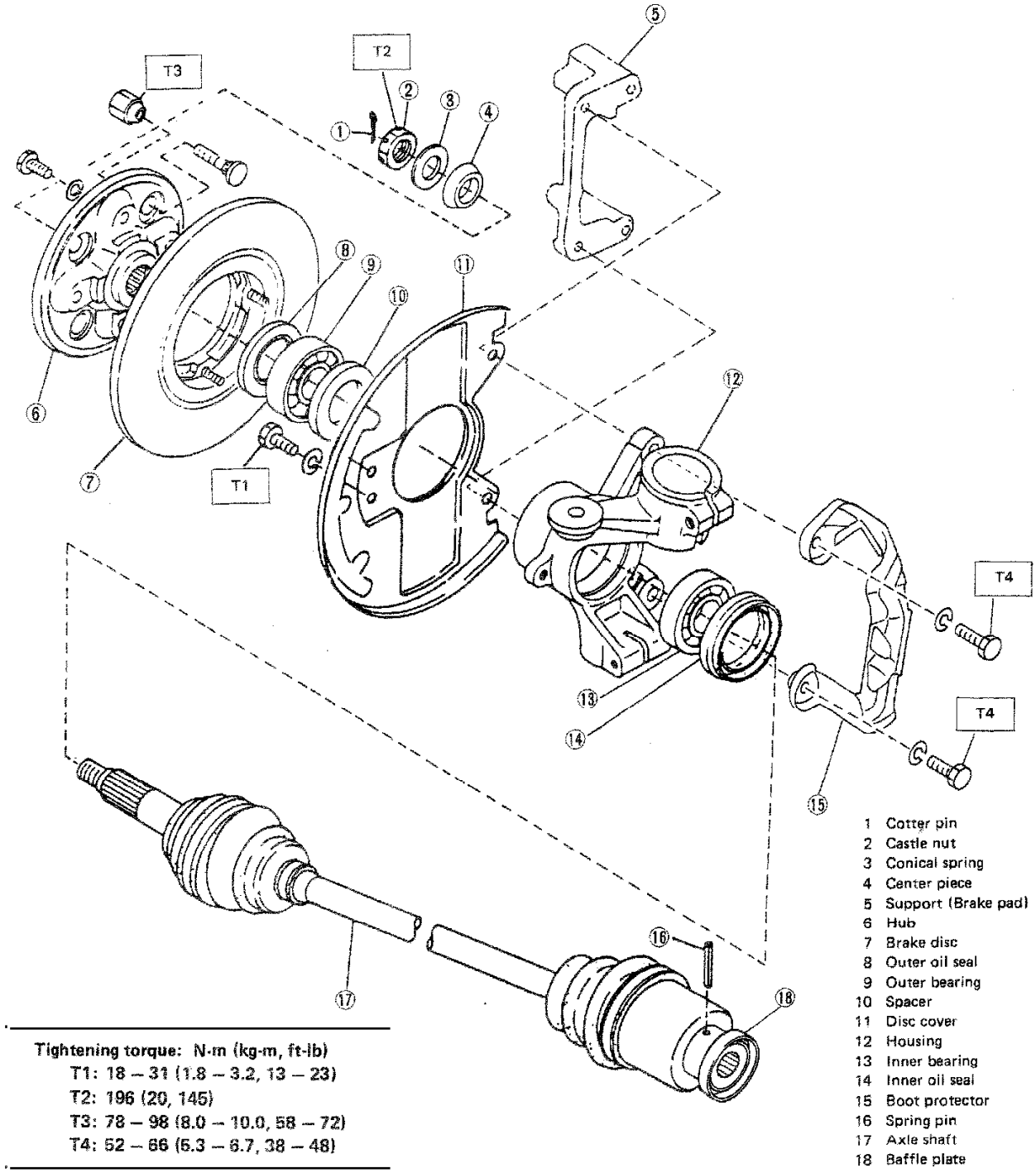
T1
T2
T3
T4
T4
1 Cotter pin
2 Castle nut
3 Conical spring
4 Center piece
5 Support (Brake pad)
6 Hub
7 Brake disc
8 Outer oil seal
9 Outer bearing
10 Spacer
11 Disc cover
12 Housing
13 Inner bearing
14 Inner oil seal
15 Boot protector
16 Spring pin
17 Axle shaft
18 Baffle plate
Tightening torque: N·m (kg-m, ft-lb)
T1: 18 – 31 (1.8 – 3.2, 13 – 23)
T2: 196 (20, 145)
T3: 78 – 98 (8.0 – 10.0, 58 – 72)
T4: 52 – 66 (5.3 – 6.7, 38 – 48)

Front Axle

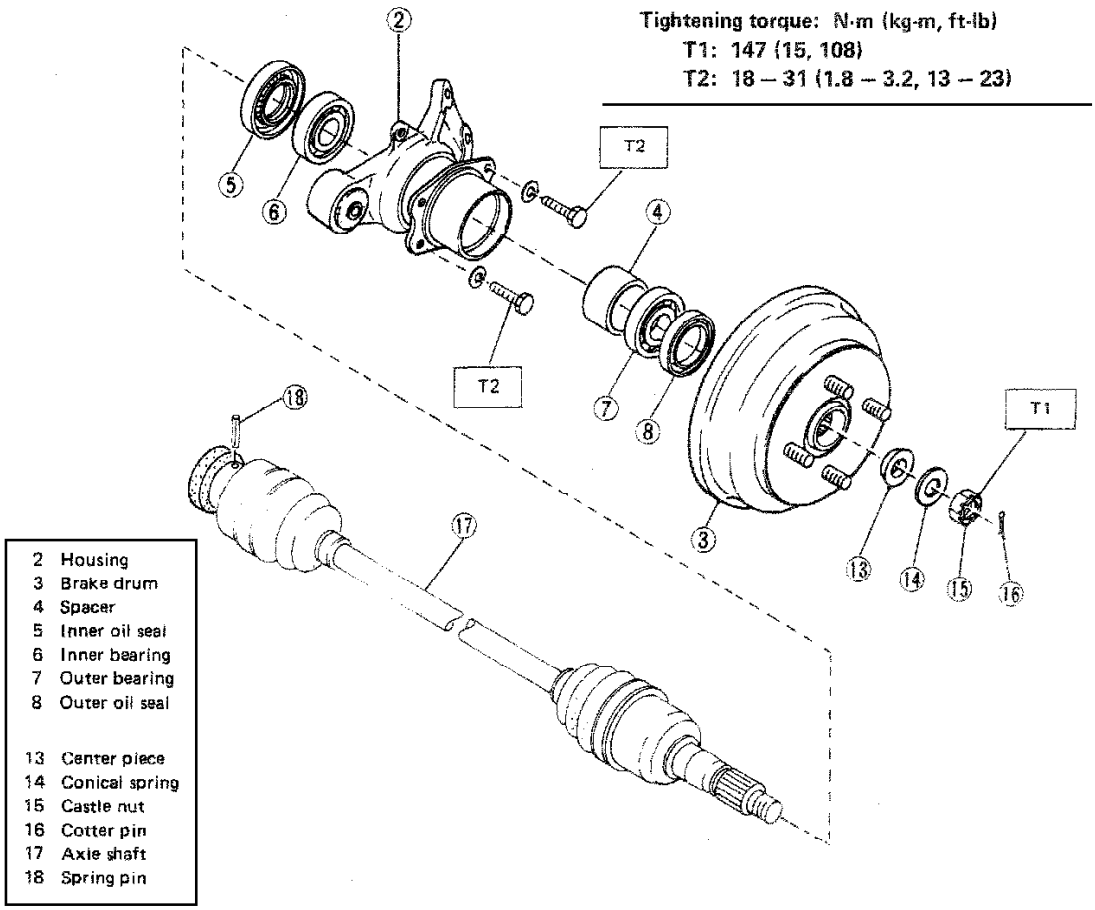
Tightening torque: N·m (kg-m, ft-lb)
T1: 147 (15, 108)
T2: 18 – 31 (1.8 – 3.2, 13 – 23)
T2
T2
T1
2 Housing
3 Brake drum
4 Spacer
5 Inner oil seal
6 Inner bearing
7 Outer bearing
8 Outer oil seal
13 Center piece
14 Conical spring
15 Castle nut
16 Cotter pin
17 Axle shaft
18 Spring pin

Rear Axle

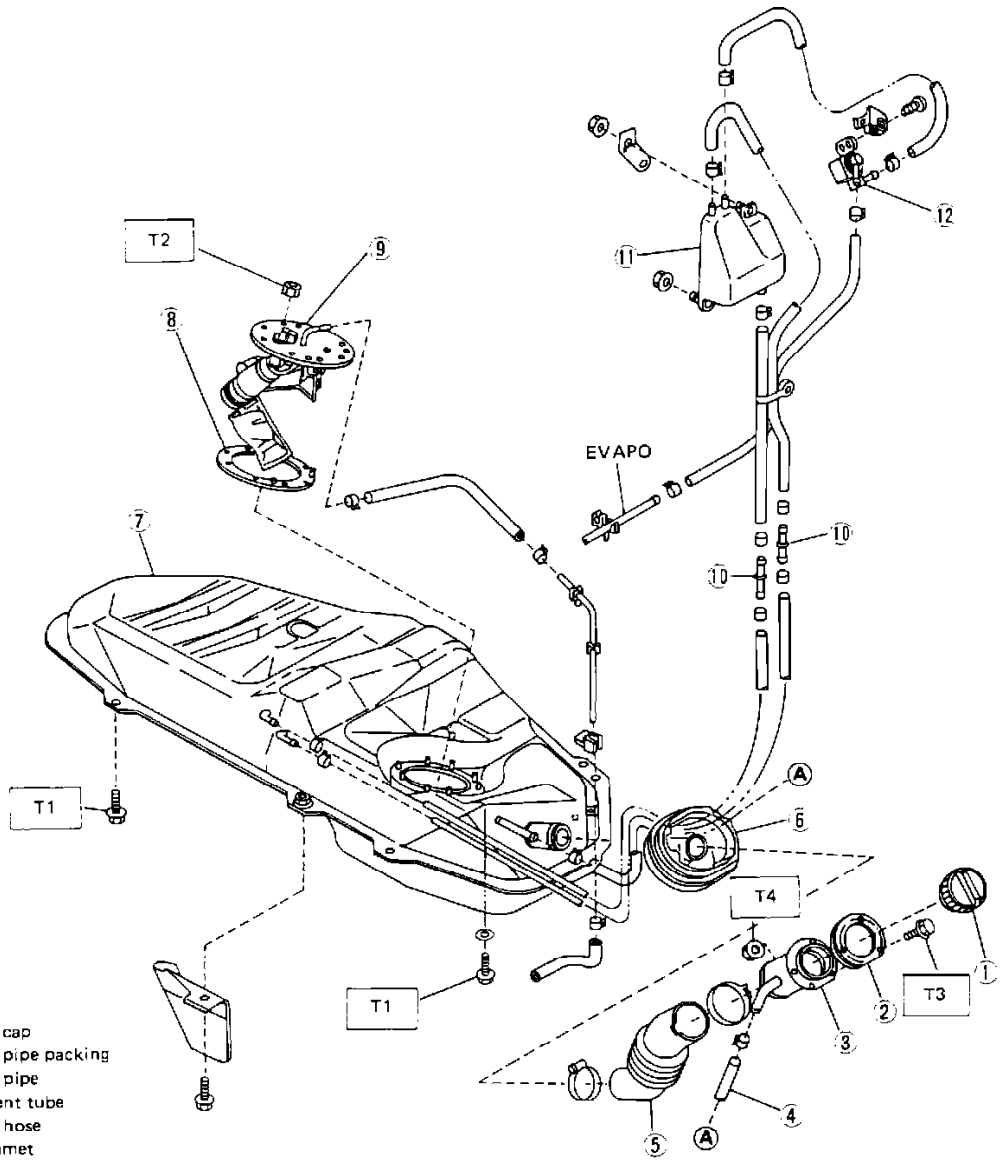

1 Filler cap
2 Filler pipe packing
3 Filler pipe
4 Air vent tube
5 Filler hose
6 Grommet
7 Fuel tank
8 Fuel pump packing
9 Fuel pump ASSY
10 Pipe joint
11 Separator
12 Roll over valve

Tightening torque: N·m (kg-m, ft-lb)
T1: 13 – 23 (1.3 - 2.3, 9 – 17)
T2: 1.8 – 3.1 (0.18 – 0.32, 1.3 – 2.3)
T3: 3 – 6 (0.3 – 0.6, 2.2 – 4.3)
T4: 1.5 – 2.5 (0.15 – 0.25, 1.1 – 1.8)

Fuel Tank

(F121)

1	BG	Ground (Sensor)
2	BG	Ground (Sensor)
3	YR	Vacuum pressure sensor
4	(B)	O_2 sensor
5	WB	Water temperature sensor
6	WL	Air temperature sensor
7	—	O_2 sensor (Shield)
8	YB	High altitude signal II (ECVT only)
9	LgW	Read memory connector
10	Br	Test mode connector
11	BR	Identification of MT or ECVT
12	BL	Identification of Cal.
13	—	
14	BR	Identification of FWD or 4WD
15	—	
16	—	

(F120)

1	R	Power (Battery)
2	WL	Standby power (for memory backup)
3	Lg	Ignition monitor
4	LgB	Speed sensor
5	YL	Clutch switch (FWD or ECVT only)
6	LW	Idle switch
7	LG	Serial monitor RX
8	Y	Serial monitor CLOCK
9	GL	Serial monitor TX
10	BR	Ground (Control)
11	GW	Blower fan signal
12	R	Power
13	—	
14	L	A/C signal
15	GB	Radiator fan signal
16	GR	Power switch
17	BW	Starter switch
18	LY	Rear defogger switch
19	—	
20	BW	Headlight high (Hi) signal
21	RY	Headlight low (Lo) signal
22	—	

(F119)

1	BR	Ground (Control)
2	RY	Power (Vacuum pressure sensor)
3	(R)	Crank angle signal N+
4	(W)	Crank angle signal N—
5	(B)	Cylinder distinction signal G+
6	(G)	Cylinder distinction signal G—
7	—	Crank angle & cylinder distinction sensor (Shield)
8	WR	High altitude signal I (ECVT only)
9	BrB	Torque signal (ECVT only)
10	BrW	Water temperature signal (ECVT only)
11	W	Injector #3
12	WY	Injector #1
13	BL	Ground (Power)
14	—	
15	GW	A/C cut signal
16	—	
17	—	
18	LB	Fuel pump
19	Lg	Check engine light
20	Or	Shift-up indicator light (FWD/MT only)
21	YW	Ignition signal
22	LR	Canister purge control
23	BrR	A/C compressor
24	GY	ISC signal
25	WG	Injector #2
26	BL	Ground (Power)

To (F120)

11	10	9	8	7	6	5	4	3	2	1
22	21	20	19	18	17	16	15	14	13	12

To (F121)

8	7	6	5	4	3	2	1
16	15	14	13	12	11	10	9

To (F119)

13	12	11	10	9	8	7	6	5	4	3	2	1
26	25	24	23	22	21	20	19	18	17	16	15	14

Connector terminal number (ECU side)

Control Unit Pin Identification

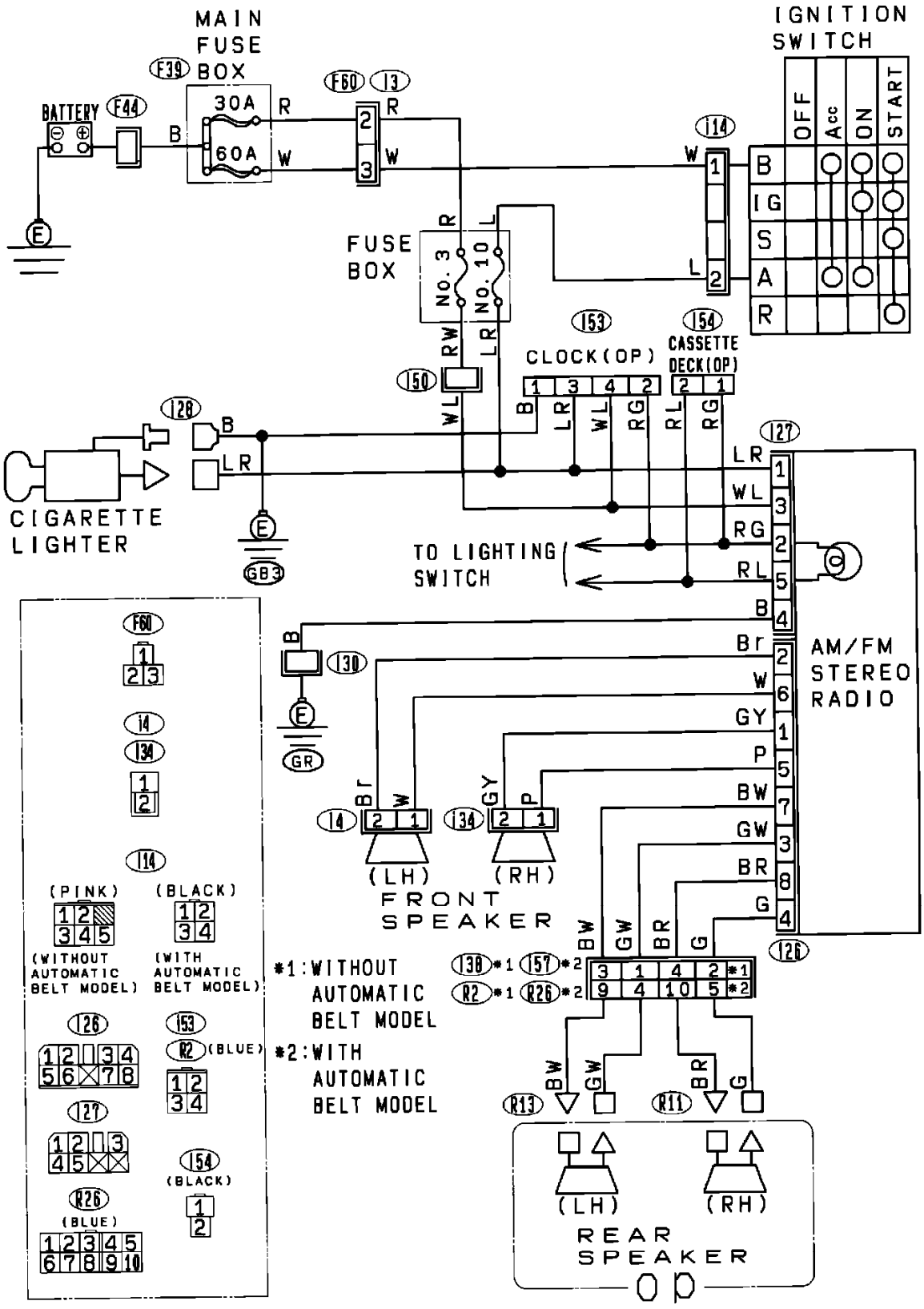

Cigarette Lighter And Radio

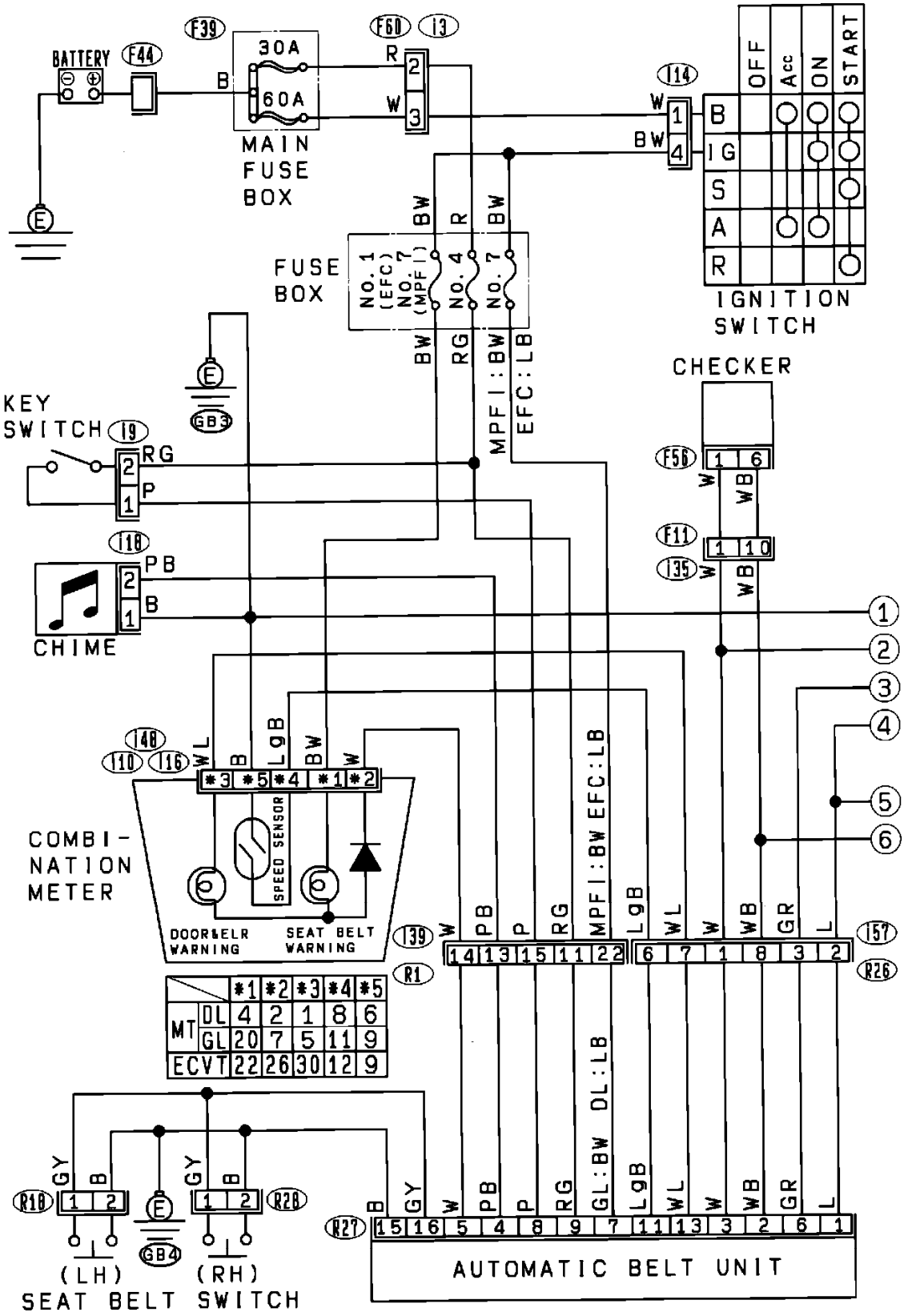

Automatic Seat Belt & Key Warning

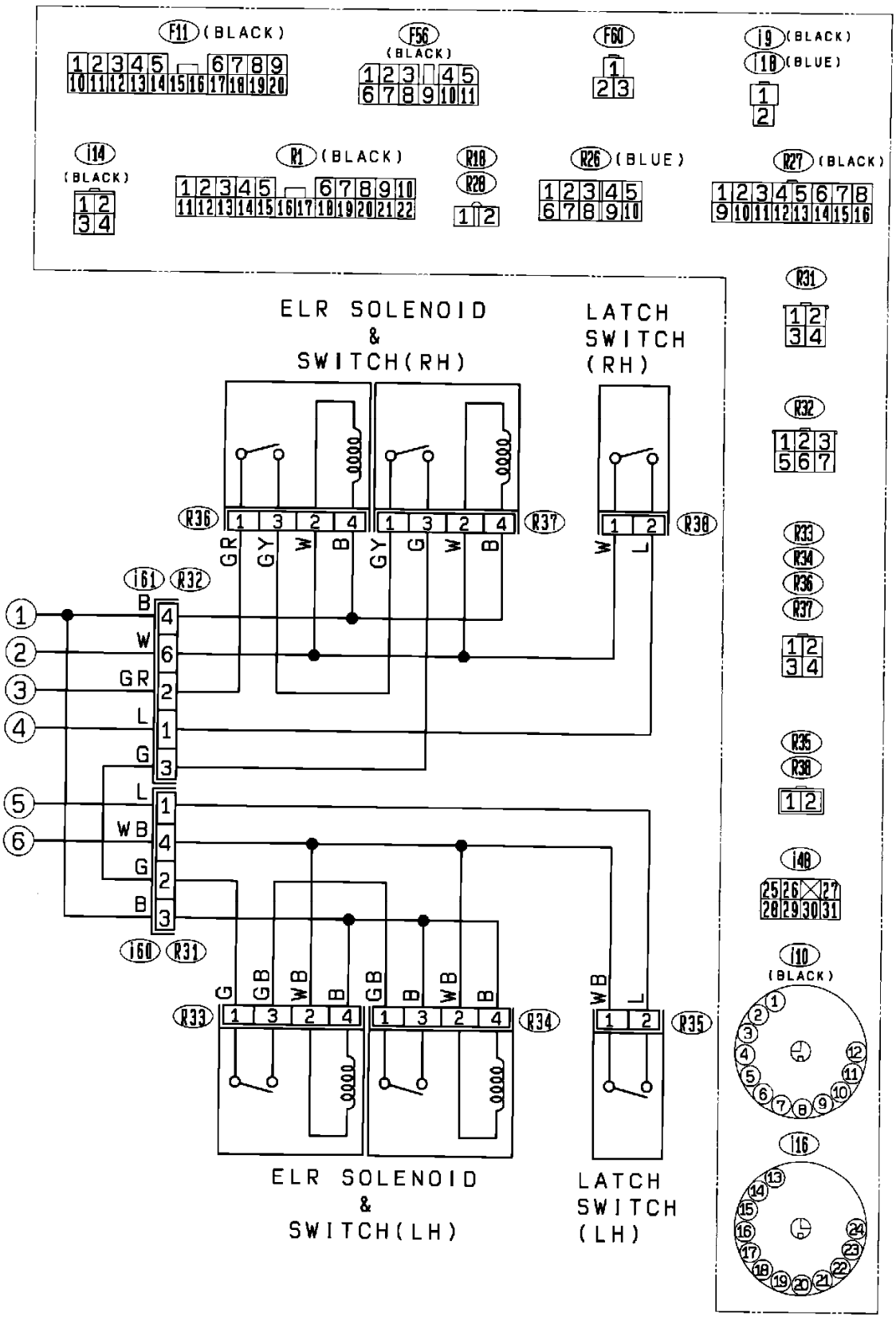

Automatic Seat Belt & Key Warning

Backup Lamp

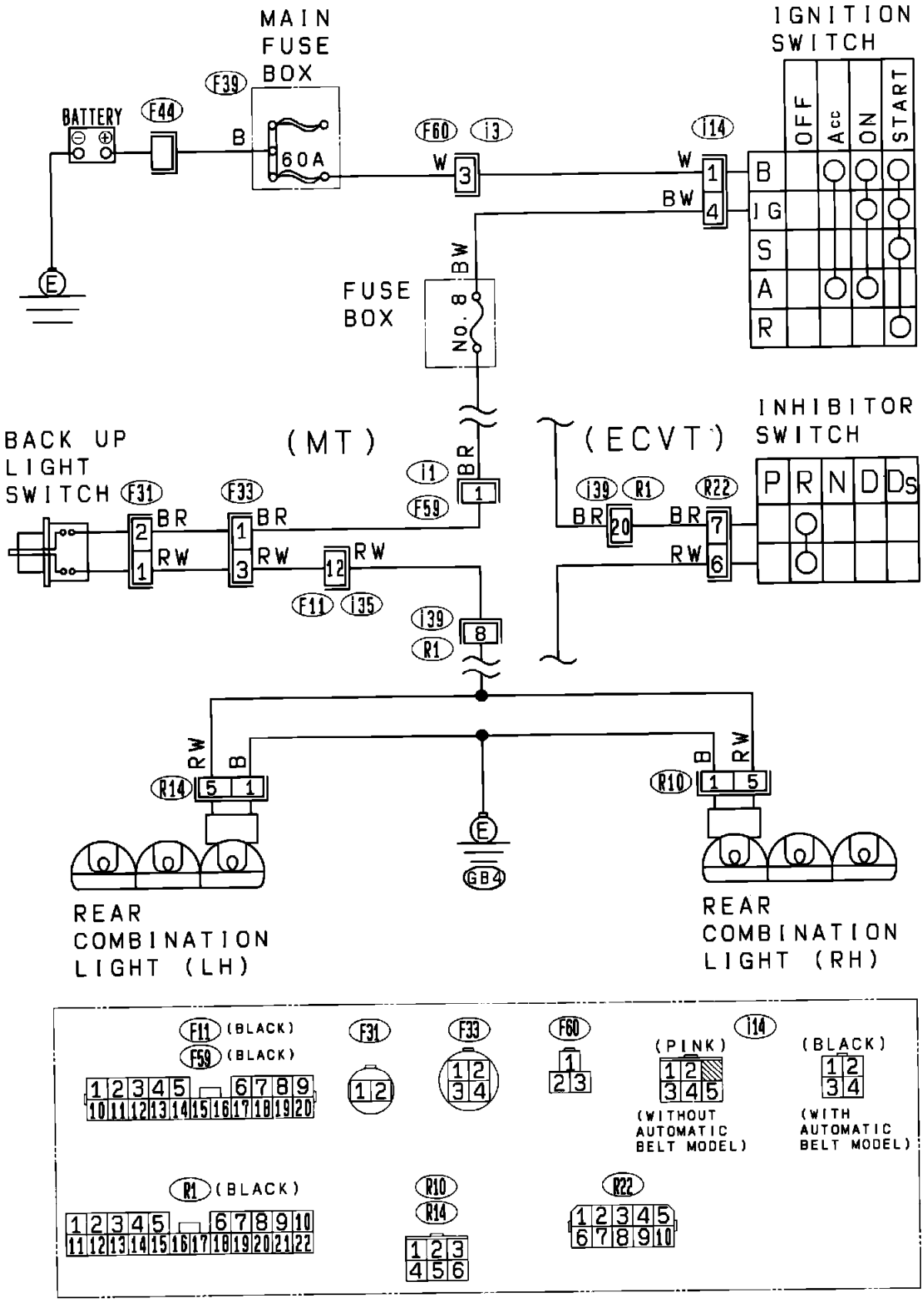

Back Up Light

Component Locations: For component locations refer to Vehicle / Locations / Component Locations: See: Locations/Component Locations

Connector Locations: For connector locations refer to Vehicle / Locations / Connector Locations: See: Locations/Connector Locations

Ground Locations: For ground locations refer to Vehicle / Locations / Grounds: See: Locations/Ground Locations

Brake Lamp

Subaru Justy Hatchback 4WD L3-1.2L SOHC (MPFI)

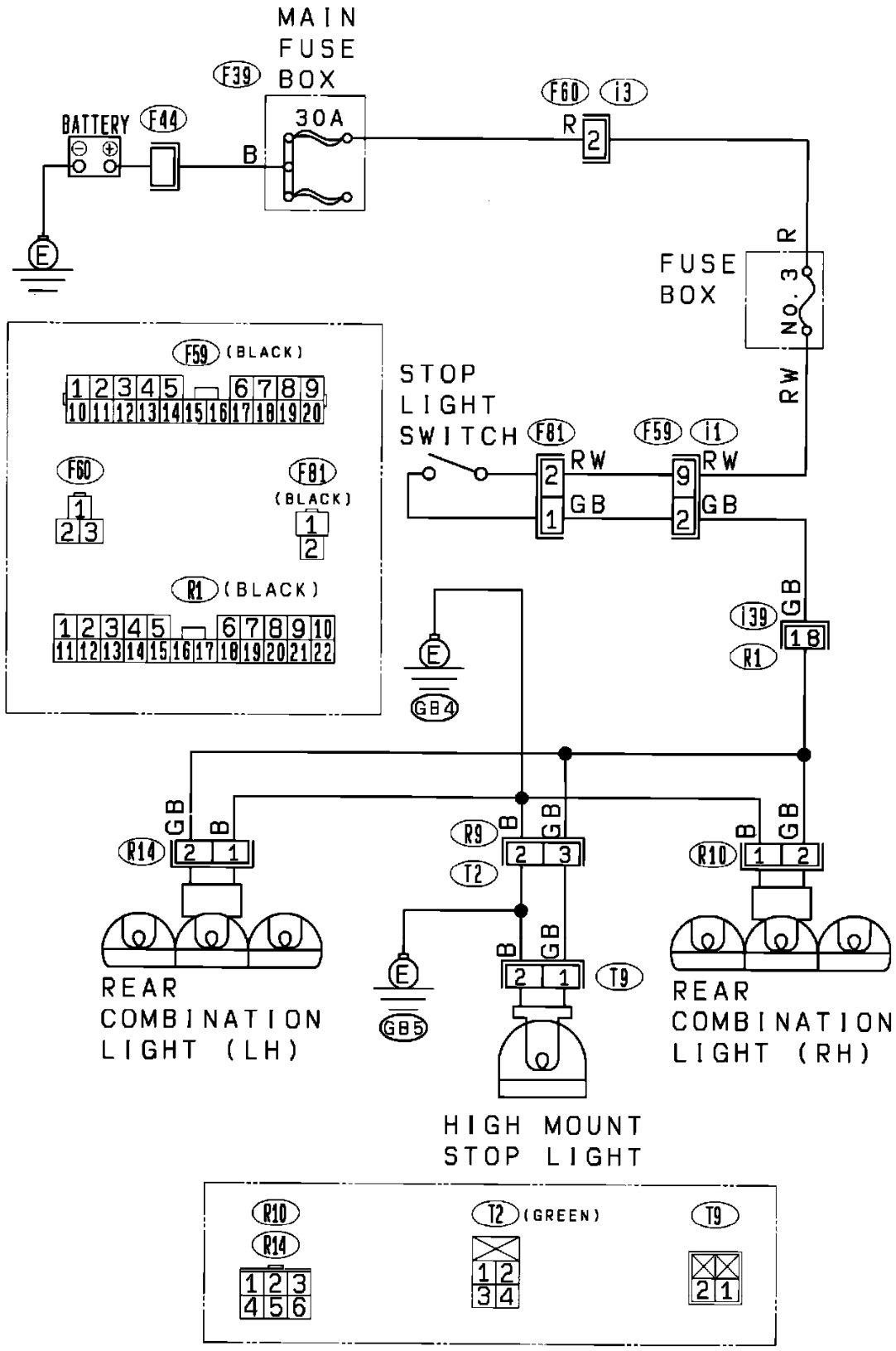

Stop Light

Fuse/Relay Locations: For fuse and/or relay locations refer to Vehicle / Locations / Components: See: Locations/Component Locations

Ground Locations: For ground locations refer to Vehicle / Locations / Grounds: See: Locations/Ground Locations

Connector Locations: For connector locations refer to Vehicle / Locations / Connectors: See: Locations/Connector Locations

Component Locations: For component locations refer to Vehicle / Locations / Components: See: Locations/Component Locations

NOTE:

To Locate Connectors, Components and/or Grounds using Harness Connector Location diagram(s) use the connector's alphanumeric name [referred to in the above diagram(s)] to identify which harness diagram to look in. For example, the letter "B" prefix in the connector name "B-38" indicates it is displayed in the Bulkhead Wiring Harness diagram.

Legend:

Prefix ..... **Harness Connector Diagram**

F ..... Front
B ..... Bulkhead
i ..... Instrument Panel
P ..... Power Window
D ..... Door
R ..... Rear

Parking Brake And Brake Fluid Level Warning System

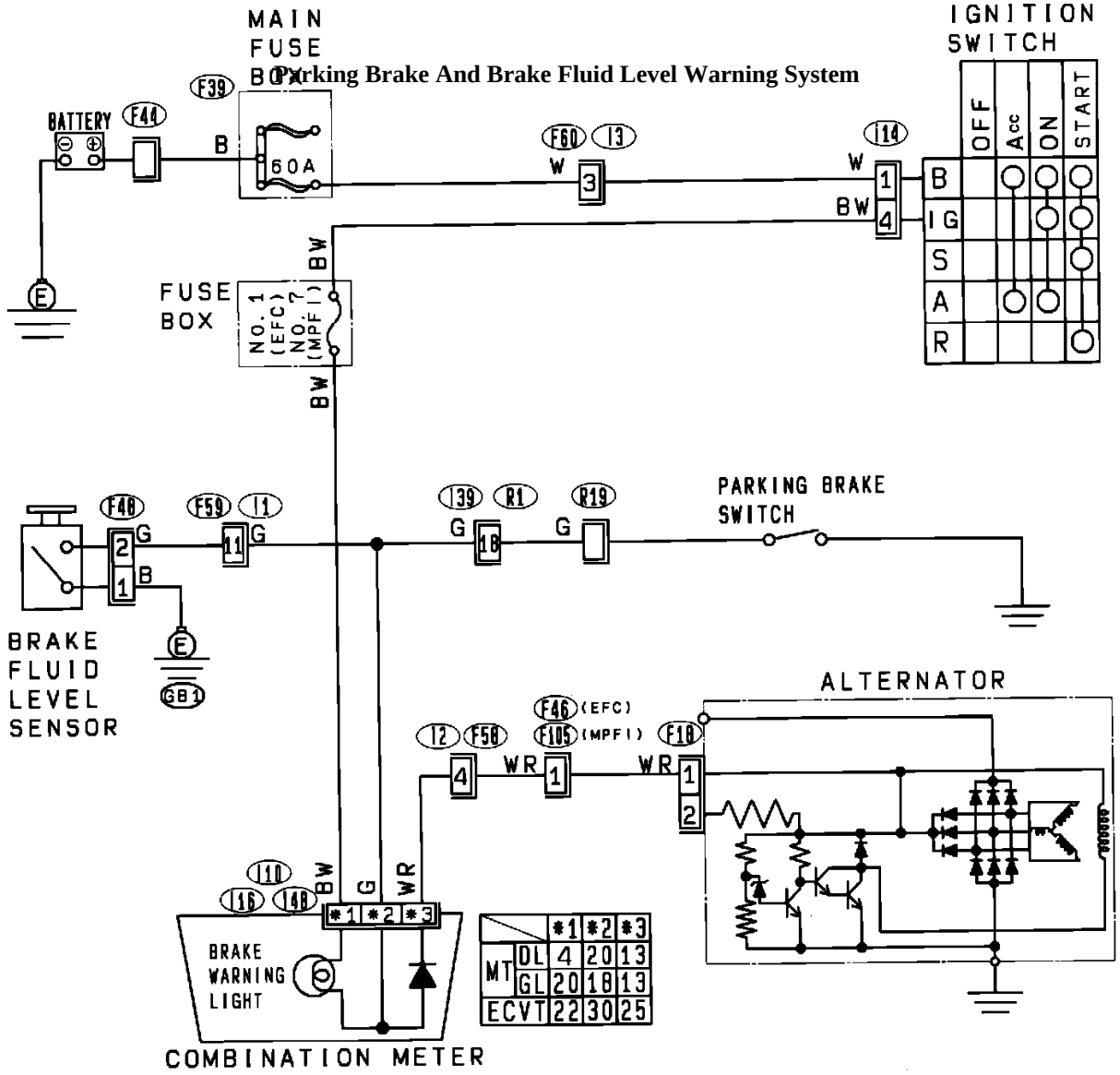

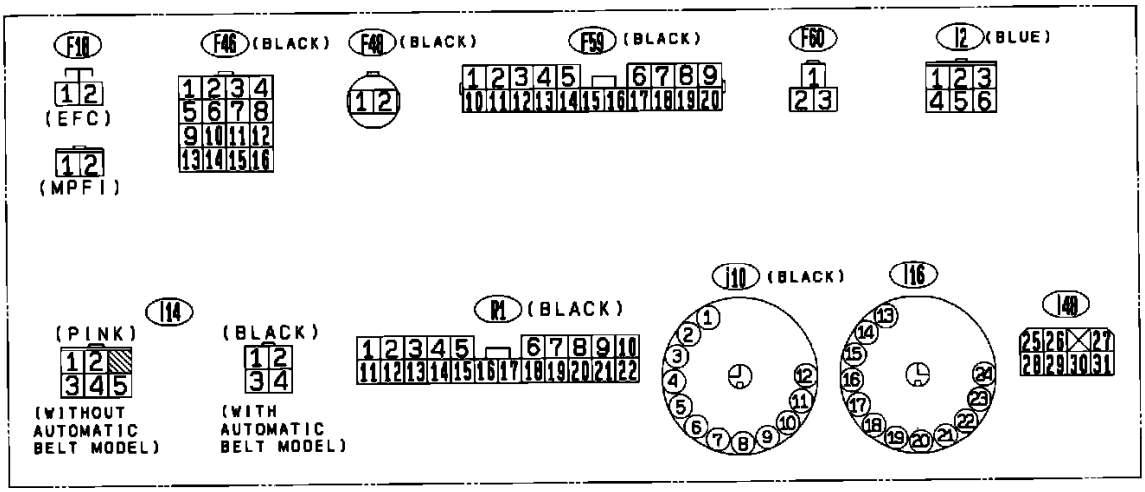

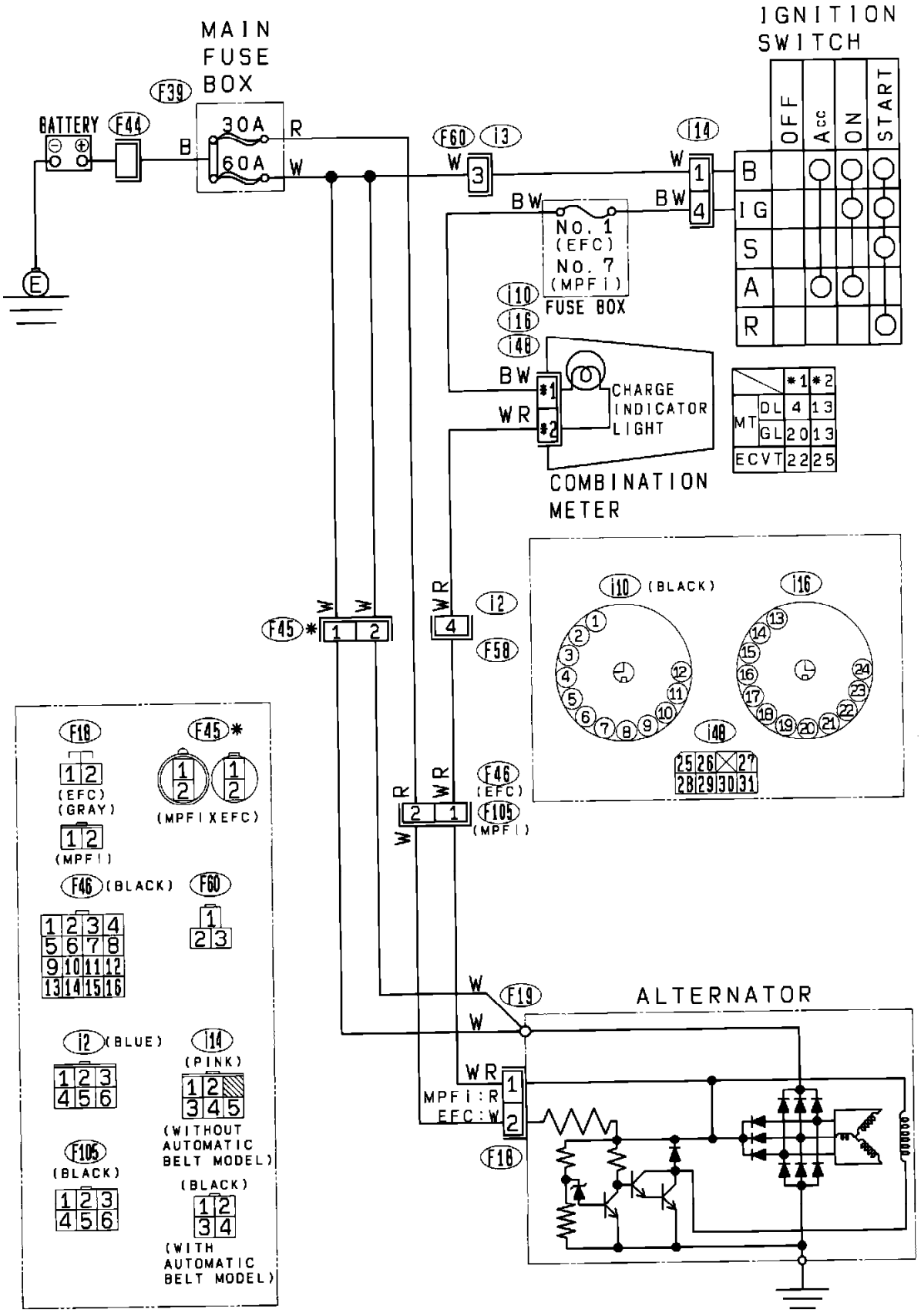

Charging System

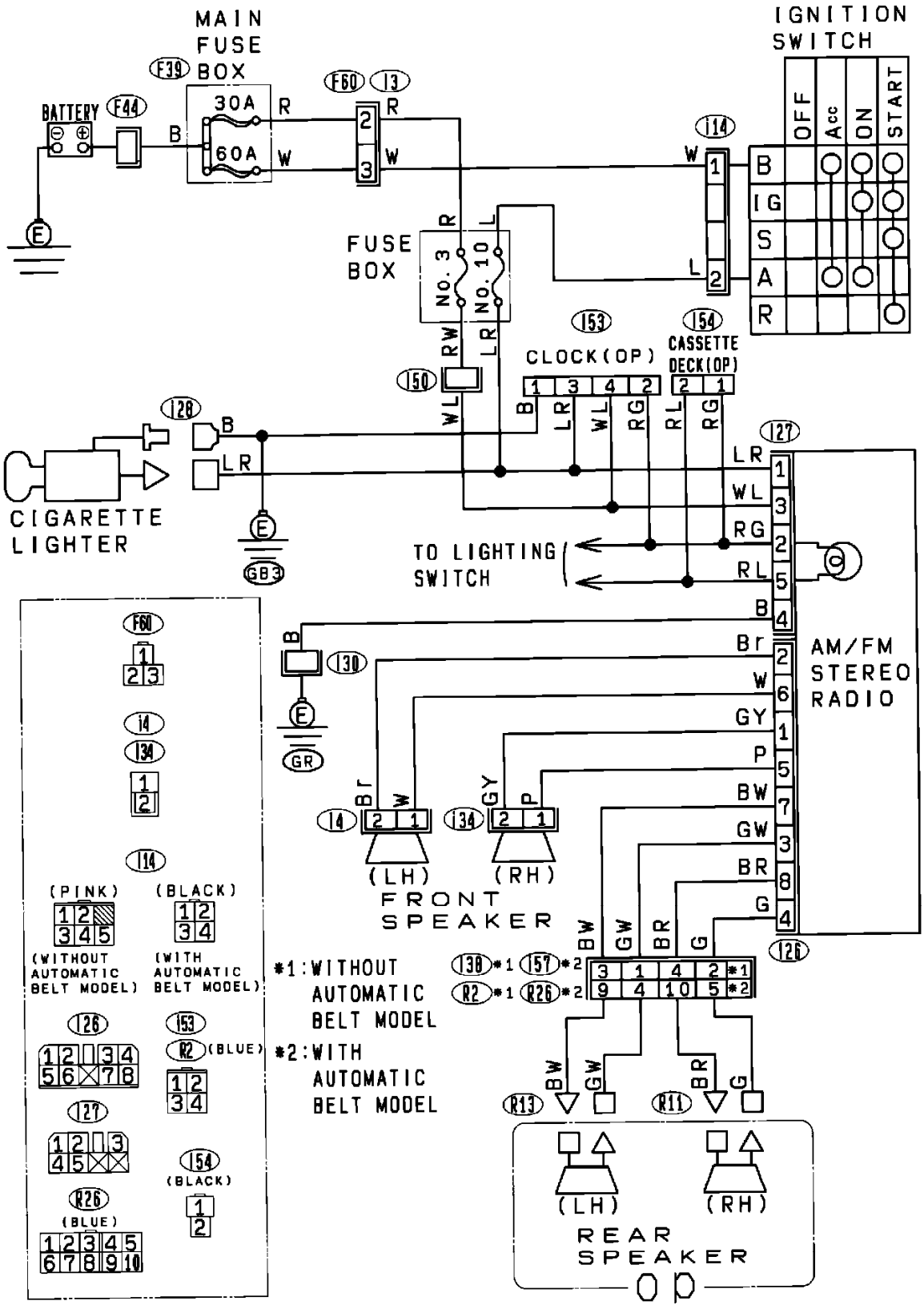

Cigarette Lighter And Radio

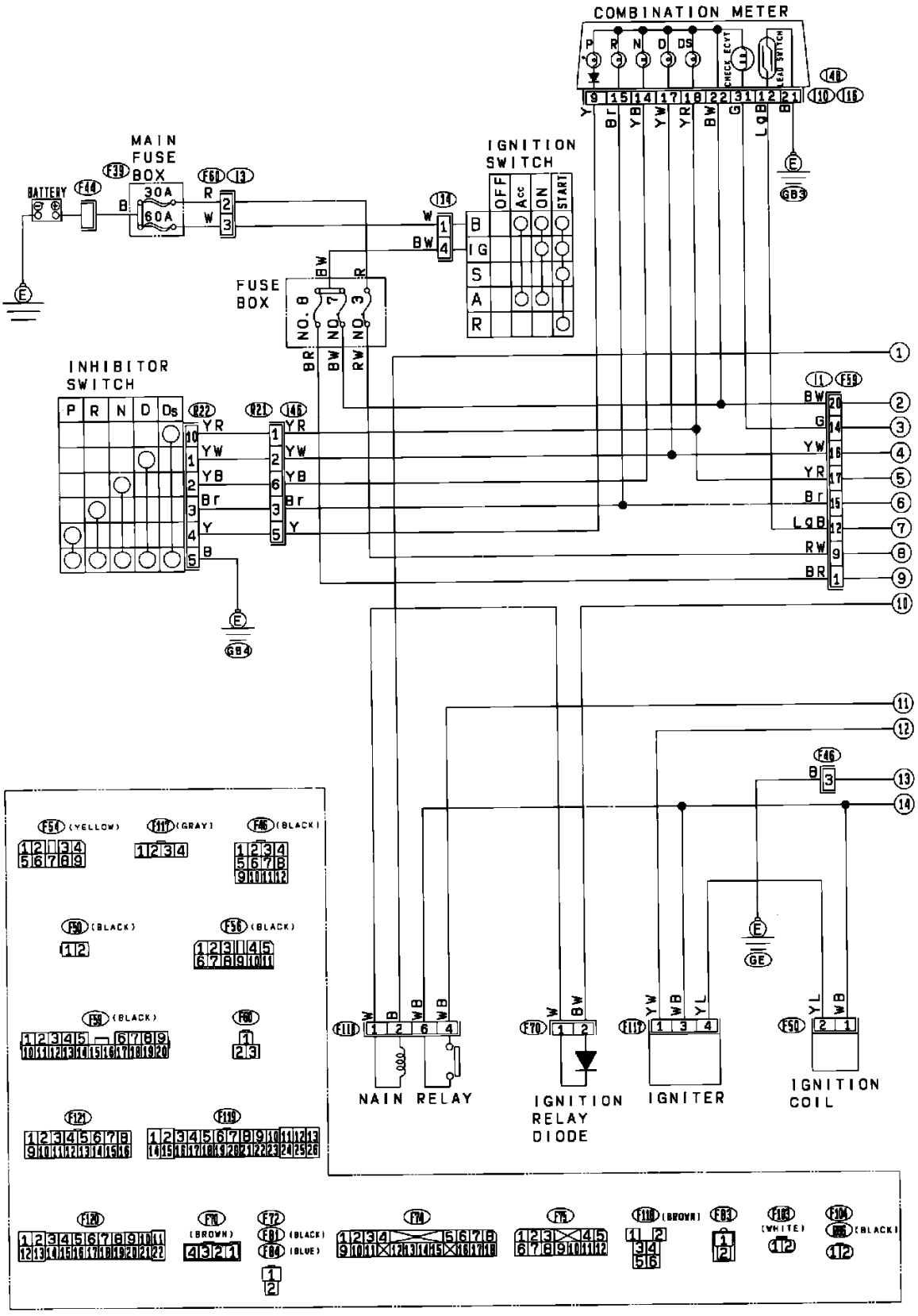
COMBINATION METER
MAIN FUSE BOX
BATTERY
IGNITION SWITCH
FUSE BOX
INHIBITOR SWITCH
NAIN RELAY
IGNITION RELAY DIODE
IGNITER
IGNITION COIL

ECVT

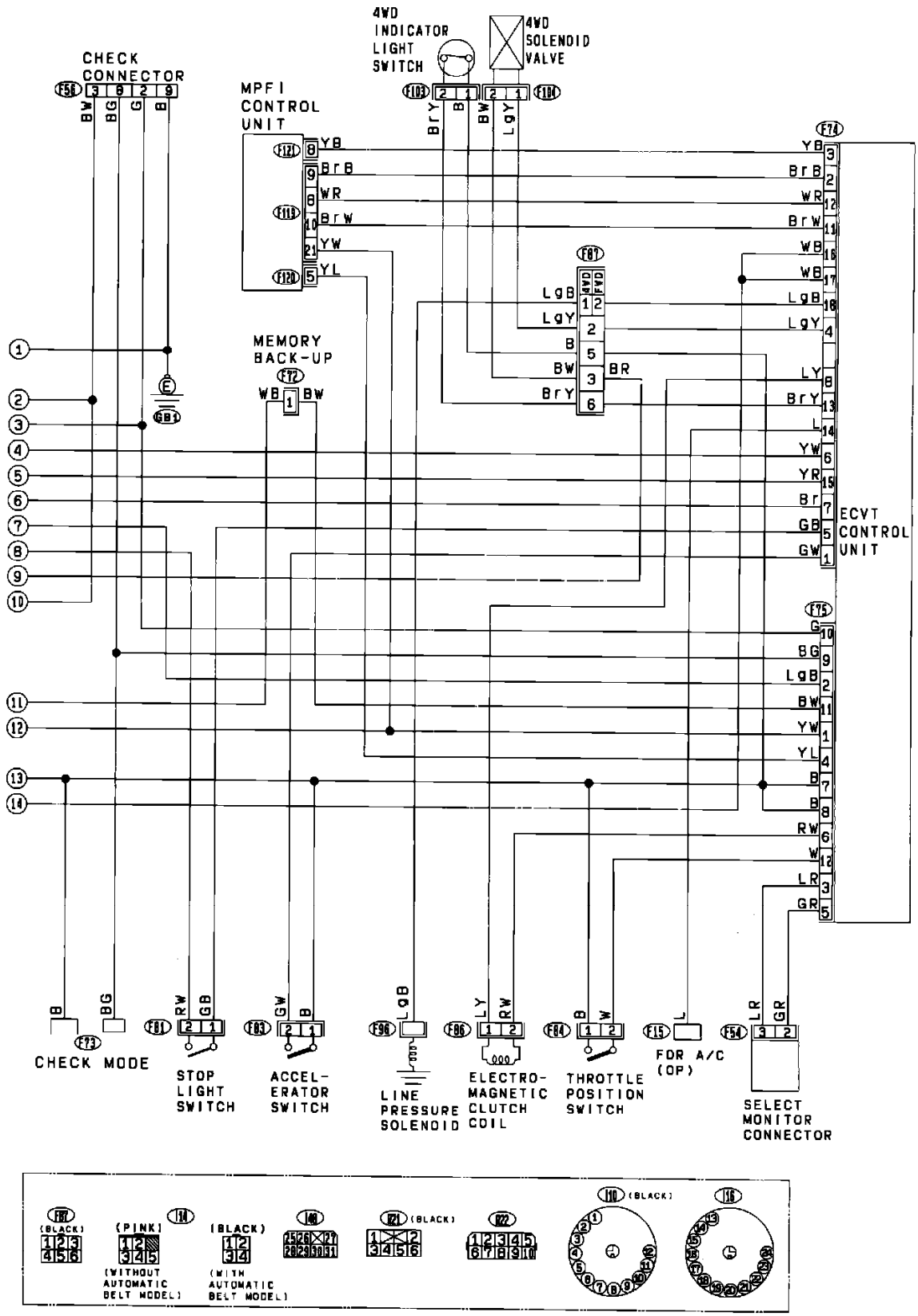

ECVT

Courtesy Lamp

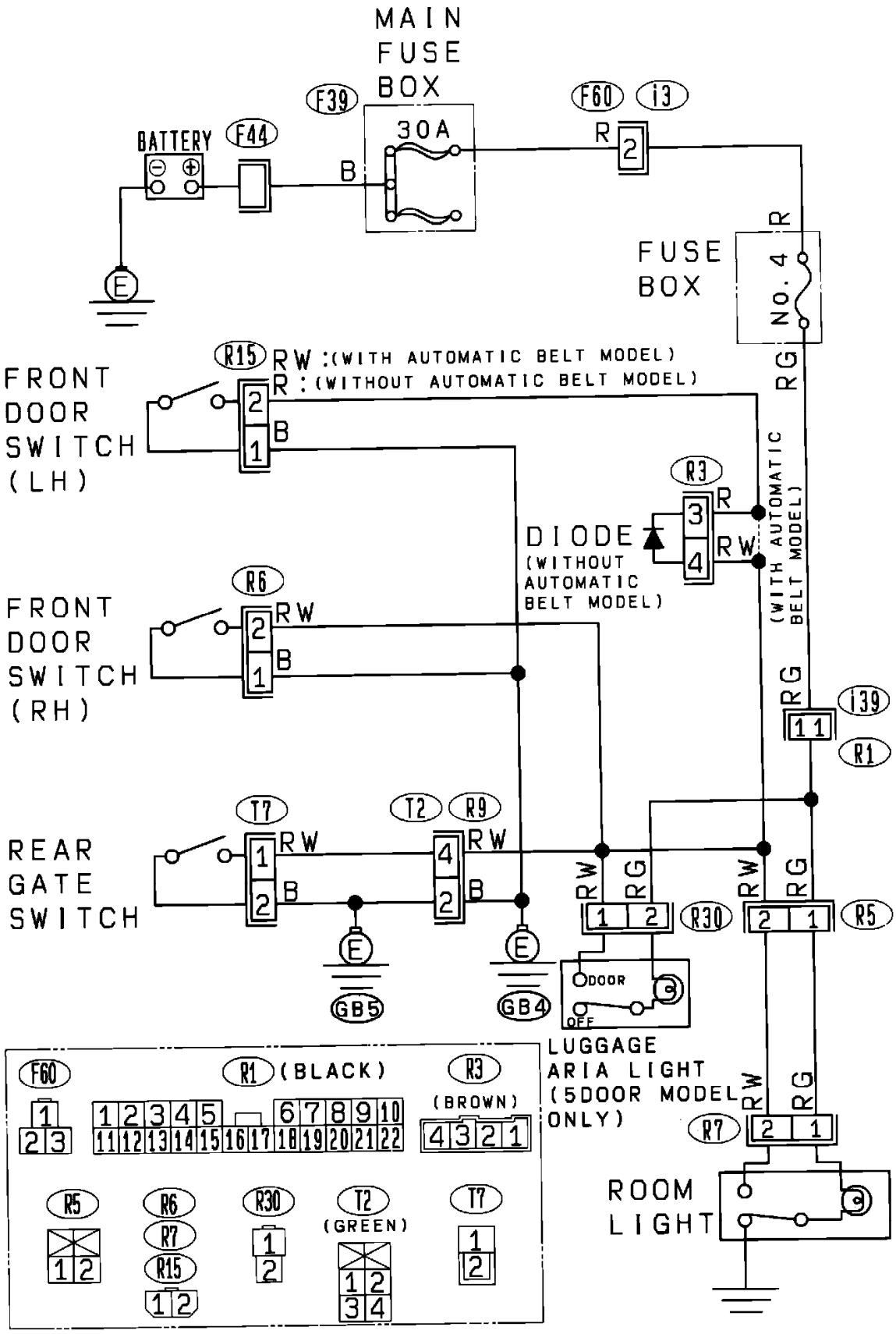

Room Light

Fuse/Relay Locations: For fuse and/or relay locations refer to Vehicle / Locations / Components: See: Locations/Component Locations

Ground Locations: For ground locations refer to Vehicle / Locations / Grounds: See: Locations/Ground Locations

Connector Locations: For connector locations refer to Vehicle / Locations / Connectors: See: Locations/Connector Locations

Component Locations: For component locations refer to Vehicle / Locations / Components: See: Locations/Component Locations

NOTE:

To Locate Connectors, Components and/or Grounds using Harness Connector Location diagram(s) use the connector's alphanumeric name [referred

to in the above diagram(s)] to identify which harness diagram to look in. For example, the letter "B" prefix in the connector name "B-38" indicates it is displayed in the Bulkhead Wiring Harness diagram.

Legend:

Prefix	**Harness Connector Diagram**
F	Front
B	Bulkhead
i	Instrument Panel
P	Power Window
D	Door
R	Rear

Daytime Running Lamp

Headlamps/Fog Lamps Circuit

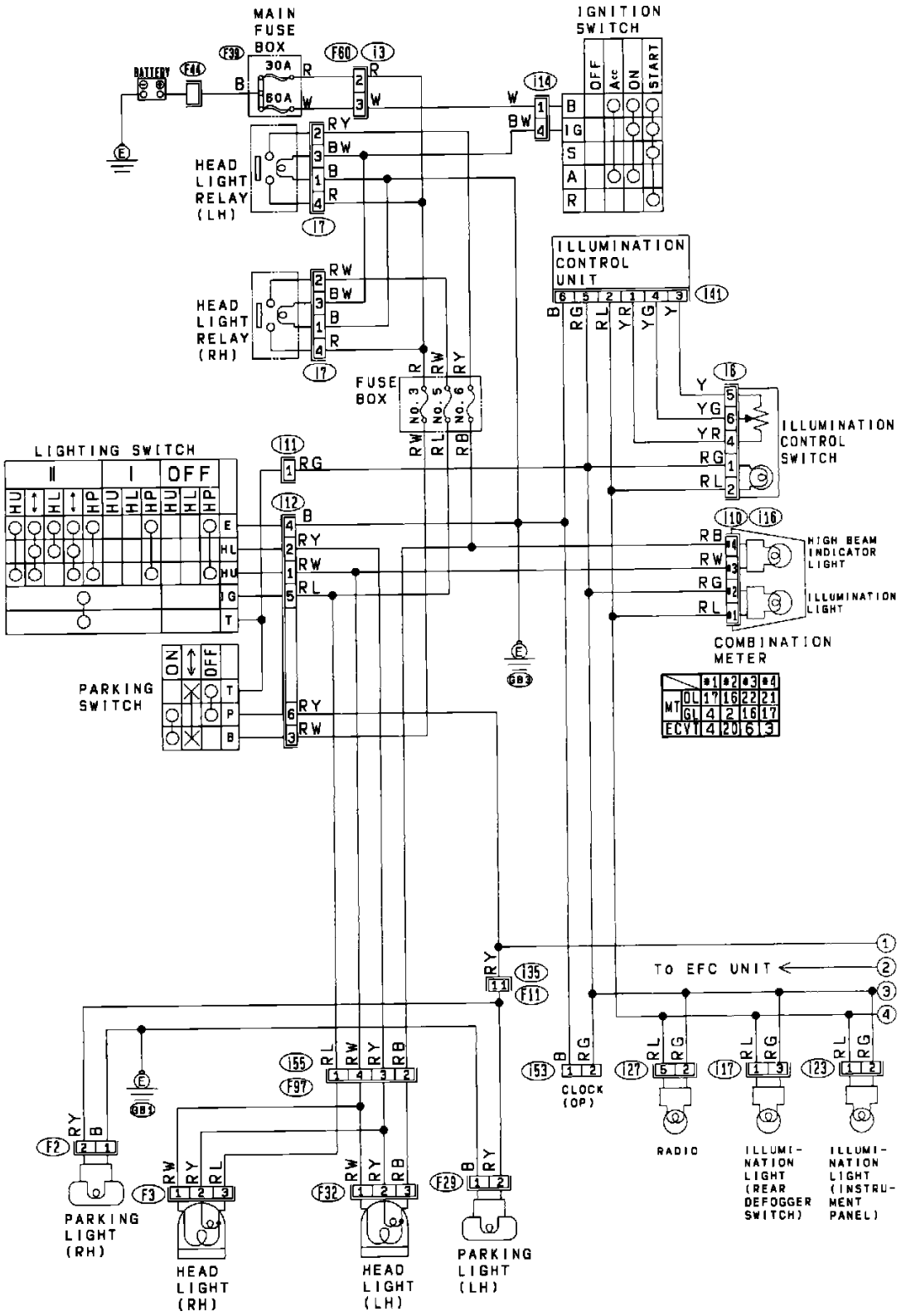

Complete Lighting System (USA Model)

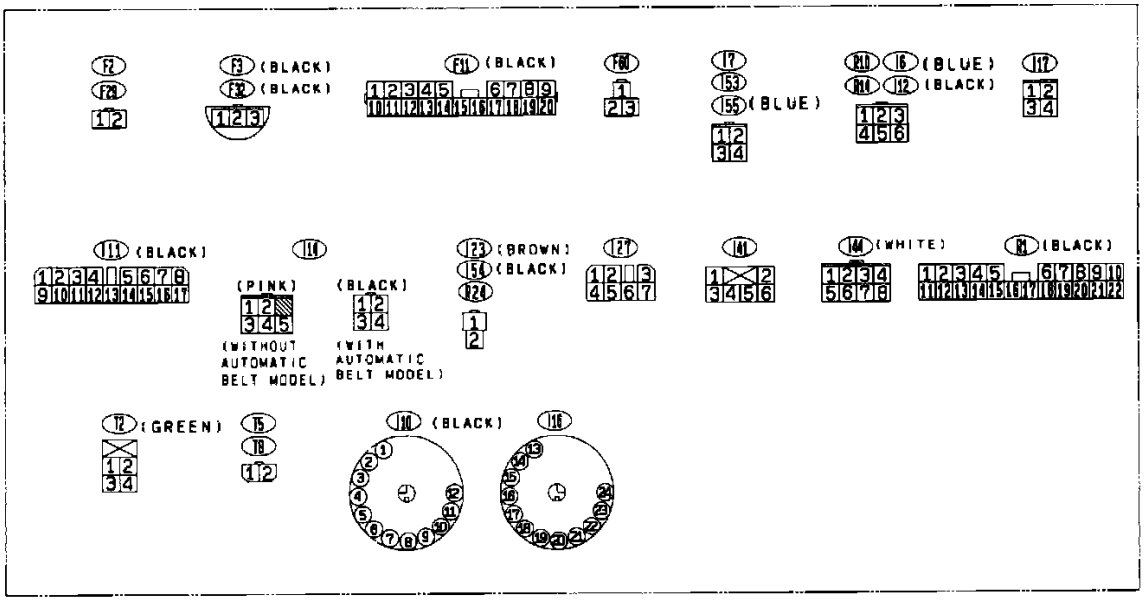

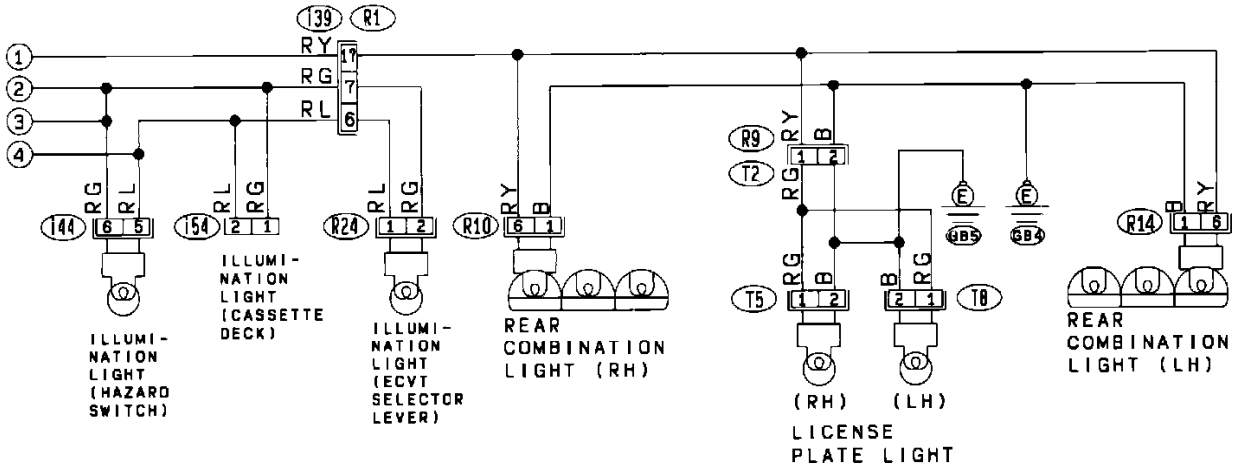

Complete Lighting System (USA Model)

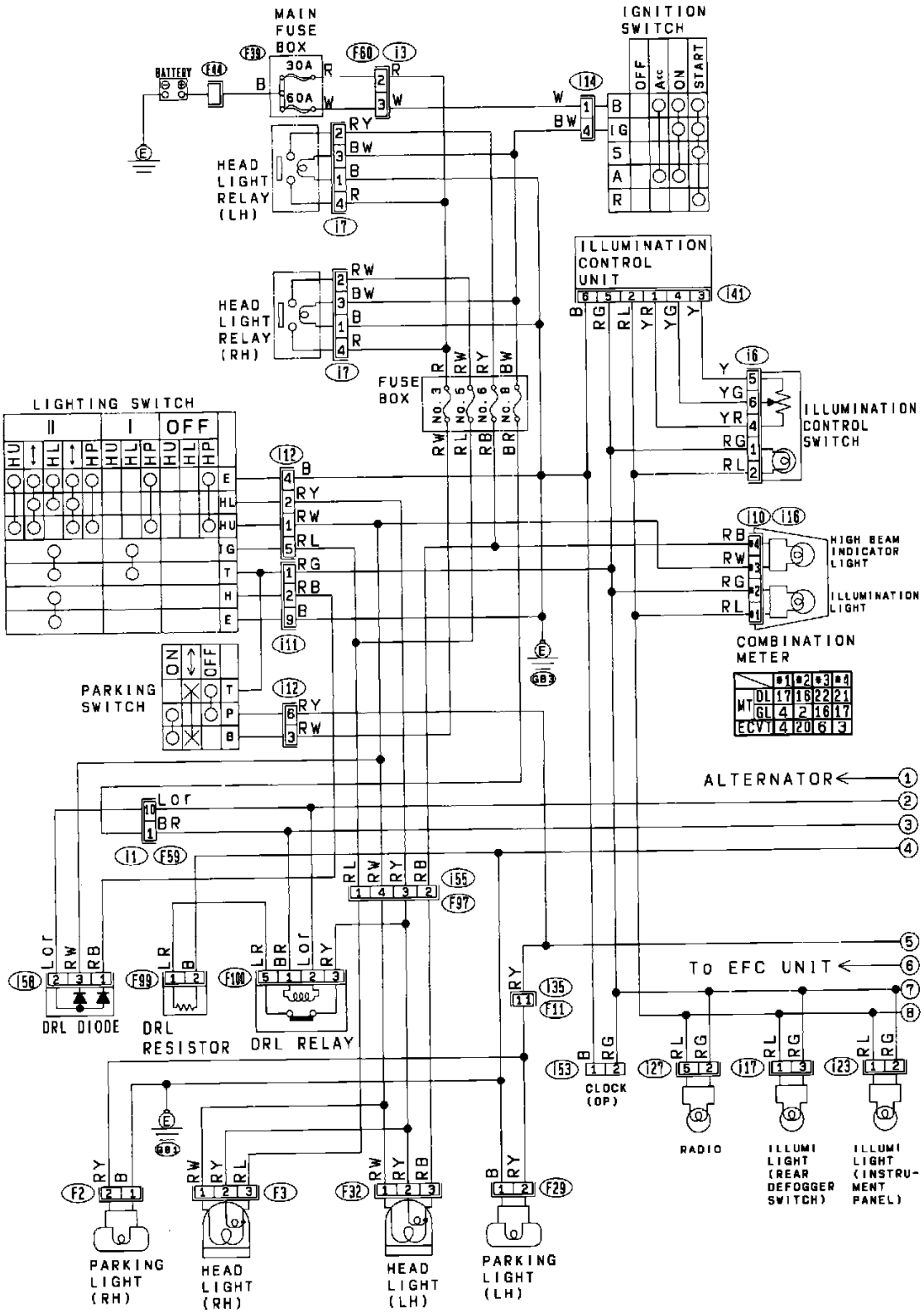

Complete Lighting System (Canada Model)

Subaru Justy Hatchback 4WD L3-1.2L SOHC (MPFI)

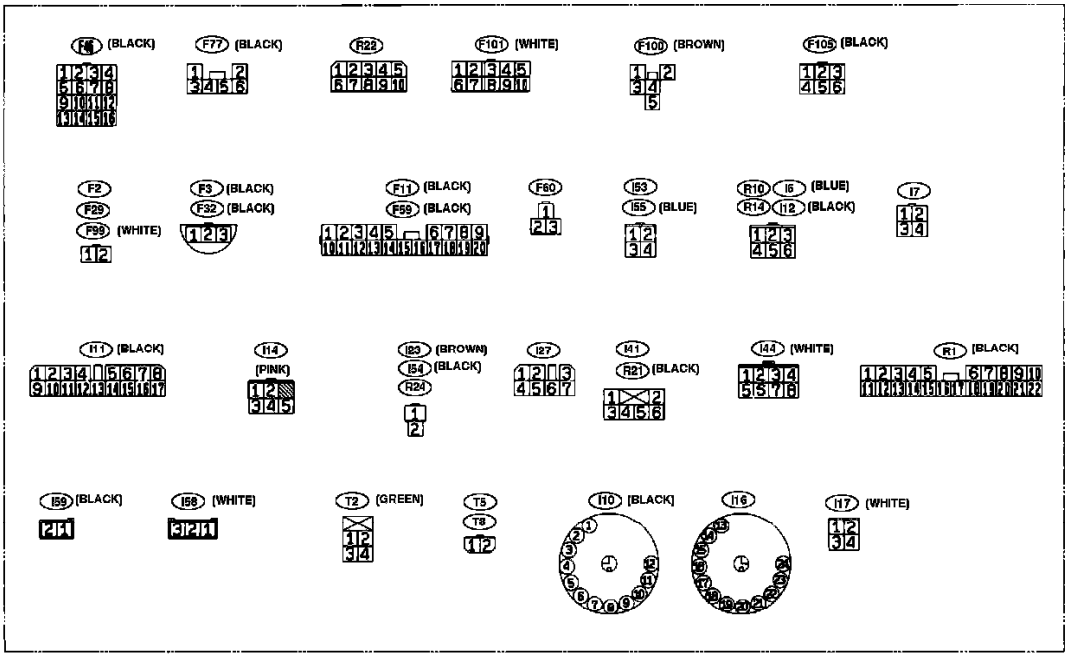

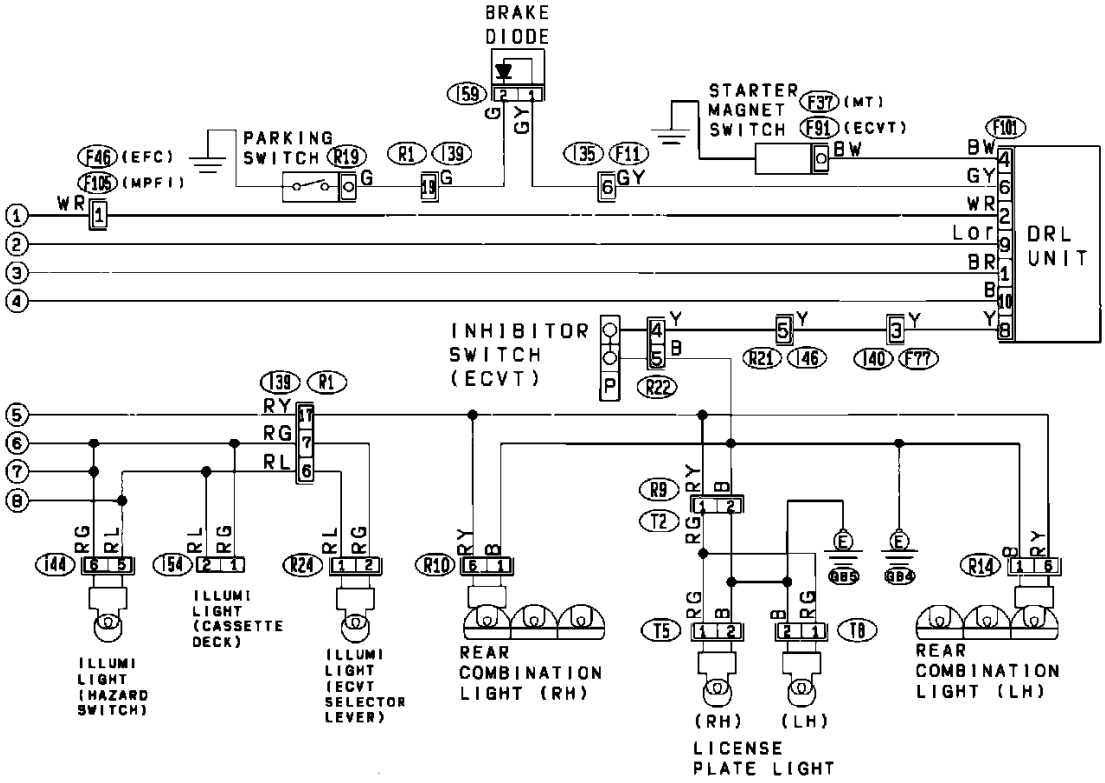

Complete Lighting System (Canada Model)

Fuse Locations: For fuse locations refer to Vehicle / Locations / Component Locations / Fuses and Fusible Links: See: Locations/Fuse and Fusible Link Locations

Ground Locations: For ground locations refer to Vehicle / Locations / Grounds: See: Locations/Ground Locations

Connector Locations: For connector locations refer to Vehicle / Locations / Connectors: See: Locations/Connector Locations

Component Locations: For component locations refer to Vehicle / Locations / Components: See: Locations/Component Locations

NOTE:

To locate Connectors, Components and/or Grounds using Harness Connector Location diagram(s) use the connector's alphanumeric name [referred to in the wiring diagram(s)] to identify the apropriate Harness Connector Location diagram. For example, the prefix letter "B" in the connector name "B-38" indicates the location is displayed in the Bulkhead Wiring Harness Connector Location diagram.

Legend:

Prefix ..... **Harness Connector Diagram**

F ..... Front
B ..... Bulkhead
i ..... Instrument Panel
P ..... Power Window
D ..... Door
R ..... Rear

Dimmer Switch

Headlamps/Fog Lamps Circuit

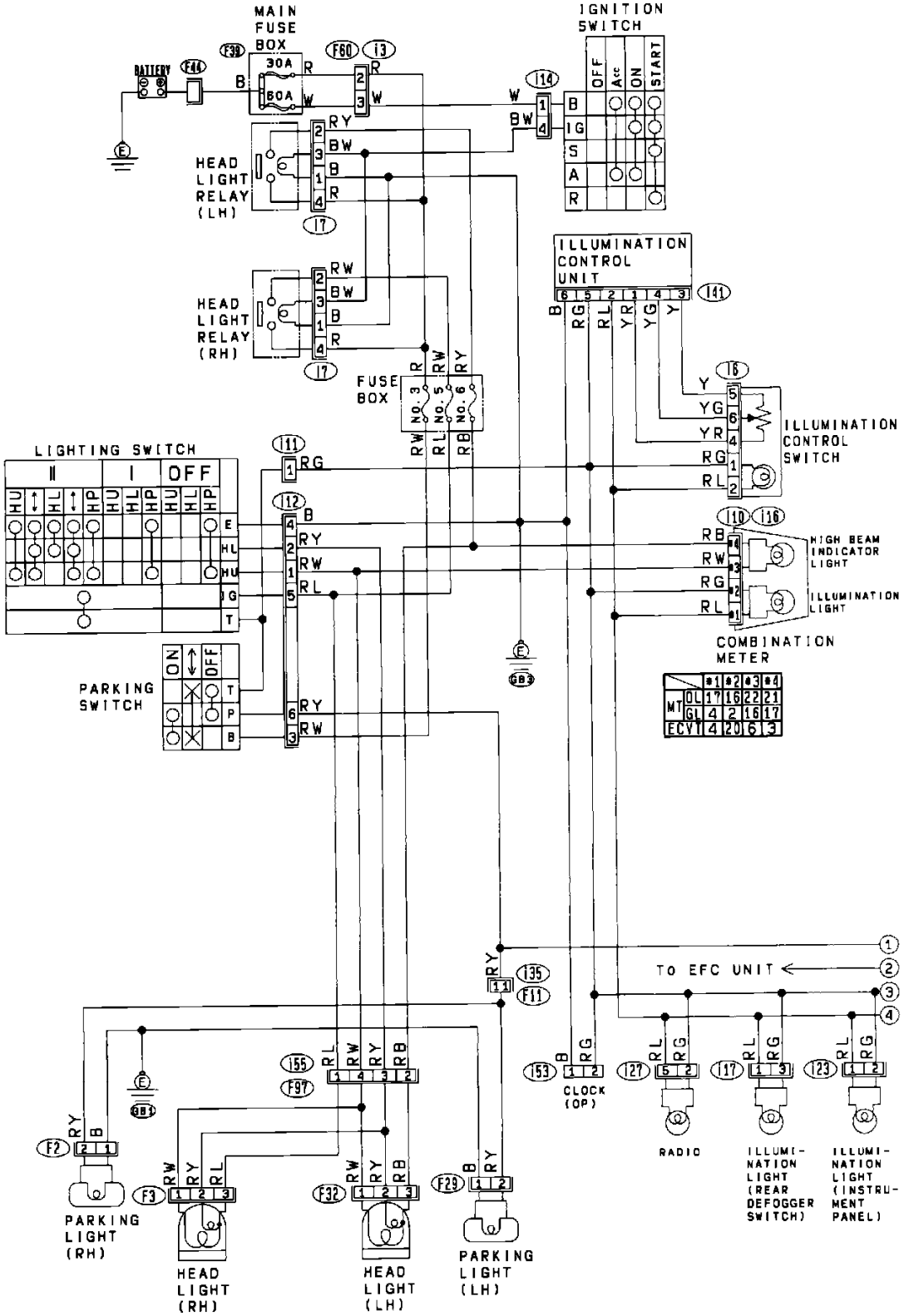

Complete Lighting System (USA Model)

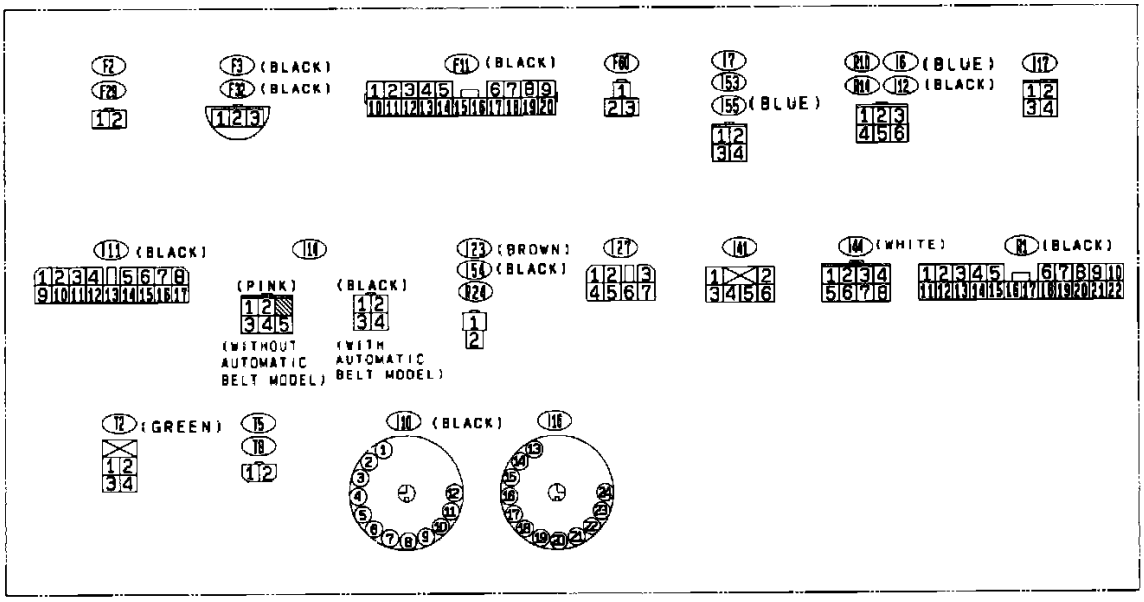

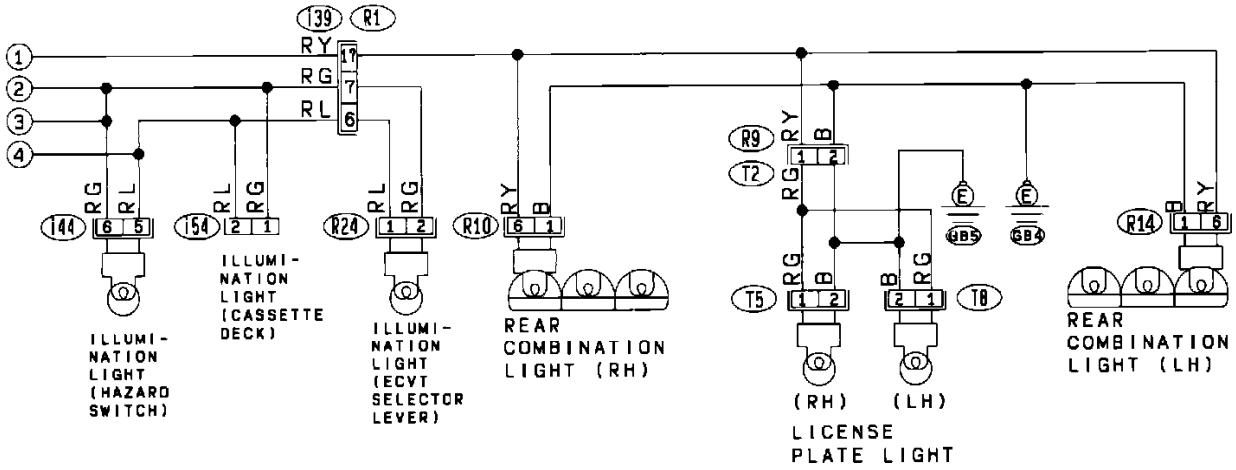

Complete Lighting System (USA Model)

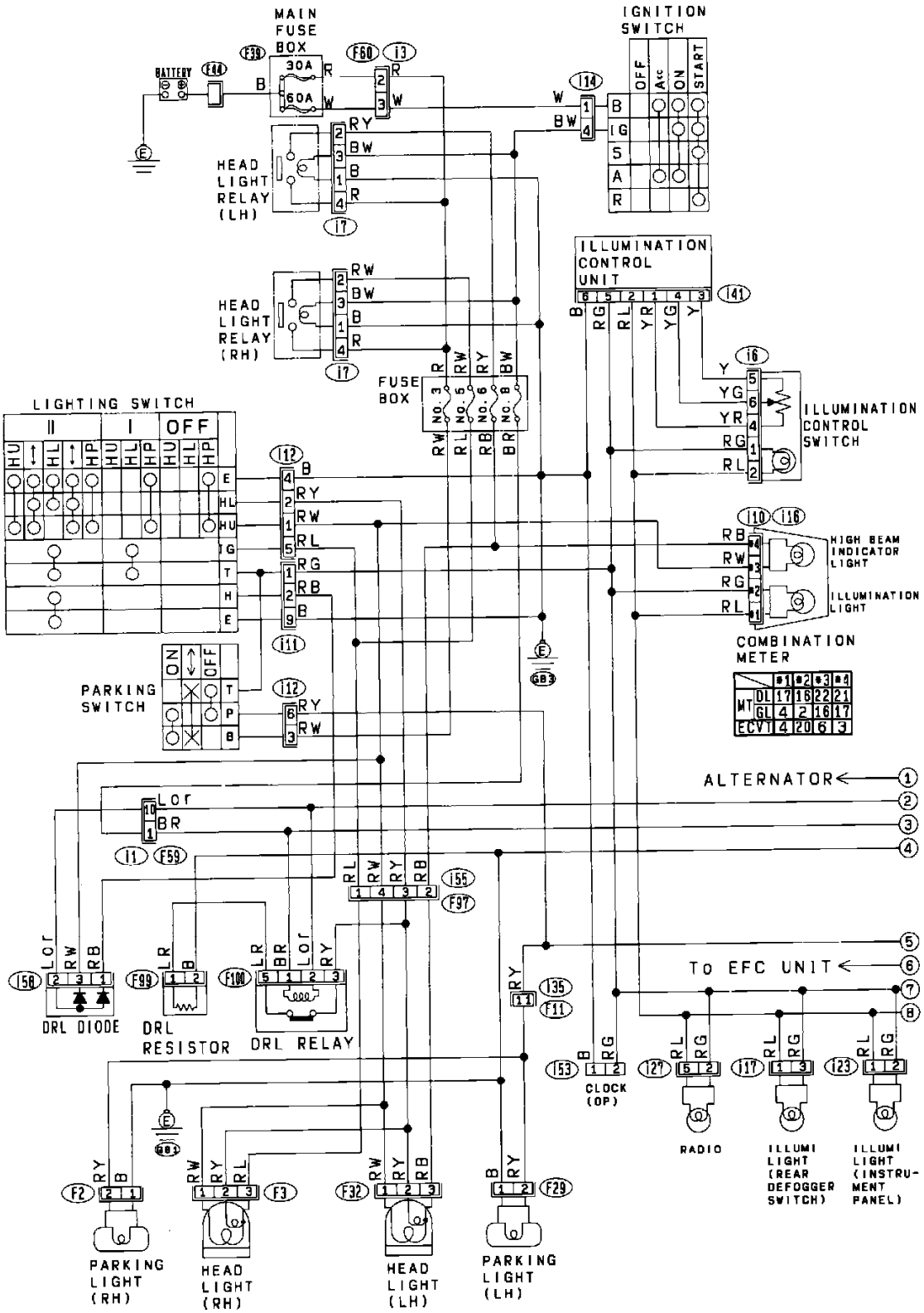

Complete Lighting System (Canada Model)

Subaru Justy Hatchback 4WD L3-1.2L SOHC (MPFI)

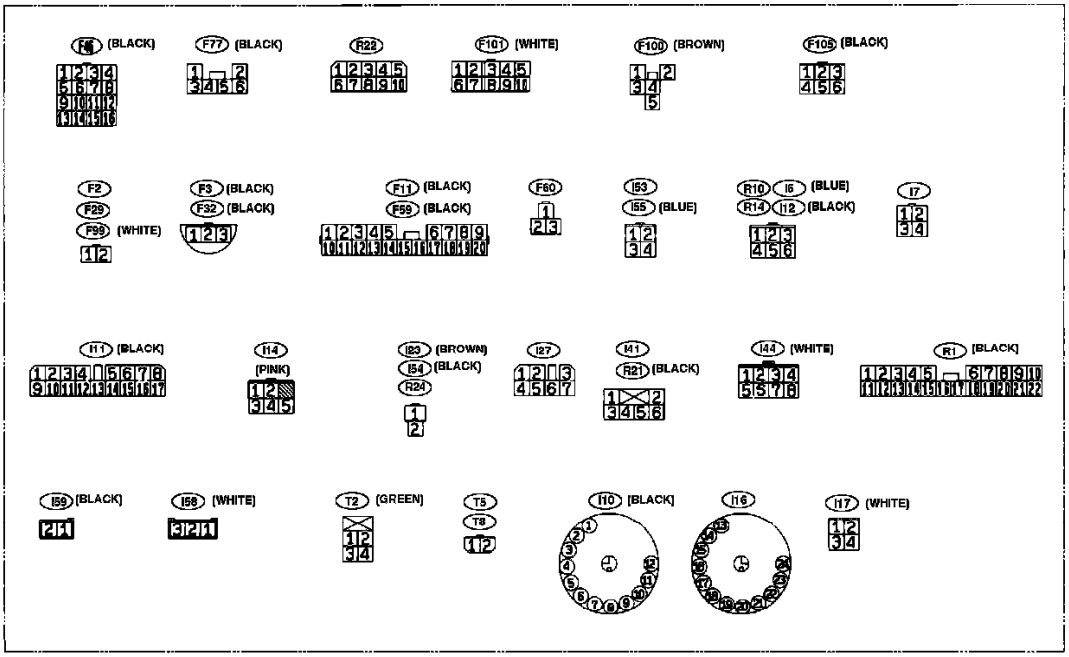

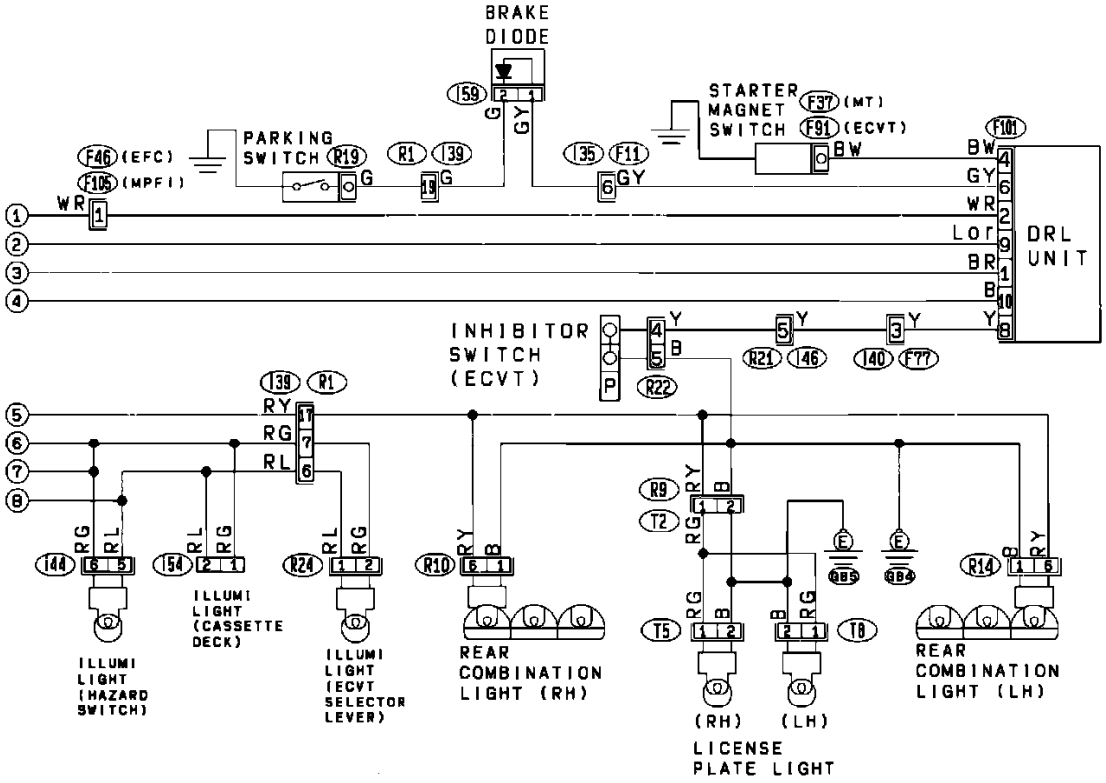

Complete Lighting System (Canada Model)

Fuse Locations: For fuse locations refer to Vehicle / Locations / Component Locations / Fuses and Fusible Links: See: Locations/Fuse and Fusible Link Locations

Ground Locations: For ground locations refer to Vehicle / Locations / Grounds: See: Locations/Ground Locations

Connector Locations: For connector locations refer to Vehicle / Locations / Connectors: See: Locations/Connector Locations

Component Locations: For component locations refer to Vehicle / Locations / Components: See: Locations/Component Locations

NOTE:

To locate Connectors, Components and/or Grounds using Harness Connector Location diagram(s) use the connector's alphanumeric name [referred to in the wiring diagram(s)] to identify the apropriate Harness Connector Location diagram. For example, the prefix letter "B" in the connector name "B-38" indicates the location is displayed in the Bulkhead Wiring Harness Connector Location diagram.

Legend:

Prefix ..... **Harness Connector Diagram**

F ..... Front
B ..... Bulkhead
i ..... Instrument Panel
P ..... Power Window
D ..... Door
R ..... Rear

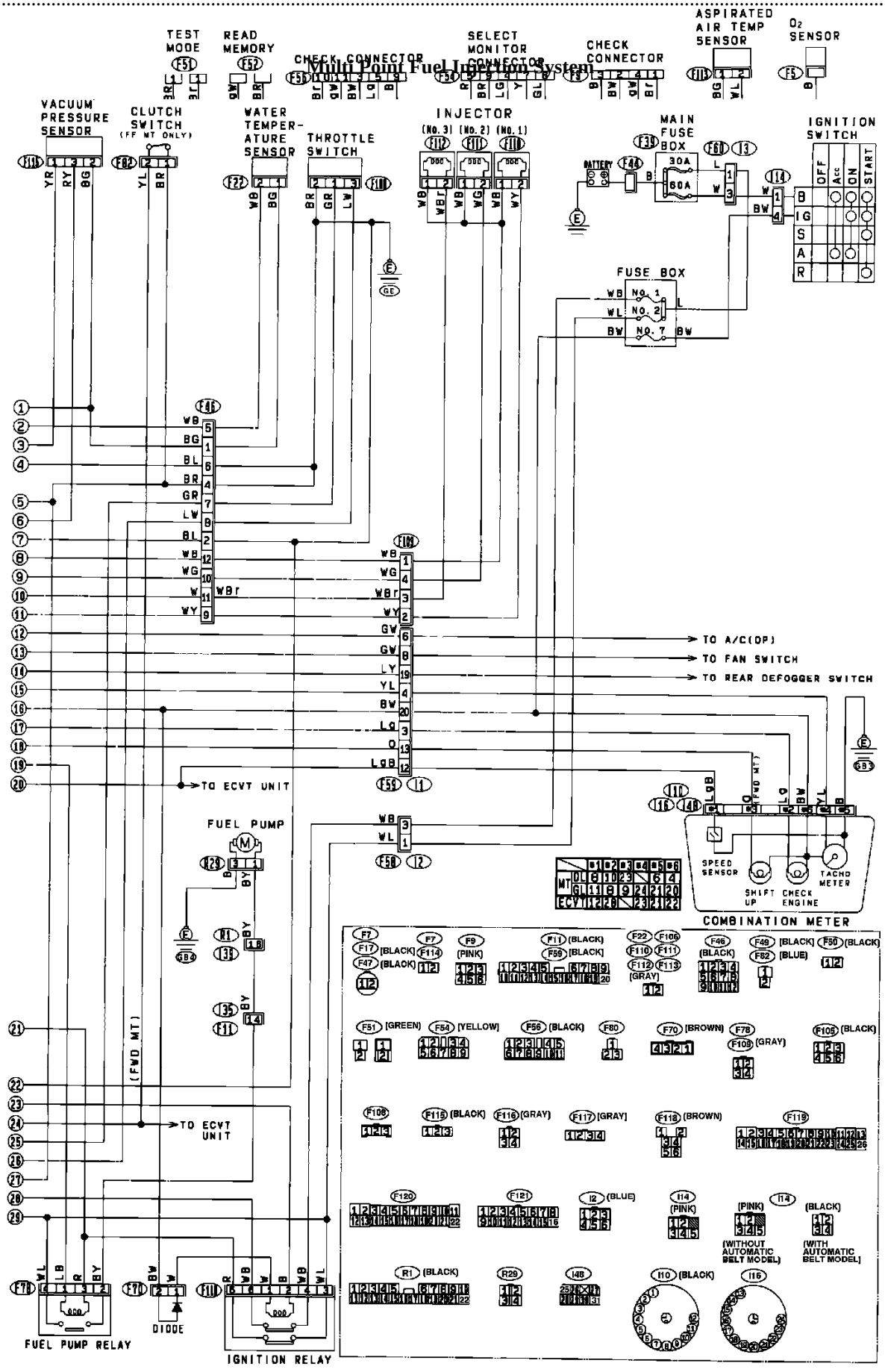

Multi Point Fuel Injection System

Exterior Lighting Module

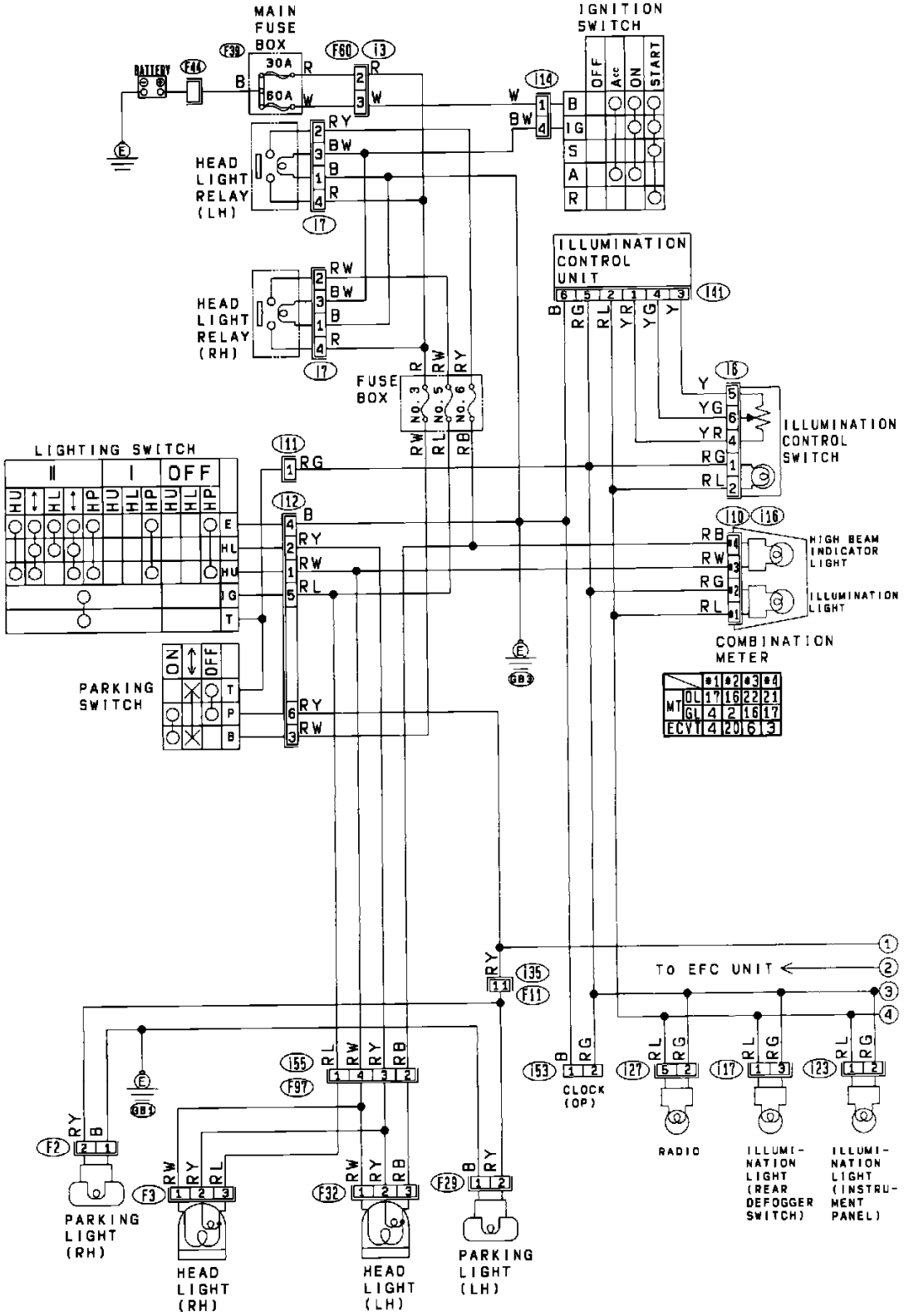

Complete Lighting System (USA Model)

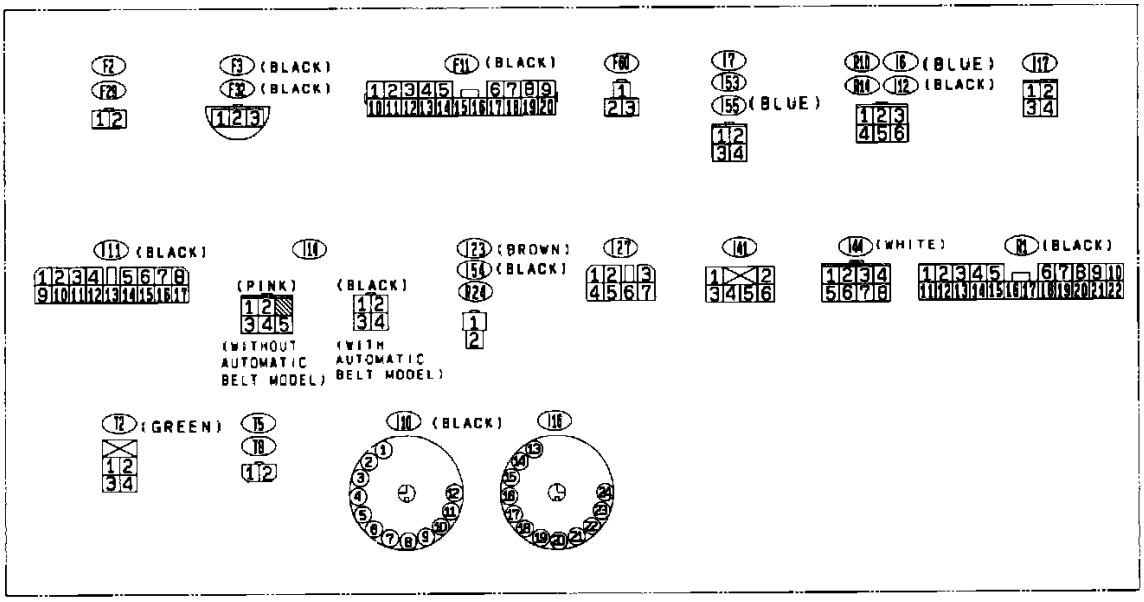

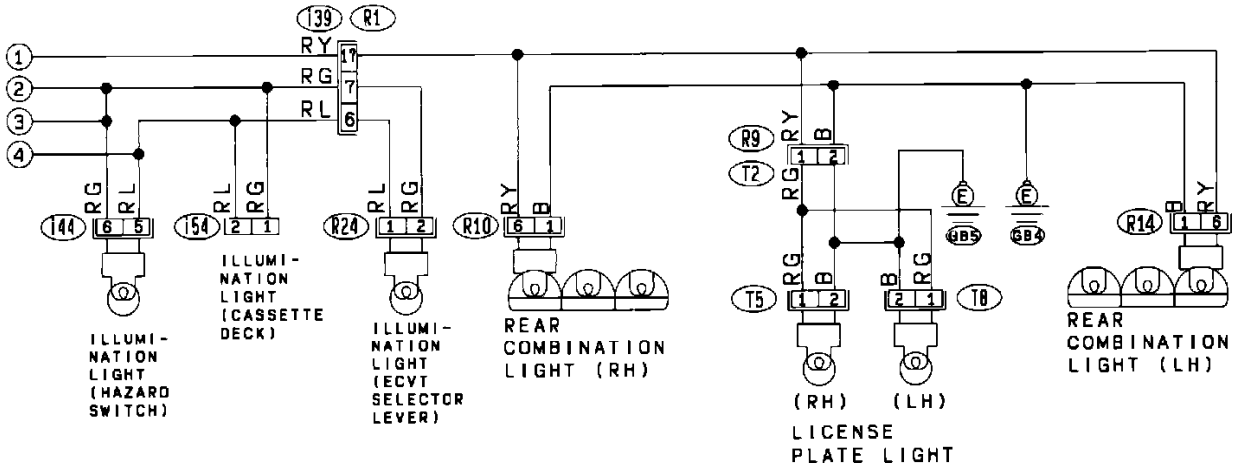

Complete Lighting System (USA Model)

USA

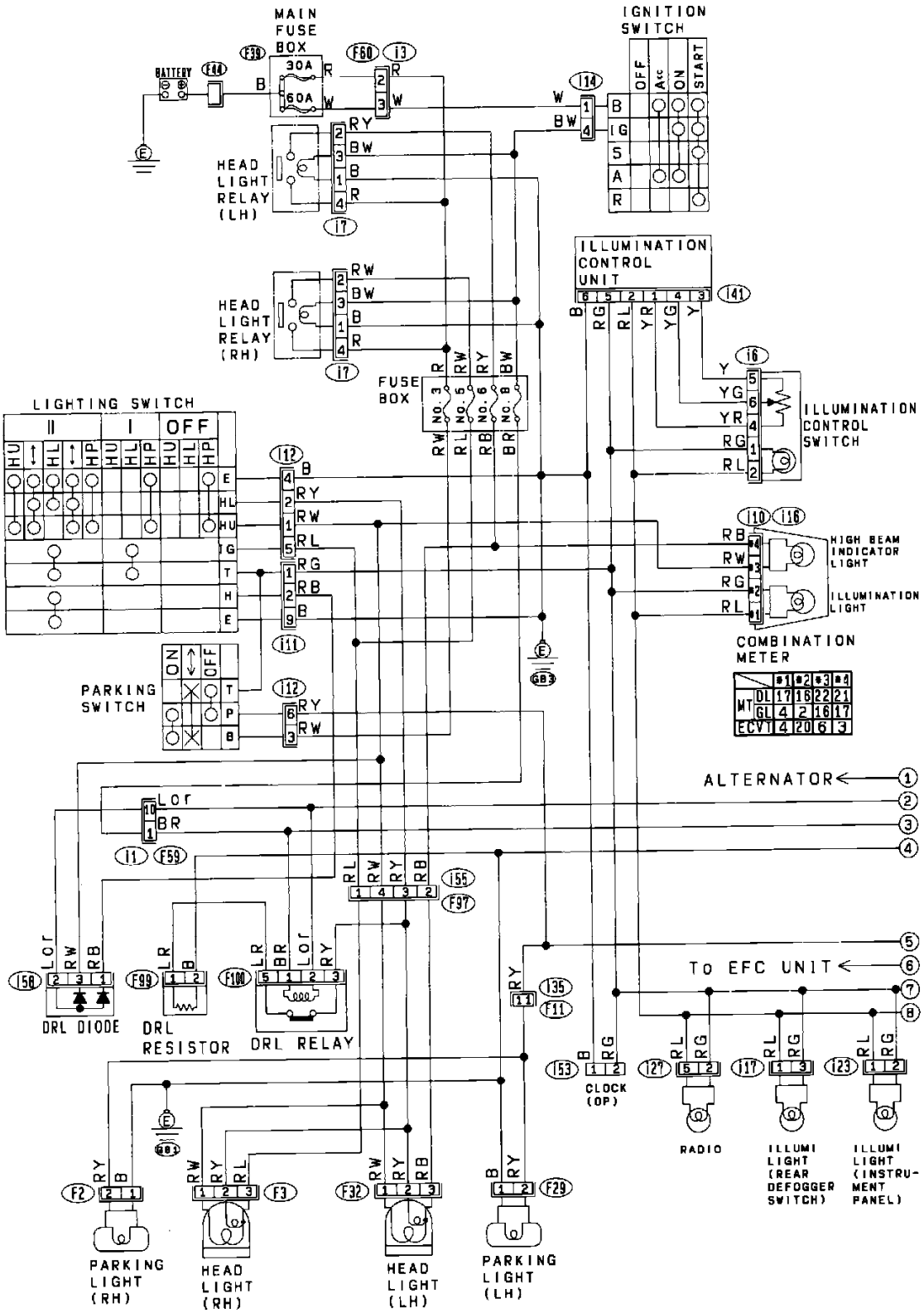

Complete Lighting System (Canada Model)

Subaru Justy Hatchback 4WD L3-1.2L SOHC (MPFI)

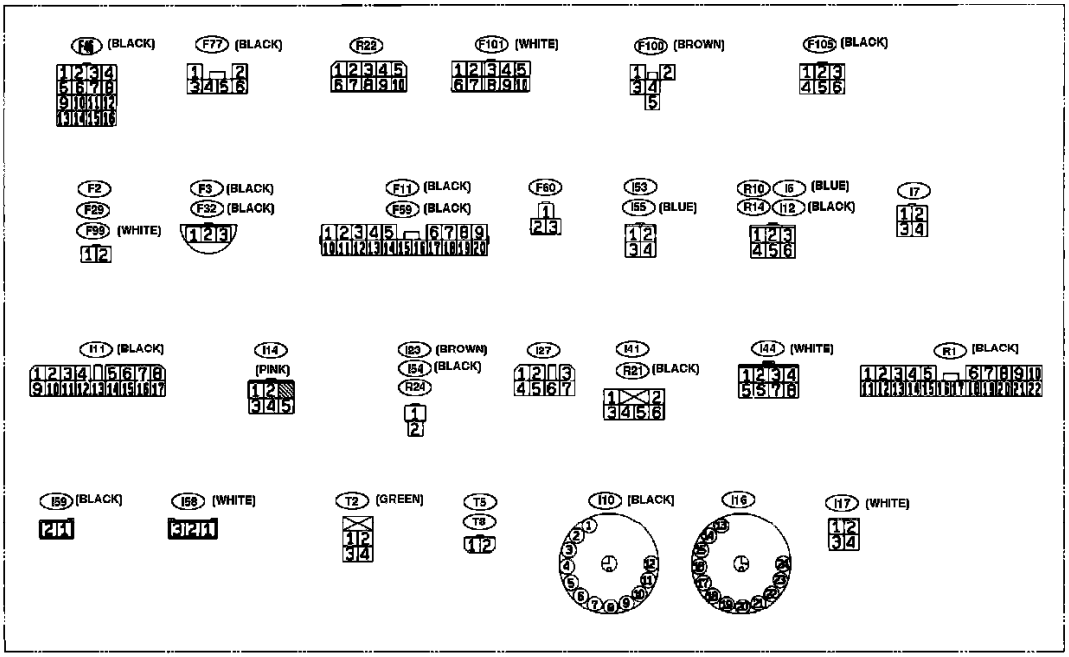

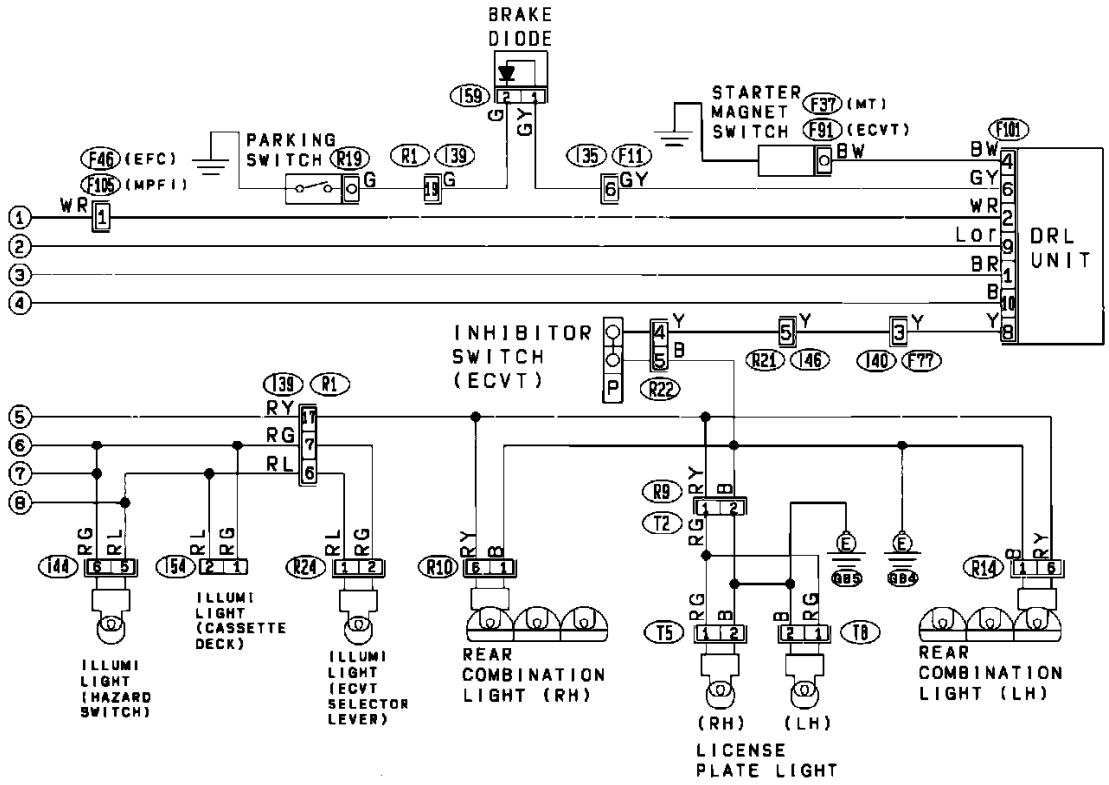

Complete Lighting System (Canada Model)

Canadian

Fuse Locations: For fuse locations refer to Vehicle / Locations / Component Locations / Fuses and Fusible Links: See: Locations/Fuse and Fusible Link Locations

Ground Locations: For ground locations refer to Vehicle / Locations / Grounds: See: Locations/Ground Locations

Connector Locations: For connector locations refer to Vehicle / Locations / Connectors: See: Locations/Connector Locations

Component Locations: For component locations refer to Vehicle / Locations / Components: See: Locations/Component Locations

NOTE:

To locate Connectors, Components and/or Grounds using Harness Connector Location diagram(s) use the connector's alphanumeric name [referred to in the wiring diagram(s)] to identify the apropriate Harness Connector Location diagram. For example, the prefix letter "B" in the connector name "B-38" indicates the location is displayed in the Bulkhead Wiring Harness Connector Location diagram.

Legend:

Prefix ..... **Harness Connector Diagram**

F ..... Front
B ..... Bulkhead
i ..... Instrument Panel
P ..... Power Window
D ..... Door
R ..... Rear

Instrument Panel Gauges: Fuel And Temperature

Hazard Warning Lamps

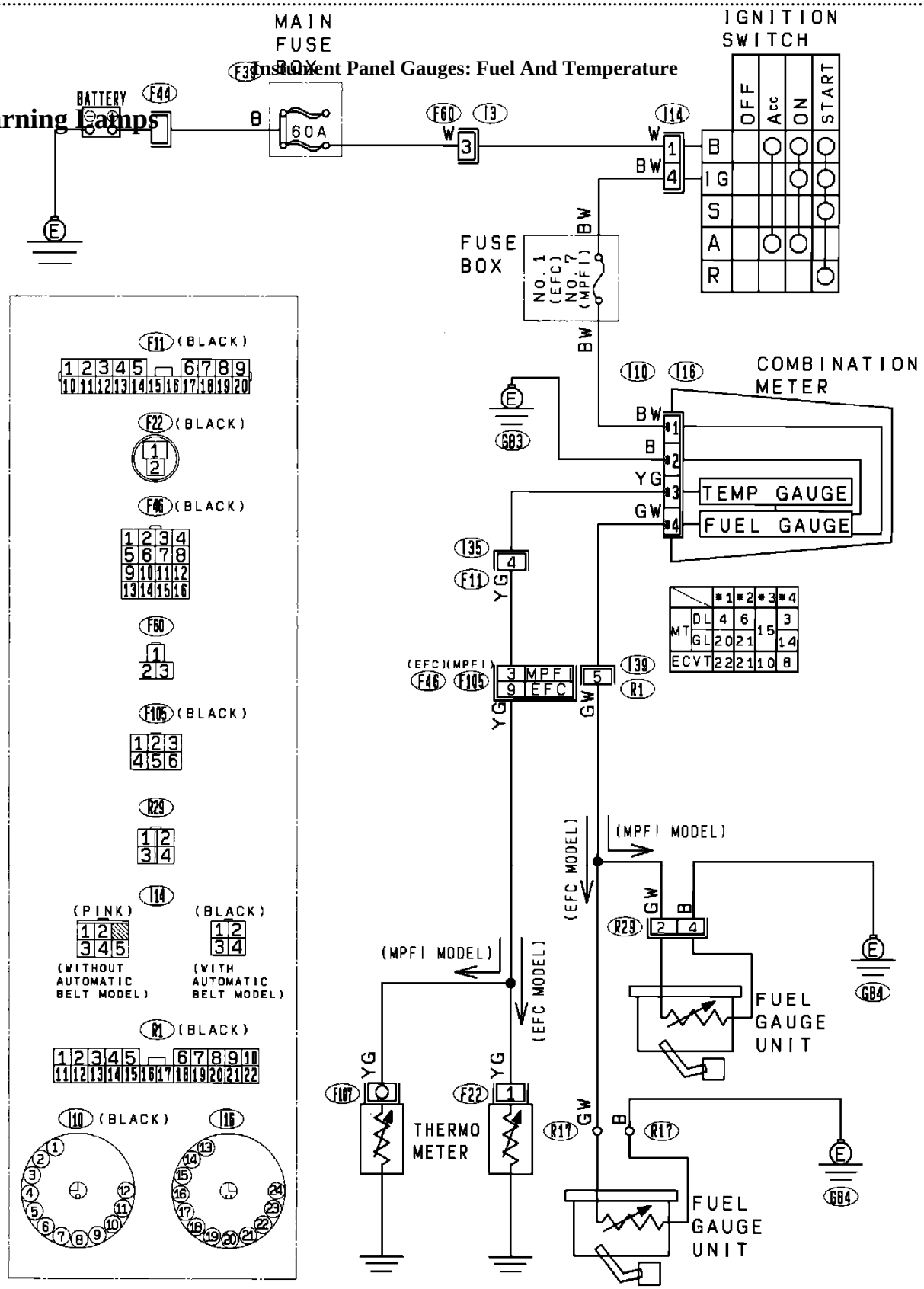

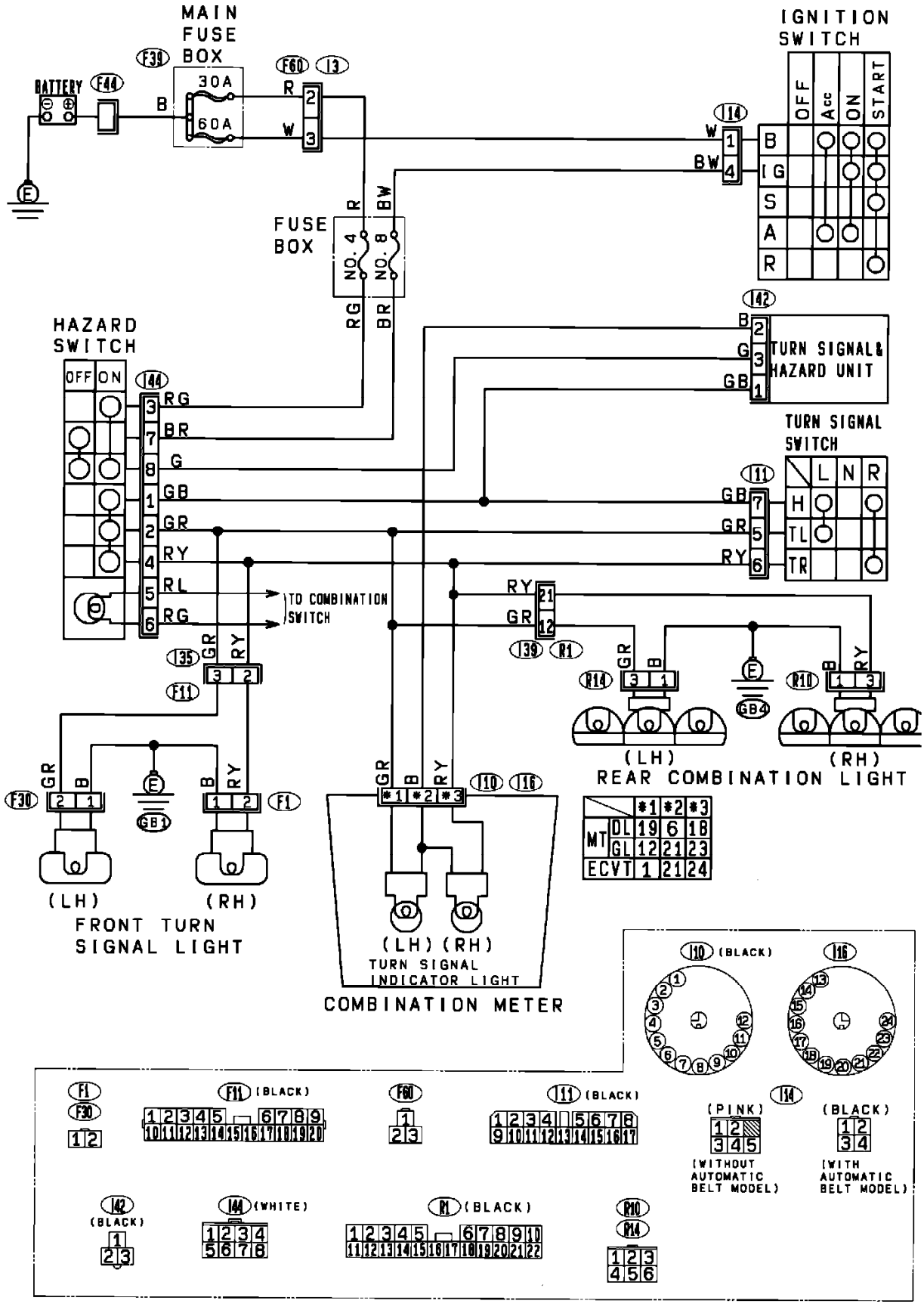

Turn Signal And Hazard Warning System

Fuse/Relay Locations: For fuse and/or relay locations refer to Starting and Charging / Power and Ground Distribution: See: Power and Ground Distribution

Ground Locations: For ground locations refer to Vehicle / Locations / Grounds: See: Locations/Ground Locations

Connector Locations: For connector locations refer to Vehicle / Locations / Connectors: See: Locations/Connector Locations

Component Locations: For component locations refer to Vehicle / Locations / Components: See: Locations/Component Locations

NOTE:

Subaru Justy Hatchback 4WD L3-1.2L SOHC (MPFI)

To Locate Connectors, Components and/or Grounds using Harness Connector Location diagram(s) use the connector's alphanumeric name [referred to in the above diagram(s)] to identify which harness diagram to look in. For example, the letter "B" prefix in the connector name "B-38" indicates it is displayed in the Bulkhead Wiring Harness diagram.

Legend:

Prefix	**Harness Connector Diagram**
F	Front
B	Bulkhead
i	Instrument Panel
P	Power Window
D	Door
R	Rear

Headlamp

Headlamps/Fog Lamps Circuit

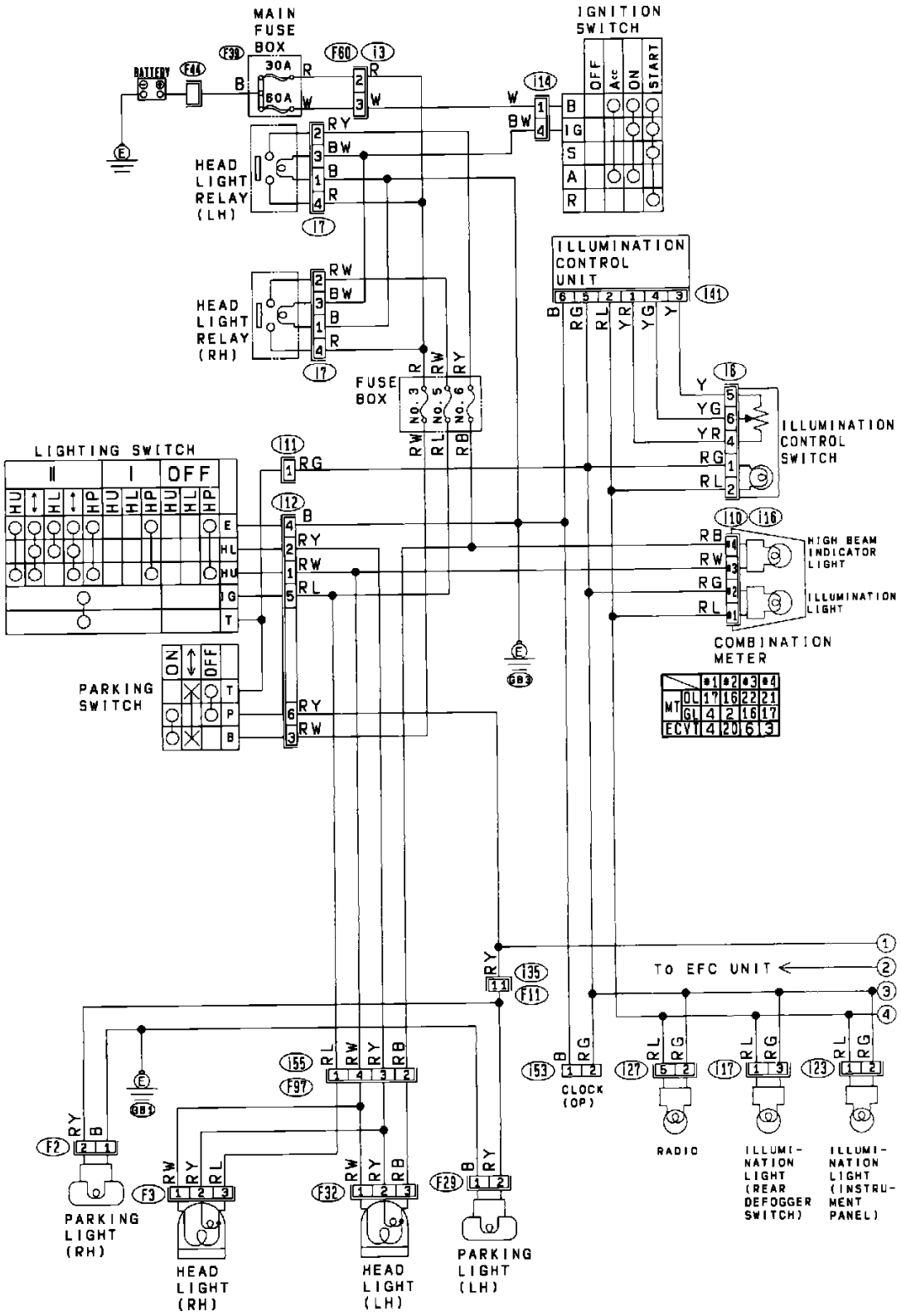

Complete Lighting System (USA Model)

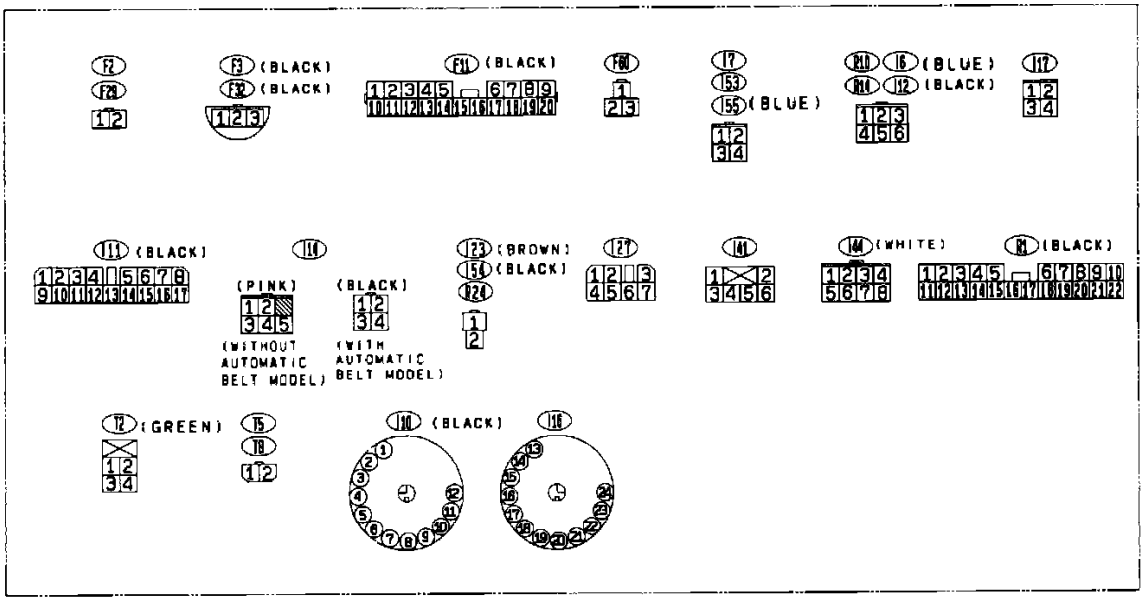

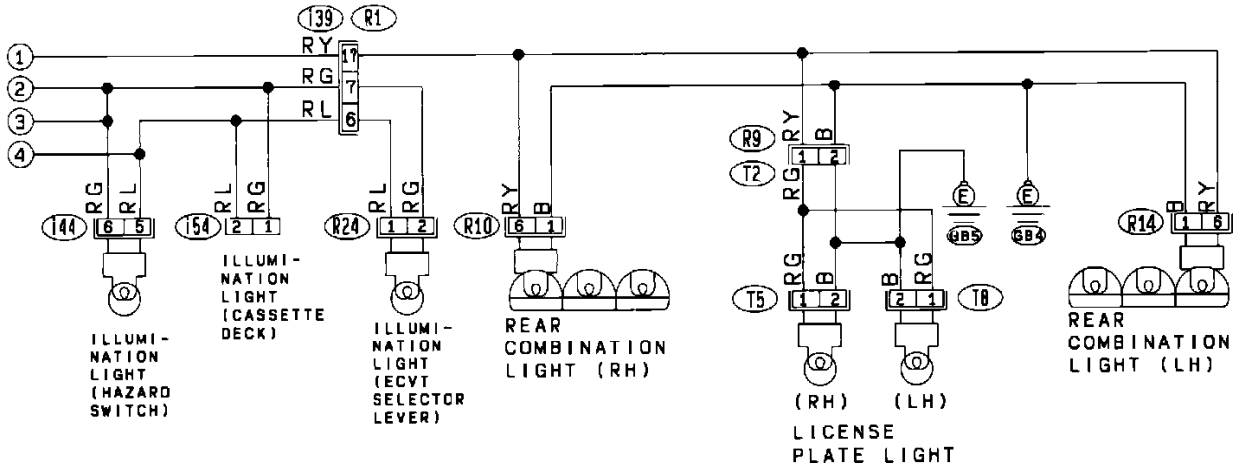

Complete Lighting System (USA Model)

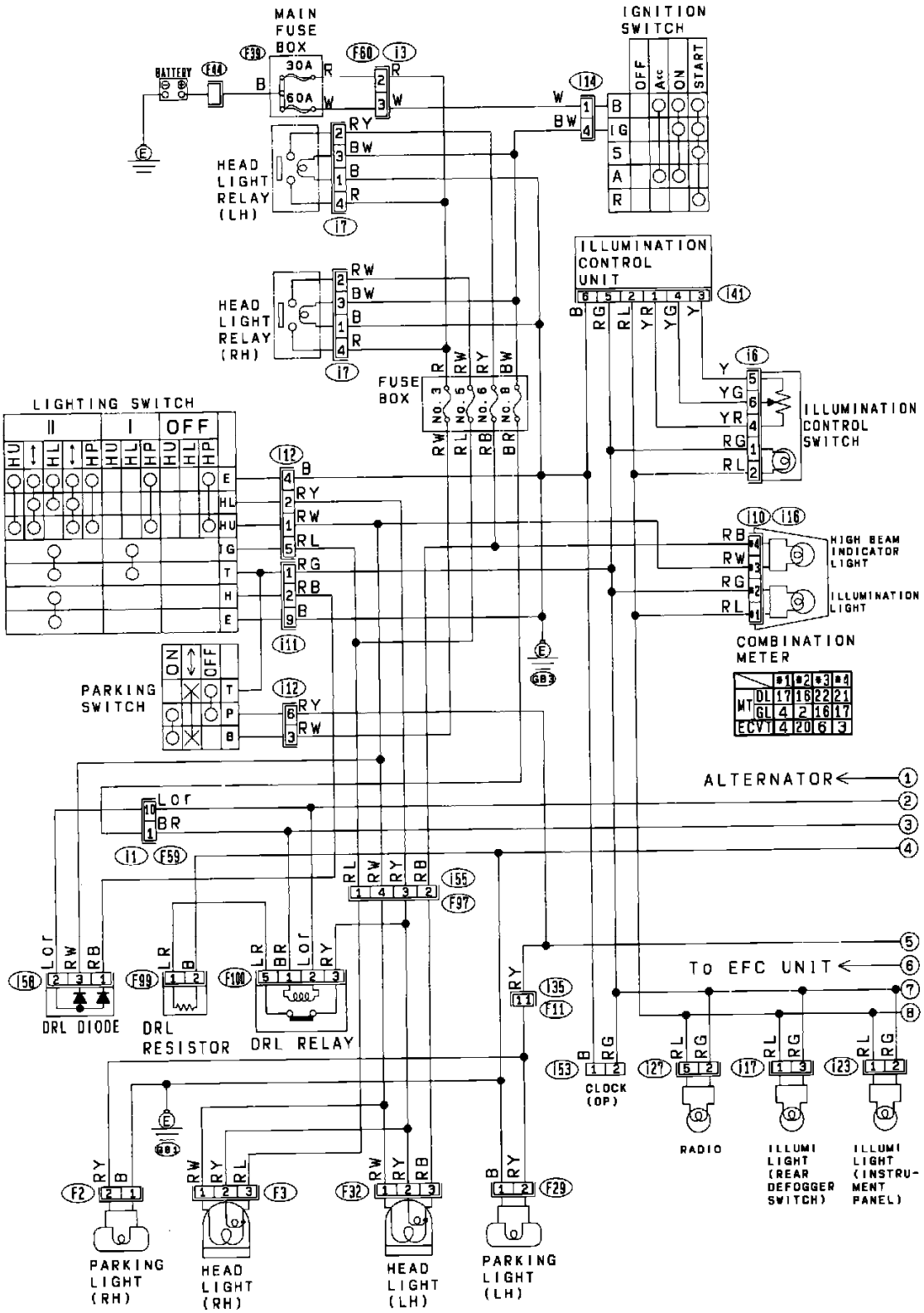

Complete Lighting System (Canada Model)

Subaru Justy Hatchback 4WD L3-1.2L SOHC (MPFI)

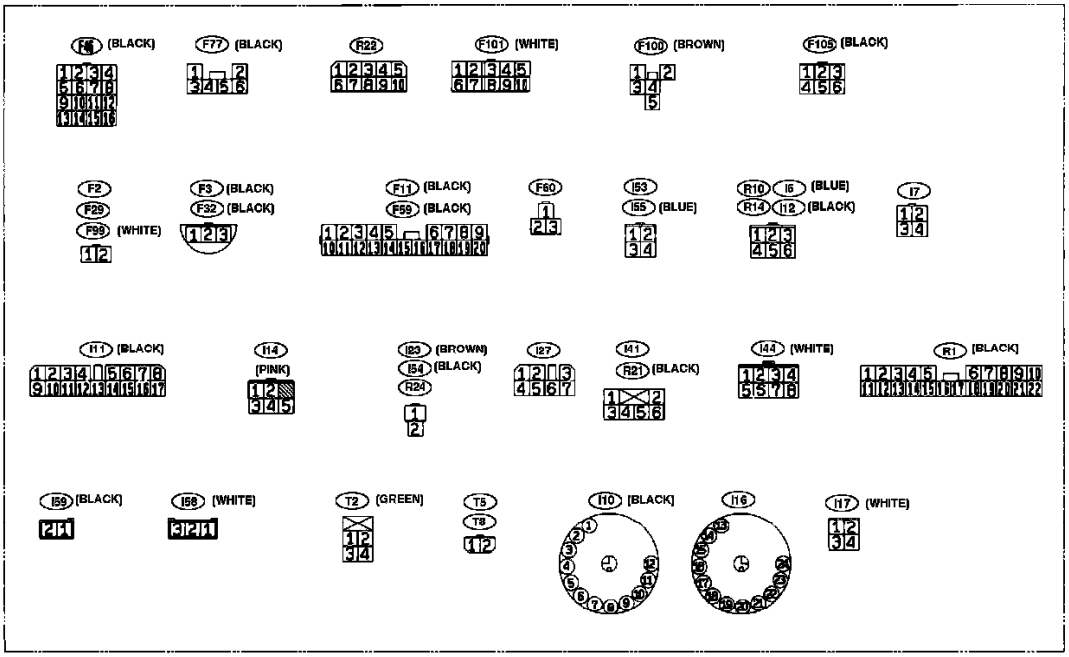

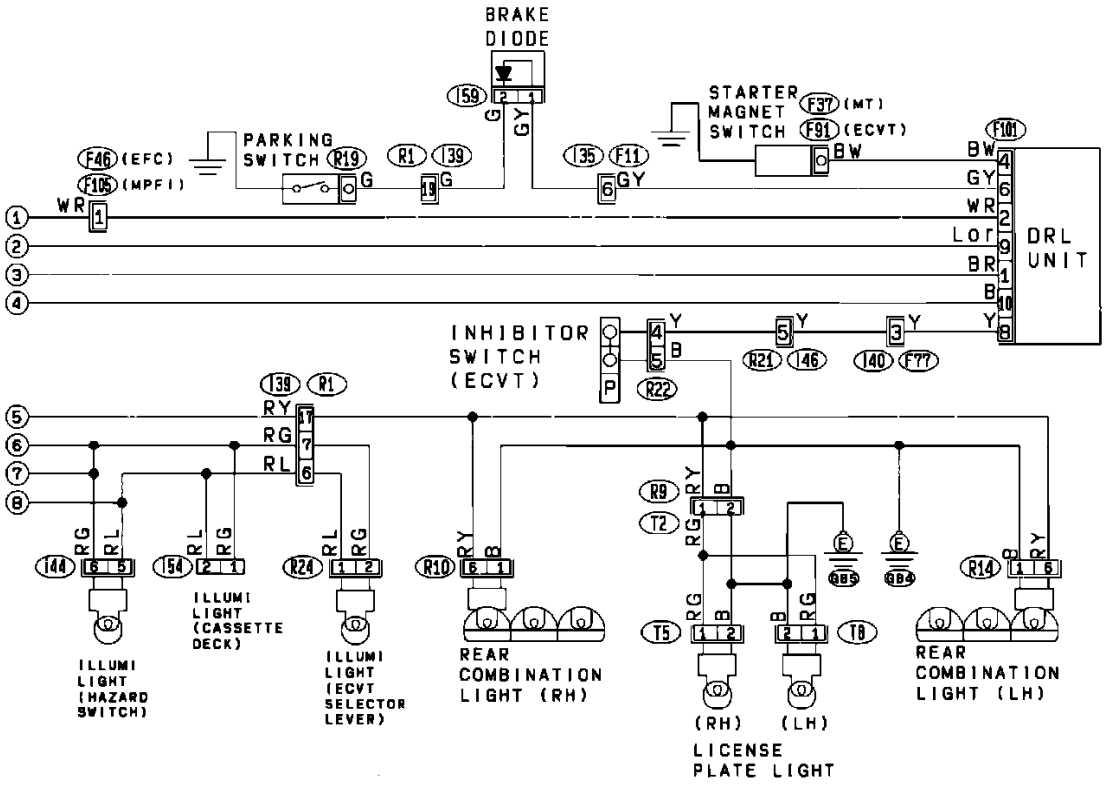

Complete Lighting System (Canada Model)

Fuse Locations: For fuse locations refer to Vehicle / Locations / Component Locations / Fuses and Fusible Links: See: Locations/Fuse and Fusible Link Locations

Ground Locations: For ground locations refer to Vehicle / Locations / Grounds: See: Locations/Ground Locations

Connector Locations: For connector locations refer to Vehicle / Locations / Connectors: See: Locations/Connector Locations

Component Locations: For component locations refer to Vehicle / Locations / Components: See: Locations/Component Locations

NOTE:

To locate Connectors, Components and/or Grounds using Harness Connector Location diagram(s) use the connector's alphanumeric name [referred to in the wiring diagram(s)] to identify the apropriate Harness Connector Location diagram. For example, the prefix letter "B" in the connector name "B-38" indicates the location is displayed in the Bulkhead Wiring Harness Connector Location diagram.

Legend:

Prefix ..... **Harness Connector Diagram**

F ..... Front
B ..... Bulkhead
i ..... Instrument Panel
P ..... Power Window
D ..... Door
R ..... Rear

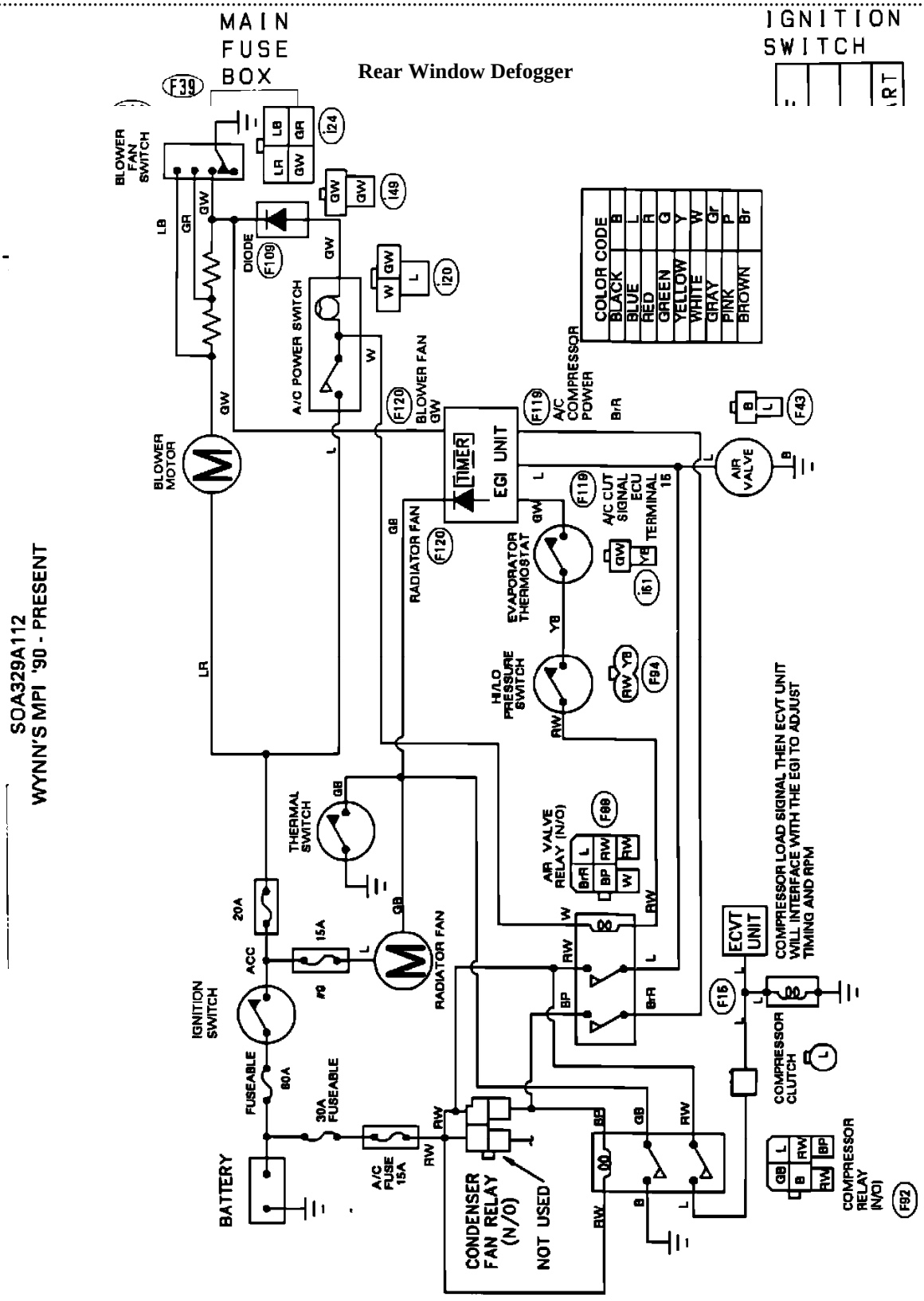

A/C Wiring Diagram

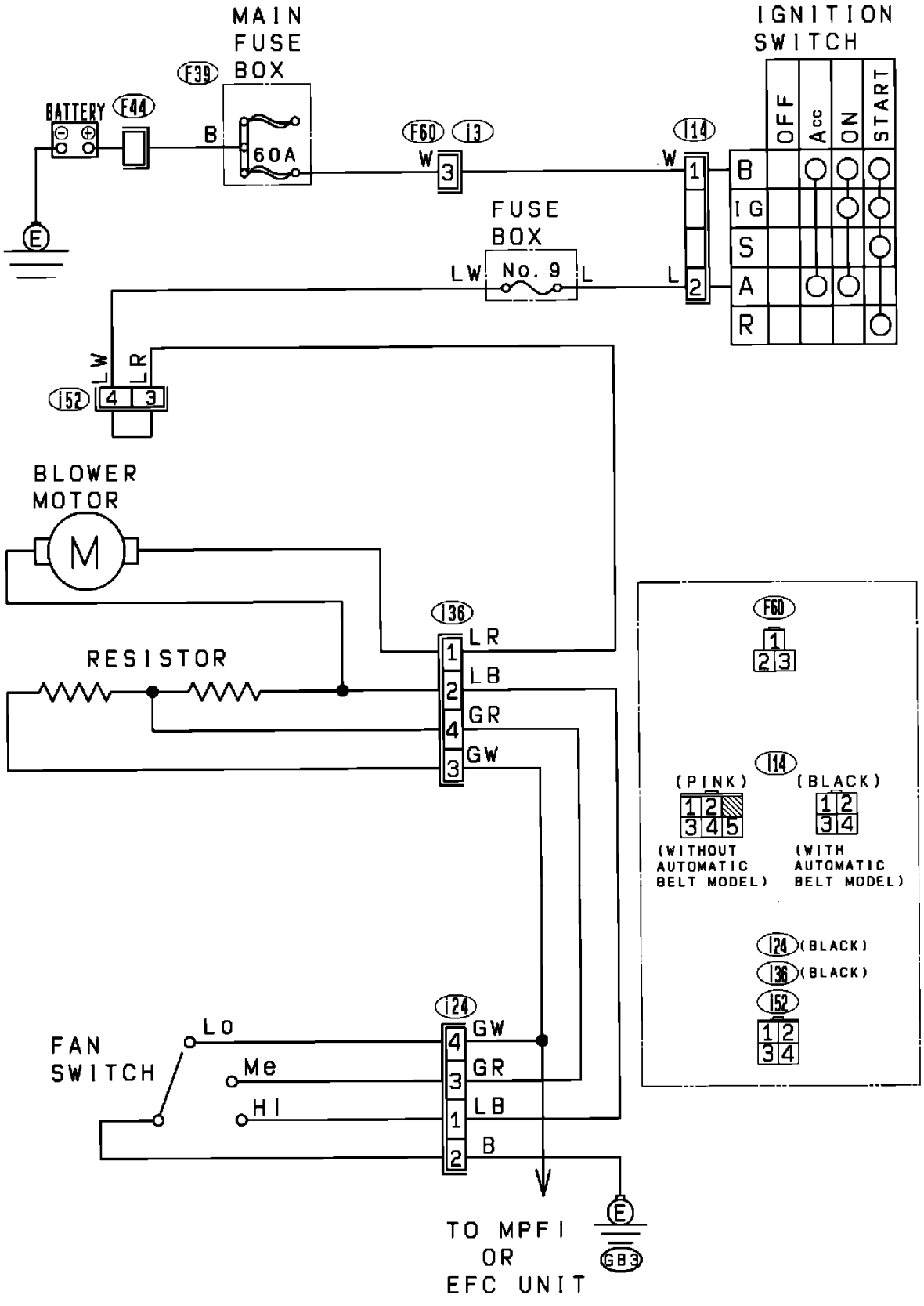

Heater Fan Motor

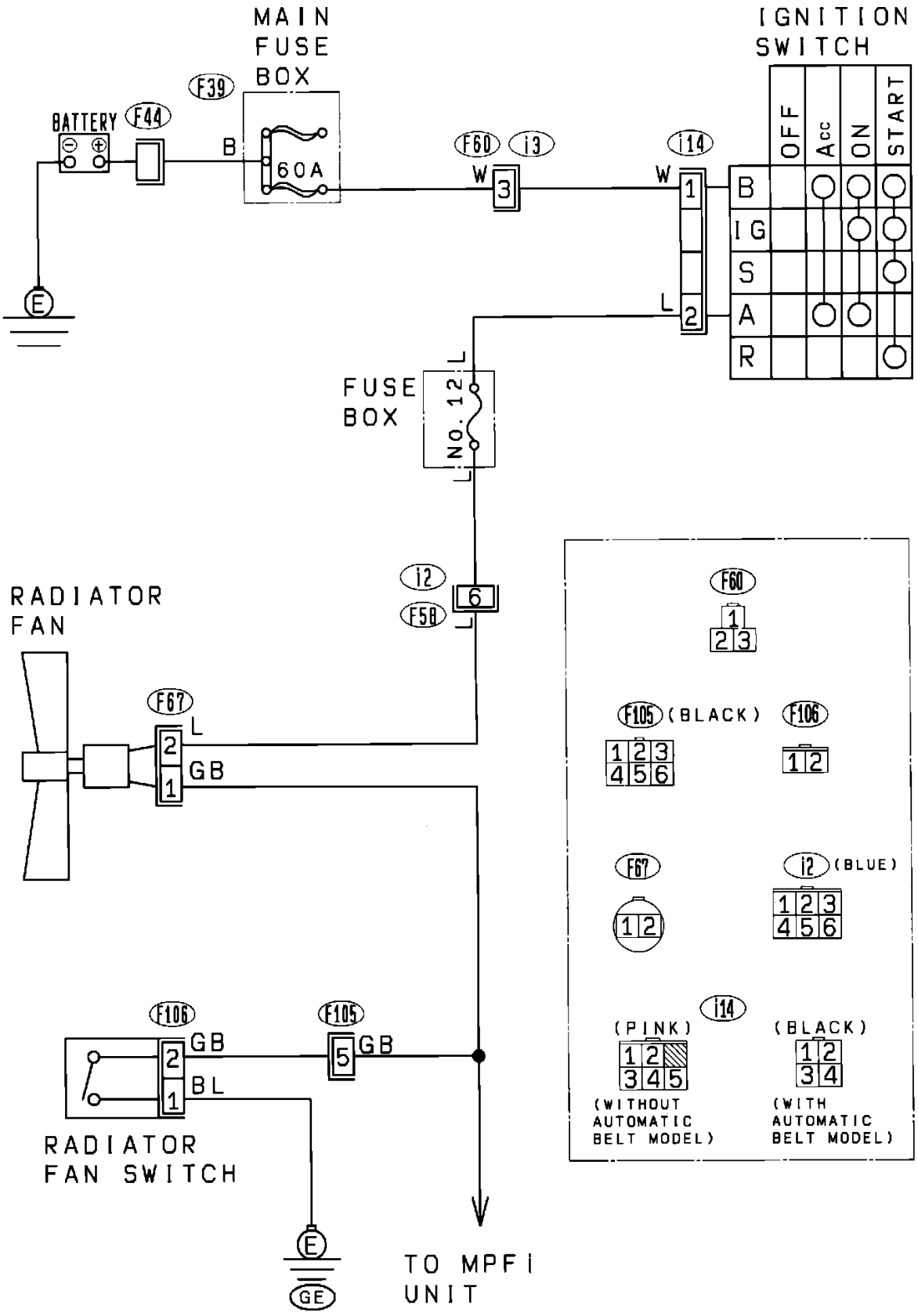

Radiator Fan Motor (Fuel Injected Models)

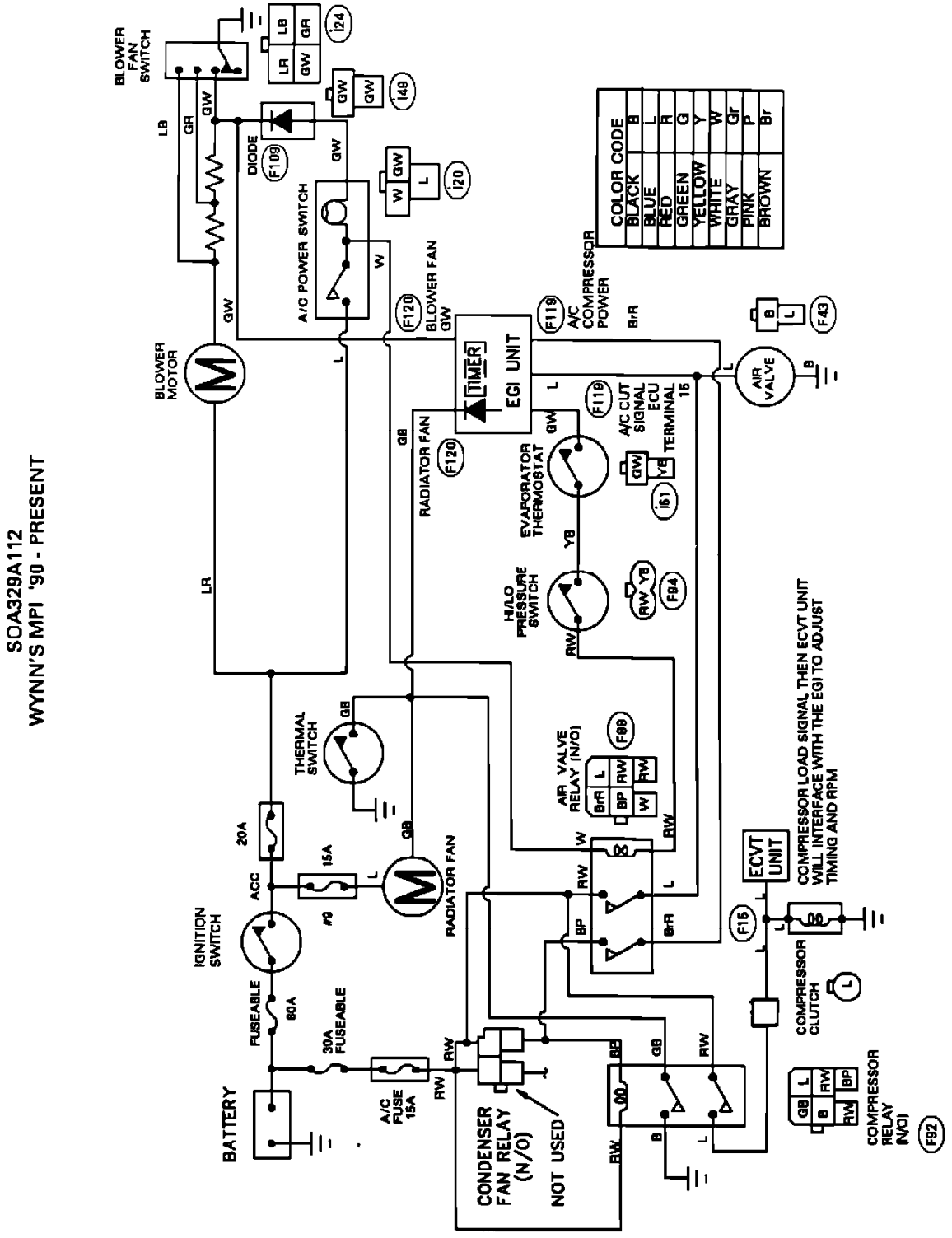

A/C Wiring Diagram

Hi-Beam Indicator Lamp

Headlamps/Fog Lamps Circuit

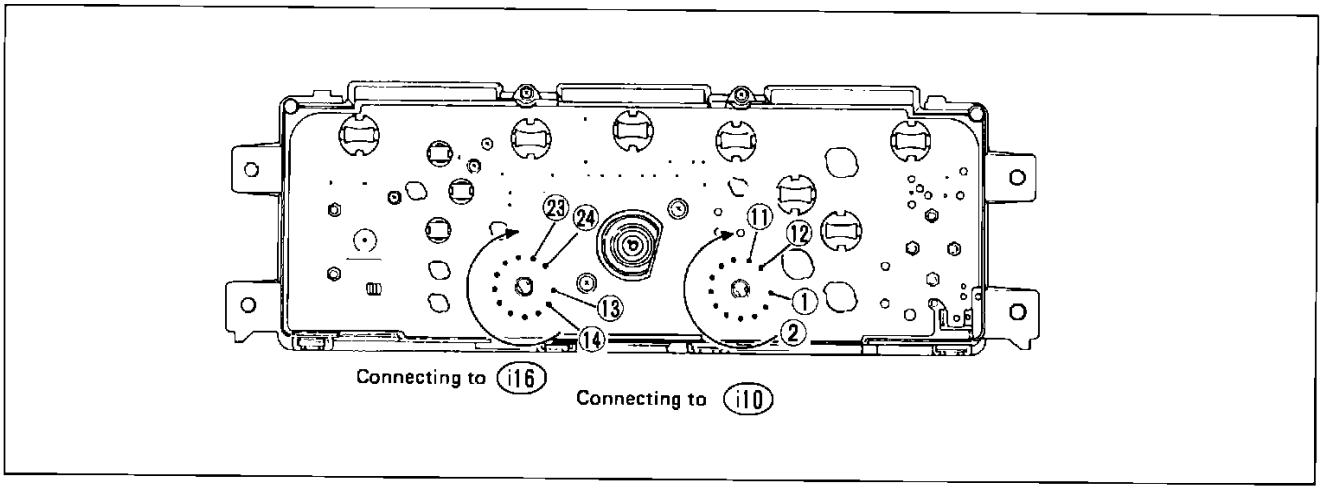

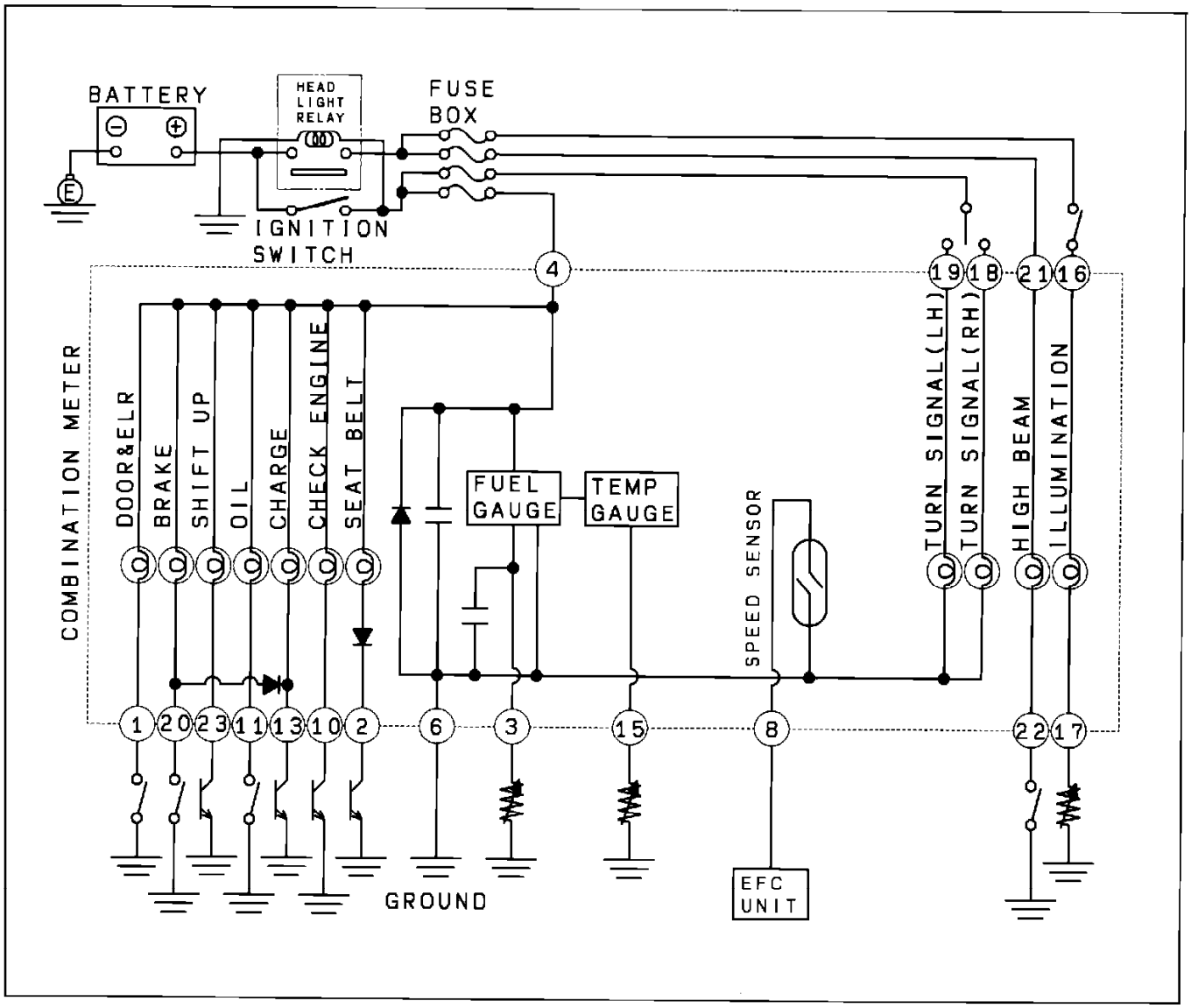

Instrument Panel Indicators (DL Model)

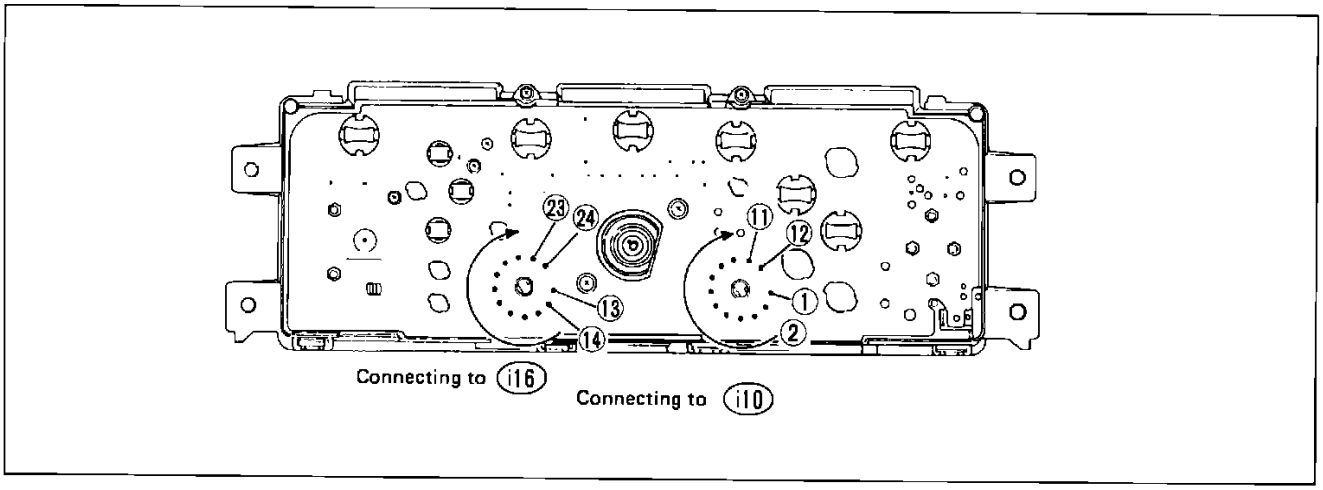

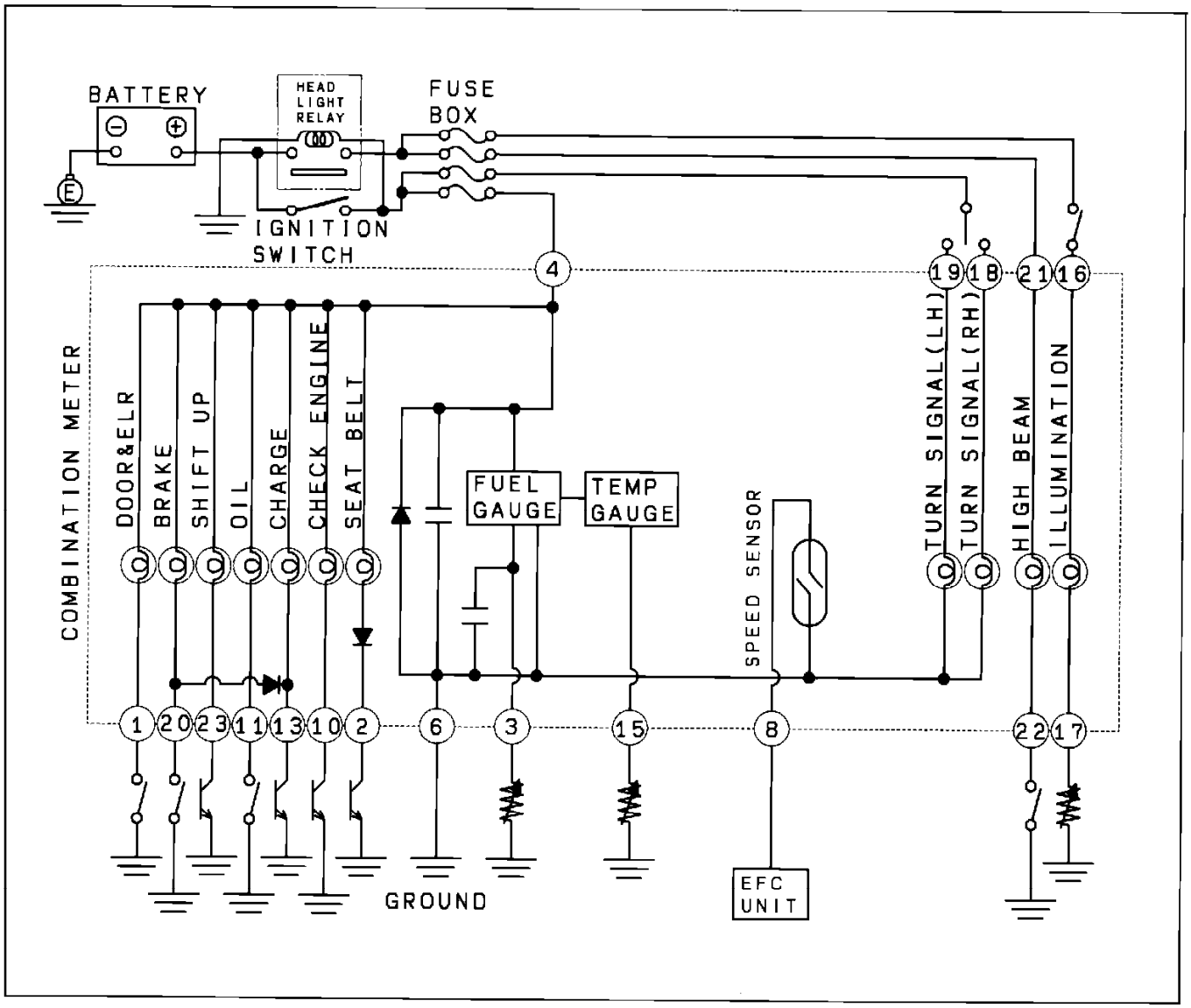

Instrument Panel Indicators (DL Model)

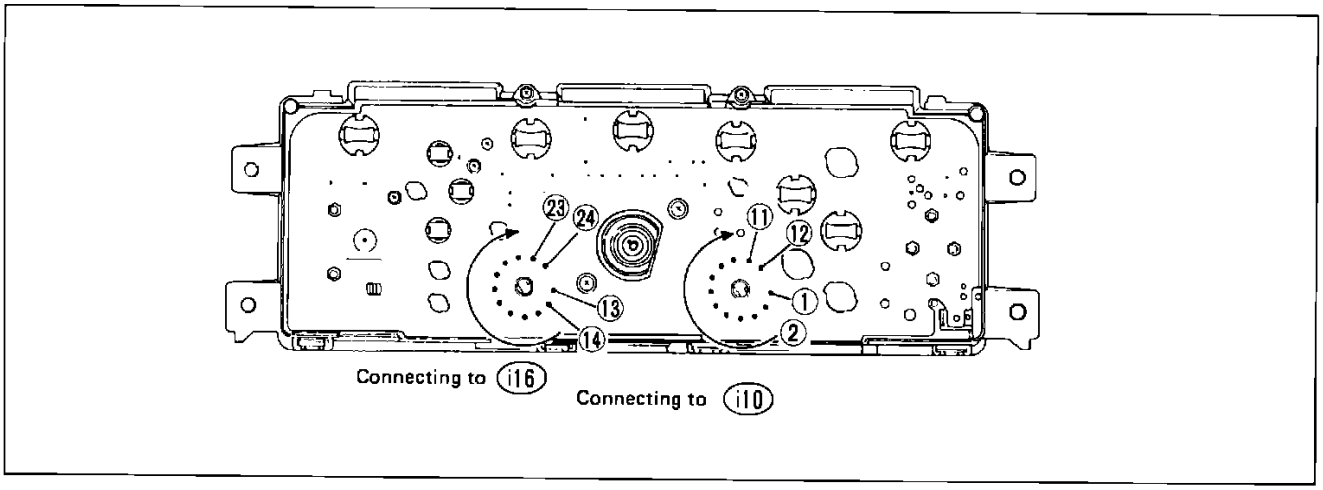

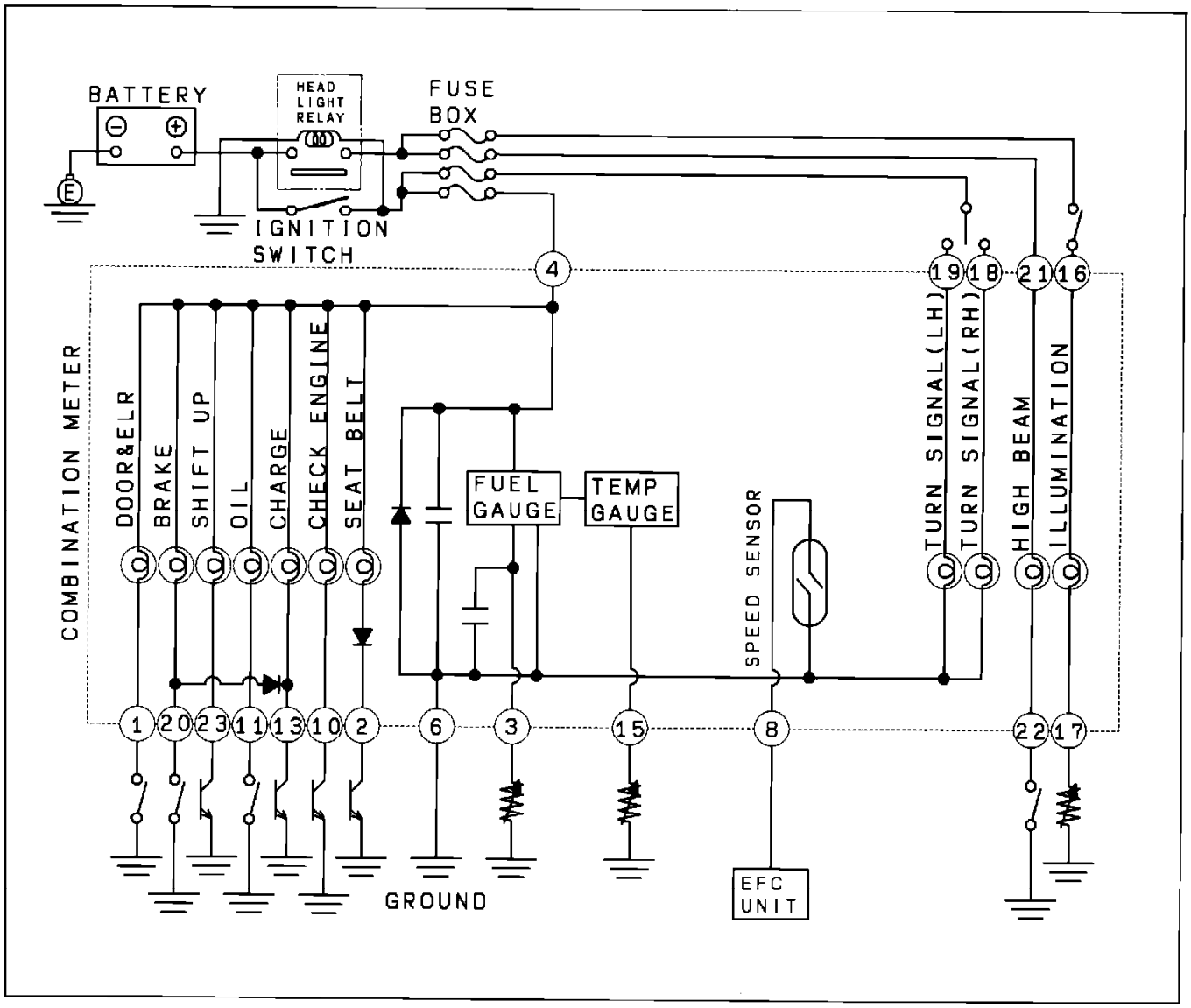

Instrument Panel Indicators (DL Model)

Fuse Locations: For fuse locations refer to Vehicle / Locations / Component Locations / Fuses and Fusible Links: See: Locations/Fuse and Fusible Link Locations

Ground Locations: For ground locations refer to Vehicle / Locations / Grounds: See: Locations/Ground Locations

Connector Locations: For connector locations refer to Vehicle / Locations / Connectors: See: Locations/Connector Locations

Component Locations: For component locations refer to Vehicle / Locations / Components: See: Locations/Component Locations

NOTE:

Subaru Justy Hatchback 4WD L3-1.2L SOHC (MPFI)

To locate Connectors, Components and/or Grounds using Harness Connector Location diagram(s) use the connector's alphanumeric name [referred to in the wiring diagram(s)] to identify the apropriate Harness Connector Location diagram. For example, the prefix letter "B" in the connector name "B-38" indicates the location is displayed in the Bulkhead Wiring Harness Connector Location diagram.

Legend:

Prefix	**Harness Connector Diagram**
F	Front
B	Bulkhead
i	Instrument Panel
P	Power Window
D	Door
R	Rear

Horn

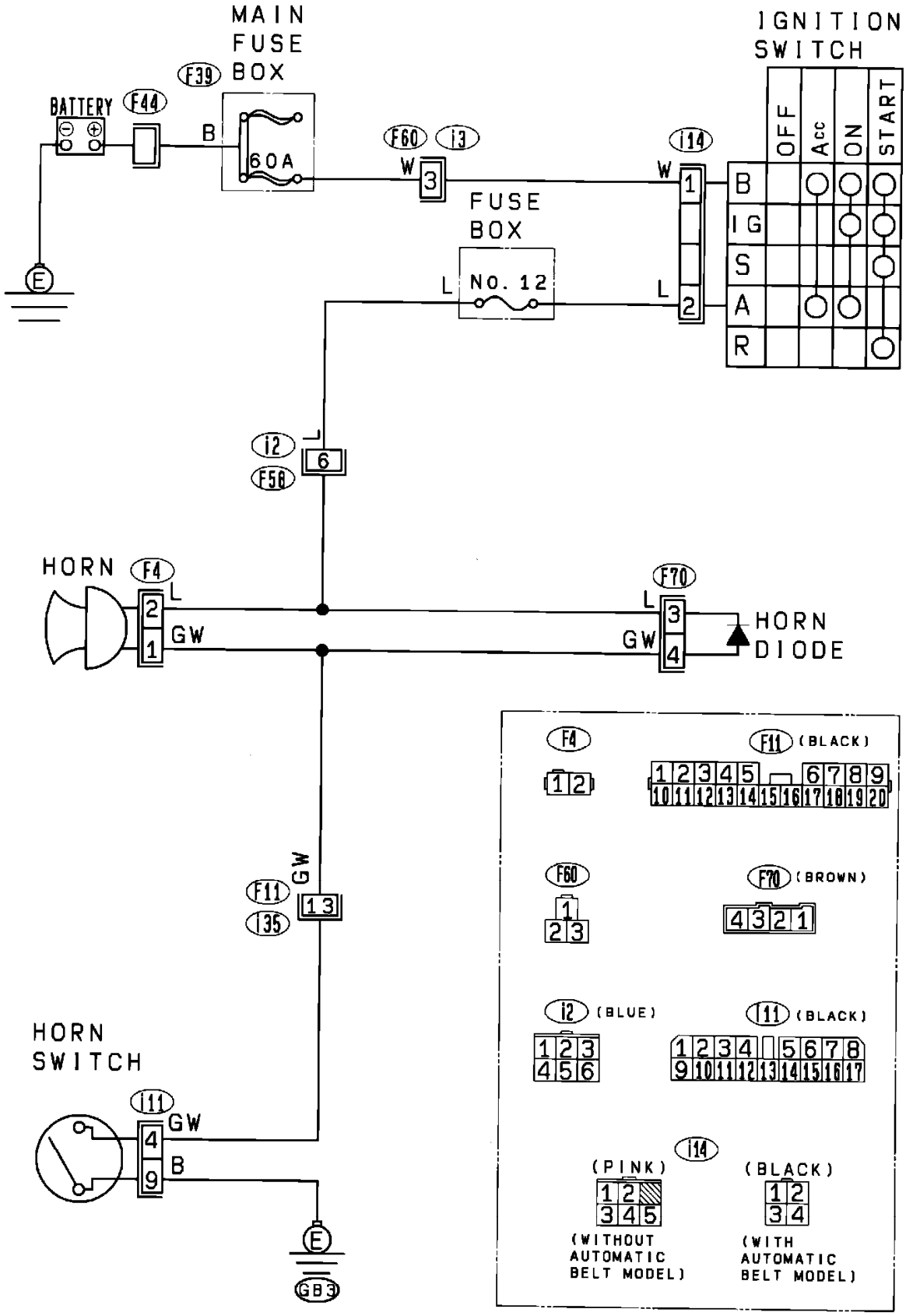

Horn

Fuse Locations: For fuse locations refer to Vehicle / Locations / Component Locations / Fuses and Fusible Links: See: Locations/Fuse and Fusible Link Locations

Ground Locations: For ground locations refer to Vehicle / Locations / Grounds: See: Locations/Ground Locations

Connector Locations: For connector locations refer to Vehicle / Locations / Connectors: See: Locations/Connector Locations

Component Locations: For component locations refer to Vehicle / Locations / Components: See: Locations/Component Locations

NOTE:

Subaru Justy Hatchback 4WD L3-1.2L SOHC (MPFI)

To locate Connectors, Components and/or Grounds using Harness Connector Location diagram(s) use the connector's alphanumeric name [referred to in the wiring diagram(s)] to identify the apropriate Harness Connector Location diagram. For example, the prefix letter "B" in the connector name "B-38" indicates the location is displayed in the Bulkhead Wiring Harness Connector Location diagram.

Legend:

Prefix	**Harness Connector Diagram**
F	Front
B	Bulkhead
i	Instrument Panel
P	Power Window
D	Door
R	Rear

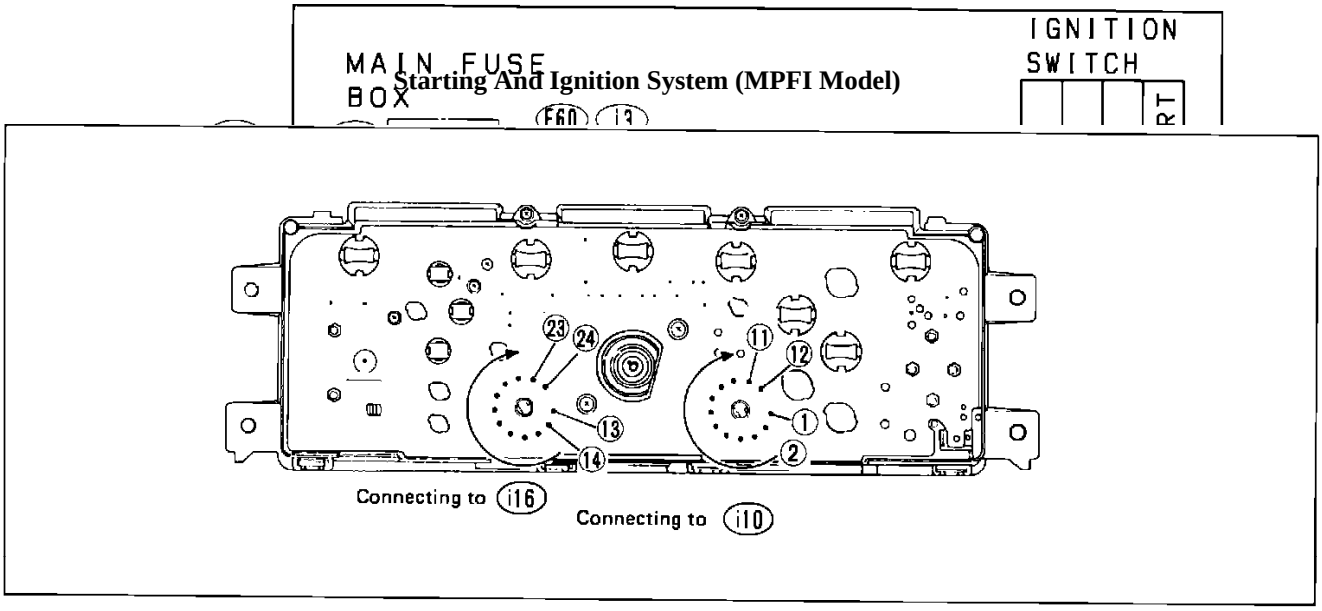

Starting And Ignition System (MPFI Model)

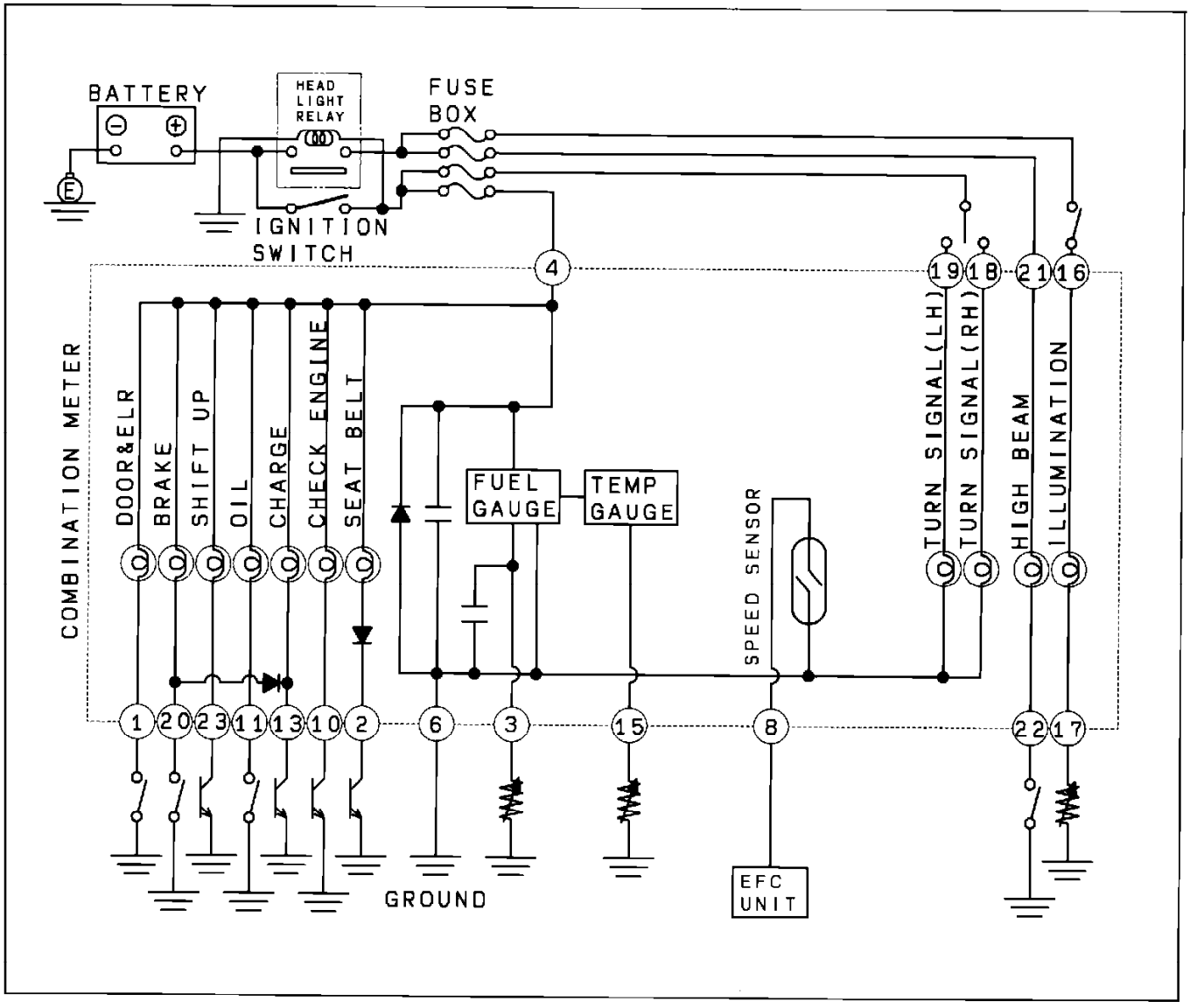

Instrument Panel Indicators (DL Model)

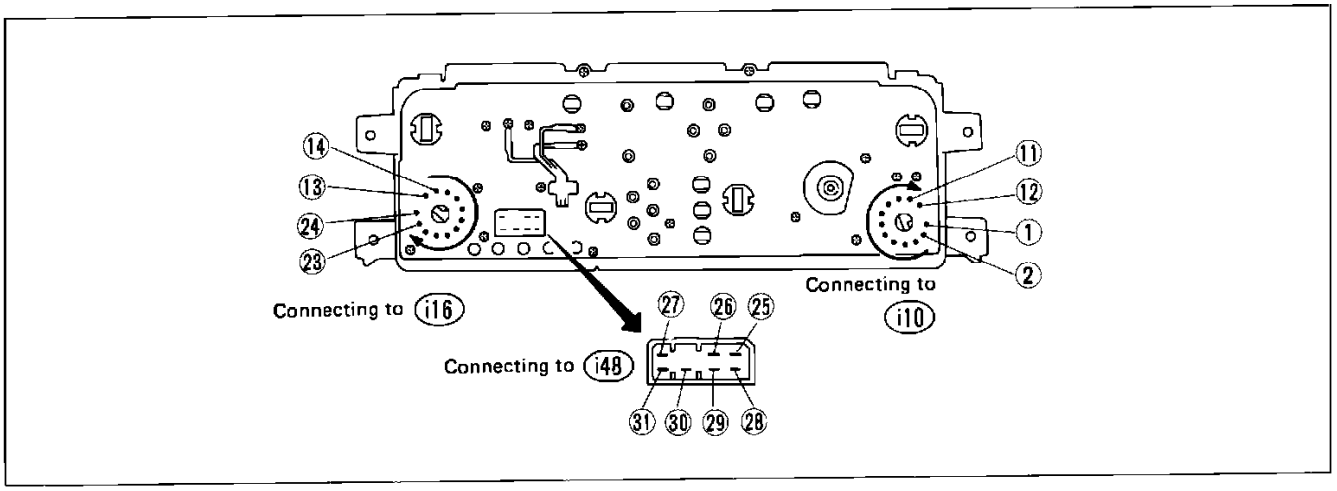

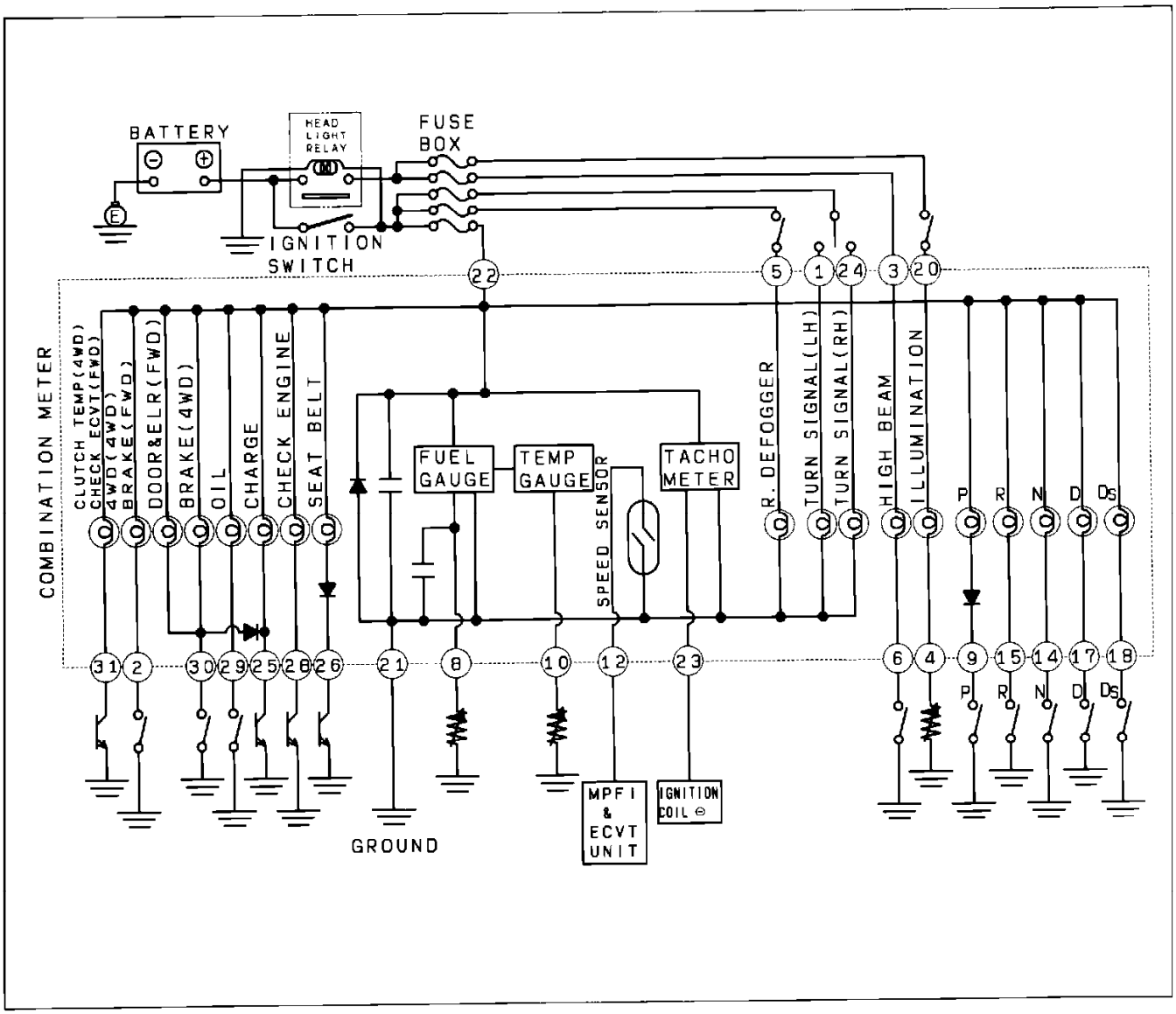

Instrument Panel Indicators (ECVT Model)

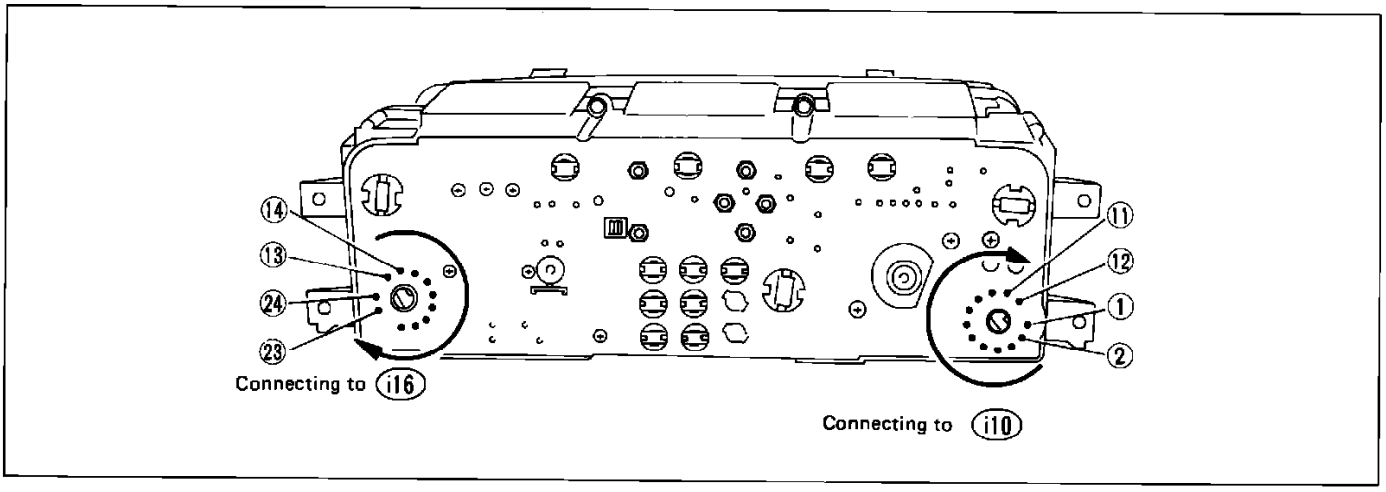

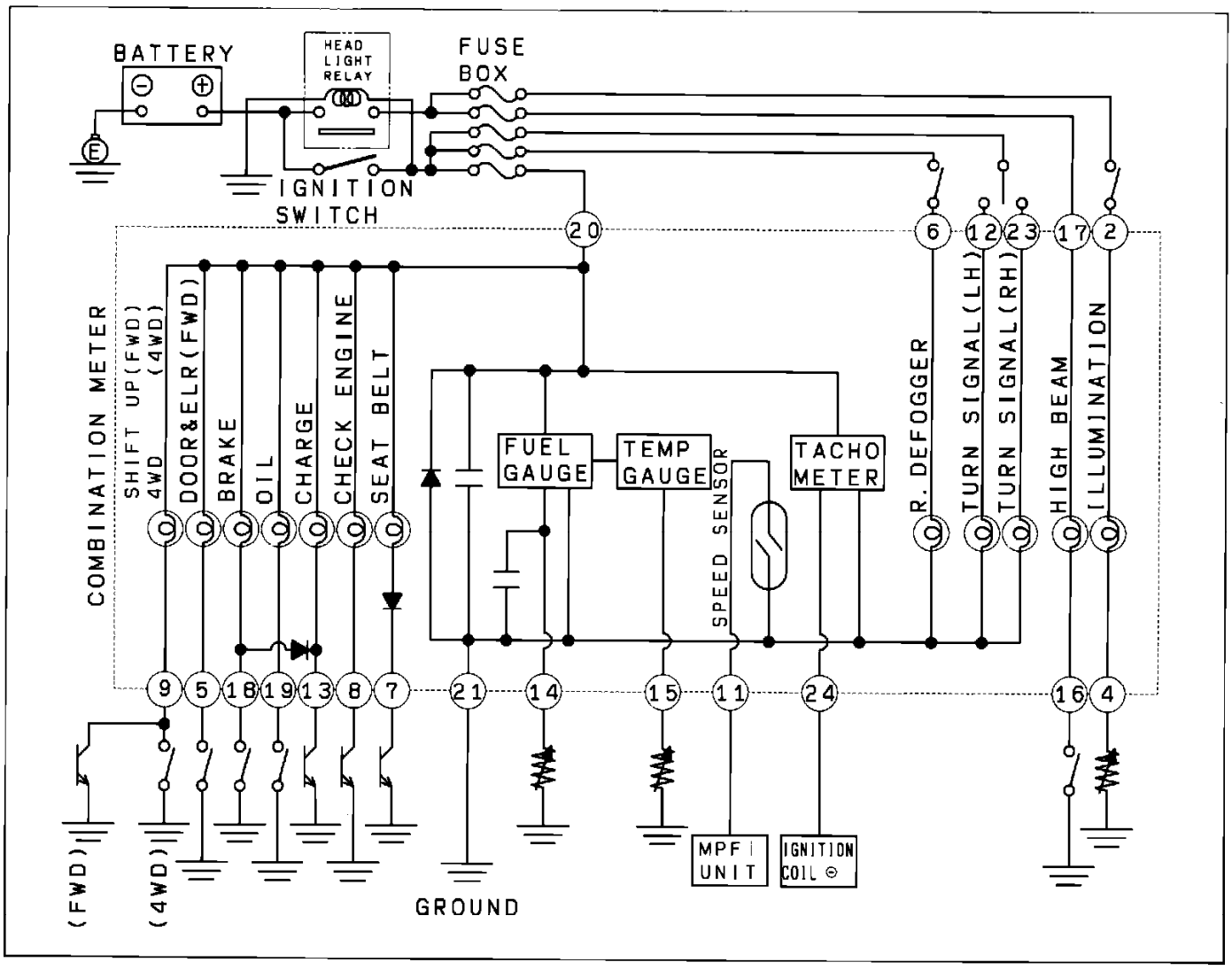

Instrument Panel Indicators

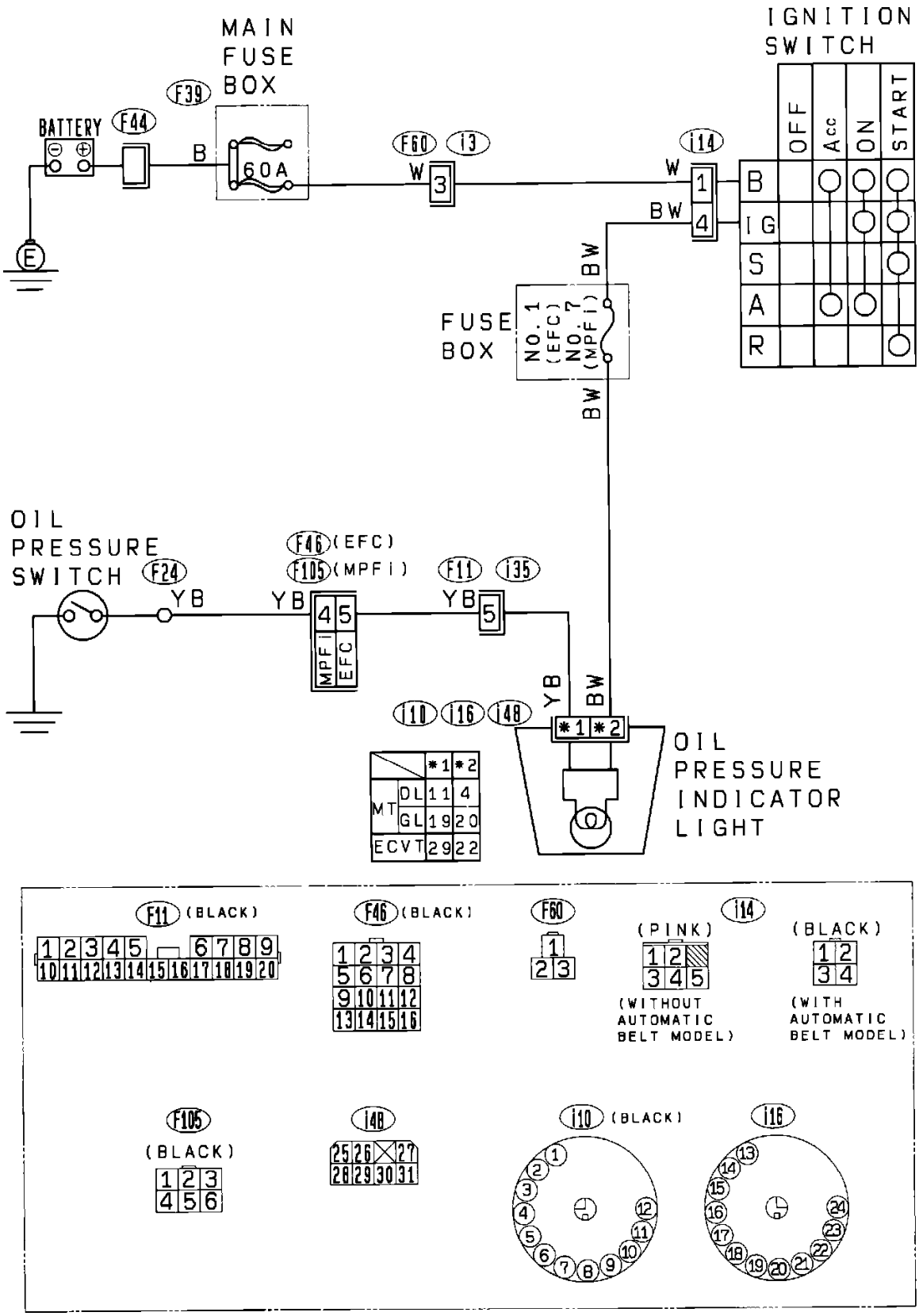

Warnings/Indicators: Oil Pressure Indicator

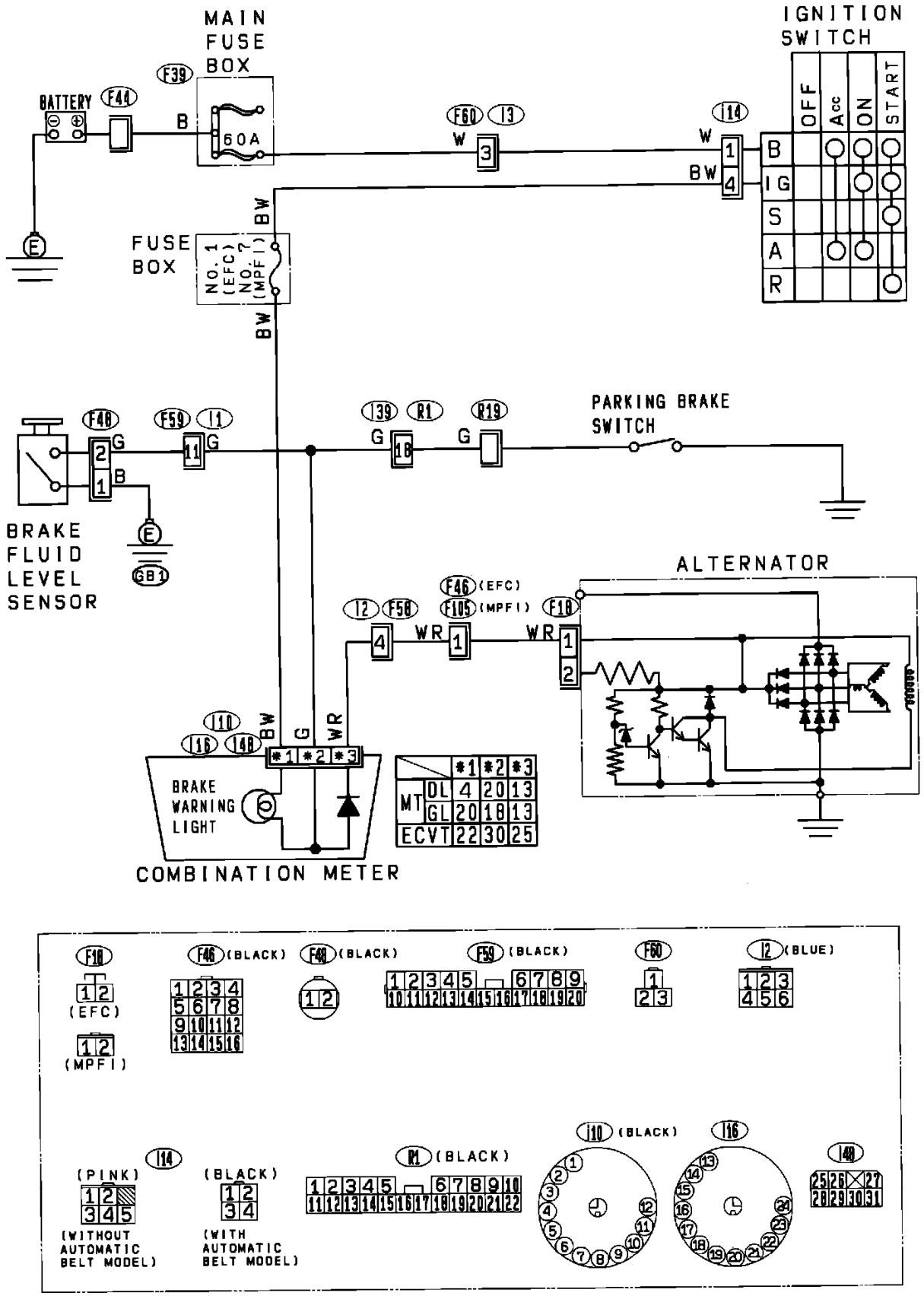

Parking Brake And Brake Fluid Level Warning System

Parking Lamp

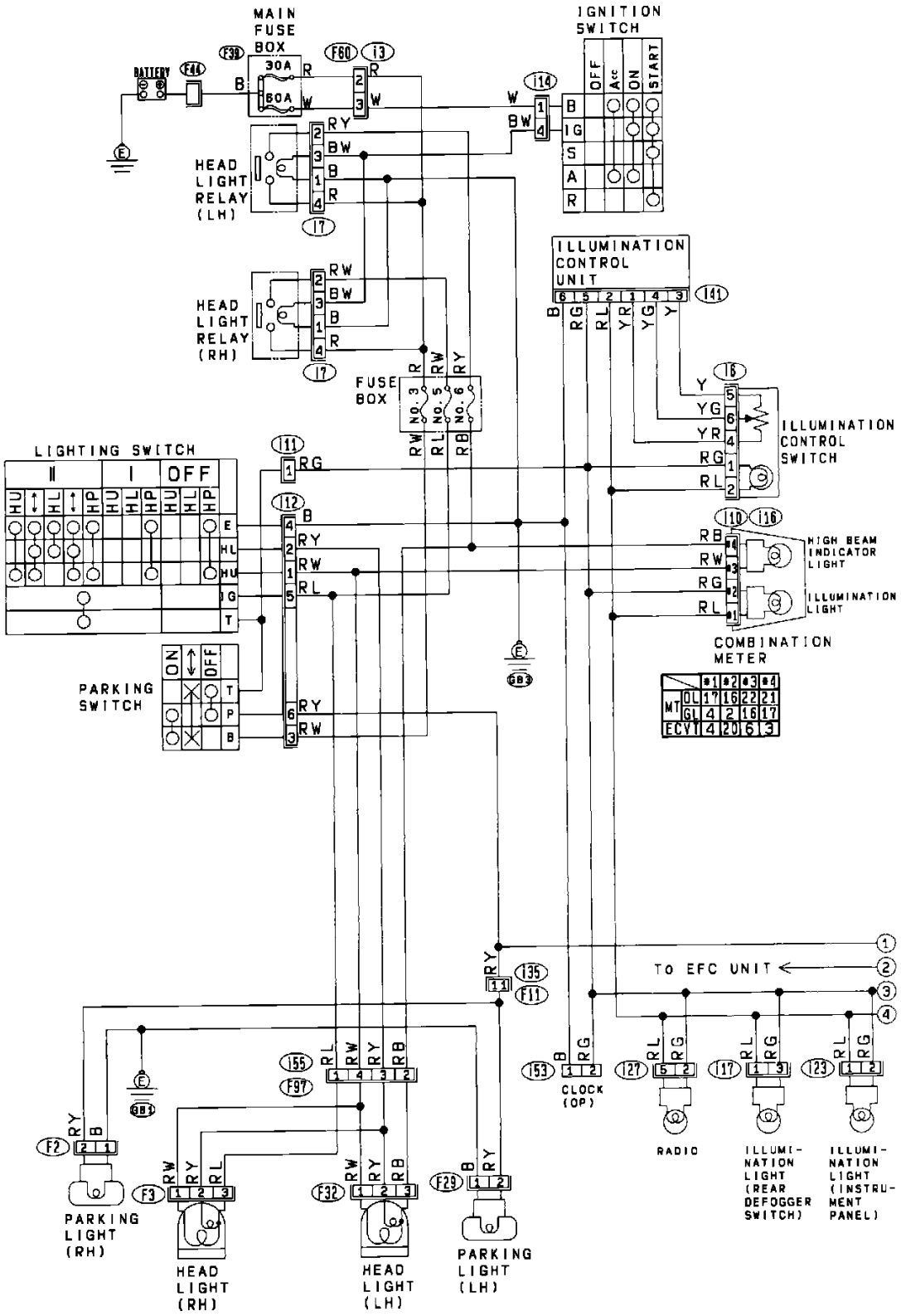

Complete Lighting System (USA Model)

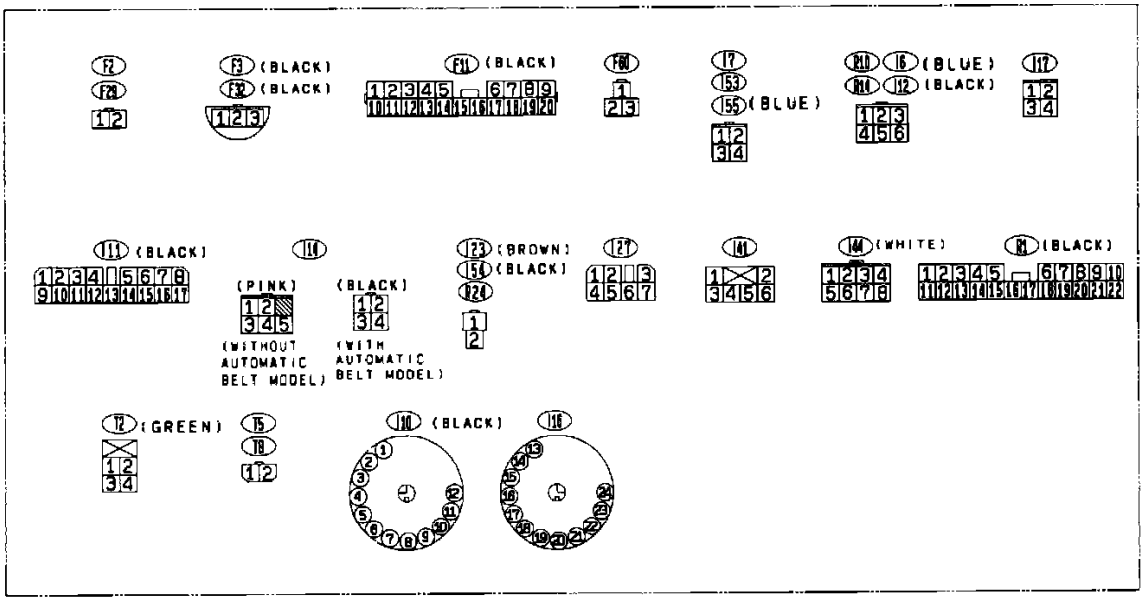

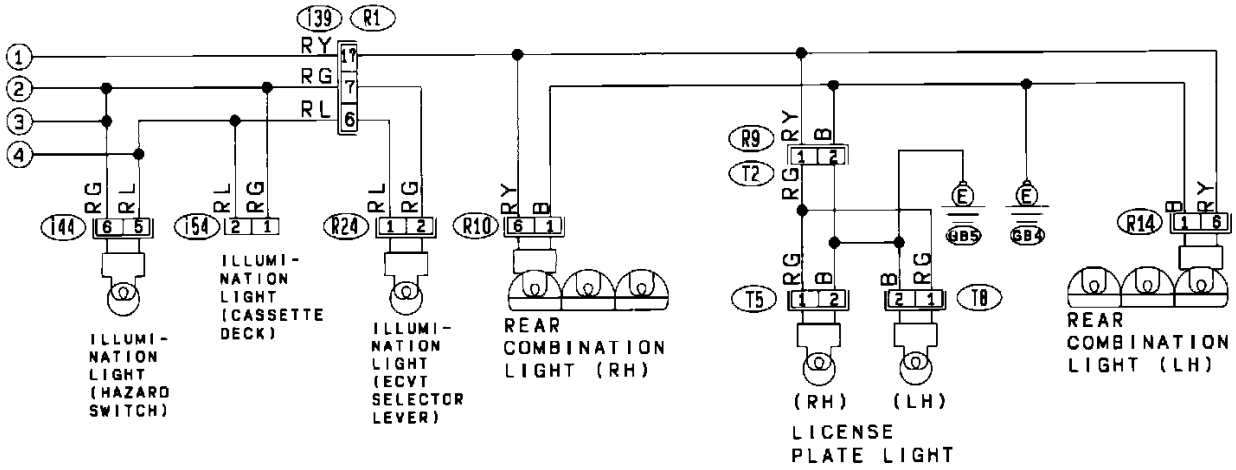

Complete Lighting System (USA Model)

USA

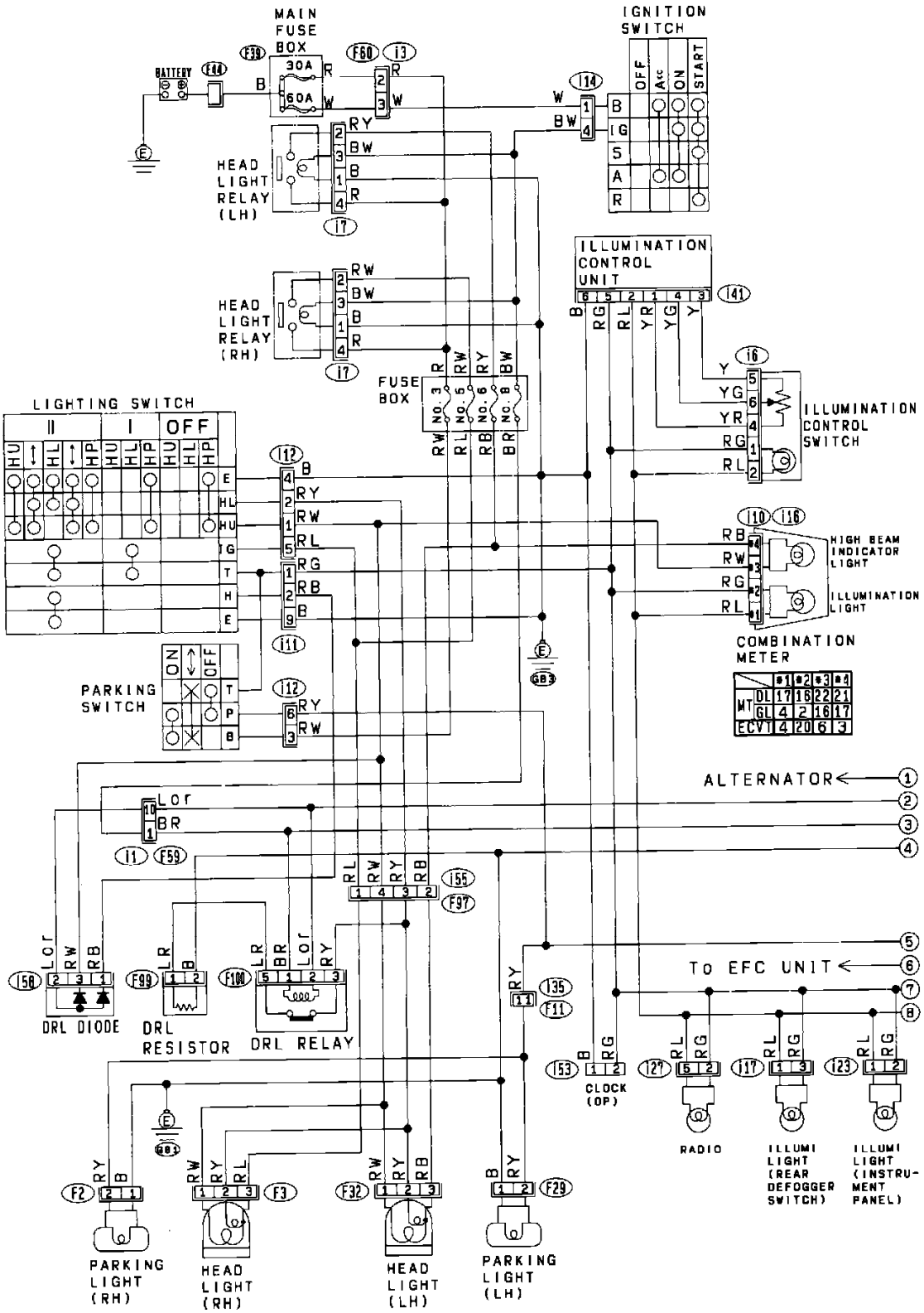

Complete Lighting System (Canada Model)

Subaru Justy Hatchback 4WD L3-1.2L SOHC (MPFI)

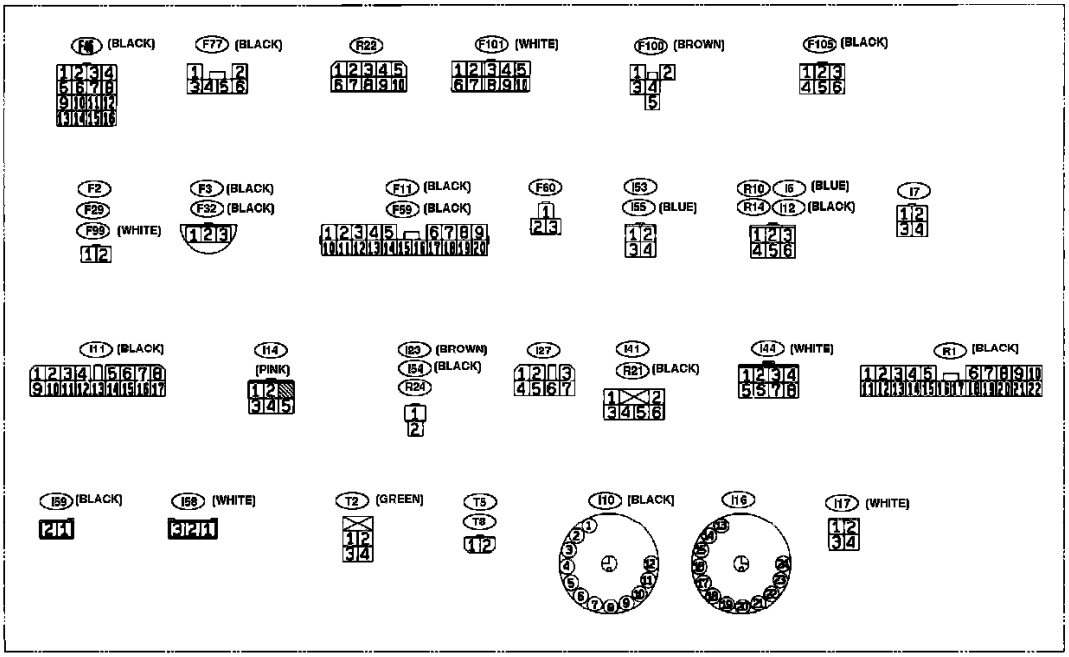

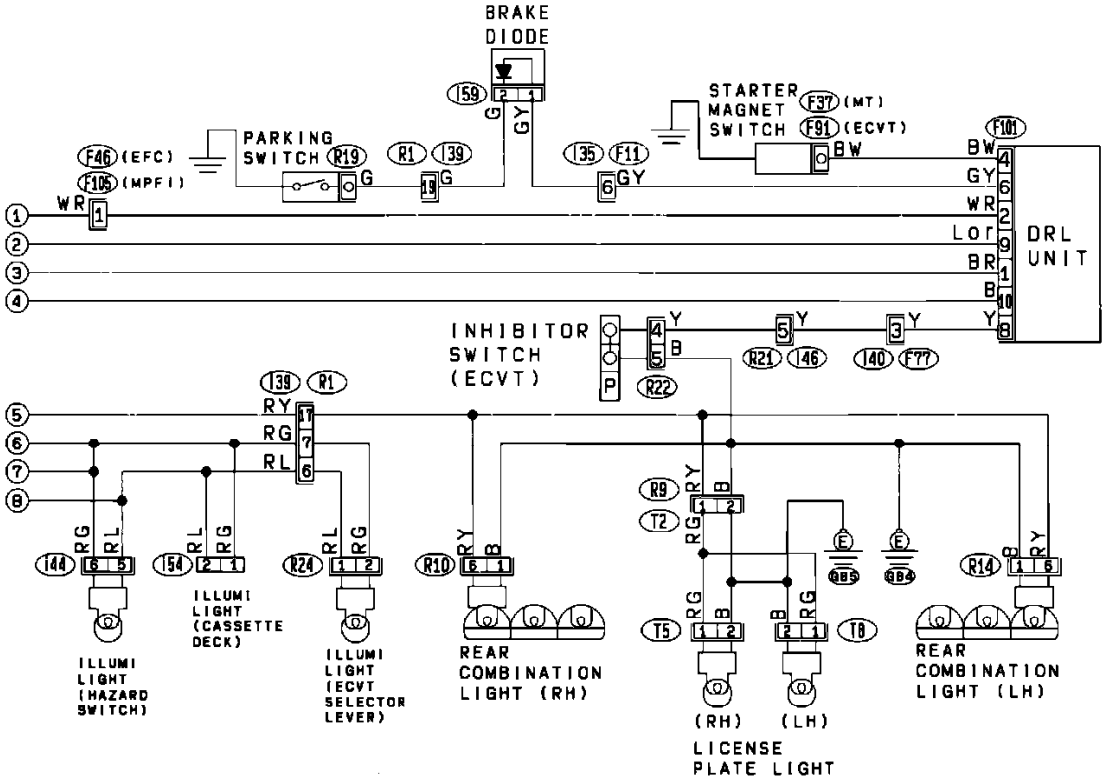

Complete Lighting System (Canada Model)

Canadian

Fuse Locations: For fuse locations refer to Vehicle / Locations / Component Locations / Fuses and Fusible Links: See: Locations/Fuse and Fusible Link Locations

Ground Locations: For ground locations refer to Vehicle / Locations / Grounds: See: Locations/Ground Locations

Connector Locations: For connector locations refer to Vehicle / Locations / Connectors: See: Locations/Connector Locations

Component Locations: For component locations refer to Vehicle / Locations / Components: See: Locations/Component Locations

NOTE:

To locate Connectors, Components and/or Grounds using Harness Connector Location diagram(s) use the connector's alphanumeric name [referred to in the wiring diagram(s)] to identify the apropriate Harness Connector Location diagram. For example, the prefix letter "B" in the connector name "B-38" indicates the location is displayed in the Bulkhead Wiring Harness Connector Location diagram.

Legend:

Prefix ..... **Harness Connector Diagram**

F ..... Front
B ..... Bulkhead
i ..... Instrument Panel
P ..... Power Window
D ..... Door
R ..... Rear

Radiator Fan Motor (Fuel Injected Models)

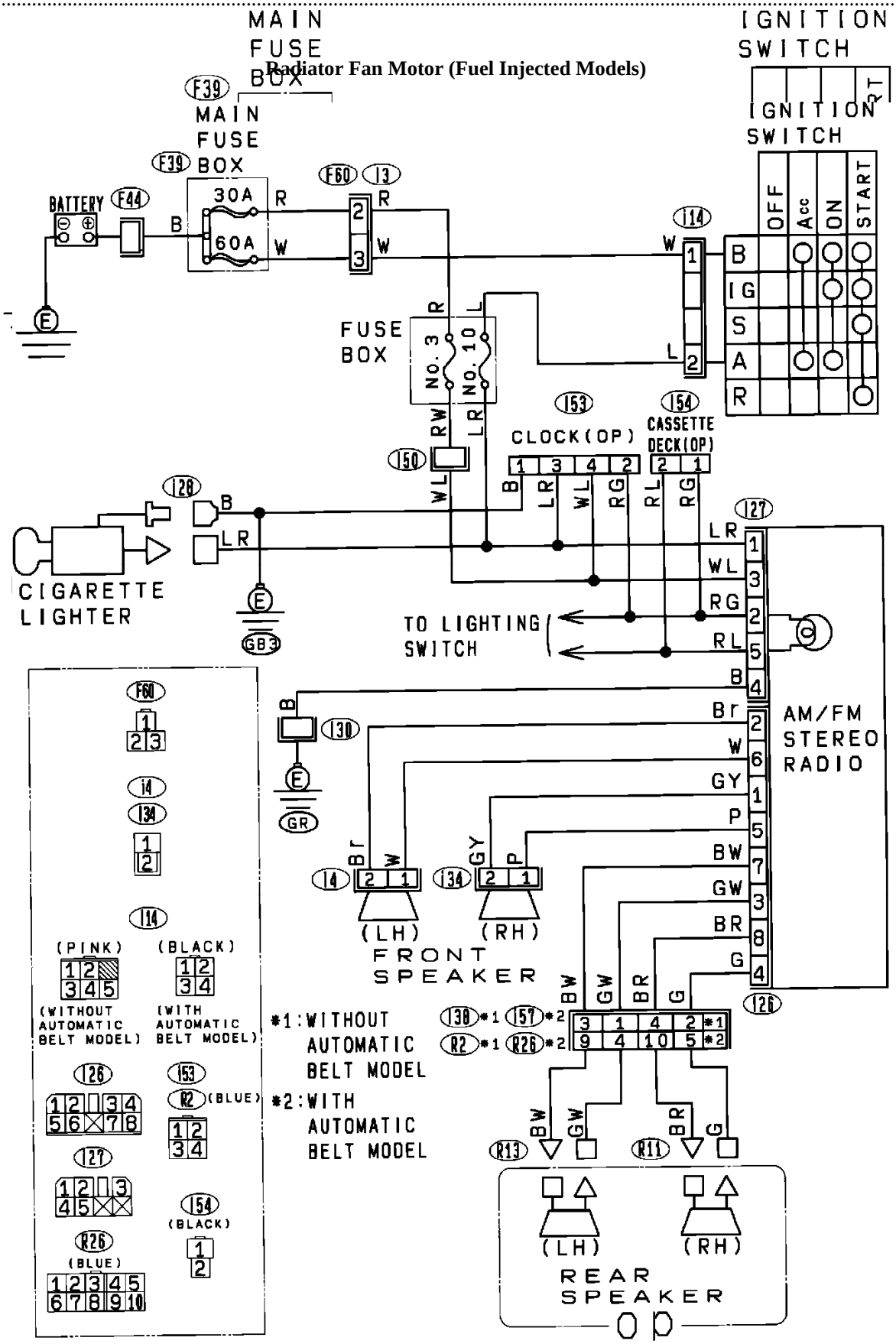

Cigarette Lighter And Radio

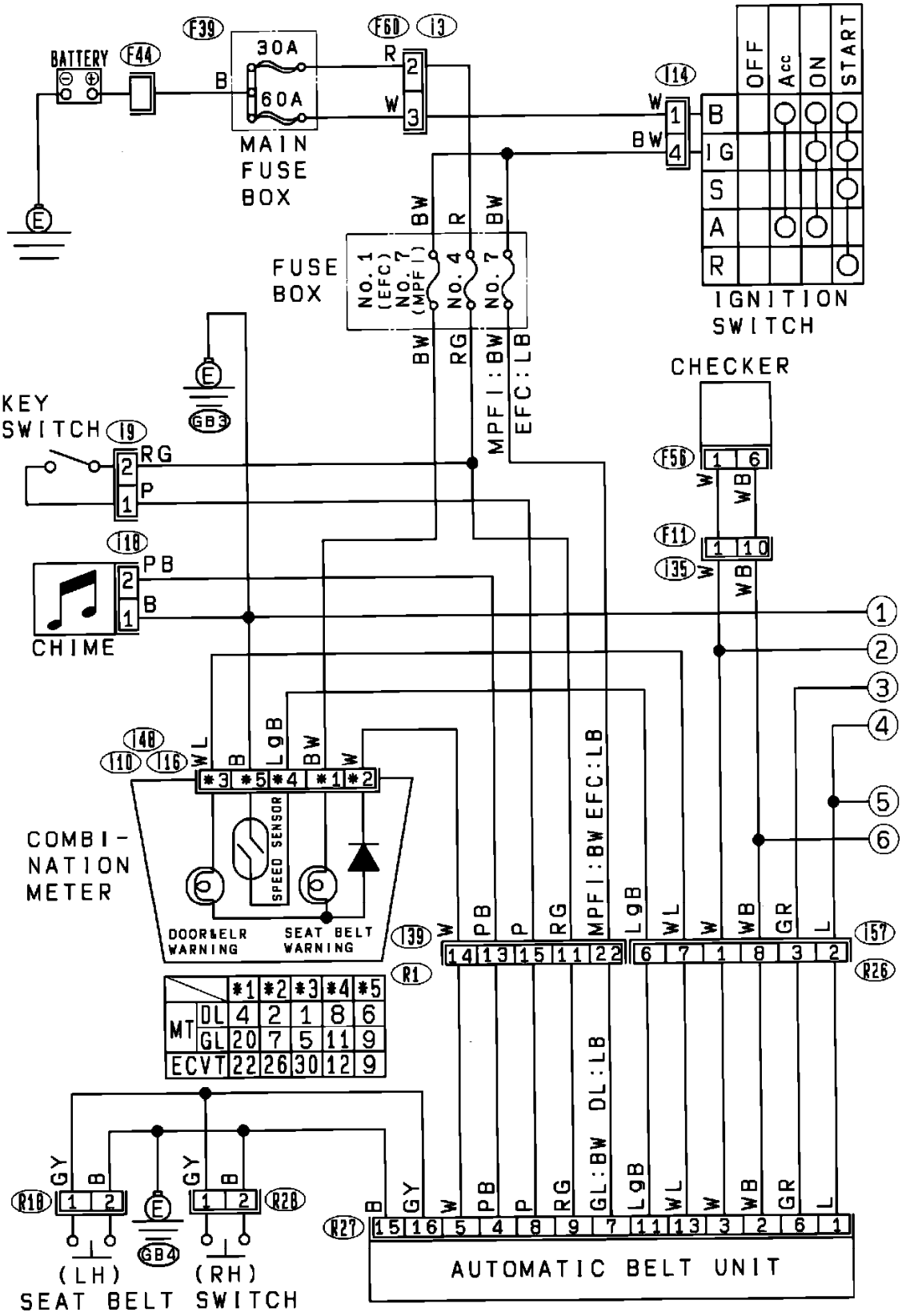

Automatic Seat Belt & Key Warning

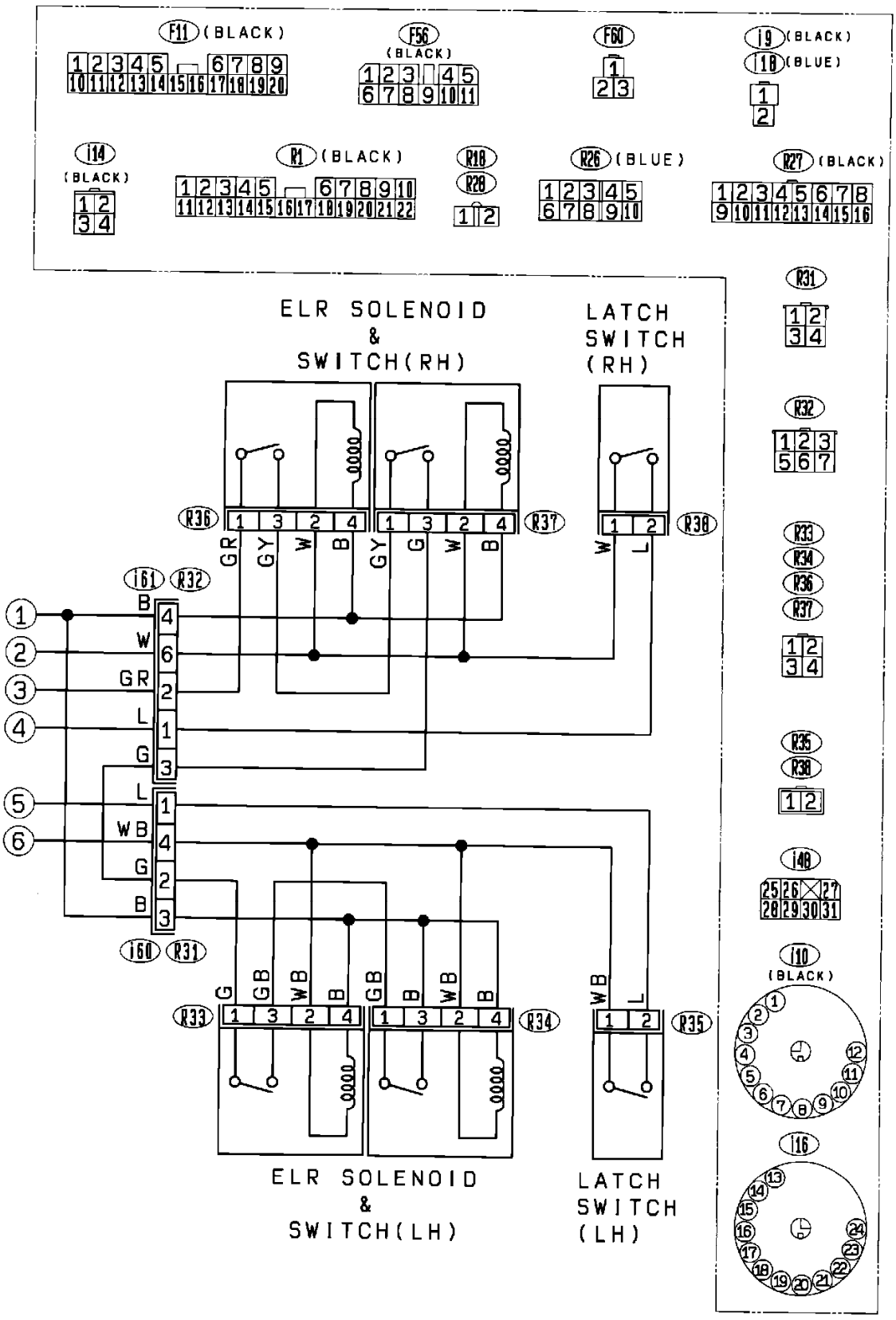

Automatic Seat Belt & Key Warning

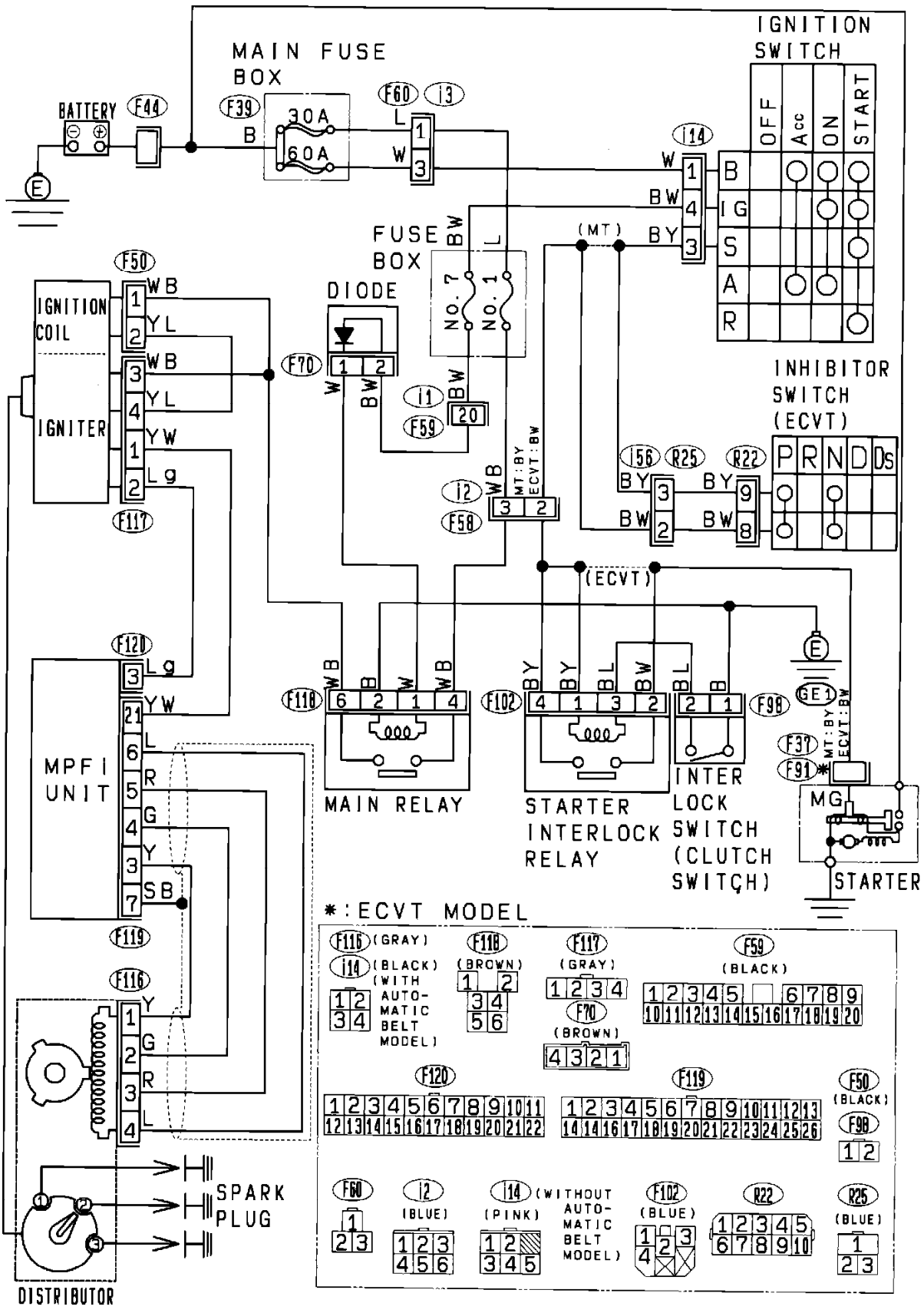

Starting And Ignition System (MPFI Model)

Tail Lamp

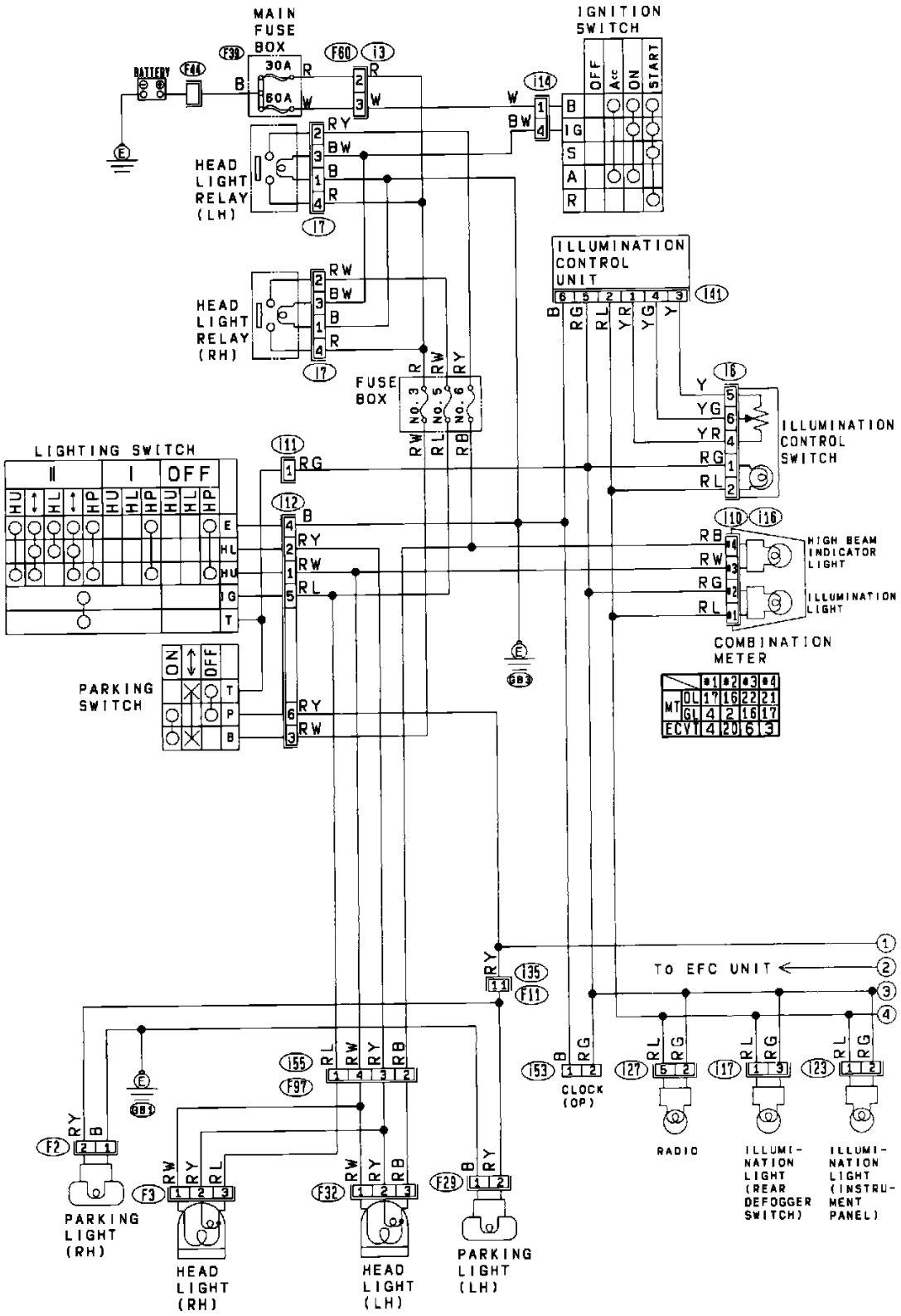

Complete Lighting System (USA Model)

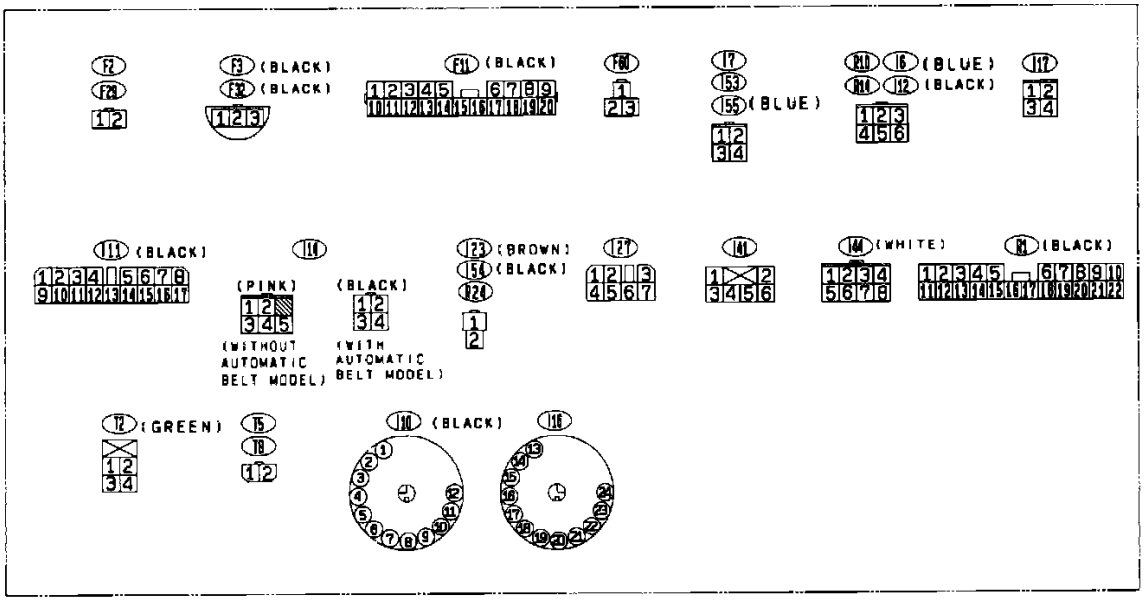

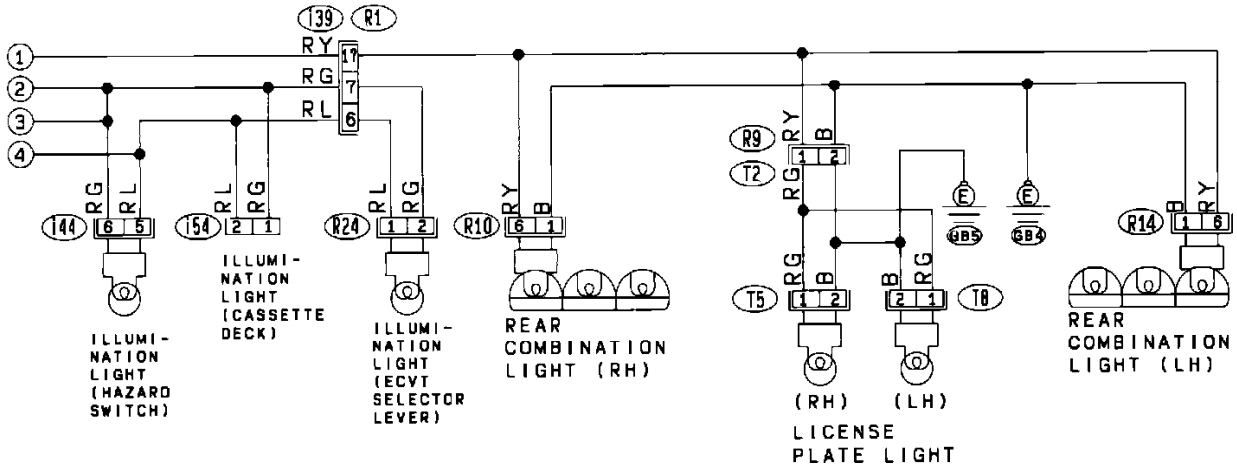

Complete Lighting System (USA Model)

USA

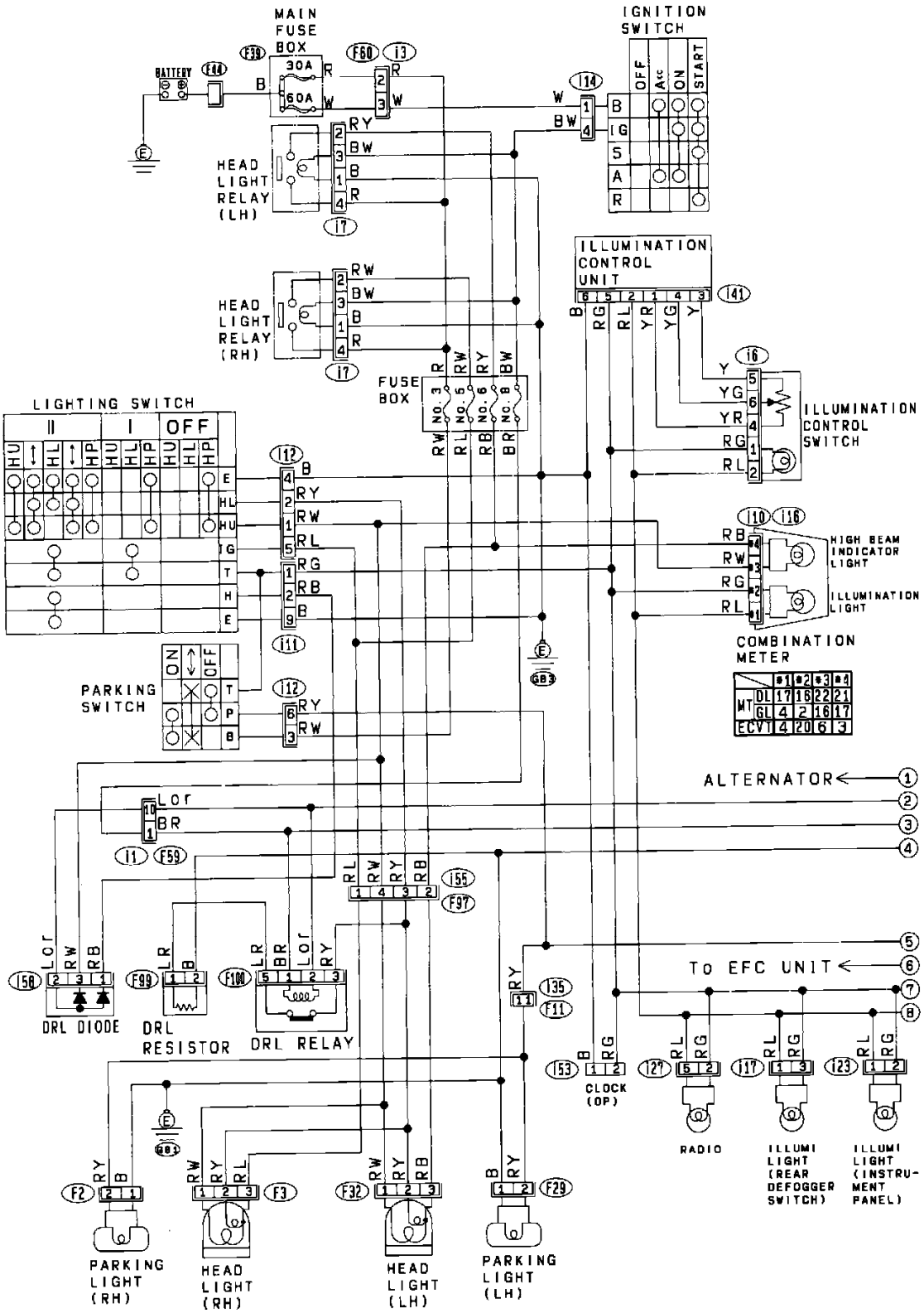

Complete Lighting System (Canada Model)

Subaru Justy Hatchback 4WD L3-1.2L SOHC (MPFI)

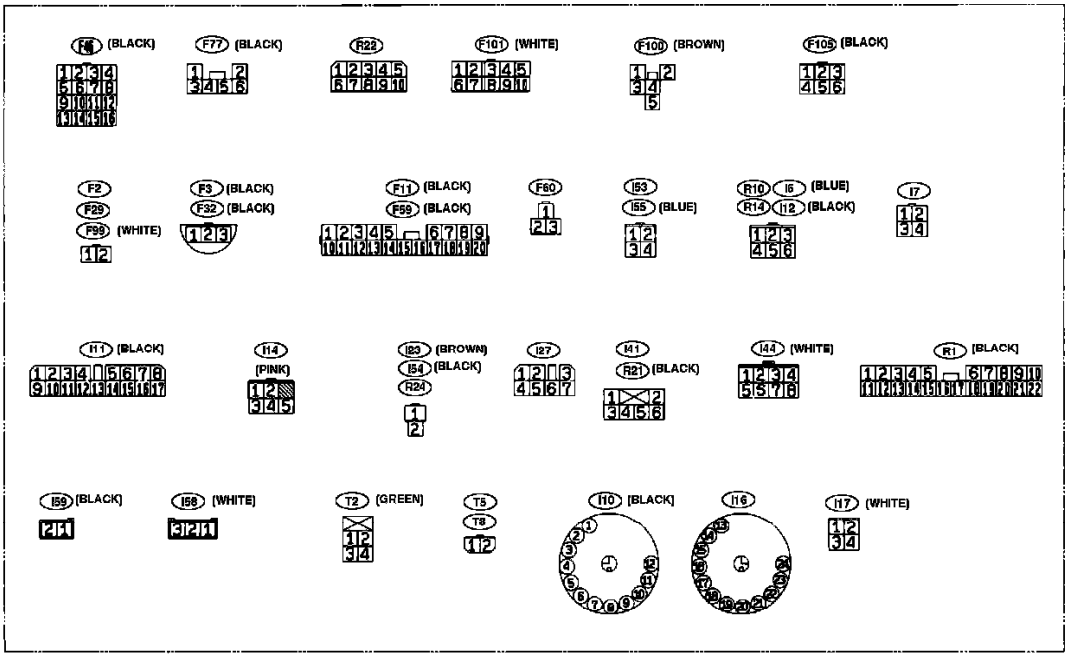

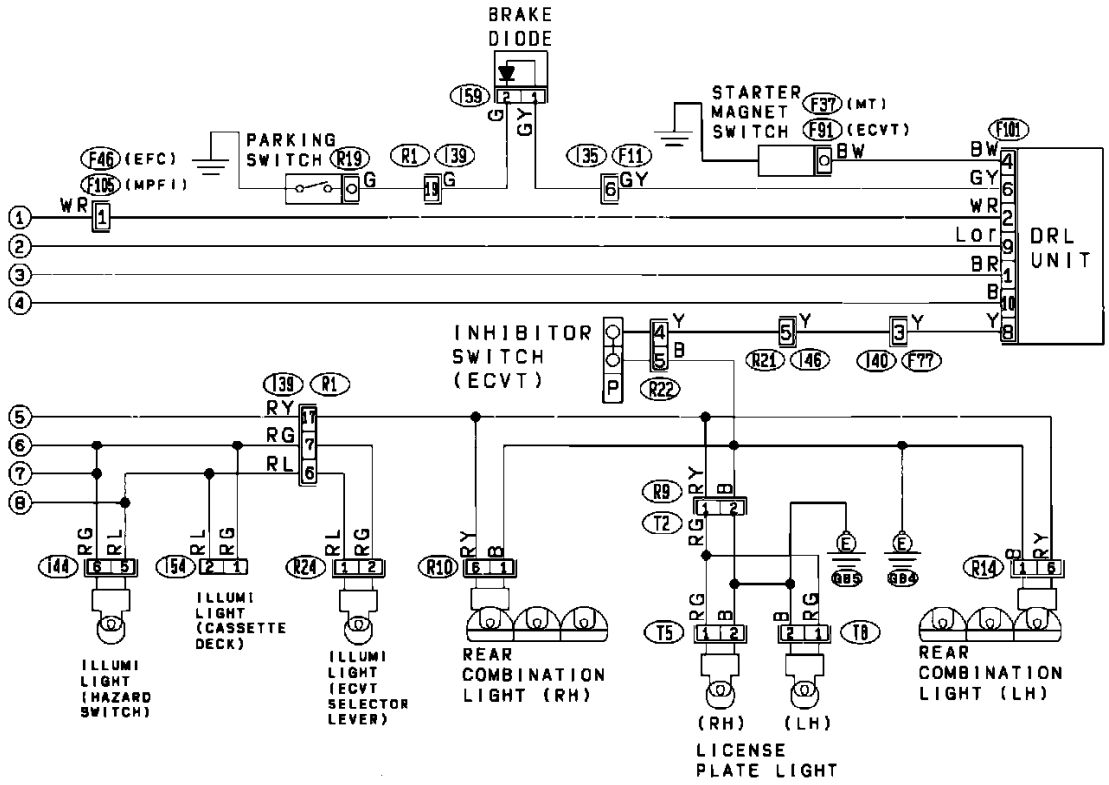

Complete Lighting System (Canada Model)

Canadian

Fuse Locations: For fuse locations refer to Vehicle / Locations / Component Locations / Fuses and Fusible Links: See: Locations/Fuse and Fusible Link Locations

Ground Locations: For ground locations refer to Vehicle / Locations / Grounds: See: Locations/Ground Locations

Connector Locations: For connector locations refer to Vehicle / Locations / Connectors: See: Locations/Connector Locations

Component Locations: For component locations refer to Vehicle / Locations / Components: See: Locations/Component Locations

NOTE:

To locate Connectors, Components and/or Grounds using Harness Connector Location diagram(s) use the connector's alphanumeric name [referred to in the wiring diagram(s)] to identify the apropriate Harness Connector Location diagram. For example, the prefix letter "B" in the connector name "B-38" indicates the location is displayed in the Bulkhead Wiring Harness Connector Location diagram.

Legend:

Prefix ..... **Harness Connector Diagram**

F ..... Front
B ..... Bulkhead
i ..... Instrument Panel
P ..... Power Window
D ..... Door
R ..... Rear

Instrument Panel Gauges: Fuel And Temperature

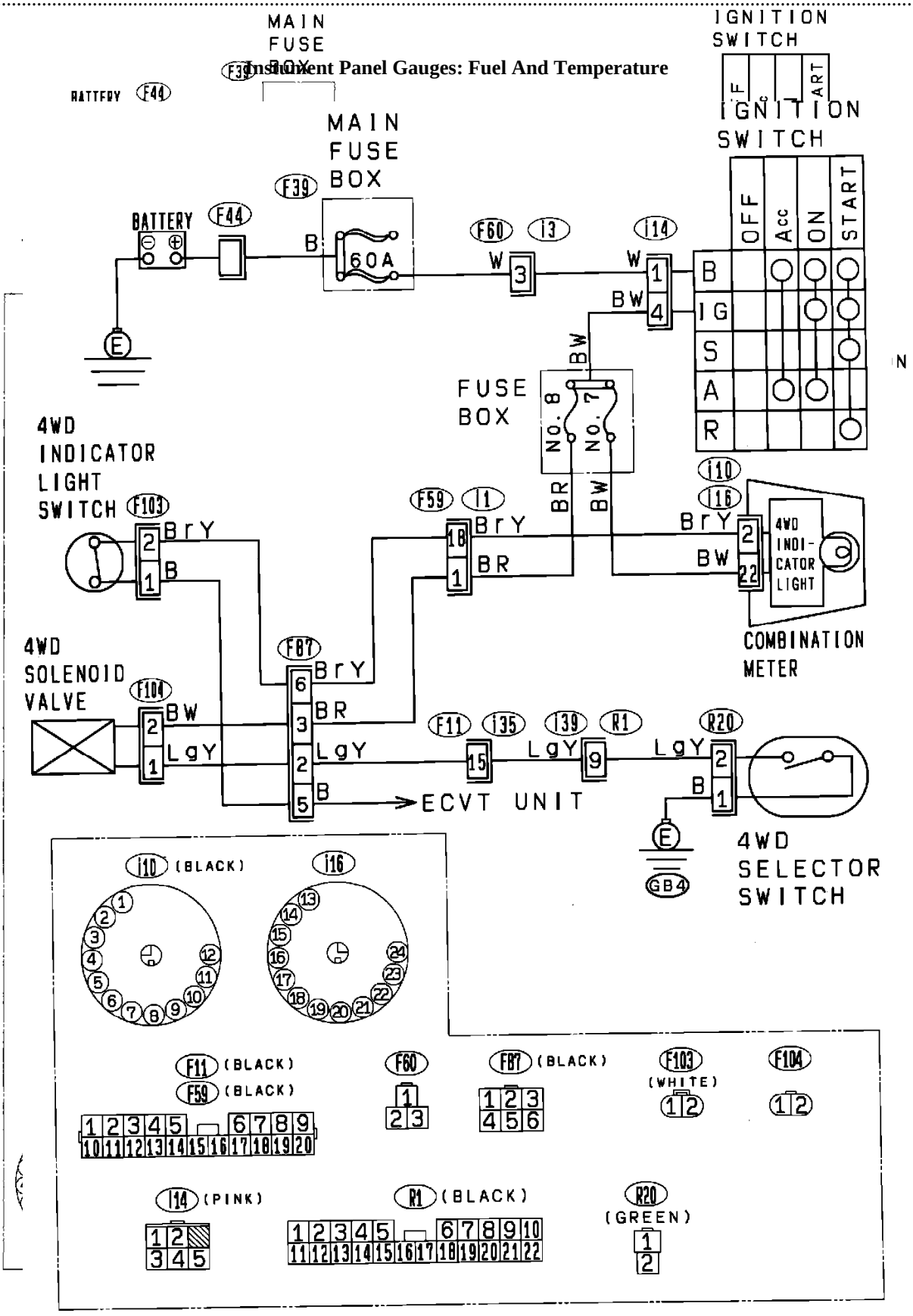

Four Wheel Drive ECVT

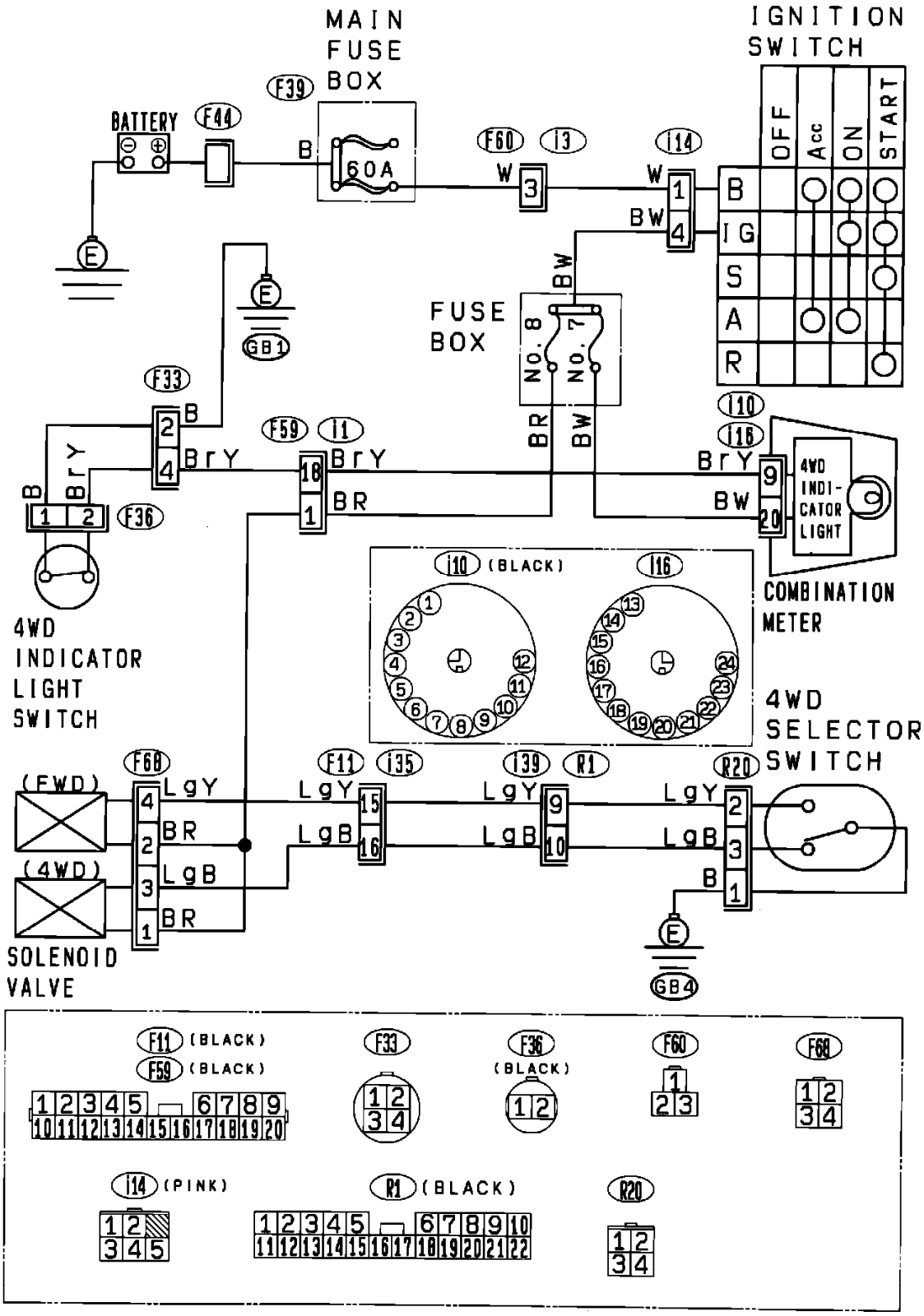

42wd M/T System

Turn Signals

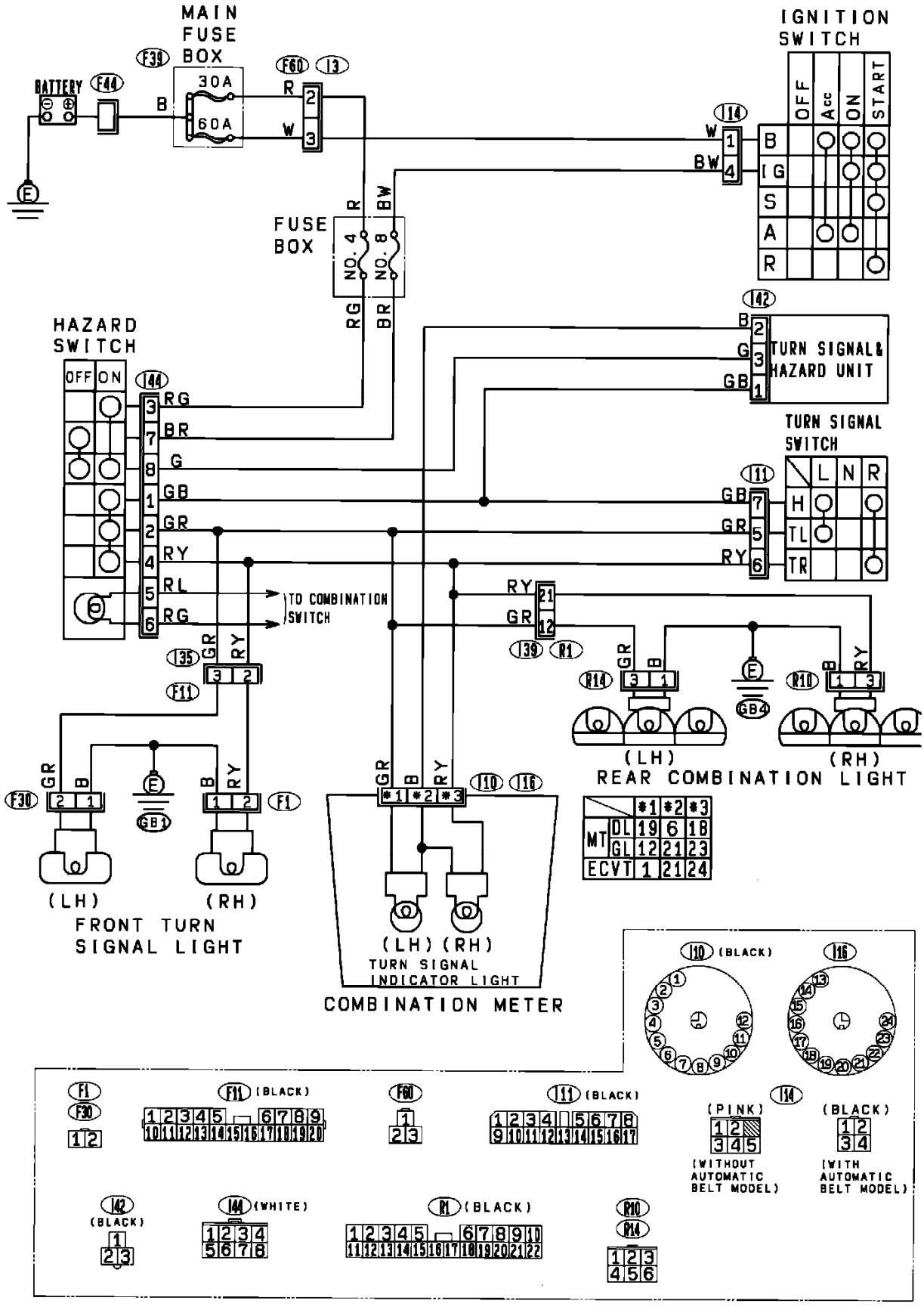

Turn Signal And Hazard Warning System

Fuse/Relay Locations: For fuse and/or relay locations refer to Starting and Charging / Power and Ground Distribution: See: Power and Ground Distribution

Ground Locations: For ground locations refer to Vehicle / Locations / Grounds: See: Locations/Ground Locations

Connector Locations: For connector locations refer to Vehicle / Locations / Connectors: See: Locations/Connector Locations

Component Locations: For component locations refer to Vehicle / Locations / Components: See: Locations/Component Locations

NOTE:

Subaru Justy Hatchback 4WD L3-1.2L SOHC (MPFI)

To Locate Connectors, Components and/or Grounds using Harness Connector Location diagram(s) use the connector's alphanumeric name [referred to in the above diagram(s)] to identify which harness diagram to look in. For example, the letter "B" prefix in the connector name "B-38" indicates it is displayed in the Bulkhead Wiring Harness diagram.

Legend:

Prefix	**Harness Connector Diagram**
F	Front
B	Bulkhead
i	Instrument Panel
P	Power Window
D	Door
R	Rear

Front Wiper/Washer

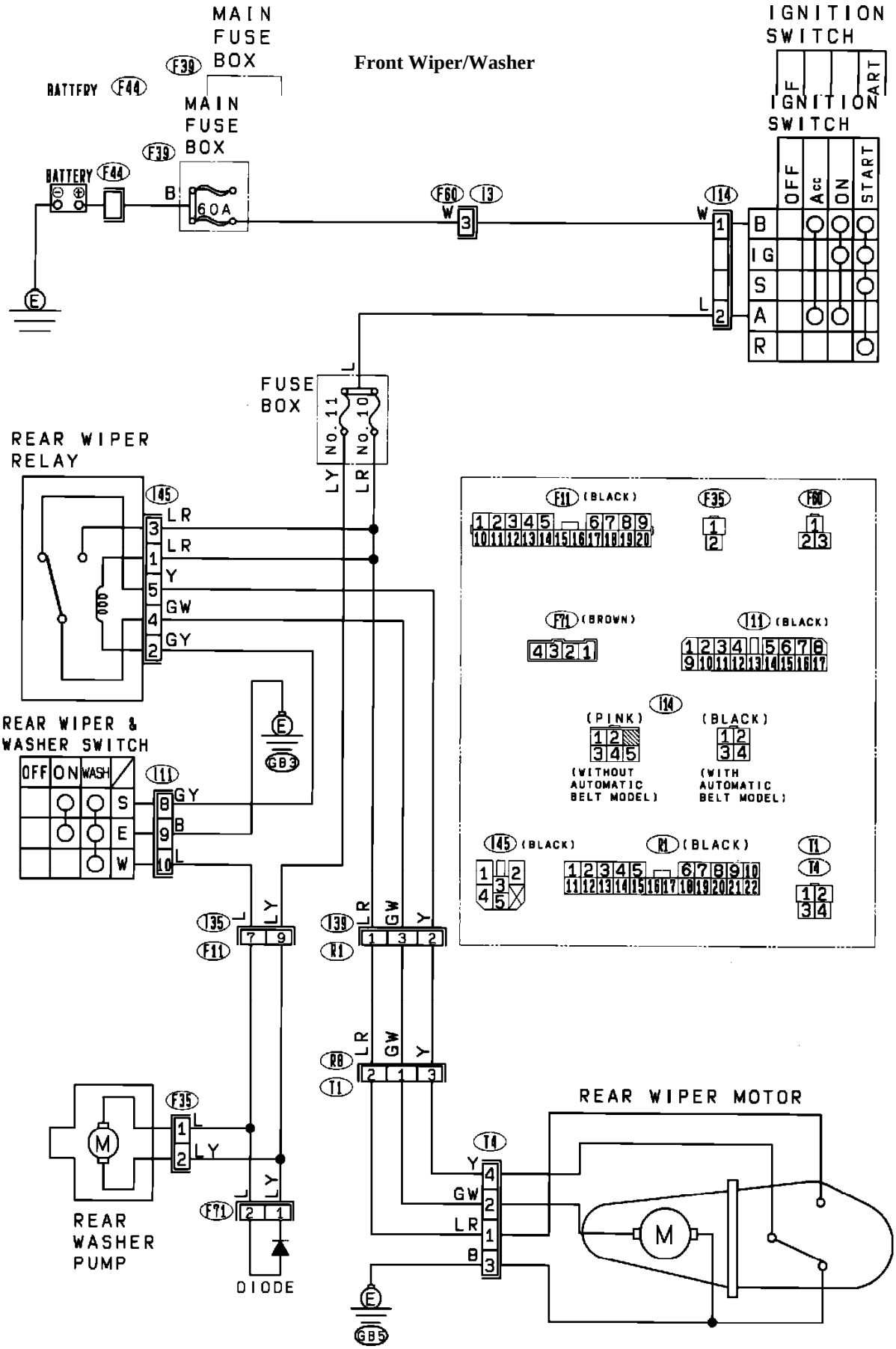

Rear Wiper/Washer

Type	Pulley arrangement	Tension mm (in)/98 N (10 kg, 22 lb)	
		New belt	Existing belt
Basic model	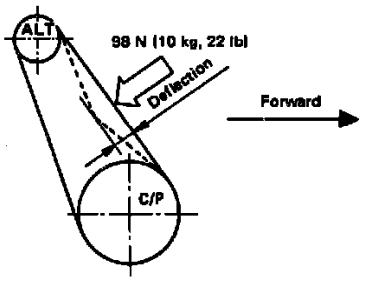	8 – 9 (0.31 – 0.35)	9 – 10 (0.35 – 0.39)
Air conditioner equipped model	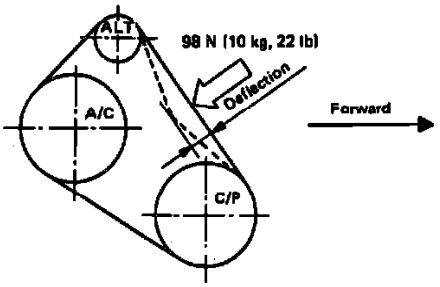	10 – 11 (0.39 – 0.43)	11.5 – 12.5 (0.453 – 0.492)

C/P: Crankshaft pulley
ALT: Alternator pulley
A/C: Air conditioner compressor pulley

Fig. 55 Drive Belt Routing & Tension Data

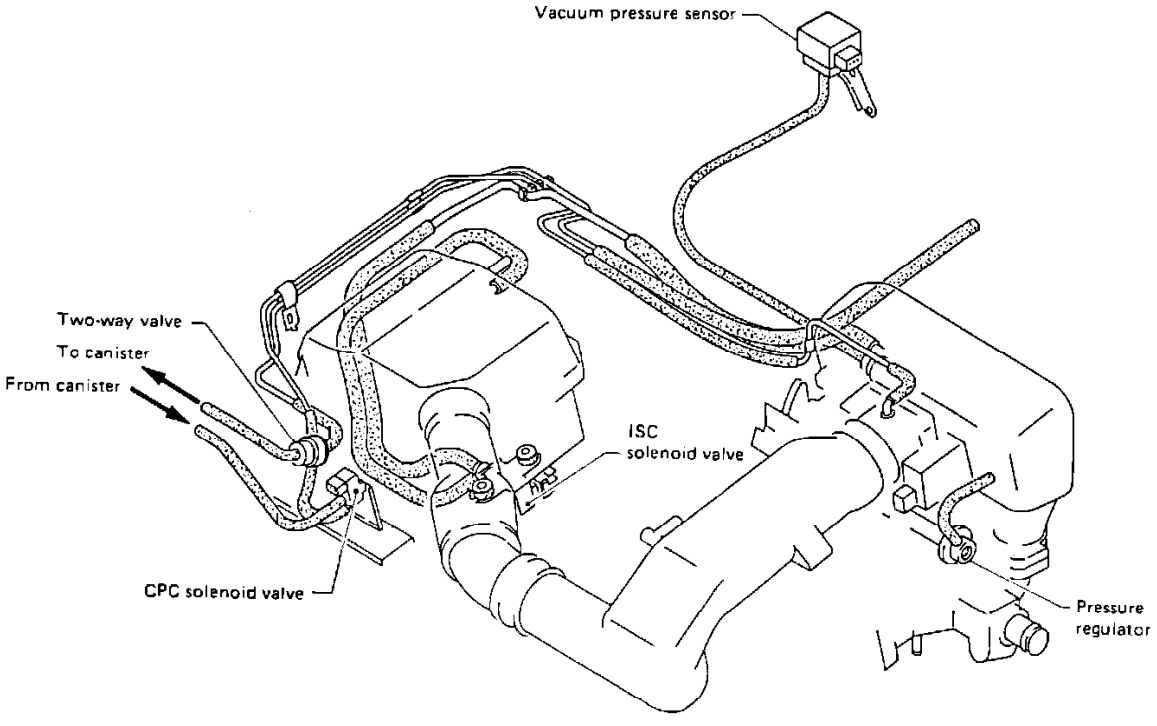

Vacuum Diagram (MPFI)

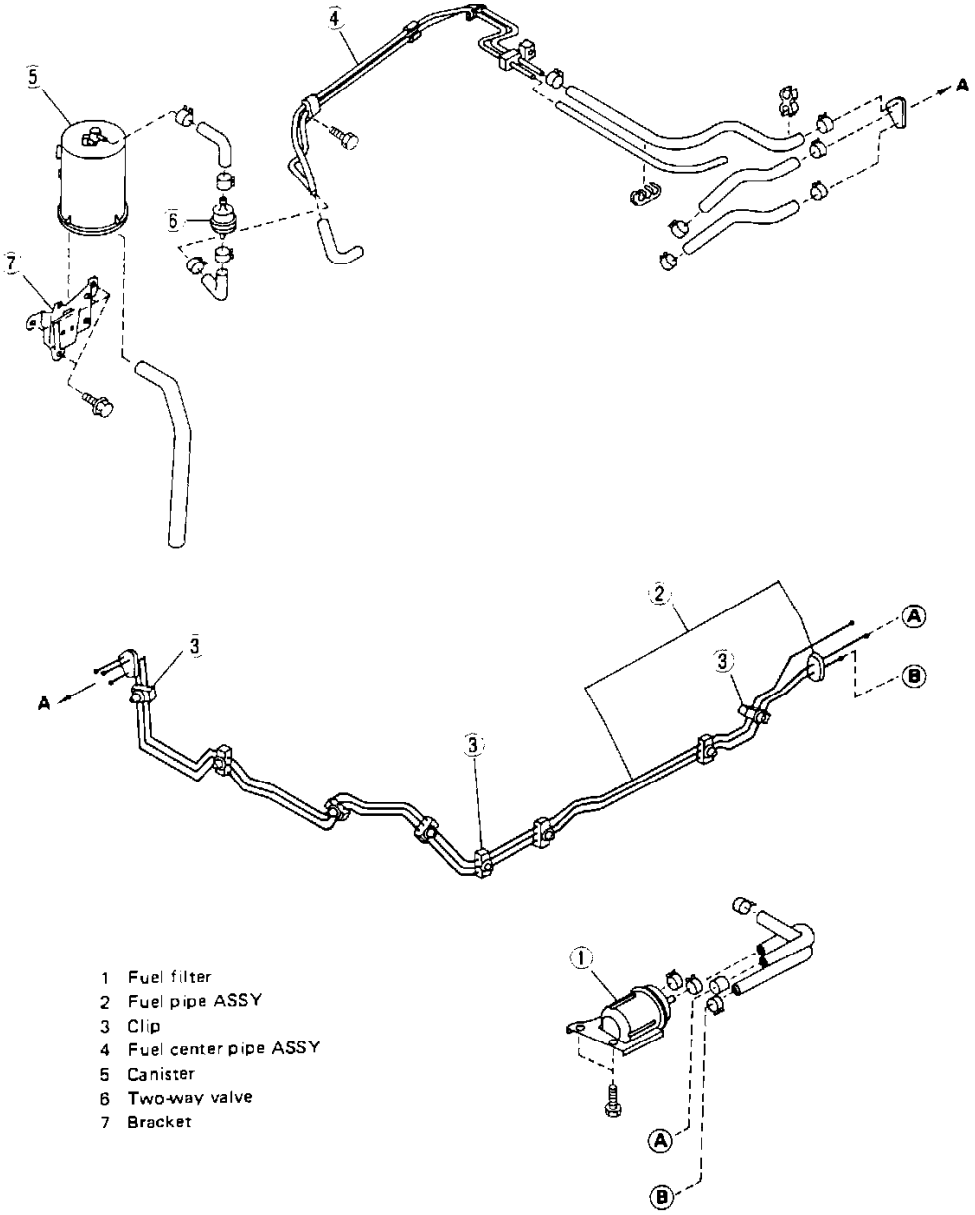
1 Fuel filter
2 Fuel pipe ASSY
3 Clip
4 Fuel center pipe ASSY
5 Canister
6 Two-way valve
7 Bracket

Fuel Lines

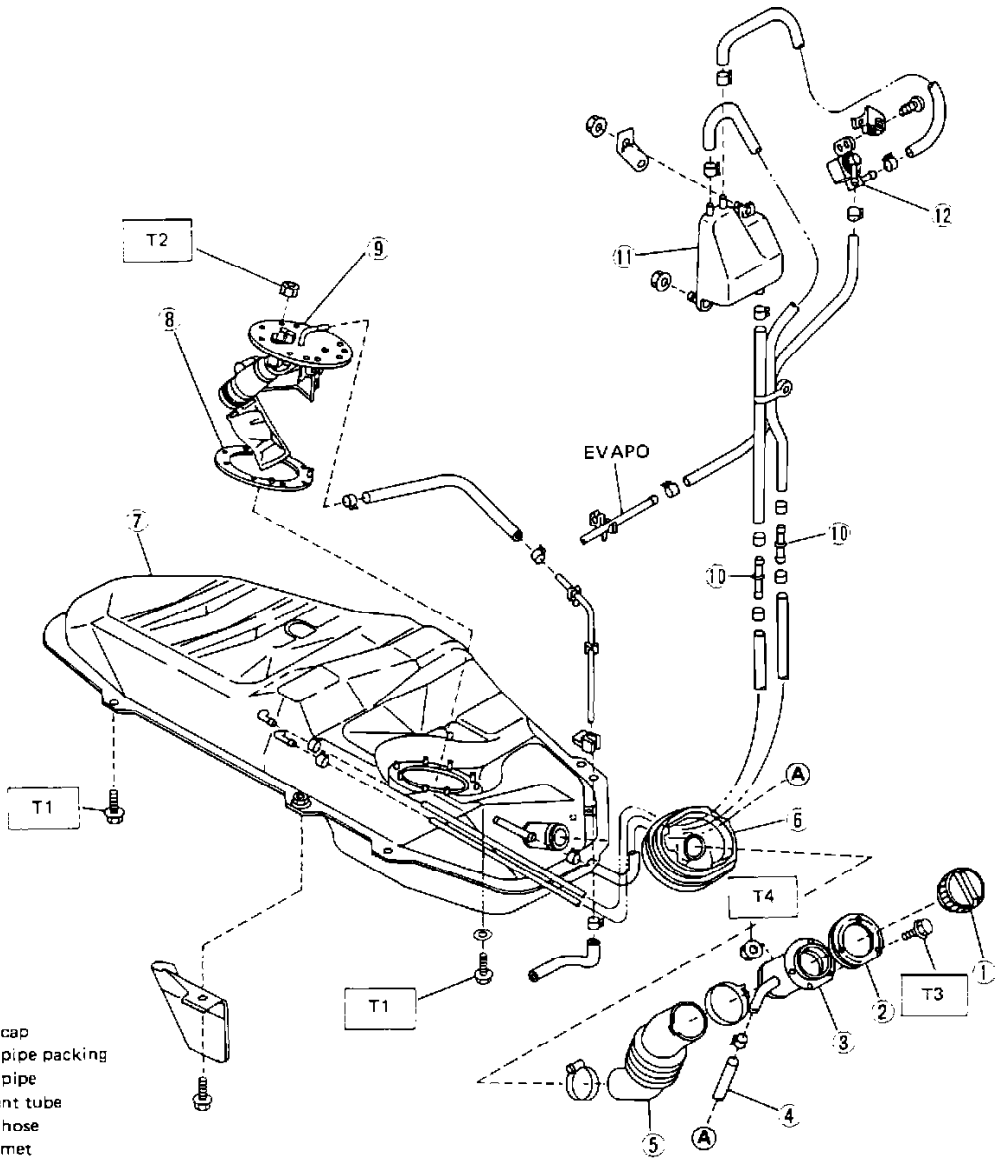

1 Filler cap
2 Filler pipe packing
3 Filler pipe
4 Air vent tube
5 Filler hose
6 Grommet
7 Fuel tank
8 Fuel pump packing
9 Fuel pump ASSY
10 Pipe joint
11 Separator
12 Roll over valve

Tightening torque: N·m (kg-m, ft-lb)
T1: 13 – 23 (1.3 - 2.3, 9 – 17)
T2: 1.8 – 3.1 (0.18 – 0.32, 1.3 – 2.3)
T3: 3 – 6 (0.3 – 0.6, 2.2 – 4.3)
T4: 1.5 – 2.5 (0.15 – 0.25, 1.1 – 1.8)

Fuel Tank

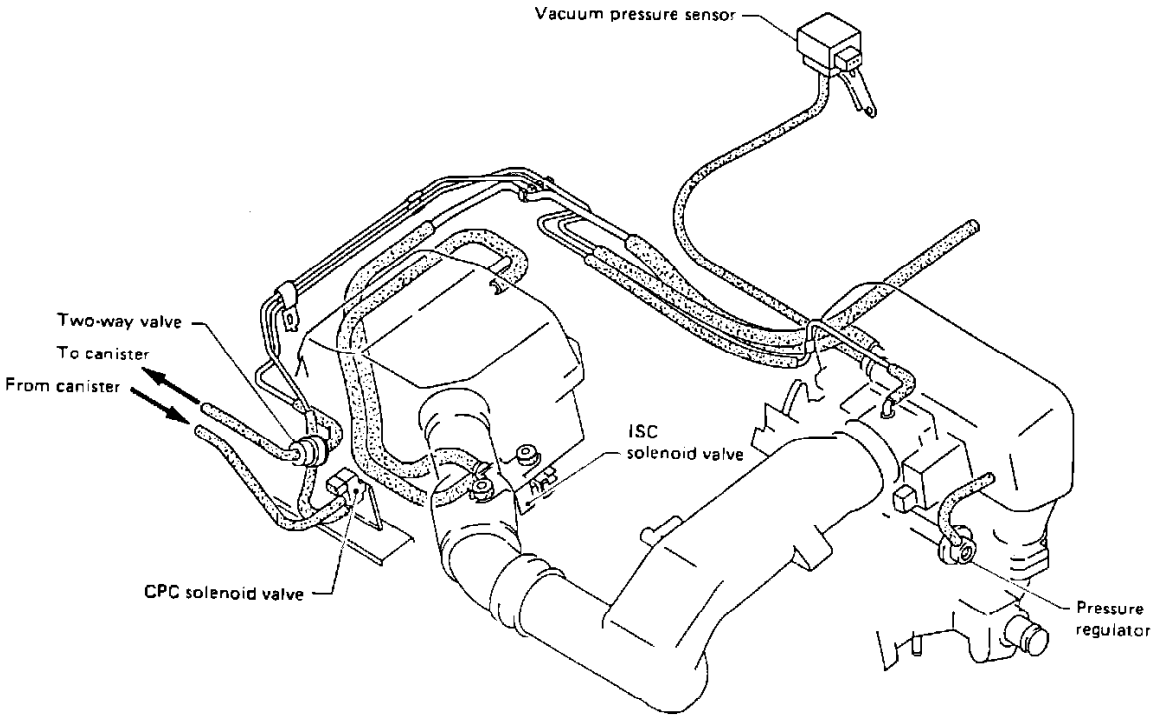

Vacuum Diagram (MPFI)

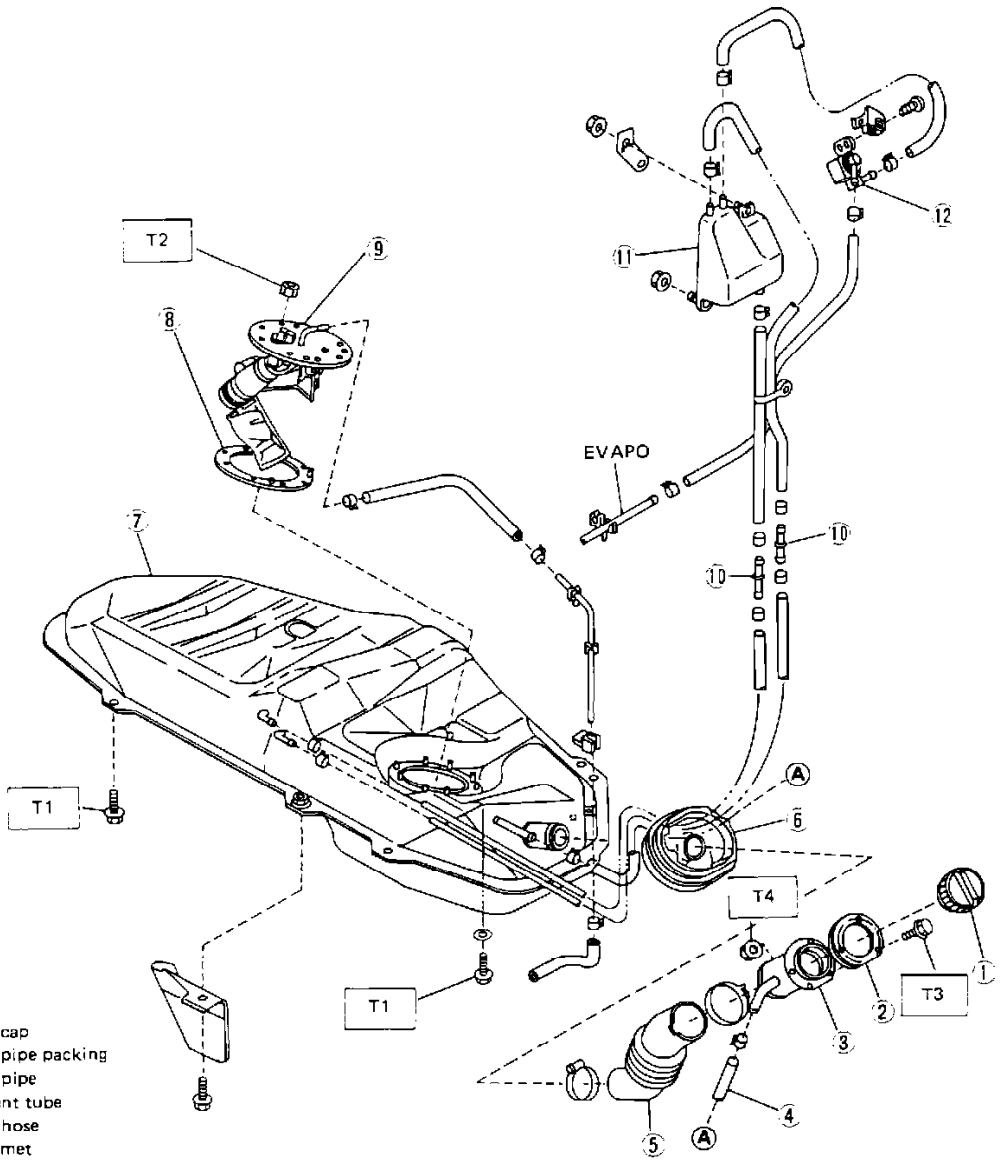

1 Filler cap
2 Filler pipe packing
3 Filler pipe
4 Air vent tube
5 Filler hose
6 Grommet
7 Fuel tank
8 Fuel pump packing
9 Fuel pump ASSY
10 Pipe joint
11 Separator
12 Roll over valve

Tightening torque: N·m (kg-m, ft-lb)
T1: 13 – 23 (1.3 - 2.3, 9 – 17)
T2: 1.8 – 3.1 (0.18 – 0.32, 1.3 – 2.3)
T3: 3 – 6 (0.3 – 0.6, 2.2 – 4.3)
T4: 1.5 – 2.5 (0.15 – 0.25, 1.1 – 1.8)

Fuel Tank

Components

Accelerator Switch: On Pedal Bracket
Air Temperature Sensor: Attached To Air Cleaner Assembly
Automatic Belt Unit: Under Instrument Panel
Back-Up Light Switch: Attached To Transmission Case
Chock Mode: Under LH Side Of Instrument Panel
Chime: Inside Instrument Panel
Condensor: Attached To Front Wiring Harness, Near Ignition
Coil Diode (Seat Belt & Room Light): Attached To Rear Wiring Harness Under RH Side Of Instrument Panel
Diode (Wiper, Ignition Relay & Horn): Attached To Front Wiring Harness, Under LH Side Of Instrument Panel
ECVT Unit: Inside Instrument Panel
EFC/MPFI Unit: Inside Instrument Panel
Flasher: Behind The LH Side Of The Instrument Panel
Front Wiper Intermittent Unit: Inside Instrument Panel
Fuel Pump Relay: Inside Instrument Panel
Fuse Panel: Under A Cover At The Lower Left Corner Of The Instrument Panel
Headlamp Relay: Inside Instrument Panel
Idle-Up Solenoid: In Front Of Front Bulk Head
Ignition Coil: Attached To Toe Board

Illumination Control Unit: On Pedal Bracket
Inhibitor Switch: Base Of Selector Lever
Interlock Switch (Clutch Switch): On Pedal Bracket
Key Lock Solenoid: Incorporated In Ignition Switch
Key Warning Switch: Incorporated In Ignition Switch
Main Relay: Inside Instrument Panel
Oil Pressure Switch: On Crankcase
Oxygen Sensor: Attached To Exhaust Pipe
Pressure Sensor (EFC): Attached To RH Wheel Apron
Pressure Sensor (MPFI): Attached To Toe Board
Radiator Fan Relay: Inside Instrument Panel
Radiator Fan Switch (Thermoswitch): Attached To Intake Manifold CP
Read Memory: Under LH Side Of Instrument Panel
Rear Wiper Relay: Inside Instrument Panel
Serial Communication: In Front Of Ignition Coil
Seat Belt Warning Timer Unit: Under Instrument Panel
Shift Lock Solenoid: Base Of Selector Lever
Shift Lock Unit: On Pedal Bracket
Solenoid (CPC): Attached To RH Wheel Apron
Solenoid (EGR): In Front Of Front Bulk Head
Solenoid (FCV): Attached To Toe Board
Solenoid (ISC): Attached To Air Cleaner Assembly
Solenoid (HAC): Attached To Toe Board
Solenoid (VLC): Attached To RH Wheel Apron
Starter Interlock Relay: Inside Instrument Panel
Toot Mode: Under LH Side Of Instrument Panel
Throttle Position Switch: On Pedal Bracket
Throttle Sensor: Attached To Throttle Body
Turn Signal & Hazard Unit: Inside Instrument Panel
Water Temperature Sensor: Attached To Intake Manifold CP
4WD Indicator Light Switch: Attached To Transmission Case
4WD/FWD Solenoid Valve: Attached To Toe Board
4WD Solenoid: Attached To Toe Board
4WD Switch: Attached To Transmission Case

Connectors

Connector F1: RH Front Corner Of Engine Compartment
Connector F2: RH Front Corner Of Engine Compartment
Connector F3: RH Front Corner Of Engine Compartment
Connector F4: Front Of Engine Compartment
Connector F5: RH Side Of Engine
Connector F7 (MPFI Models): RH Front Corner Of Engine Compartment
Connector F7 (EFC Models): RH Side Of Engine Compartment
Connector F8 (EFC Models): RH Side Of Engine Compartment
Connector F9: LH Side Of Engine Compartment
Connector F10: RH Rear Side Of Engine Compartment
Connector F11: Behind RH Side Of Instrument Panel
Connector F13: Center Of Firewall
Connector F14 (EFC Models): RH Side Of Firewall
Connector F15: RH Side Of Firewall
Connector F17 (EFC Models): RH Side Of Firewall
Connector F18: Near Alternator
Connector F19: Near Alternator
Connector F21 (EFC Models): At Carburetor
Connector F22: LH Side Of Engine
Connector F24: Front Of Engine
Connector F26 (EFC Models): At Distributor
Connector F29: LH Front Of Engine Compartment
Connector F30: LH Front Of Engine Compartment
Connector F31: LH Front Of Engine Compartment
Connector F32: LH Front Of Engine Compartment
Connector F33: LH Side Engine Compartment
Connector F35 (MPFI Models): LH Side Engine Compartment
Connector F36 (MPFI Models): LH Side Engine Compartment
Connector F37 (Manual Transmission, MPFI Models): At Starter Motor
Connector F37 (EFC Models): At Starter Motor
Connector F38: LH Side Engine Compartment
Connector F39: LH Side Engine Compartment

Connector F41 (EFC Models): Behind LH Side Of Instrument Panel
Connector F43 (MPFI Models): RH Side Of Firewall
Connector F43 (EFC Models): Center Of Firewall
Connector F44 (MPFI Models): LH Side Of Engine Compartment
Connector F44 (EFC Models): Center Of Firewall
Connector F45: LH Side Of Engine
Connector F46: LH Side Of Engine
Connector F47 (EFC Models): LH Side Of Engine
Connector F48: LH Side Of Engine Compartment
Connector F49 (MPFI Models): LH Side Of Engine Compartment
Connector F49 (EFC Models): LH Side Of Firewall
Connector F50: LH Side Of Firewall
Connector F51: Behind LH Side Of Instrument Panel
Connector F52: Behind LH Side Of Instrument Panel
Connector F54 (MPFI Models): LH Side Of Firewall
Connector F54 (EFC Models): LH Side Of Engine Compartment
Connector F56 (MPFI Models): LH Rear Side Of Engine Compartment
Connector F56 (EFC Models): LH Side Of Engine Compartment
Connector F58: Behind LH Side Kick Panel
Connector F59: Behind LH Side Kick Panel
Connector F60: Behind LH Side Kick Panel
Connector F61 (EFC Models): Behind LH Side Of Instrument Panel
Connector F62 (EFC Models): Behind LH Side Of Instrument Panel
Connector F67: Front Of Engine Compartment
Connector F68 (MPFI Models): RH Side Of Firewall
Connector F69 (EFC Models): Behind LH Side Of Instrument Panel
Connector F70: Behind LH Side Kick Panel
Connector F71: Behind LH Side Kick Panel
Connector F72 (MPFI Models): Behind LH Side Of Instrument Panel
Connector F73 (MPFI Models): Behind LH Side Of Instrument Panel
Connector F74 (MPFI Models): Behind LH Side Of Instrument Panel
Connector F75 (MPFI Models): LH Side Of Firewall
Connector F76 (MPFI Models): Behind LH Side Kick Panel
Connector F77 (MPFI Models): Behind LH Side Kick Panel
Connector F78: Behind LH Side Of Instrument Panel
Connector F79 (EFC Models): Behind LH Side Of Instrument Panel
Connector F80 (EFC Models): Behind LH Side Of Instrument Panel
Connector F81: LH Side Of Engine Compartment
Connector F82: LH Side Of Engine Compartment
Connector F83 (MPFI Models): LH Side Of Engine Compartment
Connector F84 (MPFI Models): LH Side Of Engine Compartment
Connector F86 (MPFI Models): LH Side Of Engine Compartment
Connector F87 (MPFI Models): LH Side Of Engine Compartment
Connector F88: Center Of Firewall
Connector F89 (EFC Models): Top Of Engine
Connector F90 (EFC Models): RH Side Of Engine Compartment
Connector F91 (MPFI Models): At Starter Motor
Connector F92: Center Of Firewall
Connector F94: RH Side Of Engine Compartment
Connector F95: RH Side Of Engine Compartment
Connector F96 (MPFI Models): LH Front Corner Of Engine Compartment
Connector F97: Behind LH Side Kick Panel
Connector F98 (MPFI Models): LH Rear Corner Of Engine Compartment
Connector F98 (EFC Models): LH Side Of Engine Compartment
Connector F102: Behind LH Side Of Instrument Panel
Connector F103 (MPFI Models): LH Side Of Engine Compartment
Connector F104 (MPFI Models): LH Side Of Engine Compartment
Connector F105 (MPFI Models): Rear Of Engine
Connector F106 (MPFI Models): Top Of Engine
Connector F107 (MPFI Models): Top Of Engine
Connector F108 (MPFI Models): Top Of Engine
Connector F109 (MPFI Models): Front Of Engine
Connector F110 (MPFI Models): At Fuel Injector
Connector F111 (MPFI Models): At Fuel Injector
Connector F112 (MPFI Models): At Fuel Injector
Connector F113 (MPFI Models): RH Side Of Engine Compartment
Connector F114 (MPFI Models): RH Side Of Engine Compartment
Connector F115 (MPFI Models): Rear Of Engine
Connector F116 (MPFI Models): LH Side Of Engine
Connector F117 (MPFI Models): LH Side Of Firewall

Subaru Justy Hatchback 4WD L3-1.2L SOHC (MPFI)

Connector F118 (MPFI Models): Behind LH Side Of Instrument Panel
Connector F119 (MPFI Models): Behind LH Side Of Instrument Panel
Connector F120 (MPFI Models): Behind LH Side Of Instrument Panel
Connector F121 (MPFI Models): Behind LH Side Of Instrument Panel
Connector i1: Behind LH Side Of Instrument Panel
Connector i2: Behind LH Side Of Instrument Panel
Connector i3: Behind LH Side Of Instrument Panel
Connector i4: Behind LH Side Of Instrument Panel
Connector i6: Behind LH Side Of Instrument Panel
Connector i7: Behind LH Side Of Instrument Panel
Connector i9: Behind LH Side Of Instrument Panel
Connector i10: Behind LH Side Of Instrument Panel
Connector i11: Behind LH Side Of Instrument Panel
Connector i12: Behind LH Side Of Instrument Panel
Connector i14: Behind LH Side Of Instrument Panel
Connector i16: Behind LH Side Of Instrument Panel
Connector i17: Behind LH Side Of Instrument Panel
Connector i1B: Behind Center Of Instrument Panel
Connector i2O: Behind Center Of Instrument Panel
Connector i23: Behind Center Of Instrument Panel
Connector i24: Behind Center Of Instrument Panel
Connector i26: Behind Center Of Instrument Panel
Connector i27: Behind Center Of Instrument Panel
Connector i28: Behind Center Of Instrument Panel
Connector i3O: Behind RH Side Of Instrument Panel
Connector i34: Behind RH Side Of Instrument Panel
Connector i35: Behind RH Side Of Instrument Panel
Connector i36: Behind RH Side Of Instrument Panel
Connector i38: Behind RH Side Of Instrument Panel
Connector i39: Behind RH Side Of Instrument Panel
Connector i4O: Behind LH Side Of Instrument Panel
Connector i41: Behind LH Side Of Instrument Panel
Connector i42: Behind LH Side Of Instrument Panel
Connector i43: Behind LH Side Of Instrument Panel
Connector i44: Behind LH Side Of Instrument Panel
Connector i45: Behind RH Side Of Instrument Panel
Connector i46: Behind RH Side Of Instrument Panel
Connector i47: Behind LH Side Of Instrument Panel
Connector i48: Behind LH Side Of Instrument Panel
Connector i49: Behind LH Side Of Instrument Panel
Connector i50: Behind RH Side Of Instrument Panel
Connector i51: Behind RH Side Of Instrument Panel
Connector i52: Behind RH Side Of Instrument Panel
Connector i53: Behind Center Of Instrument Panel
Connector i54: Behind Center Of Instrument Panel
Connector i55: Behind LH Side Of Instrument Panel
Connector i56: Behind RH Side Of Instrument Panel
Connector i57: Behind RH Side Of Instrument Panel
Connector i58: Behind LH Side Of Instrument Panel
Connector i59: Behind RH Side Of Instrument Panel
Connector i60: Behind LH Side Of Instrument Panel
Connector i61: Behind RH Side Of Instrument Panel
Connector R1: Behind RH Side Of Instrument Panel
Connector R2: Behind RH Side Of Instrument Panel
Connector R3: Behind RH Side Of Instrument Panel
Connector R4: Behind RH Side Of Instrument Panel
Connector R5: Behind RH Side Of Instrument Panel
Connector R6: Behind RH Front Seat
Connector R7: Center Of Roof
Connector R8: RH Rear Corner Of Vehicle
Connector R9: RH Rear Corner Of Vehicle
Connector R10: RH Rear Corner Of Vehicle
Connector R11: RH Rear Corner Of Vehicle
Connector R13: LH Rear Corner Of Vehicle
Connector R14: LH Rear Corner Of Vehicle
Connector R15: LH Side Of Vehicle
Connector R16: LH Side Of Vehicle
Connector R17: Under Vehicle, Near Fuel Tank
Connector R18: Near Rear Of Shift Console
Connector R19: Near Base Of Parking Brake Lever

Connector R20: Below Shift Console
Connector R21: Behind RH Side Of Instrument Panel
Connector R22: Below Shift Console
Connector R23: Below Shift Console
Connector R24: Below Shift Console
Connector R25: Behind RH Side Of Instrument Panel
Connector R26: Behind RH Side Of Instrument Panel
Connector R27: Behind RH Side Of Instrument Panel
Connector R28: Near Rear Of Shift Console
Connector R29: Under Vehicle, Near Fuel Tank
Connector R30: RH Rear Corner Of Vehicle
Connector R31: Behind LH Side Of Instrument Panel
Connector R32: Behind RH Side Of Instrument Panel
Connector R33: In LH Door
Connector R34: In LH Door
Connector R35: In LH Door
Connector R36: In RH Door
Connector R37: In RH Door
Connector R38: In RH Door
Connector T1: RH Rear Comer Of Vehicle
Connector T2: RH Rear Corner Of Vehicle
Connector T3: Lower RH Corner Of Rear Gate Glass
Connector T4: RH Side Of Rear Gate
Connector T5: Lower Center Of Rear Gate
Connector T7: Lower Center Of Rear Gate
Connector T8: Lower Center Of Rear Gate
Connector T9: Lower Center Of Rear Gate
Connector T10: Lower LH Comer Of Rear Gate Glass

Fuse and Fusible Links

The fuse panel is located below the lefthand side of the instrument panel.

On SVX models, the hazard and turn signal flasher is located behind the lefthand side of the instrument panel, near the brake pedal bracket.

On Justy models, the hazard and turn signal flasher is located behind the lefthand side of the instrument panel.

On XT models, the hazard and turn signal flasher is incorporated in the combination switch.

On except Justy, SVX and XT models, the hazard and turn signal flasher is located behind the righthand side of the instrument panel, near the glove compartment.

On Impreza models, the hazard and turn signal flasher is located behind the center of the instrument panel.

Grounds

Ground GB-1: RH Front OF Engine Compartment
Ground GB-2: Center Rear OF Engine Compartment
Ground GB-3: Behind LH side OF Instrument Panel
Ground GB-4: Center Front OF Luggage Compartment
Ground GB-5 & GD: Lower RH Side Of Rear Door
Ground GE: LH Side Of Engine
Ground GR: Behind RH Side Of Instrument Panel

Computers and Control Systems: Testing and Inspection

Diagnostic Modes

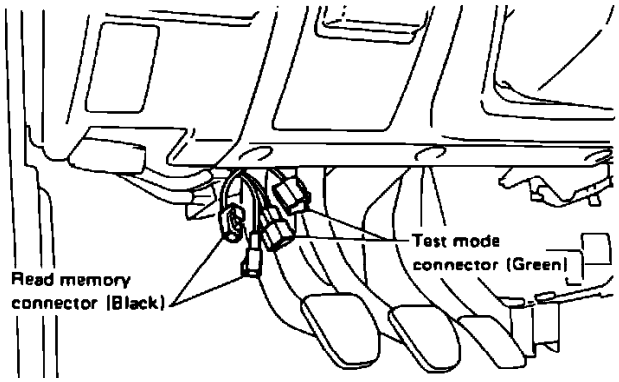

Diagnostic Connectors

PURPOSE

The self-diagnosis system detects, stores and has provision for reading codes indicating various faults with electronic engine and emission controls. A "CHECK ENGINE" light on the instrument panel indicates the presence of trouble codes and flashes the codes. The system has a fail-safe function which will default to a preset value when a part is judged defective, thereby maintaining minimal driveability until repairs can be made. ECVT (automatic transmission) models have an additional "CHECK ECVT" light that indicates problems the ECVT control unit has detected in the transmission system.

OPERATION

For accessing codes, two connectors (Read Memory and Test Mode) and the "CHECK ENGINE" are used. The connectors are for mode selection and the lamp monitors the type of problem. Read Memory connectors are black and Test Mode connectors are green. Both connectors are under the dash.

The self-diagnosis system has four modes:

^ U-Check Mode:
Only components necessary for proper starting and drive operation are monitored. The "CHECK ENGINE" light will come on when a fault is detected, indicating the need for further diagnosis. Parts which do not significantly affect starting or driveability are not monitored in this mode.

^ Read Memory Mode:
This mode is used to read codes of past problems stored in memory and can be accessed when the "CHECK ENGINE" light is off. It is effective for detecting poor contact or loose electrical connections.

^ D-Check Mode:
This mode checks the entire system and displays any trouble codes currently being monitored.

^ Clear Memory Mode:
This mode removes trouble codes from memory after repairs are made.

Mode	Engine	Read memory terminal	Test mode terminal
U-check	Ignition ON	DISCONNECT	DISCONNECT
Read memory	Ignition ON	CONNECT	DISCONNECT
D-check	Ignition ON (engine on)	DISCONNECT	CONNECT
Clear memory	Ignition ON (engine on)	CONNECT	CONNECT

Selecting Diagnostic Modes

RELATIONSHIP BETWEEN MODES AND CONNECTORS

^ U-CHECK MODE:
Ignition "ON," Read Memory disconnected, Test Mode disconnected.

^ READ MEMORY MODE:
Ignition "ON," Read Memory connected, Test Mode disconnected.

^ D-CHECK MODE:

(engine on)
Ignition "ON," Read Memory disconnected, Test Mode connected.

^ CLEAR MEMORY MODE:
(engine on)
Ignition "ON" (engine on), Read Memory connected, Test Mode connected.

Specification Code Description

SPECIFICATION CODE	SPECIFICATION
01	FWD M/T, Federal & Canada
02	FWD A/T, Federal & Canada
03	4WD M/T, Federal & Canada
04	4WD A/T, Federal & Canada
10	FWD M/T, California
20	FWD A/T, California
30	4WD M/T, California
40	4WD A/T, California

Diagnostic Strategies

Complaint Verification

Whenever possible the technician should personally verify the complaint.

- Having experienced the malfunction, you will be less likely to attempt to repair a non-existent fault.

Malfunction Verification

Automotive control systems are easily misunderstood, leading to repairs that attempt to force a system to perform in a way it was never intended to.

- Always compare system operation to normal system operation as described in either the owners manual or **Description and Operation**.
- When possible compare vehicle operation with that of a known good vehicle.

Previous Repairs

The vehicle repair history can provide explanations to unusual complaints which elude normal troubleshooting attempts. Incorrect components or unapproved repairs can have subtle influences on seemingly unrelated systems.

- Always attempt to get the "whole story" from the customer.
- When possible check the system or component which was last repaired.

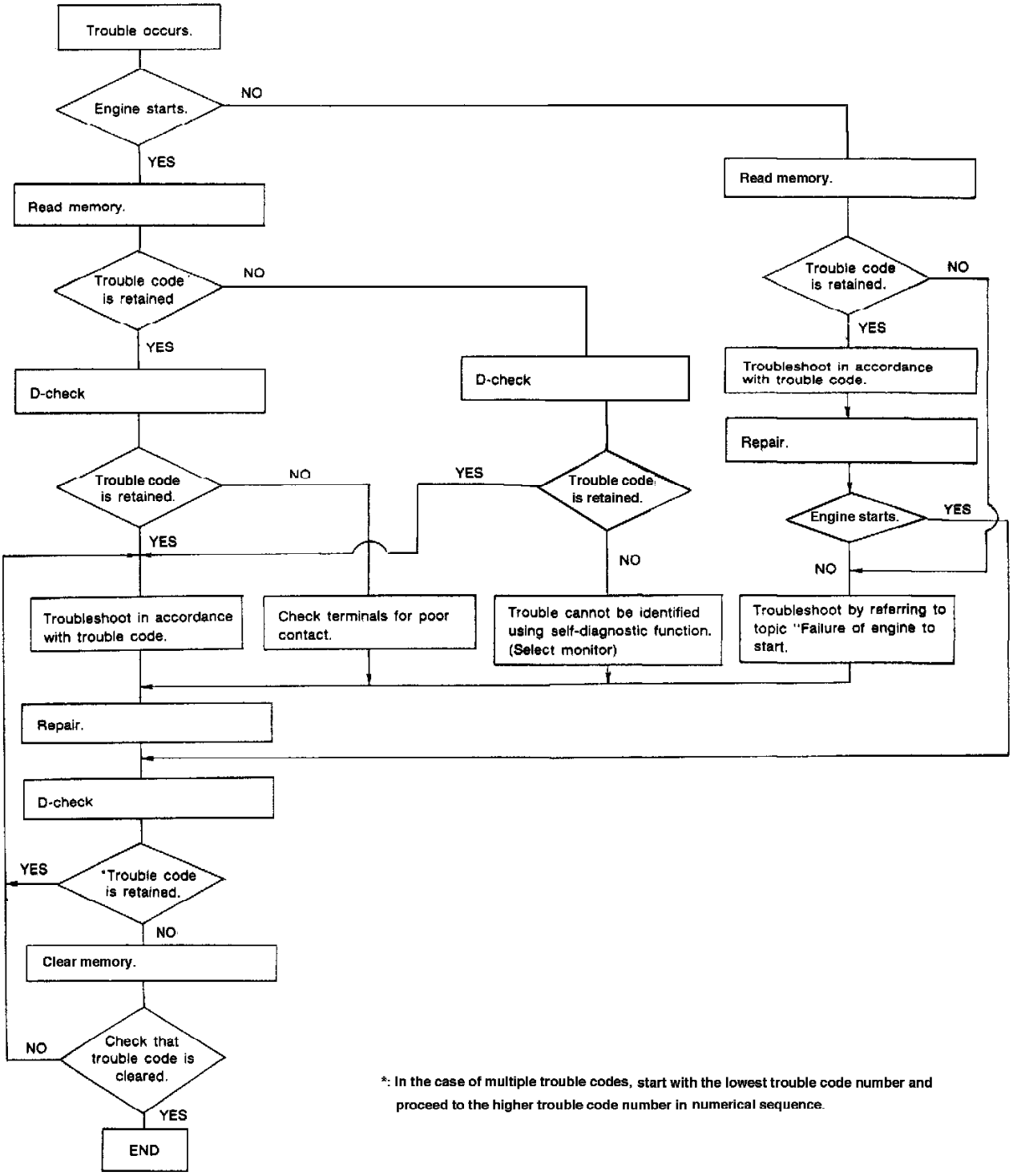

*: In the case of multiple trouble codes, start with the lowest trouble code number and proceed to the higher trouble code number in numerical sequence.

Troubleshooting Flow Chart

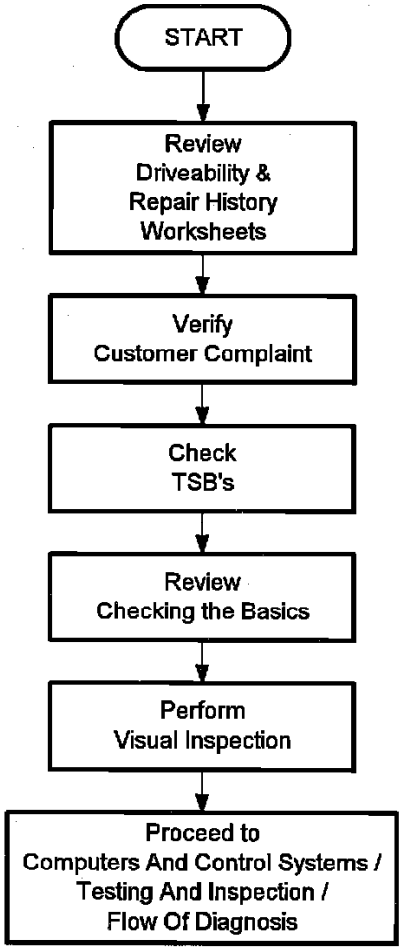

Flow Of Diagnosis -- Generic

Initial Inspection

CHECKING THE BASICS

All troubleshooting must begin by **"Checking the Basics"**. Certain basic faults are undetectable by the self-diagnostic systems of the fuel and ignition control units, and in some cases can actually interfere with self-checking and fault memory operation.

System fault codes are cleared whenever control unit or battery are disconnected. Therefore, all fault codes should be read prior to any vehicle power interruption or troubleshooting.

Prior to any teardown, repair or component replacement, the following steps should always be considered.

Battery State of Charge
Batteries in a state of partial discharge can have a dramatic effect on control units and related components.

Positive Battery Cable Integrity
All B+ connections must be in perfect condition for trouble-free electronic system operation. Refer to **Diagrams** for B+ interconnects.

Fuse Integrity
Fuses are employed to prevent possible damage to electrical components and wiring harnesses. Fuses and their connections must be without dynamic resistance. Dynamic resistance can only be checked using the voltage drop method of testing.

Negative Ground Connections
As all electrical circuits are a circle, all B- connections must also be checked and verified to be in perfect condition. A poor "common" ground point will cause seemingly unrelated systems to influence one another. High current systems which encounter a poor "common" ground can back feed through other electrical systems, causing unusual operation and perhaps inexplicable component failure. As with the B+ side of the electrical system, the ground side should be checked dynamically using the voltage drop technique.

Power Train Cable Attachments
Metal cables attached to the engine or transmission which appear overheated and/or discolored indicate the need to thoroughly test all ground connections.

Power Supply Relays
The system relay, as well as its plug connection, can be a source of intermittent operation which will not set a fault code.

Crankshaft Position/Speed Sensor
Monolithic sensors should be checked statically and dynamically. Physical mounting and condition of the sensor must be assured.

High Tension Coil and Secondary Components Wiring
The secondary ignition system should be checked visibly as well as with a suitable engine analyzer and scope. All components should be examined for tight connections and freedom from carbon tracking, moisture and corrosion.

Fuel Delivery
Fuel delivery must begin at once when cranking. Fuel pressure must be within specifications.

Spark Plugs
If out of specification, spark plugs can significantly impair engine performance. Spark plug type, condition and gap must verified according to specification.

Air/Fuel Ratio
When troubleshooting idle quality or driveability complaints, it is necessary to consider the following:
^ Presence of unmetered air leaks
^ Evaporative purge system
^ Excessive engine oil dilution
^ Substandard fuel or unapproved additives
^ Carbon build-up

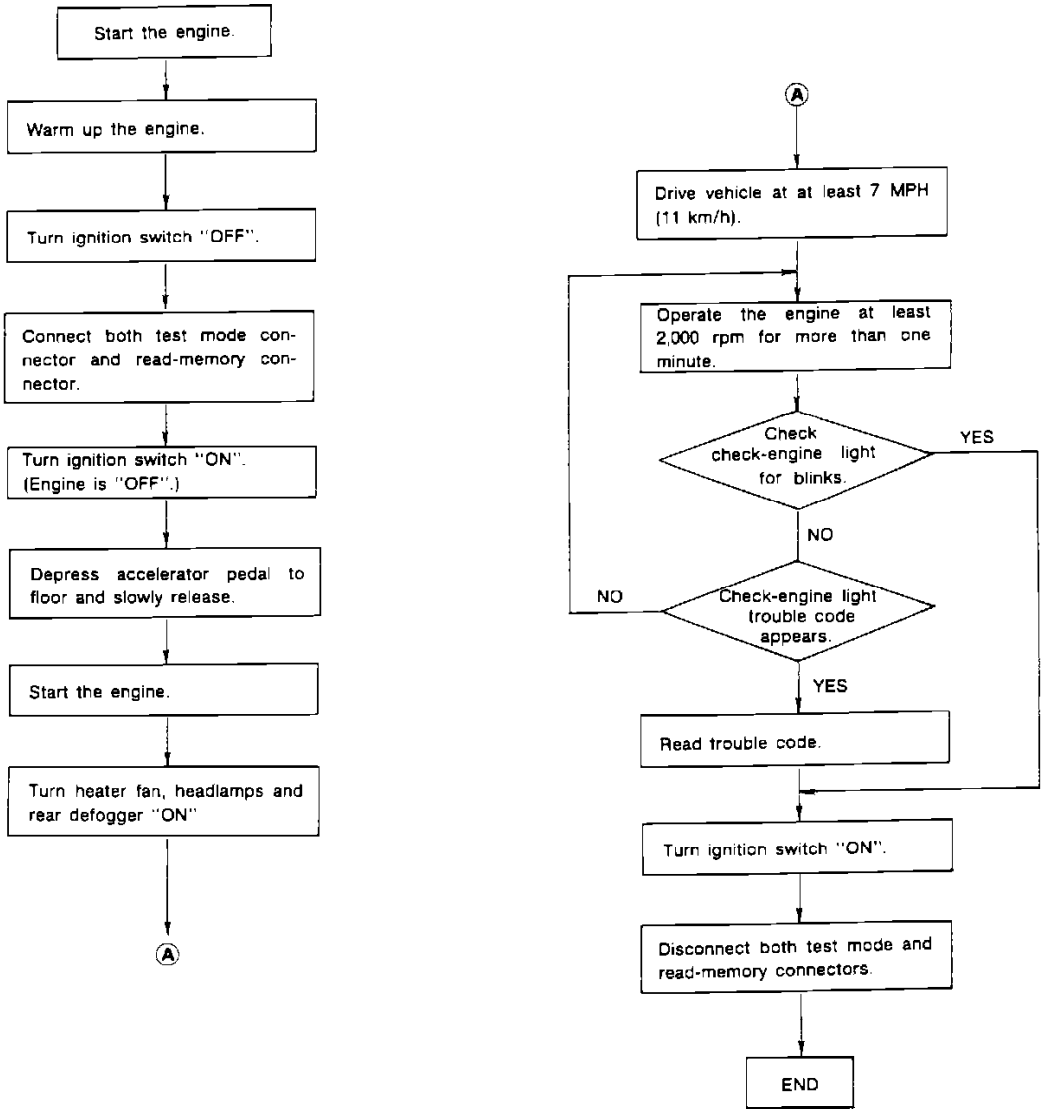

Clear Memory Mode

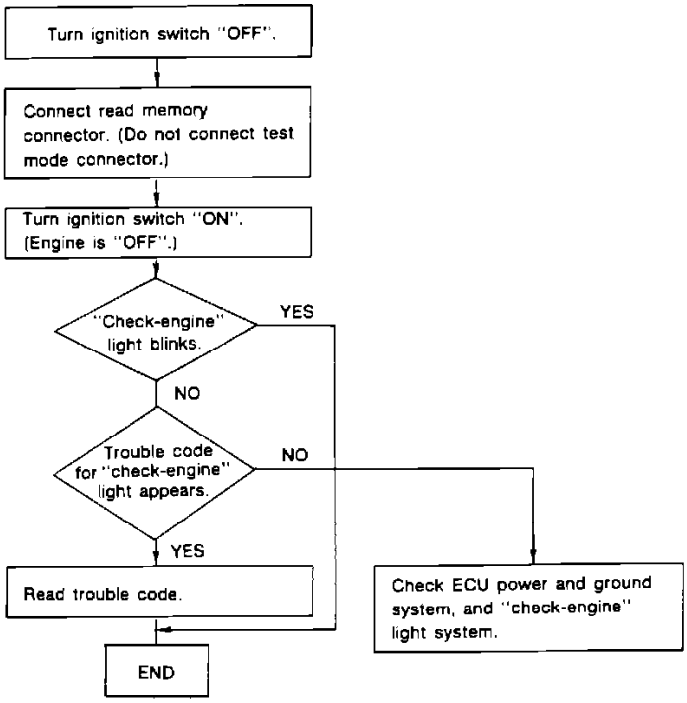

Read Memory Mode

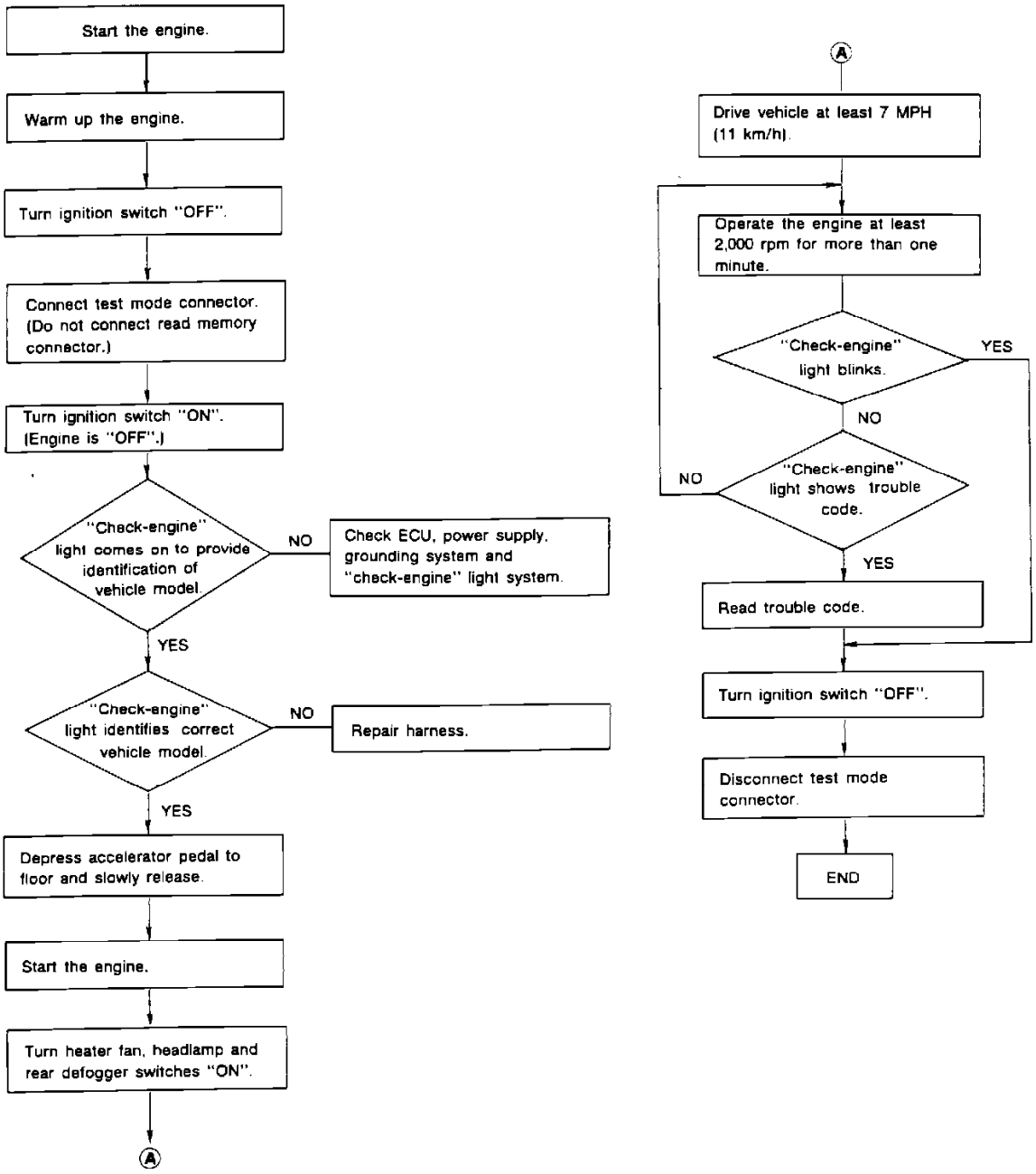

D - Check Mode

Diagnostic Trouble Code Descriptions

TROUBLE CODES

11: Crank angle sensor

12: Starter switch

13: Cylinder distinction sensor

14: Injector #1

15: Injector #2

16: Injector #3

21: Coolant temperature sensor

23: Manifold absolute pressure sensor

24: Idle speed control solenoid

26: Air temperature sensor

32: Oxygen sensor

33: Speed sensor

35: Canister purge control solenoid

36: Ignitor

41: Air/fuel learning control

42: Idle switch

43: Power switch

45: Atmospheric pressure sensor

52: Clutch switch

62: Electric load signal

63: Blower fan switch

65: Manifold absolute pressure sensor hose disconnected

DTC 11

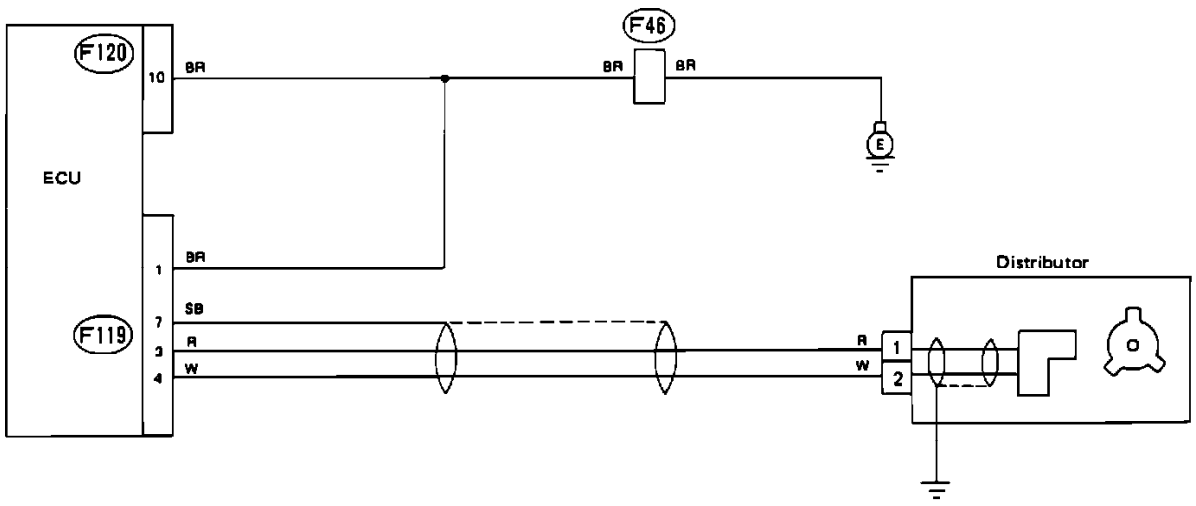

Crank Angle Sensor Schematic

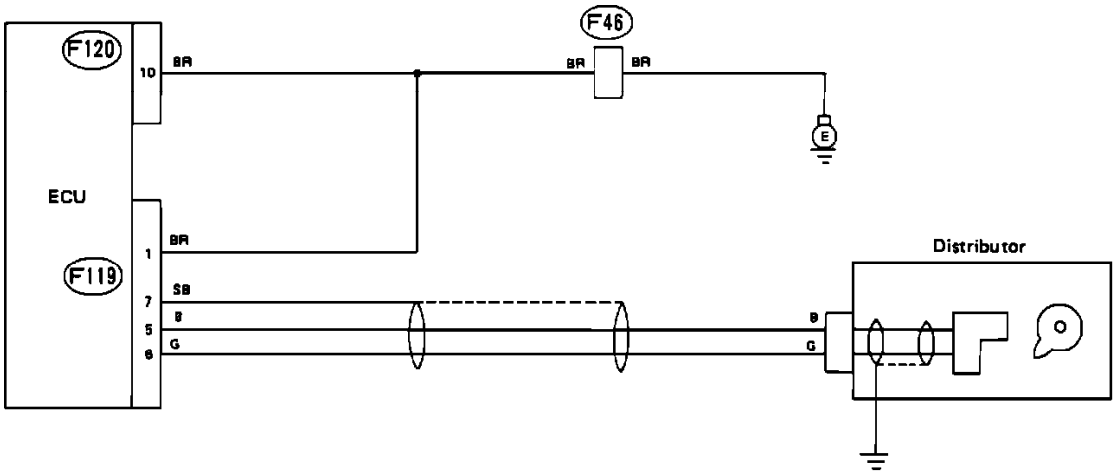

Cylinder Distinction Sensor Schematic

A faulty crank angle sensor will set code 11 in the on-board diagnostic system and the cylinder distinction sensor will set code 13. Refer to the schematic diagrams and test these sensors with the diagnostic charts.

Wire color code identification:

L: Blue
B: Black
Y: Yellow
G: Green
R: Red
W: White
Br: Brown
Lg: Light green
Gr: Gray

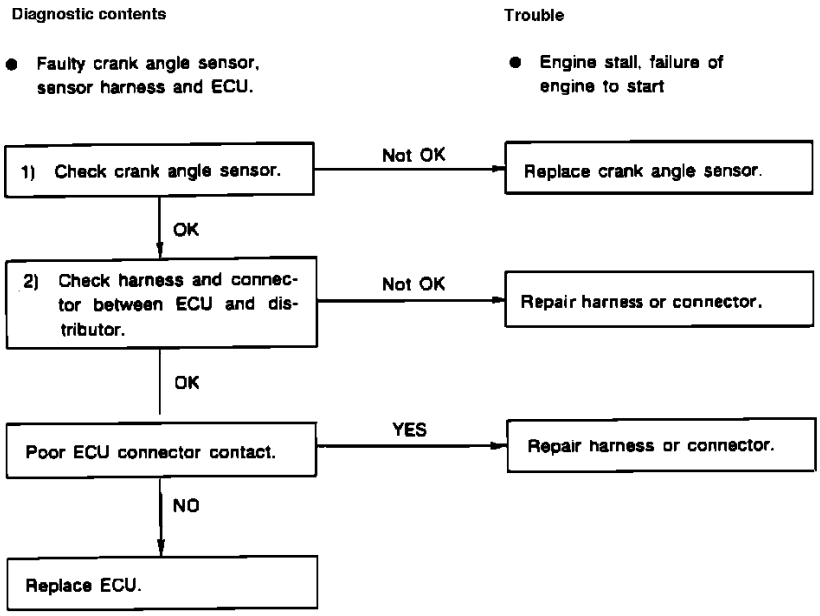

Crank Angle Sensor Diagnostic Chart

CRANK ANGLE SENSOR DIAGNOSTIC CHART

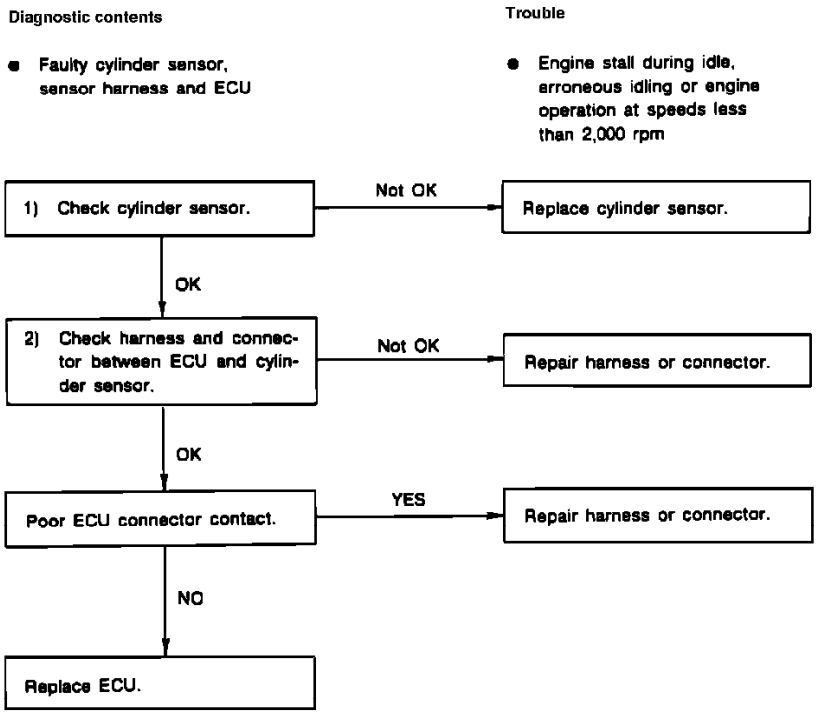

Cylinder Distinction Sensor Diagnostic Chart

CYLINDER DISTINCTION SENSOR DIAGNOSTIC CHART

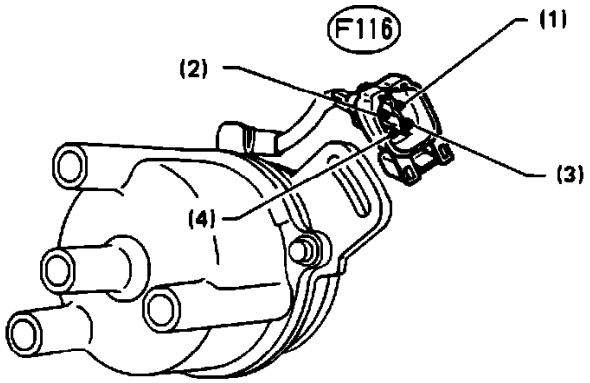

Crank Angle Sensor Testing

CHECK CRANK ANGLE SENSOR

1. Disconnect connector from distributor.
2. Measure voltage between distributor side connector terminals while cranking engine:

Connector & terminal:	**Voltage: [1]**
(F116)1-(F116)2	Varies with rpm

CHECK CYLINDER DISTINCTION SENSOR

1. Disconnect connector from distributor.
2. Measure voltage between distributor side connector terminals while cranking engine:

Connector & terminal:	**Voltage: [1]**
(F116)3-(F116)4	Varies with rpm

[1] Measure with a high impedance voltmeter set below the 0.5V range.

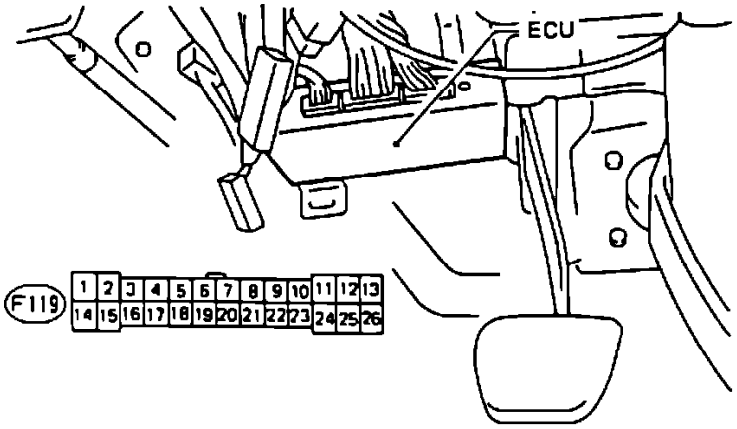

ECU/Crank Angle Sensor Harness Testing

CHECK HARNESS BETWEEN ECU AND DISTRIBUTOR

For crank angle sensor:

1. Disconnect ECU and distributor connectors.
2. Check resistance between ECU and distributor connectors and ground as follows:

Connector & terminal:	**Resistance:**
(F119)3-(F119)1	Below 1 Ohm
(F119)4-(F119)2	Below 1 Ohm
(F119)3-Ground	Infinite
(F119)4-Ground	Infinite

3. Reconnect ECU connector and measure resistance between (F119)7 and ground. Resistance should be below 10 Ohms.

For cylinder distinction sensor:

1. Disconnect ECU and distributor connectors.
2. Check resistance between ECU and distributor connectors and ground as follows:

Connector & terminal:	**Resistance:**
(F119)5-(F119)3	Below 1 Ohm
(F119)6-(F119)4	Below 1 Ohm
(F119)5-Ground	Infinite
(F119)6-Ground	Infinite

3. Reconnect ECU connector and measure resistance between (F119)7 and ground. Resistance should be below 10 Ohms.

DTC 12

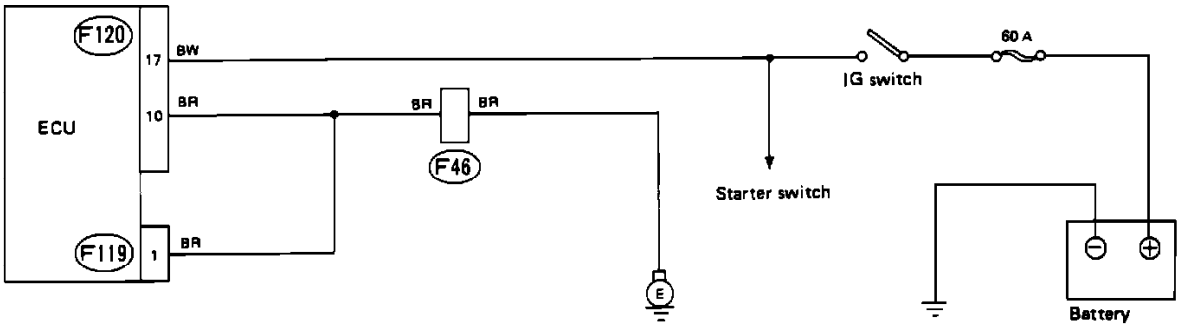

Starter Switch Schematic

A faulty starter switch will set code 12 in the on-board diagnostic system. Refer to the schematic diagram and test the sensor with the diagnostic chart.

Wire color code identification:

L: Blue
B: Black
Y: Yellow
G: Green

R: Red
W: White
Br: Brown
Lg: Light green
Gr: Gray

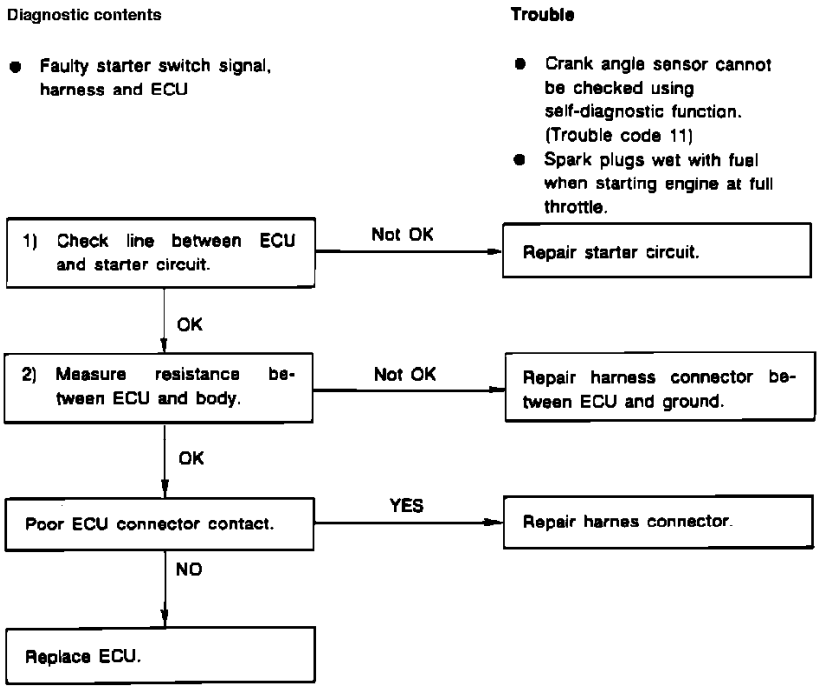

Starter Switch Diagnostic Chart

STARTER SWITCH DIAGNOSTIC CHART

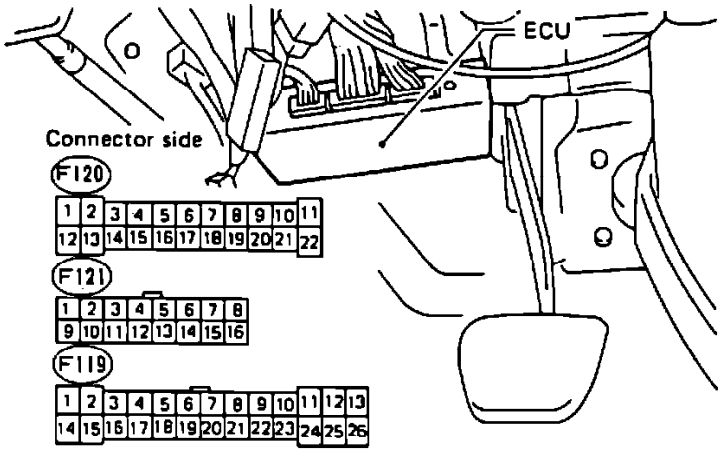

ECU Connectors

CHECK VOLTAGE AND RESISTANCE

1. With ignition "OFF,", disconnect ECU connector.
2. Measure voltage between ECU connector (F120)17 and ground while cranking engine. Voltage should be above 8V.
3. With ignition "OFF," measure resistance between ECU connectors and ground as follows:

Connector & terminal:	**Resistance:**
(F119)1-Ground	Below 10 Ohms
(F120)10-Ground	Below 10 Ohms

DTC 13

Subaru Justy Hatchback 4WD L3-1.2L SOHC (MPFI)

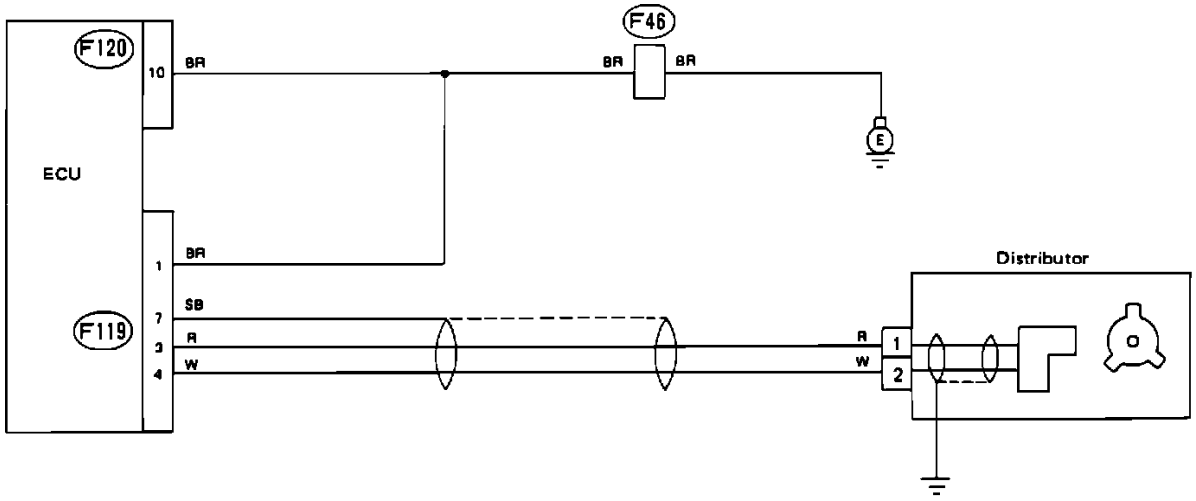

Crank Angle Sensor Schematic

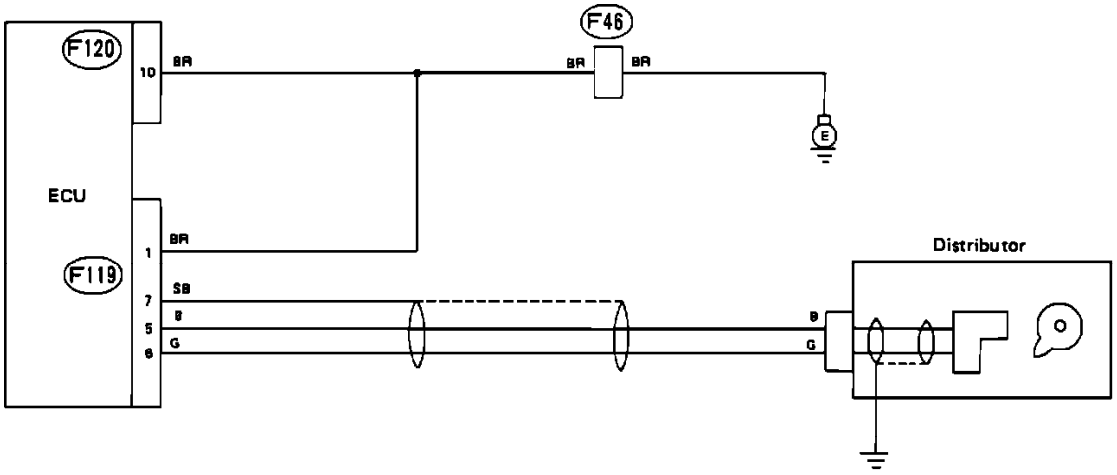

Cylinder Distinction Sensor Schematic

A faulty crank angle sensor will set code 11 in the on-board diagnostic system and the cylinder distinction sensor will set code 13. Refer to the schematic diagrams and test these sensors with the diagnostic charts.

Wire color code identification:

L: Blue
B: Black
Y: Yellow
G: Green
R: Red
W: White
Br: Brown
Lg: Light green
Gr: Gray

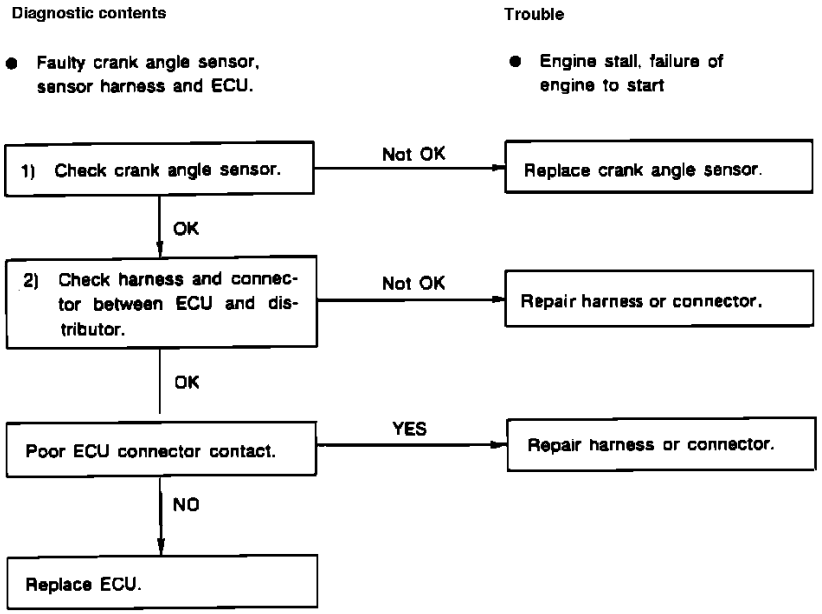

Crank Angle Sensor Diagnostic Chart

CRANK ANGLE SENSOR DIAGNOSTIC CHART

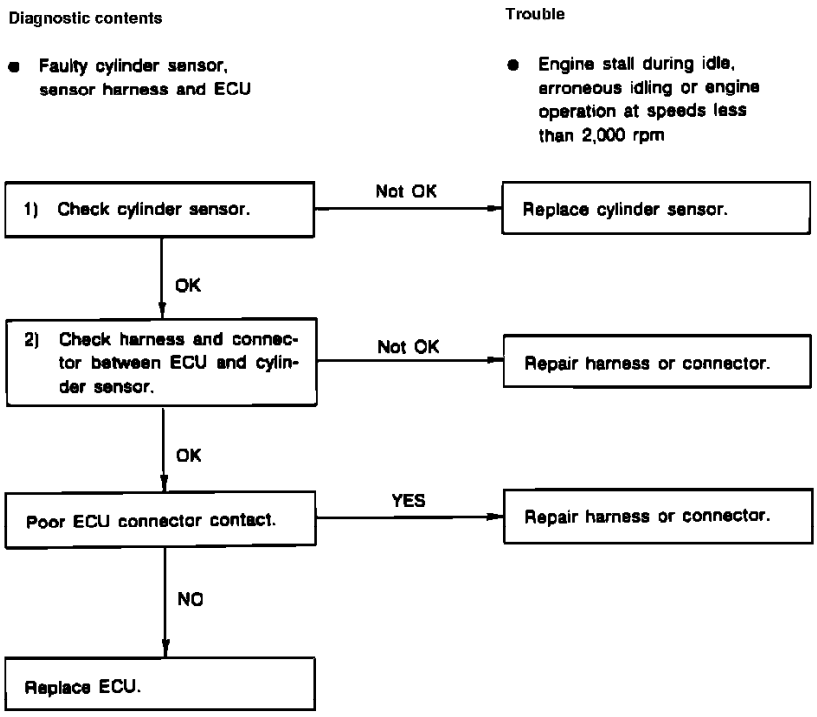

Cylinder Distinction Sensor Diagnostic Chart

CYLINDER DISTINCTION SENSOR DIAGNOSTIC CHART

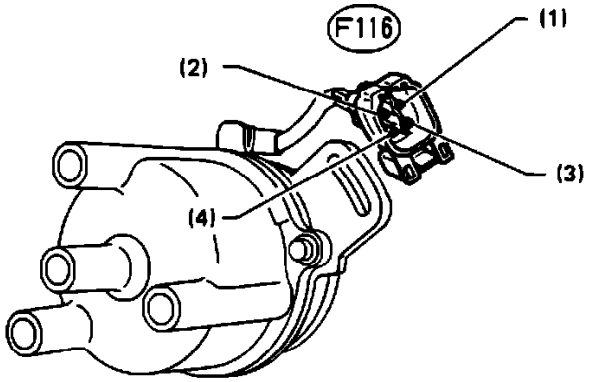

Crank Angle Sensor Testing

CHECK CRANK ANGLE SENSOR

1. Disconnect connector from distributor.
2. Measure voltage between distributor side connector terminals while cranking engine:

Connector & terminal:	**Voltage: [1]**
(F116)1-(F116)2	Varies with rpm

CHECK CYLINDER DISTINCTION SENSOR

1. Disconnect connector from distributor.
2. Measure voltage between distributor side connector terminals while cranking engine:

Connector & terminal:	**Voltage: [1]**
(F116)3-(F116)4	Varies with rpm

[1] Measure with a high impedance voltmeter set below the 0.5V range.

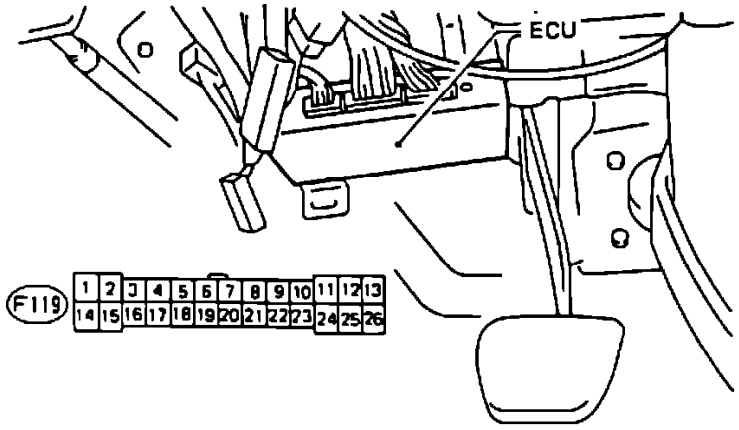

ECU/Crank Angle Sensor Harness Testing

CHECK HARNESS BETWEEN ECU AND DISTRIBUTOR

For crank angle sensor:

1. Disconnect ECU and distributor connectors.
2. Check resistance between ECU and distributor connectors and ground as follows:

Connector & terminal:	**Resistance:**
(F119)3-(F119)1	Below 1 Ohm
(F119)4-(F119)2	Below 1 Ohm
(F119)3-Ground	Infinite
(F119)4-Ground	Infinite

3. Reconnect ECU connector and measure resistance between (F119)7 and ground. Resistance should be below 10 Ohms.

For cylinder distinction sensor:

1. Disconnect ECU and distributor connectors.
2. Check resistance between ECU and distributor connectors and ground as follows:

Connector & terminal:	**Resistance:**
(F119)5-(F119)3	Below 1 Ohm
(F119)6-(F119)4	Below 1 Ohm
(F119)5-Ground	Infinite
(F119)6-Ground	Infinite

3. Reconnect ECU connector and measure resistance between (F119)7 and ground. Resistance should be below 10 Ohms.

DTC 14

Subaru Justy Hatchback 4WD L3-1.2L SOHC (MPFI)

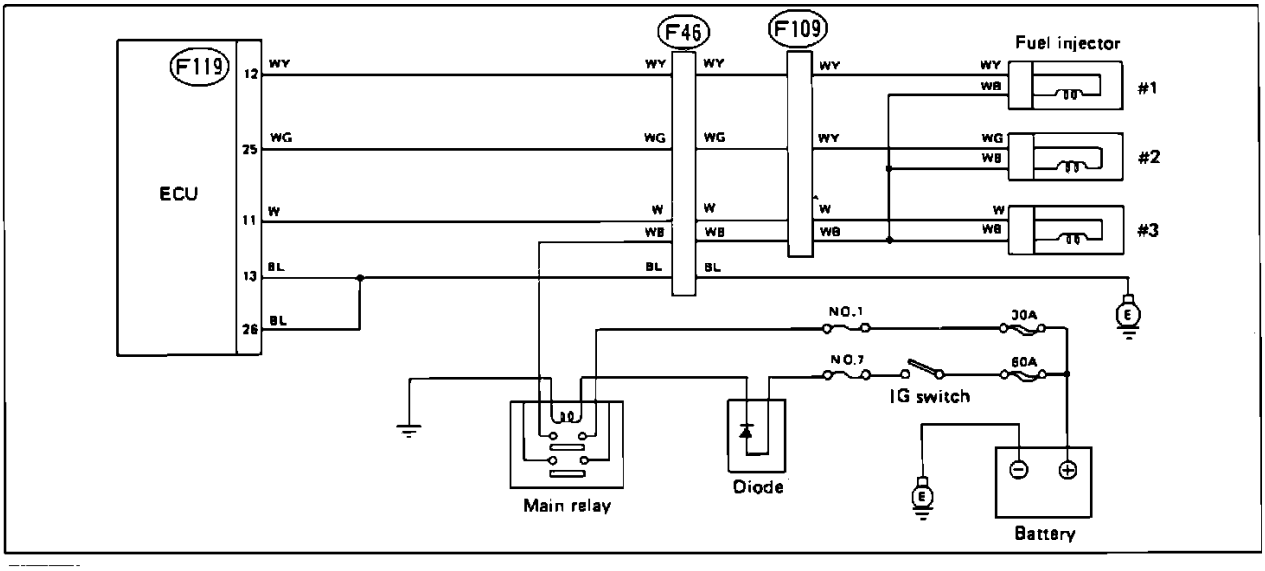

Fuel Injector Schematic

Faulty fuel injectors will set codes 14, 15 and 16 in the on-board diagnostic system. The codes correspond to injectors #1, #2 and #3. Refer to the schematic diagram and test the injectors with the diagnostic chart.

Wire color code identification:

L: Blue
B: Black
Y: Yellow
G: Green
R: Red
W: White
Br: Brown
Lg: Light green
Gr: Gray

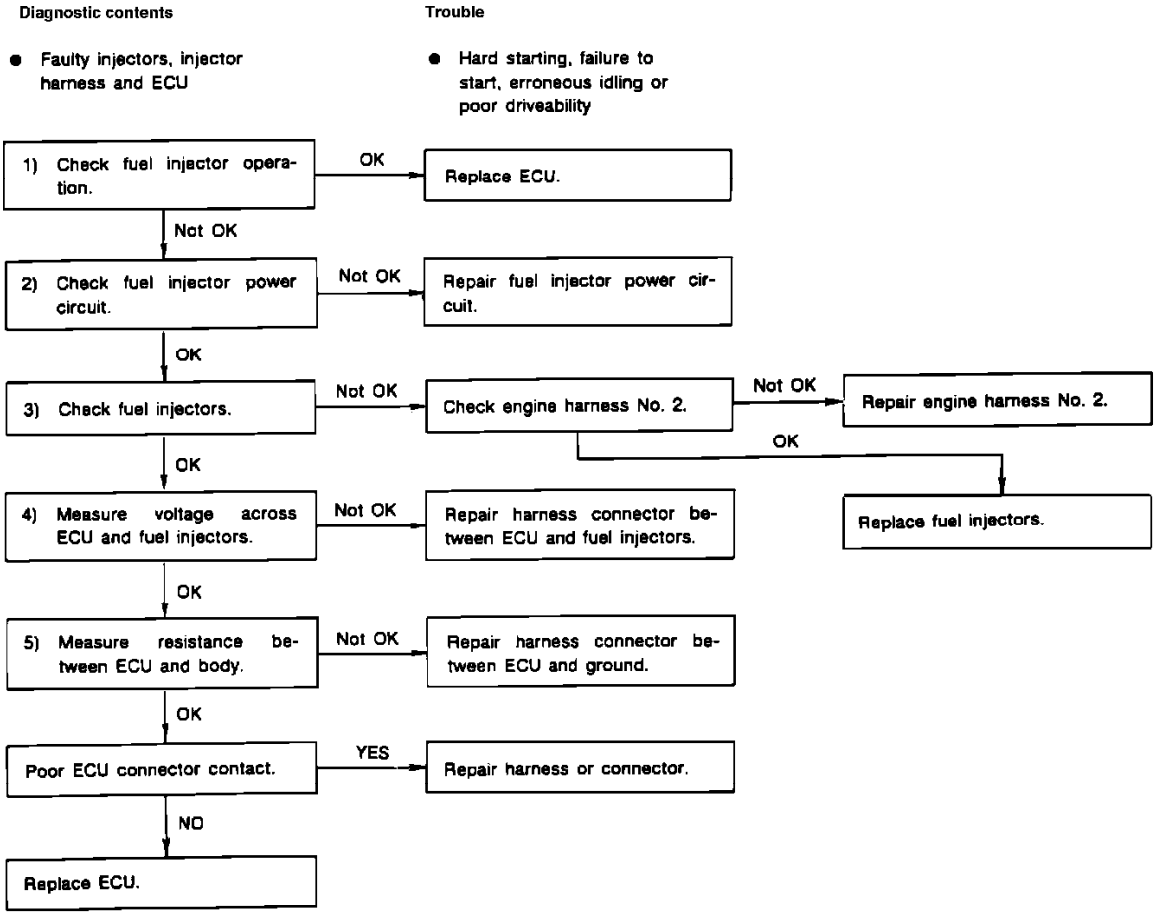

Fuel Injector Diagnostic Chart

FUEL INJECTOR DIAGNOSTIC CHART

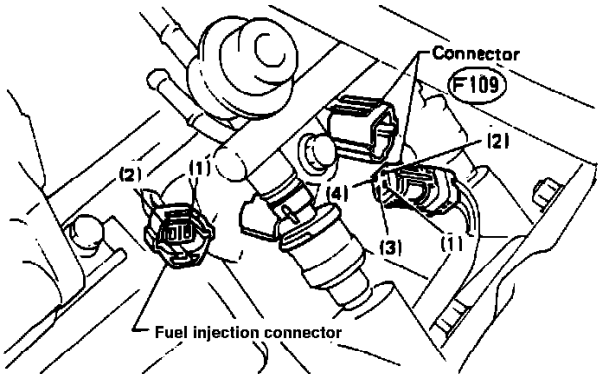

Fuel Injector Testing

CHECK INJECTOR OPERATION, VOLTAGE AND RESISTANCE

1. While cranking engine, check that each injector emits a clicking sound. Use a stethoscope or place a screwdriver on the injectors for this test.
2. Disconnect each injector connector (F109).
3. Turn ignition "ON" and measure voltage between male connector (F109)1 and ground. It should be above 9V.
4. Measure resistance between connector terminals as follows:

Connector & terminal:	**Resistance:**
(F109)1-(F109)2	10 - 18 Ohms
(F109)1-(F109)3	10 - 18 Ohms
(F109)1-(F109)4	10 - 18 Ohms

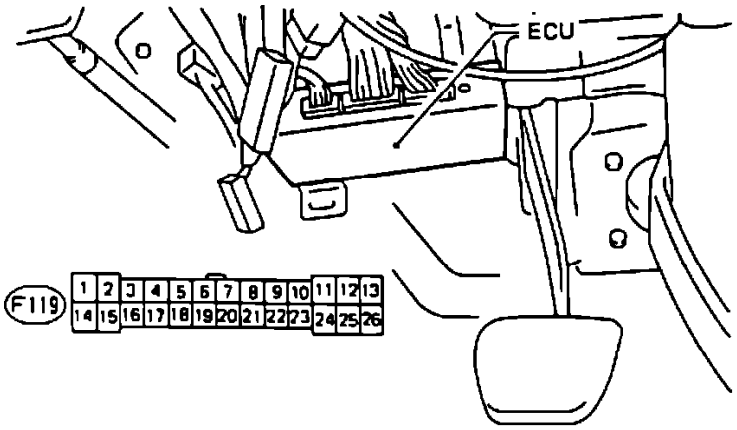

ECU/Crank Angle Sensor Harness Testing

CHECK ECU VOLTAGE AND RESISTANCE

1. Connect injector connector (F109) and turn ignition "ON."
2. Measure voltage between ECU connector terminals and ground as follows:

Connector & terminal:	**Voltage:**
(F119)12-Ground	Above 8V
(F119)25-Ground	Above 8V
(F119)11-Ground	Above 8V

3. Turn ignition "OFF" and disconnect ECU connector.
4. Measure resistance between ECU connector terminals and ground as follows:

Connector & terminal:	**Resistance:**
(F119)13-Ground	Below 10 Ohms
(F119)26-Ground	Below 10 Ohms

DTC 15

Subaru Justy Hatchback 4WD L3-1.2L SOHC (MPFI)

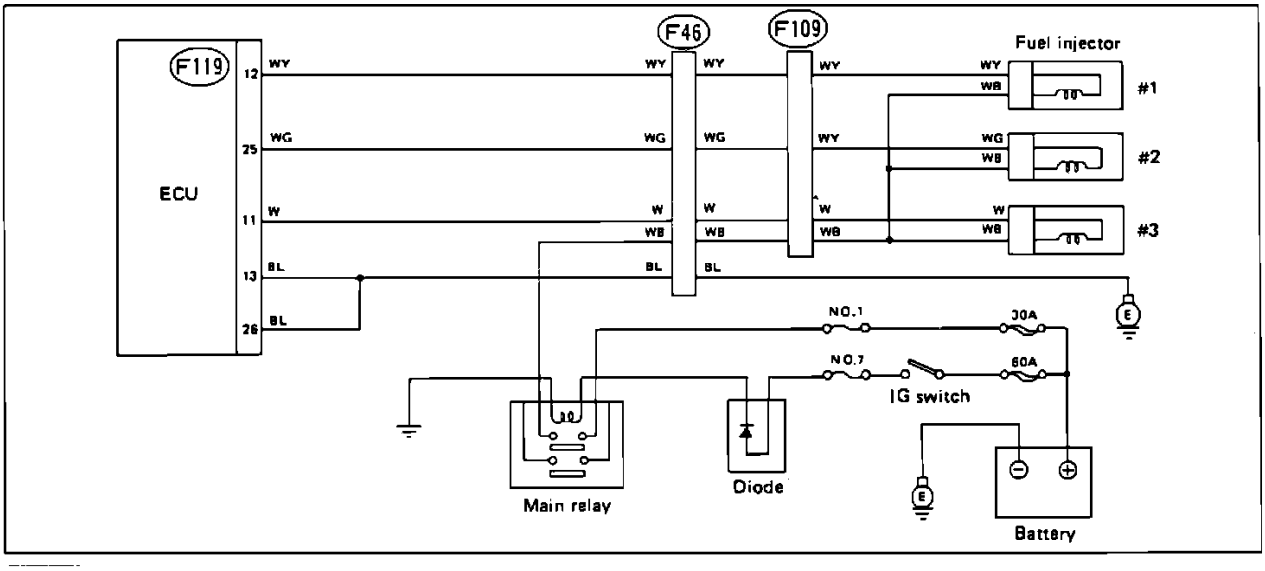

Fuel Injector Schematic

Faulty fuel injectors will set codes 14, 15 and 16 in the on-board diagnostic system. The codes correspond to injectors #1, #2 and #3. Refer to the schematic diagram and test the injectors with the diagnostic chart.

Wire color code identification:

L: Blue
B: Black
Y: Yellow
G: Green
R: Red
W: White
Br: Brown
Lg: Light green
Gr: Gray

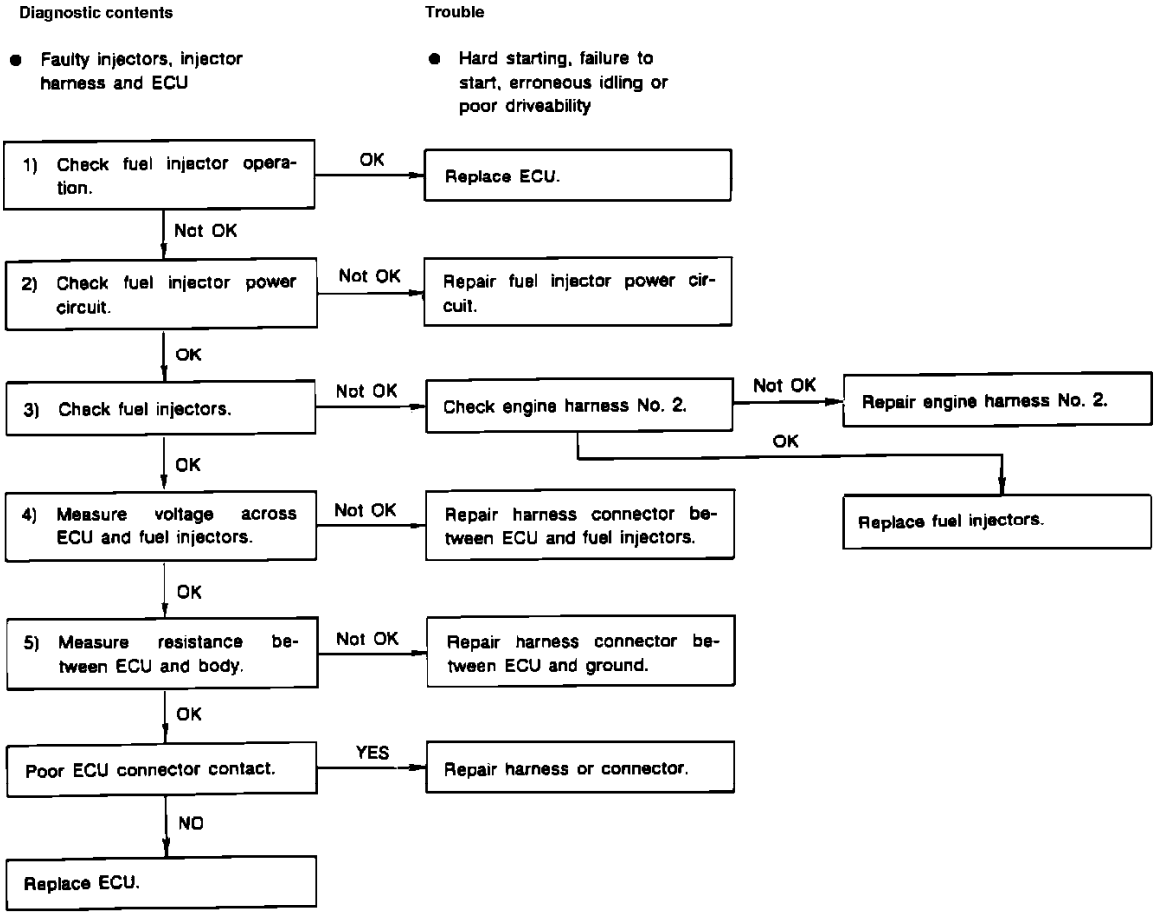

Fuel Injector Diagnostic Chart

FUEL INJECTOR DIAGNOSTIC CHART

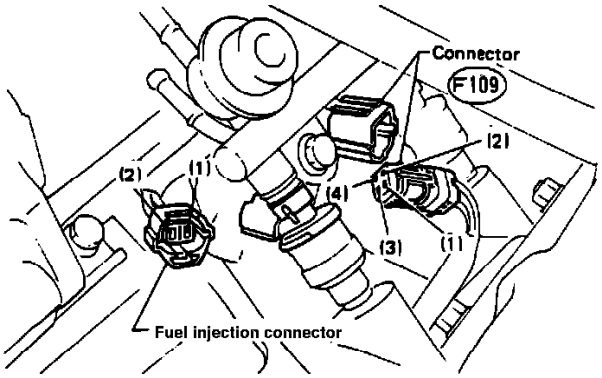

Fuel Injector Testing

CHECK INJECTOR OPERATION, VOLTAGE AND RESISTANCE

1. While cranking engine, check that each injector emits a clicking sound. Use a stethoscope or place a screwdriver on the injectors for this test.
2. Disconnect each injector connector (F109).
3. Turn ignition "ON" and measure voltage between male connector (F109)1 and ground. It should be above 9V.
4. Measure resistance between connector terminals as follows:

Connector & terminal:	**Resistance:**
(F109)1-(F109)2	10 - 18 Ohms
(F109)1-(F109)3	10 - 18 Ohms
(F109)1-(F109)4	10 - 18 Ohms

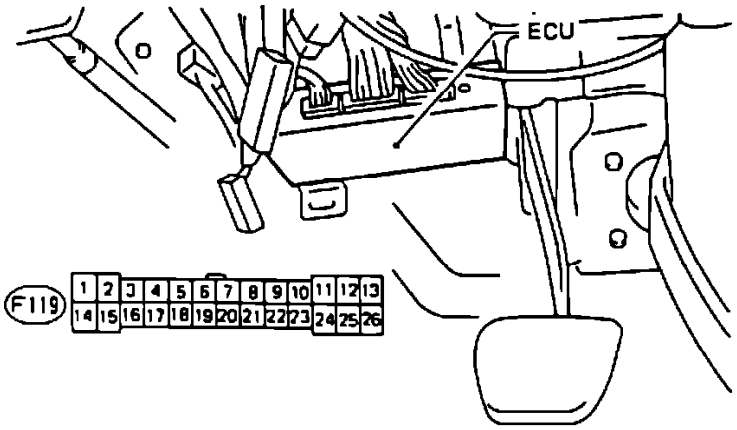

ECU/Crank Angle Sensor Harness Testing

CHECK ECU VOLTAGE AND RESISTANCE

1. Connect injector connector (F109) and turn ignition "ON."
2. Measure voltage between ECU connector terminals and ground as follows:

Connector & terminal:	**Voltage:**
(F119)12-Ground	Above 8V
(F119)25-Ground	Above 8V
(F119)11-Ground	Above 8V

3. Turn ignition "OFF" and disconnect ECU connector.
4. Measure resistance between ECU connector terminals and ground as follows:

Connector & terminal:	**Resistance:**
(F119)13-Ground	Below 10 Ohms
(F119)26-Ground	Below 10 Ohms

DTC 16

Subaru Justy Hatchback 4WD L3-1.2L SOHC (MPFI)

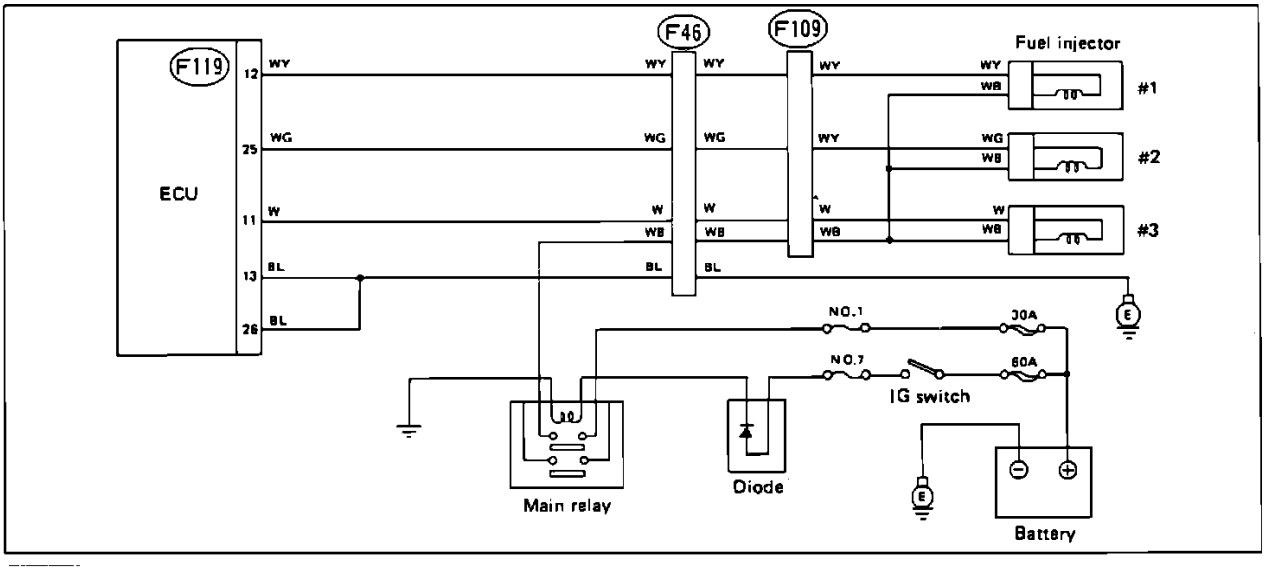

Fuel Injector Schematic

Faulty fuel injectors will set codes 14, 15 and 16 in the on-board diagnostic system. The codes correspond to injectors #1, #2 and #3. Refer to the schematic diagram and test the injectors with the diagnostic chart.

Wire color code identification:

L: Blue
B: Black
Y: Yellow
G: Green
R: Red
W: White
Br: Brown
Lg: Light green
Gr: Gray

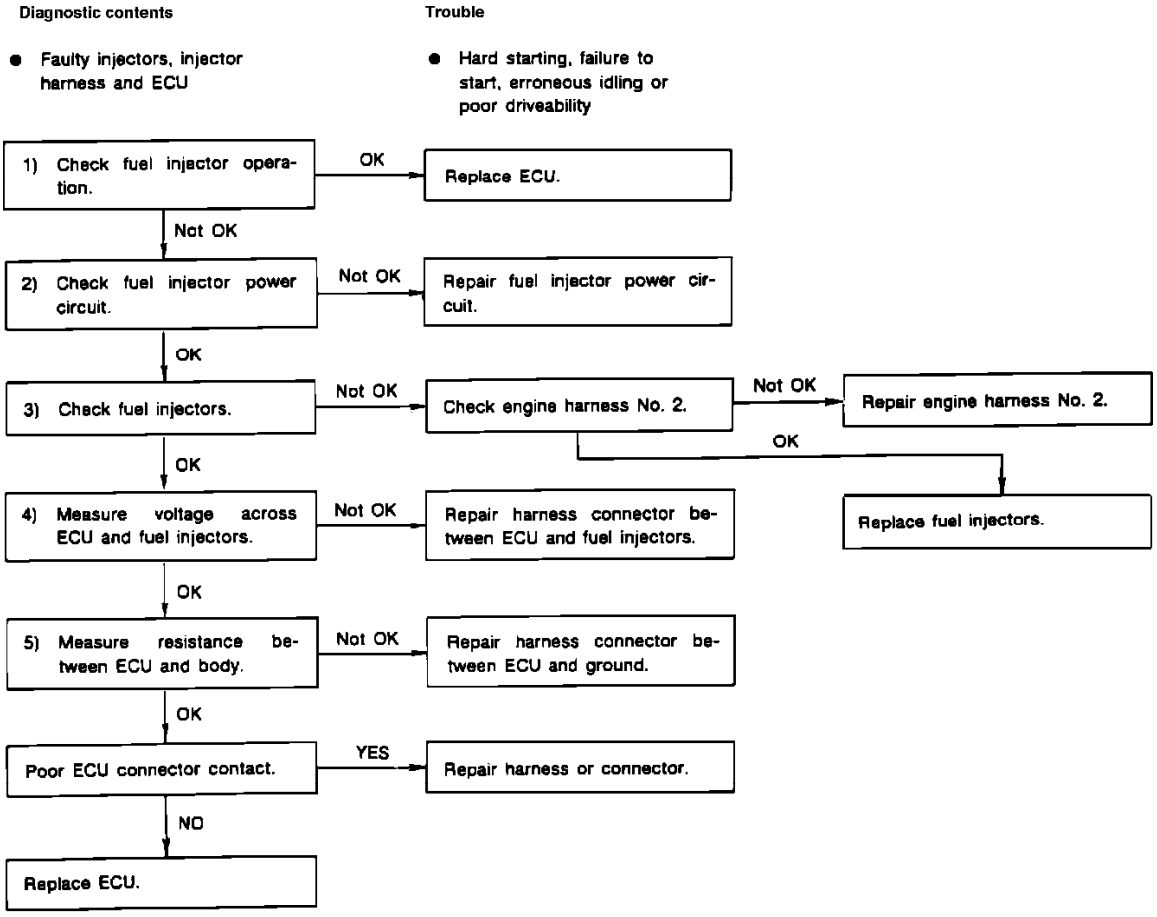

Fuel Injector Diagnostic Chart

FUEL INJECTOR DIAGNOSTIC CHART

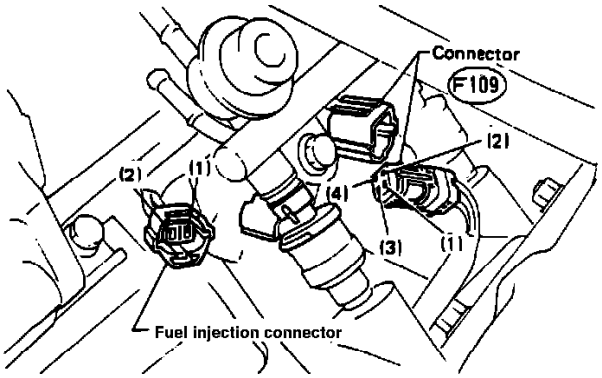

Fuel Injector Testing

CHECK INJECTOR OPERATION, VOLTAGE AND RESISTANCE

1. While cranking engine, check that each injector emits a clicking sound. Use a stethoscope or place a screwdriver on the injectors for this test.
2. Disconnect each injector connector (F109).
3. Turn ignition "ON" and measure voltage between male connector (F109)1 and ground. It should be above 9V.
4. Measure resistance between connector terminals as follows:

Connector & terminal:	**Resistance:**
(F109)1-(F109)2	10 - 18 Ohms
(F109)1-(F109)3	10 - 18 Ohms
(F109)1-(F109)4	10 - 18 Ohms

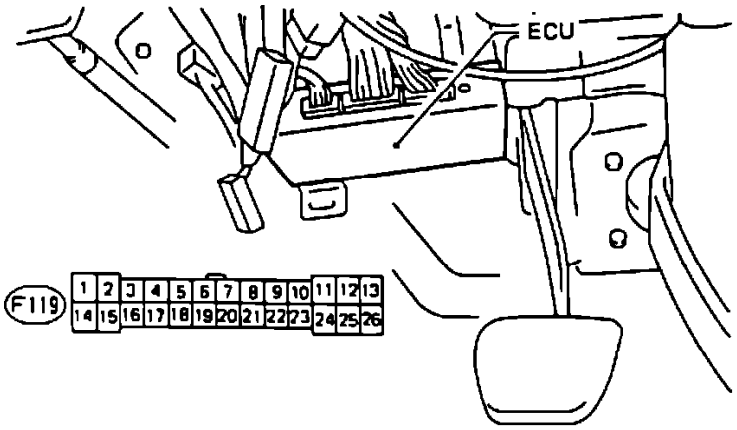

ECU/Crank Angle Sensor Harness Testing

CHECK ECU VOLTAGE AND RESISTANCE

1. Connect injector connector (F109) and turn ignition "ON."
2. Measure voltage between ECU connector terminals and ground as follows:

Connector & terminal:	**Voltage:**
(F119)12-Ground	Above 8V
(F119)25-Ground	Above 8V
(F119)11-Ground	Above 8V

3. Turn ignition "OFF" and disconnect ECU connector.
4. Measure resistance between ECU connector terminals and ground as follows:

Connector & terminal:	**Resistance:**
(F119)13-Ground	Below 10 Ohms
(F119)26-Ground	Below 10 Ohms

DTC 21

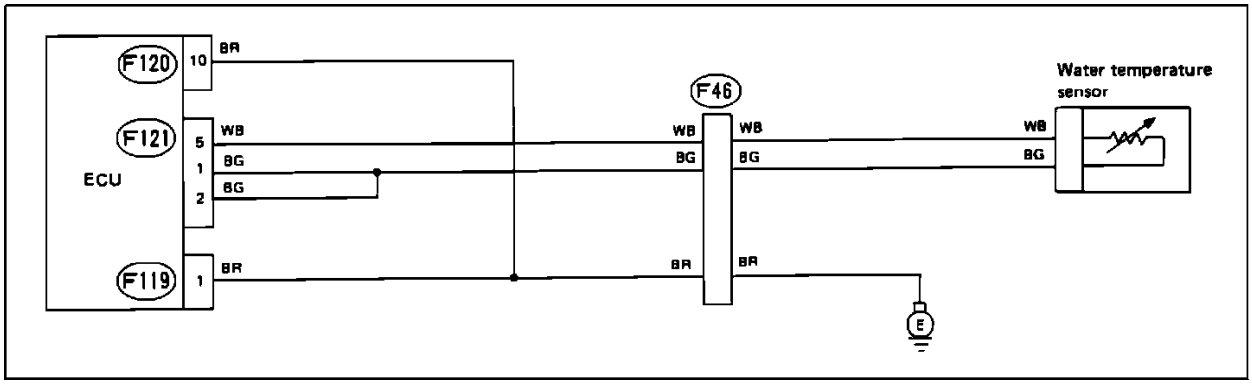

Coolant Temperature Sensor Schematic

A faulty coolant temperature sensor will set code 21 in the on-board diagnostic system. Refer to the schematic diagram and test the coolant sensor with the diagnostic chart.

Wire color code identification:

L: Blue
B: Black
Y: Yellow
G: Green
R: Red
W: White
Br: Brown
Lg: Light green
Gr: Gray

Diagnostic contents

- Shorted signal system
  Faulty water temperature sensor

Trouble

- Hard starting, failure to start, erroneous idling, poor driveability, etc.

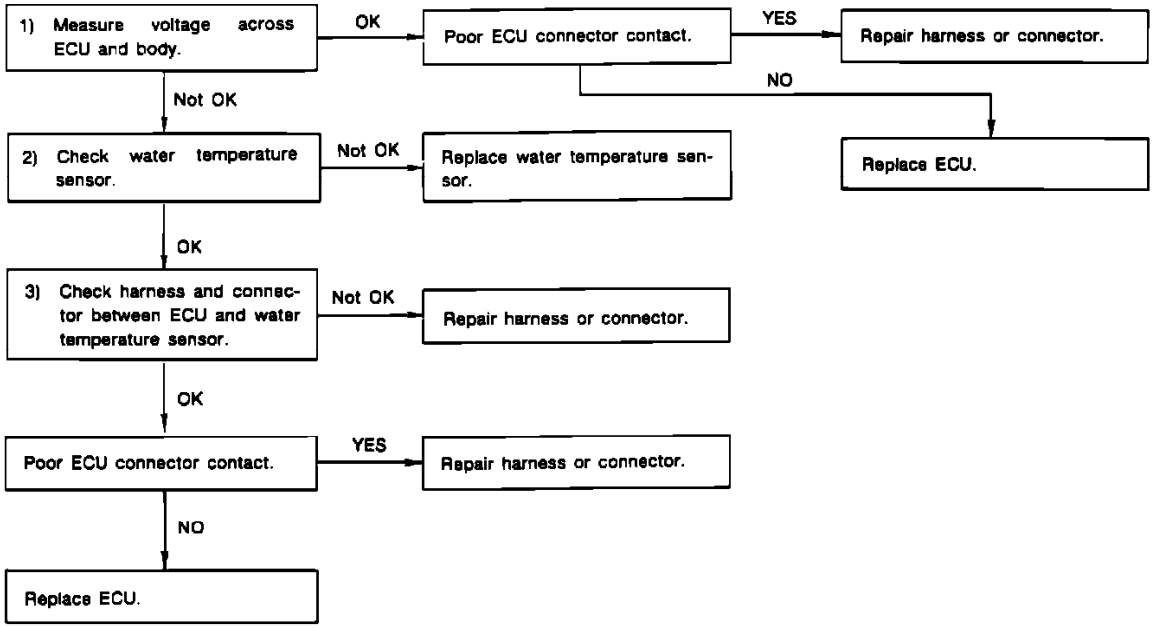

Coolant Temperature Sensor Diagnostic Chart

COOLANT TEMPERATURE SENSOR DIAGNOSTIC CHART

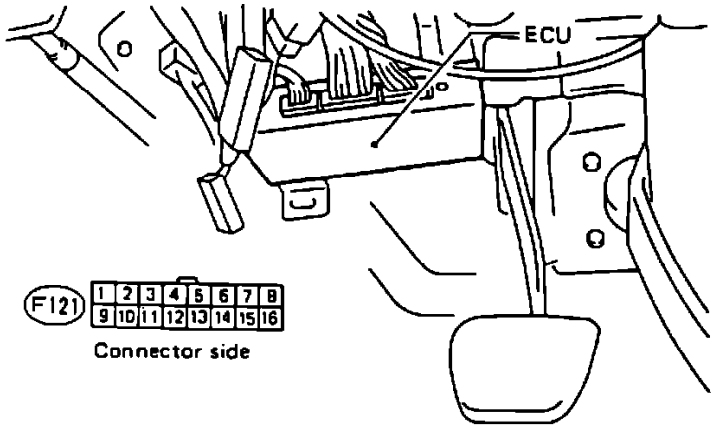

ECU/Coolant Temperature Sensor Harness Testing

CHECK ECU VOLTAGE

1. Turn ignition "ON" (engine "OFF").
2. Check ECU voltage between the following connector terminals:

Connector:	Terminal:	Voltage:
F121	5-1	0.15-4.85V
F121	5-2	0.15-4.85V

CHECK HARNESS BETWEEN ECU AND TEMPERATURE SENSOR

1. Disconnect ECU connector.
2. Measure resistance between ECU connector and sensor connector:

Connector & terminal:	Resistance:
(F121)5-(F22)2	Below 1 Ohm
(F121)1-(F22)1	Below 1 Ohm
(F121)2-(F22)1	Below 1 Ohm

3. Measure resistance between ECU connector and terminal (F121)5 and ground. Reading should be infinite.

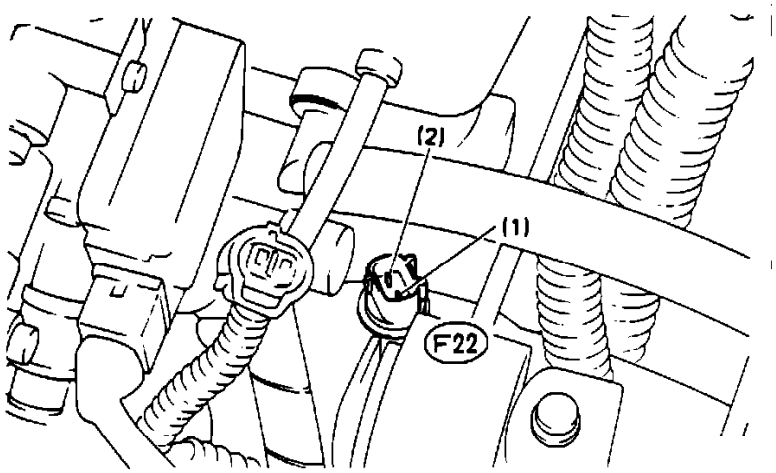

Coolant Temperature Sensor Testing

CHECK COOLANT TEMPERATURE SENSOR

1. Disconnect coolant temperature sensor connector.
2. Measure resistance between sensor terminals 1 and 2 (sensor side):

Resistance:	Temperature:
2 - 3K Ohms	20° C (68° F)
270 - 370 Ohms	80° C (176° F)

DTC 23

Subaru Justy Hatchback 4WD L3-1.2L SOHC (MPFI)

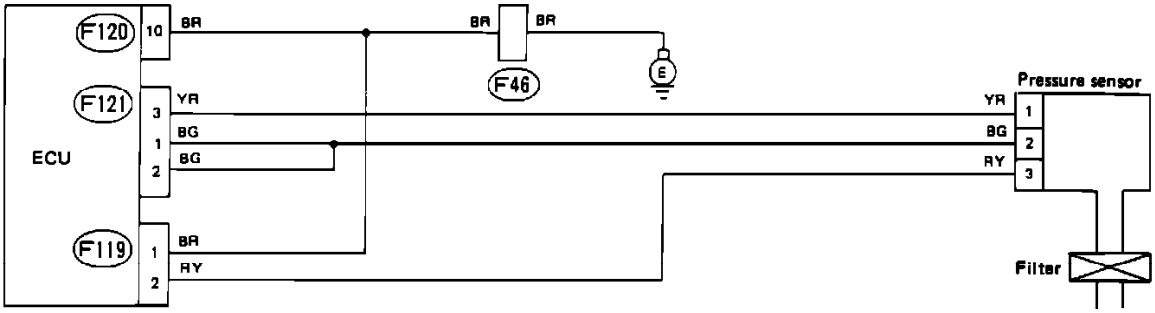

Pressure Sensor Schematic

The intake air flow measuring system is a pressure sensor connected with a hose to the intake plenum. A faulty pressure sensor will set code 23 in the on-board diagnostic system. A disconnected or broken pressure sensor hose will set code 65. Refer to the schematic diagram and test the sensor with the diagnostic chart.

Wire color code identification:

L: Blue
B: Black
Y: Yellow
G: Green
R: Red
W: White
Br: Brown
Lg: Light green
Gr: Gray

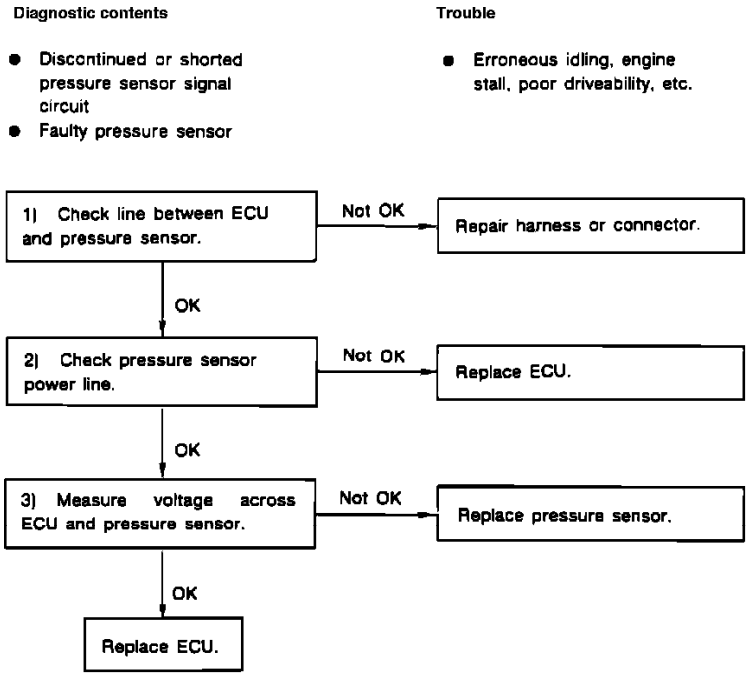

Pressure Sensor Diagnostic Chart

PRESSURE SENSOR DIAGNOSTIC CHART

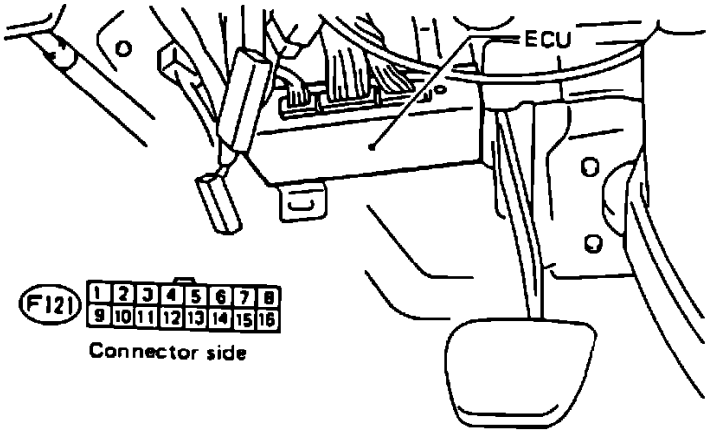

Pressure Sensor Harness

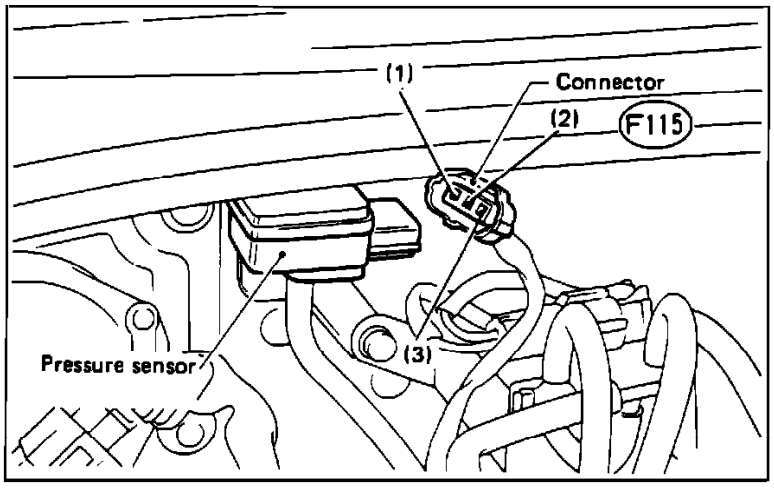

Pressure Sensor Testing

CHECK ECU HARNESS

1. With ignition switch "OFF," disconnect ECU connector.
2. Measure resistance between ECU connector and pressure sensor connector as follows:

Connector & terminal:	**Resistance:**
(F121)1-(F115)2	Below 1 Ohm
(F121)2-(F115)2	Below 1 Ohm
(F121)3-(F115)1	Below 1 Ohm
(F121)2-(F115)3	Below 1 Ohm

3. Connect ECU connector and measure resistance between pressure sensor connector (F115) terminals:

Connector & terminal:	**Resistance:**
(F115)1-(F115)2	Infinite
(F115)3-(F115)2	Infinite

CHECK PRESSURE SENSOR VOLTAGE

1. With ignition "ON," voltage across pressure sensor connector terminals should be as follows:

Connector & terminal:	**Voltage:**
(F115)3-(F115)2	4.5-5.5V

2. Connect pressure sensor connector and turn ignition "ON."
3. Measure voltage across ECU connector terminals as follows:

Connector & terminal:	**Voltage: [1]**
(F121)3-(F121)1	3.4-3.8V
(F121)3-(F121)2	3.4-3.8V

4. Start and idle engine. Measure voltage across ECU connector terminals as follows:

Connector & terminal:	**Voltage: [1]**

(F121)3-(F121)1	1.6-2.1V
(F121)3-(F121)2	1.6-2.1V

[1] With atmospheric pressure at 760mmHg (29.92 inHg).

DTC 24

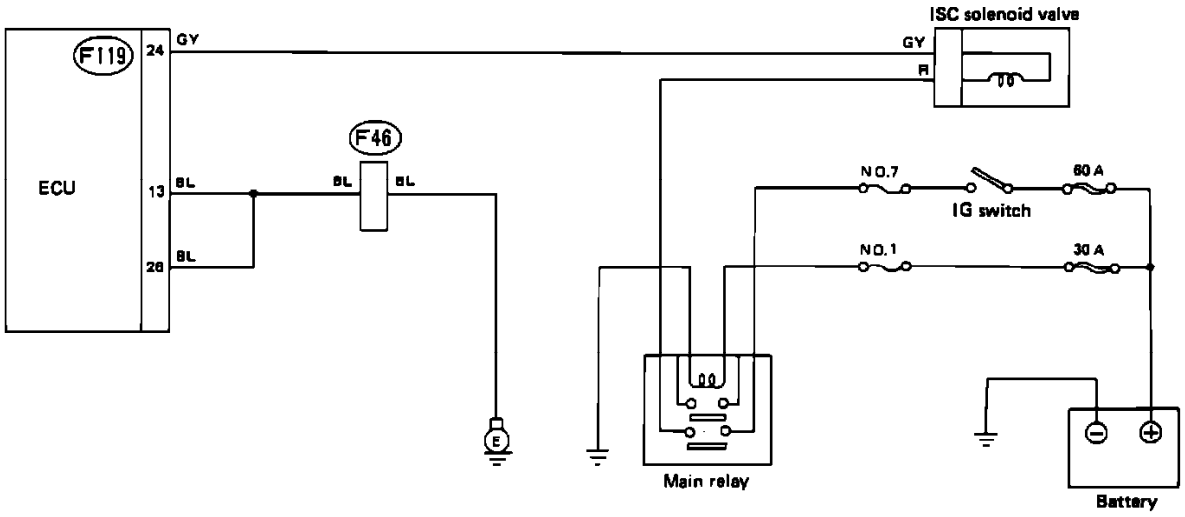

Idle Speed Control Solenoid Schematic

A faulty idle speed control (ISC) solenoid will set code 24 in the on-board diagnostic system. Refer to the schematic diagram and test the solenoid with the diagnostic chart.

Wire color code identification:

L: Blue
B: Black
Y: Yellow
G: Green
R: Red
W: White
Br: Brown
Lg: Light green
Gr: Gray

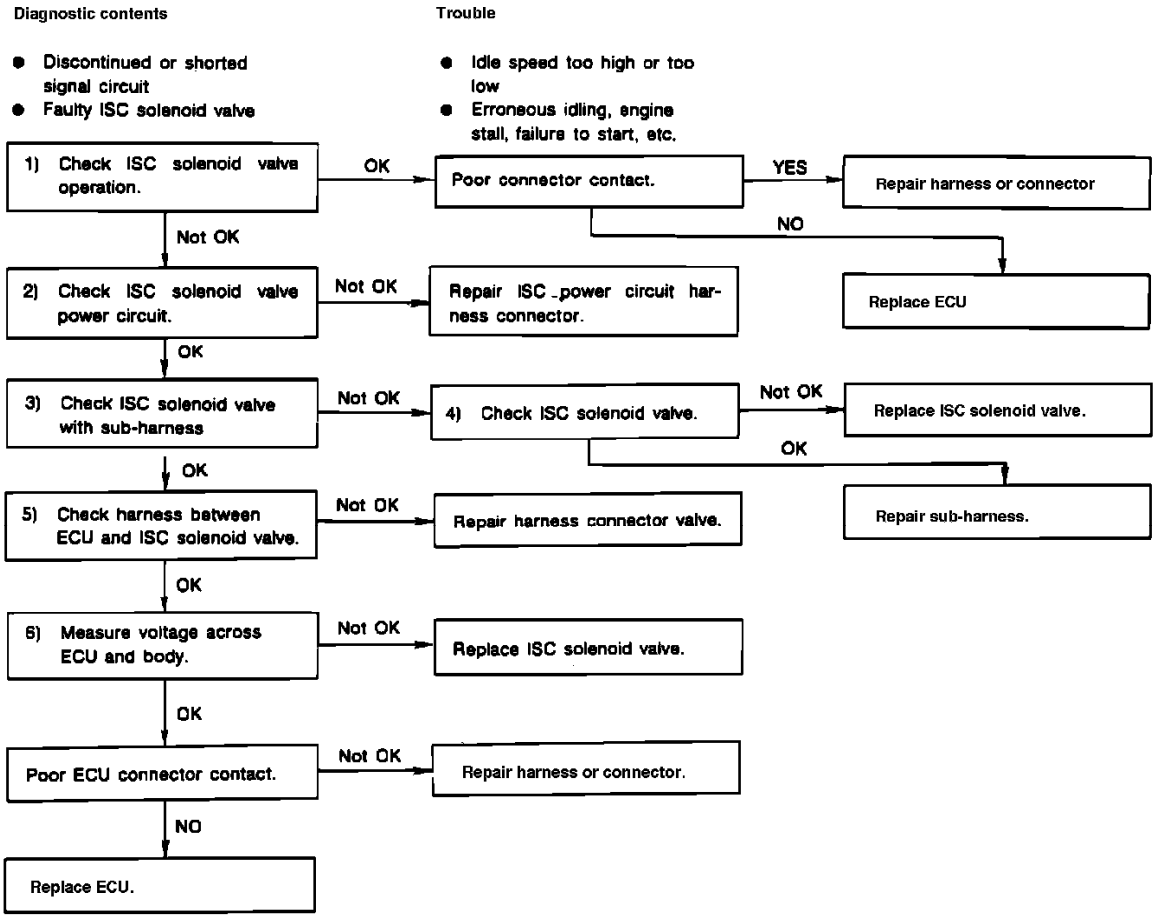

Idle Speed Control Solenoid Diagnostic Chart

ISC SOLENOID DIAGNOSTIC CHART

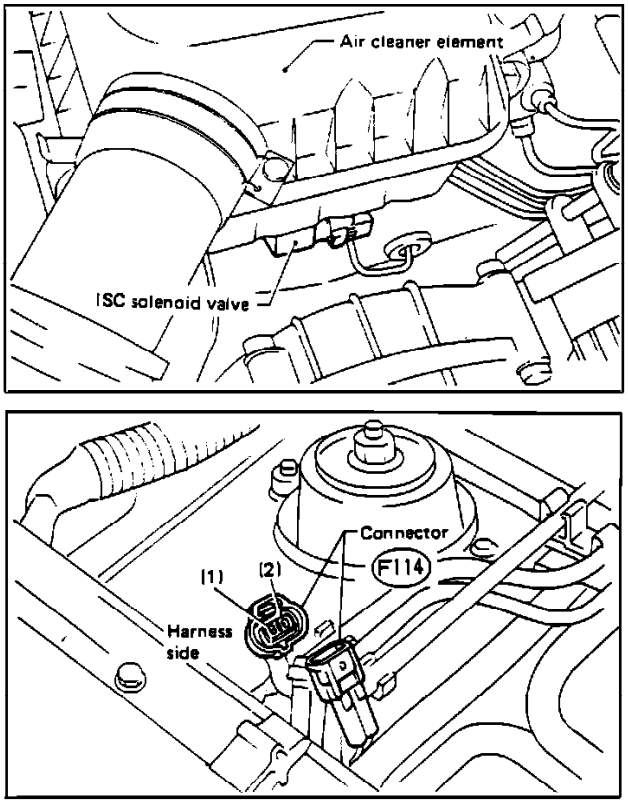

Idle Speed Control Solenoid Testing

CHECK ISC OPERATION, VOLTAGE AND RESISTANCE

1. Connect "Test Mode" connector of on-board diagnostic system.
2. Turn ignition "ON."
3. Check ISC solenoid valve for operating vibration at 0.5 second intervals. Do not confuse ISC solenoid sound with CPC solenoid sound.

4. Turn ignition "OFF" and disconnect ISC harness connector (F114).
5. Turn ignition "ON" and measure voltage across harness connector terminal (F114)2 and ground. It should be above 9V.
6. Turn ignition "OFF" and measure resistance across harness connector terminals (F114)1 and (F114)2. It should be 20-30 Ohms at 20° C (68° F).
7. Measure resistance between ISC solenoid valve connector terminals #1 and #2. It should be 20-30 Ohms at 20° C (68° F).

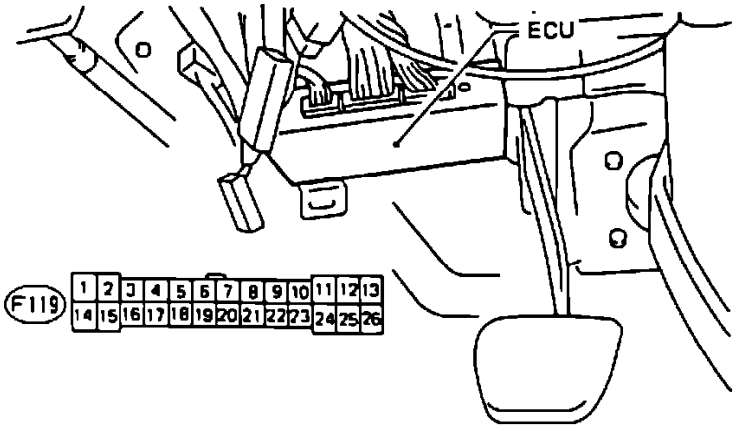

ECU/Crank Angle Sensor Harness Testing

CHECK ECU HARNESS

1. Disconnect ECU connector.
2. Measure resistance between ECU and ISC solenoid connectors as follows:

Connector & terminal:	**Resistance:**
(F119)24-(F114)1	Below 1 Ohm
(F119)24-Ground	Infinite

3. Measure resistance between ECU and ground as follows:

Connector & terminal:	**Resistance:**
(F119)13-Ground	Below 10 Ohms
(F119)26-Ground	Below 10 Ohms

CHECK ECU VOLTAGE

1. Connect ECU and ISC solenoid connectors.
2. Disconnect "Test Mode" connector.
3. Turn ignition "ON" and measure voltage between ECU connector terminal (F119)24 and ground. It should read above 8V.

DTC 26

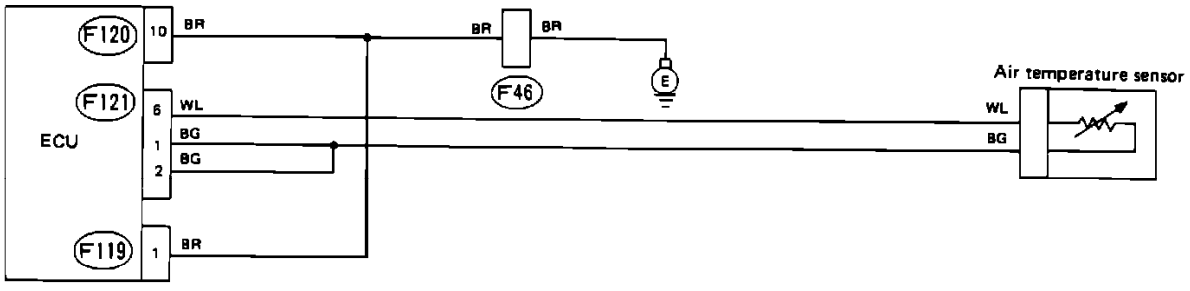

Air Temperature Sensor Schematic

A faulty air temperature sensor will set code 26 in the on-board diagnostic system. Refer to the schematic diagram and test the sensor with the diagnostic chart.

Wire color code identification:

L: Blue
B: Black
Y: Yellow
G: Green
R: Red
W: White

Br: Brown
Lg: Light green
Gr: Gray

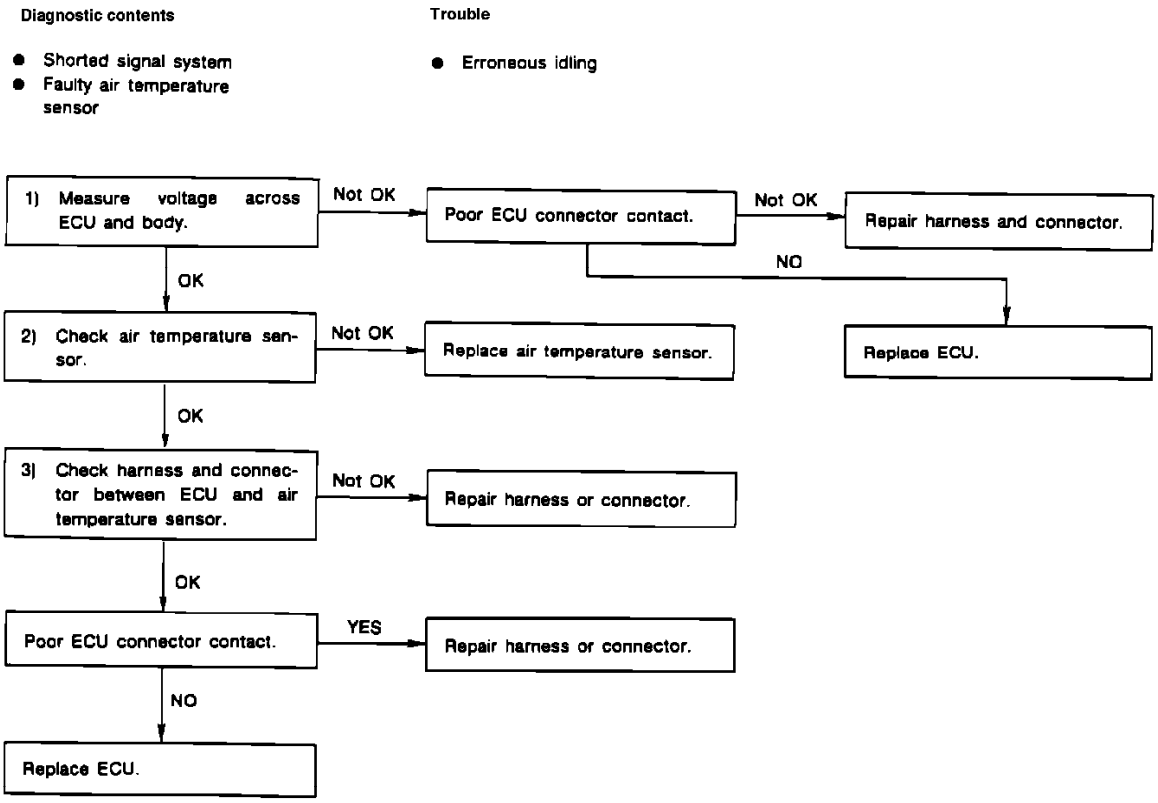

Air Temperature Sensor Diagnostic Chart

AIR TEMPERATURE SENSOR DIAGNOSTIC CHART

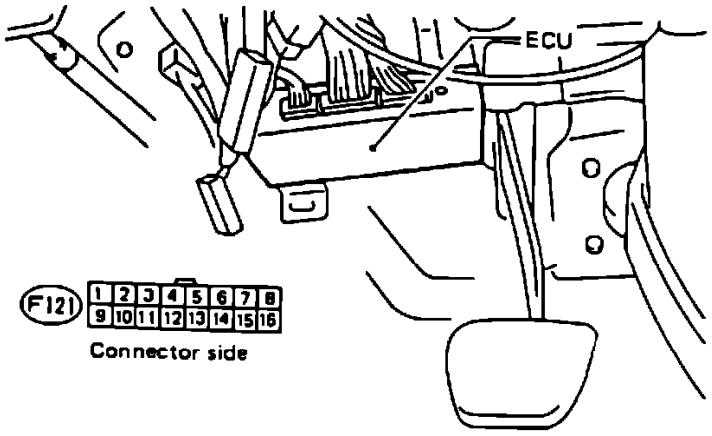

Pressure Sensor Harness

CHECK VOLTAGE AND RESISTANCE

1. With ignition "ON" and engine not running, measure voltage across ECU connector terminals as follows:

Connector & terminal:	**Voltage:**
(F121)6-(F121)1	0.15-4.85V
(F121)6-(F121)2	0.15-4.85V

2. With ignition "OFF," disconnect ECU connector and measure resistance between ECU connector and sensor connector as follows:

Connector & terminal:	**Resistance:**
(F121)6-(F113)2	Below 1 Ohm
(F121)1-(F113)1	Below 1 Ohm
(F121)2-(F113)1	Below 1 Ohm

3. Measure resistance between ECU connector terminal (F121)6 and ground. It should be infinite.

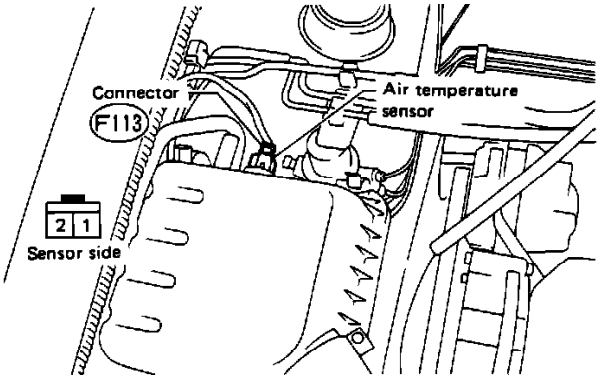

Air Temperature Sensor Testing

CHECK AIR TEMPERATURE SENSOR

1. With ignition switch "OFF," disconnect sensor connector.
2. Measure resistance between sensor terminals (F113)1 and (F113)2 for these resistance values:

Resistance:	**Temperature:**
2 - 3K Ohms	20° C (68° F)
270 - 370 Ohms	80° C (176° F)

DTC 32

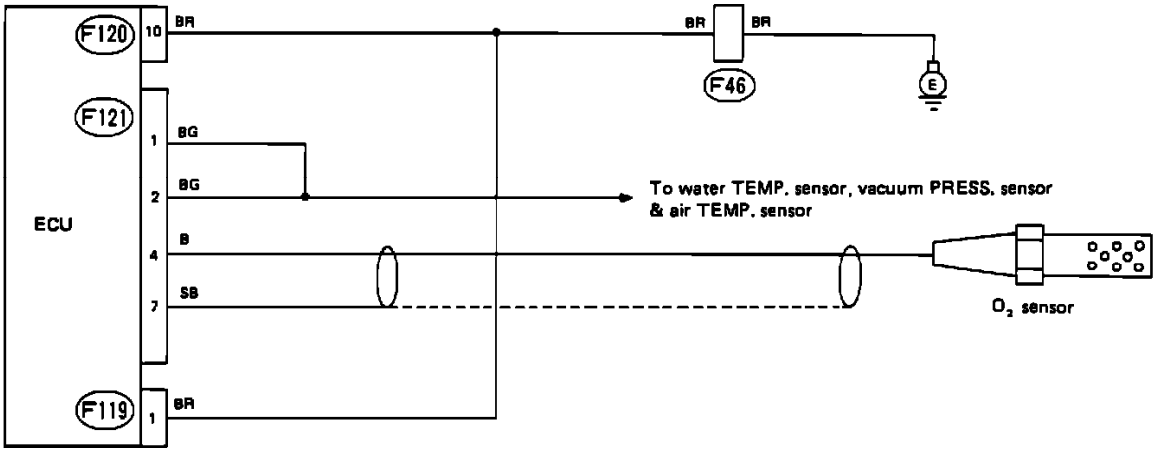

Oxygen Sensor Schematic

A faulty oxygen sensor will set code 32 in the on-board diagnostic system. Refer to the schematic diagram and test the sensor with the diagnostic chart.

Wire color code identification:

L: Blue
B: Black
Y: Yellow
G: Green
R: Red
W: White
Br: Brown
Lg: Light green
Gr: Gray

Diagnostic contents	Trouble
● Discontinued O_2 sensor signal line ● Shorted O_2 sensor	● Erroneous idling ● Poor driveability

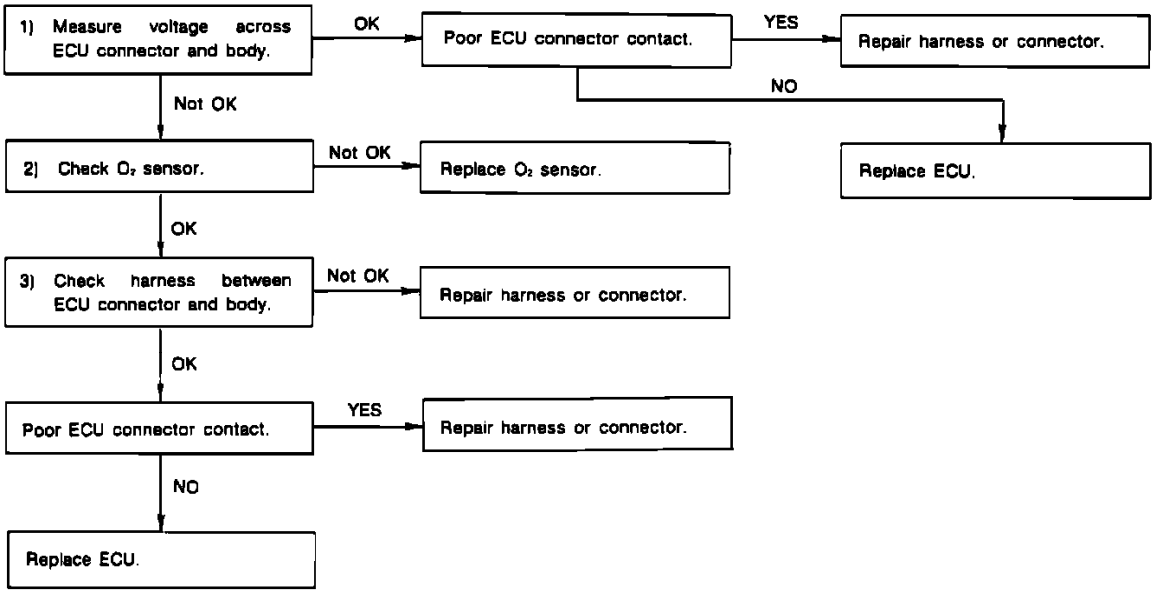

Oxygen Sensor Diagnostic Chart

OXYGEN SENSOR DIAGNOSTIC CHART

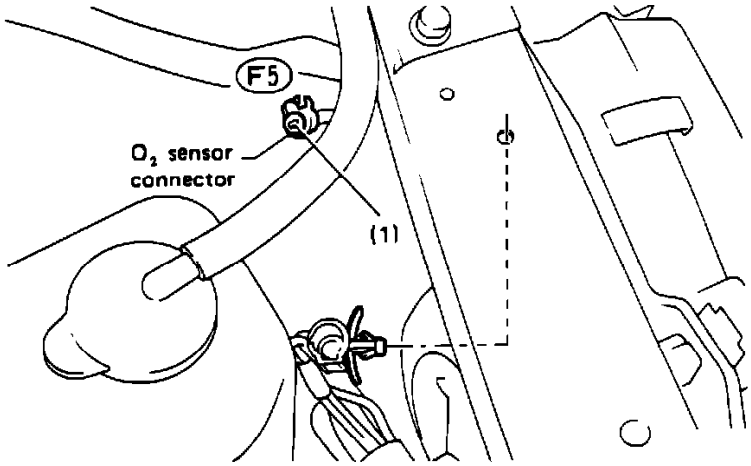

Oxygen Sensor Testing

CHECK ECU VOLTAGE AND OXYGEN SENSOR

1. With engine completely warmed up and idling, measure voltage between ECU connector (F121)4 and ground. Voltage should alternate between 0.3V and 0.6V.
2. Disconnect oxygen sensor and measure voltage between sensor connector (F5)1 and ground. Voltage should remain above .47 volts most of the time.

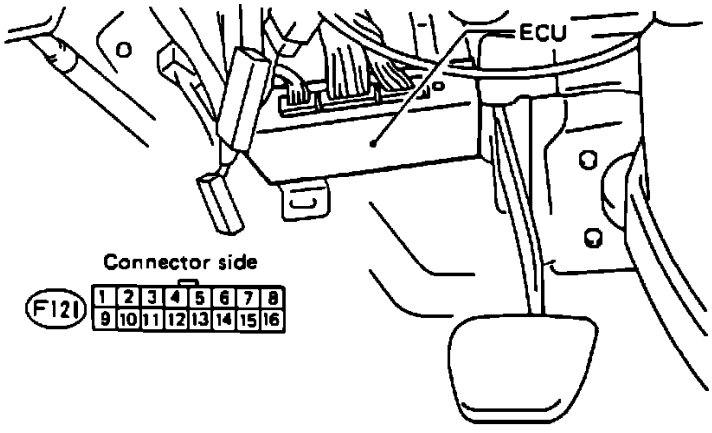

Oxygen Sensor Harness Testing

CHECK ECU HARNESS

1. With ignition "OFF," disconnect ECU and oxygen sensor connector.
2. Measure resistance between ECU connector and oxygen sensor connector:

Connector & terminal:	**Resistance:**
(F121)4-(F5)1	Below 1 Ohm

3. Connect ECU and oxygen sensor connectors.
4. Measure resistance between ECU connector and ground:

Connector & terminal:	**Resistance:**
(F121)1-Ground	Below 10 Ohms
(F121)2-Ground	Below 10 Ohms

DTC 33

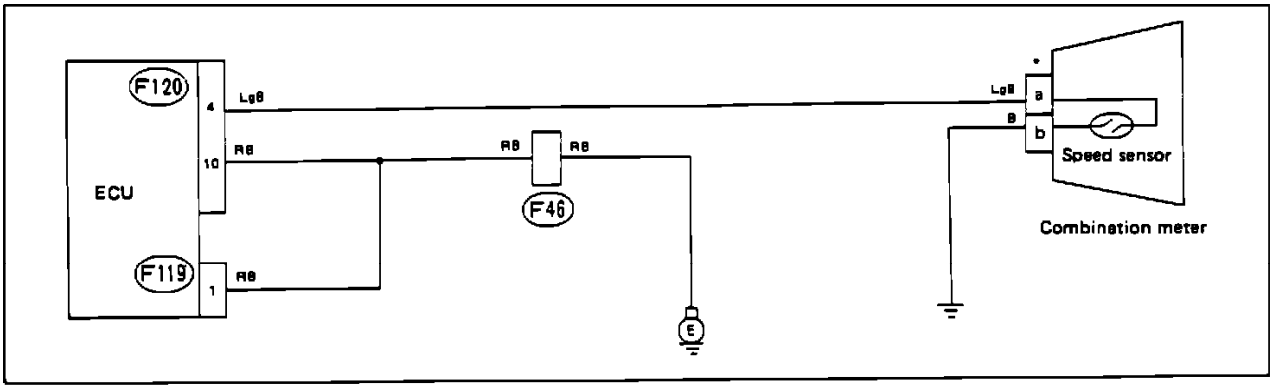

	Mode 1	Connector & Terminal
a	EFC/MT	(i10) No. 8
	MPFI/MT	(i10) No. 11
	ECVT	(i10) No. 12
b	EFC/MT	(i10) No. 6
	MPFI/MT	(i16) No. 21
	ECVT	(i16) No. 21

Vehicle Speed Sensor Schematic

A faulty vehicle speed sensor will set code 33 in the on-board diagnostic system. Refer to the schematic diagram and test the sensor with the diagnostic chart.

Wire color code identification:

L: Blue
B: Black
Y: Yellow
G: Green
R: Red
W: White
Br: Brown
Lg: Light green
Gr: Gray

Diagnostic contents	Trouble
● Discontinued or shorted vehicle speed sensor ● Faulty vehicle sensor and disconnected meter cable	● Erroneous idling

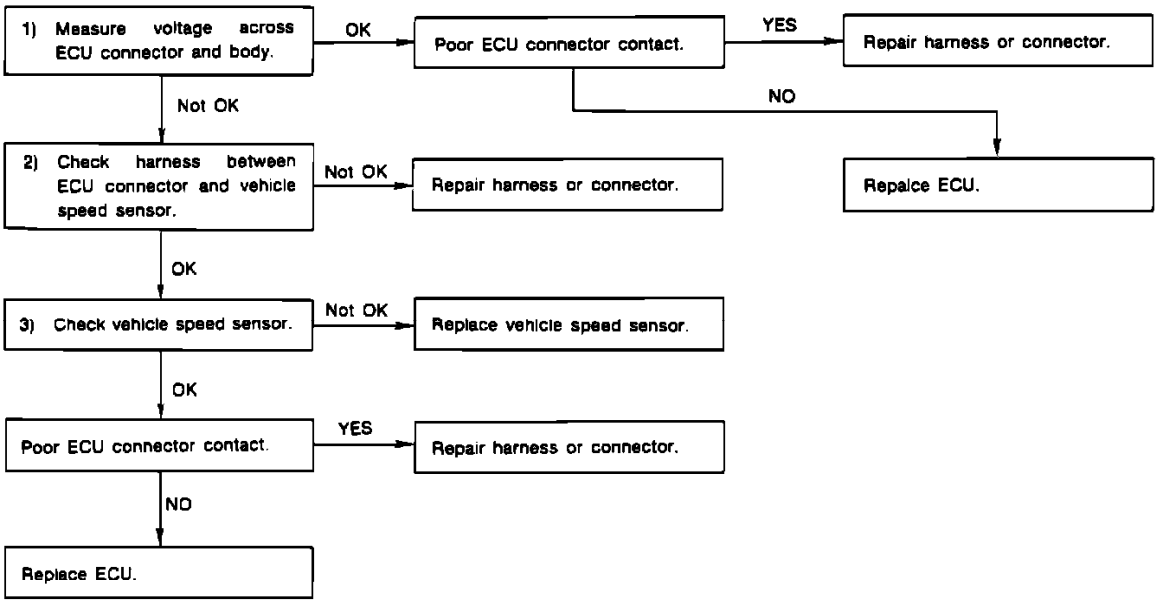

Vehicle Speed Sensor Diagnostic Chart

VEHICLE SPEED SENSOR DIAGNOSTIC CHART

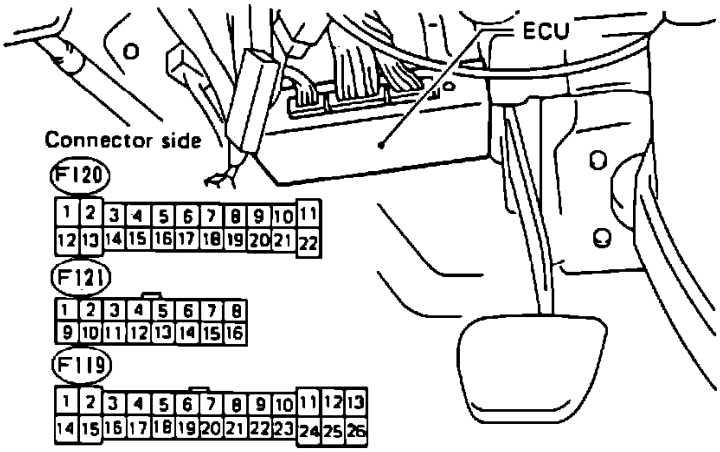

ECU Connectors

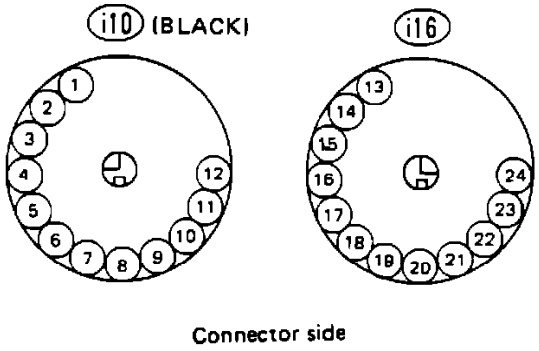

Combination Meter Connectors

CHECK ECU VOLTAGE

1. While slowly moving vehicle, measure voltage between ECU connector (F120)4 and ground.
2. Voltage should fluctuate above and below 2.5V.

CHECK HARNESS BETWEEN ECU AND SPEED SENSOR

1. With ignition "OFF," disconnect ECU and combination meter connectors.
2. Measure resistance between ECU connector (F120)4 and combination meter connector "a." **[1]** Resistance should be less than 1 Ohm.

3. Measure resistance between ECU connector and ground, and between combination meter connector and ground. Readings should be as follows:

Connector & terminal:	**Resistance:**
(F120)4-Ground	Infinite
"b" **[1]**-Ground	Below 10 Ohms
(F119)1-Ground	Below 10 Ohms
(F120)10-Ground	Below 10 Ohms

CHECK SPEED SENSOR

1. Remove combination meter from instrument panel.
2. While slowly moving vehicle, measure resistance between combination meter terminals "a" and "b."**[1]** Tester pointer should deflect, indicating that the speed sensor switch is opening and closing.

[1] Refer to **VEHICLE SPEED SENSOR DIAGNOSTIC CHART** to determine which pins are "a" and "b."

DTC 35

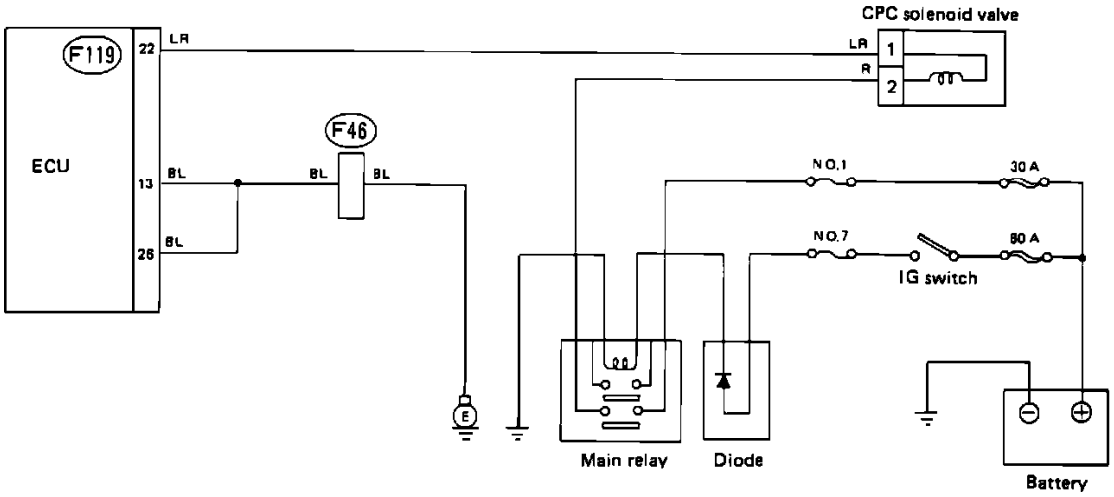

Canister Purge Solenoid Schematic

A faulty canister purge control solenoid valve will set code 35 in the on-board diagnostic system. Refer to the schematic diagram and test the valve with the diagnostic chart.

Wire color code identification:

L: Blue
B: Black
Y: Yellow
G: Green
R: Red
W: White
Br: Brown
Lg: Light green
Gr: Gray

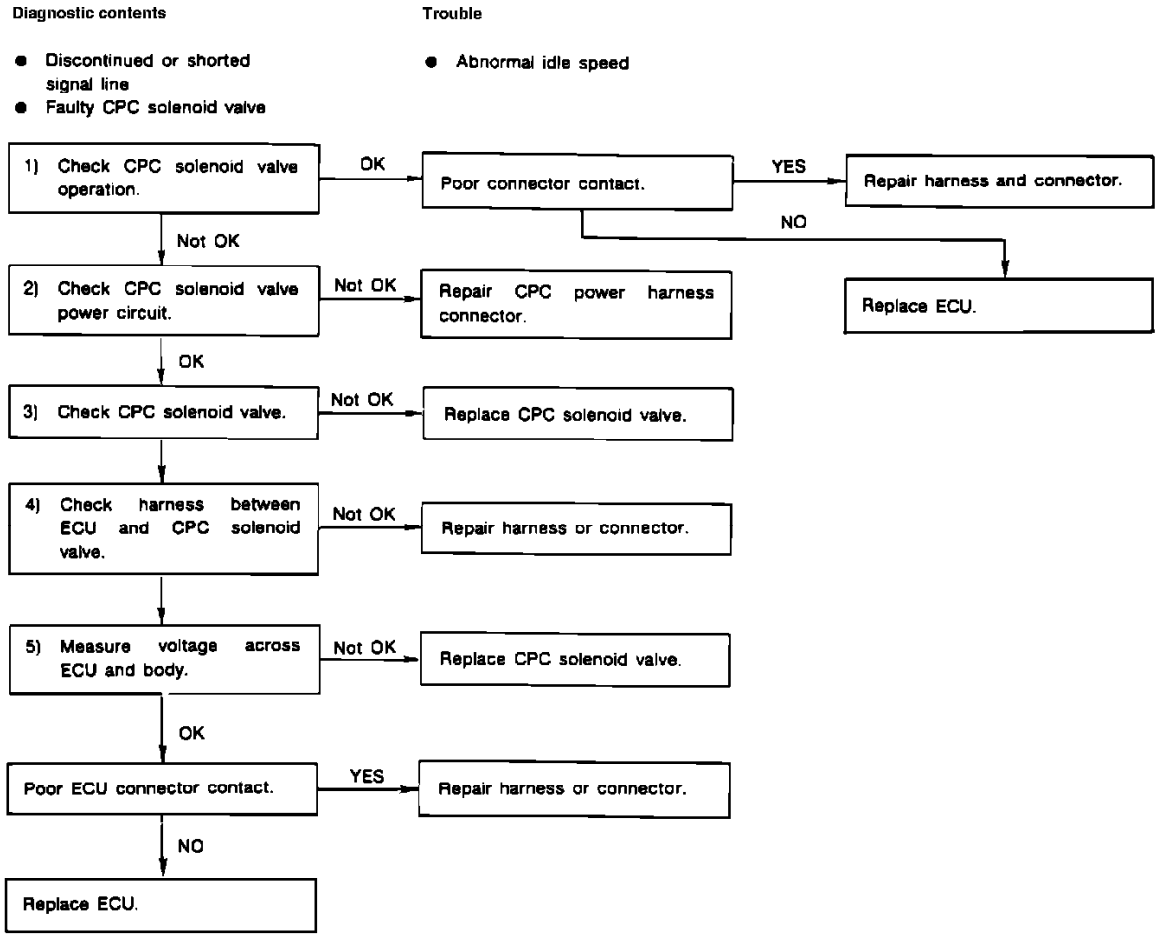

Canister Purge Solenoid Diagnostic Chart

CANISTER PURGE VALVE DIAGNOSTIC CHART

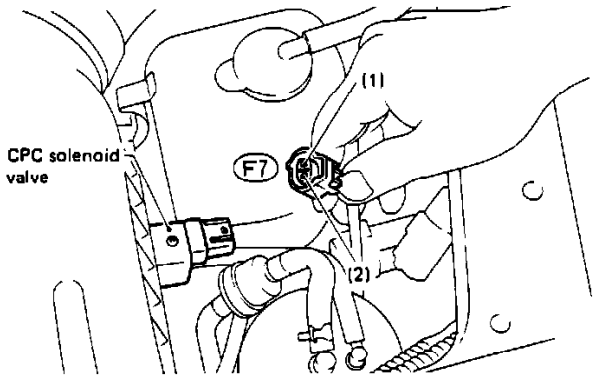

Canister Purge Solenoid Testing

CHECK PURGE SOLENOID VALVE OPERATION

1. Connect "Test Mode" connector of on-board diagnostic system.
2. Turn ignition "ON" and check solenoid for "click" sounds at 0.5 second intervals.

NOTE: Do not confuse this solenoid with the idle speed control solenoid.

CHECK PURGE SOLENOID VALVE POWER CIRCUIT AND RESISTANCE

1. With ignition switch "OFF," disconnect solenoid connector.
2. Turn ignition "ON" and measure voltage between solenoid connector and ground. Voltage at connector terminal (F7)2 should be above 9V.
3. Measure resistance across solenoid terminals (F7)1 and (F7)2. It should be 30-50 Ohms at 20° C (68° F).

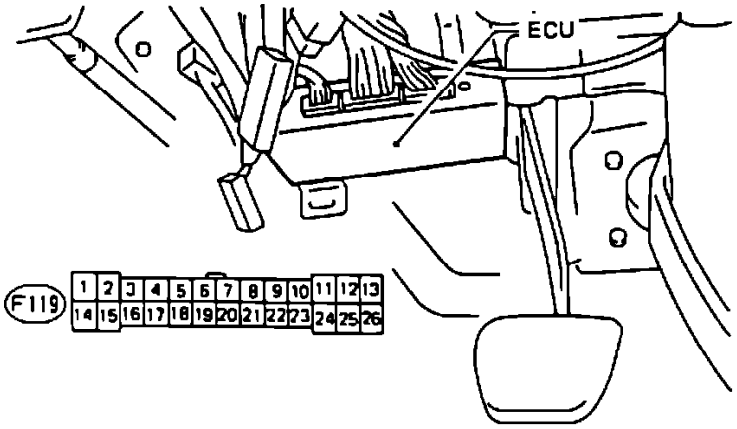

ECU/Crank Angle Sensor Harness Testing

CHECK ECU AND SOLENOID VALVE HARNESS

1. With ignition "OFF," disconnect ECU connector.
2. Measure resistance between ECU connector and solenoid valve connector as follows:

Connector & terminal:	**Resistance:**
(F119)22-(F7)1	Below 1 Ohm
(F119)22-Ground	Infinite

3. Measure resistance between ECU and ground as follows:

Connector & terminal:	**Resistance:**
(F119)13-Ground	Below 10 Ohms
(F119)26-Ground	Below 10 Ohms

4. Reconnect ECU and solenoid valve connectors and switch ignition "ON."
5. Measure voltage between ECU connector (F119)22 and ground.
6. At 0.5 second intervals, voltage reading should alternate between less than 2.5V and more than 8V.

DTC 36

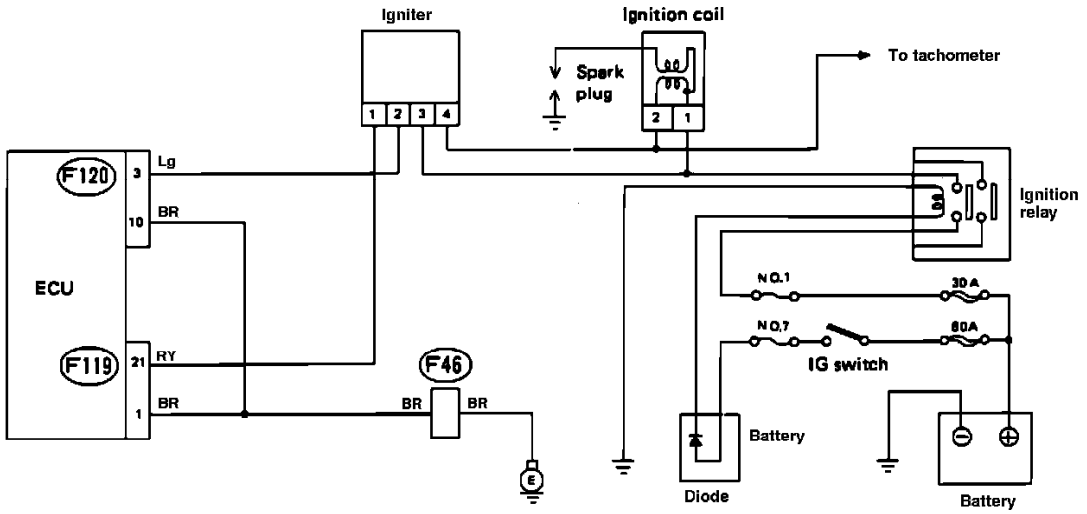

Ignition System Igniter Schematic

A faulty ignition system igniter will set code 36 in the on-board diagnostic system. Refer to the schematic diagram and test the igniter with the diagnostic chart.

Wire color code identification:

L: Blue
B: Black
Y: Yellow
G: Green
R: Red
W: White
Br: Brown

Lg: Light green
Gr: Gray

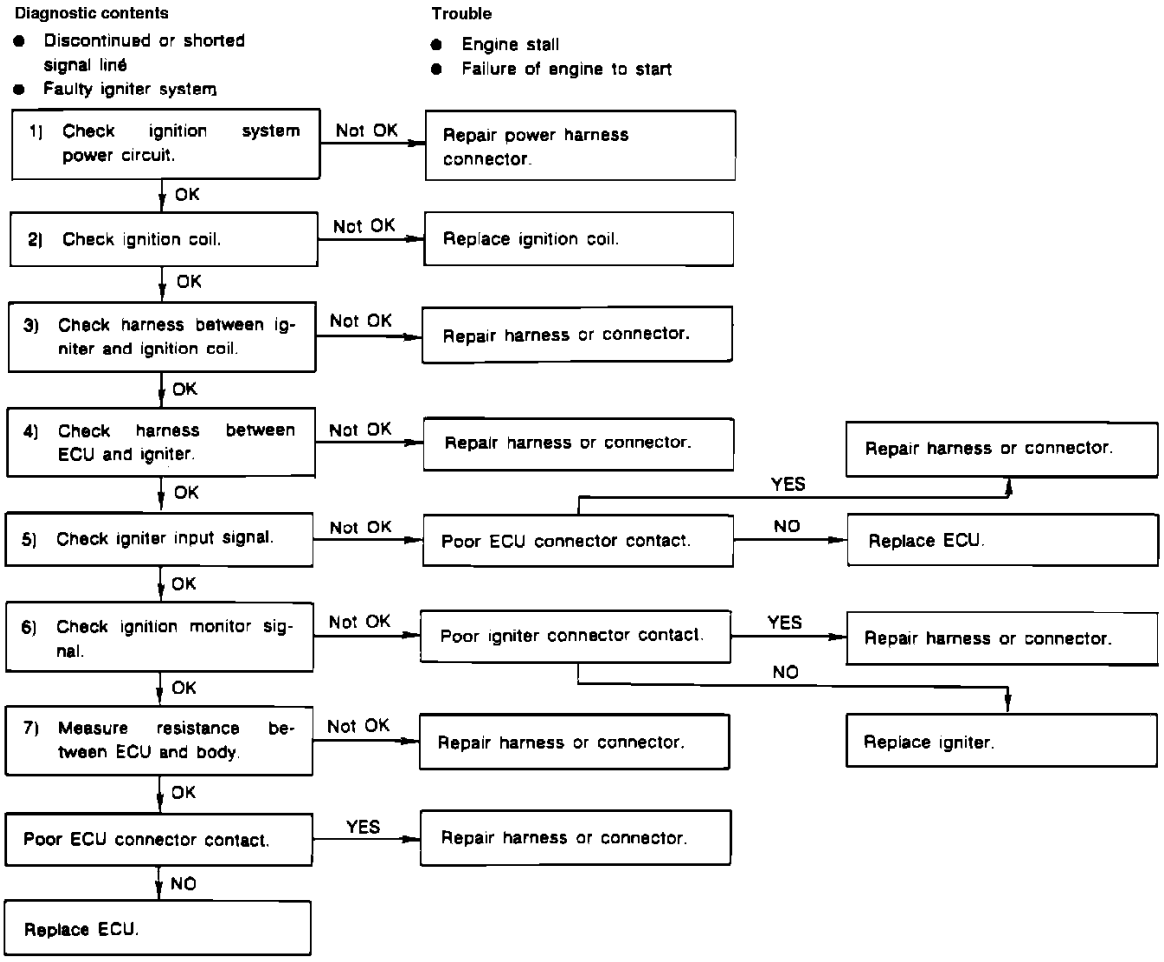

Ignition System Igniter Diagnostic Chart

IGNITION SYSTEM IGNITER DIAGNOSTIC CHART

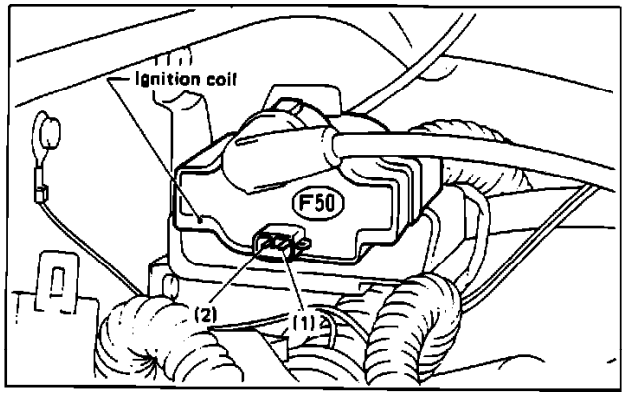

Ignition System Igniter Testing

CHECK VOLTAGE AND RESISTANCE OF COIL AND IGNITER

1. With ignition "OFF," disconnect coil and igniter connectors.
2. Turn ignition "ON" and measure voltage between harness positive terminal of coil and igniter and ground as follows:

Connector & terminal:	**Voltage:**
(F117)3-Ground	Above 9V
(F50)1-Ground	Above 9V

3. Remove high tension lead from coil.
4. Measure resistance between coil connector terminals as follows:

Connector & terminal:	**Resistance:**
(F50)1-(F50)2	0.9-1.1 Ohm @ 20° C (68° F)

5. Measure resistance between coil high tension terminal and connector terminal (F50)1. It should read 10-14K Ohms @ 20° C (68° F).

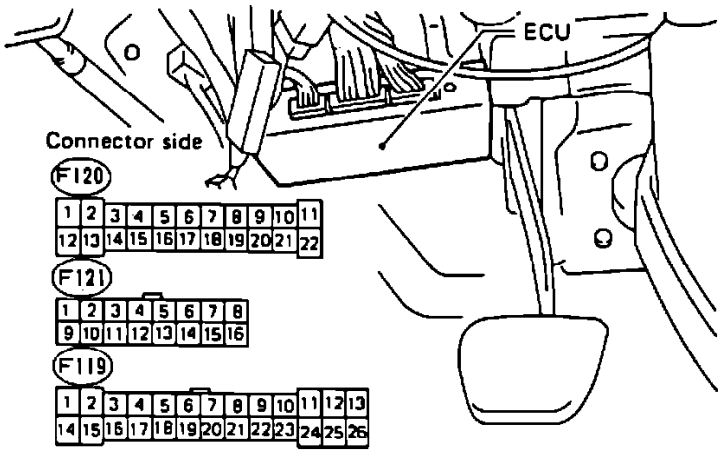

ECU Connectors

CHECK HARNESS BETWEEN IGNITER AND COIL

1. Measure resistance between igniter harness connector (F117)4 and coil harness connector (F50)2. It should be below 1 Ohm.
2. With ECU and igniter disconnected, measure resistance as follows:

Connector & terminal:	**Resistance:**
(F119)21-(F117)1	Below 1 Ohm
(F120)3-(F117)2	Below 1 Ohm

CHECK ECU HARNESS AND GROUND

1. Measure resistance between ECU and ground as follows:

Connector & terminal:	**Resistance:**
(F119)21-Ground	Infinite
(F120)3-Ground	Infinite

2. With ignition "OFF," disconnect ECU connector.
3. Measure resistance between ECU and ground as follows:

Connector & terminal:	**Resistance:**
(F119)1-Ground	Below 10 Ohms
(F120)10-Ground	Below 10 Ohms

CHECK IGNITER OUTPUT SIGNAL

1. With ignition "ON," measure voltage between ECU connector terminal (F119)21 and ground while engine is being cranked.
2. Voltage should fluctuate between 1V and 3V.

CHECK IGNITION MONITOR SIGNAL

1. With ignition "ON," measure voltage between ECU connector terminal (F120)3 and ground while engine is being cranked.
2. Voltage should fluctuate between 1V and 3V.

DTC 41

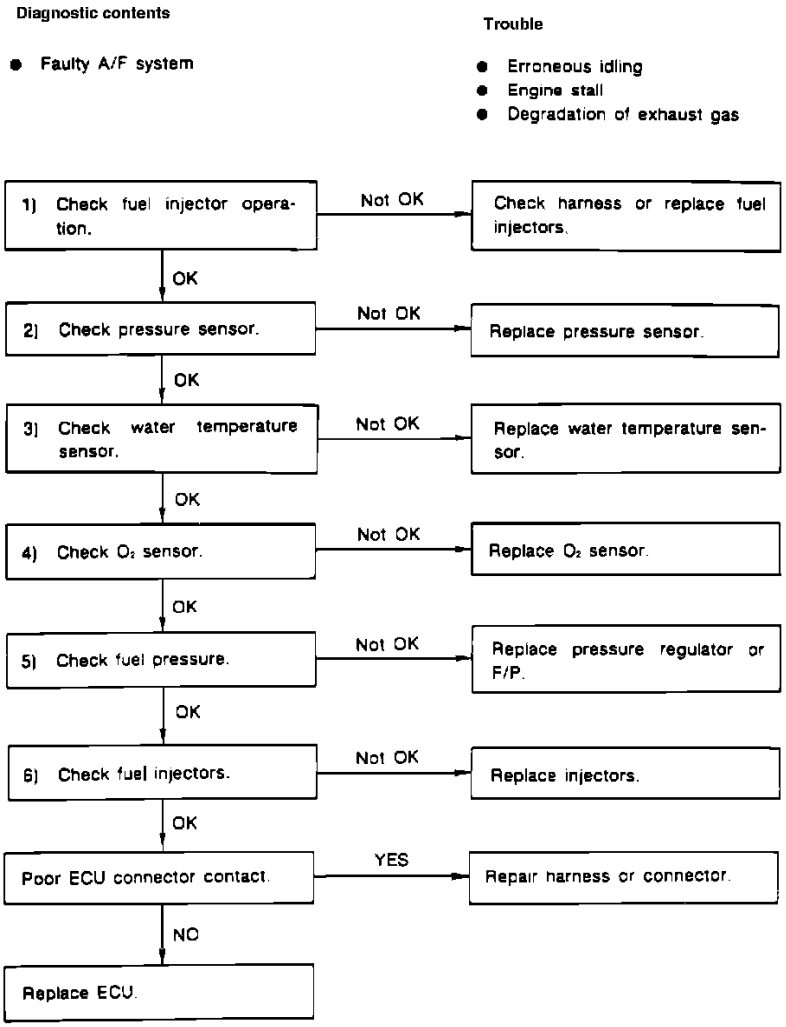

Air/Fuel Ratio Control System

If the ECU detects a problem in any of several systems that are involved in regulating the air/fuel, a code 41 will be set in the on-board diagnostic system. Use the diagnostic chart to methodically troubleshoot the various possibilities until the problem is isolated.

DTC 42

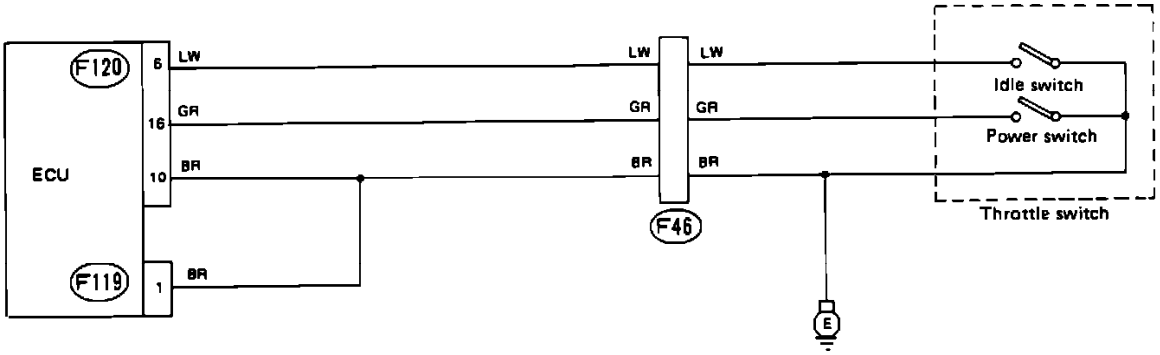

Idle/Throttle Switch Schematic

A faulty idle/throttle switch may set either of two codes in the on-board diagnostic system. Code 42 will set if the idle switch is defective and code 43 will set if the power switch is defective. Refer to the schematic diagram and test the sensor with the diagnostic chart.

Wire color code identification:

L: Blue
B: Black
Y: Yellow
G: Green
R: Red
W: White
Br: Brown
Lg: Light green

Gr: Gray

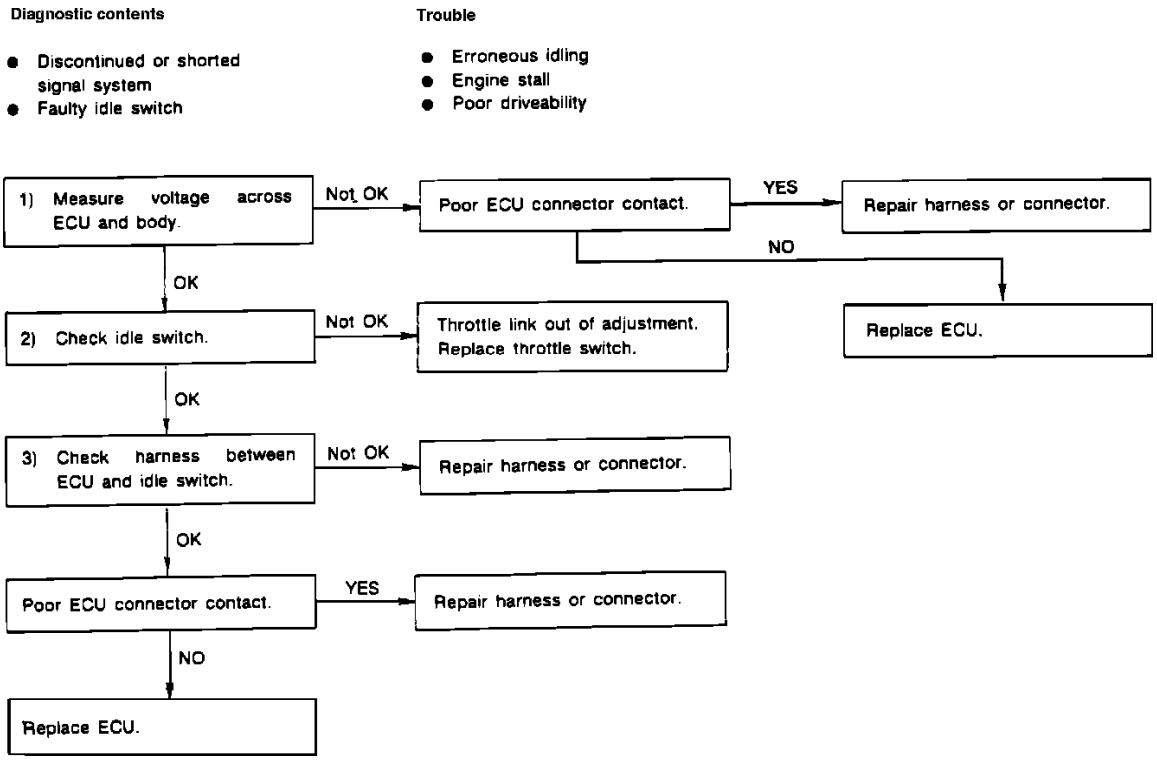

Idle/Throttle Switch Diagnostic Chart

IDLE/THROTTLE SWITCH DIAGNOSTIC CHART

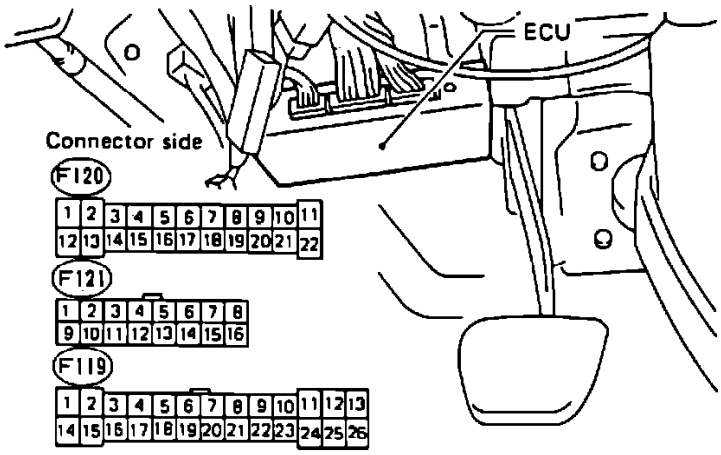

ECU Connectors

CHECK VOLTAGE AND RESISTANCE

1. With ignition "ON" and engine not running, measure voltage across ECU connector terminals as follows:

Connector & terminal:	**Voltage:**
(F120)6-(F121)1	Below 1V (fully closed throttle)
(F120)6-(F121)2	Above 8V (fully open throttle)

2. With ignition "OFF," disconnect ECU connector and measure resistance between ECU connector and switch connector as follows:

Connector & terminal:	**Resistance:**
(F120)6-(F108)3	Below 1 Ohm
(F119)1-(F108)2	Below 1 Ohm
(F120)10-(F108)2	Below 1 Ohm
(F120)6-Ground	Infinite
(F119)1-Ground	Below 10 Ohms
(F120)10-Ground	Below 10 Ohms

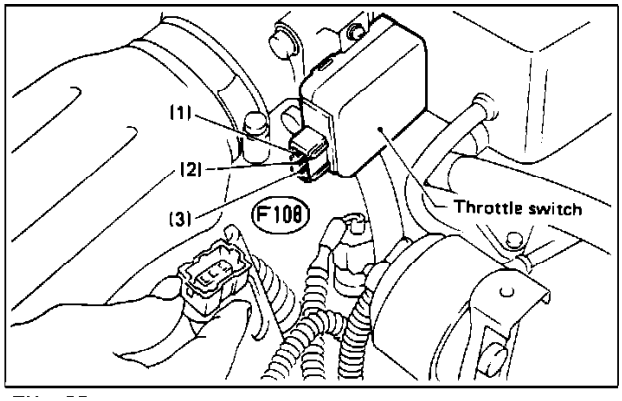

Idle/Throttle Switch Testing

CHECK IDLE/THROTTLE SWITCH

1. With ignition "OFF," disconnect switch connector.
2. Measure resistance between switch connector terminals as follows:

Connector & terminal:	**Resistance:**
(F108)3-(F108)2	Below 1 Ohm (fully closed throttle)
(F108)3-(F108)2	Infinite (fully open throttle)

DTC 43

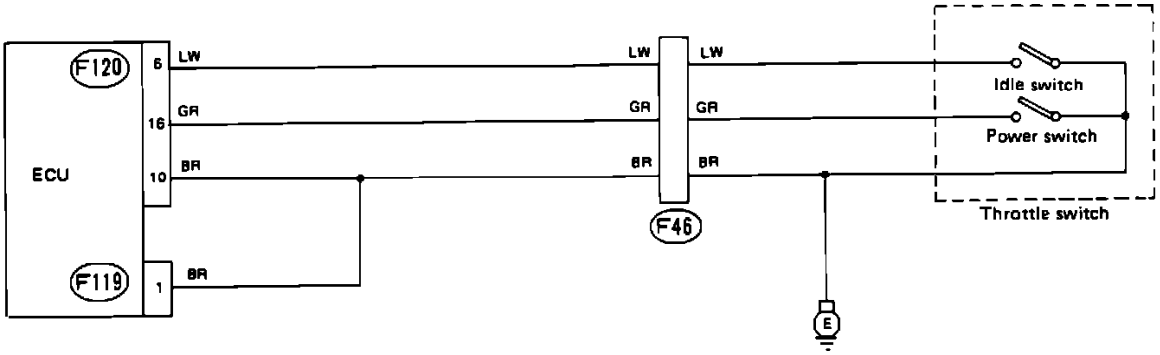

Idle/Throttle Switch Schematic

A faulty idle/throttle switch may set either of two codes in the on-board diagnostic system. Code 42 will set if the idle switch is defective and code 43 will set if the power switch is defective. Refer to the schematic diagram and test the sensor with the diagnostic chart.

Wire color code identification:

L: Blue
B: Black
Y: Yellow
G: Green
R: Red
W: White
Br: Brown
Lg: Light green
Gr: Gray

Diagnostic contents	Trouble
● Discontinued or shorted signal system ● Faulty idle switch	● Erroneous idling ● Engine stall ● Poor driveability

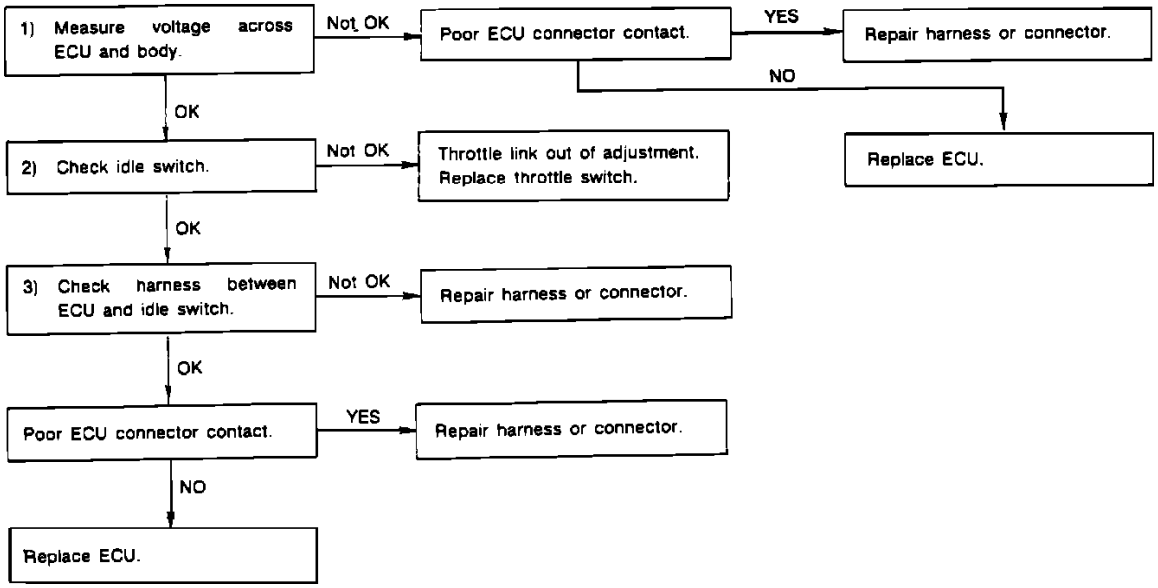

Idle/Throttle Switch Diagnostic Chart

IDLE/THROTTLE SWITCH DIAGNOSTIC CHART

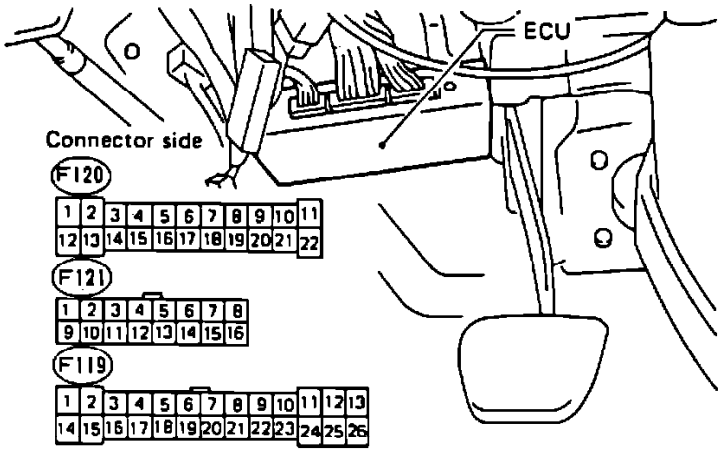

ECU Connectors

CHECK VOLTAGE AND RESISTANCE

1. With ignition "ON" and engine not running, measure voltage across ECU connector terminals as follows:

Connector & terminal:	Voltage:
(F120)6-(F121)1	Below 1V (fully closed throttle)
(F120)6-(F121)2	Above 8V (fully open throttle)

2. With ignition "OFF," disconnect ECU connector and measure resistance between ECU connector and switch connector as follows:

Connector & terminal:	Resistance:
(F120)6-(F108)3	Below 1 Ohm
(F119)1-(F108)2	Below 1 Ohm
(F120)10-(F108)2	Below 1 Ohm
(F120)6-Ground	Infinite
(F119)1-Ground	Below 10 Ohms
(F120)10-Ground	Below 10 Ohms

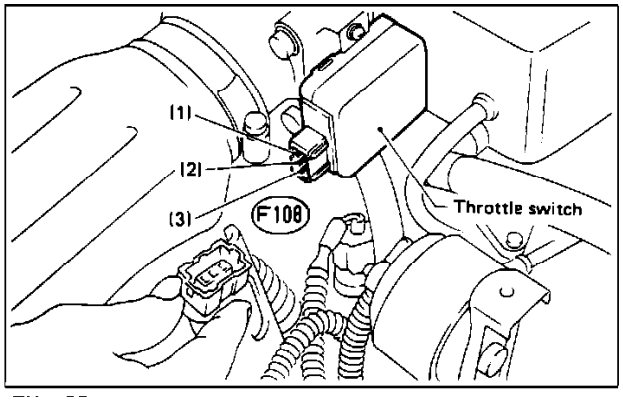

Idle/Throttle Switch Testing

CHECK IDLE/THROTTLE SWITCH

1. With ignition "OFF," disconnect switch connector.
2. Measure resistance between switch connector terminals as follows:

Connector & terminal:	**Resistance:**
(F108)3-(F108)2	Below 1 Ohm (fully closed throttle)
(F108)3-(F108)2	Infinite (fully open throttle)

DTC 45

- ^ A faulty atmospheric pressure sensor will set code 45 in the on-board diagnostic system.
- ^ Symptoms of a bad sensor include poor idle and driveability at high altitude, stalling, hard starting, etc.
- ^ If symptoms plus the presence of code 45 indicate a faulty atmospheric pressure sensor, it is necessary to replace the ECU as a unit. The sensor is an integral ECU component.

DTC 52

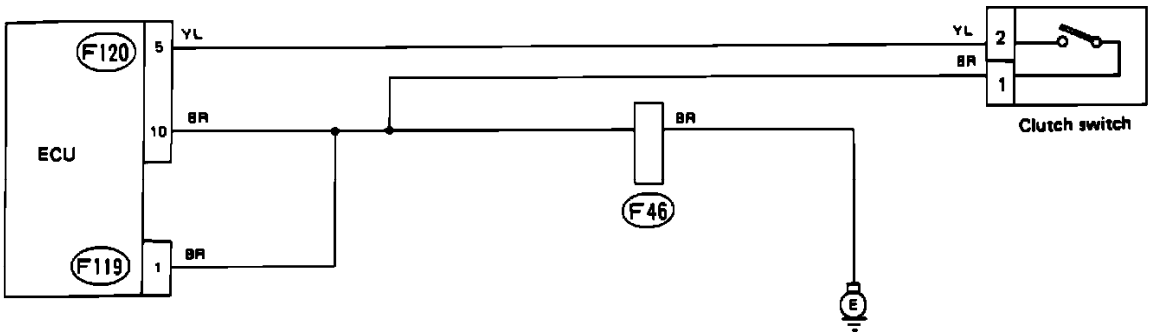

Clutch Switch Schematic

A faulty clutch switch will set code 52 in the on-board diagnostic system. Refer to the schematic diagram and test the coolant sensor with the diagnostic chart.

Wire color code identification:

L: Blue
B: Black
Y: Yellow
G: Green
R: Red
W: White
Br: Brown
Lg: Light green
Gr: Gray

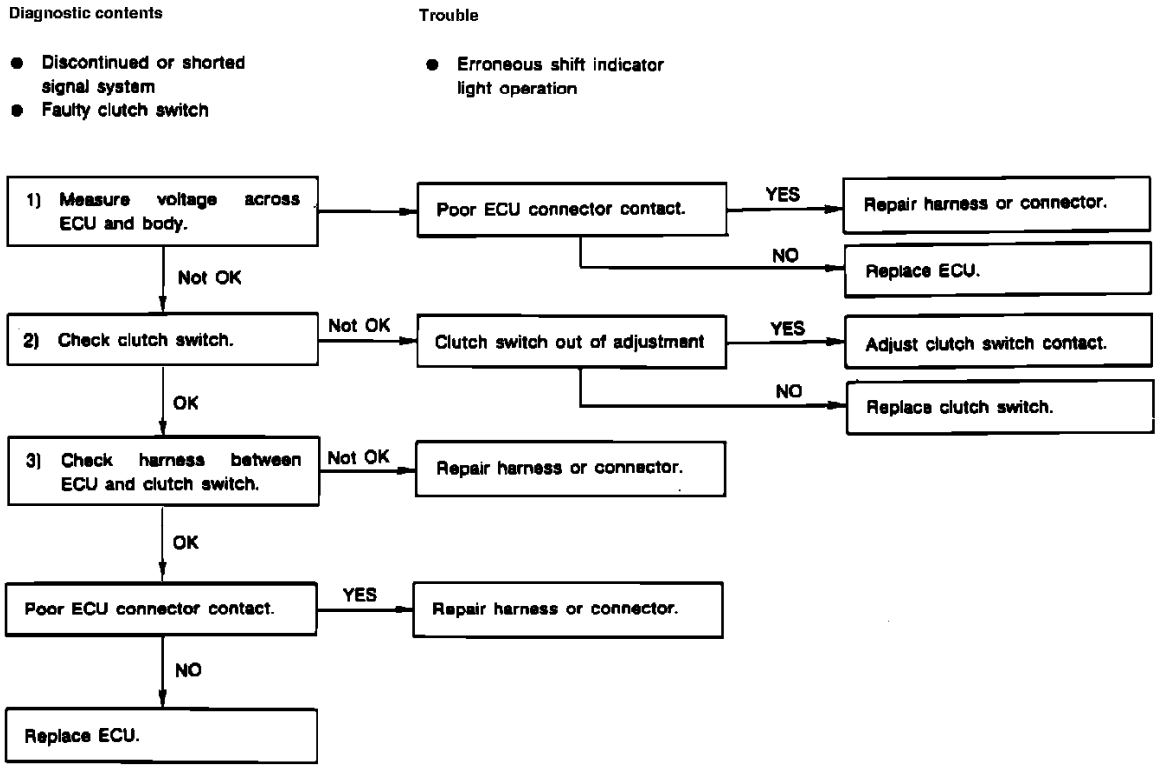

Clutch Switch Diagnostic Chart

CLUTCH SWITCH DIAGNOSTIC CHART

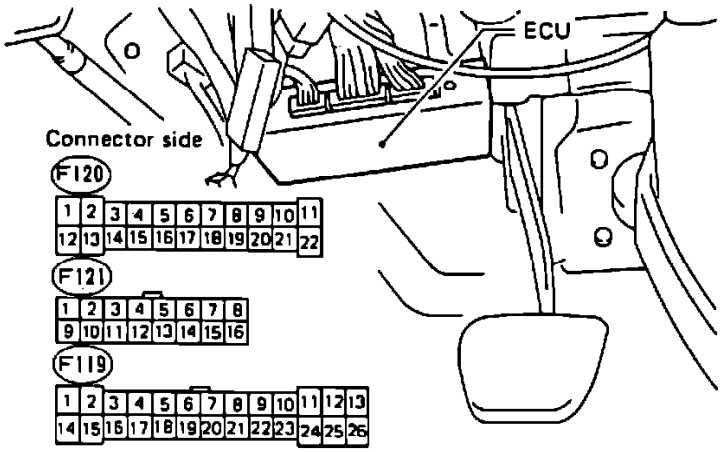

ECU Connectors

CHECK ECU AND CLUTCH SWITCH VOLTAGE AND RESISTANCE

1. With ignition switch "ON," measure voltage between ECU connector terminal and ground as follows:

Connector & terminal:	**Voltage:**
(F120)5-Ground	Below 1V (clutch released)
(F120)5-Ground	Above 8V (clutch depressed)

2. Turn ignition "OFF" and disconnect clutch switch connector.
3. Measure resistance between clutch switch connector terminals as follows:

Connector & terminal:	**Resistance:**
(F82)1-(F82)2	Below 1 Ohm (pedal released)
(F82)1-(F82)2	Infinite (pedal depressed)

CHECK ECU HARNESS

1. With ignition "OFF," disconnect ECU connector.
2. Measure resistance between ECU and clutch switch harness connector and between ECU connector and ground:

Connector & terminal:	**Resistance:**
(F120)5-(F82)2	Below 1 Ohm

(F119)1-(F82)1	Below 1 Ohm
(F120)10-(F82)1	Below 1 Ohm
(F120)5-Ground	Infinite
(F119)1-Ground	Below 10 Ohms
(F120)10-Ground	Below 10 Ohms

DTC 62

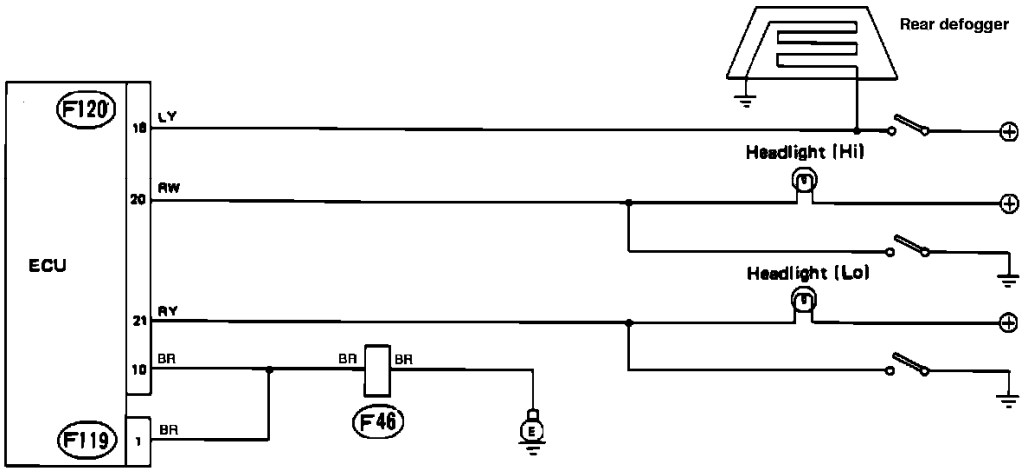

Electrical Load Signal Schematic

The ECU monitors electrical loads from the headlights and rear window defogger. Problems in these systems will set code 62 in the on-board diagnostic system. Refer to the schematic diagram and test the systems with the diagnostic chart.

Wire color code identification:

L: Blue
B: Black
Y: Yellow
G: Green
R: Red
W: White
Br: Brown
Lg: Light green
Gr: Gray

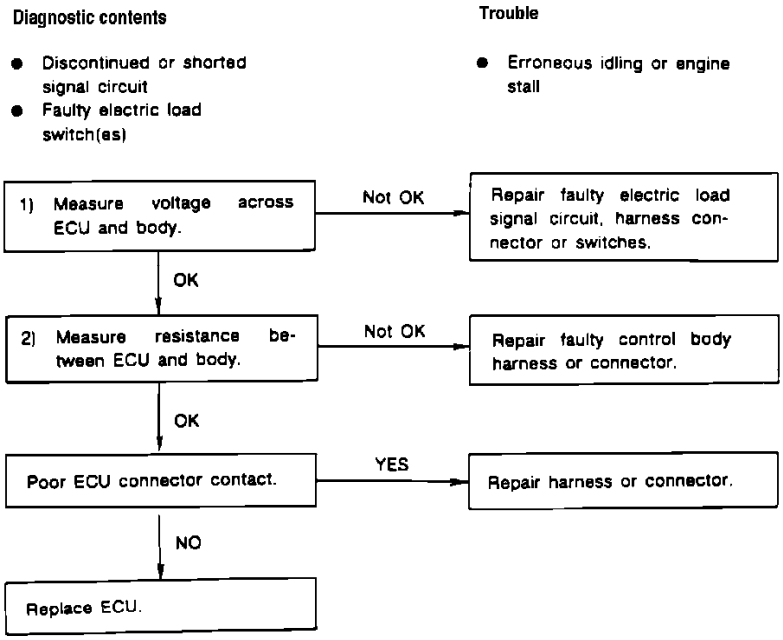

Electrical Load Signal Diagnostic Chart

ELECTRICAL LOAD SIGNAL DIAGNOSTIC CHART

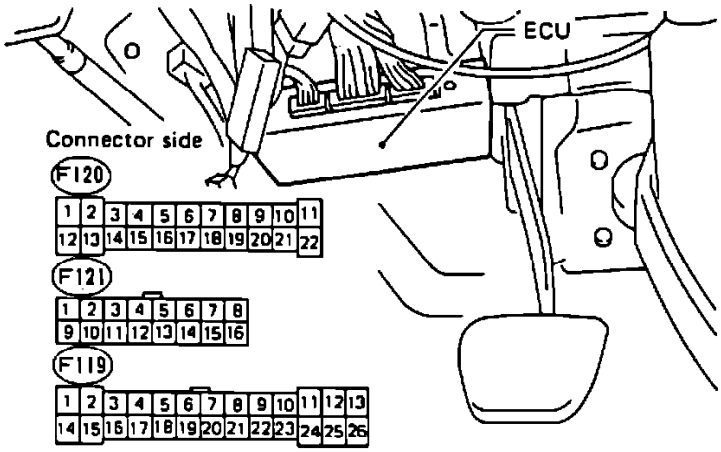

ECU Connectors

CHECK VOLTAGE AND RESISTANCE

1. With ignition "OFF," disconnect ECU connector.
2. Turn ignition "ON" and measure voltage between ECU connector terminals and ground as follows:

Connector & terminal:	**Voltage:**
(F120)18-Ground	Below 2V (defogger "OFF")
(F120)18-Ground	Above 8V (defogger "ON")
(F120)20-Ground	Above 8V (headlights "OFF")
(F120)20-Ground	Above 8V (headlights "HI")
(F120)21-Ground	Above 8V (headlights "OFF")
(F120)21-Ground	Above 8V (headlights "LO")

3. With ignition "OFF," measure resistance between ECU connector and ground as follows:

Connector & terminal:	**Resistance:**
(F119)1-Ground	Below 10 Ohms
(F120)10-Ground	Below 10 Ohms

DTC 63

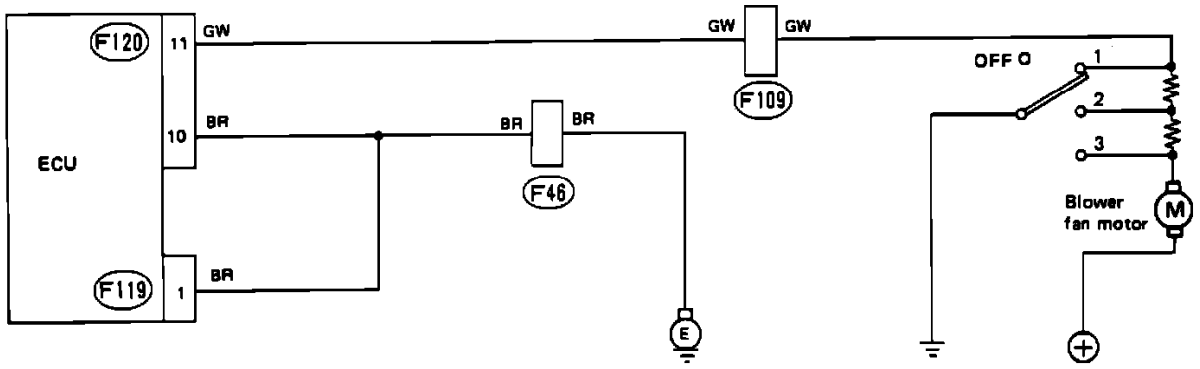

A/C Fan Switch Schematic

A faulty air conditioning/blower fan switch will set code 63 in the on-board diagnostic system. Refer to the schematic diagram and test the switch with the diagnostic chart.

Wire color code identification:

L: Blue
B: Black
Y: Yellow
G: Green
R: Red
W: White
Br: Brown
Lg: Light green
Gr: Gray

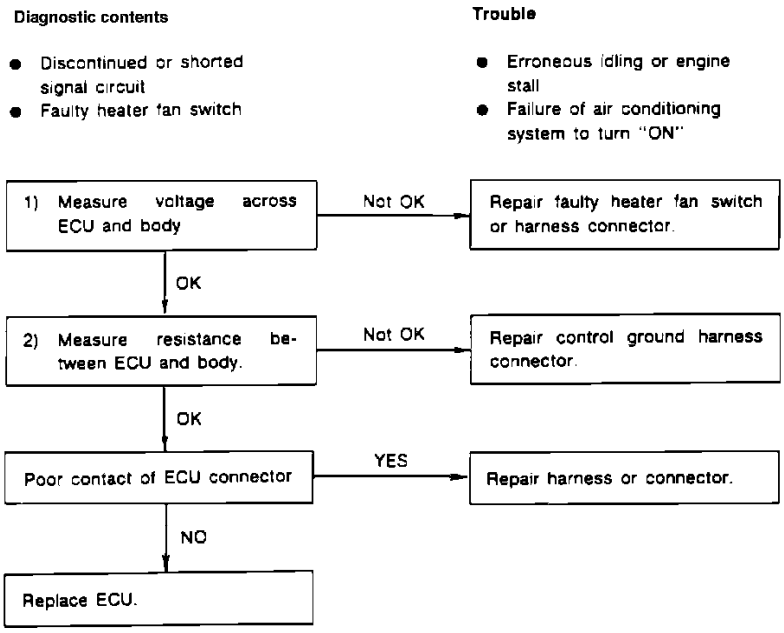

A/C Fan Switch Diagnostic Chart

A/C AND BLOWER FAN SWITCH DIAGNOSTIC CHART

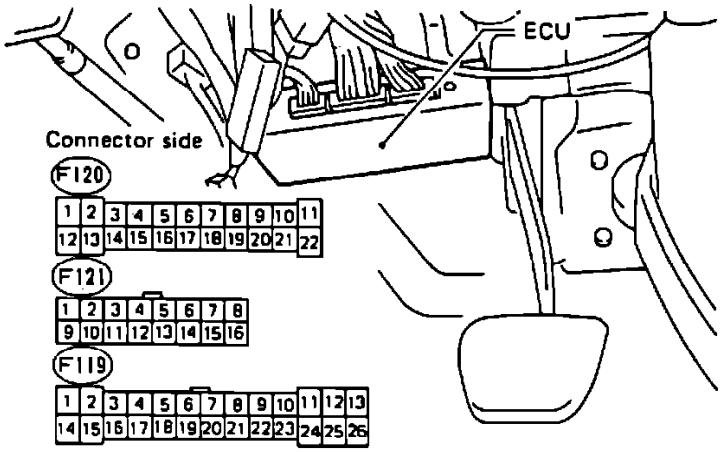

ECU Connectors

CHECK VOLTAGE AND RESISTANCE

1. With ignition "OFF," disconnect ECU connector.
2. Measure voltage across ECU connector terminals and ground as follows:

Connector & terminal:	**Voltage:**
(F120)11-Ground	Above 8V (heater fan "OFF")
(F120)11-Ground	Below 2V (heater fan 3rd speed)

2. With ignition "OFF," measure resistance between ECU connector and ground as follows:

Connector & terminal:	**Resistance:**
(F119)1-Ground	Below 10 Ohms
(F120)10-Ground	Below 10 Ohms

DTC 65

Subaru Justy Hatchback 4WD L3-1.2L SOHC (MPFI)

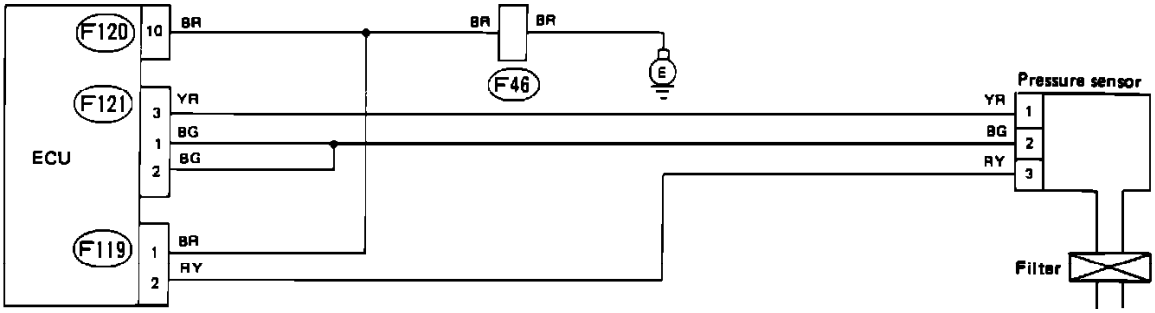

Pressure Sensor Schematic

The intake air flow measuring system is a pressure sensor connected with a hose to the intake plenum. A faulty pressure sensor will set code 23 in the on-board diagnostic system. A disconnected or broken pressure sensor hose will set code 65. Refer to the schematic diagram and test the sensor with the diagnostic chart.

Wire color code identification:

L: Blue
B: Black
Y: Yellow
G: Green
R: Red
W: White
Br: Brown
Lg: Light green
Gr: Gray

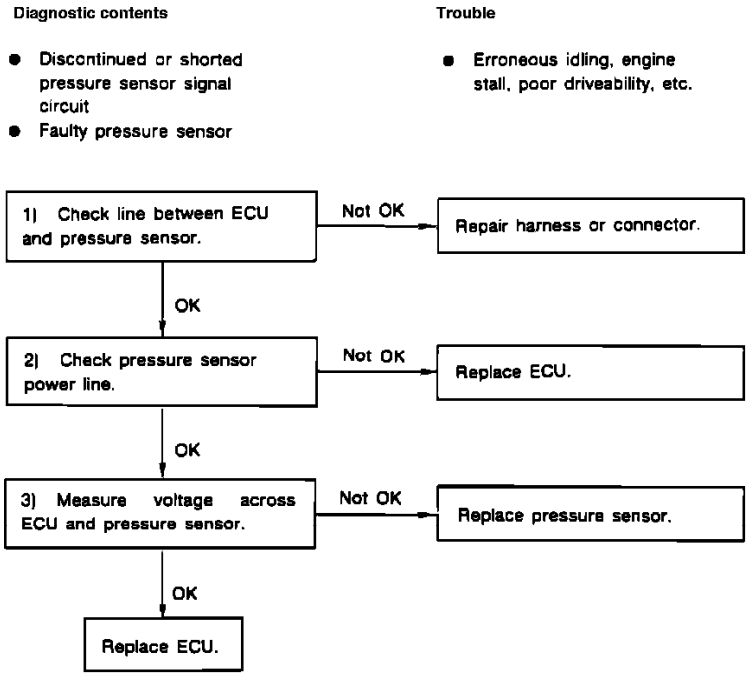

Pressure Sensor Diagnostic Chart

PRESSURE SENSOR DIAGNOSTIC CHART

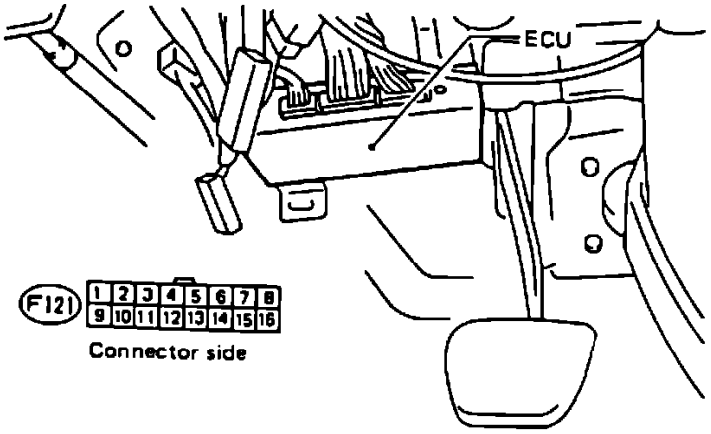

Pressure Sensor Harness

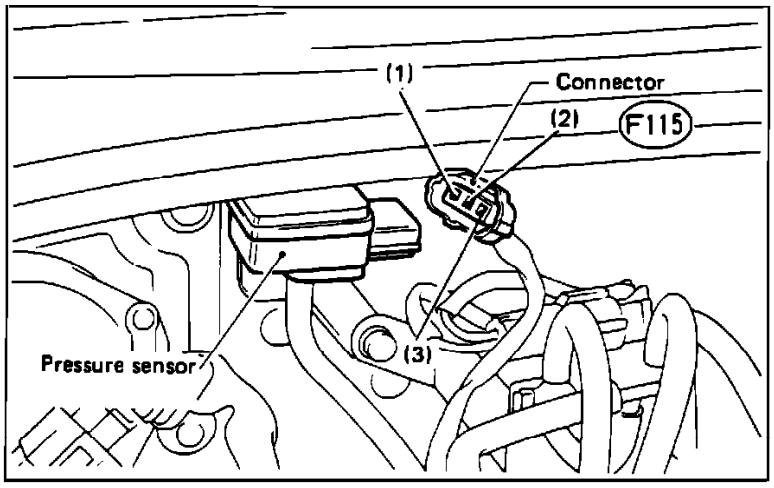

Pressure Sensor Testing

CHECK ECU HARNESS

1. With ignition switch "OFF," disconnect ECU connector.
2. Measure resistance between ECU connector and pressure sensor connector as follows:

Connector & terminal:	**Resistance:**
(F121)1-(F115)2	Below 1 Ohm
(F121)2-(F115)2	Below 1 Ohm
(F121)3-(F115)1	Below 1 Ohm
(F121)2-(F115)3	Below 1 Ohm

3. Connect ECU connector and measure resistance between pressure sensor connector (F115) terminals:

Connector & terminal:	**Resistance:**
(F115)1-(F115)2	Infinite
(F115)3-(F115)2	Infinite

CHECK PRESSURE SENSOR VOLTAGE

1. With ignition "ON," voltage across pressure sensor connector terminals should be as follows:

Connector & terminal:	**Voltage:**
(F115)3-(F115)2	4.5-5.5V

2. Connect pressure sensor connector and turn ignition "ON."
3. Measure voltage across ECU connector terminals as follows:

Connector & terminal:	**Voltage: [1]**
(F121)3-(F121)1	3.4-3.8V
(F121)3-(F121)2	3.4-3.8V

4. Start and idle engine. Measure voltage across ECU connector terminals as follows:

Connector & terminal:	**Voltage: [1]**

(F121)3-(F121)1	1.6-2.1V
(F121)3-(F121)2	1.6-2.1V

[1] With atmospheric pressure at 760mmHg (29.92 inHg).

Backfire

DEFINITION:

Fuel ignites in intake manifold or exhaust system, making a loud popping noise.

CHECK:
- Ignition Timing. See Emission Control Information Label on car.
- EGR operation for being open all the time.
- Output voltage of ignition coil.
- For crossfire between spark plugs (distributor cap, spark plug wires, and proper routing of plug wires).
- For faulty spark plugs and/or plug wires or boots.

Perform a compression check - look for sticking or leaking valves.
- For proper valve timing.
- Broken or worn valve train parts or burned intake valve(s).

Check Engine/Malfunction Indicator Lamp (MIL) Diagnosis

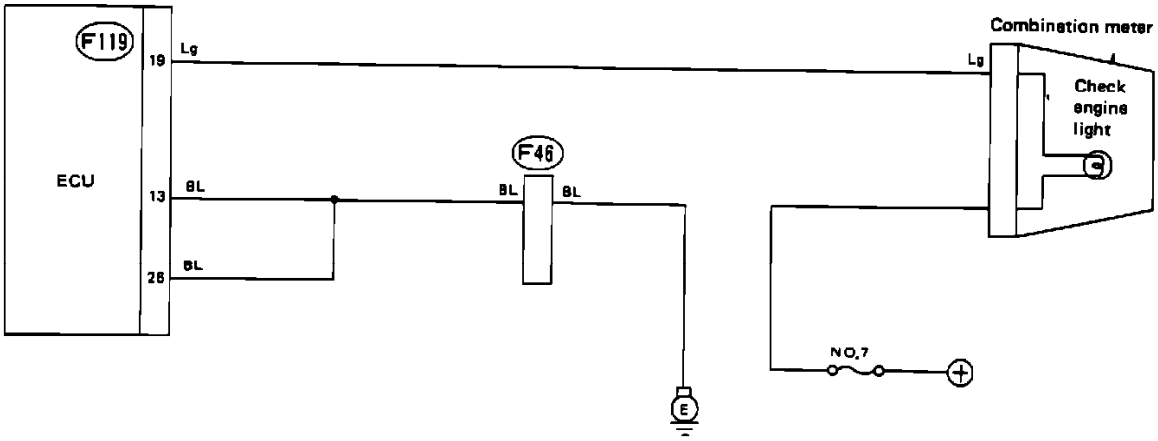

"Check Engine" Light Schematic

A faulty "Check Engine" light system does not set a code in the on-board diagnostic system. However, if the system does not operate properly, troubleshooting can identify the problem. Refer to the schematic diagram and test the "Check Engine" light with the diagnostic chart.

Wire color code identification:

L: Blue
B: Black
Y: Yellow
G: Green
R: Red
W: White
Br: Brown
Lg: Light green
Gr: Gray

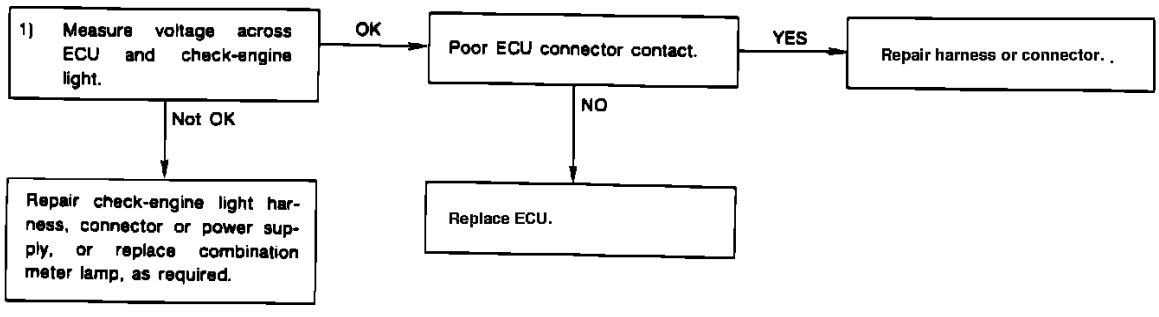

"Check Engine" Light Diagnostic Chart

"CHECK ENGINE" LIGHT DIAGNOSTIC CHART

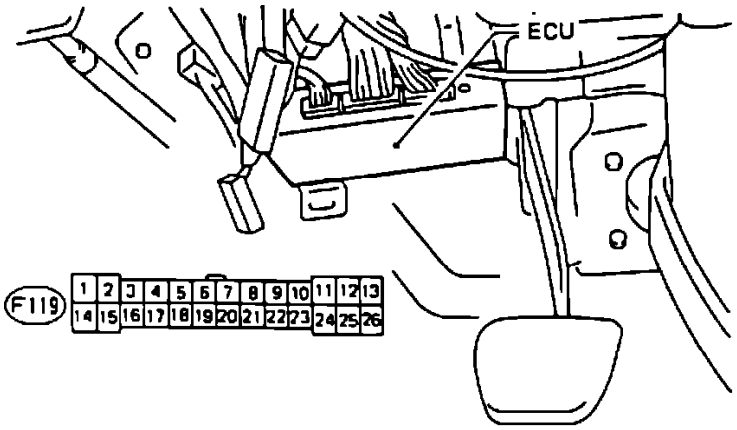

ECU/Crank Angle Sensor Harness Testing

"CHECK ENGINE" LIGHT VOLTAGE

1. With ignition switch "OFF," disconnect ECU connector.
2. Turn ignition switch "ON."
3. Check voltage between ECU connector terminal (F119)19 and "Check Engine" light. Voltage should be above 9V.

Cuts Out, Misses

DEFINITION:

Steady pulsation or jerking that follows engine speed, usually more pronounced as engine load increases. The exhaust has a steady spitting sound at idle or low speed.

Perform careful visual (physical) check.
If ignition system is suspected of causing a miss at idle or cutting out under load, check for missing cylinder by:

1. Start engine. Disconnect bypass air control valve. Remove one spark plug wire at a time using insulated pliers.
2. If there is an rpm drop on all cylinders, (equal to within 50 rpm), go to ROUGH, UNSTABLE, OR INCORRECT IDLE, symptom. Stop Engine. Reconnect bypass air control valve.
3. If there is no rpm drop on one or more cylinders, or excessive variation in drop, check for spark on the suspected cylinder(s). If there is spark, remove spark plug(s) in these cylinders and check for:
   - Cracks
   - Wear
   - Improper Gap
   - Burned Electrodes
   - Heavy Deposits

Check spark plug wire resistance (should not exceed 30,000 ohms).

Use a test light and check each injector control circuit. If OK, perform injector balance test.

If the previous checks did not find the problem:
- Visually inspect ignition system for moisture, dust, cracks, burns, etc. Spray plug wires and distributor cap with fine water mist to check for shorts or arcing.
- Fuel System - Plugged fuel filter, water, low pressure.
- Use "Scan" tool and check for erratic TPS voltage.
- Check Injector harness connectors for intermittent connections.
- Perform compression check, compression should not vary by more than 20% highest to lowest.
- Remove head covers. Check for broken or weak valve springs, worn camshaft lobes. Repair as necessary.

Detonation/Spark Knock

DEFINITION:

A mild to severe ping, usually worse under acceleration. The engine makes sharp metallic knocks that change with throttle opening.

CHECK for obvious overheating problems. Normal range is 85°C-100°C (185°F-215°F).
- Low coolant.
- Loose water pump belt.
- Restricted air flow to radiator, or restricted water flow through radiator.

- Faulty or incorrect thermostat.
- Correct coolant solution - should be a 50/50 mix of anti-freeze/coolant and water.

CHECK:
- For poor fuel quality, proper octane rating.
- Spark plugs for correct heat range.
- Ignition timing. See Vehicle Emission Control Information Label.
- Distributor cap for arcing or carbon tracking inside cap.
- Fuel system for low pressure.
- Check EGR valve for not opening.
- For incorrect basic engine parts such as cam, heads, pistons, etc.
- Excessive oil entering combustion chamber.
- Carbon build-up on pistons or combustion chamber. Remove carbon with top engine cleaner. Follow instructions on can.

Dieseling, Run On

DEFINITION:

Engine continues to run after key is turned "OFF", but runs very roughly. If engine runs smoothly, check ignition switch and adjustment.

On engines with fuel injection, there should be no fuel delivery to the intake system and engine should stop immediately when the key is turned "OFF." If not, fuel may be leaking into the intake. Check injectors for leaking.

Hard Start

DEFINITION

Engine cranks OK, but does not start for a long time. Eventually starts, or may start but immediately dies.

CHECK:

- For water contaminated fuel.
- Fuel system pressure.
- TPS for sticking or binding.
- EGR operation. Valve should be fully seated closed with engine "OFF".
- For a faulty in-tank fuel pump check valve which would allow the fuel in the lines to drain back to the tank after the engine is stopped.

Check ignition system for:
- Proper sparking voltage and duration.
- Worn distributor shaft.
- Bare and shorted wires.
- Improper pickup coil resistance or poor connections.
- Loose ignition coil connections.
- Moisture in distributor cap.
- Spark plugs for wetting, cracks, wear, improper gap, burned electrodes, or heavy deposits.

Hesitation, Stumble

DEFINITION

Momentary lack of response as the accelerator is depressed. Can occur at all car speeds. Usually most severe when trying to drive away from a stop. May cause the engine to stall if severe enough.

Perform careful visual (physical) check.

CHECK:
- Vacuum hoses for splits, kinks, and proper connections, as shown on vehicle emission control label vacuum diagram.
- Air leaks at common chamber and intake manifold gaskets.
- Ignition wires for cracks, burned spots or burned ends, hardening, correct firing order, and proper resistance (no more than 30K Ohms per wire).
- Wiring harness for bare spots, pinches, cuts or corroded connections.

ALSO CHECK:
- Fuel pressure.
- Water contaminated fuel.
- TPS for binding or sticking.
- Ignition timing. See Vehicle Emission Control Information Label.
- Vacuum/atmospheric pressure sensor
- Alternator output voltage. Repair if less than 9 or more than 16 volts.
- For open ignition system ground.

- Canister purge system for proper operation.
- EGR valve operation.
- Perform injector balance test.

Lack of Power, Sluggish

DEFINITION:

Engine delivers less than expected power. Little or no increase in speed when accelerator pedal is partially depressed.

Compare customer's car to similar unit. Make sure the customer's car has an actual problem. Was the customer's old car much more powerful? Is vehicle operator under heavily loaded condition?

Check air filter element for contamination. Replace as necessary.

CHECK:
- Throttle linkage for interference and proper travel.
- Ignition timing. See Emission Control Information Label.
- Restricted air filter.
- For restricted fuel filter or improper fuel pressure.
- ECM Grounds.
- EGR operation for being open or partly open all the time.
- Generator output voltage. Repair if less than 9 or more than 16 volts.
- Engine valve timing and compression.
- Engine for proper or worn camshaft.
- Secondary ignition for correct sparking voltage and duration using a scope.
- Secondary air control system.
- Poor or contaminated gasoline (check for excessive alcohol content), suggest owner try different brand.
- Check exhaust system for restriction.

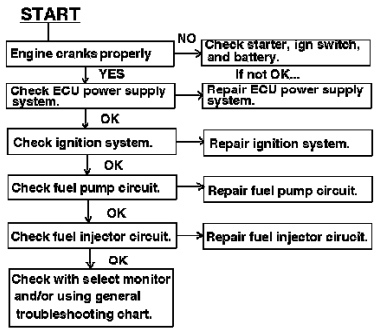

Troubleshooting For Engine Starting Failure

Poor Fuel Economy

DEFINITION:

Fuel economy, as measured by an actual road test, is noticeably lower than expected. Also, economy is noticeably lower than it was on this car at one time, as previously shown by an actual road test.

CHECK:
- Engine thermostat for being stuck open or for wrong heat range.
- Fuel pressure.

Check owner's driving habits.
- Is A/C "ON" full time?
- Are tires at correct pressure?
- Are excessively heavy loads being carried?
- Is acceleration too heavy, too often?
- Suggest driver read "Driving For Best Fuel Economy" in owner's manual.

Check air cleaner element for dirt contamination.
Check for proper calibration of speedometer.
Visually (physically) Check:
- Vacuum hoses for splits, kinks and proper connections as shown on vacuum hose routing diagram information label.
- Ignition wires for cracking, hardness and proper connections.

Check ignition timing. See Emission Control Information Label.
Remove spark plugs. Check for cracks, wear, improper gap, burned electrodes or heavy deposits. Repair or replace, as necessary.
Check compression.
Check for dragging brakes.

Suggest owner fill fuel tank and recheck fuel economy.
Check for exhaust system restriction.

Rough Idle

DEFINITION:

The engine runs unevenly at idle. If bad enough, the car may shake. Also, the idle may vary in RPM (called "hunting"). Either condition may be severe enough to cause stalling.

Engine idles at incorrect speed.

CHECK:

- Perform the usual checks for obvious problems (vacuum leaks, vacuum and electrical circuits correctly connected arcing at distributor or plug wires etc.)
- Ignition timing. See Emission Control Information Label.
- Injector balance.
- Bypass air control valve.
- If a sticking throttle shaft or binding linkage causes a high TPS voltage (open throttle indication) the ECU will not control idle. Monitor TPS voltage. "Scan" and/or Voltmeter should read less than 1.2 volts with throttle closed.
- EGR "ON" while idling will cause roughness, stalling, and hard starting.
- Check PCV valve for proper operation.
- Battery cables and ground straps should be clean and secure. Erratic voltage will cause bypass air control valve to change its position resulting in poor idle quality.
- Power Steering - ECU should compensate for Power Steering loads. Loss of this signal would be most noticeable when parking and steering loads are high.
- Inspect oxygen sensor for silicone contamination from fuel, or use of improper RTV sealant. The sensor will have a white, powdery coating, and will result in a high but false signal voltage (rich exhaust indication). The ECU will then reduce the amount of fuel delivered to the engine, causing a severe driveability problem.

Surges and/or Chugs

DEFINITION:

Engine power variation under steady throttle or cruise. Feels like the car speeds up and slows down with no change in the accelerator pedal.

Use a "Scan" tool to make sure reading of VSS matches vehicle speedometer.

CHECK:

- For intermittent EGR at idle.
- Ignition timing. See Emission Control Information Label.
- Inline fuel filter for dirt or restriction.
- Fuel pressure.
- Generator output voltage. Repair, if less than 9 or more than 16 volts.

Inspect Oxygen sensor for silicone contamination from fuel, or use of improper RTV sealant. The sensor may have a white, powdery coating and result in a high but false signal voltage (rich exhaust indication). The ECU will then reduce the amount of fuel delivered to the engine, causing a severe driveability problem.

Remove spark plugs. Check for cracks, wear, improper gap, burned electrodes, or heavy deposits. Also check the condition of the rest of the ignition system.

Electronic Control Unit (ECU)

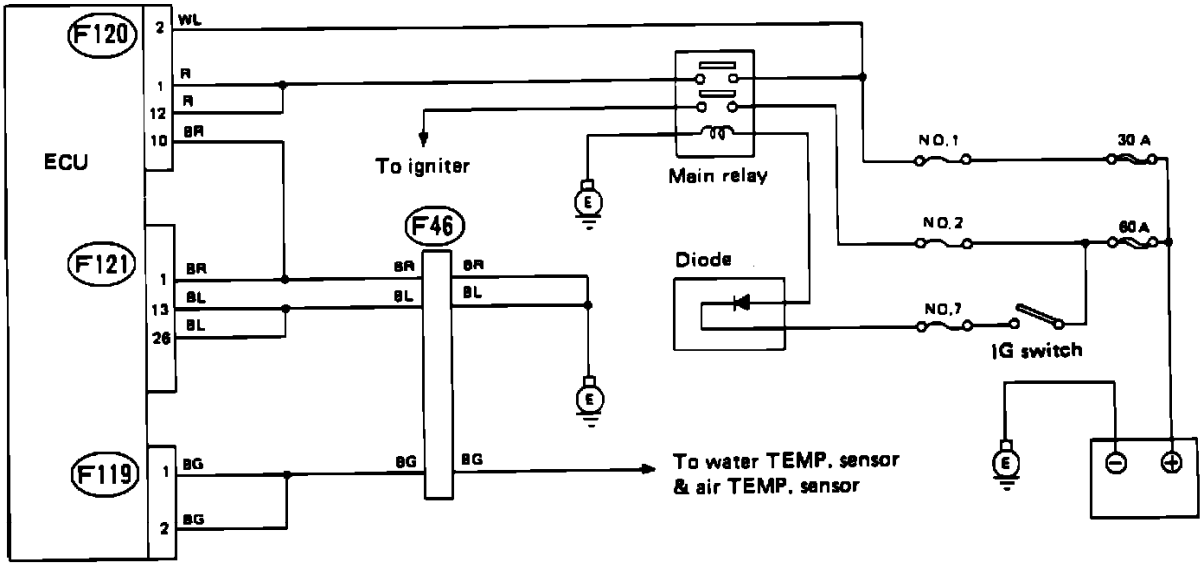

ECU Power Supply And Ground Circuit

NOTE: Never connect or disconnect the control unit or any sensors with the ignition "ON" unless specifically instructed to do so by a test procedure. Failure to follow this precaution could result in damage to electronic components.

While there is no specific test for the ECU, nor does it set a trouble code if a fault occurs in its own circuitry, many of the component tests lead to the ECU if no other problems are detected.

Connector & Terminal	Specified voltage
(F120) No. 1 – Body	Above 9 V
(F120) No. 12 – Body	Above 9 V
(F120) No. 2 – Body	Above 9 V

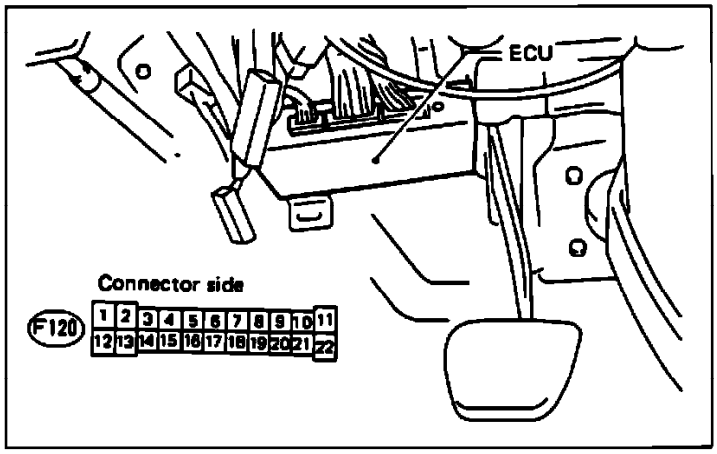

ECU Power Supply Testing

ECU POWER SUPPLY

1. Turn ignition switch "ON."
2. Measure voltage between ECU connector terminals and ground on vehicle body. Specified voltages and connector terminals are listed in the image table.

Connector & Terminal	Specified resistance
(F121) No. 1 – Body	Below 10 Ω
(F121) No. 2 – Body	Below 10 Ω
(F119) No. 1 – Body	Below 10 Ω
(F120) No. 10 – Body	Below 10 Ω
(F119) No. 13 – Body	Below 10 Ω
(F119) No. 26 – Body	Below 10 Ω

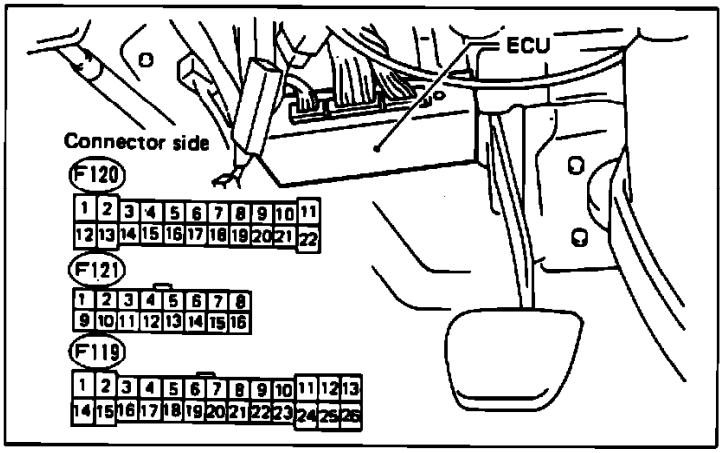

ECU Ground Circuit Testing

ECU GROUNDING CIRCUIT

1. Turn ignition switch "OFF."
2. Measure resistance between ECU connector terminals and body. Specified resistances and connector terminals are listed in the image table.

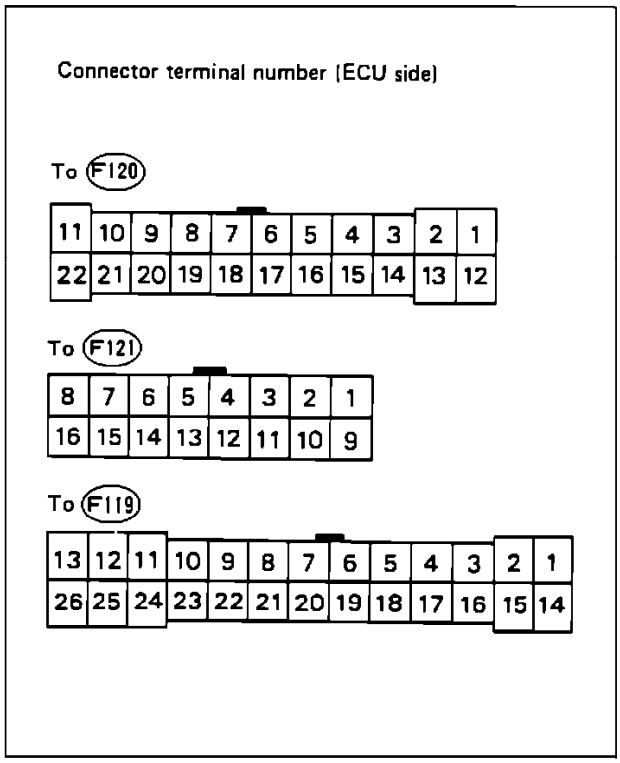

F120

1	R	Power (Battery)
2	WL	Standby power (for memory backup)
3	Lg	Ignition monitor
4	LgB	Speed sensor
5	YL	Clutch switch (FWD or ECVT only)
6	LW	Idle switch
7	LG	Serial monitor RX
8	Y	Serial monitor CLOCK
9	GL	Serial monitor TX
10	BR	Ground (Control)
11	GW	Blower fan signal
12	R	Power
13	–	
14	L	A/C signal
15	GB	Radiator fan signal
16	GR	Power switch
17	BW	Starter switch
18	LY	Rear defogger switch
19	–	
20	BW	Headlight high (Hi) signal
21	RY	Headlight low (Lo) signal
22	–	

ECU Connector Table (a)

(F121)

1	BG	Ground (Sensor)
2	BG	Ground (Sensor)
3	YR	Vacuum pressure sensor
4	(B)	O_2 sensor
5	WB	Water temperature sensor
6	WL	Air temperature sensor
7	–	O_2 sensor (Shield)
8	YB	High altitude signal II (ECVT only)
9	LgW	Read memory connector
10	Br	Test mode connector
11	BR	Identification of MT or ECVT
12	BL	Identification of Cal.
13	–	
14	BR	Identification of FWD or 4WD
15	–	
16	–	

(F119)

1	BR	Ground (Control)
2	RY	Power (Vacuum pressure sensor)
3	(R)	Crank angle signal N+
4	(W)	Crank angle signal N–
5	(B)	Cylinder distinction signal G+
6	(G)	Cylinder distinction signal G–
7	–	Crank angle & cylinder distinction sensor (Shield)
8	WR	High altitude signal I (ECVT only)
9	BrB	Torque signal (ECVT only)
10	BrW	Water temperature signal (ECVT only)
11	W	Injector #3
12	WY	Injector #1
13	BL	Ground (Power)
14	–	
15	GW	A/C cut signal
16	–	
17	–	
18	LB	Fuel pump
19	Lg	Check engine light
20	Or	Shift-up indicator light (FWD/MT only)
21	YW	Ignition signal
22	LR	Canister purge control
23	BrR	A/C compressor
24	GY	ISC signal
25	WG	Injector #2
26	BL	Ground (Power)

If disconnecting the ECU connector for checking, disconnect all connectors (F119, F120, F121).

ECU Connector Table (b)

ECU CONNECTOR TABLE

Wire color code identification:

L: Blue
B: Black
Y: Yellow
G: Green
R: Red
W: White
Br: Brown
Lg: Light green
Gr: Gray

Fuel Injector Circuit

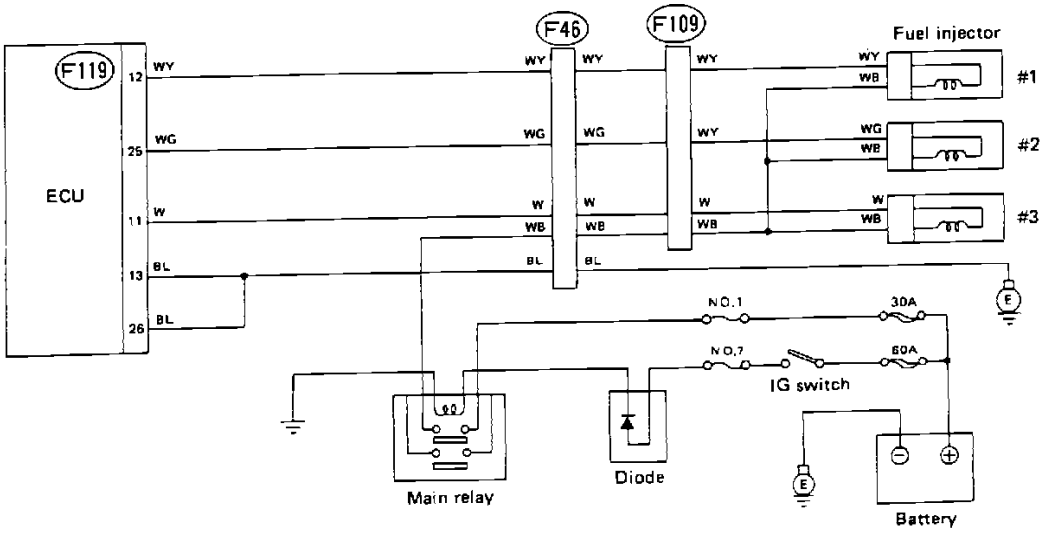

Fuel Injector Circuit

The following procedure should be used to check for a "NO POWER TO INJECTOR" condition. Refer to the schematic diagram and test the circuit with the diagnostic chart.

Wire color code identification:

L: Blue
B: Black
Y: Yellow
G: Green
R: Red
W: White
Br: Brown
Lg: Light green
Gr: Gray

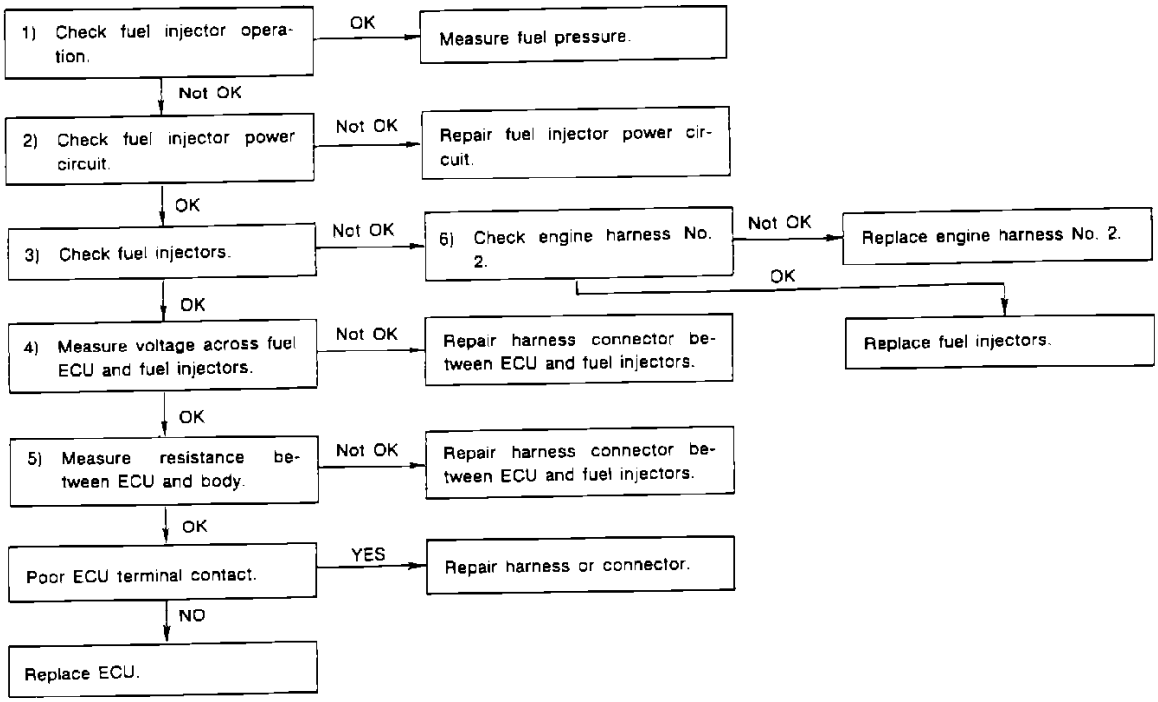

Fuel Injector Circuit Diagnostic Chart

FUEL INJECTOR CONTROL SYSTEM DIAGNOSTIC CHART

CHECK FUEL INJECTOR OPERATION

Using a stethescope, confirm that all injectors "CLICK" while cranking the engine.

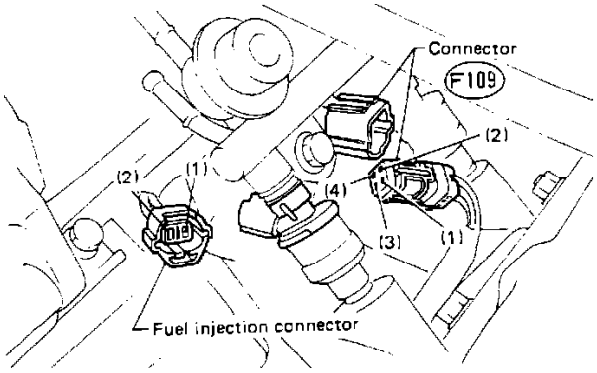

Fuel Injector Connector

CHECK VOLTAGE AT INJECTORS

1. Disconnect connector F109 (injector sub-harness).
2. Turn the key "ON".
3. Using a voltmeter, check voltage between male connector terminal and ground.

Connector & terminal:	**Voltage:**
(F109)1-Ground	Above 9V

CHECK FUEL INJECTORS

1. Turn the key "OFF".
2. Using an ohmmeter, check the resistance between fuel injector terminals.

Connector & terminal:	**Resistance:**
(F109)1-2	10 - 18 Ohm
(F109)1-3	10 - 18 Ohm
(F109)1-4	10 - 18 Ohm

If not within specification, proceed to **CHECK ENGINE HARNESS 2** below.

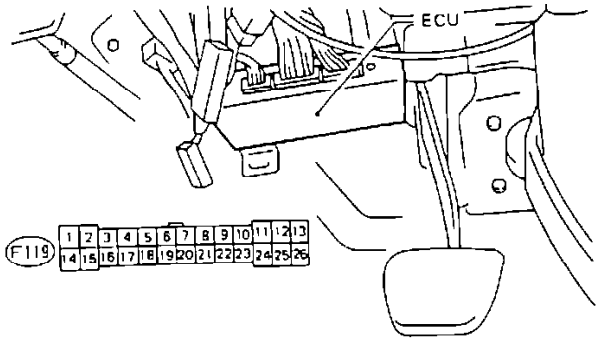

ECU Connector

CHECK VOLTAGE BETWEEN ECU AND FUEL INJECTORS

1. Connect connector F109.
2. Turn ignition key "ON".
3. Using a voltmeter, measure voltage between ECU connector terminal and body. (Back probe ECU connector.)

Connector & terminal:	**Voltage:**
(F119)12-Ground	Above 8V
(F119)25-Ground	Above 8V
(F119)11-Ground	Above 8V

4. Turn key "OFF".
5. Disconnect connector F119 from ECU.
6. Using and ohmmeter, check resistance between ECU harness connector terminal and ground.

Connector & terminal:	**Resistance:**
(F119)13-Ground	Below 10 Ohm
(F119)26-Ground	Below 10 Ohm

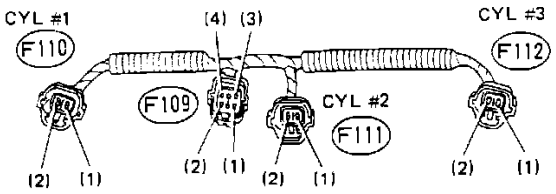

Engine Harness 2

CHECK ENGINE HARNESS 2

NOTE: Removal of the throttle chamber will improve access to the injector terminals.

1. Disconnect injector terminals.
2. Using an ohmmeter, check resistance between connector F109 and injector terminals F110, F111 and F112.

Connector & terminal:	**Resistance:**	**Cyl:**
(F109)2-(F110)2	Below 1 Ohm	#1
(F109)3-(F111)2	Below 1 Ohm	#2
(F109)4-(F112)2	Below 1 Ohm	#3
(F109)1-(F110)1	Below 1 Ohm	#1
(F109)1-(F111)1	Below 1 Ohm	#2
(F109)1-(F112)1	Below 1 Ohm	#3
(F110)1-2	Infinite Ohm	#1
(F111)1-2	Infinite Ohm	#2
(F112)1-2	Infinite Ohm	#3
(F109)2-3	Infinite Ohm	
(F109)2-4	Infinite Ohm	
(F109)3-4	Infinite Ohm	

Fuel Pump & Fuel Pump Circuit Check

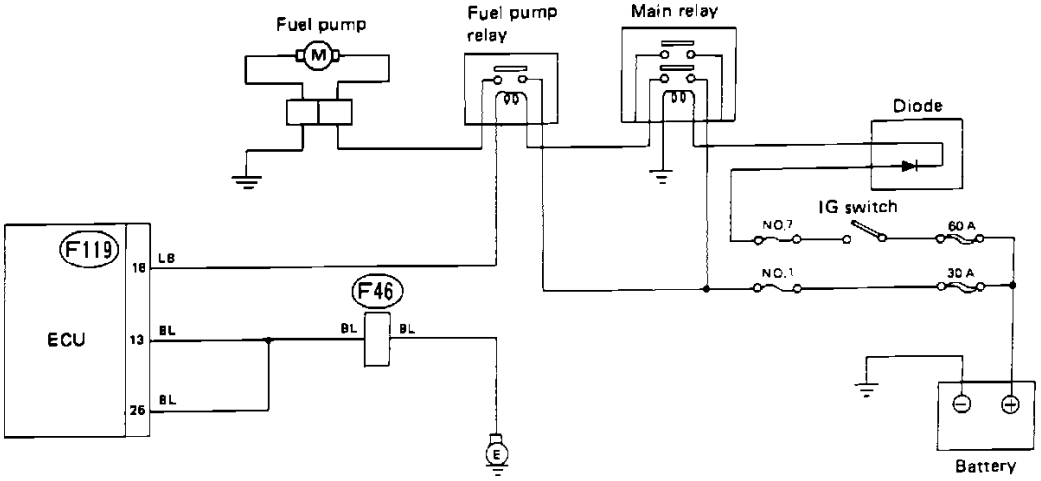

Fuel Pump Control Circuit Diagram

The following procedure should be used to check for a "NO FUEL" condition. Refer to the schematic diagram and test the circuit with the diagnostic chart.

Wire color code identification:

L: Blue
B: Black
Y: Yellow
G: Green
R: Red
W: White
Br: Brown
Lg: Light green
Gr: Gray

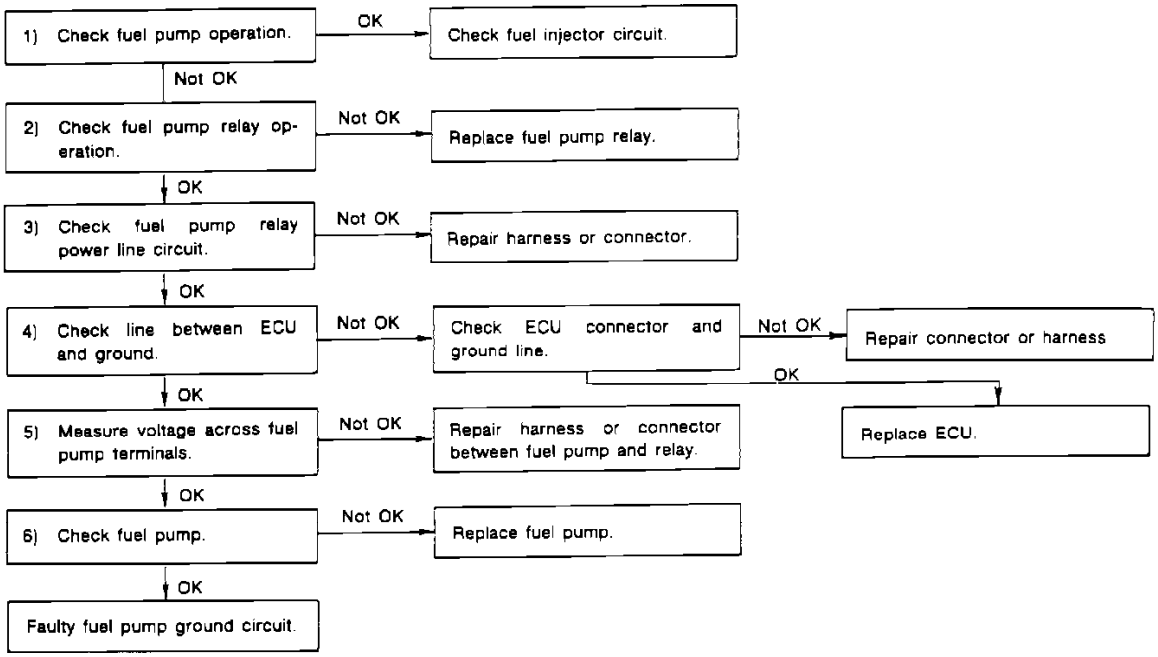

Fuel Pump Control Circuit Diagnostic Chart

FUEL PUMP CONTROL SYSTEM DIAGNOSTIC CHART

CHECK OPERATION OF FUEL PUMP

Turn the key "ON". Fuel pump should operate for two (2) seconds after turning the key from "Off" to "ON".

CHECK VOLTAGE AND RESISTANCE OF FUEL PUMP AND RELAY

1. Remove fuel pump relay.
2. Using an ohmmeter, check the resistance of relay coil.

Connector & terminal:	**Resistance:**
(F78)1-(F78)3	60 - 80 Ohm @ 20° C (68° F)

3. Connect 12 VDC to relay coil terminals and measure the resistance between the switched terminals.

Connector & terminal:	**Resistance:**
(F78)2-(F78)4	Below 1 Ohm

4. Reinstall the relay.

CHECK FUEL PUMP RELAY CIRCUIT

1. Turn key "ON".
2. Using a voltmeter, measure the voltage between fuel pump relay connector and ground.

Connector & terminal:	**Voltage:**
(F78)3-Ground	Above 9V

CHECK VOLTAGE BETWEEN ECU CONNECTOR AND GROUND

1. Turn key "ON".
2. Using a voltmeter, check the voltage for two (2) seconds after turning the key from "OFF" to "ON". (Back probe the ECU connector.)

Connector & terminal:	**Voltage:**
(F119)18-Ground	Above 9V

3. Check voltage AFTER key has been ON for two (2) seconds.

Connector & terminal:	**Voltage:**
(F119)18-Ground	Below 2.5V

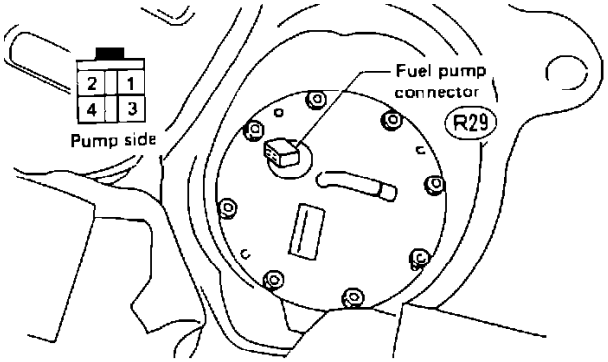

Fuel Pump Connector

CHECK TERMINAL VOLTAGE TO FUEL PUMP

1. Disconnect fuel pump connector.
2. Turn key "ON".
3. Using a voltmeter, check the voltage for two (2) seconds after turning the key from "OFF" to "ON".

Connector & terminal:	**Voltage:**
(R29)2-Ground	Above 9V

4. Check voltage AFTER key has been ON for two (2) seconds.

Connector & terminal:	**Voltage:**
(R29)2-Ground	Below 2.5V

CHECK FUEL PUMP

Connect 12V to fuel pump connector and confirm fuel pump operates.

Connector & terminal:	**Battery terminal**
(R29)2	Positive terminal
(R29)1	Negative terminal

Ignition Control System

NO SPARK TEST AND INSPECTION

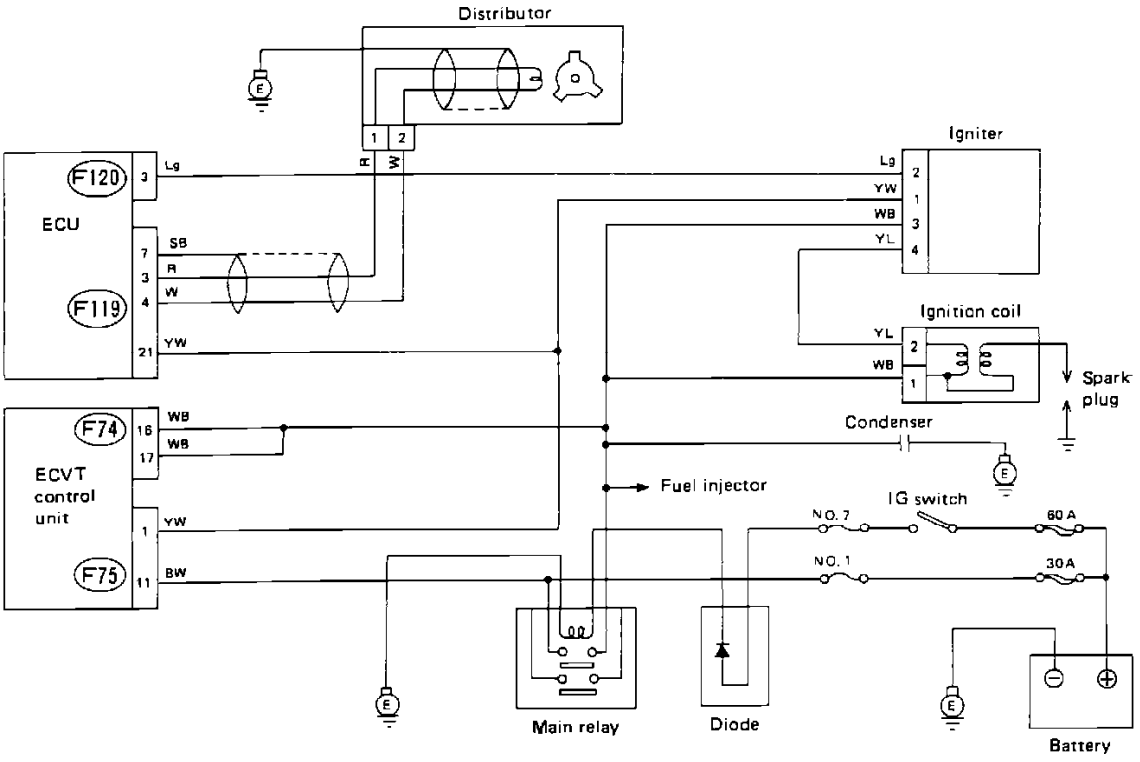

Ignition Control Circuit

The following procedure should be used to check for a "NO SPARK" condition. Refer to the schematic diagram and test the circuit with the diagnostic chart.

Wire color code identification:

L: Blue
B: Black
Y: Yellow
G: Green
R: Red
W: White
Br: Brown
Lg: Light green
Gr: Gray

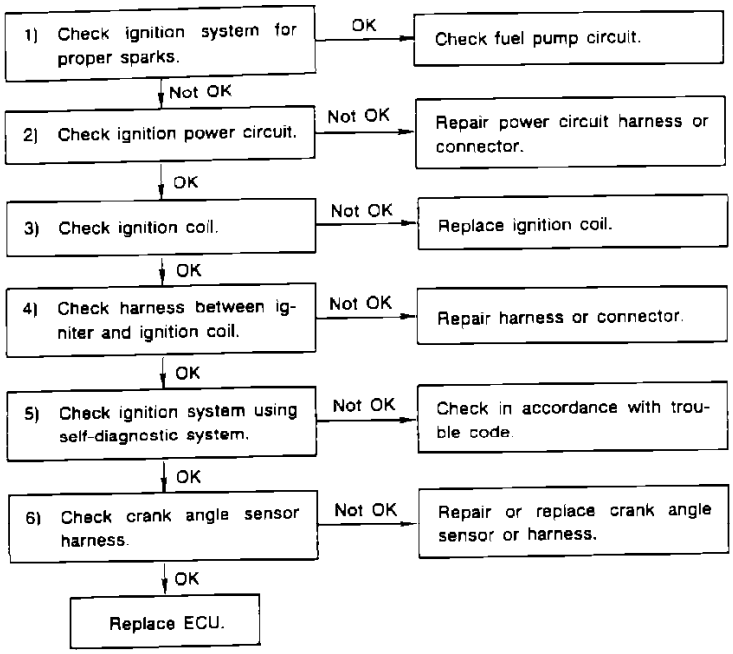

Ignition Control Circuit Diagnostic Chart

IGNITION CONTROL SYSTEM DIAGNOSTIC CHART

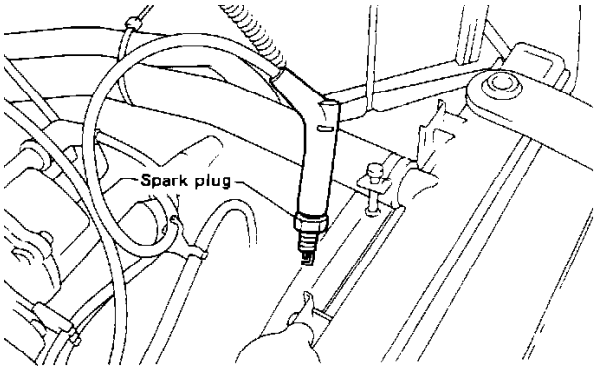

Checking For Spark

CHECK IGNITION SYSTEM FOR SPARK

1. Disconnect injector sub-harness.
2. Remove high tension wires from spark plugs.
3. Install **NEW** spark plug into wire terminal.
4. Ground threads of spark plug against engine.
5. Crank engine and confirm that spark occurs at each wire.

Subaru Justy Hatchback 4WD L3-1.2L SOHC (MPFI)

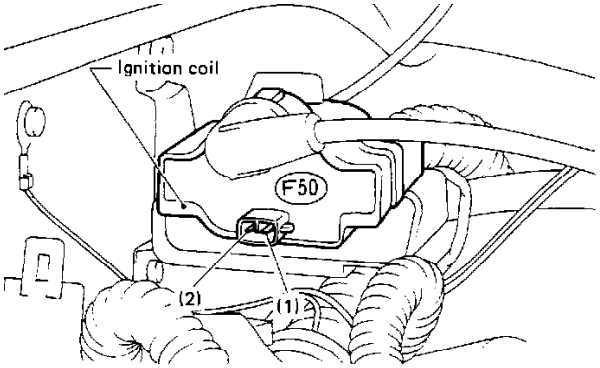

Primary Terminals

CHECK VOLTAGE AT POSITIVE TERMINALS OF COIL AND IGNITOR

1. Disconnect ignition coil and ignitor electrical connectors.
2. Turn ignition switch "ON".
3. Using a voltmeter, measure the voltage between ground and positive terminal of coil and ignitor (harness side).

Connector & terminal:	**Voltage:**
(F117)3-Ground	Above 9V
(F50)1-Ground	Above 9V

CHECK IGNITION COIL

1. Remove high tension cord from coil.
2. Using an ohmmeter, measure resistance between ignition coil terminals.

Connector & terminal:	**Resistance:**
(F50)1-(F50)2	0.9-1.1 Ohm @ 20° C (68° F)

3. Measure resistance between coil high tension terminal and connector terminal (F50)1. It should read 10-14K Ohms @ 20° C (68° F).

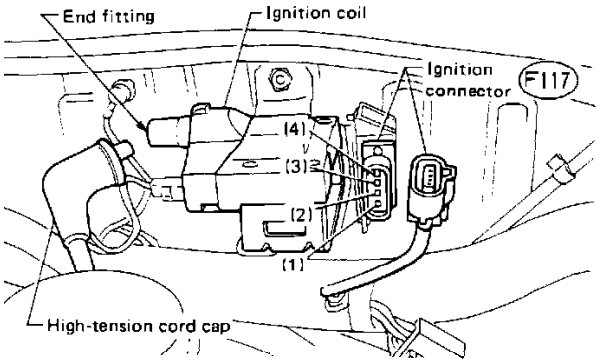

Ignitor Connector

CHECK HARNESS BETWEEN COIL AND IGNITOR

1. Using an ohmmeter, measure resistance between ignitor connector and coil connector.

Connector & terminal:	**Resistance:**
(F117)4-(F50)2	Below 1 Ohm

2. Reconnect all connectors.

CHECK FOR CODE 36 (FAULTY IGNITOR)

1. Make sure test mode and read memory connectors are disconnected.
2. Crank engine for five (5) seconds or more.
3. Turn key "ON" and connect read memory connector.
4. Code 36 should be in memory.

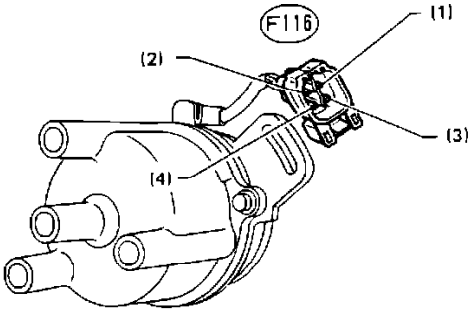

Crank Angle Sensor Connector

CHECK CRANK ANGLE SENSOR HARNESS

1. Disconnect distributor connector.
2. Using a voltmeter set below the 0.5 volt range, measure volatge between distributor terminals while cranking engine.

Connector & terminal:	**Voltage:**
(F116)1-2	Voltage changes in response to engine rpm.

Replace crank angle sensor if voltage remains constant or does not exist.

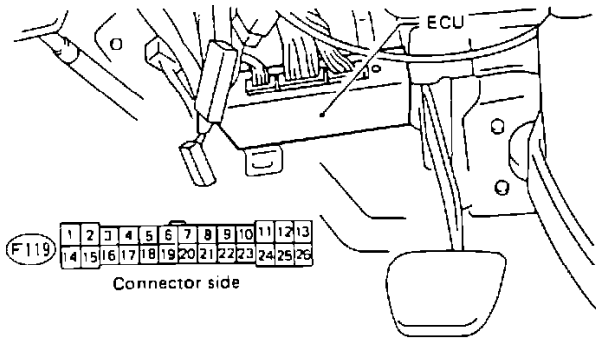

ECU Connector

3. Disconnect ECU connector.
4. Using an ohmmeter, measure resistance between ECU connector and distributor connector (harness side).

Connector & terminal:	**Resistance:**
(F119)3-(F116)1	Below 1 Ohm
(F119)4-(F116)2	Below 1 Ohm
(F119)3-ground	infinite Ohms
(F119)4-ground	infinite Ohms

5. Connect ECU connector.
6. Using an ohmmeter, back the ECU terminal and measure resistance.

Connector & terminal:	**Resistance:**
(F119)7-Ground	Below 10 Ohm

Technical Service Bulletins

All Technical Service Bulletins:

Number	Date	Name
05-50-10	Jul 10	Wheels/Tires - Highway Speed Noise/Harshness/Vibration
05-47-10	Apr 10	Tires - Repair Information/Precautions
16-63-99R	Feb 09	A/T - Remanufactured Transaxles Program
01-167-08	Sep 08	Vehicle - Recommended Fluids/Chemicals
15-126-07	Feb 08	Audio System - Noise With Rear Defogger ON
07-62-07	Jan 08	Electrical - Parasitic Battery Draw Information
09-47-07	Aug 07	Cooling System - Coolant Flushing Machines and Additives
15-125-07	Aug 07	Wheels/Tires - Wheel Lock Installation/Removal
05-37-07	Mar 07	Wheels/Tires - Tire Rotation Pattern
15-120-07	Mar 07	Audio System - CD Player Information/Precautions
09-45-06	Nov 06	Cooling System - Radiator Cap
02-100-06	Oct 06	Engine - Head Gasket Residue Removal Procedures
0606-10	Jun 06	Engine Controls - Rough Idle/Misfire Diagnostic Tips
0606-04	Jun 06	Electrical - Low Battery Voltage Affects Other Systems
0506-02	May 06	Keyless Entry - Remote Transmitter Service Tip
0506-01	May 06	M/T - Clutch Pedal Squeaking Noise
0506-04	May 06	Brakes - Brake Pad Rust Prevention
0206-08	Feb 06	Engine - Valve Guide Oil Seal Identification
0106-03	Jan 06	Wipers/Washers - Front Washer Nozzle Won't Spray
0106-01	Jan 06	Engine - Bank 1, Bank 2 Clarification
1005-07	Oct 05	Wipers/Washers - Wiper Blade Information
1005-13	Oct 05	Engine - Rough Idle Diagnostic Information
01-162-05	Jun 05	Vehicle - Flat Towing Information
09-42-05	Apr 05	Cooling System - Warranty Repair Coolant Usage
03-53-04	Aug 04	A/T, M/T - Crossmember Service Precautions
TT0404-002	Apr 04	Cooling System - Cooling System Conditioner
01-156-03	Nov 03	M/T - Warranty Information Regarding Abusive Driving
06-32-03	Nov 03	Brakes - Vibration Diagnostics
15-102-96R	May 01	Audio System - Radio Identification/Diagnostics
17-02-95R	Mar 01	Air Bag System - Inspection/Service/Replacement
TT0101-001	Jan 01	Engine - Oil Pump Replacement vs. Resealing
11-61-00	Jun 00	State Emissions Test - Fuel Filler Cap Test Procedure
11-51-97	Dec 97	AWD & Full-Time 4WD Diagnostic Testing Precautions
01-145-97	Jun 97	Engine - Tie Down Procedure to Prevent Damage
0114597	Jun 97	Tie Down Procedures To Prevent Engine Damage
01-143-96	Dec 96	Service Manual - Sealants and Adhesives Updates
11-48-96	Jul 96	State Emission Testing - VECI Label Replacement
10-68-96	Jul 96	A/C - Retrofit Procedures
0113995	Apr 95	Kats Decoater Gun - Instructions
114595	Apr 95	State Emission Testing
SHU0495	Apr 95	Service Helpline Update - April 1995
SHU9503	Mar 95	Service Helpline Updates
SHU0295	Feb 95	Service Helpline Updated
ATRATB294	Jan 95	A/T - Drive Axle and Wheel Lug Nut Torque Specifications
075093R	Dec 94	Rear Window Defogger Grids - Metal Tab Repair
106694	Jun 94	A/C - Refrigerant Handling and Service Procedures
SHU0694	Jun 94	Service Helpline Update - Special A/C Information
SHU0494	Apr 94	Service Helpline Update, April 1994
106594	Mar 94	A/C - Oil Specification
SHU0394	Mar 94	Service Helpline - Updated Information
136293	Oct 93	Paint - Formulas
ATRATB191	Oct 93	A/T - Failsafe Modes
SHU0593	May 93	Service Helpline - Updates
0113493	Apr 93	Wiper Blade - Service
13-63-93	Mar 93	Paint - Color Codes/Color Names
062393	Jan 93	Brakes - Disc Pad Service
165492	Nov 92	A/T - (4RAT) Gear Reduction Driven Shaft Replacement
028692	Oct 92	Water Pump - Seal Installation Manual Update
062592	Sep 92	Brakes - Vibration Diagnosis and Repair
ATRATB132	Sep 92	A/T - Intermittent Electrical Problems
ATRATB122	Aug 92	A/T - ECVT General Information
ATRATB078	Nov 91	A/T - How To Use A Pressure Gauge
ATRATB028	Oct 90	A/T - Engine Vacuum Testing
ATRATB9002006	Feb 90	A/T - Choosing the Right ATF

Technical Service Bulletins

All Technical Service Bulletins:

Number	Date	Name
ATRATB8930	Oct 89	A/T - Math Part II
ATRATB8927	Sep 89	A/T - Twenty Steps To Successful Repairs
ATRATB8923	Aug 89	A/T - Math Formulas Part I
ATRATB8754	Sep 87	A/T - Front Bushing Wear
ATRATB8748	Aug 87	A/T - Slipping or No-Shift/Metal Sealing Rings
073186	Nov 86	Electrical Connector Terminals - Oxidation

Vehicle: Technical Service Bulletins

How to Find Technical Service Bulletins by Category/Symptom

Selecting TSB's "By Symptom"

If you have a vehicle which displays system-related symptoms, ALLDATA provides a way to quickly search for any relevant Technical Service Bulletins (TSB's). When you select TSB's "By Symptom," all relevant TSB's display at the top of the TSB title list. Viewing TSB's by Symptom is helpful when the vehicle displays a distinct, system related, malfunction. You may also wish to review the symptom list with your customer to uncover additional information that was not indicated on the Driveability Worksheet.

You can view TSB's by Symptom at any System or Sub-System level of the TurboView hierarchy. For example, a Symptom list will appear when selecting Powertrain Management or Computers and Control Systems. Symptoms will not appear when selecting a component (such as Mass Air Flow Sensor).

To view TSB's by Symptom:

1. Select the desired System or Sub-System and click the TSB icon.
2. Select "By Symptom" from the TSB list.
3. Select the symptom you wish to display.
4. Click on the desired TSB to display the article

Example:

Your customer complains of a noise in his 1989 Toyota Corolla (1.6L DOHC). The noise seems to be coming from the automatic transmission. To find TSB's related to transmission noise:

1. Select Transmission and Drivetrain, then Automatic Transmission.
2. Click the TSB icon and select "Noise" from the TSB symptom list.
3. Notice that TSB's related to transmission noise are now located at the top of the TSB title list while non-related TSB's for the transmission are listed below.

Technical Service Bulletin # **073186** Date: **861124**

Electrical Connector Terminals - Oxidation

NUMBER: 07-31-86

DATE: 11-24-86

APPLICABILITY
ALL SUBARU VEHICLES

SUBJECT:
OXIDATION OF ELECTRICAL CONNECTOR TERMINALS

THIS BULLETIN IS FOR INFORMATION ONLY

If you encounter an electrical connector terminal which has become oxidized because of prolonged moisture exposure, this procedure will prevent reoccurance.

Material Needed:

^ one tube of dielectric silicone grease
(manufacturers: Standard Motor Products, Permatex, Delco, Motorcraft, etc).

^ one spray can of electrical contact cleaner
(manufacturers, CRC, Peramtex, etc.).

THE PROCEDURE FOR PREVENTING OXIDATION OF CONNECTOR TERMINALS

1) Unplug the connectors and clean the terminals thoroughly with contact cleaner. Use compressed air to dry the terminals.

FIGURE 1

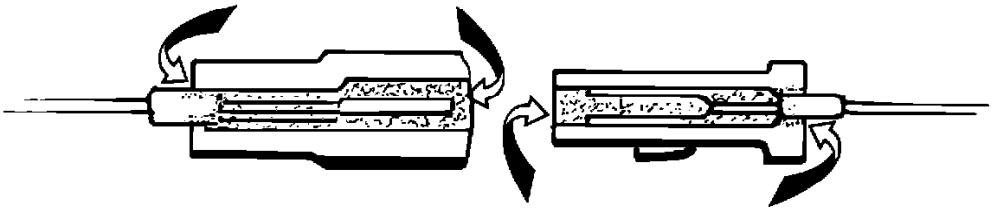

2) Fill both sides of the connectors with dielectric silicone grease. See Figure 1.

3) Plug the connectors together and wipe-off the excess grease.

Connectors on vehicles located in high moisture areas have been filled with grease since March 8, 1986 starting with the following mvin's:

4-Door	238945	
Station Wagon	449576	AND ON
XT Coupe	315672	

Technical Service Bulletin # **062592** Date: **920908**

Brakes - Vibration Diagnosis and Repair

NUMBER: 06-25-92

DATE: 09-08-92

APPLICABILITY:
ALL SUBARU MODELS

SUBJECT:
BRAKE VIBRATION DIAGNOSIS AND REPAIR

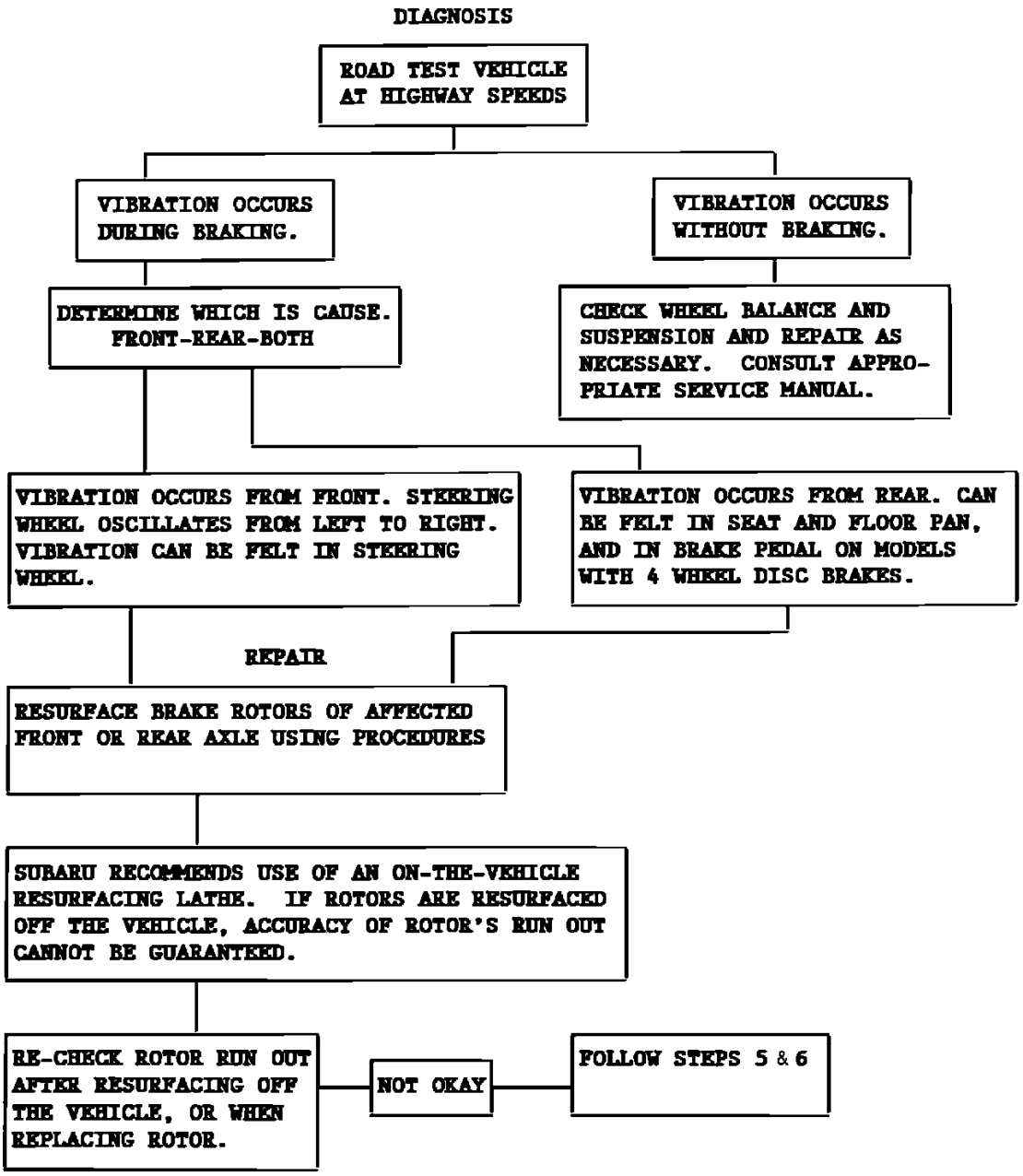

When encountering a customer complaint of brake vibration on any Subaru vehicles, the procedures are required to ensure a proper repair.

BRAKE ROTOR RESURFACING PROCEDURE

Resurfacing rotors with excessive run out is best done on the vehicle when possible, using a Twin Arbor Vehicle-Mounted Brake Lathe, such as the Ammco 710 model.

1. When using an on-the-vehicle resurfacing lathe:
    a. Measure the thickness of the rotor after resurfacing to confirm if it's within specification. (See specifications)
    b. If the thickness is less than specification, replace the rotor with a new one.
    c. Run out doesn't need to be re-checked after resurfacing the rotor when using the on-the-vehicle resurfacing lathe.
2. When using an off-the-vehicle resurfacing lathe. (i.e. Ammco Model 4000). (This method is not recommended.)
    a. Remove rust and foreign material completely from mounting area of rotor using solvent or wire brush.

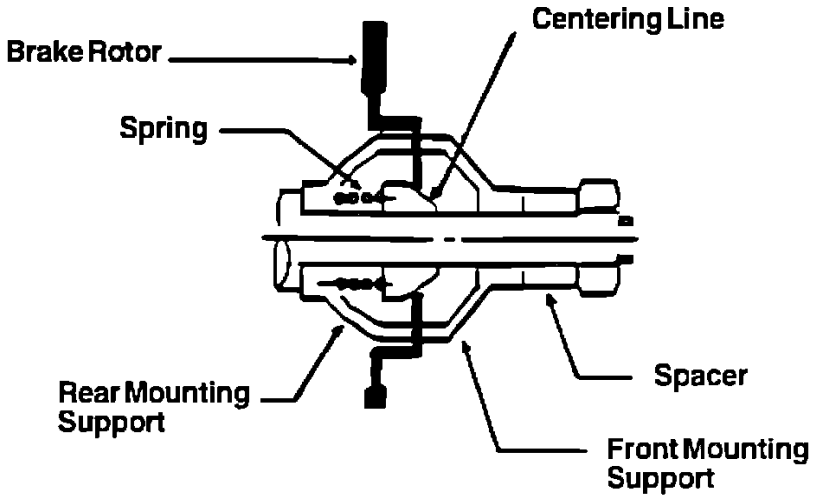

Figure 1

b. Secure the rotor on both sides and mount rotor using a centering cone. See Figure 1.

c. Measure the thickness of the rotor after resurfacing to confirm it is within specification. (See specifications)

d. Reinstall the brake rotor on the vehicle using all lugs. Install the lugs with their flat side in and tighten slightly, using a socket or wrench, then re-check run out.

e. If rust was evident before resurfacing the rear rotor, replace the brake pads using Part Numbers: 26296AA061 for Legacys with Solid Rotors and 26296AA081 for Legacys with Ventilated Rotors.

CHECKING PROCEDURE FOR BRAKE ROTOR RUN OUT

1. Measure free play of bearing by pushing and pulling hub in an axial direction.

   a. Confirm free play of bearing in an axial direction is 0.05 mm or less.

   b. Front wheel bearing free play on all models except Legacy, SVX, and XT6 is not required to be measured due to the ball bearing design.

2. Mount rotor to the hub securely with all lugs, flat side in and tighten slightly, using a socket or wrench.

3. Clean pad contact surfaces of rotor (especially where measurement will be taken).

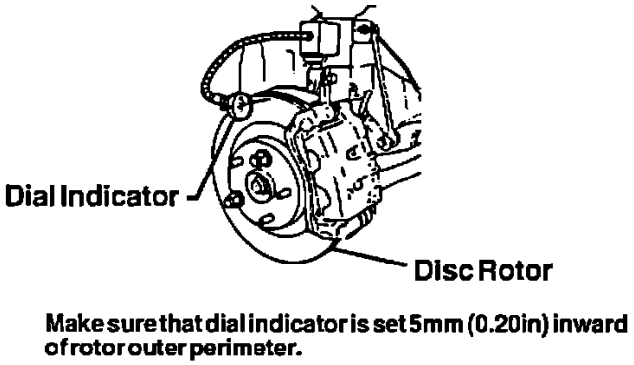

Figure 2

4. Attach dial indicator gauge on caliper mount or strut and measure maximum run out of rotor on both sides at a point of 5 mm inside from the circumference of rotor by rotating rotor gradually. See Figure 2. Run out is best checked when the rotor is cool. (See specifications.)

5. In case the run out of a new or resurfaced rotor is out of specification when re-checking, relocate the rotor to another position on the hub and re-check run out. Repeat the process of relocating the rotor to compensate for minor run out variations between the rotor and hub.

6. If relocating the rotor does not correct run out, check the hub run out for inaccuracy and repair as necessary.

	RUNOUT (MM)		RESURFACING LIMIT (MM)	
MODEL	FRONT	REAR	FRONT	REAR
JUSTY	0.1		15.5	
LOYALE	0.075	*0.1	16	*8.5
XT	0.075	*0.1	16	*8.5
XT-6	0.075	0.075	20	8.5
LEGACY	0.075	0.075	22	8.5
SVX	0.075	0.075	26	8.5

*NOTE: Turbo Models Only

The rotor specifications should be used to determine if a rotor is to be replaced or resurfaced.

BRAKE SERVICE FACTS

1. Brake rotors can be resurfaced more than once for poor run out or thickness variation if still within the minimum thickness standard after resurfacing.

2. Brake rotor discoloration or visible brake pad imprints on the rotor, do not warrant brake rotor replacement.

3. Resurfacing or replacing rotors is not necessary unless a vibration complaint is confirmed or the rotor is scored because a brake pad was allowed to wear to the backing plate.

4. Never resurface or remove the zinc coating on a new rotor. The zinc coating will be eliminated after the first few stops.

5. Resurfacing rotors is not a recommended repair for brake noise.

6. Brake pads should be reused if not worn to their limit when a brake rotor is replaced or resurfaced for vibration.

7. A major cause of brake vibration is inaccurate rotor resurfacing due to incorrect rotor lathe mounting and a brake lathe with excessive shaft run out.

8. When brake pads are worn to the minimum limit and brake pad replacement is necessary, only replace the brake pads. Rotor replacement or resurfacing is not necessary.

9. For any brake repair procedure always inspect the brake system for abnormalities. Example: Sticking or binding caliper, tight or binding pads, uneven wear, rust, foreign material, lack of lubrication, etc.

Technical Service Bulletin # **15-126-07** Date: **080213**

Audio System - Noise With Rear Defogger ON

NUMBER: 15-126-07

DATE: 02/13/08

APPLICABILITY:
All Models

SUBJECT:
Radio Static When Rear Window Defogger Is On

INTRODUCTION

If you encounter a customer complaint of radio static when the radio and rear window defogger are on at the same time, there is the possibility of a break in one or more of the defogger grids. When the grid is broken, a high resistance field is created at the break point which can create static on some radio stations. The level of resistance is usually high enough to create a field of interference which projects out from the glass. The break can be detected visually or by using a portable radio.

PART INFORMATION

Permatex(R) Quick Grid(TM) Rear Window Defogger Repair Kit, part If 15067, used for repairing damaged rear window defogger grids, is

available at local automotive parts stores

REPAIR PROCEDURE/INFORMATION

Note:
There are certain factors that could lead to unsuccessful testing. Examples are: overhead fluorescent lights, telegraph poles, high tension lines, weather conditions, etc. Testing should be performed outdoors on a clear day. Also, there is the possibility that the static may not be duplicated due to the location of the vehicle. If that is the case, you may want to move the vehicle to a different location when testing. We highly discourage the use of accessory window tinting. If the vehicle is equipped with it, do not continue with the procedure.

^ Using a portable radio, set the radio to the same frequency and station being disturbed by static. From the outside of the vehicle, slowly move the radio's antenna across the defogger grids. When interference is encountered, inspect that specific area closely for a break. Depending upon the size of the break, a magnifying glass and/or eyeloupe may be required.

^ Once the break is identified, it should be repaired using the Permatex(R) repair kit instead of replacing the rear glass.

Note:
Make sure to carefully read and follow the instructions and precautions that are included with the Permatex(R) repair kit.

^ The repaired area must be completely opaque and have a resistance reading of essentially zero (0) ohms across the repair.

^ There may be more than one break. If the first break repair does not eliminate the static, re-inspect and repair any other breaks as necessary.

WARRANTY/CLAIM INFORMATION

Note:
For vehicles within the Basic New Car Limited Warranty period the warranty covers repairs needed to correct defects in material or workmanship.

Damage to the rear window defogger/antenna grid which is the result of an outside influence is not covered under warranty Examples are: improper cleaning of the glass, window tinting, scratches and/or cuts from objects coming in contact with the grids, etc

LABOR DESCRIPTION	LABOR OPERATION #	FAIL CODE	LABOR TIME
Rear Window Defogger Antenna Grids – Repair	B 860 - 311	UDA - 01	0.5
Electrical Testing and Diagnosis – Add	C 860 - 001		0.4

Note: Up to $11.00 may be charged out in sublet to cover the cost of the repair kit.

For vehicles within the Basic New Car Limited Warranty period, this repair can be claimed using the table above.

SUBARU QUALITY DRIVEN® SERVICE

CAUTION: VEHICLE SERVICING PERFORMED BY UNTRAINED PERSONS COULD RESULT IN SERIOUS INJURY TO THOSE PERSONS OR TO OTHERS.

Subaru Service Bulletins are intended for use by professional technicians ONLY. They are written to inform those technicians of conditions that may occur in some vehicles, or to provide information that could assist in the proper servicing of the vehicle. Properly trained technicians have the equipment, tools, safety instructions, and know-how to do the job correctly and safely. If a condition is described, DO NOT assume that this Service Bulletin applies to your vehicle, or that your vehicle will have that condition.

Disclaimer

Technical Service Bulletin # **05-50-10** Date: **100723**

Wheels/Tires - Highway Speed Noise/Harshness/Vibration

NUMBER: 05-50-10
DATE: 07/23/10

APPLICABILITY:
All Subaru Vehicles

SUBJECT:
Noise, Vibration and Harshness (NVH) at Highway Speeds Caused by a Tire Imbalance or Excessive Radial Force

INTRODUCTION

This bulletin is to serve as information only and is intended to help minimize steering wheel vibrations at highway speed.

Subaru Justy Hatchback 4WD L3-1.2L SOHC (MPFI)

DESCRIPTION

Some customers may describe a concern of a steering wheel vibration, oscillation or a "shimmy" condition at highway speeds that may be caused by improper tire and wheel balance or excessive radial force variation (RFV).

Subaru of America Inc. (SOA) recommends the use of the Hunter GSP 9700 Wheel Balance and Road Force Measurement System to properly balance the wheel and tire assemblies "dynamically" and to measure the radial force variation of the wheel and tire assembly. While the majority of these conditions can be greatly reduced with proper wheel balancing, some road feel may be considered characteristic and can be compared to like model vehicles with similar mileage.

Wheel Imbalance

The two most common types of wheel imbalances are static (single weight plane) and dynamic (dual weight plane). A static imbalance is best described as a vertical imbalance when the assembly is mounted on the vehicle. A dynamic imbalance is defined as a vertical and inner/outer imbalance while the assembly is mounted on the vehicle.

Wheel and tire assembly imbalance should be addressed first as this is the most common source of tire and wheel vibrations. A well maintained dual weight plane balancer (commonly known as a Dynamic Balancer) such as a Hunter G5P9700 should be used to achieve the best possible results. Balancer settings and proper maintenance are critical to obtaining the best results. Refer to the operating instructions as provided by the balancer manufacturer for setup and maintenance instructions.

Radial Force Variation (RFV

Radial force variation is an industrial measurement describing the tire uniformity under load. These variations, or harmonics, are measured in kilograms, pounds or newtons. SOA asks that all weight measurements be reported using the metric system (grams, kilograms, etc.) The Hunter GSP 9700 Road Force Measurement System is capable of measuring these harmonics and displaying them as R1H (radial first harmonic), R2H (radial second harmonic) and R3H (radial third harmonic.) These different harmonic levels indicate the number of bad occurrences per revolution.

Most commonly, radial first (R1H) through radial third (R3H) harmonics are the cause of steering wheel or body related vibrations that can be felt at highway speeds. Radial force variation can be greatly affected if the vehicle has been parked for an extended period of time causing flat spots or by improper tire inflation. Before performing any diagnosis, be sure to drive the vehicle at least 10 miles and adjust tire pressures as indicated on the door label.

Machine Setup

SOA recommends the use of the Hunter GSP 9700 Road Force Measurement System to properly balance and measure radial force on tire and wheel assemblies. To ensure the most accurate results, the following guidelines should be used:

^ Refer to the operating instructions to set the machine to measure in grams (for balancing) and kilograms (for radial force measurements)

^ Refer to the operating instructions to enable the dynamic balancing mode

^ Refer to the operating instructions to disable the Quickmatch(TM) function, if available.

^ Select the "Mixed Weights Balance" mode and measure the weight location carefully.

^ Calibration should be checked at least once per week

^ Ensure the arbor threads and base plate are clean and in good condition

^ Measure the wheel center bore and select the proper cone for mounting the wheel to the balancer

^ Inspect the cone for any debris or damage and clean or replace as necessary

^ Perform the Centering Check(R) Procedure (software version 2.1 and higher) before each wheel is balanced

PROCEDURE

Always verify the concern with a test drive before beginning diagnosis and performing repairs. Drive the vehicle a minimum of 10 miles to eliminate any flat spots on the tires. Immediately after the road test, lift the vehicle into the air to minimize flat spotting. Adjust tire pressures according to the door label and inspect for any visible damage. If any damage is found, resolve these concerns before continuing with diagnosis.

Tire dynamic imbalance should be measured first and adjusted to within 5 grams. Leave any remaining factory weights in place and remove weights that have been added afier production; be careful not to damage the wheel. If the assembly cannot be adjusted to within 5 grams, inspect for the following:

^ Improperly mounted tire or unseated tire bead

^ Improperly mounted assembly to the balancer

^ Damage to the wheel or tire

^ Damage to the tire balancer

^ Debris located inside the tire

If a vibration can still be felt afier the wheels have been properly balanced, there is a possibility of excessive radial force variation (RFV) in the tire and wheel assembly. To address RFV concerns, a wheel balancer capable of measuring RFV must be used; Subaru Of America Inc. recommends the use of the Hunter GSP 9700 Road Force Measurement System. If a GSP 9700 is not available, locate the nearest machine through the Hunter Engineering web site (www.gsp9700.com).

Measure and record the RFV readings of the wheel and tire assembly for R1H, R2H and R3H. Then perform the wheel runout measurements by following the on-screen instructions or by referring to the operating instructions; this will determine the individual tire and wheel RFV measurements.

The following assembly RFV measurements can be used as a guide:

^ R1H on passenger tires - 5.5kg or less

^ R2H on passenger tires - 4.5kg or less

If higher than normal RFV measurements are found for the assembly, refer to the on-screen instructions or the operating instructions to match the tire and wheel to minimize the assembly RFV By matching the low spot of the tire to the high spot of the wheel, radial force can be reduced without replacing any components.

After all RFV measurements are adjusted to the lowest possible level~ install the wheels with the lowest RFV measurements on the front of the vehicle and road test to verify the concern has been reduced.

Replacement of tires due to excessive assembly measurements may be unnecessary.

If the concern still exists at an unacceptable level, contact the Subaru Technical HelpLine with the following information readily available:

^ Thorough description of customer's concern

^ VIN

^ Mileage

^ Tire manufacturer, size and condition

^ Completed "Dealer vibration Analysis Worksheet" and "Tire Analysis Worksheet" available under TechLine Pre-Call Worksheets on Subarunet. (All measurements should be in grams or kilograms)

^ Service history of vehicle

WARRANTY/CLAIM INFORMATION

LABOR DESCRIPTION	LABOR OPERATION #	FAIL CODE	LABOR TIME
4 Wheel Balance with RFV Adjustment	B613-118	XBQ88	1.2
Sublet Repair, Administrator Expenses	C101-108		0.3

For vehicles within the Basic New Car Limited Warranty period, this repair may be claimed using the table.

SUBARU QUALITY DRIVEN® SERVICE

CAUTION: VEHICLE SERVICING PERFORMED BY UNTRAINED PERSONS COULD RESULT IN SERIOUS INJURY TO THOSE PERSONS OR TO OTHERS.

Subaru Service Bulletins are intended for use by professional technicians ONLY. They are written to inform those technicians of conditions that may occur in some vehicles, or to provide information that could assist in the proper servicing of the vehicle. Properly trained technicians have the equipment, tools, safety instructions, and know-how to do the job correctly and safely. If a condition is described, DO NOT assume that this Service Bulletin applies to your vehicle, or that your vehicle will have that condition.

Rear Window Defogger Grids - Metal Tab Repair

NUMBER: O7-5O-93R

DATE: 12/02/94

APPLICABILITY:
ALL MODELS

SUBJECT:
REPAIR OF REAR WINDOW DEFOGGER METAL TAB REPAIR OF REAR WINDOW DEFOGGER GRIDS

This is a reprint of Service Bulletin 7-50-93 that includes additional information.

TAB REPAIR

If you encounter a broken wiring tab connector from the rear window defogger grid, it is recommended the rear window NOT be replaced. The tab should be resecured using a commercially available repair kit.

One such repair kit is available from Premier Autoware under part # 37827. Phone # 1-800-854-6333. Other kits may be available through your local supplier.

Follow the instructions supplied with the repair kit to ensure a proper repair.

GRID REPAIR

Rear window defogger grids can be repaired using a kit available from Loctite Corporation Part Number 13067.

Effective immediately, dealer warranty repairs will not be accepted for replacement of rear windows because of open defogger grids.

Repairs should not exceed 4 in length on any one line.

Diagnosis of Grids

Locate the exact point of the break in the grid line as follows:

1. Turn on ignition switch and rear window defogger switch.
2. Connect the positive lead of a voltmeter to the right rear window defogger grid contact.
3. With the negative voltmeter lead, touch the defogger grid line at its mid-point on the rear window.

    a. If a reading of approximately 6 volts is obtained, the grid line is operative.
    b. If a 12 volt reading is obtained, the break in the grid line is between the positive contact and the point where the negative voltmeter lead is touching the grid line. To locate the exact point of breakage, move the negative voltmeter lead slowly toward the positive side of the grid until a zero (0) reading is obtained.
    c. If no voltage reading is observed, the break is between the negative side of the grid and the point where the negative voltmeter lead is touching the grid line. To locate the exact point of breakage, move the negative voltmeter lead slowly toward the negative side of the grid to the point where a +12 volt reading is just obtained.

4. Turn off rear defogger switch and ignition switch.

Repair Procedure (Read all manufacturer warnings.)

After the break in the grid line has been located, make repairs as follows:

1. Place protective covering over work area to prevent staining of upholstery in event of spillage of materials.
2. Make sure the glass is cleaned before attempting the repair.
3. The stencil enclosed in the kit is wider than the Subaru grids, therefore, electrical tape may be used to create the proper size stencil.
4. Thoroughly shake the bottle of conductive resin.
5. Apply the resin with the brush, making sure to overlap both ends of the broken line with the resin.
6. After the surface is tack free, about one (1) minute, repeat resin. Do this three (3) times. Recap the bottle of resin tightly.
7. Wait 20 minutes and then carefully remove the electrical tape.
8. Wait 24 hours before turning the defogger on.
9. Clean the brush for future applications using acetone.

FLAT RATE INFORMATION

Item Description/ Failure Code	Operation Number	Labor Descriptions	Time
REAR DEFROSTER METAL TAB/GRID UDA-01,39	B860-311	REAR DEFROSTER METAL TAB/GRID - REPAIR MATERIAL (REPAIR KIT) SHOULD BE CHARGED IN *SUBLET - 860-317	0.5

* Sublet charges should be fair and reasonable.

Technical Service Bulletin # **16-54-04** Date: **040820**

16-54-04 - 08/20/04

This TSB number 16-54-04, dated 08/20/04 has been superceded by TSB number 03-53-04 , dated 08/20/04
Technical Service Bulletin # **075093** Date: **941202**

075093 - 12/02/94

This TSB number 075093, dated 12/02/94 has been superceded by TSB number 075093R , dated 12/02/94
Technical Service Bulletin # **15-102-96** Date: **961201**

Audio System - Exchange Program

This TSB number 15-102-96, dated 12/01/96 has been superceded by TSB number 15-102-96R , dated 05/01/01
Technical Service Bulletin # **16-63-99R** Date: **080403**

A/T - Remanufactured 4EAT/4DAT/5AT Program

This TSB number 16-63-99R, dated 04/03/08 has been superceded by TSB number 16-63-99R , dated 02/27/09
Technical Service Bulletin # **16-63-99R** Date: **000805**

A/T - 4EAT Remanufactured Transaxle Available

This TSB number 16-63-99R, dated 08/05/00 has been superceded by TSB number 16-63-99R , dated 02/27/09
Technical Service Bulletin # **16-63-99** Date: **990419**

A/T - 4EAT Remanufactured Transaxle Program

This TSB number 16-63-99, dated 04/19/99 has been superceded by TSB number 16-63-99R , dated 02/27/09
Technical Service Bulletin # **11-51-97** Date: **971205**

AWD & Full-Time 4WD Diagnostic Testing Precautions

NUMBER: 11-51-97

DATE: 12-05-97

APPLICABILITY:
All Subaru Full-Time AWD Models

SUBJECT:
Diagnostic Service Cautions

Service Bulletin # 11-50-97, concerning State emission testing of Full-Time 4WD and AWD models, includes a Warning Statement that testing of subject vehicles must never be performed on single two-wheel dynamometer nor should the diagnostic service FWD fuse be installed in the engine compartment. Attempting to do so will result in uncontrolled vehicle movement and may cause an accident or injuries to persons nearby.

Should you encounter a need to perform diagnostic service on a Full-Time 4WD or AWD model such as transfer clutch pressure test or service requiring the front wheels raised on rollers (brake tester, chassis dynamometer, etc.) and usage of the diagnostic FWD fuse, please ensure proper vehicle tie-down procedures and operate the vehicle at extremely low speed (5-10 mph).

!CAUTION!
The above diagnostic service cautions are to preclude uncontrolled vehicle movement and/or injuries to persons nearby.

If you have any questions, please contact the Subaru Technical Helpline for assistance.
Technical Service Bulletin # **SHU0593** Date: **930501**

Modified 4EAT Pump Gasket

A modified 4EAT pump gasket is now available through normal parts channels. The new Part Number is 31339AA121 and can be easily identified because the new gasket material is a coated steel type of gasket. This gasket was incorporated in production since November 1992 starting with the

following transmission numbers:

SVX: TRANS # 513102 AND AFTER
LEGACY: TRANS # 527022 AND AFTER
IMPREZA: ALL TRANSMISSIONS

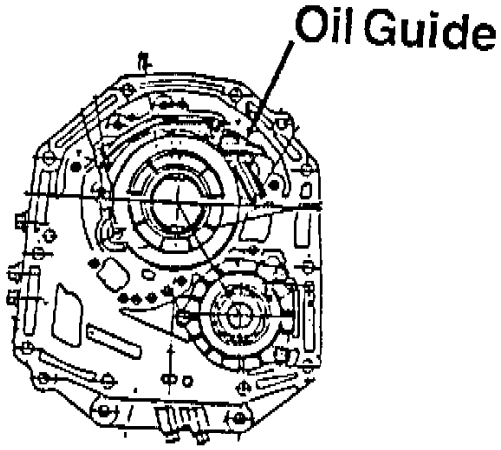

NOTE:
When installing the new type pump gasket on vehicles before the production change you must remove the oil guide plate because it will interfere with the installation of the modified gasket. (See the illustration.)

1992MY Legacy 4EAT ATK-50 VIN Range Clarification

	4-Door Sedans	Station Wagons
SIA:	N*600001 through N*616806	SIA: N*900001 through N*924131
FHI:	N*600001 through N*605769	FHI: N*900001 through N*904476

All 1991-1992MY RHD postal vehicles regardless of VIN.

All 1993MY RHD Postal vehicles had filter kits installed during production.

Legacy Zexel Air Conditioning

If you receive a Customer complaint of a slight "chirp" or "squeak" when the compressor is engaged and also during A/C cycling", do not replace the compressor. Verify proper belt tension and A/C system operation using the applicable service manual. If the A/C system is not used for a period of time, the compressor and clutch assembly may require a break-in procedure to be performed. This procedure can be found in Service Bulletin 10-57-90, Dated 05-29-90, titled "A/C Compressor Inspections". As the customer uses the A/C or defrost modes. the chirp" or "squeak" will diminish. Also, the red clutch dust (rust like substance) is normal and will accumulate during normal usage. Do not replace the compressor or clutch for these conditions.

Legacy Compressor Belt Tension

Use a belt tension gauge approved for use on serpentine type belts.

Calsonic recommends 144-166 lbs. for a new belt. Zexel recommends 145-165 lbs. for a new belt.

Anti-Lock Brakes For Legacy

We have received calls on the Technical Service Helpline concerning the hydraulic unit bleeding procedure for a "Bosch" type hydraulic unit. This information plus corrected information for the Nippon system can be found in the "ABS" Supplement Manual MSA5T9023D or in the 1992 Legacy Service Manual. The Bosch type hydraulic unit does not have plugs for bleeding the air from the solenoid valves like the Nippon unit has. In order to bleed air from solenoid valves you must loosen the brake line to one solenoid valve at a time while energizing the hydraulic unit. Also, use Service Bulletin 06-24-91 Dated 08-15-91, "Secondary Side Bleeding of ABS Hydraulic control Unit: to engage the hydraulic unit ground terminals 1 and 2 and power terminals 11 and 12 of connector F9.

NOTE:
DO NOT RUN THE HYDRAULIC UNIT FOR MORE THAN FIVE SECONDS OR THE UNIT MAY BECOME PERMANENTLY DAMAGED.

93MY Legacy "SRS" Airbag Light Stays on

If you encounter a Legacy with the "airbag" light on all the time, make sure you check the double-lock connectors AB2 and AB7 behind the airbag module in the steering wheel. If the connectors are not double locked the supplemental restraint system control in the console may not show any codes but the light will stay "on".

Legacy All Wheel Drive Fuel Gauge

We have received several Technical Service Helpline calls about the location and part number of the delay amplifier. The delay amplifier is not used in a U.S.A. specification Subaru Legacy.

Legacy Knock Sensor Testing

When using a digital volt/ohm tester to test the knock sensor, output keep the following information in mind: most DVM's will not read 1/260,000 ohms or 560 k ohms specification but, they will display .560 m ohms or .560 million ohms which is the same as 560 k ohms.

92MYSVX Auxiliary Air Valve Disconnection

Subaru Justy Hatchback 4WD L3-1.2L SOHC (MPFI)

If you receive a customer complaint of engine will not idle and stalls-out, check the hose from the throttle body to the auxiliary air valve for disconnection at the air valve nipple. If this vacuum hose comes off other symptoms, such as black smoke from exhaust when engine is started and the check engine light is on and no codes are found in the ECU memory may occur. Install a hose clamp at the air valve connection to prevent the hose from becoming disconnected. All 93my SVX models will be equipped with a hose clamp at the air valve hose connection to ensure a secure connection.

Alternate ECVT Pulley Alignment Formula

Use the completed alternate formula as an example when performing the mathematical formula to find the secondary pulley shim thickness. Attach this example with Service Bulletin 16-34-89, Dated 07-05-89 for future reference.

```
X = A - (B+Lp-Ls) + 0.054 mm - 24.45 mm

     NOTE:  For example purposes only values for A, B, Lp and Ls are
            provided.

X = 106.442 - (48.588 + 64.70 - 31.65) + 0.054 mm - 24.45 mm
     Comment:  Perform the addition and subtraction in the parentheses
               first.

X = 106.442 - (81.638) + 0.054 mm - 24.45 mm
     Comment:  Add parentheses and 0.054 mm

X = 016.442 - 81.692 - 24.45 mm
     Comment:  Subtract 81.692 from 106.442

X = 24.75 - 24.45 mm
     X = 0.3 mm shim thickness
```

Alternate Formula for Pulley Alignment Technical Service Bulletin # **01-143-96** Date: **961223**

Service Manual - Sealants and Adhesives Updates

NUMBER 01-143-96

DATE: 12/23/96

APPLICABILITY
ALL MODELS

SUBJECT
RECOMMENDED SEALANTS AND ADHESIVES

Please use this information to update the Genuine Subani Service Manuals section 1-3, General Information, "Sealants and Adhesives". All products listed in this bulletin are trademarks of the 3M, CEMENDINE, DOW-CORNING, THREEBOND, STAR CALK, ESSEX, SIKA and LOCTITE/PERMATEX Corporations.

APPLICATION	RECOMMENDATION	EQUIVALENTS
Differential oil drain plug, bearing cap #5 (Impreza only), oil pressure switch, etc.	THREEBOND 1105 (also referred to as FUJI BOND "C") SOA part number #004403010	3M T-3 Silicone (black) #08670
Oil pump and transmission case mating surfaces, flywheel and drive plate attachment bolts, engine service hole plug, coolant drain plug, oil sepatator cover, etc.	THREEBOND SUPER 1215 SOA part number #004403007	3M T-3 Silicone (black) #08670 LOCTITE/ PERMATEX #599 Ultra-Grey
Sealing weatherstripping and body grommets against water or dust entry.	STAR CALKING B-33A	3M Weatherstrip Adhesive (Black) #08011 or 3M Stripcalk #08578
Oil pan mating surface, oil pressure switch (Impreza only), etc.	THREEBOND 1207C SOA part number #004403012	3M T-3 Silicone (black) #08670 LOCTITE/ PERMATEX #599 Ultra-Grey
Transmission pan mating surface (4EAT without a paper gasket)	THREEBOND 1217B	3M T-3 Silicone (black) #08670 LOCTITE/ PERMATEX #599 Ultra-Grey
Roof rack, slat and rear spoiler hole sealing against water and dust entry.	Recommendation not available	3M T-3 Silicone (black) #08670
Water pump mechanical seal (Justy only)	THREEBOND 1303	LOCTITE/ PERMATEX #272 High strength and high temperature sealant

SEALANTS

Note:
The 3M T-3 Silicone product # 08670 is "Oxene based" which is odor free and will not affect vehicle sensors I.E., oxygen sensor, etc.

Technical Service Bulletin # **0114597** Date: **970606**

Tie Down Procedures To Prevent Engine Damage

NUMBER: 01-145-97

DATE: 06-06-97

APPLICABILITY: ALL SUBARU VEHICLES

SUBJECT:
TIE DOWN PROCEDURES TO PREVENT ENGINE DAMAGE

When any Subaru vehicle is tied down, it is required that the transmission be left in neutral with the emergency brake firmly applied. The vehicle is to be kept in neutral during transportation.

Please ensure all necessary personnel are informed of this important information.

Technical Service Bulletin # **SHU0495** Date: **950401**

Service Helpline Update - April 1995

SERVICE HELPLINE UPDATE

APRIL 1995
TOPIC OUTLINE

CAUTION
VEHICLE SERVICING PERFORMED BY UNTRAINED PERSONS COULD RESULT IN SERIOUS INJURY TO THOSE PERSONS OR TO OTHERS.

Subaru Helpline Updates are intended for use by professional technicians ONLY. They are written to inform those technicians of conditions that may occur in some vehicles, or to provide information that could assist in the proper servicing of the vehicle. Properly trained technicians have the equipment, tools, safety instructions, and know-how to do the job correctly and safely. If a condition is described, DO NOT assume that a topic covered in this Service Helpline Update applies to your vehicle, or that your vehicle will have that condition. Impreza is a Trademark and Legacy, Justy. Loyale and Subaru SVX are Registered Trademarks.

Engine Testing - Back to Basics

ENGINE TESTING - BACK TO BASICS

Subaru Justy Hatchback 4WD L3-1.2L SOHC (MPFI)

The Technical Helpline continues to get calls concerning rough idles on SUBARU vehicles. If you call the Helpline. the first thing we will ask you is if you have performed a COMPRESSION TEST or a CYLINDER LEAKDOWN TEST. These are two of the most basic tests you can do to determine the internal working condition of the engine.

Just for review purposes, each cylinder 'mist be 'turned over' the SAME number of times to see if they are capable of doing the same amount of work. The throttle plate should be fully open and the engine at operating temperature. If three of the four cylinders come up to pressure in three revolutions of the engine and another needs nine revolutions, obviously there is something wrong with that one cylinder. It doesn't matter that it got to the same pressure as the others, it took too long for it to get there. If the difference between the highest and lowest cylinder is greater than 25Z then the engine has a problem internally.

NOTE:
ALL SPARK PLUGS MUST BE REMOVED PRIOR TO DOING THIS TEST.

The next step would be to follow this compression test with another called a "WET COMPRESSION TEST" where a SLIGHT amount of oil is added to the cylinders to help the rings seal. If too much oil is added, there is the danger of seizing the engine by HYDROSTATIC LOCK. If compression readings increase too much, then this is usually an indication that the rings are bad although it is normal to get slightly increased readings even on a good engine.

If the engine has failed these tests, we recommend you perform a CYLINDER LEAKDOWN TEST where air is put into the cylinders and you look for leakage. The throttle plate should be open, remove the engine oil dipstick/filler cap and radiator cap. Air pressure should be regulated to 100 PSI if possible. Maximum allowable leakage is 10% (as per SUN Corporation). The cylinder being tested should be at Top Dead Center to be certain the valves are closed. With the cylinder pressurized, check for leakage. Air out the throttle body indicates a bad intake valve, out the tailpipe a bad exhaust valve, out the dipstick tube/oil filler tube.. bad rings (some leakage here is normal due to ring design), bubbles in the radiator head gasket, cracked cylinder wall(s). Once the source of leakage has been determined, it is easy to determine your course of action.

If the engine passes these tests and EVERYTHING involved in the tests has been done correctly, then the cause of the rough idle is elsewhere. Perhaps electrical or fuel related.

NOTE:
Sometimes under certain conditions1 it is possible for an engine with an internal sealing problem to pass a Compression Test. We recommend that all Compression Tests be followed up with a Cylinder Leakdown Test.

If you have any questions concerning this matter or the tests involved, contact the Technical Helpline.

Replacing AWD Rear Wheel Bearings

REPLACING AWD REAR WHEEL BEARINGS ON LEGACY, IMPREZA AND SVX

When replacing rear wheel bearings on All Wheel Drive LEGACY, IMPREZA, and SVX vehicles, be certain not to overtorque the lateral link bolt that secures the two transverse suspension arms to the wheel bearing housing. DO NOT AIR GUN THE BOLT OFF. The proper torque is probably less than you think. Since the torques are different for the different models and years, refer to the appropriate manuals for the proper specs for the vehicle you are working on. If this bolt is overtorqued, it can deform the housing and may lead to a repeat failure of the wheel bearing.

If you encounter a repeat failure of a rear wheel bearing occurring in an unreasonably short amount of miles, the housing may have been deformed during the first repair. Replacement of the bearing and the housing may be required.

There are some other things to remember when working on the wheel bearings. Never loosen or tighten the axle nut with the weight of the vehicle on the wheel. The vehicle should be in the air with the wheel removed prior to loosening or tightening the axle nut. If this precaution is not taken, damage to the wheel bearing may occur. The axle nuts are NOT reusable. A new nut should be used with the new bearing. Always insure that the new bearing is properly packed with suitable wheel bearing grease. The grease that the bearing is shipped with is NOT sufficient. Always use the proper special tools to install the bearing and torque the axle nut to the correct specifications.

Electrical Diagnosis - Helpline and You

ELECTRICAL DIAGNOSIS, THE HELPLINE AND YOU

When you call the Subaru Technical Helpline with an electrical problem, it is IMPERATIVE that you tell us if ANY aftermarket electrical device has been installed in the vehicle. This, of course, includes radios, CD players, alarm systems, mobile phones, two-way radios, warning lights, etc.

Without this information, we will assume the vehicle is stock and anything electrical is factory approved and our diagnosis will proceed accordingly.

It is not important who installed it but, it must be looked at as a possible source of the problem.

If the vehicle is equipped this way, locate the power source of the equipment and disconnect it and see if the problem still persists. If not, then the aftermarket device was no doubt the problem. If the problem still exists, the aftermarket device could still be the source of the problem due to it possibly damaging control units during the installation process or during its operation. This, of course, is not a matter for warranty.

So, before you call us about a weird electrical problem, take a look around the vehicle and see if any of these items are there and might be the cause of your problem.

DON'T LET A NON OEM DEVICE MAKE A PROBLEM FOR YOU! (AND US!)

2.2 Impreza AWD Fuel Senders

2.2 IMPREZA AWD FUEL SENDERS

The new 2.2 litre AWD IMPREZA vehicles have a dual fuel sending unit configuration similar to the system used in LEGACY vehicles throughout the years. There are main and sub-senders that operate the fuel gauge. The senders are wired in series, just like the LEGACY.

You will find the sub-sender listed in the parts books but not shown in the illustrations.

Cruise Control - Use of Select Monitor

CRUISE CONTROL AND THE USE OF THE SELECT MONITOR

Some SUBARU cruise control modules will communicate with the select monitor. The presence of the C/C option on the select monitor screen when scrolling through "/OTHERS" indicates that communications may be possible. However, as opposed to the other computers on board, the cruise computer can be turned on and off by the main cruise control switch. The cruise main switch must be ON for communications to occur. Also, the cruise control computer must have its powers and grounds and be able to function. This is not to say that the cruise control system must be functional. (If it worked, you wouldn't be working on it!). If communications won't occur, "ERROR 1" will be displayed.

Cruise Control Corrections - 95 Legacy

1995 LEGACY CRUISE CONTROL CORRECTIONS

LED No.	Signal name	Display
1	SET/COAST switch	SE
2	RESUME/ACCEL switch	RE
3	* Stop light switch	ST
4	* Brake switch * Clutch switch (MT)	BR
5	Inhibitor switch (AT)	N
6	—	—
7	—	—
8	—	—
9	—	—
10	—	—

SE	RE	ST	BR	N
—	—	—	—	—

1	2	3	4	5
6	7	8	9	10

1. CHECK THE SIGNAL USING A SELECT MONITOR.

1) Turn ignition switch to ON.
2) Turn cruise control main switch to ON.
3) Set select monitor in "FA0" mode.
4) Check signals for proper operation.
   (1) When pushing the SET switch:
   LED No. 1 lights.
   (2) When pushing the RESUME switch:
   LED No. 2 lights.
   (3) When pushing the CANCEL switch
   LED No. 1 and 2 Light

2. CHECK THE CRUISE CONTROL COMMAND SWITCH. KEY ON

1) Disconnect connector from command switch. at B68.
2) Measure voltage between command switch connector and body.

Terminals / Specified voltage:
No. 1 — Body / 10 V, or more Harness Side

3) Check for harness short circuit between command switch and cruise control module. - Disconnect Cruise Control Module.

Terminals / Specified resistance:
No. 2 — Body / 1 MΩ, min.
No. 3 — Body / 1 MΩ, min.

4) Measure resistance between each terminal of switch side connector to check the switch operation. at B68.

Terminals:
No. 1 — No. 2 (SET/COAST SWITCH)
No. 1 — No. 3 (RESUME/ACCEL SWITCH)
No. 1 — No. 2/ No. 3 (CANCEL)
Specified resistance:
10 Ω, max. (ON)
1 MΩ, min. (OFF)

LED No.	Signal name	Display
1	SET/COAST switch	SE
2	RESUME/ACCEL switch	RE
3	Stop light switch	ST
4	• Brake switch • Clutch switch (MT)	BR
5	Inhibitor switch (AT)	N
6	—	—
7	—	—
8	—	—
9	—	—
10	—	—

SE	RE	ST	BR	N
—	—	—	—	—

1	2	3	4	5
6	7	8	9	10

1. CHECK THE SIGNAL USING A SELECT MONITOR.

1) Turn ignition switch to ON.
2) Turn cruise control main switch to ON.
3) Apply parking brake securely.
4) Set select monitor in "FA0" mode.
5) Release the clutch pedal. (MT model)
6) Depress the brake pedal and check signals for proper operation.
   Stop light switch: LED No. 3 — lights.
   Brake switch : LED No. 4 — lights.
7) Release the brake pedal. LED No. 3 & 4 Go Out.
8) Depress the clutch pedal and check signal for proper operation. (MT model)
   Clutch switch: LED No. 4 — lights.
9) Set the selector lever from D to N position and check signal for proper operation. (AT model)
   Inhibitor switch: LED No. 5 — lights.

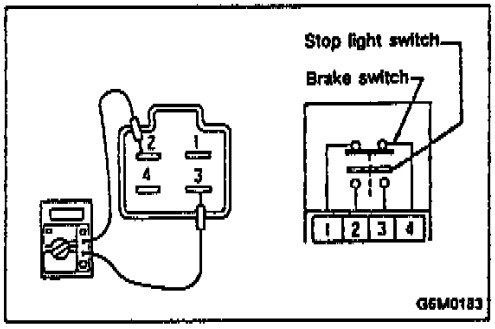

2. CHECK BRAKE SWITCH AND STOP LIGHT SWITCH.

1) Remove connector of stop and brake switch.
2) Check circuit between each terminal.

Pedal operation	Brake switch between No. 1 — No. 4	Stop light switch between No. 2 — No.
Depressing the brake pedal.	Circuit failure (open)	Circuit normal (closed)
Without depressing the brake pedal.	Circuit normal (closed)	Circuit failure (open)

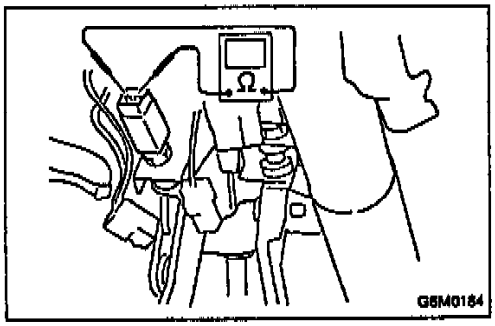

3. CHECK CLUTCH SWITCH. (MT MODEL)

1) Disconnect connector from clutch switch.
2) Check continuity of the clutch switch.

Terminals / Specified resistance:
No. 1 — No. 2 / 10 Ω, max. (Without pedal depressing.)
/ 1 MΩ, min. (Pedal depressing.)

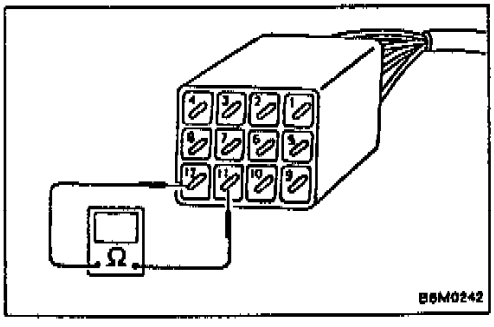

4. CHECK INHIBITOR SWITCH. (AT MODEL)

1) Set the selector lever to N position.
2) Disconnect connector of inhibitor switch.
3) Check continuity of the inhibitor switch.

Terminals / Specified resistance:
No. 11 — No. 12 / 10 Ω, max. (Selector lever is in P or N.)
Does car start in 'P' or 'N' ?
/ 1 MΩ, min. (Selector lever is not in P or N.)

1. CHECK SHORT CIRCUIT OF CRUISE CONTROL COMMAND SWITCH.

1) Separate connector of cruise control command switch.
2) Measure resistance between each terminal of cruise control command switch.

Terminals / Specified resistance:

SET switch ON No. 1 — No. 2 / 10 Ω, max.
RESUME switch ON No. 1 — No. 3 / 10 Ω, max.
CANCEL switch ON No. 1 — No. 2 / 10 Ω, max.
No. 1 — No. 3 / 10 Ω, max.

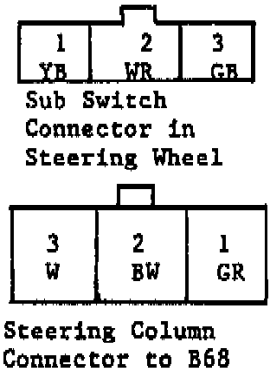

Included with this Technical Helpline Update, are some corrections to the 1995 Subaru Legacy Service Manual Volume 3, Section 6-2 diagnosing procedures for the 1995 Subaru Legacy Cruise Control.

We Suggest that you review these and make the necessary corrections to your service manuals to avoid any problems in the future.

If you have any questions concerning this information contact the Technical Helpline.

1995 LEGACY LSi

SECURITY SYSTEMS MODULE

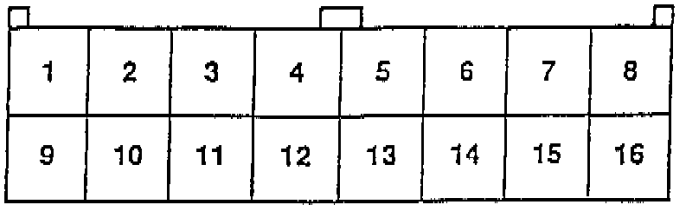

Connector B93 - 16 Pin/Black
Location - Right side of dash to right of glovebox

TERMINAL NUMBER	CONNECTED TO	WIRE COLOR	VALUE
1	Door lock/unlock switch (united with door lock actuator)	L	supplies ground when unlocked
2	Key cylinder lock switch	GY	supplies momentary ⏚ when locked
3	Tamper switch	GL	supplies ⏚
4	Door switch (room light circuit)	YR	closed - 12.8 / open - 1.5
5	Starter interrupt relay	BW	12.8
6	ignition switch (ACC)	GR	12.8
7	Security indicator light "DO NOT GROUND"	PB	11.5
8	Power supply (back-up)	LR	12.8
9		B	Ground
10	Hood switch (supplies ground NO - Armed, Hood closed)	GW	
11	Trunk lid switch (trunk room light circuit Rear gate switch (luggage room light switch)	LgY	12V trunk closed / 1 trunk open
12	Headlight alarm relay	BG	12.8
13	Horn relay	RG	12.8
14	Key cylinder lock switch		
15	Trunk lid unlock switch	WL	momentary ⏚ when unlocked
16			

Technical Service Bulletin # **SHU0394** Date: **940301**

Service Helpline - Updated Information

SERVICE HELPLINE UPDATE

MARCH, 1994
HELPLINE UPDATE

(01) JUSTY DIAGNOSTICS

(07) 1990MY-PRESENT LOYALE FUEL PUMP CONTROL UNIT WIRING DIAGRAM

(07) 1992 SVX ROMs

(12) 1993 SIA BUILT LEGACY, HEADLINER DROOP

(07) BATTERY CHARGING

(11) LEGACY CODE 32 O2 SENSOR

(14) TRANSMISSION PRESSURE GAUGE SET

(05) 1991 LEGACY COMPLAINT OF BANGING OVER BUMPS, ESPECIALLY PREVALENT IN THE RIGHT REAR

Justy Diagnostics

When phoning the helpline for assistance, having as much information available at that time is essential. When working on a Justy with an ECVT problem that may not appear to be electrical in nature, our staff could function much more effectively if all of the preliminary checks were completed prior to calling. Of these checks, commonly overlooked are line, pitot, and primary pulley pressures.

The "ECVT Transmission Diagnosis Part II" video reference booklet (MSA5AV135B), as published and released by Subaru Technical Training, is very helpful and descriptive in assisting technicians in the gathering and evaluation of the above mentioned pressures. This publication, along with its accompanying video, can be found in your technical library. If is it not, we strongly suggest you order them today.

1990-Present Loyale Fuel Pump Control Unit Wiring Diagram

When diagnosing a problem with a 1990MY or later Loyale, and a fuel pump control unit (rev sensor) problem is suspected, refer to the 1989my Loyale Service Manual, Section 6-3, Page 43. The control unit information is not found in later publications.

1992 SVX Roms

As many of you are aware, the November 1993 issue of the Service Helpline Update contains a "ROM Application Chart". In this chart, you will find that the applicable part number listing for the 1992 SVX ROM is 22677AA040 as long as the ECU part number is 22611AA680, 681, or 682.

When confronted with a customer complaint of cold/hot start rough running and stall or 2 step acceleration and, if prior installation of part number 22677AA040 is unknown, please check the vehicle's history prior to opening the ECU. If no evidence of prior installation is found and you have opened the ECU, please be aware that some ECUs have had a ROM installed at the port. (If this is the case, then the tan resistor has also been cut or removed.) At this time, you must determine which ROM is in the ECU. The ROM is identified by the white label which is affixed to the top of the ROM. Any ROM label having the markings of either "F23AYH06" or "23011" or a combination of both is part number 22677AA040 and does not need to be replaced. Any ROM having a different identification number(s) should be replaced with the 22677AA040 for the above mentioned driveability condition as described in Service Bulletin numbers 02-87-92 and 02-87-92R.

Additionally, if you have a 22611AA680 ECU, it may not have the black noise suppressor as described in Service Bulletin number 11-44-93 due to a difference in the circuit board. Therefore, no modification to the acceleration logic control is necessary.

1993 SIA Built Legacy, Headliner Droop

The Subaru Technical Service Helpline has been made aware of some 1994 SIA built Legacy vehicles which are experiencing a droop in the forward part of the headliner, above the tint line of the windshield. The condition is most noticeable from inside the car looking up, as opposed to outside of the car, due to the fact that the windshield tinting may be hiding the condition. Anyone having additional information or similar conditions is requested to contact the Technical Services Helpline before making any repairs.

Battery Charging

Batteries low in voltage (below 11.6) need to be specially charged.

A battery at this voltage is heavily sulfated and needs either a very long, slow charge, or a very high initial charge voltage.

If a standard automotive charger is used, the battery should be left on the charger for at least two days. Since the acid in this battery will mostly be stratified, it needs sufficient over charge to mix. Even after a two day charge, the battery still may only come to 60-80Z of capacity and may need to be cycled to come to full charge. If possible, once the battery is fully charged by this method, it's advisable to charge at 1 amp for 24 hours constant current.

A battery that is below 11.6 volts can also be hydrated. That means there is lead sulfate in the separator that will form lead shorts once the battery charges. Because of these shorts, the battery may self discharge once the battery has been recharged.

If a standard charger is used with a maximum voltage of 14.8 volts and the battery is getting hot on charge, it is a good indication that the battery has internal shorts.

If a boost charger can be used, a deeply discharged battery can be placed on the high setting up to 30 minutes. This will help the recharge reaction get started. After a boost charge for 30 minutes, the battery still needs at least an 8 hour slow charge. But, the battery may only reach a 60-80% state of charge.

Batteries from 11.6 to 12.1 may also be somewhat difficult to charge, and may need extra time to reach full capacity.

With any low voltage battery, it's good to give it a second charge after the battery has been sitting for at least a day.

It is always good to check gravities to determine if all the cells are charging equally. Gravities that differ more than 30 pts. may indicate some potential problem with the battery. Gravities greater than 50 pts. between cells should be replaced.

Legacy Code 32 O2 Sensor

A complaint of ECS light "on" Code 32 (O2 Sensor), where no component failures can be confirmed, could be caused by the oxygen sensor exterior body being filled with water. This situation can occur from driving through standing water, snow and/or from a car wash. Clear the ECU

memory and test drive and confirm that Code 32 does not reappear in memory.

Transmission Pressure Gauge Set

We have received information that some dealers do not have the transmission pressure gauge set. This tool was sent in the Impreza primary tool kit 2 (SOA32155N) along with a brake effort gauge. Take a look through your Impreza tools. It is packaged in a black carrying case and includes two gauges and several fittings. If you do not have this kit, we suggest you purchase one through Kent-Moore (1-800-345-2233). Kent-Moore handles all Subaru special tools.

1991 Legacy Noise In Rear Over Bumps

1991 LEGACY COMPLAINT OF BANGING OVER BUMPS, ESPECIALLY PREVALENT IN THE RIGHT REAR

If you encounter a banging over bumps in the right rear and have eliminated all of the possibilities such as, not in any particular order, replacement of struts and strut mounts, torqued checked all of the rear suspension components and adjusted brake cable clamps on trailing arms.

If the noise is still there, check the rear defogger condenser. This may be contacting the inside of the 1/4 panel causing a banging noise.

If, in fact, this corrects the problem, please fill out a QMR and let us know at the Helpline.Technical Service Bulletin # **SHU0494** Date: **940401**

Loyale and Legacy HLA Noise

Should you encounter a Legacy or an Impreza with noisy hydraulic lash adjusters (HLA) which do not pressurize during normal running, the cause may be a partially blocked oil passage in the rocker shaft. Also, Loyale vehicles, especially those with higher mileage, may have an oil flow problem due to the oil pump. When checking oil pressure, it may be within specifications but the volume of oil may not be sufficient. In this case, it is recommended the oil pump be replaced.

Impreza Rear Strut Noise Production Change

The Impreza rear strut was modified in production to eliminate a thumping noise when hitting bumps in the road. The production change was made beginning with February 1, 1993, and later with lot number NA19 and later. The lot number is located just under the lower spring saddle on the strut housing.

Lot number explanation: N=93 (year) A=January (month) 19=day of month.

In the lot number, the year designation runs backwards in the alphabet:
N=93 M=94 L=95, etc.

If you have questions, contact the Technical Helpline.

ECVT Trouble Code 31

Trouble code 31 from the ECVT Clutch Control Unit (CCU) may be due to the engine idle speed being too high.

The reason this code is displayed is because of the fail-safe function of the clutch control unit.

The clutch control unit looks for input from many areas for proper operation. Some of these inputs are from the accelerator switch and the tachometer signal from the Distributor.

If the Clutch Control Unit sees a tachometer signal above 1,000 rpm, but no signal from the accelerator switch, it assumes that the vehicle is trying to be driven and will start to engage the electromagnetic clutch. Since the Clutch Control Unit sees no input signal from the accelerator switch, it assumes it to be defective and will turn on the "check ECVT" light and, in most cases, display the code for the accelerator switch.

If this condition is happening, the car may creep when the shifter is put into "D" or "DS" range with the brake off and the vehicle on level ground.

The fix is simple. Check and adjust accelerator switch, engine timing and rpm's to specs.

There are, of course, other things that can also produce this trouble code but this simple check should not be overlooked.

ECVT - Select Monitor Speed Sensor Reading

When using the Select Monitor on a Justy ECVT, and you are looking at information from the transmission control unit speed sensor and not the ECM speed sensor, it is normal for the reading to indicate a speed no faster than 40 mph.

Impreza Headlights

You may receive a customer complaint of Impreza headlights dimming at idle. Do not attempt repair. This is a normal condition. The generator incorporates an IC regulator which features a "load response control". The load response control circuit function is to gradually increase the generator output when an additional electric load, such as headlights or blower fan, is applied to the engine in the idling state. This prevents a sharp drop in engine idling speed and ensures an improved comfort while the engine is idling. Refer to the Impreza Service Manual, Section 6-1, page 2 (MI-0).

SVX Complaints of No Heat From Dash Vents

If you encounter a customer complaint of no heat from dash vents, do not attempt repairs. This system is not designed to provide heat from dash vents in the heat mode. The air system is uniquely configured for optimum air flow and comfort.

Legacy Trim Item Characteristics

After introduction of the 1993 Legacy, a few trim items were seen to have changed in production. These changes are characteristic and no attempt should be made to match the 1993 Legacy to the 1992 specifications.

Subaru Justy Hatchback 4WD L3-1.2L SOHC (MPFI)

Customer questions and concerns continue to surface on these items.

Listed are a few of these characteristics for 1993:

^ A slight open area in the door panel fabric at the point where the fabric is folded over and tucked under. The fabric pile will have a small separation at the fold. This characteristic will be seen to varying degrees and should be explained as "a characteristic of design."

^ On Legacy wagons, the rear floor carpeting has a sewn edge from one wheel well to the other wheel well. There is a portion of the carpeting edge from the wheel well to the back of the seats, on both sides, that has no sewn edge. This is a manufacturing decision and should not be changed.

^ On Legacy wagons, the rear floor carpeting does not have floor snaps built into the carpet behind the seats. As a result, the carpet does tend to buckle upward when the rear seats are in an up position. This is a manufacturing decision and should not be upgraded.

Legacy Door/Ignition Key Code Location

If the door lock/ignition key should become lost or misplaced, and the key code information is unavailable or incorrect, the key code number that is used to make a duplicate key can be found on the passenger's side door lock cylinder lever. Refer to the applicable Service Manual and follow the procedure to gain access to the key code number.

All "L" series, XT and Justy - refer to Service Bulletin 01-109-88.

Impreza - refer to 12-60-93 and May 1993 Helpline Update.

Passive Restraints

If you encounter a passive belt that is in the front (door open) position and moves to the rear (door closed) position with the door open, the front limit switch wiring may be grounded or broken.

We have found that the interior trim molding which covers the front limit switch on the "A" pillar, has a metal clip that secures the trim molding to the body at the dash, door jam area. This metal clip may penetrate the B/W or R/W wire. This will continuously provide a ground to the limit switch and force it to the rear position. Tape must be removed in some instances to see the cut in the wire. When the area is located, you must repair the wire. We recommend you cut, solder and use heat shrink tubing.

After repair is made, verify passive belt operation.Technical Service Bulletin # **073186** Date: **861124**

Electrical Connector Terminals - Oxidation

NUMBER: 07-31-86

DATE: 11-24-86

APPLICABILITY
ALL SUBARU VEHICLES

SUBJECT:
OXIDATION OF ELECTRICAL CONNECTOR TERMINALS

THIS BULLETIN IS FOR INFORMATION ONLY

If you encounter an electrical connector terminal which has become oxidized because of prolonged moisture exposure, this procedure will prevent reoccurance.

Material Needed:

^ one tube of dielectric silicone grease
(manufacturers: Standard Motor Products, Permatex, Delco, Motorcraft, etc).

^ one spray can of electrical contact cleaner
(manufacturers, CRC, Peramtex, etc.).

THE PROCEDURE FOR PREVENTING OXIDATION OF CONNECTOR TERMINALS

1) Unplug the connectors and clean the terminals thoroughly with contact cleaner. Use compressed air to dry the terminals.

FIGURE 1

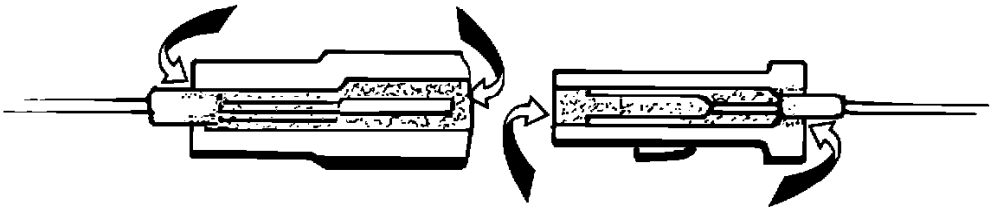

2) Fill both sides of the connectors with dielectric silicone grease. See Figure 1.

3) Plug the connectors together and wipe-off the excess grease.

Connectors on vehicles located in high moisture areas have been filled with grease since March 8, 1986 starting with the following mvin's:

4-Door	238945	
Station Wagon	449576	AND ON
XT Coupe	315672	

Technical Service Bulletin # **062592** Date: **920908**

Brakes - Vibration Diagnosis and Repair

NUMBER: 06-25-92

DATE: 09-08-92

APPLICABILITY:
ALL SUBARU MODELS

SUBJECT:
BRAKE VIBRATION DIAGNOSIS AND REPAIR

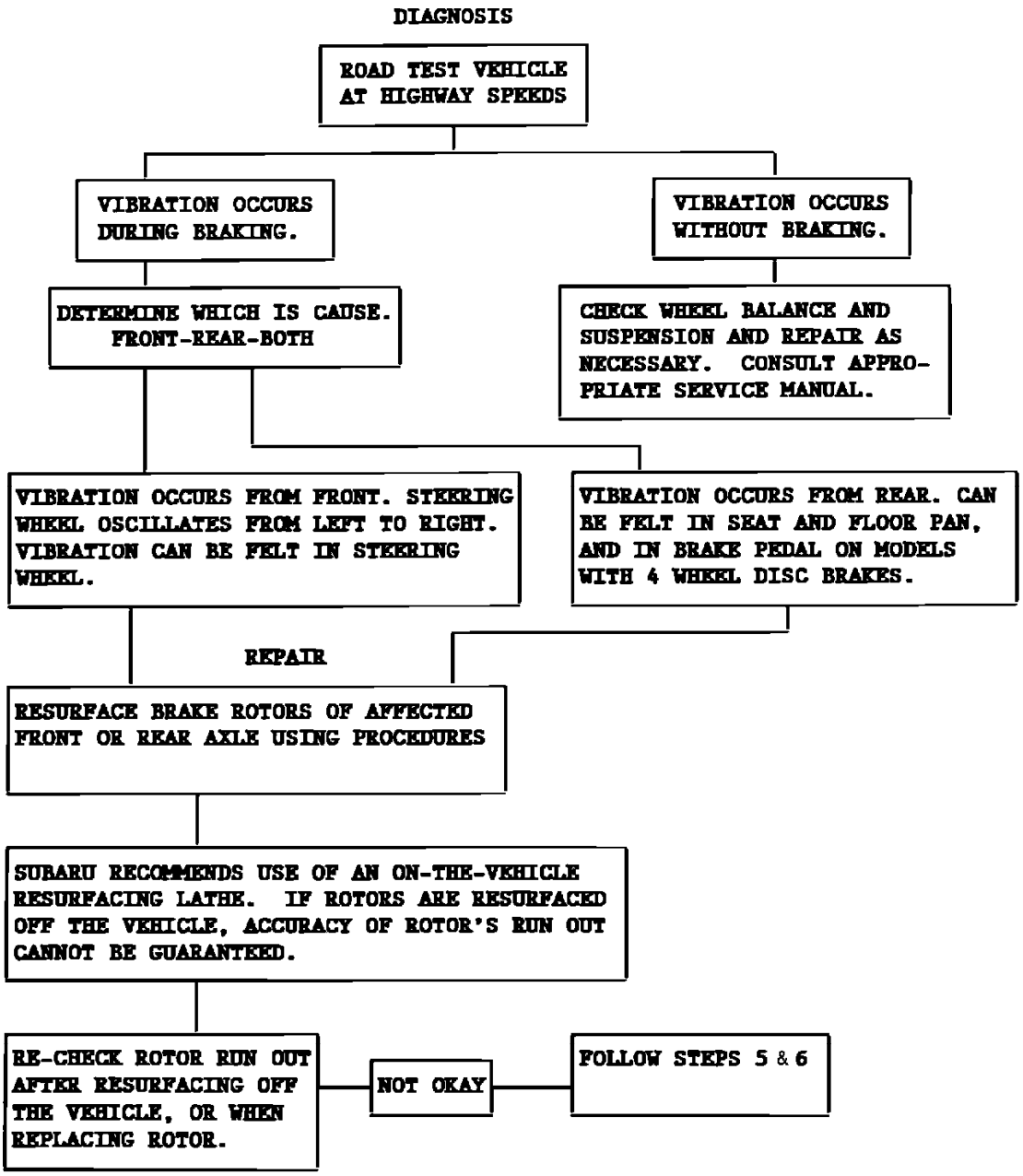

When encountering a customer complaint of brake vibration on any Subaru vehicles, the procedures are required to ensure a proper repair.

BRAKE ROTOR RESURFACING PROCEDURE

Resurfacing rotors with excessive run out is best done on the vehicle when possible, using a Twin Arbor Vehicle-Mounted Brake Lathe, such as the Ammco 710 model.

1. When using an on-the-vehicle resurfacing lathe:
    a. Measure the thickness of the rotor after resurfacing to confirm if it's within specification. (See specifications)
    b. If the thickness is less than specification, replace the rotor with a new one.
    c. Run out doesn't need to be re-checked after resurfacing the rotor when using the on-the-vehicle resurfacing lathe.
2. When using an off-the-vehicle resurfacing lathe. (i.e. Ammco Model 4000). (This method is not recommended.)
    a. Remove rust and foreign material completely from mounting area of rotor using solvent or wire brush.

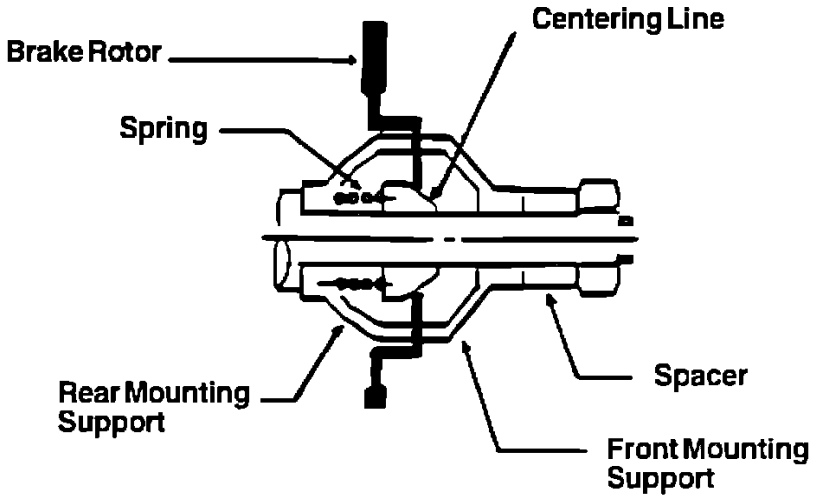

Figure 1

b. Secure the rotor on both sides and mount rotor using a centering cone. See Figure 1.

c. Measure the thickness of the rotor after resurfacing to confirm it is within specification. (See specifications)

d. Reinstall the brake rotor on the vehicle using all lugs. Install the lugs with their flat side in and tighten slightly, using a socket or wrench, then re-check run out.

e. If rust was evident before resurfacing the rear rotor, replace the brake pads using Part Numbers: 26296AA061 for Legacys with Solid Rotors and 26296AA081 for Legacys with Ventilated Rotors.

CHECKING PROCEDURE FOR BRAKE ROTOR RUN OUT

1. Measure free play of bearing by pushing and pulling hub in an axial direction.

   a. Confirm free play of bearing in an axial direction is 0.05 mm or less.

   b. Front wheel bearing free play on all models except Legacy, SVX, and XT6 is not required to be measured due to the ball bearing design.

2. Mount rotor to the hub securely with all lugs, flat side in and tighten slightly, using a socket or wrench.

3. Clean pad contact surfaces of rotor (especially where measurement will be taken).

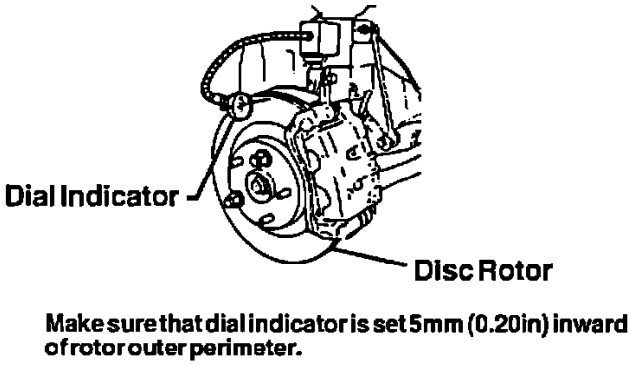

Figure 2

4. Attach dial indicator gauge on caliper mount or strut and measure maximum run out of rotor on both sides at a point of 5 mm inside from the circumference of rotor by rotating rotor gradually. See Figure 2. Run out is best checked when the rotor is cool. (See specifications.)

5. In case the run out of a new or resurfaced rotor is out of specification when re-checking, relocate the rotor to another position on the hub and re-check run out. Repeat the process of relocating the rotor to compensate for minor run out variations between the rotor and hub.

6. If relocating the rotor does not correct run out, check the hub run out for inaccuracy and repair as necessary.

Subaru Justy Hatchback 4WD L3-1.2L SOHC (MPFI)

	RUNOUT (MM)		RESURFACING LIMIT (MM)	
MODEL	FRONT	REAR	FRONT	REAR
JUSTY	0.1		15.5	
LOYALE	0.075	*0.1	16	*8.5
XT	0.075	*0.1	16	*8.5
XT-6	0.075	0.075	20	8.5
LEGACY	0.075	0.075	22	8.5
SVX	0.075	0.075	26	8.5

*NOTE: Turbo Models Only

The rotor specifications should be used to determine if a rotor is to be replaced or resurfaced.

BRAKE SERVICE FACTS

1. Brake rotors can be resurfaced more than once for poor run out or thickness variation if still within the minimum thickness standard after resurfacing.

2. Brake rotor discoloration or visible brake pad imprints on the rotor, do not warrant brake rotor replacement.

3. Resurfacing or replacing rotors is not necessary unless a vibration complaint is confirmed or the rotor is scored because a brake pad was allowed to wear to the backing plate.

4. Never resurface or remove the zinc coating on a new rotor. The zinc coating will be eliminated after the first few stops.

5. Resurfacing rotors is not a recommended repair for brake noise.

6. Brake pads should be reused if not worn to their limit when a brake rotor is replaced or resurfaced for vibration.

7. A major cause of brake vibration is inaccurate rotor resurfacing due to incorrect rotor lathe mounting and a brake lathe with excessive shaft run out.

8. When brake pads are worn to the minimum limit and brake pad replacement is necessary, only replace the brake pads. Rotor replacement or resurfacing is not necessary.

9. For any brake repair procedure always inspect the brake system for abnormalities. Example: Sticking or binding caliper, tight or binding pads, uneven wear, rust, foreign material, lack of lubrication, etc.

Technical Service Bulletin # **106594** Date: **940308**

A/C - Oil Specification

NUMBER: 10-65-94

DATE: 03-08-94

APPLICABILITY
ALL SUBARU MODELS

SUBJECT:
PROPER OILS FOR SUBARU A/C SYSTEMS

With the release of new vehicles with non-CFC (R134A) A/C systems, it has become even more important that the proper oil be used in each type of system. Refer to the reference chart below to select the proper type oil.

REMEMBER, DON'T MIX TYPES OF OILS!!!

Subaru Justy Hatchback 4WD L3-1.2L SOHC (MPFI)

		SYSTEM TYPE	
		R-12 MINERAL OIL	R-134A PAG OIL (POLYALKALINE GLYCOL)
IMPREZA		D-90PX	ZXL200PG (DH-PR) R-TYPE
SVX		D-90PX	ZXL100PG (DH-PS) S-TYPE
LEGACY	CALSONIC	D-90PX	ZXL200PG (DH-PR) R-TYPE
	ZEXEL	D-90PX	ZXL100PG (DH-PS) S-TYPE
JUSTY		D-90PX	NO R-134A SYSTEMS
LOYALE	PANASONIC (MATSUSHITA)	ATMOS S-150	NO R-134A SYSTEMS
	ALL OTHERS	D-90PX	NO R-134A SYSTEMS

NOTE: R AND S TYPE OILS HAVE DIFFERENT VISCOSITIES.

OIL CHART

Both types of PAG oil are available through Subaru Parts by ordering the following part numbers:

FOR ZXL200PG (DH-PR) USE PART # K0010FS100
FOR ZXL100PG (DH-PS) USE PART # K0010PS000

Each Part Number is for a pack of four (4) small containers. Each S-Type container is 60 ml (2.0 oz.). Each R-type container is 40 ml (1.4 oz.).

Technical Service Bulletin # **106694** Date: **940617**

A/C - Refrigerant Handling and Service Procedures

NUMBER: 10-66-94

DATE: 06-17-94

APPLICABILITY

SUBARU VEHICLE

Subject:
R-12 and R-134a AIR CONDITIONING SYSTEM HANDLING PROCEDURES

OVERVIEW:

This bulletin is for your information concerning CFC-12 concerns and phase-out. In the coming months, additional advisory information will be provided whether a retrofit modification is planned or will be available for CFC-12 equipped Subaru models.

Are Chloroflurocarbon Refrigerants Safe?

Automobile air conditioning systems have used a chloroflurocarbon (CFC) compound known as CFC-12 (also known by the trade name Freon or R-12) as a refrigerant for many years because of its safety and efficiency. It is reported that CFC chemical compounds can cause a destruction of the ozone layer, which shields the earth from harmful ultraviolet rays.

Due to growing scientific concerns that CFCs pose a depletion threat to the earth's stratospheric ozone layer, Subaru and other automobile manufacturers have accelerated implementation plans to phase-out the usage of the CFC-12 refrigerant in new model vehicle air conditioners. Commencing in 1993, Subaru SVX used an alternate refrigerant HFC-134a which does not deplete the ozone layer because it does not contain chlorine. By the end of model year 1994, all new Subaru vehicles will have a CFC free HFC-134a air conditioning system.

What Role has the U.S. Government Played in CFC Phase-Out?

Under the guidance of the United Nations, an international ozone protection agreement was signed by the United States and 23 other nations in 1987. An additional 70 nations have since signed the-agreement. U.S. regulations issued in 1988 required the annual CFC production be decreased by 50 percent from a 1986 baseline by 1998. The protocol was amended in 1990 to require a CFC phase-cut by January 1, 2000. Late in 1992, the United States mandated a complete phase-out of CFC production by January 1, 1996. This decision significantly accelerated Subaru's conversion to

the CFC free HFC-134a air conditioning system.

Are Customers Covered Under Warranty If Their Vehicle Needs Service or HFC-134a System Modifications?

Subaru is committed to making sure that your customers CFC-12 air conditioning performs in the same manner as it was designed. Subaru has made arrangements for R-12 supply in the immediate future to support warranty needs. In the event that a vehicle requires air conditioning warranty service (or is covered under a Subaru Added Security(R) extended service contract), any authorized Subaru dealer will repair it using CFC-12 refrigerant, if available. If CFC-12 refrigerant is not available, the dealer will modify the air conditioning system to use the CFC free alternate HFC-134a refrigerant. If the Subaru limited basic warranty is still in affect or if the owner has an optional Subaru Added Security(R) extended service contract, the needed service will be covered. If covered by warranty, the owner will only be responsible for any applicable deductibles. If the vehicle is not under warranty, the owner is responsible for any CFC-12 system repair costs or, if the owner chooses, the HFC-134a air conditioning system modification costs, if available. Only an authorized Subaru repair facility can provide warranty service.

Are Other Refrigerants Acceptable?

A number of other refrigerants are being offered as substitutes for the CFC-12 refrigerant. The United States Government has found many substitutes unacceptable and not safe for use in vehicle air conditioning systems. Subaru does not approve of these substitute refrigerants. All automobile manufacturers are responding to the CFC production phase-out by only producing vehicles with the alternative HFC-134a refrigerant.

Subaru vehicle air conditioning systems should be serviced by a properly trained and equipped Subaru Technician, who should use the correct refrigerant.

What are A/C Servicing Requirements?

The U.S. Government prohibits the venting or release of CFC-12 (and HFC-134a) into the atmosphere during the servicing of motor vehicle air conditioners. It also requires certification for both service technicians and refrigerant recycling equipment. These regulations are to preclude possible damage to the earth's ozone layer.

What Modifications are Needed to Convert CFC-12 A/C Systems to CFC Free HFC-134a A/C Systems?

In the future, if CFC-12 refrigerant becomes unavailable, it may be necessary to modify a vehicle's air conditioning system for usage with the alternate CFC-free HFC-134a refrigerant. Additionally, since each Subaru model's CFC-12 air conditioning system was designed differently, retrofit modifications such as new system components, hoses, fittings, lubricants, etc. will vary on a model to model basis.

In the coming months, Subaru will keep you advised whether a retrofit modification is planned or will be available for CFC-12 equipped Subaru models. Currently under development are HFC-134a retrofit modifications for 1990-1993 Legacy, 1993 Impreza, and 1992 SVX models. Subaru expects to provide technical service modification instructions for the above models this summer. The decision for possible retrofit modifications for Loyale, Justy, and XT models is still under study. At this time, it is difficult to determine the cost of retrofit modifications. In general, the cost depends on the model and age of the vehicle.

What does the CFC Information Statement Mean Listed on the Bottom of the Manufacturer's Suggested Retail Price Window Sticker?

The U.S. Government requires a CFC information label on all vehicles manufactured after May 15, 1993 that contain CFC-12 and other ozone depleting substances (ODS). If applicable, the statement may read as outlined below. The listed ODS substance 1,1,1-Trichloroethane is a metal cleaning solvent used during vehicle manufacturing process and is expected to be replaced upon the availability of a safe substitute.

WARNING:
Manufactured with 1,1,1-Trichloroethane and CFC-12, Substances Which Harms Public Health and Environment by Destroying Ozone in the Upper Atmosphere.

What Commitment has Subaru Made to Protect the Environment?

Subaru is concerned about protecting our environment and the need for cleaner air. Subaru has continually strived to find ways in which the environmental impact of our vehicles can be limited both during and after the manufacturing process. Our Subaru factory in Lafayette, Indiana is an excellent example of steps that Subaru has taken during the production process. In 1993, the factory recycled 21,644 tons of steel, 2877 tons of cardboard, 822 tons of wood, and 18 tons of plastic. The factory uses and recycles paint solvents which have been passed through an afterburner to reduce hydrocarbon emissions. Recycled plastics are used for interior and trunk trim pieces as well as cosmetic engine components. The use of asbestos has been eliminated from brake components, head gaskets and insulation. Every 1994 and newer Subaru Legacy, SVX and Impreza model has been equipped with CFC-free HFC-134a air conditioning.

Subaru has made significant, environmental progress which exceed U.S. Government requirements. You can be assured our environmental efforts will not stop here. Subaru has eliminated most harmful ozone depleting substances used in the manufacturing process. Subaru factory design engineers are developing fuel efficient and lightweight alternative fueled engines and components to take us to the next century.

For Further Information, Call the Toll Free Service Helpline at 1-800-762-8324.

Technical Service Bulletin # **SHU0694** Date: **940601**

Service Helpline Update - Special A/C Information

Subaru Justy Hatchback 4WD L3-1.2L SOHC (MPFI)

SUMMER, 1994
TECHNICAL HELPLINE
SPECIAL AIR CONDITIONING
SUPPLEMENT

By the time you get this special Supplement of the Subaru Technical Helpline Update, it will officially be summer. Many parts of the country have already experienced high temperatures/high humidity and people are reaching for the A/C button on their dashboards.

To assist you in your repairs of Subaru Air Conditioning Systems, we have compiled all of the A/C Helpline Updates and put them into this Supplement for handy reference. Along with previous information is some new information that we hope will be helpful to you.

As is always the case, if you have any questions or helpful information, contact the Helpline.

A/C Compressor Disengagement

If faced with a customer complaint of compressor disengagement after turning the system on and everything appears to be functioning correctly, don't forget to check the evaporator thermoprobe/thermoswitch.

The evaporator thermoprobe is mounted in the fins of the evaporator and monitors evaporator temperature to prevent the evaporator from freezing up. It does this by cycling the compressor on/off as necessary. If the thermoprobe fails, it most likely will allow the compressor to engage initially but will open the circuit for the compressor, turning it off and then will remain open. The compressor can be engaged again by turning the A/C main switch off, then on again. However, the thermoprobe will again open the circuit and will not close to engage the compressor.

To check the thermoprobe is simple. Locate the connector for the thermoprobe under the dash near the glove box and disconnect it. Now jump across the harness side of the connector (refer to the correct Service Manual for the vehicle you are working on for the correct wires to connect). If the compressor now engages and stays engaged, you have most likely found the problem with the system. of course, there are other components of the system that can cause a similar problem but, this check is an easy one to perform and, in most cases, is the source of the problem.

Dash Vents Mist

If a customer complains of mist coming from the A/C vents when the air conditioning system is operating, most likely, it is a normal condition caused by many factors and should not be considered a problem.

The reason the mist is coming from the vents is because the evaporator is operating close to or at the freezing point and may even have a little ice on the fins but not enough to affect its operation. The outside air is probably very humid, perhaps 85Z to 95Z. When this very humid air comes in contact with the cold evaporator, it causes the moisture in the air to condense into a mist. You have probably observed a similar situation when you opened the freezer on the refrigerator at home. This mist is then pushed through the vehicle's ducts by the fan and into the passenger compartment.

To correct the situation is simple. Since we can't change the weather conditions, we have to make a very minor adjustment to the vehicle's air conditioning system. That adjustment is to move the temperature lever on the control panel slightly toward the warm position. All we want to do is blend a little of the warm air in the heater core with the outside air to melt the coating of ice on the evaporator. The cooling of the vehicle will not be affected since we are only moving the temperature lever very little. The customer will have to experiment to find the position that cures the condition as it can change based on the weather conditions mentioned above. If there is little or no humidity in your area, you will probably not be faced with this problem since it is the humidity that generally causes this complaint.

So if you have checked out the vehicle and can find nothing wrong, perhaps the weather is the cause of the problem and a few minutes explaining this to the customer will make you happy and they'll keep their cool.

Service Bulletins

Service Bulletin	Date	Subject
02-89-94	02-03-94	Intermittent Engine Stumble when A/C Cycles
10-57-90	05-29-90	A/C Compressor Inspection
10-58-90	05-30-90	Thermoprotector Service
10-59-90	07-06-90	Thermoprotector Testing
10-61-91	07-02-91	Recycling of R-12
10-62-91	09-20-91	Wynn's Justy A/C
10-63-93	04-12-93	R-134A Handling Procedures
10-64-93	11-08-93	Heater Vent Door Binding
10-65-94	03-08-94	Proper Oils for Subaru A/C
10-66-94	06-17-94	R-12 and R-134a Handling Procedures
15-87-91	03-29-91	Evaporator Case Modification

Air Conditioning Service Bulletins are listed. You may want to reference these when diagnosing a problem.

A/C Service Oil Adjustment

Should an A/C compressor or other component require replacement, it's important to adhere to the oil charge table listed in the service manual. Each component retains a certain amount of oil even if removed and during replacement must be compensated for. For example, if a condenser is replaced in a Calsonic equipped '91 Legacy, 2.9 fluid ounces must be added to the system to compensate for the estimated amount of oil that will be taken out of the system when the original condenser is removed. On the other hand, since replacement compressors come with a full oil charge for the whole system, oil must actually be removed from the compressor to avoid overcharging the system with oil. Overcharging the system with oil will result in reduced cooling effectiveness while undercharging will result in increased system wear and possible failure.

Subaru recommends the use of a refrigerant recycling machine to help protect the environment.

SVX Zexel Auto A/C

Use only D-90PX refrigerant oil when repairing the SVX Zexel Auto A/C system. This oil is available through normal parts channels, using part number 73019AA000 for an 8 fl. oz. container. The SVX Zexel variable displacement compressor DCW-17BE has a 5.0 fl.oz. capacity.

NOTE:

Always keep a tight lid on refrigerant oils. All refrigerant oils are "hydroscopic" which means they absorb moisture from the air. Moisture contaminated oil can cause system leakage failures later on. D-90PX is almost clear or no color. If it appears brownishyellow tinted or has a brown colored substance floating at the bottom of the container, discard it and order a new supply.

The Use of A/C Refrigerants Other Than R-12

Do not use any refrigerant other than R-12 in Subaru air conditioning systems. Our A/C systems are only designed for R-12 type refrigerant. Recently, there has been information circulating about a refrigerant called SUVA-52 which is said to be an R-12 replacement with system modifications. Subaru and the manufacturers of our air conditioning systems do not recommend the use of SUVA-52 or system modifications of any kind.

Please be concerned about the earth's environmental conditions. Future Subaru models will use the alternative refrigerant R-134A. We will keep you informed as these models are introduced. Please remember to recycle R-12 whenever you are servicing an automobile air conditioning system. Do your part to protect our environment.

HFC134A Air Conditioning Refrigerant

The 1993 SVX and future Subaru vehicles will have an A/C system which uses HFC134a as the refrigerant. There is no compatibility between R12 and HFC134a. Therefore, you will need special manifold gauges, and refrigerant charge recovery station dedicated for HFC134a.

The change to HFC134a is required to reduce the harmful effects to the atmosphere from CFCs in R12.

Prepare now for this change by sourcing the proper equipment.

Subaru will be releasing more information on this change in the near future.

HFC 134a, chemical name "Tetrafluoroethane", is available.

Caution:

Before servicing, always check the labels on the compressor, radiator support and other A/C components for the type of refrigerant required to properly charge the system.

Label Color:

All R-134a system components are required to have light blue labels indicating R-134a as the only refrigerant to be used in this system. The following components are labeled:

^ Compressor
^ Evaporator
^ Hoses (different charge valves)
^ Condenser
^ Receiver-Dryer
^ Expansion Valve
^ Pressure Switch

Note:

The introduction of any refrigerant other than R-134a will damage system components. The SOA Warranty Department is aware of this information.

Refrigerant Cross Contamination

The 1994MY Legacy, Impreza and SVX models are equipped with the new 134a systems. However, the Loyale and Justy models will remain using the previous R-12 systems. Keep this information in mind when servicing or diagnosing Subaru A/C systems.

R-134a is now the refrigerant of choice. This product does not contain suspected ozone depleting chlorofluorocarbons. The chemical compounds and molecular structures of the old refrigerant R-12 and the new refrigerant R-134a are completely different. However, the temperature/pressure relationships of the two are very similar.

R-134a and R-12 are not compatible. Under no circumstances should they be mixed.

If you suspect that a refrigerant system has been tampered with or may be contaminated, observe the following general rules.

Symptoms of a contaminated system may be any of the following:

High system pressure (could be extreme) the higher the mix of contamination the higher the pressure will be.
Poor cooling
Rapid cycling of the compressor

Inspect for:

Correct condenser fan operation
Debris in front of the condenser
Correct blower fan operation
Charge/caution label
Service ports, stripped threads (from wrong fittings)
Cloudy, milky sight glass

Contact customer for:

Repair history
Dealers, independent shop repair.

It is very important that refrigerants be handled properly. Always wear protective gloves and goggles. For your safety and the safety of others, it is imperative that the work area is properly ventilated. If a refrigerant release occurs, wait until the mist clears before continuing. R-12 and R-134 are to be handled separately. The two (2) refrigerants cannot be mixed. The lubricating oils that are used in the R-12 and R-134a systems are incompatible. Service tools cannot be intermixed. If you find yourself not sure of what to do when servicing an R-134a system, don't guess. Refer to service manuals and service bulletins. As with all automotive repair work, good service depends on good diagnosis.

Oz-12 the Facts

There will be a complete phase-out of R-12 production in the United States by the end of 1995.

The product OZ-12 is 70% liquefied petroleum (LP) gas (.3% isobutane, 24% butane and 45% propane, by volume). Unlike freon, LP gases are extremely flammable.

Leaking vehicle air conditioning systems containing flammable refrigerants could discharge the product into the passenger compartment of the vehicle, causing a hazardous condition.

Air conditioning technicians servicing air conditioning systems in vehicles may be exposed to hazardous conditions if they are not aware of the flammability of this product.

Thirteen states and the District of Columbia have laws forbidding the use of flammable products in vehicle air conditioning systems.

OZ-12 is on the U.S. Environmental Protection Agency's proposed list of non-approved refrigerant replacements.

There is insufficient testing and documentation of this and other flammable freon replacements to assure their safe use in vehicle air conditioning systems.

At the request of the EPA, and based on an accident reported and complaints received, the U.S. Department of Transportation Office of Defects Investigation has initiated an investigation concerning the use of OZ-12.

There are an estimated 50,000 vehicles nationwide, in which this product is being used.

DO NOT USE THIS PRODUCT!

A/C Diagnostic Aids

Here are a couple of tips to assist you when diagnosing Legacy A/C systems. Although confirmed and directed at Legacy vehicles using Zexel's optional A/C systems with a variable displacement compressor, the diagnostics should apply to Calsonic systems as well. Keep in mind, there are no absolute pressure readings when using a manifold gauge set due to temperature, humidity and load variations. Instead, key on what could be considered an acceptable range, as well as the relationship between the high and low gauge readings.

The gauge reading examples given in the Service Manual are based on 91~F.

Compressor Failure (fixed at minimum displacement) - Look for a much smaller than usual difference between the low side and high side pressures. In other words, the low side may appear slightly higher than normal and the high side slightly lower, as the two system sides move towards equalization.

The 1991 Service Manual illustration for this condition (4-7, Page 41, Fig. 82) shows the low side at about 15 and the high at about 85, when in reality a reading of about 50 and 75, low and high respectively, is more accurate.

Expansion Valve Failure - Excessive Restriction - Your manifold gauge readings will show the low side almost normal or slightly below normal and your high side will definitely be lower than normal.

A look at the Service Manual illustration for this condition (4-7, Page 39, Fig. 75) shows readings of about 20 and 175, while in reality they would probably be closer to 28 and 90, low/high respectively. In addition, if the expansion valve is clogged, stuck closed or inoperative, the expansion valve inlet area will exhibit heavy sweating or frosting, as well as only slight or decreasing cooling performance as the condition worsens.

Be aware that a reading of 25-35 low side is not necessarily abnormal and that the high side readings must always be considered as well as the

low/high relationship.

A/C Pulser System Electrical Diagnosis - 89MY, 90MY Loyale

This information is intended specifically for the above referenced models equipped with either Hitachi or Panasonic A/C systems, however, other models and years using a pulse sensor system may have application as well.

These diagnostic tips will address a condition where upon engine start-up the A/C is turned on and the clutch engages and runs for several seconds only to shut off by itself. The clutch may also become disengaged and stop the compressor from running if the engine is revved up slightly right after engine start-up.

Should you experience a similar condition, and the A/C drive belt's condition and tension has been confirmed as good (important), suspect the A/C pulser system and follow the checks outlined below.

1. Start engine and engage the A/C system.

2. Find the A/C relay located under the hood on the firewall, RH (passenger) side.

3. Ground the red wire with the black tracer or on turbo models the red wire with green tracer, using a wire or test light.

4. If the compressor comes on and stays on, the pulser system is probably at fault.

The components of the pulser system that should be checked are listed below. Refer to the information contained in the appropriate Service Manual to provide specific checking details.

^ Compressor pick-up sensor
^ Evaporator thermostat
^ Loose wires on ignition coil
^ Pulse amplifier
^ Mode panel assembly (provides a ground to evaporator thermostat)

Remember the function of the pulser system is to compare engine speed to compressor speed and to shut off the A/C compressor if the amount of difference exceeds 2O% to 25% and falls into the lock detection range.

Justy Air Conditioning Information

Air conditioning season is upon us and since factory installed air conditioning was not offered on Justy models from '87 to present, wiring and technical information are limited to the installation instructions provided in the kits and not in the Service Manuals. To further assist the technician, both quick facts and wiring schematics are provided.

HITACHI

1. SOA332A105, which is the first A/C Kit offered for the Justy 87MY, uses a wiring harness for the dash to attach the A/C "ON/OFF" switch and the blower motor.

2. All Hitachi A/C Kits use a pulser system.

3. The Hitachi A/C Kit # 110 uses a separate condenser fan mounted in front of the condenser.

4. The last Hitachi A/C Kits made were # 110 for 89my.

5. Carburetor models FICD is adjusted in a special sequence. See Service Bulletins 02-70-89 and 02-72-89.

WYNN'S

1. Wynn's Kits do not use a pulser system.

2. The Wynn's Kit does not use a condenser fan, it relies solely on the main radiator cooling fan.

3. The Wynn's Kits # 110 will fit 89MY-92MY carbureted and the # 112 MPI.

NOTE:
THE SOA329Y100 KIT WHICH WAS USED TO UPDATE THE WYNN'S A110 KIT TO FIT MPI JUSTY MODELS IS NOT AVAILABLE. YOU MUST USE THE A112 KIT.

4. The Wynn's Kits use a Sanden compressor. Take care not to accidentally mount it upside down. See Service Bulletin 10-62-91.

5. The receiver-dryer safety blow-out plug specification is 525 psi or approximately 325 Deg. F. for Wynn's A/C systems.

6. For 1990 base Justy models (carbureted) manufactured after January 5, 1990, VIN 704943 and after, the Wynn's Justy A/C Kit # 110 requires a spacer kit Part Number SOA329Y205. The compressor is moved closer to the firewall to allow clearance for the air suction valve relocation.

Air Conditioning Evaporator Odor

As outdoor temperatures rise, so do the complaints of evaporator musty odor. To help control the amount of bacterial growth within the evaporator case (which causes the odor), perform the following:

^ Check the evaporator drain hose for kinks or clogs which might restrict proper condensation or water drainage. Also, make sure the firewall outlet end of the drain hose is routed away from the catalytic converter.
^ As a suggestion, try using the "Max A/C" or recirculation mode for initial cool down only. Then switch to the "Normal A/C" mode. This allows outside air to enter the evaporator. Changing the mode positions to selections other than "Max A/C" may reduce the conditions in which the bacteria grows.
^ Also, when parking the vehicle, the duct system will remain in the last position programmed by the mode. Using a selection other than "Max A/C" can also help reduce the odor causing environment.
^ For chronic customer complaints, an evaporator cleaning agent such as "BG FRIGIFRESH" can be used.

NOTE:
OUR REPAIR RECORDS INDICATE THAT EVAPORATOR REMOVAL FOR CORE CLEANSING IS NOT NECESSARY. CLEANING THE EVAPORATOR THROUGH THE FRESH AIR DUCT IS JUST AS EFFECTIVE.

Legacy A/C Compressor

If you encounter a customer complaint of A/C blowing warm air and after basic diagnostics (gauge readings, etc.), the compressor is found to be seized or not pumping, examine the oil from the failed compressor for metal particles. If you find metal particles, make sure the entire system is flushed using a solvent such as "Brake Clean"* (examples: Permatex; CRC; Snap; all offer a brake parts cleaner that dries with no residue) and shop compressed air. Just changing a receiver-dryer may not be sufficient in stopping the particles from clogging the expansion valve and possibly the bellows valve in the compressor. Compressed air can contain moisture, so allow the system to be evacuated longer than the 30 minutes which is for a new system unopened to the outside atmosphere.

***NOTE:**
Because of changing laws concerning refrigerant release into the atmosphere, air conditioning manufacturers are recommending alternative system flushing procedures to comply with the Montreal protocol.

Legacy Zexel Air Conditioning

If you receive a customer complaint of a slight "chirp" or "squeak" when the compressor is engaged and also during A/C cycling, do not replace the compressor. Verify proper belt tension and A/C system operation using the applicable service manual. If the A/C system is not used for a period of time, the compressor and clutch assembly may require a break-in procedure to be performed. This procedure can be found in Service Bulletin 10-57-90, Dated 05-29-90, titled "A/C Compressor Inspections". As the customer uses the A/C or defrost modes, the "chirp" or "squeak" will diminish. Also, the red clutch dust (rust like substance) is normal and will accumulate during normal usage. Do not replace the compressor or clutch for these conditions.

Legacy Compressor Belt Tension

Use a belt tension gauge approved for use on serpentine type belts.

Calsonic recommends 144-166 lbs. for a new belt.
Zexel recommends 145-165 lbs. for a new belt.

93MY Impreza Air Conditioning Inoperative

After verifying that the system has an adequate charge of R-12 using a manifold gauge set and jumping the compressor to engage it, check the mode control panel. If an open circuit is found, the problem may be a poor connection at connector F-33 to I-6.

LOYALE FACTORY INSTALLED A/C DOES NOT OPERATE

We have received reports of connector F66 (a black 21 pin connector located behind the fuse box) being partially unplugged. This connector has wiring for the pulser system and various A/C components, including the mode switch. Always check the basics; fuses, connectors and pressures.

SVX AUTO A/C DISPLAY DEGREES CELSIUS TO DEGREES FAHRENHEIT

During PDI and if you receive a customer complaint of the temperature display reading in Celsius not Fahrenheit, perform the following:

^ Locate the single pin connector B-33 in the left kick panel.
Tip: Connector B-33 is next to the PDI shorting loop for lean run.

^ Connector B-33 must be connected for the display to read in degrees Fahrenheit; disconnected, the display reads degrees Celsius.

SOA332A109
HITACHI '88

JUSTY

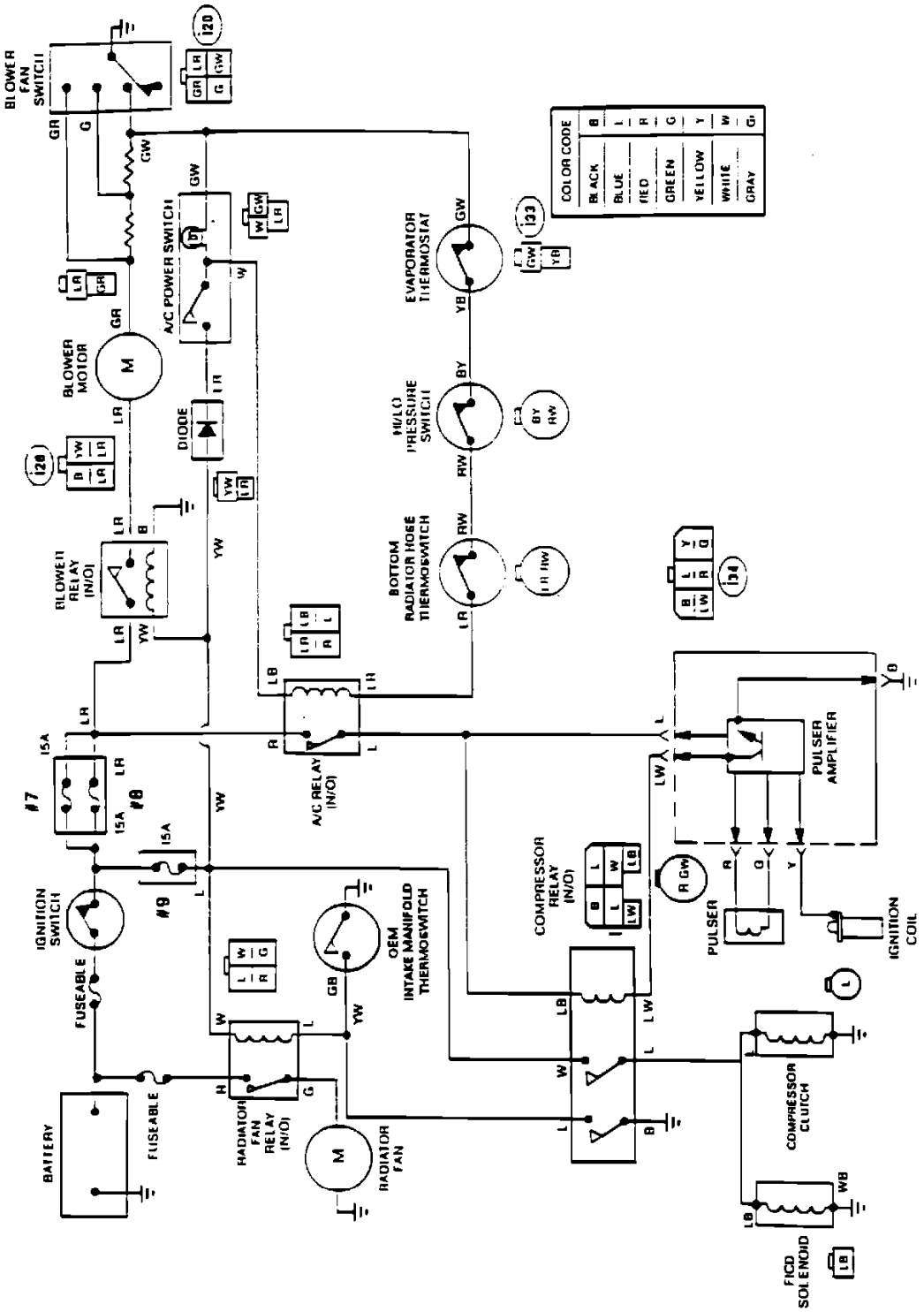

SOA332A105
HITACHI '87

JUSTY
SOA332A110
HITACHI '89

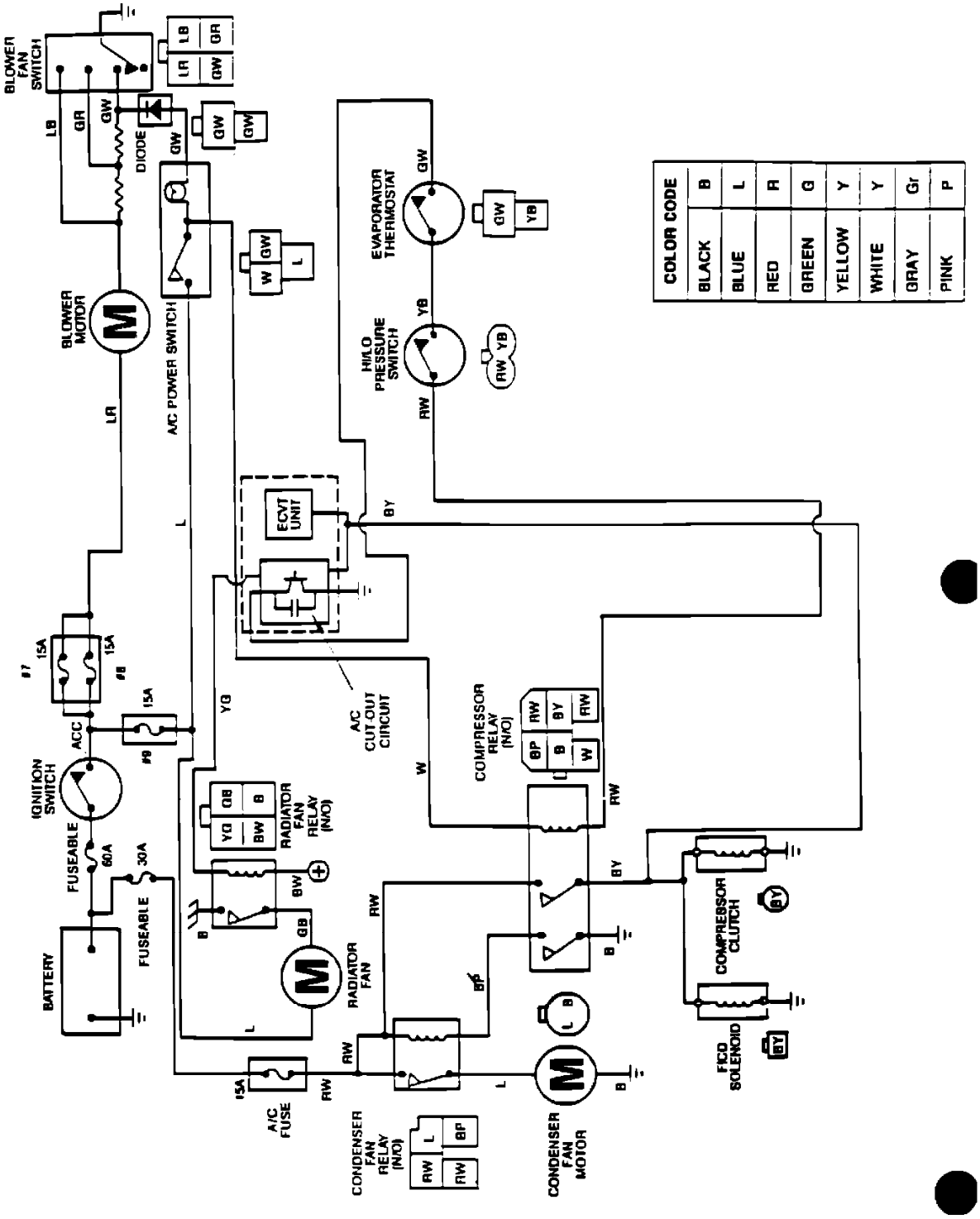

JUSTY
SOA329A110
WYNN'S '89 - PRESENT

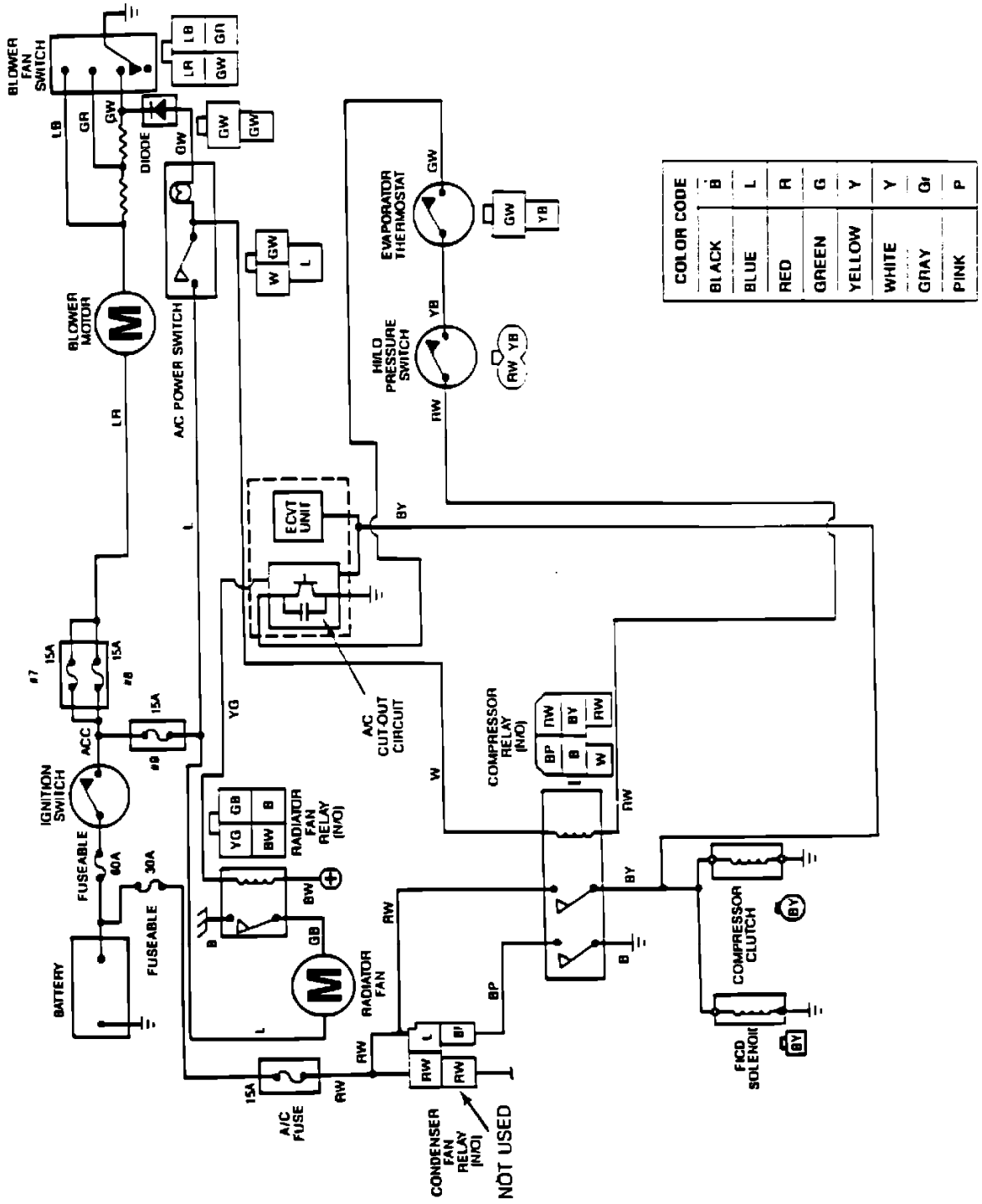

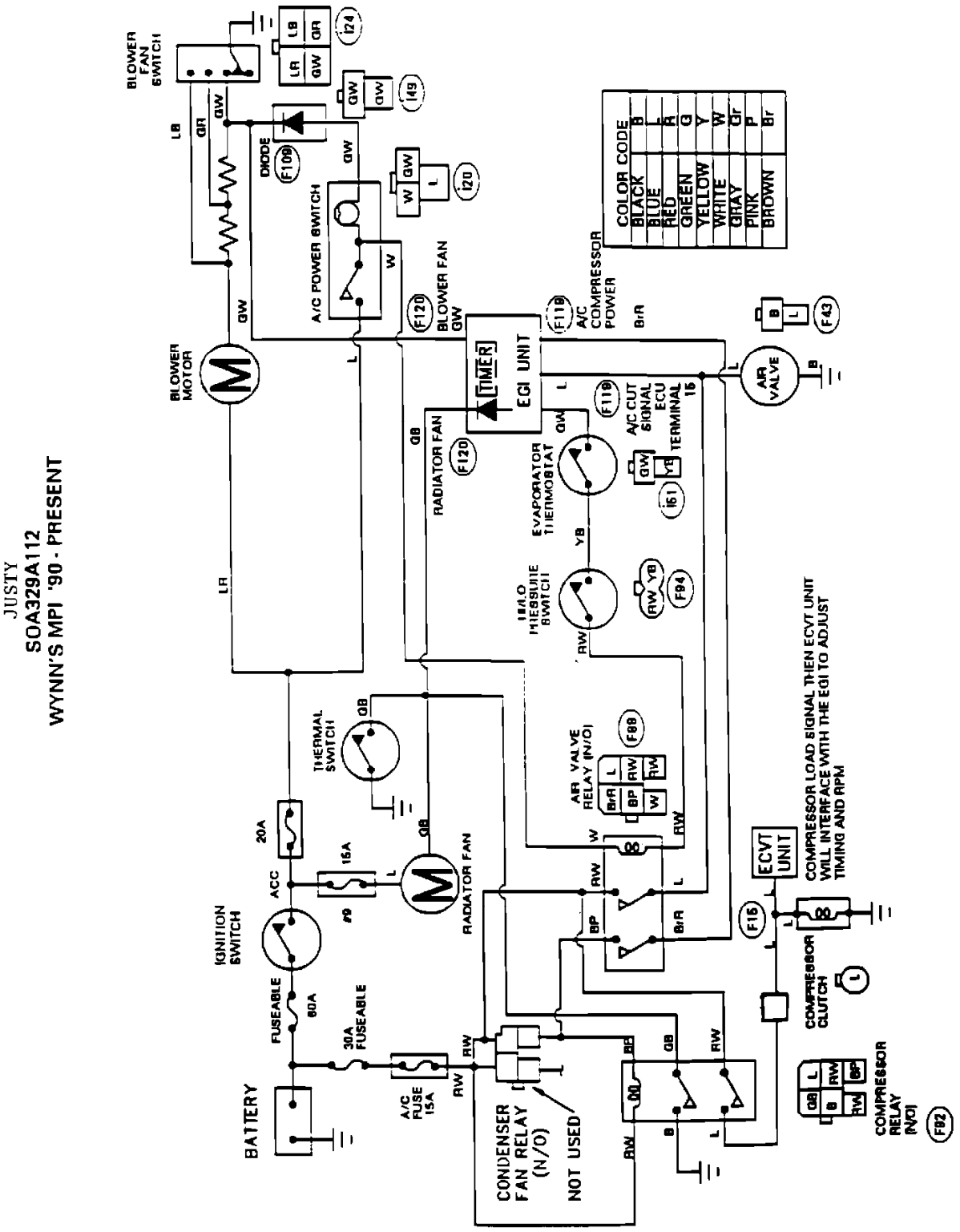

Technical Service Bulletin # **10-68-96** Date: **960712**

A/C - Retrofit Procedures

NUMBER: 10-68-96

DATE: 07-12-96

APPLICABILITY:

'87-94	Loyale
'90-94	Justy MPFI
'93	Impreza
'90-93	Legacy Zexel systems
'90-93	Legacy Calsonic systems (including Turbo)
'92	SVX

SUBJECT:

AIR CONDITIONING RETROFIT PROCEDURES R-12 to R-134a

Subaru Justy Hatchback 4WD L3-1.2L SOHC (MPFI)

SUBARU has developed R-12 to R-134a A/C retro fitting procedures for the above vehicles.

'87-94 Loyale: Kit Part # G3110GS000

PARTS INCLUDED	PART NUMBERS	TOOLS
Receiver/drier	G3110GS100	Refer to SUBARU
Suction hose	G3110GS120	service manual
Discharge hose	G3110GS110	
Discharge hose extension	73044GA321 (required for '90 thru '94 systems)	
O-rings (set of 2)	G3110FS130	
Retrofit label	G3110FS100	

'89-94 JUSTY MPFI: Kit Part # G3110FS000

PARTS INCLUDED	PART NUMBERS	TOOLS
Receiver/drier	G3110FS100	Refer to SUBARU
Hose Assy-Comp	G3110FS120	service manual
O-Rings	G3110FS130	
R-134 Retrofit Label	G3110FS100	

'93 Impreza: Kit Part # G3110FS010

PARTS INCLUDED	PART NUMBERS	TOOLS
Receiver/drier	73411FA100	Refer to SUBARU
O-rings (set of 4)	73039AA010	service manual
Adapter valve, low pressure	73058AA100	
Adapter valve, high pressure	73058AA110	
PAG oil	K0010FS100	
R-134a Retrofit label	SOA523Z500	

'90-91 Legacy Zexel systems: Kit Part # G3110AS000

PARTS INCLUDED	PART NUMBERS	TOOLS
Receiver/drier	73031AA210	Refer to SUBARU
Suction hose	73054AA620	service manual
Discharge hose	73054AA600	
O-rings (set of 2)	73039AA200	
R-134a Retrofit label	SOA523Z500	
PAG oil	73019AA110	

'92 Legacy Zexel systems: Kit Part # G3110AS010

PARTS INCLUDED	PART NUMBERS	TOOLS
Receiver/drier	73031AA210	Refer to SUBARU
Suction hose	73054AA620	service manual
Discharge hose	73054AA630	
O-rings (set of 2)	73039AA200	
R-134a Retrofit label	SOA523Z500	
PAG oil	73019AA110	

'93 Legacy Zexel systems: Kit Part # G3110AS020

PARTS INCLUDED	PART NUMBERS	TOOLS
Receiver/drier	73031AA210	Refer to SUBARU
Suction hose	73054AA400	service manual
Discharge hose	73054AA640	
O-rings (set of 2)	73039AA200	
R-134a Retrofit label	SOA523Z500	
PAG oil	K0010FS100	

'90-91 Legacy Calsonic systems (Non-Turbo) : Kit Part # G3110AS100

PARTS INCLUDED	PART NUMBERS	TOOLS
Receiver/drier	73411FA100	Refer to SUBARU
O-rings (set of 4)	73039AA010	service manual
Pressure relief valve	73035AA100	
Suction hose	73054AA141	
Discharge hose	73054AA081	
Adapter valve, suction hose	73058AA100	
Adapter valve, discharge hose	73058AA110	
PAG retrofit oil	73019AA100	
R-134a Retrofit label	SOA523Z500	

'91 Legacy Turbo Calsonic systems: Kit Part # G3110AS110

PARTS INCLUDED	PART NUMBERS	TOOLS
Receiver/drier	73411FA100	Refer to SUBARU
O-rings (set of 4)	73039AA010	service manual
Pressure relief valve	73035AA100	
Suction hose	73054AA311	
Adapter valve, suction hose	73058AA100	
Discharge hose	73054AA081	
Adapter valve, discharge hose	73058AA110	
PAG retrofit oil	73019AA100	
R-134a Retrofit label	SOA523Z500	

'92-93 Legacy Calsonic systems (including Turbo): Kit Part # G3110AS120

PARTS INCLUDED	PART NUMBERS	TOOLS
Receiver/drier	73411FA100	Refer to SUBARU
O-rings (set of 4)	73039AA010	service manual
Pressure relief valve	73035AA100	
Adapter valve, low pressure	73058AA100	
Adapter valve, high pressure	73058AA110	
PAG oil	73019AA100	
R-134a Retrofit label	SOA523Z500	

'92 SVX: Kit Part # G3110PS000

PARTS INCLUDED	PART NUMBERS	TOOLS
Receiver/drier	73031PA100	Refer to SUBARU
Suction hose	73050PA200	service manual
Discharge hose	73050PA060	
O-rings (set of 2)	73039AA200	
R-134a Retrofit label	SOA523Z500	
PAG oil	73019AA110	

PART LISTS:

Instructions For '87-94 Loyale

NOTES:

1. Always lubricate all O-rings with PAG oil before installation.
2. Always tighten fittings to proper torque specifications.
3. Observe all safety recommendations.

4. System to be serviced by qualified personnel.

1. Repair any problems or leaks before beginning retrofit procedure.

2. If the R-12 vehicle air conditioning system is operational run it at idle with the A/C blower on high speed for (5) minutes to optimize the amount of oil in the compressor.

3. Recover all R-12 refrigerant from the vehicles A/C system utilizing a UL approved R-12 recovery device.

4. Remove and discard discharge hose, retain all hardware.

5. Remove and discard suction hose, retain all hardware.

6. Remove compressor from the vehicle.

CAUTION:
hoses or block fittings on hose assemblies should be capped or protected from foreign matter entering the system.

7. Remove the compressor oil plug and then drain as much mineral oil as possible from the compressor body. Drain mineral oil from the cylinder head, suction and discharge ports while turning the shaft with a socket wrench on the clutch armature retaining nut.

8. Replace the compressor oil plug O-ring with a replacement O-ring, part number: G3110FS130. Reinstall compressor oil plug to the compressor and reinstall the compressor.

9. Install new discharge hose, part number: G3110GS110, using all applicable O.E. hardware. Lubricate the discharge hose O-rings before installation.

NOTE:
'90 thru '94 Loyale systems require that an A/C discharge hose extension, part number: 73044GA321, be attached to the discharge hose to complete the assembly. This hose extension is a standard part in Loyale A/C systems manufactured before '90.

10. Install new suction hose, part number: G3110GS120, using all applicable O.E. hardware. Lubricate the suction hose O-rings before installation.

11. Remove the existing R-12 receiver/drier from the vehicle and discard. Allow as much oil as possible to drain from A/C hoses or pipes.

12. Remove and discard the receiver/drier O-rings and replace with new O-rings, part # G3110FS130.

13. Install the new receiver/drier, part number: G3110GS100.

CAUTION:
This receiver/drier has the proper amount of PAG oil. Caution should be taken when uncapping the receiver/drier to avoid spilling any of the oil from the receiver/drier. Receiver/drier should be uncapped for as little time as possible to avoid getting moisture in the receiver/drier, since the PAG oil is highly hygroscopic (draws moisture).

14. Paint the receiver/drier sight glass with touch-up paint. The sight glass can not be utilized in testing R-134a performance.

15. Evacuate the A/C system for 45 minutes using R-134a equipment.

    a. After 10 minutes close the manifold gauge valves & perform a VACUUM LEAK TEST

    b. After 5 minutes re-check the low pressure gauge reading. If the vacuum level has changed more than 1 in HG, pressurize the system and perform an electronic leak test of the system.

    c. If no leak is indicated resume evacuation (remaining 35 minutes).

16. Charge the system with 21 oz. of R-134a refrigerant. Leak check the system using R-134a refrigerant equipment.

17. Remove the old R-12 A/C ID tag and discard.

18. Fill out the R-134a retrofit label, part number: G3110FS100, by lifting white backing tape and writing in oil type 1000 PAG, the oil amount 150cc, and the R-134a charge amount 21 oz. Locate the label in a highly visible location such as the fire wall or hood. Pull white backing off the label and cover the label with the clear portion of label. Fill out the bottom portion of R-134a A/C ID tag and place next to the top portion.

19. Conduct a performance test. Reference service manual for R-134a performance characteristics.

Instructions For '90-94 Justy MPFI

NOTES:

1. Always lubricate all O-rings with PAG oil before Installation.

2. Always use back-up wrench.
3. Always torque fittings (refer to torque chart).

1. Repair any problems or leaks before beginning of retrofit.

2. Observe all safety recommendations. System to be serviced by qualified personnel.

3. It the R-12 vehicle air conditioning system is operational, run it at idle with the A/C blower on high speed for (5) minutes to optimize the amount of oil in the compressor.

4. Recover all R-12 refrigerant from the vehicles A/C system utilizing a UL approved R-12 recovery device.

5. Remove and discard hose assembly, retain all hardware. i.e. clips, bolts, etc..)

6. Remove the compressor from the vehicle.

7. Remove the compressor oil plug and then drain as much mineral oil as possible from the compressor body. Drain mineral oil from the cylinder head suction and discharge ports while turning the shaft with a socket wrench on the clutch armature retaining nut.

8. Replace the compressor oil plug O-ring with an HNBR O'ring supplied in the retrofit kit. Reinstall compressor oil plug to the compressor.

9. Reinstall the compressor. Change the (2) O-rings with a HNBR O'ring supplied in retrofit kits on the compressor. Lubricate O-rings before installing.

10. Install new hose assembly (provided in kit) using O.E. hardware. Lubricate O-rings before installing.

11. Remove the existing R-12 receiver-drier from the vehicle and discard. Allow as much oil as possible to drain from A/C hoses or pipes.

12. Change the (2) O-rings on the receiver-drier to approved HNBR O-rings supplied in this retrofit kit. Lubricate O-rings before installing.

13. Replace the receiver-drier with the new receiver-drier supplied in this kit. **CAUTION:** This rec-drier has the proper amount of Sanden's SP20 PAG oil, and caution should be taken when uncapping the rec-drier to avoid spilling any of the oil from the receiver-drier. Receiver-drier should be un-capped as little time as possible to avoid getting moisture in the receiver-drier. Since the PAG oil is highly hygroscopic (draws moisture).

14. Paint the receiver drier sight glass with touch-up paint. The sight glass cannot be utilized in testing R-134a performance.

15. Evacuate the system for 45 minutes using R-134a equipment.

16. Charge the system with 20.9 oz. of R-134a refrigerant. Leak check the system using R-134a refrigerant equipment.

17. Fill out label by lifting mylar laminate overlay and fill in type with PAG oil, PN: with SP20. Refrigerant charge/amount will be 20.9 oz. with lubricant amount being 135cc, place a check mark in the box indicating PAG. Fill in retrofitter's name, address and date of retrofit.

18. Locate and clean original R-12 A/C tag under the vehicle hood, remove paper backing from new R-134a tag and position over old tag. **NOTE:** Cover as much of the old R-12 tag as possible with new R-134a tag.

Instructions For '93 Impreza

NOTES:

1. Always lubricate all O-rings before installation.
2. Always tighten fittings to proper torque specifications.
3. Observe all safety recommendations.
4. System to be serviced by qualified personnel.

1. Repair any problems or leaks before beginning retrofit procedure.

2. Disconnect negative battery cable.

3. Recover all R-12 refrigerant from the vehicles A/C system utilizing a UL approved R-12 recovery device.

4. Disconnect the electrical connection from receiver/drier pressure switch and remove the existing R12 receiver/drier from the vehicle and discard. Allow as much oil as possible to drain from A/C hoses or pipes.

5. On the attachment block surface that contacts the receiver/drier, remove the GUIDE PIN and make sure that the block surface is flat after removal.

6. Use touch-up paint to paint the sight glass on replacement receiver/drier; part # 73411FA100. The sight glass can not be utilized in testing R-134a performance.

7. Remove and discard the receiver/drier O-rings and replace with new O-rings, part number: 73039AA010. Lubricate O-rings with the

specified PAG oil lubricant.

8. Install the replacement RECEIVER/DRIER, P/N: 73411FA100, to the vehicle, torque to the proper specification, and connect the pressure switch electrical connection.

9. Install an adapter valve - low pressure, P/N: 73058AA100 to the low pressure suction hose. Torque the adapter to proper specification per the torque chart.

10. Install an adapter valve high pressure, P/N: 73058AA110 to the high pressure discharge hose. Torque the adapter to proper specification per the torque chart.

11. Add 180cc of PAG oil lubricant, P/N: K0010FS100 to the system as follows:

    a. Follow charging station equipment manufacturer's procedures.

    b. If there is no provision for lubricant addition, use the following procedure.

        ^ Prepare the vacuum pump to pull negative pressure at the low pressure adapter fitting.

        ^ Connect one end of the high pressure charge hose to the high pressure adapter fitting.

        ^ Place the other end into a graduated, marked container that contains the specified type of PAG lubricant.

        ^ Pull a negative pressure (vacuum) on the low side of the A/C System, which will draw the lubricant into the high side.

        ^ Discontinue the negative pressure (vacuum) when 180cc of PAG oil lubricant, P/N: K0010FS100 has been drawn into the system.

12. Vacuum the A/C system for a minimum of 30 minutes.

    a. After 10 minutes close the manifold gauge valves & perform a "VACUUM LEAK TEST".

    b. After 5 minutes re-check the low pressure gauge reading. If the vacuum level has changed more than 1in HG, pressurize and perform an electronic leak test of the system.

    c. If no leak is indicated resume evacuation (remaining 20 minutes).

13. Charge system with 21 oz./0.6 kg. R-134a refrigerant and operate the system for 10 minutes at idle. Install the R-134a service caps (the cap is an important part of the service valve seal), and perform leak test.

14. Remove and discard the existing refrigerant R-12 system label from upper radiator core support. Paint upper radiator core support if damaged during removal of label.

15. Fill out the retrofit label by lifting white backing tape and writing in oil type PAG 100, the oil amount 180cc, and the R-134a charge amount 21 oz./ 0.6 kg. Locate the label in a highly visible location such as the fire wall or hood. Pull white backing off the label and cover the label with the clear portion of label.

16. Conduct a performance test. Reference service manual for performance characteristics.

Instructions For '90-93 Legacy Zexel Systems

NOTES:

1. Always lubricate all O-rings with PAG oil before installation.
2. Always tighten fittings to proper torque specifications.
3. Observe all safety recommendations.
4. System to be serviced by qualified personnel.

1. Repair any problems or leaks before beginning retrofit procedure.

2. Disconnect negative battery cable.

3. Recover all R-12 refrigerant from the vehicles A/C system utilizing a UL approved R-12 recovery device.

4. Disconnect the electrical connection from receiver/drier pressure switch and remove the existing R12 receiver/drier from the vehicle and discard. Allow as much oil as possible to drain from A/C hoses or pipes.

5. Use touch-up paint to paint the sight glass on replacement receiver/drier; part # 73031AA210. The sight glass cannot be utilized in testing R-134a performance.

6. Remove and discard the receiver/drier O-rings and replace with new O-rings, part number: 73039AA200.

7. Install the replacement receiver/drier, part number: 73031AA210, to the vehicle and connect the pressure switch electrical connection.

8. Remove and discard the suction refrigerant hose, retain all hardware, and add 200cc PAG retrofit 100 oil, part number: 73019AA110, to the compressor.

9. Install new suction hose, part number: 73054AA620 (73054AA400 for '93 Model), using all applicable O.E. hardware. Lubricate the suction hose O-rings before installation.

10. Remove the discharge refrigerant hose and retain all hardware.

11. Install new discharge hose, part # 73054AA600 (73054AA630 for '92 Model); (73054AA640 for '93 Model) using all applicable O.E. hardware. Lubricate the discharge hose O-rings before installation.

12. Evacuate the A/C system for 30 minutes using R-134a equipment.

    a. After 10 minutes close the manifold gauge valves & perform a "VACUUM LEAK TEST".

    b. After 5 minutes re-check the low pressure gauge reading. If the vacuum level has changed more than 1 in HG, pressurize and perform an electronic leak test of the system.

    c. If no leak is indicated resume evacuation (remaining 20 minutes).

13. Charge system with 1.87 lb./30 oz/850 gm R-134a refrigerant and operate the system for 10 minutes at idle. Install the R-134a service caps (the caps are an important part of the service valve seal), and perform a leak test.

14. Remove and discard the existing refrigerant R-12 system label from upper radiator core support. Paint upper radiator core support if damaged during removal of label.

15. Fill out the R-134a retrofit label, part number: SOA523Z500, by lifting white backing tape and writing in oil type PAGR 100, the oil amount 200cc, and the R-134a charge amount 1.87 lb./30 oz/850 gm. Locate the label in a highly visible location such as the fire wall or hood. Pull the backing off the label and cover the label with the clear portion of the label.

16. Conduct a performance test. Reference service manual for R-134a performance characteristics.

Instructions For '90-91 Legacy Calsonic Systems (Inc. Turbo)

NOTES:

1. Always lubricate all O-rings with PAG oil before installation.
2. Always tighten fittings to proper torque specifications.
3. Observe all safety recommendations.
4. System to be serviced by qualified personnel.

1. Repair any problems or leaks before beginning retrofit procedure.

2. Disconnect negative battery cable.

3. Recover all R-12 refrigerant from the vehicles A/C system utilizing a UL approved R-12 recovery device.

4. Disconnect the electrical connection from receiver/drier pressure switch and remove the existing R12 receiver/drier from the vehicle and discard. Allow as much oil as possible to drain from A/C hoses or pipes.

5. On the attachment block surface that contacts the receiver/drier, remove the GUIDE PIN and make sure that the block surface is flat after removal.

6. Use touch-up paint to paint the sight glass on replacement receiver/drier; part # 73411FA100. The sight glass can not be utilized in testing R-134a performance.

7. Remove and discard the receiver/drier O-rings and replace with new O-rings, part number: 73039AAO10. Lubricate O-rings with the specified PAG oil lubricant.

8. Install the replacement receiver/drier, P/N: 73411FA100, to the vehicle, torque to the proper specification, and connect the pressure switch electrical connection.

9. Remove the compressor from the vehicle.

CAUTION:
hoses or block fittings on hose assemblies should be capped or protected from foreign matter entering the system.

10. Remove and discard the compressor pressure relief valve and then drain as much mineral oil as possible from the compressor body. Drain mineral oil from the cylinder head, suction and discharge ports while turning the shaft with a socket wrench on the clutch armature nut.

11. Install the replacement compressor relief valve, part number: 73035AA10O. Lubricate O-rings with the specified PAG oil lubricant and

reinstall the compressor.

12. Remove and discard the suction refrigerant hose, retain all hardware, and add 236cc of PAG oil lubricant, P/N: 73019AA100, to the compressor.

13. Install new suction hose, part number: 73054AA141 (73054AA311 for Turbo), using all applicable O.E. hardware. Lubricate the suction hose O-rings before installation.

14. Install an adapter valve - suction hose, P/N: 73058AA100 to the low pressure suction hose. Torque the adapter to proper specification.

15. Remove the discharge refrigerant hose and retain all hardware.

16. Install new discharge hose, part number: 73054AA081, using all applicable O.E. hardware. Lubricate the discharge hose O-rings before installation.

17. Install an adapter valve - discharge hose, P/N: 73058AA110 to the high pressure discharge hose. Torque the adapter to proper specification.

18. Vacuum the A/C system for a minimum of 30 minutes.

    ^ After 10 minutes close the manifold gauge valves & perform a "VACUUM LEAK TEST".

    ^ After 5 minutes re-check the low pressure gauge reading. If the vacuum level has changed more than 1 in HG, perform an electronic leak test of the system.

    ^ If no leak is indicated resume evacuation (remaining 20 minutes).

19. Charge system with 23 oz./0.65 kg. R-134a refrigerant and operate the system for 10 minutes at idle. Install the R-134a service caps (the cap is an important part of the service valve seal), and perform leak test.

20. Remove and discard the existing refrigerant R-12 system label from upper radiator core support. Paint upper radiator core support if damaged during removal of label.

    ^ Fill out the retrofit label by lifting white backing tape and writing in oil type

    ^ PAGR 100, the oil amount 236cc, and the R134a charge amount 23 oz./ 0.65 kg. Locate the label in a highly visible location such as the fire wall or hood. Pull white backing off the label and cover the label with the clear portion of label.

    ^ Conduct a performance test. Reference service manual for R-134a performance characteristics.

Instructions For '92-93 Legacy Calsonic Systems (Inc. Turbo)

NOTES:

1. Always lubricate all O-rings with PAG oil before installation.
2. Always tighten fittings to proper torque specifications.
3. Observe all safety recommendations.
4. System to be serviced by qualified personnel.

1. Repair any problems or leaks before beginning retrofit procedure.

2. Disconnect negative battery cable.

3. Recover all R-12 refrigerant from the vehicles A/C system utilizing a UL approved R-12 recovery device.

4. Disconnect the electrical connection from receiver/drier pressure switch and remove the existing R-12 receiver/drier from the vehicle and discard. Allow as much oil as possible to drain from A/C hoses or pipes.

5. On the attachment block surface that contacts the receiver/drier, remove the GUIDE PIN and make sure that the block surface is flat after removal, reference torque chart.

6. Use touch-up paint to paint the sight glass on replacement receiver/drier; part # 73411FA100. The sight glass can not be utilized in testing R-134a performance.

7. Remove and discard the receiver/drier O-rings and replace with new O-rings, part number: 73039AA010. Lubricate O-rings with the specified PAG oil lubricant.

8. Install the replacement receiver/drier, P/N: 73411FA100, to the vehicle, torque to the proper specification, and connect the pressure switch electrical connection.

9. Remove the compressor from the vehicle.

CAUTION:

hoses or block fittings on hose assemblies should be capped or protected from foreign matter entering the system.

10. Remove and discard the compressor pressure relief valve and then drain as much mineral oil as possible from the compressor body. Drain mineral oil from the cylinder head, suction and discharge ports while turning the shaft with a socket wrench on the clutch armature retaining nut.

11. Install the replacement compressor relief valve, part number: 73035AA100. Lubricate O-rings with the specified PAG oil lubricant and reinstall the compressor.

12. Install an adapter valve - low pressure, P/N: 73058AA100 to the low pressure suction hose. Torque the adapter to proper specification.

13. Install an adapter valve - high pressure, P/N: 73058AA110 to the high pressure discharge hose. Torque the adapter to proper specification.

14. Add 236cc of PAG oil lubricant, P/N: 73019AA100 to the system as follows:

    a. Follow charging system equipment manufacturer's procedures.

    b. If there is no provision for lubricant addition, use the following procedure.

        ^ Prepare the vacuum pump to pull negative pressure at the low pressure adapter fitting.

        ^ Connect one end of the high pressure charge hose to the high pressure adapter fitting.

        ^ Place the other end into a graduated, marked container that contains the specified type of PAG lubricant.

        ^ Pull a negative pressure (vacuum) on the low side of the A/C system, which will draw the lubricant into the high side.

        ^ Discontinue the negative pressure (vacuum) when 236cc of PAG oil lubricant, P/N: 73019AA100 has been drawn into the system.

15. Vacuum the A/C system for a minimum of 30 minutes.

    a. After 10 minutes close the manifold gauge valves & perform a "VACUUM LEAK TEST".

    b. After 5 minutes re-check the low pressure gauge reading. If the vacuum level has changed more than 1 in HG, perform an electronic leak test of the system.

    c. If no leak is indicated resume evacuation (remaining 20 minutes).

16. Charge system with 23 oz./0.65 kg. R-134a refrigerant and operate the system for 10 minutes at idle. Install the R-134a service caps (the cap is an important part of the service valve seal), and perform leak test.

17. Remove and discard the existing refrigerant R-12 system label from upper radiator core support. Paint upper radiator core support if damaged during removal of label.

18. Fill out the retrofit label by lifting white backing tape and writing in oil type PAGR 100, the oil amount 236cc, and the R-134a charge amount 23 oz./0.65 kg. Locate the label in a highly visible location such as the fire wall or hood. Pull white backing off the label and cover the label with the clear portion of label.

19. Conduct a performance test. Reference service manual for R-134a performance characteristics.

Instructions For '92 SVX

NOTES:

1. Always lubricate all O-rings with PAG oil before installation.
2. Always tighten fittings to proper torque specifications.
3. Observe all safety recommendations.
4. System to be serviced by qualified personnel.

1. Repair any problems or leaks before beginning retrofit procedure.

2. Disconnect negative battery cable.

3. Recover all R-12 refrigerant from the vehicles A/C system utilizing a UL approved R-12 recovery device.

4. Disconnect the electrical connection from receiver/drier pressure switch and remove the existing R-12 receiver/drier from the vehicle and discard. Allow as much oil as possible to drain from A/C hoses or pipes.

5. Use touch-up paint to paint the sight glass on replacement receiver/drier; part # 73031PA100. The sight glass can not he utilized in testing R-134a performance.

6. Remove and discard the receiver/drier O-rings and replace with new O-rings, part number: 73039AA200.

7. Install the replacement receiver/drier, part number: 73031PA1O0, to the vehicle and connect the pressure switch electrical connection.

8. Remove and discard the suction refrigerant hose, retain all hardware, and add 200cc PAG retrofit 100 oil, part number: 73019AA110, to the compressor.

9. Install new suction hose, part number: 73050PA200, using all applicable O.E. hardware. Lubricate the suction hose O-rings before installation.

10. Remove the discharge refrigerant hose and retain all hardware.

11. Install new discharge hose, part number: 73050PA060, using all applicable O.E. hardware. Lubricate the discharge hose 0-rings before installation.

12. Evacuate the A/C System for 30 minutes using R-134a equipment.

    a. After 10 minutes close the manifold gauge valves & perform a "VACUUM LEAK TEST".

    b. After 5 minutes re-check the low pressure gauge reading. If the vacuum level has changed more than 1 in HG, perform an electronic leak test of the system.

    c. If no leak is indicated resume evacuation (remaining 20 minutes).

13. Charge system with 1.87 lb./30 oz/850 gm R-134a refrigerant and operate the system for 10 minutes at idle. Install the R-134a service caps (the caps are an important part of the service valve seal), and perform a leak test.

14. Remove and discard the existing refrigerant R-12 system label from upper radiator core support. Paint upper radiator core support if damaged during removal of label.

15. Fill out the R-134a retrofit label, part number: SOA523Z500, by lifting white backing tape and writing in oil type PAG 100, the oil amount 200cc, and the R-134a charge amount 1.87 lb./30 oz/850 gm. Locate the label in a highly visible location such as the fire wall or hood. Pull the backing off the label and cover the label with the clear portion of the label.

16. Conduct a performance test. Reference service manual for R-134a performance characteristics.Technical Service Bulletin # **01-145-97** Date: **970606**

Engine - Tie Down Procedure to Prevent Damage

NUMBER: 01-145-97

DATE: 06-06-97

APPLICABILITY
ALL SUBARU VEHICLES

SUBJECT
TIE DOWN PROCEDURES TO PREVENT ENGINE DAMAGE

When any Subaru vehicle is tied down, it is required that the transmission be left in neutral with the emergency brake firmly applied. The vehicle is to be kept in neutral during transportation.

Please ensure all necessary personnel are informed of this important information.Technical Service Bulletin # **TT0101-001** Date: **010101**

Engine - Oil Pump Replacement vs. Resealing

SOURCE: Subaru Tech Tips

TITLE: Oil Pumps - Replacement Versus Resealing

APPLIES TO: All models

SERVICE TIP:

When diagnosing a leaking oil pump, don't automatically replace it with a new pump when a simple reseal will do. It seems that a large number of pumps are being replaced when a reseal would have solved the problem.

The only time a pump should be replaced is if the housing is porous, cracked, or damaged in some other manner.Technical Service Bulletin # **TT0404-002** Date: **040401**

Cooling System - Cooling System Conditioner

SOURCE: Subaru Tech Tips

TITLE: Cooling System Conditioner

APPLIES TO: All models

SERVICE TIP:

This conditioner reinforces the efficiency of the cooling system and includes anti-corrosive properties. When used as directed, the Cooling System Conditioner remains suspended in the radiator until the engine is started and the thermostat fully opens. Once this product begins to circulate throughout the cooling system, the conditioner is attracted to the suspect area in the vehicle's cooling system. The heat generated by the engine acts as an activation agent and hardens the cooling system conditioner to help seal the suspect area.

It is important to remember that this product is not to be used in place of proper diagnostic processes. The proper diagnostic process is to thoroughly inspect the cooling system before the conditioner is added to the vehicle. For example, this product does not remedy concerns where coolant is found in the combustion chamber, loose heater hose clamps, or cracked coolant reservoir tanks. Be sure to properly diagnose the cooling system before deciding to use this product.

Since June of 2003, the Cooling System Conditioner has been added in production on all 2.5L Phase II engines (this also includes the 2.5L Phase II turbo engine). In addition to the 2.5L Phase II engine, Fuji Heavy Industries Ltd. and Subaru of America, Inc. have determined that this product is safe for use in all Subaru vehicles. Therefore starting with the introduction of the Phase II 2.5L engine (1999 model year Forester and Impreza), Subaru of America, Inc. has updated all of the Service Manuals to reflect the adding of the conditioner whenever the antifreeze is drained and replaced.Technical Service Bulletin # **062393** Date: **930112**

Brakes - Disc Pad Service

NUMBER
06-23-93

DATE
01-12-93

APPLICABILITY
ALL SUBARU MODELS

SUBJECT:
DISC BRAKE SERVICING

The disc brake system used on vehicles today are designed and developed to meet many different but very strict requirements while providing the optimum level of performance under a wide range of vehicle operating conditions.

The choice of brake pads is ultimately a balanced choice. As a result, a certain amount of brake noise can result. The pads used on today's vehicles may cause an occasional and intermittent high-pitched squeak or squeal when brakes are applied with light or moderate pedal pressure. If the brake system is confirmed to be functioning correctly, the customer should be assured that this is an operating characteristic of disc brakes and no repair should be attempted.

Efforts to completely eliminate the occasional and intermittent noises that are judged to be normal, are frequently temporary. All brake noises should not arbitrarily be considered normal, however. They should be diagnosed as outlined in the appropriate model year service manual. An example of a similar noise requiring corrective action is the constant high-pitched squeal that is emitted by the disc brake wear warning sensor when brake pads are excessively worn.

Technical Service Bulletin # **028692** Date: **921013**

Water Pump - Seal Installation Manual Update

NUMBER: 02-86-9

DATE: 10-13-91

APPLICABILITY

ALL JUSTY MODELS 1.2 LITER ENGINE

SUBJECT:

WATER PUMP ASSEMBLY

A. Use this information to update all Justy Service Manuals Section 2-5 "Service Procedure for Water Pump".

When installing a new mechanical seal to the water pump housing, coat the outer periphery of the mechanical seal using Three Bond 1303 or *"Loctite" Brand # 271 or # 272, which is a red colored thread locking anerobic type thread sealant. Both "Loctite" # 271 or # 272 are available at most major automotive parts stores.

* Loctite is a subsidiary of the Permatex Corporation.

	RECOMMENDED	APPLICATION	U.S. EQUIVALENT
SEALANT	THREE BOND 1105 (P/N 004403010) FUJI BOND "C"	Mating surfaces of transmission cases, plugs, etc. Periphery of water pump mechanical seal.	3M's T-3 (RTV) Silicone Hi-Temp Black #08670
	SUPER THREE BOND 1215 (P/N 004403007)	Flywheel bolts, mating surface of flywheel housing crank case and transmission case.	
	THREE BOND 1102	Steering gearbox adjusting screw.	
	STARCALKING B-33A	Sealing against water and dust entry through weatherstrips, grommets, etc.	3M's Black Weatherstrip Adhesive #08011 Weatherstrips) Grommeted Windshield Sealer #8633 (sealing grommets) Strip-Calk #08578 or Scotch Foam Black Vinyl Tape #06370 and #06375 (Shimming Weatherstrips)
	THREE BOND 1207C (P/N 004403012)	Mating surface of oil pan	3M's T-3 (RTV) Silicone Hi Temp Black #08670
	THREE BOND 1303	Water pump mechanical seal Justy (1.2 liter only)	Loctite's #271 or #272 (Anaerobic Thread Sealer)
ADHESIVE	CEMEDINE 5430L	Weatherstrips and other rubber parts, plastics and textiles except soft vinyl parts.	3M's Super Weatherstrip Adhesive #08001, #08002 or #08008
	CEMEDINE 540	Soft vinyl parts, and other parts subject to gasoline, grease or oil (e.g., trim leather, gear shift boot, door inner remote cover, etc.	3Ms NO EXACT EQUIVALENT AVAILABLE Recommended: Trim Repair #08001 and #08080; Leather Repair #08054; Plastic Emblem Repairs #08061; Fabric #08090
	CEMEDINE 3000	Bonding metals, glass, plastic and rubber parts. Repairing slightly torn weatherstrips, etc.	3Ms Quick Fix Adhesive #08155
	ESSEX CHEMICAL CORP. URETHANE E	Windshield to body panel.	3Ms Superfast Urethane #08609 and Primer #08608

B. Use the chart as an addendum to Service Bulletin 01-106-88 Dated 02-01-88. Also, update all Justy Service Manuals Section 1-3 chart for "Sealants and Adhesives".

Technical Service Bulletin # **03-53-04** Date: **040820**

A/T, M/T - Crossmember Service Precautions

NUMBER: 03-53-04, 16-54-04
DATE: 08/20/04

APPLICABILITY:
All A/T and M/T Vehicles

SUBJECT:
Transmission Rear Cross-Member

INTRODUCTION

The purpose of this bulletin is to prevent the possibility of damaging the bolts and/or threads that secure the transmission rear cross member.

REPAIR PROCEDURES/INFORMATION



Figure 1

When performing service work or installing SOA's accessory short throw shifter, it is extremely important that the transmission is supported properly when removing or reinstalling the cross member. If not, damage to the bolts and/or threads will occur. Support the transmission using a transmission jack, regardless if the vehicle is supported by a lift or car ramps (Figure 1). It is recommended that hand tools be used for the removal and installation of the bolts. Inspect for bolt thread damage and replace as necessary. Be sure to clean any protective wax from the mating surfaces and be sure to start all bolts several threads by hand before using tightening tools. **Note**: If severe damage is evident to the threads, the use of a Heli-coil(R) type kit is an approved repair method.

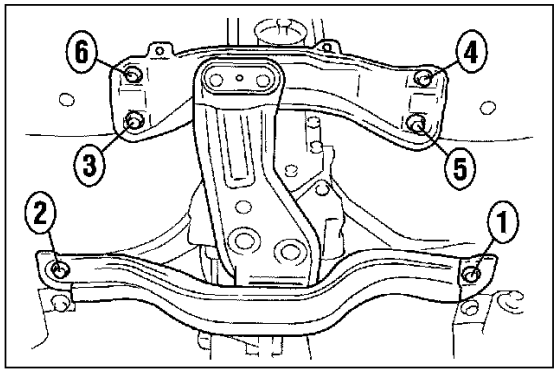

Figure 2

During reinstallation torque sequence, below (Figure 2) and the torque specifications (Figure 3)

T1: 70 N·m (7.1 kgf-m, 51 ft-lb)
T2: 140 N·m (14.3 kgf-m, 103 ft-lb)

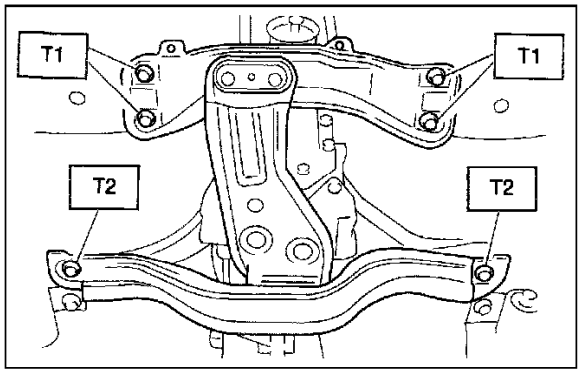

Figure 3

Bolts must be torqued to the proper specifications (Figure 3).Technical Service Bulletin # **SHU0295** Date: **950201**

Service Helpline Updated

Subaru Justy Hatchback 4WD L3-1.2L SOHC (MPFI)

SERVICE HELPLINE UPDATE

FEBRUARY 1995

NEW PROCEDURES FOR HANDLING YOKOHAMA TIRE COMPLAINTS

Yokohama Tire Corporation, one of the suppliers of original equipment tires for Subaru, has asked for our assistance in ensuring speedy and effective handling of Subaru customer complaints regarding Yokohama Tires.

Yokohama has set up a Customer Relations team that is best suited to handle complaints that have to do with these original equipment tires. (As you know, original equipment tires are warranted directly by the manufacturers.)

Yokohama tire dealers can also handle these complaints, but they are not always in the best position to evaluate all of the circumstances based on all factors known to Yokohama Tire Corporation.

To ensure that your customers receive proper consideration of their complaints with Yokohama, a special toll-free phone line has been established exclusively for Subaru dealers. In the event your customers have concerns, call the appropriate Yokohama Customer Relations number:

1-800-722-9888 8 a.m. to 4:45 p.m. Pacific Time

1-800-231-9987 8 a.m. to 4:45 p.m. Central Time

1-800-678-3279 8 a.m. to 4:45 p.m. Eastern Time

When calling the toll-free number:

^ Have all of the vehicle information in front of you.

^ Identify yourself as a Subaru dealer calling on behalf of your customer.

^ Provide the requested information. (The Yokohama Representative may ask questions about the vehicle's service and maintenance history as it relates to tire wear. Be prepared!)

The Yokohama Representative will then arrange an adjustment based on the vehicle and customer particulars presented.

It's as simple as that!

If you experience any difficulties with this procedure or if you have any questions, contact your District Technical Manager or Area Service Office.

Thank you for your cooperation. Your assistance in expediting these customer concerns will be appreciated by Yokohama - and more importantly, by our customers.

IMPREZA SHIFT LOCKS THAT WON'T UNLOCK WHEN COLD

If you encounter an Automatic Impreza with a shift lock that will not release from park position only when cold, check to see if any beverage has been spilled onto the console from the cupholder. We have received reports of shift lock mechanisms that become sticky only when cold after having soda or coffee spilled onto the solenoid, linkages. or switches. Evidence of the spill can be seen when the console cover is removed to inspect the mechanism.

ERRATIC WARNING LIGHT OPERATION

When diagnosing a vehicle that has erratically operating (flashing, dim illumination, etc.) of the handbrake/brake fluid warning lights. you might want to check the charging system and the charge light system. The charge light system (which receives a ground through the alternator field when the alternator is not charging) is used to check the bulbs of the handbrake/brake fluid warning lights (and some other warning lights on select vehicles).

IDLE QUALITY COMPLAINTS ON 95 LEGACY

If you encounter a complaint of idle quality on a 95 LEGACY, especially during warm up, check to see if there is corrosion between the spark plug terminal tips and the spark plug wire's contact.

SYNTHETIC ENGINE OIL - AN UPDATE

FHI has liberalized their position on the use of synthetic engine oils in Subaru engines. Synthetic engine oils can be used in SUBARU engines if the user follows the engine oil recommendations prescribed in the Owner's Manual. SUBARU has not tested the compatibility of all synthetic oils with engine seals, but the petroleum industry does adhere to standards for the refining process which meet SUBARU requirements.

SUBARU does not guarantee the performance of any brand of engine oil.

ENGINE 0IL USAGE GUIDELINES

^ ONLY USE ENGINE OIL THAT MEETS OR EXCEEDS THE API CLASSIFICATION DESIGNATED IN THE OWNER'S MANUAL FOR THE VEHICLE.

^ ONLY USE ENGINE OIL THAT MEETS THE VISCOSITY REQUIREMENTS FOR THE AMBIENT TEMPERATURES UNDER WHICH THE VEHICLE WILL BE OPERATED AS OUTLINED IN THE OWNER'S MANUAL.

^ THE ENGINE OIL MUST BE CHANGED AT THE INTERVALS SPECIFIED IN THE WARRANTY AND MAINTENANCE BOOKLET FOR THE VEHICLE. SOME SYNTHETIC OIL REFINERS RECOMMEND EXTENDED OIL CHANGE INTERVALS. SUBARU DOES NOT RECOMMEND ANY DEVIATI0N FROM THE SPECIFIC INTERVALS IN THE OWNER'S MANUAL.

We hope this helps to answer questions about the use of Synthetic engine oil in SUBARU engines.

Technical Service Bulletin # **SHU9503** Date: **950301**

1985 & Up L-Series MPFI Improper Engine Operation/2000 RPM

When attempting to diagnose for a loss of injection, cutting out, dramatic surging, or any other similar complaint occurring mostly when cold, but always over 2000 rpm, check the alternator for overcharging. Excessive voltage (over 15v) may disturb the computer's ability to correctly control the various systems of the vehicle.

Impreza - Air Suction Valve Noise

Some SUBARU IMPREZA'S are equipped with air suction valves (ASV). These valves may make some noise for brief periods of time during initial cold start up and driving. They sound very much like lifter noise.

This condition is considered to be a NORMAL OPERATING CONDITION and NO REPAIRS should be made. We should also remember that this is an emission control device and can not be legally tampered with.

The noise reported usually shows up at ambient temperatures of approximately 40 degrees F. or lower with engine speeds of 2,000 RPM's or higher. The noise may go away during this time if your foot is removed from the gas pedal and may return if the throttle is again applied. Once the engine has warmed up slightly, the noise goes away and will not return again until the engine has had an extended cool down period. Usually overnight.

If you have a customer complaining of a noise in his engine when cold. it may very well be the ASV'S that are causing the noise. Question the owner about when the noise is there and how the vehicle is being operated before attempting any repairs.

If you have any questions concerning this matter, contact the Technical Helpline.

Legacy & Impreza Engines With No Injection Pulse #1 Cylinder

Built into the fuel injection control unit is logic that will shut off the # 1 injector if the computer believes that it can no longer control the Idle Air Control valve. Remember this while trying to diagnose a "hard" code for the Idle Air Control Valve or a dead miss in number one cylinder due to no injection at idle. A problem in the Idle Air Control valve circuit can be responsible. (Component testing shows that it most likely is not the valve itself.)

Another unusual computer response is if the computer is deprived of its "back up power supply". If deprived of this power, some computers will generate a false code for Idle Air Control valve and kill the injector for cylinder # 1. The pin location of this power supply can be found in the Control Unit Module I/O Signal pages of the appropriate Service Manual.

Accessory "Outback" Wheel Covers

When installing "Outback" wheel covers, the protective vinyl caps must be removed from the pins on the back of the wheel covers prior to installation. Failure to remove these caps will either cause the covers to not snap on completely. resulting in the covers falling off, or cause the covers to snap on so tightly that they are virtually unremovable without damaging or destroying them. See the installation instructions.

Battery Replacement

We have noticed a high warranty replacement rate for 95 LEGACY batteries. Subaru Service has been testing all of the returns for the last two months. To our surprise not one battery failure has been confirmed. All replacements that we inspected fell into three categories:

1) Charged and returned to service
2) Wrong battery was received
3) Frozen battery (discharged batteries will freeze)

Batteries in Dealer inventory vehicles must be maintained by the dealer. We ask at this time that each dealer review their charging and replacement policy. Discharged batteries should be recharged and tested, not replaced. If a vehicle has been in inventory for a long time, do the customer a favor and recharge the battery before delivery. Refer to previous Service Bulletins for procedures.

We will be reviewing service bulletins and past updates to standardize this policy. Any information you may have or want to contribute can be faxed to the SOA Service Department at (609) 488-3136, Attention: Tom Strain.

Diagnosing Noises Over the Phone

When encountering a noise that you are having difficulty diagnosing, please feel free to call the Technical Helpline for assistance. The conversation

should be limited to asking, "Have you ever heard of this kind of noise under these kinds of conditions?" If we have, we may be able to save you some time in diagnosis. If we have not, however, we are really not in any position to assist you. You are there, hearing the noise, hearing where it is coming from, when it comes and when it goes. We are not.

If we have never heard of the noise before, you are in the best position to diagnose the vehicle. Listen for the noise, locate it, and repair as necessary. If you have isolated the noise down to a particular part, again, we may be able to help by answering, "Have you ever heard of a noise like this from this particular part?" We may have some information regarding changes to that part. If you had previously called and we did not have any information to assist you, and you have subsequently diagnosed and repaired the vehicle, we would appreciate a call to let us know what was repaired so if someone else calls in the future we can assist them with the information received from you.

ECVT Loss of Line Pressure

When diagnosing an ECVT transmission that has a severe slipping condition, check to see if you have line pressure. If there is no pressure, there are a couple of likely causes. One, with which you may already be familiar, could be a severely cracked secondary pulley. Another, which you may not be familiar with, could be an oil pump drive shaft that has disengaged from the oil pump impeller shaft.

The engine end of the oil pump drive shaft has a clip on it to limit how far it can penetrate the flex-plate. This clip may become damaged during installation after a repair (especially if the transmission was removed without removing the engine). Also, if there is excessive wear in the splines of the driveshaft and/or flex-plate, the play in the spline area may break the clip. In either case, without the clip, the oil pump drive shaft can walk far enough into the flex-plate to disengage from the oil pump impeller shaft, causing the pump to stop.

During your inspection of components, look for a missing clip on the oil pump drive shaft and check the fit of the shaft into the flex-plate. If there is excessive play, replace both the drive shaft and the flex-plate.

Note:

Never try to withdraw the oil pump drive shaft out through the oil pump end of the transmission. This will damage a seal inside the transmission input shaft.

Impreza - Installing Fog Lamp Kit

When installing a 1995 Impreza foglamp kit, pay close attention to step # 9 "Interior Installation". If the Red/Black wire is mistakenly attached to the Red/Blue, the foglamps will only work when the rear defogger is turned on. The Red/Black should be attached to the corresponding Red/Black at the fuse box.

Legacy - 1995 Service Manual Corrections

Two pin locations in connector B2 for the vehicle pressure sensor are numbered incorrectly.

Please refer to the following pages in the 1995 SUBARU LEGACY SERVICE MANUAL, VOLUME 3, SECTION 2-7, To make corrections.

Page 129 -	The locations for pins 1 & 3 are reversed. Change pin # 1 to # 3 and pin # 3 to # 1.
Page 132 -	Make the same corrections to connector B2 in the three figures shown on this page
Page 135 -	Same corrections as mentioned above.

Any questions concerning this should be directed to the Technical Helpine.

Legacy - Front End Cover (BRA) - 1995

Front end covers for the 1995 Subaru Legacy should not be installed on the Subaru Legacy LSi models.

All Subaru Legacy LSi models are equipped with a factory installed vehicle security system. Part of this system includes a switch in the engine compartment to detect opening/lifting of the hood while the system is armed. Unfortunately. the switch is in a location that results in contact with the hood portion of the front end cover.

Installation of the front end cover on a Subaru LSi model could cause the hood switch to malfunction.

Obtaining Service Bulletins and Other Published Materials

Please call your Area Service office or your DTM to obtain Subaru printed materials, such as bulletins, recalls, copies of pages from service manuals, dealer letters, questionnaires, copies of Service Helpline update articles, etc.

In general:

01 dealers	contact Subaru of New England at (617) 769-5100
02 dealers	contact Subaru Distributors Corp. at (914) 359-2500
03-07 dealers	contact the Atlanta area service office at (404) 732-3200
09-14 dealers	contact the Denver area service office at (303) 371-3820

Note:

There are some dealers on the borders of district areas that are closer to adjacent Area Service offices. Please contact the office that normally services your dealership.

Technical Service Bulletin # **075093R** Date: **941202**

Rear Window Defogger Grids - Metal Tab Repair

NUMBER: O7-5O-93R

DATE: 12/02/94

APPLICABILITY:
ALL MODELS

SUBJECT:
REPAIR OF REAR WINDOW DEFOGGER METAL TAB REPAIR OF REAR WINDOW DEFOGGER GRIDS

This is a reprint of Service Bulletin 7-50-93 that includes additional information.

TAB REPAIR

If you encounter a broken wiring tab connector from the rear window defogger grid, it is recommended the rear window NOT be replaced. The tab should be resecured using a commercially available repair kit.

One such repair kit is available from Premier Autoware under part # 37827. Phone # 1-800-854-6333. Other kits may be available through your local supplier.

Follow the instructions supplied with the repair kit to ensure a proper repair.

GRID REPAIR

Rear window defogger grids can be repaired using a kit available from Loctite Corporation Part Number 13067.

Effective immediately, dealer warranty repairs will not be accepted for replacement of rear windows because of open defogger grids.

Repairs should not exceed 4 in length on any one line.

Diagnosis of Grids

Locate the exact point of the break in the grid line as follows:

1. Turn on ignition switch and rear window defogger switch.
2. Connect the positive lead of a voltmeter to the right rear window defogger grid contact.
3. With the negative voltmeter lead, touch the defogger grid line at its mid-point on the rear window.

    a. If a reading of approximately 6 volts is obtained, the grid line is operative.
    b. If a 12 volt reading is obtained, the break in the grid line is between the positive contact and the point where the negative voltmeter lead is touching the grid line. To locate the exact point of breakage, move the negative voltmeter lead slowly toward the positive side of the grid until a zero (0) reading is obtained.
    c. If no voltage reading is observed, the break is between the negative side of the grid and the point where the negative voltmeter lead is touching the grid line. To locate the exact point of breakage, move the negative voltmeter lead slowly toward the negative side of the grid to the point where a +12 volt reading is just obtained.

4. Turn off rear defogger switch and ignition switch.

Repair Procedure (Read all manufacturer warnings.)

After the break in the grid line has been located, make repairs as follows:

1. Place protective covering over work area to prevent staining of upholstery in event of spillage of materials.
2. Make sure the glass is cleaned before attempting the repair.
3. The stencil enclosed in the kit is wider than the Subaru grids, therefore, electrical tape may be used to create the proper size stencil.
4. Thoroughly shake the bottle of conductive resin.
5. Apply the resin with the brush, making sure to overlap both ends of the broken line with the resin.
6. After the surface is tack free, about one (1) minute, repeat resin. Do this three (3) times. Recap the bottle of resin tightly.
7. Wait 20 minutes and then carefully remove the electrical tape.
8. Wait 24 hours before turning the defogger on.
9. Clean the brush for future applications using acetone.

FLAT RATE INFORMATION

Item Description/ Failure Code	Operation Number	Labor Descriptions	Time
REAR DEFROSTER METAL TAB/GRID UDA-01,39	B860-311	REAR DEFROSTER METAL TAB/GRID - REPAIR MATERIAL (REPAIR KIT) SHOULD BE CHARGED IN *SUBLET - 860-317	0.5

* Sublet charges should be fair and reasonable.

Technical Service Bulletin # **17-02-95R** Date: **010327**

Air Bag System - Inspection/Service/Replacement

NUMBER: 17-02-95R
DATE: 3-27-01

APPLICABILITY:
SRS Airbag-Equipped Vehicles

SUBJECT:
Airbag Procedures

IMPORTANT:
WHEN SERVICING THE SRS AIRBAG SYSTEM, ALWAYS FOLLOW THE SERVICE PROCEDURES, PRECAUTIONS, AND WARNINGS INDICATED IN THE APPROPRIATE SUBARU SERVICE MANUALS AND RELATED SERVICE BULLETINS. FAILURE TO DO SO MAY RESULT IN PERSONAL INJURY AND/OR DAMAGE TO THE SYSTEM.

FRONT SENSOR(S) (If Applicable)

INSPECTION STANDARD

^ Check the front section for damage, regardless of whether or not the airbag deployed; or
^ The designated trouble code is outputted during self-diagnosis. Please refer to the diagnostics section in the appropriate service manual for further information.

REPLACE THE FRONT SENSOR(S) IF ONE OR MORE OF THE FOLLOWING CONDITIONS EXIST:

^ Airbag is deployed.
^ Bracket is cracked, deformed, or damaged in any manner.
^ The housing is cracked, deformed, or damaged in any manner.
^ The label that identifies the manufacturing number is peeling off or deteriorated.
^ Harness circuit is broken, wire core is exposed, corrugated tubing is cracked, etc.
^ Front sensor is dropped to the floor or ground.
^ Front sensor had been determined to be faulty during self-diagnosis.

AIRBAG MODULE (DRIVER'S AND/OR PASSENGER'S)

INSPECTION STANDARD

^ The vehicle is damaged in a collision, regardless of whether or not the airbag deployed; or
^ The designated trouble code is outputted during self diagnosis. Please refer to the diagnostics section in the appropriate service manual for further information.

REPLACE THE AIRBAG MODULE IF ONE OR MORE OF THE FOLLOWING CONDITIONS EXIST:

^ The Airbag is deployed.
^ The pad surface is scratched, cracked, deformed, or damaged in any manner.
^ The harness and/or connector is cracked or deformed, their circuits are broken, wire core is exposed, etc.
^ The mounting bracket is cracked, deformed, or damaged in any manner.
^ The mounting surface has been fouled with a foreign mailer such as oil, grease, water, cleaning solvent, etc.
^ The airbag module has been dropped to the floor or ground.
^ The airbag module had been determined to be faulty during self-diagnosis.

AIRBAG CONTROL MODULE

INSPECTION STANDARD

^ The vehicle is damaged in a collision, regardless of whether or not the airbag deployed; or

^ The designated trouble code is outputted during self-diagnosis. Please refer to the diagnostics section in the appropriate service manual for further information.

REPLACE THE AIRBAG CONTROL MODULE IF ONE OR MORE OF THE FOLLOWING CONDITIONS EXIST:

^ The Airbag is deployed.
^ The control module is cracked, deformed or damaged in any manner.
^ The mounting bracket is cracked, deformed, or damaged in any manner.
^ The connector is scratched, cracked, deformed, or damaged in any manner.
^ The control module is dropped to the floor or ground.
^ The control module had been determined to be faulty during self-diagnosis.

MAIN HARNESS

INSPECTION STANDARD

^ The vehicle is damaged in a collision regardless of whether or not the airbag deployed; or
^ The designated trouble code is outputted during self-diagnosis Please refer to the diagnostics section in the appropriate service manual for further information.

REPLACE THE MAIN HARNESS IF ONE OR MORE OF THE FOLLOWING CONDITIONS EXIST:

^ Harness circuit is broken, wire core is exposed, corrugated tubing is cracked, etc.
^ Connector is scratched, cracked, deformed, or damaged in any manner.
^ The designated trouble code is output during self-diagnosis. Please refer to the diagnostics section in the appropriate service manual for further information.

COMBINATION SWITCH & ROLL CONNECTOR

INSPECTION STANDARD

^ The vehicle is damaged in a collision, regardless of whether or not the airbag deployed; or
^ The designated trouble code is outputted during self-diagnosis. Please refer to the diagnostics section in the appropriate service manual for further information.

REPLACE THE COMBINATION SWITCH & ROLL CONNECTOR IF THE FOLLOWING CONDITION EXISTS:

^ The combination switch or steering roll connector is cracked, deformed, or damaged in any manner.

STEERING WHEEL

INSPECTION STANDARD

^ The vehicle is damaged in a collision, regardless of whether or not the airbag deployed.

REPLACE THE STEERING WHEEL IF ONE OR MORE OF THE FOLLOWING CONDITIONS EXIST:

^ The steering wheel is cracked, deformed, or damaged in any manner.
^ Ensure that the new airbag module fits properly in the steering wheel when installed.
^ After installing the airbag module, ensure that it is free of interference with the steering wheel.
Also, clearance between all points should be equal.

STEERING COLUMN ASSEMBLY

INSPECTION STANDARD

^ The vehicle is damaged in a collision, regardless of whether or not the airbag deployed.

REPLACE THE STEERING COLUMN ASSEMBLY IF ONE OR MORE OF THE FOLLOWING CONDITIONS EXIST:

^ Ensure that the steering wheel free play, in axial and radial directions, is within specifications. Please refer to the diagnostics section in the appropriate service manual for further information.
^ Ensure that the clearance between the steering column bracket and capsule is within specifications Please refer to the diagnostics section in the appropriate service manual or SUBARU service bulletin number 17-01-92 (which can be found in the SERVICE BULLETIN MANUAL AND SERVICE HELPLINE PUBLICATIONS UPDATE SUPPLEMENT, Volume Number 14), item 4, for further information.

SIDE AIRBAG MODULE (DRIVER'S AND/OR PASSENGER'S, IF APPLICABLE)

INSPECTION PROCEDURE:

^ The vehicle is damaged in a collision, regardless of whether or not the airbag deployed; or
^ The designated trouble code is outputted during self diagnosis. Please refer to the diagnostics section in the appropriate service manual for further information.

REPLACE THE SIDE AIRBAG MODULE IF ONE OR MORE OF THE FOLLOWING CONDITIONS EXIST:

^ The Airbag is deployed.
^ The pad surface is scratched, cracked, deformed, or damaged in any manner.
^ The harness and/or connector is cracked or deformed, their circuits are broken, wire core is exposed, etc.
^ The mounting bracket is cracked, deformed, or damaged in any manner.
^ The mounting surface has been fouled with a foreign matter such as oil, grease, water, cleaning solvent, etc.
^ The airbag module has been dropped to the floor or ground.
^ The airbag module had been determined to be faulty during self-diagnosis.

SIDE AIRBAG SENSOR (DRIVER'S AND/OR PASSENGER'S, IF APPLICABLE)

INSPECTION STANDARDS:

^ Check the side section of the vehicle for damage, regardless of whether or not the airbag deployed; or

^ The designated trouble code is outputted during self-diagnosis. Please refer to the diagnostics section in the appropriate service manual for further information.

REPLACE THE SIDE AIRBAG SENSOR(S) IF ONE OR MORE OF THE FOLLOWING CONDITIONS EXIST:

^ Airbag is deployed.
^ Bracket is cracked, deformed, or damaged in any manner.
^ The housing is cracked, deformed, or damaged in any manner.
^ The label that identifies the manufacturing number is peeling off or deteriorated.
^ Harness circuit is broken, wire core is exposed, etc.
^ Sensor is dropped to the floor or ground.
^ Sensor had been determined to be faulty during self-diagnosis.

SEAT BELT PRE-TENSIONERS (DRIVER'S AND/OR PASSENGER'S)

INSPECTION PROCEDURE:

^ The vehicle is damaged in a collision, regardless of whether or not the airbag deployed; or
^ The designated trouble code is outputted during self diagnosis. Please refer to the diagnostics section in the appropriate service manual for further information.

REPLACE THE SEAT BELT PRE-TENSIONER(S) IF ONE OR MORE OF THE FOLLOWING CONDITIONS EXIST:

^ Airbag is deployed (if front airbags are deployed, the front seatbelt pre-tensioners have also discharged)
^ Bracket is cracked, deformed, or damaged in any manner.
^ The housing is cracked, deformed, or damaged in any manner.
^ The label that identifies the manufacturing number is peeling off or deteriorated.
^ Harness circuit is broken, wire core is exposed, etc.
^ The belt webbing is extended and will not retract.
^ Pre-tensioner is dropped to the floor or ground.
^ The pre-tensioner has been determined to be faulty during self-diagnosis.

Technical Service Bulletin # **114595** Date: **950427**

State Emission Testing

NUMBER: 11-45-95

DATE: 4/27/95

APPLICABILITY: ALL SUBARU FULL-TIME AWD MODELS

SUBJECT:
STATE EMISSION TESTING

WARNING
Testing of an All-Wheel Drive Vehicle must never be performed on a single two-wheel dynamometer. Attempting to do so will result in uncontrolled vehicle movement and may cause an accident or injuries to persons nearby.

CAUTION

Subaru Justy Hatchback 4WD L3-1.2L SOHC (MPFI)

Resultant vehicle damage due to improper testing is not covered under the SUBARU Limited Warranty and is the responsibility of the STATE I/M Program or its contractors or licensees.

The 1990 Clean Air Act Amendments require the Environmental Protection Agency (EPA) to implement programs to reduce air pollution from motor vehicles. States are required to adopt either a "basic" or "enhanced" vehicle Inspection/Maintenance (I/M) Program depending on the severity of their air pollution problem. The "enhanced" I/M test simulates actual driving conditions on a dyamometer and permits more accurate measurement of tailpipe emissions than the "basic" I/M test which measures emissions only during engine operating conditions at idle and 2500 RPM. The "enhanced" I/M test also includes a pressure check to identify evaporative emissions leaks in the fuel system.

The U.S. EPA has exempted SUBARU Full-Time All-Wheel Drive (AWD) vehicles from the following performance warranty short tests:

^ Loaded Test
^ Idle Test With Loaded Preconditioning

State I/M Programs should test affected SUBARU AWD models using any other EPA-91 approved performance warranty short test. SUBARU models equipped with the AWD feature should be tested on a four-wheel drive dynamometer or the State I/M Program may elect to use a "double two wheel dynamometer" arrangement. Under no circumstances should the rear wheels be jacked off the ground, nor should the driveshaft be disconnected for I/M testing.

For vehicles with the Traction Control System (TCS), the TCS off switch on the dash must be placed in the "off" position after starting the engine, but prior to any testing on the dynamometer.

Listing of 1987-1996 Subaru Full-Time Vehicles

LISTING OF 1987-1996 MODEL SUBARU FULL-TIME 4WD AND ALL-WHEEL DRIVE VEHICLES

MODEL YEAR AND SUBARU MODEL DESCRIPTION

1987 M.Y
3 Door RX F4WD Turbo
4 Door RX/GL10 F4WD Turbo (M/T model only)
XT GL-10 F4WD Turbo

1988 M.Y
3 Door RX F4WD Turbo
4 Door GL-10/RX F4WD Turbo
Station Wagon GL-10 F4WD Turbo
XT6 F4WD

1989 M.Y
3 Door RX F4WD Turbo
4 Door RX/GL10 F4WD Turbo
Station Wagon GL10 F4WD Turbo
Station Wagon GL F4WD Turbo (A/T model only)
Touring Wagon GL10 F4WD Turbo
XT6 F4WD
XT GL F4WD (A/T model only)

1990 M.Y
Loyale 3 Door RS F4WD Turbo
Loyale 4 Door Sedan F4WD Turbo
Loyale Station Wagon F4WD Turbo
Loyale Touring Wagon F4WD Turbo
Legacy Sedan F4WD
Legacy Station Wagon F4WD
Legacy Touring Wagon F4WD
XT6 F4WD

1991 M.Y
Legacy Sedan F4WD
Legacy Sedan F4WD Turbo
Legacy Station Wagon F4WD
XT6 F4WD

1992 M.Y
Legacy Sedan F4WD
Legacy Sedan F4WD Turbo
Legacy Station Wagon F4WD
Legacy Station Wagon F4WD Turbo
SVX F4WD

1993 M.Y
Legacy Sedan AWD
Legacy Sedan AWD Turbo
Legacy Station Wagon AWD
Legacy Station Wagon AWD Turbo
SVX AWD
Impreza Sedan AWD
Impreza Compact Wagon AWD

1994 M.Y
Legacy Sedan AWD
Legacy Sedan AWD Turbo
Legacy Station Wagon AWD
Legacy Station Wagon AWD Turbo
SVX AWD
Impreza Sedan AWD
Impreza Compact Wagon AWD

1995 M.Y
Legacy Sedan AWD
legacy Station Wagon AWD
Legacy Outback Wagon AWD
SVX AWD
Impreza Sedan AWD
Impreza Compact Wagon AWD
Impreza Outback Wagon AWD

1996 M.Y
Legacy Sedan AWD
Legacy Station Wagon AWD
Legacy Outback Wagon AWD
SVX AWD
Impreza Sedan AWD
Impreza Compact Wagon AWD
Impreza Outback Wagon AWD

LISTING OF TRACTION CONTROL SYSTEM EQUIPPED MODELS

1995 M.Y
Legacy Sedan
Legacy Station Wagon

1996 M.Y
Legacy Sedan

Technical Service Bulletin # **11-48-96** Date: **960712**

State Emission Testing - VECI Label Replacement

NUMBER: 11-48-96

DATE: 07-12-96

APPLICABILITY: All Subaru Models

SUBJECT:
State Emission Testing

Many states have established vehicle emission testing programs in accordance with Federal and California requirements. Both the U.S. EPA and California consider the underhood Vehicle Emission Control Information (VECI) or tune-up label as an integral part of state emission inspections because it provides information on critical emission-related parts which must be maintained in order for the vehicle to meet applicable emission standards. Additionally, these labels are used to ensure correct vehicle testing and hence minimizing false failures and customer dissatisfaction by identifying the proper vehicle testing classification.

Upon customer request or during normal dealer vehicle service activity, if it is determined that the Vehicle Emission Control Information or tune-up label is missing or requires replacement due to hood replacement, please follow the label replacement ordering guidelines in Subaru Parts Bulletin PT-74 11-91 dated 10/15/91 (included). There is no charge for replacement labels. Vacuum hose routing diagram labels can be obtained in the same manner. Label installation locations are identified in the applicable model year service manual.

Technical Service Bulletin # **11-61-00** Date: **000601**

State Emissions Test - Fuel Filler Cap Test Procedure

NUMBER: 11-61-00

DATE: 06-01-00

APPLICABILITY:
All Subaru Vehicles

SUBJECT:
State Emission Test / Fuel Filler or Gas Cap Test

Inspection of warranty returned parts has revealed a number of false failures. In the event you encounter a customer complaint of a failed fuel filler cap (herein gas cap) as a result of a state emission test, please review the following:

The U.S. Environmental Protection Agency issued technical guidance regulations for inspecting the gas cap as part of the state emission inspections in basic and enhanced Inspection/Maintenance (I/M) programs during August 1998. The gas cap pressure test is administered to all 1980 and older model gasoline fueled vehicles, which were originally equipped with a sealed gas cap. Also affected are 1981 and newer gasoline fueled vehicles, which are exempt from the evaporative system integrity (pressure) test. The gas cap pressure test is used to verify whether the gas cap can effectively block the flow of fuel vapors to the atmosphere. The vehicle inspection consists of both a visual check and functional leak check of the gas cap. The vehicle shall fail the gas cap visual check if the gas cap is missing or the wrong style gas cap is installed on the vehicle. The gas cap shall fail the functional test if it leaks a specific amount during a pressure test.

Please perform the following procedure using the Kent-Moore Evaporative Pressure Tester # J-44357 to confirm pass/fail determination as outlined below.

1. Threaded Type Gas Cap-(All Legacy, SVX, Impreza and Forester)

   ^ Plug the lower hose connection of the fuel cap adapter. (J-44357 Evap Kit)

   ^ Thread the hose of the pressure tester to the upper hose connection.

   ^ Install the gas cap on the fuel cap adapter.(Tighten to 2-3 clicks)

   ^ Connect the pump to a 12-volt source.

   ^ Turn on the pump timer passed the 1-minute setting.

   ^ Set the pressure hold switch of the pump to the open position.

   ^ Place the vent switch to the closed position.

   ^ Allow the pressure to build to its highest level and close the pressure hold switch. The pressure should hold for at least 1 minute.

   ^ Remove the gas cap from the fuel cap adapter. Replace the gas cap, if the pressure did not hold within 6 inches of H20 as specified on the # 1-44357 Evap Kit gauge. Hold the part for return to SOA, if requested.

2. Slot Type Gas Cap (All other older Subaru models).

   ^ Thread the hose of the pressure tester to the fuel cap adapter (# J-44903).

   ^ Install the gas cap on the fuel cap adapter. (Turn the cap to full lock position.)

   ^ Connect the pump to a 12-volt source.

   ^ Turn on the pump timer passed the 1-minute setting.

   ^ Set the pressure hold switch of the pump to the open position.

   ^ Place the vent switch to the closed position.

   ^ Allow the pressure to build to its highest level and close the pressure hold switch. The pressure should hold for at least 1 minute.

   ^ Remove the gas cap from the fuel cap adapter. Replace the gas cap, if the pressure did not hold within 6 inches of H20 as specified on the # J-44357 Evap Kit gauge. Hold the part for return to SOA, if requested.

If you have any questions, please contact the Technical Support Line.

CAUTION: VEHICLE SERVICING PERFORMED BY UNTRAINED PERSONS COULD RESULT IN SERIOUS INJURY TO THOSE PERSONS OR TO OTHERS.

Subaru Service Bulletins are intended for use by professional technicians ONLY. They are written to inform those technicians of conditions that may occur in some vehicles, or to provide information that could assist in the proper servicing of the vehicle. Properly trained technicians have the equipment, tools, safety instructions, and know-how to do the job correctly and safely. If a condition is described, DO NOT assume that this Service Bulletin applies to your vehicle, or that your vehicle will have that condition.

DISCLAIMER

Technical Service Bulletin # **0113493** Date: **930413**

Wiper Blade - Service

NUMBER: 01-134-93

DATE: 04-13-93

APPLICABILITY: ALL MODELS

SUBJECT: WIPER BLADE SERVICING

The major cause of windshield streaking complaints is contamination of the blade surface and/or windshield with atmospheric contaminants such as oil, dirt and road salt. These contaminants accumulate on the blades and glass during normal driving and can be increased by contact with contaminated car wash brushes or chamois.

The countermeasure to this complaint is a simple cleaning of the blades and glass using isopropyl alcohol. In some cases, it may be necessary to clean the glass using a non-abrasive household cleaner, followed by an alcohol wash. Care must be taken when using such materials to prevent paint damage.

Replacing wiper blades will not resolve the streaking complaint if the glass is oily.

Another factor affecting wiper blade longevity is the surface condition of the windshield. If the windshield is pitted by stone chips, wipers will wear out quickly. This condition is easily observed by using a magnifying glass to inspect the windshield.

These simple procedures can help satisfy your customers, in many cases, right at the Service Writer's area. Service Writers should explain this procedure to the customers also.

*For easy reference, you may want to file a copy of this in Section 12 - Body.

Technical Service Bulletin # **09-42-05** Date: **050415**

Cooling System - Warranty Repair Coolant Usage

NUMBER: 09-42-05

DATE: 04/15/05

APPLICABILITY:
All Models

SUBJECT:
Cautions Concerning Engine Coolant

INTRODUCTION

The purpose of this bulletin is to inform of cautions concerning engine coolant.

REPAIR PROCEDURES/INFORMATION

When adding, replacing or servicing the cooling system always use Genuine Subaru Long Life Coolant. Genuine Subaru Long Life Coolant is a phosphate (non-amine) type and is specially formated for all Subaru vehicles equipped with aluminum engines and radiators. Coolant of other types may not provide the proper protection to aid against corrosion of aluminum parts. If an equivalent must be used, make sure it is a phosphate (non-amine) type. As a reminder, use of Genuine Subaru Long Life Coolant is mandatory on all repairs paid for by Subaru of America, Inc, that require the replenishment of coolant. This holds true for any claim type.

Do not use flushing machines.

This photo shows the condition of a clogged radiator that has been filled with non-genuine coolant. The residue is corroded aluminum.

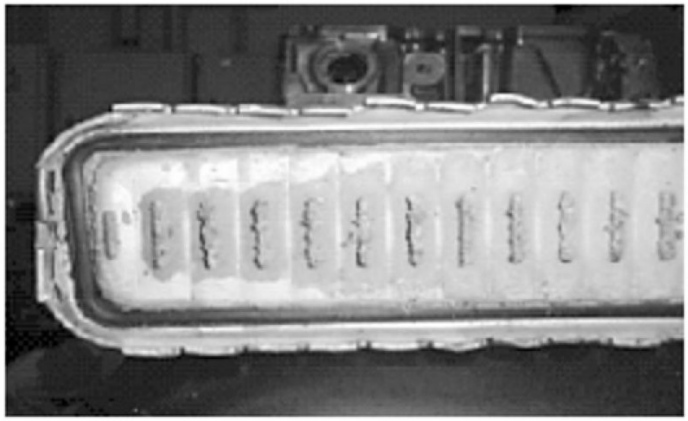

If a flushing machine has been used to service other brand vehicles with copper radiators, a chemical reaction between copper ions and Subaru coolant may occur. This could also cause clogging of the radiator.

If regular flushing is required, only use fresh tap water. Do not use hard water. Hard water will create calcium build-up which will clog the radiator.

Whenever the coolant is changed, you must add Genuine Subaru Cooling System Conditioner. Genuine Subaru Cooling System Conditioner has been tested and approved for aluminum engines and radiators.

Do not use after-market coolant reinforcement agents, sealers and/or flushing agents as those chemicals could corrode aluminum parts.

SUBARU QUALITY DRIVEN® SERVICE

CAUTION: VEHICLE SERVICING PERFORMED BY UNTRAINED PERSONS COULD RESULT IN SERIOUS INJURY TO THOSE PERSONS OR TO OTHERS.

Subaru Service Bulletins are intended for use by professional technicians ONLY. They are written to inform those technicians of conditions that may occur in some vehicles, or to provide information that could assist in the proper servicing of the vehicle. Properly trained technicians have the equipment, tools, safety instructions, and know-how to do the job correctly and safely. If a condition is described, DO NOT assume that this Service Bulletin applies to your vehicle, or that your vehicle will have that condition.

Disclaimer

Technical Service Bulletin # **165492** Date: **921127**

A/T - (4RAT) Gear Reduction Driven Shaft Replacement

NUMBER: 16-54-92

DATE: 11-27-92

APPLICABILITY:
ALL MODELS WITH 4RAT TRANSMISSIONS

SUBJECT:
GEAR REDUCTION DRIVEN SHAFT REPLACEMENT

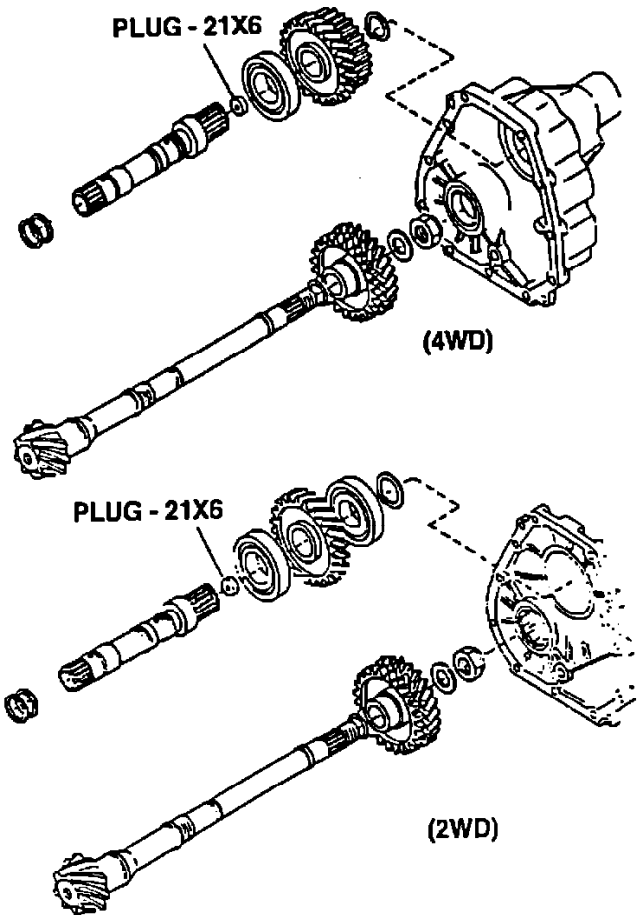

FIGURE 1

Whenever the reduction drive shaft is being serviced and/or replaced, make sure the orifice plug (21 x 6) is securely in place at the end of the reduction shaft. See Figure 1. When replacing the reduction drive shaft, the orifice plug is not included with the shaft. The plug must be ordered separately. Use the latest Parts Catalog for part number information.

NOTE:
Failure to install the orifice plug will cause major internal damage to the transmission.

Technical Service Bulletin # **ATRATB028** Date: **901001**

A/T - Engine Vacuum Testing

BULLETIN: # 028

DATE: October 1990

SUBJECT: Engine Testing With A Vacuum Gauge

TRANSMISSION: All

Engine Testing With A Vacuum Gauge

ENGINE/TRANSMISSION RELATIONS

An important part of transmission diagnosis is to make certain the engine operates properly. If the engine performance is incorrect, the transmission will receive the wrong information.

The engine sends signals to the transmission through a vacuum line, throttle cable or both. These signals basically synchronize torque with transmission line pressure, shift feel and shift timing.

Malfunctions in items like the air filter, spark plugs, EGR valves and other parts of the fuel, electrical and emission systems could result in improper transmission performance.

VACUUM GAUGE ENGINE PERFORMANCE TESTING

A vacuum gauge shows the difference between outside atmospheric pressure and the amount of vacuum present in the intake manifold.

The pistons in the engine serve as suction pumps and the amount of vacuum they create is affected by the related actions of:

- ^ Piston rings
- ^ Valves
- ^ Ignition system
- ^ Fuel control system
- ^ Other parts affecting the combustion process (emission devices, etc.).

Each has a characteristic effect on vacuum and you judge their performance by watching variations from normal.

It is important to judge engine performance by the general location and action of the needle on a vacuum gauge, rather than just by a vacuum reading. Gauge readings which may be found are as follows:

NORMAL ENGINE OPERATION

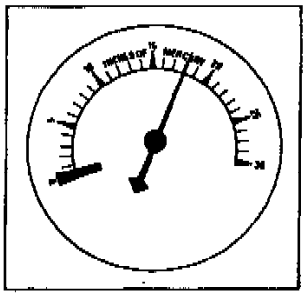

Figure 1

At idling speed, an engine at sea level should show a steady vacuum reading between 14" and 22" HG. A quick opening and closing of the throttle should cause vacuum to drop below 5" then rebound to 23" or more. See figure 1.

GENERAL IGNITION TROUBLES OR STICKING VALVES

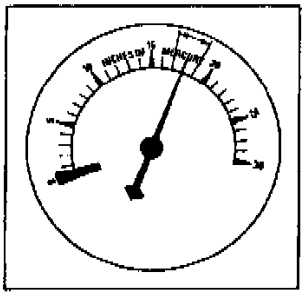

Figure 2

With the engine idling, continued fluctuation of 1 to 2 inches may indicate an ignition problem. Check the spark plugs, spark plug gap, primary ignition circuit, high tension cables, distributor cap or ignition coil. Fluctuations of 3 to 4 inches may be sticking valves. See figure 2.

INTAKE SYSTEM LEAKAGE, VALVE TIMING, OR LOW COMPRESSION

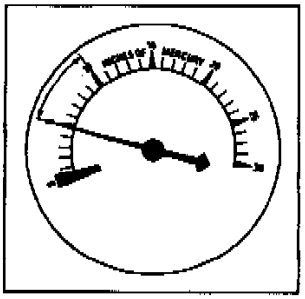

Figure 3

A vacuum reading at idle much lower than normal can indicate leakage through intake manifold gaskets, manifold-to-carburetor gaskets, vacuum brakes or the vacuum modulator. Low readings could also be very late valve timing or worn piston rings. See figure 3.

EXHAUST BACK PRESSURE

Starting with the engine at idle, slowly increase engine speed to 3000 RPM, engine vacuum should be equal to or higher than idle vacuum at 3000 RPM.

If vacuum decreases at higher engine RPM's, an excessive exhaust back pressure is probably present.

CYLINDER HEAD GASKET LEAKAGE

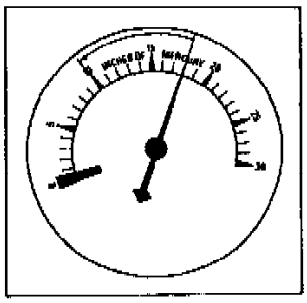

Figure 4

With the engine Idling, the vacuum gauge pointer will drop sharply, every time the leak occurs. The drop will be from the steady reading shown by the pointer to a reading of 10" to 12" Hg or less. If the leak Is between two cylinders, the drop will be much greater. You can determine the location of the leak by compression tests. See figure 4.

FUEL CONTROL SYSTEM TROUBLES

All other systems in an engine must be functioning properly before you check the fuel control system as a cause for poor engine performance. If the pointer has a slow floating motion of 4 to 5 inches - you should check the fuel control.

BULLETIN RECAP

- ^ Engine problems can affect transmission performance.
- ^ If you suspect an engine problem, connect a vacuum gauge to the intake manifold.
- ^ Note the location and action of the vacuum gauge needle.
- ^ Use the information in the bulletin to determine the engine problem.
- ^ Correct the engine problem before doing extensive calibration work on the transmission.

Technical Service Bulletin # **ATRATB078** Date: **911101**

A/T - How To Use A Pressure Gauge

BULLETIN : # 078

SUBJECT: Pressure Gauge

APPLICATION: Misc.

DATE: November 1991

HOW TO USE A PRESSURE GAUGE

A significant number of calls we receive involve improper pressures, so we need to use a pressure gauge when diagnosing problems.

Using a pressure gauge can seem like a formidable task. The reason most people do not use a pressure gauge is because they do not see the value in using one. Technicians do not see the value because the gauge readings do not tell them how to fix the problem. This article will attempt to show the technician how to interpret pressure gauge readings so the technician can find the fix to the problem.

	SLOW IDLE	FAST IDLE	WOT
P			X
R			
N			X
D			
3			
2			
1			

Figure 1

It is best to start pressure tests with mainline pressure. Mainline pressure should be checked in each range: P, R, N, D, 3, 2, 1. Each range, except Park and Neutral, should be checked under three conditions: Slow idle, fast idle, and wide open throttle. A form, as in figure 1 should be made to record the readings.

If all pressures are within specification at slow idle then the pump and pressure regulator are functioning properly.

If all pressures are low at slow idle, it indicates a potential problem in the pump, pressure regulator, filter, low fluid, or internal leakage. To help verify where the problem is, check pressures at fast idle. If all the pressures now read normally, it usually indicates a worn pump but the problem could still be internal leaks.

Internal leaks will usually show up in a particular range. For example a forward clutch leak would have normal pressure in Park, Reverse and Neutral but have low pressure in all forward ranges. A direct clutch leak will show a pressure drop when the transmission shifts to third and low pressure in reverse because in most cases, the direct clutch is on in third and reverse.

A restricted filter will usually show up as a gradual pressure drop at higher engine RPM because the filter cannot pass as much fluid as the pump is trying to draw.

A stuck pressure regulator valve will show up as fixed line pressure which means the same pressure all the time. The pressure may vary with engine RPM which means low pressure at slow RPM and higher pressure at higher RPM. There will be no boost in pressure from the TV or modulator system and no reverse boost.

If pressures are high at slow idle it indicates a pressure regulator or throttle pressure problem. On most cars, the modulator controls throttle pressure. If the transmission has a throttle pressure tap, it will tell you if the throttle pressure circuit is the problem. On GM units without a throttle pressure tap, remove the TV plunger. If line pressure is now normal then it's a TV problem, if not it's a pressure regulator problem.

Pressures also need to be checked at stall or wide open throttle (WOT). When doing a stall test, always observe safety precautions such as checking for broken mounts or bad brakes. Testing should always be done under operating conditions. To do a stall test, put the selector in the range to be tested and with one foot firmly on the brake, press the accelerator to the floor then note your pressure reading. Some technicians will pull the vacuum line off or pull the TV cable with the engine at fast idle. That is not operating conditions and will not detect a problem of trapped vacuum or a cable problem.

If all pressure at stall are low, then you should pull the TV cable to maximum or disconnect the vacuum line. If the pressures are now OK, the problem is in the cable or vacuum system. If the pressures are still low, then the problem is in the pump or control system.

If all pressures at stall are high, then look at the idle pressures. If the idle pressures are also high then this could be a pressure regulator or throttle system problem. If idle pressures are normal then the problem is in just the throttle system.

The reverse stall test is also a maximum pump output test. If you suspect a weak pump then this test will help find it. Often this will show up as low pressure at reverse stall but all other pressures including idle will be normal. If a person wanted to become really proficient with a pressure gauge they should first put a pressure gauge on their own vehicle and leave it there for exactly one week. Every time they drive the car they should watch the gauge. After one week, they should then put the pressure gauge on every single car in the shop that DOES NOT have a problem. Don't use the gauge on cars WITH problems yet. After 30 days of using a gauge on units that work properly, they can then start using the gauge on units with problems. The technician is accustomed to normal readings, abnormal readings will stand out like a sore thumb.

To fix today's transmissions, every professional technician must be proficient in the use of a pressure gauge. The only way to gain this proficiency is to use the pressure gauge daily. Practice makes perfect.

Technical Service Bulletin # **ATRATB122** Date: **920801**

A/T - ECVT General Information

TECHNICAL BULLETIN # 122

TRANSMISSION: ECVT

SUBJECT: General Information

Subaru Justy Hatchback 4WD L3-1.2L SOHC (MPFI)

APPLICATION: Subaru Justy

DATE: Aug 92

SUBARU -- ECVT

CAUTION # 1

Before you accept the job of repairing or rebuilding an ECVT be advised that several special tools are required for expanding the pulleys, measuring pulley alignment, pulley endplay etc. Without these tools, proper service is at the very least extremely difficult, if not totally impossible.

CAUTION # 2

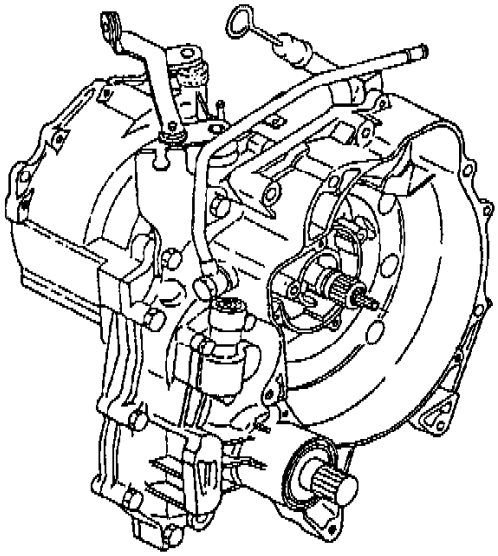

The ECVT transmission works on totally different principles as compared to conventional automatic transmissions. This transmission uses an electromagnetic powder clutch instead of a torque converter. An electric current is induced into the powder clutch causing it to transmit engine torque to the transmission.

Instead of using planetary gear sets, bands, and clutches, this transmission uses a set of hydraulically controlled variable diameter pulleys and a steel belt for ratio changes.

To a technician who is not familiar with this transmission operation, a test drive will reveal what may be interpreted as slipping or characteristics usually associated with vehicles equipped with very high stall speed converters.

The ECVT is capable of an infinite number of ratios between 2.5:1 and .5:1. The ratio change is very gradual and smooth which results in a shiftless transmission.

In the words of one technical writer, "If you think of a conventional automatic as a three-way light switch, the ECVT operates like a dimmer control.

ELECTROMAGNETIC POWDER CLUTCH SERVICE INFORMATION

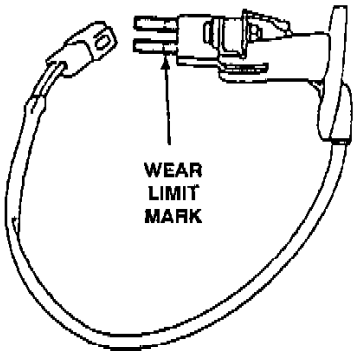

Removing the starter will allow access to the brush holder. Remove the brush holder to check for wear, contamination etc.

The wear limit indicator is the scribed mark on the brushes. The brushes must not be contaminated with oil.

BEARING: New brush holder # 30510KA040.

Check the bearing for seizure, wear, noise or improper rotation.

The bearing must run smoothly, without any signs of rough spots.

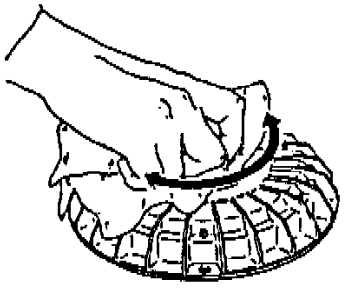

Always handle the powder clutch carefully to avoid damage to the slip rings. Clean the slip rings with a soft cloth and electrical contact cleaner, brake cleaner, etc. Install the brush holder only after the engine transmission and powder clutch are bolted together as an assembly.

CONTINUITY CHECK:

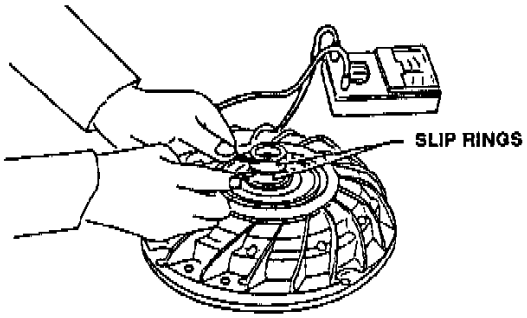

Measure the resistance between the slip rings using an ohmmeter. If it is 2 to 4 ohms the slip rings are functioning properly.

If continuity does not exist, or resistance is extremely low, replace the clutch.

INSULATION CHECK:

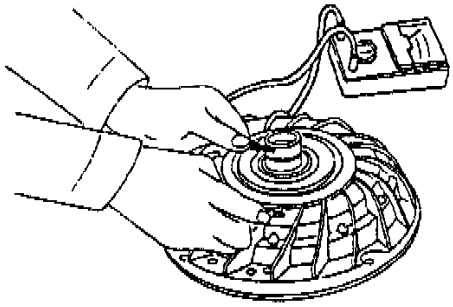

Check insulation resistance between each slip ring and aluminum bracket of the electromagnetic powder clutch using an ohmmeter (set in the max. ohm range). If continuity exists, replace the electromagnetic powder clutch.

Do not attach the test probes to the slip rings with alligator clips as this may scratch them.

Use an ammeter in series with the brush feed wires to monitor clutch current.

The rated current applied to the coil in the clutch is divided into three steps, determined by how far the accelerator pedal is depressed, and road speed.

Accelerator pedal released..... 0.4-1.8 A *

Accelerator pedal pressed lightly..... 3.0 A **

Accelerator pedal pressed heavily..... 3.51 A ***

* Above preset road speed.

** Only accelerator switch operated and above preset road speed.

***Accelerator switch and throttle position switch operated, above preset road speed.

If you are bench checking the powder clutch it should hold 105 ft/lbs of torque when 3.5 amps is induced into the coil.

HANDLING PRECAUTIONS

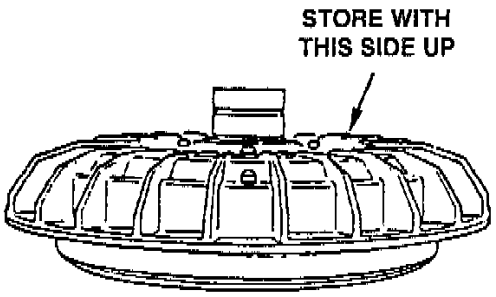

1. Do not turn the powder clutch over. Always store it with the hub up or the powder may spill out of the opening.
2. Do not scratch or dent the slip rings.
3. Do not attempt to dis-assemble the powder clutch. No internal parts are serviceable. The powder clutch is serviced as an assembly only.
4. Do not steam clean or wash the powder clutch in a solvent tank as this will contaminate the powder inside.
5. Do not remove the drive plate from the engine as it is properly balanced with the flywheel.

BELT HANDLING PRECAUTIONS

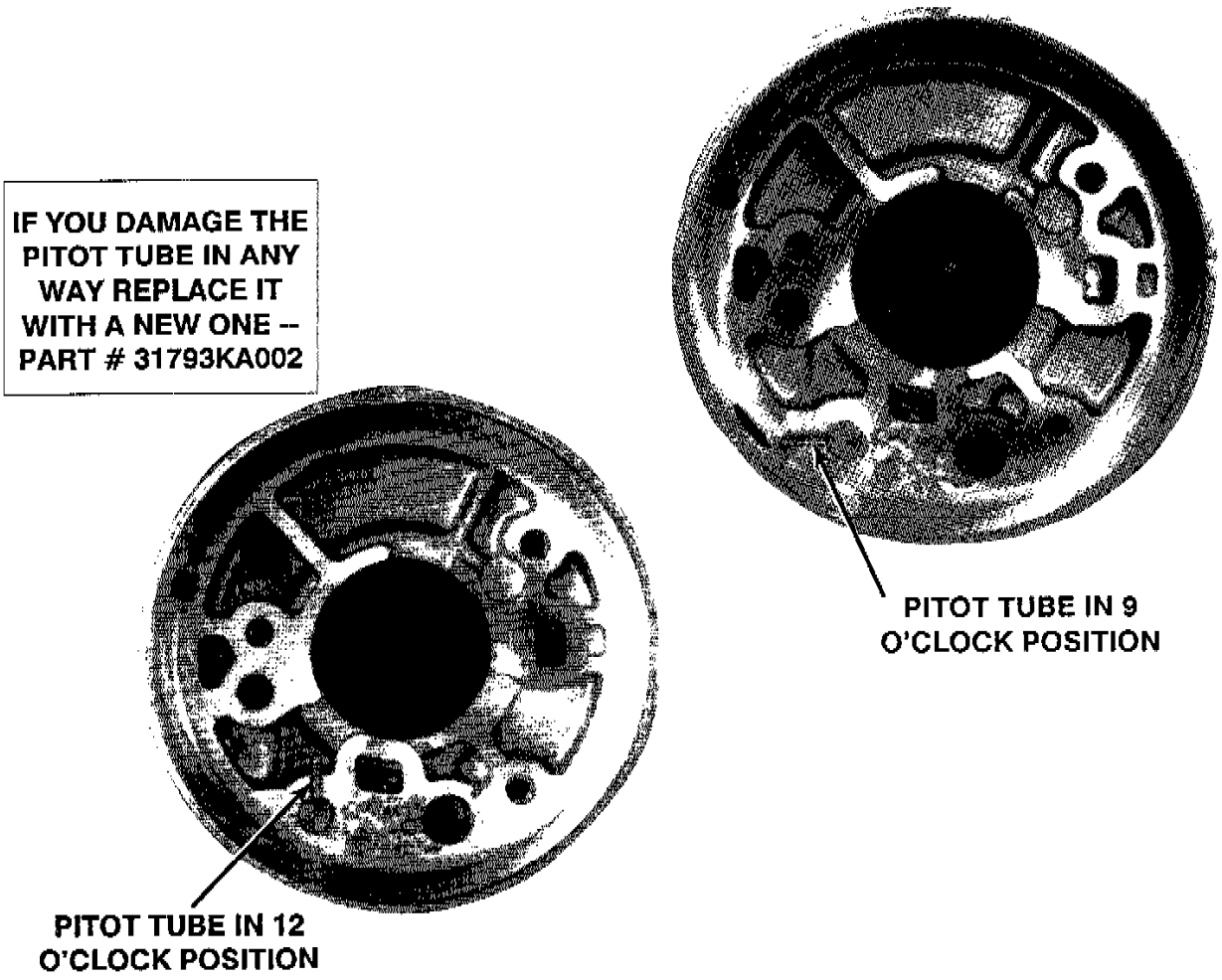

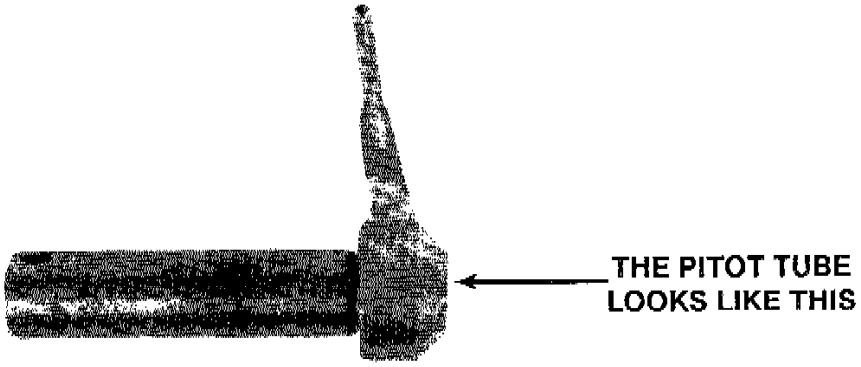

Before you attempt to separate the case halves be sure to first remove the pump and rotate the pitot tube from the 9 O'clock position, to the 12 O'clock position to prevent damaging the pitot tube.

When re-assembling the unit, place the rear case half over the pulley's with the pitot tube in the 12 O'clock position. Once the case halves are assembled, rotate the pitot tube back to the 9 O'clock position, before installing the pump.

BELT HANDLING PRECAUTIONS

The belt is made up of 280 individual segments and 10 steel bands. Special care must be exercised when handling the belt to prevent accidental dis-assembly of the belt.

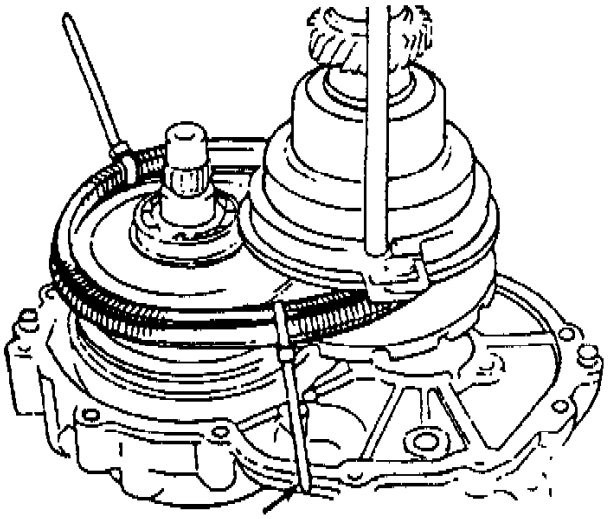

Install tie-raps on the belt before attempting to remove it from the pulley.

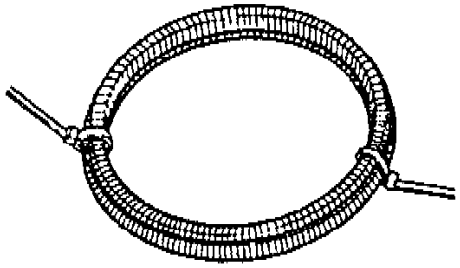

Always store the belt with the tie-raps on. Never remove the tie-raps until AFTER it is installed on the pulleys.

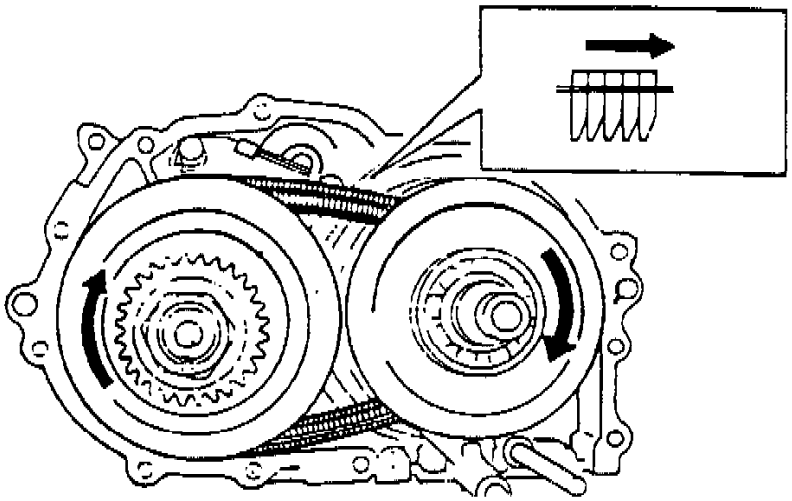

The belt is direction sensitive. It must face the direction shown.

ACCELERATOR SWITCH AND THROTTLE POSITION SWITCH

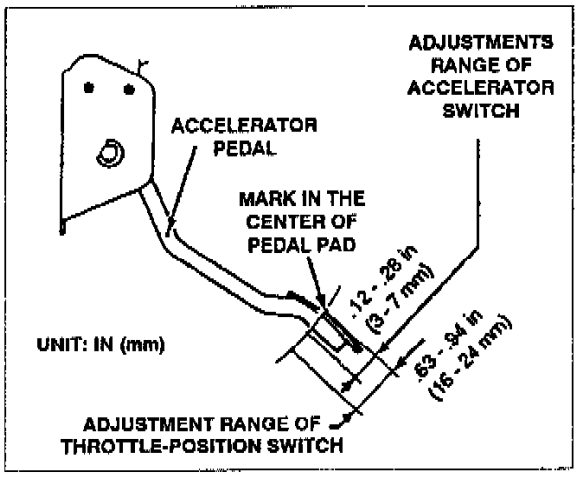

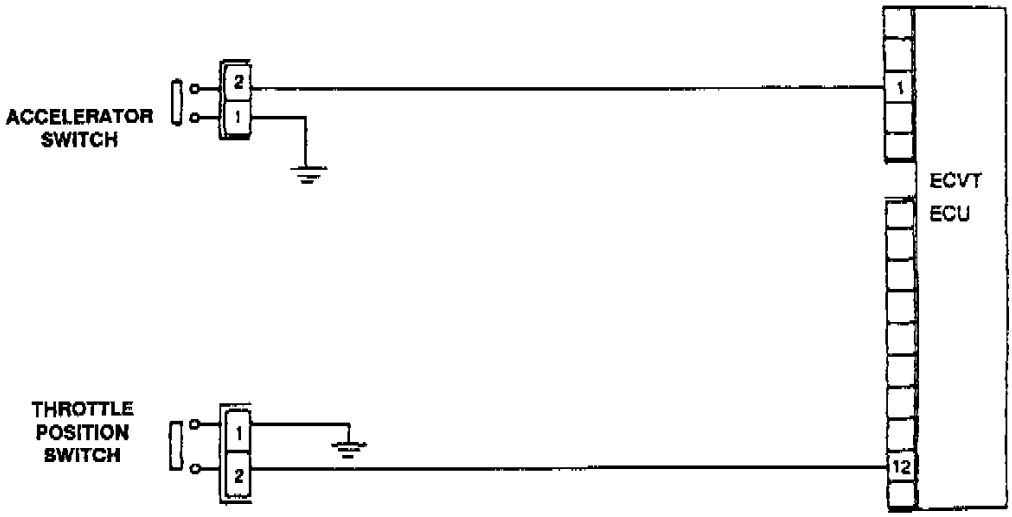

There are 2 switches activated by the accelerator pedal which inform the computer of throttle opening. The adjustment and operation of these switches is critical for proper transmission operation. Both switches are normally closed, and open when the accelerator is depressed the specified amount.

Technical Service Bulletin # **ATRATB132** Date: **920901**

A/T - Intermittent Electrical Problems

TECHNICAL BULLETIN # 132

DATE: Sep. 1992

TRANSMISSIONS: All Electronically Shifted Units

SUBJECT: Intermittent Electrical Problems

APPLICATION: All Electronically Shifted Units

Intermittent Electrical Problems

Wrong gear starts, no upshift, no downshift, falling out of 4th gear, etc may be caused by poor grounds. This applies to any electronically shifted unit, import or domestic.

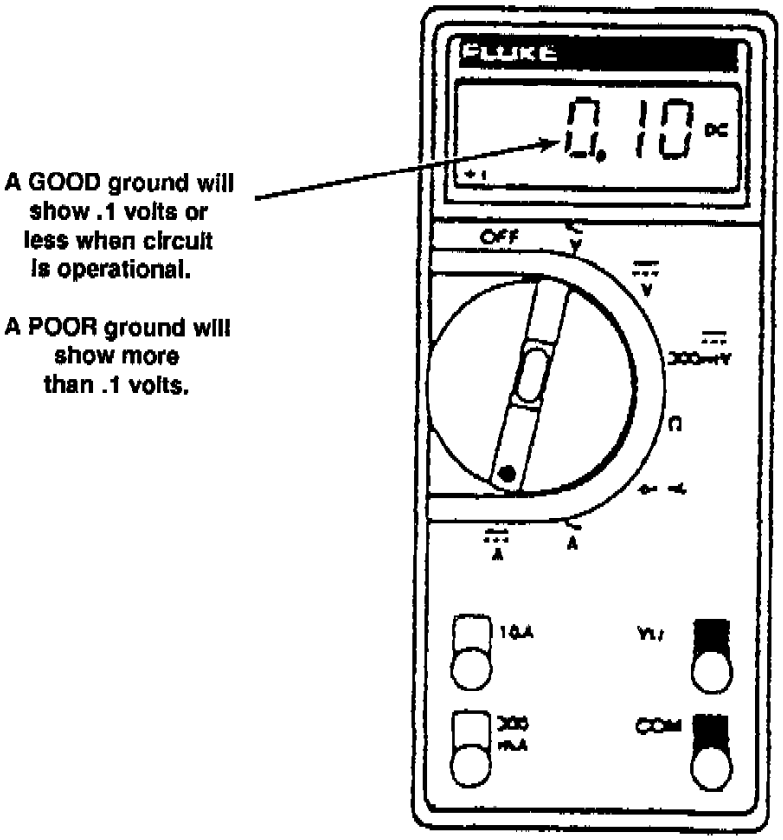

To test for a poor ground, connect the black lead of your digital voltmeter directly to the negative battery post and probe the suspect ground wire with the positive lead. A good ground will read 0.1 volts or less. More than 0.1 volts is a poor ground. Keep in mind the circuit must be operating to accurately check the ground.

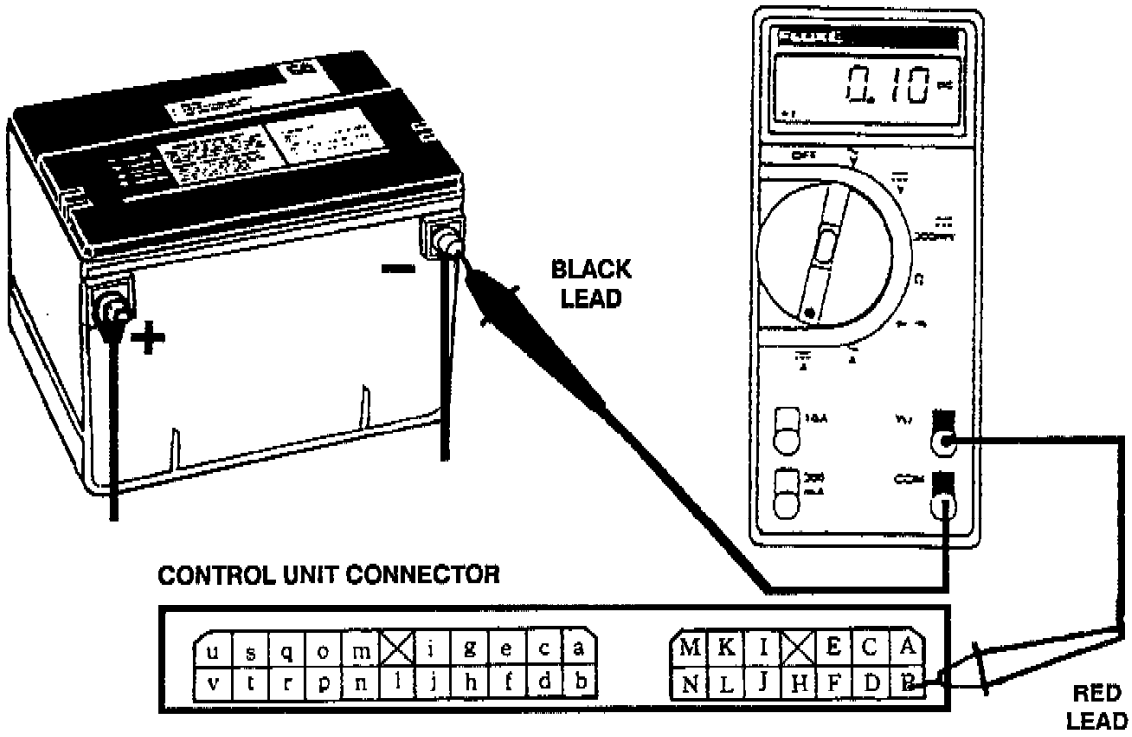

TERMINAL	CONNECTION TO	OPERATION	VOLTAGE
A	Battery	IG ON	Approx. 12
		IG OFF	0
B	Ground	Ground	0
C	Back-Up Battery		Approx. 12
D	Ground	Ground	0
E	Solenoid Valve Battery	IG ON	Approx. 12
		IG OFF	0
F	Fluid Temperature Switch	Above 150 degrees C (302 degrees F)	0
		Below 143 degrees C (289 degrees F)	Approx. 10 -12
H	1-2 Solenoid Valve	"R" range	Approx. 12
		"P" range	0
I	2-3 Solenoid Valve	"R" range	0
		"P" range	Approx. 12
J	3-4 Solenoid Valve	"R" range	0
		"P" range	Approx. 12
K	Lock-Up Solenoid Valve	In lock-up condition	Approx. 12
		Except in lock-up condition	0
L	Overdrive OFF Indicator	Button out (No up-shift into "4")	0
		Button in (Up-shift into "4")	Approx. 12
M	Inspection Code of ED-AT Tester		Code No.
N	(For Troubleshooting)		Code No.

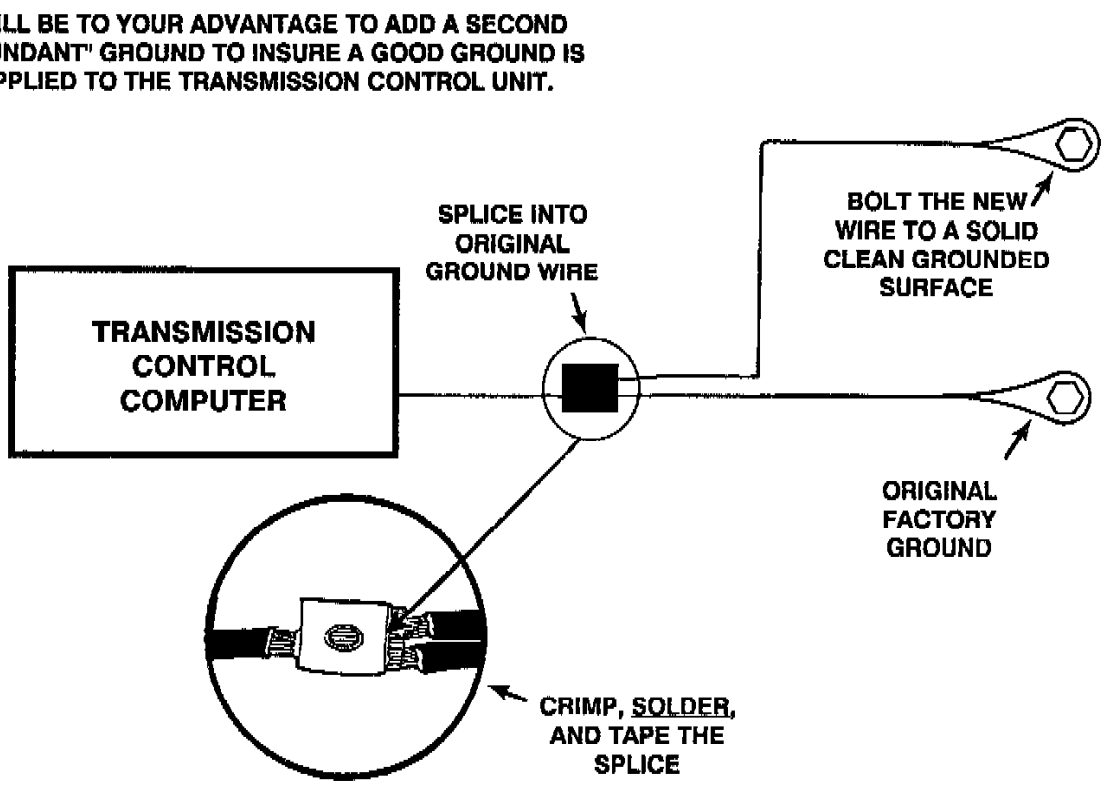

When checking a suspect poor ground always probe the wire terminal itself and not the bolt, since corrosion may insulate the wire yet the bolt is grounded.

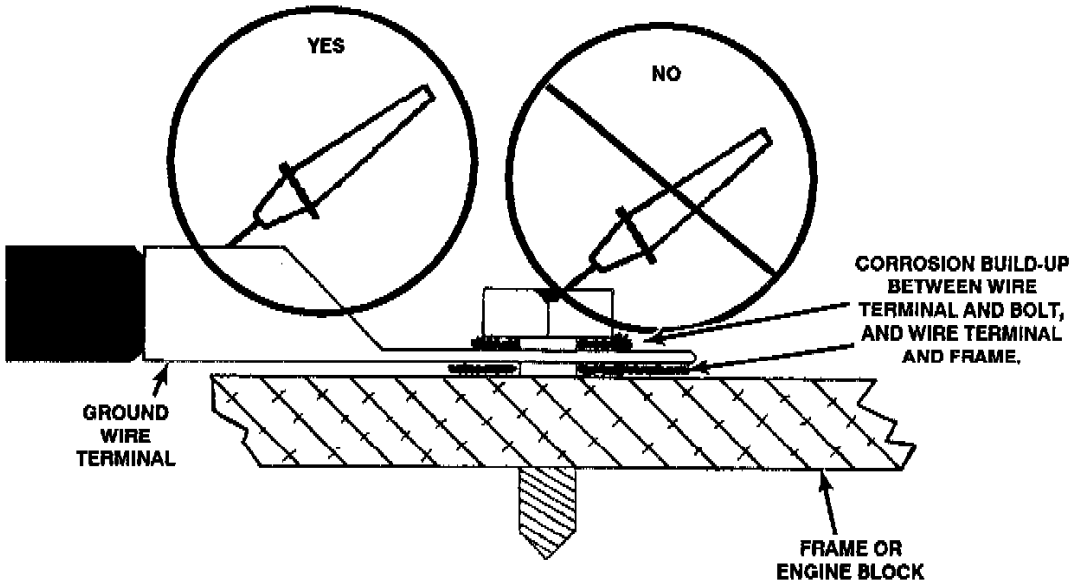

Using a service manual for the vehicle you are working on, locate the transmission computer ground circuit. In the example shown, B and D are the grounds. Now with the vehicle running in gear, backprobe B and D with the positive lead. Make sure the negative lead is hooked directly to the NEGATIVE BATTERY POST. The voltmeter must read 0.1 or less.

Technical Service Bulletin # **ATRATB191** Date: **931001**

A/T - Failsafe Modes

TECHNICAL BULLETIN # 191

DATE: Oct. 93

TRANSMISSION: None

SUBJECT: Failsafe Modes

Subaru Justy Hatchback 4WD L3-1.2L SOHC (MPFI)

APPLICATION: General

FAILSAFE MODES

Quite often you will find late model vehicles with computer shifted transmissions coming in that start off in "D" in the wrong gear. Instead of 1st, they take off in 2nd, 3rd or 4th gear.

This can happen for several different reasons, caused by either internal transmission problems, or external control system problems.

Internal transmission causes of this problem can be faulty solenoids or stuck valves.

External control systems can also cause wrong gear starts. Two common external causes are:

^ a complete loss of power or ground to the control system.

^ a failsafe protection strategy initiated by the computer to protect itself or the transmission from an observed problem.

Both the "No Power" problem and the "Fail Safe Strategy" problem result in the same wrong gear start condition. The gears that you get in each shifter position are the same.

7 POSITION SHIFTER						
TRANSMISSION		PRN	D OR D4	D OR 3	S OR 2	L OR 1
GM	4L30E	PRN	4	4	3	1
	4L60E	PRN	3	3	2	2
	4L80E	PRN	2	2	2	2
	4T60E	PRN	3	3	2	2
	4T80E	PRN	2	2	2	2
	F-7	PRN	2	2	2	1
ISUZU/GEO	JF403E	PRN	3	3	3	3
SUBARU	4AT	PRN	3	3	3	3
VW/AUDI	096-097	PRN	3	3	3	1
ZF	4HP22/24EH	PRN	3 OR 4	3 OR 4	3 OR 4	3 OR 4

6 POSITION SHIFTER					
TRANSMISSION		PRN	D OR 3	S OR 2	L OR 1
FORD	E4OD	PRN	4	2	2
	AXODE	PRN	3	3	2
	AODE	PRN	2	2	2
	A4LDE	PRN	3	2	2
	4EAT	PRN	3	3	1
	F4EAT	PRN	3	3	1
CHRYSLER	41TE (604)	PRN	2	2	2
	42LE	PRN	2	2	2
NISSAN INFINITY	RE4R01A	PRN	3	3	2
	RE4R03A	PRN	3	3	2
	RE4F02A	PRN	3	3	2
SUBARU	-4AT-	PRN	3	3	3
HONDA--ACURA--SATURN		PRN	4	4	2
MITSUBISHI	KM175,6,7	PRN	3	3	3
MAZDA	F4AEL	PRN	3	3	1
	G4AEL	PRN	3	3	1
	N4AEL	PRN	4	3	3
	R4AEL	PRN	3	3	2
TOYOTA LEXUS	A43DE	PRN	4	3	1
	A140E	PRN	4	3	1
	A240E	PRN	4	3	1
	A340E	PRN	4	3	1
	A540E	PRN	4	4	1
SPRINT/GEO/SUZUKI	A130EAW/MX17	PRN	3	2	1
GEO/ISUZU	AW4/30-40LE/30-80LE	PRN	4	3	1
RENAULT	MB/MJ/ML	PRN	3	3	3

Use the charts to see if the unit you have with wrong gear starts is in "Fail" or "No Power" mode. If so, you are probably looking for an electrical problem. If you have gears other than what is shown on this chart, you probably have a valve body or solenoid problem.

Technical Service Bulletin # **ATRATB294** Date: **950101**

A/T - Drive Axle and Wheel Lug Nut Torque Specifications

TECHNICAL BULLETIN # 294

DATE: 1995

TRANSMISSION: General

SUBJECT: Drive Axle and Wheel Lug Nut Torque

APPLICATION: Service information

AXLE AND LUG NUT SERVICE INFORMATION

It is critical to tighten the axle and lug nuts to factory specifications.

Important:
The following charts contain both DRIVE AXLE NUT and WHEEL LUG NUT tightening values. Make certain the correct tightening torque is used by referring to the chart headings.

WARNING
If the factory tightening specifications are not followed, bearing life will be shortened or mechanical loads will not be spread evenly.

^ Install axle(s) and wheel(s).

^ Install nuts and hand tighten.

^ Lower vehicle until wheels begin to touch the ground.

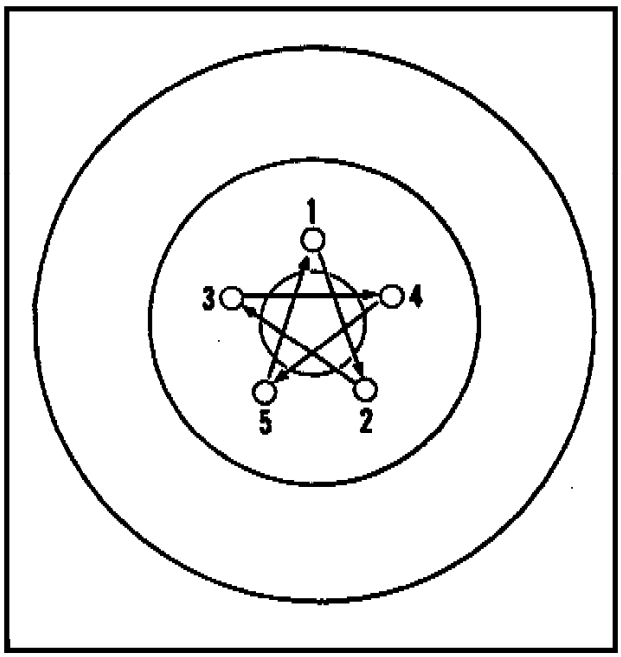

Figure 1 Tighten the lug nuts in star pattern.

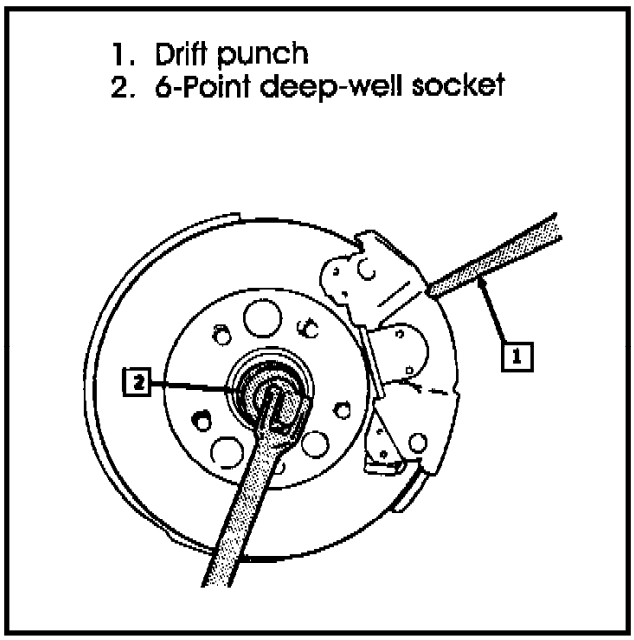

Figure 2 Tighten the axle nut with the wheels on the ground or rotor blocked (some models).

^ Using figures one and two, tighten nuts to specifications illustrated in the following tables.

Note
Some vehicles use torque-to-yield bolts. These bolts should be tightened an additional amount beyond the listed torque specification. The extra amount is listed in degrees.

Axle Nut and Lug Nut Tightening Specifications

Application		AXLE NUT CV TYPE Ft. Lbs. (N.m.)	Lug Nuts Ft. Lbs. (N.m.)
Acura			
86-94	Integra	134 (182)	80 (110)
86-91	Legend & Vigor	184 (250)	80 (110)
92-94	Legend	240 (325)	80 (110)
AMC			
84-87	Alliance & Encore	154 (210)	60 (80)
Audi			
88-94	80/90[1] except Quattro		
	1-piece wheel bearing housing[1]	195 (265)	65 (88)
	2-piece wheel bearing housing[1]	90 (120) + 90°	65 (88)
88-94	80/90 Quattro & 100/200	150 (200) + 90°	80 (110)
81-87	4000 Except Turbo Quattro/Coupe	170 (230)	65 (88)
81-87	4000 Turbo Quattro/Coupe	202 (275)	65 (88)
81-88	5000[1]	202 (275)	80 (110)
90-94	V8 Quattro[1]	150 (200) + 90°	65 (88)
Buick			
84-87	Century	185 (250)	100 (135)
88-92	Century	192 (260)	100 (135)
93	Century	103 (140) + 20°	100 (135)
94	Century	176 (240)	100 (135)
85-92	Electra & Park Avenue	107 (145)	100 (135)
93-94	Electra, LeSabre, Park Avenue	107 (145)	100 (135)
86-92	LeSabre	180 (245)	100 (135)
88-94	Regal	185 (250)	100 (135)
84-93	Riviera	185 (250)	100 (135)
84-86	Skyhawk	185 (250)	100 (135)
87-89	Skyhawk	192 (260)	100 (135)
84-92	Skylark & Somerset	185 (250)	100 (135)
93-94	Skylark & Somerset	192 (260)	100 (135)
Cadillac			
87-92	Allante	180 (245)	100 (135)
93-94	Allante, DeVille, Eldorado, Fleetwood, Seville	107 (145)	100 (135)
84-86	Cimarron	185 (250)	100 (135)

[1] = Replace nut

Application		AXLE NUT CV TYPE Ft. Lbs. (N.m.)	Lug Nuts Ft. Lbs. (N.m.)
Cadillac			
87-88	Cimarron	192 (260)	100 (135)
85-92	DeVille & Fleetwood	180 (245)	100 (135)
84-92	Eldorado & Seville	180 (245)	100 (135)
Chevrolet			
84-94	Except 93 Celebrity & Lumina APV	185-192 (250-260)	100 (135)
93	Celebrity & Lumina APV	103 (140) + 20°	100 (135)
Chrysler (Domestic)			
93-94	Concord & Premier	70-90 (250-260)	95 (130)
94-94	All others	180 (245)	95 (130)
Chrysler (Imports)			
83-94		150-190 (200-260)	Steel 55 (75) Aluminum 65-80 (90-110)
Daihatsu			
88-92		130-166 (177-226)	45-70 (60-95)
Dodge			
84-94	Except Intrepid	180 (245)	95 (130)
93-94	Intrepid	70-90 (95-122)	95 (130)
Eagle			
88-89	Medallion & Premier	185 (250)	Steel 65 (88) Aluminum 95 (130)
93-94	Vision	70-90 (95-122)	95 (130)
Ford			
88-94	Aspire & Festiva	116-174 (157-235)	70 (95)
84-90	Escore & EXP	180-200 (245-270)	90 (122)
91-94	Escort	174-235 (235-320)	90 (122)
89-94	Probe	174-235 (235(320)	75 (100)
86-94	Taurus	180-200 (245-270)	90 (122)
84-91	Tempo	180-200 (200-270)	90 (122)
92-94	Tempo	170-236 (230-320)	90 (122)
Geo			
93-94	Except Metro, Prizm, Sprint	137 (186)	75 (100)
89-94	Metro	130 (175) Stake nut	60 (80)
93-94	Prizm	160 (216)	75 (100)
85-87	Sprint	110-195(150-170) Stake nut	30(40)

Application		AXLE NUT CV TYPE Ft. Lbs. (N.m.)		Lug Nuts Ft. Lbs. (N.m.)
Honda				
84-90	Accord & Prelude[1]	135 (185)	Stake nut	80 (110)
91-94	Accord & Prelude[1]	184 (250)	Stake nut	80 (110)
84-94	Civic[1]	135 (185)	Stake nut	80 (110)
Hyundai				
	All models	135 (185)	Steel	55 (110)
			Aluminum	65 (90)
Infiniti				
	G20	173-232 (235-315)		80 (110)
Isuzu				
	I-Mark, Impulse, Stylus	137 (186)	Steel	75 (100)
			Aluminum	85 (115)
Lexus				
90-91	ES250	137 (186)		75 (100)
92-94	ES300	217 (295)		75 (100)
Lincoln				
88-94	Continental	180-200 (245-270)		90 (122)
Mazda				
84-94	Except 88-94 MX-3, MX-6 & 626	120-175 (160-235)	Stake nut	70 (95)
88-94	MX-3, MX-6 & 626	175-235 (235-320)		70 (95)
Mercury				
91-94	Capri & 88-89 Tracer	116-175 (157-235)		70 (95)
84-94	Except Capri & 88-89 Tracer	180-200 (245-270)		70 (95)
Mitsubishi				
84-94		150-190 (200-260)	Steel	55 (75)
			Aluminum	75 (100)
Nissan				
84-94	Altima, Maxima, Access, Stanza	175-230 (235-315)		80 (108)
84-86	Pulsar, Sentra	87-145 (120-195)		80 (108)
87-94	NX, Pulsar, Sentra	145-203 (200-275		80 (108)
Oldsmobile				
84-94	Except 93-94 Cutlass Ciera, Cutlass Cruiser, 94 Silhouette, Toronado, Trofeo, 88,98	185-192 (250-260)		100 (135)
93	Cutlass Ciera, Cutlass Cruiser	103 (140) + 20°		100 (135)
94	Cutlass Ciera, Cutlass Cruiser	175 (240)		100 (135)

Application		AXLE NUT CV TYPE Ft. Lbs. (N.m.)	Lug Nuts Ft. Lbs. (N.m.)
Oldsmobile (continued)			
94	Silhouette	103 (140) + 20°	100 (135)
84-85	Toronado	175 (240)	100 (135)
86-92	Toronado, Trofeo, 88	180 (245)	100 (135)
93-94	88,98	107 (145)	100 (135)
85-92	98	180 (245)	100 (135)
Peugeot			
		195 (265)	Not Available
Plymouth			
		180 (245)	95 (130)
Pontiac			
84-94	Except Bonneville, 94 Transport & 93-94 6000	185-192 (250-260)	100 (135)
87-92	Bonneville	180 (245)	100 (135)
93-94	Bonneville	180 (245)	100 (135)
94	Transport	103 (140) + 20°	100 (135)
93	6000	103 (140) + 20°	100 (135)
94	6000	175 (240)	100 (135)
Renault			
	Fuego, Sportwagon	185 (250)	60 (80)
Saab			
	900	215-225 (290-305)	75 (100)
	9000	215-225 (290-305)	85 (115)
Saturn			
		145 (200)	100 (135)
Sterling			
		215 (290)	50 (70)
Subaru			
84-94	Except 87-88 Justy, Legacy	145 (200) align to cotter pin within 30°	65 (90)
87-88	Justy	130 (180) align to cotter pin within 30°	65 (90)
90-94	Legacy	137 (185) align to cotter pin within 30°	65 (90)

Application		AXLE NUT CV TYPE Ft. Lbs. (N.m.)	Lug Nuts Ft. Lbs. (N.m.)
Suzuki			
	Swift	110-150 (150-200)	45 (60)
Toyota			
84-91	Camry, Corolla, Tercel	135 (185)	75 (100)
92-94	Camry	215 (295)	75 (100)
86-91	Celica	135 (185)	75 (100)
92-94	Celica	165 (225)	75 (100)
92-94	Corolla	160 (215)	75 (100)
92-94	Paseo, Tercel	150 (205)	75 (100)
VW			
84-92	Cabriolet, Corrado, Fox, Golf GTI, Jetta, Pickup, Quantum, Scirocco	175 (235) Use new nut	80 (110)
93-94	Corrado SLC, Golf, GTI, Jetta	195 (265) Use new nut	80 (110)
93	Euro Van	150 (200) Use new nut	80 (110)
90-95	Passat	195 (265) Use new nut	80 (110)
Volvo			
	850	110 (140) + 60°	80 (110)
Yugo			
		160 (215) Stake nut	65 (90)

Suzuki/ Toyota/ VW/ Volvo/ Yugo

Technical Service Bulletin # **ATRATB8748** Date: **870801**

A/T - Slipping or No-Shift/Metal Sealing Rings

TSB 87-48 (Aug)

SUBJECT: Metal sealing rings

Various Units

PROBLEM: Slipping, or sometimes no-shift

POSSIBLE SOLUTION: Sealing rings could be under-size.

1. Always inspect rings as outlined in SIL 84-29

Figure I

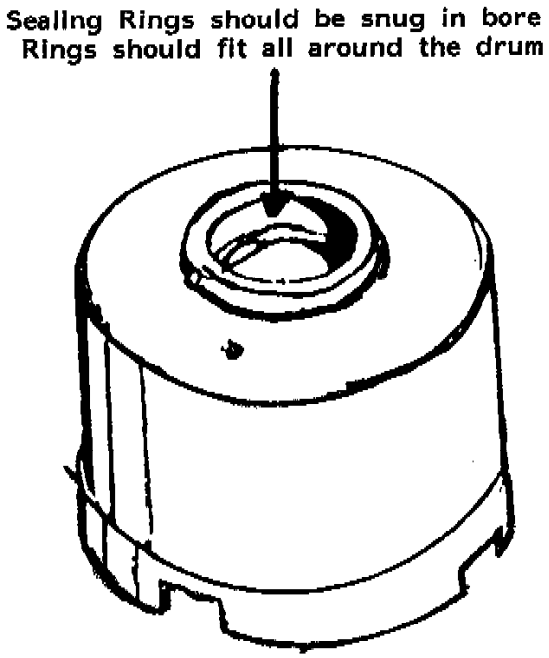
Sealing Rings should be snug in bore
Rings should fit all around the drum

Figure 2

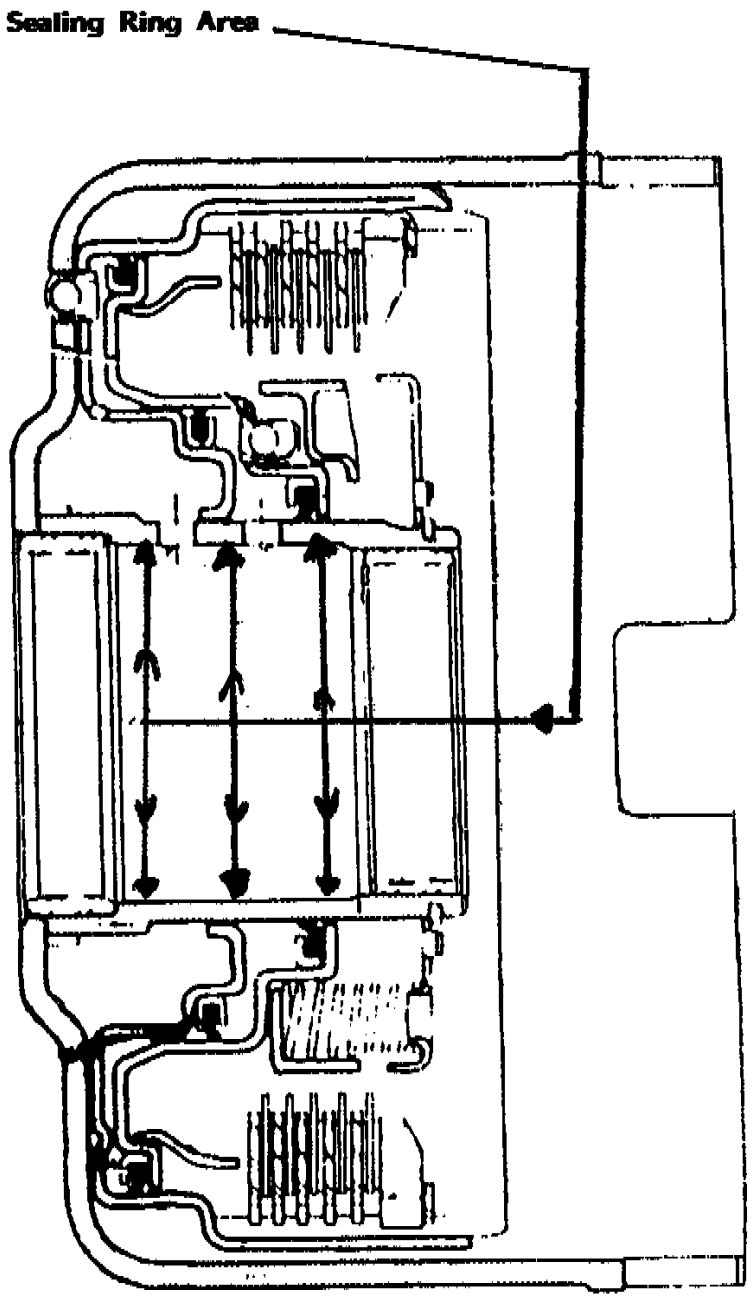

2. Place ring in bore of drum where they will be running. (See Figures 1 & 2)

3. Sealing rings should be snug in bore; rings should fit all around the drum. (drum could be out-of-round)

4. Air check all drums. (Use 30 PSI air pressure only.) If air escapes you have leaks -- better find now, than later. This represents lost clutch pressure, and could result in soft application and burned friction material.

5. Following these steps will help you save money, plus help you build better units.

Technical Service Bulletin # **ATRATB8754** Date: **870901**

A/T - Front Bushing Wear

TSB 87-54 (Sept)

SUBJECT: ALL AUTOMATICS

PROBLEM: Front Bushing Wear

CAUSE:
When diagnosing front pump bushing wear, the cause may be:

1. Excessive CONVERTER HUB RUN-OUT. This may, or may not be due to a faulty torque converter.

Figure 1

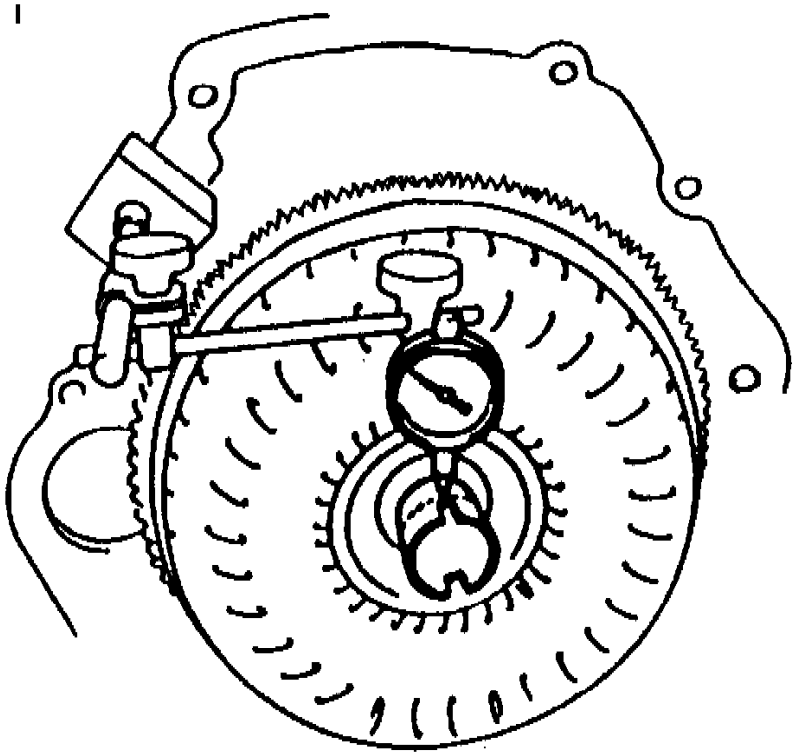

The torque converter can be checked visually, and with a dial indicator. (See Figure 1) Hub run-out should not exceed .010".

2. BROKEN, BENT OR CRACKED FLYWHEELS can also cause run-out. If the torque-converter-to-flywheel bolts have been loose, the flywheel holes can become egg-shaped, or the torque converter pads may wear into the flywheel, causing run-out.

Figure 2

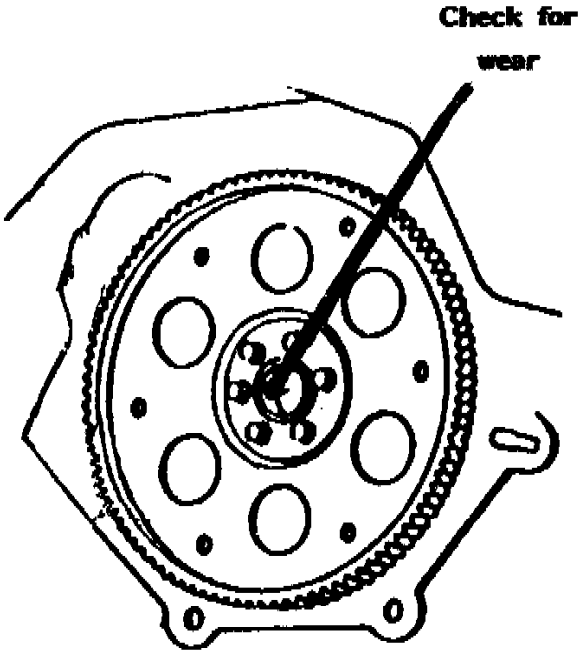

3. Another possibility is WEAR IN THE CRANKSHAFT, where it supports the torque converter pilot.(See Figure 2)

Often the crankshaft is only worn in a small area where the torque converter pilot has been against it.

If only a portion of the crankshaft is worn, rotate the crankshaft until the worn area is at 12:00 o'clock.

When the torque converter is pushed forward into the crankshaft, the torque converter pilot will bottom on a good portion, and should center properly.

Technical Service Bulletin # **ATRATB8923** Date: **890801**

A/T - Math Formulas Part I

Subaru Justy Hatchback 4WD L3-1.2L SOHC (MPFI)

TSB: 89-23 (Aug)

SUBJECT:
TRANSMISSION MATH FORMULAS (Your most valuable tool)

Transmission math formulas are not reserved exclusively for engineers. Understanding some basic mathematical formulas can be one of your most valuable tools.

The following information contained in this bulletin will discuss various basic formulas dealing with:

1. Shift Speed
2. Pressure
3. Speedometer ratios

Take the time, now, to understand these relatively simple concepts.

You will be saving yourself many problems, and considerable frustration, and also dollars, in the future.

Shift Speed and Pressure

SHIFT SPEED AND PRESSURE

To figure the area of a circle (valve or servo):

Radius (which is 1/2 the diameter) x Radius x 3.14159 = Area

EXAMPLE: A 1" diameter circle has a radius of 0.5"

0.5 x 0.5 x 3.14159 = 0.785

Therefore a 1" diameter circle has an Area of 0.785 sq. inches

Pressure x Area = Force

EXAMPLE: 100 psi line pressure, on a servo with an area of 2 square inches = force

So, 100 psi line pressure x 2 sq in = 200 pounds of force.

Force divided by Area = Pressure

EXAMPLE: 200 lbs divided by 2" = 100 psi

Force divided by Pressure = Area

EXAMPLE: 200 lbs divided by 100 psi = 2 inches

THINGS WE CAN DO WITH THESE FORMULAS:

EXAMPLE: A 700 R4 has 62 psi of line pressure at Idle.
The PR spring weighs 6.5 lbs

The tip (reaction end) of the PR valve has a diameter of 0.365" (0.365 divided by 2 = 0.1825 radius) 0.1825 x 0.1825 x 3.14159 = 0.1046" area

We want 75 psi of line pressure at Idle

First, let's see if those numbers add up, using: Pressure x Area = Force

62 psi x 0.1046 = 6.48, or 6 1/2 lb PR Spring

We want 75 psi:
Pressure x Area = Force (Spring) 75 psi x 0.1046 = 7.85 lb spring

What if we put in an 8 lb Spring? Force divided by Area = Pressure

8 lbs divided by 0.1046 = 76.48 or 76 1/2 line pressure

Now, let's look at RATIO.

Ratio is the relationship in quantity, amount or size, between two or more things.

In our example ratio is: How many psi each pound of spring will add.

Pressure divided by Force = Ratio

EXAMPLE: 62 psi divided by 6.5 lbs = 9.5 ratio Each pound of spring will increase pressure 9.5 psi

Force x Ratio = Pressure

EXAMPLE: 6.5 lbs x 9.5 = 61.75 or 62 psi

(Let's add 1 lb of spring, and see if we get 9.5 more psi.)

Force x Ratio = Pressure

EXAMPLE: 7.5 lbs x 9.5 = 71.25

New pressure Old pressure = Pressure difference

71.25 minus 61.75 = 9.5 psi change (by adding 1 lb of spring)

Once you know the ratio, a lot can be determined. Pressure divided by Ratio = Force

62 psi (actually 61.75) divided by 9.5 = 6.5 lb spring

The ratio never changes. This means that if I know that line pressure is 55 psi at idle, in a 700 R4, the the PR spring must be 5.78 lbs.

Pressure divided by Ratio = Force

So, 55 psi divided by 9.5 = 5.78 lbs.

Now, let's look at a math formula for shift speeds.

Suppose we had shift speeds of 15 mph and 20 mph, for the 1-2 & 2-3 shifts on a transmission. 20 mph may be too early for the 2-3 shift. If we adjust TV modulator, we will move both shifts. We don't want to do that because the 1-2 shift is fine, so let's work with just the 2-3 shift spring.

EXAMPLE: Original spring divided by Original MPH = Ratio

As, 4 lbs divided by 25mph = 0.2

Ratio x Desired MPH = New Spring

0.2 x 25 mph = 5 lb spring

A 5 lb spring will raise the shift on this transmission to 25 mph.

All you need to know is -- Where is it shifting now (at MINIMUM throttle) and what does the spring weigh.

This formula will get you very close, but may be a "tad" off, because we are not accounting for TV pressure helping the spring. This is why you want to check it at minimum throttle, so TV has the least effect.

Speedometer Ratios

Finally, let's look at speedometer ratios.

Suppose we put an exchange transmission in a car, and now the speedometer is off, because the speedometer drive gear has a different tooth count. What do we have to do to the driven gear to correct it?

Let's say the old drive gear had 7 teeth and the old driven gear had 21 teeth. The exchange unit had 8 teeth on the drive gear.

Old Drive Gear divided by the New Drive Gear = Ratio

7 teeth divided by 8 teeth = 0.875

Old Driven Gear divided by Ratio = New Driven Gear

21 teeth divided by 0.875 = 24 teeth

A 24 tooth driven gear will correct the speedometer error.

Let's do one more speedometer change. This time the old drive is 9, and the new drive is 10. The old driven gear is still 21.

Old Drive Gear divided by New Drive Gear = Ratio

9 tooth divided by 10 tooth = 0.9

Old Driven Gear divided by Ratio = New Driven Gear

21 tooth divided by 0.9 = 23.33 teeth

We can't get a 23.3 tooth count so we round it off to 23 teeth. Now the speedometer will be close, but not exact, because we had to round off the number.

Technical Service Bulletin # **ATRATB8927** Date: **890901**

A/T - Twenty Steps To Successful Repairs

TSB 89-27 (Sept)

SUBJECT: TWENTY STEPS TO SUCCESSFUL TRANSMISSION REPAIR

1. As you start work on a transmission, read your ATRA bulletins pertaining to that transmission. (If you do this every time, before you know it you'll have the bulletins memorized.)
2. Clean the entire transmission, including the valve body.
3. Check pumps, valve bodies, and cases for warpage.
4. Flat file pumps, valve bodies, and cases. (Just a few strokes with the file to knock off high spots and handle burrs.)
5. Check all pump gear clearances.
6. Check planet pinion endplay and side to side motion.
7. Soak all planet assemblies.
8. Soak all friction material for 15-30 minutes.
9. Sand, tumble, or replace all steel plates.
10. Re-surface all drums on which a band rides.
11. Replace all rotating oi1 control rings.
12. Check all oil control rings, and rubber products in their bores for proper fit.
13. Replace all major support bushings and bushings that control lube oil.
14. Pre-lubricate all bushings and thrust washers.
15. Pre-lube pumps.
16. Pre-fill torque converters.
17. Use available manuals to find specifications.
18. Set correct clutch and band clearances
19. Take the time to set total unit endplay
20. Use a torque wrench on all pumps and valve bodies.

Technical Service Bulletin # **ATRATB8930** Date: **891001**

A/T - Math Part II

TSB: 89-30 (Oct)

SUBJECT: TRANSMISSION MATH - Part II

Planetary Gear Sets:

Knowing the gear ratios of an automatic transmission can come in handy at times -- especially when you're swapping transmission types or differentials. The problem is in trying to find a manual with the ratios listed. What do you do?

BREAK OUT THE CALCULATOR, AND FIGURE IT OUT.

When you figure the gear ratios for planetary gear sets, it is just like any other gear set. You divide the output gear by the input. Also, don't count the idler gear; planetaries are considered idler gears. Set them aside, their tooth count doesn't matter.

Figure 1

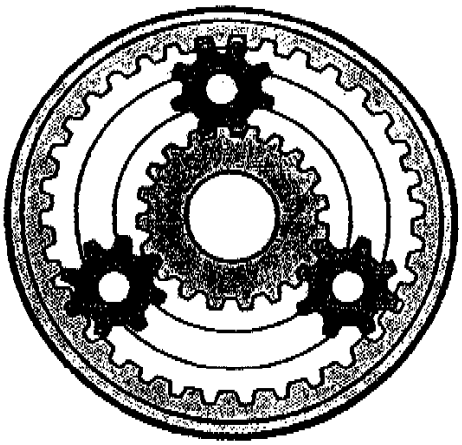

Now for the tricky part -- which gear do you consider the input, and which one the output? Figure 1 shows a planetary gear set with 34 teeth on the ring gear and 20 teeth on the Sun gear.

FOR GEAR REDUCTION, one of the gears is held stationary, and the other is used for the INPUT. THE TOOTH COUNT FOR THE OUTPUT GEAR IS THE SUM OF THE SUN GEAR AND THE RING GEAR, so if you are using the Sun gear for the input, then the ring gear + the Sun gear divided by the Sun gear = Ratio.

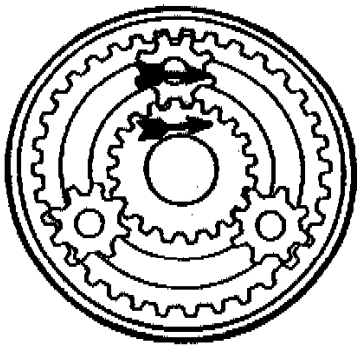

EXAMPLE: 34 + 20 divided by 20 = 2.7:1 This is how 1st gear on a THM 700 R4 is calculated. (See figure)

When the ring gear is used as the input, then the ring gear + the Sun gear divided by the ring gear = Ratio.

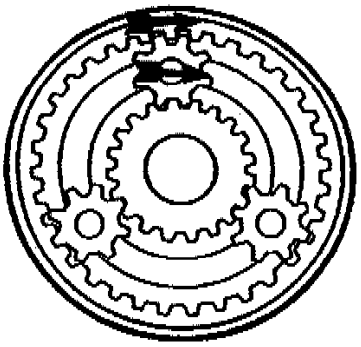

EXAMPLE: 34 + 20 divided by 34 = 1.58 This is now 2nd gear on a THM 350 is calculated. (See figure)

FOR OVERDRIVE, the sum of the ring gear + Sun gear is used for the input tooth count.

So, IF THE SUN GEAR IS HELD, then the ring gear divided by (ring gear + Sun gear) = Ratio

EXAMPLE: 34 divided by (34 + 20) = .63:1 Look familiar?

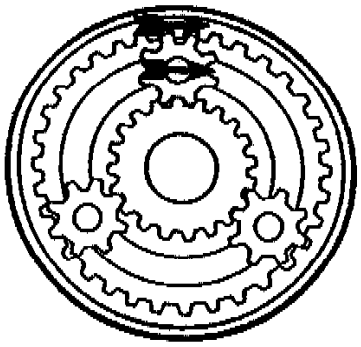

The A4LD, the THM 200-4R, the A-140E, the A-40D, the THM 325-4L are some of the units that use this method of getting overdrive. (See figure)

If the ring gear is held, then the Sun gear divided by (ring gear = Sun gear) = Ratio

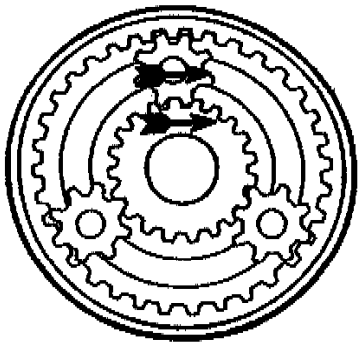

EXAMPLE: 20 divided by (34 + 20) = .37:1 (See figure)

REVERSE IS THE EASIEST - THE PLANET IS HELD.

The Sun gear is the input, and the ring gear is the output. The formula for this is: The ring gear divided by the Sun gear = Ratio.

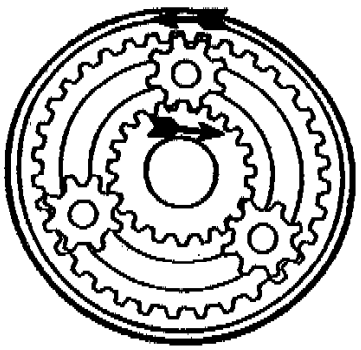

EXAMPLE: 34 divided by 20 = 1.7 (See figure)

Occasionally, the ring gear is used as the input, and the Sun gear as the output.

The formula for this is: The Sun gear divided by the ring gear = Ratio.

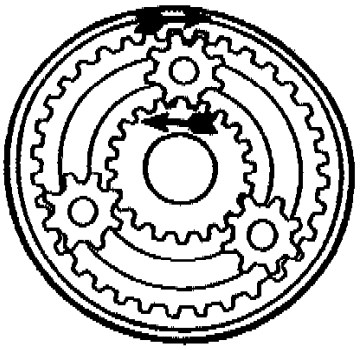

EXAMPLE: 20 divided by 34 = .59
(See figure)

Notice that the output is overdriven.

A transmission using this method must use another planetary gear set to reduce the output. The Mercedes W3A-040 is a good example of this

To get more than one gear forward and a reverse, requires multiple, or compound planetary gear sets.

Two of the most common of these are the SIMPSON GEAR SET, used in transmissions like the THM 350, the Ford C-4, and the TF 6 & 8, and the RAVIGNEAUX GEAR SET, found in transmissions such as the FMX, the AOD, and the T-35.

Figuring out all the ratios for these transmissions is a little tricky, so I'll give you the formulas, and let you figure out how these formulas were derived.

THE SIMPSON GEAR SET:

For this example I'll use a THM 200, which has 74 TEETH ON THE FRONT RING GEAR, 42 TEETH ON THE FRONT SUN GEAR, 30 TEETH ON THE REAR SUN GEAR, AND 62 TEETH ON THE REAR RING GEAR.

The formula for 1ST GEAR is: rear ring divided by rear Sun x front Sun plus front Sun + front ring divided by front ring.

EXAMPLE: On the THM 200, it would be:

62 divided by 30 x 42 + 42 + 74 divided by 74 = 2.74:1

SECOND GEAR is easy: Front Sun + front ring divided by front ring.

EXAMPLE: 42 + 74 divided by 74 = 1.57:1

THIRD GEAR is Direct Drive, or 1:1

REVERSE is rear ring divided by rear Sun

EXAMPLE: 62 divided by 30 = 2.06

THM 440-T4 (BACKWARDS SIMPSON):

The THM 440 T4 is sort of a backwards version of a Simpson gear set, and although it looks complicated, it really is very simple.

The front Sun gear has 26 teeth, while the rear Sun gear has 42. The front ring gear has 62 teeth, but keep in mind that it is part of the rear carrier, just as the rear ring gear is part of the front carrier, with a tooth count of 74.

As I said earlier, the THM 440 T4 is sort of a backwards version of a Simpson gear set, so in figuring the ratio for 1ST GEAR -- it is identical, except you substitute the words "front" and "rear" in the appropriate places. Front ring divided by front sun x rear Sun + rear Sun + rear ring divided by rear ring = Ratio

EXAMPLE: 62 divided by 26 x 42 + 42 + 74 divided by 74 = 2.92:1

2ND GEAR: Rear Sun + rear ring divided by rear ring

Example: 42 + 74 divided by 74 = 1.57:1

3RD GEAR: Direct Drive, or 1:1

4TH GEAR: Front ring divided by (front Sun + front ring = Ratio

EXAMPLE: 62 divided by (26 + 62) = .74:1

RAVIGNEAUX GEAR SET:

This is considered a compound gear set, and for this example I'll use an AOD, which has:

36 teeth on the front Sun gear
30 teeth on the rear Sun gear, and
72 teeth on the ring gear

The formula for first gear is: Ring gear divided by rear Sun gear = Ratio

EXAMPLE: 72 divided by 30 = 2.4:1

SECOND GEAR formula is: Rear Sun + front Sun divided by rear Sun x Ring divided by (Ring + front Sun)

EXAMPLE: (30 + 36) divided by 30 x 72 divided by (72 + 36) = Ratio 66 divided by 30 x 72 divided by 108 = 1.47

THIRD GEAR is Direct, or 1:1

FOURTH GEAR is: Ring gear divided by (ring gear + front Sun gear) = Ratio

EXAMPLE: 72 divided by (72 + 36) = .67:1

REVERSE on a Ford AOD is: Ring gear divided by front Sun gear.

EXAMPLE: 72 divided by 36 = 2:1

Technical Service Bulletin # **ATRATB9002006** Date: **900201**

A/T - Choosing the Right ATF

TRANSMISSION: ALL

BULLETIN: # 9002006

SUBJECT: Automatic Transmission Fluid

DATE: Feb 1990

AUTOMATIC TRANSMISSION FLUID

CHOOSING YOUR ATF

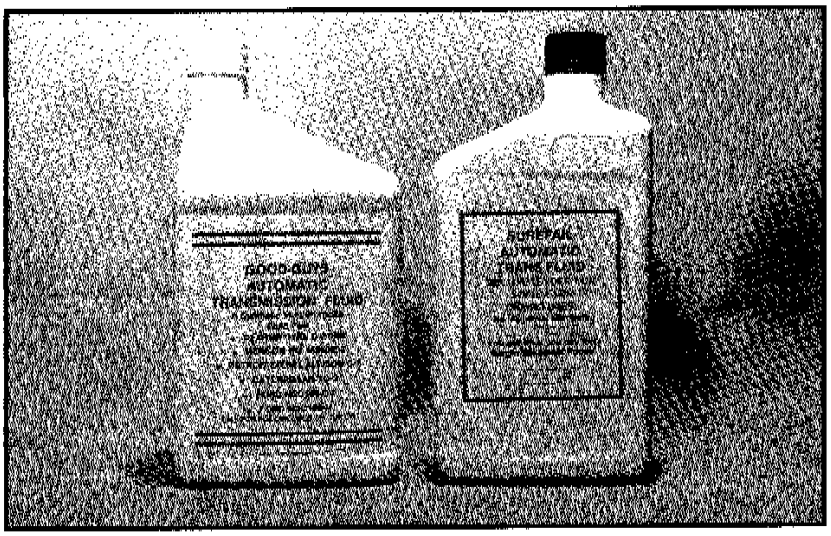

Figure 1

Different ATF's (Automatic Transmission Fluid) can have different frictional properties which can produce different shift characteristics. You may have already experienced problems like lock-up shudder, or squawks on shifts and have corrected them by changing the fluid. This alone tells, you that friction material and fluids are critical in today's cars.

MEETING THE O.E.M. SPECIFICATIONS

The first thing to consider when choosing an ATF is "Does it meet the O.E.M. specification?" ATF's wishing to be labeled as DEXRON II and/or MERCON must first meet the respective minimum requirements. It's important to note that even though the specification for DEXRON II and MERCON are currently very similar, THEY ARE NOT IDENTICAL. Also note, even fluids which meet the same specification may not be identical. One fluid may just meet a specification and, another may far surpass it. You should know what your fluids properties are! You can get that information from your fluid supplier.

EVALUATING YOUR FLUID

Ask your supplier to prove (certify) that the fluid meets O.E.M. specifications (MERCON OR DEXRON II). He will do that by supplying you with the license (certification) number issued to him by the O.E.M.

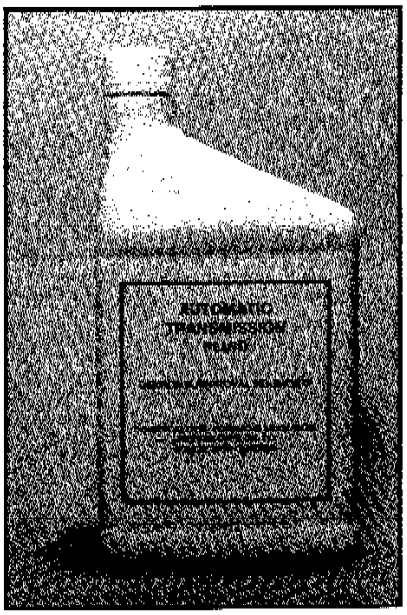

Figure 2

A DEXRON-II license number (sometimes referred to as a "D" number) will always start D-2. A typical DEXRON license number can be seen in Figure 2.

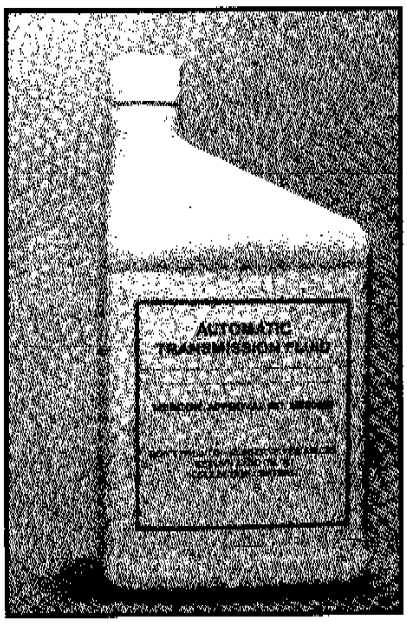

Figure 3

MERCON license numbers will be six digits starting with M as shown in Figure 3..

TRY TO MEET SEVERAL SPECIFICATIONS!

DEXRON II and MERCON have different minimum specifications, so a product that meets BOTH specifications may be better then those meeting only one spec. Meeting other specs, in addition to the first two can be an added benefit. If a fluid is licensed as DEXRON II AND MERCON as well as others like Allison C-4, or Caterpillar TO-2/TO-4, it means the fluid had to pass more tests and may be a better fluid.

Lastly, demand that the license numbers be placed on all your invoices especially if you buy in bulk. If your supplier is unwilling, it is very likely that they are supplying you an unlicensed fluid. Licensed suppliers are required to supply the license numbers to their customers as part of their agreement with the O.E.M.

OTHER THINGS TO CHECK

So now you've narrowed your choices down to a few suppliers that have O.E.M. license numbers. How do you compare two fluids that meet the same O.E.M. Spec.? Ask your supplier to give you the viscometrics on the fluid you buy.

An excellent "bench mark of the overall quality of a fluid is its viscosity at -40 degrees. This is measured in "centipoise" or "cPs". DEXRON II specification says viscosity will be no more then 50,000 cPs @ - 40 degrees. (Some poor fluids have tested at over 1,000,000 cPs) In general, the lower the number, the better the fluid.

Keep in mind that as the number goes down the price of the fluid usually goes up. (You get what you pay for) Most good fluids will average around

35,000 cPs. Hydrotreated (or Hydrocracked) fluids average around 20,000 cPs or less. (Hydrotreating is a refining process done to the base oil to clean out contaminants or impurities) Synthetic ATF's average 10,000 cPs or less, and some are as low as 5000 cPs. Viscosity at -40 degrees is a function of the base stock from which the ATF is made. A low number indicates a premium base oil OR an expensive refining process. (Hydrotreating)

FOR ADDITIONAL INFORMATION:

Transmission Digest August '89
Page 91 December '89 Page 51

BULLETIN RECAP

- ^ Only use fluids with O.E.M. approvals.
- ^ Try to get a fluid that meets more than one spec (e.g DEXRON II AND MERCON)
- ^ Check the viscosity at -40 degrees. The lower the number the better.
- ^ Avoid bargain basement fluids with no license numbers.

Technical Service Bulletin # **15-102-96R** Date: **010501**

Audio System - Radio Identification/Diagnostics

NUMBER: 15-1 02-96R
DATE: 05/01/01

APPLICABILITY:
1993 to 2000MY Subaru Vehicles

SUBJECT:
Audio System Diagnosis, Identification and Exchange Procedures

RADIO CHASSIS: LEGACY

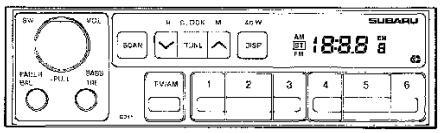

40-WATT ETR WITHOUT AUXILIARY PLUG
ID CODE ON FACE PLATE - C/P312 - C314

MODEL YEAR	VEHICLE APPLICATION	RADIO MANU.	MODEL #/ PART #
'92-'96	LEGACY (C312 - C314)	CLARION	RF-9127A SOA333D166 H6200FS000
'91-'93	LEGACY (P312)	PANASONIC	CR-LF1011A SOA416D161

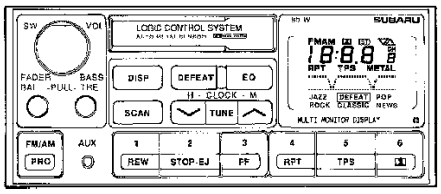

80-WATT AM/FM CASSETTE COMBO UNIT
ID CODE ON FACE PLATE - C/P 113

MODEL YEAR	VEHICLE APPLICATION	RADIO MANU.	MODEL #/ PART #
'92-'94	LEGACY (C/P 113)	CLARION	PF-9505IC SOA333DI72
		PANASONIC	CQ-LF1111Z SOA416D171

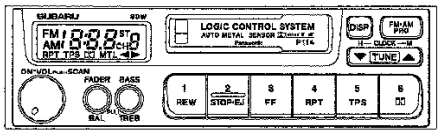

80-WATT AM/FM CASSETTE COMBO
ID CODE ON FACE PLATE - P114

MODEL YEAR	VEHICLE APPLICATION	RADIO MANU.	MODEL #/ PART #
'95-'99	LEGACY (P114)	PANASONIC	CQ-LF1410A 86201AC070

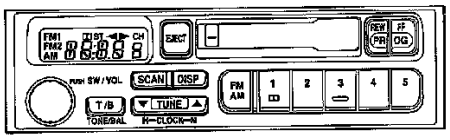

MODEL YEAR	VEHICLE APPLICATION	RADIO MANU.	MODEL #/ PART #
'97-'99	LEGACY (P115)	PANASONIC	CQ-LF1611Z 86201AC350

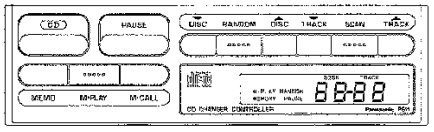

CD AUTO CHANGER
ID CODE ON FACE PLATE - P611

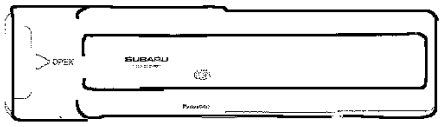

MODEL YEAR	VEHICLE APPLICATION	RADIO MANU.	MODEL #/ PART #
'95-'97	LEGACY CD CONTROLLER (P611)	PANASONIC	CY-CF1410F H6240AC520
	LEGACY CD CHANGER	PANASONIC	CX-CF1410F H6250AC510

RADIO CHASSIS: LEGACY

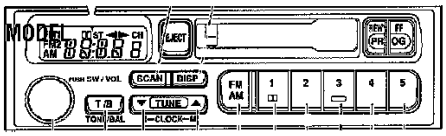

VEHICLE YEAR	RADIO APPLICATION	MODEL #/ MANU.	PART #
1998	LEGACY	PANASONIC	86201AC460

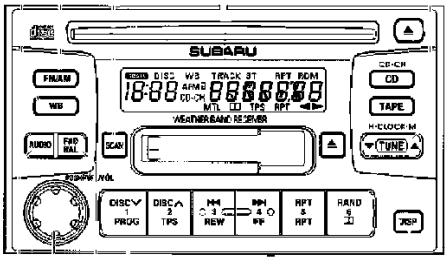

VEHICLE YEAR	RADIO APPLICATION	MODEL #/ MANU.	PART #
1999	LEGACY	PANASONIC	86201AC430

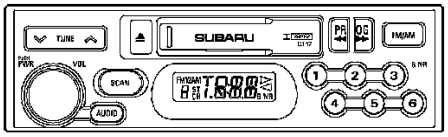

ID CODE ON FACE PLATE - C117

MODEL YEAR	VEHICLE APPLICATION	RADIO MANU.
2000	LEGACY (C117)	CLARION

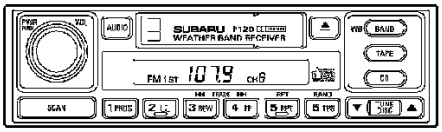

ID CODE ON FACE PLATE - P120

MODEL YEAR	VEHICLE APPLICATION	RADIO MANU.
2000	LEGACY (P119/P120)	PANASONIC

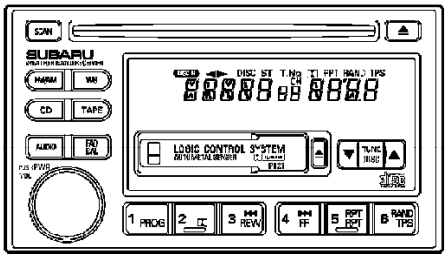

ID CODE ON FACE PLATE - P121

MODEL YEAR	VEHICLE APPLICATION	RADIO MANU.
2000	LEGACY (P121)	PANASONIC

RADIO CHASSIS: IMPREZA / SVX

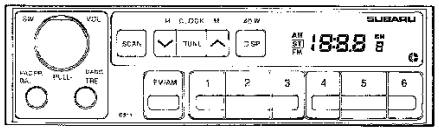

40-WATT ETR WITHOUT AUXILIARY PLUG
ID CODE ON FACE PLATE - C/P312 - C314

MODEL YEAR	VEHICLE APPLICATION	RADIO MANUFACTURER	MODEL NUMBER/ PART NUMBER
'93- '96	IMPREZA (C312 - C314)	CLARION	RF-9127A SOA333D166 H6200FS000

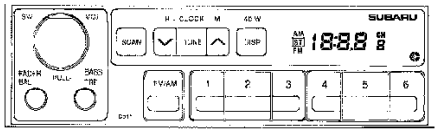

80-WATT AM/FM CASSETTE COMBO
ID CODE ON FACE PLATE - C114, C115

MODEL YEAR	VEHICLE APPLICATION	RADIO MANUFACTURER	MODEL NUMBER/ PART NUMBER
'93- '94	IMPREZA (C114)	CLARION	PF-9695AA 86201FA010
'95- '96	IMPREZA (C115)	CLARION	PF-9695A 86201FA170

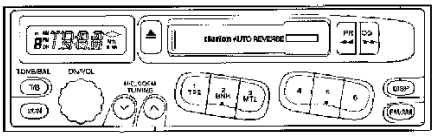

80-WATT AM/FM CASSETTE COMBO
ID CODE ON FACE PLATE - C118

MODEL YEAR	VEHICLE APPLICATION	RADIO MANUFACTURER	MODEL NUMBER/ PART NUMBER
'97- '01	IMPREZA (C116)	CLARION	PF-1509A 86201FA270

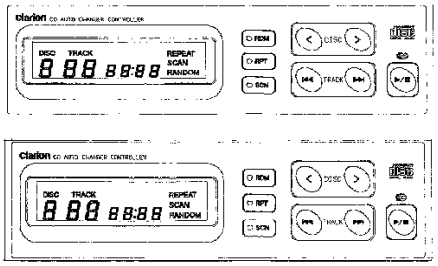

CD AUTO CHANGER

MODEL YEAR	VEHICLE APPLICATION	RADIO MANUFACTURER	MODEL NUMBER/ PART NUMBER
'95- '96	IMPREZA (4DR, SW) CD CONTROLLER	CLARION	EF-1027U-A H6240AC610
	IMPREZA (4DR, SW) CD CHANGER	CLARION	PS-2050U-B H6250AC600

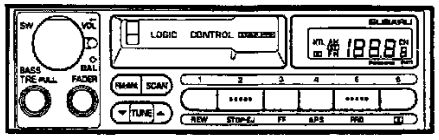

ETR WITH CASSETTE COMBO UNIT
ID CODE ON FACE PLATE - P411

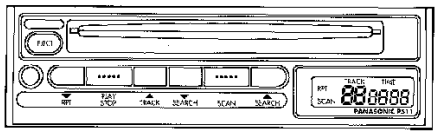

CD PLAYER
ID CODE ON FACE PLATE - P511

MODEL YEAR	VEHICLE APPLICATION	RADIO MANUFACTURER	MODEL NUMBER/ PART NUMBER
'92- '96	SVX LS-L (P411)	PANASONIC	(6 SPEAKER) CQ-LF4011A 86201PA010
	SVX LS (P411)	PANASONIC	(4 SPEAKER) CQ-LF4012A 86201PA020
	SVX CD (P511)	PANASONIC	CX-DF4011A/F SOA416E150 86202PA000

AUDIO ACCESSORIES: LEGACY / IMPREZA

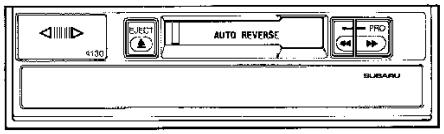

STANDARD CASSETTE DECK
ID CODE ON FACE PLATE - 4130

MODEL YEAR	VEHICLE APPLICATION	RADIO MANUFACTURER	MODEL NUMBER/ PART NUMBER
'90-'95	LEGACY/IMPREZA (4130)	PANASONIC	CX-AF192 FUS SOA416E130

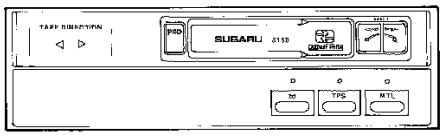

FULL FEATURE CASSETTE DECK
ID CODE ON FACE PLATE - 3150

MODEL YEAR	VEHICLE APPLICATION	RADIO MANUFACTURER	MODEL NUMBER/ PART NUMBER
'90-'95	LEGACY/IMPREZA (3150)	CLARION	PF-8118U SOA333E150 H6220FS000

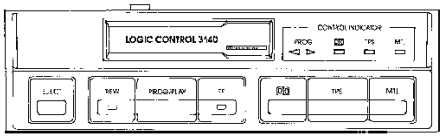

LOGIC CONTROL CASSETTE DECK
ID CODE ON FACE PLATE - 3140

MODEL YEAR	VEHICLE APPLICATION	RADIO MANUFACTURER	MODEL NUMBER/ PART NUMBER
'90-'94	LEGACY/IMPREZA (3140)	CLARION	PF-8119U SOA333E140

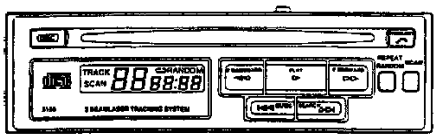

COMPACT DISC PLAYER
ID CODE ON FACE PLATE - 3160

MODEL YEAR	VEHICLE APPLICATION	RADIO MANUFACTURER	MODEL NUMBER/ PART NUMBER
'90-'96	LEGACY (3160)	CLARION	PF-2016U SOA333E160 H6240FS000

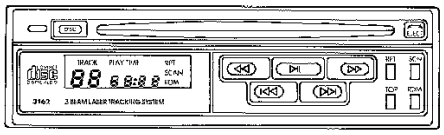

COMPACT DISC PLAYER
ID CODE ON FACE PLATE - 3162, C611, C612

MODEL YEAR	VEHICLE APPLICATION	RADIO MANUFACTURER	MODEL NUMBER/ PART NUMBER
'92-'96	LEGACY/IMPREZA (3162, C611, C612)	CLARION	PF-2046 H6240FS000

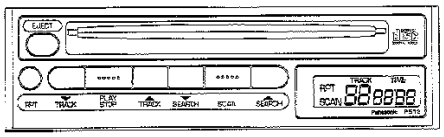

COMPACT DISC PLAYER
ID CODE ON FACE PLATE - P512

MODEL YEAR	VEHICLE APPLICATION	RADIO MANUFACTURER	MODEL NUMBER/ PART NUMBER
'95-'96	LEGACY/IMPREZA (P512)	PANASONIC	CX-DF1410A H6240AS100

RADIO CHASSIS: LOYALE / JUSTY

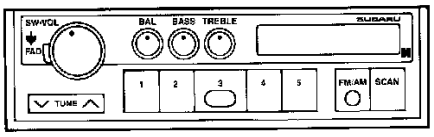

10 WATT ETR

MODEL YEAR	VEHICLE APPLICATION	RADIO MANUFACTURER	MODEL NUMBER/ PART NUMBER
'88-'94	LOYALE 3DR, 4DR, SW	CLARION	RF-9095I SOA333D117
		PANASONIC	CR-LF171A SOA416D117

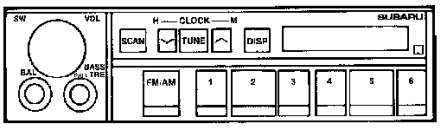

10 WATT ETR

MODEL YEAR	VEHICLE APPLICATION	RADIO MANUFACTURER	MODEL NUMBER/ PART NUMBER
'89-'94	GL/RS JUSTY	PANASONIC	CR-LF581A SOA416D121

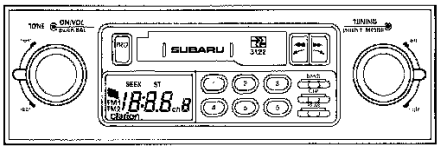

AM/FM CASSETTE COMBO
ID CODE ON FACE PLATE - 3122

MODEL YEAR	VEHICLE APPLICATION	RADIO MANUFACTURER	MODEL NUMBER/ PART NUMBER
'89-'94	DL JUSTY (3122)	CLARION (KIT #SOA333D127)	SOA333D122

CASSETTE DECKS: LOYALE / JUSTY

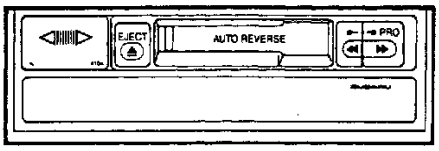

CLASSIC CASSETTE DECK
ID CODE ON FACE PLATE - 4104

MODEL YEAR	VEHICLE APPLICATION	RADIO MANUFACTURER	MODEL NUMBER/ PART NUMBER
'89-'94	LOYALE JUSTY (4104)	PANASONIC	CX-AF186 FUS SOA416E104
'90-'94	JUSTY (4104)	PANASONIC	CX-AF186 FUS SOA416E136

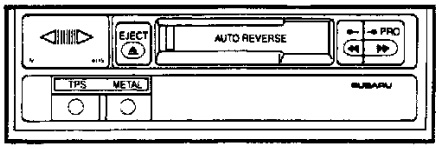

PREMIUM CASSETTE DECK
ID CODE ON FACE PLATE - 4115

MODEL YEAR	VEHICLE APPLICATION	RADIO MANUFACTURER	MODEL NUMBER/ PART NUMBER
'89-'94	LOYALE (4115)	PANASONIC	CX-AF182 FUS SOA416E115

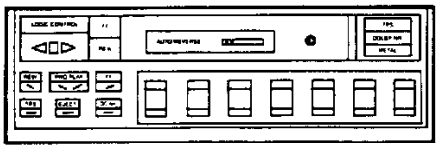

E.Q. CASSETTE DECK

MODEL YEAR	VEHICLE APPLICATION	RADIO MANUFACTURER	MODEL NUMBER/ PART NUMBER
'88-'94	LOYALE	CLARION (BLACK BUTTONS)	PF8069U SOA333E131
		CLARION (CHROME BUTTONS)	PF8069UC SOA333E130

RADIO CHASSIS: FORESTER

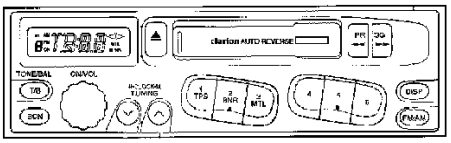

80-WATT AM/FM CASSETTE COMBO
ID CODE ON FACE PLATE - C116

MODEL YEAR	VEHICLE APPLICATION	RADIO MANU.	MODEL #/ PART #
'98 - '00	FORESTER (C116)	CLARION	PF-1509A 86201FA270

Subaru Justy Hatchback 4WD L3-1.2L SOHC (MPFI)

This bulletin contains illustrations of Genuine Subaru Audio System face plates for model years 1993 through 2001.

SUBARU AUDIO DIAGNOSTIC REPORT

Subaru Audio Diagnostic Report

VIN **Dealer Number**

Subaru Claim Number **Audio Model Number**

Discribe Customer Complaint in Detail:

Problem Confirmed? Yes No

	✔	Problem:	✔	Technician Check:
General Audio		Inoperable		Fuse, Loose connection, wiring?
		Fades / Cuts Out		Short to car chassis?
				Pinched wire?
		Channel / Speaker Out		Pinched speaker wire?
				Short to car chassis?
		Poor Sound		Loose screw or other foreign object rubbing speaker?
				Loose connection?
		Balance / Fader		Proper setting?
		Bass / Treble		
		Illumination		Dash rheostat setting?
				Pinched wire, loose connection?
		Noise (alternator, etc.)		Pinched wire, loose connection?
				Add .5 MFD capacitor between the (+) line and the radio?
Tuner		Poor Reception		Antenna Okay? Coax pinched?
				Distant station? Bad receipt area?
		Memory		Pinched wire, loose connection?
				Check Fuse?
Cassette		Tangles Tapes		Check tape condition?
				Tighten tape reel (if loose)?
				Dirty head (use cleaner)?
		Won't Eject Tapes		Warped tape, peeling labels?
		Won't Accept Tapes		Check Fuse?
		Low / Poor Sound		Dirty head (use cleaner)?
				Test using known good tape?
		Tape Speed		Check tape condition?
				Tighten tape reel (if loose)?
CD		Skips / Ejects		CD upside down? Pinholes?
				Dirty / scratched CD?
				Rough road conditions?

Technician comments / findings (**required**):

Technician Signature & Date:

If the problem persists, order a replacement unit. Enclose this completed form with defect unit.

FOR AUDIO MANUFACTURER USE ONLY

RECIEVED WITH DIRTY HEADS? YES NO

PROBLEM CONFIRMED? YES NO

TECHNICIAN:

FOR ADDITIONAL COMMENTS, USE REVERSE SIDE

A copy of the Subaru Audio Diagnostic Report is printed on the last page of this Bulletin. It should be photocopied for use. The purpose of the Subaru Audio Diagnostic Report is to assist the Technician in the diagnosis of an audio system related complaint. The preliminary information, such as owner's name, vehicle VIN and the specific customer complaint should be completed by the Service Advisor. This will enable the Technician to check specific areas in order to isolate the cause. **Note**: Not all audio system complaints are related to the chassis, refer to Service Bulletin 15-91-91 for further Technical information.

A copy of the Subaru Audio Diagnostic Report should be completed and retained by the dealer for all audio system related warranty claims,

Whether the audio unit is exchanged or not. If the audio chassis is exchanged, a completed report copy should be included with the return unit. If the audio chassis is not exchanged and a repair is made to the audio system, a completed report copy must be kept with the warranty claim.

AUDIO EXCHANGE PROGRAM

Within the terms of the Basic New Car Warranty, the Audio Exchange Program provides for replacement of a defective audio chassis with an exchange unit from the manufacturer. The manufacturer will supply an exchange unit, or a new unit in the case of a "New" and "In-stock" vehicle. Genuine Subaru audio systems are manufactured by Clarion and Panasonic. In the event an audio chassis requires an exchange, it is not necessary to remove the unit from the vehicle. The procedures listed below should be followed:

1. The defective chassis should remain in the vehicle until the exchange unit is installed.

2. The manufacturer and model should be identified using the applicable Subaru Audio System Diagnosis, Identification and Exchange Procedures Warranty Bulletin.

3. The applicable Service Center should be contacted. The Service Centers are open from 7 AM - 5 PM Pacific Time.

CLARION / MacIntosh	PANASONIC
1-800-347-8933	1-800-228-0473

Note:
In the event the vehicle is "New " or "In-stock", inform the Service Center. A new limit will he supplied rather than an exchange unit. If the Service Center is unable to provide a new unit, immediately contact your Subaru Service Representative for further instructions.

Vehicles that have been placed in demo service should use exchange units only.

Replacement of an auto chassis with a new limit, other than units supplied through the exchange program, requires authorization from your Subaru Service Representative. An authorized code will he provided and must be included upon claim submission.

4. Provide the Service Center with the following information:

- ^ Dealer Code
- ^ Dealer Name and Address
- ^ VIN - All 17 Digits
- ^ Date of Vehicle Sale
- ^ Vehicle Mileage
- ^ Caller's Name and Telephone Number
- ^ Claim Number
- ^ Chassis Model Number ID Code and/or the Subaru Part Number
- ^ Customer Complaint
- ^ Customer Last Name

At this time, the Service Center will issue an exchange number. It is required that this number be provided upon claim submission.

Panasonic Exchange Number Example	SP 00000001
Clarion / MacIntosh Exchange Number Example	FS 00000001

An exchange chassis along with an exchange form will be shipped within 72 hours. If the exchange chassis is not received within 5 days, call the Service Center. Provide the operator with the exchange number when making inquiries.

5. Install the exchange unit as soon as possible upon receipt.

Return the defective chassis to the manufacturer within 30 days. Return freight charges may be claimed as sublet, provided the repair was performed under the terms of the Basic New Car Warranty. Copies of the freight invoice should be attached to the repair order.

Note:
If the exchange unit has not been installed or the failed chassis not returned within 30 days, contact the Service Center. Reference the exchange number and explain the circumstances causing the delay. An extension will be granted or the dealer will be instructed to return the exchange unit. Failure to comply will result in a "charge back" to the dealer for the cost of the exchange unit.

Subaru Justy Hatchback 4WD L3-1.2L SOHC (MPFI)

OPERATION NUMBER	LABOR DESCRIPTIONS	LOYALE			XT	JUSTY	LEGACY		IMPREZA		SVX	FORSTER
		4DR	S/W	3DR			4DR	S/W	4DR	S/W		
A 031-101	RADIO, CASSETTE, CD AND/OR EQUALIZER. (THIS OPERATION MAY BE CLAIMED ONE TIME ONLY FOR EXCHANGE PROGRAM.) R&R	0.3	0.3	0.3	0.3	0.4	0.3	0.3	0.3	0.3	0.4	0.3

CARS OUTSIDE THE TERMS Of THE BASIC NEW CAR WARRANTY YEARS 4-5, UNLIMITED MILES

Several enhancements have been made to the out-of-warranty service procedures that can be used for vehicles outside the 3 year warranty limit.

Beginning with Model Year 2000 vehicles, Clarion and Panasonic will provide a Direct Exchange program for the 4th and 5th year from original In-Service Date (regardless of mileage), providing a quick, "no hole in the dash" repair.

The additional two years of the exchange procedure are intended to enhance customer satisfaction by speeding rep airs~ but are not covered by any SOA warranty. Clarion and Panasonic offer a 90 day manufacturers warranty on exchanged units, contact the manufacturer's Service Center for claim service.

This program utilizes the existing Direct Exchange processes and procedures as explained above to provide ease of use by the dealer. The Service Center toll free phone numbers shown in the previous section, used for in-warranty exchanges, should also be used for exchanges in years 4 and 5.

All out-of-warranty orders will be subject to availability. In case of low stock, "in-warranty" orders will take priority over "out-of-warranty" orders.

Dealer will be debited the cost of a replacement unit for failing to return the core within 30 days from the date the manufacturer ships the exchange unit.

After the necessary information has been provided to the Service Center; the Service Center will issue a claim number and price for the exchange unit that will be shipped within 48 hours by 2nd day air. As described in the next section, dealers will be billed for those units manufactured by Clarion. Panasonic units will be shipped COD.

Any questions regarding the status of an exchange should be directed to the appropriate Service Center using the toll free numbers shown in the preceding section. In the unusual circumstance when the remanufactured exchange unit is not used, the dealer must return the unused unit to the manufacturer within 30 days from the date the manufacturer ships the exchange unit.

CARS OUTSIDE THE TERMS Of THE BASIC NEW CAR WARRANTY YEARS 6-ON, UNLIMITED MILES

Beyond Year 5, both Panasonic and Clarion provide a Return and Repair Program for their audio products. Clarion and Panasonic offer a 90 day manufacturers warranty on repaired units~ contact the manufacturer's service center for claim service.

Any questions regarding the status of a repair should be directed to the appropriate phone number shown below.

CLARION PRODUCTS

Out of Warranty units sent to Clarion for repair can either be billed to the dealership with net 30 day terms or be prepaid with a dealership check.

^ Repairs will be completed in 7 to 10 working days

^ Return Freight is prepaid

^ Flat Rate Repair Charges by Product Type, contact the Clarion Customer Service Center below for quote.

To take advantage of these programs:

1. Simply forward your request for account billing to the Clarion address below. Ensure the request is on your dealership letterhead and includes your Subaru Dealer Code. OR

2. Send a dealership check in the flat rate amount along with the unit for prompt repair and prepaid return.

Clarion Corporation of America
Customer Service
661 West Redondo Beach Blvd
Gardena, CA 90247-4201
Phone: (800) 347-8667
Fax: (310)327-9377

PANASONIC PRODUCTS

If a customer complaint results in a verified audio failure, then remove the defective unit. Ship the unit along with the customer complaint, Dealer phone or fax number to the Panasonic location listed below. The audio unit will be checked and an estimate will be given within 72 hours of receipt of the unit. If the estimate is approved a check can be sent in or the unit can be shipped COD.

If a diagnosis can be made by the Service Center over the phone~ the repair can be expedited by sending a check with the unit in which case the unit will be repaired within 72 hours and then shipped 2nd day air to the dealer. Ship to:

Panasonic
OEM Service 16B-9
6550 Katella Avenue
Cypress, CA. 90630
Phone: (714) 373-7500
Fax: (714) 373-7049

Alternative Servicing facility for Out of Warranty

United Radio Service, Syracuse, NY also can provide out of warranty servicing for the dealership. Out of Warranty units sent to United Radio for repair will be repaired and billed to the dealership.

United Radio Service,
5705 Enterprise Parkway
Syracuse, NY 13057
1-800-448-0944
www.unitedradio.com

SUBARU QUALITY DRIVEN® SERVICE

CAUTION: VEHICLE SERVICING PERFORMED BY UNTRAINED PERSONS COULD RESULT IN SERIOUS INJURY TO THOSE PERSONS OR TO OTHERS.

Subaru Service Bulletins are intended for use by professional technicians ONLY. They are written to inform those technicians of conditions that may occur in some vehicles, or to provide information that could assist in the proper servicing of the vehicle. Properly trained technicians have the equipment, tools, safety instructions, and know-how to do the job correctly and safely. If a condition is described, DO NOT assume that this Service Bulletin applies to your vehicle, or that your vehicle will have that condition.

Disclaimer

Technical Service Bulletin # **136293** Date: **931029**

Paint - Formulas

NUMBER: 13-62-93

DATE: 10-29-93

APPLICABILITY:
ALL 93MY SUBARU VEHICLES

SUBJECT:
93MY PAINT FORMULA INFORMATION

THIS INFORMATION IS THE MOST ACCURATE AVAILABLE AT THE TIME OF PRINTING

The stock numbers on the chart are designated by the various paint manufacturers. Because their formulas are updated on a continuing basis, the paint manufacturers have requested that dealers contact their local jobber/distributor for the most accurate/up-to-date formula.

Subaru Justy Hatchback 4WD L3-1.2L SOHC (MPFI)

CODE NUMBER	1993 COLOR LINE-UP	ABRV.	SHERWIN-WILLIAMS STOCK NUMBER	PPG IND. INC STOCK NUMBER	DUPONT AUTOMOTIVE PRODUCTS STOCK NUMBER	BASF R-M/ GLASURIT STOCK NUMBER	AKZO/ SIKKENS STOCK NUMBER
952	BLACK PEARL (MICA)	BKM	40837	9749	N9047J	19313	SUB 9301
037	HIGH TECH RED	HTR	43882	61328	W9261	20249	SUB 2080
038	NASSAU TURQUOISE	TRM	43880	17136	W9262	20248	SUB 9392
054	POLAR WHITE	PWH	46511	4570	W9471	22375	SUB 4694
059	MISTY DAWN (MET)	TGM	40840	34674	N9046	19317	SUB 9346
218	WINESTONE (MICA)	RDM	46512	4571	L9646	22376	SUB 9522
220	ULTIMATE SILVER (MET)	NSM	46513	4572	L9631	22377	SUB 9518
222	ONYX (MET)	DGM	46514	4573	L9632	22378	SUB 9514
227	PHOENICIAN BLUE (MET)	BBM	46515	4574	L9633	22379	SUB 9515
229	SONORA SAND	SSM	46516	4575	L9634	22380	SUB 9519
230	ASPEN WHITE (PREV. PURE WHITE)	WHT	46517	4576	L9629	22381	SUB 4756
235	EBONY (MICA)	BKM	46384	9864	L9638	22370	SUB 9526
262	QUICK SILVER (MET)	LSM	46518	4577	L9635	22382	SUB 9516
265	CLARET (MICA)	DRD	46386	51669	L9640	22372	SUB 9527
267	PEARL WHITE (MICA)	WTT	46387 (B) 46388 (M)	91089 (B) 91090 (M)	L9641 (B) L9642 (M)	22373	SUB 9525
269	DARK TEAL (MET)	PBL	46389	18311	L9643	22374	SUB 9528
280	ICE BLUE (MET)	LBM	46519	4578	L9637	22383	SUB 9520
281	TEAL (MET)	BPM	46520	4579	L9647	22384	SUB 9524
307	HIGHLAND GREEN (MET)	GGM	48104	47301	L9674	23396	SUB 9010
309	FREESIA (MICA)	MRM	47925	51783	H9886	23340	SUB 9004
336	EXCITING RED	RRD	48105	74026	L9875	23397	SUB 3833
340	AEGEAN BLUE	BGM	48106	18624	L9876	23398	SUB 9006
341	GLACIER (MET)	LGM	48107	18625	L9877	23399	SUB 9007
363	AUBERGINE (MET)	PLM	48108	51789	L9878	23400	SUB 9008
378	JASPER GREEN (MICA)	GNM	47926	47287	L9873	23341	SUB 9517

The list of stock numbers and colors used on 93MY Subaru vehicles. See illustration.

Technical Service Bulletin # **0113995** Date: **950428**

Kats Decoater Gun - Instructions

NUMBER: 01-139-95
DATE: 4-28-95

APPLICABILITY: ALL SUBARU VEHICLES

SUBJECT:
KATS DECOATER GUN INSTRUCTIONS FOR "NO TOUCH" TRANSIT COATING REMOVAL

The following equipment will be required

Rubber gloves, rubber boots, safety glasses, Kats Decoater Gun, KATS 8000A remover, water hose, 4060 PSI of water pressure, chamois.

Assembly of Decoater Gun

- ^ Slide plastic siphon tube over brass connector under bottle cap.
- ^ Snap the black deflector tip under the brass spray nozzle.
- ^ Attach pistol grip sprayer to water hose with 4060 PSI.

Washing instructions

1. Place the vehicle in a shaded, well ventilated area.
2. Attach pistol grip sprayer to the garden hose.
3. Fill the bottle with undiluted KATS 8000A remover.
4. Regulate water pressure to 4060 PSI.

Note
The KATS gun assembly must remain upright to prevent liquid remover leakage through the vent hole.

5. Choose the proper dilution setting by moving the stem. (See chart for settings).

6. Do not pre-rinse the vehicle.

7. Generously spray the vehicle starting at the bottom and working up to the top.

8. Allow 2 minutes of soak time, making sure the entire vehicle stays wet with the solution.

9. After the 2 minute soak time, rinse the vehicle thoroughly. Pay close attention to cracks and crevices that can trap the solution.

10. Dry the vehicle using the chamois. During this time, inspect for any un-removed coating. If it is necessary to remove additional coating, repeat the washing instructions on that area only.

Note
This product is safe and biodegradable when used according to package instructions.

DILUTION SETTINGS

Dilution Setting (Water: 8000A Remover)	Ambient Temperature Range (Fahrenheit & Centigrade)	Transit Coating Condition
No Siphoning	above 32°F (0°C)	Clear water rinse
9:1	90°F-32°F (32°C-0°C)	General washing or where light coating exists
6:1	90°F-32°F (32°C-0°C)	Removes normal coating: .3 to .5 mils
4:1	60°F-45°F (15°C-7°C)	Removes heavy coating: .5 to .9 mils
3:1	45°F-32°F (7°C-0°C)	Removes heavy coating: 1 mil or more

Five preset dilution settings provide the versatility to handle various weather conditions or transit coating thicknesses.

The Decoating Gun is available at the address below:

HANSON-LORAN CO., INC.
6700 Caballero Blvd.
Buena Park, CA 90620
Phone: (714) 522-5700 Fax: (714) 522-5834

Technical Service Bulletin # **13-63-93** Date: **930331**

Paint - Color Codes/Color Names

NUMBER: 13-63-93

DATE: 03-31-93

APPLICABILITY:
ALL 93MY SUBARU VEHICLES

SUBJECT:
93MY PAINT CODES AND COLOR NAMES

This Bulletin is for information only. Refer to Service Bulletin 16-36-92 for formula information.

To understand the meaning of the Subaru Paint Code Numbering System, use the below:

Code # 952 Mica Black

9 = the production year it was first introduced (in this case, it is 89MY, 0 = 90MY, 1 = 91MY, etc.)

52 = the actual color identifying code

Subaru Justy Hatchback 4WD L3-1.2L SOHC (MPFI)

CODE	ABRV.	COLOR NAME	STATUS
952	BKM	MICA BLACK (EBONY IMPREZA)	LEGACY & IMPREZA
037	HTR	HIGH TECH RED	JUSTY ONLY
038	NTM	NASSAU TURQUOISE (MET)	JUSTY ONLY
054	PWH	POLAR WHITE	JUSTY ONLY
220	SIM	ULTIMATE SILVER (MET)	JUSTY ONLY
281	TTM	TEAL (MET)	LOYALE & LEGACY
262	QSM	QUICK SILVER (MET)	LOYALE & LEGACY
059	MDM	MISTY DAWN (MET)	LOYALE & LEGACY
230	WHT	PURE WHITE (GLACIER WHITE IMPREZA)	LOYALE, LEGACY & IMPREZA
309	MRM	CRIMSON PEARL (MICA)	LOYALE & IMPREZA
372	RED	BRIGHT RED	93MY SVX ONLY
222	GYM	ONYX (MET)	LOYALE & LEGACY
229	SSM	SONORA SAND (MET)	LEGACY ONLY
218	WSM	WINESTONE (MICA)	LEGACY ONLY
280	BLM	ICE BLUE (MET)	LEGACY ONLY
227	PBM	PHOENICIAN BLUE (MET)	LEGACY ONLY
075	WTM	MICA WHITE (TRI COAT)	LEGACY ONLY
247	REM	MICA RUBY (MICA)	LEGACY ONLY
936	RRD	CARDINAL RED	IMPREZA ONLY
307	GGM	HUNTER GREEN	IMPREZA ONLY
278	GNM	FOREST GREEN	LEGACY ONLY
340	BGM	AEGEAN BLUE	IMPREZA ONLY
341	LGM	AQUA FROST	IMPREZA ONLY
363	PLM	AMETHYST	IMPREZA ONLY

Included is a list of paint color codes and names with the applicable '93 vehicles.

Technical Service Bulletin # **06-32-03** Date: **031101**

Brakes - Vibration Diagnostics

NUMBER: 06-32-03
DATE: 11/01/03

APPLICABILITY:
All Models; All Years

SUBJECT:
Brake Vibration Diagnostics and Revised Flat Rate Time

INTRODUCTION

The purpose of this bulletin is two-fold:

Studies confirm that rarely is it necessary to resurface Brake Rotors and/or Drums on all four wheels when a confirmed brake vibration exists. With proper diagnostics, front or rear brake vibrations can be isolated eliminating the need to resurface all four rotors and/or rear brake drums.

Subaru Justy Hatchback 4WD L3-1.2L SOHC (MPFI)

Warranty policy states that only the actual source of the issue is warrantable and preventative repairs for what might occur in the future are not a matter for warranty. Therefore, it is required that each brake vibration complaint be narrowed to the source and only that repair be completed.

ADJUSTMENT TO FLAT RATE TIME ALLOWANCES

With the introduction of on-car brake resurfacing equipment and even more recent advances of this equipment that reduce the times necessary for set-up / calibration, measurement and use, the flat rate time allowances will be reduced. The reductions in flat rate time allowances will become effective January 1, 2004.

Please provide the following information to the appropriate personnel at your dealership.

Labor Operation	Time
A511-111	0.5 hour
A511-114	1.0 hour
A521-111	0.5 hour
A521-114	1.0 hour

The labor operation numbers for brake rotor resurfacing on vehicles has not changed. Listed below is the new time allowance.

REPAIR PROCEDURE

Use the following procedure along with the troubleshooting chart.

Road test the vehicle to confirm brake vibration. If vibration is felt where braking, verify at what speed. Typically, front rotor vibration is felt at higher speeds (above 50mph) and in the steering wheel (circumference direction and/or side to side). If this is the case, the front rotors and pads will need to be inspected.

Typically, rear brake vibration is felt at lower speeds (below 50mph). Vibration will also be felt in the floor of the vehicle, pedal, seats and dash. If this is the case, the rear rotors and pads will need to be inspected.

To check for rear drum vibration, road test the vehicle at lower speeds. Be extremely careful not to lock the rear brakes. With the parking brake release button pushed in, pull the parking brake lever slowly and gently, which applies the rear parking brakes. If vibration is felt, the rear drums and shoes will need to be inspected.

Always refer to the applicable service manual for brake, brake drum, and rotor specifications. When resurfacing always check rotor/drum thickness before and after. These measurements must be noted on the repair order. If the rotor/drum is out of specification after resurfacing, it will need to be replaced.

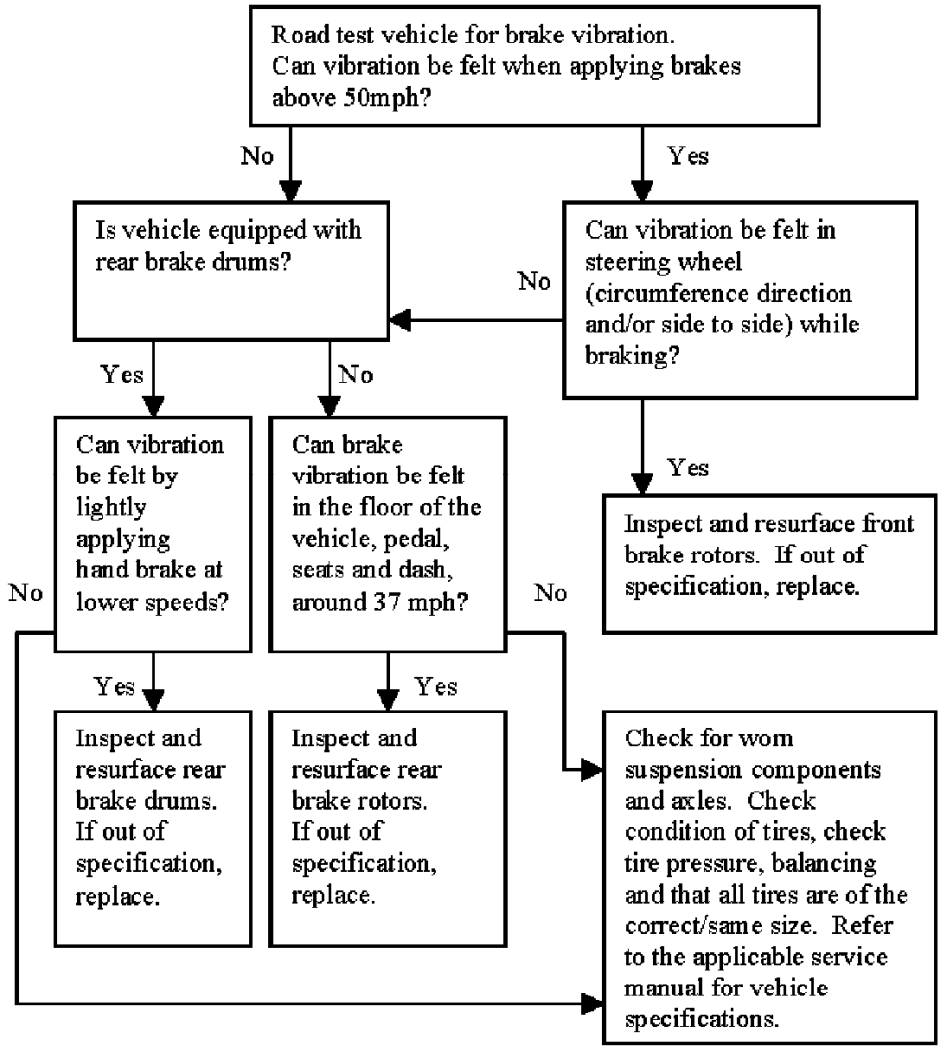

BRAKE VIBRATION TROUBLESHOOTING CHART

Diagnostics:
Whenever diagnosing for vibration, the first items that should be checked are; worn and/or loose suspension components, axles, tire pressure, conditions of tires and check that all tires are of the correct/same size. In some cases tires out of balance can also cause vibration. Always refer to the applicable Service Manual for vehicle specifications.

SUBARU QUALITY DRIVEN® SERVICE

CAUTION: VEHICLE SERVICING PERFORMED BY UNTRAINED PERSONS COULD RESULT IN SERIOUS INJURY TO THOSE PERSONS OR TO OTHERS.

Subaru Service Bulletins are intended for use by professional technicians ONLY. They are written to inform those technicians of conditions that may occur in some vehicles, or to provide information that could assist in the proper servicing of the vehicle. Properly trained technicians have the equipment, tools, safety instructions, and know-how to do the job correctly and safely. If a condition is described, DO NOT assume that this Service Bulletin applies to your vehicle, or that your vehicle will have that condition.

Disclaimer Technical Service Bulletin # **01-162-05** Date: **050628**

Vehicle - Flat Towing Information

NUMBER: 01-162-05

DATE: 06/28/05

APPLICABILITY:
STi Vehicles, All Model Years

SUBJECT:
Towing Recommendations

Subaru Justy Hatchback 4WD L3-1.2L SOHC (MPFI)

INTRODUCTION



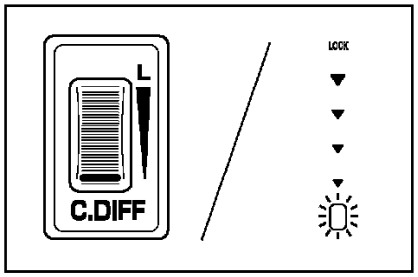

AWD Subaru vehicles with manual transmissions can be towed with all four wheels on the ground and the transmission in neutral. STi vehicles with 6 Speed Manual Transmissions can also be towed with all four wheels on the ground and the transmission in neutral. In addition, STi vehicles with 6 Speed Manual Transmissions require that the Driver's Control Center Differential (DCCD) is set in manual mode and the DCCD control dial set to the furthest rearward position.

Please refer to the owner's manual for addition important information on towing Subaru vehicles.

SUBARU QUALITY DRIVEN® SERVICE

CAUTION: VEHICLE SERVICING PERFORMED BY UNTRAINED PERSONS COULD RESULT IN SERIOUS INJURY TO THOSE PERSONS OR TO OTHERS.

Subaru Service Bulletins are intended for use by professional technicians ONLY. They are written to inform those technicians of conditions that may occur in some vehicles, or to provide information that could assist in the proper servicing of the vehicle. Properly trained technicians have the equipment, tools, safety instructions, and know-how to do the job correctly and safely. If a condition is described, DO NOT assume that this Service Bulletin applies to your vehicle, or that your vehicle will have that condition.

Disclaimer

Technical Service Bulletin # **02-100-06** Date: **061031**

Engine - Head Gasket Residue Removal Procedures

NUMBER:02-100-06
DATE: 10/31/06

APPLICABILITY:
All Models

SUBJECT:
Cylinder Head Gasket (residual carbon deposits and rubber coating removal)

INTRODUCTION

The purpose of this bulletin is to provide Subaru's recommended procedure of removing the residual carbon deposits and the rubber coating afier the cylinder head/gaskets are removed. If not removed properly, the new cylinder head gaskets may not seat properly when installed. Subaru does not recommend any other cleaning methods other than as outlined below. NOTE: Failure to follow the listed procedure which results in damage to the surface of the cylinder heads or block is not a matter for warranty.

REPAIR PROCEDURE/INFORMATION:



Removed Cylinder Head



Cylinder Block after Head Removal

For demonstration purposes the photos are of a 2.5L SOHC engine, however the procedure applies to all engine types.

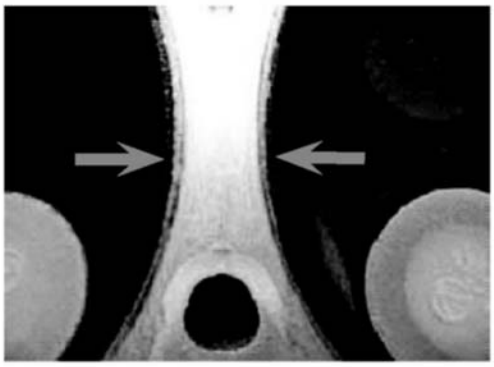

Accumulated carbon deposit on bore sealing portion

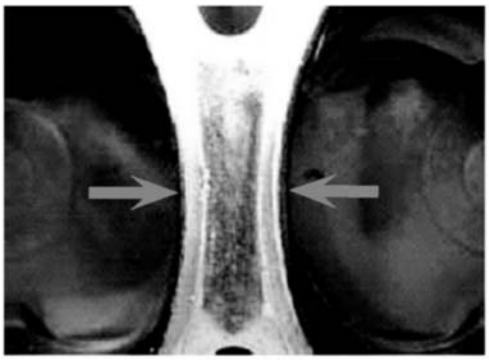

Carbon deposit on cylinder block bore sealing portion

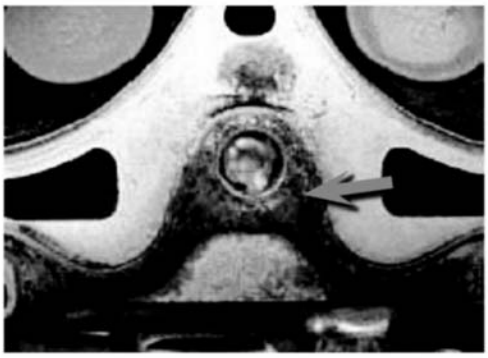

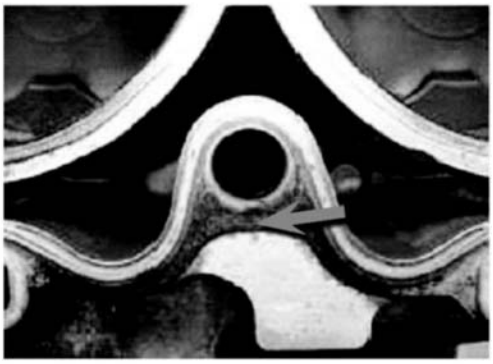

Rubber coating residue on coolant sealing portion



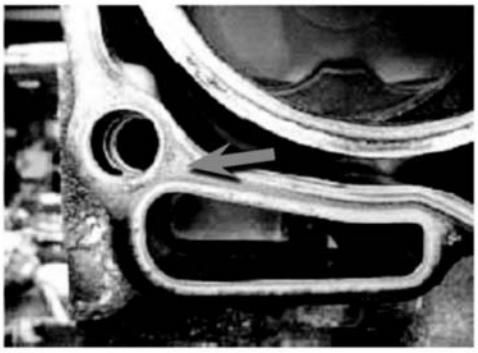

Rubber coating residue on oil sealing portion

Cylinder Head

Cylinder Block

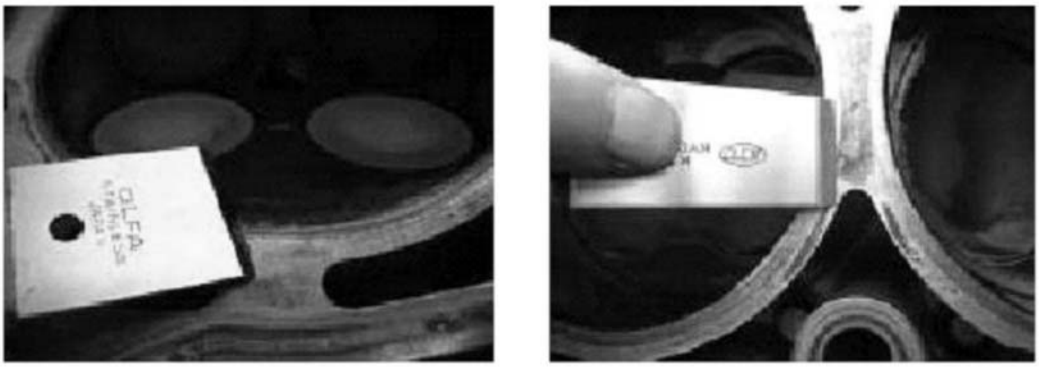

Carbon deposits being removed



Rubber coating being removed

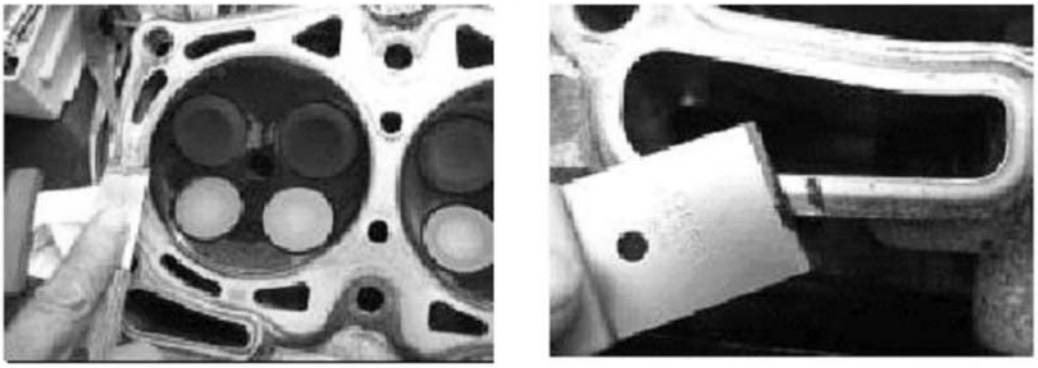

Rubber coating being removed

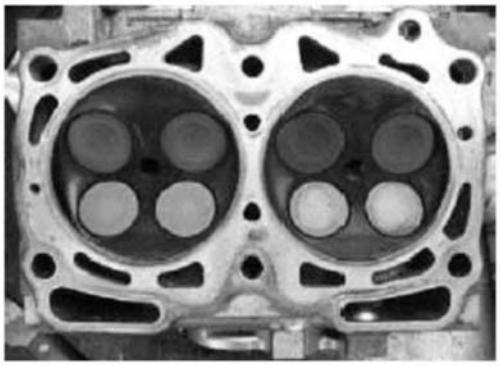

Finished cleaning (head)

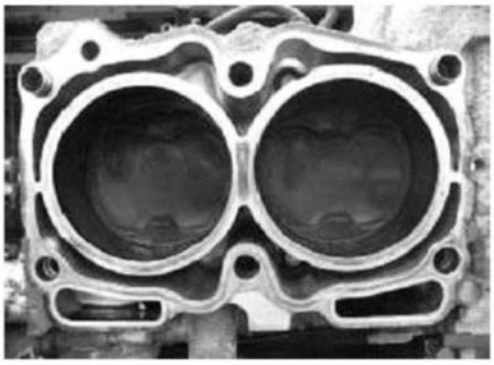

Finished cleaning (block)

NOTE: After removing carbon deposit and rubber coating, clean the surfaces using a rag and cleaning solvent.

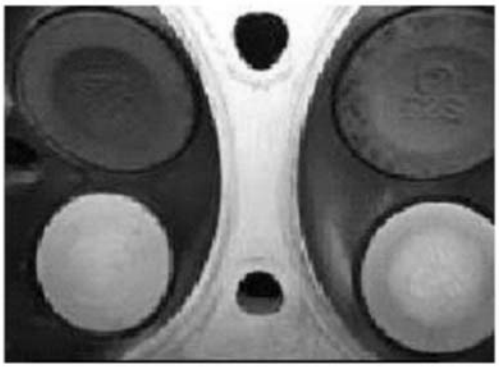

After cleaning bore sealing portion (head)

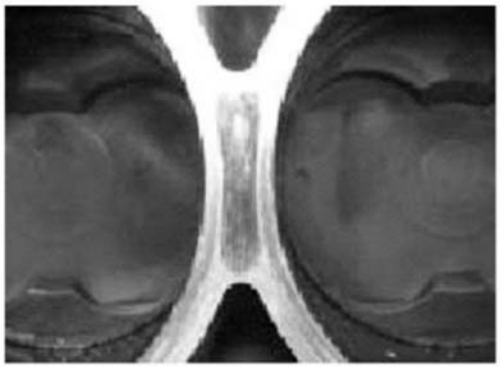

After cleaning bore sealing portion (block)



After cleaning coolant sealing portion (head)

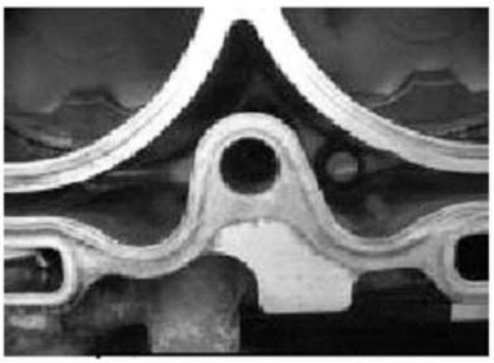

After cleaning coolant sealing portion (block)



After cleaning oil sealing portion (head)

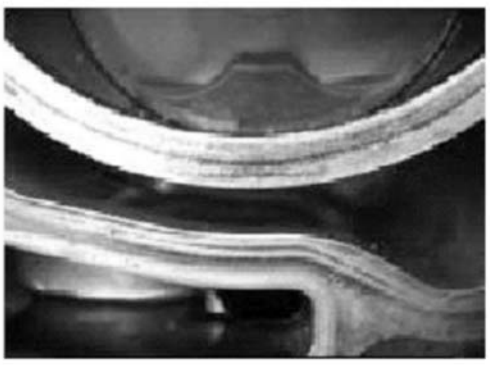

After cleaning oil sealing portion (block)

Using a gasket scraper, carefully clean any carbon deposits and rubber coating found on the surface of cylinder block and cylinder head.

CAUTION:

Keep the scraper as flush as possible to the surface to avoid damage to the mating surface of cylinder block and cylinder head.

CAUTION: VEHICLE SERVICING PERFORMED BY UNTRAINED PERSONS COULD RESULT IN SERIOUS INJURY TO THOSE PERSONS OR TO OTHERS.

Subaru Service Bulletins are intended for use by professional technicians ONLY. They are written to inform those technicians of conditions that may occur in some vehicles, or to provide information that could assist in the proper servicing of the vehicle. Properly trained technicians have the equipment, tools, safety instructions, and know-how to do the job correctly and safely. If a condition is described, DO NOT assume that this Service Bulletin applies to your vehicle, or that your vehicle will have that condition.

Disclaimer

Technical Service Bulletin # **09-45-06** Date: **061128**

Cooling System - Radiator Cap

NUMBER: 09-45-06
DATE: 11/28/06

APPLICABILITY: All Models

SUBJECT:
Radiator Cap

INTRODUCTION

The purpose of this bulletin is to provide the inspection and cleaning procedure for the radiator cap.

Whenever servicing the coolant/radiator, it is imperative that the filler neck and cap are clean of all contaminants and debris.

If foreign material is left in the filler neck sealing area, it will become embedded in the rubber seal and will prevent the cap from sealing properly. Before making the determination that the radiator cap is faulty, perform the following repair procedure.

REPAIR PROCEDURE/INFORMATION

Caution:
The engine cooling system is under pressure and may be extremely hot. To prevent personal injury or vehicle damage, be sure to take appropriate precautions while performing this procedure.

1) Wash and clean the rubber seal surface(s) "A" using clean water and a soft bristle brush.

2) Carefully open the negative pressure valve. Using clean water and a soft bristle brush wash and clean the mating surface "B" between the valve and the rubber seal.

Note:
Clean thoroughly. Failure to do so will prevent the cap from holding pressure.

3) After cleaning, check valve-opening pressure of cap using a cap tester according to the applicable service manual.

4) Clean the filler neck sealing surface of any and all contaminants.

Note:
If the valve opening pressure stays within the predetermined specification the cap is reusable. Only replace caps that failed the pressure test.

Special note:
If the vehicle has any record of overheating the cap may not be reusable even afier cleaning due to the deterioration of the sealing materials.

WARRANTY/CLAIM INFORMATION

LABOR DESCRIPTION	LABOR OPERATION	FAIL CODE	LABOR TIME
Radiator Pressure Cap, R&R	B 228-121	CAH-29	0.2
Cooling System Pressure Testing & Diagnosis (Includes cleaning cap)	C 228-001		0.3

For vehicles under the Basic New Car Limited Warranty period, this repair may be claimed using the table.

SUBARU QUALITY DRIVEN® SERVICE

CAUTION: VEHICLE SERVICING PERFORMED BY UNTRAINED PERSONS COULD RESULT IN SERIOUS INJURY TO THOSE PERSONS OR TO OTHERS.

Subaru Service Bulletins are intended for use by professional technicians ONLY. They are written to inform those technicians of conditions that may occur in some vehicles, or to provide information that could assist in the proper servicing of the vehicle. Properly trained technicians have the equipment, tools, safety instructions, and know-how to do the job correctly and safely. If a condition is described, DO NOT assume that this Service Bulletin applies to your vehicle, or that your vehicle will have that condition.

DisclaimerTechnical Service Bulletin # **15-120-07** Date: **070307**

Audio System - CD Player Information/Precautions

NUMBER: 15-120-07
DATE: 03/07/07

APPLICABILITY: All Models Equipped with an In-dash CD Changer/Player

SUBJECT:
In-dash CD Changer/Player Discs

INTRODUCTION

The purpose of this bulletin is to inform of cautions concerning compact discs. There have been an increasing number of changers/players being replaced under warranty. We have found that the majority of all failures are the result of the use of damaged CDs, non-compatible user-created CDs and labels, or multiple CDs inserted at the same time jamming the player or damaging the CD. The resultant damage to the player is generally not detected until after the audio exchange has been completed.

Customers coming in with CD changer/player issues should be reminded at the time of the unit exchange that the use of CDs as described above are the potential causes of problems.

We encourage you to make a copy of the In-dash CD Changer/Player page in this bulletin and provide it to your customers when an exchange unit is installed.

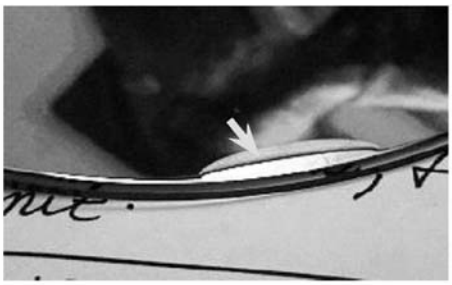

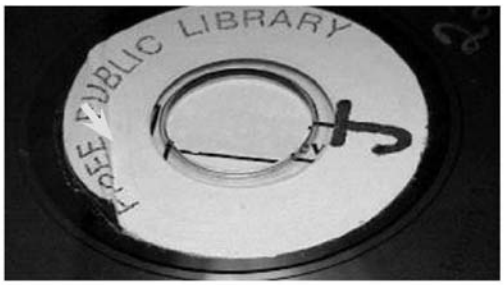





EXAMPLES OF BROKEN/CRACKED DISCS

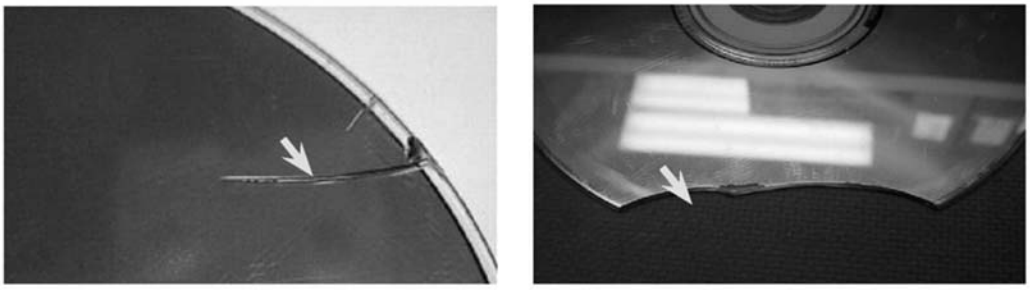

EXAMPLE OF DOUBLE-DISC INSERTION

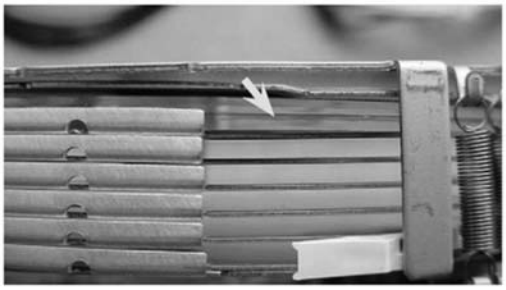

EXAMPLE OF ODD-SHAPED DISC



EXAMPLES OF PEELING LABELS

PLEASE USE CAUTION WHEN USING YOUR GENUINE SUBARU IN-DASH CD CHANGER/PLAYER

COMPACT disc DIGITAL AUDIO

In-dash compact disc (CD) players are a great way to enjoy crystal-clear music in your Subaru. Subaru CD players are designed to play standard 4 3/4 inch diameter CDs, which carry the "Compact Disc Digital Audio" logo.

1. Small size, irregularly shapped discs.

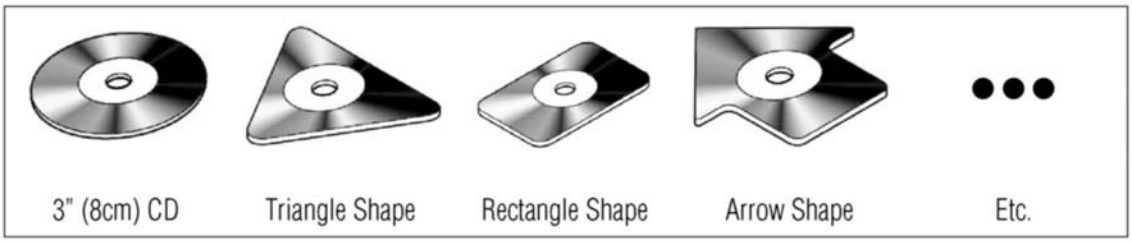

2. Excessively thick discs.

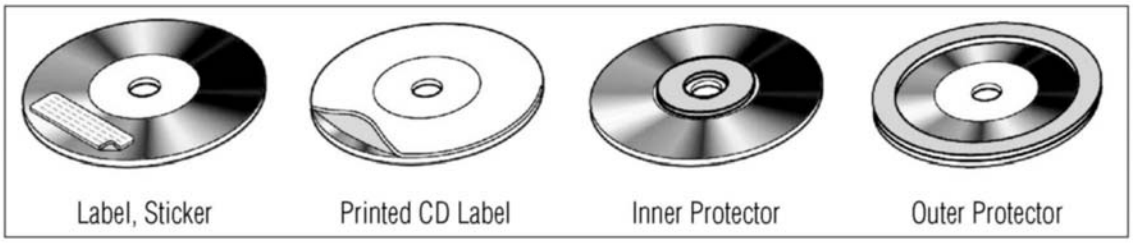

3. Damaged Discs

4. Poor quality discs.



The following CDs may cause problems when loading, playing, or ejecting due to the complexity of your CD player's internal mechanisms.

SUBARU QUALITY DRIVEN® SERVICE

CAUTION: VEHICLE SERVICING PERFORMED BY UNTRAINED PERSONS COULD RESULT IN SERIOUS INJURY TO THOSE PERSONS OR TO OTHERS.

Subaru Service Bulletins are intended for use by professional technicians ONLY. They are written to inform those technicians of conditions that may occur in some vehicles, or to provide information that could assist in the proper servicing of the vehicle. Properly trained technicians have the equipment, tools, safety instructions, and know-how to do the job correctly and safely. If a condition is described, DO NOT assume that this Service Bulletin applies to your vehicle, or that your vehicle will have that condition.

Disclaimer

Technical Service Bulletin # **05-37-07** Date: **070312**

Wheels/Tires - Tire Rotation Pattern

NUMBER: 05-37-07
DATE: 03/12/07

APPLICABILITY: All Models

SUBJECT:
Tire Rotation Pattern

INTRODUCTION

In an effort to further reduce uneven tire wear and prolong tire life, the tire rotation pattern has been changed for non-directional tires. To maximize the life of each tire and ensure that the tires wear uniformly, it is best to rotate the tires every 7,500 miles (12,000 km).

Note:
The tire rotation pattern for directional tires has not changed.

Tire Rotation Pattern for Non-Directional Tires

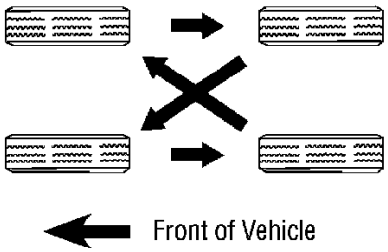

Tire Rotation Pattern for Directional Tires

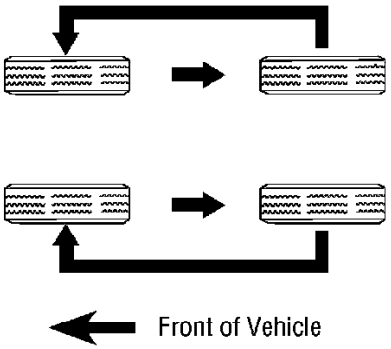

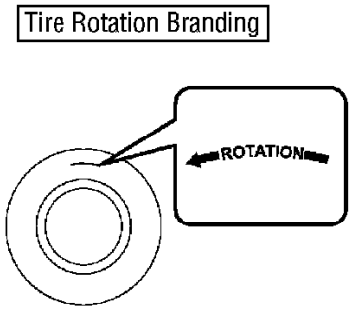

Reminder:
When rotating tires on a vehicle equipped with TPMS (Tire Pressure Monitoring System) make sure to re-register the tires.

SUBARU QUALITY DRIVEN® SERVICE

CAUTION: VEHICLE SERVICING PERFORMED BY UNTRAINED PERSONS COULD RESULT IN SERIOUS INJURY TO THOSE PERSONS OR TO OTHERS.

Subaru Service Bulletins are intended for use by professional technicians ONLY. They are written to inform those technicians of conditions that may occur in some vehicles, or to provide information that could assist in the proper servicing of the vehicle. Properly trained technicians have the equipment, tools, safety instructions, and know-how to do the job correctly and safely. If a condition is described, DO NOT assume that this Service Bulletin applies to your vehicle, or that your vehicle will have that condition.

Disclaimer

Technical Service Bulletin # **09-47-07** Date: **070831**

Cooling System - Coolant Flushing Machines and Additives

NUMBER: 09-47-07
DATE: 08/31/07

APPLICABILITY: All Vehicles
SUBJECT: Coolant Flushing Machines and Additives

Introduction

The purpose of this bulletin is to reinforce Subaru of America's policy regarding the use of coolant flushing machines and/or cooling system flushing agents. Subaru does not recommend the use of any flushing machine or flushing agent under any circumstances.

If a flushing machine has been used to service other brand vehicles with copper radiators, a chemical reaction between copper ions and Subaru coolant may occur. This could also cause future clogging of the radiator. If a flushing machine is dedicated to only Subaru vehicles, it is still not recommended as there is no way to know that the coolants being removed and processed through the machine during servicing are / were exclusively Subaru Genuine Coolant.

If regular flushing is required, only use fresh tap water. Do not use hard water. Hard water will create calcium build up which will clog the radiator.

^ When adding, replacing or servicing the cooling system, always use Genuine Subaru Long Life Coolant. Genuine Subaru Long Life Coolant is a phosphate (non-Amine) type and is specially formulated for all Subaru vehicles with aluminum engines and radiators. Coolant of other types may not provide the proper protection to aid against corrosion of aluminum parts.

^ Whenever the coolant is changed, you must add Genuine Subaru Cooling System Conditioner. Genuine Subaru Cooling System Conditioner

has been tested and approved for aluminum engines and radiators.

^ Do not use after-market coolant reinforcement agents, sealers and/or flushing agents as those chemicals could corrode aluminum parts.

Warranty Information

Any coolant system failure and/or damage resulting from that failure that is a direct result of using a coolant flushing machine is not a matter for warranty.

SUBARU QUALITY DRIVEN® SERVICE

CAUTION: VEHICLE SERVICING PERFORMED BY UNTRAINED PERSONS COULD RESULT IN SERIOUS INJURY TO THOSE PERSONS OR TO OTHERS.

Subaru Service Bulletins are intended for use by professional technicians ONLY. They are written to inform those technicians of conditions that may occur in some vehicles, or to provide information that could assist in the proper servicing of the vehicle. Properly trained technicians have the equipment, tools, safety instructions, and know-how to do the job correctly and safely. If a condition is described, DO NOT assume that this Service Bulletin applies to your vehicle, or that your vehicle will have that condition.

DisclaimerTechnical Service Bulletin # **15-125-07** Date: **070829**

Wheels/Tires - Wheel Lock Installation/Removal

NUMBER: 15-125-07
DATE: 08/29/07

APPLICABILITY: All Vehicles
SUBJECT: Subaru Wheel Locks

Introduction

The purpose of this bulletin is to provide the proper procedure for removing and installing Subaru wheel locks. Failure to follow this procedure can cause damage to the wheel locks and/or wheels.

Repair Procedure/Information

1) Remove one lug nut from each wheel. If wheel studs are dirty, clean with a wire brush prior to installing locks. Use extreme care to prevent damage to the wheel.

2) By hand, install one wheel lock on each wheel.

3) Using the special wheel lock key and a torque wrench, tighten each wheel lock to the proper lug nut torque specification (refer to the applicable Subaru Service Manual).

NOTE:
For ease of installation and removal, the wheel lock should always be the last lug nut tightened on each wheel and should always be the first one removed.





WARNING:
Use of an impact wrench may cause permanent damage to the wheel lock and key.

Warranty Information

Wheel locks and/or keys that are damaged due to improper installation and/or removal is not a matter for warranty.





Disclaimer

Technical Service Bulletin # **07-62-07** Date: **080117**

Electrical - Parasitic Battery Draw Information

NUMBER: 07-62-07

DATE: 01/17/08

APPLICABILITY:
All Models

SUBJECT:
Dark Current or Excessive Battery Draw

INTRODUCTION

The purpose of this bulletin is to provide the diagnostic procedure when checking for excessive battery draw

REPAIR PROCEDURE/INFORMATION

PRIOR to beginning the test:

^ Be certain the vehicle battery is fully charged

^ The battery posts and cable ends are free of corrosion, dirt, sealer, and in good condition.

^ Be sure to record the customer's radio station, and satellite radio station pre-sets as they will be lost during the test, along with any seat memory settings.

^ You may NOT use an aftermarket 9V memory device in the power outlet to retain any ECU memory.

^ Any aftermarket accessories will also need to be disconnected. These items will affect the test results and may cause false readings or misdiagnosis.

Items required for test:

^ Pen and paper for recording radio and satellite radio pre-sets

^ Digital Volt Ohm Meter

^ 10 MM wrench

^ 16 gauge by-pass wire, about 12 inches long, w/ proper securing attachments at each end

Test Procedure:

1) Remove battery negative cable

2) Connect one end of by-pass wire to the battery's negative post then connect the other end to negative battery cable end Simply wrapping then twisting the stripped back ends of the by-pass wire around the post and terminal will be sufficient Reinstall the negative cable on the battery post

3) Wait 5 minutes before proceeding to the next step. This will allow the system voltage to stabilize. During this time, be sure the glove box door, trunk, tailgate, and all vehicle doors are closed and their corresponding lamps are off. Also, be sure that the head lamps, fog lamps, and all switches are off. The ignition key needs to be removed, and the doors must be locked (make sure not to lock the keys in the car). Remove the negative battery cable, making sure the by-pass wire has not lost contact. If contact is lost, you will need to start at step # 2 again.

4) Make sure your voltmeter is set to milliamp (mA) setting. Connect the test leads of your voltmeter to the negative battery cable and the negative battery post. Remove the by-pass wire you installed in steps # 2 and # 3 and measure the current draw.

After the 5 minute stabilization period, the measured draw should be a maximum of 150 milli-amps. This maximum draw value is read with the key out of the ignition switch.

If your results are greater than the above specification, further diagnosis will be necessary to determine the source of the excessive current draw. This should be done using normal electrical circuit testing until the source of this excessive draw is determined and repaired.

After confirming the repair, the customer's radio presets and clock time should be reset properly.

SUBARU QUALITY DRIVEN® SERVICE

CAUTION: VEHICLE SERVICING PERFORMED BY UNTRAINED PERSONS COULD RESULT IN SERIOUS INJURY TO THOSE PERSONS OR TO OTHERS.

Subaru Service Bulletins are intended for use by professional technicians ONLY. They are written to inform those technicians of conditions that may occur in some vehicles, or to provide information that could assist in the proper servicing of the vehicle. Properly trained technicians have the equipment, tools, safety instructions, and know-how to do the job correctly and safely. If a condition is described, DO NOT assume that this Service Bulletin applies to your vehicle, or that your vehicle will have that condition.

Disclaimer

Technical Service Bulletin # **15-126-07** Date: **080213**

Audio System - Noise With Rear Defogger ON

NUMBER: 15-126-07

DATE: 02/13/08

APPLICABILITY:
All Models

SUBJECT:
Radio Static When Rear Window Defogger Is On

INTRODUCTION

If you encounter a customer complaint of radio static when the radio and rear window defogger are on at the same time, there is the possibility of a break in one or more of the defogger grids. When the grid is broken, a high resistance field is created at the break point which can create static on some radio stations. The level of resistance is usually high enough to create a field of interference which projects out from the glass. The break can be detected visually or by using a portable radio.

PART INFORMATION

Permatex(R) Quick Grid(TM) Rear Window Defogger Repair Kit, part If 15067, used for repairing damaged rear window defogger grids, is available at local automotive parts stores

REPAIR PROCEDURE/INFORMATION

Note:
There are certain factors that could lead to unsuccessful testing. Examples are: overhead fluorescent lights, telegraph poles, high tension lines, weather conditions, etc. Testing should be performed outdoors on a clear day. Also, there is the possibility that the static may not be duplicated due to the location of the vehicle. If that is the case, you may want to move the vehicle to a different location when testing. We highly discourage the use of accessory window tinting. If the vehicle is equipped with it, do not continue with the procedure.

^ Using a portable radio, set the radio to the same frequency and station being disturbed by static. From the outside of the vehicle, slowly move the radio's antenna across the defogger grids. When interference is encountered, inspect that specific area closely for a break. Depending upon the size of the break, a magnifying glass and/or eyeloupe may be required.

^ Once the break is identified, it should be repaired using the Permatex(R) repair kit instead of replacing the rear glass.

Note:
Make sure to carefully read and follow the instructions and precautions that are included with the Permatex(R) repair kit.

^ The repaired area must be completely opaque and have a resistance reading of essentially zero (0) ohms across the repair.

^ There may be more than one break. If the first break repair does not eliminate the static, re-inspect and repair any other breaks as necessary.

WARRANTY/CLAIM INFORMATION

Subaru Justy Hatchback 4WD L3-1.2L SOHC (MPFI)

Note:
For vehicles within the Basic New Car Limited Warranty period the warranty covers repairs needed to correct defects in material or workmanship.

Damage to the rear window defogger/antenna grid which is the result of an outside influence is not covered under warranty Examples are: improper cleaning of the glass, window tinting, scratches and/or cuts from objects coming in contact with the grids, etc

LABOR DESCRIPTION	LABOR OPERATION #	FAIL CODE	LABOR TIME
Rear Window Defogger Antenna Grids – Repair	B 860 - 311	UDA - 01	0.5
Electrical Testing and Diagnosis – Add	C 860 - 001		0.4

Note: Up to $11.00 may be charged out in sublet to cover the cost of the repair kit.

For vehicles within the Basic New Car Limited Warranty period, this repair can be claimed using the table above.

SUBARU QUALITY DRIVEN® SERVICE

CAUTION: VEHICLE SERVICING PERFORMED BY UNTRAINED PERSONS COULD RESULT IN SERIOUS INJURY TO THOSE PERSONS OR TO OTHERS.

Subaru Service Bulletins are intended for use by professional technicians ONLY. They are written to inform those technicians of conditions that may occur in some vehicles, or to provide information that could assist in the proper servicing of the vehicle. Properly trained technicians have the equipment, tools, safety instructions, and know-how to do the job correctly and safely. If a condition is described, DO NOT assume that this Service Bulletin applies to your vehicle, or that your vehicle will have that condition.

Disclaimer

Technical Service Bulletin # **01-156-03** Date: **031118**

M/T - Warranty Information Regarding Abusive Driving

NUMBER: 01-156-03

DATE: 11/18/03

APPLICABILITY:
All Manual Transmission Vehicles

SUBJECT:
Warranty Information Update

INTRODUCTION

This bulletin reinforces Subaru of America's (SOA) position regarding repairs to Subaru vehicles necessitated by vehicle modifications, racing or abusive driving habits.

Under normal driving conditions SOA warrants wear items such as clutch discs and brake pads under the terms of the Basic New Car Warranty. If a clutch disc or a brake pad needs to be replaced at low mileage, the dealership must satisfy itself that the replacement is not the result of one of the exclusions listed in the CDS Policy, Guidelines and Procedures Manual and the Owner's Warranty Maintenance Manual.

Reference: CDS Policy, Guidelines and Procedures Manual
Sections: 8.1.10, 8.2.6.7 and 8.2.7.10

Reference: 2004 Warranty and Maintenance Manual
Pages 13 and 14

- Transmission
- Differential
- Propeller Shaft
- Axle, Front or Rear
- Engine
- Emission System
- Suspension components
- Tires

Other components that may require repair due to abuse, racing or unauthorized modifications include, but are not limited to refer to table above.

If a determination for the cause of the failure cannot be made, the dealer must consult its District Service Operations Manager for authorization prior to proceeding with repairs under warranty.

Some examples of abusive driving are exceeding maximum recommended RPMs, excessive torque transferred to the transmission during acceleration from a complete stop (dumping the clutch), downshifting at high RPMs and missing shifts.

The term "racing" refers to all forms of racing whether street, drag, rally, sanctioned or unsanctioned, etc. Any damage that results from racing is not warrantable.

EXAMPLES

Second Gear Teeth Missing



Second Gear Teeth Missing

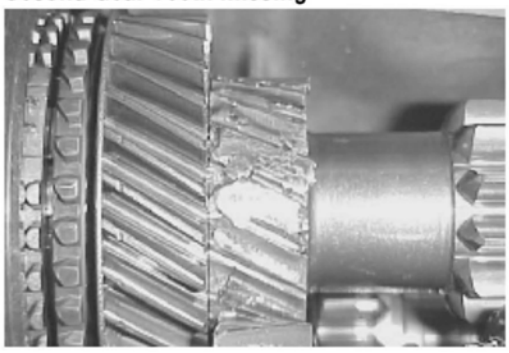

Reverse Gear Teeth Stripped

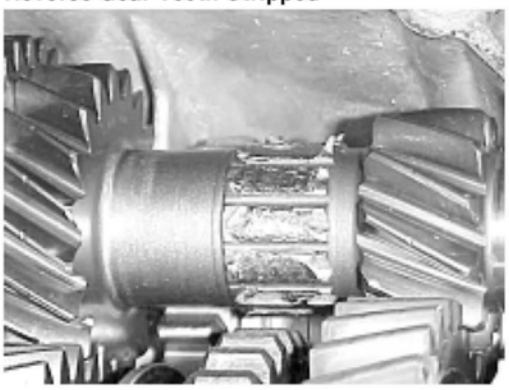

First Gear Teeth Stripped from Mainshaft

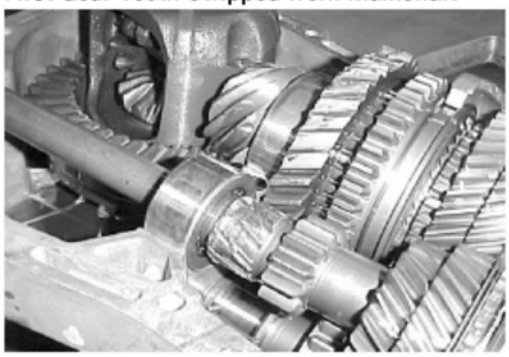

6-Speed 1-2 Shift Interlock Arm Broken



The photos above depict some results of abusive driving.

SUBARU QUALITY DRIVEN® SERVICE

CAUTION: VEHICLE SERVICING PERFORMED BY UNTRAINED PERSONS COULD RESULT IN SERIOUS INJURY TO THOSE PERSONS OR TO OTHERS.

Subaru Service Bulletins are intended for use by professional technicians ONLY. They are written to inform those technicians of conditions that may occur in some vehicles, or to provide information that could assist in the proper servicing of the vehicle. Properly trained technicians have the equipment, tools, safety instructions, and know-how to do the job correctly and safely. If a condition is described, DO NOT assume that this Service Bulletin applies to your vehicle, or that your vehicle will have that condition.

Disclaimer

Technical Service Bulletin # **01-167-08** Date: **080909**

Vehicle - Recommended Fluids/Chemicals

NUMBER: 01-067-08

DATE: 09/09/08

Subaru Justy Hatchback 4WD L3-1.2L SOHC (MPFI)

APPLICABILITY: All Subaru Vehicles

SUBJECT:
Recommended Materials

Introduction

FLUIDS

ITEM	ALTERNATIVES	SOA ITEM NUMBER	DESCRIPTION	PACKAGE SIZE	WARRANTY PART NUMBER
Subaru HP Automatic transmission fluid	IDEMITSU: ATF HP	SOA868V9241	ATF HP/PS	1qt	SOA635040
Subaru Automatic transmission fluid	DEXRON III	SOA868V9240	Idemitsu ATF/ PS	1qt	SOA635003
Power steering fluid	DEXRON III	SOA868V9240 or SOA868V9241	Idemitsu ATF/ PS ATF HP/PS	1qt	SOA635040 or SOA635003
Subaru genuine brake fluid	FMVSS No. 116 DOT3 or FMVSS No. 116 DOT4 Model application specific	SOA868V9220	Subaru genuine brake fluid	12 oz.	SOA635004
Clutch fluid (FMVSS No. 116 DOT 3)	FMVSS No. 116 DOT4	SOA868V9220	Subaru genuine brake fluid	12 oz.	SOA635004

COOLANT

ITEM	ALTERNATIVES	SOA ITEM NUMBER	DESCRIPTION	PACKAGE SIZE	WARRANTY PART NUMBER
Subaru coolant	None	SOA868V9210	Phosphoric acid (non-amine) type	1 gallon	SOA635002 (per qt)
Subaru Super Coolant	None	1-gallon 50/50 mix SOA868V9250 1-qt concentrate SOA868V9260	Subaru Super Coolant	1 Gallon or 1 Quart	SOA635041 (per qt)
Distilled water	Tap water (Soft water)	NA			
Cooling system conditioner	No	SOA345001 (case)	Subaru Cooling System Conditioner	4.4 oz.	SOA635071

REFRIGERANT

ITEM	ALTERNATIVES	SOA ITEM NUMBER	DESCRIPTION	PACKAGE SIZE	WARRANTY PART NUMBER
Refrigerant	None	SOA868V9310	R134a Domestic NA	30lbs.	SOA635015 (per lb)
Denso Oil 8	None	SOA383P100	ND-8	40cc	SOA635016D
DH-PR PAG Oil (ZXL200PG)	None	K0010FS100	PAG R	4pack of 2.3oz.	SOA635016

GREASES

ITEM	ALTERNATIVES	SOA ITEM NUMBER	DESCRIPTION	PACKAGE SIZE	WARRANTY PART NUMBER
Molykote AS-880N	-	K0777YA010	DISC BRAKE SIMGREASE		
Molykote No. 7439 Brake Paste	Molykote AS-880N				
NICHIMOLY N-130	ConocoPhillips Multiplex Red #2 Grease 14 oz.				
NIGLUBE RX-2	ConocoPhillips Multiplex Red #2 Grease 14 oz.	000041000	NIGLUBE GREASE	90g	

ITEM	ALTERNATIVES	SOA ITEM NUMBER	DESCRIPTION	PACKAGE SIZE	WARRANTY PART NUMBER
NIGTIGHT LYW No. 2 grease	KOPR-KOTE ConocoPhillips Multiplex Red #2 Grease 14 oz.				
NKG106	-	28395TC000	GREASE NKG106	65g	
NKG205	-	28495AG010	GREASE PACKAGE DOJ	130g	
NKG302		28495AE010	GREASE DRIVE SHAFT	160g	
NKG708		28495AE000	GREASE DRIVE SHAFT	80g	
Nox Rust 7703W		SOA868V9180			SOA635039 (per repair)
NTG2218-M		28395AG04A (substitution)	GREASE PACKAGE	225g	
ONE LOUVER C	-	28395SA020	GREASE DRIVE SHAFT	130g	
SILICONE GREASE G-30M	3M™ Silicone Paste #08946	004404002	GREASE G30M	100g	
SILICONE GREASE G-40M	-	004404002 (substitution)	GREASE G30M	100g	
Spray type lubricant	3M™ Silcone Spray "Wet" type # 08877 or Silicone Spray "Dry" type #08897	SOA868V9200	Silicone Spray	12.5 oz.	
SUNLIGHT 2	ConocoPhillips Multiplex Red #2 Grease 14 oz.				
VALIANT GREASE M-2	ONE LUBER SG ConocoPhillips Multiplex Red #2 Grease 14 oz.				

ADHESIVES

ITEM	ALTERNATIVES	SOA ITEM NUMBER	DESCRIPTION	PACKAGE SIZE	WARRANTY PART NUMBER
Dow Automotive Essex U-400HV Glass primers: U-401 and U-402 Painted surface primer: U-413	3M™ Fast Cure Windshield urethane #08609 or #08690 and primer #08682				
THREE BOND 4104	3M™ Duramix™ Factory Match Seam Sealer #08323				
CEMENDINE 540	3M™ Plastic & Emblem Adhesive #08061 Trim Adhesive Fabric #08090 or #08074 (spray) Top and Trim Adhesive #08046				
CEMENDINE 3000	3M™ Quick Fix Adhesive #08155				
CEMENDINE 5430L	3M™ Super Weatherstrip Adhesives #08001, #08002, #08008				
Rear view mirror repair kit	3M™ Rearview Mirror Adhesive, 08752				
Rear window defogger repair kit	Permatex® Quick Grid™ Rear Window Defogger Repair Kit, part # 15067				

SEAL MATERIAL

ITEM	ALTERNATIVES	SOA ITEM NUMBER	DESCRIPTION	PACKAGE SIZE	WARRANTY PART NUMBER
THREE BOND 1105	3M™ Ultrapro™ High Temp Silicone Gasket 08672 Black 3 oz	004403010	Fuji Bond C 1105	150g	SOA635017 (per repair)
THREE BOND 1207C	3M™ Ultrapro™ High Temp Silicone Gasket 08672 Black 3 oz	004403012	THREE BOND 1207C	480g	SOA635018 (per repair)
THREE BOND 1215	3M™ Ultrapro™ High Temp Silicone Gasket 08672 Black 3 oz	004403007	THREE BOND 1215	250g	SOA635019 (per repair)
THREE BOND 1217B	3M™ Ultrapro™ High Temp Silicone Gasket 08672 Black 3 oz	K0877YA020	THREE BOND 1217B	330ml	SOA635068 (per repair)
THREE BOND 1217G		Not Available, see note *			
THREE BOND 1280B	3M™ Ultrapro™ High Temp Silicone Gasket 08672 Black 3 oz	SOA5499100	THREE BOND 1280B	350g	SOA635065 (per repair)
THREE BOND 1324	3M™ High-Strength Threadlocker, 08730 0.34 oz				
3M Butyl Rubber 8626	3M™ Window Weld Ribbon Sealer #08610, #08611, or #08612				

* In place of Three Bond 1217G, use the Three Bond products based on the application chart found on page 6 of this bulletin.

APPLICATION	RECOMMENDED MATERIALS	ALTERNATIVES
• Cylinder block • Camshaft cap • Converter case • DOHC camshaft cap (Turbo model) • Cylinder head plug (Turbo model) • Oil pump (Except for 3.0, 3.6 L model)	THREE BOND 1215 004403007	3M™ Ultrapro™ High Temp Silicone Gasket 08672 Black 3 oz
• Engine oil pan (Except for 3.0, 3.6 L model) • Separator cover (Except for 3.0, 3.6 L model)	THREE BOND 1207C 004403012	3M™ Ultrapro™ High Temp Silicone Gasket 08672 Black 3 oz
• SOHC camshaft cap • Camshaft cap (3.0, 3.6 L model) • Cylinder head plug (3.0, 3.6 L model and turbo model) • Rocker cover (3.0, 3.6 L model and turbo model) • Oil pan and Oil Pan upper (3.0, 3.6 L model) • Back chain cover Front chain cover, block head, pan upper) (3.0, 3.6 L model)	THREE BOND 1280B K0877YA018 SOA Item SOA5499100	3M™ Ultrapro™ High Temp Silicone Gasket 08672 Black 3 oz

The tables shown above contain additional information for recommended materials listed in the repair manuals for individual models. For additional warranty submission information please refer the materials policy in Section 13.9 of the CDS Policies and Procedures Manual.

SUBARU QUALITY DRIVEN® SERVICE

CAUTION: VEHICLE SERVICING PERFORMED BY UNTRAINED PERSONS COULD RESULT IN SERIOUS INJURY TO THOSE PERSONS OR TO OTHERS.

Subaru Service Bulletins are intended for use by professional technicians ONLY. They are written to inform those technicians of conditions that may occur in some vehicles, or to provide information that could assist in the proper servicing of the vehicle. Properly trained technicians have the equipment, tools, safety instructions, and know-how to do the job correctly and safely. If a condition is described, DO NOT assume that this Service Bulletin applies to your vehicle, or that your vehicle will have that condition.

Disclaimer

Technical Service Bulletin # **16-63-99R** Date: **090227**

A/T - Remanufactured Transaxles Program

Number: 16-63-99R

Date: 02/27/09

Applicability:
1990~2009MY All Models

Subject:
Remanufactured Transaxles Program

Introduction

Subaru of America, Inc. has extended the availability of remanufactured automatic transmissions to include most Subaru models starting from 1990MY vehicles. This includes most 4EAT, 4DAT and 2005 through 2009 5AT transmissions. Please check applications and availability through normal parts channels prior to making vehicle repairs.

A remanufactured transmission must be used for all repairs reimbursed by Subaru requiring a transmission overhaul or replacement. Only the following repairs to the vehicle's original transmission may be performed:

^ External electrical components.

^ Transmission wiring harness.

^ External oil leaks.

^ Converter case and internal components (Front Differential).

^ Transfer case, transfer clutches, and solenoid assembly. Including the new VTD system.

^ Torque converter as long as it is not an internal failure that has contaminated the fluid.

^ Control Valve Body replacement (4DAT and 5AT only) as long as an internal failure has not contaminated the fluid.

^ Electrical Control Valve Body Components (4EAT only).

^ Mechanical shifter and parking system components.

Note:

If the repair estimate (parts and labor) to repair one or more of the above items exceeds 90% of the remanufactured transmission repair cost (parts and labor), then a remanufactured transmission should be used. Full details are available in the CDS Policies and Procedures Manual section 8.4.33.1.

Remanufactured transmissions may not be used to repair new in-stock vehicles.

To ensure full core credit, dealers should follow all instructions listed on the Subaru Transmission Core Return Procedures and fill out the documentation completely using the online core return system. Keep a copy of the Credit Request and Diagnosis Form with the vehicle records.

All transmissions replaced with a remanufactured transmission (warranty or non-warranty) are returned to SUBARU OF AMERICA, Inc. at the Grove City, OH address outlined in the document package. All other transmissions replaced under warranty must be shipped to the location indicated on the parts return notice. Transmissions incorrectly shipped will result in the dealer not receiving the core credit or a debit of the claim for a part not returned as requested. The dealer will be responsible to trace and return the unit to the correct location at their own expense.



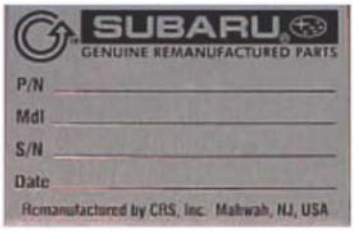

The same repairs as those of an original equipment transmission can be performed on a remanufactured transmission, but require Field Service Manager's prior authorization. Remanufactured units can be identified easily because they are painted gray and have one or both of the tags shown above attached to the unit.

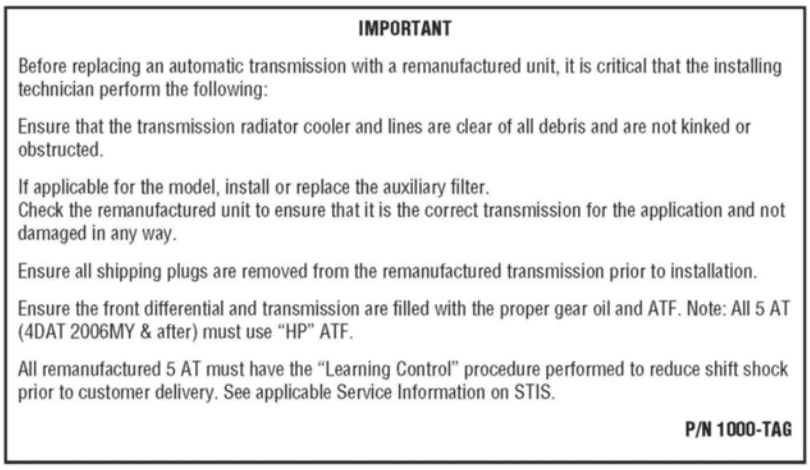

IMPORTANT

Before replacing an automatic transmission with a remanufactured unit, it is critical that the installing technician perform the following:

Ensure that the transmission radiator cooler and lines are clear of all debris and are not kinked or obstructed.

If applicable for the model, install or replace the auxiliary filter.
Check the remanufactured unit to ensure that it is the correct transmission for the application and not damaged in any way.

Ensure all shipping plugs are removed from the remanufactured transmission prior to installation.

Ensure the front differential and transmission are filled with the proper gear oil and ATF. Note: All 5 AT (4DAT 2006MY & after) must use "HP" ATF.

All remanufactured 5 AT must have the "Learning Control" procedure performed to reduce shift shock prior to customer delivery. See applicable Service Information on STIS.

P/N 1000-TAG

Each remanufactured transmission will have a tag attached explaining the installation procedures and precautions. These procedures must be followed otherwise non-warranty failures could occur. The cooler flushing procedure can be found in Subaru Service Bulletin 16-42-90

Depending on model and model year of vehicle, learning procedures may be required. Please refer to Subaru Service bulletin 16-72-07 for details. Failure to perform the learning procedures could result results in customer drivability complaints.

SUBARU QUALITY DRIVEN® SERVICE

CAUTION: VEHICLE SERVICING PERFORMED BY UNTRAINED PERSONS COULD RESULT IN SERIOUS INJURY TO THOSE PERSONS OR TO OTHERS.

Subaru Service Bulletins are intended for use by professional technicians ONLY. They are written to inform those technicians of conditions that may occur in some vehicles, or to provide information that could assist in the proper servicing of the vehicle. Properly trained technicians have the equipment, tools, safety instructions, and know-how to do the job correctly and safely. If a condition is described, DO NOT assume that this Service Bulletin applies to your vehicle, or that your vehicle will have that condition.

Disclaimer

Technical Service Bulletin # **0106-01** Date: **060101**

Engine - Bank 1, Bank 2 Clarification

BANK 1, BANK 2

Just to clear up some confusion that the Techline gets calls on. Bank 1 is where cylinder 1 is located (passenger's side of the car). Bank 2 is where cylinder 2 is located (driver's side of the car.)

Technical Service Bulletin # **1005-13** Date: **051001**

Engine - Rough Idle Diagnostic Information

ENGINE TESTING -- BACK TO THE BASICS

The Technical Helpline continues to get calls concerning rough idles on Subaru vehicles. If you call the TechLine, the first thing we will ask you is if you have performed a COMPRESSION TEST or a CYLINDER LEAKDOWN TEST. These are two of the most basic tests you can do to determine the internal working condition of the engine.

Just for review purposes, each cylinder must be "turned over" the SAME number of times to see if they are capable of doing the same amount of work. The throttle plate should be fully open and the engine at operating temperature. If three of the four cylinders come up to pressure in three revolutions of the engine and another needs nine revolutions, obviously there is something wrong with that one cylinder. It doesn't matter that it got to the same pressure as the others; it took too long for it to get there. If the difference between the highest and lowest cylinder is greater than 25% then the engine has a problem internally.

NOTE:
ALL SPARK PLUGS MUST BE REMOVED PRIOR TO DOING THIS TEST.

The next step would be to follow this compression test with another called a "WET COMPRESSION TEST where a SLIGHT amount of oil is added to the cylinders to help the rings seal. If too much oil is added, there is the danger of seizing the engine by HYDROSTATIC LOCK. If compression readings increase, then this is usually an indication that the rings are bad, although it is normal to get slightly increased readings even on a good engine.

We recommend you perform a CYLINDER LEAKDOWN TEST where air is put into the cylinders and you look for leakage, regardless of the outcome of the compression tests. The throttle plate should be open, remove the engine oil dipstick/filler cap and radiator cap. Air pressure should be regulated to 100 PSI if possible. We recommend the use of a Leak Down Tester, if available, to perform this test. Maximum allowable leakage is 10% (as per SUN Corporation). The cylinder being tested should be at Top Dead Center to be certain the valves are closed. With the cylinder pressurized, check for leakage. Air out the throttle body indicates a bad intake valve; out the tailpipe, a bad exhaust valve; out the dipstick tube, oil filler tube, bad rings (some leakage here is normal due to ring design); bubbles in the radiator could indicate head gasket problems or cracked cylinder wall(s). Once the source of leakage has been determined, it is easy to determine your course of action.

If the engine passes these tests and EVERYTHING involved in the tests has been done correctly, then the cause of the rough idle is elsewhere. Perhaps it is electrical or fuel related.

If you have any questions concerning this matter or the tests involved, contact the Technical Helpline.

Technical Service Bulletin # **0606-04** Date: **060601**

Electrical - Low Battery Voltage Affects Other Systems

LOW BATTERY VOLTAGE

If you should encounter a dead battery, especially if the voltage had dropped below 7 volts, there is a possibility that other components may have been affected. Charge the baffery following established procedure using the Midtronics test equipment. Pay affention to the electrical equipment such as relays, radio, horns, lights and other like equipment. All items should be checked for proper operation prior to releasing the vehicle back to the customer.

Technical Service Bulletin # **0506-04** Date: **060501**

Brakes - Brake Pad Rust Prevention

PREVENTIVE MEASURE FOR SURFACE RUST AROUND DISK BRAKE PAD

If you encounter a complaint that the brake pad is not sliding properly or that a squeaking type noise can be heard even though the brake performance is normal, and the vehicle is operated in the salt belt or coastal areas, there is a possibility the brake pad portion may have some surface rust on it. The cure is to apply a thin coat of grease (Molykote AS-880N or equivalent) to the parts as shown below.

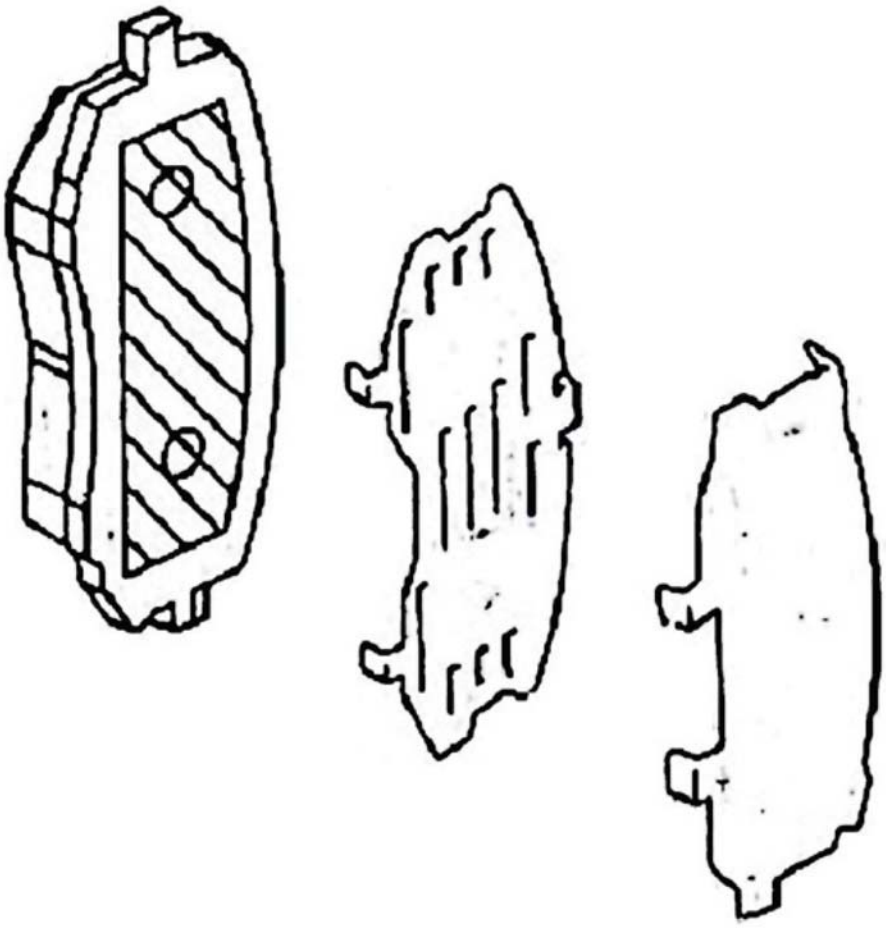

1) Apply a thin coat of Molykote AS-880N (P/N: K0777YA010) or equivalent to frictional portion between pad and inner shim.

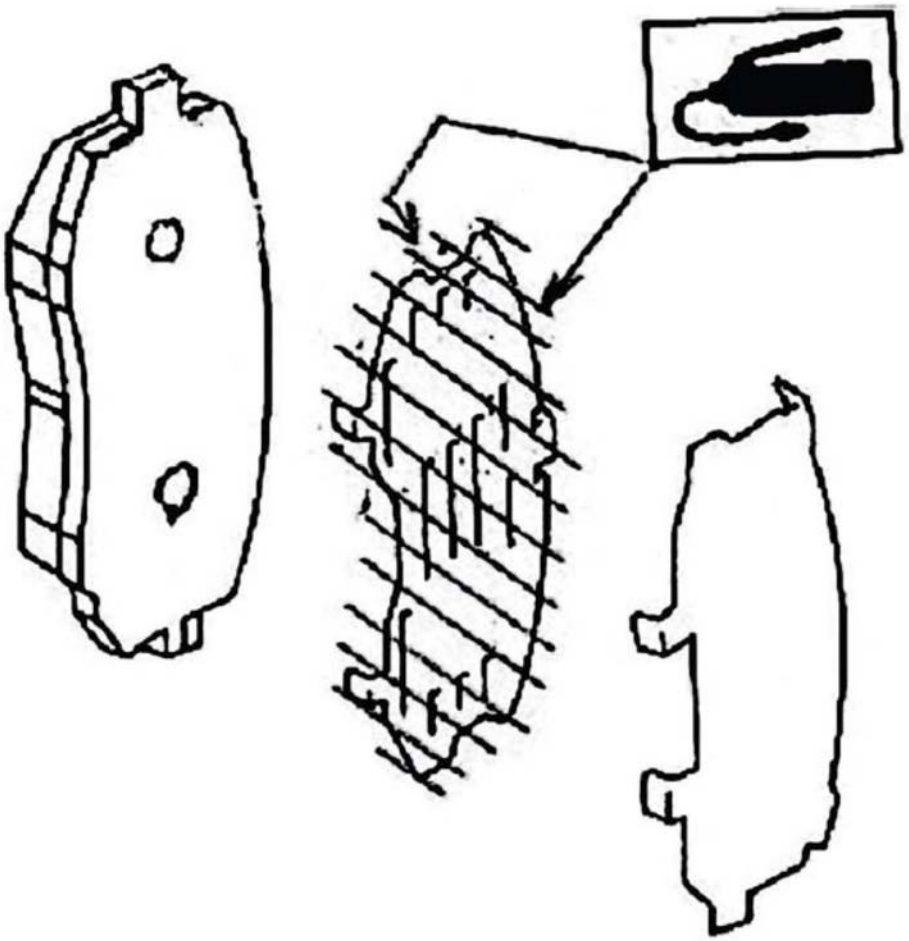

2) Apply a thin coat of Molykote AS-880N or equivalent to both faces of inner shim.

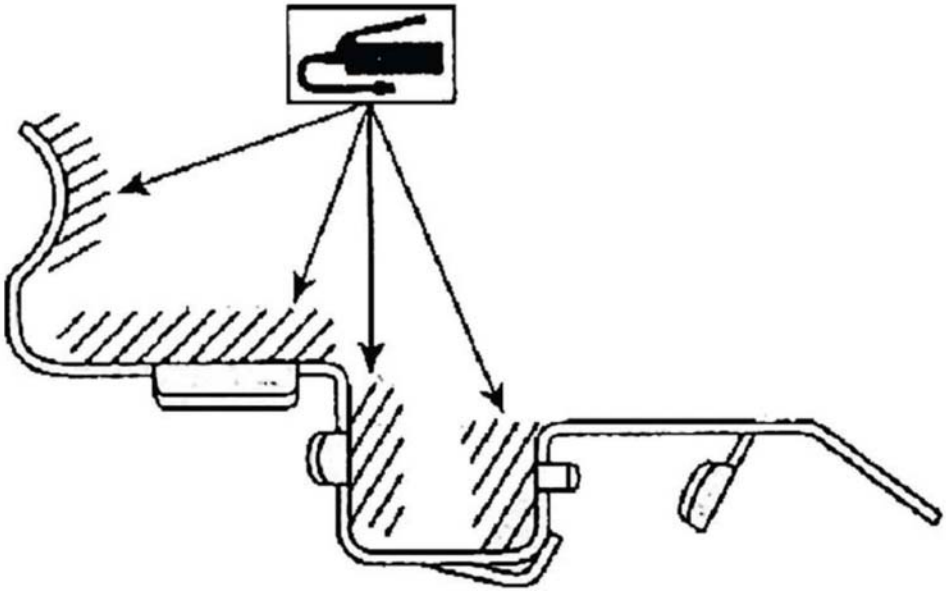

3) Apply a thin coat of Molykote M7439 or equivalent to pad clip

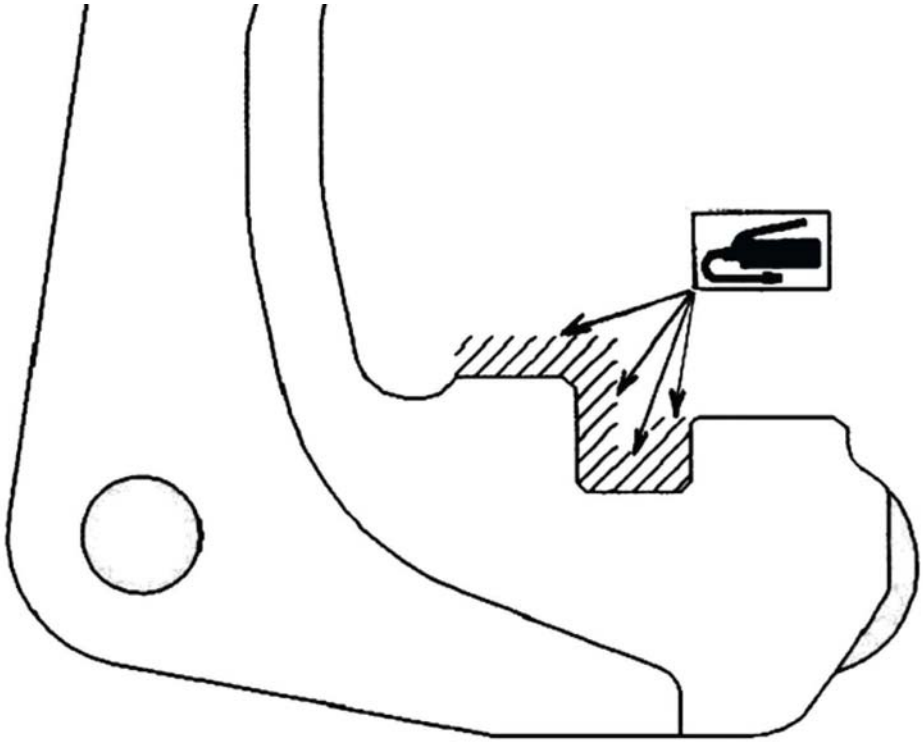

4) Apply a thin coat of Molykote M7439 or equivalent to caliper support.Technical Service Bulletin # **0206-08** Date: **060201**

Engine - Valve Guide Oil Seal Identification

Valve stem oil seals

The Techline occasionally gets calls concerning the color of valve stem oil seals and what colors are for what valves. The green seals are for the exhaust valves. The gray/black seals are for the intake valves. We hope this helps alleviate some confusion.Technical Service Bulletin # **05-47-10** Date: **100427**

Tires - Repair Information/Precautions

NUMBER: 05-47-10
DATE: 04/27/10

APPLICABILITY:
All Model Years

SUBJECT:
Tire Repair

Subaru Justy Hatchback 4WD L3-1.2L SOHC (MPFI)

Introduction
The purpose of this bulletin is to provide information regarding proper tire repair. Failure to perform proper repairs could result in tire failure which may result in an accident causing serious injury and/or death. Subaru of America, Inc. strongly recommends following the Tire Manufactures' and Rubber Manufacturers Association (RMA) procedures. Tire Information can be found in the customer's OIK (Owners Information Kit) and the tire manufacturers' web-sites.

As an example, the following information was taken directly from the Bridgestone(R) Firestone(R) Tire Maintenance, Safety and Warranty Manual.

Tire Repair

SAFETY WARNING

Driving on an improperly repaired tire is dangerous. An improper repair can be unreliable or permit further damage to the tire. The tire may suddenly fail, causing serious personal injury or death. A complete inspection and repair of your tire in accordance with Rubber Manufacturers Association (RMA) procedures should be conducted by a qualified tire service professional.

SAFETY WARNING

Speed Rating:
The tire's speed rating is void if the tire is repaired, retreaded, damaged, abused, or otherwise altered from its original condition. Thereafter, it should be treated as a non-speed rated tire.

While the comprehensive procedures and recommendations for tire repair are beyond the scope of this manual, a proper tire repair includes the following:

^ The tire is demounted from the wheel for a complete inspection, inside and out. Some damage to the tire may only be evident on the interior of the tire.



^ The puncture injury is 1/4 inch (6 mm) or less and must be within the tread area as shown in the graphic. This helps ensure long-term tire and repair durability.



^ A patch is applied to the interior of the tire and the puncture hole is filled with a suitable plug/stem filler. This helps ensure that the interior of the tire is adequately sealed to prevent inflation pressure loss and prevents contamination of the steel belts and other plies from the elements (such as water) in the outside world.

Additional notes about tire repairs:

^ Not all punctured or damaged tires can be properly repaired; consequently, some tires must be replaced. NEVER repair a tire with any of the following conditions:

- Wear to the tire's built-in tread wear indicators or to 2/32 inch (1.6 mm) remaining tread depth in any area of the tread.

- With a puncture larger than 1/4 inch (6 mm).

- With a puncture or other damage outside the repairable tread area (as shown in the graphic).

- With a pre-existing, improper repair.

^ Any tire repair done without removing the tire from the wheel is improper. The tire must be demounted from the wheel and the interior inspected for damage that may not be evident on the exterior of the tire.

^ Using only a plug/stem, or using only a patch, is not a safe or proper repair. A patch must be applied to the interior of the tire and the puncture hole must be filled with a suitable plug/stem filler to prevent inflation pressure loss and contamination of the steel belts and other plies.

^ NEVER substitute a tube for a proper repair or to remedy an improper repair.

^ Tubes, like tires, should only be repaired by a qualified tire service professional.

^ Some vehicle manufacturers do not recommend using repaired tires. Consult your vehicle owner's manual or contact the vehicle manufacturer before operating a repaired tire on your vehicle.

ASK how your tire will be repaired. ALWAYS insist on a proper tire repair.

Emergency/Temporary Sealant or Filler Repairs: An emergency/temporary sealant or filler injected into the tire, such as by aerosol can or injection/squeeze-tube, is not a proper repair and voids the tire Limited Warranty. A tire injected with such sealant/filler must be replaced by a qualified tire service professional as soon as possible.



SAFETY WARNING

Tell the tire service professional if you have used an aerosol fixer to inflate/seal the tire. Aerosol fixers could contain a highly volatile gas. Always remove the valve core outdoors, away from sources of excessive heat, flame, or sparks and completely deflate the tire before removing it from the wheel.

SAFETY WARNING



CAUTION: VEHICLE SERVICING PERFORMED BY UNTRAINED PERSONS COULD RESULT IN SERIOUS INJURY TO THOSE PERSONS OR TO OTHERS.

Subaru Service Bulletins are intended for use by professional technicians ONLY. They are written to inform those technicians of conditions that may occur in some vehicles, or to provide information that could assist in the proper servicing of the vehicle. Properly trained technicians have the equipment, tools, safety instructions, and know-how to do the job correctly and safely. If a condition is described, DO NOT assume that this Service Bulletin applies to your vehicle, or that your vehicle will have that condition.

Disclaimer

Technical Service Bulletin # **0506-01** Date: **060501**

M/T - Clutch Pedal Squeaking Noise

CLUTCH PEDAL SQUEAK

If you encounter a manual transmission equipped vehicle with a clutch pedal squeak concern, and lubricating the pedal mechanism didn't fix the noise, check the clutch switch. We have had a few reports where this has been the source of the problem. The fix is to replace the clutch pedal switch.Technical Service Bulletin # **0606-10** Date: **060601**

Engine Controls - Rough Idle/Misfire Diagnostic Tips

basics, basics, basics

The Techline receives calls on rough idles and misfire codes on a daily basis. Before you call us, we suggest/ask the following:

Check the ECM reprogramming sheets available on the Subarunet.com website to see if the particular model you are working on is eligible for a reflash for rough idle/misfire.

If your particular vehicle is not listed or the ECM calibration identification number (CID) matches the one shown on the sheets, then reflashing is not an option. **NOTE**: Reflashing will NOT address/fix a car that has an actual mechanical issue causing a rough idle. You will need to investigate the problem further to determine the cause. If the car idles fine and just has the misfire code(s), there is a good chance the reflash will fix it.

Subaru Justy Hatchback 4WD L3-1.2L SOHC (MPFI)

Does the engine idle fine, but, have a misfire code? If so, it might be a fuel mixture problem. Check the vehicle history to see if the car has been in before for this problem. In some cases, you'll find it has been. If so, was the misfire on the same or another cylinder? If the code was on another cylinder, it might be a fuel related problem. Hopefully you DIDN'T clear the code(s) so you can use the Subaru Select Monitor to pull up the Freeze Frame Data. You'll want to look at the Short Term Fuel Trim (STFT) and the Long Term Fuel Trim (LTFT) readings in the data list. These will give you an idea of what the Air/Fuel Ratio Sensor (A/F) is doing in determining the fuel trim delivered to the cylinders. If the A/F sensor is functioning properly, the numbers you should be seeing for the STFT & LTFT should be somewhere between a +5% to a -5%. Slightly higher readings are ok but if you have a reading in the double digits, typically T2% or higher, it usually indicates there is a problem with the A/F sensor. Trouble shooting of the A/F sensor should be performed to determine if it is functioning properly or another condition (vacuum leak etc.) is influencing the A/F sensor readings. Our A/F sensor readings will max out at 37.5 %. If the number is a positive (+) the car is running lean. This is usually when we see the misfire and rough running concerns. There is simply not enough fuel getting into the cylinder to support combustion. This is referred to as a lean miss. A negative (-) number is of course a rich mixture and is not usually a cause for a misfire.

If the car has an actual rough idle, there are many things that you can do to track down the cause. Check the plug wire(s), coil(s), plug(s), and injector(s). If the code is always on a particular cylinder, try swapping that injector with a known good cylinder and see if the code follows the injector. Then swap a plug, then coil. This is what we'll suggest if you call us. If the code moves with the injector, then you have a bad injector. If it doesn't follow the injector, there is most likely something wrong internally with that particular cylinder however, the pins in the injector connector will need to be checked to see if they might be the problem. If everything external has been inspected and ruled out as the cause, the problem must be something internal to the engine. It could be a carbon buildup on the valves or varnish in the valve guides. It could also be a valve adjustment that is too tight. Further tests are necessary.

Hook up a vacuum gauge to a source of engine vacuum (below the throttle plate). A good running engine will have between 16" to 22" of intake manifold vacuum depending on the altitude. The needle should be steady on the gauge and not bounce around. A slight quiver to the needle is acceptable. If the needle is bouncing around 1" or more, it shows you there is a cylinder sealing problem (valves or rings). Most often it is the valves causing the problem. However, this test doesn't pinpoint the exact cylinder(s) at fault. If there is a misfire code, you can be reasonably sure that the code indicates the problem cylinder(s). If there is no misfire code, you'll need to perform a compression and cylinder leakdown test. We always recommend that a compression test be followed up by a leakdown test as we've seen many cases where an engine might pass a compression test but, fail the leakdown test. Most importantly an accurate leakdown test will help identify where you should look for the leak: intake valve, exhaust valve, or rings. when you perform a leakdown test, always follow the procedure recommended by the equipment manufacturer to assure that the test results are accurate. Refer to the 04/95 Tech TIPS (available on the STIS website) for additional information concerning compression and leakdown testing.

If your testing has determined that the valves are the problem and you've checked the adjustment, the head(s) will need to be removed for further inspection. If the cause is then determined to be a carbon buildup, usually just cleaning the valves and the guides is all that is necessary to repair the problem. If the valves are reinstalled into their original positions (and they should be), everything should be fine, but you can lap the valves in by hand if you wish to insure a tight seal. We do not recommend cutting or grinding the valves or their seats at any time.

^ In closing, there are other things that can cause rough idles and misfire codes. These are just the most common ones we deal with here on the Techline and the methods we suggest you use.Technical Service Bulletin # **0106-03** Date: **060101**

Wipers/Washers - Front Washer Nozzle Won't Spray

FRONT WASHER NOZZLE DOES NOT SPRAY PROPERLY

Failure of the front washer nozzle to spray properly may be caused by something blocking the nozzle outlet. Try to eliminate dust and foreign matter from front washer nozzle using the following procedure. If the washer nozzle spraying does not change after the repair, then it will be necessary to replace with a new nozzle or inspect other parts on the washer system.

1) Open the front hood

2) Remove the washer nozzle

3) Blow compressed air in the spray hole of the washer nozzle and the installation hole for washer hose to eliminate dust and foreign matter.

4) Install the hose to washer nozzle and install the washer nozzle.

5) Check if front washer sprays properly. If no change, replace with a new nozzle.

A Technical Service Bulletin will be forthcoming with additional information on this subject.Technical Service Bulletin # **1005-07** Date: **051001**

Wipers/Washers - Wiper Blade Information

12 WIPER BLADES - THE BASICS

When presented with a complaint indicating worn or noisy windshield wipers, please keep the following checks in mind. First check the condition of the wiper's rubber inserts. They should not be cracked, split or torn. If damaged, the inserts must be replaced. In all cases the blade frame itself should be inspected to ensure that the pivot points move easily and that the frame is not bent or otherwise damaged. Wipers with physically damaged blade frames are not a matter for warranty. If the frame is in good shape, then only the rubber insert needs replacing. If the wiper and rubber inserts appear undamaged, check the wiper performance to determine if the blades are streaking, smearing or chattering as they go across the windshield.

Subaru Justy Hatchback 4WD L3-1.2L SOHC (MPFI)

BLADE PART NUMBER	DESCRIPTION	FORESTER 03	FORESTER 04-05	FORESTER 06	LEGACY 00-04	LEGACY 05	LEGACY 06	BAJA 03-06	IMPREZA 02-04	IMPREZA 05-06	B9 TRIBECA 06	REFILL PART NUMBER
86542AG09A	14"Blade					Rr	Rr					SOA591U314R
86542XA09A	14"Blade										Rr	SOA591U314R
86542AG080	14"Blade			Rr						Rr		SOA591U314R
SOA591U215	15"Blade	Rr			Rr				Rr			SOA591U215R
86542SA050	16"Blade		Rr									SOA591U316R
SOA591U217	17"Blade								Fr-RH	Fr-RH		SOA591U217R
SOA591U218	18"Blade					Fr-RH	Fr-RH					SOA591U218R
SOA591U219	19"Blade	Fr-RH	Fr-RH	Fr-RH								SOA591U219R
SOA591U220	20"Blade				Fr-RH			Fr-RH				SOA591U220R
86542XA02A	26"Blade										Fr-LH	SOA591U326R
86542XA07A	20"Blade										Fr-RH	SOA473W320
SOA591U221	21"Blade											SOA591U221R
SOA591U222	22"Blade	Fr-LH	Fr-LH	Fr-LH	Fr-LH			Fr-LH	Fr-LH[illegible]	Fr-LH		SOA591U222R
86542FE020	22"Blade								Fr-LH(STI)			86548AE150
86542AG02A	24"Blade					Fr-LH						SOA591U324R
86542AG13A	24"Blade						Fr-LH					SOA591U324R

The following information is supplied to assist in your understanding of the causes of wiper streaking and chattering complaints and should be considered a maintenance tip. If you notice any of these concerns, many times they are due to residue on the wipers, windshield, or both. To correct these concerns, start by cleaning the windshield and the wiper blades rubber inserts. Clean the windshield and the wiper inserts with a neutral non-abrasive cleaner, such as washer solvent using a sponge or soft cloth. Do not use petroleum products, thinner, or other solvents, as these will dry and damage the rubber and possibly the windshield. In terms of warranty handling if physical damage is not present and if cleaning would not resolve the concern, only the wiper's rubber inserts should require replacement. In the event that a direct replacement insert for the original equipment blade is not available from Subaru, the wiper blade assembly should be replaced with a Genuine Subaru replacement blade assembly (denoted by a part number beginning with SOA such as S0A591U218). Please see June 05 Tech Tips for specific information relating to 05 Legacy and Outback applications. The chart shown below contains a list of the available replacement wiper inserts and blade assemblies from SOA Parts. Please refer to www.subarunet.com > Fixed Operations> Price Book/CD Instructions> Price Book - Front Section > Wiper Blades and Refills for the latest chart.Technical Service Bulletin # **0506-02** Date: **060501**

Keyless Entry - Remote Transmitter Service Tip

Keyless Entry Remote Inoperative

Inspections of returned Keyless Entry Remotes for inoperative complaints found that many are due to oxidation on the contacts. Merely moving the battery itself disturbs this oxidation and the remotes then operate normally. This would be a very inexpensive first thing to check for an inoperative complaint. Check the battery and terminal condition and buff with a coarse cloth if either the battery or terminals are oxidized.Technical Service Bulletin # **05-50-10** Date: **100723**

Wheels/Tires - Highway Speed Noise/Harshness/Vibration

NUMBER: 05-50-10
DATE: 07/23/10

APPLICABILITY:
All Subaru Vehicles

SUBJECT:
Noise, Vibration and Harshness (NVH) at Highway Speeds Caused by a Tire Imbalance or Excessive Radial Force

INTRODUCTION

This bulletin is to serve as information only and is intended to help minimize steering wheel vibrations at highway speed.

DESCRIPTION

Some customers may describe a concern of a steering wheel vibration, oscillation or a "shimmy" condition at highway speeds that may be caused by improper tire and wheel balance or excessive radial force variation (RFV).

Subaru of America Inc. (SOA) recommends the use of the Hunter GSP 9700 Wheel Balance and Road Force Measurement System to properly balance the wheel and tire assemblies "dynamically" and to measure the radial force variation of the wheel and tire assembly. While the majority of these conditions can be greatly reduced with proper wheel balancing, some road feel may be considered characteristic and can be compared to like model vehicles with similar mileage.

Wheel Imbalance

The two most common types of wheel imbalances are static (single weight plane) and dynamic (dual weight plane). A static imbalance is best described as a vertical imbalance when the assembly is mounted on the vehicle. A dynamic imbalance is defined as a vertical and inner/outer imbalance while the assembly is mounted on the vehicle.

Wheel and tire assembly imbalance should be addressed first as this is the most common source of tire and wheel vibrations. A well maintained dual weight plane balancer (commonly known as a Dynamic Balancer) such as a Hunter G5P9700 should be used to achieve the best possible results. Balancer settings and proper maintenance are critical to obtaining the best results. Refer to the operating instructions as provided by the balancer manufacturer for setup and maintenance instructions.

Radial Force Variation (RFV

Radial force variation is an industrial measurement describing the tire uniformity under load. These variations, or harmonics, are measured in

kilograms, pounds or newtons. SOA asks that all weight measurements be reported using the metric system (grams, kilograms, etc.) The Hunter GSP 9700 Road Force Measurement System is capable of measuring these harmonics and displaying them as R1H (radial first harmonic), R2H (radial second harmonic) and R3H (radial third harmonic.) These different harmonic levels indicate the number of bad occurrences per revolution.

Most commonly, radial first (R1H) through radial third (R3H) harmonics are the cause of steering wheel or body related vibrations that can be felt at highway speeds. Radial force variation can be greatly affected if the vehicle has been parked for an extended period of time causing flat spots or by improper tire inflation. Before performing any diagnosis, be sure to drive the vehicle at least 10 miles and adjust tire pressures as indicated on the door label.

Machine Setup

SOA recommends the use of the Hunter GSP 9700 Road Force Measurement System to properly balance and measure radial force on tire and wheel assemblies. To ensure the most accurate results, the following guidelines should be used:

^ Refer to the operating instructions to set the machine to measure in grams (for balancing) and kilograms (for radial force measurements)

^ Refer to the operating instructions to enable the dynamic balancing mode

^ Refer to the operating instructions to disable the Quickmatch(TM) function, if available.

^ Select the "Mixed Weights Balance" mode and measure the weight location carefully.

^ Calibration should be checked at least once per week

^ Ensure the arbor threads and base plate are clean and in good condition

^ Measure the wheel center bore and select the proper cone for mounting the wheel to the balancer

^ Inspect the cone for any debris or damage and clean or replace as necessary

^ Perform the Centering Check(R) Procedure (software version 2.1 and higher) before each wheel is balanced

PROCEDURE

Always verify the concern with a test drive before beginning diagnosis and performing repairs. Drive the vehicle a minimum of 10 miles to eliminate any flat spots on the tires. Immediately after the road test, lift the vehicle into the air to minimize flat spotting. Adjust tire pressures according to the door label and inspect for any visible damage. If any damage is found, resolve these concerns before continuing with diagnosis.

Tire dynamic imbalance should be measured first and adjusted to within 5 grams. Leave any remaining factory weights in place and remove weights that have been added afier production; be careful not to damage the wheel. If the assembly cannot be adjusted to within 5 grams, inspect for the following:

^ Improperly mounted tire or unseated tire bead

^ Improperly mounted assembly to the balancer

^ Damage to the wheel or tire

^ Damage to the tire balancer

^ Debris located inside the tire

If a vibration can still be felt afier the wheels have been properly balanced, there is a possibility of excessive radial force variation (RFV) in the tire and wheel assembly. To address RFV concerns, a wheel balancer capable of measuring RFV must be used; Subaru Of America Inc. recommends the use of the Hunter GSP 9700 Road Force Measurement System. If a GSP 9700 is not available, locate the nearest machine through the Hunter Engineering web site (www.gsp9700.com).

Measure and record the RFV readings of the wheel and tire assembly for R1H, R2H and R3H. Then perform the wheel runout measurements by following the on-screen instructions or by referring to the operating instructions; this will determine the individual tire and wheel RFV measurements.

The following assembly RFV measurements can be used as a guide:

^ R1H on passenger tires - 5.5kg or less

^ R2H on passenger tires - 4.5kg or less

If higher than normal RFV measurements are found for the assembly, refer to the on-screen instructions or the operating instructions to match the tire and wheel to minimize the assembly RFV By matching the low spot of the tire to the high spot of the wheel, radial force can be reduced without replacing any components.

After all RFV measurements are adjusted to the lowest possible level~ install the wheels with the lowest RFV measurements on the front of the vehicle and road test to verify the concern has been reduced.

Replacement of tires due to excessive assembly measurements may be unnecessary.

If the concern still exists at an unacceptable level, contact the Subaru Technical HelpLine with the following information readily available:

^ Thorough description of customer's concern

^ VIN

^ Mileage

^ Tire manufacturer, size and condition

^ Completed "Dealer vibration Analysis Worksheet" and "Tire Analysis Worksheet" available under TechLine Pre-Call Worksheets on Subarunet. (All measurements should be in grams or kilograms)

^ Service history of vehicle

WARRANTY/CLAIM INFORMATION

LABOR DESCRIPTION	LABOR OPERATION #	FAIL CODE	LABOR TIME
4 Wheel Balance with RFV Adjustment	B613-118	XBQ88	1.2
Sublet Repair, Administrator Expenses	C101-108		0.3

For vehicles within the Basic New Car Limited Warranty period, this repair may be claimed using the table.



CAUTION: VEHICLE SERVICING PERFORMED BY UNTRAINED PERSONS COULD RESULT IN SERIOUS INJURY TO THOSE PERSONS OR TO OTHERS.

Subaru Service Bulletins are intended for use by professional technicians ONLY. They are written to inform those technicians of conditions that may occur in some vehicles, or to provide information that could assist in the proper servicing of the vehicle. Properly trained technicians have the equipment, tools, safety instructions, and know-how to do the job correctly and safely. If a condition is described, DO NOT assume that this Service Bulletin applies to your vehicle, or that your vehicle will have that condition.

Disclaimer