Autodata

Car Repair Manual

R18/FUEGO



Renault 18/Fuego from 1979

Models: TL · GTL · TS · GTS · TX · GTX · Turbo
4 speed · 5 speed · Automatic

Engines: 1397 cc · 1565 cc · 1647 cc · 1995 cc

Autodata

Car Repair Manual

R18/FUEGO

Compiled and Written by
the Autodata Technical Writers



Renault 18/Fuego MkI/II from 1979

R18 TL/GTL Saloon (1397 cc)
R18 TS/GTS Saloon (1647 cc)
R18 Saloon Automatic (1647 cc)
R18 TX/GTX Saloon (1995 cc)
R18 TX/GTX Estate (1995 cc)
R18 Turbo Saloon (1565 cc)
R18 L/TL Estate (1397 cc)
R18 TS/LS/GTL Estate (1647 cc)
R18 Estate Automatic (1647 cc)
R18 Saloon/Estate Automatic (1995 cc)
Fuego TL/GTL (1397 cc)
Fuego TS/GTS (1647 cc)
Fuego TX/GTX (1995 cc)
Fuego Automatic models
Fuego Turbo Saloon (1565 cc)

The Editor would like to acknowledge the help from the following companies in the preparation of this repair manual:

Renault (UK) Ltd
Champion Spark Plug Co. Ltd
Boyne Hill Garage Ltd - Renault Dealer (Maidenhead)
P. Baldock & Son Ltd - Renault Dealer (Bracknell)
Britax Ltd
Speedograph Ltd (Test equipment)
Lucas Electrical Ltd
Sound Service (Oxford) Ltd
Snap-On Tools Ltd

Autodata Car Repair Manual for Renault 18 and Fuego

Compiled and written by Ivor Carroll, Vic Willson
Edited by Vic Willson
Additional illustrations by Eddie Kent

Updated and additions by Robert Tiller

Layout and paste-up: Mandy Way
Composing: Simer Stuart-Jones

Published by Autodata Limited
St. Peter's Road, Maidenhead, Berkshire SL6 7QU, England

© 1985 Autodata Limited

All rights reserved. No part of this publication may be reproduced, stored in a retrieval system or transmitted, in any form, electronic, mechanical, photocopying, recording or other means without prior written permission of Autodata Limited.

Although every care has been taken to ensure the accuracy of the information contained in this manual, no liability can be accepted by the authors or publishers or suppliers for any mechanical malfunction, damage, loss, injury or death caused by the use of incorrect or misrepresented information, omissions or errors that may have arisen during the preparation of the manual.

ACRM 296

ISBN 0-85666-383-2

Printed in England by Spottiswood Ballantyne Ltd

Introduction

The Autodata Car Repair Manual is designed to guide you through all the stages of repair or service jobs on your car - from a simple engine oil and filter change right through to the removal and overhaul of the engine.

MANUAL LAYOUT

Easy reference of the appropriate section dealing with the part of your car to be checked or repaired is provided by the Contents pages and the individual chapter headings. Each chapter contains easy-to-follow repair sequences together with clear line drawings, cross referenced with the text, showing what fits where.

A comprehensive Index page at the end of the manual gives quick reference to components and assemblies.

MOT TEST

A special section is devoted to passing the MoT test, with cross reference to the chapters concerned. Check over all the items detailed in this section before submitting your car for it's MoT test to avoid any needless failure.

ROUTINE MAINTENANCE

The regular maintenance operations are contained in a complete chapter and are forwarded by a Service Schedule identifying all the maintenance items required and showing the appropriate service intervals.

To ensure that your car is set up to give maximum performance and economy, a comprehensive Tune-Up chapter follows the Routine Maintenance. From the information contained in both chapters you will be able to carry out all the regular maintenance and adjustment operations required to keep your car running as efficiently, economically and safely as possible.

TROUBLE SHOOTERS

To assist you in making a correct fault diagnosis a special Trouble Shooter is included at the end of each appropriate chapter. These Trouble Shooters provide details of symptoms and possible causes and will help in tracking down problems as and when they arise.

TECHNICAL DATA

Technical information required for specific operations is contained in the text throughout the manual, to make each section as complete and easy-to-follow as possible.

At the end of the manual a Technical Data section is provided to give a comprehensive listing of the technical specifications likely to be needed by the DIY motorist.

SPECIAL TOOLS

Certain repair jobs covered in the manual require the use of special tools not normally found in a DIY toolkit. When such tools are required we tell you in the introduction to each repair operation. If the special tool is likely to be available from your local tool hire shop then we tell you. Equally, if the job can only be done with a tool which is unique to your make of car then we advise you.

SPECIALIST SERVICES

In some cases the non-availability of spare parts and the need for special tools means that the best solution is to fit an exchange or specialist overhauled component, we then give the procedure for removal and replacement of the unit.

The need for specialised equipment to carry out some operation will require you to take your car to your local garage or service centre. Wheel alignment, as an example, can be checked using DIY equipment, but a full front suspension geometry check can only be undertaken by a garage or tyre specialist having the necessary equipment. In such cases we advise you accordingly.

Contents

INTRODUCTION 3

HISTORY & IDENTIFICATION 6

PASS THE MoT 8

SERVICE SCHEDULE 10

ROUTINE MAINTENANCE 11
- Introduction 11
- Jacking procedures 11
- Engine oil & filter 12
- Gearbox oil 14
- Automatic transmission 14
- Battery 14
- Cooling system 16
- Brake fluid level 18
- Air filter 18
- Distributor 18
- Drive belts 18
- Brakes 20
- Clutch adjustment 21
- Wheels & tyres 21
- Steering & suspension 21
- Exhaust system 24
- Lights & instruments 24
- Windscreen wipers & washers 25
- Seat belts 25
- General lubrication 25

TUNE-UP 26
- Introduction 26
- Spark plugs 26
- Compression check 28
- Valve clearances 28
- Distributor 30
- Ignition timing 34
- Carburettor adjustment 34
- Non-start trouble shooter 37

OHV ENGINE 38
- Introduction 38
- Cylinder head 38
- Crankshaft front/rear oil seals 46
- Timing chain & tensioner 47
- Sump pan 48
- Oil pump 48
- Engine mountings 48
- Engine overhaul 50
- Engine removal & installation 57
- Exhaust system 57

OHC ENGINE 58
- Introduction 58
- Timing belt & camshaft oil seal 58
- Jackshaft oil seal 59
- Crankshaft front oil seal 59
- Crankshaft rear oil seal 60
- Camshaft replacement (in-situ) 60
- Cylinder head 60
- Sump pan 65
- Oil pump 65
- Engine mountings 65
- Engine overhaul 65
- Engine removal & installation 65
- Exhaust system 65
- Trouble shooter 66

ENGINE ELECTRICS 67
- Introduction 67
- Alternator 67
- Starter motor 68
- Distributor 70
- Ignition coil 72
- Electronic ignition 72
- Ignition switch 75
- Cruise control 75
- Econometer 75
- Trouble shooter 76

COOLING SYSTEM 77
- Introduction 77
- Draining & refilling 77
- Thermostat 78
- Hoses & clips 80
- Radiator 80
- Coolant expansion tank 80
- Cooling fan & thermo switch 80
- Water pump 82
- Heater matrix & controls 82
- Trouble shooter 85

FUEL SYSTEM 86
- Introduction 86
- Fuel pump 86
- Throttle cable 88
- Carburettor replacement 88
- Carburettor adjustments 88
- Fuel tank & gauge sender unit 93
- Turbo charger 93
- Trouble shooter 94

CLUTCH & GEARBOX **95**
Introduction 95
Clutch cable 95
Clutch assembly 95
Clutch release bearing 96
Input shaft oil seal 96
Gearbox removal & installation 98
Selector shaft seal (model 352) 98
Selector shaft seal (model 395) 100
Gearbox overhaul (model 352) 100
Gearbox overhaul (model 395) 105
Differential side oil seals 105
Trouble shooter 106

AUTOMATIC TRANSMISSION **107**
Introduction 107
Control mechanism 107
Selector mechanism 110
Torque converter oil seal 110
Differential side oil seals 110
Transmission removal 110
Transmission installation 112
Torque converter drive plate 112
Torque converter 112
Trouble shooter 113

STEERING **114**
Introduction 114
Front wheel alignment 114
Track rod end joints 116
Steering rack bellows 116
Steering wheel & column assembly 116
Manual steering rack assembly 118
Manual rack end bush 120
Manual rack end balljoint 120
Power steering rack 121
Trouble shooter 122

FRONT SUSPENSION **123**
Introduction 123
Wheel bearings 123
Drive shafts 126
Shock absorbers 126
Coil springs 128
Upper suspension arm 128
Lower suspension arm 130
Anti-roll bar 130

REAR SUSPENSION **131**
Introduction 131
Wheel bearings 131
Shock absorbers 134
Coil springs 134
Axle beam assembly 134
Trailing arms 136
Anti-roll bar 136
Upper suspension arm 136

BRAKES **137**
Introduction 137
Front brake pad replacement 137
Rear brake shoe replacement 138
Rear brake pad replacement 142
Brake hydraulic circuit 142
Bleeding the hydraulic circuit 142
Brake pipes and hoses 144
Front brake caliper bracket 144
Front brake disc 144
Rear brake cylinders 145
Rear brake disc 145
Rear brake caliper 145
Brake master cylinder 146
Brake limiter 148
Brake servo 148
Handbrake cable 148
Brake pedal 150
Trouble shooter 150

GENERAL ELECTRICS **152**
Introduction 152
Charging the battery 152
Bulb & lamp replacement 152
Fuses, relays & flasher unit 154
Instrument panel 154
Switches 156
Interior heater fan motor 156
Windscreen wipers & washers 156
Headlamp wash wipe 159
Central locking system 159
Electrically operated windows 159
Wiring diagrams . . . . . 160 - 166
Trouble shooter 167

BODY & FITTINGS **168**
Introduction 168
Front & rear bumpers 168
Bonnet panel 168
Bonnet release cable & lock 170
Boot lid 170
Door trim panel 170
Window winder mechanism 170
Handles & locks 172
Speedometer cable 172
Front seat 175
Rear seat 175
Front wings 175
Bonnet lock panel 175
Corrosion 175

ACCESSORIES **176**

Introduction 176
Radio fitting 176
Suppression 176
Aerial fitting 178
Speaker fitting 180
Child safety seat 180
Towbar fitting & electrics 182
Soundproofing kit 184

TECHNICAL DATA . . . . . **185 - 191**

INDEX **192**

History & Identification

FEBRUARY 1979
Renault 18 range introduced in the UK. Available with two engine sizes, 1397 cc (TL and GTL models) and 1647 cc (TS and GTS models). Five-speed gearbox as standard on the GTS. Automatic transmission available on TS and GTS models.

SEPTEMBER 1979
R18TL and TS Estate models introduced with automatic transmission option only available on TS versions.

FEBRUARY 1980
R18LS Estate introduced using the engine of the TS version with the more basic trim and instrumentation level of the TL.

OCTOBER 1980
Fuego model introduced in UK with choice of 1397 cc (TL) 1647 cc (TS & GTS) and 1995 cc (TX & GTX) engines. GTS model available with automatic transmission.
Diesel engined Renault 18 introduced in TD and GTD versions with five-speed manual gearbox fitted to the GTD. (Diesel engine not included in this manual).

JANUARY 1981
R18 Turbo model introduced powered by 1565 cc engine and five speed gearbox. Power steering, revised suspension with negative offset steering geometry and high equipment specification as standard.

MAY 1981
Special edition 18 known as the 'Soleil' introduced. Mechanically the same as 18TS model, but with new three - position tinted transparent sunroof, sports wheels, rear spoiler and special custom stripe.

SEPTEMBER 1981
Fuego TS model now fitted with five-speed gearbox. Power steering now standard fitting on Fuego GTS Automatic model.
R18 GTL model now fitted with 1647 cc engine. Five-speed gearbox now standard fitting on R18 TL Estate and GTL models. Production of R18 GTS Saloon model discontinued.

DECEMBER 1981
Renault 18 TX and GTX Saloon/Estate introduced with 1995 cc OHC Fuego engine with 5-speed gearbox. Additional interior features include electric windows, central locking and tinted glass. Improvements to rear suspension system give improved road holding.

SEPTEMBER 1982
Body trim improvements added to the 18 models including a front air dam, wheel trims and boot lid spoiler (not TL/TD). All engines fitted with electronic ignition. GTX has Turbo style instrument panel and engine improvements to increase output to 125 bhp at 5500 rpm, brakes are now disc all round and other improvements are updated Turbo 'badging'.

APRIL 1983
Limited edition 'American' model based on GTL introduced with 1647 cc engine and 5-speed gearbox.

SEPTEMBER 1983
18 Automatic now uses 1995 cc instead of 1647 cc engine. Fuego has new grille and levels of trim depending upon model. GTX has new alloy wheels. Fuego Turbo introduced with 1565 cc turbo charged engine (A5L.D. 750) developed from the 18 turbo engine. Improved brakes, with discs all round, ventilated discs at the front. Power assisted steering and improved interior trim levels.

APRIL 1984
Mk 2 Renault 18 introduced, improvements include, two tone style grille, boot lid spoiler and new alloy wheels on GTX and Turbo. Fuego instrument panel now fitted to all 18's (as GTX & Turbo). Interior trim updated with needle point carpeting and new velour trim on GTX Estate. Turbo type arm rests and door trim panels on all models.

AUGUST 1984
Fuego Turbo and 18 Turbo fitted with a seven function trip computer as used in the Renault 11 series.

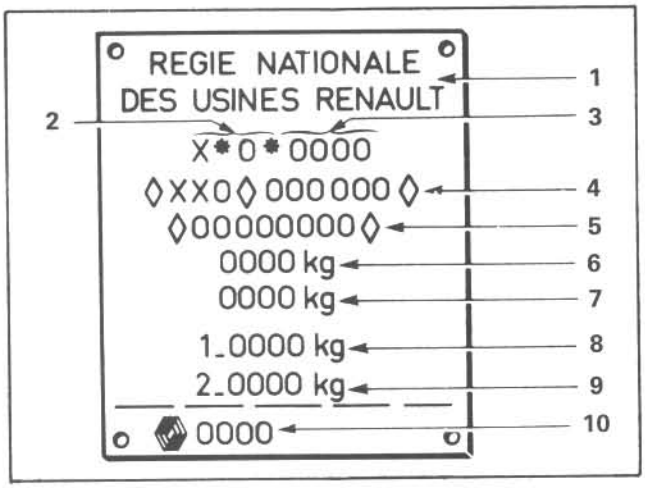

1. *Name of manufacturer*
2. *EEC country number*
3. *EEC vehicle type number*
4. *Manufacturer's code*
5. *Chassis No.*
6. *Gross vehicle weight*
7. *Gross vehicle and trailer weight*
8. *Permitted front axle loading*
9. *Permitted rear axle loading*
10. *Model year*

Fig. 1 Identification plate (bulkhead)

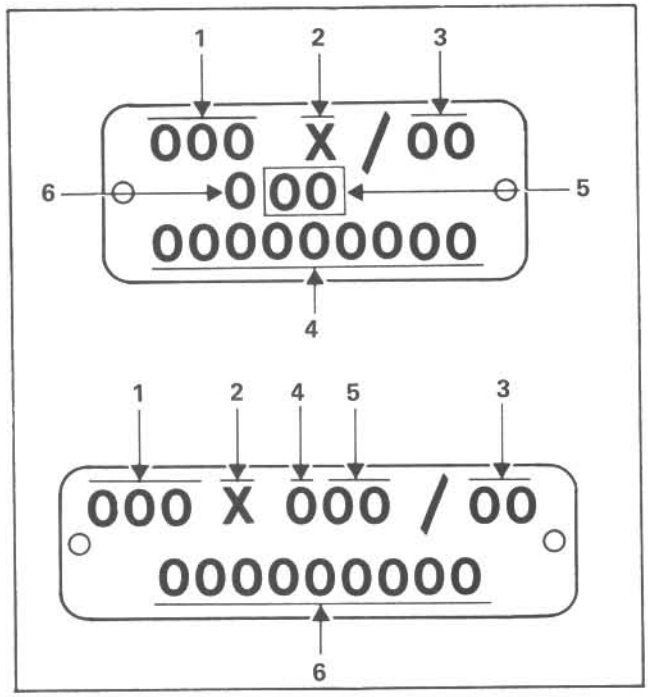

1. *Engine type*
2. *French ministry code*
3. *Engine equipment*
4. *Renault identity*
5. *Engine suffix*
6. *Fabrication number*

Fig. 3 Engine identification plates

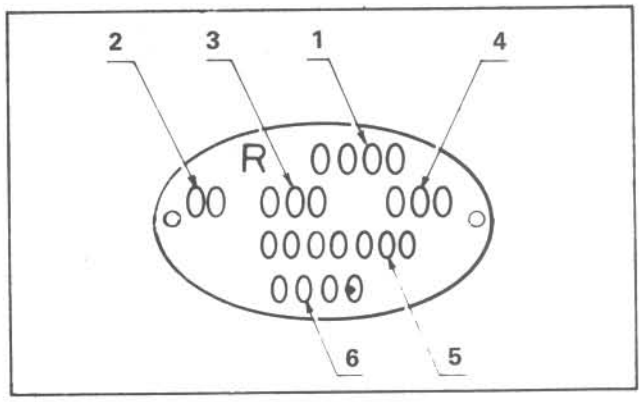

1. *Vehicle type*
2. *First character - transmission type*
   Second character - any special feature
3. *Steering identification*
4. *Optional equipment (from factory)*
5. *Fabrication number*
6. *Model year (not all countries)*

Fig. 2 Identification plate (inner wing)

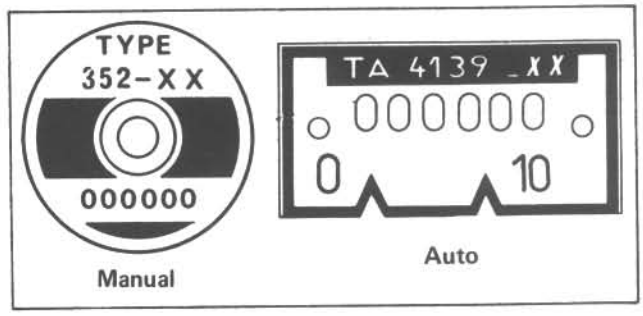

Fig. 4 Transmission plates

VEHICLE IDENTIFICATION

Vehicle identification is given by two plates, one oval shaped plate fitted to the nearside (driver's side) inner wing and one rectangular plate (VIN plate) mounted on the nearside of the bulkhead.

A breakdown of the entries on each plate is given in Figs. 1 and 2 respectively.

ENGINE NUMBER

The engine identification plate is to be found rivetted to the block and is in one of two formats (see Fig. 3) according to the space available on the block. A breakdown of the entries on the plate is given in the illustration.

TRANSMISSION NUMBER

The transmission can be identified by means of a plate affixed to the end cover on manual gearboxes or the torque converter housing on automatic transmission. The uppermost number relates to the transmission type while the bottom number is the fabrication number.

Pass the MoT

When your Renault 18 or Fuego is three years old, it must be submitted for its first MoT test. The car must then be tested annually to ensure that it is being maintained in a roadworthy condition. The test fee paid to the garage covers the cost of carrying out the inspection whether the vehicle passes the test or fails, so it makes sense to carry out your own pre-test check beforehand. Bear in mind that even a simple item like a parking lamp or one of the screen washers not working could "fail" the car. Obviously a DIY owner will not be able to examine a car to the same standard of inspection as an official tester, but you could avoid a needless failure certificate just by being aware of the checks that the tester will make.

All the items that will come under the tester's scrutiny are included in this repair manual, although this book is not compiled specifically for passing the test. However, if you work your way through the items shown on these two pages and turn to the appropriate page, you will have the information required either to check or service the relevant components.

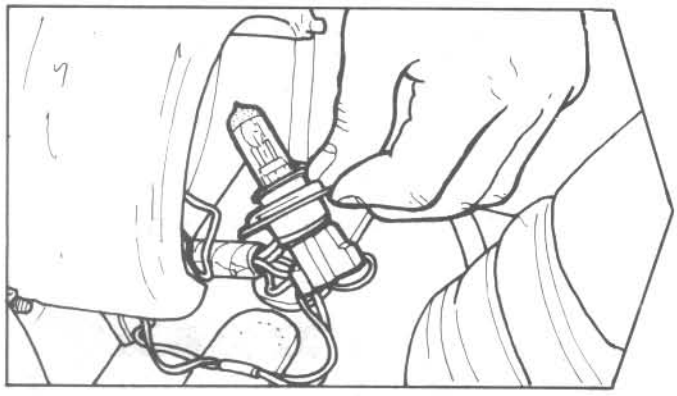

LIGHTING EQUIPMENT . . . . . Pages 24, 152

All external lights must be in working order including the headlamp main and dipped beam - and visible from a reasonable distance. Light lenses and reflectors must not be damaged or missing. The indicators must flash at the correct rate - between one and two flashes per second - and the panel warning lights must also be functioning. Headlamps must be correctly aligned. The stop lamps must illuminate whenever the foot brake is used.

STEERING . . . . . Pages 21, 114

Check for excessive play in all steering components from the road wheels to the steering wheel. Check for any unusual stiffness in the steering operation. The steering wheel should freely turn from one side through to full lock on the other side. Feel for play in the lower column universal joint, the rack mountings and steering ball joints. Examine the steering column bushes for wear by pushing the steering wheel back and forth as well as sideways. Examine the gaiters for any splits or tearing.

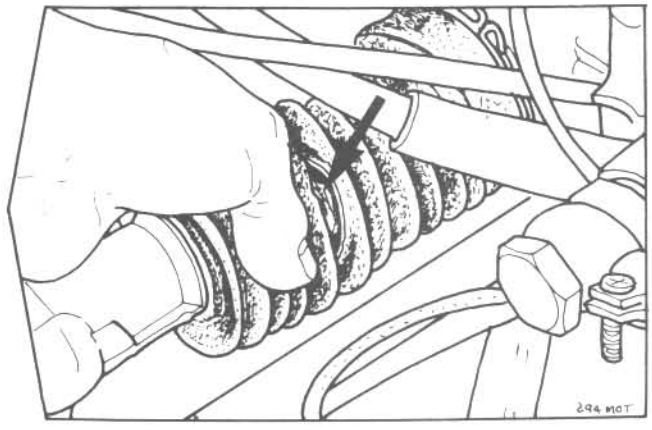

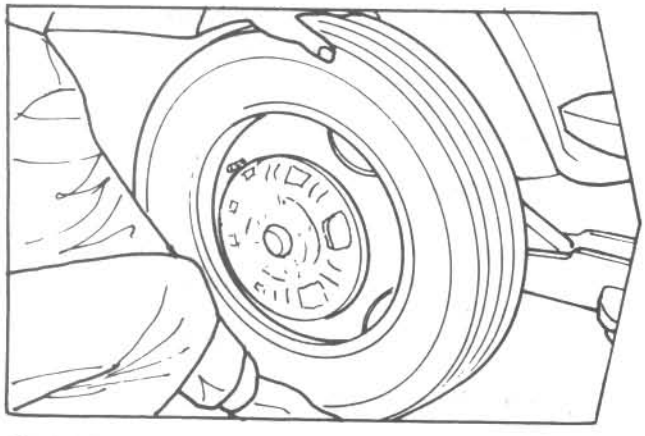

WHEEL BEARINGS . . . . . Pages 21, 123, 131

Raise and support each wheel in turn and check for bearing slackness or roughness by turning the wheel. A worn bearing will either be heard or felt at the tyre as the wheel turns. Grasp the wheel at the top and bottom then rock it to check for excessive or insufficient bearing clearance. If the bearings appear to be damaged or worn, or if there are any signs of grease leakage from the oil seals, the hub assembly should be overhauled. The condition should be checked whenever a wheel is off the ground, for whatever reason.

SEAT BELTS . . . . . Page 25

The MoT tester will check the seat belts for security and the fabric for chafing and any obvious damage. Check the belt locking mechanism by pulling slowly out of the top mounting, then sharply. The belt should instantly lock. The belt should retract smoothly once released. Check the belt and stalk mounting points for security. There should be no structural rust near the seat belt mounting points.

SUSPENSION . . . . . Pages 21, 123, 131

The vehicle will have to be raised and supported to check the suspension. Using a suitable long lever or screwdriver to give leverage, check for excessive play in all the suspension joints and rubber mountings. Check for condition of the shock absorber units and MacPherson struts, looking for fluid leakage and the security of the upper and lower mountings. Examine the drive shaft bellows. The drive shaft joints can be checked trying to move the halves of the joint in opposite directions. Feel for movement or grating between the two shafts on the joints. Under road test conditions a worn joint will be heard to 'knock' when accelerating under conditions of partial or full steering lock.

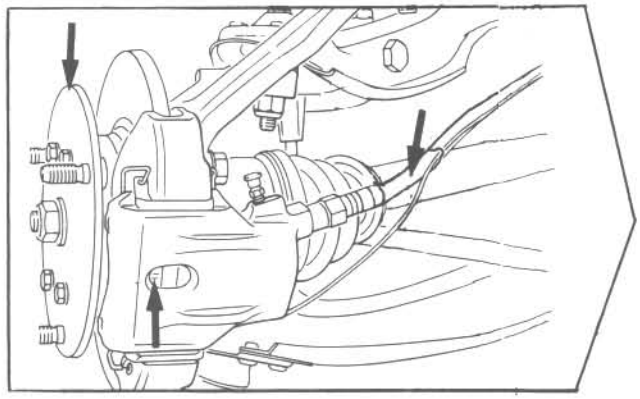

WHEELS & TYRES . . . . . .Page 21

Check the condition of all tyres, including the spare. Check the tread depth around the circumference of each tyre and inspect the side walls, looking for cuts, bumps and bulges as well as sharp objects stuck in the rubber. See that all tyres are inflated to the correct pressures (this could affect the brake test). 'Run flat' type tyres must not be punctured. Check the tyre type. Steel and fabric belted radial tyres should not be mixed on the same car. Examine all the road wheels, checking for damage and distortion. Make certain that wheel nuts or bolts are not missing, and are tightened adequately.

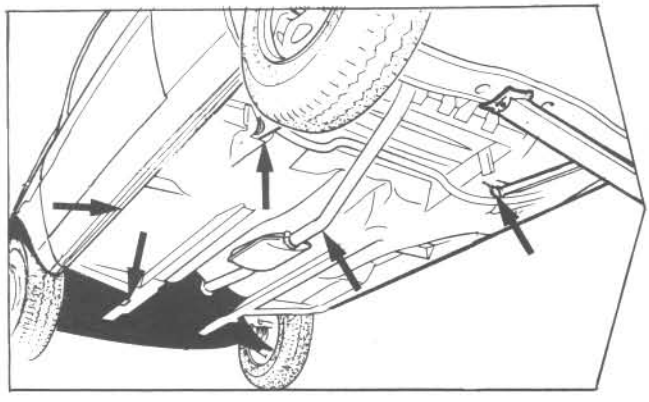

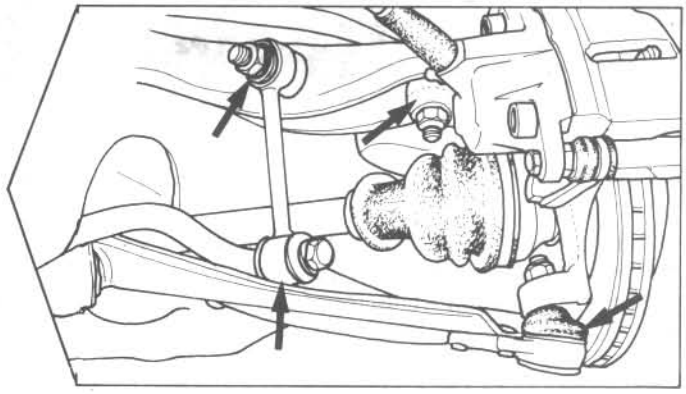

BRAKES. . . . . .Pages 18, 20, 137

Check the operation of the brakes and handbrake. The pads and linings should be free of contamination and of adequate thickness. Check for brakes pulling to one side and ascertain the cause. Also check the condition of the flexible brake hoses, looking for signs of cracking or bubbling and for corrosion on the rigid metal pipes. Check that the brake servo is working correctly (if fitted). The testing station will use a roller brake tester to check the efficiency of each wheel, including the handbrake mechanism. The brakes should not stick on after the handbrake is released. Check around the master cylinder and all of the brake pipe unions for fluid leakage.

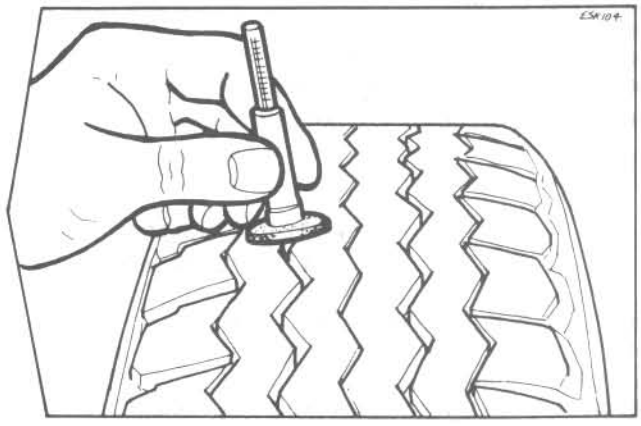

GENERAL . . . . . .Pages 24, 57, 65

The windscreen wipers and washers should be working efficiently. Wiper blades do deteriorate so it is a sensible rule to replace the rubbers or complete arms at least once a year. The horn should also operate clearly. Check that the exhaust system does not leak nor make an excessive amount of noise. Check the body for any damage or corrosion liable to render the car unsafe, especially all of the important load bearing areas - steering, suspension and the engine and transmission supports.

NOTE: The items mentioned on these pages are a guide so that the keen DIY owner can check his or her Renault 18 or Fuego before submitting it for the MoT test. Although it is based on the official MoT check list at the time of publication, it is only a guide and should be treated as such.

Service Schedule

WEEKLY OR WHEN REFUELLING

- Check tyre pressures and condition, including spare
- Check operation of all lights and horn
- Check operation of windscreen wipers and washers
- Check condition of driving mirrors
- Check windscreen, headlamp and tailgate washer levels
- Check coolant level
- Check engine oil level
- Check brake fluid level

EVERY 5,000 MILES OR EVERY 6 MONTHS, WHICHEVER IS SOONER

As for weekly check above, plus the following additional items

- Check operation of handbrake and lever ratchet travel
- Change the engine oil
- Check/top up automatic transmission
- Check for brake fluid leaks/front brake pad wear
- Check condition/run of flexible hoses
- Check/top up manual transmission
- Check operation of bulbs & warning lights
- Check tyre condition/pressures
- Check wheel nut tightness
- Check front/rear hub play

EVERY 10,000 MILES OR YEARLY, WHICHEVER IS SOONER

As for 5,000 mile service, plus the following additional items

- Change oil filter
- Change engine oil
- Check front brake pad wear
- Check/adjust main/dipped beams
- Check underbody & exterior panels for corrosion
- Check/adjust clutch operating clearance
- Check/adjust drive belt tension
- Check/adjust CO setting & idle speed
- Check/adjust dwell angle & timing
- Check/adjust/change spark plugs (contact breaker ignition)

EVERY 20,000 MILES OR 2 YEARS, WHICHEVER IS SOONER

As for 10,000 mile service, plus the following additional items

- Check engine/transmission for leaks
- Check drive shafts for play/leaks
- Check/tighten sump bolts
- Check shock absorbers for leaks/loose mountings
- Check condition of exhaust system
- Check fuel lines for leaks/condition
- Check visually all mechanical units
- Change fuel filter element
- Change air filter element
- Check/adjust or change spark plugs

EVERY 40,000 MILES OR EVERY 4 YEARS, WHICHEVER IS SOONER

As for 20,000 mile service, plus the following additional items

- Drain/refill manual gearbox
- Drain/refill automatic gearbox
- Check for play/leaks front suspension/steering
- Adjust handbrake
- Drain/flush/bleed cooling system
- Change rocker shaft oil filter (829 Engine only)

EVERY 80,000 MILES OR 8 YEARS, WHICHEVER IS SOONER

As for 40,000 mile service, plus the following additional items

- Change toothed timing belt (829 Engine only)

Routine Maintenance

INTRODUCTION . . . . . [1]
JACKING PROCEDURES . . . . . [2]
ENGINE OIL & FILTER . . . . . [3]
GEARBOX OIL . . . . . [4]
AUTOMATIC TRANSMISSION . . . . . [5]
BATTERY . . . . . [6]
COOLING SYSTEM . . . . . [7]
BRAKE FLUID LEVEL . . . . . [8]
AIR FILTER . . . . . [9]
DISTRIBUTOR . . . . . [10]
DRIVE BELTS . . . . . [11]
BRAKES . . . . . [12]
CLUTCH ADJUSTMENT . . . . . [13]
WHEELS & TYRES . . . . . [14]
STEERING & SUSPENSION . . . . . [15]
EXHAUST SYSTEM . . . . . [16]
LIGHTS & INSTRUMENTS . . . . . [17]
WINDSCREEN WIPERS & WASHERS . . . . . [18]
SEAT BELTS . . . . . [19]
GENERAL LUBRICATION . . . . . [20]

INTRODUCTION . . . . . [1]

The importance of regular servicing cannot be over-emphasised - remember that 'prevention is better than cure'. Carrying out the servicing yourself will not only save you money but also give you the opportunity to get to know your car.

The Service Schedule on the opposite page lists all the service checks and adjustments with the intervals at which they should be carried out. Cars which cover a low annual mileage, should be serviced on a time basis instead of mileage. The sequence in which items are given has been arranged to give a reasonably logical order of working around and under the car. It is therefore recommended that this be followed where possible.

Apart from the necessary materials - oil, filters, plugs, etc. - the most important requirement is time. If time is limited, the service can be split up into two or more sections, and the remaining items carried out at a later date. The advantage of this is that the service can be spread out over several weekends rather than doing it all in one go. In this way, there will be no need to either hurry or skimp over any items, as each is important in its own way, even if it's only a check or inspection.

Few tools apart from normal hand tools (spanners, screwdrivers, etc.) will be required. However, some tools will be specifically required for servicing. Given below, is a list of tools that will be worthwhile buying if servicing is to be carried out on a regular basis.

Oil filter strap wrench	Torque wrench
1 in. A/F socket or ring spanner	Brake adjuster tool
Battery hydrometer	Grease gun
Tyre pressure gauge	Oil can

Items listed in the Service Schedule are covered in detail either in this, or the next chapter. For convenience, all items directly concerned with engine performance and economy - e.g. plugs, points, valve clearances - are covered in the TUNE-UP chapter. This enables a complete engine tune to be carried out as a separate operation if required. The remainder of the Routine Maintenance checks and operations are contained in this chapter, although major overhaul operations are described in the relevant chapters.

Before starting work, read through both of these chapters carefully so you are aware of the work entailed and the tools and parts required. All relevant data, such as capacities, clearances, etc., where not included in the text, can be found in the TECHNICAL DATA at the end of this manual.

JACKING PROCEDURES . . . . . [2]

All Renault 18 and Fuego models are fitted with four jacking points on the underbody side sills; two at the front behind the front wheel arches, and two at the rear in front of the rear wheel arches. These jacking points should only be used with the jack supplied with the car (Fig. A:1).

Before raising any part of the car, make sure that the wheels in contact with the ground are securely chocked. If possible, the handbrake should be applied and the car left in gear, or in the case of automatic transmission, in the 'Park' position.

Never rely on the jack alone except when changing a wheel, and even then, one wheel should be placed under the car to act as a cushion should the jack slip.

To raise the front when working under the car, place a jack (preferably a trolley jack) under the gearbox with a strong piece of timber between the jack head and the two main body members - see Fig. A:2. To raise the rear of the car, place the jack head in the centre of the rear axle beam (Fig. A:3). To raise the side of the car, use a suitably shaped wood block between the side sill and the jack in line with the front door (Fig. A:4). Support the body

with axle stands under the body side frame members with wood spreader blocks. Never attempt to lift the car by jacking under any non load-bearing panel.

ENGINE OIL & FILTER .....[3]

Oil Level Check

It is essential that the oil level be maintained at the correct level. The oil level should be checked at least once a week, and always before a long run.

If the engine has been running, wait a few minutes after switching off to allow the oil to drain back into the sump for a correct level reading. The car must also be standing on level ground when checking the oil level.

The oil level dipstick and filter cap locations on the various engines are shown in Fig. A:5.

The oil level should be maintained between the two marks on the dipstick (Fig. A:6), and must never be allowed to fall below the lower mark. On models with an engine oil level indicator, the Min and Max positions of the needle correspond to those positions on the dipstick (Fig. A:7). Remove the dipstick, wipe the end with a piece of clean tissue or lint-free cloth to remove the oil film. Re-insert the dipstick fully then withdraw it again to check the level.

If the level is low, remove the oil filler cap from the rocker cover (Fig. A:5) and add oil to bring the level to the upper mark on the dipstick. Wait for a minute or so to allow the fresh oil to reach the sump before taking the dipstick reading. The level should not be above the upper mark. When the level is correct, refit the oil filler cap.

Do not overfill as this may result in oil leaks and increased oil consumption.

Changing Engine Oil & Filter

The engine oil and filter should be changed at the recommended service intervals or more frequently under severe operating conditions. The most severe type of operation, and that which gives rise to a sludge formation inside the engine, is light engine loading, slow engine speeds and short journeys where the engine never reaches normal operating temperature. High speeds over long distances are generally kinder to the engine. Modern multigrade engine oils contain additives which go a long way towards preventing sludge formation, but even these have certain limitations.

The oil should be changed when the engine is warm, after a run. Unless you have access to a pit, it will be necessary to raise the front of the car, either by jacking up as described previously, or by driving the front wheels up car ramps.

NOTE: Before attempting to drive the car onto the ramps for the first time, check that there is sufficient clearance under the front spoiler or valance to avoid damage.

Place a suitable container under the engine sump drain plug. This is located under the rear of the sump pan (Fig. A:8). An old 5-litre oil can with the side cut out is ideal for this operation.

Undo the drain plug using a universal drain plug spanner with a male fitting and drain the oil into the container. While the oil is draining, clean the sump plug and check the condition of the sealing washer. If in doubt, fit a new washer.

When the oil has completely drained, refit the plug and tighten it. Do NOT overtighten as difficulty will be met when draining next time.

The oil filter is of the throw-away cartridge type, and is located on the side of the engine block.

On most engine types it is possible to remove the filter from within the engine compartment, although on some engines, access is better from below. Place a suitable container under the filter to catch any oil spilt during removal.

It should be possible to unscrew the filter by hand, but if not, a special strap wrench, such as that shown in Fig. A:9 will be required to release it. A strap wrench can usually be obtained quite cheaply from a local car accessary shop.

Unscrew the filter from the engine and discard it. Thoroughly clean the filter sealing flange on the engine block to remove all traces of oil and dirt.

Make sure the rubber sealing ring on the new filter is correctly located, and then apply a smear of clean engine oil to the sealing ring.

Screw the new filter into position until the sealing ring just contacts the mounting flange, then tighten a further 3/4 turn. Do NOT overtighten the filter as this may distort the sealing ring and give rise to oil leakage.

The engine oil should be added in two stages. Pour into the engine filler hole, the amount of oil corresponding to the sump capacity given in TECHNICAL DATA.

Run the engine for a few minutes to circulate the oil, then stop the engine and check the dipstick level as detailed previously. Top-up the level to the upper mark on the dipstick as the new filter will have absorbed approximately 0.25 litres.

NOTE: It is illegal to dispose of old oil by tipping it down the drain or burying it in the ground. Most local councils have a facility for oil disposal and use should be made of this. Alternatively, a local garage may be willing to dispose of the oil for you.

Oil Leaks

If oil is required more often than normal, suspect engine wear or an oil leak. Check first around the engine for obvious signs of oil leakage and then the exhaust for excessive 'smoking'.

Also check the underside of the engine for leaks at the following places: Oil sump drain plug, oil filter mounting flange, generally around the timing gear end of the engine.

If any evidence of oil leakage is found, the area should be wiped clean, then the engine run to confirm the source. If the leak is serious, remedial action should taken as soon as possible.

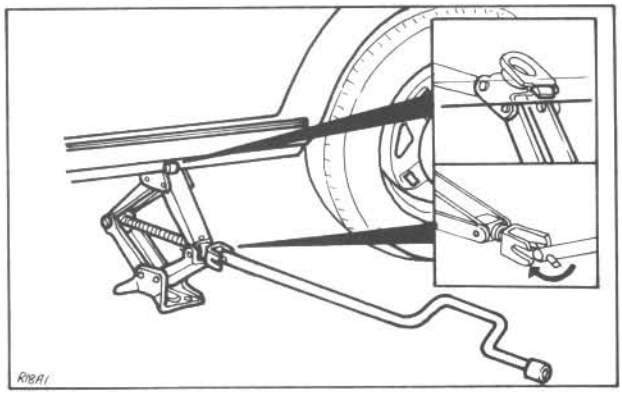

Fig. A:1 Details of car jack location

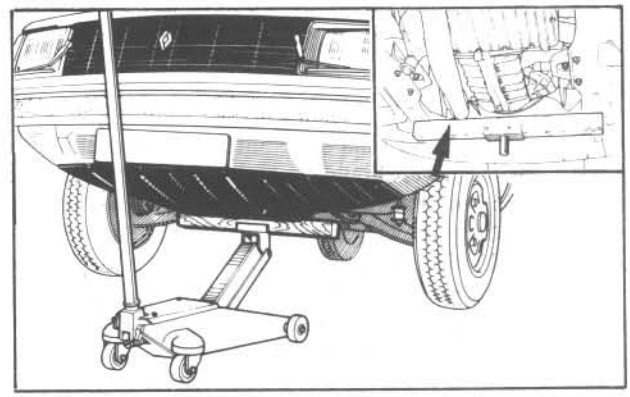

Fig. A:2 Method of raising front of car

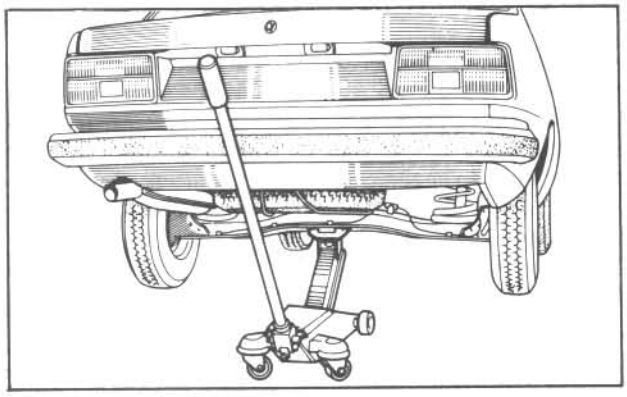

Fig. A:3 Method of raising rear of car

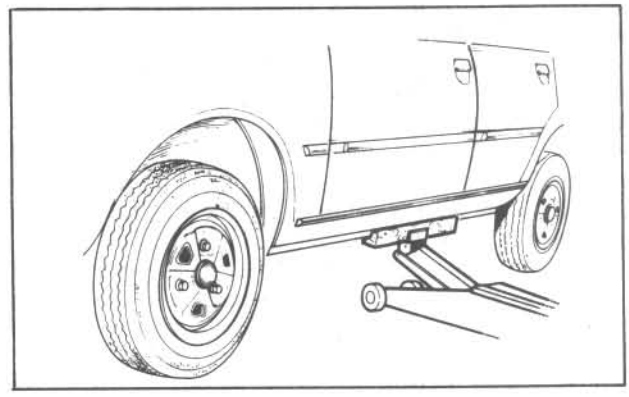

Fig. A:4 Raising side of car with wood spacer block

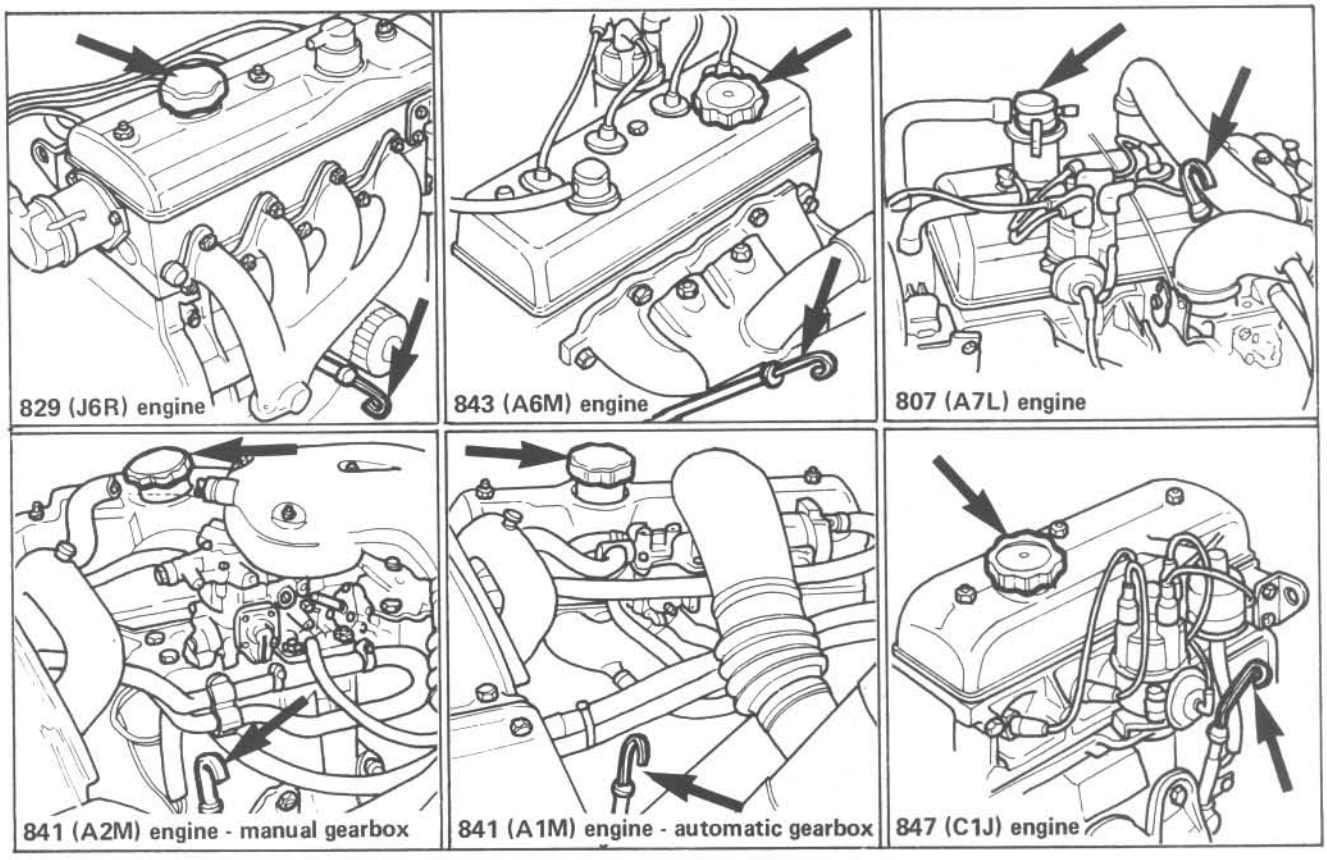

Fig. A:5 Engine oil dipstick and filler cap locations

GEARBOX OIL .....[4]

Oil Level

The gearbox and final drive units share a common oil supply. The oil level should be checked after the car has been standing on level ground for some time, as foaming of the oil during use will cause the level to rise and give an incorrect indication of the oil level.

In many cases, if a pit is not available, the car will need to be raised and supported by an equal amount at both ends to give access to the gearbox.

The oil level is checked at the filler/level plug hole on the side of the gearbox - see Fig. A:10, and a special drain plug key, (obtainable from most car accessory shops) may be required to remove the plug if it has a square socket head (Fig. A:10).

The gearbox oil level is correct when it reaches the lower edge of the hole. If necessary, top-up the level with the correct grade of oil as specified in the TECHNICAL DATA using a plastic 'squeeze' bottle with a flexible tube attached.

When the level is correct, refit the plug and tighten it sufficient to seal but do not overtighten. The gearbox/final drive oil should be changed periodically as detailed in the Service Schedule. Undo the drain plug (Fig. A:10) and drain the oil into a suitable container. Refit the drain plug and refill the gearbox to the correct level - see TECHNICAL DATA for capacity and oil grade.

NOTE: Lack of oil in the gearbox can only result from leakage, and this should be investigated if the level is low.

AUTOMATIC TRANSMISSION .....[5]

Fluid Level

The fluid level in the automatic transmission should be checked periodically.

The fluid level is best checked immediately after a short run when the fluid will have reached its normal operating temperature.

With the car standing on level ground, apply the handbrake fully, and with the engine idling, move the manual selector lever through all positions at least three times. Now move the selector lever to the P (Park) position, and allow the engine to idle for a further one to two minutes.

The fluid level dipstick is located in the transmission filler tube at the rear of the engine (Figs. A:11 & A:12) depending on the engine type.

With the engine still idling, clean the outside of the filler tube to prevent dirt from entering the transmission, then withdraw the dipstick and wipe the end clean with a tissue or lint-free cloth. Reinsert the dipstick fully into the filler tube and when withdraw it again immediately.

Check the fluid level indicated on the dipstick - it should be between the two marks inset in Figs. A:11 & A:12.

NOTE: The dipstick has 'Hot' upper 'Cold' lower level markings, select the appropriate mark for the level reading.

If the level is low, top-up with the specified type of automatic transmission fluid - see TECHNICAL DATA, through the dipstick tube, using a clean funnel and a suitable piece of tubing as necessary. Automatic transmission fluid is normally obtainable in plastic 'squeeze' bottles with a flexible spout.

Take great care to avoid overfilling the transmission this will cause the fluid to become aerated with subsequent overheating of the transmission. The transmission will only work properly when the fluid level is correct.

NOTE: The importance of cleanliness cannot be overemphasised when checking or topping-up the fluid level as the slightest trace of dirt or incorrect oil may cause damage to the transmission.

Fluid Change

The fluid in the automatic transmission should normally be changed every 40,000 miles or 4 years. However, under arduous operating conditions, such as when towing a caravan for a high mileage or over mountainous terrain, it is advisable to change the fluid more often.

A drain plug is fitted to the transmission oil pan or casing depending on the type (Figs. A:13 & A:15), and this should be removed to drain out the fluid. A universal drain plug spanner with a male fitting will be needed to undo the plug. This tool can normally be obtained from most car accessory shops.

Place a suitable container of adequate capacity under the transmission to catch the fluid. Clean, refit and tighten the drain plug securely but do not overtighten.

Refill the transmission with the specified type of automatic transmission fluid - see TECHNICAL DATA.

The amount of fluid required for a fluid change is 2.0 - 2.5 litres, depending on how much fluid has drained from the torque converter.

First, pour in approximately 2 litres of fresh fluid into the transmission filler tube, using a funnel and suitable length of tube as necessary.

With the handbrake and footbrake fully applied, start the engine and allow it to idle. Move the manual selector lever through all the positions with the car stationary.

Now check the fluid level as detailed previously. Add fluid as necessary to bring the level up to the Cold full mark on the dipstick.

Drive the car for a short distance until the engine and transmission fluid reaches normal operating temperature. Recheck the fluid level as detailed previously and top-up to the Hot level mark on the dipstick if necessary.

NOTE: A low fluid level in the transmission can only result from leakage, and the cause should be investigated as soon as possible to avoid damage to the transmission.

BATTERY .....[6]

Electrolyte Level

Some Renault 18 and Fuego models are equipped from new with a 'maintenance-free' battery which, as the name suggests, should require no attention. These batteries

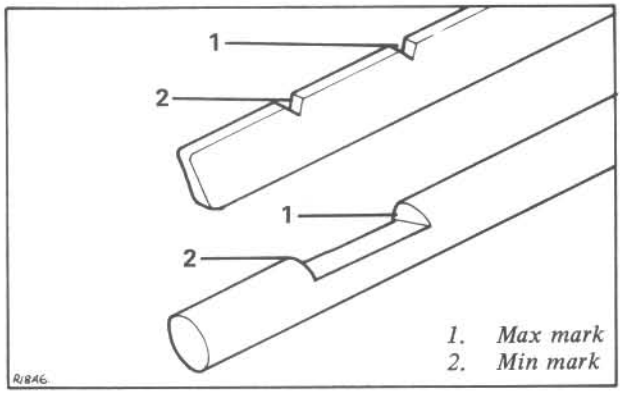

Fig. A:6 Dipstick oil level markings

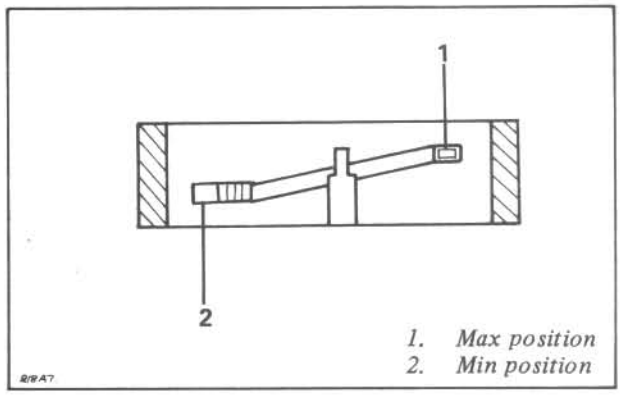

Fig. A:7 Oil level indicator markings

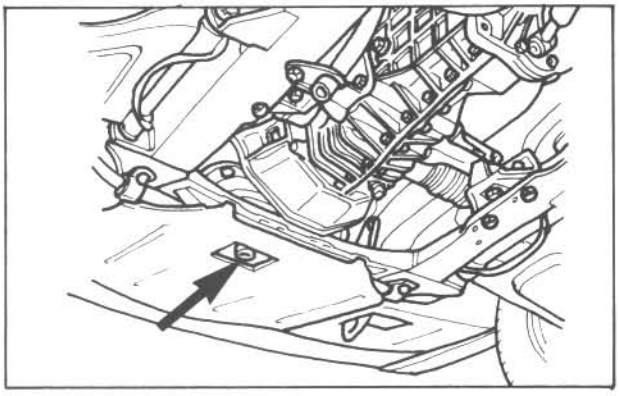

Fig. A:8 Location of engine sump drain plug

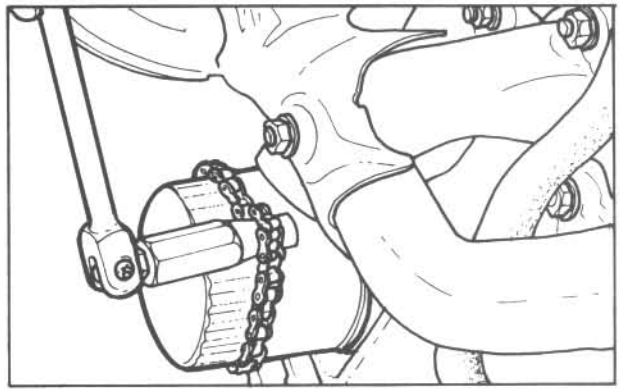

Fig. A:9 Undoing oil filter with strap wrench

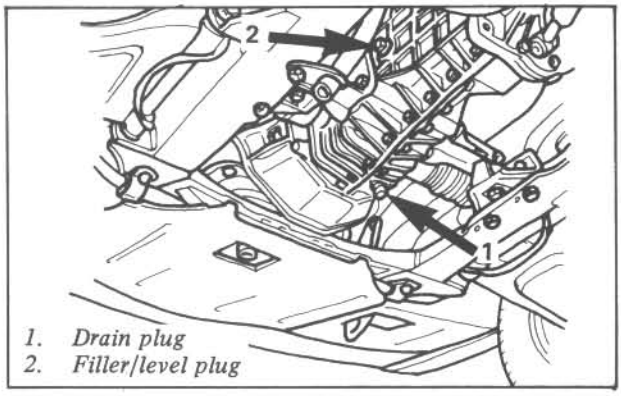

Fig. A:10 Location of manual gearbox filler/drain plugs

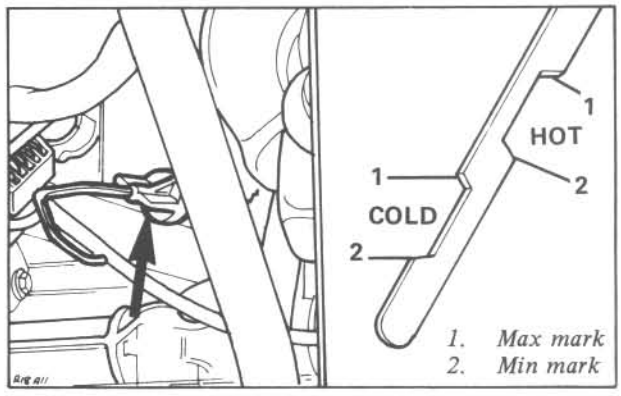

Fig. A:11 Auto transmission fluid dipstick - 843 engine

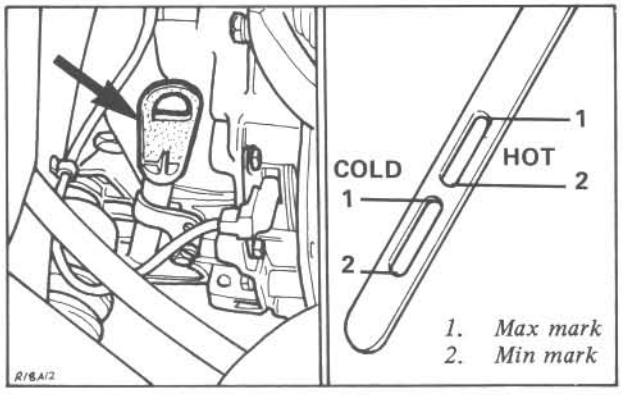

Fig. A:12 Auto transmission fluid dipstick - 841 engine

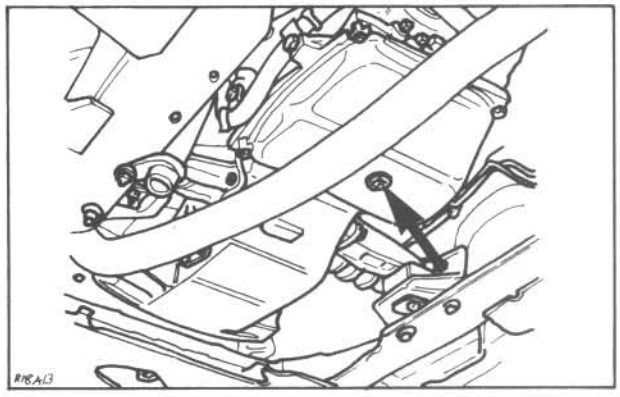

Fig. A:13 Auto transmission drain plug - 843 engine

can be identified by a non removable cell cover and by a sticker on the casing.

On conventional batteries the level of the electrolyte should be checked periodically and distilled (deionised) water added if the level in any cell is below the separators, or the bottom of the filling tube on trough-filled batteries. In some cases the battery casing is translucent to allow the level to be checked without the need for lifting the vent cover. Do not overfill the battery. It is good practice to run the car immediately after topping up the battery, especially in cold weather, to ensure thorough mixing of the acid and the water and so prevent freezing.

If the battery is found to need frequent topping up, steps should be taken to find out the reason. For example, the battery may be receiving an excessive charge due to a malfunction of the voltage regulator, causing too high a charge voltage. In this case the charging system should be properly tested and the fault rectified as soon as possible - see ENGINE ELECTRICS. If one cell in particular needs topping up more than the others, check the battery case in the vicinity of that cell for cracks or splits causing leakage. If there are signs of an electrolyte leak the source should be traced and corrective action taken.

State of Charge

If a sealed-for-life (maintenance-free) battery is fitted, the state of battery charge cannot be accurately checked as there is invariably no access to the cells for the purpose of carrying out a hydrometer test. In this case it is best to remove the battery from the car, fully charge it and then take it to a battery agent for testing with a heavy-discharge tester.

The state of charge of an unsealed battery can be determined by checking the specific gravity of the electrolyte in each cell with a hydrometer, taking care not to spill any electrolyte onto clothing or skin as it is highly corrosive. Proceed with checking as follows:

1. Unscrew the cell caps or pull off the plastic cover (depending upon the type of battery) then squeeze the hydrometer bulb and insert the end of the hydrometer into the first cell (Fig. A:16).
2. Release the bulb slowly - this will draw electrolyte into the hydrometer and lift the float in the hydrometer tube with it.
3. Observe the point on the float scale with which the electrolyte level coincides and note the reading - this is the specific gravity of the cell.
4. Raise the hydrometer slightly and gently squeeze the bulb to release all the electrolyte back into the cell. Remove the hydrometer and repeat the operation on the other cells. A specific gravity reading of at least 1.275 should be obtained if the battery is fully charged, or 1.120 if discharged.

If consistently low readings are obtained, the battery should be charged and the state of charge rechecked after leaving the battery for about an hour. The procedure for charging the battery is given in BASIC PROCEDURES. If the reading is still low, the battery should be replaced.

Battery Connections

To ensure good electrical contact, the battery cables should be tight on the battery posts. If the battery posts or cable clamps are corroded, the cables should be disconnected and the terminals and posts cleaned with a soda solution and a wire brush. When reconnecting the clamps to the battery posts, a thin coating of petroleum jelly (not grease) should be applied. The battery earth strap and the engine earth strap should also be checked for proper connection and condition.

COOLING SYSTEM . . . . . [7]

Coolant Level (Fig. A:17)

The coolant level should be checked at least once a week and always before a long run, and topped up as necessary. Check the level when the engine is cool. The level can be seen through the translucent plastic expansion tank mounted on the offside (driver's side) of the engine compartment, seen from the front. The coolant level should be between the MINI and MAXI marks.

To top up the coolant level unscrew the pressure cap on the expansion tank, and remove it. Top up the level with a water/anti-freeze mixture in the correct proportions as described below, until the level is correct and is up to the MAXI mark. Refit the pressure cap.

Anti-freeze

Because of the ability of anti-freeze to lower the boiling point of the coolant it is recommended that an 'All Season' type anti-freeze is used permanently in the cooling system to afford maximum protection against both freezing and overheating. The presence of a corrosion inhibitor will also help to prevent corrosion and the formation of scale in the system.

During the winter months an anti-freeze mixture MUST be used to protect against frost damage. The concentration of the anti-freeze solution will depend on the degree of protection required and dilution should be carried out in accordance with the anti-freeze manufacturer's instructions. The concentration of anti-freeze should not fall to less than 30% by volume.

Before filling the system with anti-freeze solution, inspect all hoses, hose connections and cooling system joints. Tighten or renew where necessary. After adding the anti-freeze, run the engine up to normal operational temperature and check for leaks. A label should be attached to the front panel to record the date of filling.

The anti-freeze concentration in the system should be checked periodically and in any case before the beginning of the winter season or before travelling to a colder climate. If possible the specific gravity of the coolant should be checked with a suitable hydrometer and brought up to the required strength as necessary. The specific gravity of a 50% solution should be 1.073 providing no other additives are in the coolant.

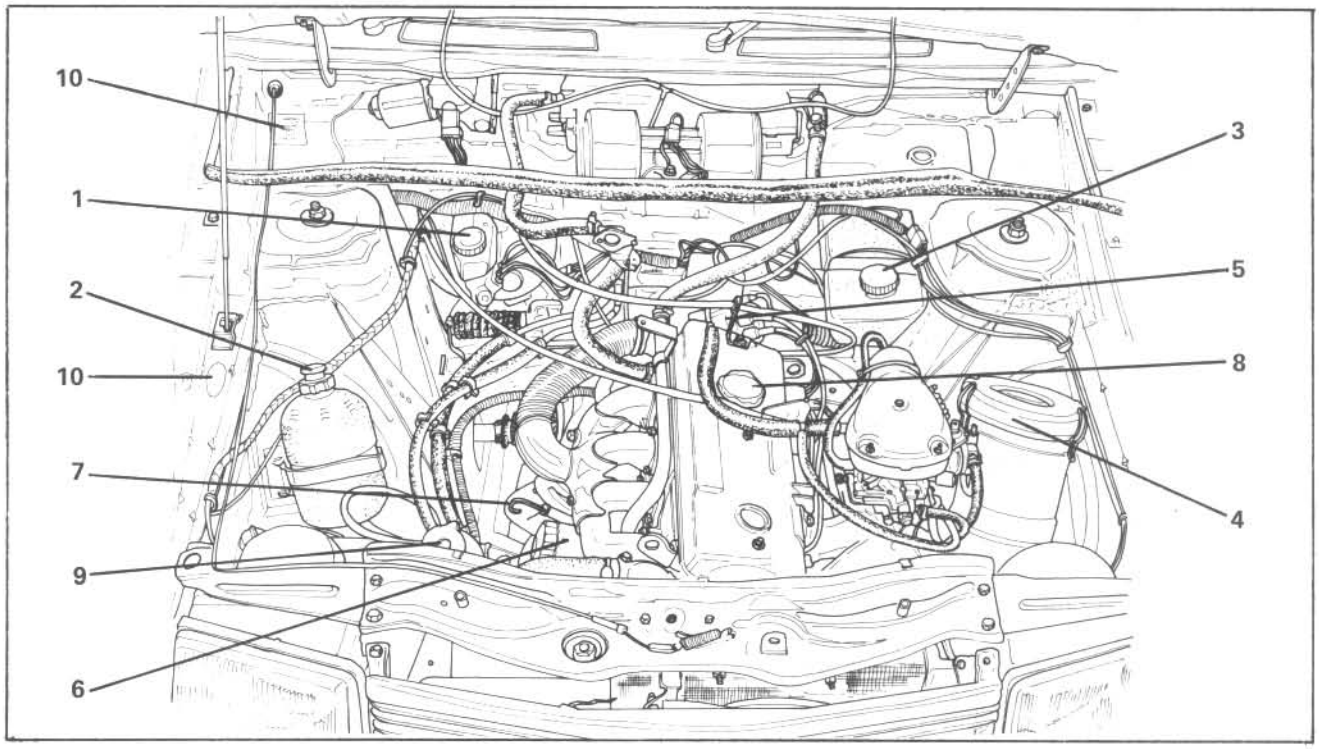

1. *Brake fluid reservoir*
2. *Radiator expansion bottle*
3. *Screen washer reservoir*
4. *Air filter*
5. *Distributor*
6. *Oil filter*
7. *Oil level dipstick*
8. *Oil filler cap*
9. *Power steering fluid reservoir*
10. *Vehicle Identification plate location*

Fig. A:14 Renault 18/Fuego engine compartment - 829 (J6R) engine type shown

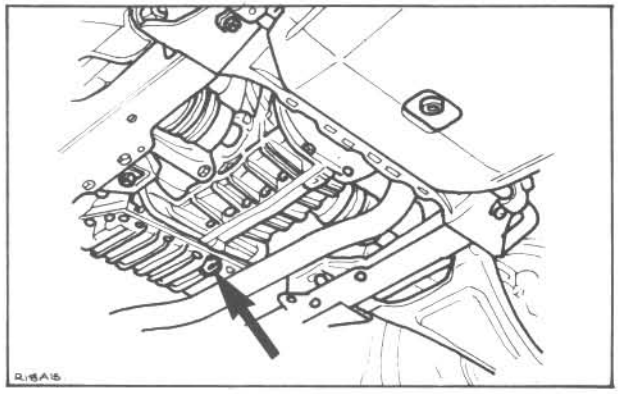

Fig. A:15 Auto transmission drain plug - 841 engine

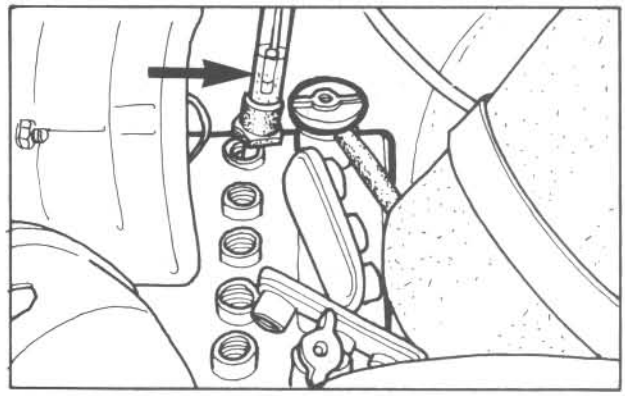

Fig. A:16 Checking battery specific gravity

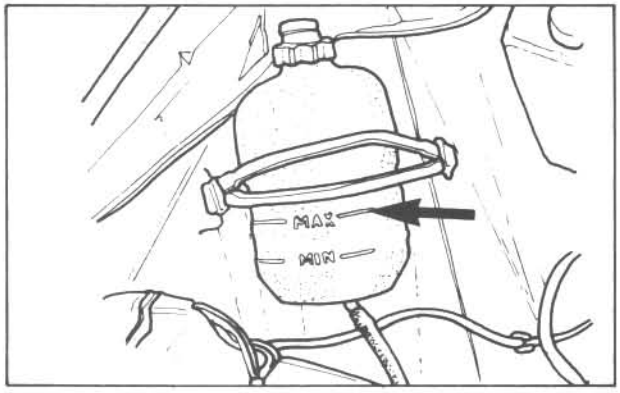

Fig. A:17 Check/top up coolant level to MAX mark

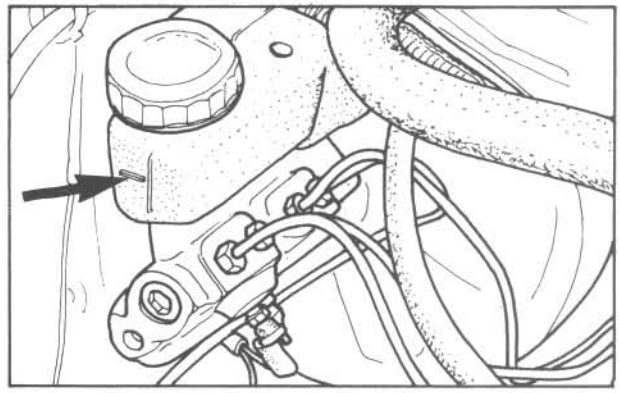

Fig. A:18 Check brake fluid level (arrowed)

The cooling system should be completely drained, flushed and refilled with a fresh mixture of anti-freeze and water every two years or as often as is recommended by the anti-freeze manufacturer.

Hoses - Checking Condition

The hoses, hose connections and system joints should be checked periodically for leaks especially before the coming of winter or when filling the system with anti-freeze.

Examine each hose in turn, looking for deterioration, indicated by cracks, separation of the layers, swelling or excessive softness of the rubber. Also inspect them for chafing damage due to contact with other components. Replace any hoses that are suspect.

Check that the hose clips are secure and in good condition. Tighten or replace as necessary - see COOLING SYSTEM chapter.

Draining and Refilling

Full details of the draining and refilling procedure are given under the appropriate heading in the COOLING SYSTEM chapter later in this manual.

BRAKE FLUID LEVEL . . . . . [8]

The brake fluid level on all models is monitored by a float inside the reservoir. If the level drops due to a leak, the float drops and a warning light in the fascia illuminates. However, a quick inspection of the translucent reservoir whilst working under the bonnet will not be wasted. If the fluid level falls excessively, or requires frequent topping up, this indicates a leak in the braking system, and steps should immediately be taken to establish the cause and deal with it.

If topping up is necessary, clean the area around the filler cap before unscrewing it (Fig. A:18). Use only the brake fluid specified in TECHNICAL DATA. Check that the vent hole in the filler cap is clear before refitting the cap.

Any spilled brake fluid should be wiped up and washed away immediately as it damages paintwork. Throw away the rag or it may accidentally spread the chemical.

It is recommended that the fluid in the brake system should be changed completely every 18,000 miles or every 18 months. This is because the fluid absorbs moisture (hygroscopic) which lowers the boiling point of the fluid and could result in vapour locks with a consequential loss of braking. Moisture in the brake fluid can also promote premature failure of the system components by corrosion.

A fluid change is achieved using the sequence detailed under Bleeding the Brakes in the BRAKES chapter, repeating the operation until all the air bubbles are gone and the new clean fluid emerges from the bleed nipples.

AIR FILTER. . . . . [9]

The air filter fitted inside the air cleaner housing should be replaced every 20,000 miles or two years. If the car has been used extensively in dusty conditions, the filter should be changed more often. On models with the 847 engine (Fig. A:19) undo the wing nut, screws and clips holding the lid. The air filter on all other models is of the remote type (Fig. A:20). Undo the central wing nut (and clips if fitted) and detach cover to remove filter element. On both types of filter, wipe the inside of the casing clean, to remove any accumulation of oil, dust and dirt. Fit a new element and refit the lid. Do not over-tighten the crosshead screws.

DISTRIBUTOR. . . . . [10]

Lubrication (Not "Cassette" Type)

The distributor fitted may be made by Ducellier or SEV Marchal. Only the Ducellier distributor should be lubricated periodically as follows:

Unclip and remove the distributor cap, and pull off the rotor arm from the central spindle.

Apply one or two drops of clean engine oil to the felt wick at the top of the cam spindle (Fig. A:21).

The distributor cam should also be lubricated whenever the contacts are adjusted or replaced. With the rotor arm removed, lightly smear the cam with petroleum jelly or high melting point grease. Use a screwdriver to distribute the lubricant uniformly over the cam surface, taking great care not to get any grease near the contact points.

When the cam is rotated, a small fillet of lubricant should be built up on the back of the points rubbing block.

Avoid over-lubricating. Carefully wipe away any surplus grease and check that the contacts are clean and dry.

Refit the rotor arm and distributor cap. See Tune-Up chapter for details of contact breaker inspection and replacement.

DRIVE BELTS . . . . . [11]

Tension - Alternator/Water Pump

On all engines both the alternator and water pump are driven by a 'V' drive belt, from the crankshaft pulley.

It is important that the correct tension of the 'V' drive belt is maintained to ensure efficient operation of the electrical, and the cooling systems. Too great a tension will place excessive strain upon the alternator or water pump bearings, excessive slackness will allow the belt to slip causing inefficient operation of the cooling and charging systems as well as premature drive belt wear.

To test the belt tension, press the belt down at a point midway between the pulleys as shown in Figs. A:22 and A:23 using firm thumb pressure. The belt should deflect by a maximum of 7-8 mm. If retensioning of the belt is necessary, slacken the alternator mounting bolts (Figs. A:22 & A:23). The lower bolts can only be reached using a socket wrench and short adaptor. Pull or lever the alternator away from the engine, applying any force to the drive end bracket only, until the correct tension is obtained.

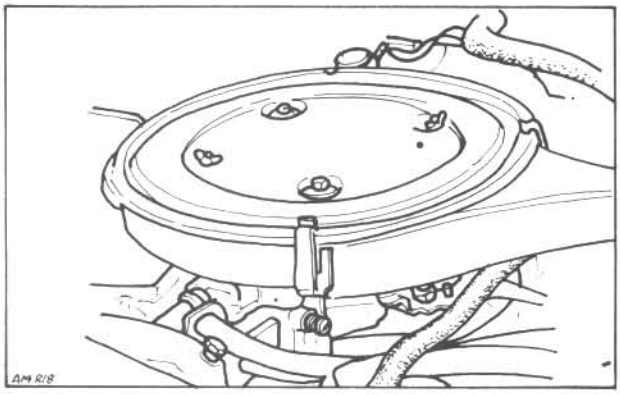

Fig. A:19 Air filter on 847 engine models

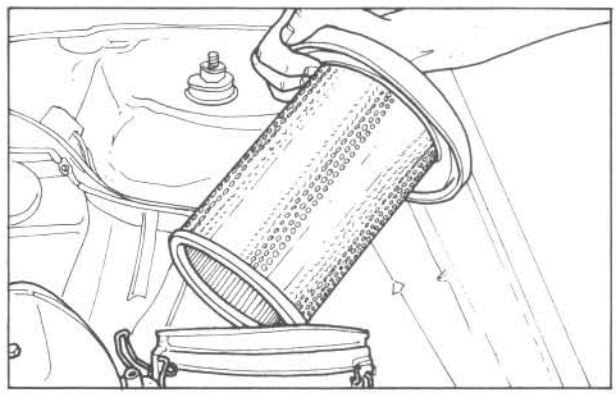

Fig. A:20 Removing element on remote type air filter

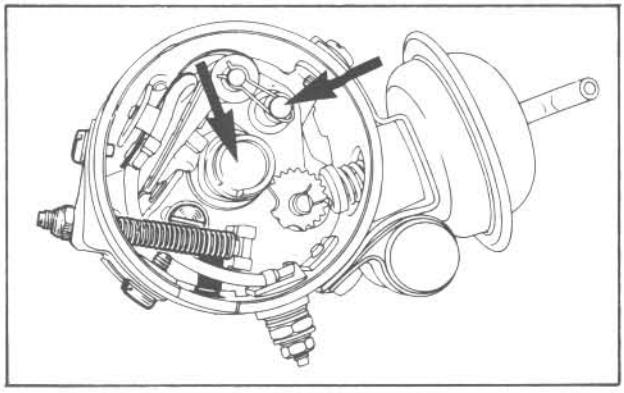

Fig. A:21 Ducellier distributor lubrication points

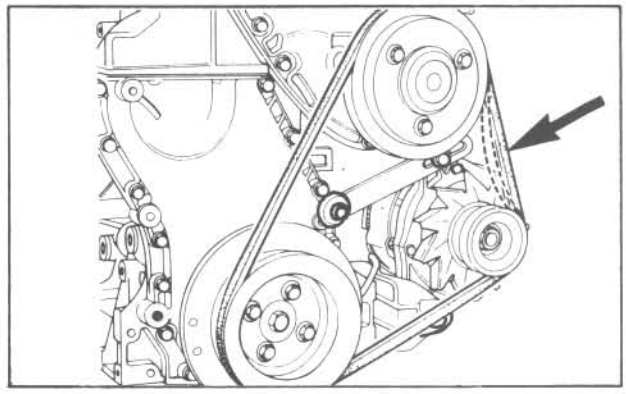

Fig. A:22 Alternator drive belt tension - 807/829/841 engines

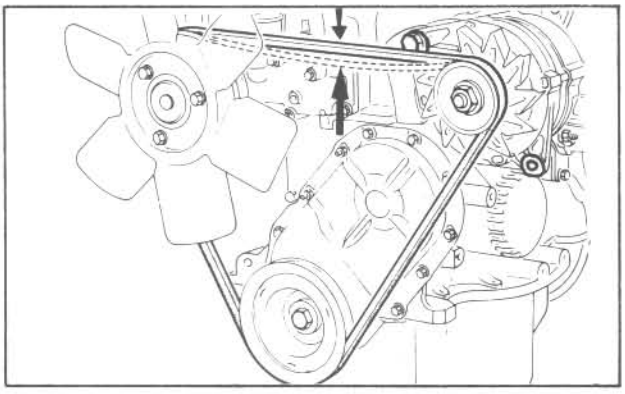

Fig. A:23 Alternator drive belt tension - 843/847 engines

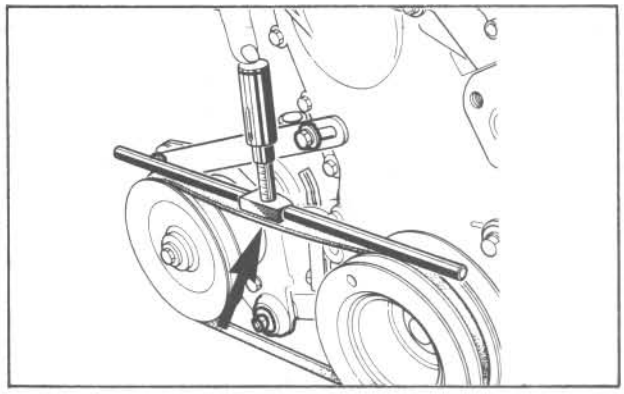

Fig. A:24 Power steering pump belt tension

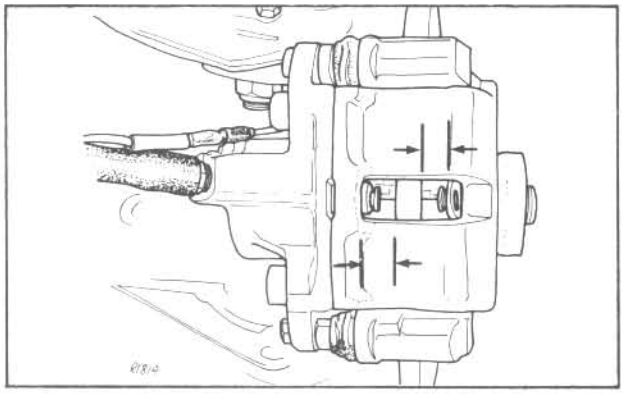

Fig. A:25 Checking disc brake pad thickness (arrowed)

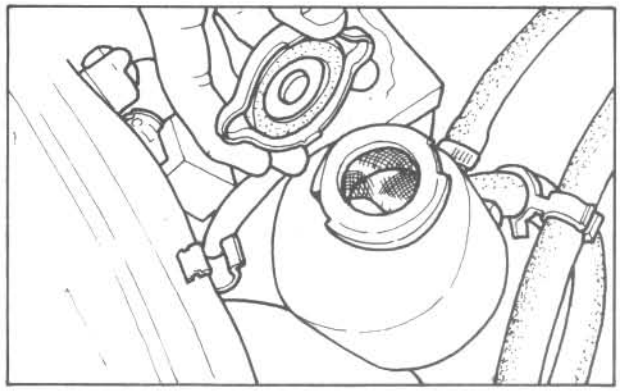

Fig. A:26 Check/top up power steering fluid level

Tighten the adjustment bolts and recheck the tension. Readjust as necessary.

NOTE: If a new belt has been fitted, the tension should be rechecked after approximately 100 miles as it will stretch after initial use.

Replacement

Check the condition of the drive belt periodically and replace it if it is excessively worn, stretched or showing signs of fraying. The belt should be replaced as a matter of course every 2 years or 24,000 miles.

To replace the drive belt, proceed as detailed for adjustment previously and detach the belt from the pulleys. On power steering models it will be necessary to remove the power steering belt first. Fit the new belt and adjust the tension as detailed previously. On power steering models, refit and tension the pump belt as detailed in the following section. Run the engine at a fast-idle for about 5 minutes, then recheck the belt tension. Do not attempt to lever a new belt onto the pulleys as this will damage both belt and the pulleys.

NOTE: The tension of a new belt should be rechecked after approximately 100 miles as it will stretch after initial use.

Tension - Power Steering

The power steering pump is driven from the crankshaft pulley by a V-drive belt (Fig. A:24). It is important that the correct tension of the drive belt is maintained to ensure efficient operation of the power steering. Too great a tension will place excessive strain upon the pump bearings, and excessive slackness will cause loss of steering assistance as well as causing undue wear on the belt.

To test the belt tension press down on the top run of the belt. Under a firm pressure the belt should deflect about 5.5-6.5 mm.

If retensioning of the belt is necessary, slacken the pivot bolts holding the pump to the engine and the tensioning strap. Lever the pump away from the engine, applying any force to the drive end bracket only using a soft metal or wooden lever until the correct belt tension is obtained. Tighten the adjustment bolt, then the pivot bolts and recheck the tension.

Replacement

Check the condition of the drive belt periodically and replace if excessively worn, stretched, nicked or cut. The belt should be replaced as a matter of course every 2 years or 24,000 miles. To replace the drive belt, proceed as for adjustment and detach the belt from the pump and crankshaft pulleys. Fit the new belt and adjust the tension as described previously. Run the engine at 1,000 rpm for five minutes, then recheck the tension.

Do not attempt to lever a new belt onto the pulleys as this will damage the belt and pulleys.

NOTE: The tension of a new belt should be checked after approximately 100 miles as it will stretch after initial use.

BRAKES.....[12]

Front Brake Pads

Certain models are fitted with a brake pad wear warning light. As the pad wears down to the minimum pad thickness, a wire in the pad is broken by the brake disc and the instrument panel warning light operates.

On all models, the front brake pads should be checked for wear every 5,000 miles or 6 months as follows:

Slacken the front wheel nuts or bolts, then jack-up the front of the car and remove each front wheel in turn. The thickness of the pads can be checked by looking into the end of the caliper as shown in Fig. A:25.

Measure the distance between the face of the pad backing plate and the contact face. When this distance is reduced to, or approaching 1/8 in (3 mm), or less, then the pads must be replaced.

NOTE: Whenever one or more pads require replacement, both pads on both front brakes should be replaced as a set otherwise brake balance will be affected.

If the pads are not to be replaced, make sure that enough pad material remains to allow the car to run until the next scheduled service check.

The procedure for replacing the brake pads is detailed in the BRAKES chapter. After checking the brake pads, refit the road wheels and lower the car to the ground. Tighten the wheel nuts or bolts.

Rear Brake Pads (R18 Turbo Only)

1983 R18, Turbo models are fitted with disc type rear brakes. The pad wear check procedure is similar to that detailed for checking the front brake pads.

Rear Brake Linings

The rear brake drums will have to be removed in order to check the thickness of the shoe linings. This should be done every 10,000 miles or yearly, as follows:

Remove both rear brake drums as detailed in the BRAKES chapter.

Using a cloth soaked in Methylated Spirit, clean all dust and dirt from the shoes and linings.

If the lining thickness is 1/16 in (1.5 mm) or near to it at any point, then the shoes should be replaced as detailed in the BRAKES chapter. The rear brake shoes are self-adjusting, and do not require regular adjustment.

Handbrake Cable Adjustment

The handbrake should be checked to ensure it is operating correctly. When correctly adjusted, the handbrake lever should travel at least nine notches before locking the rear wheels. Check that the cable follows its correct run and is correctly located in its guides.

Lubricate the cable sparingly with grease at the equaliser bracket and where the cable enters the outer sleeves. Lubricate all pivot points and check that they are operating freely.

As stated above, the handbrake should not normally

require adjustment as any free-play should be taken up automatically by the rear shoe adjuster mechanism. However, if movement at the handbrake lever is insufficient or excessive, the cable should be adjusted as detailed in the BRAKES chapter.

Hoses, Pipes & Seals

A visual check of flexible hoses and all rigid brake pipes should be carried out at every 5,000 mile or 6 monthly service, also every time that the car is off the ground for any reason. Look for leaks, damage, chafing and corrosion. Flexible hoses can be gently twisted and examined for cracking. Although the rigid pipes are covered with a plastic material, if chipped then corrosion can still occur. Any component which is suspect should be changed immediately. See the relevant sections in the BRAKES chapter.

As preventative maintenance, all fluid seals should be regularly inspected and replaced if necessary. Because the seals in the wheel and master cylinders are designed to work with brake fluid as a lubricant, a small seepage past the seal into the protective boot is expected. However, the amount of fluid at this point should be minimal. A drain hole is fitted to the master cylinder boot from which a minimal seepage is acceptable. If any seal is found to be leaking a large amount of fluid all of the seals should be replaced as a safety measure.

The procedures for replacing the brake seals in the various hydraulic components are fully described under the appropriate headings in the BRAKES chapter.

CLUTCH ADJUSTMENT . . . . . [13]

Clutch cable adjustment is done at the lower end of the cable, from under the car (Fig. A:28).

Pull up the clutch pedal to its stop and push the operating lever away from the adjusting nut. Measure the gap between the inner adjustment nut on the cable and the clutch operating lever. It should be 2.5 mm. If necessary, adjust the clearance by slackening the cable locknut and turning the adjusting nut until the correct clearance is obtained. Tighten the locknut and recheck the clearance afterwards.

WHEELS & TYRES . . . . . [14]

Tyre Pressures

The tyres should be checked and adjusted to the recommended pressures where necessary at least once a week. Check the pressures when the tyres are cold as tyre pressures may increase by as much as 6 lb/in^2 (0.4 kg/cm^2) when hot. The recommended inflation pressures are given in TECHNICAL DATA. The spare tyre should be set at the highest specified pressure and adjusted as necessary after fitting.

Incorrect inflation pressures will cause abnormal tyre wear and may result in premature failure. There is an average loss of 13% tread mileage for every 10% reduction in inflation pressure below the recommended figure.

When checking pressures ensure that the dust caps are refitted to the valves as, apart from keeping out dirt, they also provide a second seal to the valve.

The tightness of the wheel securing bolts should be checked at the same time as the tyre pressures.

Tyre Inspection

The tyres should be checked periodically for wear or damage. Check the depth of tread, preferably with a proper tread depth gauge. In the UK the minimum permissible tread depth is 1 mm, but tyres should be replaced before this level is reached as road holding and resistance to punctures will have been affected long before this point.

Check the tyre casing visually for cuts in the casing fabric, exposure of ply or cords, or the presence of lumps or bulges. If any of these conditions are present, the tyre should be replaced.

Abnormal tyre wear may be caused by improper inflation pressures, wheel imbalance, misalignment of front or rear suspension, or mechanical irregularities - see Fig. A:27. When rapid or uneven tyre wear becomes apparent, the cause should be established and dealt with as soon as possible.

Fins and feathering on the tyre tread surface are an indication of severe wheel misalignment. This condition takes the form of a sharp 'fin' on the edge of each pattern rib, and the position of this indicates the direction of misalignment. Fins on the outboard edges are caused by excessive toe-out, whereas fins on the inboard edges of the pattern ribs are caused by excessive toe-in.

Some mechanical defects which could be a cause of abnormal tyre wear are: slack wheel bearings, uneven brake adjustment, distorted brake discs, excessive wear or damage on the suspension components, slack or worn steering connections, or bent steering arms.

Wheel Balancing

Imbalance of the road wheels may cause axle tramp, vibration in the steering or abnormal tyre wear. To obtain maximum ride comfort and tyre life, the balance of the road wheels should be checked periodically. Since specialised knowledge and equipment are required for this operation, the work should be entrusted to your local Renault dealer or tyre specialist.

STEERING & SUSPENSION . . . . . [15]

Power Steering Pump Reservoir (Fig. A:26)

The fluid level in the power steering reservoir should be checked every 5,000 miles or 6 months. Remove the filler cap to check the fluid level which should be just above the bottom of the filter gauze. If necessary, top up the level using the correct fluid - see TECHNICAL DATA.

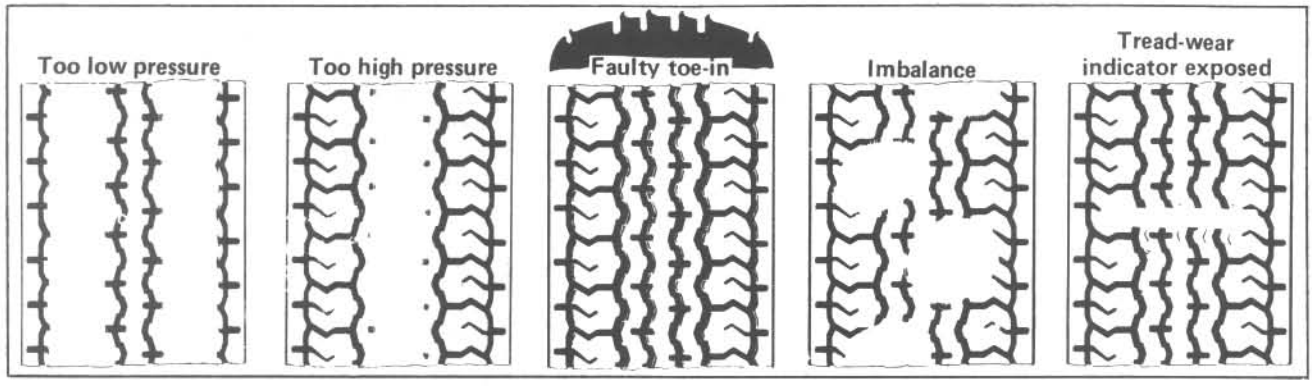

Fig. A:27 Examples of tyre tread wear and their causes

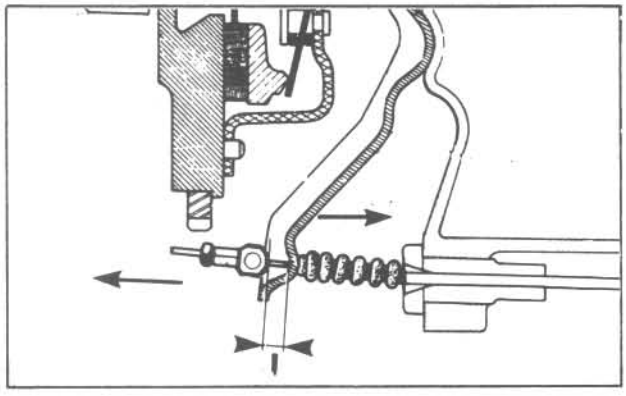

Fig. A:28 Clutch cable adjustment point

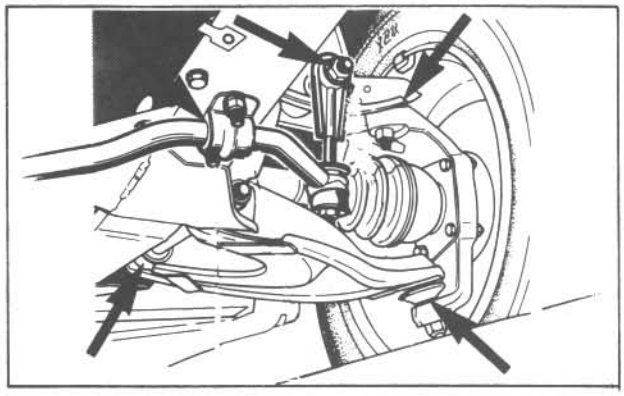

Fig. A:29 Front suspension ball joints and bushes

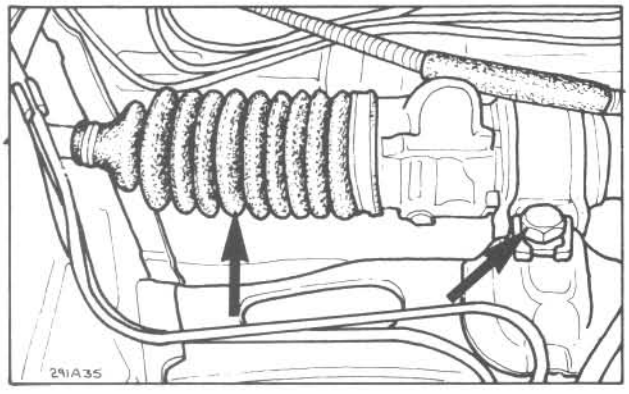

Fig. A:30 Check steering rack bellows for damage

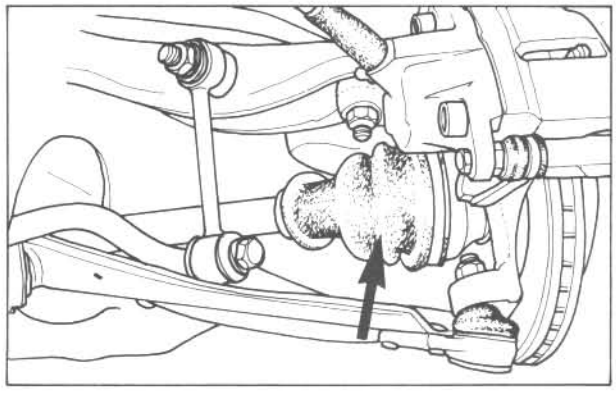

Fig. A:31 Check drive shaft boots for damage

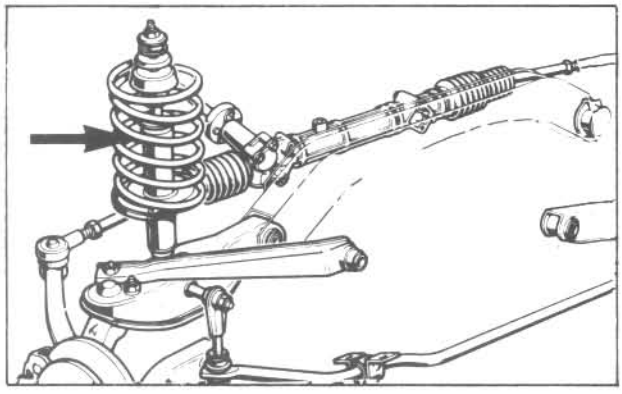

Fig. A:32 Checking front shock absorber for leaks

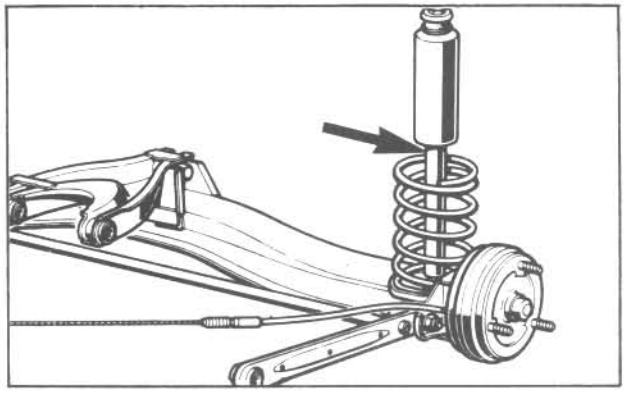

Fig. A:33 Checking rear shock absorber for leaks

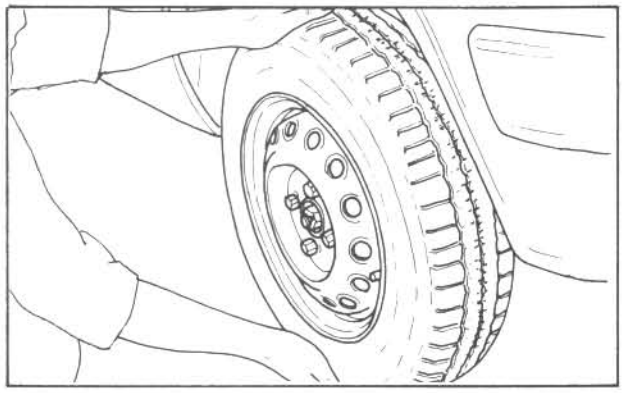

Fig. A:34 Method of checking for front wheel bearing play

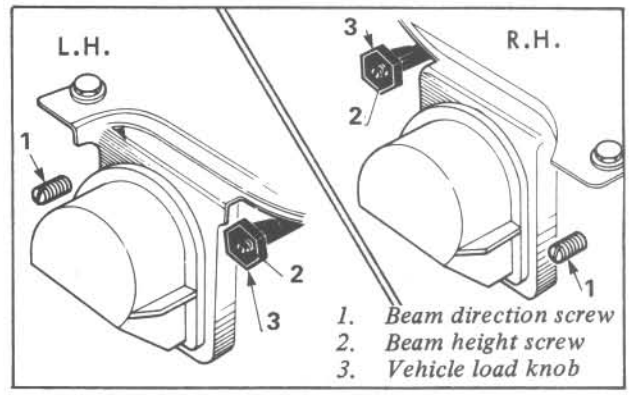

Fig. A:35 Headlight beam adjuster screws

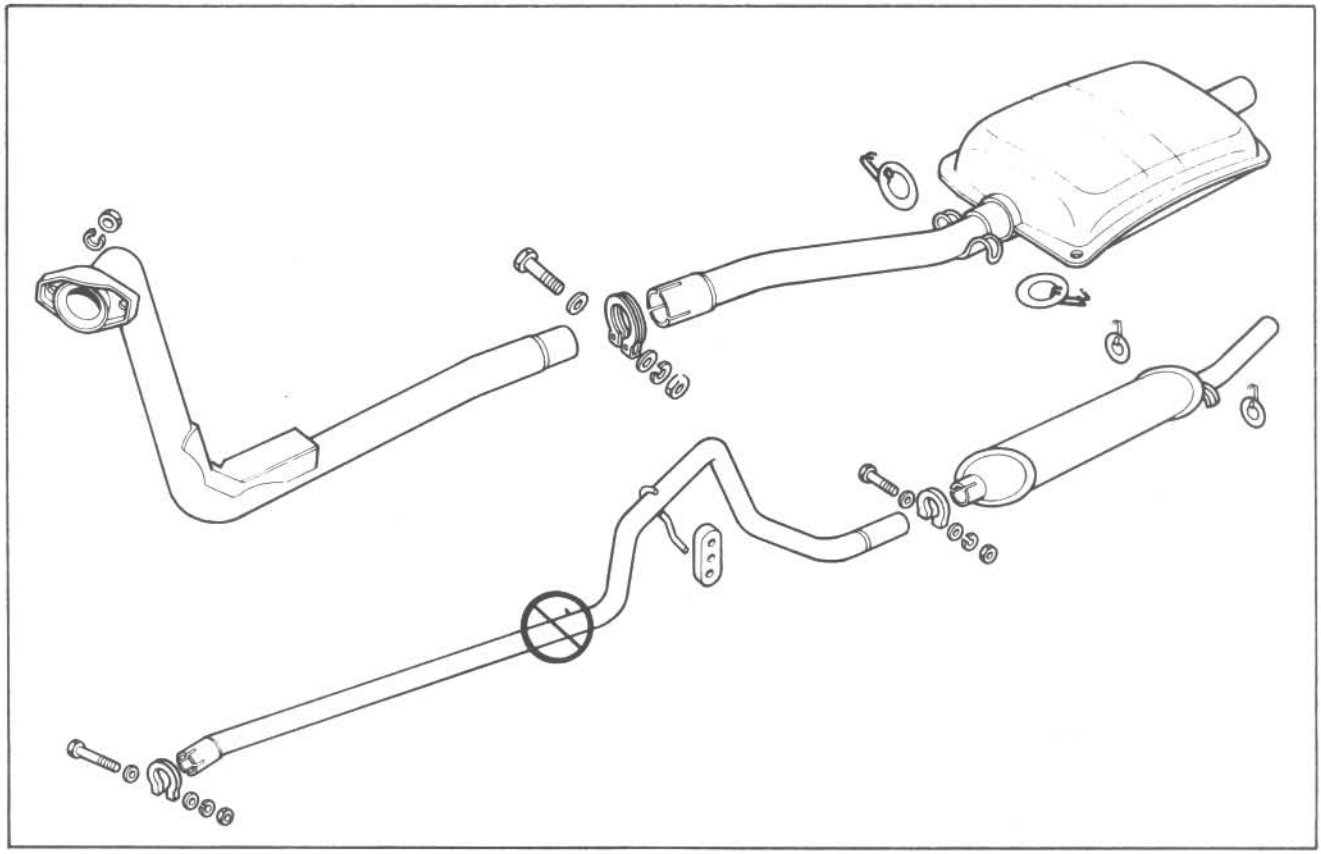

Fig. A:36 Renault 18 exhaust system showing pipe connections and support brackets

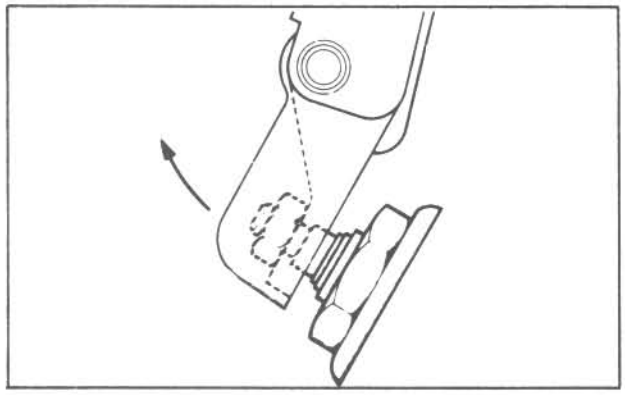

Fig. A:37 Lift cap to remove wiper arm from spindle

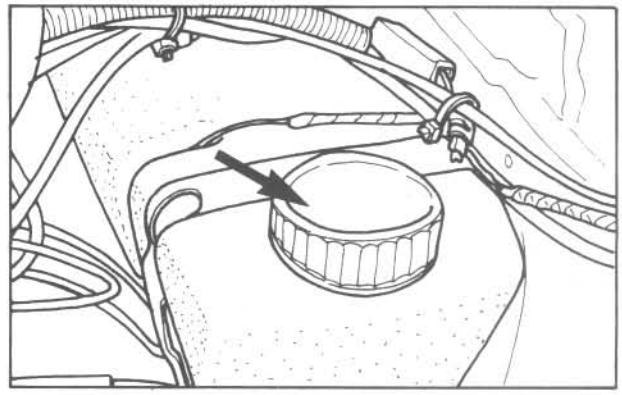

Fig. A:38 Check/top up screen washer fluid level

Ball Joints and Bushes

Check the steering and suspension ball joints for excessive movement indicating wear (Fig. A:29). There are ball joints at the top and bottom of the swivel hub and between the track rod ends and swivel hub. These joints are sealed for life and are not adjustable. The anti-roll bar and lower arm are located by rubber bushes.

With the car's wheels on the ground, watch the movement of the various joints while an assistant turns the steering wheel. Position a tyre lever between the suspension joints and lever apart. If there are signs of play of lift in any of the joints or bushes, new parts will be required. Refer to the FRONT SUSPENSION chapter for the operations involved.

Check the condition of the dust cover at each ball joint (Fig. A:29) as, if these are damaged, dirt will be allowed to enter the joint and accelerate wear.

Steering Rack

Check that the steering rack is securely mounted and that all the nuts and bolts are present and are not loose. Examine the convoluted bellows at each end of the rack (Fig. A:30). If the bellows are torn or otherwise damaged they must be replaced and the unit refilled with lubricant (see STEERING chapter). If the bellows are in good condition but have been leaking around the clips, it is possible to top them up by injecting grease into the unit in-situ with a syringe after loosening the bellows. Ensure that the correct lubricant is used. This is specified in the TECHNICAL DATA. Ensure that the clips are retightened after refilling.

Shock Absorbers

The shock absorbers do not need regular maintenance, but their damping action should be checked periodically as it deteriorates over a long period. Test the action of the shock absorbers by pressing down on each corner of the car in turn. If the shock absorber is in good condition, the corner of the car will spring up again and then stop. It it rebounds down again before stopping, the unit is deteriorating and will eventually need replacement. If the car rebounds more than twice, then the unit has failed and must be replaced immediately.

Check the shock absorber body for signs of fluid leakage (Figs. A:32 & A:33) which indicates that the unit is worn and should be replaced. Note that shock absorbers should always be replaced in axle sets, i.e. both front or both rear ones.

Drive Shaft Boots

Check both inner and outer gaiters for signs of leakage or damage (Fig. A:31). If they are at all suspect they must be renewed. If a hole in a gaiter is not spotted quickly, the joint will rapidly deteriorate and need replacement. These operations are detailed in the FRONT SUSPENSION chapter.

Front Wheel Alignment

The checking and adjustment procedure for the front wheel alignment is fully described under the appropriate heading in the FRONT SUSPENSION chapter. The alignment of the wheels should be checked after any front suspension component has been replaced or overhauled, or the front wheels have been subjected to a shock, for example hitting a kerb.

Wheel Bearings

To check the hub bearing adjustment and condition, raise and support each wheel in turn using an axle stand and chock the other wheels. Spin the wheel and check for any roughness in the bearings. Rock the wheel top and bottom to detect any excess play (Fig. A:34). Likewise look for any leakage of grease from the bearings. These operations are described in the FRONT SUSPENSION and REAR SUSPENSION chapters.

EXHAUST SYSTEM. . . . . [16]

The exhaust system should be checked periodically for leaks and security. It is a good idea to spend a few minutes examining the system whenever work is being carried out under the car, always ensuring that the car is supported by axle stands or on ramps and the wheels chocked.

Check the alignment of the system to ensure that none of the mounting points are under strain (Fig. A:36). Inspect the exhaust pipes and silencer boxes for damage, corrosion or signs of exhaust gases blowing. Any leakage can be detected by running the engine at fast idle and placing a gloved hand over the tailpipe to pressurise the system. Any leaks can then be heard. Badly rusted components can be detected by tapping the pipes and boxes with a screwdriver handle or similar light tool. Take care not to strike the system with a heavy tool as this may damage it.

Check the rubber mountings for splits and ensure that they are adequately supporting the system (Fig. A:36). Exhaust system replacement is dealt with in the ENGINE chapter.

LIGHTS & INSTRUMENTS . . . . . [17]

The lamps, horn and indicators should be checked periodically to ensure that they are functioning correctly. The function of the instruments is best checked under road test conditions. Bulb replacement procedure is described in the GENERAL ELECTRICS chapter.

Headlamp Alignment (Fig. A:35)

Headlamp alignment is usually carried out in a garage using optical beam setting equipment, to which the DIY owner is unlikely to have access. However, it is possible to achieve a satisfactory setting if the following procedure is

followed.

The headlamps should be so aligned that they will not dazzle a person standing more than 25 feet (7.5 metres) from the front of the car. This can be checked after dark by positioning the car at the specified distance from a wall, standing on level ground. Covering each headlamp in turn, set the beam height and direction by turning the adjuster screws with a screwdriver - see Fig. A:35.

WINDSCREEN WIPERS & WASHERS . . . . . [18]

Wiper Blades

The wiping speeds, intermittent wipe action and park position of the wiper blades as well as the condition of the blades and rubbers should be checked periodically.

Blades which are contaminated with insect or oil deposits should be removed and cleaned with a hard brush and detergent solution.

Worn blades will cause streaks and unsatisfactory cleaning of the glass. The wiper edge of the blades must not be perished or torn. Wear of the blades will increase under conditions of dust, air pollution and when used on a frozen or dry screen.

The wiper blades are retained on the arms by plastic clips. To release a clip, push the plastic clip tongue inwards and pull the wiper blade from the arm. Fit a new blade in the reverse order. Check the new blade operation.

To replace the wiper arms, lift up the plastic cover at the spindle end of the arm (Fig. A:37), unscrew the locknut and withdraw the arm from the spindle. Fit the arm in the reverse order of removal, noting that the wiper motor should be in the 'Park' position beforehand.

Washer Reservoir Top-up

The windscreen washer reservoir should be checked and topped up weekly or more often if in regular use. The reservoir is mounted on the nearside/passenger's side of the engine compartment at the rear (Fig. A:38).

Some models are fitted with headlamp wash/wipe and tailgate wash/wipe. The reservoir used is the same as for the windscreen washers, but with additional pumps fitted.

The reservoirs should be filled with a mixture of water and washer fluid. This will improve the washing action as well as stopping the fluid freezing in cold weather. Do not use any other fluid such as anti-freeze.

SEAT BELTS . . . . . [19]

Although seat belts are fitted to the car, it does not necessarily mean that they are working efficiently or, indeed, that they are capable of doing their job when they are needed. This is why the condition of the seat belt is now included in the MoT test when due. There are some simple checks to be made on a regular basis to ensure that they are in working order. They are as follows:

1. Pull each seat belt against its anchorage to see that it is properly secured to the vehicle structure.
2. Examine carefully the condition of the webbing, looking for cuts or obvious signs of deterioration.
3. Fasten each seat belt locking mechanism and then try to pull the locked sections apart. Operate the mechanism, whilst pulling on the belt to determine that the mechanism releases when required.
4. Check the condition of the attachment fittings and adjusting fitting on each belt for distortion or fracture.
5. As far as practicable check the condition of the vehicle structure around the seat belt anchorages - this will be best carried out from below the vehicle.
6. Pull a section of the webbing from the reel unit and then release it to see that the webbing automatically winds back.

GENERAL LUBRICATION . . . . . [20]

Locks, Hinges & Linkages

All hinges and locks should be regularly lubricated to prevent wear and possible seizure. Use a pump type oil can containing engine oil. Remove the plastic cap then put a few drops onto each hinge and latch. Wipe up any excess oil to prevent staining and dripping.

The lock barrels in the doors and tailgate should be lubricated by dipping the key in lock-lube oil or graphite powder and inserting it into the lock. Do not attempt to lubricate the steering column lock.

Tune-Up

INTRODUCTION . . . . . [1]
SPARK PLUGS . . . . . [2]
COMPRESSION CHECK . . . . . [3]
VALVE CLEARANCES . . . . . [4]
DISTRIBUTOR . . . . . [5]
IGNITION TIMING . . . . . [6]
CARBURETTOR ADJUSTMENT . . . . . [7]
NON-START TROUBLE SHOOTER . . . . . [8]

INTRODUCTION . . . . . [1]

Difficult starting, poor performance and excessive fuel consumption are some of the problems associated with an engine which is badly worn or out of tune. This is why at every major service the various relevant components of the engine should be checked and adjusted as specified in the Service Schedule.

Engine tune-up has been deliberately presented as a separate chapter independant of the ROUTINE MAINTENANCE so that if any problems occur between services the engine can be attended to on its own.

The following checks and adjustments have been arranged in logical sequence and it is advised that they be followed in the order given when carrying out a complete engine tune-up.

Often it is the condition or adjustment of only one component which is at fault, for example the ignition timing or idle adjustment, and consequently it will not be necessary to carry out a complete engine tune-up. However, it is usually only by a process of elimination that the fault can be traced and rectified. To assist in pin-pointing the source of the trouble a Non-start Trouble Shooter is included at the end of this chapter.

Both R18 and Fuego models require the minimum of special tools and equipment for tuning the engine. Early models (except those with 2.0 litre engine) have conventional contact breaker ignition, but later models from 1981 on, have been progressively fitted with integral electronic ignition which requires no adjustment.

The various service and maintenance operations on the engine should be checked according to the Service Schedule on page 10 as should the carburettor which should not normally require adjustment other than to the engine idle speed as detailed in this chapter.

A selection of spanners and screwdrivers will be necessary for most work. All nuts and bolts are metric, so a metric tool set should be used. A plug spanner or socket should be used for spark plug removal to avoid the possibility of damaging the plug.

If the cylinder compression pressures are to be checked, a compression test gauge should be obtained. A set of metric feeler gauges for setting the spark plug gaps, contact breaker points (on early models) and the valve clearances, are essential. Static setting of the ignition timing requires a test lamp, but dynamic testing requires a stroboscopic timing light on models with conventional contact breaker ignition systems.

Useful aids for tuning the engine are a tachometer or rev counter plus a dwell meter for accurately setting the contact breaker points on early models. To adjust the carburettor mixture, ideally an exhaust gas analyser should be used to check the exhaust CO level, although this tool is not essential. Alternative DIY methods are to use a vacuum gauge or 'Colortune' plug to check and adjust the mixture if necessary.

SPARK PLUGS . . . . . [2]

Inspection

The spark plugs should be removed and checked periodically as recommended in the Service Schedule.

When disconnecting the HT leads from the plugs, grasp the moulded cap and pull it off the plug. Do not pull on the plug lead itself, otherwise the core inside the lead may be damaged. The plug leads are marked with the plug number on the outer casing, noting that on all R18 and Fuego engines, No 1 cylinder is situated at the rear (clutch housing) end of the engine. However, if a new unmarked set of replacement leads is, or has been fitted, label each lead with its respective cylinder number to ensure that it is refitted to its correct position.

Blow or brush any dirt away from around the plug recesses before attempting to remove the plugs from the cylinder head. This will prevent the possibility of any foreign matter entering the combustion chambers as the plugs are removed.

Use a proper spark plug socket or spanner to remove the spark plugs (Fig. B:1), taking great care to avoid damaging the white porcelain insulator on the plug during removal. This is particularly important on the R18 Turbo engine where an extra long deep reach box spanner will be needed to remove the plugs situated in the rocker cover.

Inspect the condition of the centre electrode and insulator nose, also the outer earth electrode of each plug, as this can give a good indication as to the general state of

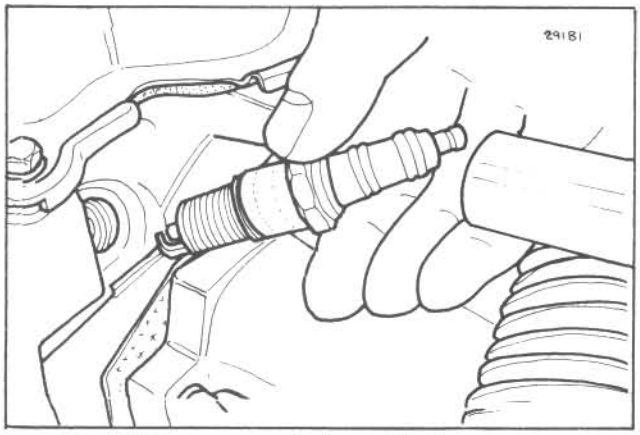

Fig. B:1 Remove spark plug with plug spanner

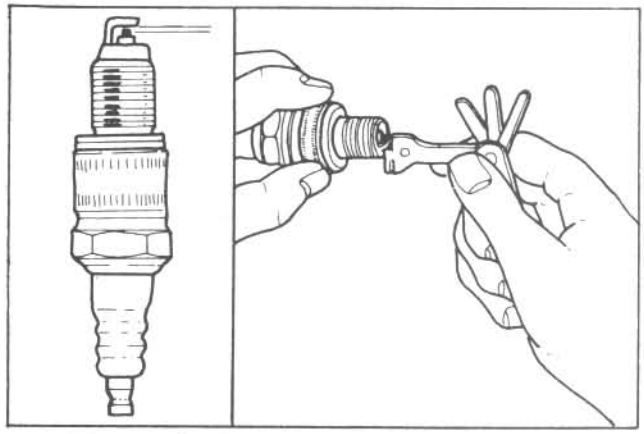

Fig. B:2 Check and adjust plug electrode gap

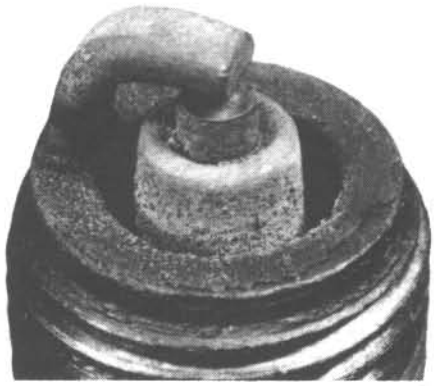

1. NORMAL – If all plugs are lightly coated with tan or grey deposits and electrode wear is normal, good engine and ignition condition is indicated. Plugs can be cleaned, re-gapped and re-fitted, replace at mileage shown in Service Schedule.



2. HEAVY DEPOSITS – White or yellow deposits on the electrodes and plug shell, which are easily flaked off, are ususally the result of fuel or oil additives. These change the chemical nature of the deposit to minimise misfire. Re-use plug after cleaning.



3. CARBON FOULING – Deposit has dry black appearance. May be corrected by using next hotter grade of plug. First check for sticking valves or damaged ignition leads (if only one or two plugs are affected): clogged air filter or a faulty choke.



4. OIL FOULING – Black wet deposits resulting from plug short circuiting due to excessive oil entering combustion chamber. In high mileage engines the piston rings, valve guides or cylinder bores may be excessively worn. Hotter plugs can temporarily cure problem but severe cases require engine overhaul.



5. OVERHEATING – White or blistered insulator nose and badly eroded electrodes indicates hotter than normal operating temperatures. Engine overheating or incorrectly set ignition timing may be cuase. If individual plugs overheat check for coolant blockage, worn distributor parts or manifold leaks. Replace affected plugs.



6. PRE-IGNITION – Electrodes melted, probably caused by excessive temperatures resulting in pre-ignition. This could result in engine damage. Check ignition timing, intake manifold for air leaks, distributor for worn parts, and possible causes of overheating. Make sure that plug is of correct heat range. Plug must be renewed.

Fig. B:3 Typical spark plug conditions and their causes

the engine. Typical examples of spark plug conditions are shown in Fig. B:3.

Electrode Gap

Spark plugs which are in good condition and with low mileage can be cleaned, preferably with proper sandblast cleaner, however, a stiff wire brush will do. Hold the spark plug with the electrode end facing downwards whilst brushing the electrode surfaces to avoid any particles of dirt or carbon lodging between the insulator nose and the outer shell of the plug. File the end of the centre electrode square with a points file if necessary.

Check the electrode gap with a gap setting gauge or feeler gauges. The correct gap is specified in the TECHNICAL DATA.

If necessary, adjust the gap by bending the outer electrode slightly, using pliers. Make sure that the outer electrode is aligned with the centre electrode, again by bending it slightly with pliers.

When fitting new spark plugs, check and adjust the electrode gap before installation in the engine. Also, make sure that the replacements are of the correct grade and type for the engine - see TECHNICAL DATA at the end of this manual for specifications.

Apply a few drops of clean engine oil to the plug threads before fitting. Do NOT overtighten the plugs when installing them - this is most important. The plugs should be screwed in by hand until finger-tight, followed by a maximum of a quarter turn with a plug spanner.

On the R18 Turbo engine, make sure that the rubber sealing plug at the top of each plug hole in the rocker cover is correctly fitted to avoid dirt entering the engine next time the plugs are removed.

COMPRESSION CHECK. . . . . [3]

Valuable time can be wasted trying to tune an engine which is badly worn. This is particularly applicable in the case of an engine which has covered a considerable mileage.

The engine compression pressures should be within the specifications given in the TECHNICAL DATA and can be checked as follows:

1. Run the engine until it attains normal operating temperature, then switch off and remove the spark plugs and leads as described previously.
2. Disconnect the LT (low tension) lead from the + (positive) terminal on the ignition coil on early models. On later models with integral electronic ignition (see Introduction), disconnect the HT lead at the coil end on the electronic ignition module.
3. Screw or push the compression tester (Fig. B:4) into the No. 1 spark plug hole and, with an assistant inside the car, hold the accelerator pedal fully down and crank the engine on the starter. Continue cranking the engine for a few revolutions until the tester needle stops moving.
4. Note tester gauge reading on paper alongside the cylinder number.
5. Remove the compression tester and repeat the compression testing operation on the remaining cylinders in turn, noting the readings.
6. Now compare the readings with each other, and with the specifications given in the TECHNICAL DATA. If all the readings are within 10% of each other, then the cylinder bores and pistons can be considered to be in good order.
7. If one or two cylinder readings are lower than the others, the cause could be due to either the valves/head gasket, or the pistons/cylinder bores. Either cause can be confirmed by repeating the compression test on the suspect cylinders, only this time adding a small amount of engine oil to the cylinder beforehand. This called the 'wet' test as opposed to the 'dry' test previously. If the 'wet' test causes the compression reading to rise substantially, then the cause is likely to be due to the piston or cylinder bore. If, on the other hand, the reading remains the same, then it is likely that the cause is due to the head gasket or valves not sealing properly.

If this is the case, refer to the respective ENGINE chapter which will detail how the faults can be rectified.

VALVE CLEARANCES . . . . . [4]

Renault do not specify a particular time or mileage to check and adjust the valve clearances. Therefore, if you have reason to suspect that the valve clearances are the cause of excessive noise or loss of power, (or after the cylinder head has been disturbed), then the clearances should be checked and adjusted. This job can be done quite easily after the rocker cover has been removed, remembering that both valves and cylinders are numbered from the rear of the engine – No 1 piston being at the clutch housing end of the engine. The procedure for adjusting the valves is as follows:

1. The valve clearances can be checked with the engine hot or cold to the relevant setting specified in the TECHNICAL DATA.
2. Note the fitted position of the various emission system pipes and cables over the rocker cover before disconnecting them.
3. On Turbo models only, carefully unscrew the clips and disconnect the trunking between the turbocharger and the intercooler adjacent to the radiator (Fig. B:6).
4. Note the angle of the clutch cable locating bracket on some models before unscrewing the three nuts securing the rocker cover.
5. Place the clutch cable to one side before lifting the rocker cover off the studs and removing it from the engine (Fig. B:8). Place the cover upside down to avoid any oil draining out.
6. Using the method described in the 'Ignition Timing' section, rotate the crankshaft in the normal (clockwise) direction of rotation as viewed from the front of the car, until No 1 cylinder Exhaust valve (at the rear of the cylinder head) is fully open with the valve spring fully compressed.
7. Check the clearance on No 3 cylinder Inlet valve and No 4 cylinder Exhaust valve using feeler gauges. The clearance is correct when the correct size feeler - see TECH-

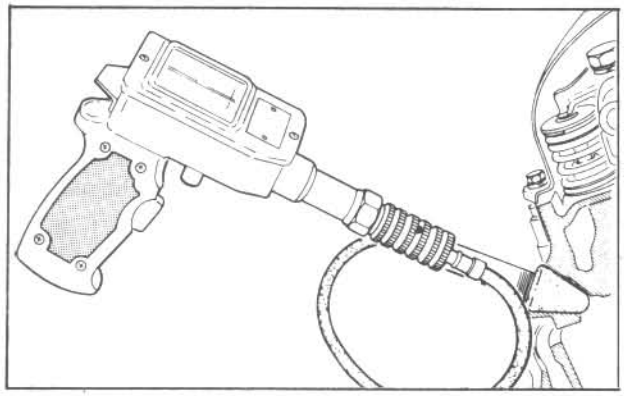

Fig. B:4 Check cylinder compression with test gauge

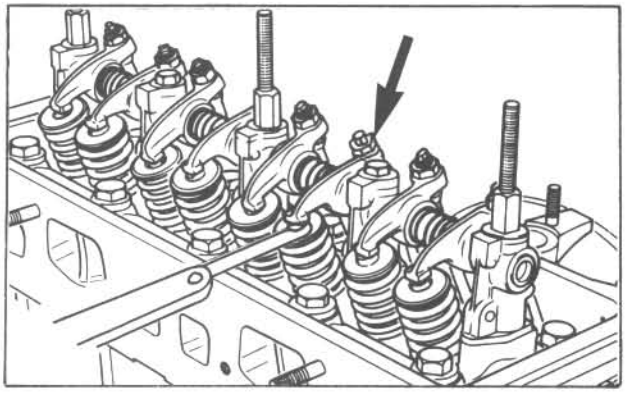

Fig. B:5 Checking/adjusting valve clearance - OHV

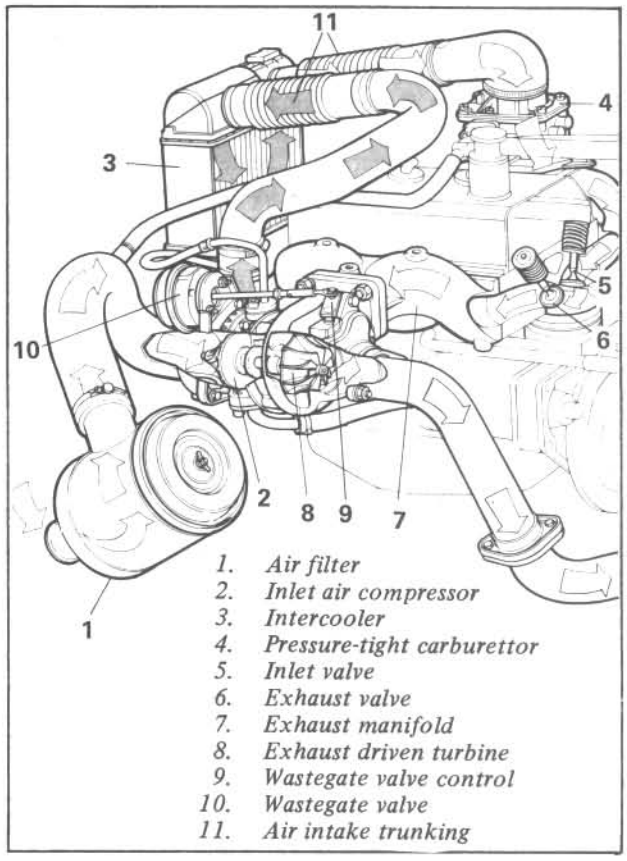

Fig. B:6 Details of the turbocharging system - 807 type

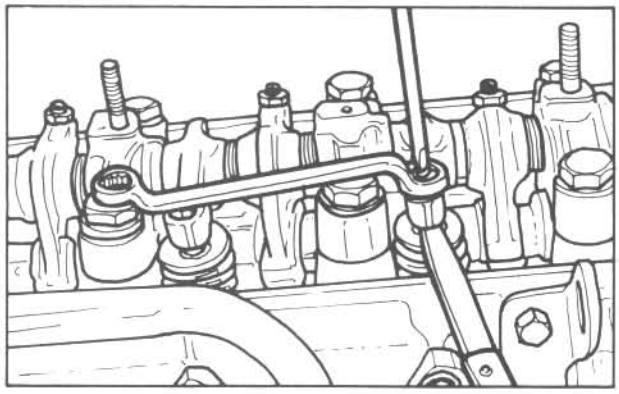

Fig. B:7 Checking/adjusting valve clearance - OHC

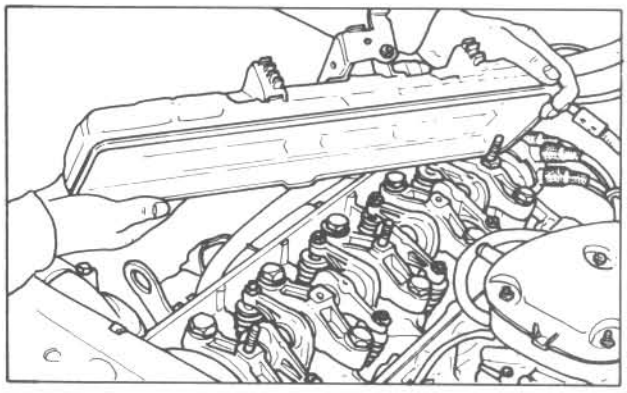

Fig. B:8 Removing rocker cover

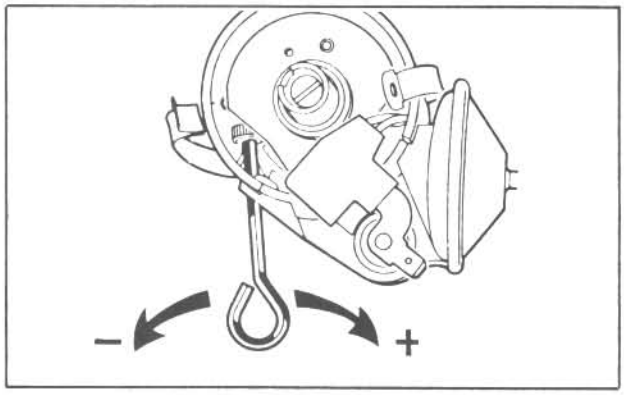

Fig. B:9 "Cassette" type contact points adjustment

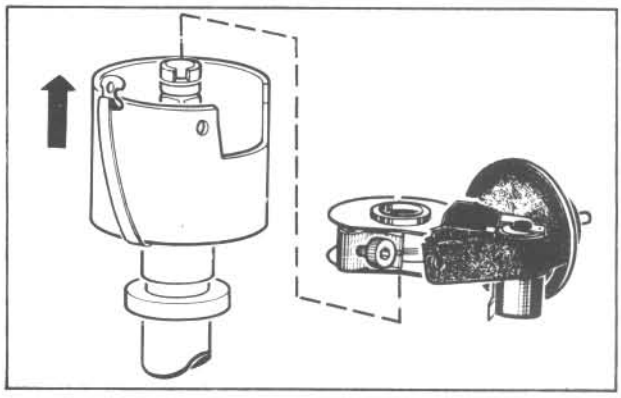

Fig. B:10 Lifting out "cassette" type points assembly

NICAL DATA - is a neat sliding fit between the rocker arm and the valve stem as shown in Figs. B:5 & B:7.

8. If adjustment is necessary, slacken the locknut and turn the adjuster screw using pliers or a small open-ended spanner until the correct valve clearance is obtained. Retighten the locknut and recheck the clearance afterwards.

9. Now repeat the adjustment procedure on the remaining valves in the following order:

Exhaust valve fully open	Check/adjust Inlet valve No	Check/adjust Exhaust valve No
3	4	2
4	2	1
2	1	3

NOTE: The crankshaft should always be rotated in a clockwise direction when adjusting the valve clearances.

10. When adjustment is complete, clean the rocker cover flange on the cylinder head to remove any oil or dirt. Check the condition of the rubber seal on the rocker cover. If necessary, peel off the seal and clean the seal groove to remove all traces of oil and seal adhesive.

11. Smear a suitable rubber adhesive (Bostic Clear type is ideal) around the seal flange on the rocker cover and allow it to partially dry until it becomes tacky before positioning the new seal. Make absolutely sure that the seal is correctly seated in the groove. This is important to prevent oil leakage in service.

12. Refit the rocker cover in the reverse order of removal, refit the securing nuts and clutch cable bracket, (if fitted). Tighten the nuts evenly and sufficient to compress the cover seal. Do not overtighten the nuts as this will distort the rocker cover and give rise to oil leakage from the seal.

13. Reconnect the emission system pipes in the reverse order of removal. On Turbo models only, make absolutely sure that the trunking between the turbocharger and the intercooler is correctly fitted and the clips tightened, to prevent any possibility of air entering at the connections which will adversely affect the operation of the turbocharger.

DISTRIBUTOR.....[5]

As detailed previously, certain early models were fitted with conventional contact breaker ignition requiring periodic adjustment or replacement. Note that two types of distributor were fitted. The Ducellier distributor has a conventional contact breaker points set, but the SEV distributor has "Cassette" type points which can only be adjusted from outside the distributor using a 3 mm Allen key. Later models are fitted with Integral Electronic Ignition which requires no maintenance other than to periodically check the distributor cap.

Contact Breaker Points Check

As the contact set is a relatively inexpensive item, it is recommended that it be replaced if any doubt exists as to the condition of the contacts.

The contact points gap can be checked and set either by measuring the gap with feeler gauges, on Ducellier distributors only, or by measuring the dwell angle with a dwell meter. Both Ducellier and SEV distributors have an external points adjuster for use with a dwell meter (Figs. B:9 & B:11). Where possible, and especially in the case of points which have covered a high mileage where metal transfer (pitting and piling) has taken place, the use of a dwell meter is essential for an accurate setting.

To check the contact points gap with feeler gauges, first remove the distributor cap by levering off the spring clips with a screwdriver. Now turn the crankshaft as detailed in the 'Ignition Timing' section until the distributor contacts are fully open, i.e. until the breaker arm rubbing block is resting on the highest point of the cam lobe. Check the contact gap by inserting a feeler of suitable thickness between the contact points - the gauge should be a neat sliding fit in the gap without moving the breaker arm.

To check the points setting with a dwell meter, the distributor cap need not be removed, only the distributor vacuum advance pipe should be disconnected. The dwell meter should be connected to the ignition circuit with the meter Red (Positive) lead connected to the '-' Negative LT (Low Tension) terminal on the ignition coil, and the meter Black (Negative) lead connected to a good earth point.

Remember that the dwell angle of the contact points is the angle of points closure. The wider the points gap, the smaller will be the dwell angle, and vice-versa (Fig. B:15).

With the engine idling, the dwell angle reading should be $57^{O} \pm 3^{O}$.

Points Adjustment

If the contact gap requires adjustment on Ducellier distributors, it can be done statically as follows:

1. Check that the breaker arm rubbing block is resting on the highest point of the cam lobe.
2. Insert an 0.4 mm (0,016 in) feeler gauge between the contacts and adjust the gap by turning the adjusting nut (1 in Fig. B:11).
3. If necessary, check and readjust the ignition timing as detailed later in this chapter.

Points Adjustment - Dwell Angle Method (Fig. B:15)

As detailed previously both types of distributor have an external points adjuster for use with a dwell meter.

1. With the engine idling, adjust the dwell angle to the correct figure of $57^{O} \pm 3^{O}$ by turning the adjusting nut (1 in Fig. B:11) on Ducellier distributors or using an Allen key on SEV "Cassette" type distributors (Fig. B:9). Turning the key clockwise will increase the dwell angle, and anti-clockwise will decrease the dwell angle.

Points Replacement (Conventional Contact Assembly)

1. Remove the distributor cap (if not previously removed), then pull off the rotor arm and disconnect the LT

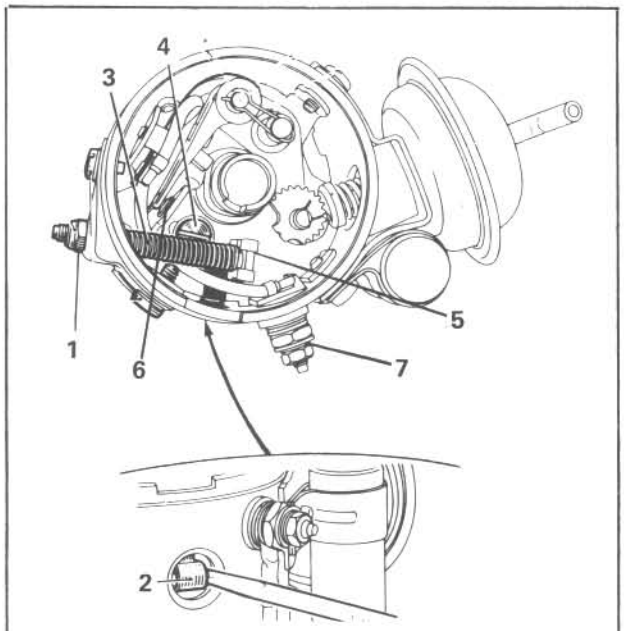

1. *Adjusting nut*
2. *Retaining clip*
3. *Adjusting rod*
4. *Fixed contact screw*
5. *Fixed contact lug*
6. *Contact breaker gap*
7. *LT terminal*

Fig. B:11 Ducellier type contact breaker assembly

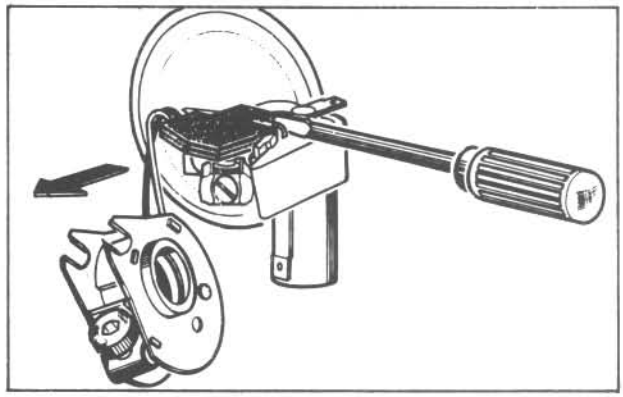

Fig. B:12 Detaching "cassette" from condenser

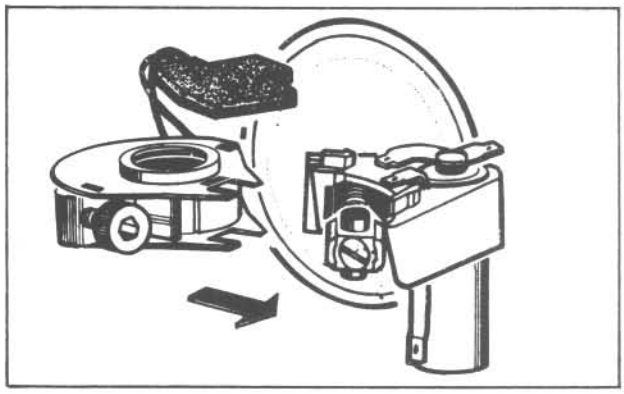

Fig. B:13 Method of fitting "cassette" to condenser

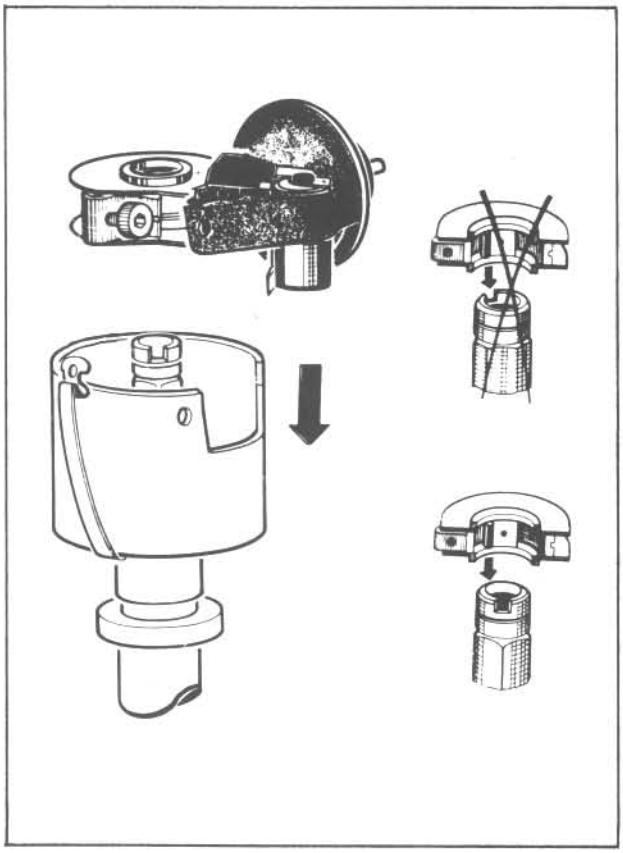

Fig. B:14 Fit "cassette" assembly in correct position

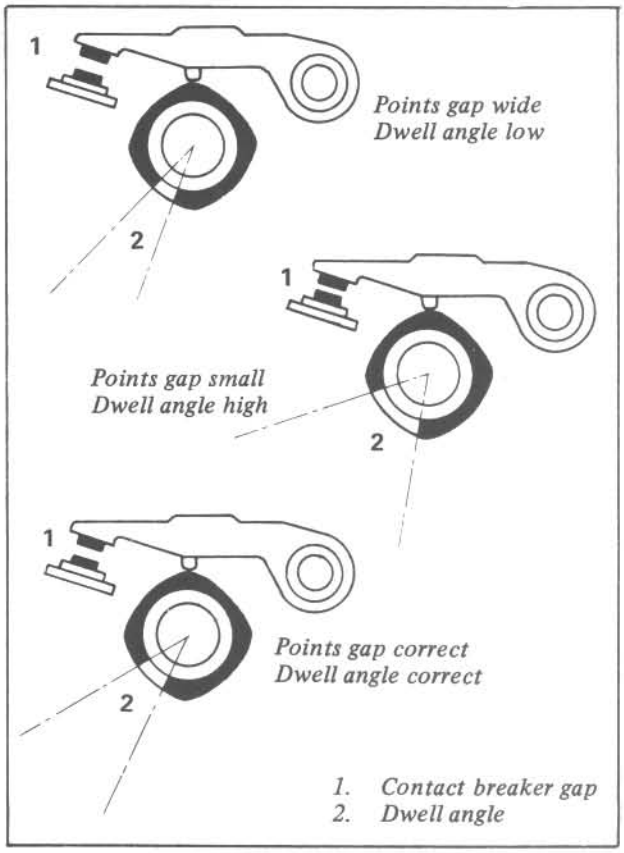

Fig. B:15 Dwell angle in relation to points gap

(low tension) lead from the distributor housing.
2. Slacken the terminal nut on the side of the distributor body and release the slotted end of the moving contact spring (7 in, Fig. B:11).
3. Remove the spring clip from the moving contact pivot post (Fig. B:11). Take care not to drop the clip. Remove the washer and lift the moving contact from the pivot post. Remove the plug and retaining clip (2 in Fig. B:11). Disconnect the adjuster rod (3 in Fig. B:11) from the fixed contact lug (5 in Fig. B:11).
4. Remove the screw (4) holding the fixed contact plate to the distributor base plate, then withdraw the contact plate.
5. Thoroughly clean the base plate to remove all traces of dirt and oil. Lightly smear the cam lobes with high melting point grease.
6. Fit the new contact assembly to the distributor in the reverse order of removal.
7. Adjust the contact breaker gap either statically or by the dwell angle method, as detailed previously.

"Cassette" Type Points Replacement

1. Remove the distributor cap and lift out the rotor arm and disconnect the vacuum advance pipe from the capsule.
2. Lift the cassette and condenser/vacuum capsule unit off the distributor shaft and body (Fig. B:10).
3. Detach the cassette unit from the condenser by using a screwdriver at the connector (Fig. B:12).
4. Fit the new cassette to the condenser/vacuum capsule retaining lugs (Fig. B:13).
5. Fit the cassette over the cam and insert the condenser support into the body (Fig. B:14), making sure that the contact point heel is not in line with the lobe of a cam which would damage the heel (Fig. B:14).
6. Make sure that the cassette/condenser assembly is fully home in the distributor body, then refit the rotor arm and distributor cap.
7. A new cassette has the contacts preset during manufacture and is fitted without further adjustment, although the static or dynamic ignition timing should be checked and adjusted if necessary afterwards.

Condenser

The condenser is mounted externally on the distributor body and is connected across the contact breaker points. It serves to increase the electrical current peak in the primary windings of the ignition coil when the points are open. A further important function of the condenser is to minimise the errosion and oxidisation of the contact surfaces of the points.

As a condenser is a relatively inexpensive item, it should be replaced if it is in any way suspect. Excessive wear or burning of the contact points are indications that that the condenser is defective.

Distributor Advance Mechanism Check (Conventional Ignition Only)

The operation of the distributor advance mechanism may be checked using a strobe timing light and the flywheel timing marks. As the throttle is gradually opened, the timing mark on the flywheel should move smoothly away from the fixed timing mark against the direction of engine rotation. As the throttle is closed, the mark will move back to its original position.

Any tendency towards erratic operation shown by the flywheel mark suddenly jumping away from the fixed mark indicates that the internal advance mechanism is faulty. If the timing marks suddenly leap away from each other it indicates that the advance weights are binding. If the flywheel timing mark wavers, this indicates that the advance weight springs are weak or broken, or possibly that the distributor shaft bearing is worn.

The advance mechanism can be checked by undoing the screws and lifting out the contact breaker base plate. In many cases, cleaning and lubricating the weights and springs will cure the problem.

Vacuum Advance Mechanism Check

The simplest method of checking the vacuum advance operation is to detach the vacuum pipe from the carburettor and apply suction to it while checking that the mechanism partially rotates the contact breaker base plate. When the suction is released, the base plate should snap smartly back to its original position.

If the base plate seems sluggish on return, it could be that the vacuum advance unit is worn or the return spring is weak or broken.

On later models with Integral Electronic Ignition, the vacuum advance mechanism is mounted at the bottom of the electronic ignition module, and although identical to that used on conventional ignition distributors, it cannot be removed or checked in the conventional way. Apart from checking that the vacuum pipe is in good condition and properly connected, any suspected faults with the Electronic Ignition module should be checked by a local Renault dealer with the necessary equipment and knowledge to carry out the job.

Distributor Cap, Rotor Arm, Coil, HT Leads

Thoroughly clean the distributor cap, inside and out with a clean cloth, paying particular attention to the spaces between the metal electrodes (Fig. B:16). Check that the electrodes are not excessively erroded and that there are no signs of 'Tracking' (etched hairline zig-zag lines) on the surface of the cap. Check that the small carbon brush inside the centre of the cap is undamaged.

Similarly, clean the rotor arm and check for damage or excessive errosion of the electrode. Also check that the rotor is a neat fit on the distributor shaft without excessive side play.

Clean the outside of the ignition coil tower and check for signs of damage or 'Tracking' as detailed for the distributor cap.

Wipe all oil and dirt from the HT (High Tension) and LT (Low Tension) leads, and check them for signs of cracking, chafing or any other damage. Ensure that all ignition leads are correctly and securely connected.

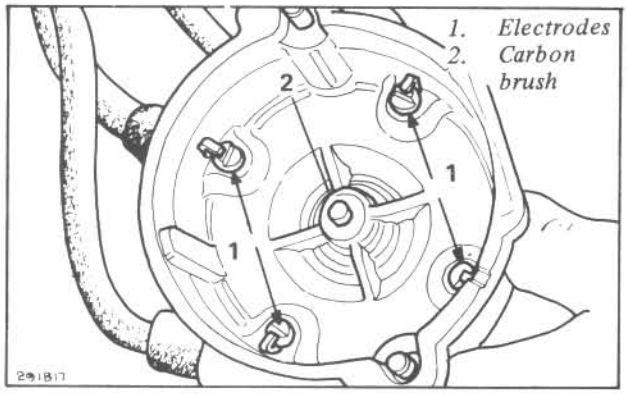

Fig. B:16 Check distributor cap and electrodes

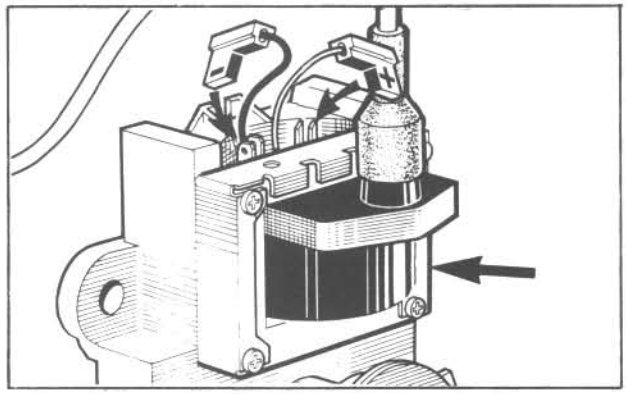

Fig. B:17 Coil position on later electronic ignition system

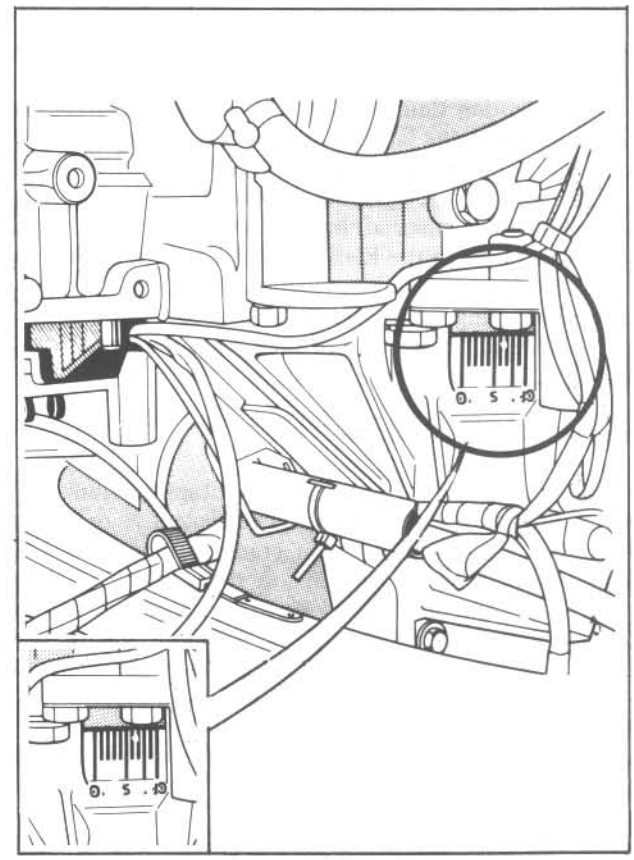

Fig. B:18 Engine type 807/841/A2M/843 timing marks

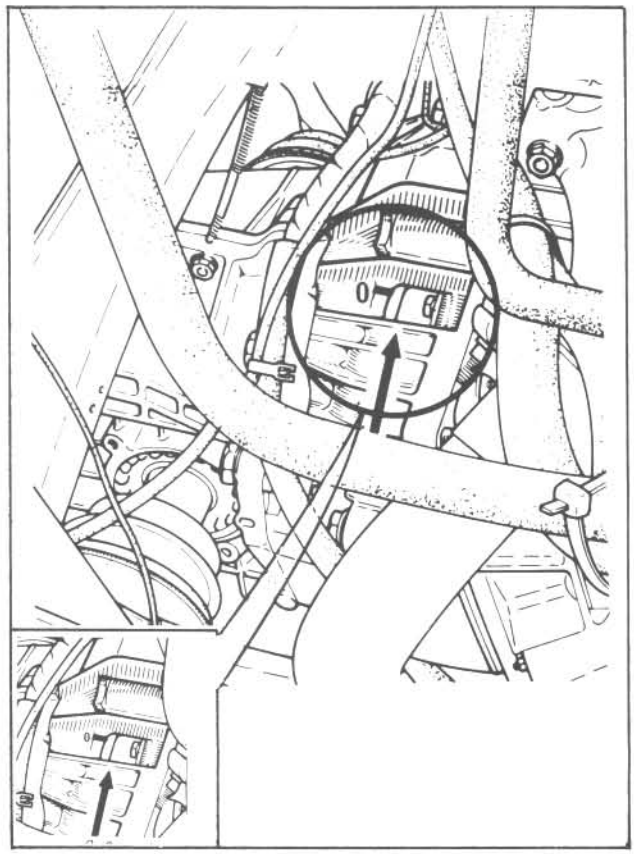

Fig. B:19 Engine type 847 timing marks (manual)

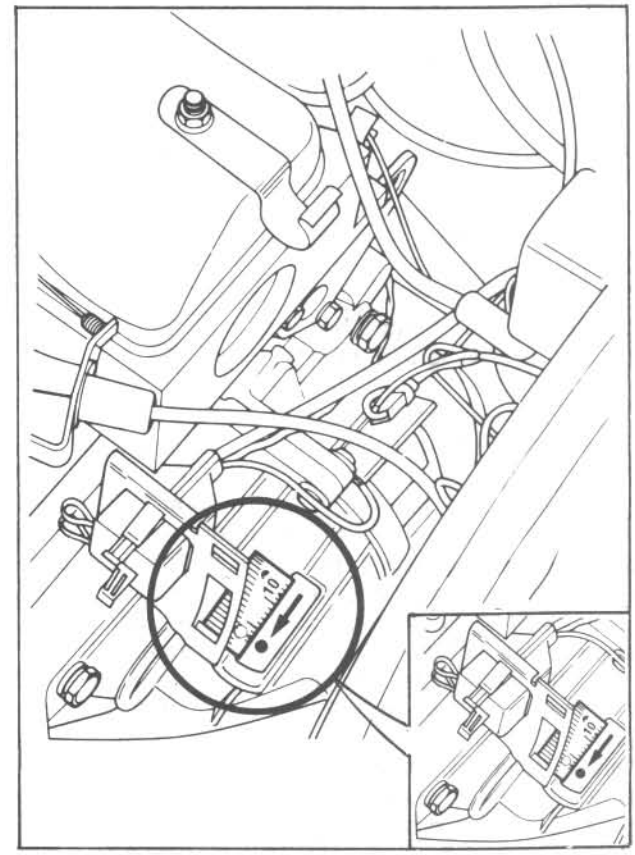

Fig. B:20 Engine type 841/A2M timing marks (auto)

IGNITION TIMING .....[6]

The ignition timing can be checked and set statically or dynamically, the latter is the more accurate method if you have a stobe timing light - available from most car accessory shops. However, if the distributor has been removed and the crankshaft has been turned, then reference should be made to the ENGINE ELECTRICS chapter for distributor removal and installation details before checking and adjusting the ignition timing.
NOTE: The initial ignition advance value is stamped on a clip fitted to one of the HT leads.

Turning the Crankshaft

Several methods can be used to rotate the crankshaft for setting the ignition timing valve clearances or any of the other tasks dependent on crankshaft position. The ignition should be switched off, or the ignition coil Negative (-) lead disconnected (Fig. B:17) before attempting to turn the engine by any of the following methods to avoid accidental starting. Removing the spark plugs beforehand will also release the compression pressure and make the engine easier to turn.

Probably the easiest way to turn the engine is to place the gear lever in 4th gear and push the car back and forth to rotate the engine.

If space is restricted, place the gear lever in 4th gear then raise and support one front wheel clear of the ground - see ROUTINE MAINTENANCE chapter. Turning the raised front wheel in a forward direction will then turn the engine.

These methods however, will only apply to manual gearbox models, on automatic transmission models, the torque converter will prevent the engine from being turned in this way and the starter motor will have to be used in short bursts until the crankshaft is in the correct position. Alternatively, a spanner placed on the crankshaft pulley bolt can be used to turn the crankshaft to the correct position.

Static Ignition Timing Setting (Conventional Ignition Only)

Remove the distributor cap and connect a 12 volt test lamp between the distributor LT (Low Tension) terminal and a good earthing point. Rotate the crankshaft by the method detailed previously in its normal (clockwise) direction of rotation until the rotor arm is pointing approximately mid-way between the No 2 and No 1 plug lead segments in the distributor cap. The cap should be temporarily replaced to check this. Note that the rotor arm rotation is clockwise as viewed from above.

With the ignition switched on, (the test lamp should not be lit), continue to turn the crankshaft in the normal direction of rotation until the test lamp just lights. If the ignition timing is correct, the fixed timing pointer on the clutch or converter housing will be aligned with the appropriate deg BTDC mark on the flywheel as shown in Figs. B:18, B:19 and B:20 (see TECHNICAL DATA for timing settings).

NOTE: The initial ignition advance value is stamped on a clip fitted to one of the HT leads.

If the timing marks are not aligned correctly then the timing should be adjusted as follows:

1. Turn the crankshaft in the normal (clockwise) direction of rotation through two complete revolutions until the correct flywheel timing mark is aligned with the fixed timing pointer on the clutch or converter housing (Figs. B:18, B:19, and B:20).
2. Slacken the distributor clamp bolt (Fig. B:21), and turn the distributor body in a clockwise direction back past the point where the test lamp goes out, then turn it back, anti-clockwise until the test lamp just lights.
3. Carefully retighten the distributor clamp bolt without disturbing the setting of the distributor.
4. Recheck the setting after rotating the crankshaft by two revolutions.

Dynamic Ignition Timing Setting

If possible, the ignition timing should be checked dynamically using a stroboscopic timing light to ensure optimum engine performance. The timing light should be connected to the No 1 spark plug at the rear (clutch housing) end of the engine (Fig. B:22) following the equipment manufacturer's instructions, depending on the type of timing light used.

With the engine running at normal operating temperature and idle speed, disconnect the vacuum pipe from the side of the carburettor, then point the timing light at the timing marks on the clutch housing. The timing marks will appear to be stationary on the flywheel in relation to the fixed pointer on the clutch or converter housing.

If the timing is correct, the appropriate mark on the flywheel - see TECHNICAL DATA - will be aligned with the fixed pointer. If the timing is incorrect, slacken the distributor clamp bolt and turn the distributor body in a clockwise direction to retard the ignition, or anti-clockwise and advance the ignition until the appropriate flywheel mark is aligned with the fixed pointer.

When the adjustment has been completed, carefully retighten the distributor clamp bolt, then recheck the timing. Don't forget to reconnect the vacuum pipe to the carburettor.
NOTE: It will make it easier to observe the timing if the appropriate mark on the flywheel is highlighted with chalk or paint prior to carrying out the check.

CARBURETTOR ADJUSTMENT.....[7]

NOTE: The carburation should be the last part of the engine tune-up to be attempted, as the settings will be affected by the tune of the rest of the engine.

Tamperproofing

Tamperproof seals are fitted to the idle mixture and throttle stop screws. The seals are either plastic caps or plugs, depending on the make of carburettor fitted. The seal can normally be removed using pliers or a screwdriver.

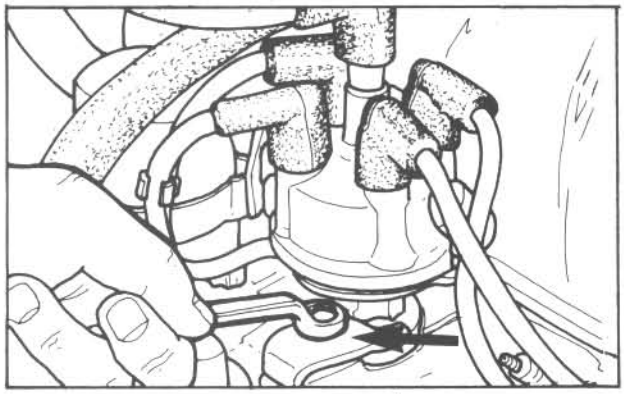

Fig. B:21 Location of distributor clamp bolt

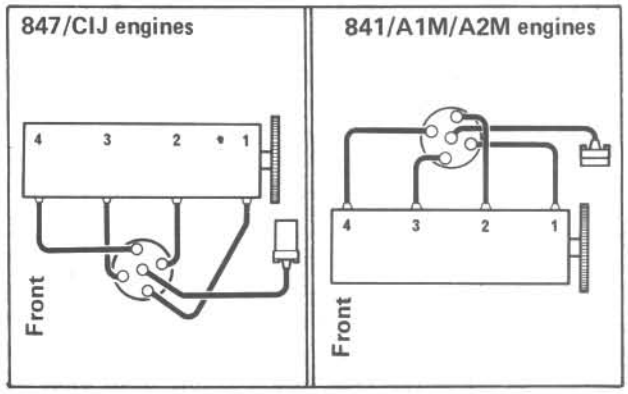

Fig. B:22 OHV engine ignition and cylinder numbering

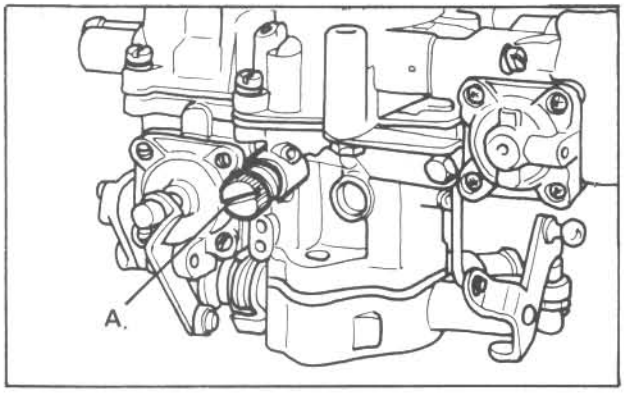

Fig. B:23 Idle speed air control screw - Solex

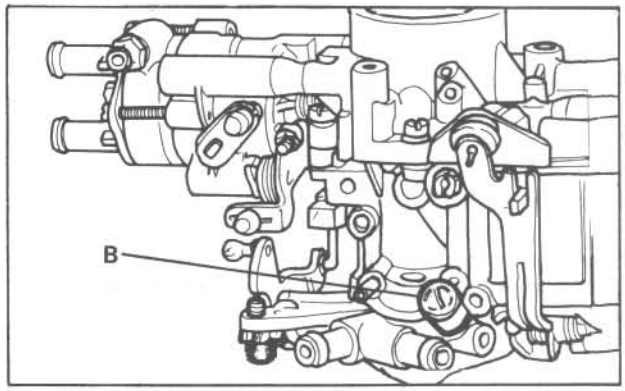

Fig. B:24 Idle mixture control screw - Solex

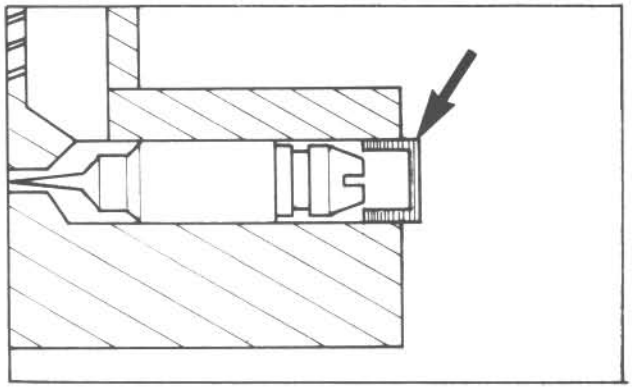

Fig. B:25 Tamperproof seal - Zenith carburettor

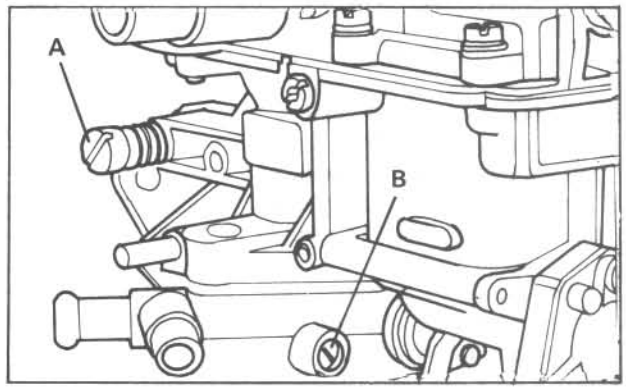

Fig. B:26 Idle adjustment screws - Zenith

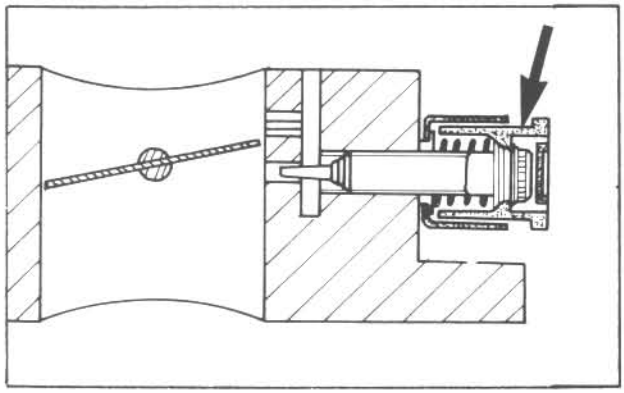

Fig. B:27 Tamperproof seal - Weber carburettor

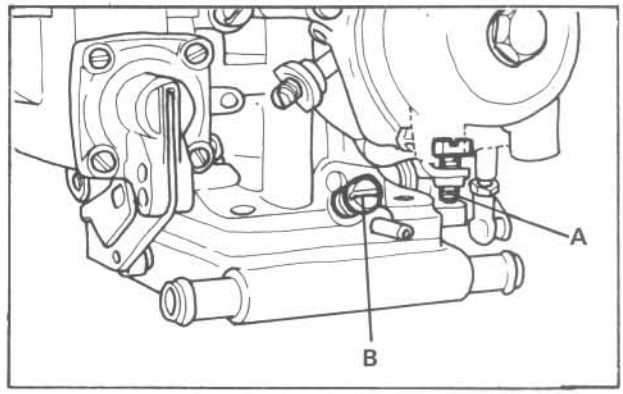

Fig. B:28 Idle adjustment screws - Weber

In the UK, it is not a legal requirement for a new seal to be fitted once any adjustment has been carried out, however, in certain EEC countries the adjustment screws should be sealed.

Special Tools

Before attempting to tune the carburettor, you will need an accurate tachometer or rev-counter plus a vacuum gauge or Gunson's Colortune plug for checking and adjusting the mixture. The latter are available from most car accessory shops. In addition, a few standard screwdrivers and a pair of pliers will be needed.

Idle Adjustment, Preparatory Conditions

Before adjusting the carburettor, the following conditions should be met. If not, the carburettor settings will be incorrect.

1. All other engine functions, for example, valve clearances, and ignition timing should be correctly adjusted and working properly as detailed previously in this chapter.
2. Check that the inlet manifold is without any air leaks including the security of emission system pipes.
3. The engine should be at normal operating temperature. Either drive the car for a few miles or allow the engine to fast idle for at least 15 minutes, depending on the season.
4. The air cleaner should be in position when attempting to adjust the idle speed. The choke flap valve should also be fully open (vertical), remove the cover over the carburettor intake to check this. If suspect, see FUEL SYSTEM chapter. Refit the cover before adjustment.
5. All electrical components such as lights, heater blower motor and radio should be switched off during the adjustment procedure.
6. On automatic transmission models, the selector lever should be in the 'D' position with the handbrake fully applied and the wheels securely chocked to prevent movement.
7. If not already fitted to the car, a tachometer or rev-counter should be connected to the ignition circuit. Connect the meter Red lead to the ignition coil (-) Negative terminal, and the meter Black lead to a good Earth on the car body.
8. Remove No 1 cylinder spark plug and fit the Colortune plug and lead connector.

Solex/Zenith Carburettor Adjustment

1. Check the idle speed - see TECHNICAL DATA for specification. If adjustment is required, adjust the idle speed by turning the idle air screw (Fig. B:23) on Solex carburettors, or the throttle stop screw A, Fig. B:26 on Zenith carburettors, to obtain the correct speed.

NOTE: Normally, no adjustment of the mixture setting will be necessary. However, if the engine will not idle smoothly at the correct idle speed, or the CO level is found to be outside the specified limits, check and adjust as follows:

2. Remove the tamperproof seal from the mixture control screw (B, Figs. B:24 & B:26).
3. Connect up an exhaust gas analyser, vacuum gauge (to brake servo vacuum pipe take-off on manifold) or a Colortune test plug in accordance with the equipment manufacturer's instructions.
4. Run the engine at fast idle for about half a minute, then, with the engine idling, turn the mixture control screw (B, Figs. B:24 & B:26) by small amounts at a time until the correct CO or vacuum reading, or mixture colour is obtained, depending on the equipment being used.
5. Readjust idle speed if necessary as detailed previously in operation 1. followed by readjustment of the mixture setting until a satisfactory idle speed is obtained.

Weber Carburettor Adjustment

1. Check the idle speed - see TECHNICAL DATA for specification. If the idle speed is outside the specified limits, adjust by turning the throttle stop screw (A, Fig. B:28) to obtain the correct speed.

NOTE: Normally, no adjustment of the mixture setting will be necessary. However, if the engine will not idle smoothly at the correct idle speed, or the CO level is found to be outside the specified limits, check and adjust as follows:

2. Remove the tamperproof seal from the idle mixture control screw (Fig. B:27).
3. Connect up an exhaust gas analyser, vacuum gauge (to the brake servo vacuum pipe take-off on manifold) or a Colortune test plug in accordance with the equipment manufacturer's instructions.
4. Run the engine at a fast idle for about half a minute then, with the engine idling, turn the idle mixture control screw (B, Fig. B:28) by small amounts at a time until the correct CO or vacuum reading, or mixture colour is obtained, depending on the equipment being used.
5. Readjust the idle speed if necessary as detailed previously in operation 1. followed by readjustment of the mixture setting until a satisfactory idle speed is obtained.

NON-START
Trouble Shooter

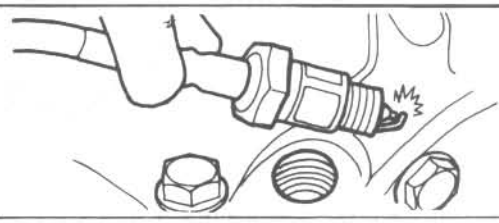

FAULT	CAUSE	CURE
Starter will not turn engine (Headlamps become dim after a minute	1. Battery discharged. 2. Battery faulty.	1. Check charging system and charge battery. 2. Fit new battery.
Starter will not turn engine (Headlamps dim when starter switch operated)	1. Bad connection on battery terminal 2. Starter jammed. 3. Seized engine.	1. Clean and tighten battery terminals. 2. Rock car in gear (Manual). Remove starter and free pinion (Automatic). 3. Establish cause of seized engine and rectify.
Starter will not turn engine (Headlamps stay bright)	1. Disconnected or loose engine earth. 2. Gear lever not in P or N. (Auto.). 3. Wrongly adjusted or faulty inhibitor switch. 4. Starter solenoid faulty. 5. Starter pinion not engaging. 6. Starter pinion/ring gear teeth damaged. 7. Starter motor faulty. 8. Starter solenoid connections loose. 9. Faulty starter/ignition switch.	1. Reconnect or tighten earth. 2. Select P or N. 3. Adjust or replace inhibitor switch. 4. Fit new solenoid. 5. Remove starter and free off pinion. 6. Replace pinion/ring gear. 7. Fit new starter motor. 8. Tighten connections. 9. Fit new switch.
Engine turns slowly but will not start	1. Battery partly discharged. 2. Faulty battery. 3. Loose or corroded battery terminals. 4. Loose or disconnected engine earth. 5. Faulty starter motor. 6. Partially seized engine.	1. Recharge battery and check charging system. 2. Fit new battery. 3. Clean and tighten terminals. 4. Reconnect or tighten earth. 5. Fit new starter motor. 6. Establish cause and rectify.
Engine turns but will not fire	1. Ignition fault. 2. No spark at plug lead. 3. Mixture not reaching cylinders. 4. Engine flooded (over-use of choke). 5. Inadequate tappet clearances.	1. Check for spark at plug lead. 2. Check coil output to confirm high or low tension fault. If spark from coil, check HT leads, distributor cap and rotor arm, particularly for cracks, tracking or dampness. If no spark from coil, check ignition-coil connections and contact-breaker points for short circuits or disconnection. 3. Check petrol feed to carburettor by disconnecting fuel feed pipe and actuating pump. If no petrol, look into carburettor intake, operate throttle, observe whether damp or dry. If dry, clean jets, needle valve, internal filters etc. 4. Remove spark plugs, dry, clean, and check gaps. Refit and start car with throttle held fully open. 5. Adjust tappets.
Engine backfires	1. Inadequate tappet clearances. 2. Ignition timing incorrect. 3. Contact breaker points dirty or incorrectly set. 4. Damp distributor cap or leads. 5. Cracked or tracking distributor cap/rotor arm. 6. Incorrect plug lead positioning.	1. Adjust tappets. 2. Check and reset ignition timing. 3. Check and reset points. 4. Dry thoroughly. 5. Fit new cap/rotor arm. 6. Check and re-position leads.

OHV - Engine

INTRODUCTION . . . . . [1]
CYLINDER HEAD . . . . . [2]
CRANKSHAFT FRONT/REAR OIL SEALS . [3]
TIMING CHAIN & TENSIONER . . . . . [4]
SUMP PAN . . . . . [5]
OIL PUMP . . . . . [6]
ENGINE MOUNTINGS . . . . . [7]
ENGINE OVERHAUL . . . . . [8]
ENGINE REMOVAL & INSTALLATION . . . [9]
EXHAUST SYSTEM . . . . . [10]

INTRODUCTION . . . . . [1]

There are four versions of the OHV (overhead valve) engine used in the Renault 18 and Fuego, depending on the model - see HISTORY & IDENTIFICATION section for details.

All four engines are of the 'wet liner' type with replaceable cylinder liners using either a cast iron or aluminium cylinder block and are similar in design except for the cylinder head.

Type 841/A2M engine (1647 cc) is of conventional Renault OHV design, with the camshaft mounted high in the engine block operating the valves via cam followers mounted in the cylinder head, short pushrods, and a single rocker shaft. The timing chain is of the duplex type with hydraulic tensioner.

Both the type 807 (1565 cc) engine on the Turbo, and type 843 (1647 cc) on Fuego models have a similar engine block to the type 841/A2M engine, but have a hemispherical combustion chamber cylinder head and twin rocker shafts.

Type 847 engine (1647 cc) fitted to R18 and Fuego models differs considerably from the 841/A2M type by having the camshaft mounted lower in the engine block along with the cam followers, a single row timing chain and spring - loaded chain tensioner.

The repair and overhaul procedures, however, are similar on all four types of engine, but where differences do occur, they are detailed in a separate section.

Such is the design of the Renault 18 and Fuego engine, that much of the normal repair and overhaul work can be carried out with the engine in-situ. In fact, the engine will only have to come out if it is to be replaced, or for attention to the crankshaft.

All other repair operations can be done quite easily after removal of the associated ancillary components - detailed in the relevant sections of this manual.

Some operations will require the use of special tools which the DIY mechanic is unlikely to possess and in most cases these can be hired locally, although, where possible a practical DIY alternative is detailed.

In cases where special Renault tools are essential, however, it will be necessary to contract the work out to a local Renault dealer or auto engineers who will have the necessary equipment.

CYLINDER HEAD . . . . . [2]

Removal - Type 841/A2M and 847 Engines

1. Disconnect the battery and drain the cooling system as detailed in the COOLING SYSTEM chapter.
2. Make a note of the fitted position of any emission system pipes connected to the rocker cover, carburettor or air filter assembly before removing the air filter assembly or air intake elbow from the carburettor, depending on the engine. Disconnect and clamp the fuel pipe at the carburettor to prevent fuel loss and the ingress of dirt.
3. Remove the radiator grille as detailed in the BODY & FITTINGS chapter, then undo the bolts and remove the bonnet lock panel over the radiator.
4. Detach the throttle cable, and choke cable (if fitted) from the carburettor - see FUEL SYSTEM chapter.
5. Disconnect the H.T. leads from the spark plugs and ignition coil. Remove the distributor as detailed in the ENGINE ELECTRICS chapter.
6. Slacken the alternator/water pump drive belt as detailed in the ROUTINE MAINTENANCE chapter, then detach the belt from the pulleys.
7. On 847 type engines, remove the alternator and mounting bracket from the side of the cylinder head - see ENGINE ELECTRICS chapter.
8. Disconnect the radiator hoses at the water pump - see COOLING SYSTEM chapter.
9. Disconnect the exhaust downpipe at the manifold connection (Fig. C:1) and support the pipe clear of the engine to avoid straining the remainder of the system.
10. Unscrew the two or three nuts (depending on the engine) and carefully detach the rocker cover from the cylinder head.
11. Remove the diagnostic socket from its bracket.
12. Slacken the rocker arm adjuster locknuts and slacken the adjusting screws sufficient to disengage the push rods.
13. Withdraw the pushrods in installation order. Place each pushrod through a piece of numbered card in removal order - this is important.
14. Unscrew and remove all the cylinder head bolts except the bolt adjacent to the distributor (Figs. C:2 & C:3). This bolt should be slackened by a few turns but not removed at this stage.
15. It is vital that the cylinder head is not lifted off the block until the head gasket seal is broken. To do this, tap

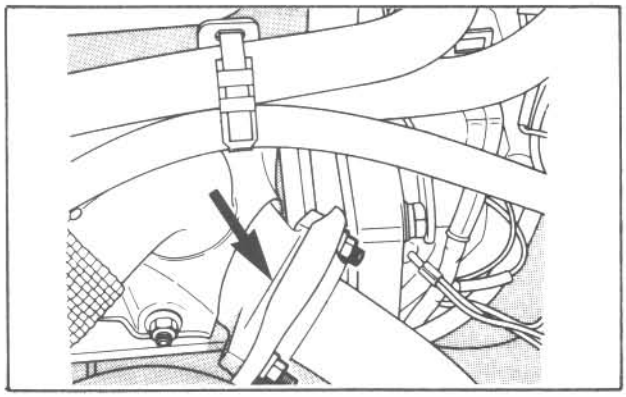

Fig. C:1 Disconnect exhaust pipe at manifold flange

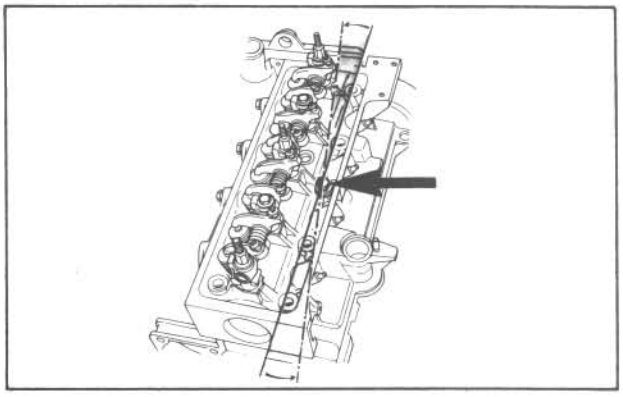

Fig. C:2 Location of head pivot bolt - 841 type engine

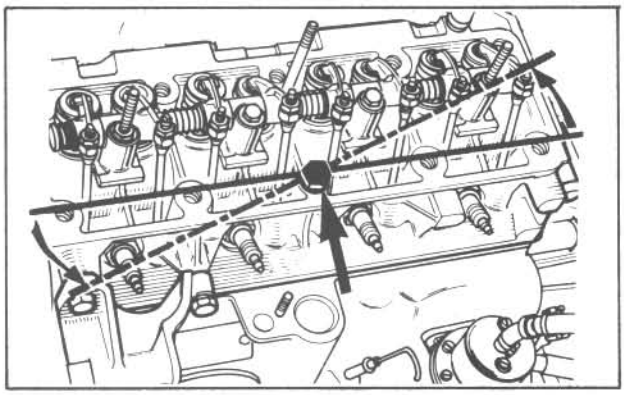

Fig. C:3 Location of head pivot bolt - 847 type

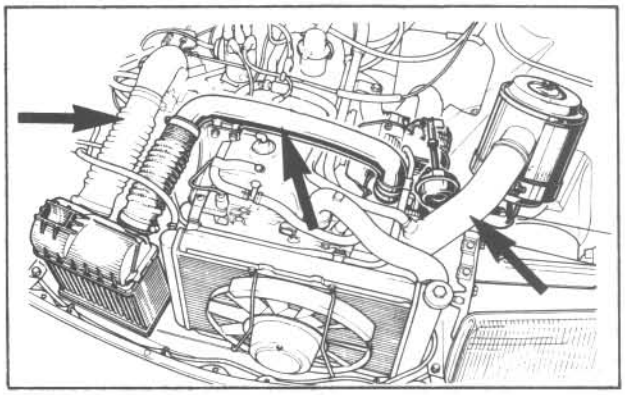

Fig. C:4 Type 807 Turbo charger trunking

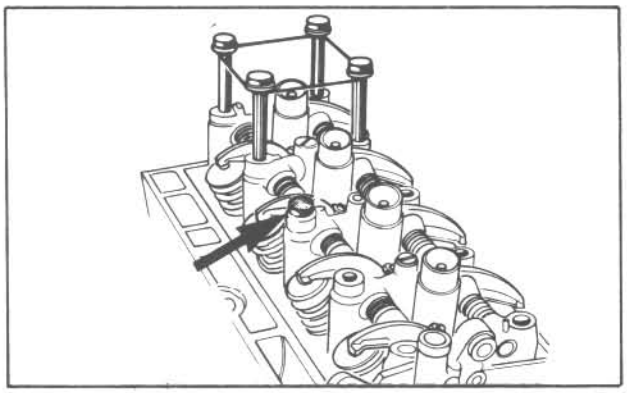

Fig. C:5 Location of head pivot bolt - 807/843 type

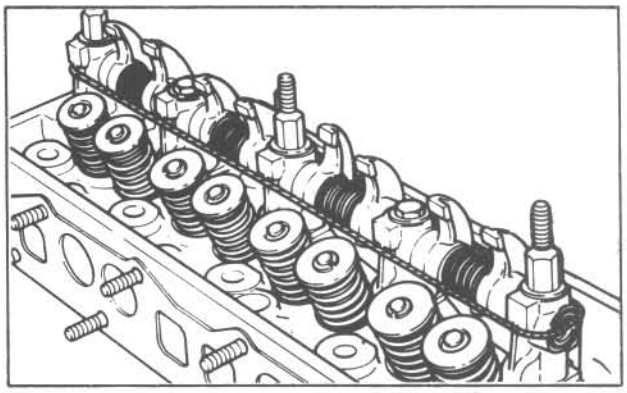

Fig. C:6 Removing rocker shaft on type 841 engine

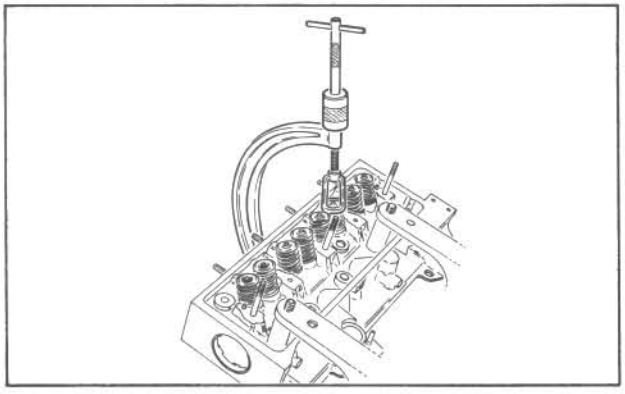

Fig. C:7 Removing valves with compressor tool

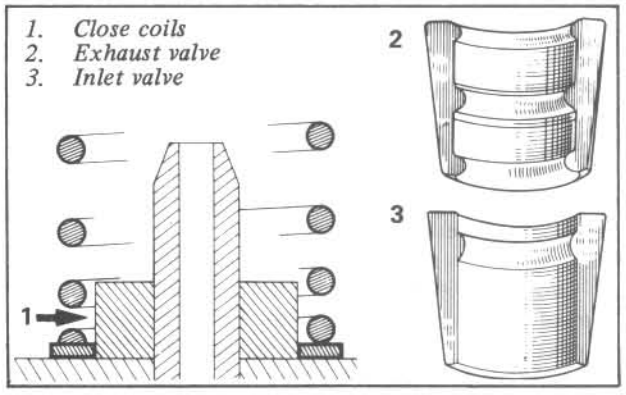

Fig. C:8 Valve spring and collet fitting

each end of the cylinder head on the side with a plastic headed hammer or wood mallet until the head pivots about the remaining head bolt (Figs. C:2 & C:3).
16. Remove the remaining cylinder head bolt, then carefully lift the head assembly complete with inlet and exhaust manifolds off the engine block. Note that on type 841 engine cylinder heads, the cam followers are fitted in the underside of the head and care should be taken to prevent them falling out as the head is removed.
NOTE: Do not turn the crankshaft or disturb the cylinder liners. If the cylinder head is being removed to replace a leaking head gasket, the protrusion of the cylinder liners should be checked - see Pistons & Engine Block section.

Removal - Type 807 & 843 Engines

1. Disconnect the battery and drain the cooling system as detailed in the COOLING SYSTEM chapter.
2. Remove the air trunking between the turbocharger and the intercooler, and the trunking between the intercooler and the carburettor intake (Fig. C:4).
3. Slacken the alternator/water pump drive belt as detailed in the ROUTINE MAINTENANCE chapter and detach the belt from the water pump pulley.
4. Detach the H.T. leads from the spark plugs and the ignition coil. Undo the clamp bolt and remove the distributor from the cylinder head.
5. Note the fitted position of the various crankcase emission pipes between the turbocharger and the carburettor/inlet manifold before disconnecting the pipes.
6. Undo the nuts and carefully pull the inlet and the exhaust manifolds clear of the head studs. Support both manifolds clear of the head and make sure that the exhaust system is not under undue strain.
7. Undo the screws and detach the rocker cover from the cylinder head.
8. Slacken the rocker arm adjuster locknuts and turn the adjuster screws until the pushrods can be disengaged.
9. Withdraw the pushrods in installation order. Place each pushrod through a numbered hole in a piece of card in removal order - this is important.
10. Unscrew the cylinder head bolts in the tightening order shown in Fig. C: 20.
11. Raise the rear four bolts and keep them in this position with an elastic band as shown in Fig. C:5.
12. Remove the remainder of the head bolts except the bolt arrowed in Fig. C:5 which must only be slackened by a couple of turns at this stage.
13. The cylinder head must not be raised to remove it at this stage as the head gasket will be stuck to both the head and cylinder liner faces. Lifting would raise the liners and break the watertight seal at the base of the liners, allowing coolant and dirt to enter the sump.
14. To unstick and remove the head, tap each end of the head on the side with a plastic headed hammer or wood mallet until the head pivots about the remaining head bolt.
15. Unscrew the remaining head bolt and lift the head clear of the engine block, complete with water pump. Note that the cam followers (tappets) are fitted in the underside of the head and care must be taken to prevent them from falling out when the head is removed.
NOTE: Do not turn the crankshaft or disturb the cylinder liners. If the cylinder head is being removed to replace a leaking head gasket, the protrusion of the cylinder liners should be checked - see Pistons & Engine Block section.

Dismantling the Head - All Engines

1. Place the head, supported on wood blocks, on a clean workbench and remove the spark plugs.
2. Undo and remove the bolts attaching the water pump to the head, and remove the pump.
3. Remove the inlet and exhaust manifolds from the cylinder head, (except 807 & 843 type engines)
4. Undo the bolts and nuts attaching the rocker shaft support brackets to the head, then remove the rocker shaft assembly. On 807 & 843 type engines, simply lift off the rocker shaft assembly. On 841 type engines, tie a piece of string around the shaft assembly to prevent the components becoming detached (Fig. C:6).
5. Support the head upside down on wood blocks and carefully remove all carbon deposits from the combustion chambers, valve heads and valve ports with a suitable scraper and wire brush. Note that great care should be taken when doing this to avoid scratching or scoring the metal, particularly the machined face of the cylinder head.
6. Similarly, clean any carbon or gasket remains from the cylinder head face using a non-caustic solvent such as Evostick cleaning solution.
7. Blow or brush any carbon dust or dirt away from the combustion chambers, valve ports and head face.
8. Using a universal valve spring compressor tool, compress the valve springs and remove the split collets to detach the valve (Fig. C:7) starting with the valve nearest to the rear of the head. Mate each valve with its respective spring and collets in removal order for examination. Note that the collets are different for inlet and exhaust valves (Fig. C:8), also that double valve springs are fitted on type 807 and 843 engines.
9. To dismantle the rocker shaft assembly, remove the spring clips (if fitted), or carefully slide the components off the shaft, depending on the engine type (Figs. C:9 & C:10). Place the components in removal order for cleaning and examination. The oilway plugs at the ends of the shaft are a press fit and must not be removed. If necessary, tap any jammed components off the shaft using a soft faced hammer to free them.

Cylinder Head Inspection

Clean all old gasket material, etc., from the machined faces and remove all oil and dirt by thoroughly washing the head in paraffin. Check the internal water passages of the head through the water pump flange, and remove any lime deposits.

Blow out all oil and water passages, particularly the rocker shaft oil transfer passage with compressed air from a tyre foot pump. Probe all bolt holes to ensure they are clear. If necessary, the holes can be cleared out with a suitable size of tap.

Inspect the head for cracks, particularly around the combustion chambers and valve seats, and all machined surfaces for signs of burrs, scratches or nicks. Remove any burrs with an oil stone.

Check the machined face of the head for flatness us-

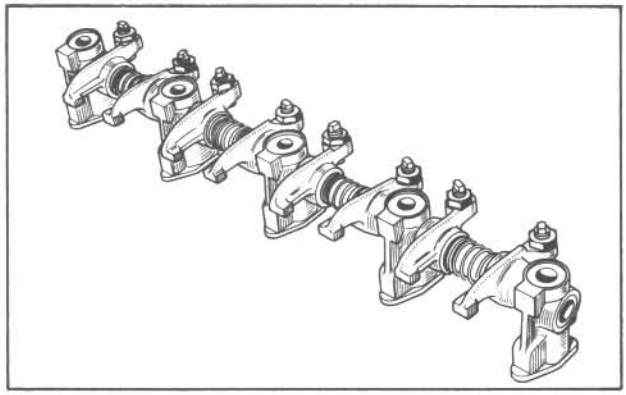

Fig. C:9 Rocker shaft component order - 841 engine

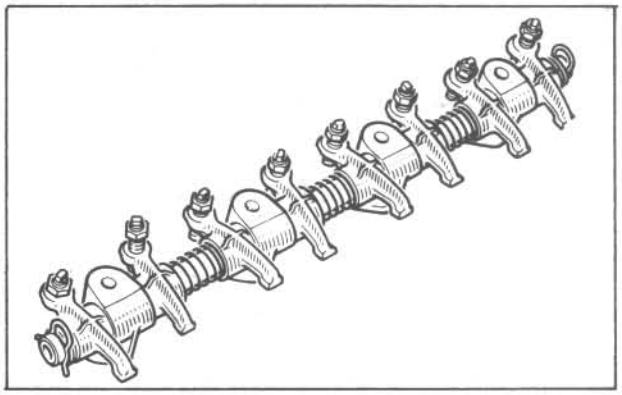

Fig. C:10 Rocker shaft component order - 847 engine

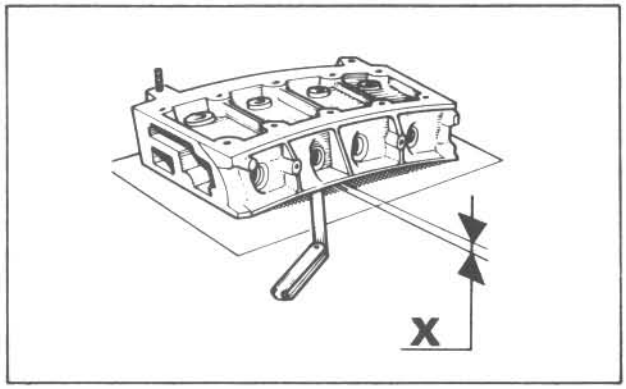

Fig. C:11 Checking cylinder head for flatness



Fig. C:12 Method of checking for valve/guide wear

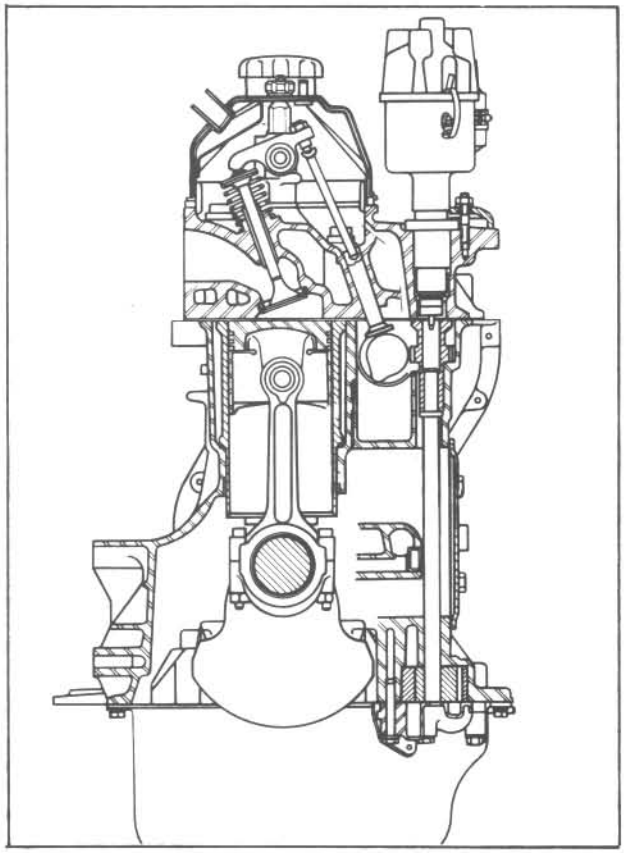

Fig. C:13 Sectional view of type 841 engine

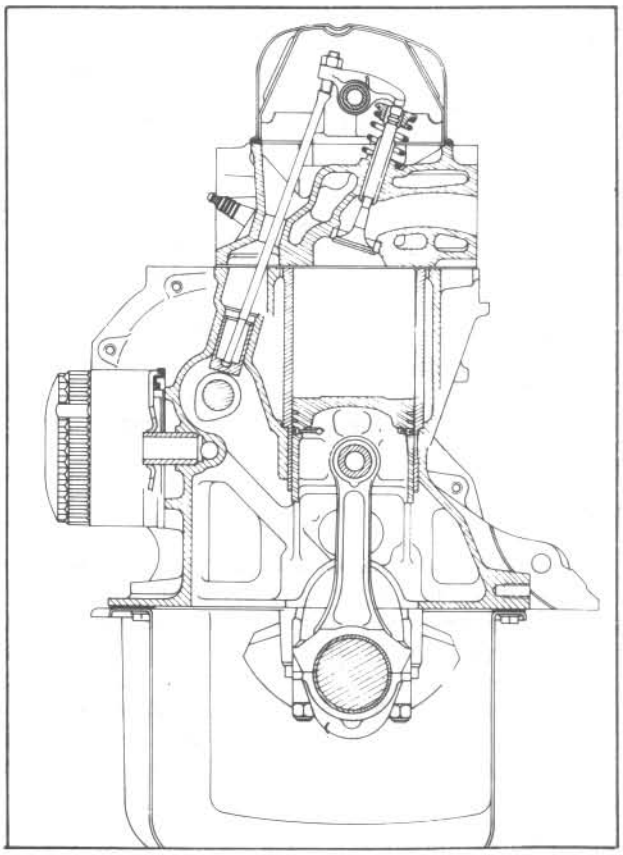

Fig. C:14 Sectional view of type 847 engine

ing a steel rule (Fig. C:11). If the head face is bowed more than 0,05 mm (0.002 in), the head should be machined flat by a local auto engineers or Renault dealer.

Check the spark plug holes for damaged or stripped threads. If present, it should be possible to rectify any damage with a suitable size of tap, or in bad cases, a Helicoil thread insert can be fitted by a local auto engineers.

Valve Inspection

If necessary, remove any excess carbon from the head of the valves by placing each valve in the chuck of a bench - mounted electric drill. With the drill on fast-speed (if applicable) and the eyes suitably protected, scrape off the deposits with a blunt screwdriver, taking care not to remove any metal from the valve. Finally, polish the valve with 'fine' grade emery cloth.

Inspect the valve head for signs of burning, errosion, cracking or warpage. Inspect the valve face and edges for pits, grooves, scores or other damage.

Inspect the end of the valve stem for grooves or other signs of wear. Minor damage may be removed by grinding, but do not remove more than 0,25 mm (0.010 in) from the end of the stem. Chamfer the end of the stem afterwards.

Inspect the valve stem to see if it is bent, or for signs of a wear ridge. If it is found to be bent or worn, then the valve should be replaced with a new one. Replacement valves are available with Standard or Oversize valve stems. The appropriate size should be selected dependent on the condition of the valve guides as detailed in the following section.

Valve Guides

After some length of use, an oval wear pattern is produced at the valve spring end of the valve guide bore, at right-angles to the crankshaft axis. Check the valve stem-to-guide clearance by refitting each valve to its respective guide, in turn as shown in Fig. C:12.

With the valve raised slightly off its seat, check the amount of sideways movement of the valve stem in its guide. If there is more than 'just perceptable' movement (about 0,015 mm/0.005 in) at the valve head, then the valve should be replaced or the respective guide reamed out and an oversize stem valve fitted. Try fitting a new valve first, then checking for wear. If the clearance is still excessive, the valve guide will have to be reamed oversize by a local Renault dealer or auto engineers.

Valve Seats

Inspect the surface of the valve seats, looking for signs of pitting, burning or looseness. If the pitting is only slight, then it should be possible to remove this by grinding in the valve(s) with 'coarse' grinding paste. Other than this, the valve seats should be recut to the correct angle - see TECHNICAL DATA, or the seats replaced with new ones. Both jobs should be done by a local Renault dealer or auto engineers who will have the necessary equipment for the job.

Valve Springs

Inspect the valve springs, spring retainer caps and collets for obvious signs of wear or damage, and replace any defective or suspect parts. Check the ends of the springs for squareness using a steel square on a flat surface. Revolve the spring slowly and observe the clearance between the top coil and the square. If the out of square is excessive, fit a new spring.

Check the free-length of each spring. If the length is less than that specified in the TECHNICAL DATA, the springs should be replaced.

The valve springs should be replaced as a matter of course if the car has completed a high mileage. Ensure that replacement springs are of the correct rating for the engine.

Push Rods & Rocker Shaft Components

Clean the pushrods and check the ends of each rod, looking for obvious signs of wear grooves, roughness etc. Check each rod for straightness by rolling it across a flat surface. Replace as necessary. Do NOT attempt to straighten a bent pushrod.

NOTE: Keep all pushrods in their removal order at all times.

Inspect the rocker shaft and arms for signs of wear indicated by wear ridges on the shaft, a sloppy fit of the arms on the shaft and for wear indentations on the valve stem end of each rocker arm. Replace any parts which are found to be worn or suspect.

Check that the oil holes in the shaft and rocker arms are clear. If necessary, probe the oilways with wire to clear them then blow through with compressed air from a tyre foot pump.

Cam Followers (Tappets)

Remove the cam followers from the engine block on type 847 engines and place them in removal order on a clean surface. On all engine types, clean each follower and check the cam contact face for damage. If the face is pitted, chipped or otherwise obviously damaged, the camshaft lobes should also be checked for wear before fitting new cam followers.

Pistons & Engine Block

As detailed previously when removing the cylinder head, the position of the cylinder liners must not be disturbed with the head removed otherwise the seal at the base of the liners may be broken, allowing coolant and dirt to enter the sump. This is particularly important when the crankshaft needs to be turned to reposition the pistons for decarbonising purposes.

All four cylinder liners must be held firmly in position when turning the crankshaft and Renault garages use a special tool for this (Fig. C:15). A similar tool can either be made from scrap materials or, probably the most practical way of doing this is to place a flat wood block or steel bar across the centres of all four liners, pressing down on it while turning the crank with a spanner on the crankshaft front pulley bolt.

Bring each pair of pistons to the TDC (Top Dead Centre) position and carefully scrape any carbon from the piston crowns, leaving a thin ring of carbon around the outer edge to preserve the natural extra sealing arrangement of the carbon. Finally, polish the crown with 'fine'

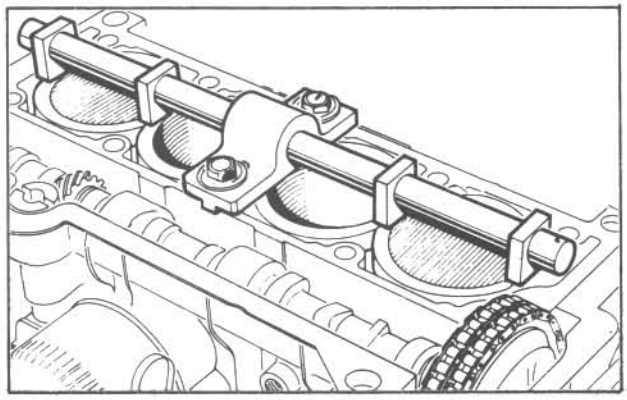

Fig. C:15 Renault special tool for holding cylinder liners

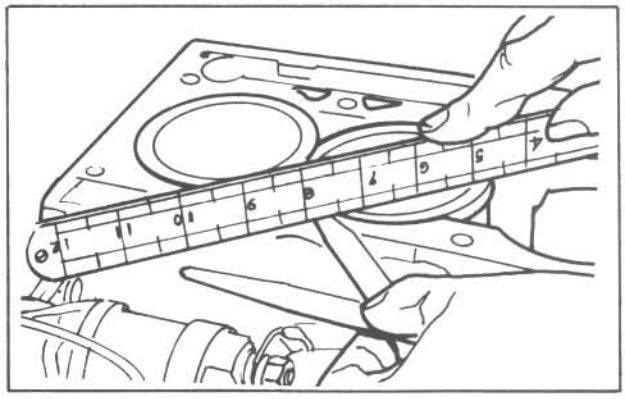

Fig. C:16 Checking cylinder liner protrusion

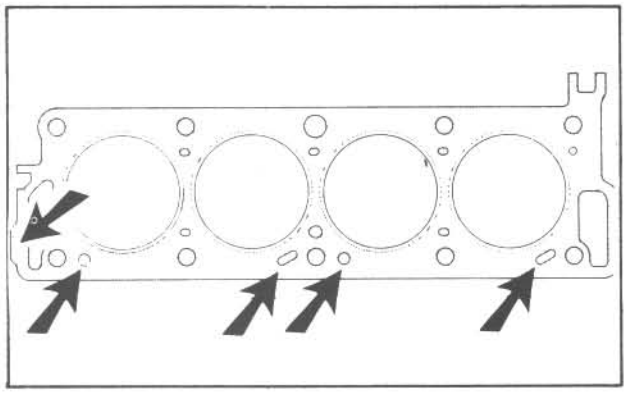

Fig. C:17 Head gasket identification - type 807/841/843 engine

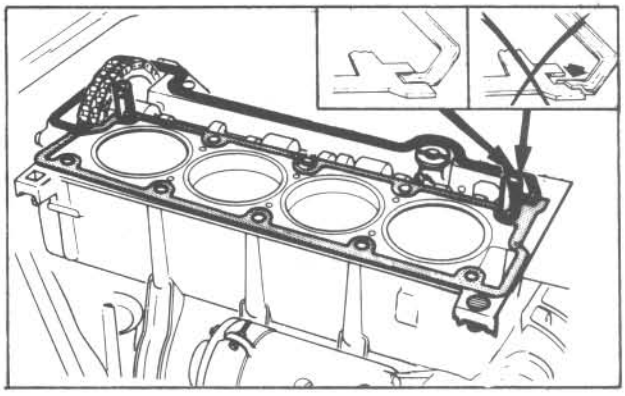

Fig. C:18 Correct head gasket positioning - 807/841/843

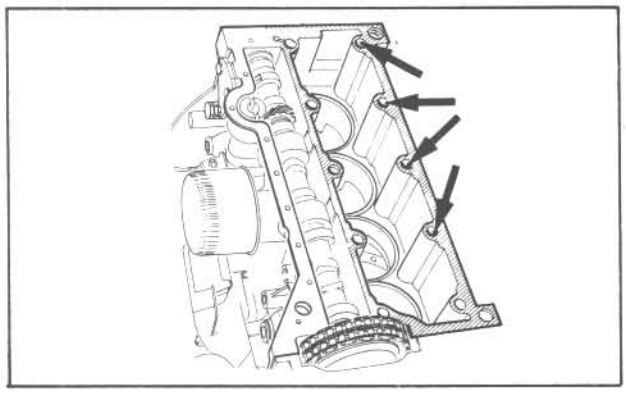

Fig. C:19 Position of the four longest head bolts - 841

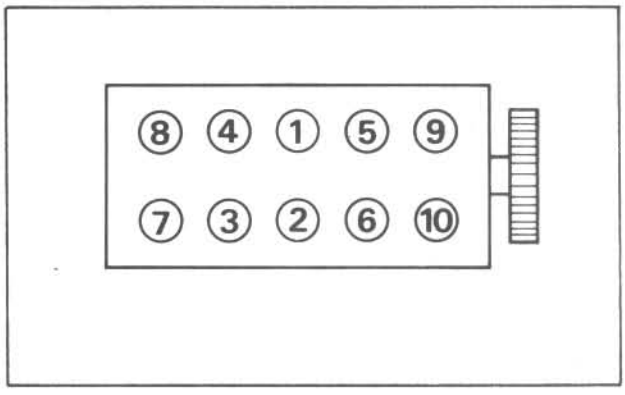

Fig. C:20 Head bolt tightening sequence - all engines

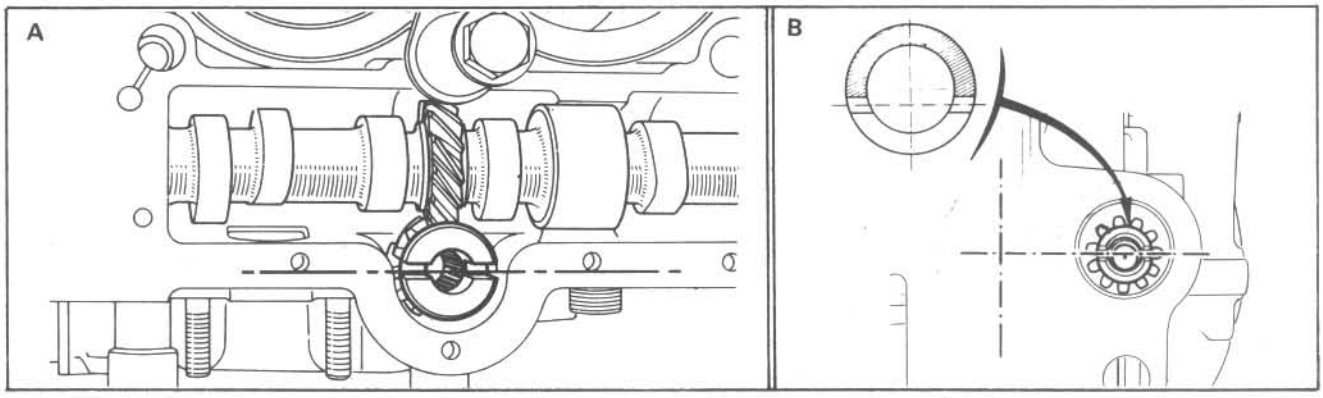

Fig. C:21 Correct position of distributor drive slot (No 1 piston at TDC) 807/841/843 engines (A) & 847 engines (B)

grade emery cloth. Repeat the cleaning procedure on the remaining pair of pistons.

Make sure that any carbon particles are not allowed to drop into the engine block water passages or oilways. Ideally, a vacuum cleaner with a small section nozzle should be used to remove any carbon.

Clean the gasket face on the engine block to remove all gasket remains, also clean out all head bolt holes. Finally, wipe the cylinder bores to remove any dirt.

If the cylinder head has been removed because of head gasket leakage, the protrusion of the cylinder liners should be checked either using a clock gauge as shown in Fig. C:16 or by placing a steel rule across all four liner centres and measuring the gap between the rule and the engine block face. The gap should not exceed the tolerance given in the TECHNICAL DATA for the relevant engine. If the gap is incorrect, reference should be made to the 'Engine Overhaul' section later in this chapter.

Reassembling the Cylinder Head

Place the head, supported on wood blocks, upside down on a workbench, then grind-in each valve (including new valves) to its respective seat by hand, using a valve grinding tool and 'coarse' or 'fine' grinding paste depending on the condition of the seat, as follows:

1. Smear a small quantity of 'coarse' or 'fine' grinding paste (depending on the condition of the seat) around the valve seat, making sure that the paste does not contact the valve guide bore.
2. Attach the suction pad of a valve grinding tool to the head end of a valve, then insert the valve into its respective guide.
3. Grind-in the valve by rotating the grinding tool handle between the palms of the hands, backwards and forwards and, at the same time, applying slight downward pressure on the valve.
4. Periodically, lift out the valve, apply fresh grinding paste, then turn the handle by a few degrees and repeat the grinding procedure.
5. Continue grinding until a gas-tight seal is obtained at the seat. This will be indicated by a continuous matt grey ring around the valve face and seat. When this has been achieved, clean all traces of grinding paste from the seat and valve - this is important.
6. Repeat the grinding procedure on the remaining valves.

NOTE: It may take at least 10 minutes of continuous grinding to produce a satisfactory seal on the valve and seat.

7. After all the valves have been ground-in and cleaned, the sealing of the valves can be checked (if time permits) by refitting the spark plugs and the valves to their respective seats, then filling each combustion chamber with paraffin. If the valves are sealing properly, there should be no detectable leakage of paraffin through the valve ports for at least 20 minutes. If necessary, repeat the grinding procedure.
8. Finally, remove all valves and spark plugs, then thoroughly wash the head in paraffin to remove all traces of grinding paste. Blow the head dry using compressed air from a tyre foot pump, then wipe with a clean cloth.
9. Lubricate the valve stems and guide bores before installing each valve assembly in its respective position, in the reverse order of removal. Note that the close-coiled end of the valve spring goes next to the cylinder head. Make sure that the split collets are correctly fitted before releasing the spring compressor tool. Note that double valve springs are fitted on type 807 & 843 engines.
10. Check that the inlet and exhaust manifold, and the water pump mounting flanges are clean before refitting to the cylinder head with new gaskets, in the reverse order of removal.
11. Reassembly the rocker shaft (if dismantled) in the correct order and refit it to the cylinder head. It is important that the shaft lubrication oilways in the support pedestals are aligned with the oil passages in the head. Also the lubrication holes in the rocker shaft must face towards the pushrods when installed.
12. On all cylinder heads, except type 847, smear the cam followers (tappets) with grease before installing each one in its original bore. After installation, give each follower a slight tap with a wood block to hold it in position while the head is being installed. Check that the followers will stay in place by lifting the head slightly off the workbench in its normal installed position.

Cylinder Head Installation - All except Type 847

Make sure that the correct head gasket is being fitted to these engines. The gasket can be identified by additional holes for coolant circulation, and a tongue at the water pump end as shown in Fig. C:17.

Renault specify that the cylinder head positioning operation is very important as it determines the alignment of the distributor drive spindle with its drive pinion. Special Renault tools are used by dealers when fitting the head on these engines which locate the two gaskets to prevent them from moving when the head is fitted. As it is unlikely that the DIY mechanic will be able to obtain these special tools, the head/gaskets/cylinder block alignment will be critical for correct fitment, and an assistant or two will be of great help during installation as follows:

1. Make absolutely sure that the cylinder head and engine block gasket faces are perfectly clean.
2. Carefully fit the cylinder head gasket so that all the bolt holes are perfectly in line with the gasket holes.
3. Fit the rubber camshaft chamber seal to the block face, making sure that the ends are correctly aligned with the cut-outs in the head gasket (Fig. C:18).
4. Lubricate the cylinder head bolt threads with clean engine oil and position and four longest bolts to one side (841 type engine only - see Fig. C:19).
5. Now comes the critical bit - positioning the head on the block. Two assistants will be needed to hold the head assembly in position directly over the engine but keeping it about 13 mm away from actually making contact with the gasket. A third person should now finally align the head with the gasket and block holes before very carefully inserting the head bolts at the four corners of the head, into the block without disturbing the gasket. Screw each head bolt in by a couple of turns at this stage to locate them. Now, very carefully lower the head onto the engine block without disturbing the gasket.
6. Slowly screw the already fitted head bolts fully

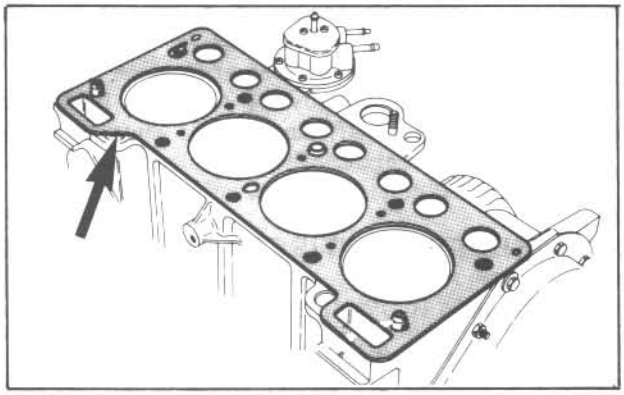

Fig. C:22 Head gasket fitting/identification (arrowed) - 847

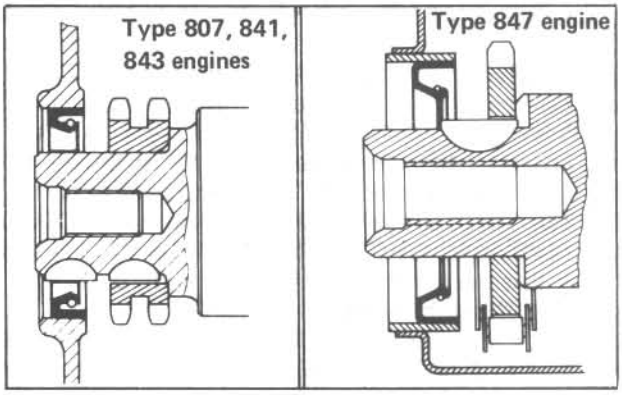

Fig. C:23 Crankshaft front oil seal location in cover

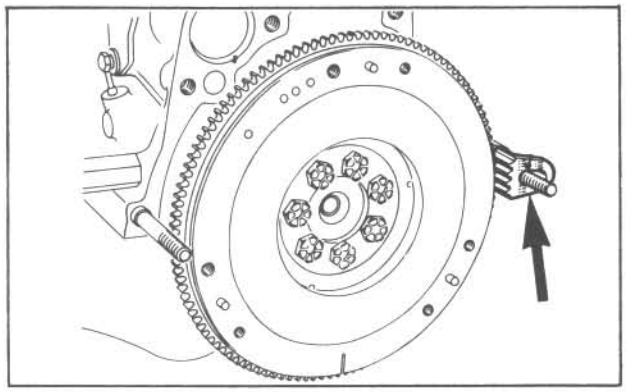

Fig. C:24 Method of locking flywheel to undo bolts

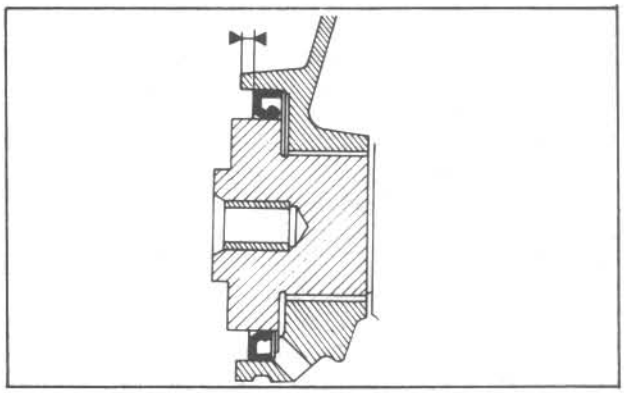

Fig. C:25 Crankshaft rear oil seal location

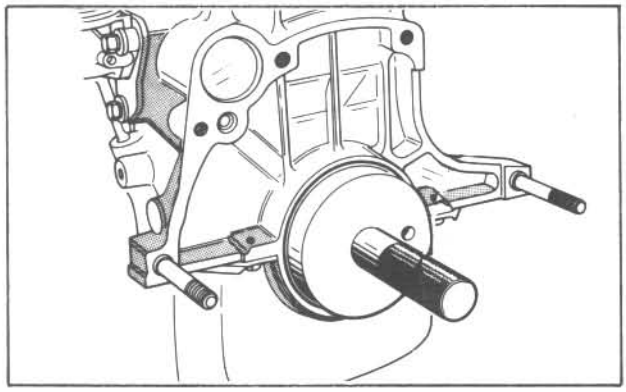

Fig. C:26 Using drift to install crank rear oil seal

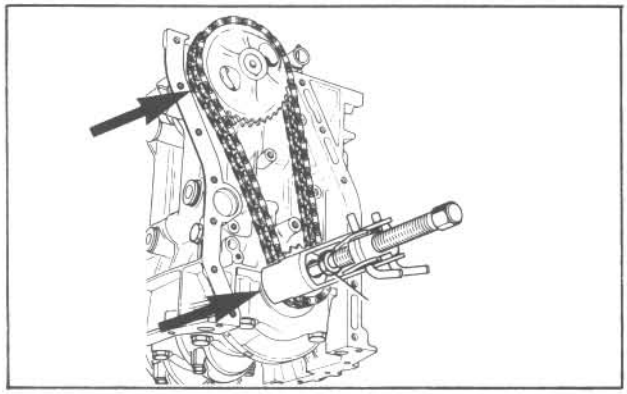

Fig. C:27 Removing crank and camshaft sprockets

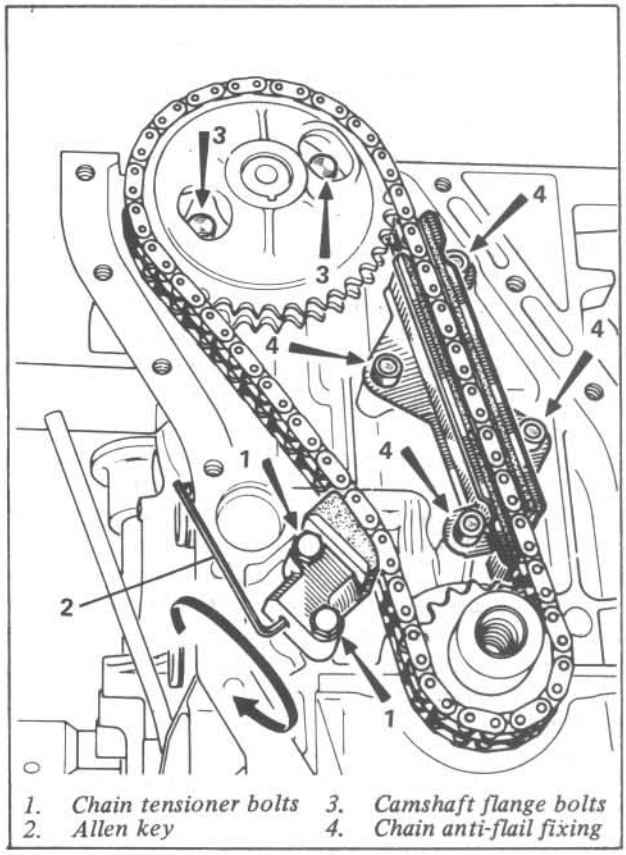

1. *Chain tensioner bolts*
2. *Allen key*
3. *Camshaft flange bolts*
4. *Chain anti-flail fixing*

Fig. C:28 Details of timing chain, sprockets and tensioner

home, finger tight, then fit the remainder of the head bolts.
7. Using a torque wrench, tighten the head bolts in the order shown in Fig. C:20 to an initial torque of 4,0 kg m (30 lb ft).
8. Finally, tighten the head bolts in the order shown in Fig. C:20 to a torque of 7,0 - 7,5 kg m (52 - 57 lb ft).
9. Turn the crankshaft until No 1 piston (at the rear of the head) is at the TDC (Top Dead Centre) position. Check that the distributor drive slot is in the correct position (Fig. C:21) then refit the distributor.
NOTE: If the distributor drive slot is 180 deg out, then continue to turn the crankshaft in a clockwise direction by one full revolution.
10. Refit the pushrods in their removal order, then adjust the valve clearances as detailed in the TUNE-UP chapter.
11. Reconnect the remainder of the ancillaries to the cylinder head and engine in the reverse order of removal. Refill the cooling system and bleed it as detailed in the COOLING SYSTEM chapter.
12. Run the engine until the cooling fan motor switches on, then stop the engine and allow it to cool for 2,5 hours. Retorque the head bolts in the order shown in Fig. C:00 by slackening off each bolt by 1/4 turn then tightening to 7,0 - 7,5 kg m (52 - 57 lb ft). Recheck and adjust the valve clearances as detailed in the TUNE-UP chapter.
NOTE: The engine on Type 807 Turbo models should never be run with any part of the air trunking between the turbocharger and the carburettor disconnected.

Cylinder Head Installation - Type 847 Engine

1. If removed, refit the cam followers (tappets) to their original bores in the engine block, lubricating them with clean engine oil prior to fitting.
2. Make sure that both the cylinder head gasket face and the engine block face are perfectly clean.
3. Position the new head gasket on the engine block with the 'HAUT - TOP' mark facing upwards and aligned with the head bolt holes. The correct gasket for the engine can be identified by two notches at the point shown arrowed in Fig. C:22.
4. Carefully position the cylinder head on the engine so that the bolt holes align, then refit the head bolts.
5. Using a torque wrench, tighten the head bolts in the order shown in Fig. C:20 to a torque of 5,5 - 6,0 kg m (41 - 45 lb ft).
6. Turn the crankshaft until No 1 piston (at the rear of the head) is at the TDC (Top Dead Centre) position. Check that the distributor drive slot is in the correct position (Fig. C:21) then refit the distributor.
NOTE: If the distributor drive slot is 180 deg out, then continue to turn the crankshaft in a clockwise direction by a further full revolution.
7. Refit the pushrods in their original positions, then adjust the valve clearances as detailed in the TUNE-UP chapter.
8. Reconnect the remainder of the ancillaries to the cylinder head and engine in the reverse order of removal. Refill the cooling system and bleed it as detailed in the COOLING SYSTEM chapter.
9. Run the engine for 20 minutes or until the engine has reached normal operating temperature, indicated by the radiator cooling fan switching itself on. Stop the engine and allow it to cool for 2,5 hours.
10. Retorque the head bolts in the order shown in Fig. C:20 by slackening each bolt by 1/4 turn, then tighten to 5,5 - 6,0 kg m (41 - 45 lb ft). Recheck and adjust the valve clearances as detailed in the TUNE-UP chapter.

CRANKSHAFT FRONT/REAR OIL SEALS . [3]

Front Oil Seal - Replacement

The oil seal can be replaced without draining the engine oil or removing the timing cover as follows:
1. Drain the cooling system and remove the radiator as detailed in the COOLING SYSTEM chapter.
2. Slacken the generator mounting bolts and push the generator towards the engine to disconnect and remove the drive belt. On type 807 Turbo & 843 engines, also disconnect the power steering pump belt.
3. Place the gear lever in 4th gear and apply the handbrake fully. If necessary, place chocks under the front wheels to prevent the car moving. On automatic transmission models remove the starter motor and prevent the crankshaft from turning by jamming the ring gear with a screwdriver.
4. Using a suitable socket with short extension, undo the crankshaft front pulley bolt.
5. Carefully withdraw the pulley from the front of the crankshaft using a universal puller tool if necessary.
6. Clean the area around the oil seal and measure the depth between the front face of the oil seal and the cover housing flange with a steel rule or suitable gauge, so that the new seal can be fitted to the correct depth.
7. Using a screwdriver or other suitable tool, lever out the old oil seal from the cover (Fig. C:23).
8. Clean all dirt from the seal housing and smear clean engine oil on the seal lips.
9. Place the new seal squarely in the housing (open side facing inwards) and tap it gently in with a hammer and tubular drift, until it is at the correct depth by measuring with the marker. It is essential that the seal is installed squarely in relation to the crankshaft axis to avoid oil leakage.
10. Clean, then lubricate the sleeve of the crankshaft pulley before refitting it making sure that the slot is engaged with the key in the crankshaft nose. Tighten the pulley bolt to the correct torque and refit the drive belts.
11. Refit the radiator, refill and bleed the cooling system as detailed in the COOLING SYSTEM chapter.

Rear Oil Seal - Replacement

1. Remove the gearbox and clutch as detailed in the CLUTCH & GEARBOX chapter. On automatic transmission models, remove the transmission as detailed in the AUTOMATIC TRANSMISSION chapter.
2. Lock the crankshaft to prevent it turning when undoing the flywheel or driveplate bolts, either by making up a locking tool similar to that shown in Fig. C:24 or by jamming a screwdriver between the ring gear teeth and the engine block flange.
3. Bend back the lock tabs on manual gearbox engines

only, then undo the bolts and detach the flywheel or driveplate. Discard the bolts.
4. Clean the area around the oil seal and crankshaft boss.
5. Using a screwdriver, carefully lever out the old oil seal,avoiding scratching or damaging the seal housing.
6. Clean the seal housing and crankshaft to remove all dirt and oil.
7. Smear clean engine oil on the seal lips and position the seal squarely in the housing with the open side facing inwards.
8. Using a hammer and tubular drift, gently tap the seal into the housing (Fig. C:26) until it is positioned flush with the end of the housing (Fig. C:25). In this position, the new seal lip will be contacting an unworn section of the crankshaft boss. It is essential that the seal is fitted squarely in relation to the crankshaft axis to avoid oil leakage.
9. Refit the flywheel or driveplate using new bolts coated with 'Locktite', followed by the clutch, gearbox or automatic transmission in the reverse order of removal.

TIMING CHAIN & TENSIONER .....[4]

Replacement - Type 807/841/843 Engines

1. Drain the cooling system and remove the radiator as detailed in the COOLING SYSTEM chapter.
2. Remove the cylinder head and ancillaries as detailed previously.
3. Remove the sump pan as detailed in the following section.
4. Remove the front pulley from the crankshaft as detailed previously under 'Crankshaft Front Oil Seal'.
5. Undo the bolts and remove the timing chain cover from the front of the engine block.
6. Retract the tensioner by inserting a 3 mm Allen key into the tensioner body and turning it as shown in Fig. C:28. Secure the chain tensioner pad in the retacted position with wire then remove the tensioner by undoing the two bolts (Fig. C:28).
7. Remove the timing chain anti-flail shoes (Fig. C:28), then undo the two bolts securing the camshaft flange. The bolts are accessible through the two holes in the cam sprocket (Fig. C:28).
NOTE: Hold the cylinder liners firmly in place with a wood block or steel bar if the crankshaft needs to be turned to align the cam sprocket flange access holes.
8. Using a universal puller tool, carefully pull the sprocket from the crankshaft nose, withdrawing the camshaft at the same time (Fig. C:29).
9. Detach the chain from the camshaft and crankshaft sprockets. Check all parts for wear - see 'Examination' section.
10. Keeping the cylinder liners held firmly in place, turn the crankshaft until the key on the crankshaft nose is at the top.
11. Fit the crankshaft sprocket to the chain (alignment mark facing outwards).
12. Position the chain over the cam sprocket so that both marks (Fig. C:29) are aligned. In this position, fit the sprocket to the crankshaft nose.
13. Drift the crankshaft sprocket fully home, sliding the camshaft into the engine at the same time.
14. Fit and tighten the two cam flange bolts (Fig. C:28).
15. Refit the original or a new chain tensioner and tighten the bolts. Release the wire or remove the plastic locking 'keep' on a new tensioner to set the tensioner (Fig. C:30).
16. Refit the anti-flail shoes and adjust them so they are about 1,0 mm away from the chain and parallel to the chain (Fig. C:28).
17. If necessary, fit a new oil seal to the timing cover before refitting the cover. Refit the crankshaft pulley to the crankshaft nose to centralise the seal before tightening the cover bolts.
18. Refit the cylinder head, sump pan and remainder of the ancillaries in the reverse order of removal as detailed in the relevant sections or chapters.

Replacement - Type 847 Engine

1. Remove the crankshaft pulley as detailed previously under 'Crankshaft Front Oil Seal', operations 1 to 4.
2. Drain the sump pan oil into a suitable container and refit the drain plug - see ROUTINE MAINTENANCE chapter.
3. Remove the sump pan from the engine as detailed under 'Sump Pan' in the following section.
4. Undo the bolts and remove the timing cover from the front of the engine.
5. Place an adjustable wrench over the crankshaft nose and turn the crankshaft until the alignment marks on the crank and camshaft chain sprockets are in line (Fig. C:31).
6. Remove the chain tensioner (Fig. C:32) and spring.
7. Bend back the tab washer and undo the camshaft sprocket securing bolt. Carefully remove the camshaft sprocket from the camshaft without turning the camshaft, then detach the timing chain from the crankshaft sprocket.
8. If necessary, use a universal two-legged puller to draw the sprocket off the crankshaft nose.
9. Examine the parts for wear - see 'Examination' section.
10. Fit the chain to the crankshaft sprocket first, then, holding the camshaft sprocket so that the alignment mark and the camshaft dowel pin hole are roughly lined up, attach the chain to the sprocket.
11. Fit the camshaft sprocket to the camshaft without turning the camshaft. If the dowel pin will not line up, check the timing mark alignment and reposition the cam sprocket on the chain. Check the timing mark alignment with a straight edge placed across the centres of the shafts (Fig. C:31).
12. Fit the camshaft sprocket bolt and tighten it to the correct torque before bending over the locking tab.
13. Fit the chain tensioner in position making sure the spring is correctly pre-tensioned.
14. Fit a new oil seal to the timing cover if the old one is leaking or the engine has covered a high mileage. Lever out the old seal and drift a new one in until the inner face of the seal is flush with the rear of the cover housing - see Fig. C:23.
15. Refit the timing cover and the remainder of the ancillaries in the reverse order of removal.

Examination

Check the timing chain for excessive wear by holding it in a horizontal position at one point and seeing by how much it bends. A slight curvature is permissible, but if the chain has a pronounced bend to it, then it should be replaced.

Another way to check for wear is to see if the chain links are unduly sloppy on the sprocket teeth and can be bunched together. If the chain is worn, then check the sprocket teeth too for obvious signs of wear on the thrust side of the tooth only, and replace the sprocket if necessary.

Check the rubber pad on the end of the chain tensioner, for wear. If it has slight scoring it can be reused but deep wear grooves caused by the chain mean a new tensioner assembly should be fitted.

SUMP PAN . . . . . [5]

The sump pan can be removed from the engine to give access to the oil pump and crankshaft big-end bearings quite easily without having to disturb the engine as follows:

Removal (Fig. C:33)

1. Drive the front of the car up on ramps or raise and support the front as detailed in the ROUTINE MAINTENANCE chapter.
2. Drain the sump pan oil into a suitable container and refit the drain plug - see ROUTINE MAINTENANCE chapter.
3. Undo the nuts and bolts and detach the engine undertray (if fitted).
4. Undo the bolts securing the sump pan to the engine. A universally jointed socket attachment will make it easier to undo the bolts on type 807, 841 and 843 engines.
5. Using a screwdriver, if necessary, free the sump pan from the engine and remove it from under the car.

NOTE: On type 847 engines, it may be necessary to turn the crankshaft webbs until Nos 1 and 4 pistons are at bottom dead centre, and to turn the front of the sump to one side to remove it.

Installation

1. Carefully clean all traces of the oil sump gasket from the engine and sump pan flanges.
2. Remove the rubber seal strips from the rear main bearing cap and front timing cover location grooves.
3. Fit the new rubber seals at either end of the crankshaft making sure the ends are properly located over the cut-out in the sump gasket (Fig. C:34).
4. Smear the engine block flange with Hermetite or similar jointing compound and stick the sump gasket strips in position (Fig. C:35).
5. Refit the sump pan to the engine, taking great care to avoid disturbing the gasket strips. Refit one sump bolt at each corner of the pan first to keep the gasket located, then refit the remainder of the bolts.
6. The remainder of the work is a reversal of the removal procedure tightening all bolts to the correct torque. Refill the engine with oil and check for leaks.

OIL PUMP. . . . . [6]

Testing Oil Pressure

The oil pressure can be tested to determine the condition of the pump and engine bearings using a suitable pressure gauge connected to the oil pressure switch connection on the side of the engine block. To get a reasonably accurate reading, it is important that the engine is at normal operating temperature and at the correct speed when the readings are taken.

1. Unscrew the oil pressure switch and connect up the pressure gauge pipe (Fig. C:36).
2. Start the engine and note the pressure gauge reading at idle speed (hot).
3. Increase the engine speed to 4000 rpm and note the pressure gauge reading.
4. If the pressure gauge readings are outside the limits specified in the TECHNICAL DATA, the pump should be removed and the components checked for wear.
5. Remove the pressure test equipment and refit the oil pressure switch.

Replacement

1. Remove the engine sump pan as detailed previously.
2. Undo the bolts securing the oil pump to the underside of the engine block (Figs. C:37 & C:38) and withdraw the pump assembly.
3. Prime the pump by injecting fresh oil into the pump outlet hole before fitting the pump in the reverse order of removal.

Checking for Wear

On type 847 engines, undo the four bolts secureing the pump cover to the body (Fig. C:39). Hold the cover in position then lift it slowly to prevent the pressure relief valve ball, seating and spring from flying out.

On type 807/841/843 engines, remove the split pin and withdraw the pressure relief valve components.

On both types of pump, lift out the driving and driven gears from the pump body, clean all parts in paraffin and check for wear. Refit the gears and check the clearance between the pump body and the gears with a feeler gauge (Fig. C:40). If the clearance exceeds the figure specified in the TECHNICAL DATA, or there are score marks on the pump cover, the pump should be replaced with a new one.

ENGINE MOUNTINGS. . . . . [7]

Replacement

1. With the car on level ground and the handbrake fully applied, place a jack with a suitable wood spacer on the head, under the centre of the sump pan. Raise the jack height sufficient to just take the weight of the engine.
2. Undo and remove the nuts or bolts securing the mounting to the engine and the car body (Figs. C:41 & C:42) on one side.
3. Raise the engine slowly with the jack until the mounting can be removed. Make sure none of the coolant hoses are under strain.
4. Fit the new mounting and lower the engine by stages until the mounting nuts or bolts can be refitted and

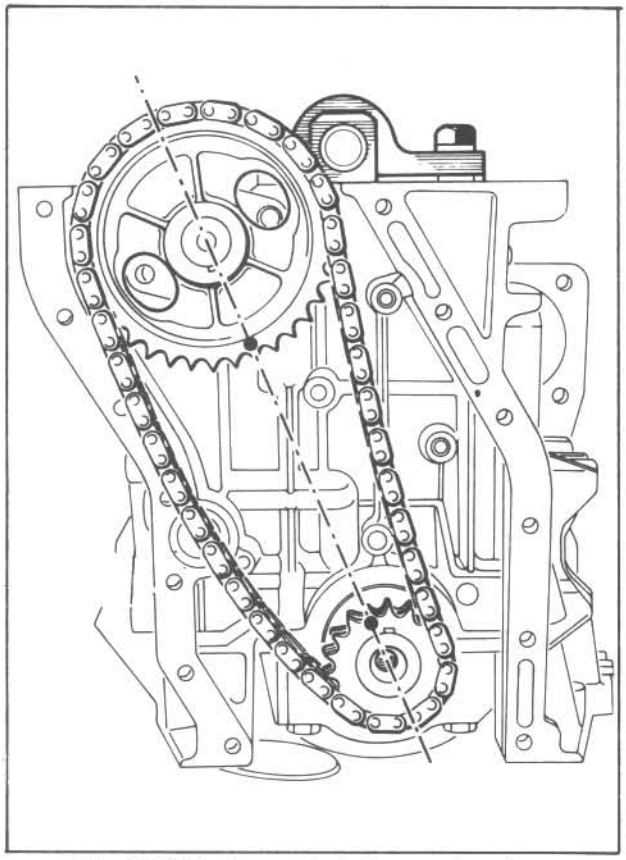

Fig. C:29 Chain sprocket alignment marks - 807/841/843 engines

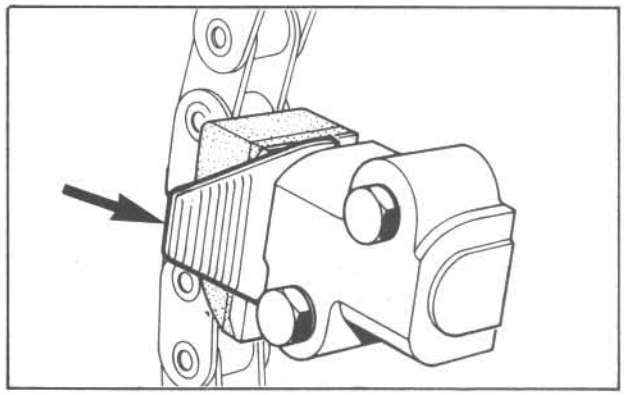

Fig. C:30 Timing chain tensioner locking 'keep' arrowed

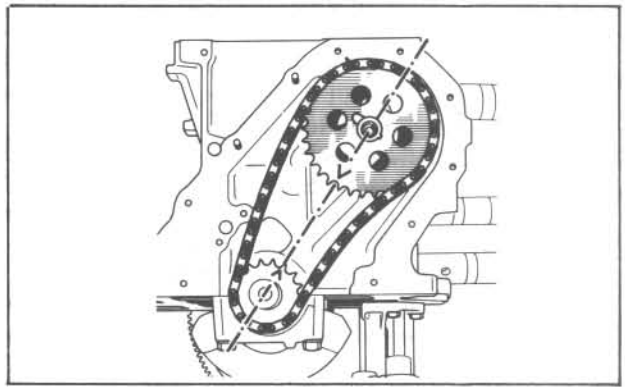

Fig. C:31 Chain sprocket alignment marks - 847 engines

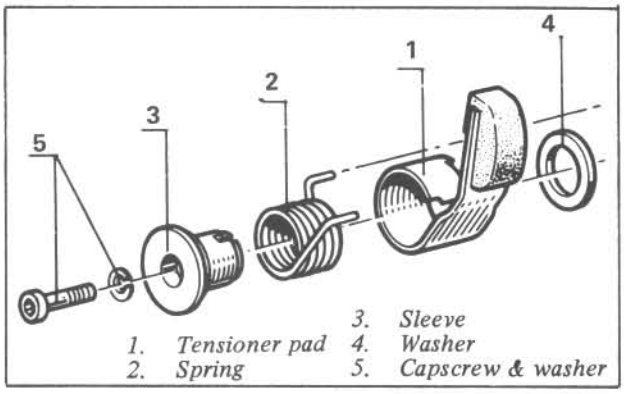

Fig. C:32 Exploded view of chain tensioner - 847 engines

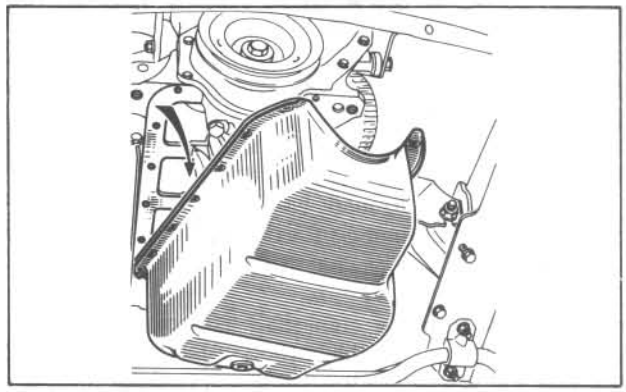

Fig. C:33 Tilt sump pan to left when removing it

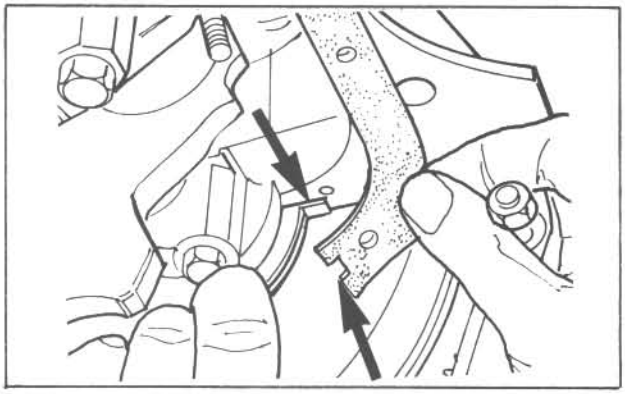

Fig. C:34 Make sure gasket ends overlap

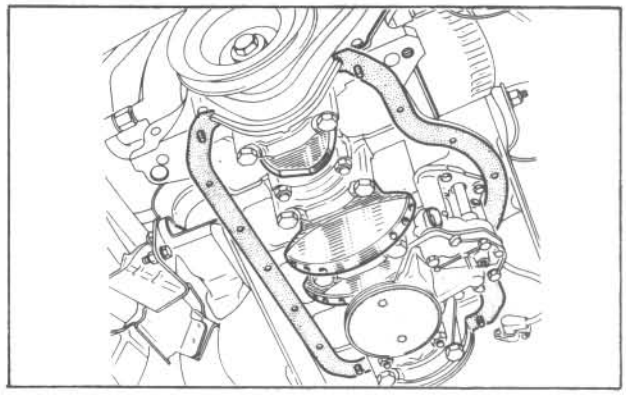

Fig. C:35 Sump gasket location 847 engines

screwed up finger-tight.
5. Repeat the mounting replacement procedure on the other mounting if necessary.
6. Finally, remove the jack and fully tighten the mounting nuts or bolts with the weight of the engine resting on the mountings.

ENGINE OVERHAUL .....[8]

The OHV engines fitted to R18 and Fuego models are the easiest for the DIY mechanic, as most major overhaul work can be done with the engine in the car.

The 'wet liner' type cylinder bores and the pistons can be removed from the block easily once the head and sump pan have been detached. The advantage of this is that you don't have the inconvenience and lifting problems normally associated with a conventional cylinder rebore.

New pistons and matched 'wet liners' can be purchased as a kit from a Renault dealer or cheaper from some Continental spares auto factors, and fitted in a relatively short time. Alternatively, new rings can be fitted to the pistons if the pistons and bores are not too badly worn.

The engine only needs to be removed from the car to recondition the crankshaft or replace the main - bearings, or if the complete engine is to be exchanged.

Note that the big-end bearings can be replaced once the sump pan is removed and the flywheel ring gear by removing the gearbox and clutch.

Big-End Bearing - Replacement

1. Raise the front of the car on ramps or raise and support the front as detailed in the ROUTINE MAINTENANCE chapter.
2. Drain the engine oil and remove the sump pan and oil pump as detailed previously.
3. Check that each big-end cap and connecting rod are suitably marked for location before they are separated. Use a centre punch to mark both cap and rod with their respective cylinder numbers starting with No. 1 at the rear (flywheel) end of the engine, at the points shown in Figs. C:43 & C:44.
4. Carefully turn the crankshaft as necessary to bring each connecting rod to the bottom of its travel. Undo the cap nuts and gently tap the cap with a hammer to detach it from the rod.
5. Push the connecting rod upwards, away from the crankshaft and detach the upper bearing shell from the rod. Place the shells and cap in removal order on a clean surface.
6. Repeat the procedure on the remaining three bearings.
7. Check the condition of the bearing shells. If the bearing shell backing (usually a different colour metal) is showing through it means that the bearing is badly worn and that the crankshaft journal may be worn too. If the bearing shells show no obvious signs of wear and the crankshaft journal is smooth, then a new set of shells can probably be fitted. The bearing size is usually marked on the back of the shell.
8. Depending on the condition of the bearing shell, it is wise to measure the crankshaft journal for wear if possible using a vernier gauge or micrometer at four places around each journal to determine if it is out-of-round.

If the journal is found to be out-of-round, tapered or excessively scored, the crankshaft should be reground or replaced. Crankshaft removal is detailed later in this chapter.
9. The new bearing shells should be fitted dry, in each conrod and cap, taking care to avoid getting any dirt under the shell which would affect the bearing clearance.
10. Check that each big-end journal is perfectly clean and that the oilway is clear. Smear the journals copiously with clean engine oil.
11. Smear the upper and lower bearing shells with clean engine oil and reconnect each bearing cap to its respective conrod following the same procedure used to remove them. Tighten the cap nuts to the correct torque.
12. Refit the oil pump and sump pan as detailed previously. Fill the sump with fresh oil, start the engine and check for oil leaks.

Piston and Liner - Replacement

1. Run the front of the car up on ramps or raise and support the front as detailed in the ROUTINE MAINTENANCE chapter.
2. Drain the cooling system and remove the cylinder head assembly as detailed previously.
3. Drain the engine oil and remove the sump pan and oil pump as detailed previously.
4. Undo the cylinder block drain plug and drain off any coolant remaining in the block water jacket - see COOLING SYSTEM chapter.
5. Mark each big-end cap and connecting rod for location if necessary, using a centre punch, in cylinder order - No 1 cylinder being adjacent to the flywheel (Figs. C:43 & C:44).
6. Carefully turn the crankshaft until each connecting rod is at the bottom of its travel. Undo the cap nuts and remove the cap. Push the conrod upwards, away from the crankshaft and detach the upper bearing shell. Place the upper shell and the lower bearing cap assembly in removal order in a clean safe place. Repeat the procedure on the remaining bearings.
7. Mark the position of each liner in relation to the engine block as shown in Fig. C:45.
8. Using a long thin hardwood drift, gently tap the underside of No. 1 cylinder liner (nearest the flywheel) to dislodge it from the cylinder block. Withdraw the liner complete with piston and con-rod from the block and place it in removal order on a workbench.
9. Repeat the procedure on the remaining liner assemblies. Remove the liner base seals from the engine block.
10. Place a clean cloth over the crankshaft journals and clean all rust and sediment from the block water jacket. Carefully clean - do not scrape - any dirt or corrosion from each liner base seal flange in the cylinder block (Figs. C:46 & C:47). A perfectly clean and flat surface should be obtained to avoid coolant leakage into the sump when the liners are installed.
11. New pistons and liners are matched as 'sets' during production and should be suitably marked beforehand to retain the matching when fitting (Fig. C:48). Although each piston/liner 'set' can be installed in any position in

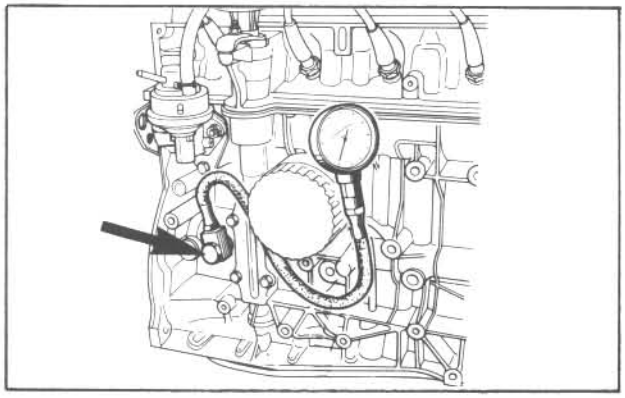

Fig. C:36 Oil pump pressure test connection

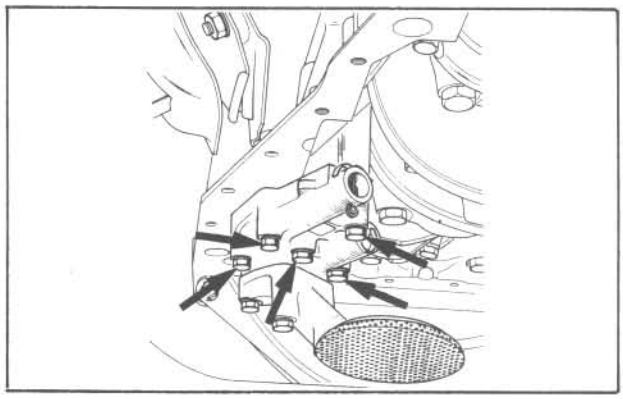

Fig. C:37 Oil pump location - 807/841/843 engines

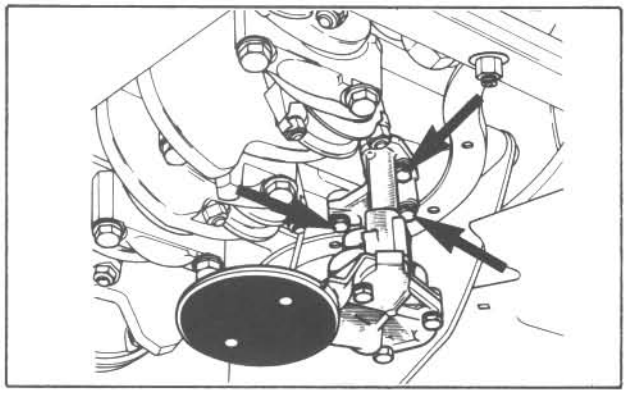

Fig. C:38 Oil pump attachment - 847 engines

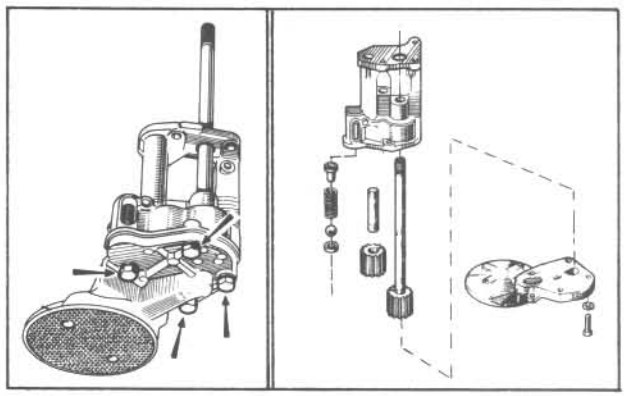

Fig. C:39 Oil pump components - 847 engines

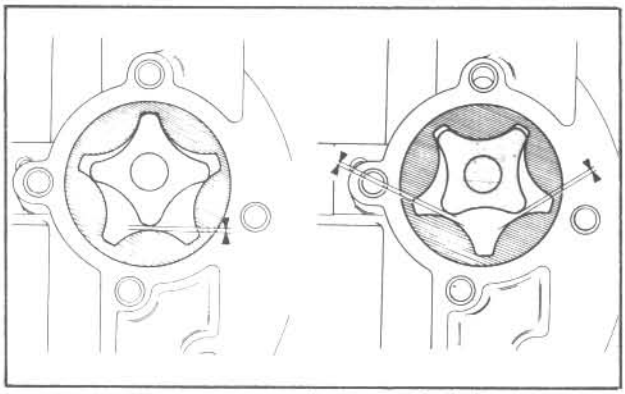

Fig. C:40 Pump clearance checking points - 807/841/843 engines

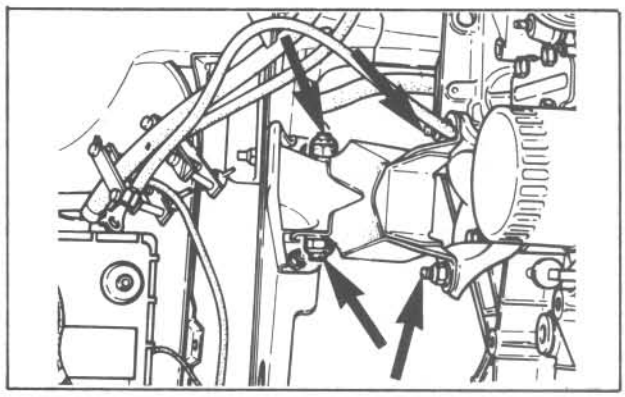

Fig. C:41 Engine mountings on type 807/841/843 engines

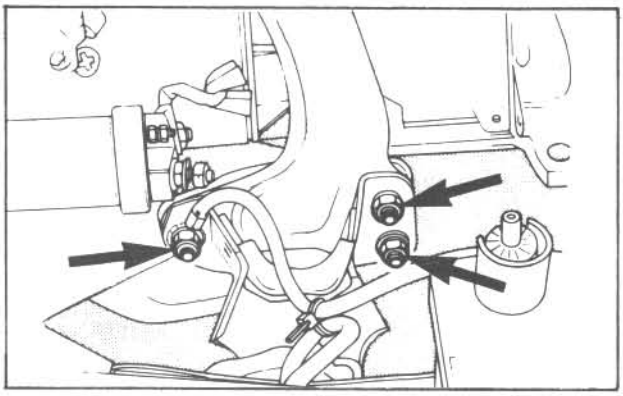

Fig. C:42 Engine mountings on type 847 engines

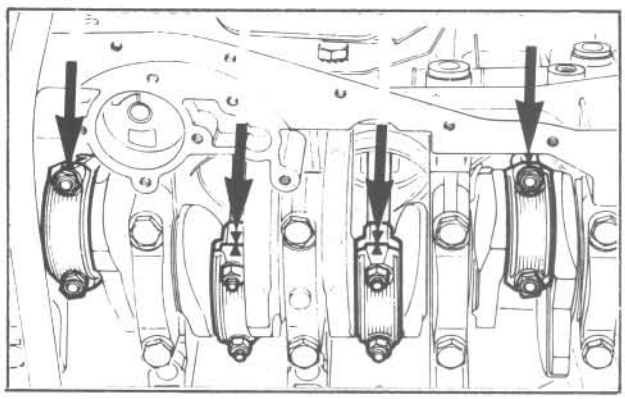

Fig. C:43 Mark big-end caps for location - 807/841/843 engines

the block, to avoid confusion it is best to arrange and mark the piston/liner in relation to each con-rod, i.e. No. 1 con-rod to No 1 piston/liner set. Except on type 807 Turbo engines, the fitting of the con-rods to the new pistons is not a DIY job as the piston pins are an interference fit requiring the correct amount of heat and special equipment to fit. This job should be done by a Renault dealer or auto engineers. On type 807 engines, the gudgeon pins are retained in the pistons by circlips.

12. Check that the con-rods are correctly fitted in relation to the pistons, with the number mark (arrowed) made on removal facing the side away from the camshaft on type 843/847 engines, or facing towards the camshaft on 807/841 engines and the arrow on the piston crown arranged as shown in Fig. C:49.
13. Clean the anti-rust preservative film of the liner bores by dissolving it in paraffin - do not attempt to scrape it off. Make sure the sealing flange at the bottom of the liner is perfectly clean and smooth.
14. Rubber 'O' ring seals are used round the liner bases on this engine and act as coolant seals only (Fig. C:50). The liners locate direct on the cylinder block flange without a paper gasket and liner protrusion is governed by close machining tolerance on the liner and cylinder block.
15. To check the liner protrusion, place each liner in the block - without the 'O' ring seal - making sure that the liners are seating fully. Place a steel rule across the liner faces and check by how much the liners protrude above the surrounding block face (Fig. C:16).
16. The liners should be placed so that the protrusion difference between any two adjacent liners (Fig. C:51) does not exceed 0,04 mm (0.001 in) within the permitted tolerance given in TECHNICAL DATA.
17. Mark the position of the liners then remove them from the block when the correct protrusion has been obtained, placing them in removal order. Lubricate the liner bores with clean engine oil.
18. If necessary, fit the rings to the pistons from the top, using feeler gauge strip to ease the lower rings over the grooves. New pistons normally have the rings already fitted, and pre-gapped.
19. Space the oil control and the upper two compression rings at 120 deg to each other prior to installation. (Fig. C:52). Fit a piston ring compressor to each piston in turn and insert the piston into its respective liner from the bottom with the machined sides of the con-rod parallel to the flats at the top of the liner - see Fig. C:53.
20. Fit the coolant 'O' ring seals to the base of each liner bore (Fig. C:50).
21. Fit the liner - piston assemblies to their respective marked positions in the block (see operation 17 previously) with the arrow on the piston crown pointing towards the flywheel end of the engine. Press the liners firmly down by hand to make sure they are seating correctly on their seals.
22. Refit the cylinder head and gasket as detailed under 'Cylinder Head' at the beginning of this chapter.
23. Fit new big-end bearing shells and reconnect the con-rods as detailed in the previous section. Refit the sump pan and fill the engine with oil and coolant.

Piston Ring - Replacement

1. Remove the piston/liner assemblies from the engine block as detailed in the previous section after suitably marking them for location - No 1 at the flywheel end.
2. Remove each piston from its respective liner from the bottom end.
3. Check the liner bore condition, looking for signs of scoring, scuffing or roughness. Check the top of the bore for signs of a wear ridge. If the wear ridge can just be detected with a finger nail, then oversize piston rings can probably be fitted provided the pistons are in reasonable condition.

Oversize piston rings can normally compensate for up to 0.004 in of wear per inch of bore diameter, but if you are in any doubt, have the liner bores accurately measured with an internal micrometer by a piston supplier or auto engineers.

4. New piston rings should be fitted as a matter of course when overhauling an engine. It is very important to check the gap of each piston ring in its respective bore beforehand using feeler gauges. Use an inverted piston to position the ring squarely in the bore about 13 mm (0.5 in) below the top of the liner. If the gap is outside the specified limits, file the ring end squarely to increase the gap or fit another ring set if the gap is too great.
5. Check the fit of each ring in its respective piston groove. Clean all deposits of carbon and oil from the grooves first by scraping with the end of a broken ring. The new ring should seat easily in the groove and be able to rotate.
6. Measure the ring to groove clearance with a feeler gauge. If the clearance is too great, then consult a local auto engineer or piston supplier, or fit new pistons.
7. Assemble the piston rings to the pistons following instructions supplied with the new rings. The rings must be fitted from the top of the piston. The compression rings will normally be marked TOP on one face, and this side should face the piston crown. Oversize or replacement rings for use in worn bores usually have a stepped top compression ring (ridge dodger) - to avoid the wear ridge at the top of the bore. It is most important that these rings be fitted with the stepped part uppermost otherwise ring breakage will occur as soon as the engine is run.
8. When fitting new piston rings to run in worn bores, it is important to remove the glazing (smoothness) on the bore to allow the new ring to 'bed-in'. It is possible to 'bust the glaze' by hand, rubbing the inside of the bore with 'fine' grade emery cloth or wet-or-dry paper until the entire bore wall is covered with criss-cross abrasions giving a matt finish appearance. Clean the liners thoroughly in paraffin afterwards and dry.
9. Refit the pistons to the liners and the liners to the engine block as detailed in the previous section.

Camshaft - Replacement

1. Remove the radiator assembly as detailed in the COOLING SYSTEM chapter.
2. Remove the cylinder head, timing cover, timing chain

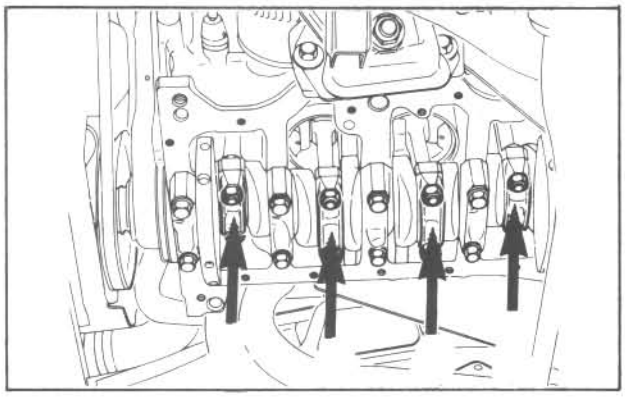

Fig. C:44 Mark big-end caps for location - 847 engines

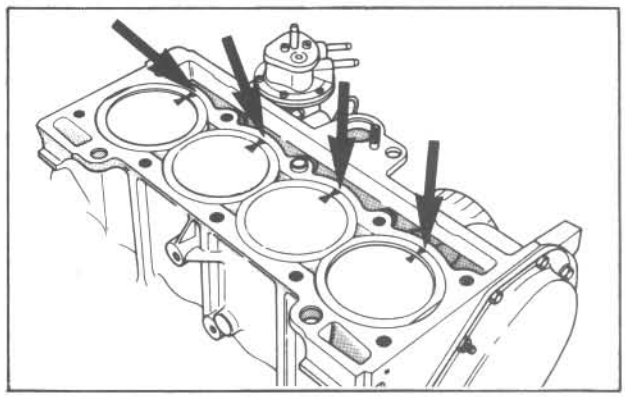

Fig. C:45 Mark liners for location in engine block

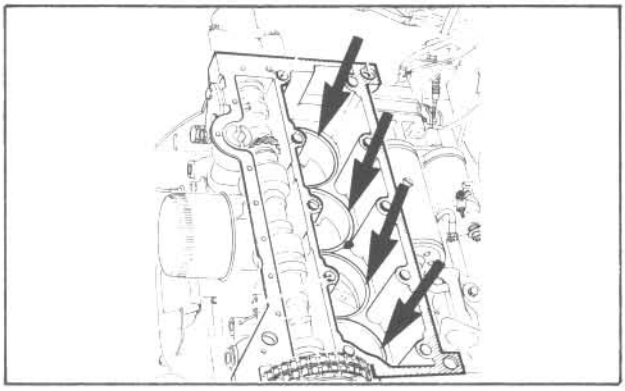

Fig. C:46 Clean liner base flange arrowed - 807/841/843 engines

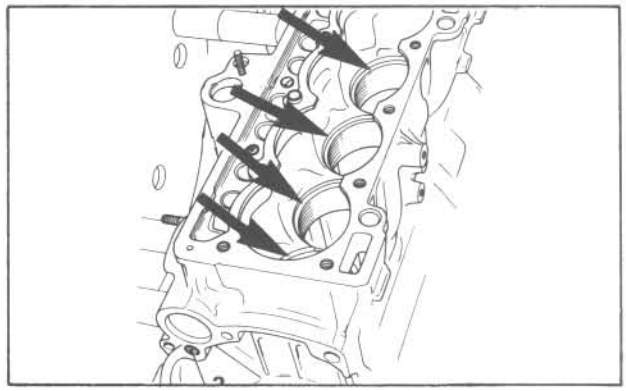

Fig. C:47 Clean liner base flange arrowed - 847 engines

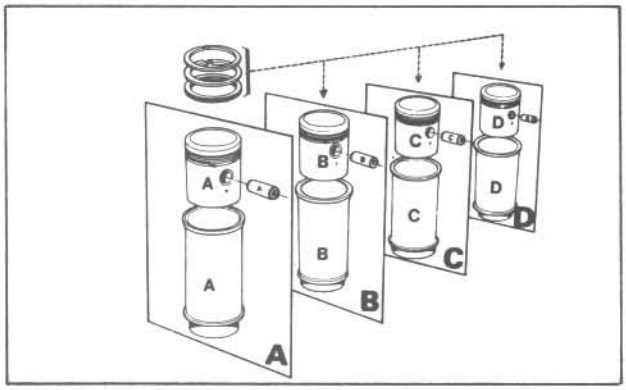

Fig. C:48 Mark pistons and liners as they are matched sets

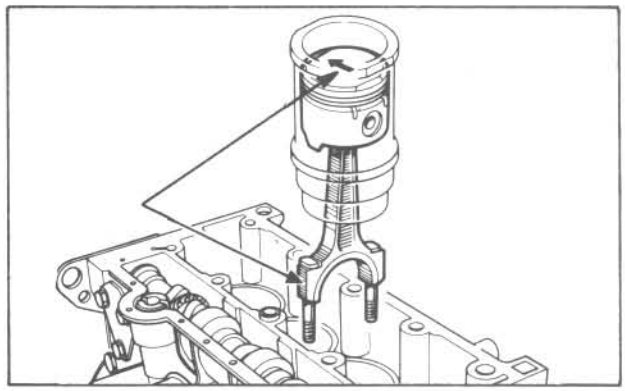

Fig. C:49 Relationship of piston to con-rod mark - 841 type shown

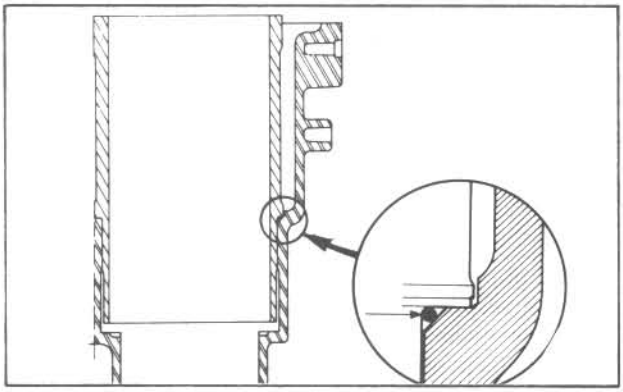

Fig. C:50 Position of liner base coolant seal

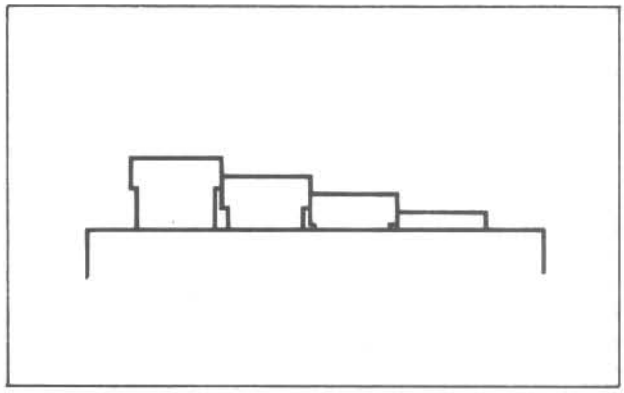

Fig. C:51 If necessary, arrange liner protrusions in order shown

and sprockets as detailed previously.
3. On type 847 engines, carefully lift out the cam followers (tappets) from the engine block. Place them in removal order in a safe place.
4. Clamp and disconnect the fuel pipes at the pump, then undo the two nuts and remove the fuel pump.
5. On type 847 engines, withdraw the distributor drive using a bolt, 12 mm dia x 1,75 pitch.
6. On all engines, undo the two camshaft locking flange bolts and then carefully withdraw the camshaft out from the engine.
7. Check the condition of the cam lobes and the contact faces of the followers. Look for any signs of pitting on the peaks of the cams or the face of the followers, this will indicate severe wear. Replace or reprofile the camshaft and replace the followers if pitting is found on both parts.
8. If a new camshaft is being fitted check the flange clearance - see Fig. C:54 on type 847 engines. The clearance should be 0,06 - 0,11 mm (0.002 - 0.005 in) with the sprocket refitted. If the clearance is outside these limits, fit a new flange and a spacer.
9. Fit a new oil camshaft oil seal at the pulley end, if a new camshaft is being fitted or the old seal shows signs of leakage. Lever the old seal carefully out using a screwdriver. Clean the seal housing and drive the new seal squarely into position with the open end facing inwards, using a flat wood block and a hammer. The outer face of the seal should be flush with the block face. Lubricate the seal lip with clean engine oil before fitting the camshaft.
10. On type 807/841/843 engines only, fit the sprocket to the camshaft before installation. Gently tap it onto the shaft until there is a clearance of 0,05 - 0,12 mm (0.002 - 0.004 in) between the sprocket face and the cam face (Fig. C:55).
11. All engines: Smear the bearing surfaces and the camshaft and the oil seal lip with clean engine oil, then carefully slide the camshaft into the engine. Take care to avoid scoring the bearings with the cam lobes during installation.
12. Align the camshaft keyway, then refit the sprockets and timing chain as detailed previously.
13. Check that the timing sprocket marks are aligned, with No 1 piston (at the flywheel) and in the TDC position. Install the distributor drive gear so that it is positioned as shown in Fig. C:21 when fully meshed with the camshaft gear.
14. Refit the timing cover, cam followers, cylinder head, oil pump and the sump pan - described previously.

Crankshaft Replacement

1. Remove the engine from the car as detailed in the following section.
2. Remove the sump pan with the engine on its side to prevent any remaining oil and sludge draining out of the sump into the engine.
3. Using a wood block to jam the crankshaft and prevent it from turning, undo the bolts and remove the clutch assembly, also undo the crankshaft pulley bolt.
4. Remove the timing cover, chain and tensioner as detailed previously.
5. Using a centre punch, mark the flywheel position in relation to the crankshaft, then undo the flywheel bolts and detach the flywheel. Discard the bolts.
6. Mark the big-end caps for location at the points shown in Figs. C:43 & C:44 using a centre punch, then undo the bolts and detach the caps.
7. Carefully remove each bearing cap and place it in removal order on a clean surface.
8. Mark the location order of the main bearing caps as shown in Fig. C:56 using a centre punch.
9. Undo the main bearing cap bolts and detach the caps, noting their removal order.
10. Lift the crankshaft out of the engine together with the thrust washers and rear oil seal. Remove the upper main bearing shells from the crankcase and place them with the respective bearing cap.
11. Check the condition of the bearing shells and crankshaft journals as detailed for Big-End Bearing Replacement previously. It is good practice to replace the bearing shells after a high mileage in any case.
12. If the crankshaft journals are scored or the bearing shells badly worn, the crankshaft should be reground and new bearings fitted. Note that they are normally supplied with the reground crank by the auto machining firm.
13. Make sure all oilways in the engine block are clean and free from blockage by probing with a length of wire. Clean the upper bearing shell housings on the engine block and fit the new shells in position. Check that the oil holes are aligned (Fig. C:57).
14. Clean the crankshaft including the oilway drillings thoroughly with paraffin and dry with a lint-free cloth.
15. Coat the crankshaft journals and upper bearings with clean engine oil.
16. Lower the crankshaft into position, taking care not to dislodge any of the bearing shells.
17. Fit the thrust washers in place by sliding them down either side of the centre journal support (Fig. C:58). The white metal side of each washer should face towards the crankshaft.
18. Fit the lower bearing shells to the main bearing caps, noting that these shells have no oil holes.
19. Fit each bearing cap to its respective position and tighten the bolts to the correct torque. Check that the crankshaft revolves freely.
20. Check the crankshaft for correct end float by measuring with a feeler gauge placed between the centre main bearing thrust washer and the crank web face. It should be between 0,05 - 0,23 mm (0.002 - 0.009 in). If the end-float is incorrect, change the thrust washers. Alternative thrust washer thicknesses are available.
21. Smear the oil seal boss on the rear of the crankshaft with clean engine oil.
22. Fit the crankshaft rear bearing oil seal carefully sliding the seal over the end of the crankshaft to avoid damaging the seal lip. The seal should be fitted with the lip facing inwards.
23. Gently tap the seal into the housing using a hammer and smooth wood block. If a new crank has been fitted, the seal should be fitted flush with the inside of the housing. If the original or a 'used' crank is fitted, the seal should be positioned flush with the outside of the housing, so that the lip of the new seal does not contact the same part of the crank as the old seal.

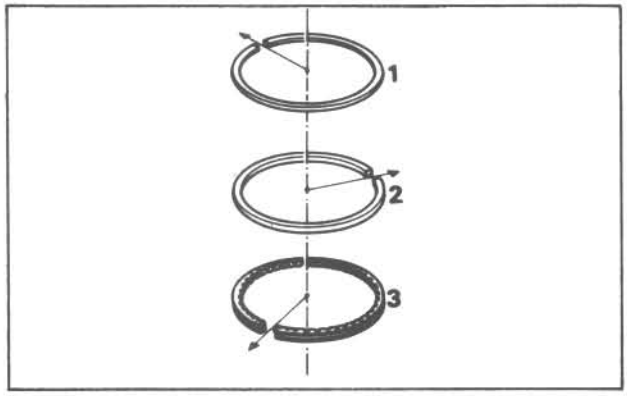

Fig. C:52 Space piston rings at 120° to each other

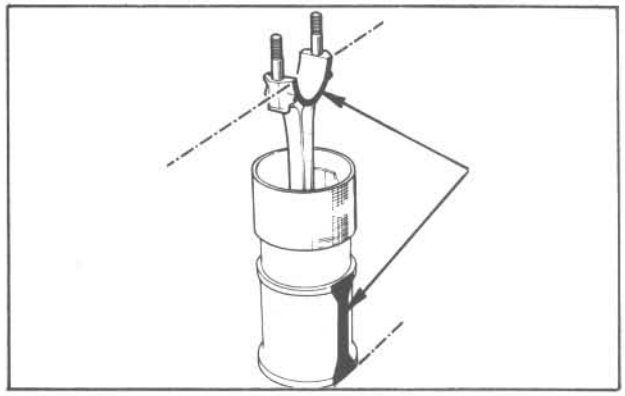

Fig. C:53 Con-rod must be parallel to liner flat when fitting

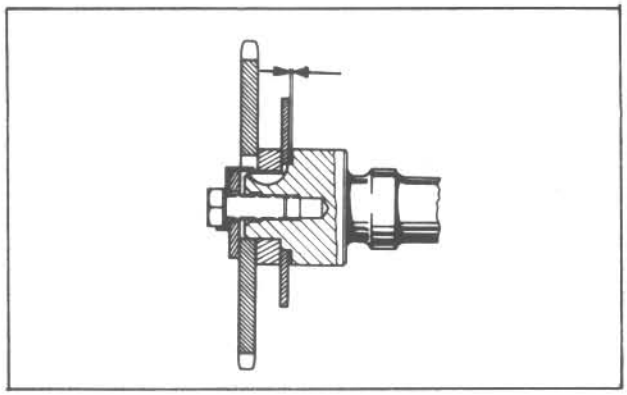

Fig. C:54 Checking cam flange clearance - 847 engines

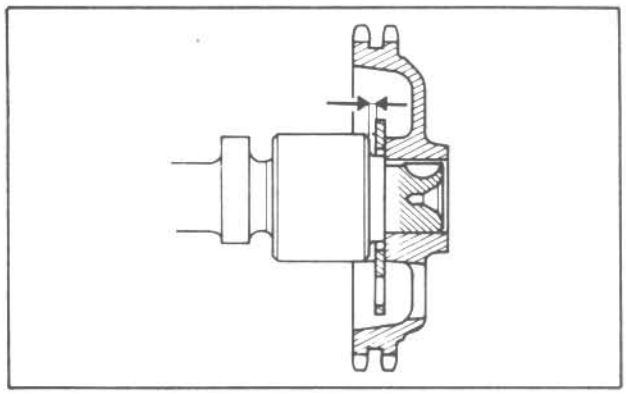

Fig. C:55 Checking cam flange clearance - 807/841/843 engines

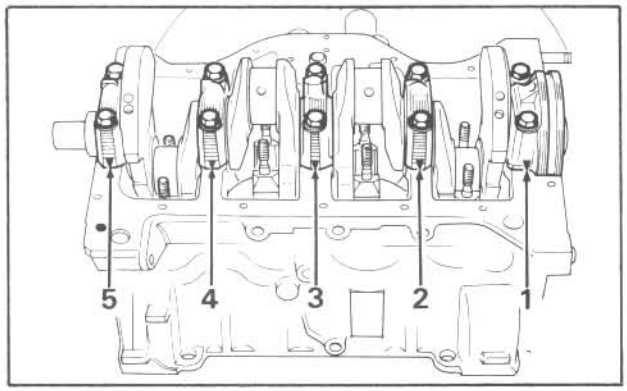

Fig. C:56 Marking main bearing caps for location

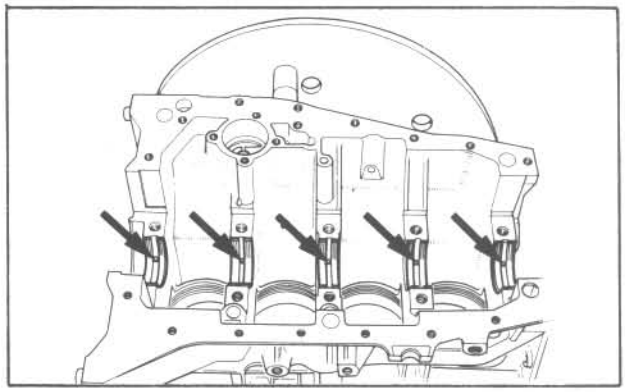

Fig. C:57 Align crankshaft bearing shell holes with oilways

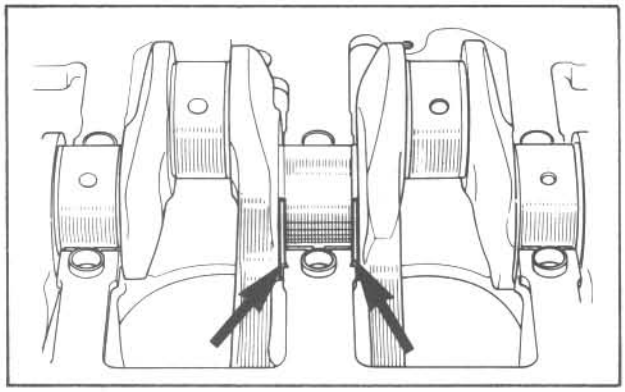

Fig. C:58 Fit thrust washers either side of centre journal

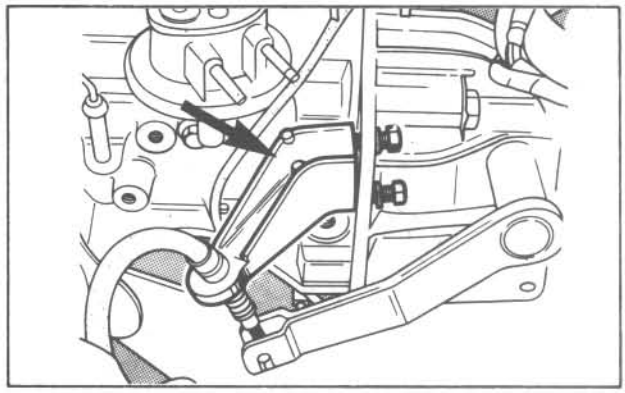

Fig. C:59 Engine removal - clutch cable bracket - 847 engine

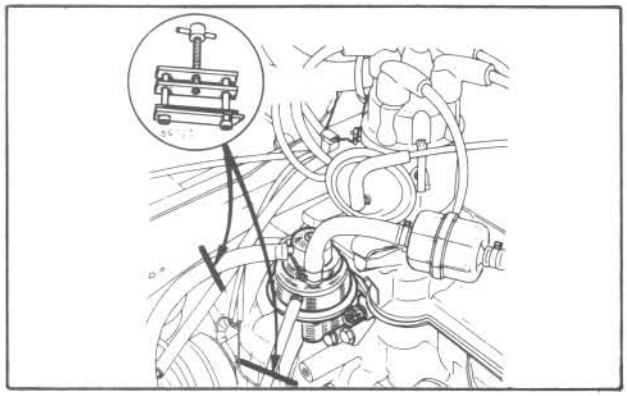

Fig. C:60 Clamp fuel pipes before disconnection

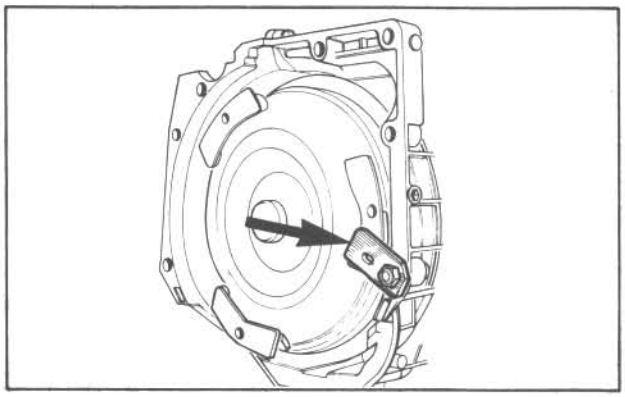

Fig. C:61 Torque converter securing clamp position

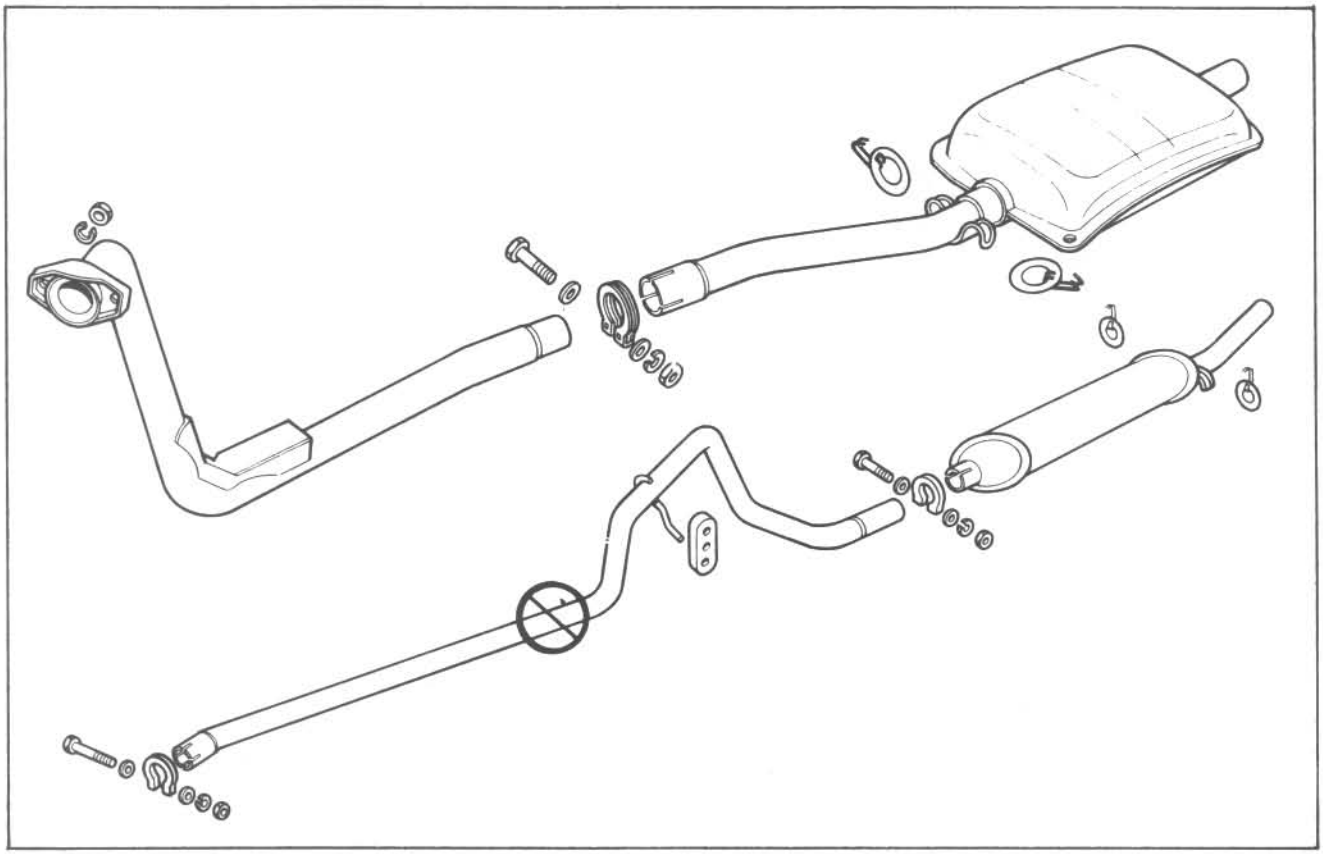

Fig. C:62 Details of the exhaust system components, support rubbers and clamps

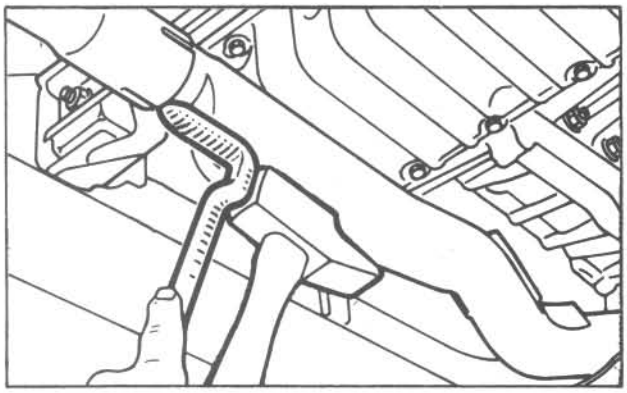

Fig. C:63 Using a shaped tool to separate joint

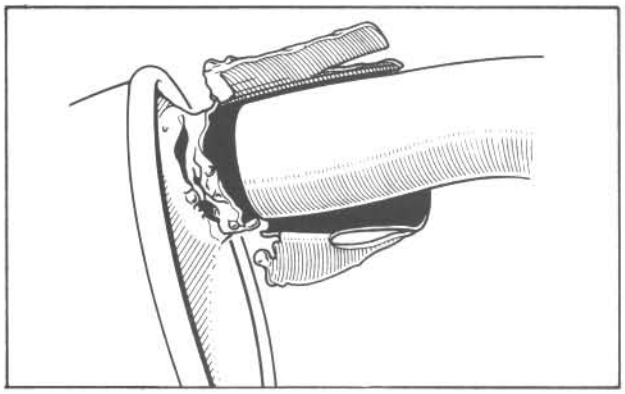

Fig. C:64 Method of breaking rusted joints

NOTE: It is very important that the oil seal is installed squarely in the housing to avoid uneven wear and subsequent oil leakage.

24. Check the condition of the clutch pilot (spigot) bearing in the end of the crankshaft, and replace if necessary as detailed in the CLUTCH & GEARBOX chapter.
25. Refit the flywheel, fit new securing bolts and tighten them to the correct torque after locking the crankshaft to prevent it turning, using a wood block.
26. Refit the clutch, the sump pan, timing chain and cover, and the remainder of the ancillaries in the reverse order ot removal.
27. Install the engine in the car as detailed in the following section.

ENGINE REMOVAL & INSTALLATION . . . [9]

Removal

1. Disconnect the battery and drain the cooling system as detailed in the COOLING SYSTEM chapter.
2. Remove the bonnet lock panel and radiator as detailed in the COOLING SYSTEM chapter.
3. Remove the radiator front grille and the engine undertray (if fitted). Remove the clutch cable bracket on type 847 engines only (Fig. C:59).
4. Make a note of the fitted position before disconnecting the hoses pipes and wires to the engine ancillaries.
5. Clamp the fuel pipes and disconnect them at the carburettor (Fig. C: 60).
6. Disconnect the exhaust downpipe at the manifold flange.
7. Undo the lower bolts securing the engine to the gearbox.
8. On automatic transmission models, remove the torque converter shield, the drive plate fixing bolts and the upper engine to transmission securing bolts - see AUTOMATIC TRANSMISSION chapter.
9. Place suitable lifting tackle around the engine and raise the hoist to just take the weight of the engine off the front mountings.
10. Undo the front mounting nuts on each side to free the engine. Pull the engine forwards slightly to remove the clutch shield with TDC sensor (if fitted).
11. Raise the engine slowly, then pull it forwards to disconnect it from the gearbox or automatic transmission. On auto transmission models only, place a clamp to secure the torque converter (Fig. C:61) and prevent if from falling out as soon as there is room to do so.

Installation

Installation is a straight reversal of the removal procedure, noting the following points:

a) Apply a smear of high melting point grease to the gearbox input shaft splines, also the torque converter location on auto transmission models.

b) On auto transmission models only, line up the drive plate blade which is the TDC mark, with the corresponding TDC mark on the torque converter (hole marked with paint spot).

corresponding TDC mark on the torque converter (hole marked with paint spot).

c) Remember to reconnect the battery earth lead.

EXHAUST SYSTEM. . . . . [10]

The exhaust system should be examined periodically to check for corrosion and leaks - see Pass the MoT section at the front of this manual. Replacement systems comprise four parts (Fig. C:62) the down pipe, the expansion chamber, intermediate pipe and rear silencer with tail pipe.

When part of the system requires replacement, it may be more economical in the long run to replace the complete system from manifold to tailpipe.

A used section should only be reused if it is sound and undamaged. Remember that the exhaust system corrodes from the inside outwards as the hot corrosive gases attack the inside of the pipe. Therefore, when a pipe appears to have only surface rust on the outside, it could well be that the pipe will only have a short life left before leakage.

As corrosion takes place throughout the length of the exhaust system, examine each section carefully to check how much requires replacement.

Replacement - Complete System

1. Place the car over a pit if available, or raise and support the car to give sufficient working room underneath - see 'Jacking Procedures' in ROUTINE MAINTENANCE chapter.
2. Unbolt the downpipe fixing flange at the manifold.
3. Free the system from the mounting rubbers and let it hang down. Saw through the intermediate pipe at the position circled in Fig. C: 62.
4. Remove the system pipes from under the car.
5. Clean up the manifold flange and fit the new section of down pipe. Fit the nuts (and spring washers) finger-tight at this stage.
6. Fit the intermediate pipe over the rear axle beam.
7. Join the expansion box to the downpipe and intermediate pipe, followed by the tailpipe.
8. Align the sections of the system and reconnect the mounting rubbers. Make sure that no mountings are under undue strain by realigning the sections before tightening the joint clamps.

Replacement - Individual Sections

Sections of the system can be replaced if desired, the problem in many cases being the difficulty in disconnecting the rusted joints.

Various methods can be used, starting with penetrating oil, then tapping around the outside of the joint sleeve with a hammer to break the rust hold. Failing this, a shaped pointed tool can be made up as shown in Fig. C: 63 to spread the pipe outer sleeve and disconnect the joint. In really stubborn cases, the pipe outer sleeve will have to be split and peeled back to free the inner pipe as shown in Fig. C: 64.

Having disconnected and removed a section, make sure the pipe ends of the two adjacent sections are clean and circular. If necessary, gently tap the pipe end to the right shape.

Smear the pipe ends with Holts exhaust assembly paste and reconnect the section as detailed previously for replacing the complete system.

OHC - Engine

INTRODUCTION . . . . . [1]
TIMING BELT & CAMSHAFT OIL SEAL . . . [2]
JACKSHAFT OIL SEAL. . . . . [3]
CRANKSHAFT FRONT OIL SEAL . . . . . [4]
CRANKSHAFT REAR OIL SEAL . . . . . [5]
CAMSHAFT REPLACEMENT (IN-SITU). . . . [6]
CYLINDER HEAD . . . . . [7]
SUMP PAN . . . . . [8]
OIL PUMP. . . . . [9]
ENGINE MOUNTINGS. . . . . [10]
ENGINE OVERHAUL . . . . . [11]
ENGINE REMOVAL & INSTALLATION . . [12]
EXHAUST SYSTEM. . . . . [13]
TROUBLE-SHOOTER . . . . . [14]

INTRODUCTION . . . . . [1]

The type 829 (J6R) 1995 cc engine is of the 'wet liner' type with replaceable cylinder liners. The engine is produced by the Peugeot/Volvo/Renault co-operative factory, and the same engine is also fitted to the Peugeot 505 and Citroen CX models as well as the Renault 20.

The engine block, cylinder liners and crankshaft are of conventional (Renault) design, but the aluminimum cylinder head is of the Cam-in-Head type, where the camshaft is mounted in the middle of the cylinder head. 'L'-shaped rockers actuate the valves and pivot on a rocker shaft mounted above the camshaft.

The camshaft is driven from the crankshaft by a toothed rubber belt which also drives the distributor, oil pump and fuel pump via a short jack shaft in the front of the engine block.

In common with the OHV engine fitted to R18 and Fuego models, the majority of engine repairs and overhaul work on the 829 (J6R) engine can be done with the engine in the car, although, for any work at the front of the engine, the radiator and grille, and the bonnet lock panel will have to be removed first. Once this has been done, there is plenty of room to get at the engine all round.

With the cylinder head removed, the pistons and cylinder liners can be removed from the engine block for replacement, thereby avoiding the necessity of removing the engine for a rebore.

The sump pan can be removed easily without disturbing the engine or front suspension for access to the oil pump and crankshaft big-end bearings.

In fact, the engine really only needs to be removed for replacement of the crankshaft or main bearings.

As the repair or overhaul procedures on the 829 (J6R) engine are in many cases, identical to those on OHV engines, only the operations which are peculiar to the 829 (J6R) engine are included in this chapter. Reference should be made to the OHV ENGINE chapter where indicated for further details.

A comprehensive metric spanner and socket set, assorted screwdrivers and feeler gauges will be needed for any repair or overhauls. For more ambitions overhaul work, a valve spring compressor tool, piston ring clamp, torque wrench and possibly a small universal type puller will be needed. The latter can usually be hired for the occasion from a local tool hire shop - see 'Yellow Pages' under 'Hire Services, Tools and Equipment'.

TIMING BELT & CAMSHAFT OIL SEAL . . . [2]

The timing belt should be replaced every 36000 miles or earlier if it is found to be contaminated with oil.

Timing Belt - Replacement

1. Disconnect the battery and drain the cooling system as detailed in the COOLING SYSTEM chapter.
2. Remove the front grille, bonnet locking panel and the radiator as detailed in the COOLING SYSTEM chapter.
3. Using a socket on the crankshaft pulley bolt, turn the crankshaft in the normal (clockwise) direction of rotation until No 1 piston (at the flywheel end) is at the TDC (Top Dead Centre) position. This is indicated by the timing line on the flywheel being aligned with the 'O' mark on the clutch or converter housing aperture, and timing line on the camshaft sprocket opposite the fixed pointer on the timing belt cover as shown in Fig. D:1.

NOTE: Do not turn the sprockets with the timing belt removed.

4. Disconnect the inlet manifold coolant hose which runs in front of the timing belt cover.
5. Undo the four bolts and detach the timing belt cover.
6. Slacken both the belt tensioner securing bolts (Fig. D:3), tilt the tensioner to one side to release the belt tension, then retighten the tensioner bolts in this position.
7. Carefully remove the timing belt, taking care not to disturb the position of the sprockets.
8. If the belt has been removed because of oil con-

tamination, check the shaft oil seals for leakage and rectify, then carefully clean all oil and dirt from the sprocket teeth.
9. Before fitting the belt, check that all the sprockets at set at the correct position as shown in Fig. D:3.
10. Fit the timing belt to the sprockets, making sure that the belt and sprocket teeth are properly engaged.
11. Slacken the tensioner securing bolts. The tensioner spring will now automatically tension the belt. Retighten the tensioner bolts.
12. The timing belt tension should now be adjusted by rotating the crankshaft in the normal (clockwise) direction, two full turns. Do NOT turn the crankshaft anticlockwise. Slacken the tensioner bolts and allow the tensioner to readjust the tension as necessary. Retighten the tensioner bolts.
13. Check the belt tension by pressing it at a point midway between the jackshaft and camshaft sprockets under moderate thumb pressure. If correctly adjusted, the belt should deflect 5,5 - 7,0 mm. If the belt deflection is outside these limits, re-adjust the tensioner as detailed previously.

Camshaft Oil Seal - Replacement

1. Remove the timing belt as detailed in the previous section.
2. Make up a tool similar to that shown in Fig. D:4 to hold the camshaft stationary while the cam sprocket bolt is undone. Carefully pull the sprocket from the camshaft.
3. If a special seal extractor tool is available, remove the oil seal from the housing (Fig. D:5). Otherwise, remove the seal by carefully levering it out with a screwdriver. Take great care not to score or damage the seal housing.
4. Clean the seal housing thoroughly to remove all dirt and oil. Apply a smear of clean engine oil to the camshaft flange.
5. Smear clean engine oil on the oil seal lips, then position the seal squarely in the housing bore with the open side facing inwards. Using a tubular drift, either gently tap the seal into the housing, or use the cam sprocket bolt to press the seal in as shown in Fig. D:6. When correctly installed, the outer face of the seal should be recessed approximately 2 mm in from the outer face of the head.
6. Check that the locating key is correctly fitted in the shaft groove then refit the sprocket. Note that the sprocket should be fitted with the offset (Fig. D:7) facing the cylinder head.
7. Using the camshaft locking tool, tighten the sprocket bolt to the correct torque - see TECHNICAL DATA.
8. Refit the timing belt and ancilaries as detailed in the previous section.

JACKSHAFT OIL SEAL.....[3]

Replacement

1. Remove the bonnet lock panel, radiator and timing belt as detailed previously.
2. Undo the jackshaft sprocket bolt using a home-made tool similar to that shown in Fig. D:4 for undoing the cam sprocket bolt. Remove the sprocket from the shaft.
3. Undo the bolts and detach the shaft seal housing from the engine. Remove the paper gasket and discard it.
4. Drift or lever out the oil seal from the housing with a screwdriver.
5. Thoroughly clean the seal housing to remove any dirt, oil or gasket remains.
6. Using a piece of 38 mm dia. tube, drift the oil seal into the housing, making sure it is fitted square. The seal open side should face inwards when installed.
7. Fit a new paper gasket to the engine block and hold it in position with a dab of grease.
8. Lubricate the oil seal lips and the jackshaft with clean engine oil.
9. Refit the seal housing to the engine block. Take great care to avoid damaging the seal lip on the shaft when installing.
10. Refit and tighten the housing bolts.
11. Refit the sprocket (offset facing towards engine as shown in Fig. D:7), making sure the key is correctly aligned. Tighten the bolt to the correct torque by the same method as used to undo it.
12. Make sure the sprockets are correctly aligned as shown in Fig. D:3, then refit the timing belt, radiator etc. as detailed previously under 'Timing Belt' replacement.

CRANKSHAFT FRONT OIL SEAL.....[4]

Replacement

1. Remove the radiator and timing belt as detailed previously.
2. Undo the crankshaft pulley bolt and remove the pulley from the crankshaft nose.
NOTE: In order to prevent the crankshaft from turning when undoing or tightening the bolt, place the gear lever in 4th gear and apply the handbrake fully on manual gearbox engines. On automatic transmission models, remove the starter motor and prevent the crankshaft from turning by wedging a lever or screwdriver between the ring gear teeth and the starter aperture.
3. Withdraw the timing belt sprocket with its two roll-pins (if fitted) from the crankshaft (Fig. D:8).
4. Using a screwdriver, carefully remove the oil seal from the housing avoiding scoring or damaging the seal housing.
5. Clean the seal housing thoroughly to remove all dirt and oil.
6. Smear the crankshaft flange and the new seal lips with clean engine oil. Position the new seal squarely in the housing with the open side facing inwards. Using a tubular drift, either gently tap the seal into the housing, or use the crankshaft pulley bolt to press the seal in as shown in Fig. D:8. When correctly installed the outer face of the seal should be recessed approximately 2 mm from the outer flange of the housing.
7. Apply a smear of grease to the crankshaft nose before refitting the crankshaft sprocket, taking care that the locating key is properly fitted.
8. Refit the crankshaft pulley and tighten the bolt to the correct torque - see TECHNICAL DATA, by the same method as used to undo it.

9. Refit the timing belt and radiator as detailed previously under 'Timing Belt' replacement.

CRANKSHAFT REAR OIL SEAL .....[5]

Replacement

The rear oil seal fitting on the type 829 (J6R) engine is identical to that on the OHV engines, and reference should be made to the OHV ENGINE chapter for details of replacement.

CAMSHAFT REPLACEMENT (IN-SITU)....[6]

The design of the type 829 (J6R) engine allows the camshaft to be withdrawn from the front of the cylinder head without the need to remove either the cylinder head or the engine, as follows:

1. Remove the timing belt, the camshaft sprocket and oil seal as detailed in previous sections.
2. Remove the rocker cover and rocker shaft as detailed below under 'Cylinder Head' removal. Note that the cylinder head bolts must be removed to detach the rocker shaft, but as the head will be stuck firmly to the engine block by the gasket, it will not move during the camshaft replacement. Note also that the camshaft locking thrust plate is secured to the front rocker shaft support pedestal.
3. Carefully withdraw the camshaft out from the front of the head (Fig. D:10), taking care to avoid scoring or damaging the cam bearing housings with the cam lobes during removal.
4. Refer to the OHV ENGINE chapter under 'Camshaft Inspection' to check the wear.
5. Clean any oil or dirt from the cylinder head bolt holes using a syringe - this is important.
6. Lubricate the camshaft journals and lobes, and the bearing housings on the head with clean engine oil prior to refitting.
7. Fit the camshaft to the head in the reverse order of removal. Check that the sprocket key is correctly fitted.
8. Refit the rocker shaft and tighten the head bolts to the correct torque in the correct order - see 'Cylinder Head' section. Fit a new oil seal to the camshaft, refit the sprocket and the timing belt as detailed previously.
9. Adjust the valve clearances as detailed in the TUNE-UP chapter and refit the rocker cover.

CYLINDER HEAD .....[7]

Removal

1. Disconnect the battery and drain the cooling system as detailed in the COOLING SYSTEM chapter.
2. Remove the timing belt as detailed previously under 'Timing belt' replacement.
3. Make a note of the fitted position of the various pipes and hose connections to the cylinder head and ancilliaries, i.e. crankcase emission, brake servo, throttle cable etc,. before disconnecting them.
4. Clamp the fuel pipes at the carburettor to prevent fuel loss and the ingress of dirt before disconnecting them.
5. Undo the inlet and exhaust manifold attachment nuts, and carefully pull the manifolds away from the head until clear of the studs. Support the manifolds clear of the head with wire or string making sure that none of the connections are under strain.
6. Remove the rocker cover, then unscrew and remove all the cylinder head bolts except the head bolt '1' in Fig. D:11 at the cam sprocket end which has a locating dowel.
7. Using a plastic-headed hammer or wood mallet, tap the rear of the head on the exhaust manifold side (2, in Fig. D:11) to unstick the head from the engine block so that the head pivots on the remaining head bolt.

NOTE: Do NOT attempt to lift the head at any stage before unsticking it from the block, otherwise lifting the head would break and damage the watertight seal at the bottom of each cylinder liner and allow water and dirt to enter the sump.

8. Remove the remaining head bolt and lift the cylinder head off the engine block. Carefully lift off the rocker shaft and place it to one side. Note that the camshaft locating thrust plate is bolted to the end rocker shaft support pedestal.

NOTE: Do not turn the crankshaft or disturb the cylinder liners. If the cylinder head is being removed to replace a leaking head gasket, the protrusion of the cylinder liners should be checked - see Pistons & Engine Block section of the OHV ENGINE chapter.

Dismantling the Head

1. Place the head, supported on wood blocks, on a clean workbench and remove the spark plugs.
2. Undo and remove the camshaft pulley bolt and detach the pulley as detailed previously under 'Camshaft Oil Seal' replacement.
3. Remove the camshaft from the front of the cylinder head.
4. Support the head upside down on wood blocks and carefully remove all carbon deposits from the combustion chambers, valve heads and valve ports with a suitable scraper and wire brush. Note that great care should be taken when doing this to avoid scratching or scoring the metal, particularly the machined face of the cylinder head.
5. Similarly, clean any carbon or gasket remains from the cylinder head face using a non-caustic solvent such as Evostick cleaning solution.
6. Blow or brush any carbon dust or dirt away from the combustion chambers, valve ports and head face.
7. Using a universal valve spring compressor tool, compress the valve springs and remove the split collets to detach the valve (Fig. D:12) starting with the valve nearest to the rear of the head. Mate each valve with its respective spring and collets in removal order for examination.
8. To dismantle the rocker shaft assembly, remove the plug in the end of the shaft and detach the filter, then carefully slide the components off the shaft. Place the components in removal order for cleaning and examination (Fig. D:13). If necessary, tap any jammed components off the shaft using a soft faced hammer to free them.

Cylinder Head Inspection

Clean all old gasket material, etc., from the machined

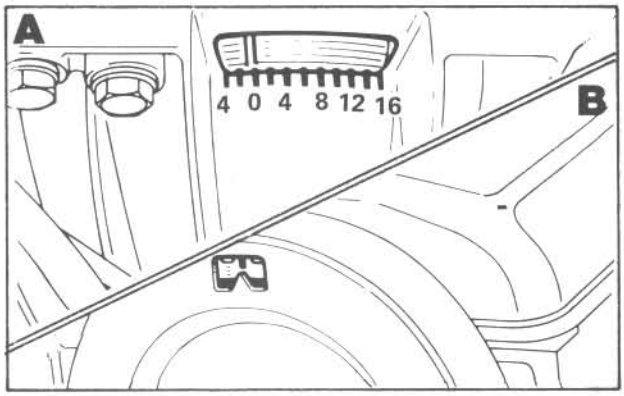

Fig. D:1 TDC Timing marks on flywheel (A), camshaft (B)

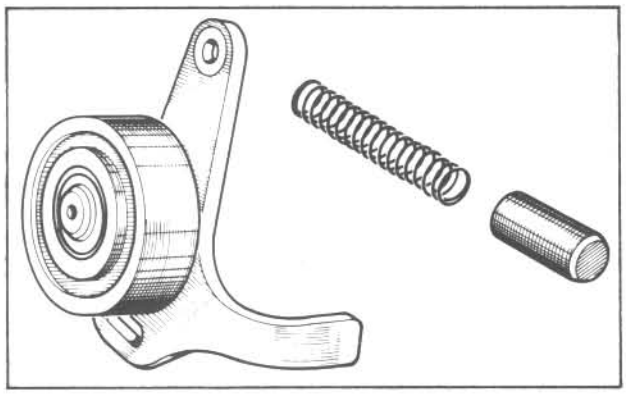

Fig. D:2 Details of belt tensioner assembly

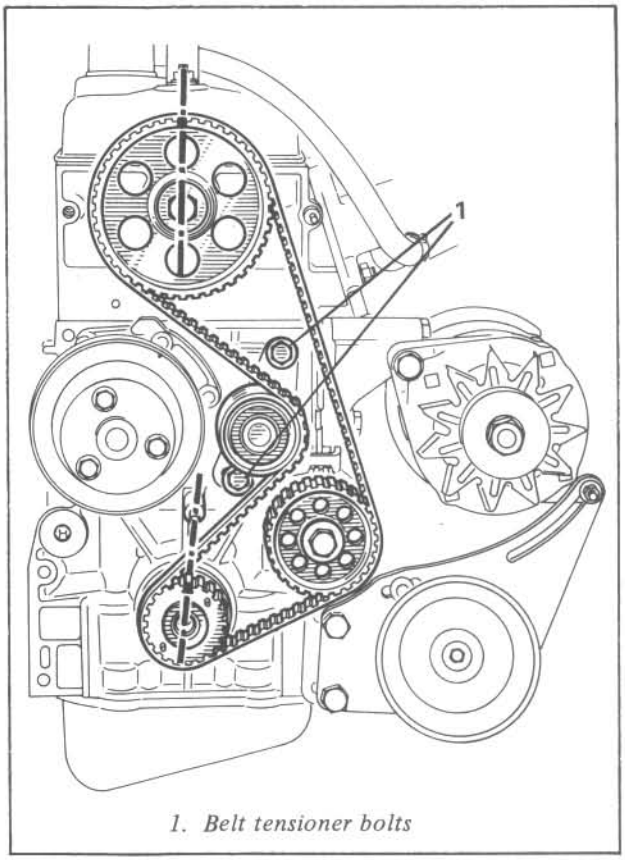

1. Belt tensioner bolts

Fig. D:3 Sprocket alignment at No 1 piston TDC

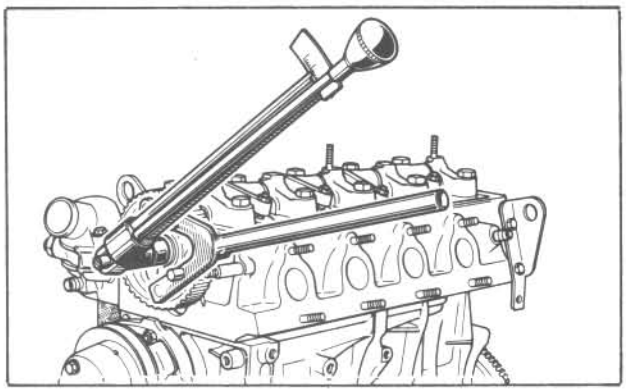

Fig. D:4 Using tool to undo/tighten cam sprocket bolt

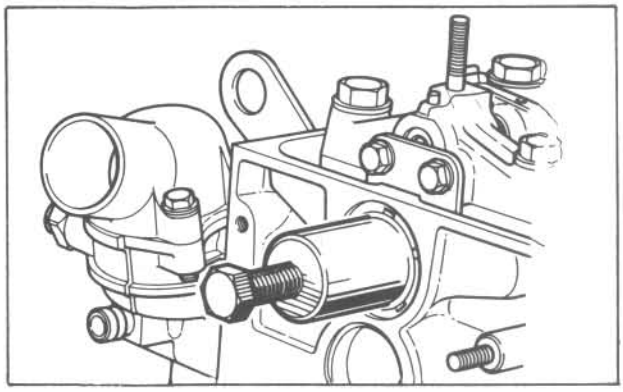

Fig. D:5 Removing oil seal with special extractor

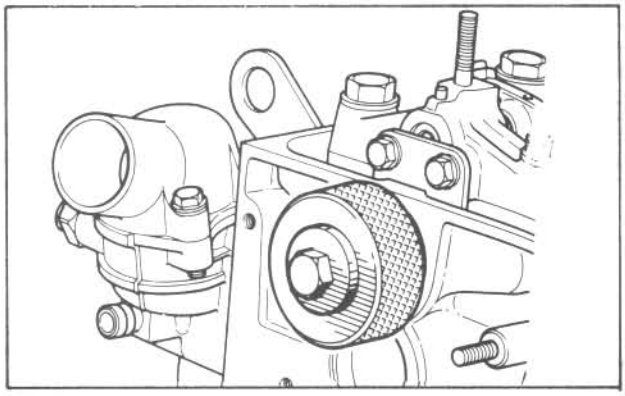

Fig. D:6 Using sprocket bolt to press in oil seal

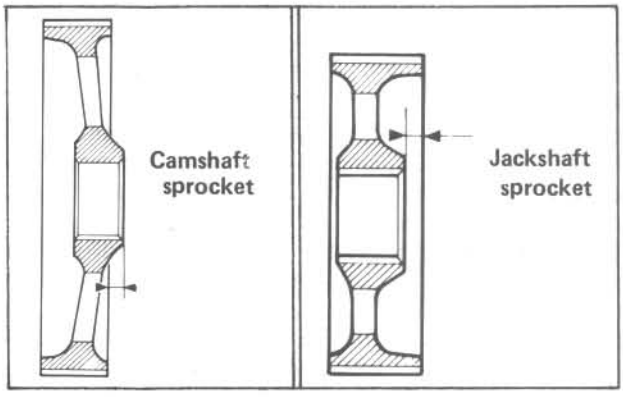

Fig. D:7 Sprocket offsets should face engine

faces and remove all oil and dirt by thoroughly washing the head in paraffin. Check the internal water passages of the head through the water pump flange, and remove any lime deposits.

Blow out all oil and water passages, particularly the rocker shaft oil transfer passage with compressed air from a tyre foot pump. Probe all bolt holes to ensure they are clear. If necessary, the holes can be cleared out with a suitable size of tap.

Inspect the head for cracks, particularly around the combustion chambers and valve seats, and all machined surfaces for signs of burrs, scratches or nicks. Remove any burrs with an oil stone.

Check the machined face of the head for flatness using a flat steel surface (Fig. D:14). If the head face is bowed more than 0.05 mm (0.002 in), the head should be machined flat by a local auto engineers or Renault dealer.

Check the spark plug holes for damaged or stripped threads. If present, it should be possible to rectify any damage with a suitable size of tap, or in bad cases, a Helicoil thread insert can be fitted by a local auto engineers.

Valves, Valve Seats, Spring & Guides Inspection

Refer to the OHV ENGINE chapter for details of component inspection.

Rocker Shaft Components - Inspection

Inspect the rocker shaft and arms for signs of wear indicated by wear ridges on the shaft, a sloppy fit of the arms on the shaft and for wear indentations on the valve stem end of each rocker arm. Replace any parts which are found to be worn or suspect.

Check that the oil holes in the shaft and rocker arms are clear. If necessary, probe the oilways with wire to clear them then blow through with compressed air from a tyre foot pump.

Reassembling the Cylinder Head

Place the head, supported on wood blocks, upside down on a workbench, then grind-in each valve (including new valves) to its respective seat by hand, using a valve grinding tool and 'coarse' or 'fine' grinding paste depending on the condition of the seat, as follows:

1. Smear a small quantity of 'coarse' or 'fine' grinding paste (depending on the condition of the seat) around the valve seat, making sure that the paste does not contact the valve guide bore.
2. Attach the suction pad of a valve grinding tool to the head end of a valve, then insert the valve into its respective guide.
3. Grind-in the valve by rotating the grinding tool handle between the palms of the hands, backwards and fowards, and at the same time, applying slight downward pressure on the valve.
4. Periodically, lift out the valve, apply fresh grinding paste, then turn the handle by a few degrees and repeat the grinding procedure.
5. Continue grinding until a gas-tight seal is obtained at the seat. This will be indicated by a continuous matt grey ring around the valve face and seat. When this has been achieved, clean all traces of grinding paste from the seat and valve - this is important.
6. Repeat the grinding procedure on the remaining valves.
7. After all the valves have been ground-in and cleaned, the sealing of the valves can be checked (if time permits) by refitting the spark plugs and the valves to their respective seats, then filling each combustion chamber with paraffin. If the valves are sealing properly, there should be no detectable leakage of paraffin through the valve ports for at least 20 minutes. If necessary, repeat the grinding procedure.
8. Finally, remove all valves and spark plugs, then thoroughly wash the head in paraffin to remove all traces of grinding paste. Blow the head dry using compressed air from a tyre foot pump, then wipe with a clean cloth.
9. Lubricate the valve stems and guide bores before installing each valve assembly in its respective position, in the reverse order of removal. Note that the close-coiled end of the valve spring goes next to the cylinder head. Make sure that the split collets are correctly fitted before releasing the spring compressor tool Note that valve stem oil seals are not fitted.
10. Check that the inlet and exhaust manifold, and the water pump mounting flanges are clean before refitting to the cylinder head with new gaskets, in the reverse order of removal.
11. Reassembly the rocker shaft (if dismantled) in the correct order and refit it to the cylinder head complete with a new filter on the end plug. It is important that the components are refitted in the correct order. Pedestals 1, 2, 3 & 4 are identical by having one oil feed hole for the respective pedestal bearing plus a threaded hole for the rocker cover stud on Nos 1 & 3 pedestal. All pedestals have a machined flat on the top (Fig. D:15) which should face towards the cam sprocket when fitted. Pedestal No. 5 has two threaded holes for the cam thrust plate location plug a hole for the 3 mm dia. camshaft locking rollpin (Fig. D:15).

Cylinder Head Installation

1. Make sure that both the cylinder head gasket face and the engine block face are perfectly clean.
2. If necessary, turn the crankshaft until No 1 piston (at the rear of the head) is at the TDC (Top Dead Centre) position. Check that the distributor drive slot in the camshaft is in the No. 1 piston (at the flywheel end) TDC position as shown in Fig. D:16. Turn the camshaft if necessary to the correct position.
3. Position the new head gasket on the engine block with the 'HAUT - TOP' mark facing upwards and aligned with the head bolt holes.
4. Carefully position the cylinder head with rocker shaft, on the engine so that the bolt holes align, then refit the head bolts.
5. Using a torque wrench, tighten the head bolts in the order shown in Fig. D:17 to an initial torque of 5,0 kgm (38 lb, ft), then again to a torque of 8,0 kgm (60 lb ft).
6. Adjust the valve clearances as detailed in the TUNE-UP chapter.
7. Refit and reconnect the remainder of the ancilliaries to the cylinder head and engine in the reverse order of removal. Refill the cooling system and bleed it as detailed in the COOLING SYSTEM chapter.
8. Run the engine for 20 minutes or until the engine has

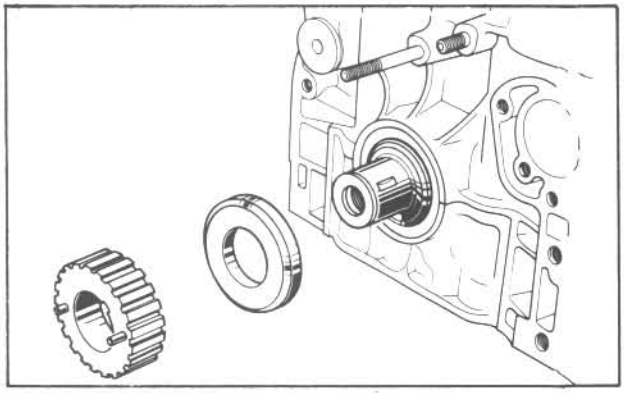

Fig. D:8 Detach crank sprocket from shaft

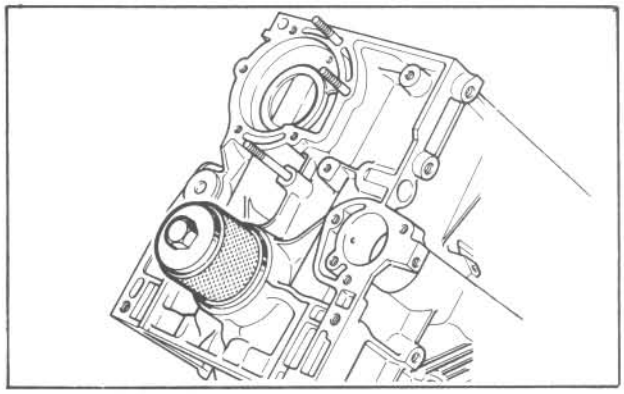

Fig. D:9 Installing crank oil seal with pulley bolt

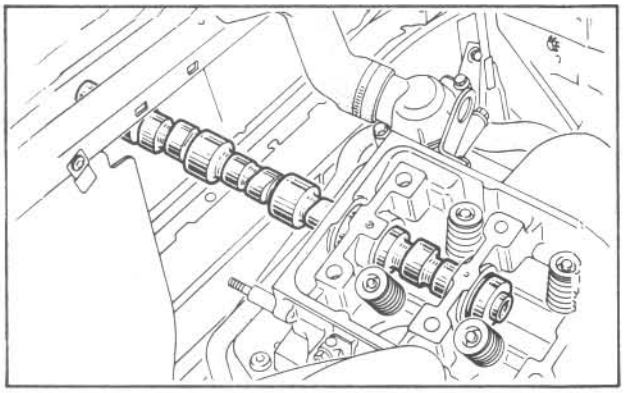

Fig. D:10 Withdrawing camshaft from front of head

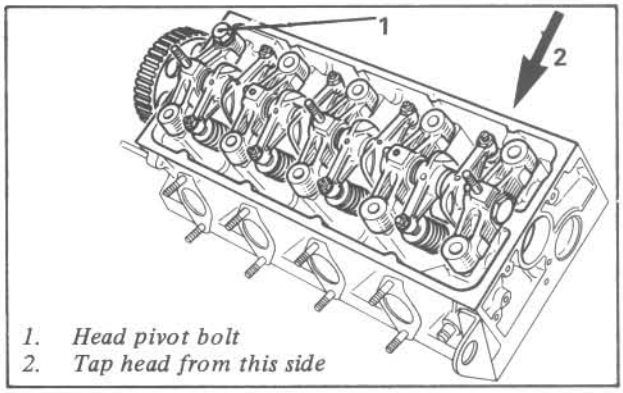

Fig. D:11 Unsticking cylinder head from engine block

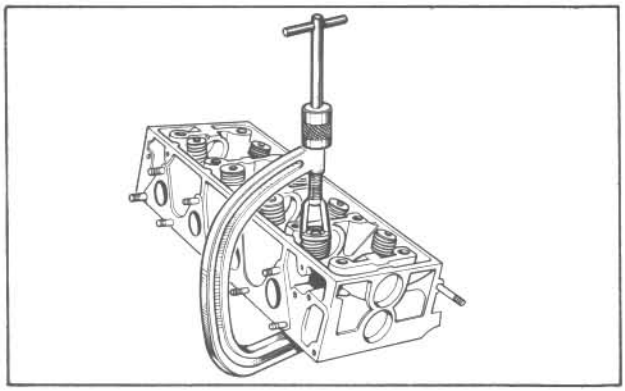

Fig. D:12 Using compressor tool to remove valves

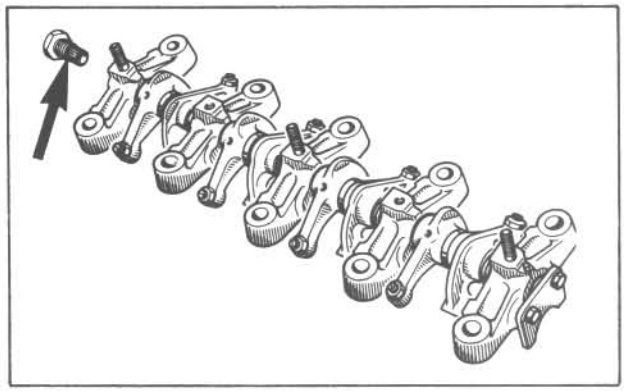

Fig. D:13 Rocker shaft component order - filter arrowed

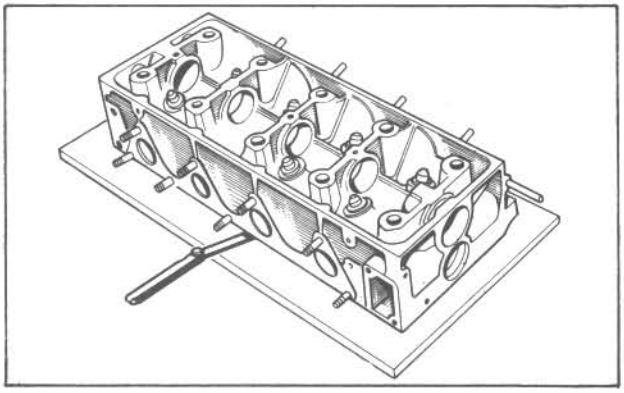

Fig. D:14 Checking cylinder head face for flatness

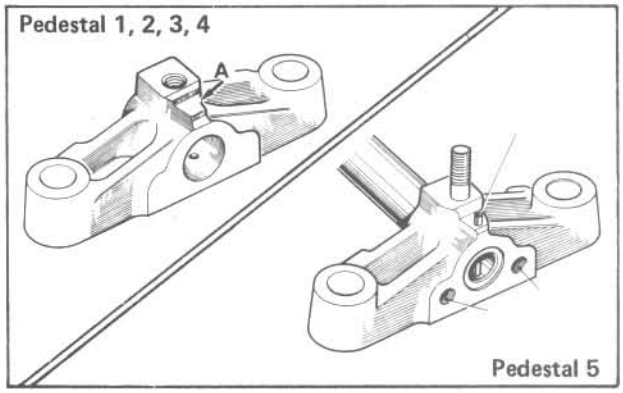

Fig. D:15 Rocker shaft pedestal identification

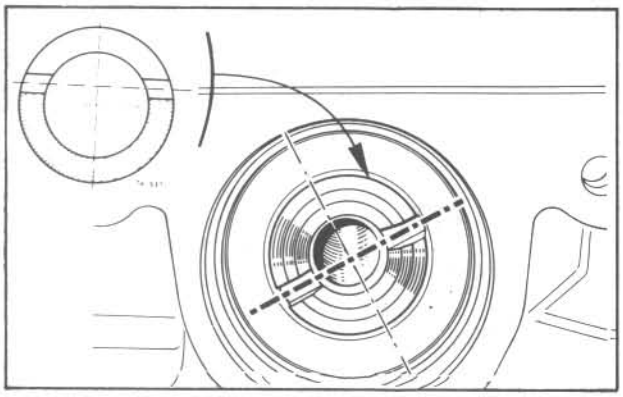

Fig. D:16 Camshaft distributor slot position at TDC

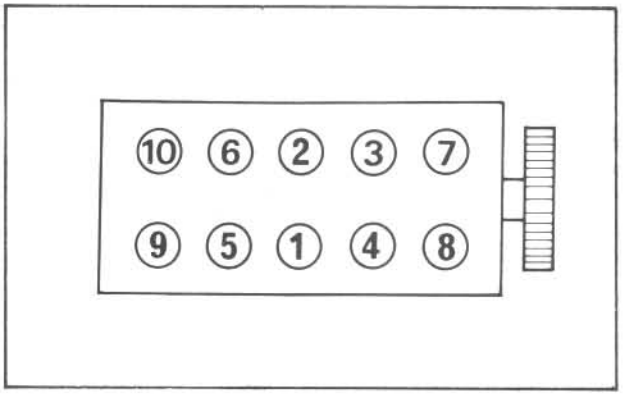

Fig. D:17 Head bolt tightening sequence

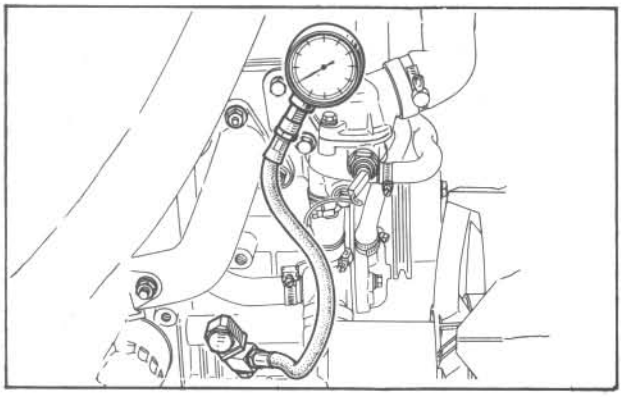

Fig. D:18 Checking oil pump pressure

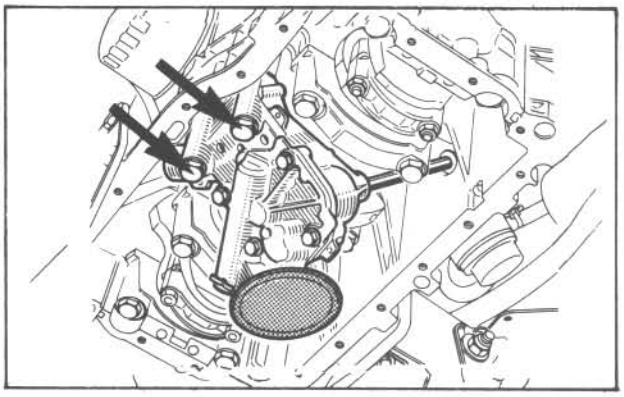

Fig. D:19 Oil pump bolts to engine block (arrowed)

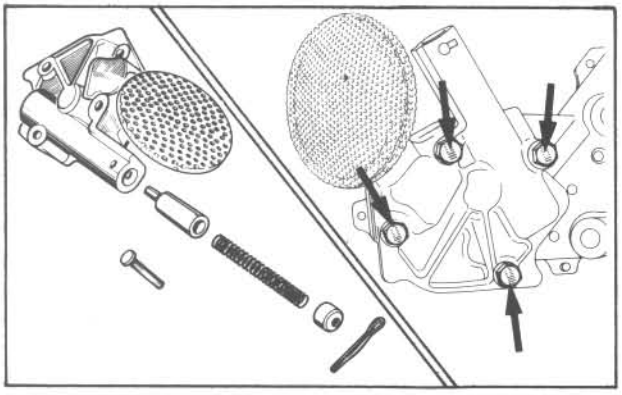

Fig. D:20 Oil pump casing bolts and relief valve

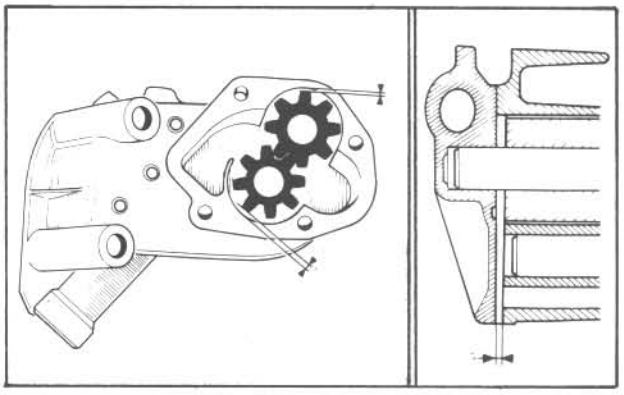

Fig. D:21 Oil pump gear check points

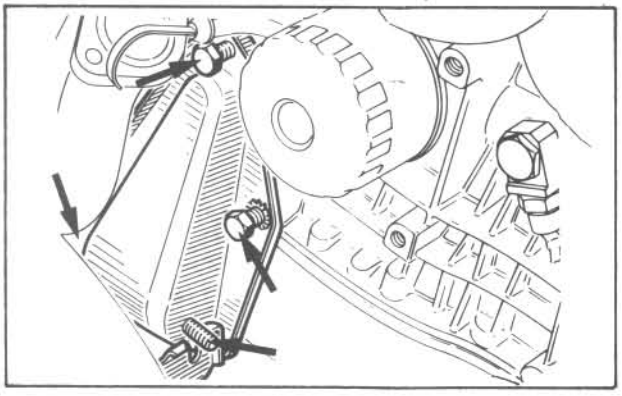

Fig. D:22 Engine mounting securing bolts

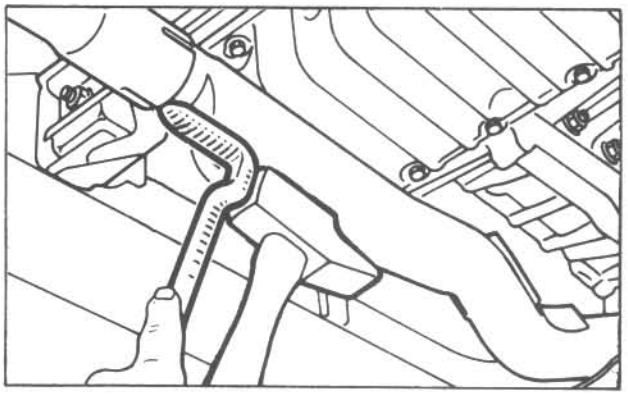

Fig. D:23 Using shaped tool to disconnect exhaust pipe

reached normal operating temperature, indicated by the radiator cooling fan switching itself on. Stop the engine and allow it to cool for 2.5 hours.
9. Retorque the head bolts in the order shown in Fig. D:17 by slackening each bolt by 1/4 turn, then tighten to 8,0 kgm (60 lb ft). Recheck and adjust the valve clearances as detailed in the TUNE-UP chapter.

SUMP PAN . . . . . [8]

The sump pan removal and installation procedure is the same as that detailed in the OHV ENGINE chapter.

OIL PUMP. . . . . [9]

Pressure Test (Fig. D:18)

1. Remove the wire from the oil pressure switch on the engine block.
2. Unscrew the pressure switch and screw in a pressure gauge pipe adaptor (Fig. D:18).
3. With the engine idling at normal operating temperature, note the pressure reading.
4. Rev the engine to 4000 rpm and again note the pressure gauge reading.
5. If the reading is outside the figures specified in the TECHNICAL DATA, remove check or replace the pump.
6. Refit the pressure switch and reconnect the wire.

Removal

1. Remove the sump pan as detailed in the OHV ENGINE chapter.
2. Undo the two bolts and detach the pump and drive shaft from the engine (Fig. D:19). Note that the pump also has two locating dowels in the engine block.

Checking for Wear

1. Undo the four bolts (Fig. D:20) and separate the pump casing.
2. Remove the split pin and withdraw the relief valve components (Fig. D:20).
3. Clean all parts and check for wear.
4. Refit the gears and check for wear at the points shown in Fig. D:21. If the clearance is outside the limits specified in TECHNICAL DATA, replace the pump.
5. Reassemble the pump components in the reverse order of removal.

Installation

1. Refit the pump driveshaft to the pump. The circlip acts as a shaft limit stop in the pump.
2. Refit the pump to the engine and tighten the bolts to the correct torque - see TECHNICAL DATA.
3. Refit the sump pan as detailed previously.

ENGINE MOUNTINGS. . . . . [10]

Replacement (Fig. D:22)

The replacement procedure for the engine mountings is the same as that detailed in the OHV ENGINE chapter.

ENGINE OVERHAUL . . . . . [11]

The engine overhaul procedures are the same as that on OHV engines and detailed in the OHV ENGINE chapter.

Note that the jackshaft replacement is similar to that detailed for the camshaft previously.

ENGINE REMOVAL & INSTALLATION . . [12]

Removal and installation of the engine is identical to that detailed in the OHV ENGINE chapter. Note that the engine mountings are different - see Fig. D:22.

EXHAUST SYSTEM. . . . . [13]

The exhaust system should be examined periodically to check for corrosion and leaks - see Pass the MoT section at the front of this manual. Replacement system comprise four parts, the down pipe, the expansion chamber pipe, intermediate pipe and silencer, and rear silencer with tail pipe.

When part of the system requires replacement, it may be more economical in the long run to replace the complete system from manifold to tailpipe.

A used section should only be reused if it is sound and undamaged. Remember that the exhaust system corrodes from the inside outwards as the hot corrosive gases attach the inside of the pipe. Therefore, when a pipe appears to have only surface rust on the outside, it could well be that the pipe will only have a short life left before leakage.

As corrosion takes place throughout the length of the exhaust system, examine each section carefully to check how much requires replacement.

Replacement - Complete System

The replacement procedure is the same as that detailed in the OHV ENGINE chapter.

Replacement - Individual Sections

Sections of the system can be replaced if desired, the problem in many cases being the difficulty in disconnecting the rusted joints.

Various methods can be used, starting with penetrating oil, then tapping around the outside of the joint sleeve with a hammer to break the rust hold. Failing this, a shaped pointed tool can be made up as shown in Fig. D:23 to spread the pipe outer sleeve and disconnect the joint. In really stubborn cases, the pipe outer sleeve will have to be split and peeled back to free the inner pipe.

Having disconnected and removed a section, make sure the pipe ends of the two adjacent sections are clean and circular. If necessary, gently tap the pipe end to the right shape.

Smear the pipe ends with Holts exhaust assembly paste and reconnect the section as detailed previously for replacing the complete system.

ENGINE

Trouble Shooter

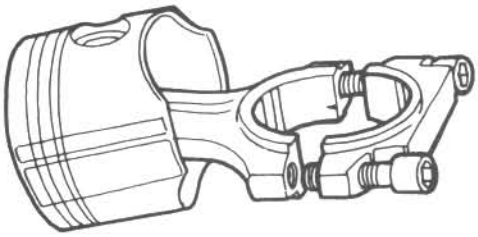

FAULT	CAUSE	CURE
Noisy tappet (with correct clearance	1. Worn rocker or shaft (OHV engine) 2. Worn cam follower tappet (OHC engine)	1. Replace rockers or shaft (OHV). 2. Fit new follower/tappet & camshaft.
Lack of compression	1. Faulty valve seat, excessive wear in stem or guide. 2. Faulty head gasket. 3. Worn pistons, rings and bores.	1. Recut seat and valve, fit new guide and valve. 2. Fit new gasket or reface head. 3. Either fit new rings, pistons and rings and rebore. If engine badly worn then recondition engine.
Smoke from exhaust. Lack of power	1. As above. 2. Blocked crankcase breather.	1. As above. 2. Check breathing apparatus as above.
Piston slap	1. Worn pistons, rings and bores.	1. Engine overhaul.
Big-end knock	1. Wear between big-end shell and crankshaft. Wrong torque on bolts.	1. Depending on wear, fit new shells, regrind crankshaft and check torque.
Mains rumble	1. Wear between main bearing shells and crankshaft.	1. As above.
Cam follower tap	1. Camshaft worn or follower dished.	1. Examine and replace followers or camshaft. Or both.
Knocking when clutch de-pressed. Movement at crank pulley	1. Excessive crankshaft end-float. Wear between crank and thrust washer.	1. Fit new thrust washers and recheck clearance.
Clattering from front of engine	1. Worn or slack timing chain, worn chain tensioner.	1. Fit new chain and tensioner. Adjust chain where necessary.
Small-end or gudgeon pin knock	1. Excessive wear between gudgeon pin and con-rod.	1. Check piston assemblies for wear.
Lack of oil pressure	1. Lack of oil. 2. Faulty oil pump. 3. Blocked oil pick-up strainer. 4. Faulty pressure-relief valve. 5. Blocked oil filter. 6. Excessive wear in crankshaft journals.	1. Install fresh oil. 2. Fit new pump. 3. Clean pick-up. 4. Fit new relief valve. 5. Fit new filter. 6. Overhaul engine.
Oil leaks	1. Sump gaskets or packings. 2. Front and rear crankshaft oil seal. 3. Rocker or camshaft gasket. 4. Oil filter.	1. Fit new gaskets. 2. Fit new seals. 3. Fit new gasket. 4. Check filter seal.
Lack of power (engine in good condition)	1. Faulty ignition timing. Faulty sparking plugs, points or condenser. Wrong valve clearance.	1. Tune engine.

Engine Electrics

INTRODUCTION .....[1]
ALTERNATOR .....[2]
STARTER MOTOR .....[3]
DISTRIBUTOR.....[4]
IGNITION COIL.....[5]
ELECTRONIC IGNITION .....[6]
IGNITION SWITCH .....[7]
CRUISE CONTROL .....[8]
ECONOMETER .....[9]
TROUBLE SHOOTER .....[10]

INTRODUCTION .....[1]

The engine electrical system is divided into three main sections; the starting, ignition and charging circuits. Components such as the temperature gauge sender unit, transmission electrics and the cooling fan are dealt with in other chapters.

The procedure for charging the battery is given in the GENERAL ELECTRICS chapter. Many charging problems come from lack of battery maintenance and drive belt failure - see ROUTINE MAINTENANCE chapter for details of battery checking and drive belt adjustment. Because it is very difficult to get at the belt, it is important that it be regularly checked during servicing to avoid a breakdown on the road.

To solve any simple continuity and earthing problems, a test lamp and selection of jump leads should prove sufficient. However, to test some of the more complex assemblies, a multi-meter will be required. This meter should have voltage, amperage and resistance scales. The instrument may be combined with a dwell meter and rev-counter. See the TUNE-UP chapter for details of the applications of these scales. Other tools that may prove necessary are electrician's screwdrivers, a selection of spanners, pliers and wire strippers. A small soldering iron can be used for making some connections, for example the starter motor field brushes. Special equipment will be required to test electronic equipment such as the electronic ignition computer and alternator diodes, also to test the starter armature windings and the distributor advance characteristics. The distributor can also be checked - see TUNE-UP chapter.

Before attempting to overhaul or replace any of the components, ensure that the correct replacement parts are available before starting work. Original equipment components may be supplied by one of several different manufacturers, so check that any replacement parts are for the correct unit.

ALTERNATOR .....[2]

Precautions

It is essential that the following points are observed when carrying out any maintenance or repairs on the charging system.

1. Never disconnect or reconnect the battery leads while the engine is running or this may result in damage to the rectifier pack and regulator unit. It is also inadvisable to make or break any other connection in the charging circuit with the battery connected. Note that the battery can be electrically isolated by turning the green knob on top of the post.
2. Do not disconnect the main output cable either at the alternator or battery while the field windings are energised, or the rectifier diodes may be damaged.
3. When reconnecting the battery leads, always ensure that the connection is made with the correct polarity terminals. Reversed battery or charger connections will damage the rectifier diodes. Connect the positive lead to the battery positive terminal first, then the negative lead to the negative terminal.
4. No attempt should be made to polarise the alternator. The alternator is for use on negative earth systems only and the polarity cannot be reversed by "flashing" the field terminals, as with a dynamo. Any attempt to polarise the alternator will damage it.
5. Always disconnect the battery before using a battery charger as this will isolate the alternator from the battery and external charging equipment. The charger must always be connected in parallel to the battery - positive to positive, then negative to negative.

Charging Circuit Test

1. Check that the alternator drive belt is correctly adjusted - see ROUTINE MAINTENANCE chapter. The battery should be in good condition and its terminals

clean and tight, also the connections and leads in the rest of the charging system should be clean and making good contact.

2. Check the car's electrical system for a current leak, which will flatten the battery and so make charging difficult. Using a good battery, connect an ammeter between the battery positive post and the battery lead. The ammeter should read a current of less than 10 milli-amps with all electrical units (clock, interior lights etc) turned off. If it is more than this, locate the cause and rectify.

3. Connect a voltmeter across the battery terminals and measure the battery voltage. With the engine running the voltage should increase by at least 1 volt. If so, the charging circuit is working and the battery is suspect.

4. If battery voltage is not exceeded, the charging circuit has a fault. With the voltmeter connected between the alternator positive and negative terminals, check the voltage with the engine running. If the voltage increases examine the alternator wiring connections. If not, temporarily connect a jump lead between the positive and energising (EXC) terminals. Do not turn on any of the car's lamps. With the engine running the voltage should increase. If not, check the alternator earth connection, brushes and windings.

5. If the voltage does increase, remove the jump lead from the alternator and fit to the voltage regulator positive and EXC terminals. With the engine running, voltage should increase. If not, check the regulator supply from the battery. If the voltage does increase, the regulator is at fault and should be replaced. Remove the jump lead.

6. As a final check, the alternator output can be measured. With an ammeter connected between the battery positive terminal and the battery lead, run the engine at 2500 rpm. With all electrical units turned on, check the output. As each unit is turned on the output should increase. Output should not exceed the maximum specified - see TECHNICAL DATA at the end of the manual.

NOTE: Most faults found in the charging system are usually due to either worn brushes or a defective regulator unit.

Replacement of the brushes and regulator unit is detailed in this chapter. If the fault is suspected to be anything more involved, it is recommended that the repair be entrusted to an auto electrician or alternatively, that an exchange unit be obtained. In most cases, an exchange unit will be found to be the most economical and convenient solution, rather than to attempt to obtain parts and repair the assembly.

Removal & Installation

The alternator is mounted on the nearside of the engine at the front on all models (Figs. E:1, 2 & 3). Access is restricted by coolant hoses, engine ancillaries and body panels on some models. It may be necessary to free pipes from their retaining clips and push out of the way. Avoid disconnecting any of the control and vacuum lines.

Disconnect the battery, then the multi-plug from the back of the alternator. Slacken and remove the top pivot bolt. The lower mounting bolts are best reached from below. Jack up the front of the car and support - see ROUTINE MAINTENANCE chapter. Remove the mounting bolts, noting the direction that the bolt is fitted from. On some OHV engines it may be necessary to remove the alternator mounting bracket (Fig. E:4). Free the drive belt from the pulley and withdraw the alternator.

Refit the alternator in the reverse order of removal. Tighten the mounting bolts to the specified torque, see the TECHNICAL DATA. Reconnect the alternator multi-plug. Tension the alternator drive belt as described in the ROUTINE MAINTENANCE chapter.

Brush Replacement

1. Before attempting to replace the brushes, ensure that the replacement brushes are for the unit fitted. Remove the alternator as detailed previously.

2. The brushes are held in a carrier box on the rear end of the unit. The brush box is held by two screws. Remove these and withdraw the box and brushes (Fig. E:8).

3. Examine the brushes for wear and contamination. If in doubt, they should be replaced. If the slip ring shows signs of pitting, it should be lightly dressed with fine glass paper. If this cleaning does not clean up the surface, the alternator should be replaced. Before refitting clean the brushes contact face with petrol and wipe dry with a lint - free cloth.

4. Refit the brush box in the reverse order of removal. Do not overtighten the fixing screws.

If an SEV alternator is fitted, the brush leads are soldered to their terminals. When resoldering, take care not to melt the brush holder.

If a Motorola alternator is fitted, the regulator leads must be disconnected before holder removal (Fig. E:8). Ensure that the wires are reconnected in the correct order.

Voltage Regulator

The voltage regulator is integral with the alternator on models from 1980 on. Cars prior to 1980 are fitted with a remote regulator unit mounted on the engine bay bulkhead above the ignition coil assembly (Fig. E:9). Its purpose is to regulate the current to the alternator excitation coils, so regulating alternator output. The regulator is a sealed unit, and no attempt should be made to overhaul it should it prove defective.

If replacement to the earlier type remote unit is necessary, first disconnect the battery, then remove the positive leads, alternator lead and the left-hand mounting nut and earth wire. Refit in the reverse order then reconnect the battery.

If an integral type regulator is fitted (Fig. E:8), it can be unbolted from the rear of the alternator, noting the lead location and wiring colours.

STARTER MOTOR .....[3]

Starter Motor Test

If the starter motor fails to operate, check against the Trouble Shooter at the end of this chapter and then run

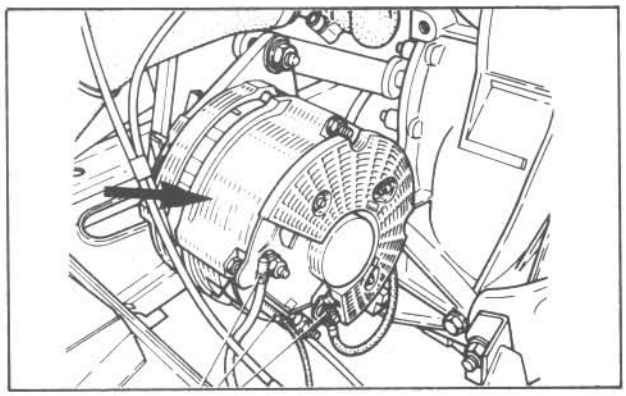

Fig. E:1 Alternator location, 847 engine

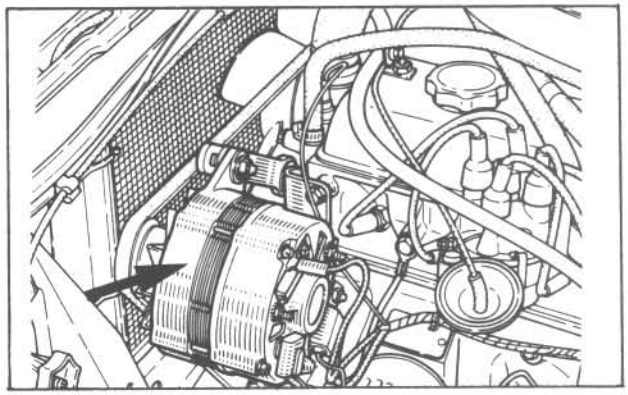

Fig. E:2 Alternator location, 843 engine

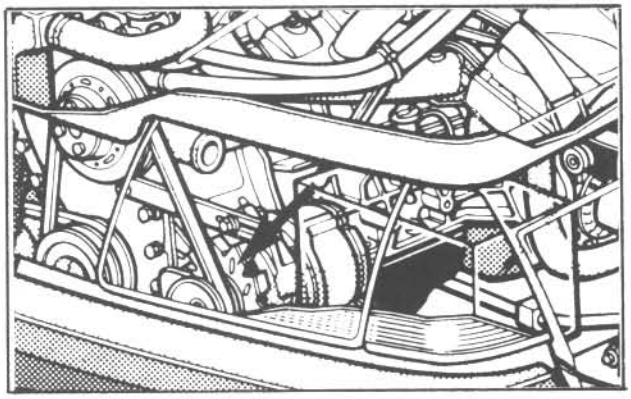

Fig. E:3 Alternator location, 829 engine

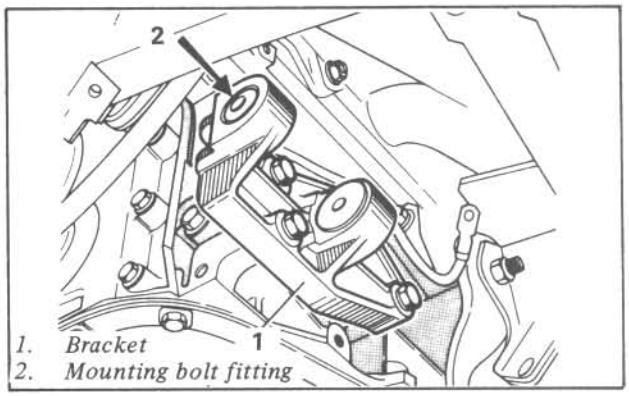

Fig. E:4 Alternator mounting bracket from below

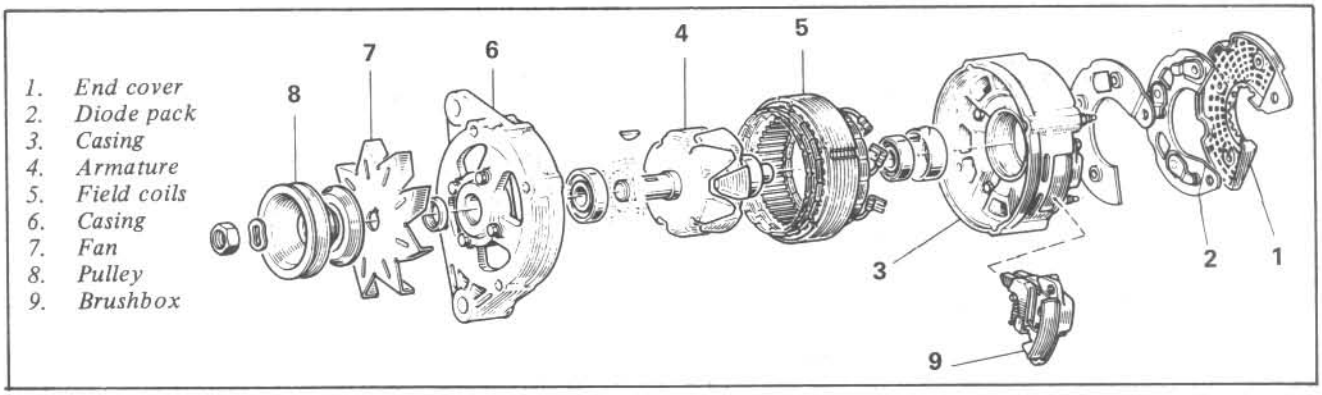

Fig. E:5 SEV Marchal alternator exploded view

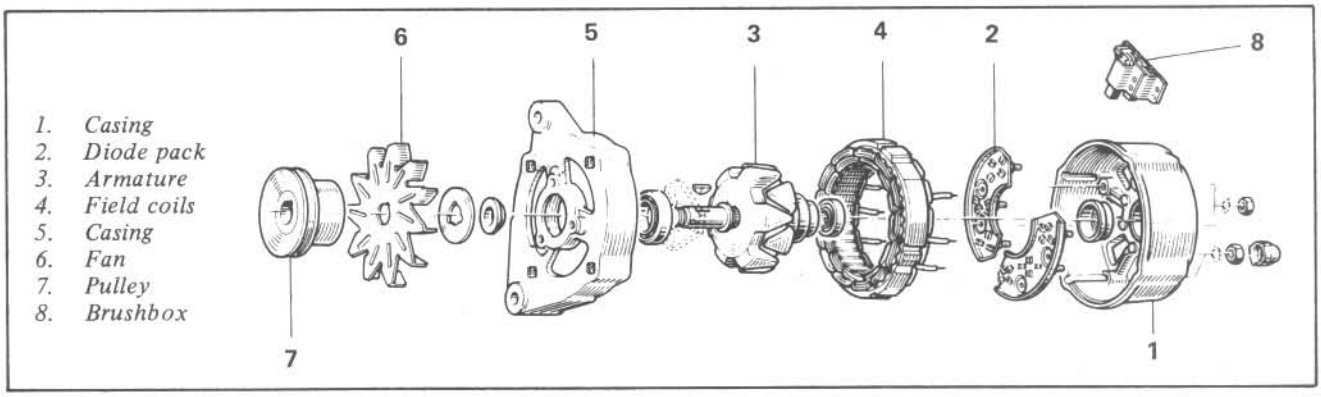

Fig. E:6 Paris-Rhone alternator exploded view

through the sequence of checks as described below.

1. Check that the heavy gauge wiring between the battery and solenoid is in good condition and that the connections are clean, tight and making good electrical contact.
2. Check that the starter pinion is not jammed in mesh with the flywheel ring gear. Putting the car in a high gear and rocking it back and forth should free it again. Examine the ring gear and starter motor pinion for damaged teeth.
3. Check solenoid operation by turning the ignition key and listening at the solenoid. A click should be heard as the switch operates.
4. If no click is heard, check the supply of current to the solenoid. Remove the lead on the end of the solenoid and connect it to a 12 volt bulb. When the ignition switch is turned, the bulb should be brightly illuminated. If not, the ignition switch or the wiring is faulty. Reconnect the lead.
5. Actual closure of the solenoid switch contacts can be confirmed by placing a test bulb across the two main solenoid terminals. If the bulb does not glow brightly, suspect the earth connection. Turn the ignition switch, whereupon the test bulb should go out. This is because the switch is shorting out the bulb, following the path of least resistance. If the bulb stays bright, the switch on the solenoid is faulty and the unit should be replaced.
6. If these tests all reveal correct operation of the solenoid and ignition switch, the fault must be in the starter motor itself, which should be removed and checked or an exchange unit obtained.

Removal & Installation

The starter motor fitted to all models is mounted on the near side of the engine underneath the exhaust manifold. Before attempting to remove the starter motor allow the engine to cool first.

Disconnect the battery then the supply leads to the starter motor. Remove the three bolts holding the starter motor to the clutch housing and withdraw them. If difficulty is encountered reaching the bolts remove the manifold above.

On the 847 engine unscrew the rear engine mounting and tilt the mounting at least 90 degrees. Pull the starter back and lower the nose. Turn through 90 degrees and withdraw (Fig. E:10). Refit in the reverse order, starting the bolts turning by hand so as not to damage the block threads due to misalignment

The starter motor on 841, 807, A2M, and A6M engines is removed after unscrewing the near side engine mounting then tilting the bracket until it is horizontal. Then continue as above.

The starter motor fitted to 829, J6R engines is retained by an additional pair of mountings holding the armature casing to the cylinder block (Fig. E:11). These bolts should be removed before removing the housing bolts.

Brush Replacement

Remove the starter motor from the car as detailed previously. To remove the brush holder plate, undo the tie bolt retaining nuts and remove the end cover. Undo the bolt at the end of the shaft and remove the brush holder plate (Fig. E:12).

Inspect the brushes. If badly worn they should be replaced. If the commutator is slightly pitted or burnt, it may be possible to clean it with fine glasspaper. If more damage than this is evident, it may be worth renewing the complete starter.

To remove the field coils, undo the screws on the outside of the starter body. These will release the pole pieces and the coils may be removed.

Remove the sleeve that protects the soldered joint and unsolder the old brush lead using a soldering iron. Then soft solder the new brush lead into place. Do not use excessive heat whilst making the connection.

Replace the coils and pole pieces. Screw the pole pieces into position. Reassemble the starter motor in the opposite order to removal, lubricating the rear bush with grease.

Solenoid Replacement

Remove the leads to the solenoid, noting their locations. Undo the nuts holding the solenoid to end housing. On the Ducellier unit, tap out the actuating lever fork pin, drifting out from the side indicated (Fig. E:13). Remove the plastic bung and remove the operating rod bolt.

Refit the solenoid in the reverse order of removal, then set the armature pinion endfloat as described below.

Drive Pinion

Whenever the starter motor is removed, the drive pinion should be lightly oiled and checked for correct endfloat. To check the endfloat, remove the dust cap from the pinion end of the starter solenoid. There should be minimal clearance between the adjusting nut and bolt. With the pinion resting against the armature, the gap between the pinion and end stop should be as specified in TECHNICAL DATA (Fig. E:15). If the endfloat requires adjustment, turn the solenoid adjusting bolt. If the pinion extends any further, the teeth will wear upon the starter ring gear.

If the pinion itself is worn, a new part may be obtained and the old assembly replaced. After removing the brush plate, tap the armature casing free. Remove the solenoid and free the armature from the actuating fork. Separate the drive pinion from the armature by tapping the stop ring down the armature shaft (Fig. E:16). The retaining circlip can then be levered free and the pinion removed. After fitting a new pinion, replace the stop collar then the circlip. Assemble the starter motor and set the armature endfloat as described above.

DISTRIBUTOR.....[4]

Removal & Refitting
Contact Breaker Type Ignition

1. Turn the crankshaft in the normal direction of rotation (clockwise as viewed from the front on all engines)

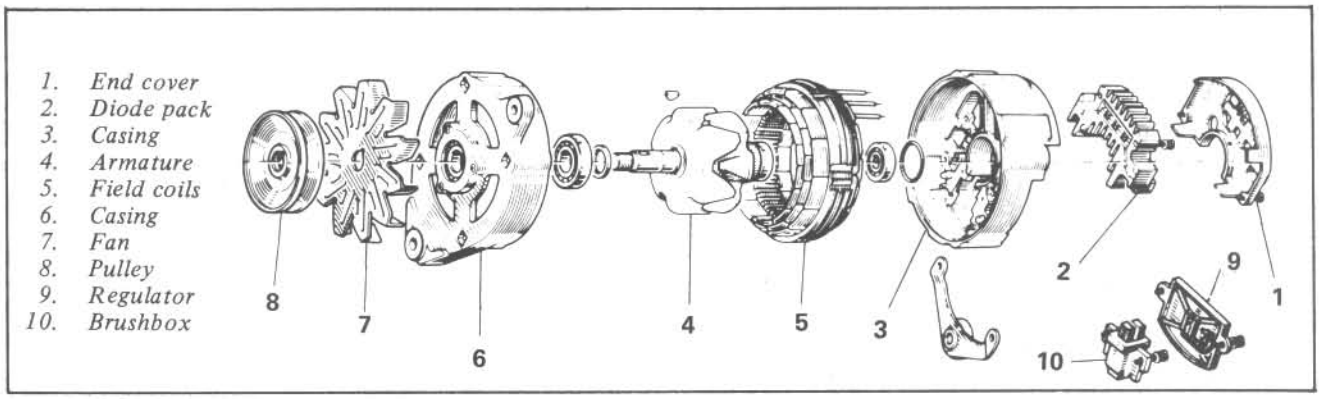

Fig. E:7 Motorola alternator with integral voltage regulator

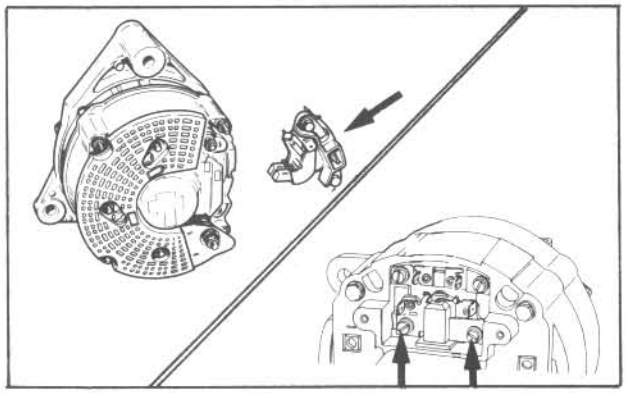

Fig. E:8 Alternator brushbox, Paris-Rhone and Motorola

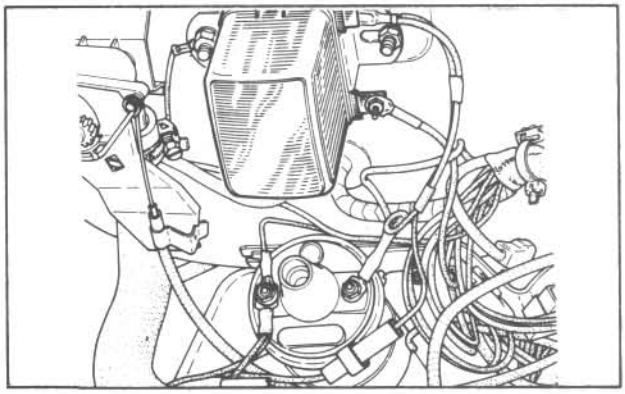

Fig. E:9 Early type voltage regulator and ignition coil

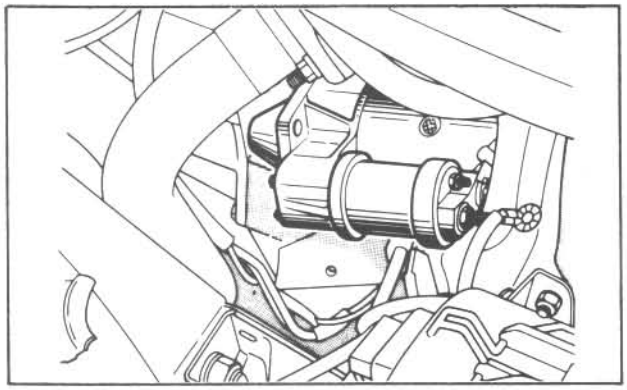

Fig. E:10 Starter motor location and removal, 847 engine

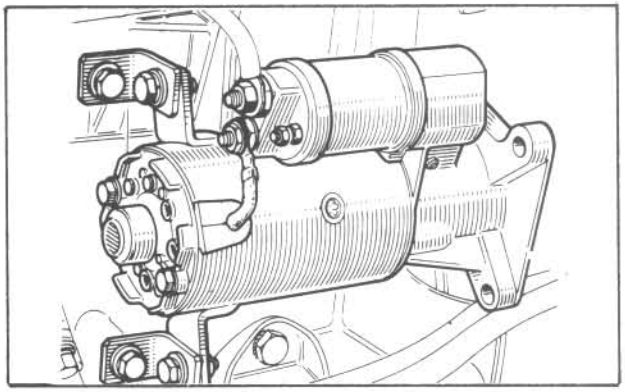

Fig. E:11 Starter motor mounting, 829 engine

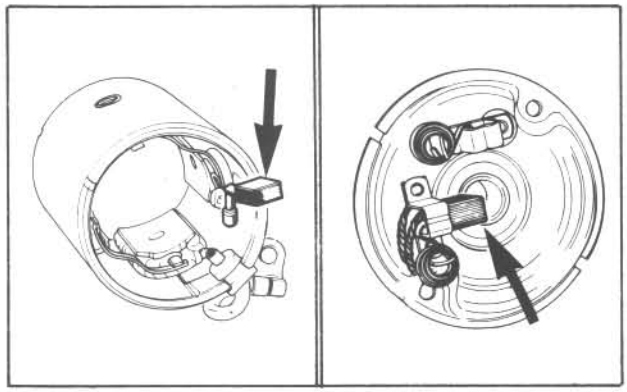

Fig. E:12 Location of brushes on Ducellier starter

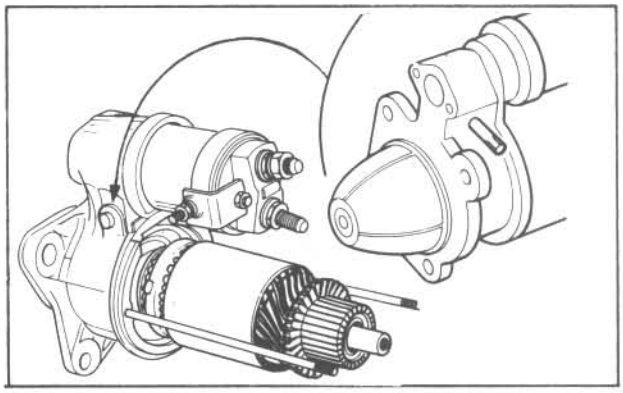

Fig. E:13 Ducellier starter motor solenoid removal

until number 1 piston is at the TDC (top dead centre) position on the firing stroke. The timing line on the flywheel should be in line with the fixed pointer on the clutch housing mark. See the TUNE-UP chapter for illustrations of the timing marks.

NOTE: No 1 cylinder is at the rear (clutch housing end) of the engine on all models.

2. In the TDC position, the distributor rotor arm should point to the number 1 plug lead segment in the distributor cap. Remove the cap to check the alignment. If the rotor arm points at the number 4 plug lead segment, turn the crankshaft (clockwise) through a further complete revolution to the TDC mark.
3. Mark the direction of the rotor arm on the distributor body. Then scribe alignment marks on the distributor body and cylinder block.
4. Disconnect the low tension lead to the contact breaker points.
5. Release the distributor clamp bolt and pull the unit from the block. Note the position of the distributor drive dog at the bottom of the distributor location.
6. Before refitting the distributor, check the alignment of the drive dog. Refit the distributor by turning the rotor arm slightly to engage the distributor shaft tongue with the offset drive dog. The rotor arm should point at the alignment mark on the distributor body, and the scribed marks on the block and distributor body should be aligned.
7. Check and set the ignition timing as described in the TUNE-UP chapter. Tighten the distributor clamp bolt.

Removal & Refitting - Electronic Ignition

The electronic ignition distributor assembly fitted to early Turbo models is similar to the unit used with conventional contact breaker ignition, but has a detecting coil to trigger the low tension current. On later models with Renix Integral Electronic Ignition computor, the distributor acts only to distribute the high tension current. The procedure for removing and refitting this distributor is however, the same as for the contact breaker ignition unit.

Distributor Overhaul

In most cases of wear or damage to the distributor components, for example the shaft, cam assembly, advance weights etc., and especially after a high mileage, it will be more economical and convenient to fit a new distributor.

IGNITION COIL.....[5]

Ignition Coil Test

The ignition coil fitted to conventional type contact breaker ignition models and early type electronic ignition, is mounted on the engine bay bulkhead above the voltage regulator unit (Fig. E:9). The electronic ignition coil is similar to the unit integral with the later Renix Electronic Ignition computer.

Faults relating to the ignition coil are usually intermittent and sometimes difficult to trace. If the coil is completely faulty then a simple check can be made to confirm that this is the case.

1. Check with a test bulb for low tension current at the coil positive (+) terminal. If there is none, then suspect the ignition switch and wiring.
2. If there is current at the positive terminal, repeat the test at the negative terminal. If there is no current, then the coil is faulty.
3. These tests can only prove that the coil is operating sufficiently to start the car. However, after the engine has been running and the coil warmed up problems can sometimes develop. A constant misfire at high engine speed and whilst under load, assuming that the rest of the ignition circuit has been checked, can usually be attributed to the coil.
4. The best way to test an intermittently faulty coil is to substitute the suspect item for a known good unit so that a comparision can be made.

ELECTRONIC IGNITION .....[6]

Early Type Electronic Ignition

The electronic ignition fitted to early Turbo models is different in construction and operation to the later Renix computer system. A detecting coil in the distributor triggers the low tension current to a computer which sets the ignition curve. The ignition advance is retarded 6 - 9 degrees if the engine pinks, felt by a detector in the cylinder head. An ignition cut out relay is operated by a pressure switch monitoring the carburettor.

Later Type Renix Electronic Ignition Computer

The Renix computer fitted to 1982 models uses a TDC sensor mounted on the flywheel housing, which also determines engine speed. Engine loading is determined by measuring the inlet manifold depression. From these factors the computer sets the ignition timing advance.

Integral Electronic Ignition Test

The Renix integral electronic ignition control unit is mounted on the engine bay bulkhead behind the engine. The ignition coil is integral with the computer but can be replaced separately if necessary. The ignition system has no moving parts apart from the distributor rotor arm.

The electronic ignition system is usually maintenance free. If a fault is suspected check the spark plugs, HT leads, distributor cap and rotor before suspecting the ignition unit. Then check the voltage supply to the ignition coil positive terminal lead (red wire) with a voltmeter. The supply should be at least 9.5 volts.

At no time attempt to remove the vacuum capsule from the computer. The vacuum lead contains a plug with calibrated hole. Do not lose the plug. Do not allow the HT current to short on the computer assembly, nor earth the ignition coil low and high tension leads.

Test the module and coil in the following order, see Fig. E:19.

Measure the voltage between the feed (A) and earth,

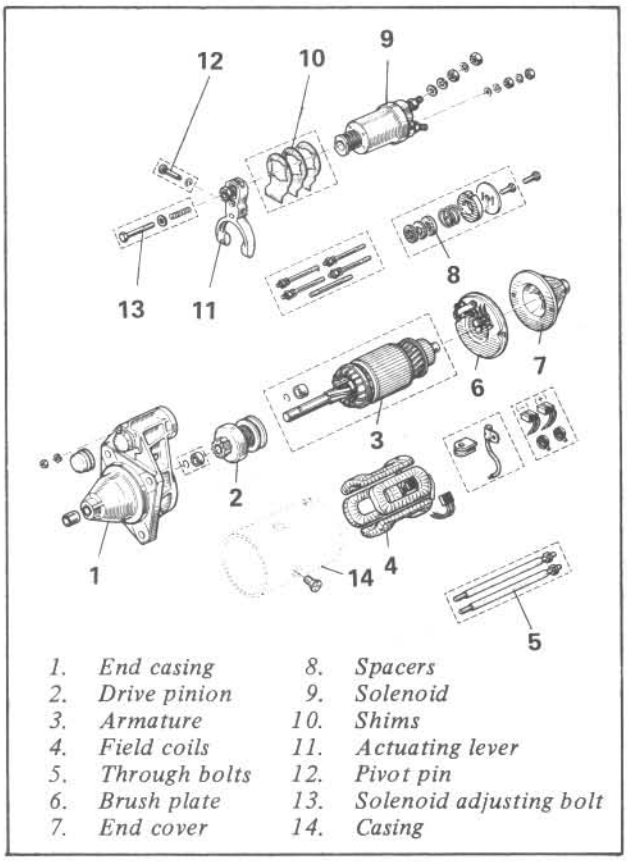

1. *End casing*
2. *Drive pinion*
3. *Armature*
4. *Field coils*
5. *Through bolts*
6. *Brush plate*
7. *End cover*
8. *Spacers*
9. *Solenoid*
10. *Shims*
11. *Actuating lever*
12. *Pivot pin*
13. *Solenoid adjusting bolt*
14. *Casing*

Fig. E:14 Ducellier starter motor exploded view

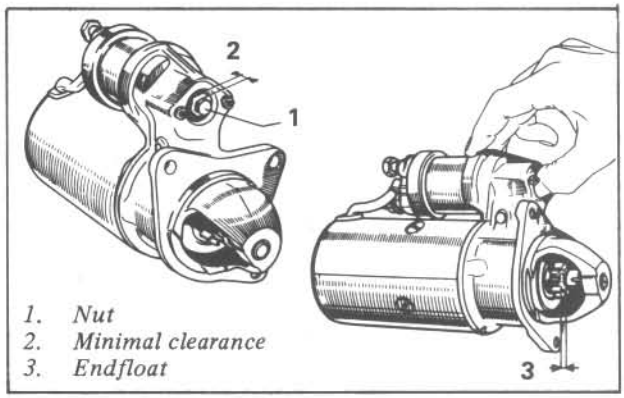

1. *Nut*
2. *Minimal clearance*
3. *Endfloat*

Fig. E:15 Drive pinion endfloat check and adjustment

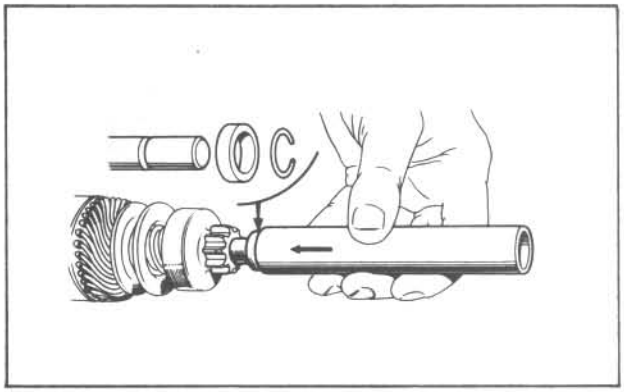

Fig. E:16 Starter pinion stop collar removal

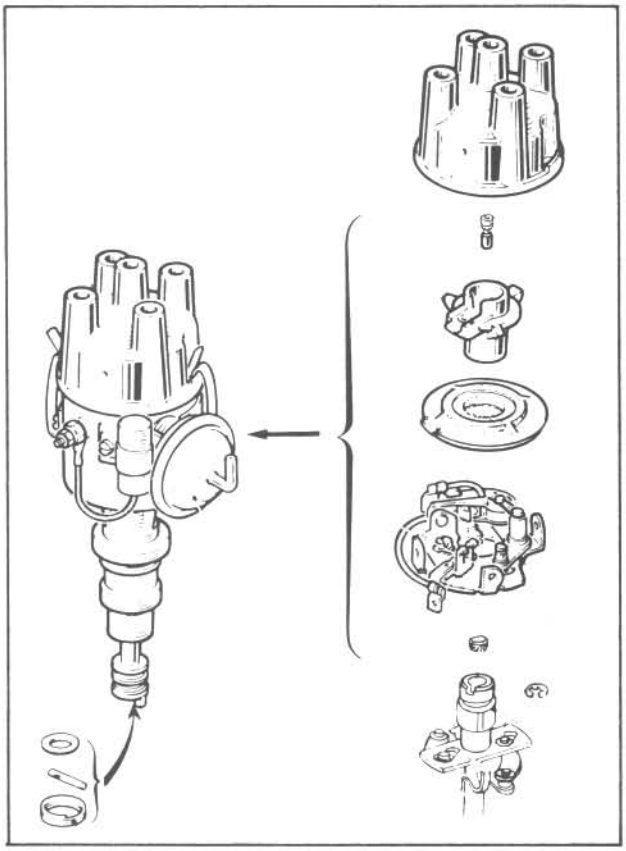

Fig. E:17 Contact breaker distributor assembly

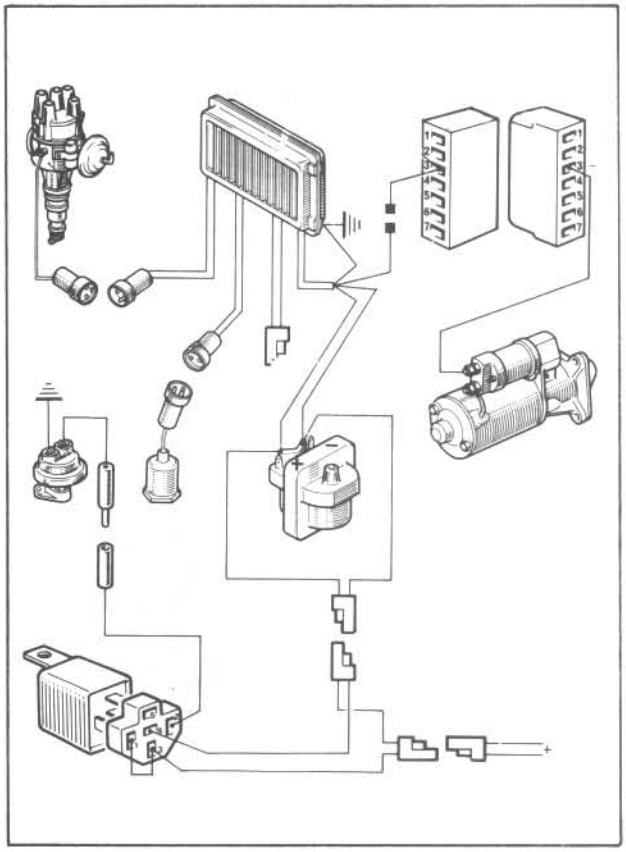

Fig. E:18 Turbo electronic ignition assembly - early type

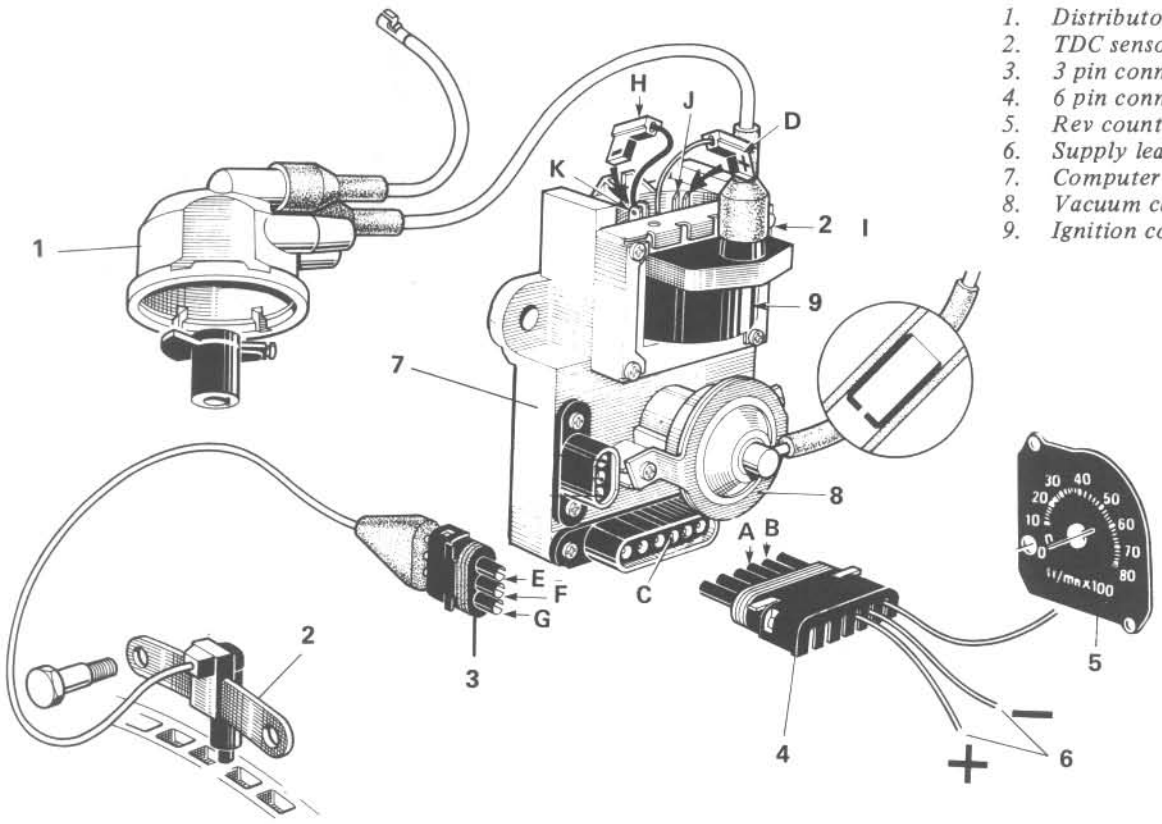

Fig. E:19 Integral electronic ignition system

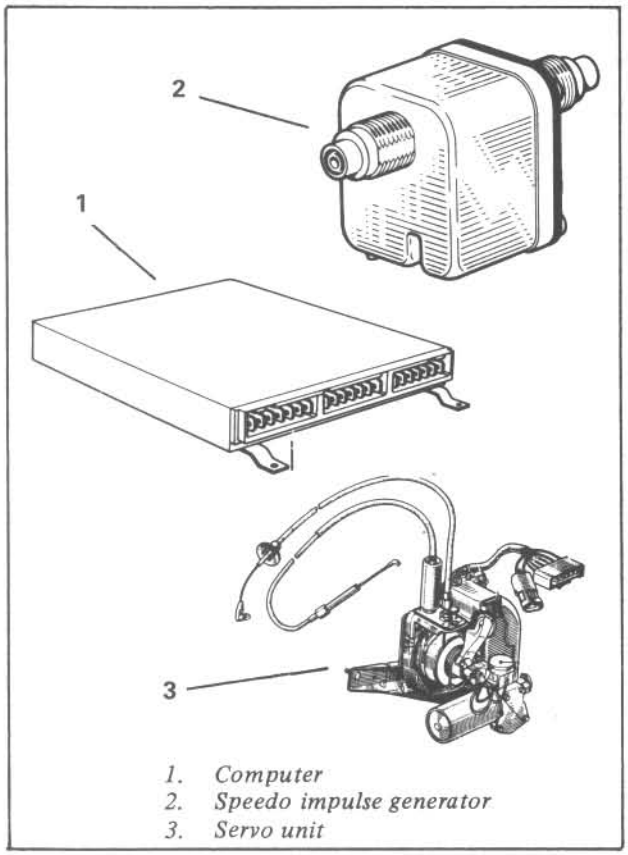

Fig. E:20 'Normalur' cruise control assembly

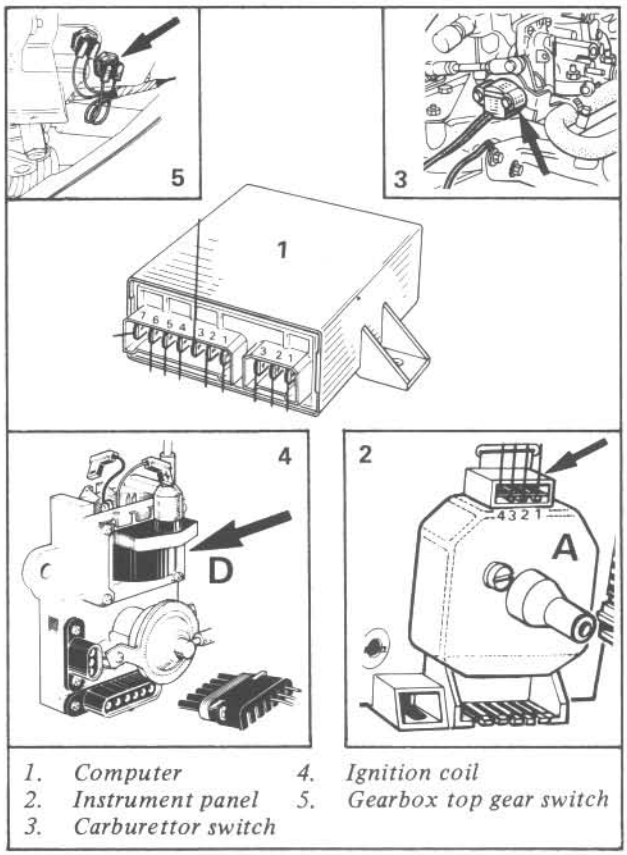

Fig. E:21 Econometer system components

ignition on and starter spinning. If less than 9.5 volts, check the feed wire and battery. Turn off the ignition.

Measure the resistance between earth terminal (B) and car earth. If not 0 ohms, check earth wire.

Check current feed between C and D. If not 0 ohms, change the module.

Turn on the ignition. Measure the voltage between earth and A, should be 9.5 volts. If less, check connector.

Test sensor resistance between E and F. If not 150 ohms +/- 50, replace the sensor. Test sensor insulation between E and G then F and G. If not infinity, replace the sensor.

Check the air gap between sensor and flywheel. If not 1 mm +/- 0.5, change the sensor assembly.

With a test bulb between D and H and the ignition coil connectors disconnected, spin the engine. The bulb should flash. If not, change the module.

Test the ignition coil secondary resistance between I and J. If not 4000 +/— 1500 ohms, change the coil.

Test the coil primary resistance between J and K. D and H should be disconnected. If resistance is more than 10 ohms change the coil.

If the unit is still suspect, the complete computer assembly should be replaced. Alternatively, have the unit checked by an auto electrician or your Renault dealer.

Computer Removal & Refitting

Replacement of the computer assembly is just a matter of disconnecting the leads and removing the mounting bolts. The ignition coil can be removed after unscrewing the crosshead screws.

When refitting the unit ensure that the leads are connected correctly. Do not overtighten the securing screws.

IGNITION SWITCH .....[7]

Removal & Refitting

The ignition switch assembly can be removed without removing the steering column combination switch. Disconnect the battery and remove the steering wheel, see the STEERING chapter. Remove the steering column shrouds, then disconnect the switch connector block. Turn the key to the 'garage', position and remove it.

Remove the switch housing retaining screw and press in the retaining latch. Push the switch out from behind.

To replace the switch after removal of the housing, insert the key and turn to the 'stop' position. Remove the key and then remove the two retaining screws from the rear of the housing. Push the switch out backwards. Fit the new switch in the reverse order.

Refit the switch in the reverse order of removal, pushing the retaining latch into place with a probe. Refit the screw. Reconnect the connector and block, then test the operation. Refit the shrouds and steering wheel.

CRUISE CONTROL .....[8]

The Renault 'Normalur' cruise control system is actuated by a switch on the fascia. Additional switches on the steering wheel increase the set speed, and resume the set speed after speed changes. A computer mounted below the driver's side of the fascia operates the electric servo in the cruise control unit. Engine speed is taken from an impulse generator on the speedometer cable. The servo unit is mounted on the engine bulkhead and controls the carburettor throttle cable (Fig. E:20).

The computer should not be dismantled for any reason, nor should removal of the potentiometer and gear train in the servo be attempted.

Testing of the cruise control assembly is normally done using a control box specifically designed for the purpose. Therefore it is recommended that any testing is done by your Renault dealer. However, it is possible to check the operation of the brake and clutch pedal switches, steering wheel switches and fascia switch. With the ignition off, use an ohmmeter to see if the switches have failed, or if the steering wheel switch track rings are corroded or damaged. If this is the case, clean the track rings with fine emery cloth and smear with Electronex lubricant or similar.

Details of the throttle cable adjustment and replacement are given in the FUEL SYSTEM chapter.

ECONOMETER .....[9]

The econometer display is controlled by a computer mounted within the steering column shrouds.

The computer is controlled by the engine speed, carburettor throttle butterfly angle, and the gearbox ratio in use at the time (Fig. E:21). Operation of the switches can be checked using an ohmmeter. Engine speed is taken from the ignition computer assembly. Testing of the computer should be left to a Renault dealer.

To test the carburettor switch, connect the meter between the switch connector terminals. Open the throttle. The meter should read 0 ohms as the second throttle barrel opens. If not replace the switch.

The top gear switch is mounted below the reversing light switch on the gearbox casing. With the gearlever in neutral, the meter should read infinite ohms. With the lever in top gear, the meter should read 0 ohms.

ENGINE ELECTRICS

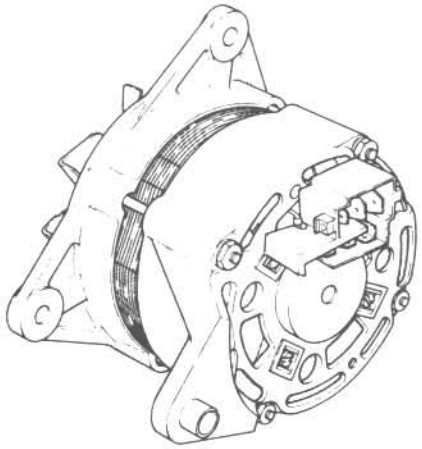

Trouble Shooter

FAULT	CAUSE	CURE
STARTER		
Starter doesn't turn (lights dim).	1. Battery flat or worn. 2. Bad connection in battery circuit	1. Charge or fit new battery. 2. Check all feed and earth connections.
Starter doesn't turn (lights stay bright).	1. Faulty ignition switch. 2. Broken starter circuit.	1. Check switch. 2. Check starter circuit.
Solenoid switch chatters.	1. Flat battery.	1. Charge or replace battery.
Starter just spins.	1. Bendix gear sticking.	1. Remove starter and clean or replace Bendix gear.
CHARGING CIRCUIT		
Low or no charge rate	1. Broken or slipping drive belt. 2. Poor connections on or faulty alternator.	1. Fit new belt. 2. Check and replace alternator.
IGNITION SYSTEM		
Engine Fails To Start		
No spark or weak spark at plug	1. Faulty spark plug 2. Tracking from HT leads, distributor cap ignition coil 3. Cap electrodes and rotor eroded 4. Ignition coil suspect	1. Replace 2. Clean, check for cracks, replace failed leads 3. Replace 4. Test supply leads
No spark from ignition coil lead	1. Check for arcing, tracking 2. Low voltage at positive (+) terminal 3. Low voltage at negative (-) terminal	1. Clean, replace 2. Test supply lead with lamp, check ignition switch, ballast resistor and wiring 3. Coil earth connection suspect, clean Coil internal short, substitute
Electronic ignition unit suspect	1. Supply lead has low voltage 2. Ballast auxiliary resistor failed 3. Electronic unit suspect	1. Check wiring, ignition switch 2. Replace 3. Test, see text, see dealer
Engine runs roughly, will not idle		
Weak spark at plug	1. Ignition circuit fault 2. Incorrect ignition timing 3. Advance plate sticking 4. Vacuum mechanism failed	1. Test circuit as above 2. Check timing dynamically 3. Check free play and movement 4. Check vacuum pipe, vacuum capsule

Cooling System

INTRODUCTION.....[1]
DRAINING & REFILLING .....[2]
THERMOSTAT.....[3]
HOSES & CLIPS.....[4]
RADIATOR .....[5]
COOLANT EXPANSION TANK.....[6]
COOLING FAN & THERMO SWITCH.....[7]
WATER PUMP .....[8]
HEATER MATRIX & CONTROLS.....[9]
TROUBLE SHOOTER .....[10]

INTRODUCTION.....[1]

The cooling system on Renault 18 and Fuego models is a pressurised, partially sealed assembly consisting of a radiator, water pump, engine water jacket, expansion tank and interior heater (Fig. F:1 & F:2).

Coolant is circulated through the system by an impeller type water pump mounted on the front of the engine and driven by a 'V' drive belt from the crankshaft pulley. The radiator is of the cross-flow type and has an electrically driven cooling fan operated by a thermostatic switch.

A thermostat valve is included in the cooling system and remains closed when the coolant is cold to prevent flow through the radiator during the warming-up period. In this condition, coolant flows back to the intake side of the pump. When the normal operating temperature is reached, the thermostat valve opens and allows coolant through to the radiator.

A transparent coolant expansion bottle is mounted on the side of the engine compartment to accomodate the increased volume of the hot coolant at normal operating temperature. The valve in the expansion bottle cap serves to seal and pressurise the cooling system to approximately 13 psi.

NOTE: Some models are fitted with aluminium radiators or heater matrix. To avoid corrosion problems, it is essential that the cooling system is filled at all times with either a corrosion inhibitor or the correct anti-freeze mixture.

DRAINING & REFILLING .....[2]

Draining

1. Set the heater controls to hot.
2. If the car has been run recently, take great care when removing the expansion tank cap since considerable pressure can build up in the cooling system, causing steam and scalding hot water to be ejected on removal of the cap. To prevent accidental injury, muffle the cap with a heavy cloth and unscrew it slowly to release the pressure in the system. When satisfied that all pressure in the system has been released, remove the cap fully.
3. Place suitable containers beneath the cylinder block drain plug (Figs. F:3 & F:4) which is situated at the rear of the cylinder block below the fuel pump and the bottom radiator hose. If the coolant is to be reused make sure that the containers are clean.
4. Open the cylinder block drain plug and release the clip holding the bottom radiator hose to the radiator. Pull the hose free and allow the coolant to drain into the containers.

NOTE: If the cooling system is to be left drained for any length of time, it is advisable to leave a reminder on the vehicle to prevent it being run in this condition.

Flushing

Ideally this operation should be carried out every two years and it involves back flushing the radiator and cylinder block with a high - pressure water hose. This procedure is as follows:

1. Remove the radiator as detailed later in this chapter.
2. Turn the radiator upside down, position the flushing hose in the bottom hose neck and back flush the unit until all sludge and deposits have been removed. Also flush any accumulations of dirt, leaves, etc from the outside fins of the radiator.
3. Remove the thermostat housing and thermostat as described later in this chapter.
4. Insert the hose in the thermostat location and back flush the cylinder block until all deposits of sludge have been removed.
5. Refit the thermostat and housing using a new seal.
6. Refit the radiator and reconnect the hoses.
7. Refit the cooling system as detailed in the following section.

Refilling

NOTE: The use of aluminium in the construction of the engine necessitates the use of a corrosion inhibitor or anti-freeze incorporating a corrosion inhibitor. On no account fill or top up the cooling system with plain water. Always top up with the correct solution to maintain its efficiency.

1. Make sure all the hose connections are tight and that the heater controls are set to 'hot'.
2. Refill the system with coolant, making sure it is a solution of water and anti-freeze or water and corrosion inhibitor. On no account refill with plain water only. The anti-freeze or corrosion inhibitor should be diluted in accordance with the makers recommendations and poured into the system slowly to allow much of the air in the system to escape.

Top up the system to approximately 70 mm above the MAX line on the expansion tank.
3. Open the three bleed screws (7, Fig. F:1), detach the expansion bottle from its mounting and raise it as high as possible. A wire hook attached to the bonnet will be useful for this purpose.
4. Close the three bleed screws when coolant flows out.
5. Start the engine and run it until it reaches normal running temperature and the thermostat opens.
6. Open the bleed screws once more and allow the coolant to flow out until no more air is ejected. Close the bleed screws and refit the expansion bottle in its normal position.
7. Allow the engine to cool down and then check the level in the expansion tank and adjust as necessary.

NOTE:Take great care when removing the expansion tank cap after running the engine, muffle it with a thick rag and allow the pressure in the system to escape before removing the cap fully.

Topping Up

The coolant in the system should only be topped up with water and anti-freeze or water and corrosion inhibitor solution to match that in the system. Topping up with plain water will further dilute the solution and will reduce the properties of either.

When checking the coolant level make sure that the engine is cold.

Anti-freeze

Where protection against freezing is required, the system should be filled with a solution of 50% water and 50% anti-freeze and always topped up with a solution of similar strength. The quantity of anti-freeze to be added when filling the system can be calculated from the cooling system capacity specified in the TECHNICAL DATA at the end of this manual.

When refilling the system with a fresh water and anti-freeze mixture, it may be mixed in one of two ways; either by mixing the exact quantity of coolant for the system in a large container and then pouring it into the system, or by partially filling the system with plain water, pouring in the exact amount of anti-freeze and then finally topping up with water. In the latter case the engine should be run for a while to thoroughly mix the water/anti-freeze solution. The anti-freeze contains a corrosion inhibitor so its strength should be maintained throughout the year. Its specific gravity should be checked periodically. It should be 1.073 for a 50% solution.

An 'all season' type anti-freeze should be used and changed every two years. If it is necessary to drain the system for any reason during that period, catch the water/anti-freeze solution in clean containers so that it may be re-used.

THERMOSTAT.....[3]

Replacement - OHV Engines

The thermostat is located in the hose between the water pump and the radiator and is retained by an extra hose clip fitted round the outside of the hose close to the pump neck.

To remove the thermostat, release any residual pressure in the cooling system, drain the radiator until the coolant level is below the water pump level and remove the top hose from the water pump. The thermostat will be seen to be fitted in the end of the hose and can be removed once its clip has been undone and slid off the hose end.

Install the thermostat in the reverse order of removal making sure that it is fitted into the hose the correct way round - see Figs. F:5 & F:6.

Top up the cooling system and bleed out any trapped air as detailed previously under 'Refilling'.

Replacement - 829 (Cam-in-Head) Engine

The thermostat is mounted in a cast housing on the front of the cylinder head immediately above the water pump.

Release any residual pressure in the cooling system and drain out sufficient coolant to bring the level below that in the thermostat housing.

Undo the two bolts holding the thermostat housing cover to the cylinder head and pull the cover off for access to the thermostat. If the cover is stuck on the gasket, a light tap with a soft faced mallet should be sufficient to dislodge it.

When the thermostat is installed both the housing face and the cover face must be perfectly clean and a new gasket must be used.

Refill the cooling system with the correct strength coolant mixture and bleed off any trapped air as detailed previously under 'Refilling'.

Thermostat Test

The thermostat is a relatively inexpensive item and should be replaced if thought suspect. The operation of the thermostat can be checked, see TECHNICAL DATA for details of operating temperature.
1. Suspend the thermostat in a suitable container full of water so that it does not touch the sides or bottom (Fig. F:7).
2. Gradually heat the water, checking the temperature frequently with an accurate thermometer.
3. If the thermostat does not open at the correct temperature, refuses to open fully, or does not open at all, replace it with a new unit.

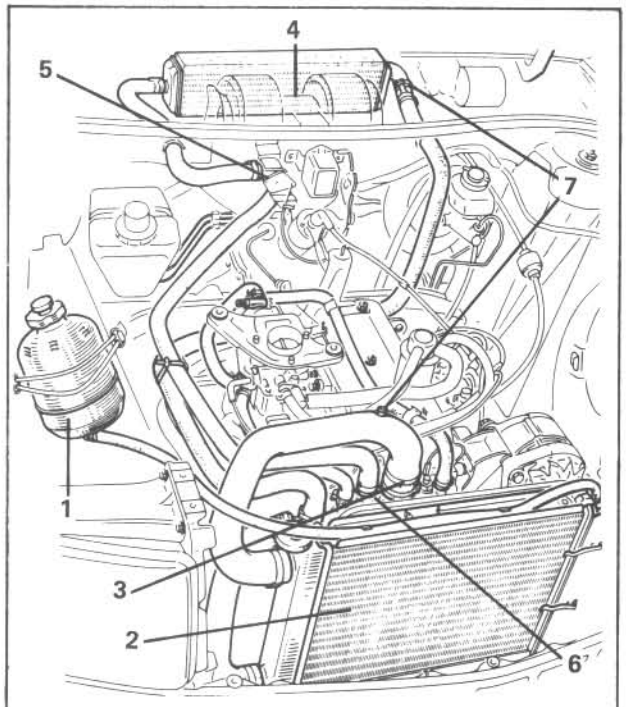

1. *Expansion tank*
2. *Radiator*
3. *Thermostat location*
4. *Heater matrix*
5. *Heater water valve*
6. *Water pump*
7. *Bleed screw*

Fig. F:1 Cooling system - 847 Engine

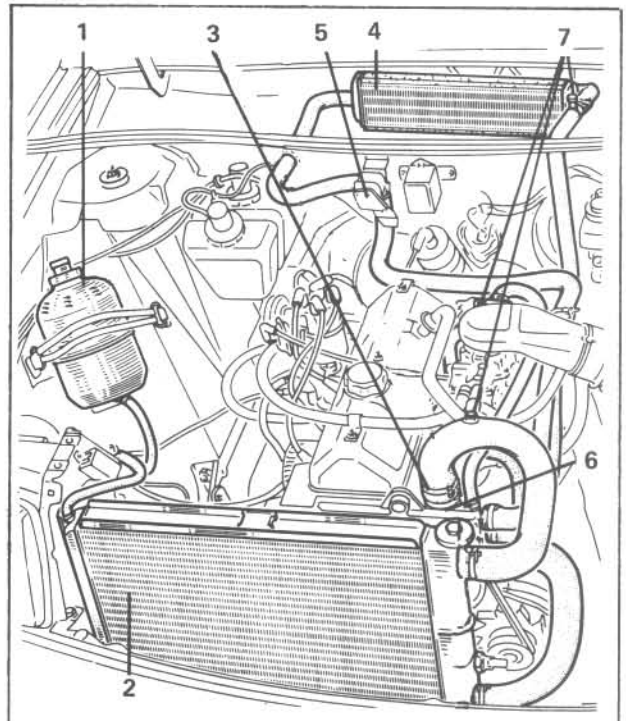

1. *Expansion tank*
2. *Radiator*
3. *Thermostat location*
4. *Heater matrix*
5. *Heater water valve*
6. *Water pump*
7. *Bleed screw*

Fig. F:2 Cooling system - 841 Engine

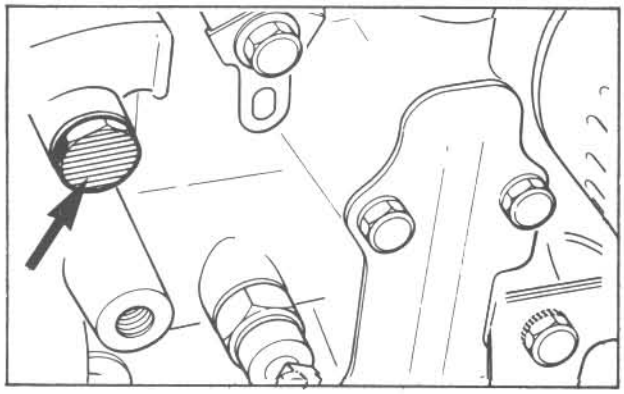

Fig. F:3 Cylinder block drain plug OHV Engine

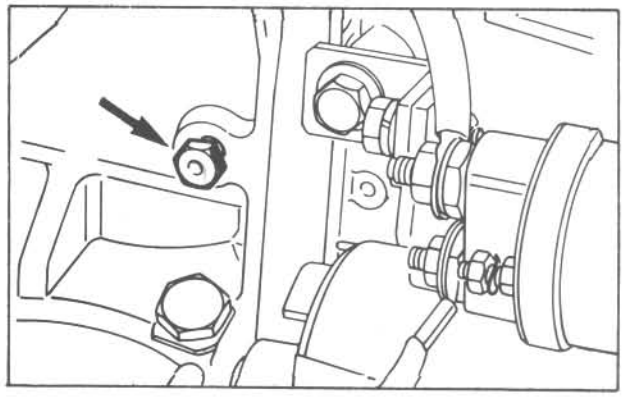

Fig. F:4 Cylinder block drain plug - 829 Engine

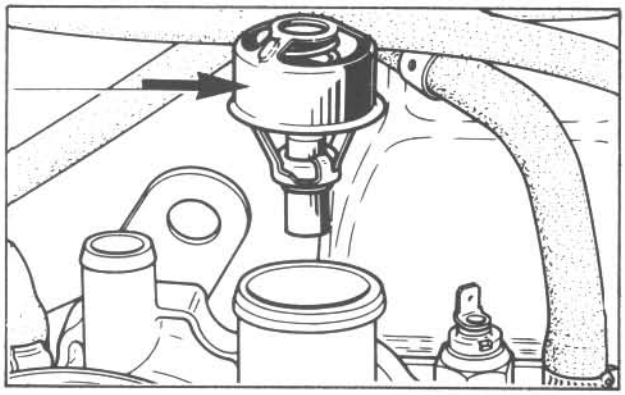

Fig. F:5 Thermostat - OHV Engine

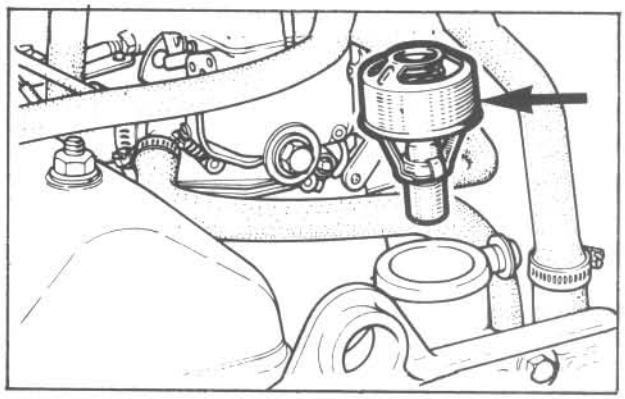

Fig. F:6 Thermostat - 829 Engine

HOSES & CLIPS . . . . . [4]

Checking

The cooling system hoses should be checked periodically-particularly before the beginning of winter - to ensure that they are in good condition and that the clips are secure.

Examine each hose carefully for cracks; particularly on the bends, separation of the layers, swelling or excessive softness of the rubber. Also inspect them for damage, especially chafing due to contact with other components.

Deterioration of the hose rubber is best detected by pinching the hose and looking to see if the surface shows signs of cracking. You can often tell by the feel if a hose is deteriorating because it will be soft and soggy (Fig. F:8).

Looking for leaks is best carried out with the system full of water, it makes identifying the location of leaks a lot easier. The bright colour of anti-freeze will leave telltale stains, and rust particles in suspension will adhere to a surface once the water evaporates. If the cooling system is usually topped up with hard water, the deposits will be white.

Hose Replacement

Changing a hose can sometimes present problems. Access to the hoses on the Renault 18 and Fuego models is quite good as they can all be reached from above. Before attempting to remove a hose, ensure that the cooling system is depressurised and that the coolant level is below the relevant hose connection. See the 'Draining & Refilling', section. Removal and refitting will be easier if the engine has cooled.

The clips fitted to the hoses may be of several types (F:9). Large hoses have a type of worm drive clip that can be re-used, but smaller hoses (for example the expansion tank hose) have a type of crimped clip that must be cut to remove it. This type of clip will have to be replaced by one of the proprietary worm drive hose clips available from car accessory shops.

There is no real substitute for brute force when it comes to shifting a hose that stubbornly adheres to its connector - waggling, pulling and twisting will usually do the trick. To ease fitting the new hose, clean both the connector and the hose end to remove any corrosion, then smear the ends with a little grease or petroleum jelly. Position the clip on the hose before pushing it fully onto the connector and then tightening the clip.

RADIATOR . . . . . [5]

Replacement

1. Disconnect the battery.
2. Undo the four bolts holding the bonnet lock panel to the body and the single bolt holding the steady bracket (Fig. F:10).
3. Lift off the panel without disconnecting the bonnet lock cable and place to one side.
4. Drain the cooling system into a suitable container or alternatively clamp off the hoses leading to and from the radiator. Disconnect all the hoses.
5. On models fitted with an electric cooling fan, disconnect the wiring from the motor and the thermostatic switch.
6. Unclip the air deflector from the side of the radiator.
7. Tilt the radiator towards the engine and lift it out of the engine compartment (Fig. F:11).
8. Unbolt the electric cooling fan assembly if fitted and unscrew the thermostatic switch if the radiator is being changed.
9. Install in the reverse order of removal, fill the cooling system with the correct mixture and bleed out the air as detailed in the 'Draining & Refilling' section of this chapter.

COOLANT EXPANSION TANK. . . . . [6]

The coolant expansion tank fitted to Renault 18 models is fitted to the left hand (offside) inner wing valence and on Fuego models it is located on the right hand (nearside) of the engine compartment next to the car jack stowage point.

Both types of expansion tank are retained by rubber straps which are attached to hooks welded to the body.

To replace the tank, unhook the rubber retaining strap, undo the expansion tank cap and pour out the contents into a suitable container. Disconnect the small bore hose from the radiator. This hose is fitted with a crimped clip which will have to be cut off to remove the hose.

Install in the reverse order of removal and fit a suitable screw type hose clip to retain the hose. Top up the coolant level in the tank until it reaches the Max line with the cooling system cold.

COOLING FAN & THERMO SWITCH . . . . . [7]

Cooling Fan - Removal

1. Disconnect the battery.
2. Hinge back the headlamp wiper arm spindle covers and undo the retaining nuts. Pull off the arms.
3. Undo the two cross head screws at the top corners of the grille and lift it away from the lower mounting spigots.
4. Disconnect the headlamp washer supply hose at the 'T' connector.
5. Disconnect the wiring to the fan motor.
6. Undo the four bolts (some models have only three) holding the motor bracket to the radiator surround and lift out the assembly.
7. Hold the fan blades and undo the central retaining nut which has a left-hand thread. The fan can now be pulled off the motor shaft.
8. Drill out the three rivets holding the can motor to the mounting frame and separate the two units.

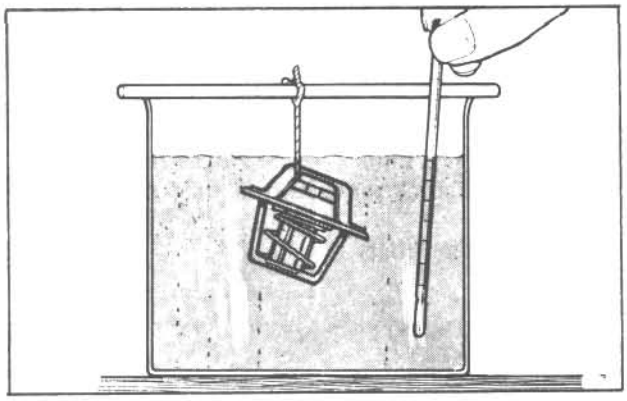

Fig. F:7 Thermostat test in hot water

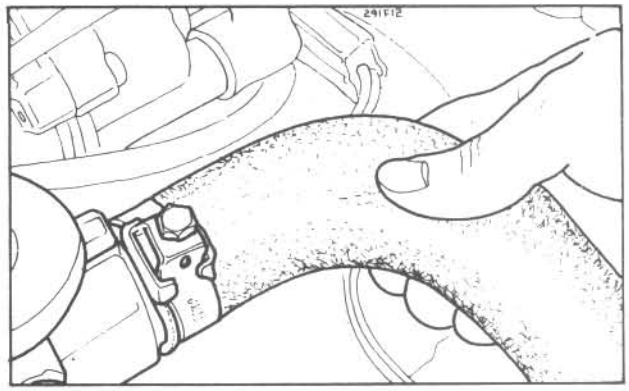

Fig. F:8 Test hose condition by feel

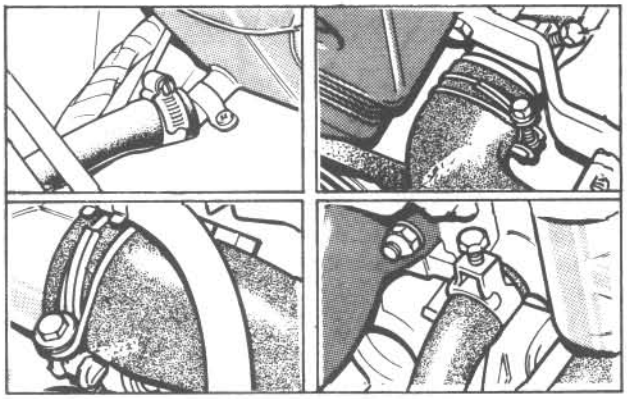

Fig. F:9 Hose clip types

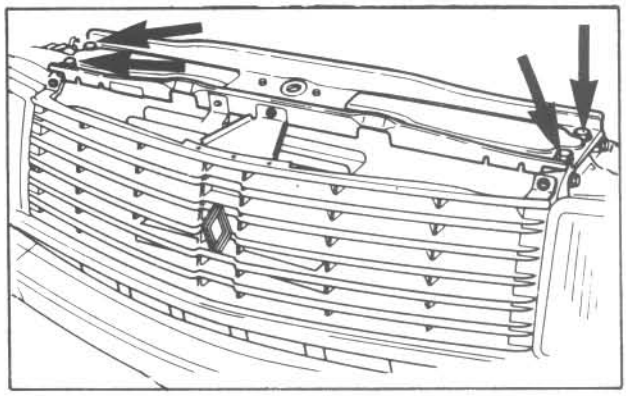

Fig. F:10 Bonnet lock panel bolts

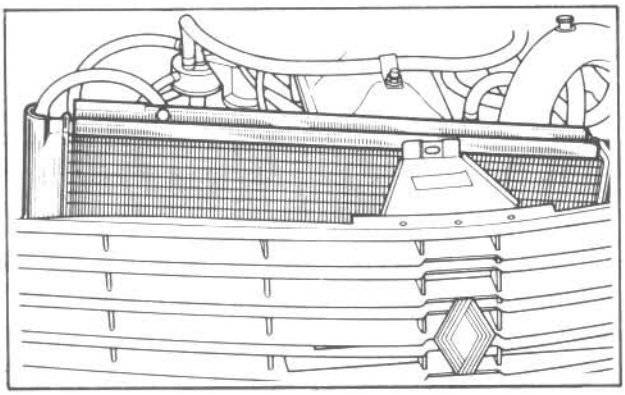

Fig. F:11 Removing radiator

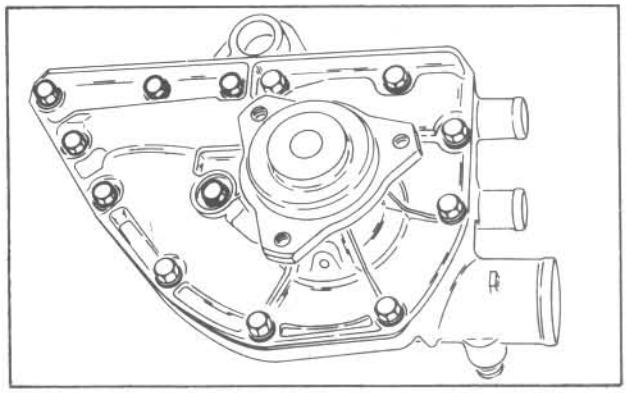

Fig. F:12 Water pump - 841 Engine

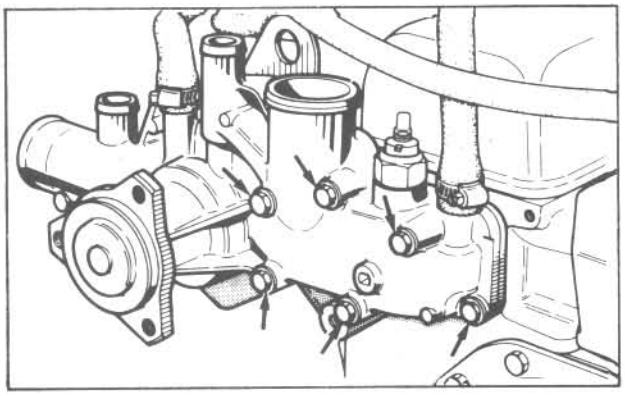

Fig. F:13 Water pump - 847 Engine

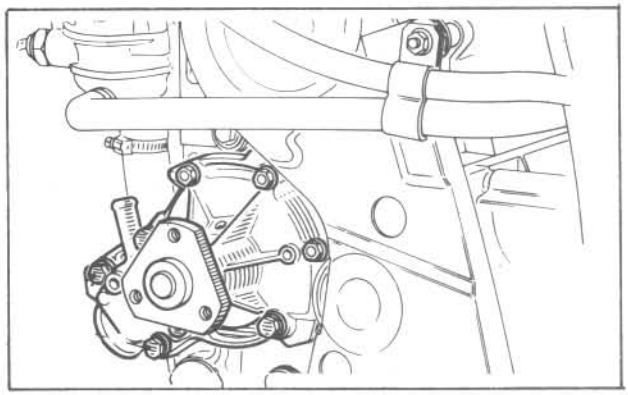

Fig. F:14 Water pump - 829 Engine

Installation

1. Fit the motor to the mounting using new rivets and fit the fan to the motor spindle. Tighten the left-hand threaded retaining nut.
2. Bolt the assembly to the radiator and reconnect the wiring. Run the engine until it reaches the cut-in temperature of the thermostatic switch to check the operation of the fan.
3. Install the grille and headlamp washers in the reverse order of removal.

Thermostatic Switch - Replacement

1. Disconnect the battery.
2. Remove the front grille as described in the previous section.
3. Disconnect the switch wiring and drain the cooling system.
4. Unscrew the thermostatic switch.
5. Replace in the reverse order of removal, fill the cooling system and bleed the air from the system as detailed previously.
6. Run the engine until it reaches the cut in temperature to confirm the correct operation of the switch.
7. Refit the grille and headlamp washers and wipers as previously described.

WATER PUMP .....[8]

Removal - OHV Engines (Fig. F:12 & F:13)

1. Release any cooling system pressure by undoing the cap carefully as described in the 'Draining & Refilling' section of this chapter. Drain the cooling system into a suitable container.
2. Disconnect the battery.
3. Remove the grille, radiator and cooling fan assembly as previously described.
4. Slacken the alternator adjusting strap and remove the 'V' belt.
5. Undo the three water pump pulley retaining nuts and remove the pulley.
6. Undo the water pump mounting bolts and remove the pump from the engine. It will probably be stuck to the gasket and the easiest way to free it is to tap the body of the pump with a soft faced mallet.

Installation

1. Carefully clean all traces of the old gasket from the cylinder head face and from the joint face of the water pump if it is to be refitted to the engine.
2. Fit the pump with a new gasket and tighten the retaining bolts evenly.
3. Fit the pulley to the water pump flange and tighten the retaining bolts. Refit the drive belt and adjust it to the correct tension - see ROUTINE MAINTENANCE chapter.
4. Install the radiator, grille and cooling fan in the reverse order of removal.
5. Refill the cooling system with the correct coolant mixture and bleed out any air trapped in the system as detailed previously.
6. Run the engine until it reaches its normal operating temperature and check for leaks from the pump and hose joints.
7. Reconnect the battery.

Removal - 829 Engine

1. Disconnect the battery.
2. Drain the cooling system as described in the 'Draining & Refilling' section of this chapter.
3. Remove the electric cooling fan and motor assembly. There is no need to disconnect the wiring.
4. Remove the radiator.
5. If power assisted steering is fitted, slacken the pump and remove the drive belt.
6. Slacken the alternator adjustment and remove the drive belt.
7. Undo the hose clip and remove the carburettor heater hose from the water pump neck.
8. Disconnect the coolant return pipe and undo the mounting bolts.
9. The water pump can now be removed from the engine block. If the gasket is stuck it may be necessary to tap round the water pump body with a soft faced mallet.

Installation

1. Carefully clean all traces of the old gasket from the water pump face, if it is being refitted, and from the cylinder block face.
2. Install the pump using a new gasket without any jointing compound and tighten the retaining bolts evenly.
3. Refit the coolant return pipe.
4. Refit the drive belts and adjust the tension as described in the ROUTINE MAINTENANCE chapter.
5. Install the radiator and cooling fan in the reverse order of removal.
6. Fill the cooling system with the recommended coolant mixture and bleed out any trapped air as detailed previously.

HEATER MATRIX & CONTROLS.....[9]

Heater Control Panel - Replacement

1. Disconnect the battery.
2. Undo the retaining screws on either side of the centre console and pull the unit away from the fascia.
3. Remove the console mounting bracket.
4. Undo the two screws securing the heater control panel to the fascia.
5. Disconnect the wiring from the rheostat switch and the control panel lighting.
6. Release the four outer cable retaining clips and disconnect the cables from the control panel (7, Fig. F:15).

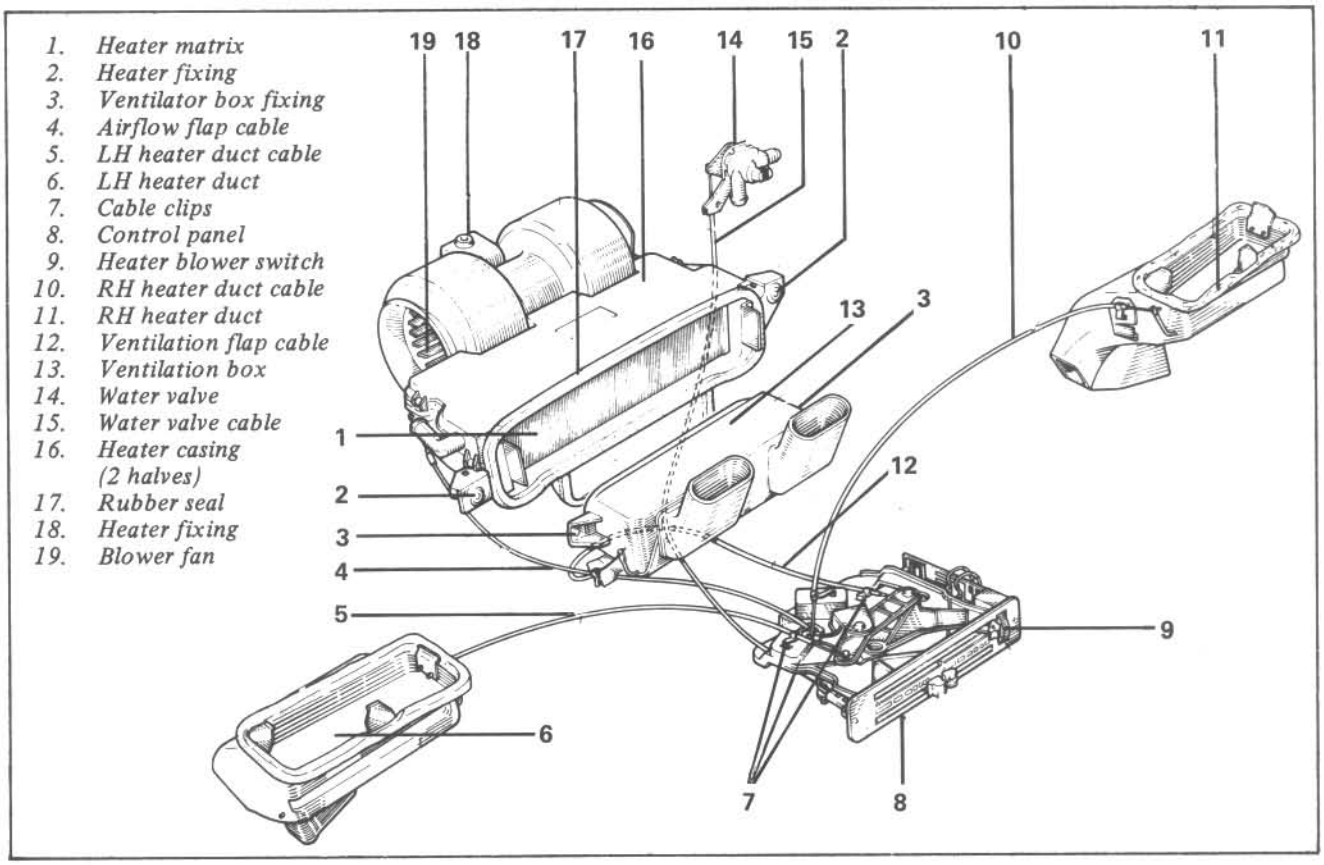

Fig. F:15 Heating and ventilating system layout

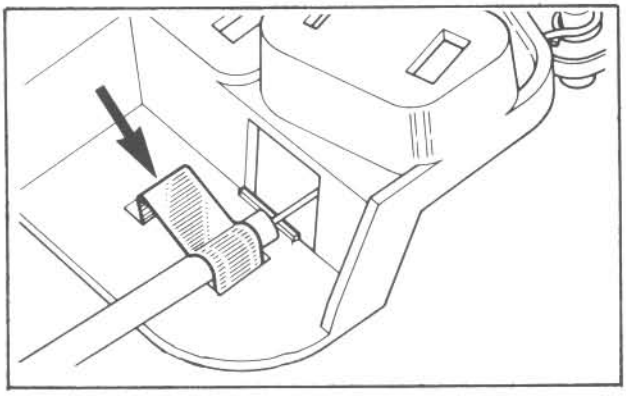

Fig. F:16 Control cable clip

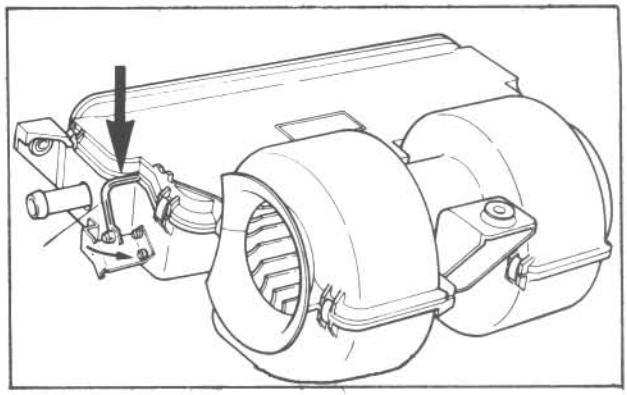

Fig. F:17 Air flow flap lever

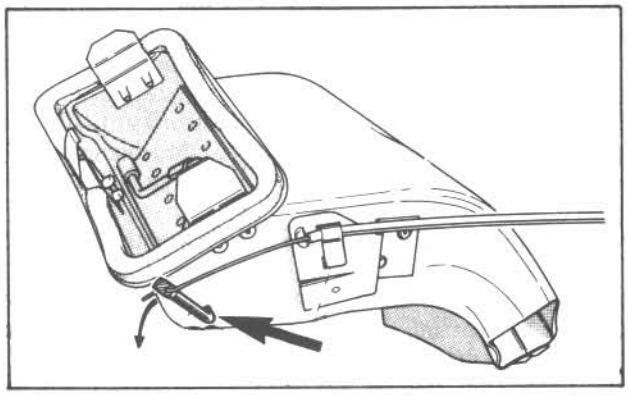

Fig. F:18 Heater duct control arm

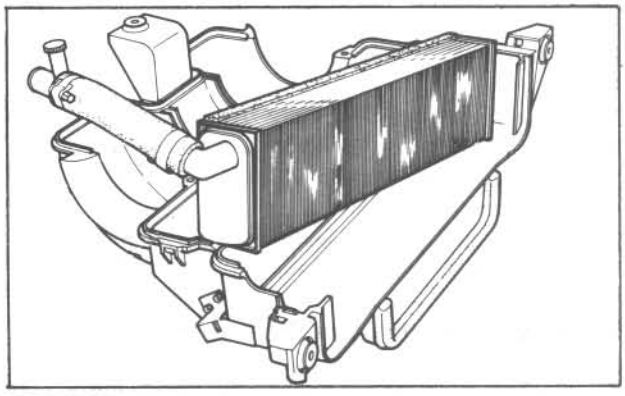

Fig. F:19 Heater matrix & lower casing half

7. The control panel assembly can now be removed from the car.
8. Install in the reverse order of removal, being careful not to trap any of the wiring and adjust the cables as described in the following sections of this chapter.

Heater Valve Cable Adjustment

1. Connect the heater valve cable to the sliding control (15, Fig. F:15).
2. Rotate the heater water valve bellcrank until the valve is fully closed (14, Fig. F:15).
3. Slide the control lever to the right until there is only 3 to 4 mm of movement left.
4. Clamp the outer cable with a clip as shown in Fig. F:16.
5. Check the operation of the control lever and confirm that it is opening and closing the flap fully.

Ventilation Flap Cable Adjustment

1. Connect the flap cable to the lower right hand control knob.
2. Push the flap control lever until the flap is closed tightly against its seal.
3. Slide the control lever to the right until there is only 3 to 4 mm of travel left.
4. Clamp the outer cable to the control unit with a spring clip (Fig. F:16).
5. Check the operation of the control lever and confirm that it is opening and closing the flap fully.

Airflow Flap Cable Adjustment

1. Connect the flap cable to the upper control lever.
2. Fully close the airflow flap by operating the end lever (Fig. F:17).
3. Slide the control lever to the right until there is only 2 to 3 mm of travel left.
4. Clamp the outer cable to the control unit using a spring clip (Fig. F:16).

Left Hand Heater Duct Cable Adjustment

1. Connect the left hand heater duct cable to the upper control lever.
2. Close the heater duct fully by twisting the control arm (Fig. F:18), until the flap is fully shut.
3. Slide the lever to the left until there is only 3 to 4 mm of travel left.
4. Clamp the outer cable to the control unit with the spring clip (Fig. F:16), until the flap is fully shut.

Right Hand Heater Duct Cable Adjustment

1. Connect the right hand heater duct cable to the upper control lever.
2. Close the heater duct fully by twisting the control arm as described for the left hand arm.
3. Position the control lever to the left until there is only 3 to 4 mm of travel left.
4. Clamp the outer cable with a spring clip (Fig. F:16).
5. With the three cables connected to the upper control lever check that the control moves freely through its slot and that the three flaps are opening and closing fully.

Heater Matrix - Removal

1. Disconnect the battery.
2. Fit pipe clamps to the hoses on either side of the heater matrix. Undo the hose clips and remove the hoses.
3. Disconnect the wiring to the windscreen wiper motor and the heater fan motor.
4. Unclip the airflow flap outer cable.
5. Undo the retaining bolts 2 & 18, Fig. F:15.
6. Working inside the car, undo the nuts 3, Fig. F:15.
7. The heater assembly can now be removed from under the bonnet.
8. Prise off the clips holding the upper and lower halves of the heater casing together and remove the central bolt. The casing can now be separated.

NOTE: The casing halves have sealant applied to their edges and therefore may need prising apart.

9. The heater matrix can now be lifted out of the lower casing half (Fig. F:19).

Installation

1. Position the matrix in the lower half of the casing.
2. Carefully clean the mating surfaces of the upper and lower casings and apply a bead of Bostik 306 or similar sealer.
3. Fit the two sections of the casing together and refit the spring clips and the centre bolt.
4. Before installing the unit in the car check that the heater blower fan rotates without fouling the casing.

   If it does, release the clips and the bolt and realign the casing halves to obtain the necessary clearance.
5. Fit the rubber seal to the heater box and position the assembly against the bulkhead.
6. Fit the two bolts at either end of the heater assembly but do not tighten at this stage. Fit the central bolt 18, Fig. F:15, and the heater fan motor and wiper motor earth wires.
7. Tighten the bolts in the following order: firstly the two ventilation box bolts 3, Fig. F:15, then the two bolts holding the heater box 2, Fig. F:15, and finally the central bolt 18, Fig. F:15.
8. Reconnect the wiring to the wiper motor and the heater blower motor.
9. Reconnect the hoses, fill the system with the recommended coolant mixture and bleed any trapped air from the system as detailed previously.
10. Reconnect the airflow flap cable and adjust as described previously.

COOLING

Trouble Shooter

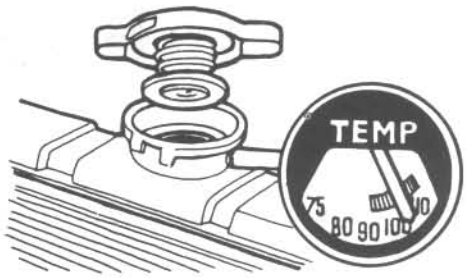

FAULT	CAUSE	CURE
Loss of coolant	1. Leaks. 2. Damaged radiator or heater matrix. 3. Damaged cylinder head gasket. 4. Cracked cylinder block. 5. Cracked cylinder head. 6. Loose cylinder head bolts.	1. Locate and repair. 2. Repair or replace radiator or matrix. 3. Replace gasket. Check engine oil and refill as necessary. 4. Replace cylinder block. Check engine oil in crankcase for mixing with water. 5. Replace cylinder head. 6. Tighten cylinder head bolts.
Poor circulation	1. Restriction in system 2. Insufficient coolant. 3. Inoperative water pump. 4. Loose fan belt. 5. Thermostat not opening.	1. Check hoses for kinking. Clear the system of rust and sludge. 2. Replenish. 3. Replace water pump. 4. Adjust belt. 5. Replace thermostat.
Corrosion	1. Insufficient anti-freeze. 2. Infrequent flushing and changing of coolant.	1. Add anti-freeze. 2. Flush thoroughly at least every two years.
Overheating	1. Inoperative thermostat. 2. Radiator fins obstructed. 3. Incorrect engine tune. 4. Inoperative cooling fan switch. 5. Inoperative cooling fan motor. 6. Inoperative water pump. 7. Loose fan belt. 8. Restricted radiator. 9. Inaccurate temperature gauge. 10. Faulty sender unit.	1. Replace thermostat. 2. Clean fins. 3. Tune engine. 4. Replace thermal switch. 5. Replace fan motor. 6. Replace. 7. Adjust tension. 8. Flush radiator. 9. Replace temperature gauge. 10. Replace sender unit.
Overcooling	1. Inoperative thermostat. 2. Faulty temperature gauge. 3. Faulty sender unit.	1. Replace thermostat. 2. Check gauge. 3. Check sender unit.

Fuel System

INTRODUCTION.....[1]
FUEL PUMP.....[2]
THROTTLE CABLE.....[3]
CARBURETTOR REPLACEMENT.....[4]
CARBURETTOR ADJUSTMENTS.....[5]
FUEL TANK & GAUGE SENDER UNIT....[6]
TURBO CHARGER.....[7]
TROUBLE SHOOTER.....[8]

INTRODUCTION.....[1]

All Renault 18 and Fuego models are equipped with a conventional fuel system consisting of the fuel tank, fuel pump and carburettor.

Six different carburettors are fitted throughout the range depending on the engine type. Adjustments for all are included in this chapter.

The fuel pump is mechanically driven from the camshaft on all engines except the 829 (J6R) type 1995 cc engine, and details are given for a fuel pump pressure test although overhaul of the pump is not possible. If a pump is found to be faulty, a replacement should be fitted.

The carburettor is probably the most important component of the engine in terms of performance and economy. It is accurately calibrated to suit the individual requirements of the engine to which it is fitted and should not be interfered with unnecessarily. It is therefore recommended that only the adjustments covered in this chapter be attempted. Any further work should preferably be left to a Renault dealer or carburettor specialist as special measuring tools are required.

Overhaul kits which contain all the necessary replacement parts are generally available for most carburettors, but it is recommended that work of this nature should be undertaken only by someone with previous experience. A sensible alternative, especially in the case of a carburettor which has done a considerable mileage, is to exchange the carburettor for a new or reconditioned unit.

When working on any part of the fuel system, ALWAYS disconnect the battery earth strap first. Keep all components as clean as possible and clean the area around any components or connections before removing them. Use new gaskets, sealing rings, hoses, clips, etc., where required.

No special tools are necessary for the operations described in this chapter, apart from a selection of metric spanners, various length screwdrivers and a small pressure tester for measuring the fuel pump output pressure. These testers are available from most accessory shops. Note that the adjustment procedures for the idle speed and mixture are described in the TUNE-UP chapter.

FUEL PUMP.....[2]

The fuel pump fitted to all Renault 18 and Fuego models is of the mechanical type and is mounted on the side of the engine block.

Pump Pressure Test

The fuel pump operating efficiency can be checked by measuring the fuel output pressure. A pressure tester will be required, see the 'Introduction'.

Fuel pump pressure is measured with the engine running but with the pump disconnected from the carburettor, i.e. the float chamber must be full of fuel before commencing the test. Proceed as follows:

1. Run the engine for a short while at idling speed and then switch it off.
2. Disconnect the pipe from the outlet stub of the pump and connect in its place a short length of TRANSPARENT pipe to the pressure gauge. Clamp the return pipe to the fuel tank.
3. With the engine running at idle speed, hold the gauge directly above the pump and observe the behaviour of the fuel in the transparent pipe.
4. When the fuel level has settled, lower the gauge so that the level of fuel in the pipe is on the same plane as the pump diaphragm (Fig. G:1). Read the pressure with the gauge in this position and compare with that specified in TECHNICAL DATA. If after cleaning the pump filter, the pressure is still below specification, the pump should be replaced.

Fuel Pump Filter

Although the fuel pump diaphragm is sealed, the filter assembly can be cleaned. The different types of pump fitted are shown in Fig. G:2. Remove the screw(s) holding the cover and clean and filter and housing in petrol, checking that the gasket is not damaged. If suspect, it should be replaced. Refit the filter assembly and cover but take care not to overtighten the cover screw.

Removal & Installation

Before disconnecting the fuel pump it is important to clamp both pipes from the fuel tank as the tank is situated higher than the pump and fuel will leak out.

1. Disconnect the pipes at the fuel pump and undo the pump retaining nuts. Lift off the pump.
2. Before installing, clean the pump and block mating

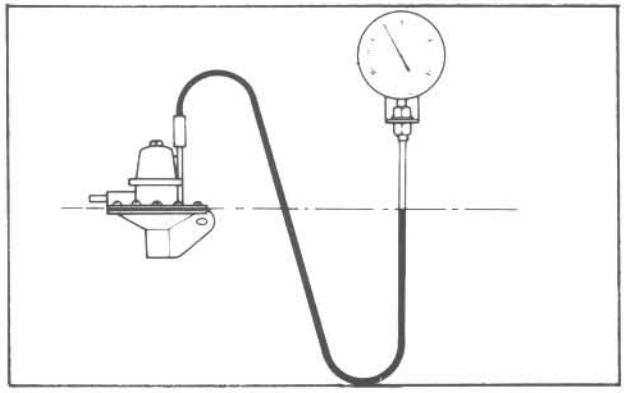

Fig. G:1 Testing pump pressure

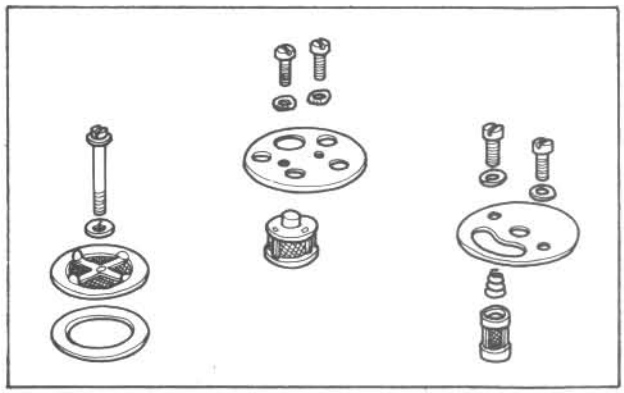

Fig. G:2 Alternative pump filter assemblies

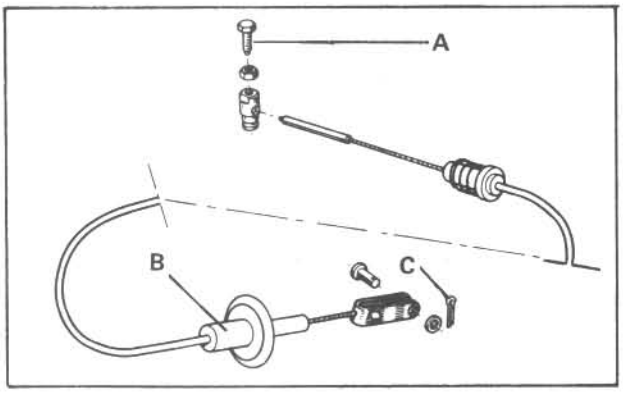

Fig. G:3 Throttle cable assembly

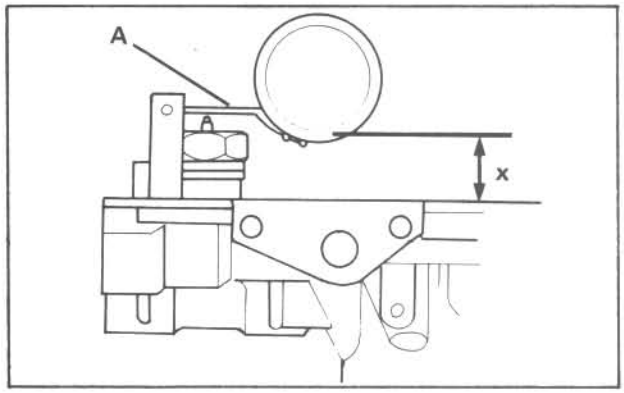

Fig. G:4 Checking float level

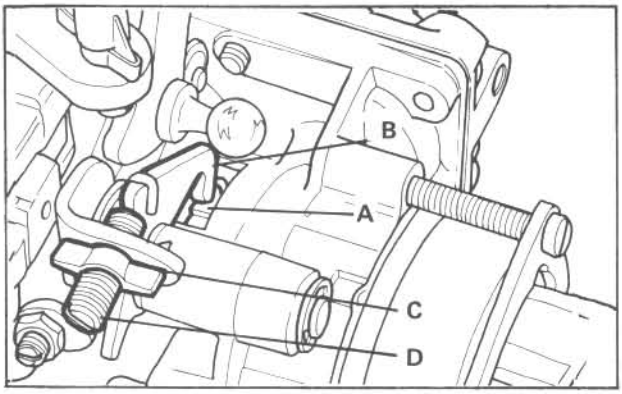

Fig. G:5 Fast idle setting (EITA)

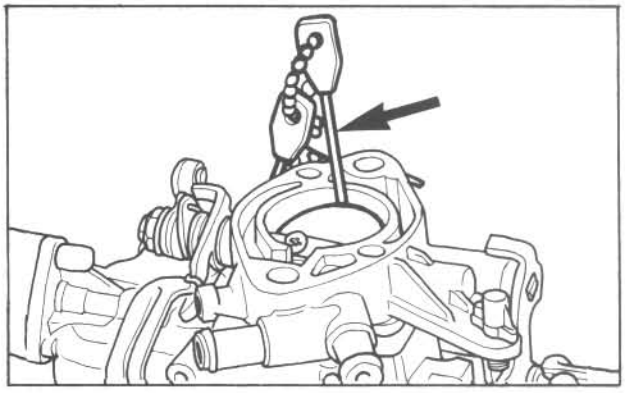

Fig. G:6 Throttle valve gap (EITA)

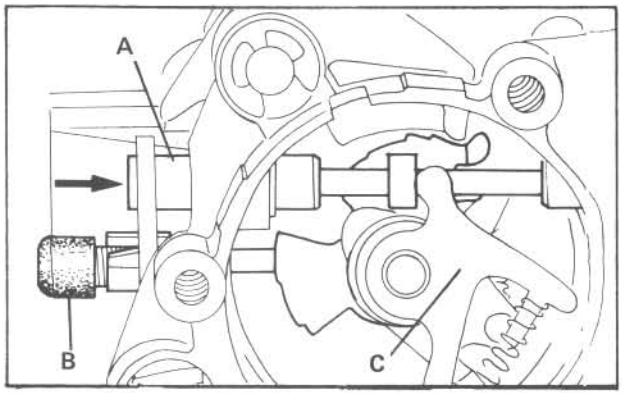

Fig. G:7 Setting choke valve gap (EITA)

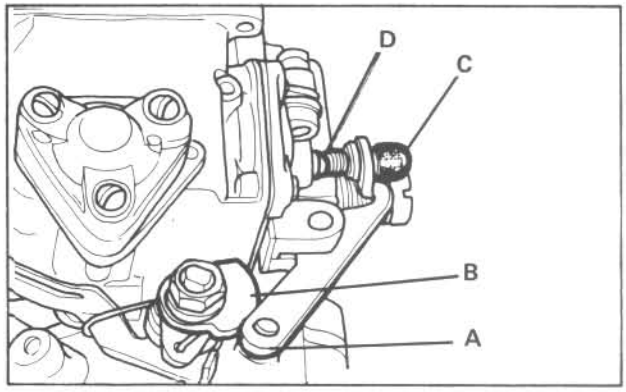

Fig. G:8 Accelerator pump adjustment (EITA)

faces then fit a new gasket.
3. Position the pump and tighten its retaining nuts evenly.
4. Refit the tank pipes to the correct positions and tighten the retaining clips. Unclamp the pipes.

THROTTLE CABLE. . . . . [3]

Replacement

1. Disconnect the battery earth lead.
2. Disconnect the cable at the carburettor end by undoing the locknut and releasing the pinch-screw (A, Fig. G:3) or alternatively by removing the spring clip and extracting the cable end nipple from the throttle quadrant-depending on type.
3. From inside the car, remove the clevis pin from the throttle pedal top by first pulling out the split pin (C, Fig. G:3).
4. Unclip the guide (B, Fig. G:3) from the bulkhead.
5. Pass the cable end-fork into the engine compartment.
6. Fit the new cable in the reverse order to removal and adjust as detailed before.

Adjustment

1. Press the throttle pedal to the floor and hold the throttle lever (on the carburettor) in the fully open position.
2. Tension the cable so that the compensating spring is compressed by about 2 mm and secure it in this position with the pinch screw (carburettor end).
3. Holding the nipple with a small spanner, tighten the pinch-screw and locknut.
4. On automatic transmission models ensure that the kickdown switch functions correctly as detailed in the AUTOMATIC TRANSMISSION chapter.
5. Ensure that the throttle opens fully and that there is no excess free play in the cable which might allow the cable outer sleeve to jump out of its stop.

CARBURETTOR REPLACEMENT . . . . . [4]

1. Disconnect the battery and remove the air filter assembly or air intake elbow as detailed in the ROUTINE MAINTENANCE chapter.
2. Clamp the coolant hoses which run to and from the carburettor base and the automatic choke housing (where fitted).
3. Disconnect the coolant hoses and the distributor vacuum advance hose from the carburettor.
4. Disconnect the fuel pipe, the breather hose and the throttle cable. Where a ball joint type linkage is fitted, disconnect one of the joints.
5. Disconnect the choke cable (where fitted).
6. Disconnect the anti run-on solenoid (where fitted).
7. Disconnect the Econometer sender unit plug from the side of the carburettor (where fitted).
8. Disconnect the throttle return spring from the rocker cover where applicable.
9. Remove the carburettor base retaining nuts and washers and lift off the carburettor.
10. Install the carburettor in the reverse order to removal using a new gasket. Tighten the nuts evenly. Reconnect the battery.
11. Adjust the throttle cable as detailed previously and check the idling speed.

CARBURETTOR ADJUSTMENTS. . . . . [5]

The idle speed and CO level adjustments on all carburettor types should be carried out as described in the TUNE-UP chapter. The following adjustments are normally only necessary if the settings have been inadvertently altered or if the carburettor has been overhauled.

Solex 32/35 EITA Carburettor - Float Level

1. Remove the air filter assembly or air intake elbow as detailed in the ROUTINE MAINTENANCE chapter.
2. Remove the screws which retain the carburettor top cover and lift off the cover, complete with gasket.
3. Holding the top cover upside down and horizontal, so that the weight of the float is resting on the needle valve, measure the distance between the body gasket face and the smaller diameter part of the float (X, Fig. G:4).
4. If the distance is outside the specified limits then adjust by bending the float arm (A, Fig. G:4).
5. After adjustment, make sure that the float arm pivots freely on the pivot pin and also ensure that the float clears the immersed pipe.
6. Refit the top cover to the carburettor body and refit the air cleaner assembly or intake elbow.

NOTE: All checking and adjustment of the float height should be done with the carburettor cover gasket removed.

Fast Idle Adjustment - EITA Type

This adjustment must be done with the carburettor removed.
1. Set the choke mechanism to the 'Extreme Cold' position by turning the larger radius of the fast-idle cam (A, Fig. G:5) towards the carburettor base flange until lever (B, Fig. G:5) is resting on the highest point of the cam.
2. With the carburettor inverted, measure the gap between the throttle plate edge and the carburettor venturi wall (Fig. G:6) using a drill shank or gauge rods.
3. If the throttle plate clearance is outside the specified limits, adjust by releasing wingnut (C) and turning the fast-idle screw (D, Fig. G:5) to obtain the correct clearance.

Choke Valve Gap Setting - EITA Type

1. Set the choke mechanism to the 'Extreme Cold' position as detailed in operation 1. of the previous section.
2. Check that the choke housing alignment marks are visible. If necessary, mark the choke housing for correct positioning on reassembly.

3. Undo the choke housing securing ring screws and remove the choke housing from the carburettor.
4. Press the end of the rod (A, Fig. G:7) so that it contacts the pneumatic opening cam (C, Fig. G:7).
5. Measure the choke plate opening gap using a drill shank or gauge rods on the higher side of the choke plate.
6. If the clearance is outside the specified limit, adjust by turning the screw (B, Fig. G:7).

Accelerator Pump Adjustment - EITA Type

If the accelerator pump is thought to be maladjusted, i.e. flat spots are evident upon acceleration, then it can be adjusted as follows:
1. With the throttle plate in the idling position, bring the roller (A) into contact with the cam (B, Fig. G:8).
2. Turn screw (C) inwards until it contacts the plunger (D) then screw it in a further 1/2 to 1 full turn.

Zenith 32IF Carburettor - Fuel Level

1. Remove the air filter assembly or air intake elbow as detailed in the ROUTINE MAINTENANCE chapter.
2. Undo the screws and remove the carburettor top cover. Remove the gasket from the cover.
3. Holding the top cover upside down and horizontal, measure the distance (X, Fig. G:9).
NOTE: Do not take the measurement from the higher gasket joint surface. Make sure that the needle valve is not pushed in.
4. If the distance is greater than that specified, screw the needle valve down until the correct distance is obtained.
5. If the distance is less than that specified, remove the needle valve and replace the valve washer with a new one. Refit the needle valve and screw it down until the specified distance is obtained.
6. Refit the carburettor top cover and the air filter assembly or air intake elbow.

Accelerator Pump Injector Tube - IF Type

If the accelerator pump is thought to be operating inefficiently, i.e. flat spots are evident upon acceleration, then the positioning of the injector tube nozzle can be checked and, if necessary, adjusted as follows:
1. Remove the air filter assembly or air intake elbow and the carburettor top cover as detailed in the previous section.
2. Using a depth gauge, measure the distance between the carburettor mounting flange and the injector tube nozzle (X, Fig. G:10).
3. If the injector tube nozzle is outside the specified distance, adjust by gently bending the tube until the correct distance is obtained. Check that the jet of fuel is directed into the venturi centre (A, Fig.G:10). by operating the accelerator pump linkage.
4. Refit the carburettor top cover and the air filter assembly or air intake elbow.

Fast Idle Adjustment - IF Type

1. With the carburettor removed and inverted, close the choke plate operating lever to the 'Medium Cold' position (hole 'A' aligned with the detent ball) or to the 'Extreme Cold' position (hole 'B' aligned with detent ball) shown in Fig. G:11.
2. Holding the throttle lever closed, measure the gap between the throttle plate and the carburettor venturi wall (on the progression hole side) using a drill shank or gauge rods (C, Fig. G:11).
3. If the throttle plate clearance is outside the limits specified, adjust the clearance by slackening the locknut (D) and turning the fast idle adjusting screw (E, Fig.G:11).

Accelerator Pump Travel - IF Type

If the accelerator pump is thought to be maladjusted, i.e. flat spots are evident upon acceleration, then it can be adjusted as follows:
1. With the carburettor removed, unscrew the double-feed valve from the base of the float chamber (A, Fig. G:12).
2. Hold the choke plate fully open and the throttle plate fully closed using an elastic band.
3. Insert a depth gauge through the double-feed hole and measure the distance between the hole flange and the underside of the pump piston (B, Fig. G:12).
4. If the distance is outside the specified figure, adjust it by screwing the pump push rod/lever nut (C, Fig.G:12) in or out to obtain the correct distance.
5. Refit the double-feed valve to the base of the float chamber.

Weber 32 DARA Carburettor - Float Level

1. Remove the air intake elbow assembly as detailed in the ROUTINE MAINTENANCE chapter.
2. Unscrew and remove the carburettor top cover and hold the cover vertical with the weight of the float resting on the needle valve. In this position, measure the distance between the gasket face (D, Fig.G:13) and the float (Y, Fig. G:13).
NOTE: All checking and adjustment of the float level should be done with the cover gasket installed on the cover flange.
3. If the distance is outside the specified limits, adjust by bending the float arm tag (C, Fig. G:13).
4. After adjustment, check that the float pivots freely on the pin.
5. Refit the carburettor top cover and gasket.
6. Refit the air intake elbow assembly.

Fast Idle Adjustment - DARA Type

1. With the carburettor removed and the automatic choke housing cold, open the throttle linkage to set the choke plates to the fully closed (Extreme Cold) position.
2. Close the throttle linkage. The adjusting screw (A, Fig. G:14) should now be resting on the highest step of the notched cam inside the choke housing.

3. Invert the carburettor and measure the gap between the edge of the primary throttle plate and the carburettor venturi wall (progression hole side) using a drill shank or gauge rods.
4. If the primary throttle plate clearance is outside the limits specified, adjust by turning the adjusting screw (A, Fig. G:14).
5. Recheck the throttle plate clearance afterwards.

Choke Plate Gap Setting - DARA Type

1. With the carburettor removed, check that the choke housing to carburettor body alignment marks are visible. If necessary, mark the choke housing for correct alignment for reassembly (Fig. G:15).
2. Undo the choke housing securing ring screws and remove the choke housing from the carburettor.
3. Push the throttle linkage lever to fully close the choke plates.
4 Move rod (A) upwards so that it fully contacts the pneumatic capsule (B, Fig. G:16). Hold lever (C) in contact with the rod, then measure the choke plate part-open gap between the longer (upper) part of the plate and the side of the air intake wall, using a drill shank or gauge rods.
5. If the choke plate setting is incorrect, adjust by removing the plug (D) in the top of the pneumatic capsule and turning the screw (E) inside to obtain the correct setting.

Solex 32 SEIA Carburettor - Float Level

1. Remove the air filter assembly or air intake elbow as detailed in the ROUTINE MAINTENANCE chapter.
2. Unscrew and remove the carburettor top cover and detach the gasket.
3. Holding the carburettor top cover upside down and horizontal, measure the distance between the underside of the float and the carburettor body flange (X, Fig. G:4).
4. If the clearance is outside the specified limits adjust the float height by bending the brass tag (A, Fig. G:4).
5. Check that the float does not contact the econostat tube.
6. Refit the carburettor top cover usng a new gasket if necessary.
7. Refit the air filter assembly or air intake elbow.

Fast Idle Adjustment - SEIA Type

1. With the carburettor removed and held inverted, close the choke plate lever to the 'Extreme Cold' position (i.e. lever A, Fig. G:17 moved in the direction of arrow).
2. Measure the gap between the throttle plate edge and the carburettor venturi wall using a drill shank or gauge rod of 0,8 mm diameter (B, Fig. G:17).
3. If the throttle plate gap is outside the limits specified then adjust the clearance by turning the fast idle screw (C, Fig. G:17).

Accelerator Pump Stroke - SEIA Type

If the accelerator pump is thought to be maladjusted, i.e. flat spots are evident upon acceleration, it can be adjusted as follows:

1. With the throttle plate closed, undo the adjusting screw (A) until there is a clearance between the screw end and the pump plunger (B, Fig. G:18).
2. Hold the roller in contact with the cam (C, Fig. G:18) and screw the adjusting screw inwards until it just contacts the plunger, then screw it in a further 1/2 to 1 full turn.

Weber 32 DIR - Float Level

Note that all checking and adjustment of the float level should be done with the top cover gasket installed on the cover flange.
1. Remove the air intake elbow assembly as detailed in the ROUTINE MAINTENANCE chapter.
2. Unscrew the carburettor top cover and remove it, complete with gasket.
3. Holding the top cover vertical, with the weight of the float resting on the needle valve, measure the distance between the gasket face (D, Fig. G:13) and the float (X).
4. If the distance is outside the specified limits, adjust it by bending the float arm (A). Make sure that the needle valve contact tag (B, Fig. G:13) remains at right angles to the needle valve centre-line.
5. Hold the top cover in a horizontal position with the float hanging down and measure the amount of float travel between the gasket face and the float (Y, Fig. G:13).
6. If the distance is outside the specified limits, adjust it by bending the float arm tag (C, Fig. G:13).
7. After adjustment, check that the float pivots freely on the pin.
8. Refit the top cover to the carburettor and reinstall the air filter assembly.

Fast Idle Adjustment - DIR Type

1. With the carburettor removed, close the choke valve completely by acting on the choke operating lever.
2. Measure the distance between the primary throttle plate edge and the carburettor venturi wall using a drill shank or gauge rods of the specified diameter.
3. If the clearance is outside limits, adjust it by slackening the locknut and turning the adjusting screw (A, Fig. G:19).
4. Tighten the locknut and recheck the clearance.

Choke Plate Gap Setting - Mechanical - DIR Type

1. Close the choke plate fully by turning the operating lever and check that a clearance exists between the topmost part of the slot in the operating lever and the choke plate actuating pin (Fig. G:19). This clearance should be 0,5 ± 0,2 mm.
2. If necessary, adjust the clearance by turning screw (B, Fig. G:19).

Choke Plate Gap Setting - Pneumatic - DIR Type

1. Push the rod (A, Fig. G:20) as far downwards as is possible and then close the choke plate.

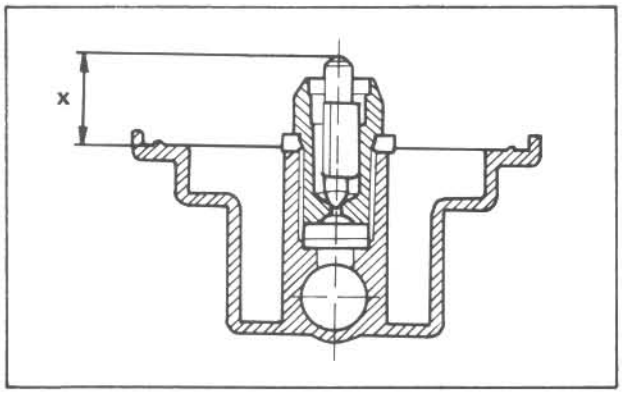

Fig. G:9 Fuel level measurement (32IF)

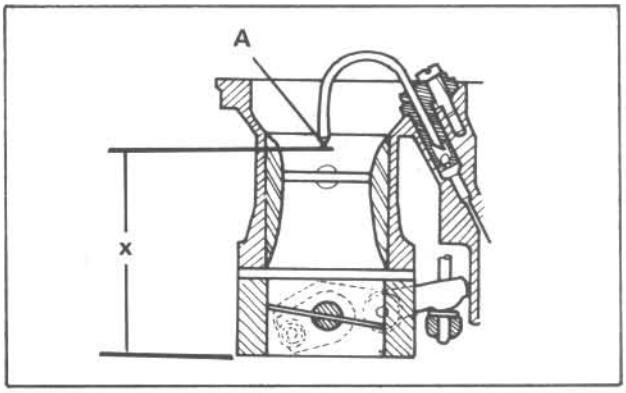

Fig. G:10 Injector tube adjustment (32IF)

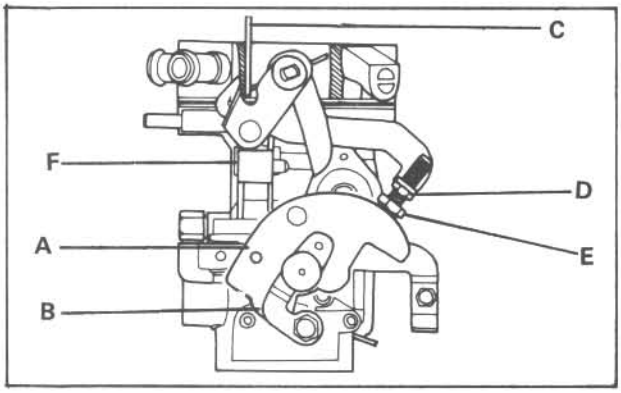

Fig. G:11 Fast idle adjustment (32IF)

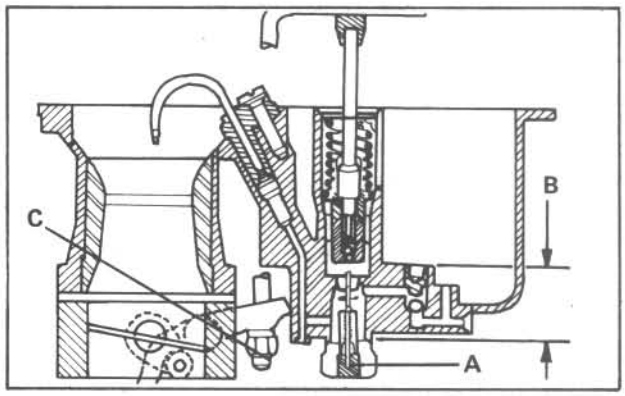

Fig. G:12 Accelerator pump adjustment (32IF)

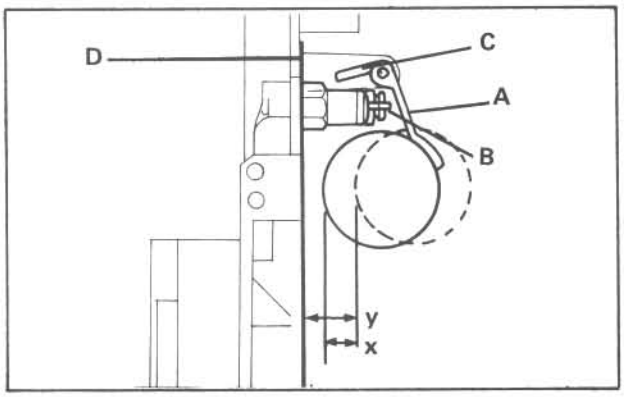

Fig. G:13 Float level adjustment

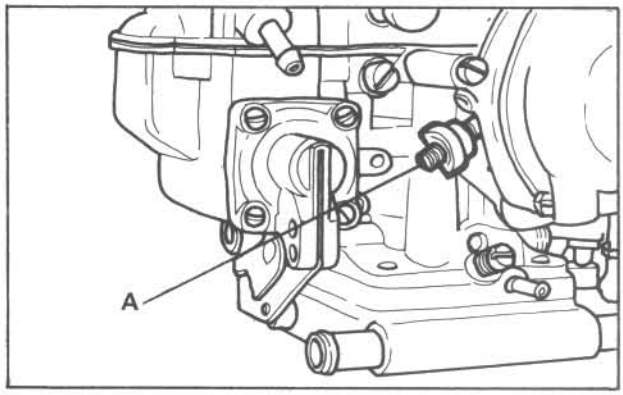

Fig. G:14 Fast idle adjustment (DARA)

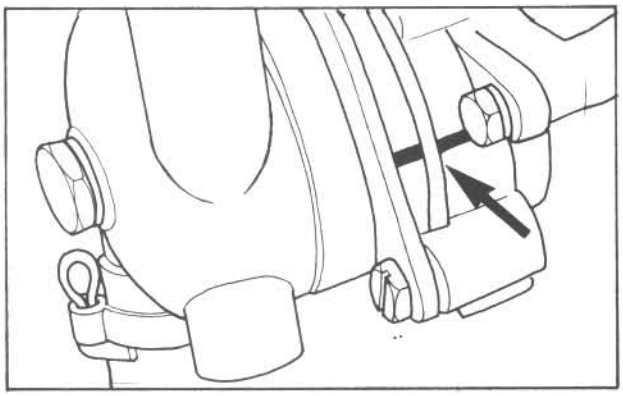

Fig. G:15 Choke housing alignment marks (DARA)

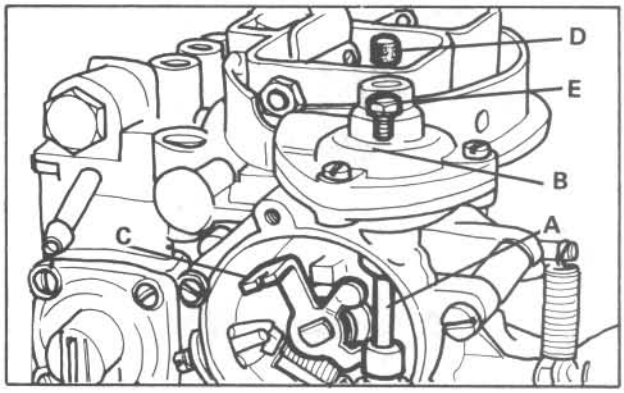

Fig. G:16 Choke valve gap (DARA)

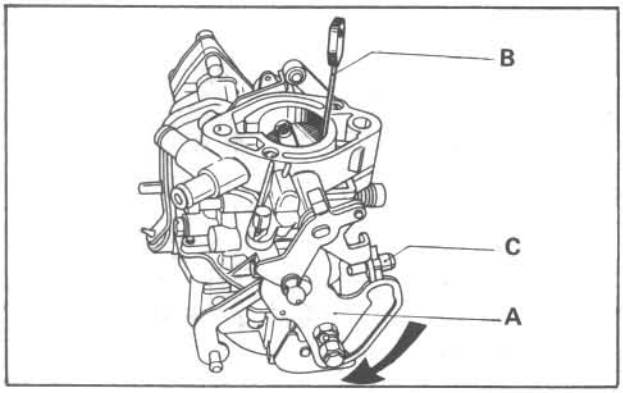

Fig. G:17 Fast idle adjustment (SEIA)

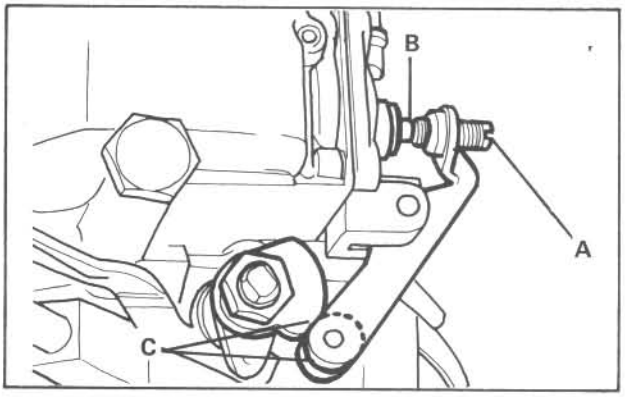

Fig. G:18 Accelerator pump adjustment (SEIA)

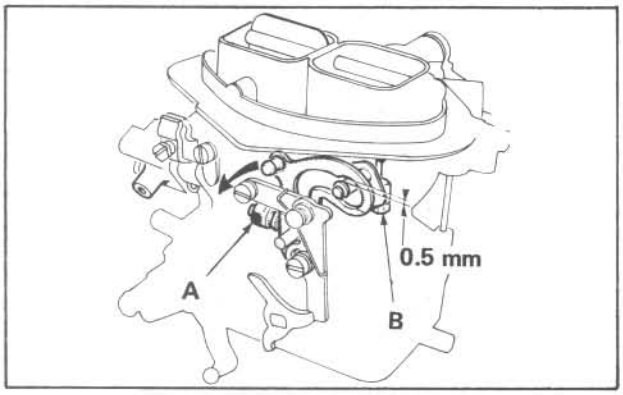

Fig. G:19 Fast idle screw (A) & choke adjustment (B) (DIR)

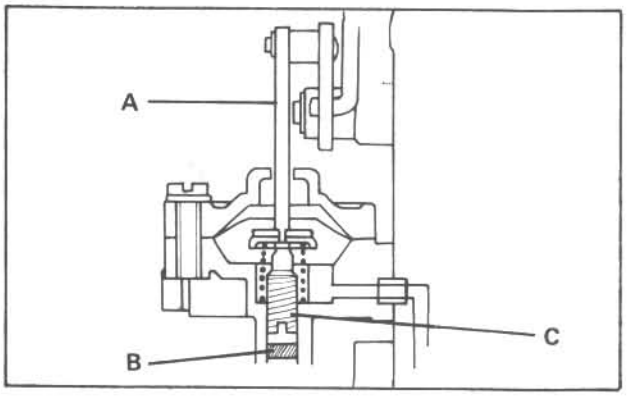

Fig. G:20 Pneumatic choke adjustment (DIR)

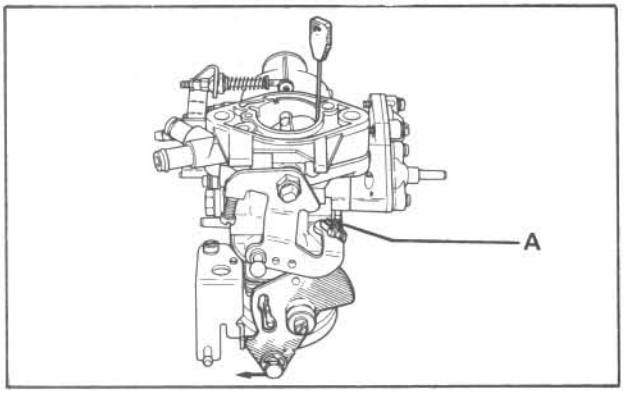

Fig. G:21 Fast idle adjustment (DIS)

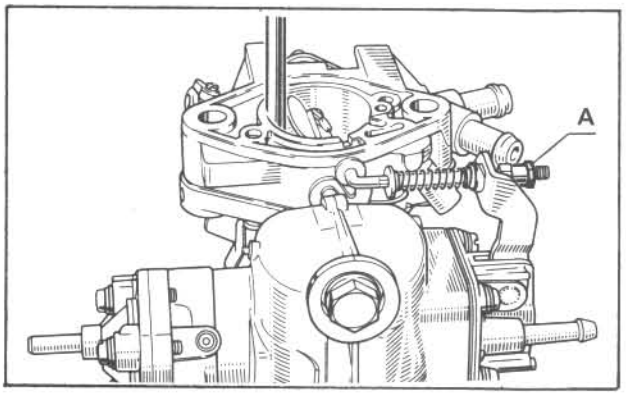

Fig. G:22 Accelerator pump adjustment (DIS)

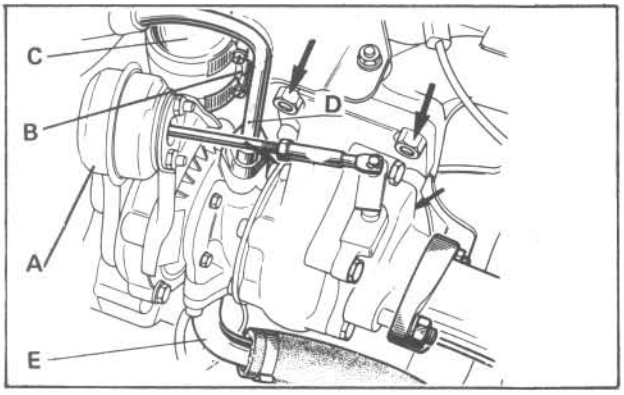

Fig. G:23 Turbocharger installation

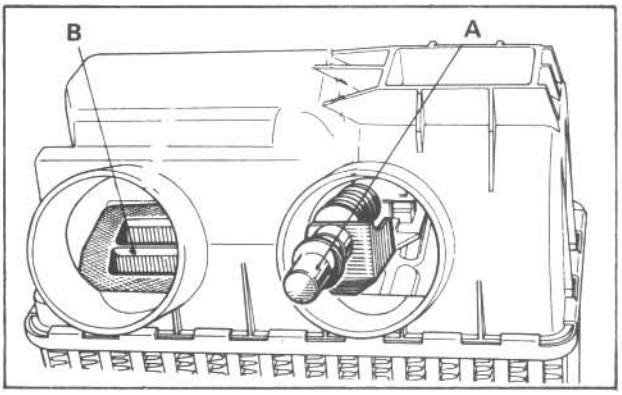

Fig. G:24 Intercooler thermostat (A) and flap (B)

2. Measure the choke plate part-opening using a drill shank or gauge rod of the specified diameter placed between the edge of the choke plate and the air intake wall.
3. If the clearance is outside the specified limits, remove the blanking plug (B) and turn the screw (C) inside in order to adjust.

Solex 32 DIS Carburettor - Float Level

The float level on the DIS carburettor is not adjustable, however, if it is suspected that the fuel level is incorrect, remove the air intake trunking from the carburettor, then unscrew and lift off the top cover. Unscrew the needle valve from the cover and take out the washer. The thickness of this washer should be 1 mm. If it is not then it should be replaced with a new one in the reverse order of removal.

When refitting the air intake trunking, make absolutely sure that the connection is air tight.

Fast Idle Adjustment - 32 DIS Type

1. With the carburettor removed, move the choke plate operating lever into the 'Extreme Cold' position (direction of arrow, Fig. G:21).
2. Hold the throttle lever so that the fast idle screw (A) is in firm contact with the choke lever cam then measure the throttle plate gap with a drill bit or gauge rod between the throttle plate edge and the venturi wall. If the gap is not to specification then turn the fast idle screw to adjust.

Accelerator Pump Stroke - DIS Type

1. With the carburettor removed, insert a drill bit or gauge rod of the specified diameter between the throttle plate edge and the venturi wall on the opposite side to the progression slot in the venturi. In this position the pump operating lever should be at the end of its travel. If not, adjust the nut (A, Fig. G:22).

FUEL TANK & GAUGE SENDER UNIT . . . . [6]

Tank Removal & Installation

1. Disconnect the battery.
2. Remove the filler cap and syphon off the remaining petrol into a suitable container.
3. Detach the tank shield.
4. Disconnect the luggage compartment light leads.
5. Clamp the fuel pipes and disconnect them from the tank.
6. Disconnect the lead to the fuel level sender unit.
7. Detach the fuel pipe clips from the tank.
8. Remove the tank securing bolts and nuts. Two nuts are at the bottom of the tank and a bolt on each side.
9. Remove the tank by pulling it to the left of the car in order to free the filler pipe from the hole in the body.
10. Install the tank in the reverse order to removal.

Sender Unit Replacement

1. With the battery disconnected, detach the leads to the sender unit and the luggage compartment light.
2. Take out the tank cover and unscrew the sender from the tank.

After replacement of the unit, make sure that there are no fuel leaks from around the sender unit joint.

TURBOCHARGER. . . . . [7]

Checking of the turbocharger assembly (i.e. turbocharger, wastegate and fuel pressure regulator) is not recommended for the DIY mechanic as it is a fairly involved procedure necessitating the use of special tooling. Removal and installation of the assembly are, however, straightforward operations and these are covered in the following section in the event of removal or replacement being necessary. Note that the wastegate valve (A, Fig. G:23) is matched to the turbocharger during production and therefore any defect with either one or the other necessitates replacement of the two as a complete assembly.

Replacement

1. Detach the hose connecting the turbocharger to the air filter and remove the air filter on the clutch housing by first slackening the retaining clip.
2. Slacken the retaining clip and unscrew the bolts which retain the exhaust pipe support bracket.
3. Remove the bolts securing the air pipe and slacken off the bottom securing clip (B, Fig. G:23). Push the pipe (C) clear of the turbocharger.
4. Detach the two oil pipes (D & E, Fig. G:23) from the turbocharger.
5. Undo the turbocharger support bracket by removing the retaining bolts.
6. Undo the turbocharger securing bolts (arrowed) and lift off the assembly. Do not let the weight of the unit strain the wastegate link rod.

Installation of the assembly is a reversal of the removal procedure but the following points MUST be adhered to:

1. Before installing, thoroughly clean the mating faces of both the turbocharger and the manifold and replace the securing nuts with new ones (this is important as the self-locking nuts may only be used once).
2. Renew the gaskets on both the oil pipes, reconnect the bottom oil pipe and fill the turbocharger with the specified oil via the top oil pipe opening.
3. With the ignition coil disconnected (i.e. H.T. lead detached) turn the engine over with the starter motor until oil flows out of the top oil pipe opening. Reconnect the top oil pipe.
4. Reconnect the H.T. lead and run the engine at idle speed for a short while in order to prime the oilways.

NOTE: The engine should never be run if the ducting between the carburettor and the turbocharger is disconnected.

FUEL

Trouble Shooter



FAULT	CAUSE	CURE
Flooding	1. Improper seating or damaged float needle valve or seat 2. Incorrect float level 3. Fuel pump has excessive pressure	1. Check and replace parts as necessary. 2. Adjust float level. 3. Check fuel pump.
Excessive fuel consumption	1. Engine out of tune 2. Float level too high 3. Loose plug or jet 4. Defective gasket 5. Fuel leaks at pipes or connections 6. Choke valve operates improperly 7. Obstructed air bleed	1. Tune engine. 2. Adjust float level. 3. Tighten plug or jet. 4. Replace gaskets. 5. Trace leak and rectify. 6. Check choke valve. 7. Check and clear.
Stalling	1. Main jet obstructed 2. Incorrect throttle opening 3. Slow-running adjustment incorrect 4. Slow-running fuel jet blocked 5. Incorrect float level	1. Clean main jet. 2. Adjust throttle. 3. Adjust slow-running. 4. Clean jet. 5. Adjust float level.
Poor acceleration	1. Defective accelerator pump (if fitted) 2. Float level too low 3. Incorrect throttle opening 4. Defective accelerator linkage 5. Blocked pump jet	1. Overhaul pump. 2. Adjust float level. 3. Adjust throttle. 4. Adjust accelerator linkage. 5. Clean pump jet.
Spitting	1. Lean mixture 2. Dirty carburettor 3. Clogged fuel pipes 4. Manifold draws secondary air	1. Clean and adjust carburettor. 2. Clean carburettor. 3. Clean or replace pipes. 4. Tighten or replace gasket.
Insufficient fuel supply	1. Clogged carburettor 2. Clogged fuel pipe 3. Dirty fuel 4. Air in fuel system 5. Defective fuel pump 6. Clogged fuel filter	1. Dismantle and clean carburettor. 2. Clean fuel pipe. 3. Clean fuel tank. 4. Check connections and tighten. 5. Repair or replace fuel pump. 6. Clean or replace filter.
Loss of fuel delivery	1. Pump faulty (electric) 2. Slotted body screws loose 3. Diaphragm cracked 4. Loose fuel pipe connections 5. Defective valves 6. Cracked fuel pipes	1. Replace pump. 2. Tighten body screws. 3. Overhaul fuel pump. 4. Tighten fuel pipe connections. 5. Replace valves. 6. Replace fuel pipes.
Noisy pump	1. Loose pump mounting 2. Worn or defective rocker arm (mechanical). 3. Broken rocker arm spring (mechanical).	1. Tighten mounting bolts. 2. Replace rocker arm. 3. Replace spring.

Clutch & Gearbox

INTRODUCTION . . . . . [1]
CLUTCH CABLE . . . . . [2]
CLUTCH ASSEMBLY. . . . . [3]
CLUTCH RELEASE BEARING . . . . . [4]
INPUT SHAFT OIL SEAL . . . . . [5]
GEARBOX REMOVAL & INSTALLATION . [6]
SELECTOR SHAFT SEAL (MODEL 352) . . . [7]
SELECTOR SHAFT SEAL (MODEL 395) . . . [8]
GEARBOX OVERHAUL (MODEL 352) . . . . [9]
GEARBOX OVERHAUL (MODEL 395) . . . [10]
DIFFERENTIAL SIDE OIL SEALS. . . . . [11]
TROUBLE SHOOTER . . . . . [12]

INTRODUCTION . . . . . [1]

The clutch on all Renault 18/Fuego models is of the conventional diaphragm spring type and is cable operated.

The cable is adjustable to compensate for wear and details of the adjustment procedure are given in this chapter.

To replace the clutch, the gearbox will have to be removed first. This can be done without removing the engine although the front of the car will have to be raised and supported high enough to enable the gearbox to be removed from under the car. Also the swivel hubs will have to be disconnected from the track rod ball joints and the upper swivel pins so that the driveshafts can be withdrawn from the differential splines.

Two basic types of gearbox are fitted, the Model 352, 4 speed unit and the Model 395, 5 speed unit.

Both types are integral with the differential with an external gearchange linkage connected to a remote type gear lever.

Both the differential side oil seals, and the gear selector shaft oil seal can be replaced without removing the gearbox.

A minimum of special tools will be required for the operations described in this chapter, but a clutch alignment tool is essential when installing a new clutch plate.

CLUTCH CABLE . . . . . [2]

Adjustment

1. Adjustment of the clutch release bearing clearance to compensate for lining wear is made at the lower end of the cable.
2. Pull up the clutch pedal to its stop and hold it in this position with a length of wood. From inside the engine compartment, push the clutch operating lever away from the adjusting nut as far as it will go.
3. Now measure the clearance between the inner adjustment nut on the cable and the operating lever (3, Fig. H:1). see TECHNICAL DATA for the correct setting.
4. If adjustment is necessary, slacken the cable locknut and turn the adjusting nut until the correct clearance is obtained. Tighten the locknut and recheck the clearance afterwards.

Clutch Cable Replacement

1. Undo the locknut and adjusting nut (4, Fig. H:1), then disconnect the cable from the operating lever at the lower end. Withdraw the cable through the mounting bracket.
2. From inside the car, push the clutch pedal down and unhook the inner cable yoke from the top of the pedal.
3. Unclip the outer cable from the retaining clip and pull the ferrule out of the clutch housing end. The cable can now be removed from the car.
4. Fit the new cable to the pedal end first, then screw the pivot pad, retaining nut and locknut to the lower threaded end of the inner cable, in the reverse order of removal.
5. Adjust the operating clearance as described previously.

CLUTCH ASSEMBLY. . . . . [3]

Removal (Fig. H:1)

1. Remove the gearbox as described later in this chapter.
2. Progressively undo the six bolts attaching the clutch pressure plate to the flywheel, working diagonally across the cover to avoid distortion.
3. Hold the pressure plate with one hand and carefully lever it off its locating dowels with a screwdriver. Remove both the pressure plate and the clutch plate behind it, from the flywheel.

Clutch Plate - Inspection

Check the disc friction surfaces for wear, burning or oil contamination. If the linings are worn down near to the rivet heads, or if any of the other conditions above are apparent, then the disc should be replaced.

If oil contamination is found on the disc, then its source should be located and the fault rectified before replacing the gearbox, otherwise the trouble may recur. The most likely sources of oil on the clutch are from a leaking gearbox front oil seal or from the rear of the crankshaft.

Pressure Plate - Inspection

Check the inner ends of the diaphragm fingers for excessive wear where they contact the release bearing (1, Fig. H:1).

A bright ring is normal, a deep radial indentation means the fingers are worn. Check also, the spring connections at both the pressure plate and the cover looking for cracks and the rivets for tightness. If any of the above conditions are apparent, the assembly should be replaced.

Inspect the contact face of the pressure plate for scoring caused by allowing the clutch plate to wear down to the rivets, and signs of burning or cracking. Check the plate face for distortion using a straight edge and feeler gauges. Replace the assembly if any of these conditions are apparent.

Flywheel - Inspection

Inspect the friction surfaces of the flywheel. Blueing or small cracks are of no particular importance, but if any deep scratches or scoring are present, then the flywheel should be machined flat again or a new flywheel should be fitted.

NOTE: If the flywheel is bolted to the crankshaft with self-locking securing bolts these must be replaced with new ones when refitting the flywheel. When the bolts are held by a lockplate, a new one should be fitted when installing the flywheel.

Release Bearing - Inspection

The release bearing (1, in Fig. H:1), can be checked for wear without removing it from the operating lever. Spin the bearing. If it has a 'dry' sound or rattles and is a sloppy fit on the hub, then it should be replaced with a new one. Replacement of the bearing is covered in the following section. While checking the bearing, also check the pivot points on the bearing carrier and operating lever for wear and replace as necessary.

Clutch Spigot Bush - Inspection

The clutch spigot bush is located in the end of the crankshaft, and should be inspected for wear, damage or signs of overheating. The bush is a press fit in its bore and should not be loose. If any of these conditions are present, a new bush should be fitted. The easiest method of removing the old bush is to pack grease into the centre and then insert a circular drift.

When the drift is hammered in, the hydraulic effect will eject the bush from the housing (Fig. H:2).

Alternatively a tap can be screwed into the bush enabling it to be pulled out with a self-grip wrench.

Drift the new bush into position being careful not to burr the edges.

Clutch Installation

1. A clutch alignment tool (mandrel) is essential to ensure the correct alignment of the clutch plate and flywheel during reassembly. If the clutch plate is not perfectly aligned it will be impossible to refit the gearbox and any attempt to do so will probably damage the components.

A suitable tool can either be made quite simply from a piece of wood, such as a broom handle, or purchased quite cheaply from a local car accessory shop or tool stores.

2. Ensure that the friction surfaces of the flywheel and pressure plate are clean and grease-free before reassembly, then fit the clutch plate the correct way round. The damping plate, and damping springs should face the diaphragm.
3. Fit the pressure plate in position and insert the alignment tool (mandrel) as shown in Fig. H:3.
4. Fit the pressure plate bolts and tighten them in a diagonal fashion to avoid distorting the assembly. The bolts should be tightened to the correct torque - see TECHNICAL DATA.
5. Make sure that the release bearing is correctly fitted, then sparingly lubricate the operating arm pivot points and the splines on the gearbox input shaft with high melting point grease.
6. Install the gearbox as described later in this chapter taking care to ensure that the gearbox weight does not hang on the input shaft once it has entered the clutch.

CLUTCH RELEASE BEARING . . . . . [4]

Replacement

1. Remove the gearbox as described later in this chapter.
2. Unhook the spring ends from the release bearing hub and slide the bearing off the gearbox input shaft sleeve (Fig. H:4).
3. Clean the sleeve and operating arm forks, and then smear with high melting point grease.
4. Fit the release bearing onto the sleeve and engage the spring ends in the hub.
5. Install the gearbox and adjust the clutch cable clearance as detailed at the beginning of the chapter.

INPUT SHAFT OIL SEAL . . . . . [5]

Removal (Fig. H:5)

1. Remove the gearbox as detailed later in this chapter.
2. Undo the twelve bolts - six on the inside and six on the outside - securing the clutch housing to the gearbox casing. Note where the bolts come from as they are of differing lengths.

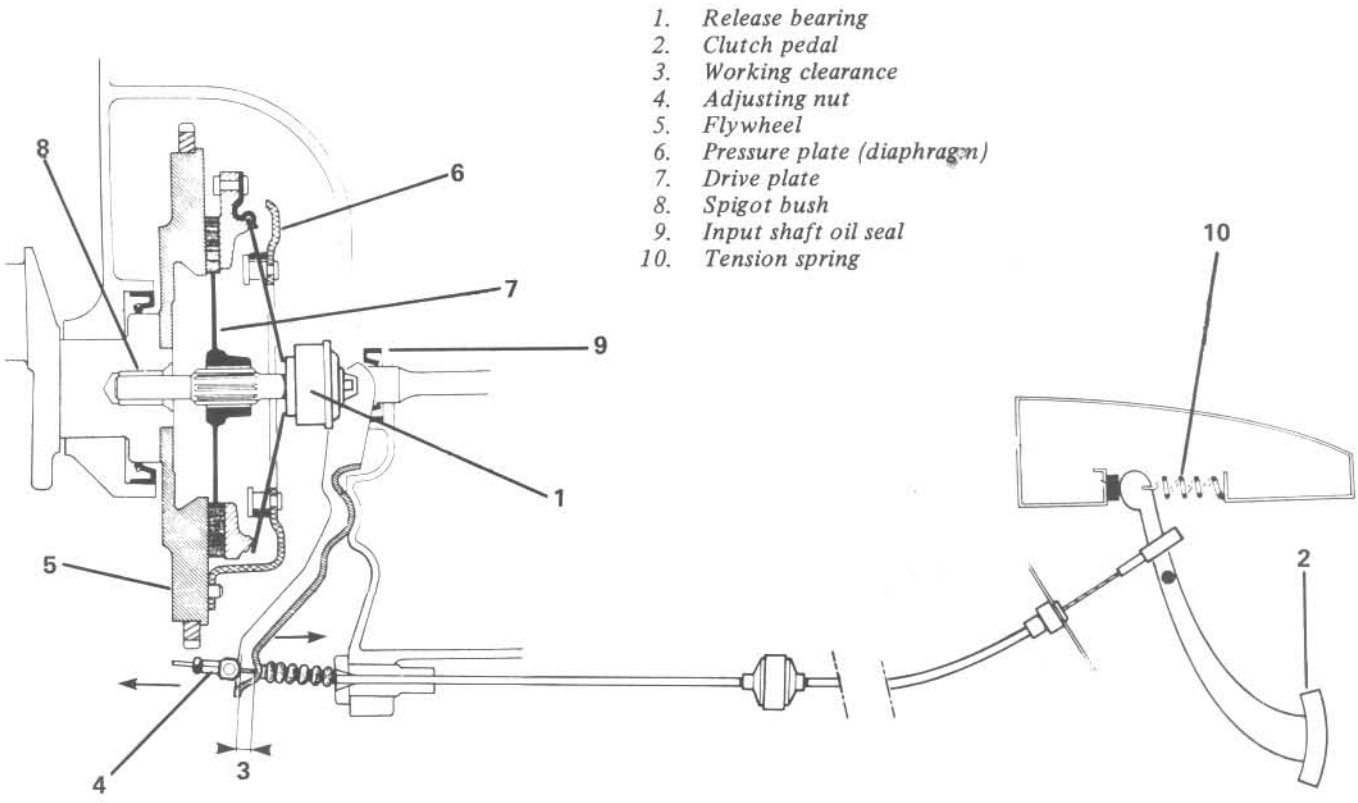

Fig. H:1 Details of the clutch operating mechanisim

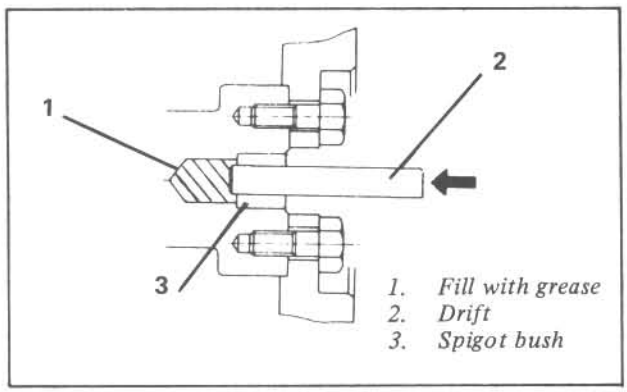

Fig. H:2 Removing spigot bush

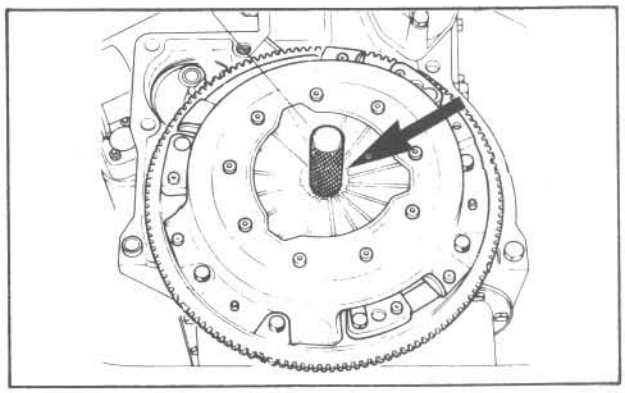

Fig. H:3 Aligning clutch plate

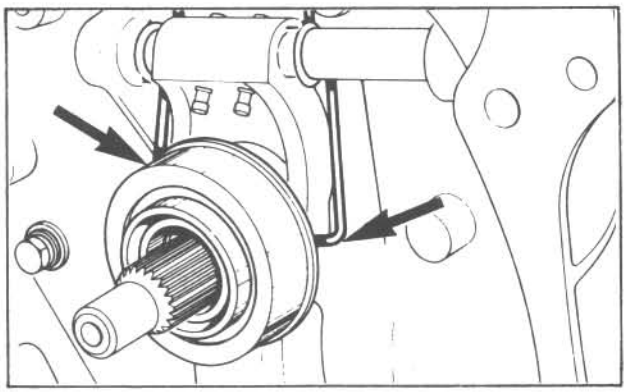

Fig. H:4 Clutch release bearing

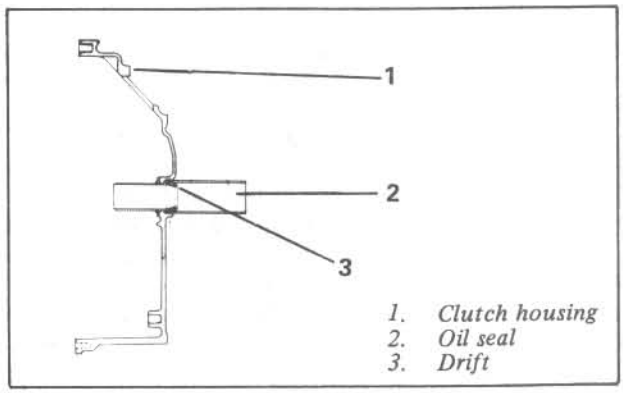

Fig. H:5 Input shaft oil seal

3. Carefully separate the clutch housing from the gearbox casing. Discard the paper gasket.
4. The oil seal is located on the gearbox side of the clutch housing and can be removed by gently levering it out with a screwdriver. Take care to avoid scratching or damaging the aluminium of the seal housing.

Installation

1. Clean the seal housing thoroughly, then fit the new seal squarely into the housing using a tubular drift and a hammer (3, Fig. H:5). Make sure the seal is fitted the correct way round with the seal lip facing inwards towards the gearbox.
2. Clean the mating surfaces of the gearbox and the rear of the clutch housing, then fit a new paper gasket, keeping it in position on the locating dowels.
3. Clean the input shaft and cover the clutch plate splines at the outer end with masking tape to avoid damaging the seal lip during installation. Smear grease on the remainder of the input shaft to ease the seal into position.
4. Bolt the clutch housing to the gearbox tightening the bolts evenly and to the correct torque - see TECHNICAL DATA.
5. Refit the gearbox to the engine as described in the Gearbox - Installation section of this chapter and set the clutch cable adjustment as previously described.

GEARBOX REMOVAL & INSTALLATION . [6]

Models 352 & 395

1. Slacken the front wheel bolts, then raise and support the front of the car as described in the ROUTINE MAINTENANCE chapter. Remove both front wheels.
2. Drain the gearbox oil by unscrewing the drain plug underneath, see ROUTINE MAINTENANCE chapter.
3. Disconnect the battery followed by the wiring to the starter motor.
4. Disconnect the three bolts securing the starter motor to the clutch housing.
5. Remove the rear bolt and slacken the rear fixing strut mounting bolt. Tilt the strut 90 degrees.
6. Pull the starter motor back and tilt the pinion end downwards until it rests on the exhaust pipe. Turn the starter through 90 degrees and remove it from the engine bay (Fig. H:6).
7. Disconnect the clutch inner cable at the gearbox end and then pull the outer cable sleeve from its stop.
8. Fit spacer struts between the lower suspension arms and the shock absorber bottom mountings - see FRONT SUSPENSION chapter.
9. Remove the front brake caliper assemblies without disconnecting the hydraulic hoses - see BRAKES chapter.

   Tie the calipers out of the way so that their weight is not hanging on the hydraulic hoses.
10. Using a suitable sized drift, tap out the roll pins securing the inner ends of the driveshafts to the differential output splines (Fig. H:7).
11. Disconnect the steering track rod ends using a ball joint taper breaking tool.
12. Disconnect the upper suspension swivel joint using a suitable tool - see FRONT SUSPENSION chapter.
13. Angle the hub carrier assemblies so that the driveshafts can be withdrawn from the inboard splines.
14. Undo the speedometer cable retaining bolt and remove the cable. Disconnect the wiring from the reversing light switch.
15. Using a suitable allen key, undo the gearshift ball joint bolt (1, Fig. H:8), but do NOT split the ball joint. Undo and remove the pivot bolt (2, Fig. H:8).
16. Remove the clutch shield, place a trolley jack under the gearbox and support the weight.
17. Undo the remove the left and right hand mountings and remove the bolts holding the gearbox to the engine.
18. Lower the jack slowly and draw the gearbox assembly rearwards off the engine, taking care not to foul the clutch mechanism or the gearbox shaft on the clutch diaphragm.

NOTE: When lowering the jack under the gearbox, make sure that no hoses or other components in the engine compartment are under strain.

Installation

Install the gearbox in the reverse order of removal paying particular attention to the following points:
1. Lightly smear the splines of the input shaft and driveshaft splines with high melting point grease.
2. When attaching the gearbox to the engine, make sure that the weight of the gearbox is not allowed to hang on the input shaft.
3. When refitting the drive shafts, carefully line up the roll pin holes before sliding the shafts into position and fitting new roll pins.
4. Refill the gearbox with the correct grade of oil and reset the clutch operating clearance as described earlier in this chapter.

SELECTOR SHAFT SEAL (MODEL 352) . . . [7]

Replacement

1. Jack up the front of the car and support on axle stands as detailed in the ROUTINE MAINTENANCE chapter.
2. Remove the gearbox drain plug and drain out the oil. Refit the drain plug.
3. Disconnect the speedometer cable and the gear linkage as described in the 'Gearbox Removal' section previously.
4. Undo the rear gearbox cover retaining bolts and remove the cover. Do NOT let the adjusting shims drop out.
5. Knock out the two selector finger retaining roll pins. Pull out the selector shaft noting the relative position of the collars and spring (Fig. H:9).
6. Carefully lever the oil seal from the selector housing cover.
7. Clean any burrs from the selector shaft with fine emery cloth or carborundum paper.
8. Fit a new seal into the housing, insert the shaft and fit the two collars and the spring in the correct order.

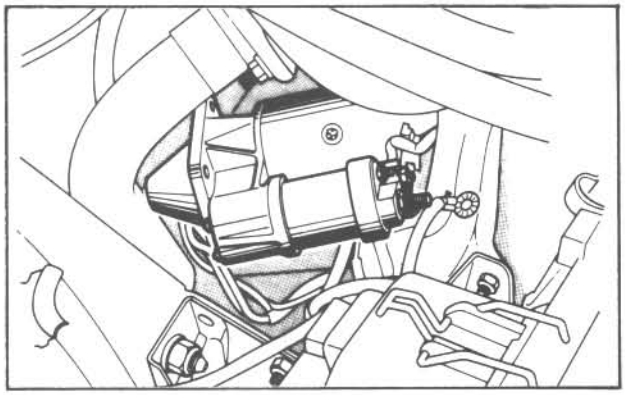

Fig. H:6 Starter motor removal

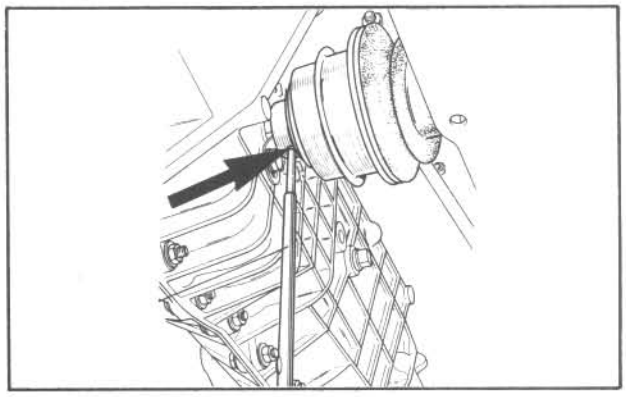

Fig. H:7 Removing driveshaft roll pins

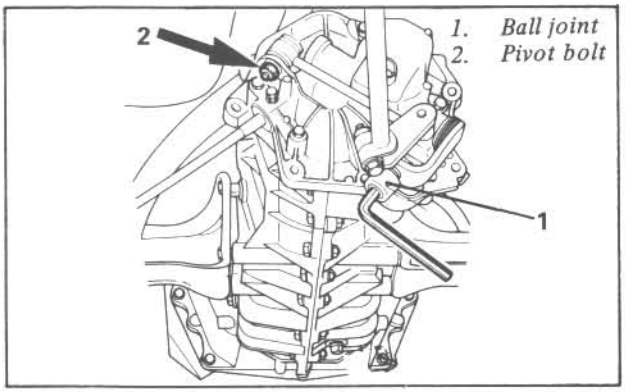

Fig. H:8 Disconnecting the gear linkage

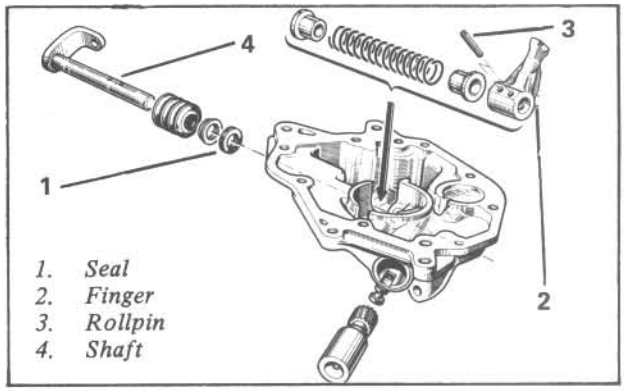

Fig. H:9 Selector housing components

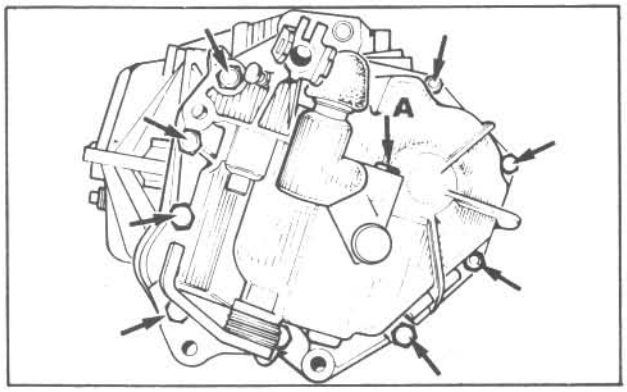

Fig. H:10 Rear housing bolts

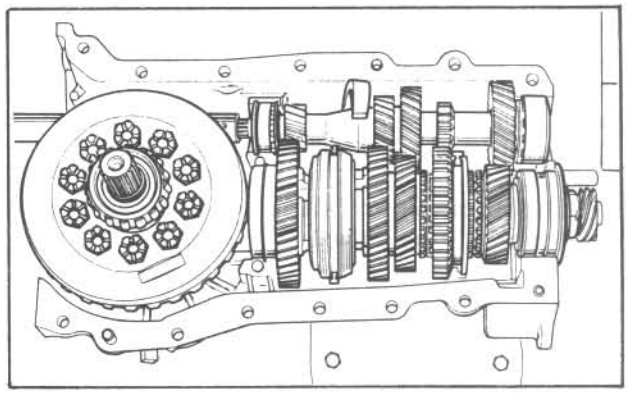

Fig. H:11 Gearbox half casing

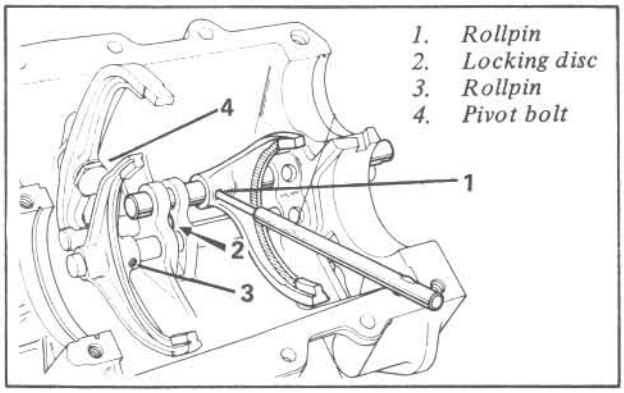

Fig. H:12 Gear selector forks and shafts

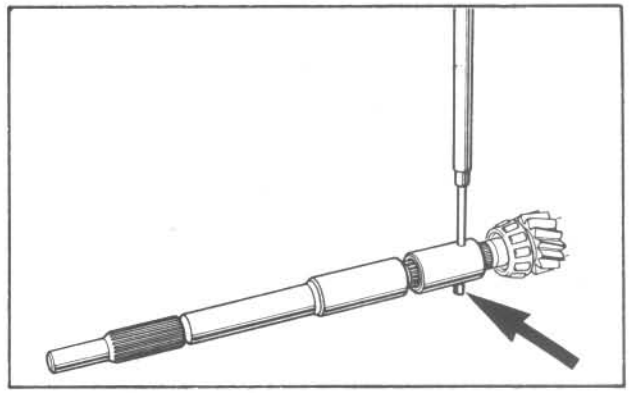

Fig. H:13 Removing quill shaft roll pin

9. Refit the selector finger and knock in two new roll pins.
10. Lightly smear the end cover gasket with gasket sealer and position the end cover so that the selector finger fits into the selector shaft slots.
11. Tighten the cover retaining bolts to the correct torque - see TECHNICAL DATA.
12. Refit the gearchange linkage and the speedometer cable. Refill the gearbox with the correct grade of oil.
13. Remove the axle stands and lower the car to the ground.

SELECTOR SHAFT SEAL (MODEL 395) . . . [8]

Replacement

1. Remove the selector shaft cover as described previously for the Model 352 gearbox.
2. Drift out the two roll pins retaining the selector finger and remove the circlip from the shaft.
NOTE: The 5th gear selector locking bolt A, Fig. H:10 and the spring and ball must also be removed.
3. Pull the shaft out of the housing and note the position of the two collars, two springs and single washer.
4. Carefully remove both lip type oil seals and replace with new ones.
5. Clean any burrs off the selector shaft using fine emery cloth or carborundum paper.
6. Install the selector in the reverse order of removal, using new roll pins to retain the selector finger.
7. Refit and torque tighten the selector housing bolts, install the 5th gear locking spring and ball, smear the retaining plug threads with thread locking compound and insert the plug.
8. Reconnect the gear selector linkage and the speedometer cable.
9. Fill the gearbox with the recommended grade of oil.
10. Remove the axle stands and lower the car to the ground.

GEARBOX OVERHAUL (MODEL 352) . . . . [9]

1. Remove the gearbox assembly from the car as described in the 'Gearbox Removal & Installation' section previously.
2. Disconnect the battery positive lead.
3. Unscrew the reversing light switch.
4. Undo the clutch housing bolts and remove the housing.
5. Remove the selector housing cover as described in the 'Selector Shaft Oil Seal' section of this chapter.
6. Remove the differential bearing adjusting ring nuts from both sides of the unit - see 'Differential Side Oil Seals' section of this chapter.
7. Undo the 14 bolts holding the two halves of the gearbox together and lift off one half of the casing, leaving the gear train in the other half. It may be necessary to gently tap round the casing with a soft faced mallet to separate the two castings (Fig. H:11).
8. Lift out the differential assembly and store in a safe place.
9. Lift out the secondary gear train assembly followed by the primary shaft.
10. Using a suitable diameter punch, tap out the roll pin retaining the 3rd - 4th gear selector fork (1, Fig. H:12).
11. Pull out the selector shaft, taking care not to lose the locking spring and ball. Lift out the selector locking disc from between the selector shafts (2, Fig. H:12).
12. Pull the reverse gear selector shaft towards the rear of the casing as far as it will go. Tap out the roll pin retaining the 1st - 2nd gear selector fork (3, Fig. H:12) then pull the shaft through the fork and out of the casing. Carefully retain the locking spring and ball.
13. Undo the reverse selector lever pivot bolt (4, Fig. H:12) and pull out the shaft.
14. Lever off the reverse gear circlip and pull the shaft out noting the relative positions of the gear wheel, thrust washer and spacer sleeve.

Primary Shaft Overhaul

1. Remove the adjusting shims and the bearing tracks from either end of the shaft.
2. Tap the roll pin out of the connecting sleeve between the clutch quill shaft and the primary shaft, using a suitable pin punch (Fig. H:13). There is a noise damping washer fitted between the two shafts, inside the connecting sleeve, known as a Grower washer.
3. Pull the bearings off each end of the shaft and then clamp the first gear in a soft jawed vice.
4. Select first gear and, using an open ended spanner, unscrew the speedometer drive gear (Fig. H:14).
5. Remove the double track taper roller bearing, the final drive pinion protrusion spacing washer, and the 4th gear synchro ring.
6. Pull off the 3rd and 4th gear synchro sliding gears and mark the relative positions of the hub and sliding components. Do NOT lose the synchro keys.
7. Support the 3rd and 4th gear synchro hub so that the shaft can be tapped through the centre, using a soft faced mallet, without damaging the gears.
8. Lever out the 3rd gear stop washer retaining key (Fig. H:15), then slide off the washer and the 3rd gear and synchro ring.
9. Slide off the 2nd gear stop washer, followed by the 2nd gear and synchro ring.
10. Mark the relative position of the 1st and 2nd speed synchro gear and the hub. Remove the gear and the synchro hub stop washer (Fig. H:20).
11. Support the 1st - 2nd gear synchro hub so that the shaft can be tapped through the centre using a soft faced mallet.
12. Slide off the 1st speed synchro ring, stop washer and 1st gear.
13. The front roller bearing cannot be replaced as the inner track is bonded to the shaft and cannot be replaced. A clip should be fitted to the outer track to retain the rollers in position as shown in Fig. H:16.
14. Dismantle the rear selector shaft housing as described in the 'Gear Selector Shaft Oil Seal' section of this

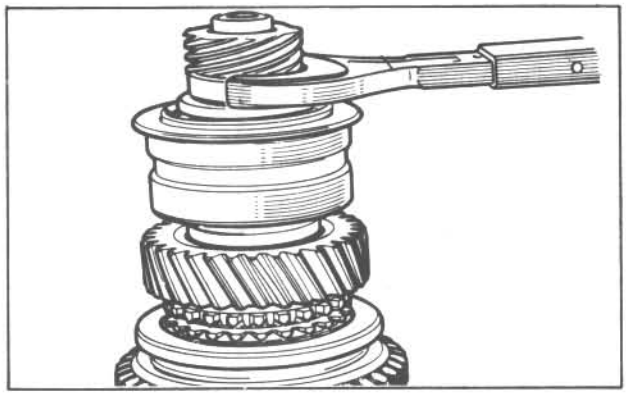

Fig. H:14 Unscrewing speedo drive gear

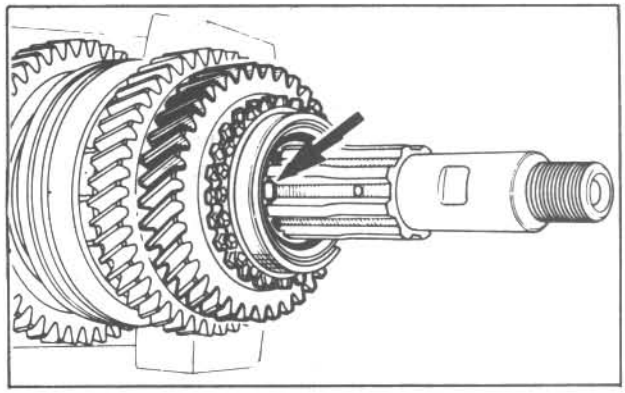

Fig. H:15 Stop washer retaining key

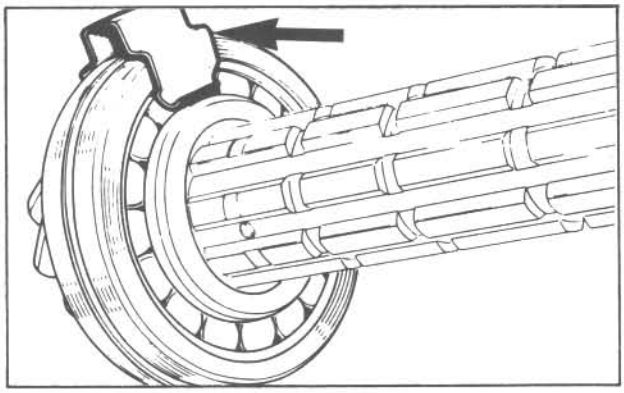

Fig. H:16 Bearing retaining clip

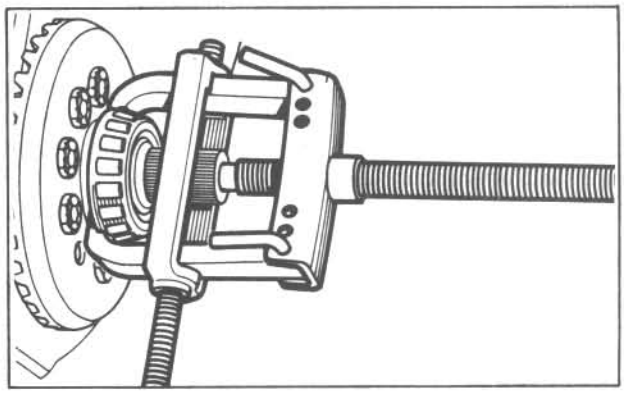

Fig. H:17 Drawing off differential side bearing

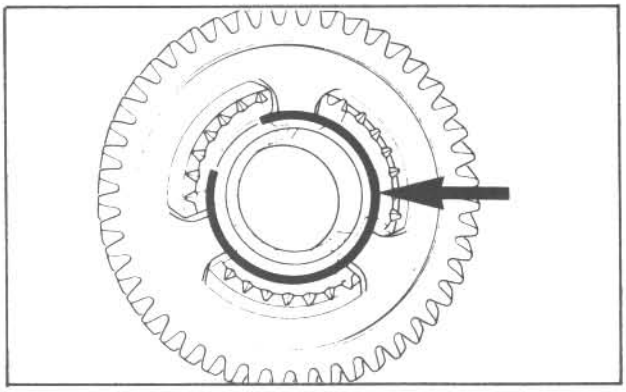

Fig. H:18 First gear synchro spring

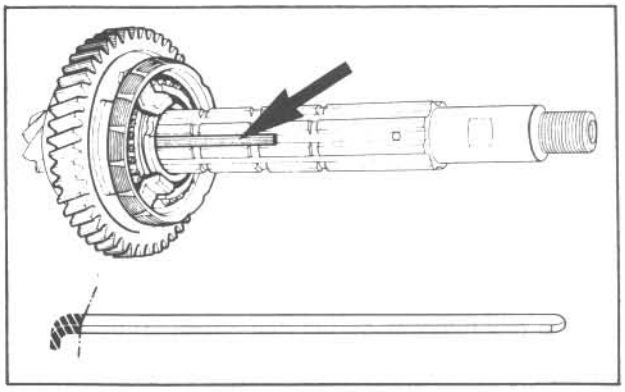

Fig. H:19 Fitting dummy spline key

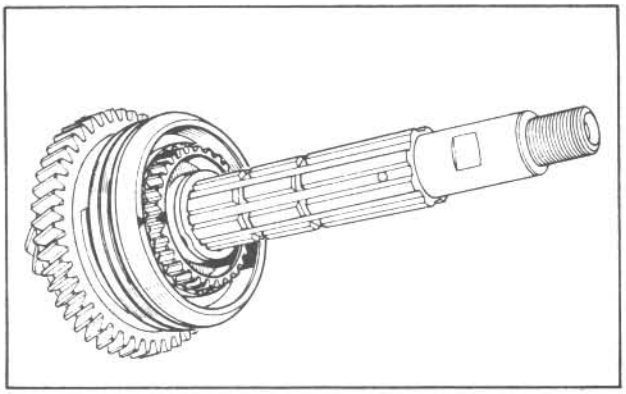

Fig. H:20 Fitting 1st - 2nd synchro

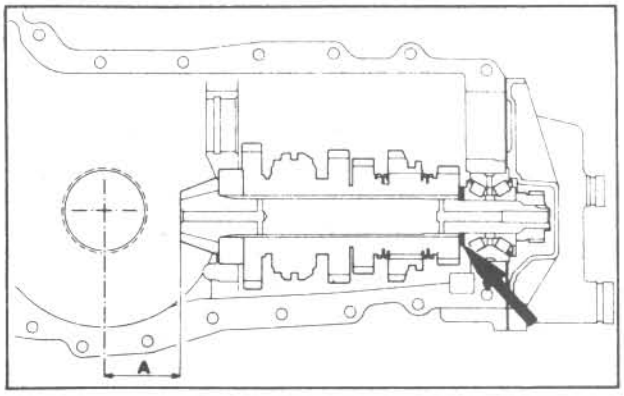

Fig. H:21 Pinion protrusion and spacing washer

chapter.

15. Using a two legged puller, draw off the two differential side bearings. To enable the legs of the puller to be located under the edge of the bearing track, two diametrically opposed bolts should be removed (Fig. H:17). These bolts must be tightened to the correct torque - see TECHNICAL DATA, when the new bearings have been fitted.

Component Wear Check

Examine all the gear teeth for excessive wear or damage. Check all bearings for excessive wear, pitting or roughness. Check also for bearing tracks that are loose in the casing.

The 'dog' - teeth on the gearwheels must be examined for chipping or breakage and the synchroniser cone projection on each gear must not in any way be rough or pitted. It is advisable to determine synchroniser cone or sleeve wear by fitting the sleeve into its corresponding cone and attempting to rotate it while pressing it fully home.

If the sleeve can turn easily, this is indicative of wear, either of the cone or of the sleeve itself and the faulty components can be isolated by repeating the test with a new synchroniser sleeve.

All the roll pins, gaskets and oil seals hould be replaced as a matter of course and the casing and all components, whether new or original, should be thoroughly cleaned before the gearbox is reassembled.

Reassembly

1. Fit the spring to the first gear synchro assembly, positioning the ends so that it overlaps all three slots (Fig. H:18).
2. Place the 2nd gear synchro hub in an oven and heat up until the whole unit is at 120 degrees C. This will take at least 15 minutes in a pre - heated oven.
3. Assemble the 1st gear onto the secondary shaft so that it is positioned against the pinion bearing. Fit the synchro ring followed by the stop washer. Turn the washer until the keyway is aligned with a spline having an oil hole at the speedometer drive gear end.
4. Fit a dummy spline key as shown in Fig. H:19, which can easily be made from a standard washer retaining key by cutting the lug from the end.
5. Remove the 1st and 2nd gear hub from the oven using a pair of thick gloves or other suitable insulating material. Slide it onto the secondary shaft with the recessed side of the splined centre facing the 1st gear and an unsplined segment aligned with the dummy spline key.
6. Position the synchro ring centrally, with the lugs below the level of the stop washer, to avoid straining the spring. Press the hub down until it contacts the stop washer and allow sufficient time for it to cool before releasing the pressure. Pull out the dummy spline key.
7. Slide the 1st and 2nd synchro sliding gear onto the hub with the chamfer facing away from the final drive pinion and the alignment marks positioned as shown in Fig. H:20.
8. Align the splines of the hub stop washer with the shaft and slide the washer into position.
9. Assemble the 2nd gear synchro spring to the gear as previously described for the 1st gear. Slide the 2nd gear and its synchro ring onto the shaft and fit the stop washer with the splines aligned with those on the shaft.
10. Slide the third gear and sychro ring onto the shaft, align the splines of the stop washer with those on the shaft, and push the washer down until it contacts the hub.
11. Slide the stop washer retaining key into one of the spline grooves with the feed hole at the threaded end of the shaft.
12. Press the 3rd and 4th gear synchro hub onto the shaft until it butts against the stop washer for 3rd gear.

The notch in the hub should face towards the 3rd gear and be aligned with the stop washer retaining key. The three keys must be aligned with the three notches in the synchro ring.

13. Fit the 4th gear and synchro ring, followed by the pinion adjusting washer (removed during dismantling), the double track roller bearing and the speedometer drive pinion.
14. Grip the 1st gear in a soft jawed vice, select 1st gear and tighten the speedometer drive gear using an open ended adaptor in a torque wrench. See TECHNICAL DATA for correct torque specification.

Reassembly - Primary Shaft

1. Using a piece of tubing that fits closely over the primary shaft, drift the bearings onto each end of the shaft. Alternatively they can be pressed into position if suitable equipment is available.
2. Before the primary shaft is installed in the gearbox the pinion protrusion (A, Fig. H:21) must be checked and reset if found to be incorrect. This operation can only be carried out with the aid of Renault Special Tools B. Vi. 239-01 and B. Vi. 239-02. and is an operation best undertaken by a Renault dealer.

However if the gearbox is being reassembled using the original parts (other than the bearings, which can be replaced without significantly upsetting the pinion protrusion), it will be satisfactory to use the original spacer washer, in which case the speedometer drive gear must be locked in position with the washer provided.

3. Assemble the outer bearing tracks on the primary shaft bearings and slide the adjusting washer on the clutch quill shaft end.
4. Lay the right hand section of the gearbox casing on the bench and fit, firstly the primary shaft assembly and then the secondary shaft assembly.
5. The relative position of the two shafts must be adjusted so that the overlap R, Fig. H:22, is equal on both gears. Adjustment is effected by using washers of different thickness between the end bearing and the housing sleeve.
6. Reassemble the selector mechanism in the reverse order of dismantling.
7. Smear non-setting gasket compound on the mating surfaces of the gearbox casing and bolt the two halves together. The bolts must be tightened in the order shown in

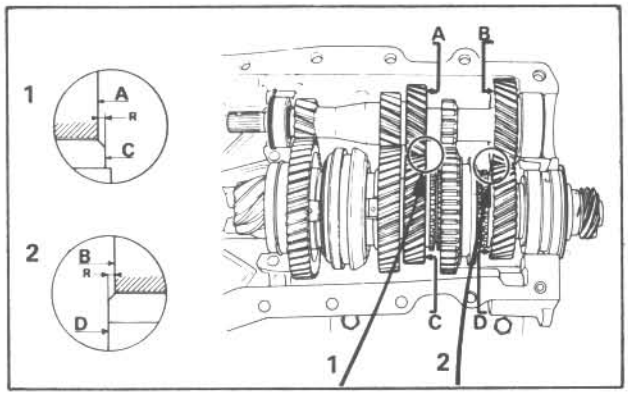

Fig. H:22 Relative position of gear shafts

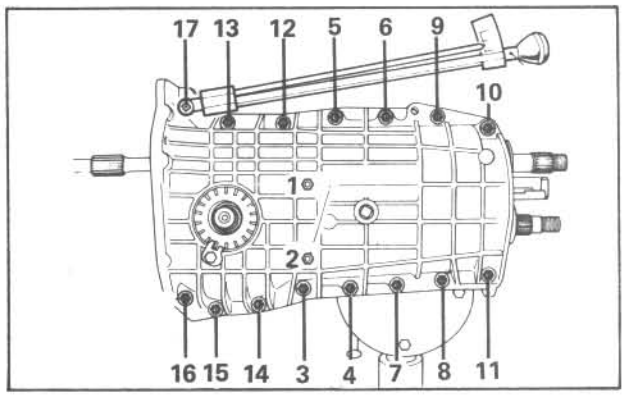

Fig. H:23 Tightening sequence for casing bolts

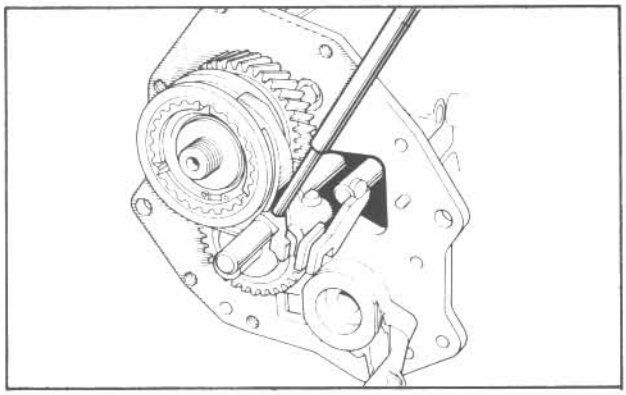

Fig. H:24 Removing 5th gear selector fork

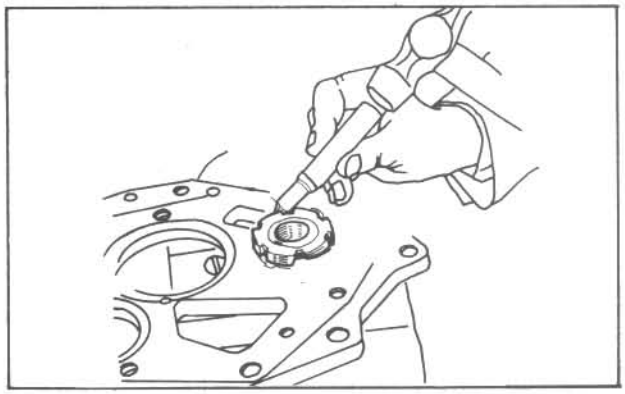

Fig. H:25 Removing interlock pivot

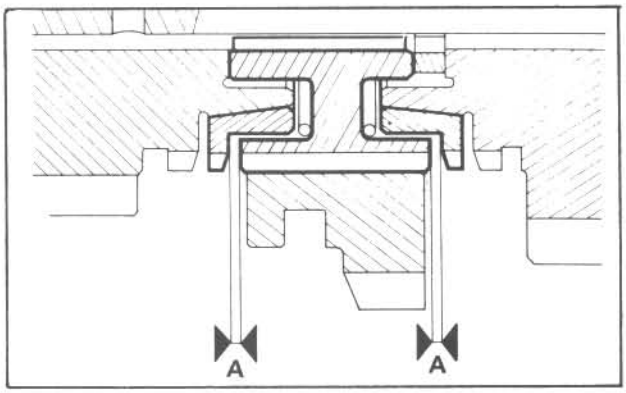

Fig. H:26 Checking synchro clearance

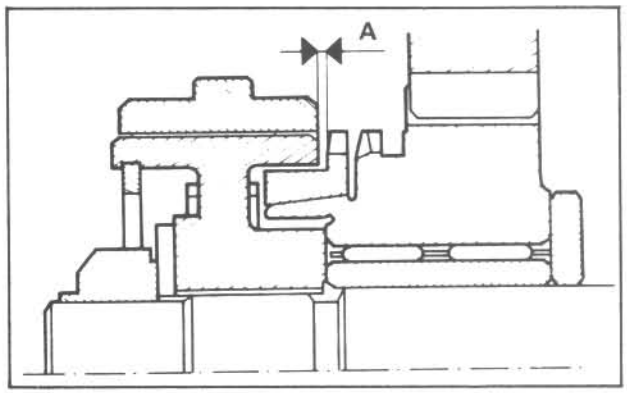

Fig. H:27 5th gear synchro clearance

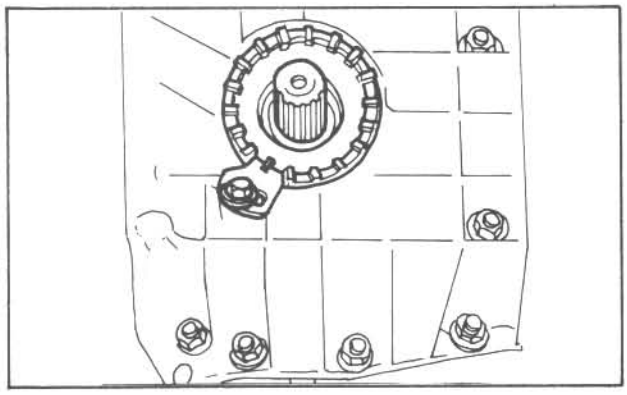

Fig. H:28 Differential ring nut lock plate

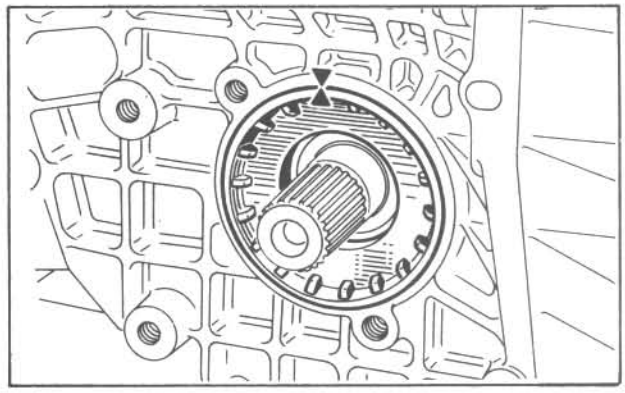

Fig. H:29 Differential bearing ring nut alignment

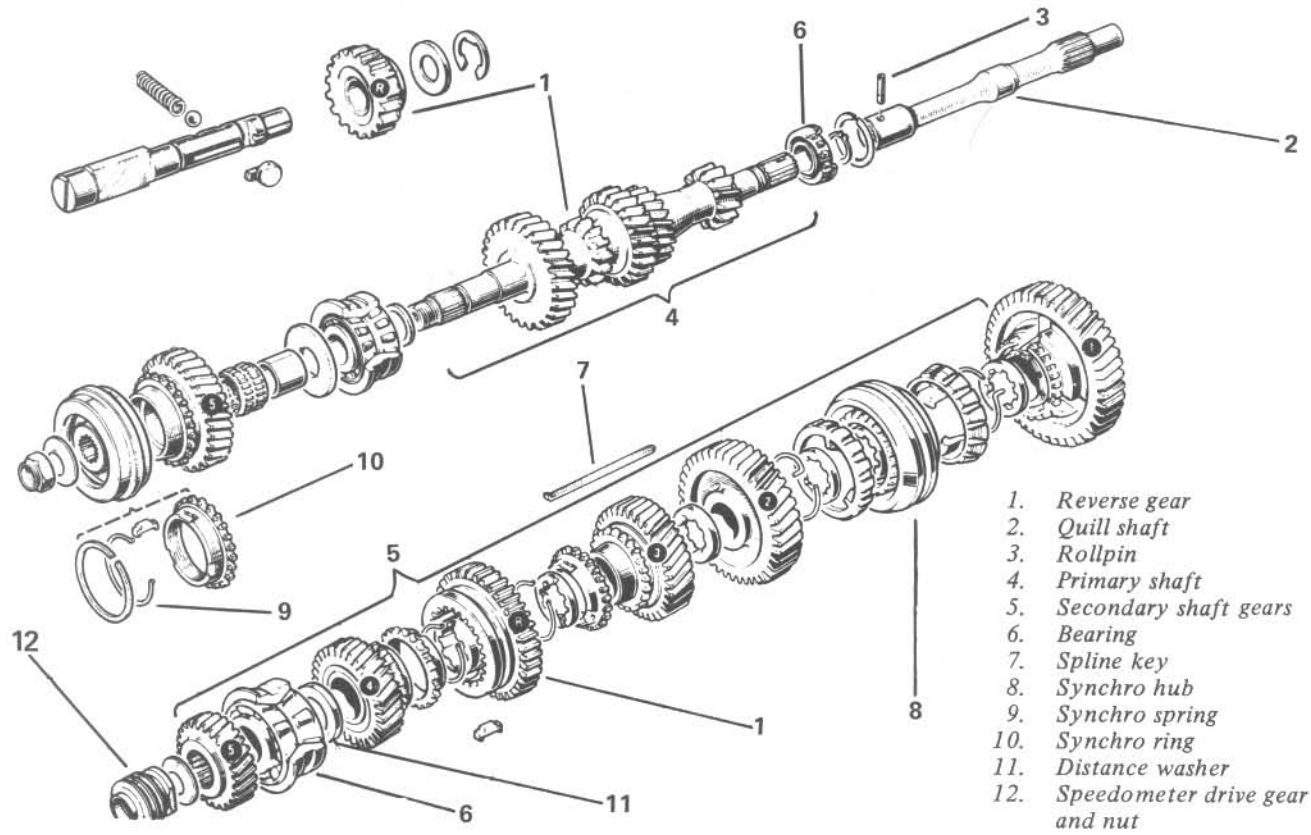

1. *Reverse gear*
2. *Quill shaft*
3. *Rollpin*
4. *Primary shaft*
5. *Secondary shaft gears*
6. *Bearing*
7. *Spline key*
8. *Synchro hub*
9. *Synchro spring*
10. *Synchro ring*
11. *Distance washer*
12. *Speedometer drive gear and nut*

Fig. H:30 Gearbox internal components - Model 395

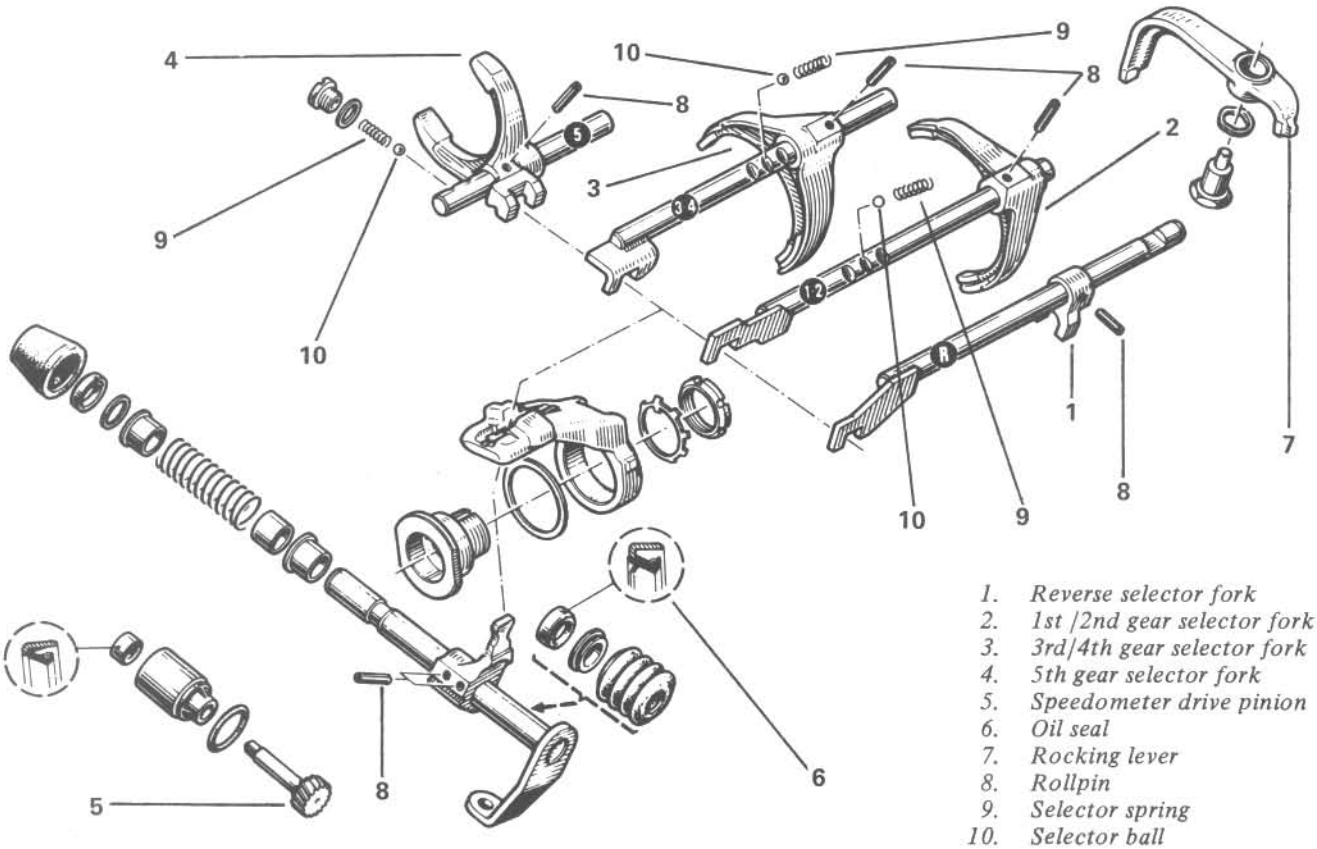

1. *Reverse selector fork*
2. *1st /2nd gear selector fork*
3. *3rd/4th gear selector fork*
4. *5th gear selector fork*
5. *Speedometer drive pinion*
6. *Oil seal*
7. *Rocking lever*
8. *Rollpin*
9. *Selector spring*
10. *Selector ball*

Fig. H:31 Gearbox selector mechanism - Model 395

Fig. H:23. The correct torque setting is given in TECHNICAL DATA.
8. Refit the two ring nuts to the differential side bearings, screwing them in the exact number of turns required to remove them and tighten until the alignment marks coincide.
9. Bolt on the rear selector housing and tighten the bolts to the correct torque - see TECHNICAL DATA.
10. Refit the clutch quill shaft and tap in a new roll pin. Wrap masking tape or insulating tape over the clutch plate driving splines to avoid damaging the clutch housing oil seal.
11. Refit the clutch housing and tighten the mounting bolts - see TECHNICAL DATA for correct torque setting.
12. Refit the reversing light switch and fill the gearbox with the correct grade of oil.

GEARBOX OVERHAUL (MODEL 395) . . . [10]

Overhaul procedures for the Model 395 gearbox are similar to the Model 352 detailed previously, however, where they differ, the details are given below.
1. Remove the rear selector housing cover as described in the 'Gear Selector Housing Oil Seal' section and then select reverse gear and 5th gear simultaneously so that the speedometer drive gear and 5th gear synchro hub nuts can be slackened.
2. Position the selectors in the neutral position and then select 4th gear. Drive out the roll pin for the 5th gear selector fork using a suitable pin punch (Fig. H:24).
3. Slide the 5th gear synchro hub, selector fork, 5th gear and needle bearing and ring off the shaft.
4. Undo the spacer plate fixing bolts and separate the plate from the rear of the gearbox casing.
5. Unscrew the interlock pivot by gently tapping around the edge using a soft metal drift (Fig. H:25).
6. Dismantle the remainder of the gearbox as previously described for the Model 352.

Reassembly

Reassemble the gearbox as described for the Model 352, with the following additional procedures.
1. After fitting the secondary shaft double track bearing, fit the spacer plate followed by the 5th gear, wave washer and the speedometer drive gear.
2. Tighten the drive gear using a torque wrench fitted with an open ended adaptor - see TECHNICAL DATA for specified torque.
3. With the synchro ring pressed tightly against the gear cone and the gear pressing against the hub, measure the clearance A, Fig. H:26, between the synchro hub rim and the 3rd gear synchro ring. The minimum clearance permissible is 0,2 mm.
4. Repeat the clearance check on the 4th gear synchro ring.
5. Assemble the 5th gear and selector fork in the reverse order of removal, using a new roll pin to secure the selector fork.
6. Select 5th gear and reverse simultaneously to lock the geartrain and tighten the primary shaft nut and the speedometer drive gear nut to the correct torque - see TECHNICAL DATA. Lock both nuts.
7. With the 5th gear synchro ring pressed tightly against the taper on the gear and the gear hard against the hub, check the clearance A, Fig. H:27. The minimum permissible is 0,2 mm.
8. Set the selectors in the neutral position and fit the rear selector housing, using a new gasket smeared with non setting gasket sealer. Engage the rocking lever into the slot in the selector shafts, position the housing and tighten the retaining bolts to the correct torque - see TECHNICAL DATA.
9. Fit the 5th gear locking ball with its spring and washer, smear the threads of the retaining plug with thread locking compound and tighten the plug in its bore.
10. Reassemble the remainder of the gearbox and clutch housing as previously described.

DIFFERENTIAL SIDE OIL SEALS . . . . . [11]

The oil seals are fitted to the differential adjusting ring nuts, which must be removed first for access to the seals. Because these ring nuts control the differential bearing adjustment it is essential that they are refitted in exactly the same position after the new seals have been fitted.

Replacement

1. Raise the front of the car and support on axle stands as described in the ROUTINE MAINTENANCE chapter.
2. Undo the gearbox drain plug and drain the oil into a suitable container. Refit the drain plug.
3. Disconnect the drive shafts as described in the Gearbox Removal section of this chapter.
4. Thoroughly clean the casing around the differential seal area.
5. Working on one side at a time, undo the bolt and remove the ring lock plate (Fig. H:28).
6. Using a punch or scriber, mark the exact position of the ring nut in relation to the gearbox casing (Fig. H:29).
7. With a hammer and suitable drift, gently tap the ring nut round to unscrew it and note the exact number of turns needed to remove it. Withdraw the ring carefully to avoid disturbing the differential.
8. Remove the old seal, noting which way round it is fitted in the housing. Clean the housing and fit a new seal, drifting it into position with the aid of a block of wood. Fit a new 'O' ring to the outside of the housing.
9. Carefully screw the ring nut back into the differential housing the exact number of turns required to remove it. The alignment marks made before removal should be positioned exactly opposite each other.
10. Refit the slotted lock washer and tighten the bolt.
11. Repeat the replacement procedure on the other ring nut seal. Replace the drive shafts in the reverse order of removal, smearing the shaft inner seals with oil to avoid damaging the seal lips.

CLUTCH & GEARBOX
Trouble Shooter

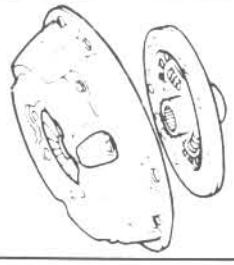

FAULT	CAUSE	CURE
CLUTCH		
Clutch slips	1. Driven plate lining worn 2. Driven plate lining contaminated with oil 3. Clutch incorrectly adjusted	1. Replace clutch assembly 2. Check cause and replace driven plate or clutch assy. 3. Adjust clutch (if adjustable)
Clutch drags - i.e. gear fails to engage smoothly	1. Faulty clutch operation on hydraulic type system 2. Clutch incorrectly adjusted 3. Driven plate sticking on hub shaft splines 4. Broken clutch pressure plate fingers 5. Broken release bearing or release arm	1. Check/overhaul/replace clutch hydraulic components 2. Adjust clutch (if adjustable) 3. Remove clutch, clean and lubricate splines with graphite 4. Check and replace pressure plate assembly 5. Check and replace components
Clutch grabs	1. Oil on driven plate lining 2. Driven plate cushion springs broken 3. Warped, or damaged pressure plate 4. Weak or broken engine mountings	1. Replace driven plate 2. Replace driven plate 3. Check pressure plate and replace if necessary 4. Check/replace mounting rubber
Scream from clutch pedal fully depressed	1. Worn release bearing or broken pressure plate/driven plate springs	1. Remove gearbox and check/replace spigot or release bearing
Constant noise/chatter from clutch - pedal released, disappearing when pedal depressed	1. Worn spigot bearing in flywheel or worn release bearing	1. Remove gearbox and check/replace clutch components
GEARBOX		
Gearchange difficult when cold	1. Incorrect grade of oil in gearbox 2. Clutch driven plate not clearing 3. Normal condition on some models. 4. Worn or incorrect adjustment on gearchange linkage	1. Check/replace gearbox oil with known correct grade 2. See Clutch drag 3. Check possible causes 1 and 2 4. Check for play in linkage joints. Replace and/or adjust.
Gearchange difficult when hot - gears grate	1. Worn synchromesh unit 2. Incorrect clutch adjustment	1. Overhaul or replace gearbox. 2. Check clutch adjustment
Constant moan or grating noise from gearbox	1. Insufficient oil in gearbox 2. Worn layshaft bearings 3. Worn front and rear mainshaft bearings	1. Check/top up gearbox oil 2. Overhaul or replace gearbox 3. Overhaul or replace gearbox
Oil leakage from bottom of clutch housing	1. Front bearing oil seal worn	1. Remove gearbox, clutch release mechanism and fit new oil seal
Oil leakage from rear of gearbox	1. Output shaft oil seal worn	1. Remove propshaft and replace output shaft oil seal

Automatic Transmission

INTRODUCTION.....[1]
CONTROL MECHANISM.....[2]
SELECTOR MECHANISM.....[3]
TORQUE CONVERTER OIL SEAL.....[4]
DIFFERENTIAL SIDE OIL SEALS.....[5]
TRANSMISSION REMOVAL.....[6]
TRANSMISSION INSTALLATION.....[7]
TORQUE CONVERTER DRIVE PLATE....[8]
TORQUE CONVERTER.....[9]
TROUBLE SHOOTER.....[10]

INTRODUCTION.....[1]

The automatic transmission unit fitted to Renault 18/ Fuego models is a Renault 4139 type consisting of a three-element torque converter and an electro-hydraulic controlled gear train (Fig. I:1).

An automatic gearbox is probably the most complicated part of any car, and it is for this reason that DIY overhaul procedures have been deliberately omitted from this section as specialised knowledge and tools are needed to carry out any repairs satisfactorily.

If there is any malfunction with an automatic gearbox, the first step must always be to check the fluid level and then carry out a thorough fault diagnosis check using a hydraulic pressure gauge and a special Renault electrical test unit to ascertain the cause of the trouble. The latter job must be done by an authorised dealer or a local Automatic Transmission specialist with the gearbox in the car. It is pointless to remove the gearbox from the car and dismantle it in the hope that the fault will be visible, for invariably it will not.

However, there are certain straightforward service, maintenance repairs and adjustments that can be done by the DIY owner and which may become necessary from time to time, and these are covered in detail in this section.

NOTE: Many drivers fail to realise how much the engine performance affects the correct operation of an automatic transmission. If the engine is in a bad state of tune or in need of overhaul, then this will have a marked effect on the automatic gearchange pattern and it will appear to be a gearbox fault when, in fact, the cause is due to the engine. In all cases of apparent automatic gearbox troubles, always check the fluid level and the engine tune first.

CONTROL MECHANISM.....[2]

Computer Replacement

1. Disconnect the battery.
2. Make a note of the wire connections, then disconnect the computer wiring harness and the connector block support.
3. Remove the sealed multi-plug protective shield.
4. Undo the two screws and detach the computer unit.
5. Turn the control shaft on the computer to the maximum position - this corresponds to the 1st gear Hold position.
6. Set the lever (A, Fig. I:2) on the transmission in the 1st gear Hold position.
7. Fit new spacers to the computer unit then place it in position. Fit the securing screws but do not tighten them at this stage.
8. Turn the lever (A, Fig. I:2), and the computer unit in the direction shown by the arrow in Fig. I:2, without using any force. The latter is to ensure that the manual valve is correctly lined up.
9. Tighten the computer unit screws sufficiently to secure the unit without compressing the plastic distance pieces.
10. Reconnect the wiring harness to the computer unit after making sure that the terminals are locked in the two blocks. Refit the sealed multi-plug shield.
11. Reconnect the battery.

Governor Replacement

1. Disconnect the battery.
2. Disconnect the control cable nipple from the slot in the quadrant then slacken the adjusting sleeve nuts and detach the cable from the bracket. Disconnect the wiring harness from the connector block (Fig. I:3).
3. Undo the three bolts securing the governor unit to the transmission and withdraw the governor (Fig. I:3).
4. Clean the mating surfaces of the transmission and governor, then smear them with gasket jointing compound. Fit a new gasket to the transmission flange and fit the governor unit.
5. If it is difficult to slide the governor into position, carefully guide it in, turning the speedometer gear slightly at the same time. Refit the governor securing bolts.
6. Reconnect the wiring harness to the connector block, making sure that the two clips on the printed circuit are tight.
7. Reconnect the control cable to the governor quadrant and adjust the sleeve stop 4, Fig. I:3, to the middle position.
8. Connect the control cable to the carburettor, if necessary (Fig. I:4), then wedge the throttle fully open with a piece of wood.
9. Slacken the locknut and adjust the control cable at

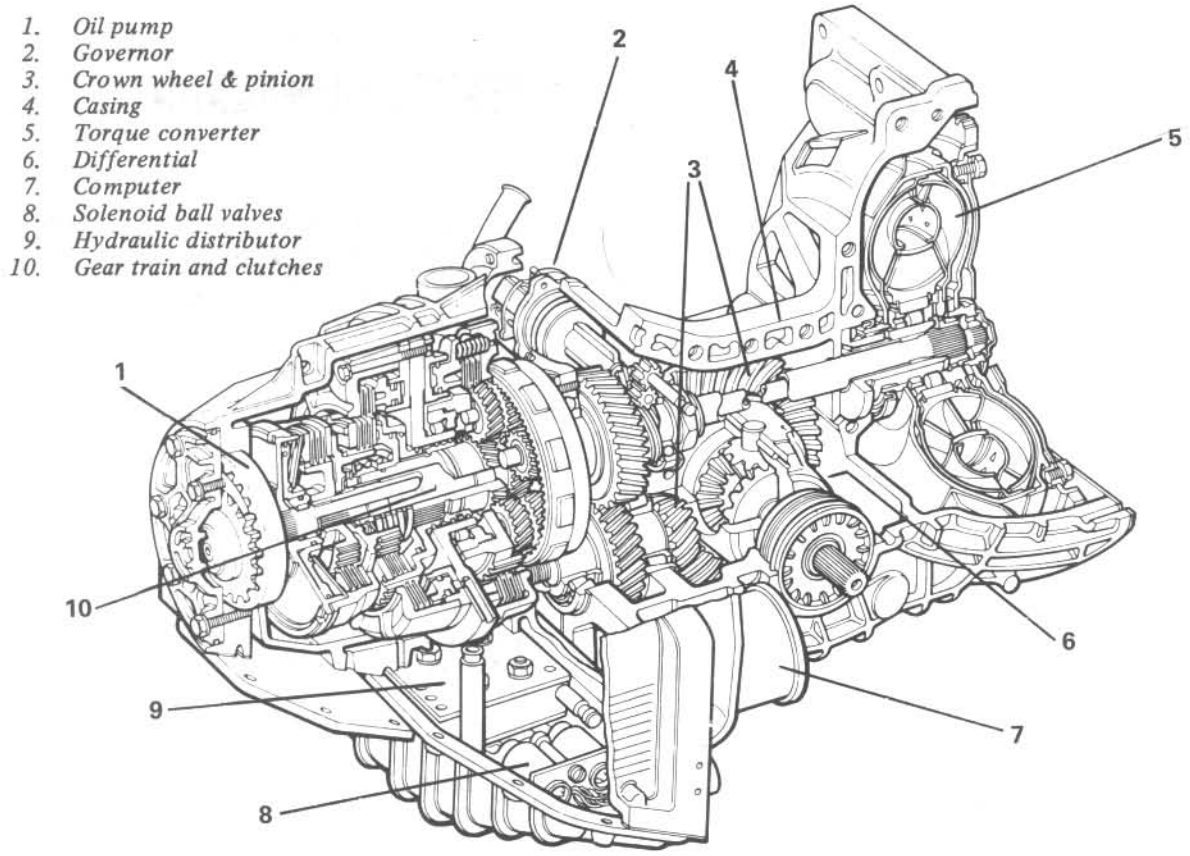

Fig. I:1 General layout of automatic transmission components

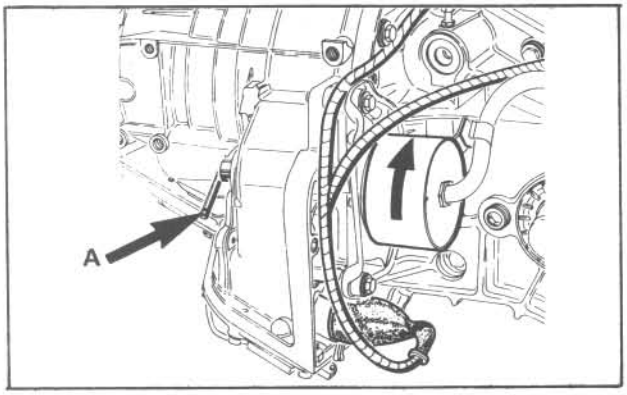

Fig. I:2 Positioning the computer unit

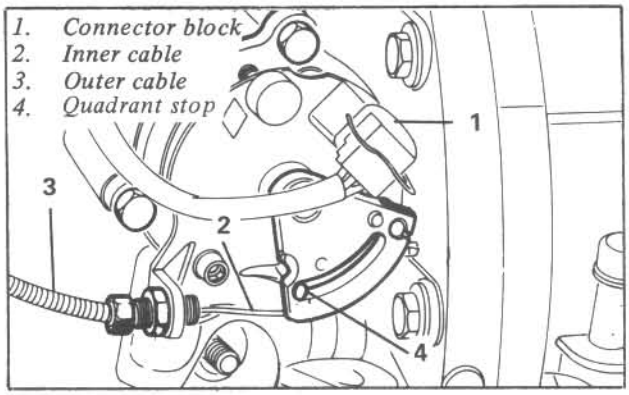

Fig. I:3 Governor cable connections

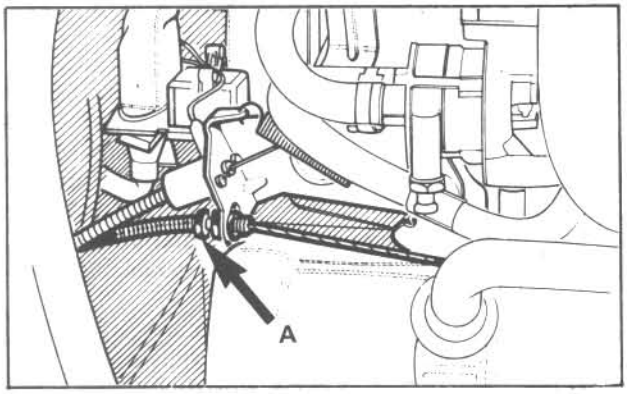

Fig. I:4 Governor cable connection to carburettor

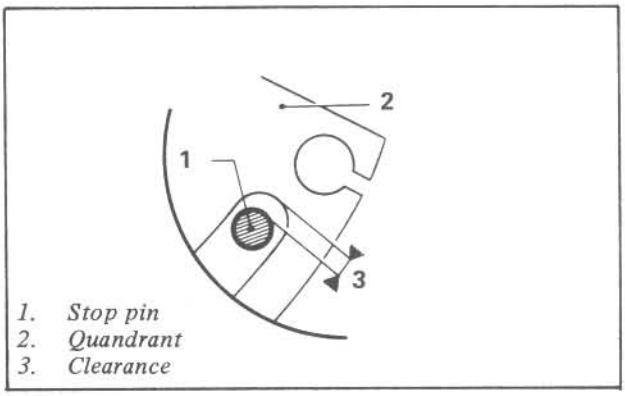

Fig. I:5 Governor cable quadrant

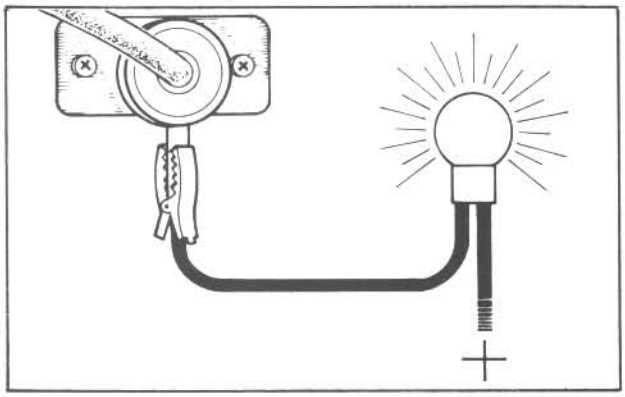

Fig. I:6 Kick-down switch test circuit

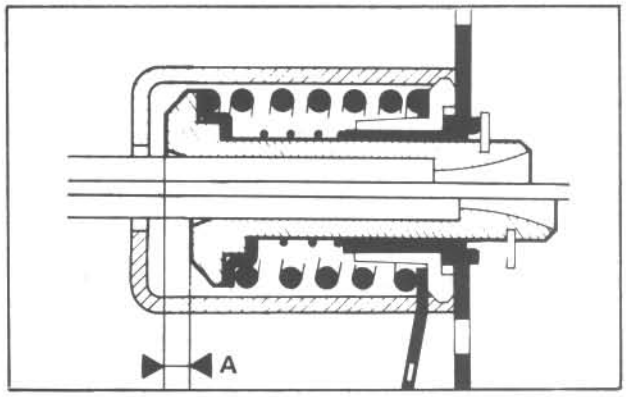

Fig. I:7 Kick-down switch adjustment

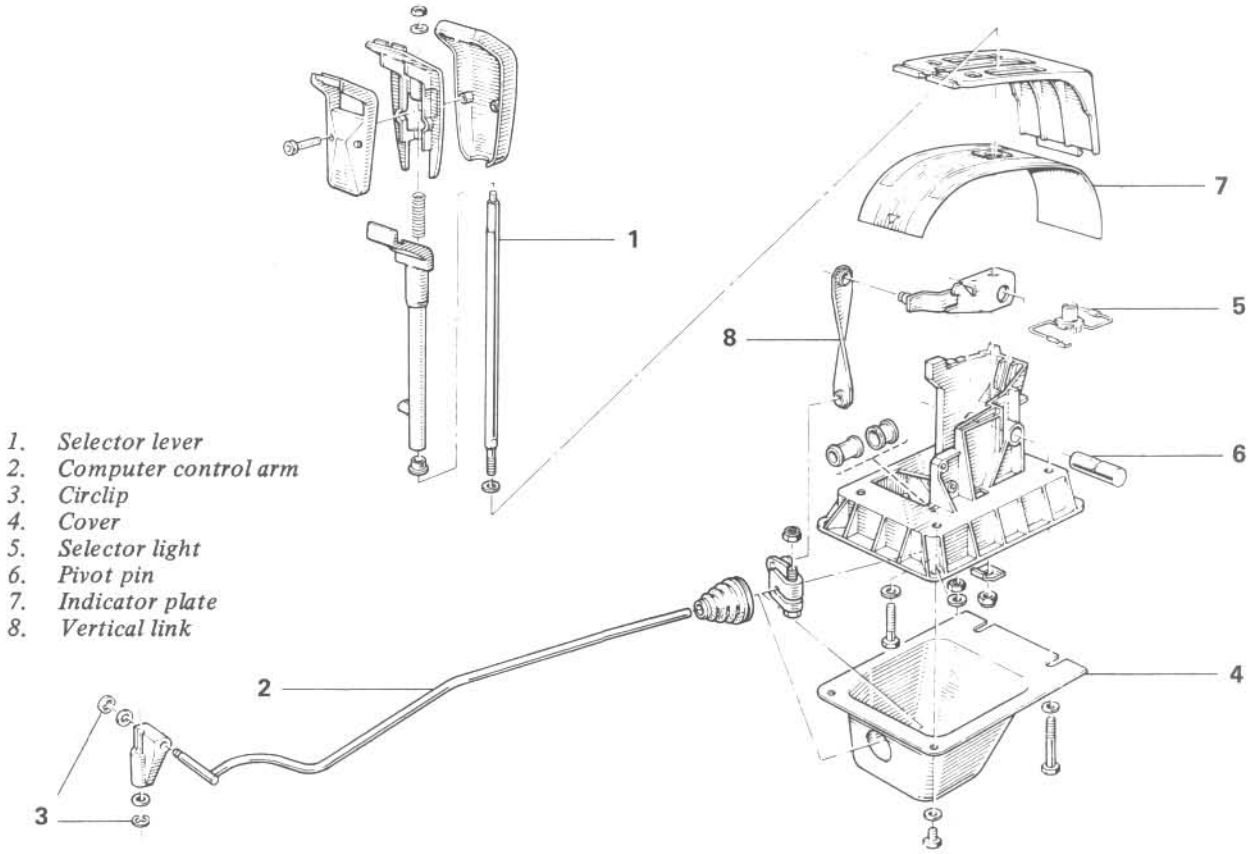

1. *Selector lever*
2. *Computer control arm*
3. *Circlip*
4. *Cover*
5. *Selector light*
6. *Pivot pin*
7. *Indicator plate*
8. *Vertical link*

Fig. I:8 Gear selector linkage components

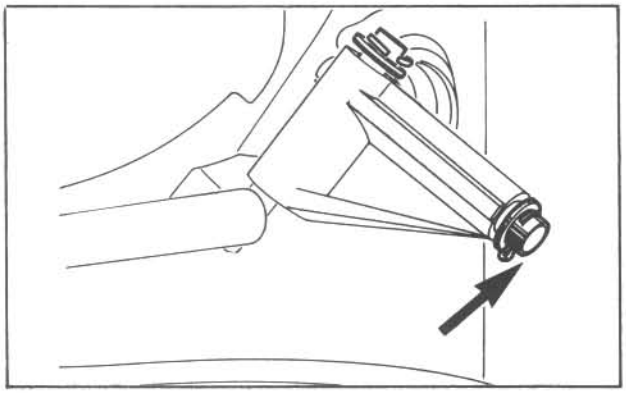

Fig. I:9 Computer control arm circlip

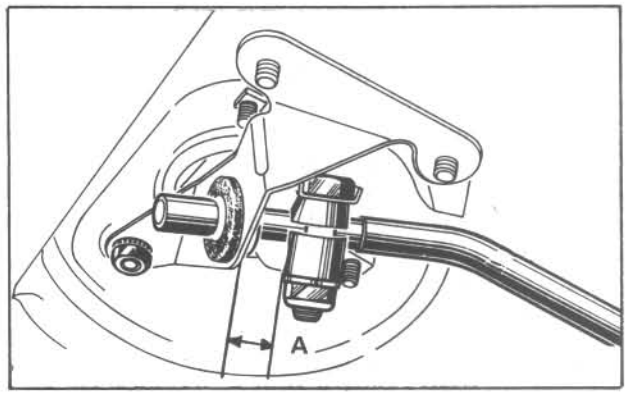

Fig. I:10 Operating arm adjustment

the governor end to take up any slack in the inner cable by turning the outer cable sleeve stop (A, Fig. I:4).
10. Check the inner cable adjustment. The clearance between the pin 1, Fig. I:5, and the end of the quadrant slot should be 0.2 - 0.7 mm. If necessary, turn the outer cable sleeve to obtain the correct clearance, then tighten the locknut.

Kick-down Switch - Checking

The operation of the kick-down switch can be checked using a test bulb connected between the switch and the battery positive(+) terminal.

Connect up the test bulb circuit as shown in Fig. I:6. With the accelerator pedal in the fully depressed (kick-down) position, the bulb should light up. If the bulb fails to light, check the wiring connections first, before replacing the switch.

Kick-down Switch - Replacement

1. Remove the throttle cable as described in the FUEL SYSTEM chapter.
2. Disconnect the battery.
3. Disconnect the kick-down switch wiring.
4. Undo the two screws retaining the kick-down switch and remove the switch.
5. Position the switch, refit and tighten the retaining screws.
6. Reconnect the switch wiring and the battery.
7. Refit the throttle cable.
8. The kick-down switch position is set by adjusting the throttle cable upper stop sleeve. The cable should have enough initial play to give 3-4 mm movement at the stop sleeve (A, Fig. I:7), when the throttle pedal is fully depressed. If necessary alter the position of the stop sleeve to obtain the correct clearance.

NOTE: As the throttle cable, kick-down switch, and the governor cable all work in close relationship to each other, it is recommended that they are all checked and adjusted at the same time.

SELECTOR MECHANISM . . . . . [3]

Removal

1. Disconnect the battery, then move the selector rod to the neutral (N) position.
2. Raise and support the front of the car as described in the ROUTINE MAINTENANCE chapter.
3. Working under the car, remove the circlip from the computer unit control arm (Fig. I:9).
4. Remove the cover from the lower part of the control, then unscrew the nuts on the fork end and control rod bracket (Fig. I:8).
5. Remove the control rod.
6. Working inside the car, remove the selector lever gate by sliding it out and disconnect the wires to the starter inhibitor switch and selector light.
7. Undo the lever bracket fixing bolts and remove the bracket and selector lever as an assembly.

Installation

1. Place the selector lever and the computer unit in the neutral (N), 4th notch, position and refit the selector lever assembly in the reverse order of removal.
2. Adjust the operating arm so that dimension A, Fig. I:10, is 15 mm, then tighten the pinch bolt to the correct torque setting - see TECHNICAL DATA.
3. Refit the cover and reconnect the battery.
4. Remove the axle stands and lower the car to the ground.

TORQUE CONVERTER OIL SEAL . . . . . [4]

Replacement

1. Remove the transmission unit as described in the appropriate section of this chapter.
2. Carefully withdraw the torque converter from the transmission mainshaft splines.
3. The oil seal is located just inside the end of the transmission casing, and its replacement is straightforward, however, as the seal is recessed, a measurement should be taken of how far it is positioned into the bore for correct installation. This can be easily done using a steel ruler and measuring the depth on a piece of wood or stiff card.
4. Lever out the old seal using a thin screwdriver or similar tool, taking great care not to damage or score the seal bore (Fig. I:11).
5. Carefully clean the seal bore and the surrounding area using a non-fluffy cloth.
6. Lubricate the seal lip with automatic transmission fluid then place the seal, with the lip facing inwards towards the transmission, into the bore chamfer.
7. Using a tubular drift (a suitably sized socket is ideal), bearing on the outer rim of the seal (Fig. I:11), drive the seal into place until it is in the same position as the original seal.

NOTE: It is very important that the seal is installed squarely in the bore to avoid premature wear. Check to see that it is installed correctly by comparing the depth at four points around the seal flange.

8. Clean the sleeve of the torque converter which contacts the seal lip, smear the sleeve with automatic transmission fluid and refit the converter to the transmission shaft.

DIFFERENTIAL SIDE OIL SEALS . . . . . [5]

These oil seals are fitted in the differential adjusting ring nuts and the replacement procedure is identical to that for the manual transmission described in the previous chapter.

TRANSMISSION REMOVAL . . . . . [6]

The transmission can be removed with the engine as one unit, but for practical reasons, such as weight, it is

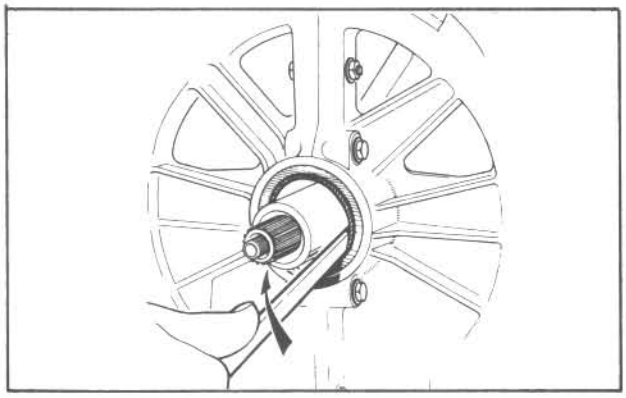

Fig. I:11 Levering out torque converter seal

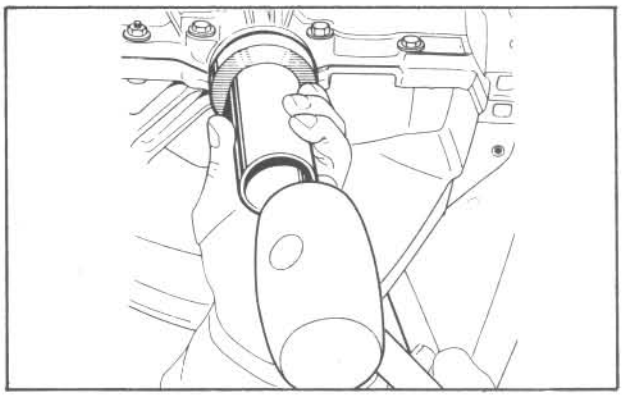

Fig. I:12 Installing torque converter seal

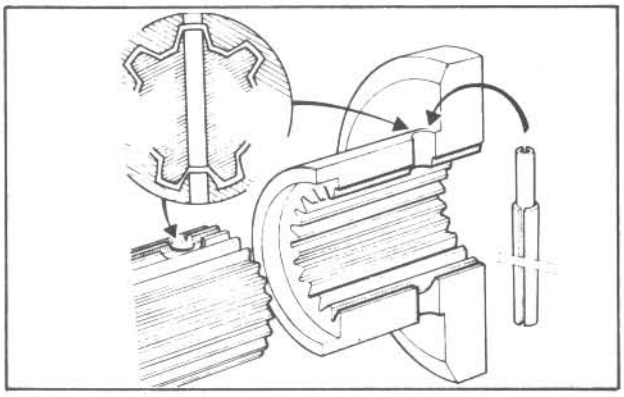

Fig. I:13 Driveshaft roll pin location

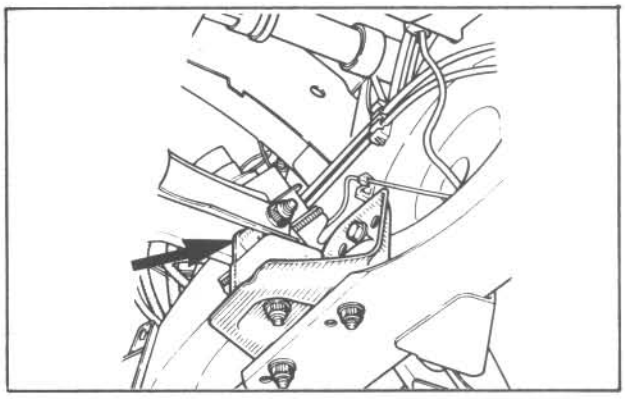

Fig. I:14 Transmission mounting pad

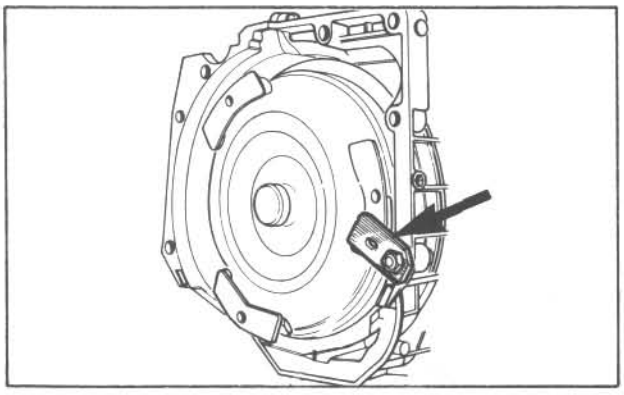

Fig. I:15 Torque converter retaining plate

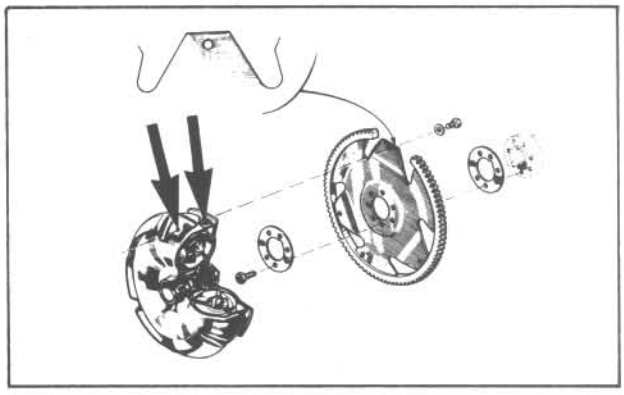

Fig. I:16 Torque converter alignment

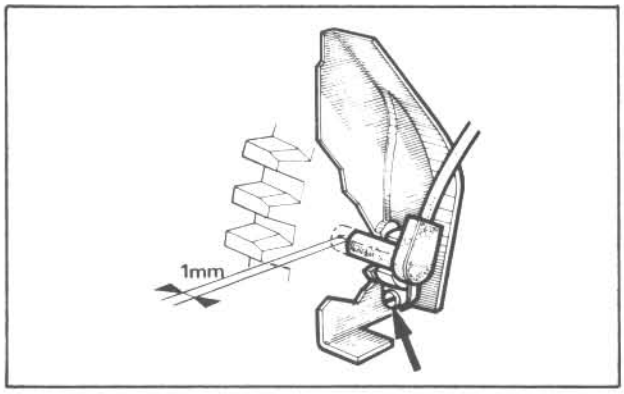

Fig. I:17 TDC pick-up adjustment

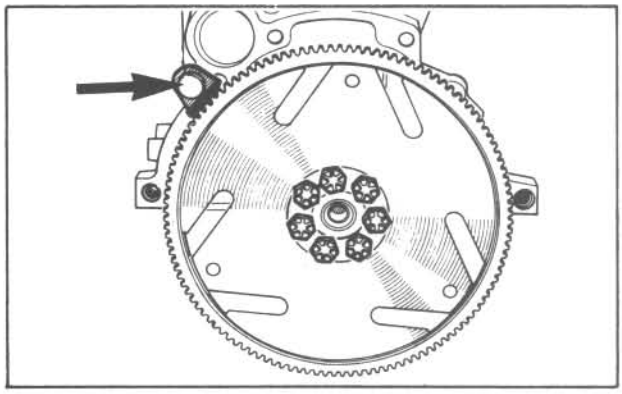

Fig. I:18 Engine locking tool in position

best removed on its own from under the car in a similar way to the manual gearbox as follows:

1. Disconnect the battery and the wiring harness to the transmission controls.
2. Undo the starter fixing bolts and the rear mounting and withdraw the starter to the rear.
3. Fit a spacer strut to the front suspension each side as described in the FRONT SUSPENSION chapter. Raise and support the front of the car as detailed in the ROUTINE MAINTENANCE chapter.
4. Drain the transmission fluid as described in the ROUTINE MAINTENANCE chapter.
5. Using a suitable thin drift and a hammer, knock out the roll pins securing the drive shafts to the differential shafts (Fig. I:13).
6. Remove both front wheels and undo the nuts securing the upper arm ball joint and the steering arm on both sides.
7. Using a ball joint taper breaking tool, disconnect the joints and tilt the brake disc/hub carrier assembly down to withdraw the inner part of the drive shaft from the differential. Repeat the operation on the other side.
8. Disconnect the governor control cable and the wiring from the governor and computer.
9. Disconnect the vacuum capsule pipe.
10. Disconnect the reversing light switch wiring and the speedometer cable.
11. Move the gear selector lever to the Neutral position and prise the circlip from the computer control finger.
12. Remove the T.D.C. pick-up support plate.
13. Prevent the engine from turning by fitting Renault special tool number Mot. 582 (Fig. I:18), or alternatively by using the blade of a large screwdriver wedged in the ring gear teeth and held by an assistant. Undo the three bolts holding the converter to the drive plate, turning the unit and then relocking it after each bolt has been slackened.
14. Disconnect the exhaust downpipe at the manifold.
15. Undo the transmission mounting pad bolts each side (Fig. I:14), and remove the two mounting pads.
16. Place a trolley jack under the transmission, using a block of wood to spread the load. This must be positioned so that as the unit is lowered it does not topple off the jack.
17. Undo the bolts holding the transmission unit to the engine and draw the unit away from the engine being careful to ensure that no pipes or wires are caught up.

TRANSMISSION INSTALLATION . . . . . [7]

Installation is a reversal of the removal procedure with special attention being paid to the following points:

1. Position the torque converter so that the fixing boss that is in line with the distributor timing hole aligns with the arm of the drive plate which is machined to a sharp angle and is identified with a paint mark (Fig. I:16).

NOTE: If the drive plate bolt holes are not in line the transmission will have to be removed again as the drive plate cannot be turned in relation to the converter once the transmission is bolted on.

2. Tighten the torque converter mounting bolts progressively so that it locates correctly and does not distort the drive plate - see TECHNICAL DATA for the correct torque setting.
3. Refit the T.D.C. pick-up mounting plate and set the distance between the drive plate and the pick-up housing so that the clearance (A, Fig. I:17), is 1 mm. The easiest way to obtain this clearance is to push the pick-up in until it touches the drive plate, mark the position of the clamp (B, Fig. I:17) and then pull the pick-up out by 1 mm.
4. Fill the transmission with the correct grade of fluid as detailed in the ROUTINE MAINTENANCE chapter.
5. Don't forget to remove the front suspension spacer struts.
6. Pump the brake pedal several times to bring the pads into contact with the discs before taking the car on the road.
7. Reconnect the governor cable and adjust as described in the 'Governor Replacement' section earlier in this chapter.

TORQUE CONVERTER DRIVE PLATE . . . . [8]

The starter ring gear is welded to the drive plate and if the teeth are worn, the complete plate must be replaced.

Replacement

1. Remove the gearbox and torque converter as previously described.
2. Prevent the engine from turning by fitting Renault special tool number Mot. 582 (Fig. I:18), or alternatively by using the blade of a large screwdriver wedged in the starter ring gear teeth and held by an assistant.
3. Undo the seven bolts retaining the drive plate to the crankshaft and remove the plate and locking washers.
4. Install in the reverse order of removal and tighten the mounting bolts to the correct torque - see TECHNICAL DATA.

TORQUE CONVERTER. . . . . [9]

Replacement

1. Remove the transmission from the car as described previously in this chapter.
2. Carefully withdraw the torque converter from the transmission shaft splines.

NOTE: The converter will still contain a substantial amount of fluid.

3. If the converter is known to be faulty, it cannot be repaired, only replaced.
4. Fit the converter in the reverse order of removal, remembering to clean and lubricate the oil seal sleeve with automatic transmission fluid to avoid damaging the seal lip.
5. Install the transmission in the reverse order of removal as detailed earlier in this chapter.

AUTOMATIC TRANSMISSION

Trouble Shooter

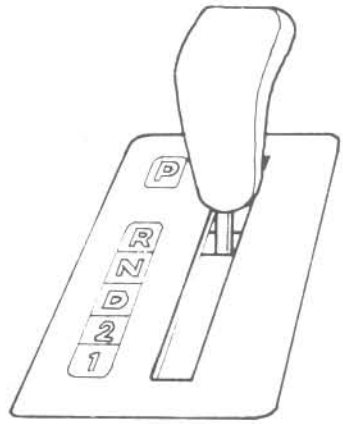

As detailed in the Introduction at the beginning of this chapter, the engine performance should be checked before suspecting the automatic transmission which is generally very reliable.

There is a set test procedure for checking the probable cause of automatic transmission faults and which requires the use of special hydraulic pressure checking equipment and this should be done by a Renault dealer or automatic transmission specialist. However, there are visual checks which can be done by the DIY mechanic if the fault is a simple one, as follows.

FAULT	CAUSE	CURE
Car will not move with selector in any forward range	1. Insufficient fluid 2. Incorrect operation of manual selector lever 3. Transmission locked by parking pawl 4. Internal transmission fault	1. Check/top up fluid 2. Check selector linkage for wear or adjust 3. Check selector linkage for wear or adjust 4. Consult dealer
Car will not move with selector in 'R' position	1. Incorrect operation of manual selector lever 2. Internal transmission fault	1. Check selector linkage for wear or adjust 2. Consult dealer
Slow acceleration	1. Maladjusted or worn engine 2. Binding rear brakes 3. Incorrect carburettor throttle opening or downshift adjustment 4. Internal transmission fault	1. Check engine tune, cylinder compression test 2. Check braking system 3. Check carburettor throttle opening and downshift adjustment 4. Carry out Stall Test, consult dealer
Car will start with selector in any position	1. Faulty/maladjusted inhibitor switch operation	1. Check operation of inhibitor switch/reversing light switch 2. Adjust/replace unit
Fluid leak from converter housing	1. Leaking oil seal either from engine or torque converter	1. Check colour of oil, reddish for automatic, black for engine, replace oil seal or consult dealer
Fluid leak from rear of transmission extension housing	1. Leaking oil seal	1. Replace oil seal or consult dealer

Steering

INTRODUCTION . . . . . [1]
FRONT WHEEL ALIGNMENT . . . . . [2]
TRACK ROD END JOINTS . . . . . [3]
STEERING RACK BELLOWS . . . . . [4]
STEERING WHEEL & COLUMN ASSEMBLY [5]
MANUAL STEERING RACK ASSEMBLY . . . [6]
MANUAL RACK END BUSH . . . . . [7]
MANUAL RACK END BALLJOINT . . . . . [8]
POWER STEERING RACK . . . . . [9]
TROUBLE SHOOTER . . . . . [10]

INTRODUCTION . . . . . [1]

The steering system fitted to Renault 18 and Fuego models is of the rack and pinion type, with power assistance on some models. Complete overhaul of the rack unit is not a task recommended for the DIY mechanic, however, certain repair operations are covered in this chapter and these are the jobs which are most likely to need undertaking; these include:

Basic front wheel alignment.

Replacement of the track rod end joints, rack bellows, rack end bush and the rack end ball joints.

A helpful section on diagnosis is also to be found under 'Manual Steering Rack Assembly' and this will enable you to isolate the cause of any problem within the steering system.

We strongly recommend against the dismantling of the power assisted steering rack assembly because of the complexity of the mechanism. Any DIY work on PAS system should therefore be restricted to filling and bleeding of the hydraulic system and rack replacement. Any overhaul work should be done by a Renault dealer.

No special tools are required for overhaul work except for a conventional ball joint taper separator tool for disconnecting the track rod end joints, plus a pair of grips for undoing the rack end ball joint housing.

FRONT WHEEL ALIGNMENT . . . . . [2]

Toe Setting

The toe setting of the front wheels affects the stability and controllability of the car and also the wear characteristics of the front tyres.

The toe setting is the amount by which the wheels point inwards or outwards at the front in relation to each other (Fig. J:2). This is measured from the wheel rims at hub height and may be given either as a total dimension for both wheels or as an angular measurement for each wheel in degrees. When the wheels point inwards they are said to have toe-in, and toe-out when they point outwards.

Ideally the front wheel toe setting should be checked after any repair or overhaul operation in which a steering or suspension component has been removed, or its location altered. It should also be checked if the front wheels have been subjected to heavy impact, such as hitting the kerb - (even at low speeds) when parking, for example.

A reasonably accurate indication of whether or not the front wheels are correctly aligned can be gained by examining the wear pattern of the tyre treads. The presence of 'fins' or 'feathers' on the tread surface are an indication of incorrect alignment. This condition takes the form of a sharp 'fin' on the edge of each pattern rib, and the position of this indicates the direction of misalignment. Fins on the outboard edges indicate excessive toe-in, whereas fins on the inboard edges of the pattern ribs indicates excessive toe-out (see the ROUTINE MAINTENANCE chapter).

Preliminary Checking Conditions

Before attempting to check or adjust the front wheel toe setting, the following checks should first be carried out:

1. Check that there is no excessive wear or looseness in any of the steering or front suspension ball joints, bushes or mountings, or in the front wheel bearings.
2. Check that all tyres are inflated to their correct pressures.
3. Ensure that the car is in its normal unladen condition (i.e. spare wheel in place, luggage compartment empty, etc.).
4. Find the steering mid position as follows:

Turn the steering wheel as far as it will go in one direction and then make a mark at its top-most point. Turn it back as far as it will go and count the number of turns it makes in order to reach full opposite lock. Now turn it back by exactly HALF the number of turns in order to reach the steering centre point.

5. Position the car on level, horizontal ground. Bounce the car a few times at each corner to settle the suspension. Once this has been done, the ride height must not be disturbed either by jacking up the car or by someone sitting in it.

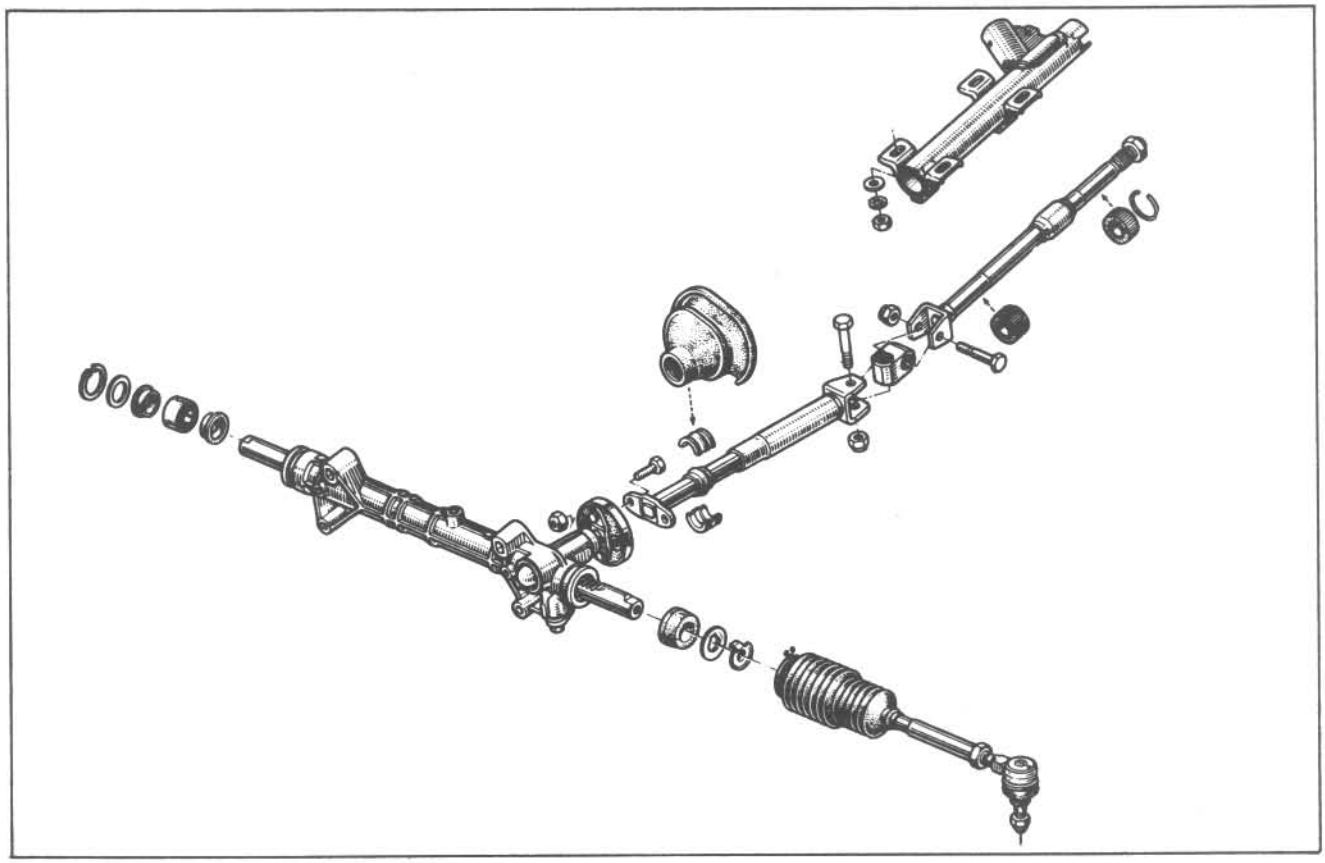

Fig. J:1 Details of the manual steering assembly

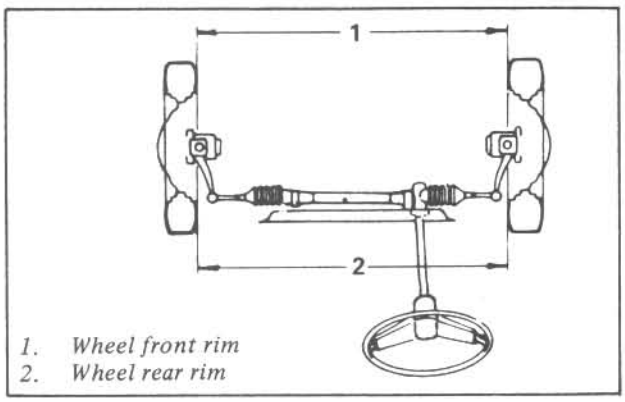

Fig. J:2 Checking front wheel alignment

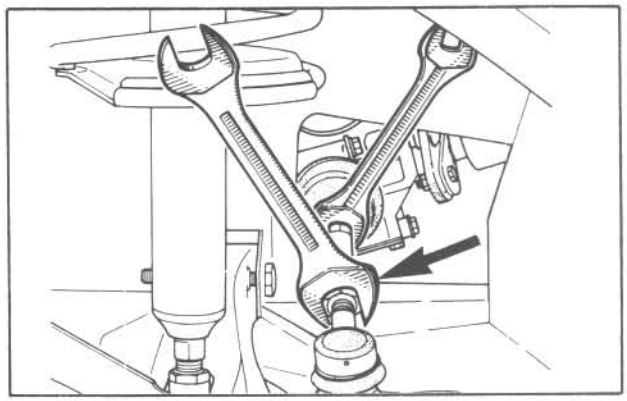

Fig. J:3 Slackening track rod end locknut

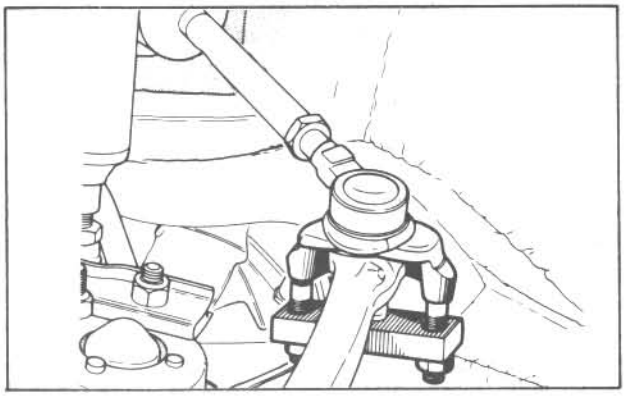

Fig. J:4 Separating track rod end joint

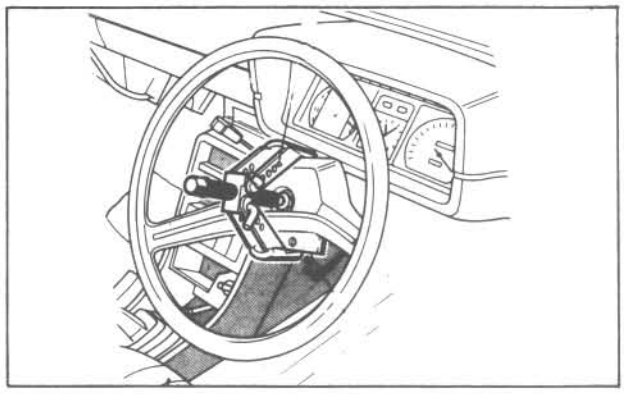

Fig. J:5 Steering wheel removal

6. With the front wheels in the straight-ahead position, roll the car forwards a few feet and stop it without using the brakes. It must not be moved backwards after this.

Checking & Adjusting

As stated previously, the front wheel toe setting can be checked and roughly set using a mechanical tracking bar. This should normally be treated only as a temporary measure, but if great care is taken a fairly accurate setting can be obtained.

For those unacquainted with this piece of equipment, a tracking bar is basically a telescopic rod which fits between the front wheel rims with a pair of stands to set it at the correct height. The length of the rod is adjustable and can be locked in position by a wing nut. It should be possible to obtain a tracking bar from a tool hire shop.

1. Position the tracking bar in front of the front wheel axis and adjust its length so that the bar ends are at the wheel rims at hub height. Note the reading on the bar scale.
2. Similarly, take a second reading of the distance between the wheel rims, this time behind the wheel axis.
3. The difference by which the first reading differs from the second reading will give the existing toe setting figure. The toe setting is given in the TECHNICAL DATA.
4. If necessary, to minimise the possibility of inaccuracy due to wheel rim run-out, the car can be moved forwards sufficiently to rotate the front wheels through 180° and the measuring procedure repeated. An average of the two readings can then be taken.
5. If adjustment is necessary, the track rods on each side should be adjusted equally.
6. Slacken the clips on the outer end of the bellows. To adjust the toe setting hold the track rod with a spanner and slacken the track rod end locknut (A, Fig. J:3). Grip the track rod with a self-locking wrench and turn it clockwise to increase the toe-in or anti-clockwise to increase the toe-out.
7. Retighten the locknut and the bellows clip. Both track rods should be approximately the same length after adjustment.

TRACK ROD END JOINTS . . . . . [3]

Replacement

Wear in the track rod end joint cannot be removed by adjustment. Renewal of the complete track rod end is necessary when worn.

1. Slacken the road wheel bolts and raise the front of the car as detailed in the ROUTINE MAINTENANCE chapter. Remove the wheels.
2. Slacken the track rod end joint locknut and remove the ball-pin securing nut.
3. Using a ball joint taper breaking tool, separate the track rod end joint ballpin from the steering arm (Fig. J:4).
4. Before unscrewing the joint from the track rod, count the number of threads visible. This will facilitate installation of the new joint to the correct position to ensure approximate wheel alignment.
5. Remove the joint and screw on the new one up to the correct number of threads. Tighten the locknut.
6. Install the ballpin in the steering arm, fit the securing nut and tighten to the correct torque. Refer to 'Front Wheel Alignment' for checking of the toe setting.

STEERING RACK BELLOWS . . . . . [4]

Replacement

If the rubber bellows is damaged or split it should be replaced as soon as possible. As a temporary measure, a plastic bag can be placed over the bellows to prevent dirt and water from getting inside and damaging the steering rack unit.

1. Remove the track rod end joint as described in the previous section. Count the number of turns required to remove the joint from the track rod. Unscrew the locknut from the rod.
2. Unscrew the clip securing the outer end of the bellows to the track rod, then repeat for the inner end clip.
3. Pull the bellows over the track rod and remove it. If the bellows has been damaged and water has entered, replace the existing lubricant. It is wise to turn the steering to full lock in order to expose as much of the rack as possible and to wipe any contaminated grease from it.
4. Clean the track rod to remove any dirt and check that there is no dirt remaining around the ball joint at the inner end of the track rod. If there is, it should be carefully wiped clean.
5. Fill the inside of the new bellows with the correct amount of lubricant (see TECHNICAL DATA). Slide the bellows into position over the track rod.
6. Refit the clip to the inner end of the bellows only and install the track rod end joint to the correct depth. Tighten the locknut.
7. Reconnect the track rod end joint to the steering arm and observe the correct torque when tightening the retaining nut.
8. Slowly turn the steering back and forth in order to distribute the lubricant then lift open the small end of the bellows using a small screwdriver and squeeze the bellows to expel any air. Fit the securing clip.
9. Check the front wheel alignment as detailed previously.

STEERING WHEEL & COLUMN ASSEMBLY [5]

Steering Wheel Removal & Installation

1. Using a crosshead screwdriver, undo the screws and remove the two halves of the steering column cowling.
2. Prise out the steering wheel centre pad using a screwdriver.

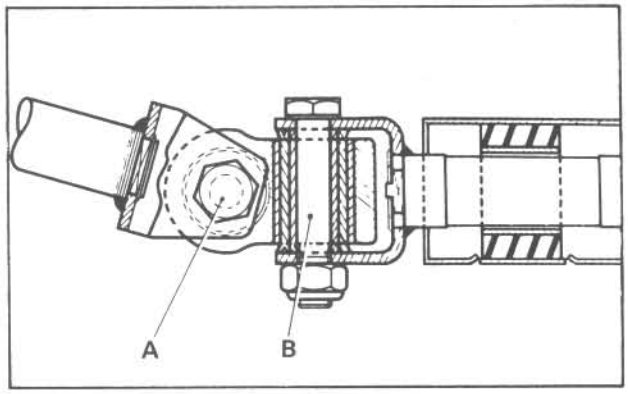

Fig. J:6 Column joint (manual steering)

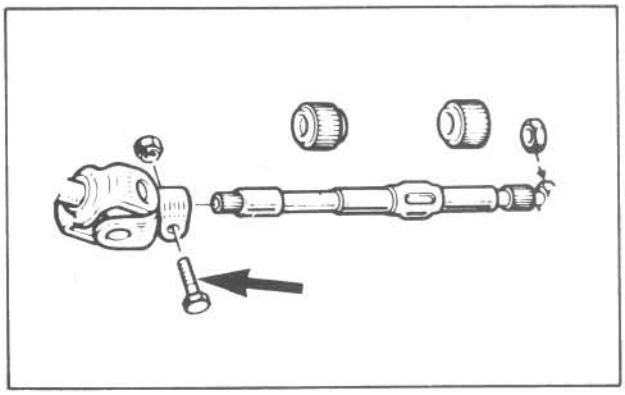

Fig. J:7 Column joint (power steering)

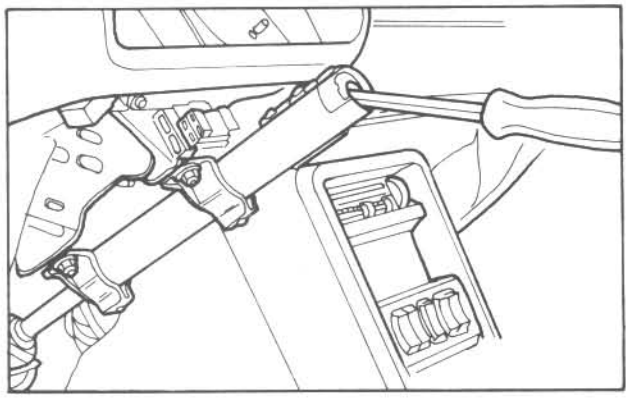

Fig. J:8 Levering out top column bush

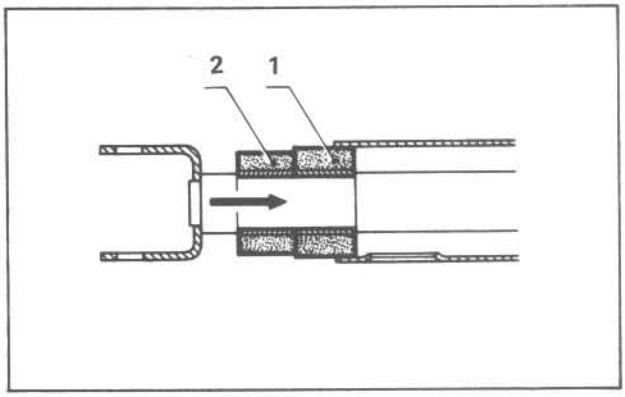

Fig. J:9 Fitting new bush (1) using old bush (2)

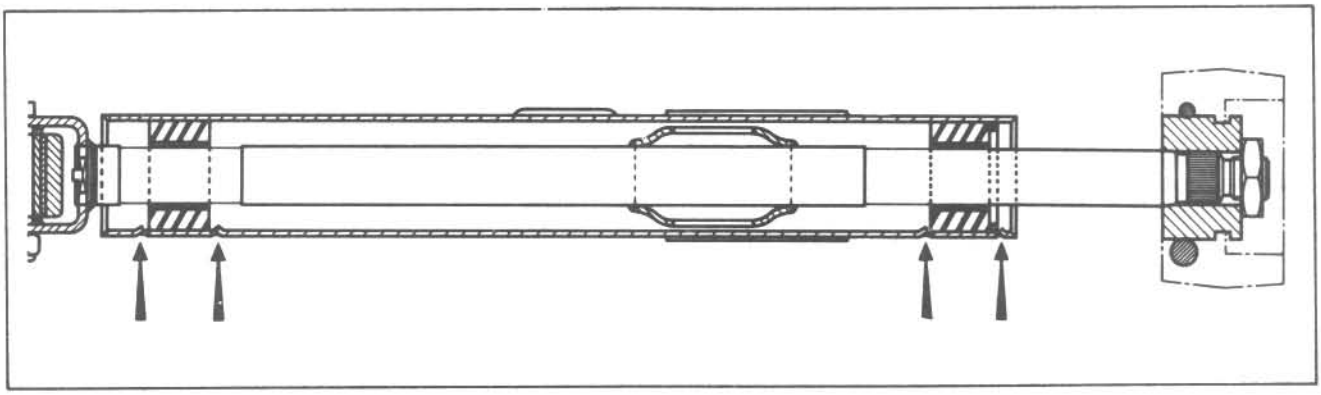

Fig. J:10 Details of steering column bush location

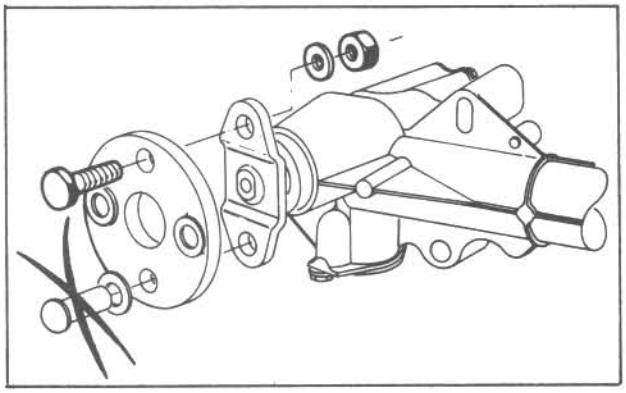

Fig. J:11 Steering shaft rubber coupling

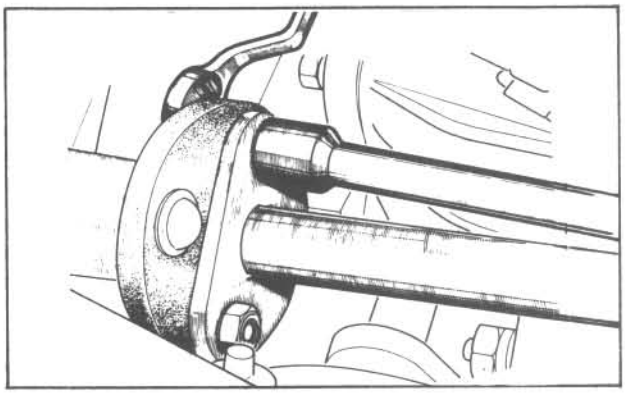

Fig. J:12 Undoing rubber coupling bolts

3. Unscrew the steering wheel retaining nut but leave it on by at least three threads at the top of the column shaft.
4. Knock the steering wheel from behind with the palms of the hands until the wheel frees itself from the splines. Remove the nut and the wheel (Fig. J:5).
5. To install the wheel, make sure that the road wheels are in the straight - ahead position first then refit the wheel to the shaft.
6. Fit the retaining nut and tighten it to the correct torque.
7. Dot-punch between the shaft and the nut in order to lock the nut.

Column Bush Replacement

1. Disconnect the battery earth lead.
2. Remove the two steering column cowling halves as detailed previously.
3. Remove the steering wheel as detailed previously.
4. Remove the steering column switches as detailed in the GENERAL ELECTRICS chapter and the column lock - see ENGINE ELECTRICS chapter, under 'Ignition Switch'.
5. At the bottom of the steering column, undo the nut and bolt (A) and disconnect the universal joint (Fig. J:6 or J:7).
6. Gently tap the inner column downwards, using a 'soft' headed hammer until the bottom bush is ejected from the outer column housing.
7. Using a thin screwdriver, release the snap ring securing the upper bush in the outer column. Lever out the bush from the column housing with a screwdriver (Fig. J:8).
8. Smear the new bushes with high melting point grease and cut a small section lengthwise out of the old bush to reduce its outside diameter by 0.08 in (2 mm).
9. Position the new bottom split bush on the steering wheel shaft with the old bush behind it (Fig. J:9).
10. Press the new bottom bush into its location by pushing up the steering inner column from below. The bush is located by indents - arrowed - in the outer column (Fig. J:10).
11. Push the inner column down very slightly to detach the old bush.
12. Tap the new top bush into position in the outer column indents using a piece of suitable diameter tube.
13. Refit the snap ring to the top of the column and mount the steering wheel to the shaft.
14. Set the steering to the mid position. On manual steering models, refit and tighten bolt (A, Fig. J:6) to the shaft universal joint. Turn the steering wheel by 90 degrees and fit and tighten the second bolt (B, Fig. J:6). On power steering models, fit the universal joint to the shaft splines, ensuring that the steering wheel is in the straight-ahead position and tighten up the pinch bolt.
15. On manual steering models only, ensure that one of the universal joint bolt heads is vertical when the road wheels are in the straight - ahead position.
16. Refit the column switches (as detailed in the GENERAL ELECTRICS chapter), the two steering column cowling halves and tighten the steering wheel nut after ensuring that the wheel is correctly aligned.
17. Reconnect the battery earth lead.

Manual Steering Shaft Flexible Coupling - Replacement

1. Remove the steering rack assembly with the lower coupling as detailed in the following section.
2. The rubber disc coupling is attached during manufacture by rivets which, after centre punching the heads, can be removed by drilling the heads off. Note the rubber packing piece.
3. Fit the new coupling disc (with packing piece) and secure it in position with two 7 mm diameter by 30 mm long bolts and self locking nuts supplied with the coupling. The nuts must face towards the rack (Fig. J:11) after installation.
4. Refit the steering rack assembly and reconnect it to the steering shaft as detailed in the following section.

MANUAL STEERING RACK ASSEMBLY. . . [6]

Wear Check

If wear is apparent in the steering system after a relatively high mileage and it can be attributed to the rack and pinion unit itself (i.e. all suspension and steering column joints and bushes are found to be sound) then it is possible to ascertain further which component(s) is/are at fault.

If a heavy "clonk" noise is evident each time the steering wheel is moved from one direction to another then it is likely that the rack end bush is worn. Check this as follows:

With an assistant rocking the steering wheel back and forth, grip the rack shaft through the bellows at the end opposite to the pinion. If the knocking can be distinctly felt at this point and there is side movement of the rack shaft in its housing then the bush is clearly worn. The rack end bush can easily be replaced by the DIY owner following the instructions given in the relevant section.

Track rod end joints should be checked for wear by separating them from the steering arms, holding the joint housing and moving the ballpin around. If no resistance to movement is felt, i.e. the pin moves around very freely, then it is best to renew both joints.

Check the rack end ball joints as follows:
1. Depending on which side is being checked, turn the steering wheel so that the rack shaft protrudes as far out of its housing as is possible.
2. Disconnect the track rod end from the steering arm.
3. Grasp the rack shaft firmly through the bellows with one hand and hold the track rod with the other. Move the track rod backwards and forwards along the axis of the rack, ensuring that the rack shaft does not move. If play between the two can be detected then the joint should be renewed as detailed in the appropriate section.

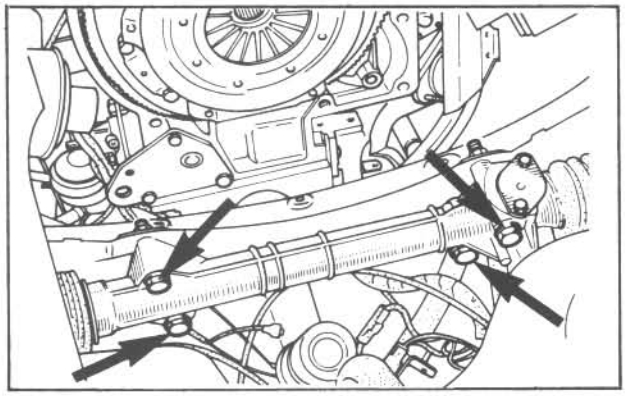

Fig. J:13 Rack mounting bolts

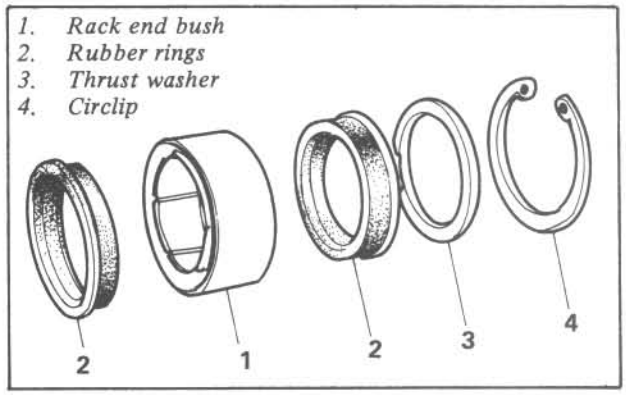

Fig. J:14 Rack end bush assembly

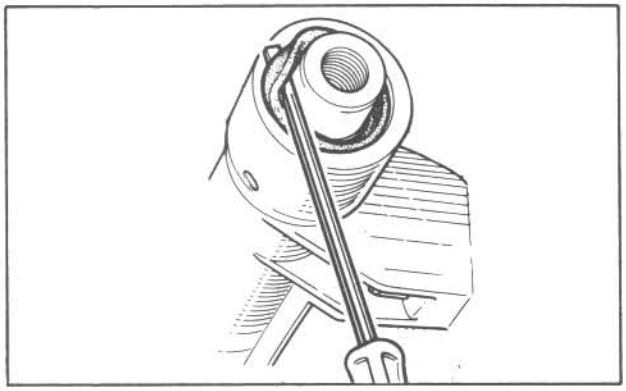

Fig. J:15 Prising rubber ring from housing

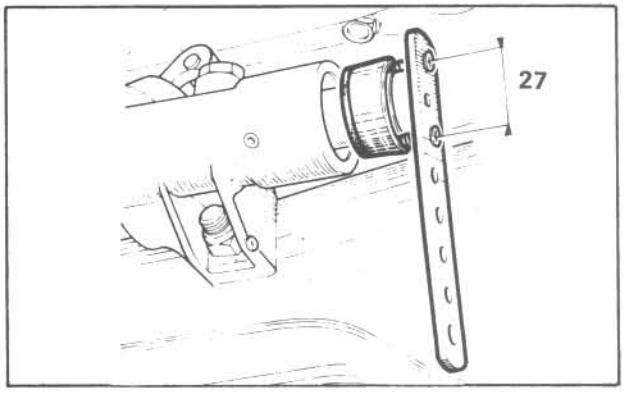

Fig. J:16 Extracting bush assembly

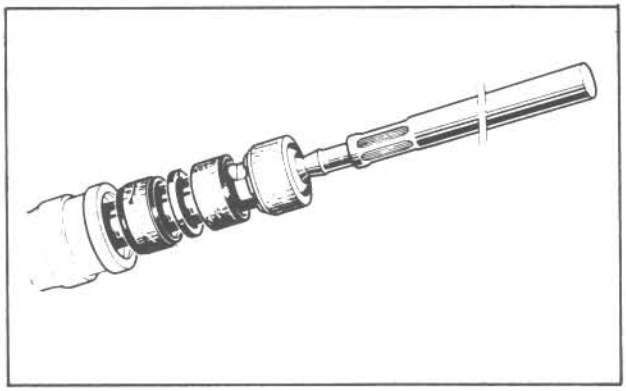

Fig. J:17 Drawing in bush assembly

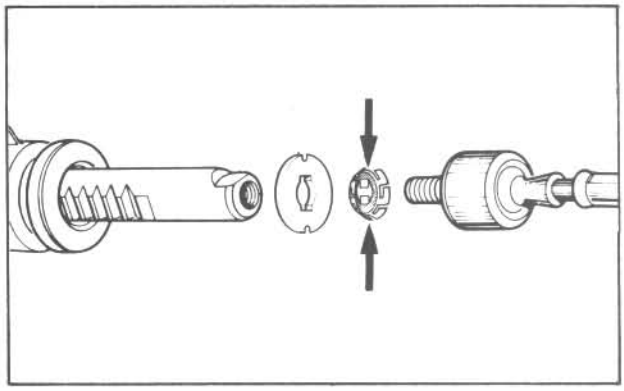

Fig. J:18 Non re-usable type joint

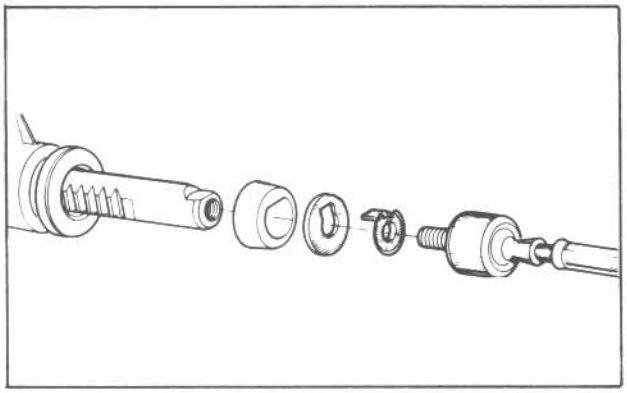

Fig. J:19 Re-usable type joint

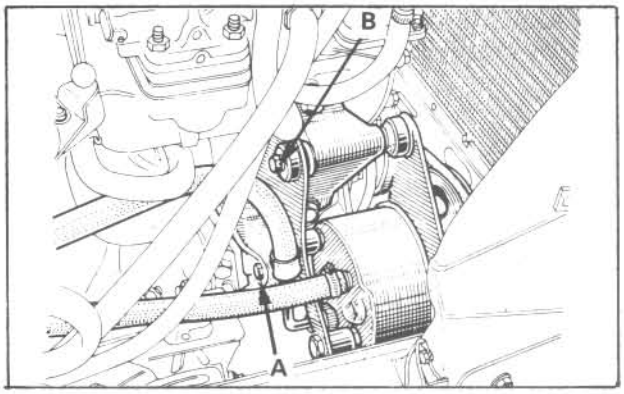

Fig. J:20 Pump tensioner (A) and pivot (B) bolts

Wear of the pinion bearings or rack damper can only be accurately ascertained with the rack unit removed from the car. With the rack housing and the rack shaft each held firmly (preferably in a vice) turn the pinion rubber coupling backwards and forwards by small amounts and feel for any "clonking" between the pinion and the rack. If a large amount of wear or out-of-adjustment is present then the pinion shaft will be seen to rise and fall slightly as it is turned. If excess play is apparent at this point, then any further repairs or adjustment should be left to a Renault dealer who will have the necessary equipment to carry out the operation satisfactorily.

NOTE: The steering rack assembly should not be removed without a very good reason as the rack height setting is very important. The adjustment of the height setting MUST be done by a RENAULT dealer who will have the necessary special equipment.

Rack Unit Removal

1. Slacken the road wheel bolts, then raise and support the front of the car as detailed in the ROUTINE MAINTENANCE chapter.
2. Remove the road wheels, undo the track rod end nuts and separate the ballpins from the steering arms using a ball joint taper breaking tool.
3. Undo the rubber coupling bolts (Fig. J:12).
4. If the same rack is to be refitted, mark the position of the rack mounting with a scriber so that the rack may be refitted in EXACTLY the same position. If a new rack is being fitted, the position marking is not important as the adjustment will have to be done by a Renault dealer afterwards.
5. Undo the four rack mounting bolts (Fig. J:13) and pass the rack assembly through the opening in the inner wing panel.

Installation

Installation is a reversal of the removal procedure noting that if a new rack has been fitted, the rack mounting bolts should not be tightened until the rack has been centred.

With the new rack installed, the car should be taken to a Renault dealer as soon as is possible in order to check both the steering rack height and the toe setting.

MANUAL RACK END BUSH. . . . . [7]

Replacement

This job can be done without removing the rack assembly from the car.

1. Raise and support the front of the car as detailed in the ROUTINE MAINTENANCE chapter, and remove the near-side (passenger side) front wheel.
2. Disconnect the track rod end joint and unscrew it from the track rod, noting the exact number of turns needed to remove it - see appropriate section previously.
3. Remove the rack bellows and the rack end ball joint as detailed in the appropriate sections.
4. Turn the steering so that the end of the rack is flush with the rack housing.
5. Using a conventional pair of internal circlip pliers, remove the circlip which retains the bush in the housing and also remove the washer (Fig. J:14).
6. Prise out the rubber ring (Fig. J:15).
7. Drill two holes, 4 mm diameter and 27 mm apart in a short length of steel strip.
8. Attach the strip to the rack end bush using two 3 mm diameter self-tapping screws as shown in Fig. J:16.
9. Turn the steering wheel slowly towards the right-hand lock and the rack shaft will draw the bush out of the rack housing.
10. Lever out the inner rubber ring and thrust washer (if fitted) from the housing using a thin screwdriver.
11. Thoroughly clean the rack and the bush location and smear both of them with Molykote BR 2 grease.
12. Fit the rubber rings (2, Fig. J:14) to the new bush and fit the bush onto the rack followed by the thrust washer (3, Fig. J:14) and the old bush. Screw on, but do not tighten the rack end ball joint.
13. Slowly turn the steering in order to draw the bush into its location until it abuts (Fig. J:17).
14. Take off the rack end ball joint and remove the old bush. Check that the new bush is fully and correctly seated (the circlip groove should be clear).
15. Fit the circlip.
16. Refit the remainder of the dismantled components, referring to the relevant sections for each.
17. Check and if necessary, adjust the toe setting as detailed under 'Front Wheel Alignment'.

MANUAL RACK END BALLJOINT . . . . . [8]

The ballpin of the rack end ball joint is crimped to the track rod and it is therefore not possible to separate the two. Replacement ball joints, however, are supplied complete with track rod.

The track rod and ball joint assemblies fitted to certain models cannot be re-used once they have been slackened as the locking washer fitted to this type of ball joint damages the joint housing if the housing is turned. In this case, if the joint has been slackened or removed, it is imperative that it be replaced with a new one. Refer to Fig. J:18 for identification of this type of ball joint assembly. Note the locking washer (arrowed).

Removal

1. Hold the track rod with an open-ended spanner and loosen the track rod end joint locknut.
2. Unscrew the track rod from the track rod end joint,

counting the number of turns made so that an approximate toe-setting can be achieved upon reassembly.
3. Turn the steering wheel to give full right-hand lock.
4. To remove the rack end ball joint, unscrew the ball joint housing with a suitable pair of grips. Access is gained through the opening in the inner wing. In order to prevent harmful force being applied to the pinion in the event of the ball joint housing being very tight, hold the rack shaft with a pair of grips in order to prevent it twisting (place a rag in the jaws to avoid damage). Take care not to lose any of the components shown in Fig. J:18 or Fig. J:19., depending upon the type of assembly fitted.

Installation

Installation is a reversal of the removal procedure noting the following points:
1. Smear locking compound on the threads of the ball joint stud before fitting.
2. Always renew the lockwasher and bend its tab or tabs into the slot(s) in the ball joint.
3. Check and if necessary, adjust the toe setting as detailed under 'Front Wheel Alignment'.

POWER STEERING RACK .....[9]

No attempt should be made to overhaul the power steering rack because of the complexity of the mechanism and the fine tolerances of the operating system. If a fault is suspected, have the system pressure tested by a Renault dealer.

Removal & Installation

The power assisted steering rack is removed and refitted in a similar operation to that detailed for the manual unit. However, it will also be necessary to free the rack fluid feed and return pipes from their retaining clamp and then to disconnect them from the pinion housing. Allow the fluid to drain into a CLEAN container.

Before disconnecting the universal joint from the pinion, mark the relationship of the joint to the pinion splines.

Installation is a reversal of the removal procedure noting that the hydraulic system must be filled and bled as detailed below.

Power Steering Pump

The power steering system is powered by a pump driven from the engine crankshaft pulley. If a fault is suspected in the operation of the pump or rack, a pressure test should be carried out on the system. This operation should be carried out by a Renault dealer or power steering specialist.

Filling & Bleeding

The hydraulic system should not need regular topping up. If it does, then check for leakage. If any work has been carried out on the system, fill as described. Never run the engine unless the pump fluid level is correct.

Completely fill the reservoir with the specified fluid (see TECHNICAL DATA) and turn the steering from lock to lock slowly. Top up as necessary. Turn the steering again from lock to lock with the engine running and again check the level. The level is correct when the fluid is just visible at the bottom of the reservoir filter mesh.

Pump Removal & Installation

1. Clamp the fluid hose which runs from the reservoir to the pump and disconnect it from the pump.
2. Disconnect the high pressure hose from the pump.
3. Loosen the tensioner (A, Fig. J:20) and remove the drive belt from the pump pulley.
4. Remove the tensioner bolt and the pump pivot bolt (B, Fig. J:20).
5. Lift out the pump.

Installation is a reversal of the removal procedure. Refill the system and bleed as in the previous section. Tension the drive belt as detailed in the ROUTINE MAINTENANCE chapter.

STEERING

Trouble Shooter

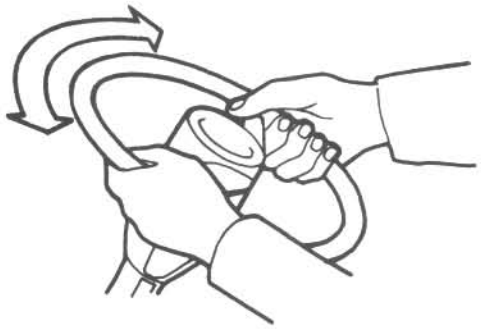

FAULT	CAUSE	CURE
Steering feels stiff	1. Low tyre pressures 2. Incorrect wheel alignment 3. Stiff track rod ends 4. Steering rack needs adjustment	1. Correct tyre pressures. 2. Correct wheel alignment. 3. Check and replace if necessary. 4. Adjust if necessary.
Steering wheel shake	1. Wheels and tyres need balancing 2. Tyre pressures incorrect 3. Incorrect wheel alignment 4. Wheel hub nut loose 5. Wheel bearings damaged 6. Front suspension distorted 7. Steering rack needs adjustment 8. Shock absorbers faulty	1. Balance as necessary. 2. Correct. 3. Correct alignment. 4. Adjust wheel bearings. 5. Replace wheel bearings. 6. Check, repair or replace. 7. Adjust as necessary. 8. Check and rectify.
Steering pulls to one side	1. Uneven tyre pressure 2. Wheel alignment incorrect 3. Wheel bearings worn or damaged 4. Brakes improperly adjusted 5. Shock absorbers faulty 6. Suspension distorted 7. Steering rack worn	1. Correct. 2. Correct. 3. Replace and adjust. 4. Adjust brakes. 5. Check and rectify. 6. Check and rectify. 7. Adjust or replace.
Wheel tramp	1. Over-inflated tyres 2. Unbalanced tyre and wheel 3. Defective shock absorber 4. Defective tyre	1. Correct pressure. 2. Check and balance if necessary. 3. Check and rectify. 4. Repair or replace.
Abnormal tyre wear	1. Incorrect tyre pressure 2. Incorrect wheel alignment 3. Excessive wheel bearing play 4. Improper driving	1. Check pressures. 2. Check wheel alignment. 3. Adjust wheel bearings. 4. Avoid sharp turning at high speeds, rapid starting and braking, etc.
Tyre noises	1. Improper tyre inflation 2. Incorrect wheel alignment	1. Correct tyre pressures. 2. Correct wheel alignment.

Front Suspension

INTRODUCTION.....[1]
WHEEL BEARINGS.....[2]
DRIVE SHAFTS.....[3]
SHOCK ABSORBERS.....[4]
COIL SPRINGS.....[5]
UPPER SUSPENSION ARM .....[6]
LOWER SUSPENSION ARM .....[7]
ANTI-ROLL BAR.....[8]

INTRODUCTION.....[1]

The front suspension on all Renault 18/Fuego models is of the coil spring type with a bolt-on swivel hub carrier, a bottom wishbone and a top suspension arm which is located by a tie-rod.

The hub carrier on the Fuego and later Renault 18 models is of a slightly different design from the original Renault 18 R1340, 1341 types. One non-adjustable double ball race wheel bearing is used instead of two single race bearings supporting the driveshaft on early R18 models (see Figs. K:2 & K:3).

In addition to metric sockets and spanner for overhaul, specialised tools needed are:

Ball joint taper breaking tool (Renault T.Av. 476 or Sykes-Pickavant No. 081700).

Coil spring compressing clamps

Torque wrench

Slide hammer (Renault T.Av. 235-01 or Sykes-Pickavant 085307 with adaptor 085320).

Size T30 TORX multi-spline socket adaptor.

As well as these tools a suspension distance piece is required in order to accurately position the suspension components prior to tightening the principal suspension bolts and nuts. Renault tool No. T. Av. 509-01 is the recommended tool for this purpose but if difficulty is encountered in obtaining this a substitute distance piece can easily be made from a length of 1/8 in thick box section steel, the dimensions for which are given in Fig. K:1.

Where needed, this tool should be inserted between the lower arm pivot bolt and the shock absorber bottom mounting bolt (Fig. K:4) and in order to achieve this the hub itself should be raised by placing a jack under the bottom ball joint. If the driveshaft has a weight attached to it which hinders access then it is permissible to position the distance piece against the anti-roll bar drop link nut. With the distance piece in position the jack should be lowered until the suspension is held in the part-compressed position by the tool. When the relevant nuts or bolts are tightened the distance piece can simply be removed by jacking up the hub again.

Whenever any work has been carried out on the front suspension, the front wheel alignment (toe-setting) should be checked afterwards by a Renault dealer or tyre specialist and adjusted if necessary to avoid possible excessive tyre wear.

WHEEL BEARINGS.....[2]

Replacement (Early Renault 18, Fig. K:6)

1. Insert the suspension distance piece between the lower suspension arm pivot bolt and the shock absorber bottom mounting bolt as detailed in the 'Introduction'.
2. Slacken the road wheel nuts, raise and support the front of the car as detailed in the ROUTINE MAINTENANCE chapter, and remove the road wheel(s).
3. Refit the wheel bolts, then place a long metal bar across the wheel bolts and slacken the driveshaft hub nut. The nut is tightened to 120 lb ft (16 kg m) and a torque wrench (or long bar) and socket will be needed to undo it.
4. Remove the brake caliper and caliper bracket without disconnecting the fluid pipe (see BRAKES chapter for details).
5. Unscrew the driveshaft hub nut and draw off the hub/brake disc assembly using either Renault special tool (No. T.Av. 235-01) or a universal type slide hammer such as the Sykes-Pickavant No. 085307 together with pulling plate No. 085320. Take care not to lose the hub nut washer. Note that the outer hub bearing will also be withdrawn from the carrier on the hub sleeve (Fig. K:5).
6. Undo the bolts and detach the brake disc from the hub flange.
7. Disconnect the top and bottom swivel ball joints and the track rod end from the steering arm using a ball joint separating tool. The Sykes-Pickavant offset-lever type separator (No. 081700) is ideally suited for this purpose if Renault tool (No. T.Av. 476) is not available (Fig. K:8).
8. Remove the carrier assembly from the suspension/steering arms and withdraw it from the driveshaft (Figs. K:6 & 7). Support the end of the driveshaft to avoid straining the shaft couplings.
9. Support the carrier flange, remove the seal (closure plate) and drift out the inner bearing from the housing (Fig. K:9). Clean the housing thoroughly. Remove the spacer ring from the hub sleeve and use a puller to remove the outer bearing (Fig. K:10).
10. Pack the new bearings with grease, working it well in.
11. Fit the outer bearing to the hub-disc sleeve (sealed end facing the roadwheel) using a hammer and tube with 35 mm (1 3/8 in) diameter bore. Refit the brake disc to the hub flange and tighten the bolts to the correct torque.
12. Fit the inner bearing to the carrier housing, with the

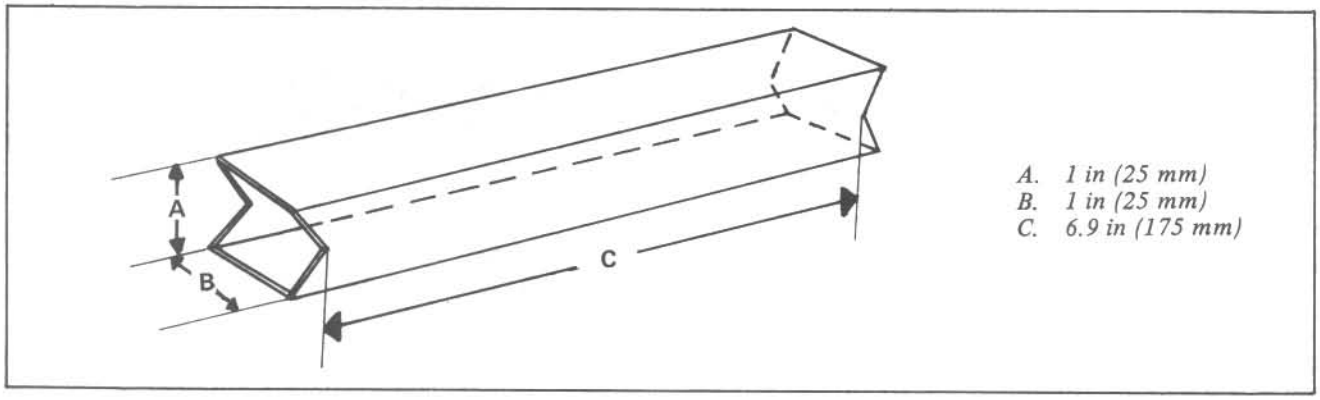

Fig. K:1 Dimensions for making up suspension distance piece

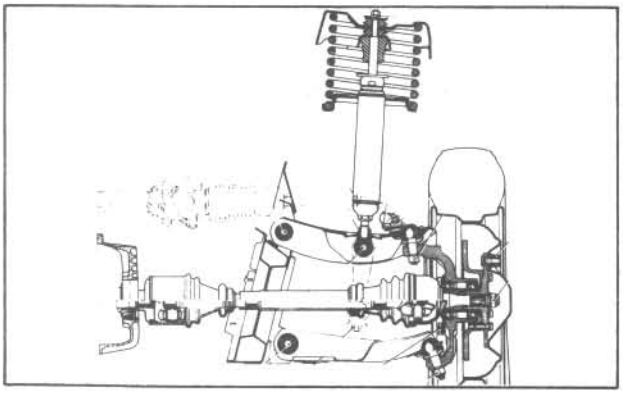

Fig. K:2 Early R18 suspension

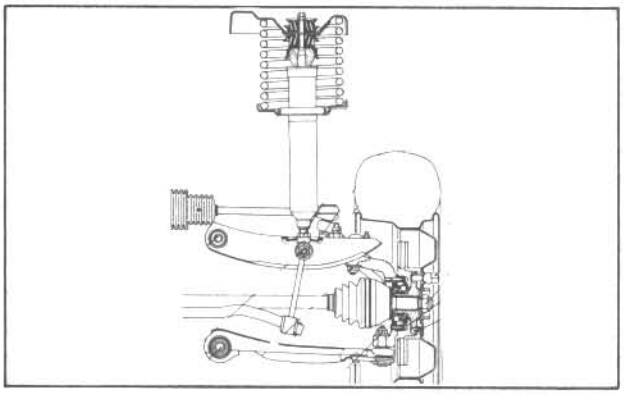

Fig. K:3 Fuego/late R18 suspension

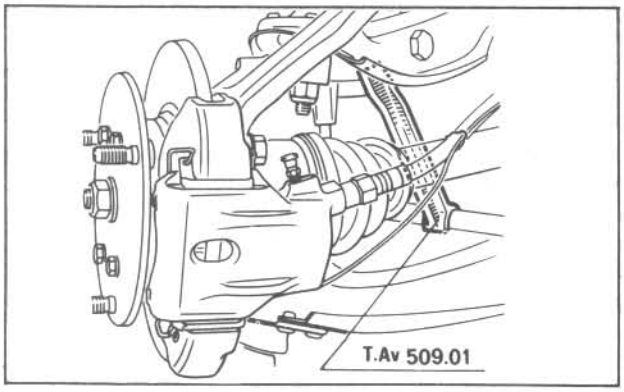

Fig. K:4 Distance piece in position

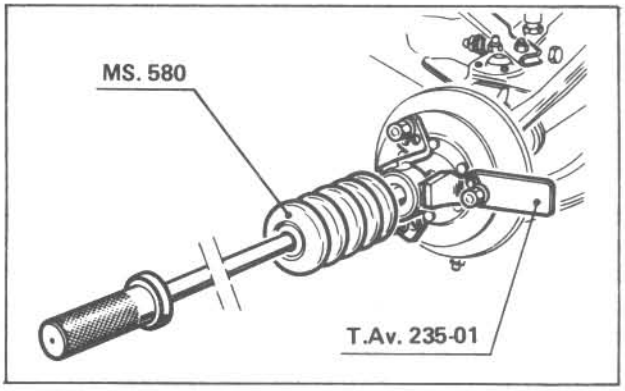

Fig. K:5 Drawing off hub/disc assembly

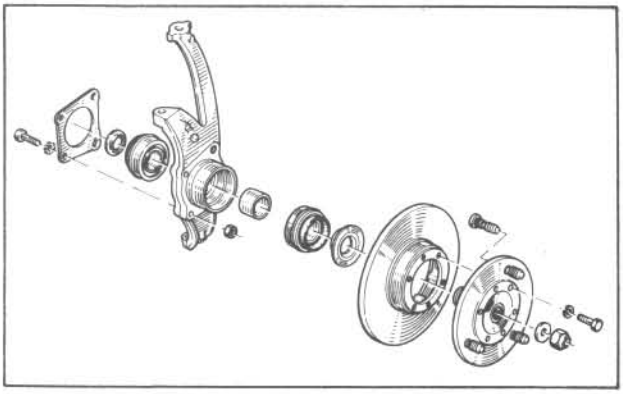

Fig. K:6 Early R18 hub assembly

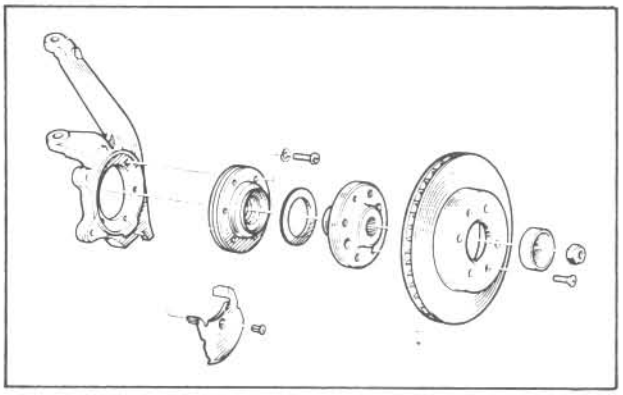

Fig. K:7 Fuego/late R18 hub assembly

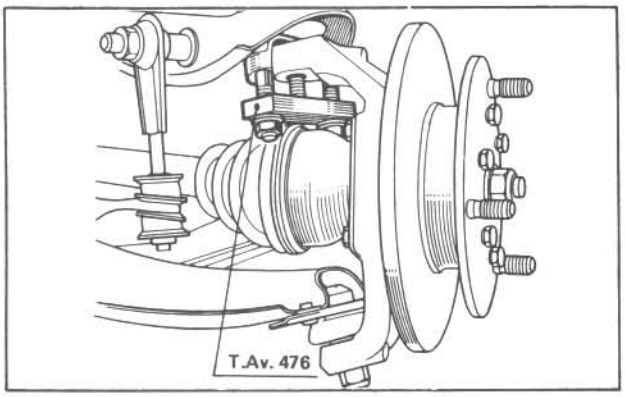

Fig. K:8 Separating upper ball joint

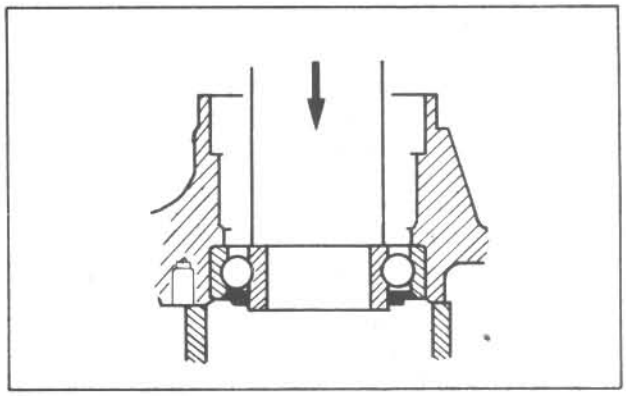

Fig. K:9 Drifting out inner bearing

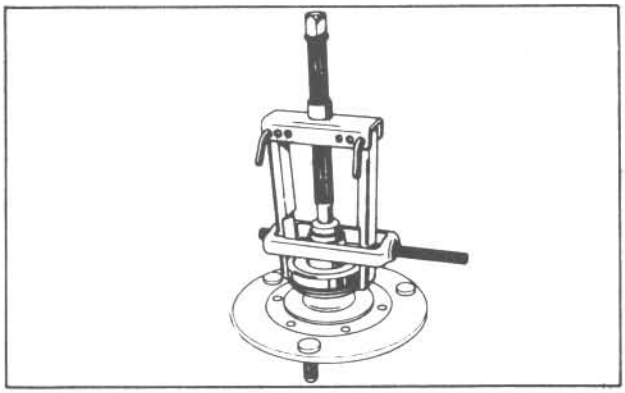

Fig. K:10 Removing outer bearing with puller

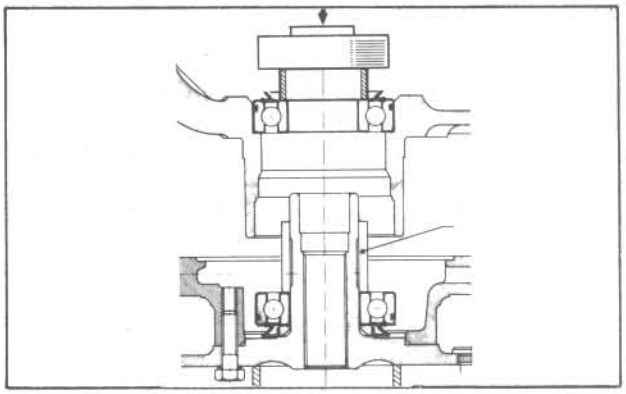

Fig. K:11 Pressing hub assembly together

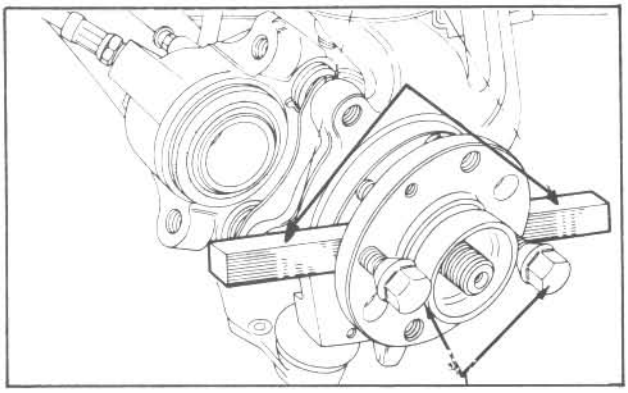

Fig. K:12 Removing hub (Fuego/late R18)

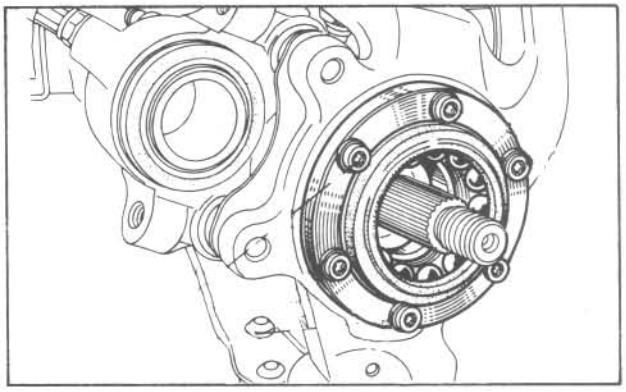

Fig. K:13 Wheel bearing retainer

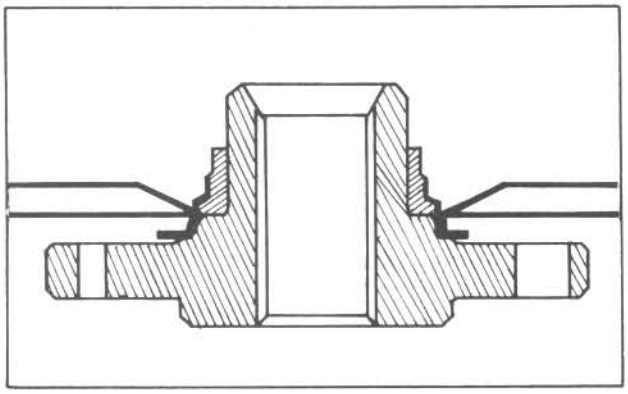

Fig. K:14 Removing inner race

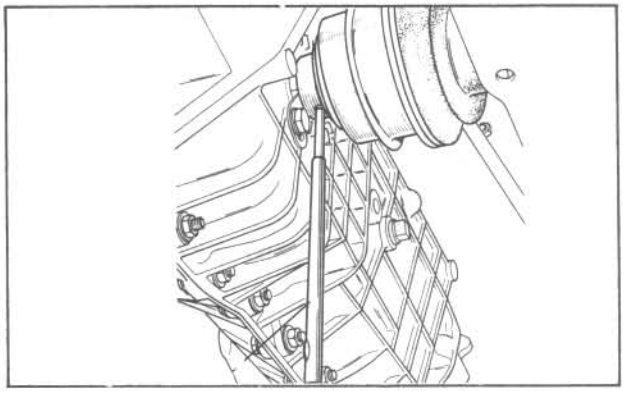

Fig. K:15 Knocking out roll pin

sealed side facing away from the carrier, making sure it is fully home and square in the housing.
13. Smear a reserve of high melting point grease inside the carrier between the bearing housing.
14. Fit the spacer to the hub-disc sleeve and press or drift the carrier - hub/disc assembly together (Fig. K:11).
15. Place a smear of sealing compound around the rear flange of the carrier and fit a new seal (closure plate).
16. Refit the hub carrier assembly to the end of the driveshaft. Using a 'soft' faced hammer, tap the carrier assembly onto the shaft until the threaded end of the shaft is just protruding from the outer face of the hub flange.
17. Refit the hub nut and turn it to draw the drive shaft fully into the carrier assembly. Do not tighten the nut at this stage.
18. Reconnect the carrier assembly to the suspension and steering joints, then reassemble the brakes in the reverse order of removal.
19. Refit the road wheel and tighten the hub nut to the correct torque using the same method as for removal.
20. Compress the suspension on the side concerned and remove the distance piece.
21. Pump the brake pedal a few times to bring the brake pads into contact with the discs.

Replacement (Fuego/later R18, Fig. K:7)

1. Remove the front wheel trim(s). With an assistant applying the brakes, slacken the drive shaft hub nut. It is tightened to 187.5 lb ft (25 kg m) and so a torque wrench (or long bar) and socket will be needed to undo it.
2. Slacken the wheel bolts then raise and support the front of the car as detailed in the ROUTINE MAINTENANCE chapter. Remove the road wheel(s).
3. Remove the brake caliper as detailed in the BRAKES chapter.
4. Remove the brake disc by undoing the two retaining bolts. Note that these bolts are of the TORX type, necessitating the use of a TORX multi-spline socket adaptor, size T30. Unscrew the hub nut and remove the brake disc.
5. Extract the hub as follows:
a) Fit two metal bars between the drive flange and the bearing carrier and clamp them in place using two wheel bolts screwed through the drive flange as in Fig. K:12.
b) Screw the two wheel bolts in carefully and evenly until the drive flange is drawn off the splines.
6. Unscrew the six bearing retainer bolts using a TORX T30 size multi-spline socket adaptor (Fig. K:13) and remove the retainer, bearing and inboard inner race.
7. Remove the inner race from the drive flange using a universal thin-lipped bearing puller (Fig. K:14).
8. Fit the new inboard inner race to the drive shaft stub axle and fit the bearing to the stub axle carrier.
9. Press or drift the outboard inner race onto the drive flange using a short length of tubing of 40 mm internal diameter.
10. Coat all bearing components and the oil seal lips with multi-purpose grease then tap the drive flange over the stub axle until enough stub axle threads are exposed to allow the hub nut to be screwed on.
11. Fit the wheel centralising cup.
12. Refit the hub nut but do not yet tighten.
13. Fit the brake disc and the caliper and pads as detailed in the BRAKES chapter. Pump the brake pedal a few times to bring the brake pads into contact with the discs.
14. Refit the wheel(s), lower the car onto the ground and tighten the hub nut to 187.5 lb ft (25 kg m) by the same method as used to undo it. Tighten the wheel bolts.

DRIVE SHAFTS. . . . . [3]

Removal

1. Insert the suspension distance piece between the lower suspension arm pivot bolt and the shock absorber bottom mounting bolt as detailed in the 'Introduction'.
2. Raise and support the front of the car as detailed in the ROUTINE MAINTENANCE chapter. Remove the road wheel(s).
3. Undo the driveshaft hub nut as detailed previously for the hub carrier bearings.
4. Remove the front brake caliper without disconnecting the fluid pipe as detailed in the BRAKES chapter.
5. From under the car, use a thin 5 mm dia parallel drift or punch to knock out the roll pin securing the driveshaft to the differential shaft (Fig. K:15).
6. Undo the nuts securing the hub carrier upper joint to the suspension arm and the steering arm joint. Use a ball joint taper breaking tool to separate the joints (Fig. K:8).
7. Disconnect the steering/suspension joints and tilt the hub carrier down until there is sufficient room to carefully tap the outer joint stub axle from the rear of the hub carrier using a mallet and drift.
8. When the outer end of the driveshaft is free, withdraw the inner end from the differential and remove the shaft from the car.

Installation

Installation is a reversal of the removal procedure, noting the following points:
a) Smear the driveshaft splines with high melting point grease.
b) Refit the outer end of the driveshaft into the hub carrier and, supporting the driveshaft with one hand, tap the outer flange of the hub carrier with a 'soft' hammer until the drive shaft threads are just protruding. Fit the hub nut and turn it to draw the shaft splines fully into the hub carrier. Do not tighten the hub nut at this stage.
c) Reconnect the driveshaft inner end to the differential, taking care to ensure that the securing roll pin holes are aligned. The shaft may need to be realigned on the splines before the pin will fit (Fig. K:16).
d) Seal the roll pin with locking compound.
e) Check and top up the gearbox or transmission oil level if necessary.

Driveshaft Joint Rubber Bellows

To replace the bellows, the joint must be dismantled first, but as special tools and, in some cases, new joint parts, are needed to reassemble the joint again, it is recommended that this job be undertaken by a Renault dealer with the necessary equipment and knowledge.

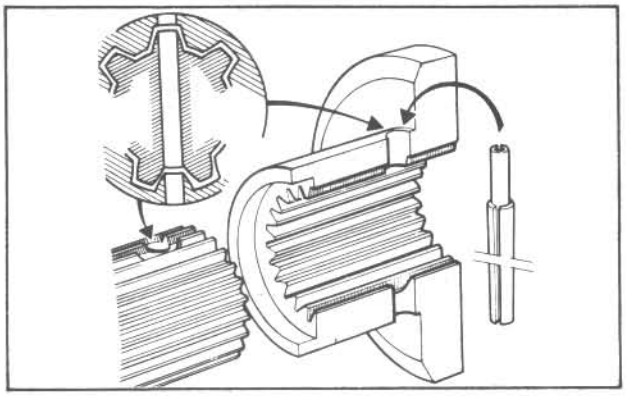

Fig. K:16 Roll pin installation

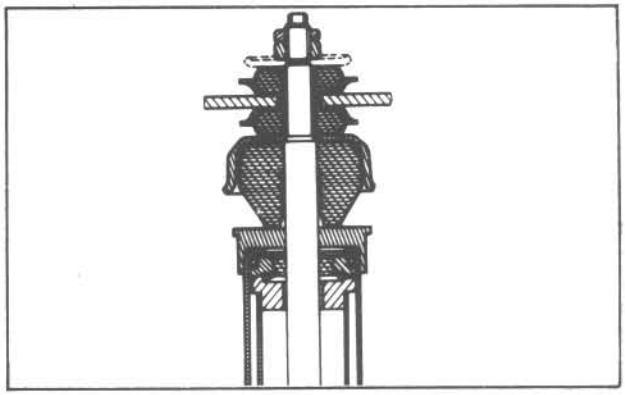

Fig. K:17 Shock absorber upper mounting

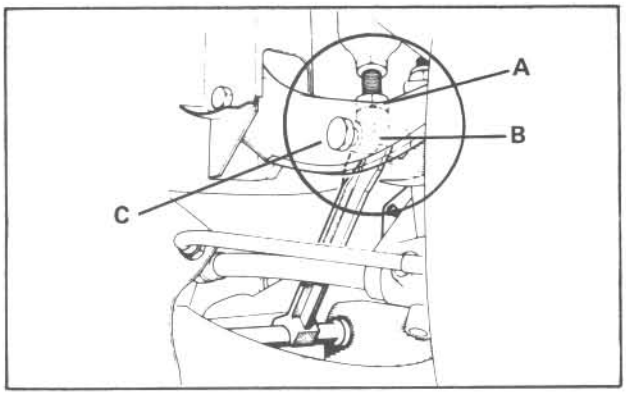

Fig. K:18 Shock absorber lower mounting

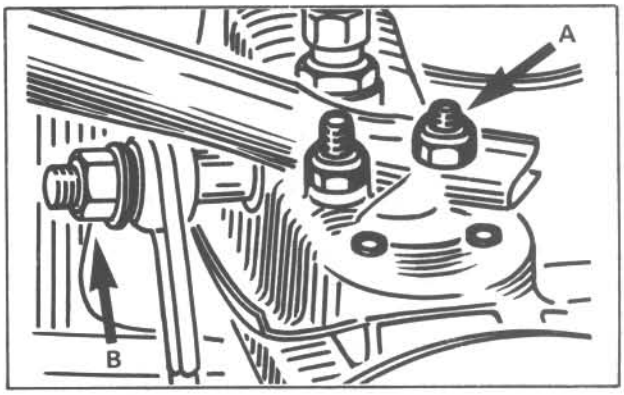

Fig. K:19 Tie rod nut A, anti-roll bar nut B

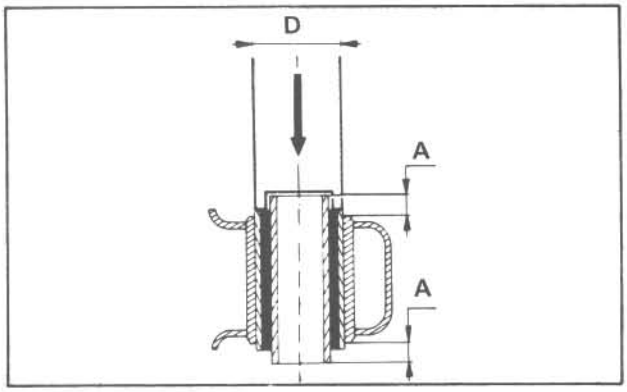

Fig. K:20 Upper arm bush and drift

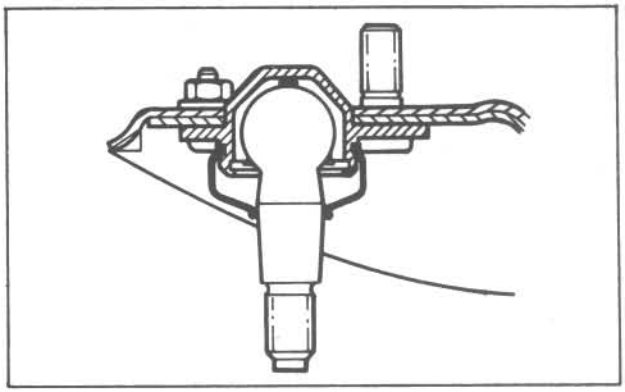

Fig. K:21 Upper ball joint

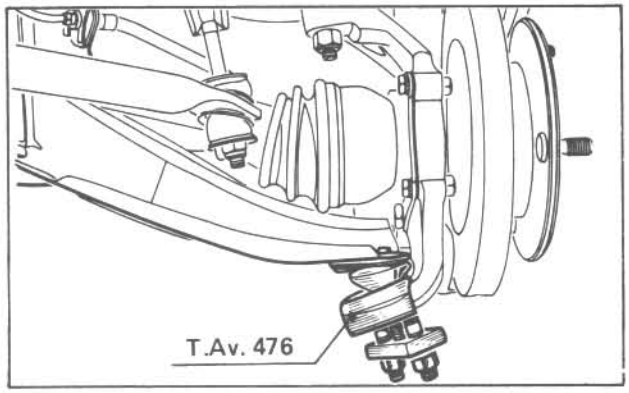

Fig. K:22 Separating ball joint taper

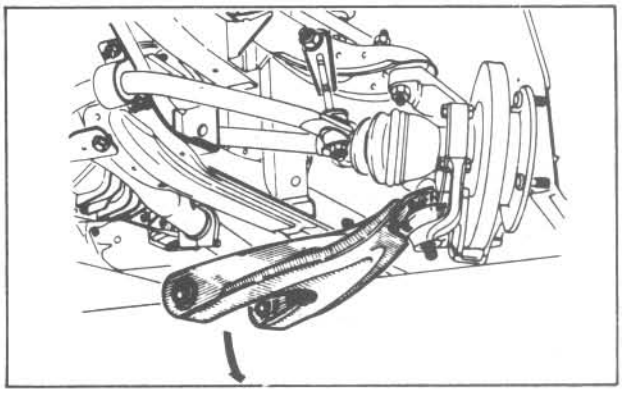

Fig. K:23 Removing lower suspension arm

SHOCK ABSORBERS. . . . . [4]

Replacement

1. Raise and support the front of the car as detailed in the ROUTINE MAINTENANCE chapter and remove both front wheels.
NOTE: Shock absorbers must always be replaced in pairs i.e. both front ones (or rear ones) otherwise the car's handling will be adversely affected.
2. Place coil spring clamps over at least four coils of the spring and compress the clamps sufficiently to take the spring compression load off the upper body mounting.
3. From inside the engine compartment, unscrew the shock absorber upper mounting nut holding the stud with pliers to prevent it from turning. Remove the plate and rubber bush from the stud.
4. Undo the bottom shock absorber mounting locknut (A, Fig. K:18) and unscrew the shock absorber from the wishbone 'T'-piece (B). Slacken the 'T'-piece pivot bolt.
5. Remove the shock absorber and coil spring assembly from the car. Detach the spring and the upper mounting bushes from the shock absorber unit.
6. If the shock absorber has been stored for any length of time in a horizontal position, hold the unit vertically and operate it through several full travel strokes to eliminate any air in the fluid.
7. Fit the upper mounting lower rubber bush and plate in the correct order as shown in Fig. K:17 depending on the fitting.
8. Position the coil spring (with the clamps still compressing it) on the shock absorber lower mounting cup stop.
9. Refit the shock absorber to the car in the reverse order of removal. Screw the lower stud into the wishbone 'T'-piece and fit the upper mounting bushes and plate. Tighten the top and bottom mounting nuts but do not yet tighten the 'T'-piece pivot bolt.
10. Jack up the hub and insert the suspension distance piece as detailed in the 'Introduction' then lower the jack.
11. Tighten the pivot bolt to the correct torque.
12. Jack up the hub in order to free the suspension distance piece.
13. Remove the distance piece, fit the roadwheel and lower the jack.
14. Finally, lower the front of the car and tighten the road wheel bolts.

COIL SPRINGS. . . . . [5]

1. Fit coil spring clamps and remove the shock absorber unit as detailed previously.
2. Detach the coil spring from the shock absorber unit and clean the coils to identify the spring type indicated by a paint dab.
3. Slowly and carefully unscrew the spring clamps evenly to release the compression until the clamps can be removed.
4. To replace the spring, first compress it using the clamps, covering at least four coils of the spring.
5. Fit the spring to the shock absorber unit noting that the spring bottom must locate in the stop in the shock absorber cup.
6. Refit the unit to the car as detailed in the previous section.

UPPER SUSPENSION ARM . . . . . [6]

Removal

1. Raise and support the front of the car as detailed in the ROUTINE MAINTENANCE chapter, and remove the road wheel.
2. Slacken the locknut (A, Fig. K:18) on the lower end of the shock absorber.
3. Undo the bolt securing the tie-rod to the suspension arm (A, Fig. K:19). Push the rod clear of the arm.
4. Undo the nut and remove the pin securing the shock absorber lower mounting and anti-roll bar link to the suspension arm (B, Fig. K:19).
5. Undo the nut securing the upper arm ball joint to the stub axle carrier and use a ball joint taper breaking tool to separate the joint from the carrier.
6. Undo the nut and withdraw the pin securing the inner part of the suspension arm to the body.
7. Lift the suspension arm and unscrew the shock absorber lower mounting (Fig. K:18). Remove the arm from the car.

Installation

Installation is basically a reversal of the removal procedure, noting the following:
1. Insert the suspension distance piece between the lower arm pivot bolt and the shock absorber bottom mounting bolt, as detailed in the 'Introduction'.
2. Reconnect the upper arm ball joint to the hub carrier, smear the upper arm pivot bolt with multipurpose grease and refit the arm and tighten the ball joint nut and the pivot bolt to the correct torque.
3. Refit the tie bar to the upper arm, observing the tightening torque.

Pivot Bush - Replacement

1. The bush can be replaced easily once the arm has been removed from the car as detailed previously.
2. Using a large, heavy duty vice, press out the old bush using a short tube of 26 mm (1 1/32 in) external diameter (D, Fig. K:20).
3. Smear the new bush with washing-up liquid to aid fitting, press in the new bush with the vice until it is central in the arm housing. The outer ends should be protruding 6 mm (15/64 in) on either side (A, Fig. K:20).
4. Refit the suspension arm to the car in the reverse order of removal.
NOTE: Check the condition of the pivot bolt and replace if worn.

Ball Joint - Replacement

Note that if the ball joint boot is damaged the entire ball joint must be replaced as new boots are not available separately.

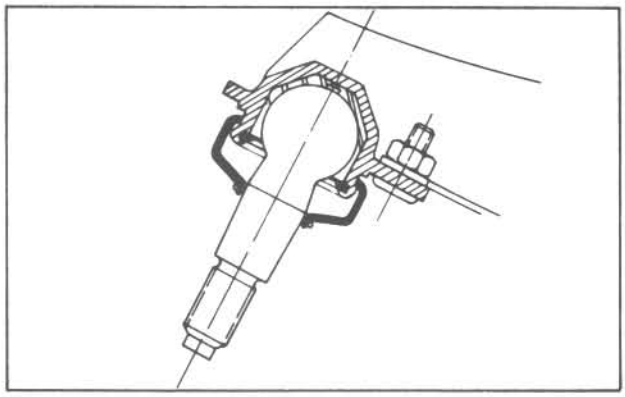

Fig. K:24 Lower ball joint (early R18)

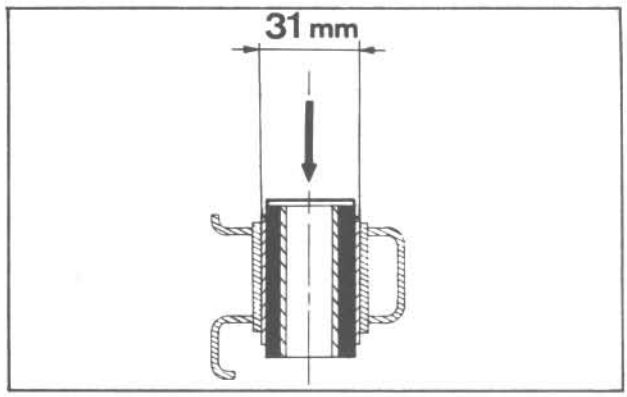

Fig. K:25 Lower arm bush and drift

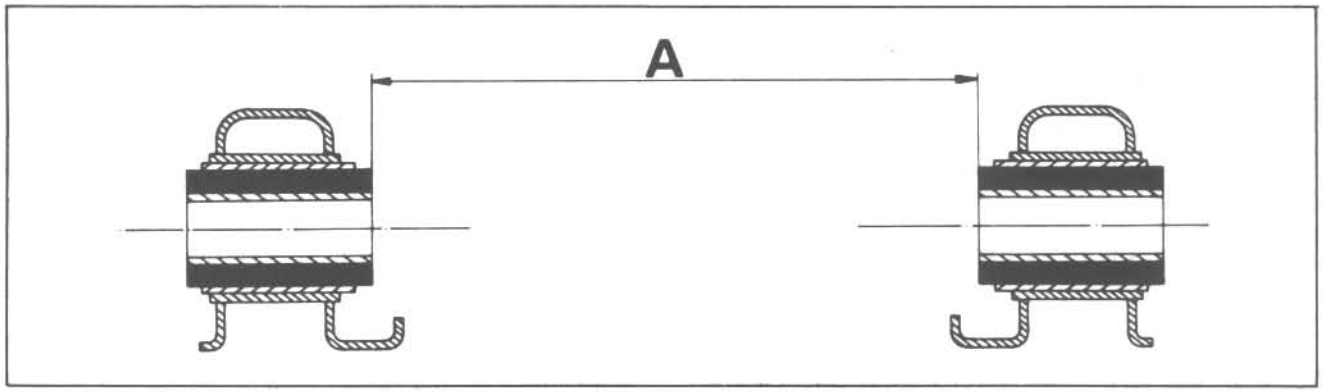

Fig. K:26 Lower arm bush distancing

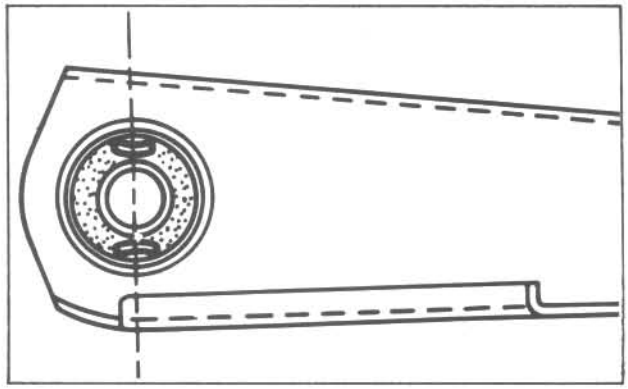

Fig. K:27 Bush position in arm

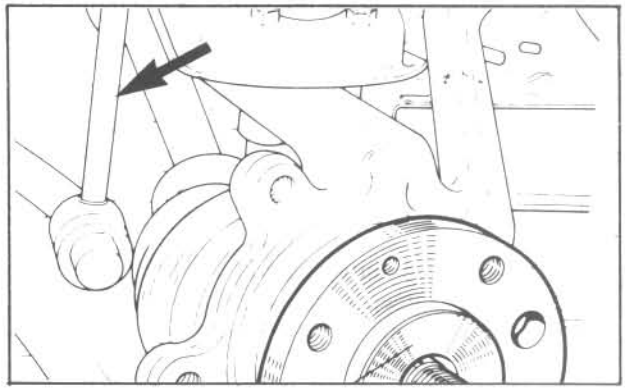

Fig. K:28 Fuego/late R18 anti-roll bar link

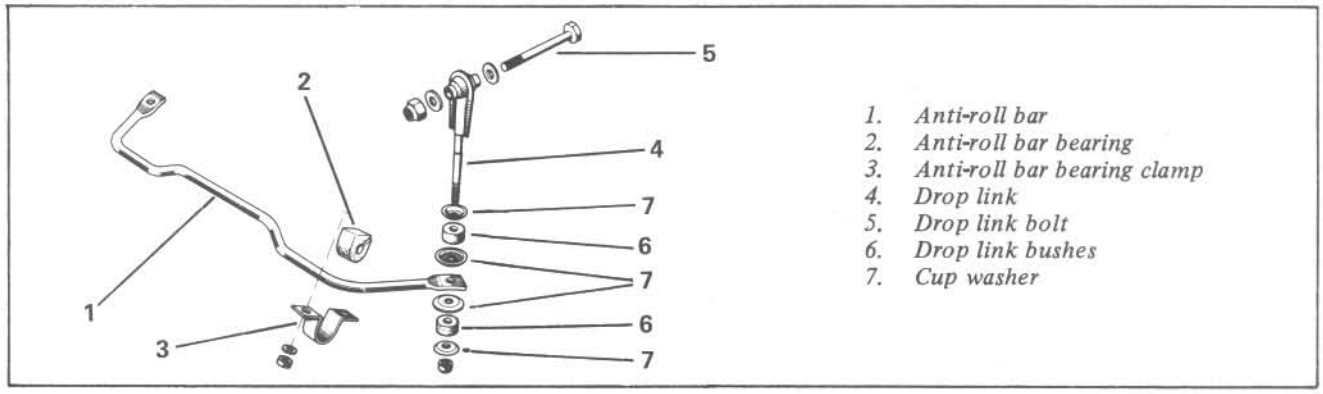

1. *Anti-roll bar*
2. *Anti-roll bar bearing*
3. *Anti-roll bar bearing clamp*
4. *Drop link*
5. *Drop link bolt*
6. *Drop link bushes*
7. *Cup washer*

Fig. K:29 Early R18 anti-roll bar assembly

1. Raise and support the front of the car as detailed in the ROUTINE MAINTENANCE chapter, and remove the road wheel.
2. Undo the nut securing the upper ball joint to the hub carrier assembly and use a ball joint taper breaking tool to separate the joint. Replace the nut to temporarily hold the joint together.
3. Mark the joint outer rivet heads with a centre punch, then remove the heads by drilling them out. Take care not to enlarge the rivet holes in the suspension arm.
4. Undo the two nuts (one secures the tie rod) attaching the joint inner fixing to the suspension arm. Undo the stud nut and remove the joint.
5. Fit the new joint and secure it in place with the nuts and bolts supplied. Note that the bolts should be fitted so that the heads are on the joint bellows side (Fig. K:21). Reconnect the tie rod.
6. Refit the ball joint to hub carrier nut and tighten it to the correct torque, replace the road wheel and lower the car to the ground.
7. Have the front wheel alignment/suspension angles checked afterwards by a Renault dealer or local tyre specialist.

LOWER SUSPENSION ARM . . . . . [7]

Removal

1. Raise and support the front of the car as detailed in the ROUTINE MAINTENANCE chapter, and remove the road wheel.
2. Undo the nut securing the lower ball joint pin to the hub carrier and use a ball joint taper breaking tool to separate the joint (Fig. K:22).
3. Remove the anti-roll bar bearings and lower the anti-roll bar sufficiently to allow withdrawal of the lower suspension arm inner pivot pin. Note the exact position of any shim or shims fitted to the pivot pin as these must be replaced correctly to ensure that the normal castor angle is maintained.
4. Undo the nut securing the pivot pin and withdraw it from the brackets towards the front of the car.
5. Remove the lower suspension arm from the car (Fig. K:23).

Installation

1. Connect the lower suspension arm ball joint to the hub carrier and screw the retaining nut on by a few threads.
2. Grease the pivot pin with multi-purpose grease, locate the suspension arm and insert the bolt ensuring the correct positioning of any shims.
3. Jack up the hub and insert the suspension distance piece between the lower suspension arm pivot bolt and the shock absorber bottom mounting bolt as detailed in the 'Introduction'.
4. Lower the jack and tighten the ball joint retaining nut, the pivot pin nuts and the anti-roll bar bearing nuts.
5. Raise the hub, remove the distance piece and lower and remove the jack.
6. Refit the road wheel, lower the car and tighten the wheel bolts.

Ball Joint - Replacement

Note that if the ball joint boot is damaged the entire ball joint must be replaced as new boots are not available separately.

1. Remove the lower suspension arm from the car as detailed previously.
2. Mark the rivet heads using a centre punch and then remove the heads by drilling them out until the joint is free.
3. Fit the new joint and secure it in place with the nuts and bolts supplied. Note that the bolts should be fitted so that the heads are on the side of the rubber boot (Fig. K:24).

Pivot Bushes - Replacement

1. Remove the lower suspension arm as detailed previously.
2. Each bush must be removed and replaced individually to retain the internal dimension (A) in Fig. K:26 as follows:
3. Using a large, heavy duty vice, press out the old bush with a short length of 31 mm (1 7/32 in) external diameter tube (Fig. K:25).
4. Smear the new bush with washing up liquid to aid fitting and press it in from outside until the inner part of the bush is 151 mm (5 15/16 in) (A, Fig. K:26) from the opposite bush. Make sure that the slots in the bush are correctly positioned relative to the arm (Fig. K:27).
5. Repeat the replacement procedure on the other bush.
6. Check the condition of the pivot pin for wear and replace as necessary.
7. Refit the suspension arm to the car as detailed previously.

ANTI-ROLL BAR . . . . . [8]

Removal (Figs. K:28 & K:29)

1. Undo the nuts securing the bar clamp to the frame member on each side and detach the clamps.
2. Undo the nut securing each anti-roll bar link to the upper suspension arm.
3. Remove the anti-roll bar assembly from the car.

Bush Replacement

Undo the nut securing the link to the anti-roll bar end and remove the rubber bushes and washers (where fitted; see Fig. K:29) noting the order of assembly.

Fit new bushes if required and reassemble in the reverse order of removal. Tighten the nut to the correct torque.

Installation

Installation is a reversal of the removal procedure but note that before tightening the anti-roll bar bearings it is necessary to position the suspension in a part-compressed position using the suspension distance piece - see 'Introduction.

Rear Suspension

INTRODUCTION . . . . . [1]
WHEEL BEARINGS . . . . . [2]
SHOCK ABSORBERS . . . . . [3]
COIL SPRINGS . . . . . [4]
AXLE BEAM ASSEMBLY . . . . . [5]
TRAILING ARMS . . . . . [6]
ANTI-ROLL BAR . . . . . [7]
UPPER SUSPENSION ARM . . . . . [8]

INTRODUCTION . . . . . [1]

The rear suspension fitted to all Renault 18 and Fuego models is of the "dead axle" type with vertical shock absorbers and coil springs, the beam axle being located fore and aft by two rubber bushed trailing arms and transversely by a single "wishbone" shaped upper arm.

All suspension bushes are rubber and are designed to operate under torsion. These can be checked for wear by levering the arm to one side, then examining the bush for signs of the rubber splitting or becoming detached from the metal sleeve of the bush.

All of the bushes on the upper arm (top axle locator) are replaceable but on the trailing arms only the bushes at the body attachment end can be replaced. If the bushes at the axle end of the arms are worn the entire trailing arm assembly must be replaced.

When torque tightening any of the rear suspension bushes (with the exception of the shock absorber mountings) it is essential to partly compress the rear suspension in order to correctly position the bushes.

The correct amount of suspension compression is reached when the distance from the hub centre to the ground, minus the distance from the trailing arm pivot pin to the ground (see A, Fig. L:1) equals 48 mm (1 7/8").

WHEEL BEARINGS . . . . . [2]

Adjustment

1. Raise and support the rear of the car as detailed in the ROUTINE MAINTENANCE chapter, and remove the road wheel.
2. Securely chock the front wheels to prevent them moving and release the handbrake.
3. Remove the centre hub cap from the brake drum either by using a 'Stilson' type wrench or a hammer and drift pin (1, Fig. L:2).
4. Remove the split pin and the hub nut retainer.
5. Using a torque wrench and suitable socket, tighten the hub nut to the correct torque - see TECHNICAL DATA whilst revolving the brake drum at the same time.
6. Now, back-off the hub nut by 1/8th of a turn and check the hub endfloat. There should be a barely perceptible endfloat, see TECHNICAL DATA.
7. Refit the nut retainer and secure in position with a new split pin.
8. Clean the inside of the hub bearing cap and refill it with approximately 1/3 oz (10 grams) of bearing grease before refitting.
9. Refit the road wheel and lower the car to the ground. Repeat the adjustment procedure on the other rear wheel bearing, if necessary.
10. Tighten the road wheel nuts to the correct torque.

Bearing Replacement (Figs. L:2 & 3)

NOTE: After May 1983 Renault 18 rear axles which have the four hole fixing for the wheel bolts (those with a negative offset front axle) were fitted with wheel hub/drum assemblies with integral wheel bearings that cannot be replaced or repaired. The brake drums being fixed to the hub by two Torx screws. The wheel bearings and hub cannot be separated so if faulty, the complete assembly must be renewed (Fig. L:3).

1. Raise and support the rear of the car and remove the road wheel(s) as detailed in the previous section. Chock the front wheels and release the handbrake.
2. Remove the hub cap by the method detailed previously, withdraw the split pin and hub nut retainer, then unscrew the hub nut.
3. Remove the brake drum from the stub axle. It should come off quite easily with a tap from a 'soft' hammer. If it is difficult to remove, slacken off the brake adjustment - see BRAKES chapter, or use a universal puller.

NOTE: When the brake drum is removed the inner bearing cage and rollers will be left attached to the stub axle, but on later models, as previously described, the bearings are integral with the drum and hub assembly and no further dismantling is possible. A new hub and bearing assembly must be fitted if a replacement is required.

4. Remove the outer bearing assembly from the brake drum, then lever out the oil seal from the hub housing using a screwdriver.
5. Use a hammer and small chisel to drift out the inner and outer bearing cups from the hub. Insert the chisel through the hub to the back of each cup, placing the chisel at diametrically opposite points to avoid the cup jamming in the housing. Take care to avoid damaging the cup housing with the chisel.
6. Clean the inside of the hub thoroughly to remove all traces of old grease.
7. Fit the new bearing cups, using a tubular drift, making sure they are fitted the correct way round with the taper facing inwards, and that they are fully home and square in the housing.
8. Fit a new oil seal to the hub inner flange, tapping it gently and squarely into position with a flat hardwood block. The seal should be fitted with the lip facing inwards towards the hub. Lubricate the lip with a smear of grease or clean oil.

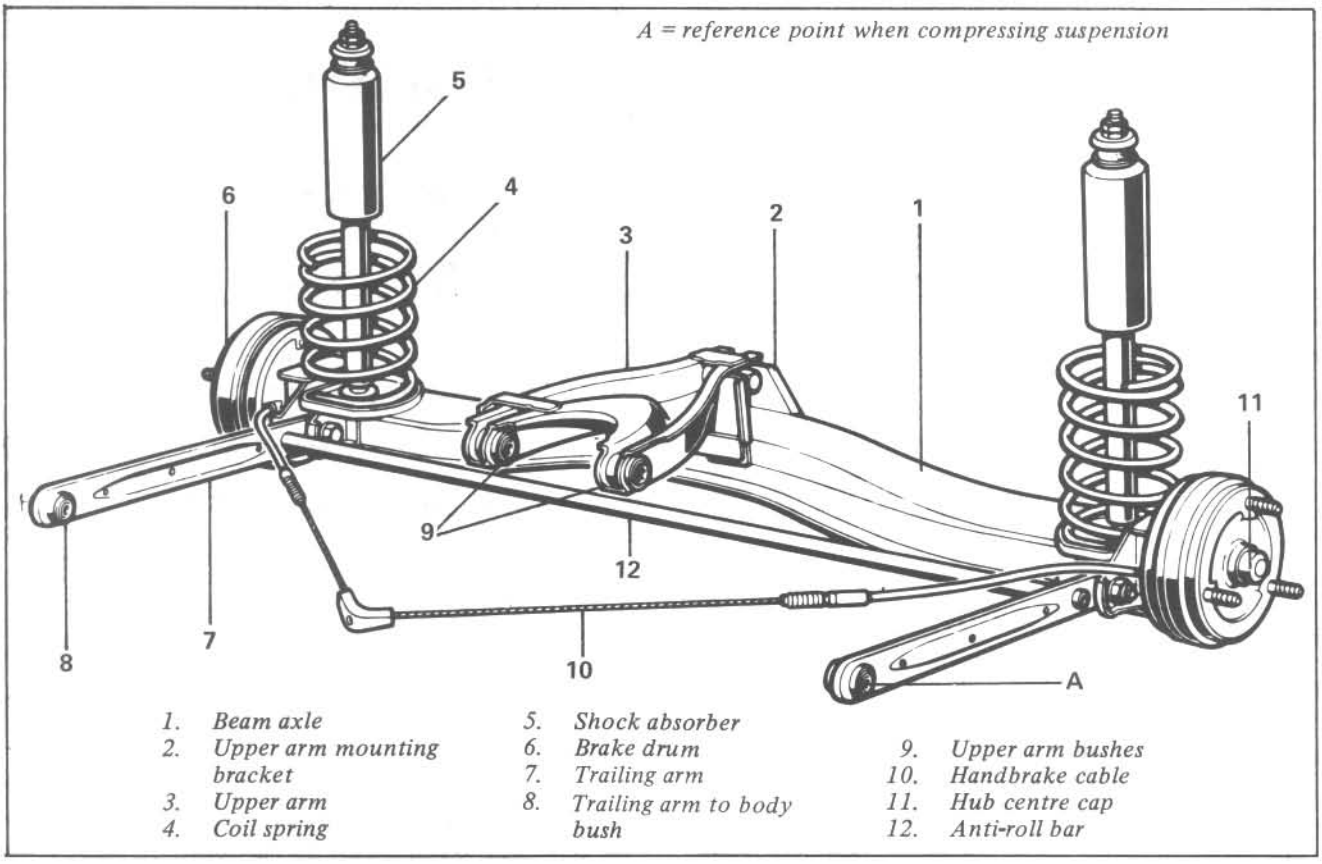

1. *Beam axle*
2. *Upper arm mounting bracket*
3. *Upper arm*
4. *Coil spring*
5. *Shock absorber*
6. *Brake drum*
7. *Trailing arm*
8. *Trailing arm to body bush*
9. *Upper arm bushes*
10. *Handbrake cable*
11. *Hub centre cap*
12. *Anti-roll bar*

Fig. L:1 Rear suspension assembly

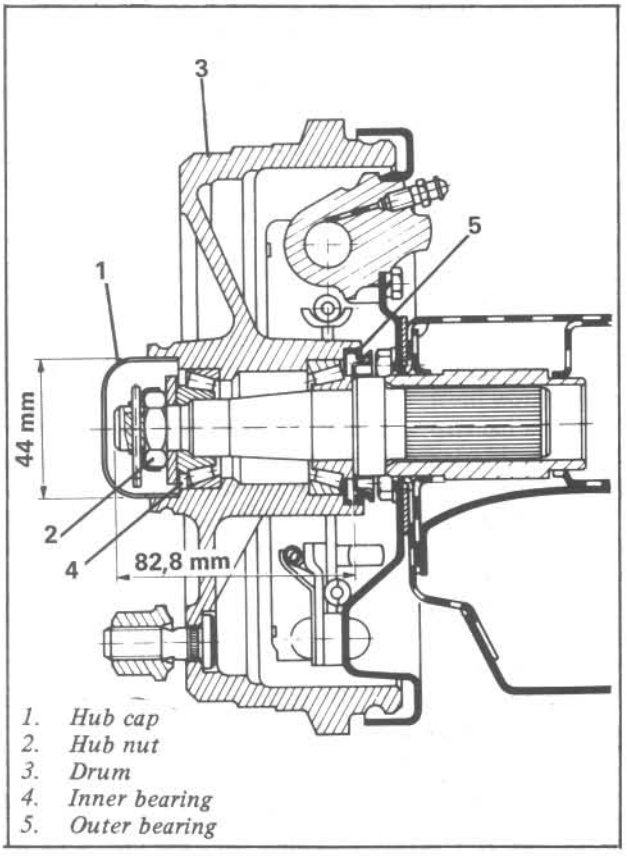

1. *Hub cap*
2. *Hub nut*
3. *Drum*
4. *Inner bearing*
5. *Outer bearing*

Fig. L:2 Sectional view of hub assembly

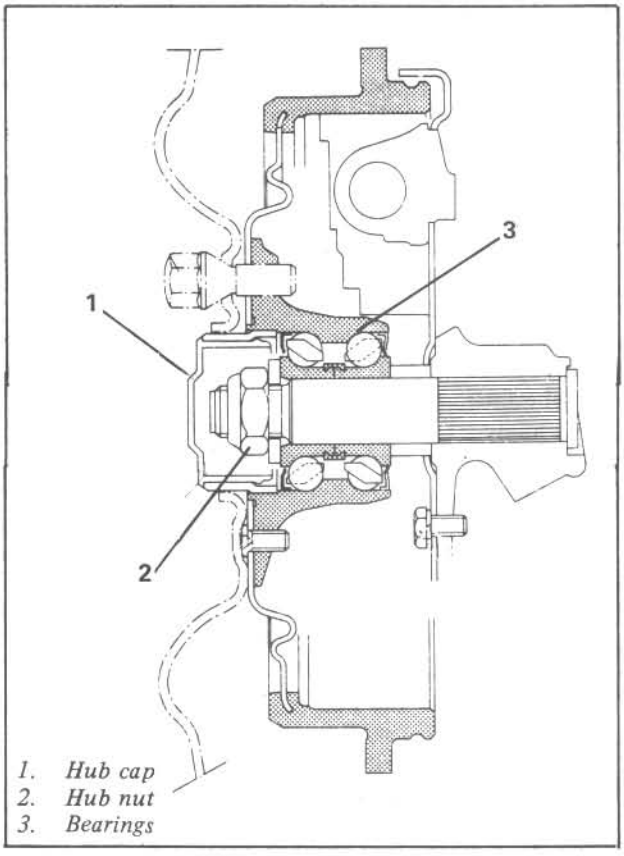

1. *Hub cap*
2. *Hub nut*
3. *Bearings*

Fig. L:3 Sectional view of later hub assembly (May 83 -on)

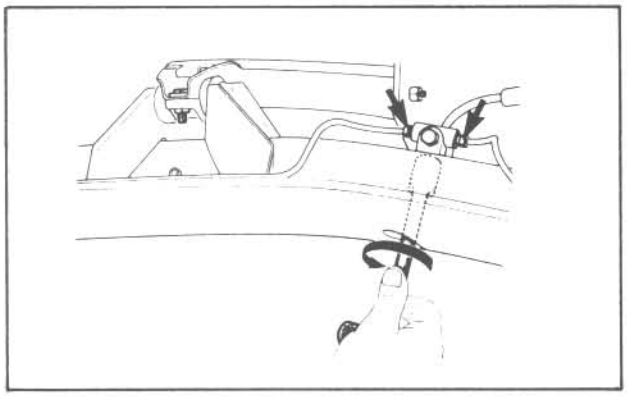

Fig. L:4 Removing brake pipe union

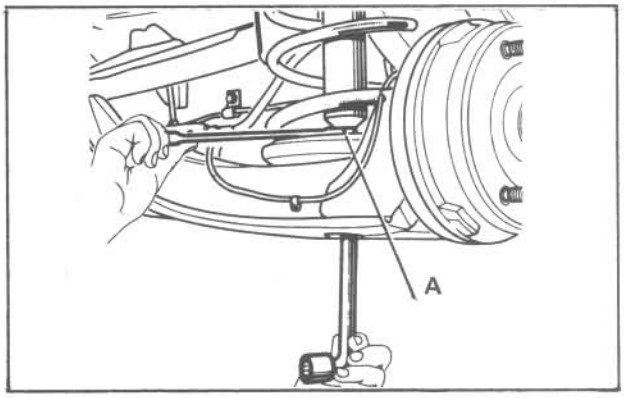

Fig. L:5 Hold shock absorber at 'A'

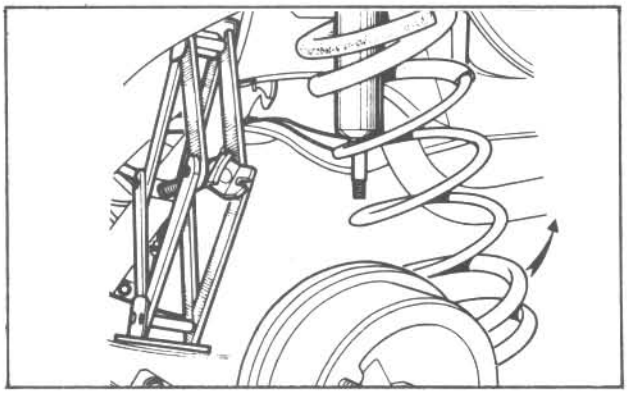

Fig. L:6 Lowering axle to remove spring

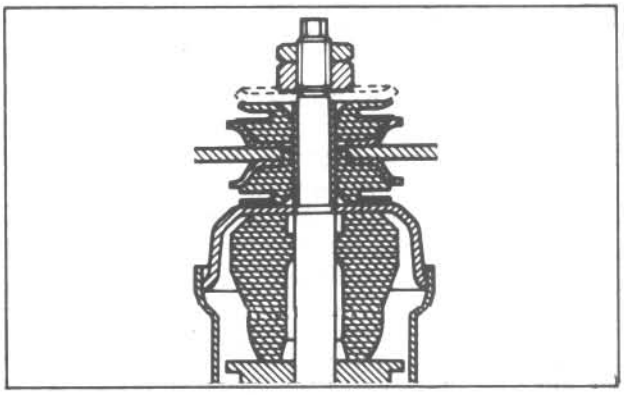

Fig. L:7 Shock absorber top mounting

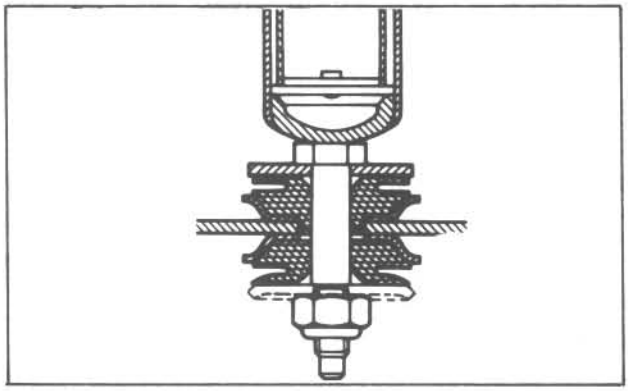

Fig. L:8 Shock absorber bottom mounting

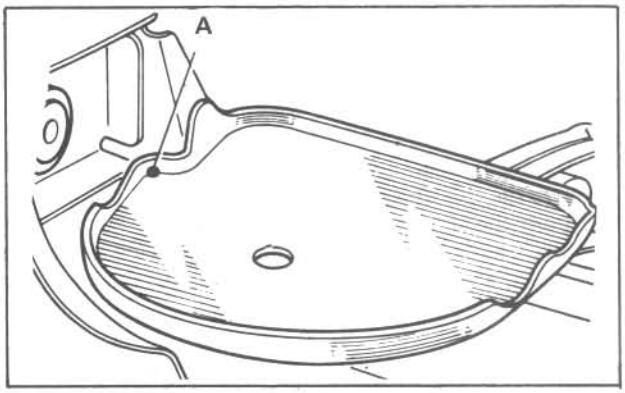

Fig. L:9 Details of spring bottom location

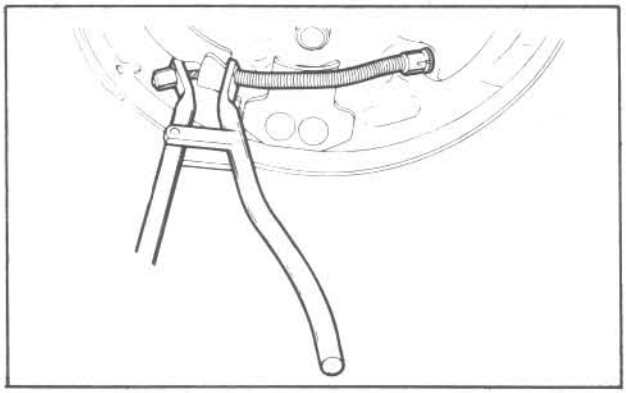

Fig. L:10 Disconnecting handbrake cable

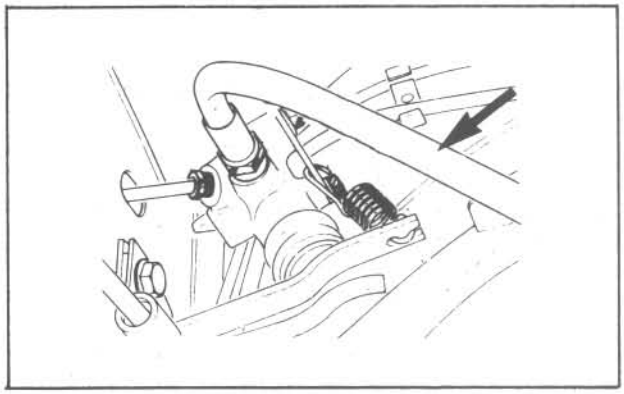

Fig. L:11 Clamp the flexible brake pipe

9. Remove the inner bearing cage from the stub axle using a three-legged universal puller, then clean the stub axle thoroughly.
10. Pack the new bearings and rollers with high melting point grease, working it into the rollers inside the cage.
11. Fit the inner bearing to the stub axle with the taper facing outwards away from the axle assembly. Drive the bearing fully home using a tubular drift.
12. Fit the outer bearing to the hub housing in the brake drum with the taper facing inwards.
13. Refit the brake drum to the stub axle, followed by the washer and hub nut.
14. Tighten the hub nut to the correct torque - see TECHNICAL DATA, and adjust the hub endfloat as detailed previously.

SHOCK ABSORBERS. . . . . [3]

Replacement

1. From inside the boot (or rear luggage compartment on estate cars) undo the shock absorber upper mounting. Hold the flats on the attachment stud with pliers to prevent the stud from turning while removing the securing nut. Remove the upper mounting rubber bushes.
2. Raise and support the rear of the car on stands under the body as detailed in the ROUTINE MAINTENANCE chapter.
3. Unbolt the brake pipe union from the axle but do not disconnect the pipes (Fig. L:4).
4. Place a jack under the rear axle beam and remove the rear wheels.
5. Hold the shock absorber by placing an open-ended spanner at position 'A' in Fig. L:5 and undo the lower mounting nut using a socket wrench through the hole in the underside of the axle beam. Remove the nut and rubber bushes to free the shock absorber.
6. Lower the jack under the rear axle beam until the coil springs are free of the upper and lower mounting pads. Remove the jack from under the axle.
7. Push the shock absorber up as far as it will go to reduce its length to clear the spring then place a scissor jack between the side arm and the body to push the axle down until the coil spring can be tilted sideways as shown in Fig. L:6.
8. Remove the shock absorber and coil spring from the car.
9. Place the new shock absorber in the vertical position and operate it for several strokes through its full travel to remove any air in the fluid, particularly if the unit has been stored on its side for some time.
10. Fit the upper mounting spacer and bush to the top stud in the correct order - see Fig. L:7.
11. Move the axle aside and offer up the spring and shock absorber together to their location.
12. Align the spring with the bottom cup in the axle, noting that the stop (A, Fig. L:9) locates the end of the spring.
13. Place a jack under the axle and raise the axle to compress and locate the spring.
14. Pull the shock absorber body down and fit the lower mounting rubbers and washers before reconnecting it to the axle. Note the fitting order of the bushes as shown in Fig. L:8.
15. Tighten the top and bottom shock absorber mountings.
16. Remove the jack and refit the brake pipe union to the axle beam.
17. Refit the road wheels, lower the car and tighten the wheel nuts.

NOTE: Shock absorbers should always be replaced in axle pairs otherwise the car's handling will be adversely affected.

Shock Absorber Inspection

Check the unit visually for any fluid leaks or signs of damage. If any are present it must be replaced.

Clamp the unit vertically in a vice and operate the piston rod to its full length, then compress it. There should be a moderate and even resistance throughout the upward and downward strokes. Any variation or sudden loss of resistance indicates the presence of air in the system, loss of fluid or a faulty valve, and the shock absorber must be replaced as detailed previously.

COIL SPRINGS. . . . . [4]

Replacement

1. Remove the coil spring from the car as detailed in the previous section for removing the shock absorbers, noting that it is only necessary to undo the shock absorber lower mounting.
2. The suspension springs can be checked to see if they are weak by measuring their free (uncompressed) length and comparing with the figure quoted in TECHNICAL DATA.
3. Refit the spring in the reverse order of removal, noting that the bottom end is denoted by a colour code on the second to last coil. Ensure that the bottom coil engages correctly in the recess in the spring plate (Fig. L:9).

AXLE BEAM ASSEMBLY . . . . . [5]

Removal

1. Raise and support the rear of the car on stands under the body as detailed in the ROUTINE MAINTENANCE chapter.
2. Remove both rear wheels, and the brake drums as detailed earlier in this chapter.
3. Disconnect each handbrake cable from the brake shoe lever and detach the cables from the brake backplates - see BRAKES chapter.
4. Place a brake pipe clamp on the flexible brake hose to the 3 - way pipe union on the axle beam (Fig. L:11).
5. Unscrew and disconnect the two brake pipes from the 3 - way pipe union and plug them to prevent the ingress of dirt.
6. Using a suitable socket and extension, undo the bolts securing the 3 - way union to the axle beam (Fig. L:4) and detach the union.
7. Place a jack under the axle beam to support it.
8. Undo the nuts and remove the pivot bolts securing the rear ends of the trailing arms to the axle beam brackets.
9. Undo the two nuts securing the upper suspension arm to axle bracket bush 'U' clamp and remove the clamp.
10. Raise the axle jack slightly to take the weight off the

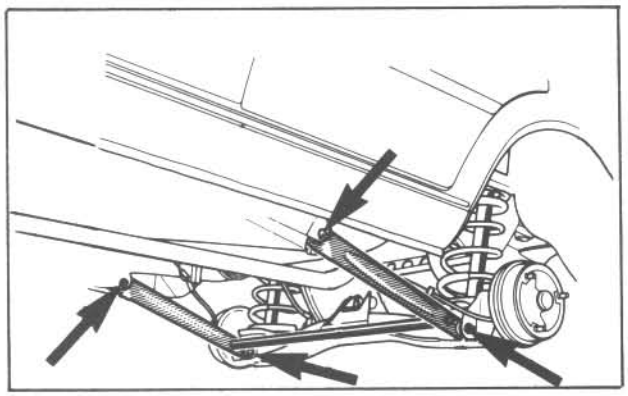

Fig. L:12 Trailing arm pivot bolts (arrowed)

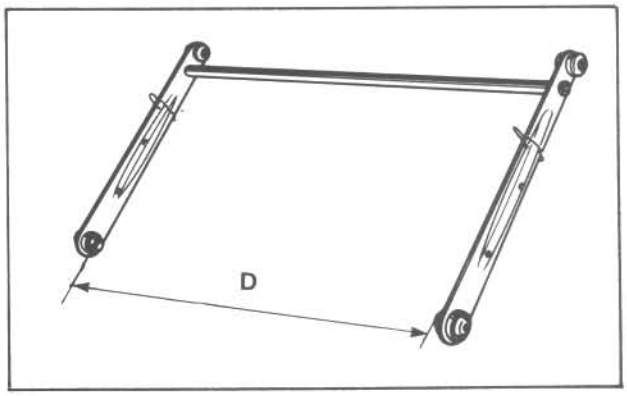

Fig. L:13 Trailing arm bush distancing

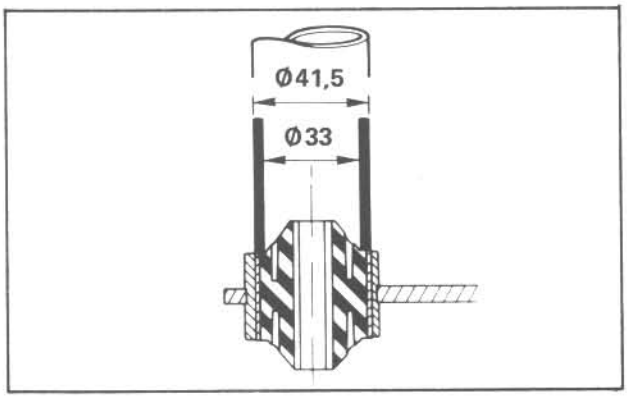

Fig. L:14 Replacing trailing arm bushes

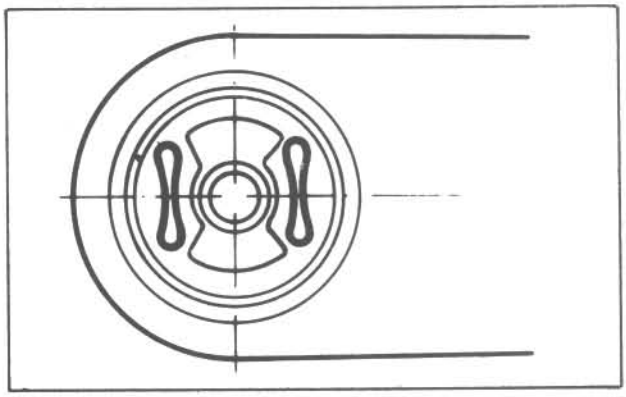

Fig. L:15 Bush positioning in trailing arm

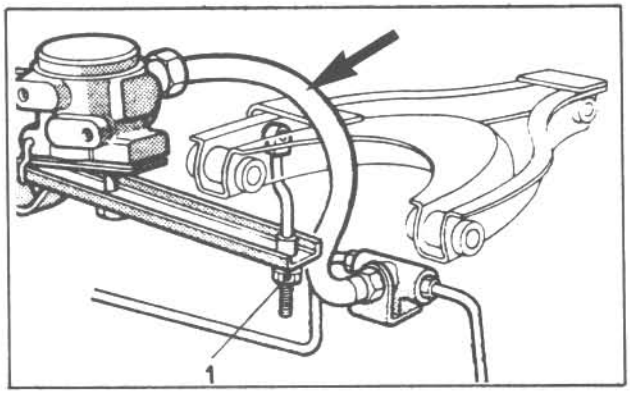

Fig. L:16 Limiter connection to upper arm

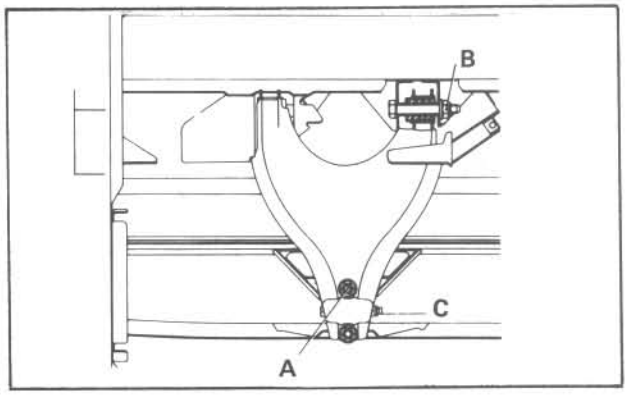

Fig. L:17 Upper arm attachment points

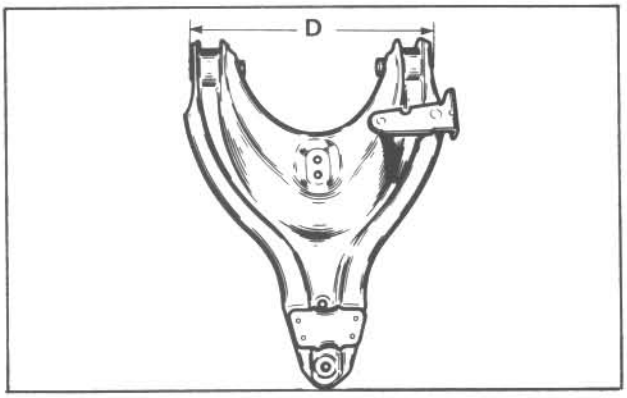

Fig. L:18 Upper arm bush distancing

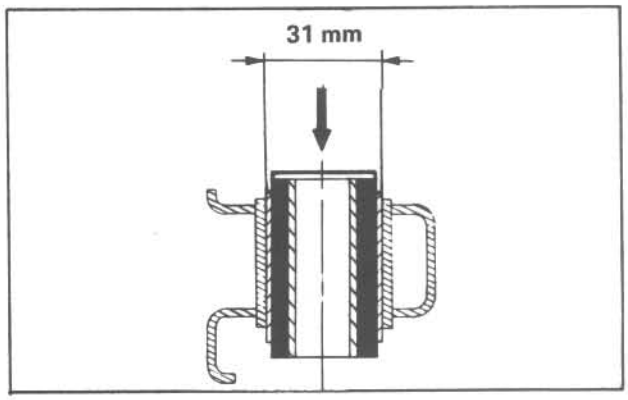

Fig. L:19 Replacing upper arm bushes

shock absorber lower mountings.
11. Undo the shock absorber lower mounting nuts and remove the washers and rubbers.
12. Lower the axle carefully on the jack until the coil springs are free to be detached as the axle is removed from under the car.

Installation

Installation is a reversal of the removal procedure noting that the suspension pivot bolts and nuts should only be tightened to the correct torque with the suspension partly compressed - see 'Introduction'.

TRAILING ARMS . . . . . [6]

Removal

1. Raise and support the rear of the car as detailed in the ROUTINE MAINTENANCE chapter and remove the road wheels.
2. Disconnect the handbrake cables from the levers at the backplates (Fig. L:10).
3. Remove the nuts from either end of the trailing arms and tap out the pivot bolts (arrowed, Fig. L:12).
4. Remove both trailing arms together with the anti-roll bar.

Bush Replacement

NOTE: Only the bushes at the body attachment end of the trailing arms can be replaced; those at the axle end cannot and if worn or damaged then the trailing arm must be replaced as a complete assembly.
The body to arm bushes must be replaced one at a time in order to retain their exact positioning in relation to the centre-line of the car body.
1. Support the arm adjacent to the bush being removed and use a short piece of steel tube of the diameter shown in Fig. L:14 and a hammer to drift the old bush out.
2. Lubricate the outside of the new bush with washing-up liquid and then press it into position, either with a heavy duty vice or with a hammer and steel tube until the edge of the bush (inboard side) is at a distance of 37.75 in (959 mm) (D, Fig. L:13) from the inboard side of the opposite trailing arm bush.
NOTE: The bushes should be positioned with their slots positioned as in Fig. L:15.
3. Repeat the operation for the opposite side trailing arm but remember to maintain the distance 'D' between the two sides.

Installation

Installation is a reversal of the removal procedure, noting the following points:
a) Lubricate the pivot points with high melting point grease before fitting.
b) Tighten the pivot bolt nut(s) with the suspension partly compressed - see 'Introduction'.

ANTI-ROLL BAR . . . . . [7]

On many models the anti-roll bar is integral with the trailing arms and therefore cannot be removed separately. On some models, however, an additional anti-roll bar is bolted to the trailing arms and in this case removal is simply a matter of undoing the nuts (these are accessible from the outside of the trailing arms) and withdrawing the four bolts.

UPPER SUSPENSION ARM . . . . . [8]

1. Raise and support the rear of the car on axle stands as detailed in the ROUTINE MAINTENANCE chapter.
2. From under the car, undo the bolt securing the brake pressure limiter connecting rod to the underside of the upper suspension arm (Fig. L:16). Push the rod to one side, clear of the arm.
NOTE: Do not attempt to disconnect the rod by undoing the rod adjusting nuts.
3. Undo the two nuts securing the arm clamp to the axle bracket (A, in Fig. L:17). Detach the clamp.
4. Undo the two nuts securing the arm pivot pins, B, in Fig. L:18.
5. Drift the pivot pins out.
6. Remove the suspension arm from the car.
7. Undo the nut and bolt securing the axle pivot rubber bush ('C' in Fig. L:17), withdraw the bolt and detach the bush.

Installation

1. Check the condition of the arm pivot pins and the rubber bushes and replace if found to be worn.
2. Lubricate the pivot pins with multi-purpose grease and refit the arm and pin in the reverse order of removal. Tighten the nuts to the correct torque only when the suspension is partly compressed - see 'Introduction'.
3. Reconnect the arm to axle bracket clamp and tighten the nuts progressively to avoid distorting the rubber bush.
4. Reconnect the brake pressure limiter connecting rod to the arm.
NOTE: If the connecting rod adjusting nuts have been disturbed, it is essential that the limiter is properly adjusted by a Renault dealer as soon as possible.

Pivot Bush Replacement

1. Remove the upper arm from the car as detailed in the previous section.
2. Note that the arm bushes must be replaced, one at a time in order to retain the overall width 'D' in Fig. L:18 and the bushes central in relation to the pivot pin.
3. Support the arm adjacent to the bush being removed and use a short piece of steel tube 31 mm (1 7/32 in) outside diameter, and a hammer to drift the old bush out in the direction of the arrow in Fig. L:19.
4. Lubricate the outside of the new bush with washing-up liquid and then press it into position, either with a heavy duty vice or a hammer and steel tube, until the outer edge of the bush is to dimension 'D' 243 mm (9 9/16 in) as shown in Fig. L:18.
5. Repeat the replacement procedure on the other bush.
6. Refit the arm to the car as detailed in the previous section.

Brakes

INTRODUCTION . . . . . [1]
FRONT BRAKE PAD REPLACEMENT . . . . . [2]
REAR BRAKE SHOE REPLACEMENT . . . . . [3]
REAR BRAKE PAD REPLACEMENT . . . . . [4]
BRAKE HYDRAULIC CIRCUIT . . . . . [5]
BLEEDING THE HYDRAULIC CIRCUIT . . . [6]
BRAKE PIPES AND HOSES . . . . . [7]
FRONT BRAKE CALIPER BRACKET . . . . [8]
FRONT BRAKE DISC . . . . . [9]
REAR BRAKE CYLINDERS . . . . . [10]
REAR BRAKE DISC . . . . . [11]
REAR BRAKE CALIPER . . . . . [12]
BRAKE MASTER CYLINDER . . . . . [13]
BRAKE LIMITER . . . . . [14]
BRAKE SERVO . . . . . [15]
HANDBRAKE CABLE . . . . . [16]
BRAKE PEDAL . . . . . [17]
TROUBLE SHOOTER . . . . . [18]

INTRODUCTION . . . . . [1]

All Renault 18 and Fuego models are fitted with a dual circuit braking system providing two separate hydraulic circuits for, either diagonally opposed pairs of wheels, or front and rear pairs of wheels depending on the particular model. This system provides emergency braking in the event of one system failing.

The front disc brakes are of single piston, sliding caliper design, with self adjusting drum type rear brakes on all models with the exception of some Turbo 18 models which are fitted with disc rear brakes. All models are fitted with a direct acting vacuum servo.

A brake pressure limiting valve is also fitted in the hydraulic circuit to limit the tendency for the rear brakes to lock prematurely under conditions of heavy braking. The brake pressure limiting valve is connected to the rear axle beam by an adjustable linkage which reacts to changes in the suspension position caused by varying load conditions.

On certain model variants, brake pad wear sensors are fitted to the front brake pads. When the pad lining material has worn to a predetermined thickness, the sensor contacts the brake disc and operates a warning light on the instrument panel.

The handbrake is cable operated on the rear brakes and can be adjusted to compensate for wear and cable stretch.

Apart from the brake pressure limiting valve and vacuum servo mentioned previously, the remainder of the braking system components can be overhauled or replaced by the experienced DIY mechanic - see Brake Hydraulic Circuit section.

FRONT BRAKE PAD REPLACEMENT . . . . . [2]

The front brake pads should be renewed if they are worn below the minimum safe thickness of 11 mm including the steel backing plate (Fig. M:2 & M:3).

Whenever one or more brake pads require replacement, BOTH pads at BOTH front brakes should be replaced to maintain even braking balance.

Pad Replacement - Bendix

1. Slacken the front wheel bolts, jack up the front of the car and support on axle stands. Remove the wheels.
2. Remove the small spring clips securing the ends of the caliper upper and lower locking wedges, using thin nosed pliers.
3. Use a thin punch to drift out the top locking wedge and then slide out the bottom one.
4. Slide the caliper away from the carrier bracket and disc to release the pads which will remain located in the carrier bracket (Fig. M:4). Support the caliper to prevent straining the flexible hose. Once the caliper has been detached on no account must be brake pedal be depressed.
5. Detach the worn brake pads, noting the position of the springs underneath.
6. Clean the pad housings and the rim of the piston thoroughly to remove all dirt.
7. Check the level of the hydraulic fluid in the master cylinder reservoir. If it is absolutely full it is advisable to siphon a small quantity out of the reservoir to allow for the rise in level when the caliper pistons are retracted into their bores to enable the new pads to be fitted.
8. Using an angled lever, carefully push the caliper pistons back into their bores (Fig. M:5).
9. Make sure that the springs in the carrier bracket are correctly fitted with the longer one on the outside and the short one inside.
10. Fit the new pads in the carrier bracket the correct way up. The pad wear sensor wire should be positioned at the top of the pad.

    Check that both pads slide freely in the bracket then slide the caliper into position over the pads.
11. Fit the lower locking wedge first, then use a screwdriver to lever the caliper inwards slightly to insert the upper locking wedge-see Fig. M:6.
12. Refit the wedge securing clips.
13. Pump the brake pedal several times to bring the pads into contact with the disc.
14. Refit the road wheels, jack up the car, remove the axle stands and lower the car to the ground. Tighten the wheel bolts to the correct torque - see TECHNICAL DATA.

Pad Replacement - Girling

1. Slacken the front wheel bolts, jack up the front of the car and support on axle stands. Remove the wheels.
2. Check the level of the fluid in the master cylinder reservoir. If it is absolutely full it is advisable to siphon a small quantity out of the reservoir to allow for the rise in level when the caliper pistons are retracted into their bores to enable the new pads to be fitted.
3. Pull the caliper firmly outwards, by hand, to push the piston back into its bore (Fig. M:7).
4. Using two spanners, undo and remove the two caliper bolts as shown in Fig. M:8. These bolts should be renewed whenever the pads are changed.
5. Slide the caliper assembly from the carrier bracket and disc to expose the pads which will remain located in the carrier bracket (Fig. M:9). Support the caliper so that the flexible hose is not under any strain. Once the caliper has been detached on no account must be brake pedal be depressed.
6. Remove the brake pads from the carrier bracket and clean all the brake dust and road dirt from the carrier bracket and caliper assembly.
7. If necessary, push the piston back fully into the caliper bore using a suitable lever as shown in Fig. M:10.
8. Fit the new pads to the caliper bracket. The pad wear warning sensor wire should be positioned at the top of the pad.
9. Carefully slide the caliper assembly into position and refit the inner guide bolt (Fig. M:11).
10. Press on the caliper and refit the top guide bolt.
11. Tighten the guide bolts to the correct torque starting with the bottom bolt.
12. Depress the brake pedal several times to bring the piston and pads into contact with the disc.

NOTE: The overhaul procedure for both Girling and Bendix front calipers is similar to that detailed for the 'Rear Brake Caliper' later in this chapter, noting that there is no screw piston adjuster.

Pad Replacement - Bendix Series 4

1. Slacken the front wheel bolts, jack up the front of the car and support on axle stands. Remove the wheels.
2. Disconnect the pad wear warning light wires.
3. Remove the pad retaining key safety clip (1, Fig. M:12), then slide out the key (2, Fig. M:12).
4. Using a screwdriver, lever gently on either side of the inner pad between the disc and the caliper to retract the caliper piston. This will provide clearance for the pads to be withdrawn.
5. Examine the dust seal and bellows for splits or damage and replace if necessary. Clean the slides and the end of the piston with methylated spirits and grease them before fitting new bellows.
6. Check the level of the fluid in the master cylinder reservoir. If it is absolutely full it is advisable to siphon a small quantity out of the reservoir to allow for the rise in level when the caliper pistons are retracted into their bores to enable the new pads to be fitted.
7. Retract the piston into the caliper using a suitable 'G' clamp or, if available, Renault tool Fre. 823 (Fig. M:13).
8. Fit the new pads into the caliper ensuring that the anti-rattle springs are positioned correctly.
9. File a chamfer (Fig. M:14) on one end of the retaining key and slide it into position in the caliper.
10. Refit the safety clip and reconnect the warning light wire.
11. Pump the brake pedal several times to bring the pads into contact with the disc.
12. Refit the road wheels, jack up the car, remove the axle stands and lower the car to the ground. Tighten the wheel bolts to the correct torque - see TECHNICAL DATA.

REAR BRAKE SHOE REPLACEMENT. . . . . [3]

The rear brakes on all Renault 18 and Fuego models, with the exception of the 1983 model year Turbo models, are of the self adjusting drum variety and are manufactured by either Bendix or Girling. 1983 model year Turbo models are fitted with disc rear brakes.

The rear brake shoes should be renewed if the linings are worn to or approaching the minimum wear thickness of 0.5 mm of lining above the rivet heads, or if they are the cause of braking problems.

Brake shoes should be renewed in axle sets, i.e. BOTH sides of BOTH rear brakes to maintain braking balance.

Removal - Bendix

1. Slacken the rear wheel bolts, jack up the rear of the car and support on axle stands. Remove the rear wheels.
2. Release the handbrake fully, slacken the secondary cables to allow the operating lever to return to its fully relaxed position. Lever out the blanking plug from the backplate and insert a screwdriver through the hole and push the actuating lever away from the brake shoe. Once this has been done the lever can be pivoted further to the rear (Fig. M:15).
3. Using a broad bladed screwdriver, lever the edge of the hub grease cap away from the brake drum, working progressively round the edge until the cap can be removed.
4. Pull out the split pin and undo the hub nut, and remove the washer.
5. Using either Renault tool T.Av. 235 or T. Av. 235-01 pull off the brake drum. Alternatively a universal three legged puller can be used (Fig. M:16).
6. Using thin nosed pliers, disconnect the top shoe return spring from the hole in the shoe web.
7. Push the handbrake actuating lever inwards and disconnect the end of the handbrake cable.
8. Using a length of thin tube, unhook the shoe steady springs by pressing on the bottom of each spring (Fig. M:17).
9. Push the self adjusting mechanism toothed lever (Fig. M:18) towards the stub axle as far as it will go.
10. Ease both brake shoes away from the backplate, then pull the link outwards and remove the leading shoe from it (Fig. M:19).
11. Set the toothed sector (Fig. M:20) in its initial position, then tilt the leading shoe outwards at 90 deg.
12. Remove the bottom return spring with a screwdriver.
13. Remove both brake shoes from the backplate then detach the spring, link and handbrake lever from the shoes. Fit Renault tool Fre. 05 to prevent the wheel

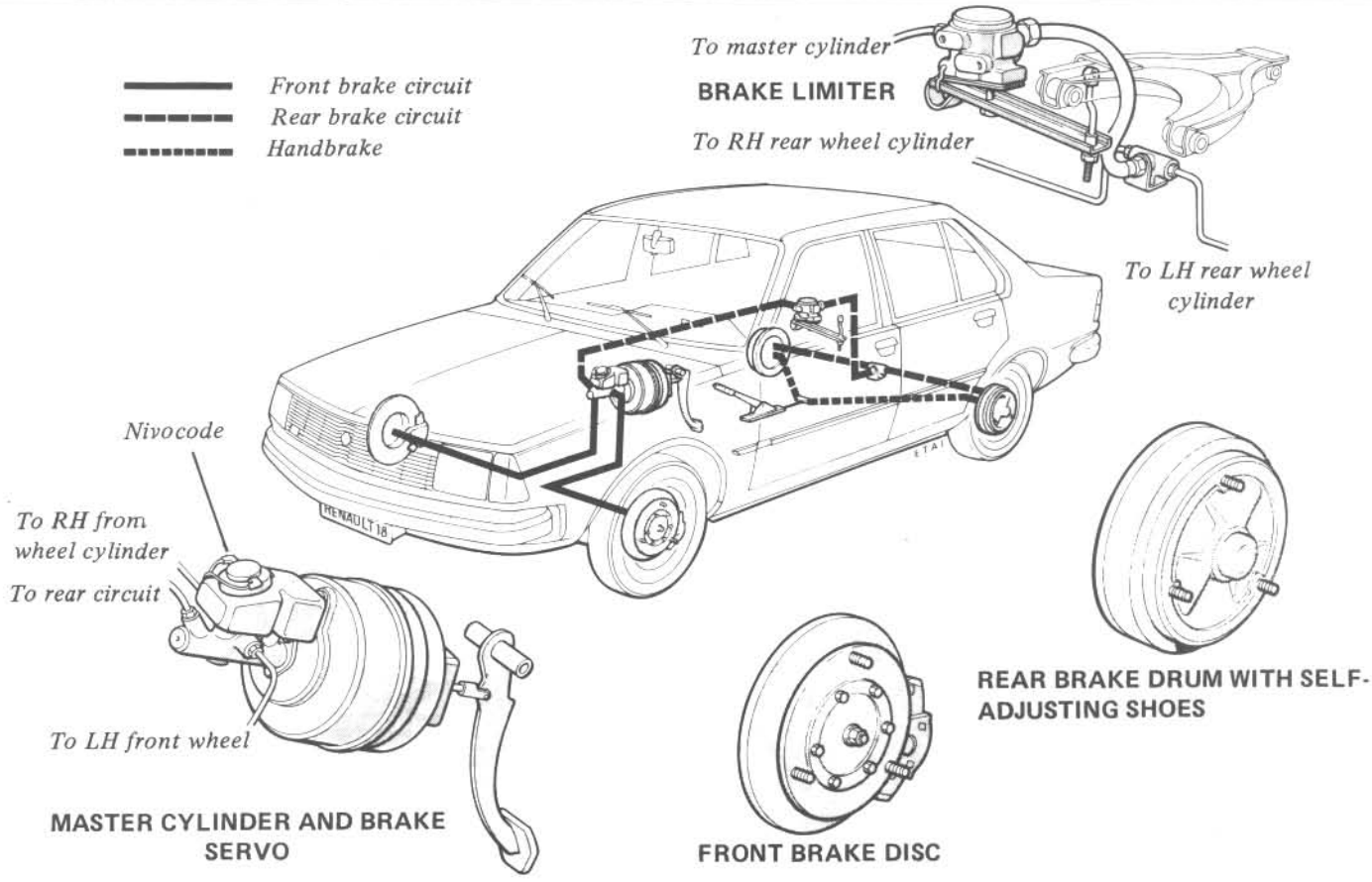

Fig. M:1 General layout of braking system

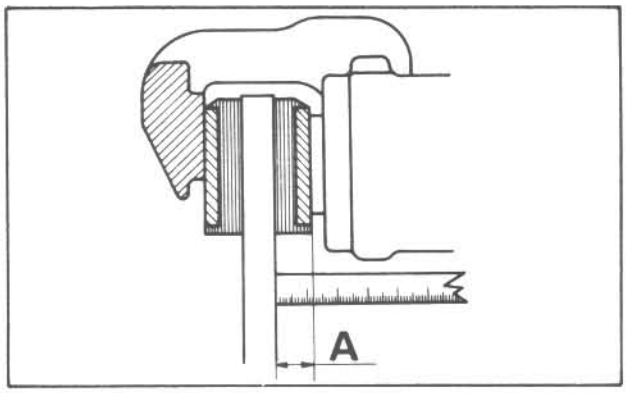

Fig. M:2 Front brake pad thickness - Bendix

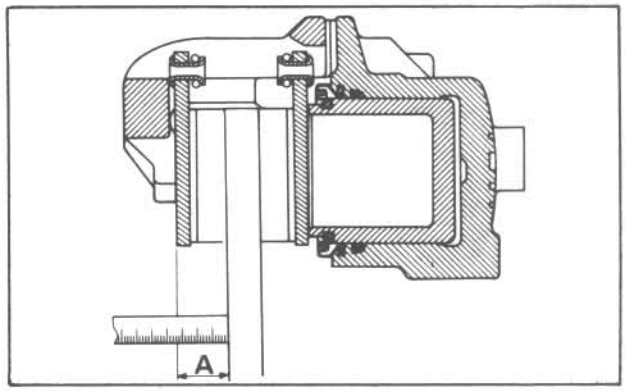

Fig. M:3 Front pad thickness - Girling

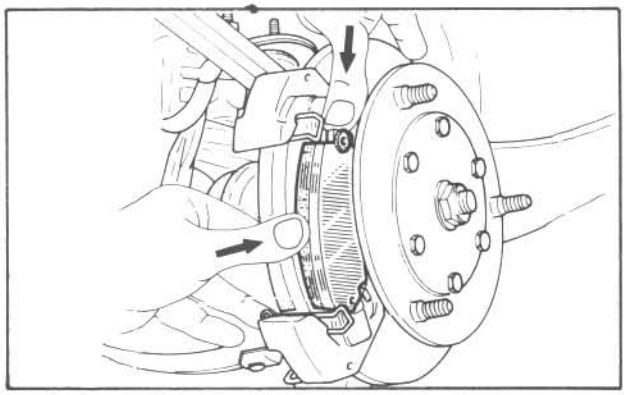

Fig. M:4 Removing brake pads - Bendix

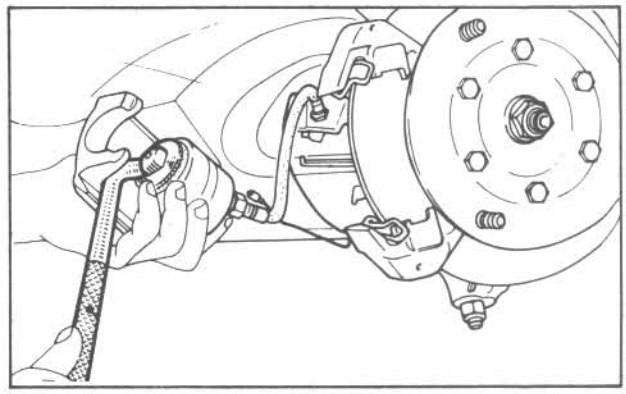

Fig. M:5 Retracting caliper pistons - Bendix

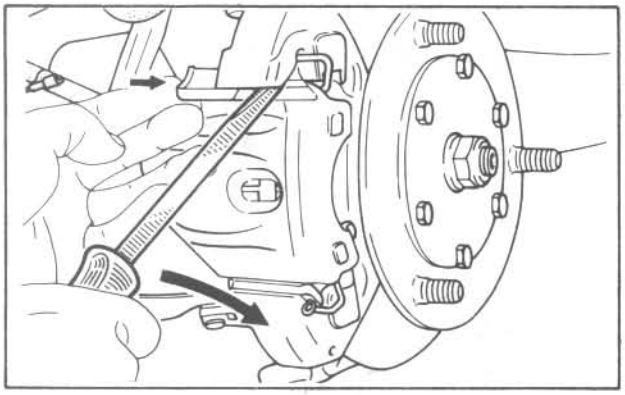

Fig. M:6 Installing locking wedges - Bendix

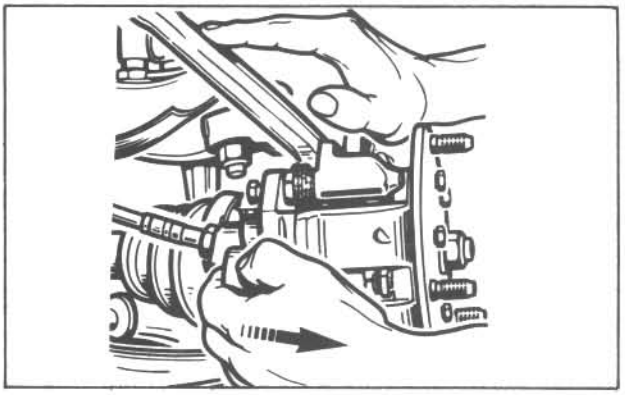

Fig. M:7 Retracting caliper piston - Girling

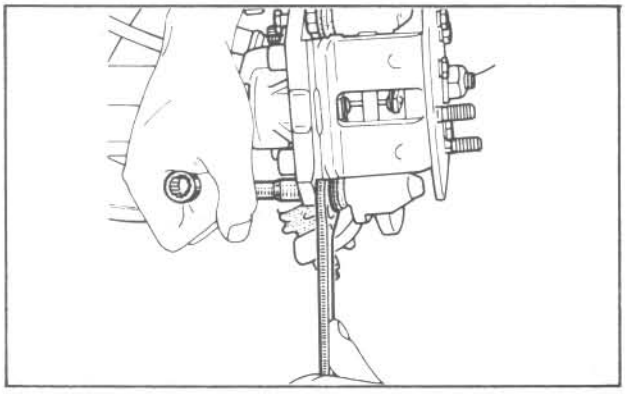

Fig. M:8 Removing caliper guide bolts - Girling

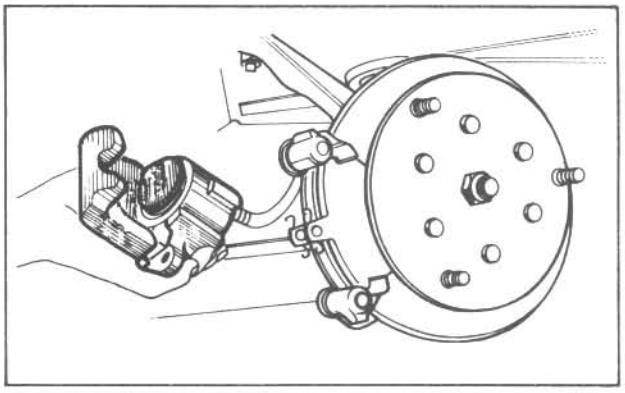

Fig. M:9 Removing caliper assembly - Girling

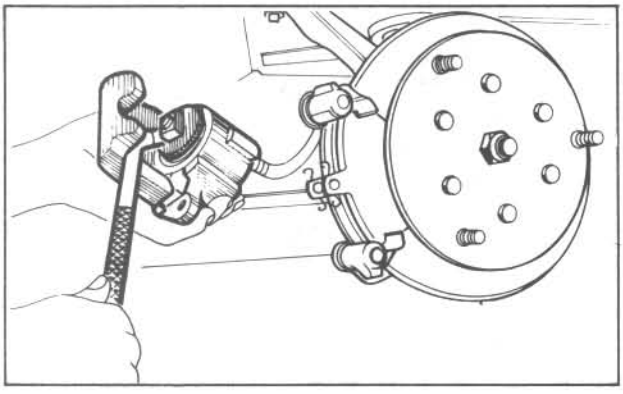

Fig. M:10 Retracting caliper piston - Girling

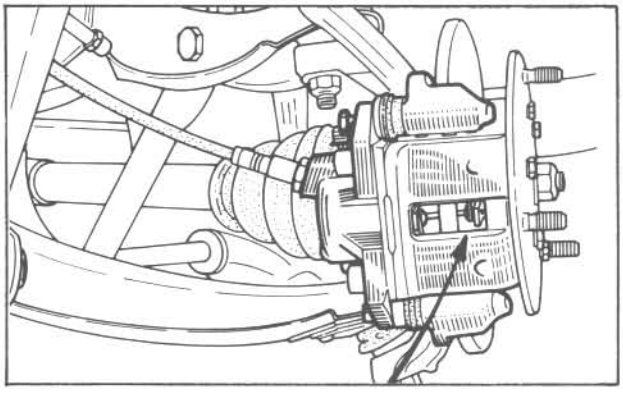

Fig. M:11 Installing pads and caliper - Girling

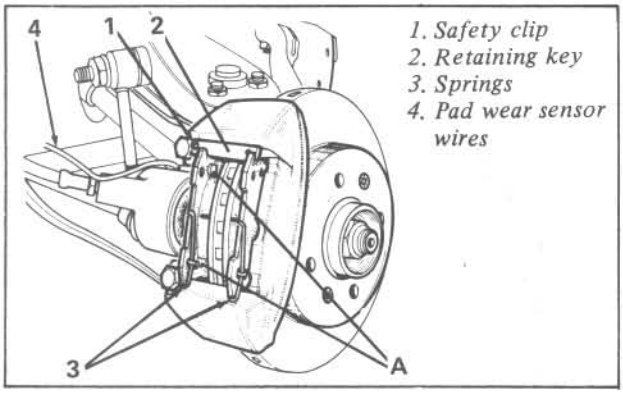

Fig. M:12 Front caliper - Bendix series 4

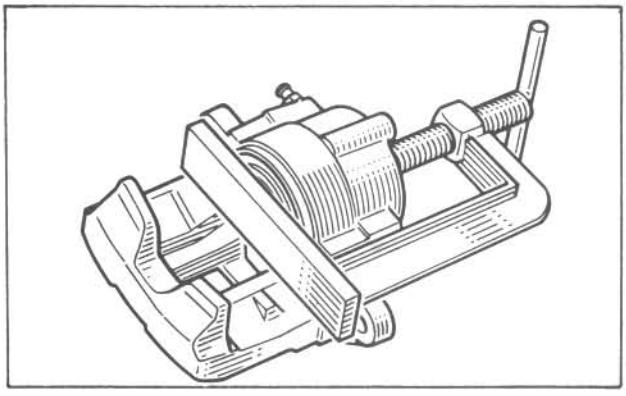

Fig. M:13 Retracting caliper piston - Bendix series

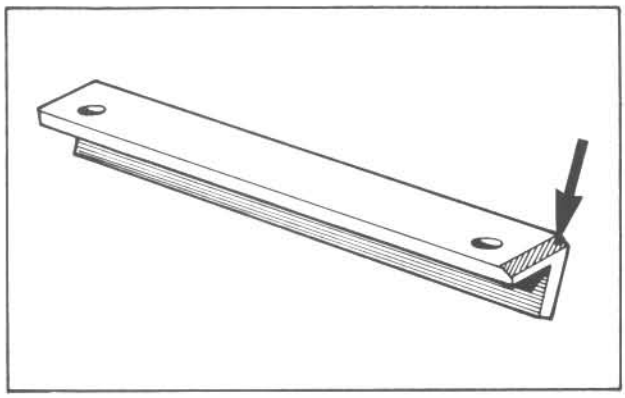

Fig. M:14 Chamfer pad retaining key

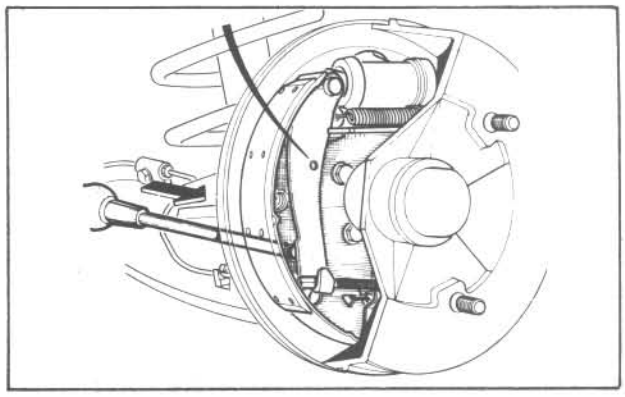

Fig. M:15 Disengaging the actuating lever - Bendix

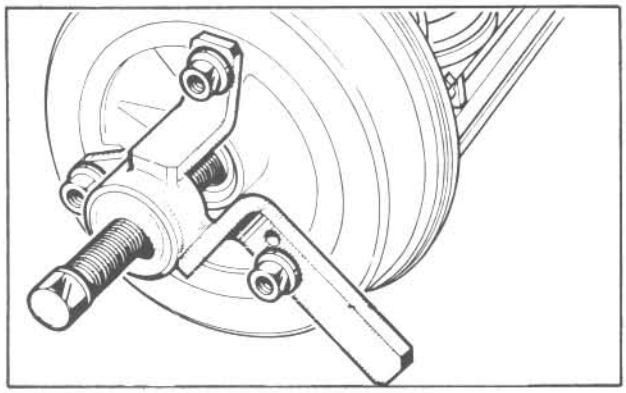

Fig. M:16 Removing rear brake drum

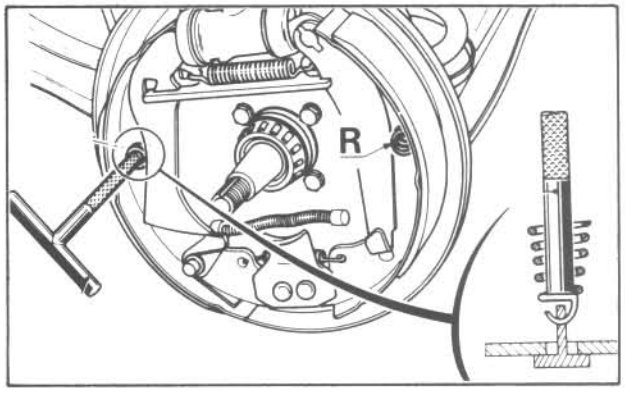

Fig. M:17 Removing shoe retaining springs - Bendix

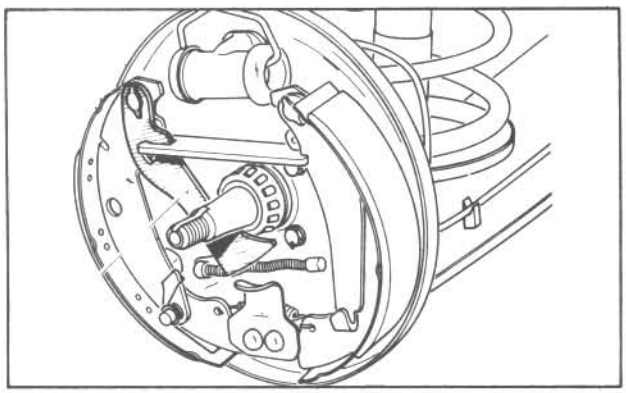

Fig. M:18 Releasing self adjusting link - Bendix

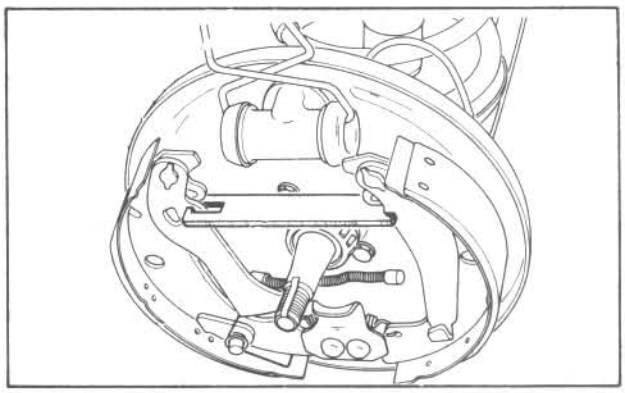

Fig. M:19 Removing shoe link - Bendix

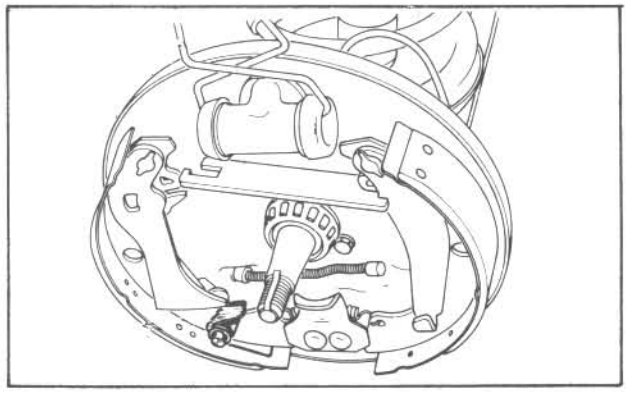

Fig. M:20 Positioning toothed sector - Bendix

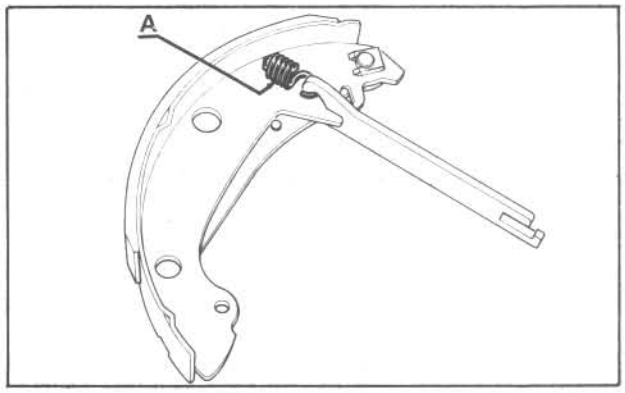

Fig. M:21 Self adjusting spring - Bendix

cylinder pistons coming out of their bores. If this special tool is not available then a good alternative is to twist a piece of wire round the cylinder.
14. Protect the rear hub bearing against dirt by placing a plastic cup over the stub axle.
15. Clean all the brake dust and dirt from the inside of the backplate. If there are signs of grease or brake fluid on the backplate or brake shoes, then the cause should be investigated and rectified at this stage before the new shoes are fitted.

Installation

1. Smear all the shoe pivot points with brake grease and reassemble the slotted link and spring, and the handbrake lever to the shoe.
2. Fit the shoes in the reverse order of removal and reconnect the handbrake cable.
3. The self adjusting mechanism will only work if the tension of spring 'A', Fig M:21, is correct. The clearance between the link and the leading shoe must be approximately 1 mm (Fig. M:22). If this dimension is not as specified, the link spring and both brake shoe return springs must be changed.
4. Refit the brake drum after centralising the shoes in relation to the backplate, adjust the hub bearing endfloat and pump the brake pedal several times to bring the shoes into correct adjustment.

Removal - Girling

1. Remove the brake drum as described in the previous section.
2. Unhook the handbrake cable and the upper return spring .
3. Remove retaining clip and unhook the self adjusting mechanism ratchet spring and lever (Fig. M:23).
4. Retain the ratchet lever thrust washer from the pivot spindle.
5. Extract the shoe retaining pins by gripping the upper washer with a pair of pliers, compressing the spring and turning the washer through 90 deg. Pull off the washer, spring and lower washer and extract the pin.
6. To stop the wheel cylinder pistons coming out of their bores they should either be retained with a piece of wire wrapped around the cylinder or, alternatively use Renault tool Fre. 05.
7. Remove the adjusting link (Fig. M:23), pull the brake shoes away from the wheel cylinder and cross them over. The bottom return spring can now be removed from behind its retaining clip.
8. The brake shoes can now be removed from the backplates.

NOTE: The adjusting link on the right hand side is identified by yellow paint and the left hand side by grey paint.

Installation

1. Examine the wheel cylinder for any signs of brake fluid leaks and overhaul the cylinder if necessary as described in the Rear Brake Cylinders section of this chapter.
2. Fit the bottom return spring by hooking the ends through the shoes from the back as shown in Fig. M:24.
3. Refit the shoes and linkage in the reverse order of removal.
4. Push the hand brake operating lever back against the brake shoe and rotate the ratchet until the diameter, measured across the linings, is approximately 178 mm. When this dimension is correct fit the top return spring.
5. Reconnect the handbrake cable and refit the brake drum.
6. Reset the hub bearing endfloat and adjust the brake shoe clearance by depressing the pedal several times to actuate the self adjusting mechanism.
7. Check the handbrake travel and adjust as described in the Handbrake Cable section of this chapter.
8. Refit the wheels, jack up the car, remove the axle stands, lower the car to the ground and tighten the wheel bolts to the correct torque setting - see TECHNICAL DATA.

REAR BRAKE PAD REPLACEMENT . . . . . [4]

Replacement

1. Slacken the rear wheel bolts, jack up the rear of the car and support on axle stands. Remove the wheel.
2. Remove the pad retaining clips and extract the outer pad.
3. Swing the caliper inwards and remove the inner pad.
4. Install in the reverse order of removal.

BRAKE HYDRAULIC CIRCUIT . . . . . [5]

Overhaul of the components of the hydraulic system should always be carried out under conditions of scrupulous cleanliness. Clean all dirt and grease from the exterior of components before removal and dismantling.

After dismantling, wash all parts in commercial alcohol, methylated spirits or clean brake fluid. Do NOT use mineral based oils such as petrol, paraffin or carbon tetrachloride. Blow out all internal passages with compressed air.

Inspect pistons and cylinder bores of the master cylinder, looking for scores, ridges or corrosion pits. The unit MUST be discarded if any of these conditions are present. The calipers and wheel cylinders should also be inspected for leaks and signs of wear after dismantling.

If any signs of wear are present, the unit must be replaced.

It is essential that only new seals are used when reassembling. These are normally available in the form of a repair kit containing all the necessary parts required for the overhaul of a particular unit.

All seals should be inspected carefully before fitting, even when new. Check that the sealing lips are perfectly formed, concentric with the bore of the seal, and free from 'knife edge' cuts, surface blemishes or marks. Any seal which does not appear perfect, no matter how minute the blemish may appear to be, should be discarded.

BLEEDING THE HYDRAULIC CIRCUIT . . . [6]

The fluid level in the brake master cylinder must be maintained at a reasonable level throughout the bleeding operation as, if allowed to drop excessively, air may be drawn into the system.. Use only fresh hydraulic fluid of the correct specification - see TECHNICAL DATA.

Never re-use fluid which has already been passed

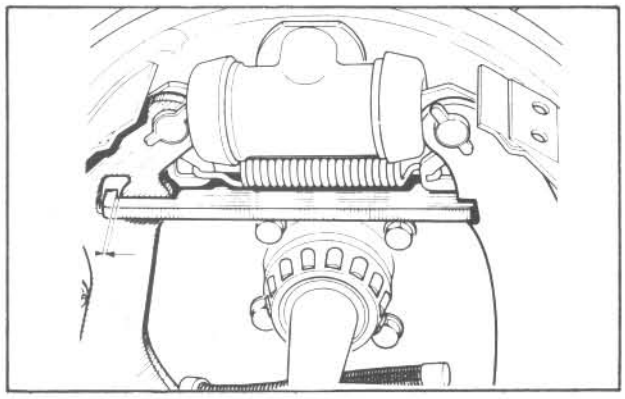

Fig. M:22 Shoe link clearance - Bendix

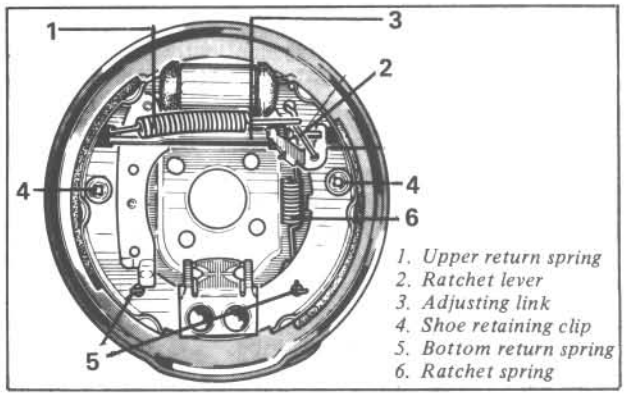

Fig. M:23 Rear brake assembly - Girling

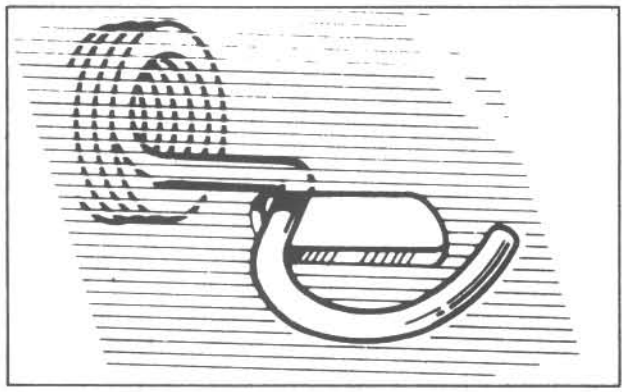

Fig. M:24 Engaging return spring Girling

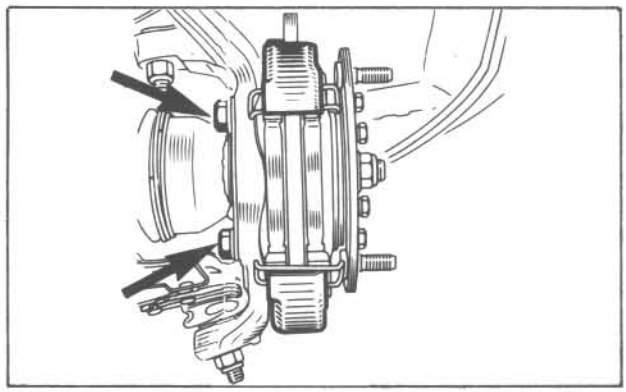

Fig. M:25 Caliper bracket retaining bolts

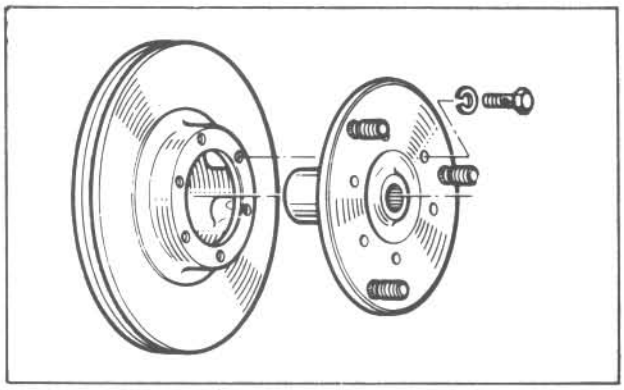

Fig. M:26 Removing brake disc from hub

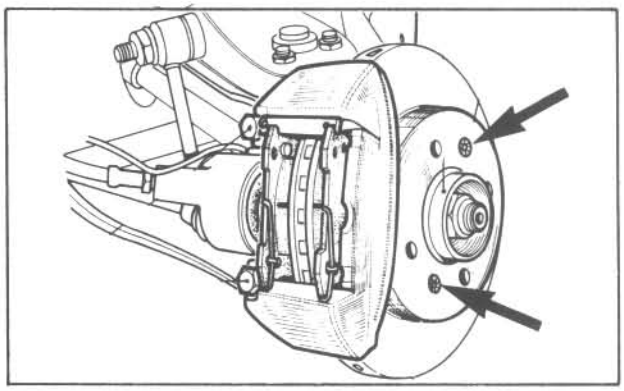

Fig. M:27 Front brake disc - Fuego

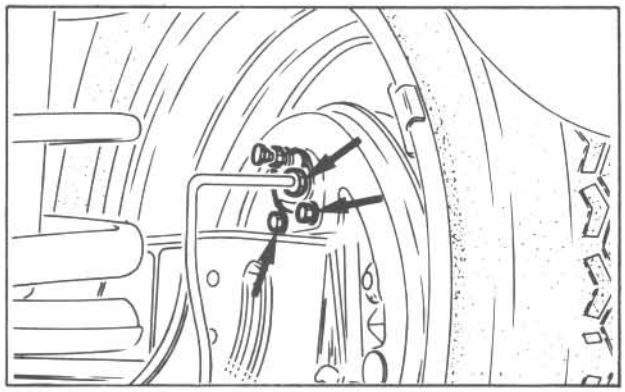

Fig. M:28 Rear brake cylinder bolts

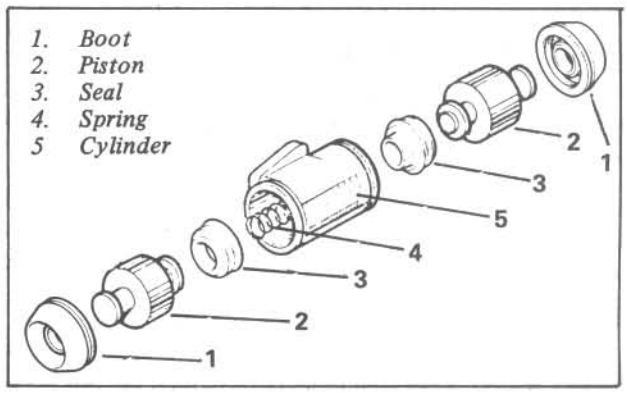

Fig. M:29 Rear brake cylinder - Girling

through the system. Take care when topping up the master cylinder with fluid since it is an effective paint stripper, and any spilt on the bodywork should be washed off with cold water immediately.

1. The vehicle should be standing on level ground when bleeding the brakes, not up at one side or end.
2. Remove the reservoir cap and top up the reservoir, making sure both chambers are topped up with the recommended fluid. Note that the fluid level should be topped up regularly during the bleeding operations.
3. Clean the right-hand (offside) front brake caliper bleed nipple and attach a bleed tube.
4. Immerse the other end of the tube in a clean jar containing a small quantity of clean brake fluid.

Throughout the bleeding operation, the end of the tube must remain immersed in this fluid.

5. Slacken the bleed nipple approximately half a turn and then depress the brake pedal fully, allowing it to return to the fully released position. Brake fluid and/or air should have been pumped into the jar. If not, slacken the bleed nipple further until fluid and/or air can be pumped into the jar.
6. Continue depressing the brake pedal, pausing briefly (about three seconds) after each stroke, until the fluid coming from the bleed tube is completely free of air bubbles and is perfectly clean.
7. Finally with the brake pedal in the fully depressed position, close the bleed nipple. Take care not to overtighten the nipple; tighten it only enough to seal it.
8. Remove the bleed tube and transfer it to the left-hand (near-side) rear brake.
9. Repeat the bleeding operation, connecting the tube to the nipple located on the brake backplate.
10. Repeat the bleeding operation on the left-hand (near-side) front brake, followed by the right-hand (offside) rear brake.
11. Top up the master cylinder with approved fluid and replace the cap, after first checking that the vent hole in it is clear. Do not fill the reservoir above the MAX mark on the side.
12. Check the operation of the brakes. If after bleeding, the brake pedal is still 'spongy', or goes right down to the floor, this indicates that air is still present in the system, and the bleeding operation must be repeated.

If subsequent attempts at bleeding still fail to produce a satisfactory result, the system should be checked for leaks, as air is obviously being drawn into the system.

BRAKE PIPES & HOSES .....[7]

Brake pipes and hoses should be inspected for corrosion and leakage (Fig. M:1), and should be replaced if at all suspect. Flexible hoses should be replaced as a matter of course every 3 years 36,000 miles. If the pipes come loose from their clips they may vibrate and fatigue fracturing may result. Brake pipes rust especially between the body and the pipe, and should have any mud washed off to aid inspection.

When fitting a new pipe or replacing an old fitting, the tube nuts should be tightened to a torque of approximately 8 lb ft. Take care not to overtighten the nut or the fitting will distort and leak. Use only short spanners to avoid the risk of damage.

Before fitting a tube nut, ensure that both sides of the connection are clean and free from grit, which will prevent the joint from seating.

Whenever a hydraulic fitting is disturbed, the brake system should be bled as described previously.

FRONT BRAKE CALIPER BRACKET .....[8]

Removal

1. Slacken the wheel bolts, jack up the front of the car and support on axle stands. Remove the road wheel.
2. Remove the caliper and piston assembly as detailed in the Front Brake Pad Replacement section of this chapter.

Do not disconnect the hydraulic hose or let the weight of the caliper hang unsupported.

3. Extract the disc pads as previously described and put to one side.
4. Undo the two caliper bracket retaining bolts and remove the bracket (Fig. M:25).

Installation

1. Install in the reverse order of removal but before refitting the caliper bracket bolts apply thread locking compound to the threads.
2. Install the disc pads and caliper as described previously.
3. Pump the brake pedal several times to bring the pads into contact with the disc.

FRONT BRAKE DISC .....[9]

Removal - Early Models Except Fuego

1. Remove the brake caliper and caliper bracket as previously described.
2. Pull off the brake disc and hub assembly as described in the FRONT SUSPENSION chapter of this manual.
3. Mount the assembly in a soft jawed vice and undo the six retaining bolts. The disc can now be separated from the hub flange (Fig. M:26).

Inspection

Inspect the disc friction surfaces. Moderate scoring is permissible, but heavy scoring or grooving, cracking or pitting of the surfaces, or excessive corrosion build up necessitates the replacement of this disc.

The disc may be trued up by grinding down to within the minimum permissible thickness specified in TECHNICAL DATA, but replacement is preferable.

Make sure all disc/hub mating surfaces are free from dirt and corrosion. Also make sure that the friction surface of the disc is free from dirt, oil and brake fluid.

Installation

1. Bolt the disc to the hub flange, carefully tightening the bolts evenly to avoid causing distortion.

The bolts should be tightened to the correct torque figure - see TECHNICAL DATA.

2. Refit the hub assembly, brake caliper bracket and caliper. Pump the brake pedal several times to bring the

pads into contact with the disc. Tighten the hub nut to the specified torque - see TECHNICAL DATA.
3. Refit the road wheel, remove the axle stands, lower the car to the ground and fully tighten the wheel bolts.

Removal - Negative Offset Suspension

1. Remove the brake pads and the brake caliper as previously described.
2. Undo the two brake disc retaining bolts (Fig. M:27). These bolts have Torx heads (size T 30) requiring a suitable special tool for removal, which is available from most good car accessory shops or tool dealers.
3. The disc should now come away from the hub flange, but if not the drive shaft nut should be loosened slightly to allow more clearance.

Installation

1. Inspect the condition of the brake disc as detailed in the previous section of this chapter.
2. Fit the brake disc onto the hub and tighten the Torx screws. Tighten the driveshaft nut to the correct torque if necessary - see TECHNICAL DATA.
3. Refit the brake caliper and pads and pump the brake pedal several times to bring the pads into contact with the disc.

REAR BRAKE CYLINDERS .....[10]

Two alternative types of rear brake cylinders are used on Renault 18 and Fuego models. One is manufactured by Bendix and the other by Girling, but although there are slight differences, the replacement and overhaul procedures are identical.

Removal

1. Remove the rear brake drum - see Rear Brake Shoe Replacement section of this chapter.
2. Disconnect the upper return spring from the brake shoe linkage and pull the shoes apart.
3. Block the hydraulic system by sealing the master cylinder reservoir as previously described.
4. Undo the pipe union at the rear of the cylinder and remove the pipe. Block the end to prevent dirt ingress and loss of hydraulic fluid (Fig. M:28).
5. Undo the two cylinder mounting bolts and remove the cylinder from the brake backplate (Fig. M:28).

Installation

This is a reversal of the removal procedure, noting that the hydraulic circuit must be bled as described previously at the beginning of this chapter.

Overhaul (Fig. M:29 & M:30)

1. Remove the brake cylinder as described previously.
2. Pull the rubber boots from the ends of the cylinder and withdraw the piston assemblies. Separate the boots from the pistons.
3. Slide out the piston seals and then remove the spring from the centre of the cylinder bore.
4. Clean all the components with methylated spirits or clean brake fluid, wiping them dry with a lint free cloth. Check the pistons and bore for scoring and pitting - this is important. If any component is badly scored or pitted it must be replaced.
5. Assemble the rubber boots to the pistons.
6. Lubricate the piston, cylinder bore and seals with clean brake fluid.
7. Fit one piston and boot to the cylinder.
8. From the open end of the cylinder, slide in a new piston seal, spring and second seal, making sure the open ends of the seal face the spring.
9. Fit the second piston and rubber boot.
10. Refit the cylinder to the brake backplate and connect the brake pipe.
11. Refit the brake shoe return spring and the brake drum.
12. Bleed out the hydraulic system, refit the road wheel, lower the car to the ground and fully tighten the wheel bolts.

REAR BRAKE DISC .....[11]

Replacement

1. Slacken the rear wheel bolts, jack up the rear of the car and support on axle stands. Remove the wheels.
2. Remove the brake pads as described in the previous section.
3. Undo the two caliper bracket fixing bolts (Fig. M:31) and ease the caliper clear of the disc, carefully flexing the hydraulic pipe without kinking it.
4. Undo the two bolts holding the disc to the hub (Fig. M:32).

These have Torx T30 heads which require a special tool which can be obtained from most good accessory shops.

5. The disc can now be removed from the hub. The rear discs cannot be reground and therefore if any uneven wear, pitting, or cracking is present the disc must be replaced.
6. Install in the reverse order of removal observing the correct torque setting for the disc retaining bolts and the caliper bracket bolts - see TECHNICAL DATA.

REAR BRAKE CALIPER .....[12]

Replacement

1. Block the hydraulic system by sealing the fluid reservoir as described previously.
2. Slacken the rear wheel bolts, jack up the rear of the car and support on axle stands. Remove the rear wheels.
3. Detach the handbrake cable from the operating lever on the caliper.
4. Undo the hydraulic pipe union at the bottom of the caliper (Fig. M:31) and block the end to prevent fluid loss and the ingress of dirt.
5. The caliper can now be removed from the mounting bracket.
6. Remove the brake pads.
7. Install in the reverse order of removal.
8. Bleed the air from the hydraulic system and check the adjustment of the handbrake.

Overhaul

1. Remove the caliper as described in the previous sect-

ion of this chapter.
2. Mount the caliper in a soft jawed vice.
3. Using a small screwdriver, remove the dust cover from the end of the piston.
4. Apply a source of compressed air to the hydraulic fluid port and simultaneously unscrew the piston using a square section tool such as a screwdriver shaft (Fig. M:33).

The piston must be protected from contacting the caliper body by using a suitable block of wood as shown in Fig. M:34. If the piston is damaged in any way it must not be re-used.
5. Using a smooth metal or plastic instrument such as a feeler gauge or a plastic knitting needle, remove the piston seal from its bore.
6. Clean all the parts in methylated spirits or clean brake fluid. Do not use mineral based oils such as petrol or paraffin. Inspect the surface of the piston and the condition of the bore for pitting, scoring and cracking.

If any of these conditions are present the caliper must be replaced with a new one.
7. Lubricate the piston seal with clean brake fluid and fit it to the groove in the bore.
8. Lubricate the piston with clean brake fluid and push it gently into the bore being careful to avoid damaging the seal.
9. Finish screwing the piston into the bore using a square section tool. When the piston is fully retracted it will turn without entering any further.
10. Turn the piston carefully until the groove (1. Fig. M:35) is aligned with the bleed nipple (2, Fig. M:35). This ensures that the caliper can be bled easily and the pad will fit correctly in the centre slot.
11. Apply a smear of Spagraph grease to the exposed area of the piston and fit the dust cover carefully locating it in the retaining groove.

BRAKE MASTER CYLINDER .....[13]

The brake master cylinder fitted to Renault 18 and Fuego models is either of Teves or Bendix manufacture. The removal and installation procedures are identical, but the overhaul method differs slightly.

Removal

1. Remove the reservoir cap and drain all the fluid from the reservoir chambers by opening the bleed nipple on both front calipers. Close the bleed nipple when the reservoir is empty.
2. Carefully lever the fluid reservoir from the master cylinder body and remove the rubber sealing grommets.
3. Undo the two retaining nuts and separate the master cylinder from the vacuum servo. The unit can now be removed from the car.

Installation

1. Installation is a reversal of the removal procedure, but the length of push rod protruding from the servo front face should be 0.354 in (9 mm) see A, Fig. M:38.

If this dimension is incorrect the rod should be adjusted before proceding.
2. Refit the master cylinder and tighten the retaining nuts.
3. Refit the hydraulic pipes, ensuring that they are installed in the correct order - see Fig. M:39.
4. Fit new sealing rings to the master cylinder and push the reservoir down as far as it will go.
5. Fill the reservoir with fresh brake fluid and bleed the air from the system.

Master Cylinder Overhaul - Teves (Fig. M:36)

1. Remove the master cylinder assembly as described in appropriate section of this chapter.
2. Mount the cylinder in a soft jawed vice and lever off the fluid reservoir.
3. Compress the piston return spring by pushing a small screwdriver in the pushrod end of the cylinder. Undo the stop screw (Fig. M:40) and remove the circlip from the end of the cylinder bore.
4. Release the pressure on the return spring and lift out the primary piston and spring.
5. Blow out the secondary piston and spring using compressed air, but place some cloth over the end of the cylinder to avoid losing any of the components.
6. Clean the master cylinder and pistons with methylated spirits or clean brake fluid. Do NOT use mineral based oils such as petrol or paraffin. Dry the components using a lint free cloth or blow them dry with compressed air.
7. Inspect the pistons and master cylinder bore for visible score marks pitting or corrosion. This is important, if any of these conditions is evident, the component must be renewed.
8. Lubricate the cylinder bore and components with clean brake fluid.
9. Fit the secondary piston assembly followed by the primary piston assembly.
10. Compress the piston return springs and install the stop screw.
11. Install the washer and circlip in the end of the cylinder bore.
12. Fit new sealing rubbers in the master cylinder body and push the fluid reservoir down as far as it will go onto the cylinder.
13. Refit the master cylinder assembly as described previously and bleed the brakes. After bleeding, depress the brake pedal and hold it depressed for approximately ten seconds. Examine the master cylinder to ensure that there are no signs of fluid leakage.

Master Cylinder Overhaul - Bendix (Fig. M: 37)

1. Make up a tool to the dimensions shown in Fig. M:41, from 0.25 in (6 mm) diameter steel rod.
2. Compress the primary and secondary piston assemblies with the tool as shown in Fig. M:42.
3. Place a 3,5 mm drill horizontally in a vice, then position the master cylinder so that the drill enters the secondary piston roll pin (Fig. M:43).
4. Rotate the master cylinder round the drill until it grips the roll pin, then pull the master cylinder to withdraw the roll pin.
5. Repeat the previous procedure to remove the primary roll pin.
6. Withdraw the primary and secondary piston assemblies from the cylinder bore.

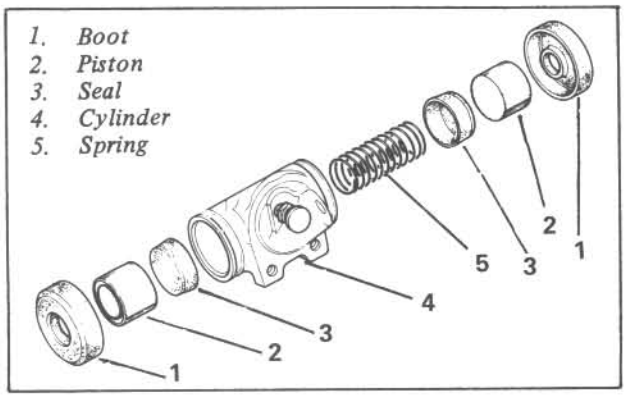

Fig. M:30 Rear brake cylinder - Bendix

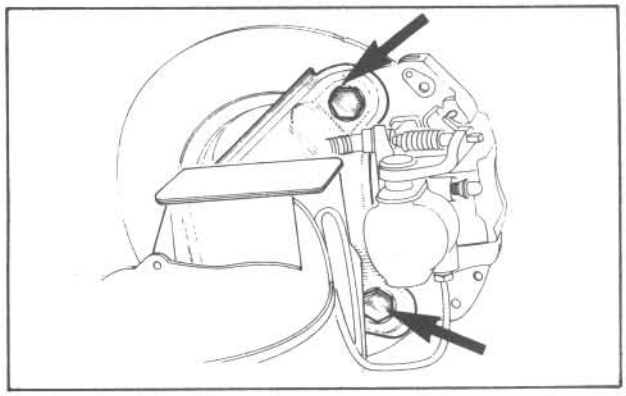

Fig. M:31 Rear caliper bolts

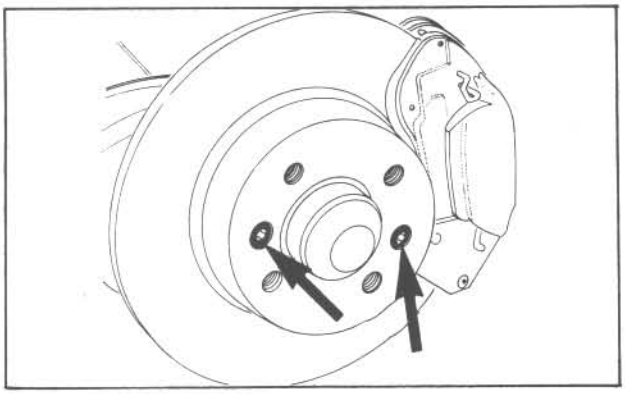

Fig. M:32 Rear disc retaining screws

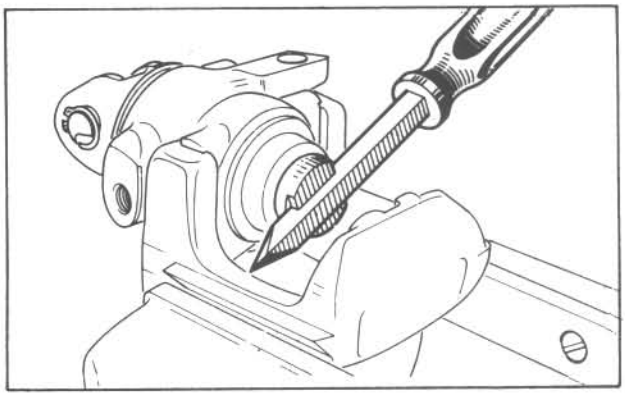

Fig. M:33 Winding piston into bore

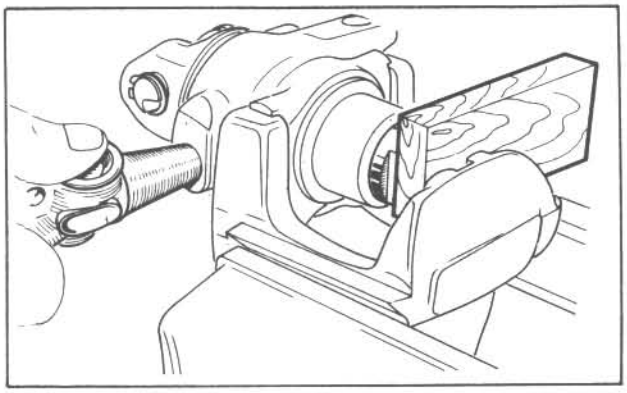

Fig. M:34 Ejecting caliper piston

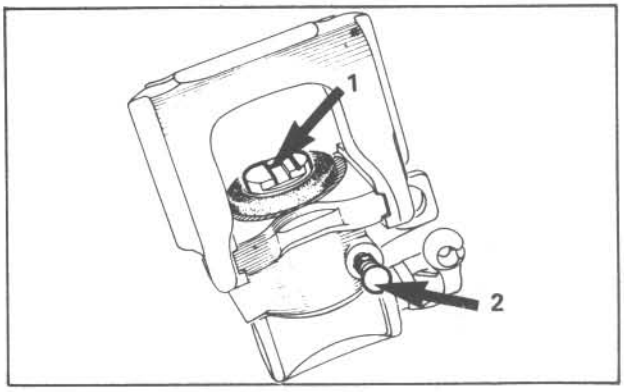

Fig. M:35 Aligning caliper piston

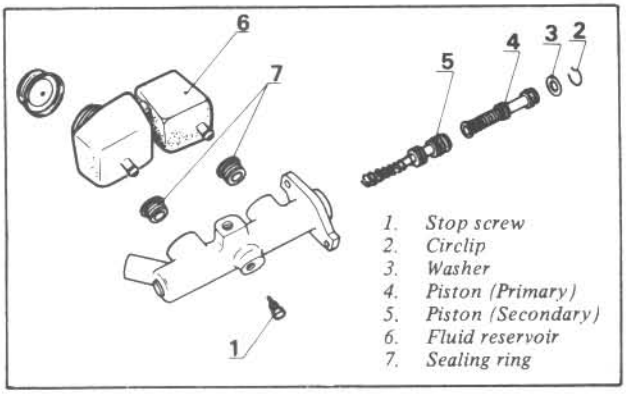

Fig. M:36 Master cylinder - Teves

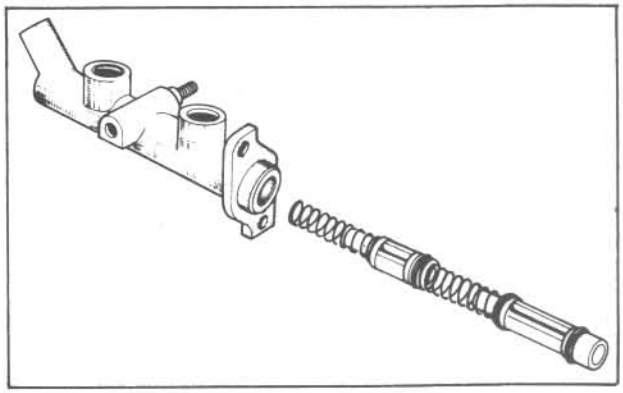

Fig. M:37 Master cylinder - Bendix

7. Clean the cylinder bore and the piston assemblies with methylated spirits or clean brake fluid and check the condition of the parts. Look for signs of scoring and pitting or wear ridging. If any of these conditions are apparent, then the master cylinder should be discarded and a new unit fitted.
8. If the master cylinder is suitable for reconditioning, then remove the old seals from the piston assemblies and fit new seals. Note which way round the seal lips are fitted before removing them.
NOTE: The individual parts which make up the primary and secondary pistons should not be dismantled. If the pistons are worn, the assembly must be replaced. Only the seals can be renewed individually.
9. Lubricate the inside of the cylinder bore and piston assemblies with clean brake fluid and refit them in the reverse order of removal, making sure that the slots in the rollpins are in the vertical position.
10. Fit the previously described spring compressing tool and then insert the rollpins, taking care to align their slots facing the pushrod end (Fig. M:44).
11. Fit new rubber seals to the reservoir ports and push the reservoir onto the cylinder as far as it will go.

BRAKE LIMITER.....[14]

Removal

1. Block the hydraulic system by sealing the master cylinder cap as previously described.
2. Undo the union on the metal pipe feeding the limiting valve.
3. Loosen the union at the valve end of the flexible hose.
4. Undo and remove the nuts securing the actuating rod to the valve arm.
5. Undo and remove the two bolts holding the valve to the underside of the car. The valve can now be removed from the car.

Installation

1. The brake limiter cannot be repaired and therefore it must be replaced if its' operation is not satisfactory.
2. Bolt the valve to the underside of the car.
3. Fit and tighten the metal pipe union to the valve.
4. Screw in the flexible hose union and tighten, ensuring that the pipe does not become twisted. If the pipe is twisted the union at the three way adaptor end of the hose must be slackened and offset one notch.
5. Remove the seal from the master cylinder and bleed the air from the hydraulic system as described under the appropriate heading in this chapter.
6. Connect the actuating rod and adjust using the procedure described in the following section.
7. If the flexible hose is being renewed, the copper washers either side of the three way union must be checked for thickness. The correct thickness is 1,5 mm and new washers should be used if the measured thickness varies greatly from this figure.

Adjusting

1. Before the limiting valve is adjusted the car must be parked on level ground with the luggage space empty and a person of average weight sitting in the drivers seat.
2. Remove one of the rear wheel cylinder bleed screws and fit Renault special pressure gauge Fre. 214-02.
3. Bleed the air from the system using the bleed nipple located on the pressure gauge.
4. Tighten the bleed nipple and press the pedal several times, noting the cut off pressure.
5. Compare the pressure reading with the figure given in TECHNICAL DATA and adjust if necessary by screwing up the actuating link to increase the pressure or screwing it down to lessen it.
6. Check the cut off pressure several times after adjustment to ensure that the setting is correct.
7. Disconnect the pressure gauge and bleed the air from the system.

BRAKE SERVO.....[15]

Removal

1. Disconnect the battery and place a tray under the master cylinder to catch the brake fluid as the pipe unions are undone.
2. Undo and disconnect the brake pipes from the master cylinder and drain the fluid from the reservoir into a container.
3. Undo the nuts securing the master cylinder to the servo unit and remove the master cylinder.
4. Disconnect the vacuum hose from the servo check valve.
5. From the inside of the car, disconnect the brake pedal clevis pin from the pushrod yoke.
6. Undo the nuts securing the servo unit to the bulkhead.
7. Carefully remove the servo unit from the engine compartment.

Installation

1. Before installing the servo adjust the pushrod so that dimension 'A' Fig. M:38, is 9 mm and dimension 'B' is 126 mm.
2. Position the servo on the bulkhead and tighten the retaining nuts from inside the car.
3. Connect the pushrod clevis to the brake pedal.
4. Fit the master cylinder to the servo body and connect the pipes in the correct order as shown in Fig. M:39.
5. Connect the vacuum hose to the servo check valve and tighten the securing clip.
6. Fill the master cylinder reservoir with fresh fluid and bleed the air out of the system.

HANDBRAKE CABLE.....[16]

Ensure the correct operation of the self adjusting mechanism for the rear brakes it is essential that the handbrake cable is adjusted correctly. The car must be positioned with all four wheels on the ground and the handbrake lever fully released.

Adjustment

1. Slacken the locknut and adjust the position of nut (1, Fig. M:45) so that the cable can only be deflected by approximately 20 mm (2, Fig. M:45). Do not over adjust the cable as this will prevent the self adjusting mechanism

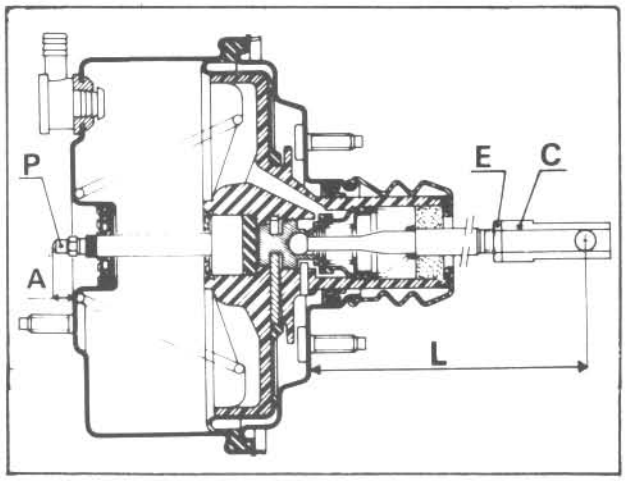

Fig. M:38 Servo pushrod adjustment

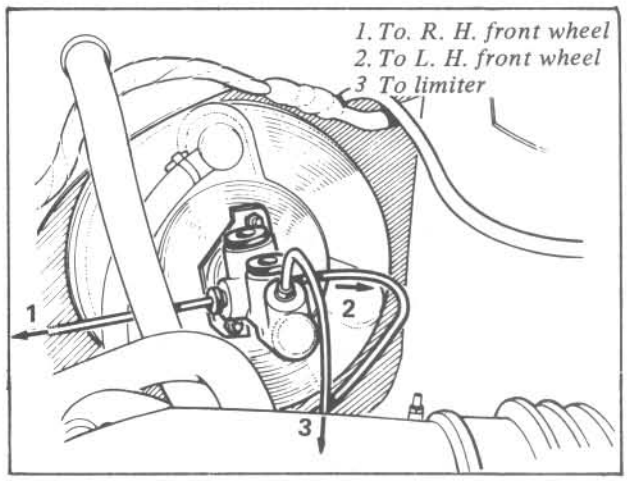

Fig. M:39 Master cylinder pipes

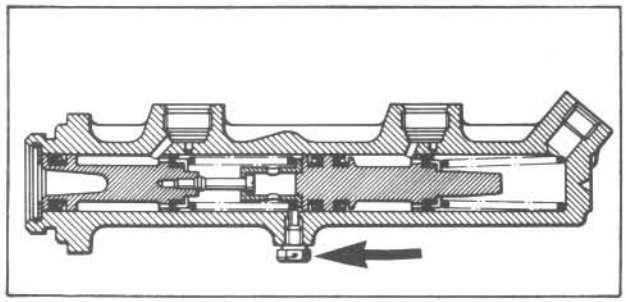

Fig. M:40 Master cylinder stop screw

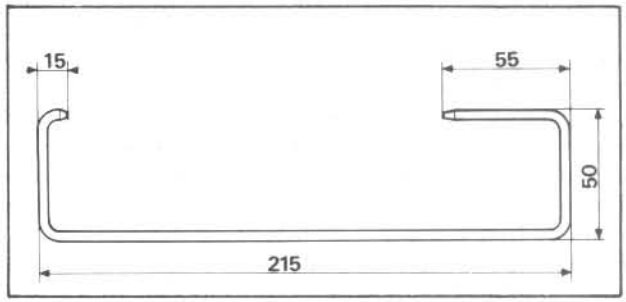

Fig. M:41 Piston compressing tool

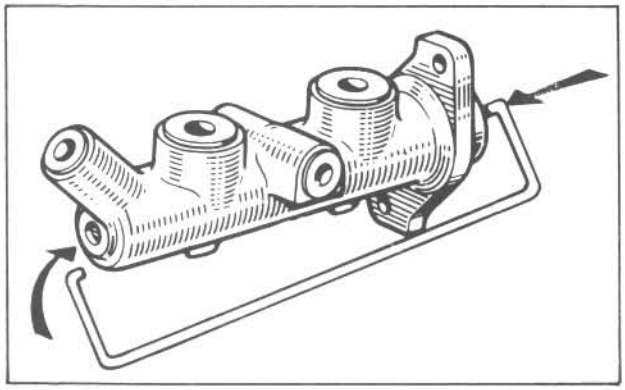

Fig. M:42 Compressing master cylinder pistons

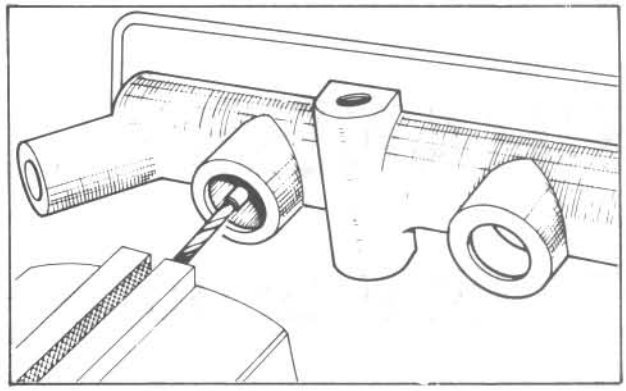

Fig. M:43 Withdrawing rollpin

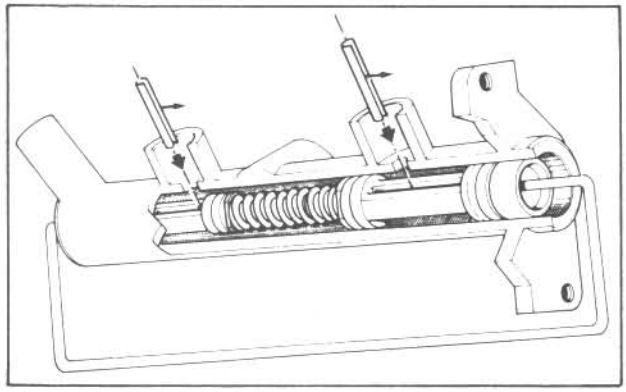

Fig. M:44 Aligning rollpin slots

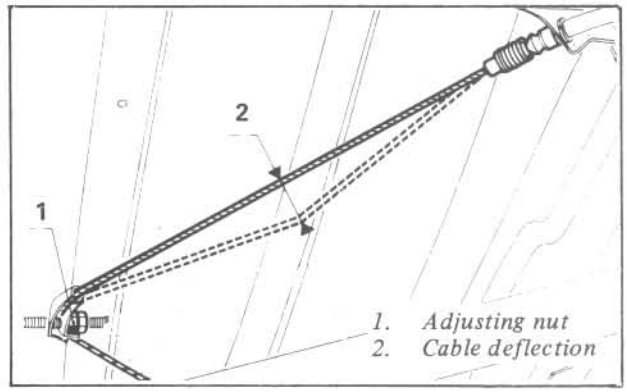

Fig. M:45 Handbrake cable adjustment

operating correctly.
2. The handbrake lever travel should be at least 9 notches (12 notches on cars fitted with disc rear brakes).

Replacement

1. Loosen the wheel bolts, jack up the car and support on axle stands. Remove the wheels.
2. Using a screwdriver inserted through the brake backplate, push the operating lever towards the drum to release it from the brake shoe.
3. Remove the grease cap from the hub using a suitable screwdriver, pull out the split pin, and remove the locknut and stub axle nut and washer.
4. Pull off the brake drum using a suitable three legged puller or Renault special tool T. Av. 235.
5. Unhook the upper return spring and pull the shoes away from the hydraulic cylinder. Secure the pistons in their bores by twisting a piece of wire round the cylinder.
6. Disconnect the cable from the operating lever using Renault special tool number Fre. 573 or by pulling the end nipple with a self - grip wrench.
7. Remove the backplate mounted cable stop and unhook the cable from the guide stop on the underbody.
8. Undo the locknut and remove the adjusting nut from the handbrake lever link rod. The cable can now be removed from the car.
9. Refit in the reverse order of removal, but ensure that the hub bearing endfloat is set correctly - see REAR SUSPENSION chapter. Also the grease cap should be filled with fresh grease before refitting.
10. Adjust the cable as described in the previous section of this chapter.

BRAKE PEDAL .....[17]

Removal

1. Remove the under dash trim below the steering wheel.
2. Disconnect the clutch cable, on manual transmission models, at both the pedal and operating lever.
3. Remove the pedal shaft retaining clip and withdraw the clutch pedal.
4. Remove the clevis pin from the brake pedal pushrod.
5. Unclip the second pedal shaft retainer and withdraw the pedal and shaft.

Installation

1. Check the length of the servo pushrod and adjust if necessary so that dimension 'B' Fig. M:38 is 126 mm.
2. Apply grease to pedal shaft, fit the pedal to the shaft and refit the shaft.
3. Reconnect the brake pedal to the push rod and refit the clevis pin and retaining clip.
4. Refit the clutch pedal and return spring, on manual transmission versions.
5. Fit the securing clip to the clutch pedal end of the pivot shaft.
6. On manual transmission cars reconnect the clutch cable to the operating lever and adjust to give the correct clearance - see ROUTINE MAINTENANCE.
7. Refit the trim panel above the pedal.

BRAKES

Trouble Shooter

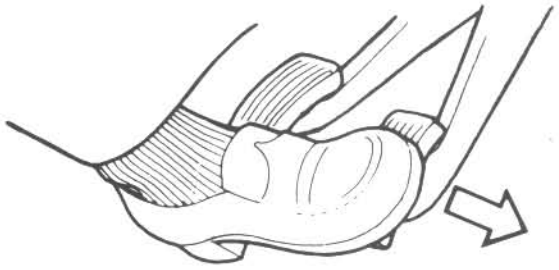

FAULT	CAUSE	CURE
Excessive brake pedal travel	1. Brakes need adjusting or replacement. 2. Air in system. 3. Leaking or contaminated fluid. 4. Faulty master cylinder.	1. Adjust or renew brake shoes. 2/3. Bleed hydraulic system. 4. Fit new master cylinder.
Brake fade	1. Incorrect pad or lining material. 2. Old or contaminated fluid. 3. Excessive use of brakes or car overloaded.	1. Fit new pads or shoes. 2. Renew brake fluid. 3. Check vehicle load.
Spongy brake pedal	1. Air in hydraulic system. 2. Shoes badly lined or distorted. 3. Faulty hydraulic cylinder.	1. Bleed system. 2. Fit new pads or shoes. 3. Check hydraulic circuit.

Cont'd over

FAULT	CAUSE	CURE
Brake pedal too hard	1. Seized wheel cylinder or caliper piston. 2. Glazed friction material. 3. No clearance on master cylinder operating rod.	1. Replace seized component. 2. Fit new shoes/pads. 3. Adjust push rod if possible.
Brake pedal requires pumping or pedal sinks to floor.	1. Brakes wrongly adjusted. 2. Air in hydraulic system. 3. Fluid leak from component or brake pipe. 4. Loss of fluid from master cylinder. 5. Seized caliper piston.	1. Adjust brakes. 2. Bleed system. 3/4. Check hydraulic circuit and replace parts as necessary. 5. Replace caliper.
Brakes grab when applied	1. Contaminated friction material. 2. Wrong linings fitted. 3. Scored drums or discs. 4. Rusty drums or discs.	1/2. Replace (don't clean) pads or shoes. 3. Fit new drum or disc. 4. Clean or replace drums or discs.
Brake squeal	1. Worn retaining pins (disc). 2. Faulty damping shims or shoe retaining clips. 3. Dust in drum. 4. Loose backplate or caliper. 5. Linings contaminated with brake fluid or hub grease.	1. Fit new pins. 2. Fit new shims or clips. 3. Remove dust from drums/shoe. 4. Tighten caliper or backplate. 5. Replace leaking cylinder and contaminated shoes or pads.
Brake judder	1. Distorted discs or drums. 2. No clearance at master cylinder operating rod. 3. Shoe tension springs either broken or weak. 4. Wheel cylinder or caliper piston seizing. 5. Faulty self-adjusting mechanism. 6. Seized handbrake mechanism.	1. Replace discs or drums. 2. Adjust rod if possible. 3. Replace tension springs. 4. Fit new caliper or cylinder. 5. Check mechanism. 6. Check handbrake operation.
Brake pull to one side	1. Contaminated friction material on one side (grease, oil or brake fluid). 2. Loose backplate. 3. Seized cylinder. 4. Faulty suspension or steering.	1. Replace shoes/pads in axle sets. 2. Tighten backplate. 3. Replace seized cylinder. 4. Check suspension and steering.
Handbrake ineffective	1. Worn rear shoes or pads. 2. Brakes require adjusting. 3. Faulty handbrake linkage. 4. Cable or rod requires adjustment.	1. Fit new pads/shoes. 2. Adjust brakes. 3. Check linkage and operating mechanism. 4. Adjust cable or rod.
Servo (where fitted) late in operation	1. Blocked filter. 2. Bad vacuum sealing or restricted air inlet.	1. Clean or replace filter. 2. Tighten vacuum hose connections and check hoses.
Loss of servo action	1. Air leak in servo - vacuum low.	1. Either overhaul servo or replace.
Loss of fluid (Servo only)	1. Servo seal failure. 2. Scored servo bore.	1/2. Replace or overhaul servo.
Loss of fluid - general	1. Wheel cylinder or caliper seal failure. 2. Damaged or corroded fluid pipes.	1. Replace wheel cylinder/caliper. 2. Inspect and fit new pipes.

General Electrics

INTRODUCTION . . . . . [1]
CHARGING THE BATTERY . . . . . [2]
BULB & LAMP REPLACEMENT . . . . . [3]
FUSES, RELAYS & FLASHER UNIT . . . . . [4]
INSTRUMENT PANEL . . . . . [5]
SWITCHES . . . . . [6]
INTERIOR HEATER FAN MOTOR . . . . . [7]
WINDSCREEN WIPERS & WASHERS . . . . . [8]
HEADLAMP WASH WIPE . . . . . [9]
CENTRAL LOCKING SYSTEM . . . . . [10]
ELECTRICALLY OPERATED WINDOWS . . [11]
TROUBLE SHOOTER . . . . . [12]

INTRODUCTION . . . . . [1]

The Renault 18 and Fuego have a Negative earth electrical system. The battery can be isolated from the electrical system without disconnecting the terminals from the battery posts. The butterfly knob on the green (earth) terminal will break contact when rotated (Fig. N:1).

Certain components such as the instrument panel incorporate printed circuit boards and extra care must be taken when removing and refitting bulbs and connectors, also when dismantling the component, to avoid damaging the circuit board.

CHARGING THE BATTERY . . . . . [2]

It is preferable to slow or trickle-charge a battery as then there is little risk of damage to the plates, provided that the electrolyte is at the proper level in all of the cells. Charge at a rate of between 4 and 5 amps for a minimum of 24 hours if the battery has been completely flattened. A high-speed battery charger must not be used as a starting aid. A high-speed charger should only be used if the battery has been disconnected from the car's electrical system. Some types of 'maintenance free' batteries, for example the lead-calcium type, can be damaged by high-speed chargers.

A battery is in a fully charged condition when all the cells are gassing freely and there is no change in the specific gravity of the electrolyte. The vent plugs must be removed whilst charging, unless the battery is either of the 'maintenance free' type or is fitted with an Autofill type cover, in which case the balls in the vent plugs are automatically displaced.

NOTE: Hydrogen gas is given off by the battery as it charges which is highly explosive. Any spark or naked flame will ignite the gas, causing an explosion.

When charging the battery the following precautions should be taken.

1. Check that the charger output voltage is the same as the nominal voltage of the battery.
2. The charger Positive (+) lead is connected to the Positive battery terminal.
3. The charger Negative (-) lead is connected to the Negative battery terminal or earth strap.

When boost starting the car using another car's battery, the following precautions must be taken to prevent serious damage to the charging system and electrical components.

1. The booster battery must be of the same nominal voltage as the car's battery.
2. The interconnecting cables (jump leads) are of sufficient capacity to carry the starting current.
3. The cables are connected one at a time, to the booster battery first, not the other way around.
4. The cables are connected in the following order (Fig. N:2), Positive to Positive, and then Negative to an earth point or strap on the car's body.
5. After starting the car, the engine speed must be reduced to 1000 rpm or below, before disconnecting the booster battery.
6. The car's battery must NEVER be disconnected while the engine is running.

BULB & LAMP REPLACEMENT . . . . . [3]

It is good practice to carry a stock of spare bulbs in a padded container in the car and know how to replace them as well. You can buy packs of light bulbs suitable for your car, or make up your own kit. Since you are most likely to notice that a bulb has gone when it is dark, carry a torch in the car.

If any of the lenses are cracked or the reflectors corroded, they should be replaced.

Remember, before attempting to remove any electrical components, disconnect the battery first.

Direction Indicator

To replace the direction indicator bulb, pull the bulb-holder from the back of the unit (Fig. N:3). The bulb is held in the holder by a bayonet type fitting.

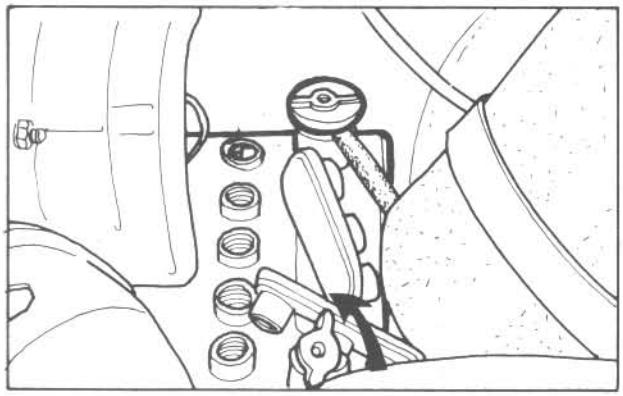

Fig. N:1 Disconnect battery by turning earth connector

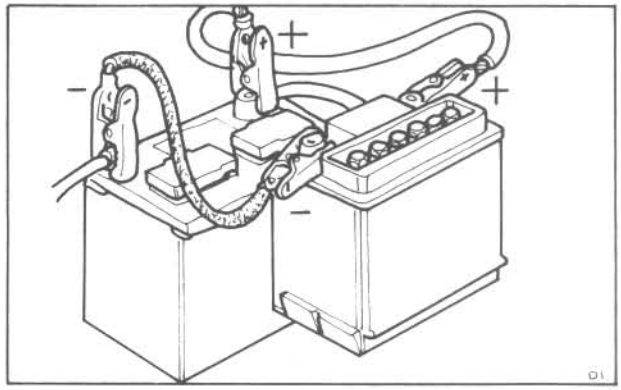

Fig. N:2 Boost start battery connection

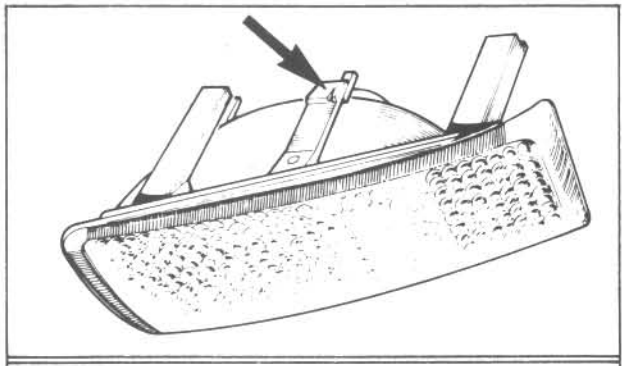

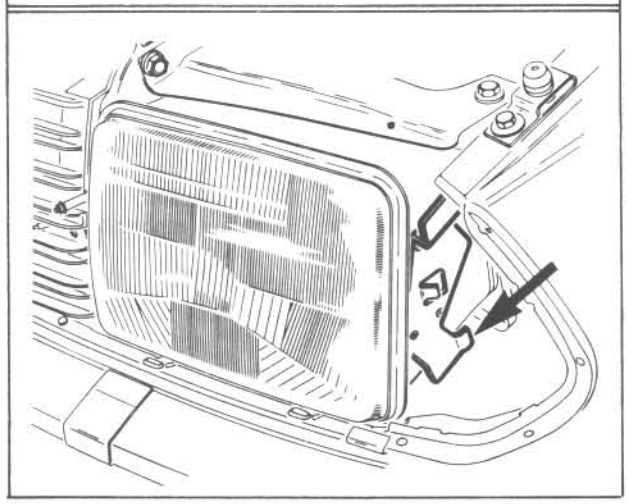

Fig. N:3 Renault 18 direction indicator lamp and latches

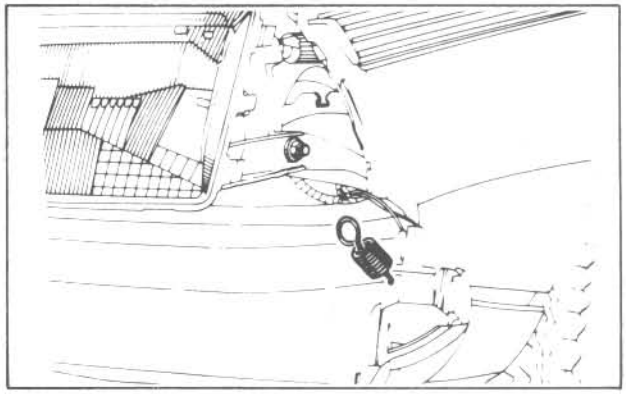

Fig. N:4 Fuego direction indicator lamp and retaining spring

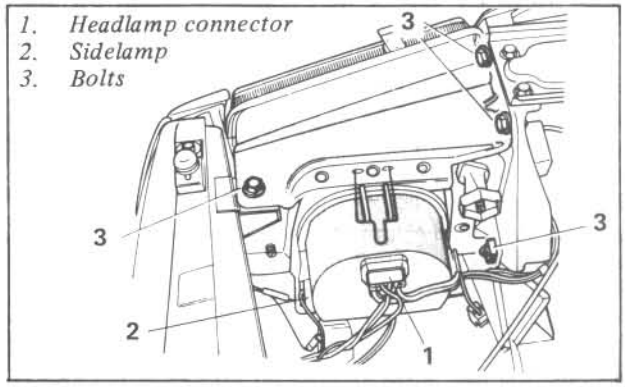

Fig. N:5 Renault 18 headlamp unit

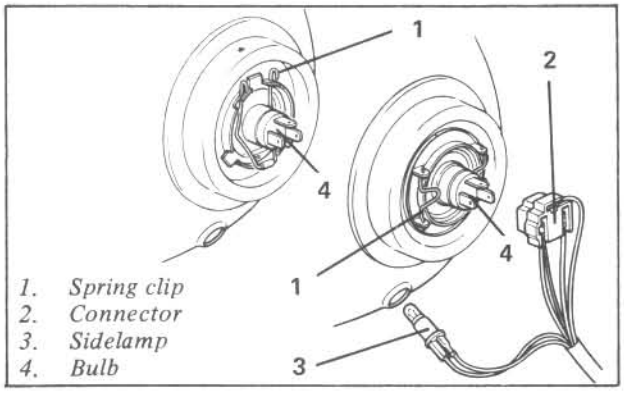

Fig. N:6 Headlamp bulb replacement

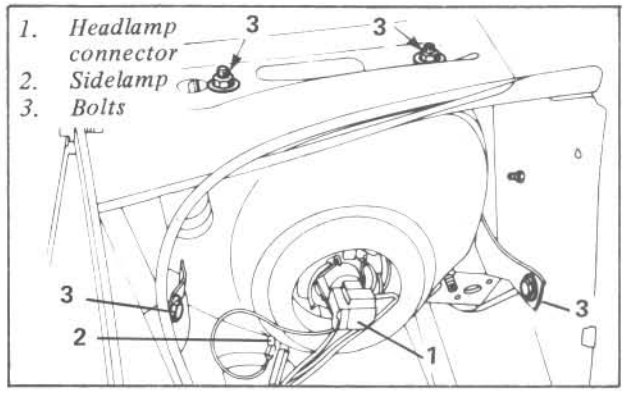

Fig. N:7 Fuego headlamp unit

To remove the front lamps, first remove the bulb from the back of the unit. The lamp is held by a plastic latch, released by pressing with a screwdriver. Pull the lamp from the housing.

When refitting the lamp, align the latch and push until the latch clips in. Refit the bulb.

The Fuego front indicator unit is held by a spring (Fig. N:4). The rear indicators are part of the rear lamp assembly, see below.

Headlamps

To replace the headlamp bulb, pull off the electrical connector (Fig. N:6). Release the spring clips holding the bulb. If halogen type headlamps are fitted, take great care not to touch the glass. If the glass is touched, wipe clean with a clean cloth and a little methylated spirits. Any dirt or grease will reduce light output and may cause the bulb to crack.

The front sidelight bulb is a pushfit in the lower half of the headlamp. The bulb can be replaced after the holder is pulled from the back of the reflector.

Before removing the headlamp unit, remove the direction indicator housing. Disconnect the bulb pushfit connectors (Fig. N:6). Remove the four retaining bolts (Fig. N:5) and withdraw the housing. Refit in the reverse order of removal and adjust the headlamp alignment as described in the ROUTINE MAINTENANCE chapter.

To remove the Fuego headlamp assembly, disconnect the headlamp wiper, see below. Then remove the headlamp wiper arm. Remove the front grille. Remove the two lower retaining bolts (Fig. N:7) and slacken the upper nuts. Withdraw the unit. Refit in the reverse order.

Rear Lamp Assembly

To replace any of the rear lamp assembly bulbs, remove the black plastic cover inside the rear luggage area by pushing the latches inwards (Fig. N:8).

To replace the assembly unscrew the four retaining nuts. Push the two inner latches together to separate the bulb holder from the cover. Separate the electrical connectors.

The rear lamp on estate cars is held by two fixing screws. Remove these and release the casing latches (Fig. N:9). After pulling the case out the bulbs can be replaced.

Refit in the reverse order. Do not overtighten the screws or the plastic shells may be damaged.

The Fuego rear lamp bulbs are replaced after removing the plastic cover, retained by one latch on the end (Fig. N:10).

To remove the Fuego rear lamp assembly, make up a hook as shown in the illustration. Insert into the centre of the car to the recessed clip and press inwards. To refit the assembly offer it into place and pull the clip inward using the hook.

Instrument Panel Bulbs

The instrument panel bulbs should only be replaced after testing of the related component and wiring if possible. Remove the instrument panel as described below. The bulbs are a 'bayonet' fit in the top of the instrument casing (Fig. N:13).

FUSES, RELAYS & FLASHER UNIT .....[4]

Failure of a particular fuse is indicated when all of the circuits it protects fail. If a new fuse fails, establish the cause and rectify the fault before fitting a second replacement, which should be of the correct value. Do not fit a fuse of a higher rating than specified.

The fuses are fitted to the accessories plate under the right-hand side of the fascia (Fig. N:11).

Some electrical components such as the engine cooling fan, wiper delay mechanism, horns, rev counter and lights are controlled by relays on some models.

The indicator flasher unit is mounted on the accessory plate, with the other relays. The units are plugged into a printed circuit with connectors running to the side of the printed circuit. (See the Wiring Diagrams for details of connections).

Electrical relays are used to pass current for various electrical devices. The relay is activated by a low current from the control switch, and acts as a switch for a high current. Testing the operation of a relay is within the scope of the average DIY mechanic , but it is not possible to overhaul a relay. Instead, a replacement should be obtained if the test shows the old unit to be defective. Access to the units is gained by removing the two securing screws and pulling the plate from its upper retaining latches.

Check all of the terminals of the circuit, not just the relay terminals. A connection may appear sound but might be corroded within the insulation. Clean the terminals and ensure a good fit. This is especially important with earth connections.

To test the relay itself, examine the circuit diagram and note the wire colours and destinations. From these, it will be possible to check whether the lead to the relay is charged. The wire to the operating coil should be charged when the circuit is on. Test this with a bulb. If the coil is undamaged, the earth connection or return lead should also be charged. If the coil is receiving charge at one terminal but not charged at the other, the coil is defective.

If the coil is allowing current to flow, the contact breakers may be damaged. Connect a test circuit with bulb and battery across the two contact breaker terminals. Depending upon function, the test bulb should illuminate either when a current flows through the coil, or when no current flows through the coil. If the test bulb stays either permanently on or off, the contact breakers are defective.

If, after testing the wiring and appliance the relay is found to be defective, the unit should be replaced.

INSTRUMENT PANEL.....[5]

Removal & Replacement

The instrument panel can be removed and refitted

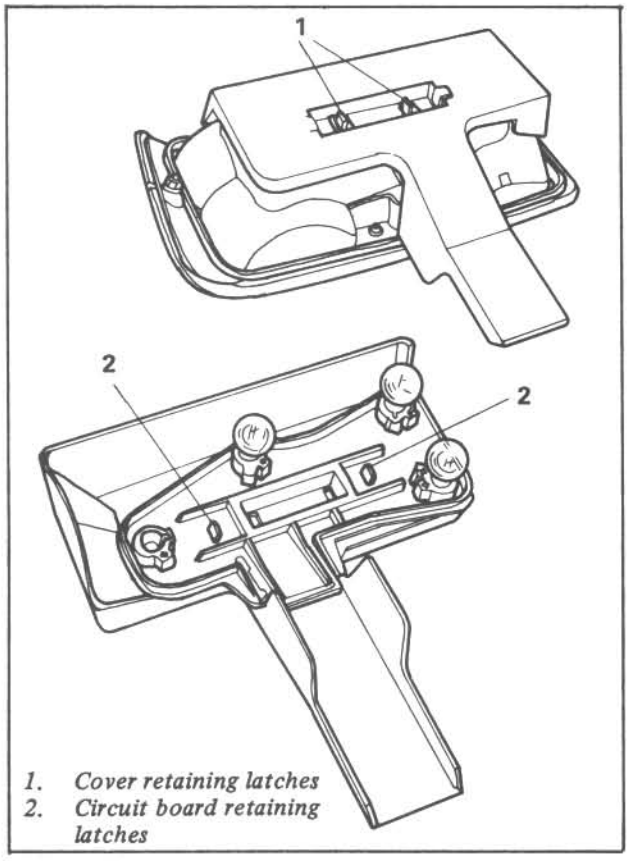

Fig. N:8 Saloon rear lamp panel

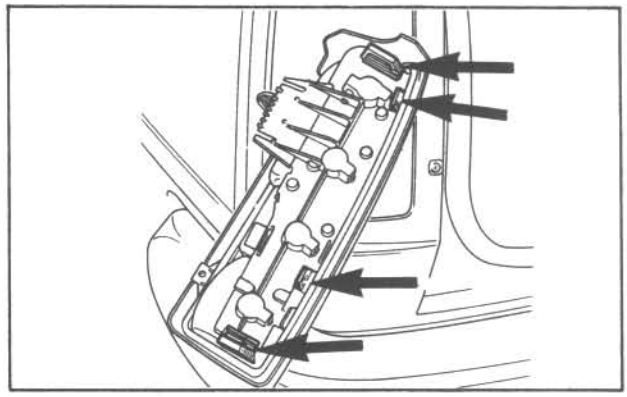

Fig. N:9 Estate rear lamp panel

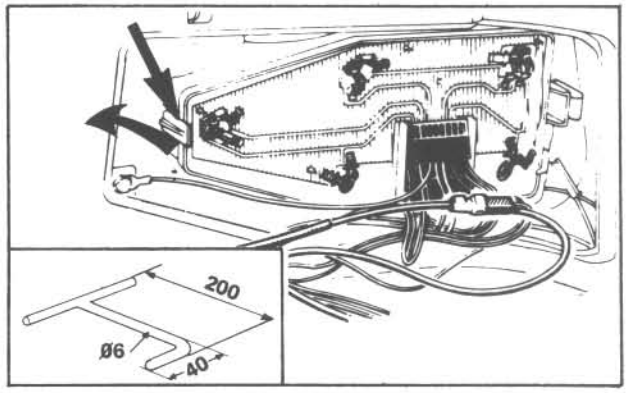

Fig. N:10 Fuego rear lamp assembly

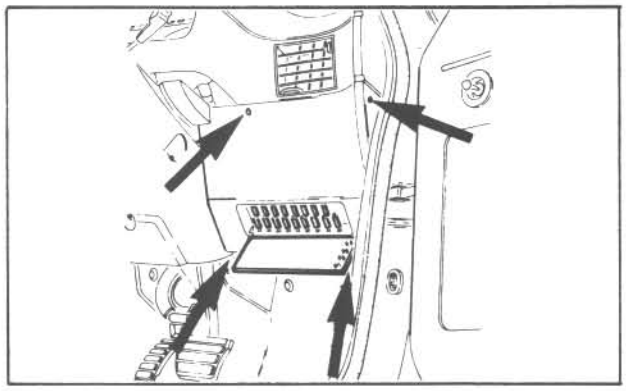

Fig. N:11 Accessory plate fusebox location

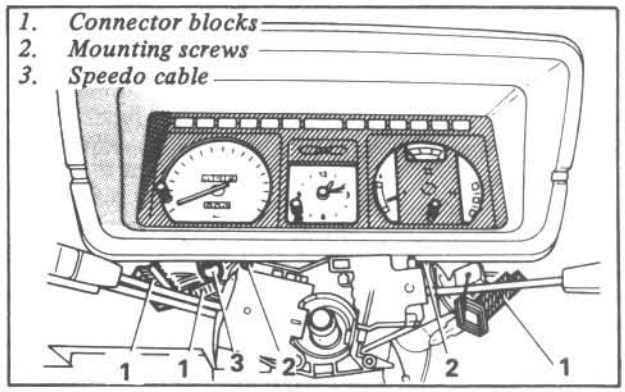

Fig. N:12 Instrument panel mounting

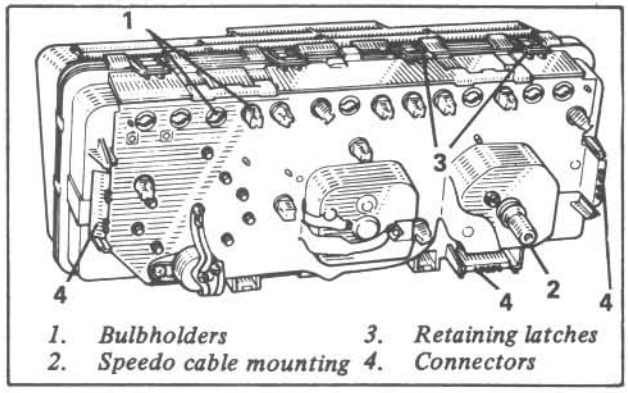

Fig. N:13 Rear of instrument panel

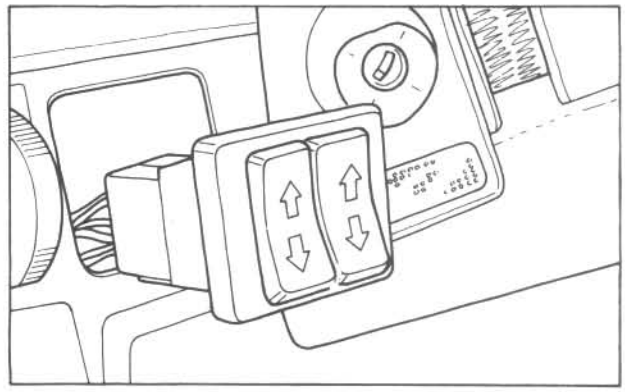

Fig. N:14 Switch removal from fascia

without removal of the fascia panel. Disconnect the battery, then remove the steering wheel and shrouds, see the STEERING chapter.

Remove the two screws holding the instrument panel (Fig. N:12). Disconnect the speedometer cable by pressing the latches inwards and pulling the cable out of the back of the instrument. Disconnect the three wiring connector blocks from the printed circuit.

Lever the instrument panel forward with a screwdriver so that the top is free, pushing the bottom half inward by hand. Pull the panel out horizontally from the locating pegs (Fig. N:12).

Refit the instrument panel in the reverse order of removal.

Instrument Replacement

To replace any of the instruments in the panel, release the eight locking latches on the top and bottom of the casing (Fig. N:13). The casing can then be dismantled (Fig. N:14). The instruments are screwed to the base plate.

SWITCHES . . . . . [6]

Steering Column Switches

The direction indicator control, windscreen wash wipe control and lighting switch are all mounted on the steering column assembly along with the ignition switch.

To remove the complete assembly (Fig. N:15), disconnect the battery and remove the steering wheel and column shrouds - see the STEERING chapter. Disconnect the switch connector blocks. Remove the retaining bolt and screw, then pull the assembly upwards. Refit in the reverse order.

The lighting switch can be replaced separately but the combined direction indicator and wipe wash switches must be replaced as a unit. Remove the locking peg using a suitable pin punch and tube. Fit a new switch by tapping the retaining peg into position (Fig. N:17).

The ignition switch housing can be removed separately. Removal of the barrel is described in the ENGINE ELECTRICS chapter. Turn the ignition key to the 'Garage' position and remove the key. Remove the retaining screw and depress the retaining latch with a sharp probe (Fig. N:15). The switch can then be withdrawn.

When refitting the switch assembly, depress the latch first before pushing the switch into place. Reconnect in the reverse order.

Switches

Accessory switches, such as the electric windows, rear wash/wipe, hazard warning systems and the heater blower motor switch are located in the centre console and on the fascia. The heater switch is a rotary resistor switch (rheostat) based on a printed circuit board, this controls the amount of current being supplied to the heater motor, thus controlling its speed and output. The other switches are the conventional on/off type except for the rear wash/wipe switch which is of the one push or 'flash' type, the rear wiper motor does not run continuously.

Removal and replacement of the switches is as follows:

1. Disconnect the battery earth lead.
2. Using a small screwdriver, carefully lever out the surrounding panel from the fascia (Fig. N:14).
3. Pull the panel and switch from the fascia and disconnect the switch wiring harness plug.
4. Remove the switch assembly from the panel.
5. Install the switch in the reverse order of removal.

The heater blower motor switch can only be removed after the centre console panel has been removed or pulled forward. The console panel can be prised out after removing the radio unit and switches. Remove the heater switch and control panel by unclipping it and undoing the retaining screws. Disconnect the wiring harness leads and slide out the rotary switch and circuit board assembly. Install the heater switch in the reverse order of removal.

INTERIOR HEATER FAN MOTOR. . . . . [7]

To replace the fan motor, it will be necessary to remove the fan ventilation unit mounted on the bulkhead. Block the heater coolant hoses using suitable clamps, then disconnect them from the heater assembly. Disconnect the electrical lead to the fan motor and the connector to the windscreen wiper motor.

Free the control cable attached to the airflow flap, see the COOLING SYSTEM chapter. Remove the three retaining bolts from the bulkhead panel and the nut under the left-hand side of the fascia (Fig. N:16). Remove the lower steering column shroud and the retaining nut on the right-hand side of the fascia. The heater assembly can now be withdrawn.

To dismantle the unit, remove the rubber seal around the outlet and lever aside the clips holding the half casing edges (Fig. N:18). Remove the bolt from the centre and separate the casing halves, breaking the sealant. The motor and fan assembly can then be withdrawn, noting the direction of the fan blades. Note that the motor cannot be repaired and should be replaced as a unit with the fans (Fig. N:18).

Reassemble the motor and casing in the reverse order to removal and disassembly. Check the heater motor and wiper motor earth lead connections. Reconnect the airflow cable so that, with the flap fully closed, there is 2 mm clearance between operating lever and right-hand side of the control plate. After reconnecting the heater hoses, bleed the cooling system as described in the COOLING SYSTEM chapter.

WINDSCREEN WIPERS & WASHERS . . . . . [8]

Wiper Motor

To remove the windscreen wiper motor and linkage, first disconnect the battery. Remove the wiper arms from

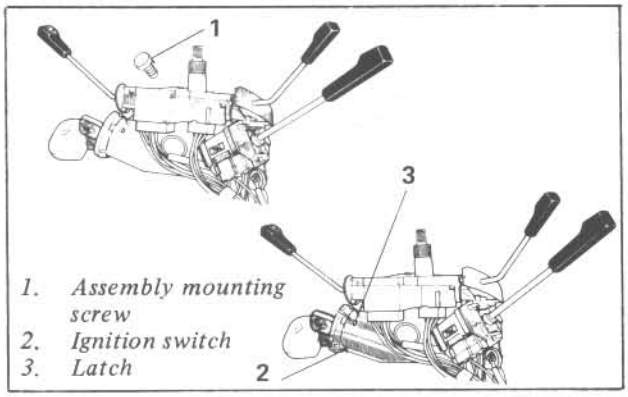

Fig. N:15 Steering column switch assembly mounting

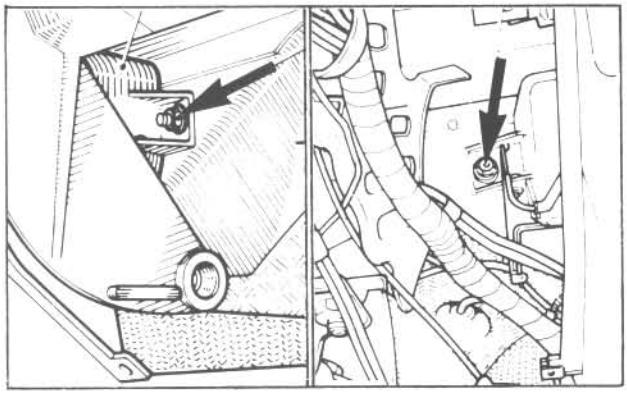

Fig. N:16 Heater assembly retaining nuts

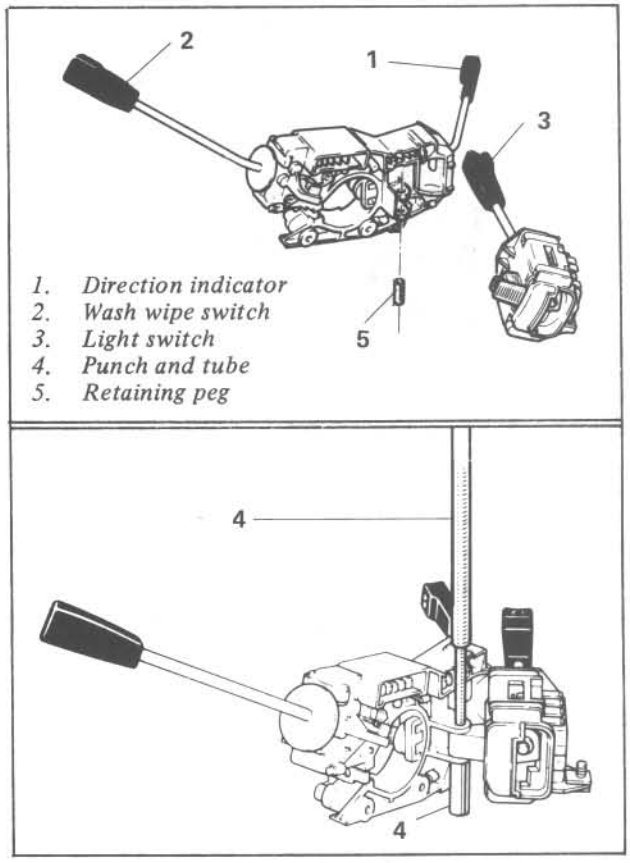

Fig. N:17 Steering column switch separation

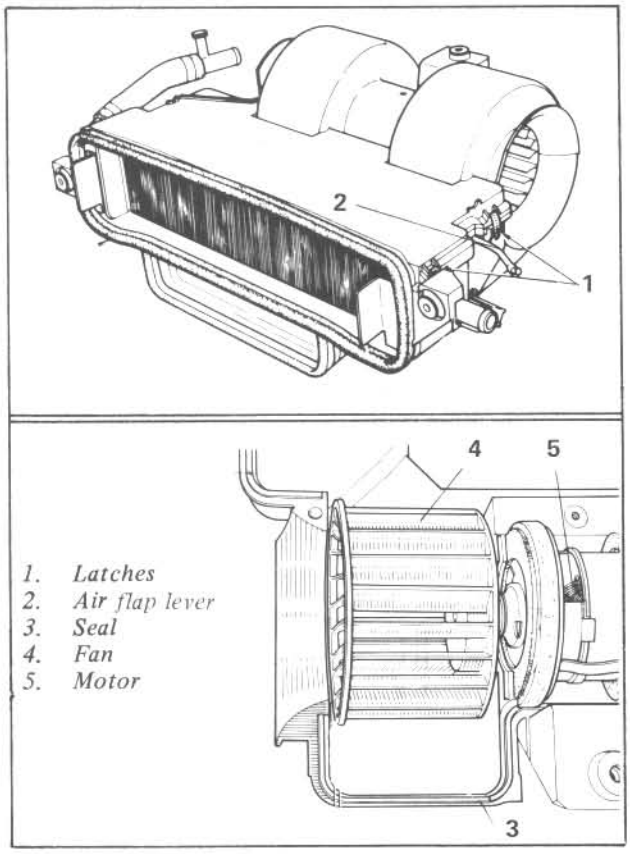

Fig. N:18 Heater assembly and fan motor

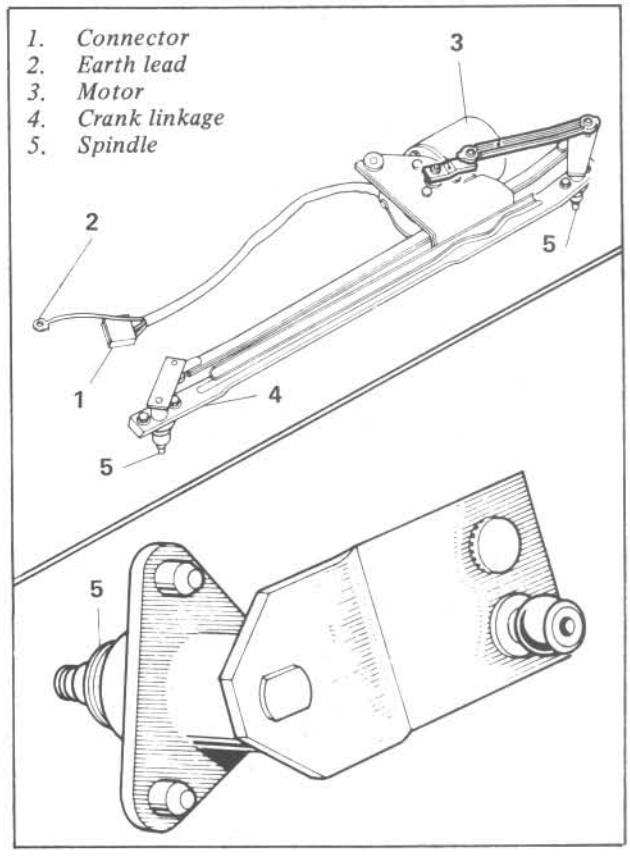

Fig. N:19 Windscreen wiper motor assembly

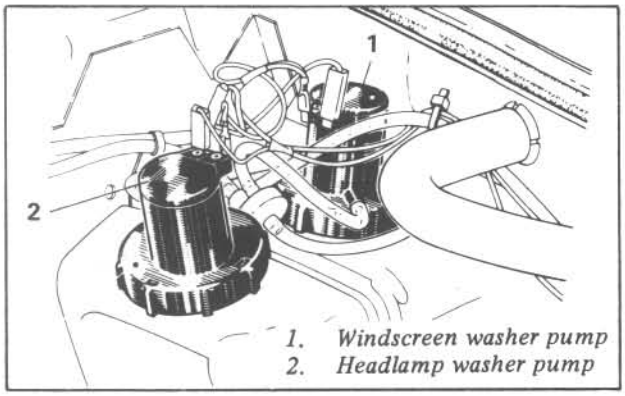

Fig. N:20 Washer reservoir and pump location

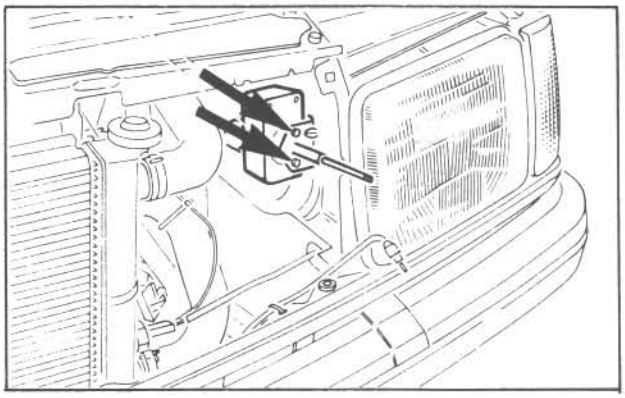

Fig. N:21 Nearside headlamp wiper motor mounting nuts

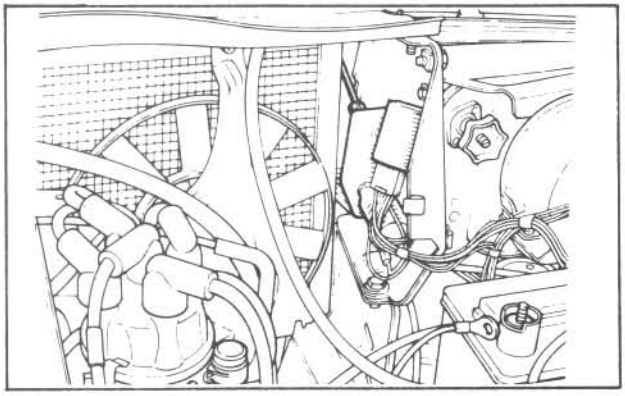

Fig. N:22 Offside headlamp wiper motor mounting

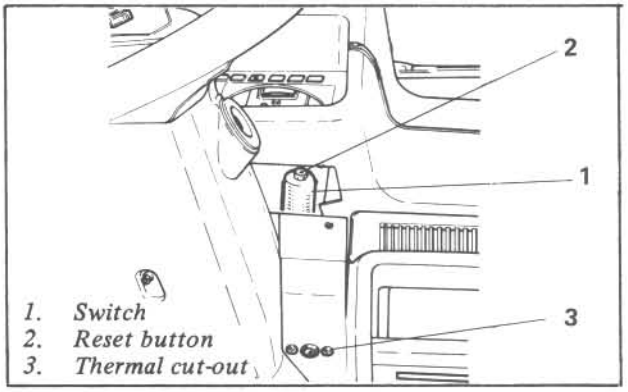

Fig. N:23 Central locking tumble switch

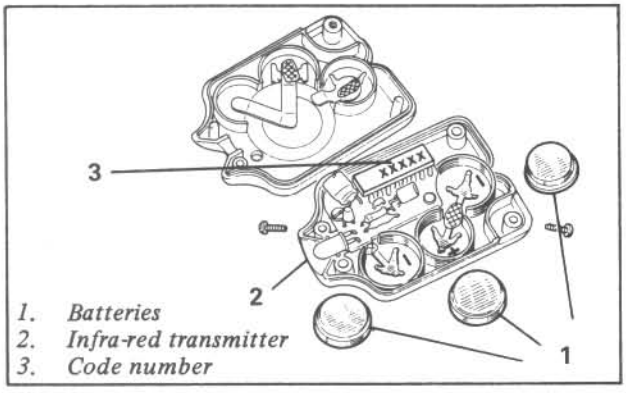

Fig. N:24 'PLIP' system transmitter

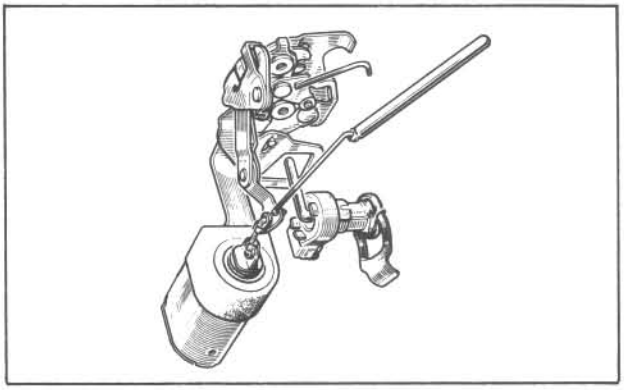

Fig. N:25 Door lock solenoid assembly

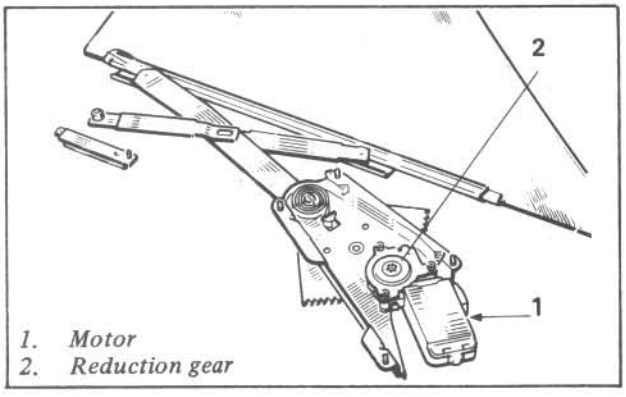

Fig. N:26 Electric window winder mechanism

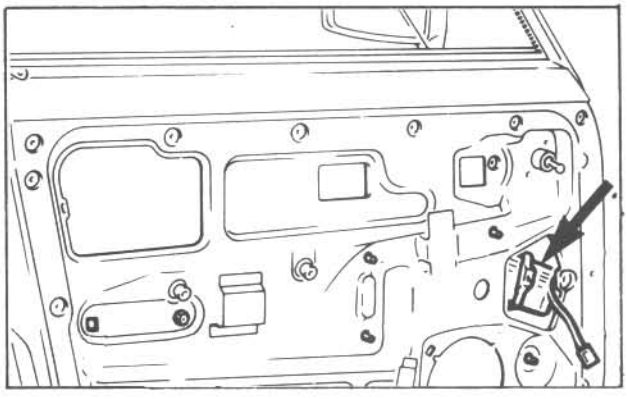

Fig. N:27 Electric winder motor in door

the spindle after removing the retaining nuts (Fig. N:19). Then remove the lower nuts. Disconnect the connector block to the motor and the earth wire, then remove the mounting plate fixing bolt. Withdraw the assembly by pulling downwards to clear the spindles and pull to the right.

Refit the motor in the reverse order of removal, ensuring that the earth lead is connected. The crank and link should be in line when the assembly is refitted.

Washer Pump

The headlamp washer pump is mounted on the washer fluid reservoir in the right-hand corner of the engine compartment (Fig. N:20). If replacement is necessary, the pump can be removed by unscrewing the sealing ring. Before removing the electrical connectors from the old unit, note their location and fit to the new pump in the correct order.

If the tubing is cracked or shows signs of chafing it should be replaced. To ease fitting over the spigots, the pipe can be temporarily softened by dipping the end in hot water.

For details of the relays and timers that may be fitted to the system, see the Wiring Diagrams section for details of the locations and connections.

HEADLAMP WASH WIPE . . . . . [9]

Wiper Motor Replacement

To remove the right-hand unit, it will be necessary to remove the grille (Fig. N:21), see BODY & FITTINGS. Disconnect the battery and the connector to the motor (Fig. N:22), then the water pipe. Detach the wiper arm by removing the retaining nut. Remove the two nuts holding the wiper motor to its mounting plate and withdraw the unit.

The motor can be replaced in the wiper assembly by removing the cover retaining screws and taking off the cover. The motor can then be withdrawn. As the motor is not serviceable, a new unit should be fitted if the motor is faulty.

Refit the unit in the reverse order of removal. Before refitting the wiper arm, ensure that the spindle is in the 'park' position.

CENTRAL LOCKING SYSTEM . . . . . [10]

The Renault central locking system (if fitted) allows all of the doors to be locked and unlocked simultaneously. By activating the system either by key or by the infrared 'PLIP' system, the operating solenoids in the doors free the latches. In the event of an accident, a tumble switch will automatically open all door latches.

The tumble switch is mounted behind the instrument panel (Fig. N:23). Should the switch operate, reset by pressing the button on top of the casing. A thermal cut-out stops the system from overloading after the tumble switch operates.

The 'PLIP' system transmitter and receiver cannot be repaired if defective. If the transmitter is suspect, check the batteries and contacts (Fig. N:24).

The door lock operating solenoids are an integral part of the door lock mechanism (Fig. N:25). Removal and refitting is described in the BODY & FITTINGS chapter.

ELECTRICALLY OPERATED WINDOWS. . [11]

The electric motor operating the window winder mechanism is waterproof and cannot be repaired.

The motor can be removed separately from the reduction gear and winder mechanism (Fig. N:26). Remove the door trim panel, see BODY & FITTINGS chapter. Disconnect the wiring multi-plug. Remove the motor retaining nut and bolts. Pull the motor from the reduction gear (Fig. N:27).

Check the motor operation by connecting the leads to the battery terminals.

Refit the motor to the reduction gear, noting the washers.

Wiring Diagram (1)

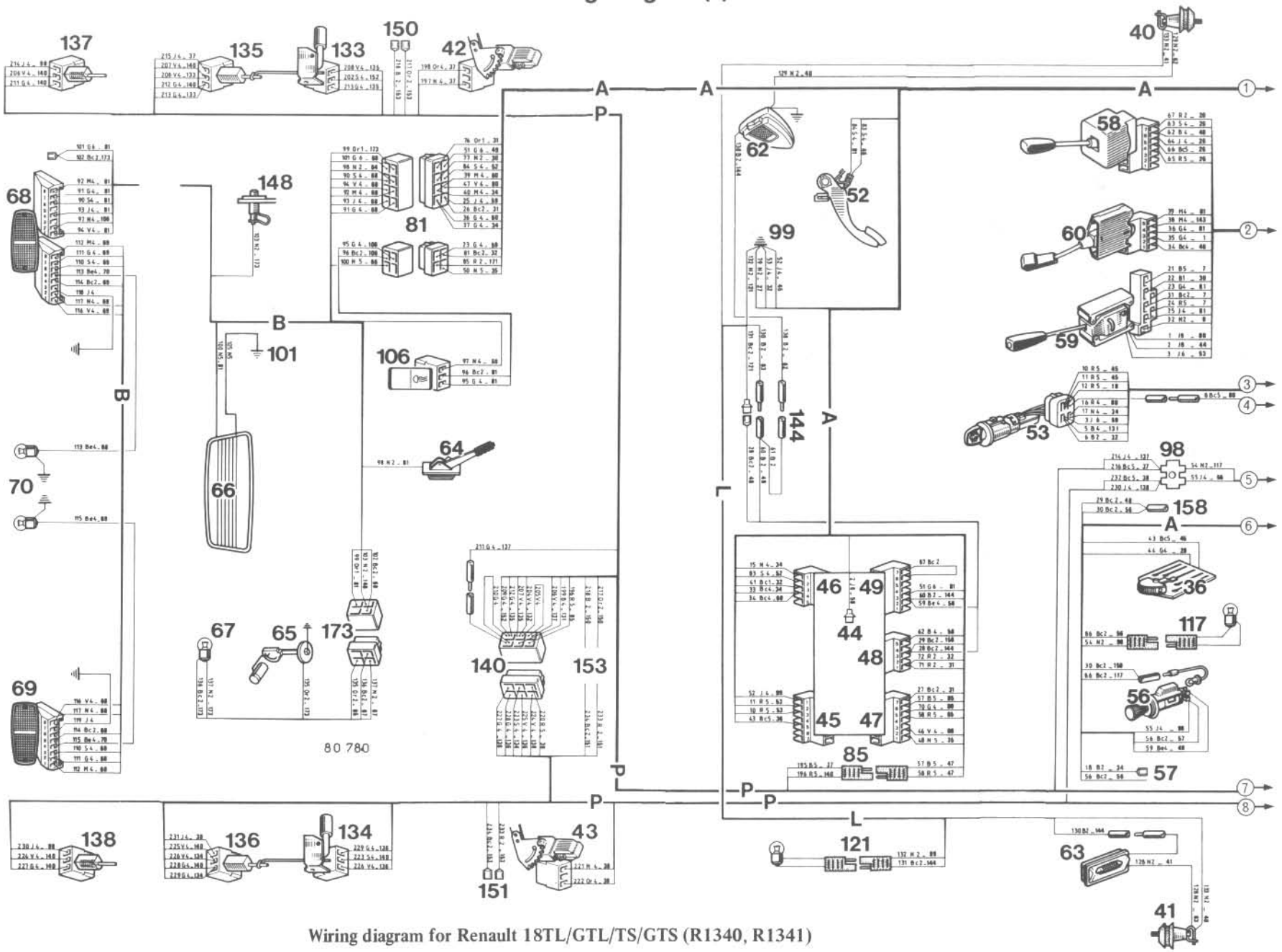

Wiring diagram for Renault 18TL/GTL/TS/GTS (R1340, R1341)

Wiring Diagram (1)

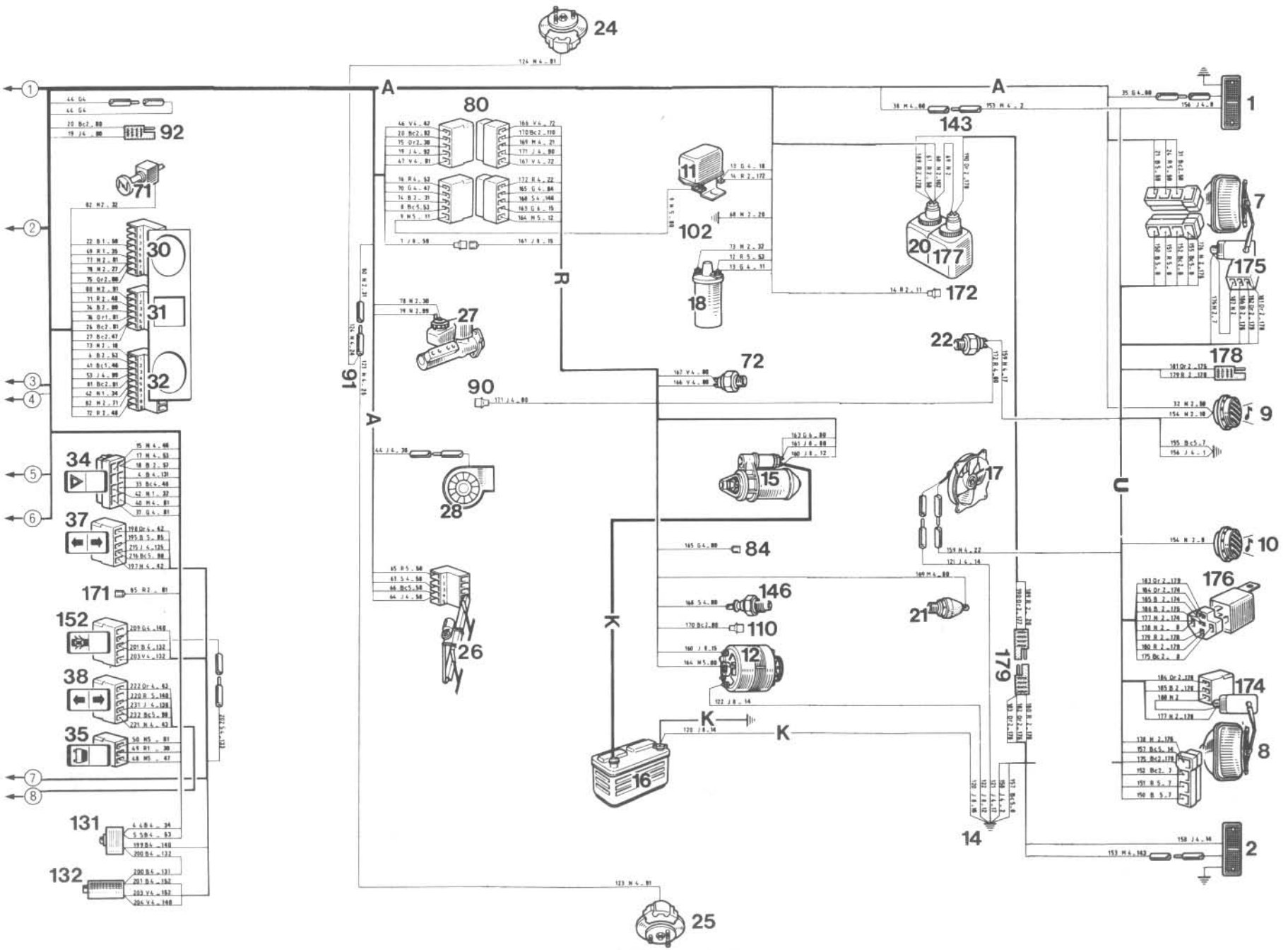

Wiring diagram for Renault 18TL/GTL/TS/GTS (R1340, R1341) Contd.

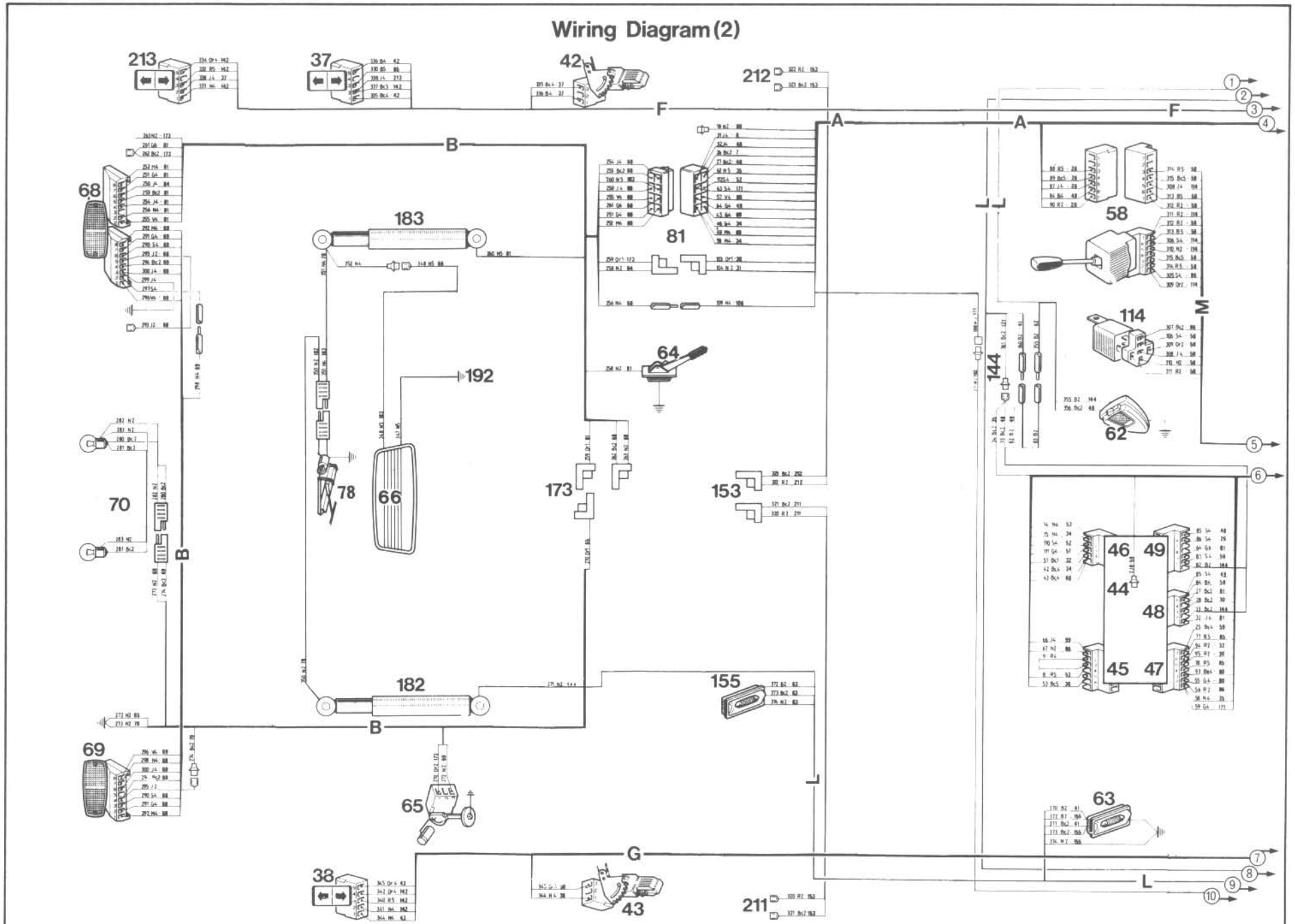

Wiring diagram for Renault Fuego TL/GTL/TS/GTS (R1360, R1362)

Wiring Diagram (2)

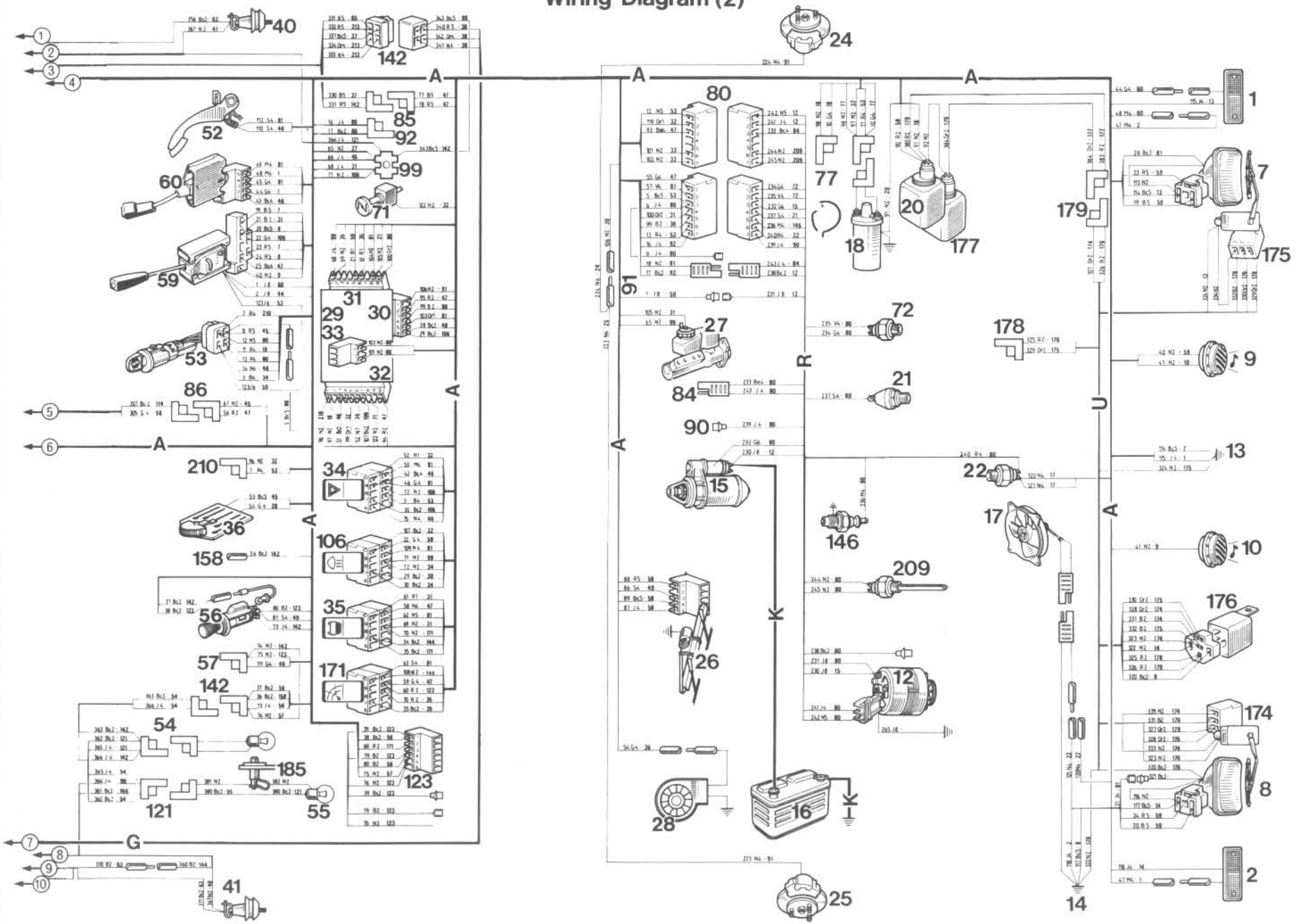

Wiring diagram for Renault Fuego TL/GTL/TS/GTS (R1360, R1362) Contd.

Wiring Diagram (3)

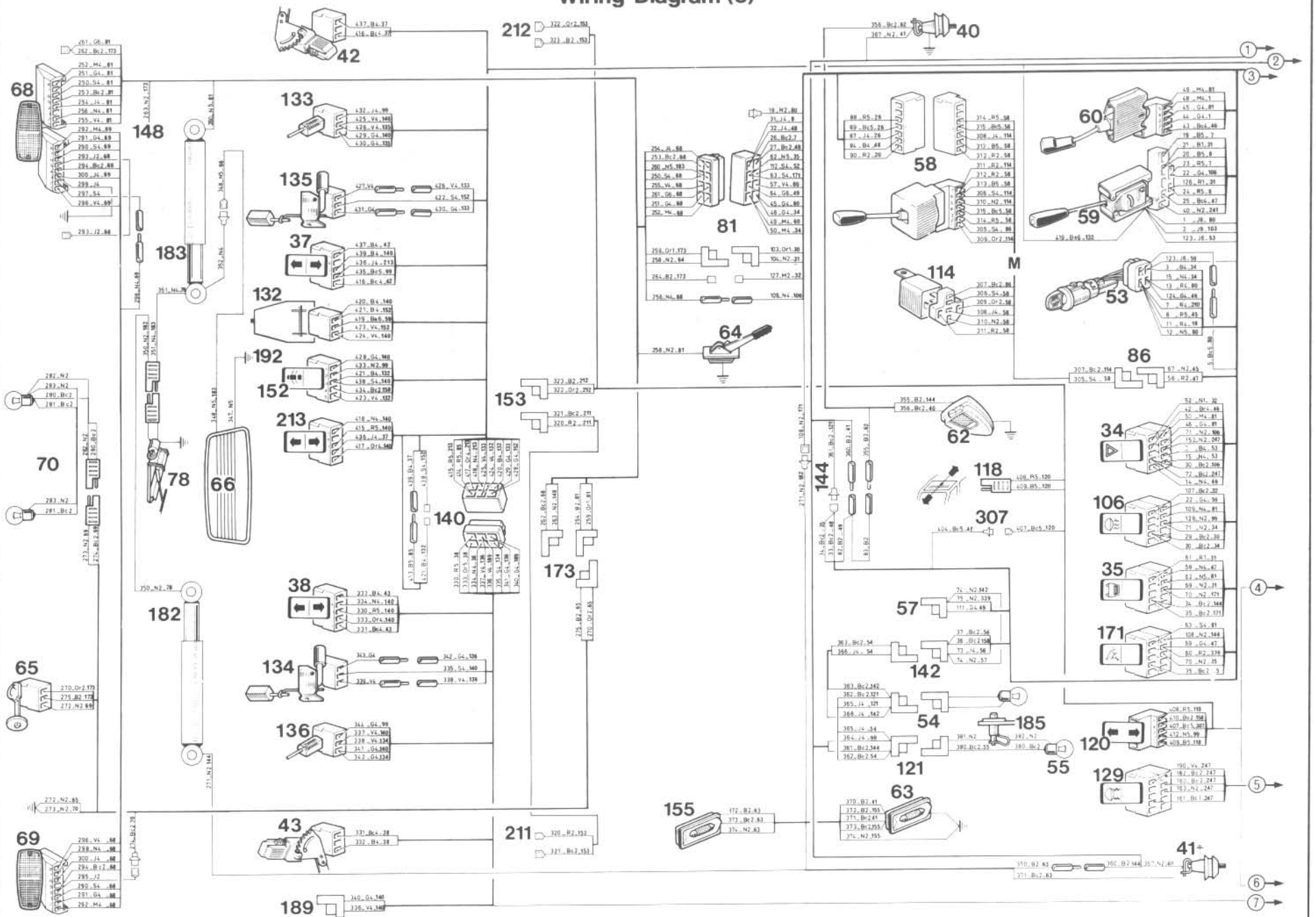

Wiring diagram for Renault Fuego TX/GTX (R1363)

Wiring Diagram (3)

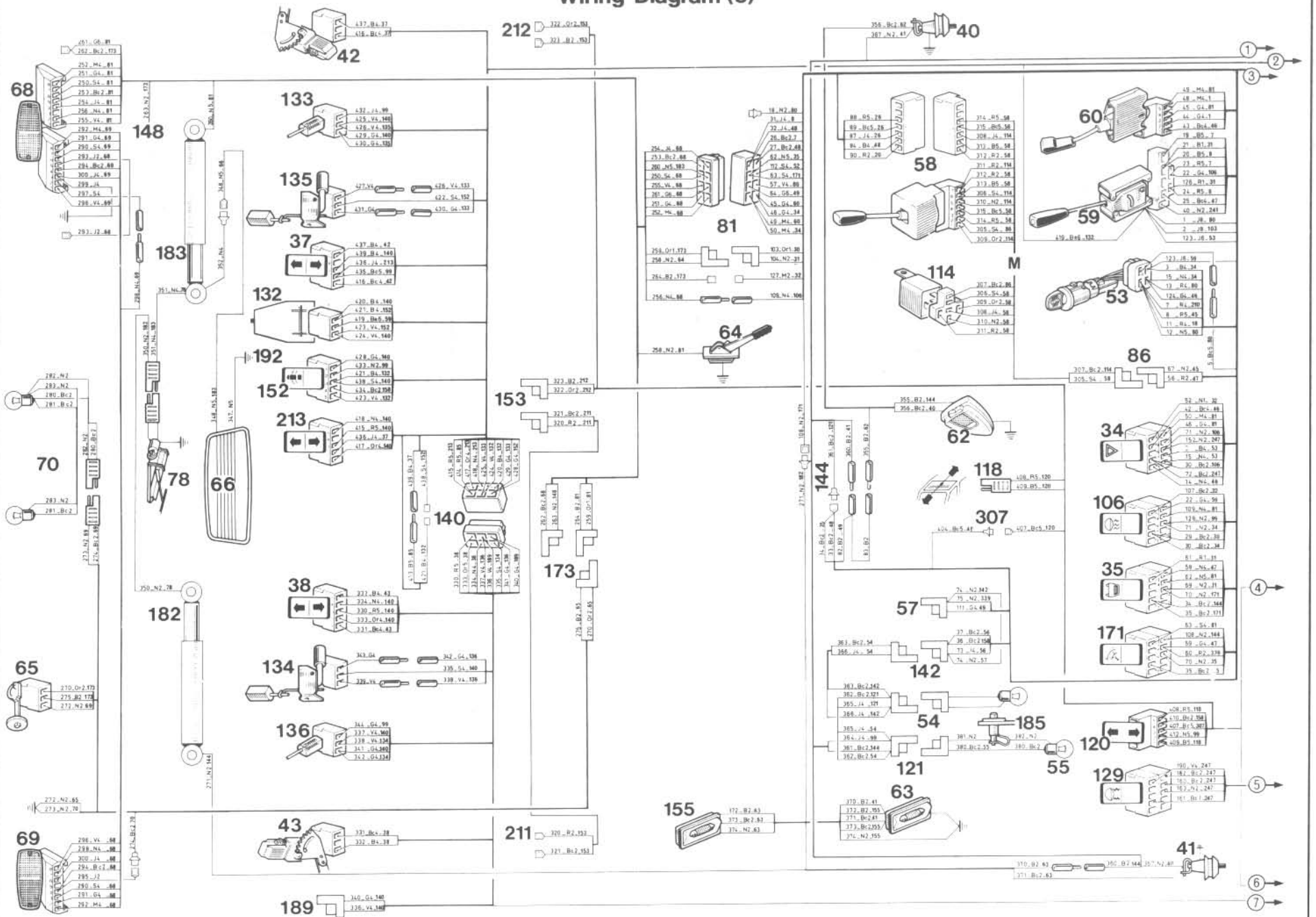

Wiring diagram for Renault Fuego TX/GTX (R1363)

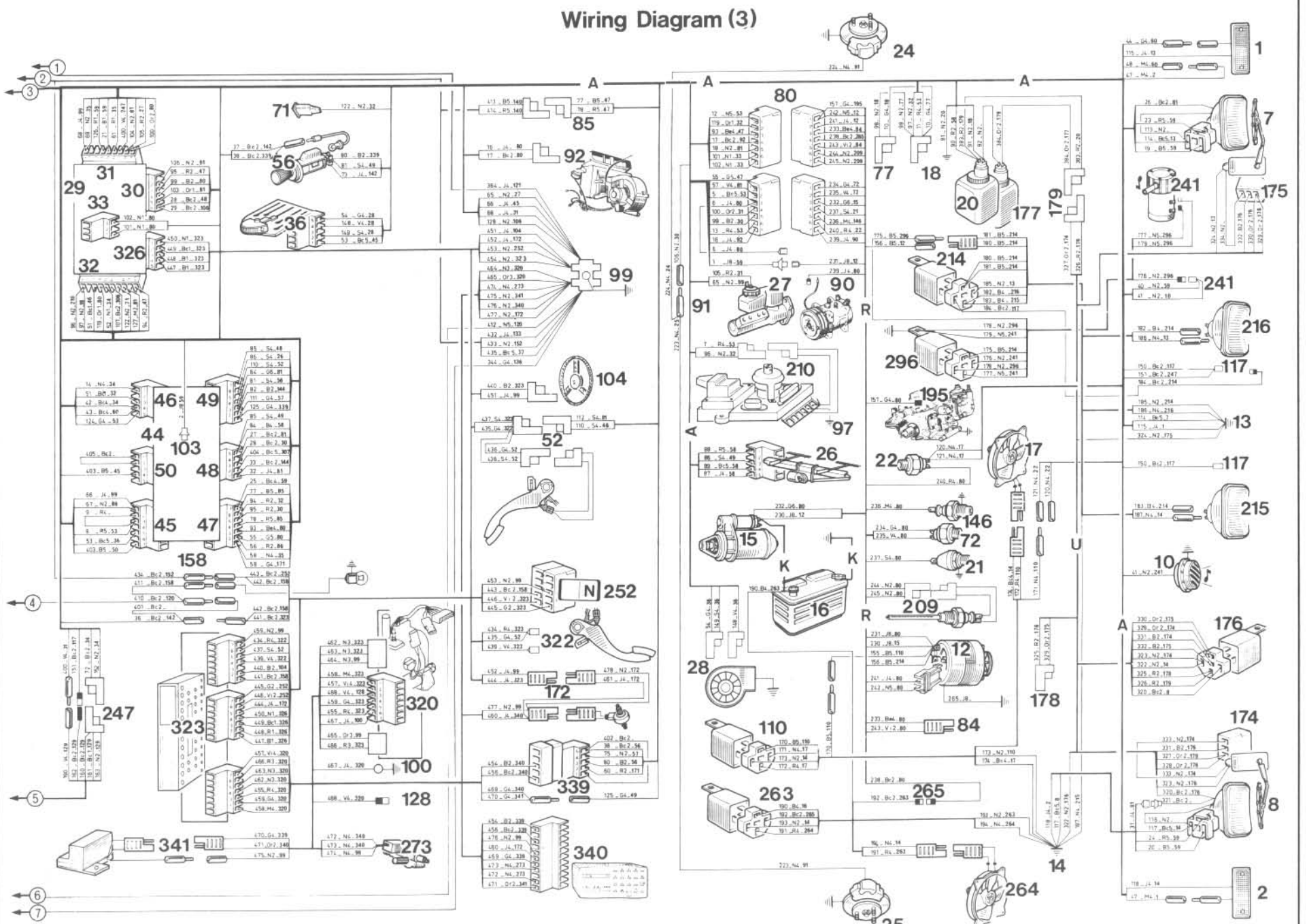

Wiring diagram for Renault Fuego TX/GTX (R1363) Contd.

ELECTRICAL
Trouble Shooter

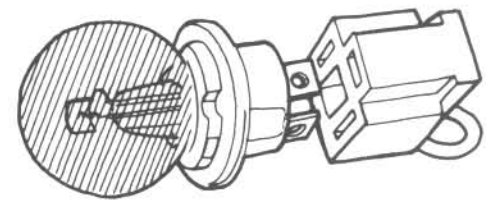

FAULT	CAUSE	CURE
LIGHTING CIRCUIT		
No lights (or very dim)	1. Flat or faulty battery, bad battery connections.	1. Check battery and connections.
Side and rear lights inoperative although stoplights and flashers work	1. Fuse blown.	1. Fit correct value fuse.
One lamp fails	1. Blown bulb. 2. Poor bulb contact. 3. Bad earth connection. 4. Broken feed.	1. Fit new bulb. 2/3. Check connections. 4. Check feed.
Flasher warning bulb stays on or flashers twice as fast	1. Faulty bulb or connection on front or rear of offending side.	1. Fit new bulb, make good connection.
Lights dim when idling or at low speed	1. Loose drive belt. 2. Flat battery. 3. Faulty charging circuit.	1. Tighten belt. 2/3. Check charge output and battery.
One dim light	1. Blackened bulb. 2. Bad earth. 3. Tarnished reflector.	1/3. Fit new bulb or sealed-beam. 2. Check earth connections.
WINDSCREEN WIPERS		
Wipers do not work	1. Blown fuse. 2. Poor connection. 3. Faulty switch. 4. Faulty motor.	1. Fit new fuse of correct rating. 2. Check connections. 3. Check switch. 4. Remove and examine motor.
Motor operates slowly	1. Excessive resistance in circuit or wiper drive. 2. Worn brushes.	1. Check wiper circuit. 2. Remove motor and check brushes.
HORN		
Horn(s) do not work	1. Faulty horn push. 2. Faulty or broken connection. 3. Faulty horn(s).	1. Replace steering column switch. 2. Check wiring continuity. 3. Replace horn(s).
Horn operates continuously	1. Horn push earthed or stuck down. 2. Horn cable to horn push earthed.	1. Remedy cause of earthing out or free off horn push. 2. Trace cause of cable earthing and re-insulate.
FUEL GAUGE		
Fuel gauge not reading	1. No fuel in tank. 2. Sender unit to gauge cable broken or disconnected. 3. No earth on fuel gauge. 4. Supply to gauge disconnected. 5. Gauge faulty.	1. Add fuel. 2. Reconnector repair cable. 3. Reconnect earth. 4. Check wiring and reconnect or repair. 5. Replace gauge.
Fuel gauge registering full	1. Sender unit to gauge cable earthed.	1. Trace cause of earthing out and re-insulate.

Body & Fittings

INTRODUCTION . . . . . [1]
FRONT & REAR BUMPERS . . . . . [2]
BONNET PANEL . . . . . [3]
BONNET RELEASE CABLE & LOCK . . . . . [4]
BOOT LID . . . . . [5]
DOOR TRIM PANEL . . . . . [6]
WINDOW WINDER MECHANISM . . . . . [7]
HANDLES & LOCKS . . . . . [8]
SPEEDOMETER CABLE . . . . . [9]
FRONT SEAT . . . . . [10]
REAR SEAT . . . . . [11]
FRONT WINGS . . . . . [12]
BONNET LOCK PANEL . . . . . [13]
CORROSION . . . . . [14]

INTRODUCTION . . . . . [1]

All the body fittings are easy to get at and to remove by the DIY mechanic. Some of the fittings however, are secured with Torx type screws which have socket heads requiring a special Torx adaptor when unscrewing or tightening them. These adaptors can usually be purchased from a local Auto Engineering supply shop or good tool stores.

On models with electrically operated door locks and electric front window lifts, the removal and installation procedures are similar to the manually operated version, although it is important to disconnect the battery earth lead when working on the components to avoid accidental short-circuits.

FRONT & REAR BUMPERS . . . . . [2]

Removal - Front

1. On models with a remote type air cleaner cannister, it will help by removing the air cleaner for better access to the left-hand (nearside) bumper bolts.
2. Working inside the engine compartment, undo the four bumper bracket retaining bolts (Fig. O:1).
3. Pull the bumper assembly away from the body to release it from the side mounting brackets, taking care not to damage the paintwork.
4. Remove the side mountings by undoing the through bolts from the outside (Fig. O:2).

Installation - Front

1. Assemble the side mountings using the washers in the order shown in Fig. O:2.
2. Support the bumper assembly in the horizontal position and slide it onto the side mountings.
3. Refit the four bolts to the centre brackets and tighten once the bumper is level and centralised. Finally tighten the side mounting bolts.

Removal & Installation - Rear

Removal and installation of the rear bumper assembly follows exactly the same procedure as that for the front with the exception that there is obviously no need to disturb the air cleaner.

BONNET PANEL . . . . . [3]

Removal

1. Open the bonnet and support with the stay.
2. If the original bonnet is to be refitted, it will facilitate alignment of the bonnet on installation if the positions of the side hinges are marked by scribing a line round each at this stage.
3. An assistant will be needed to lift off the bonnet, and the area at the rear corners of the bonnet should be padded with cloth to prevent damage to the paintwork as the hinge bolts are released.
4. Undo either the four bolts holding the hinges to the bonnet panel or the two bolts holding the hinges to the scuttle panel. Access holes are provided in the scuttle panel as shown in Fig. O:3. Remove the blanking grommet and use a socket with an extension from below the wing.
5. Disconnect the windscreen washer tubing and lift the bonnet panel off the car.

Installation

When installing the bonnet, take care not to damage the paintwork with the rear corners of the bonnet. Refit the hinge bolts loosely at first, then align the hinges with the marks previously made and tighten the bolts.

Lower the bonnet and check that the alignment is correct in relation to the wings before pressing it into the

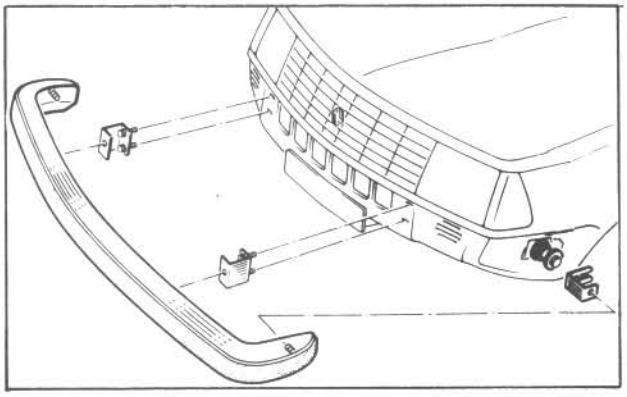

Fig. O:1 Bumper mounting brackets

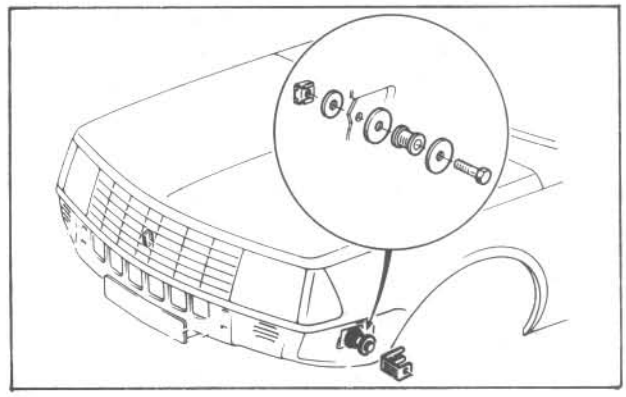

Fig. O:2 Side bumper mountings

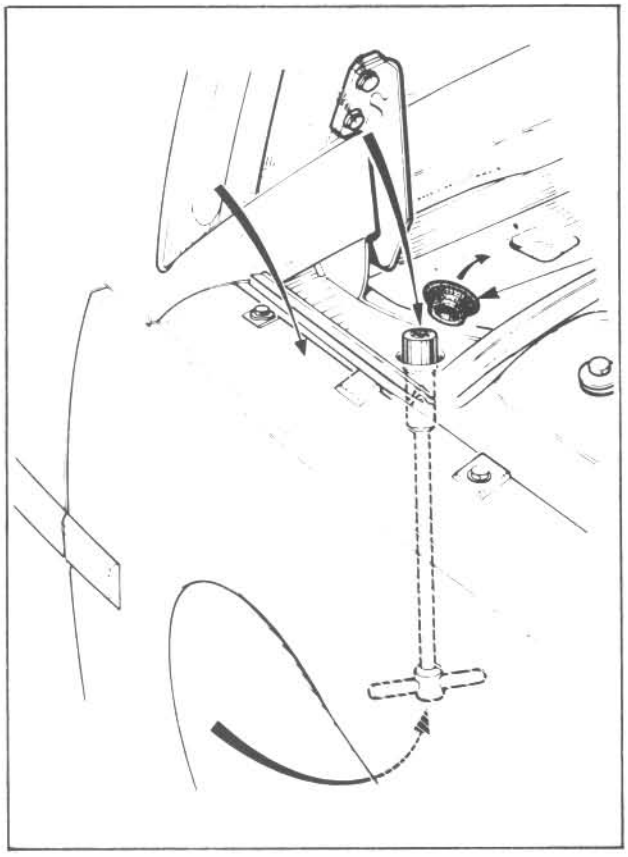

Fig. O:3 Bonnet hinge bolts

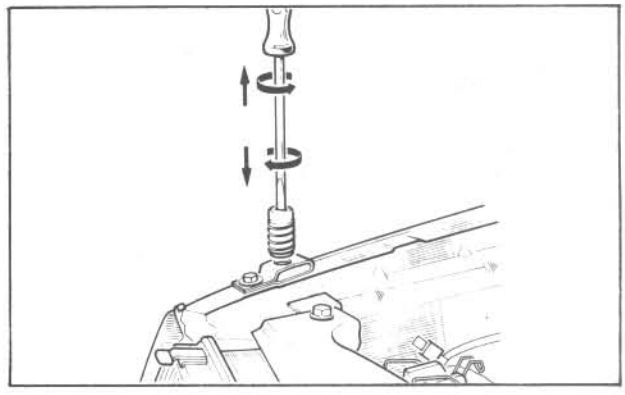

Fig. O:4 Bonnet adjustment pads

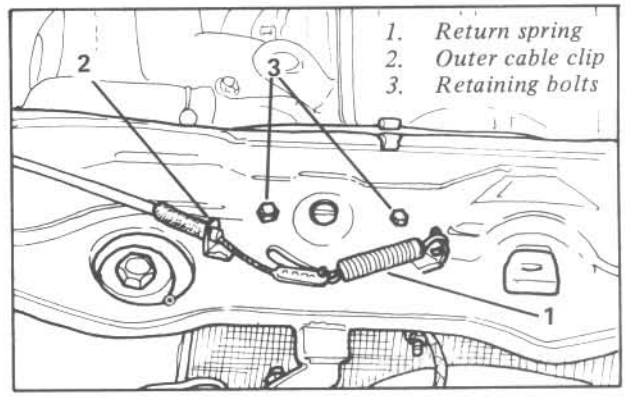

Fig. O:5 Bonnet lock release cable

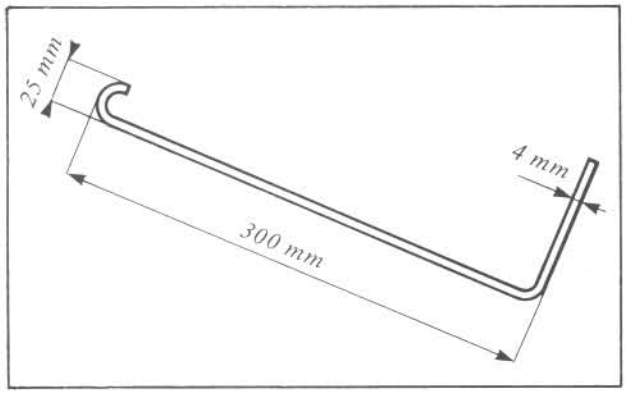

Fig. O:6 Bonnet lock release tool

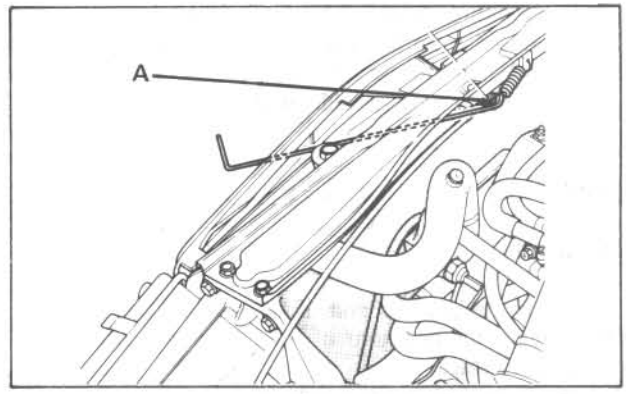

Fig. O:7 Releasing bonnet lock

locked position. If necessary, realign the bonnet by slackening the hinge bolts. The vertical alignment can be adjusted by screwing the two pads (Fig. O:4) up or down as required.

BONNET RELEASE CABLE & LOCK . . . . . [4]

Broken Release Cable

If the bonnet release cable breaks with the bonnet shut the following method can be used to release it.

Make up a wire hook to the dimensions shown in Fig. O:6, and insert it through the front grille just below the top edge on the left-hand side of the radiator cap.

Position the end of the hook over the lock operating lever and pull hard to release the bonnet (Fig. O:7).

Cable Replacement

1. Open the bonnet and support on its stay.
2. Unhook the cable return spring from the operating lever and cable end tag (1, Fig. O:5).
3. Pull the outer cable ferrule through the stop bracket. It may be necessary to lever the ears of the bracket apart to release the cable (2, Fig. O:5). Release the outer cable from any underbonnet clips.
4. Working inside the car, undo the two bolts holding the release lever to the side panel. The cable assembly can now be pulled through into the car.
5. Install in the reverse order of removal. Replacement cables are supplied as an assembly, complete with the release lever and are a fixed length so that no adjustment is possible.

Bonnet Lock

The bonnet lock can be removed by disconnecting the cable from the lever and then undoing the two retaining bolts. Withdraw the lock from under the front panel.

Make sure the lock sliding plate is well greased before installing the lock in the reverse order of removal.

Bonnet Lock - Adjustment

Bonnet lock adjustment is achieved by screwing the spring loaded striker pin in or out with a screwdriver.

The bonnet should fully latch under its own weight when released from a height of 300 mm above its pop up position. When released from a height of 75 mm the secondary catch only should engage.

BOOT LID . . . . . [5]

Removal

1. Open the boot lid and, if the original lid is to be refitted, mark the positions of the hinges by scribing round them at this stage.
2. With the aid of an assistant, support the weight of the lid and undo the four hinge retaining bolts (Fig. O:9).
3. Lift the lid away from the car noting the position of any packing shims that may have been fitted between the hinges and the boot lid.

Installation

1. Before installing the lid check the condition of the 'snub rubbers' fitted to the edge of the aperture. These can be removed quite easily by pulling up a section of the rubber edge seal as shown in Fig. O:10.
2. Install the lid in the reverse order of removal but before finally tightening the hinge bolts carefully lower the lid and check that it is not fouling the surrounding panels and that it is correctly aligned.

Adjustment of the height can be achieved by increasing or decreasing the number of shims fitted and the alignment of the gaps can be altered by moving the lid on its slotted mounting holes.

DOOR TRIM PANEL . . . . . [6]

Removal

1. Remove the two screws from the armrest (1, Fig. O:11). Later cars have Torx headed screws which require a special wrench to remove them.
2. On the front doors it is necessary to tilt the armrest downwards to free the upper retaining peg (2, Fig. O:11).

The armrests on the rear doors are held only by two screws.

3. Undo the single retaining screw from the interior door handle (3, Fig. O:11), pull the handle away from the trim panel and lever the connecting link clip off the link rod. Remove the handle from the door.
4. Undo the two cross-head screws from the lower edge of the map pocket (4, Fig. O:11) and lift it up and off the two retaining pegs.
5. Unscrew the outer ring from the interior control lever for the door mirror, if fitted (5, Fig. O:11).
6. Lever up the lock tell-tale sleeve and remove it from the top edge of the trim panel (6, Fig. O:11).
7. Using a small screwdriver, carefully lever the trim panel away from its retaining clips.
8. Lift the panel away from the lock tell-tale and peel off the polythene sealing sheet if access to the interior of the door is required.

Installation

1. Reposition the plastic sheet and seal the edges using Renault mastic No. 77 01 401 817 or a similar sealer.
2. Refit the trim panel and ancillary parts in the reverse order of removal.

WINDOW WINDER MECHANISM . . . . . [7]

Removal

1. Remove the door trim panel as detailed in the previous section.

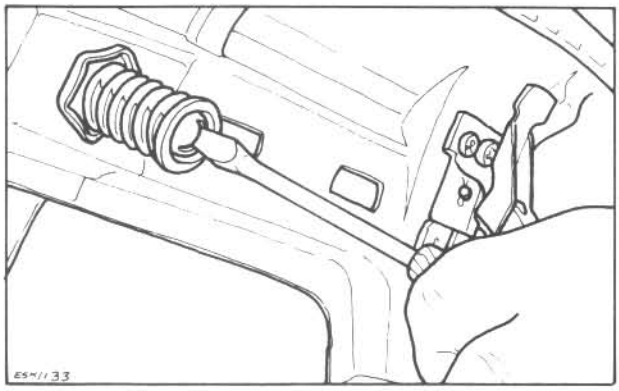

Fig. O:8 Adjusting bonnet lock pin

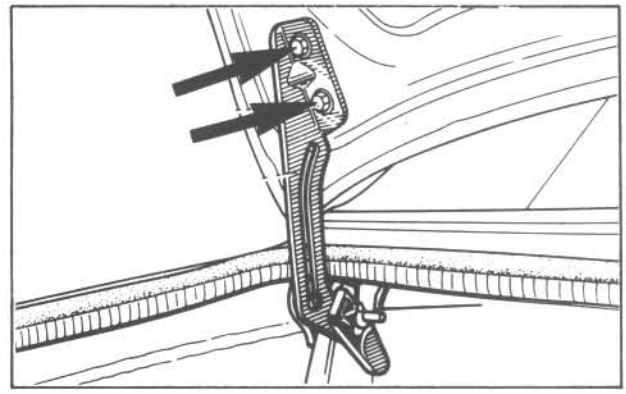

Fig. O:9 Boot lid hinge assembly

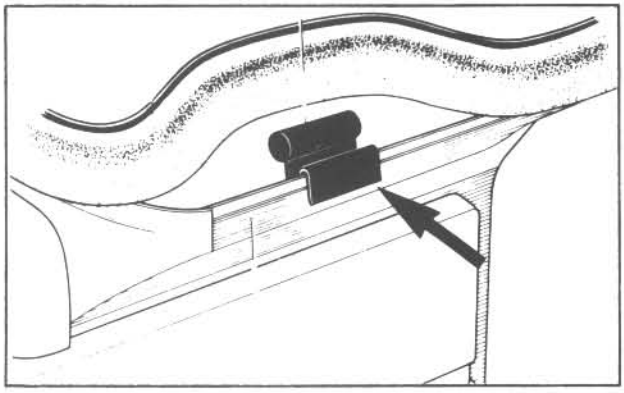

Fig. O:10 Boot seal 'snub' rubbers

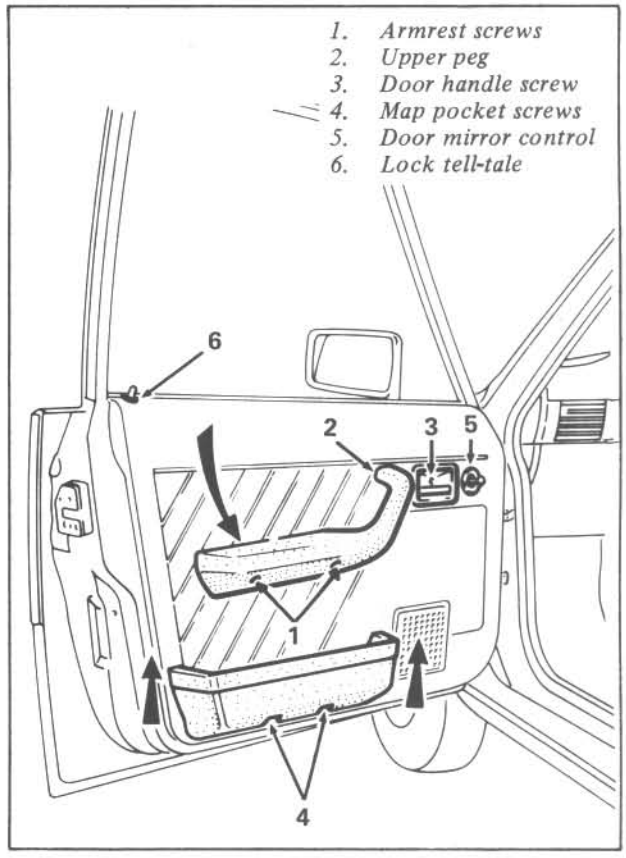

Fig. O:11 Removing door trim panel

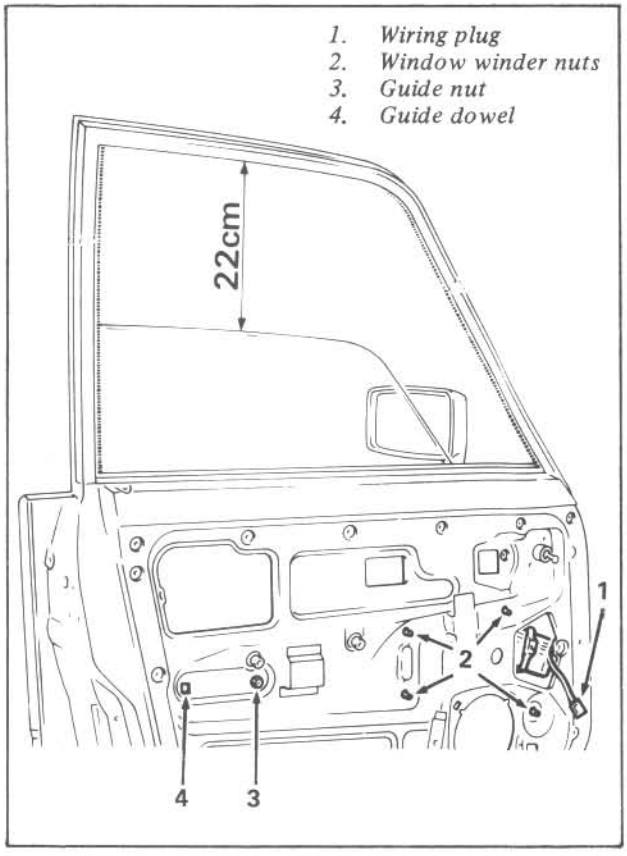

Fig. O:12 Window winder installation

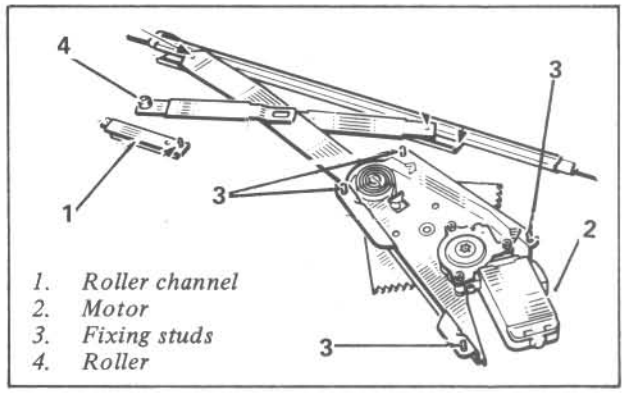

Fig. O:13 Window winder mechanism

2. Carefully peel back the plastic sheet to expose the interior of the door.
3. Lower the window glass until to top of the glass is 22 mm from the top of the frame.
4. Disconnect the wiring harness plug (1, Fig. O:12).
5. Undo the four nuts (2, Fig. O:12) retaining the winder mechanism to the door frame.
6. Remove the bottom roller guide channel by undoing the retaining nut (3, Fig. O:12) and pulling the guide dowel through the door panel.
7. Push the mechanism into the door until the fixing studs are clear of the panel and then slide it off the roller channels (1, Fig. O:13).
8. Manoeuvre the mechanism out through the bottom aperture of the door.

Installation

1. Position the bottom roller guide and fit the retaining nut,but do not tighten at this stage.
2. Place the winder mechanism in the bottom of the door frame with the fixing studs facing outwards.
3. Channel the rollers into their guides and fit the retaining nuts to the four fixing studs on the mechanism but do not tighten fully at this stage.
4. Reconnect the wiring plug and raise the window to the top of its channel.
5. Tighten the four mechanism retaining nuts and finally the bottom guide nut.
6. Refit the plastic sealing sheet using the sealer described in the Door Trim Panel section of this chapter.
7. Refit the door trim panel.

HANDLES & LOCKS . . . . . [8]

Door Window Regulator Handle

To remove the handle, carefully prise the square insert from the regulator shaft end of the handle (1, Fig. O:14). Remove hexagon headed nut (2, Fig. O:14), from the handle boss using a socket and detach the handle and bezel from the regulator shaft.

To install, refit the bezel on the regulator shaft and align the handle on the shaft. Insert and tighten the fixing bolt. Align the square insert with the cut out in the end of the handle and press into position to secure.

Exterior Door Handle - Replacement

1. Lock the door.
2. Undo the handle locating screw located in door shut face (1, Fig. O:15).
3. Push the handle towards the front of the car to disengage it from the notches (2, Fig. O:15).
4. Angle the handle downwards and lift it away from the door panel.
5. Install the handle in the reverse order of removal with the door locked and tighten the fixing screw.

Door Lock - Replacement

The door locks fitted to Renault 18 and Fuego models can be either manually or electrically operated. The removal and installation procedures given in this section are applicable to the electrically operated type but can be used for the manually operated type by ignoring the references to the solenoid and wiring.

Further details of the electric door locking system can be found in the GENERAL ELECTRICS chapter of this manual.
1. Raise the window to the top of its travel.
2. Remove the door trim panel as described earlier in this section.
3. Carefully peel off the plastic sealing sheet and unplug the wiring harness plug.
4. Remove the changeover assembly (1, Fig. O:16), from the lock barrel leaving the barrel holder in position (2, Fig. O:16).
5. Using a screwdriver, lever the clip away from the remote control link (Fig. O:17) and free the link rod from its clip on the door frame.
6. Undo the three screws retaining the latch assembly to the door shut face and remove the latch (1, Fig. O:18).
7. Undo the lower bolt in door shut face that holds the lock solenoid in position (2, Fig. O:18).
8. Pivot the lock assembly round the window channel and withdraw it through the aperture in the bottom of the door.
9. Install the lock assembly in the reverse order of removal.

SPEEDOMETER CABLE . . . . . [9]

The correct routeing of the speedometer cable is important to prevent an erratic speedometer needle reading, and to prevent noisy operation. The life of the inner cable can also be affected by a sharply curved cable. The cable assembly should be routed as gently as possible to ensure smooth trouble-free operation.

To replace a broken inner cable, the instrument panel must be removed first as detailed in the GENERAL ELECTRICS chapter. Press the outer cable flange locking tab and detach the cable from the rear of the speedometer (Fig. O:19).

The inner cable can now be withdrawn from the outer cable. Note that the cable will be covered with grease and should be wiped clean as it is withdrawn.

Check the lower (gearbox) end of the cable to see if it broken, fractured or frayed. The inner cable usually breaks at the point where it enters the gearbox driving gear. If the inner cable has obviously broken it will be necessary to release the outer cable from the gearbox by pulling the nylon retaining pin out and then pulling the cable out of the casing boss.

The broken end can then be withdraw from the driving gear using tweezers.

Refit the outer cable, pushing it fully into the gearbox casing and then refit the retaining pin. Apply a film of high melting point grease to the inner cable but leave the top 150 mm clean. Insert the inner cable into the

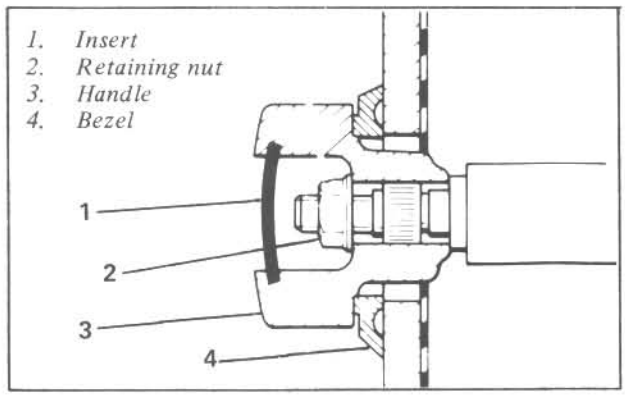

Fig. O:14 Window winder handle section

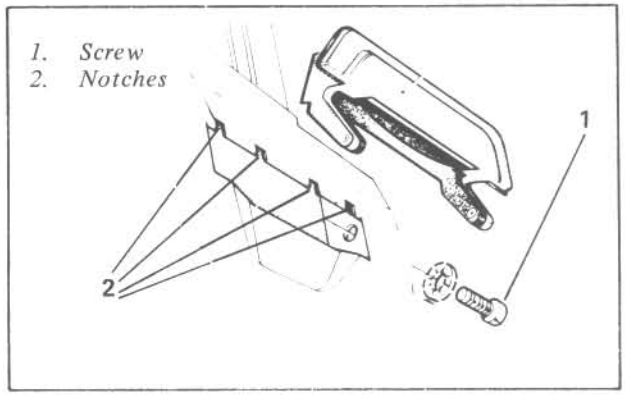

Fig. O:15 Exterior door handle

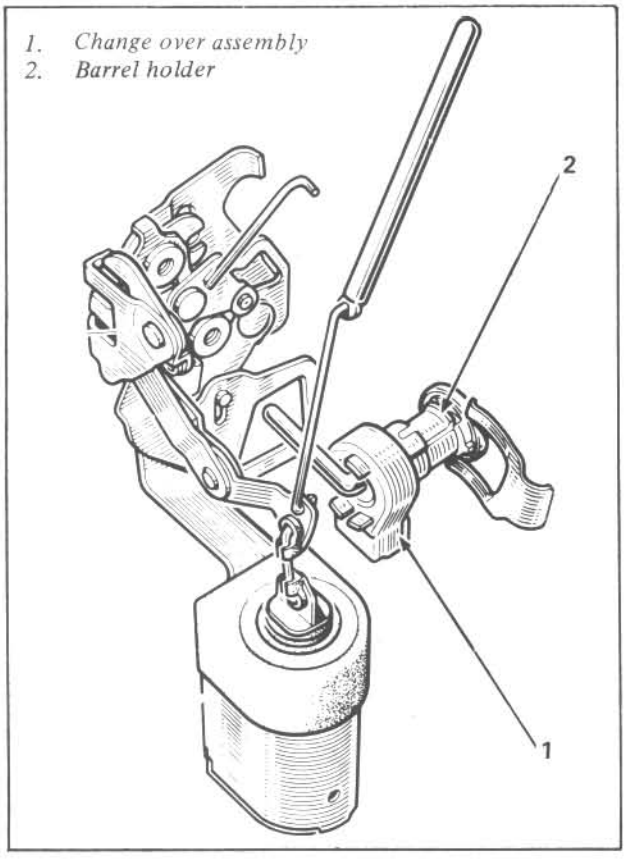

Fig. O:16 Electrically operated door lock

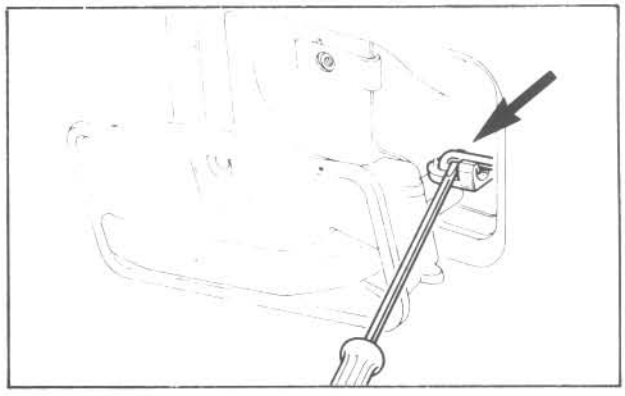

Fig. O:17 Interior handle link clip

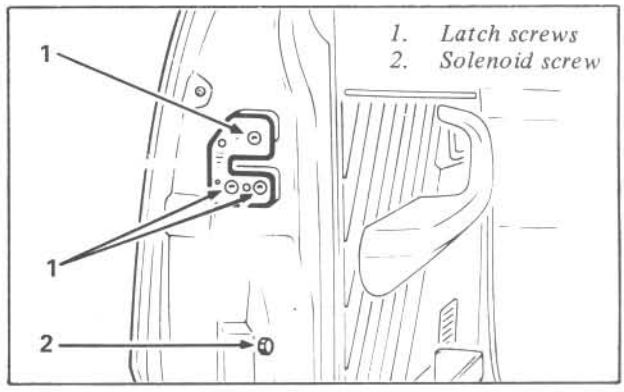

Fig. O:18 Door lock latch screws

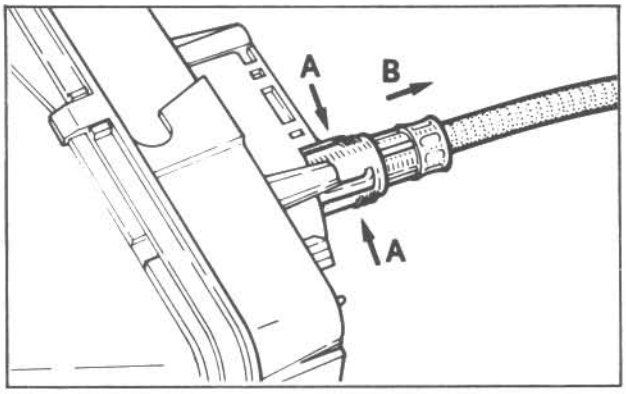

Fig. O:19 Detaching cable from speedo head

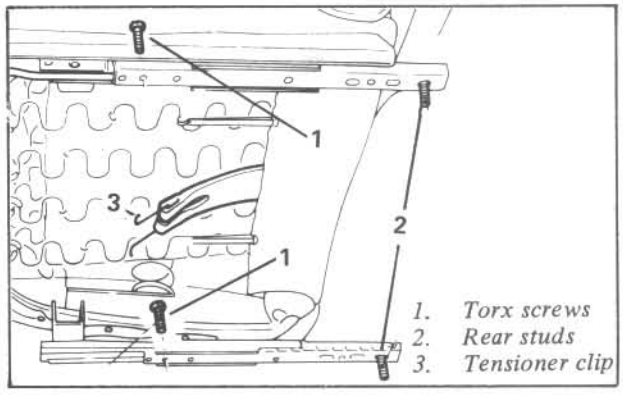

Fig. O:20 Seat frame fixings

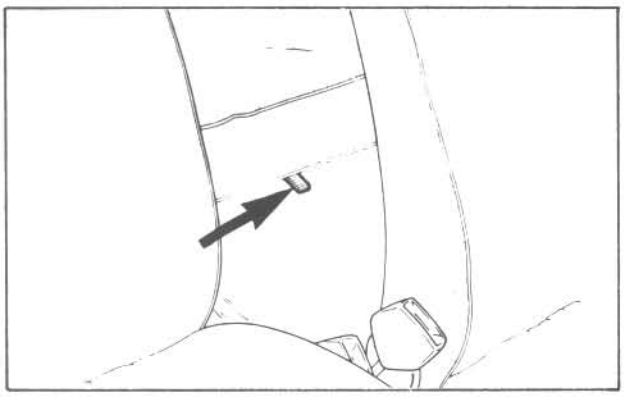

Fig. O:21 Rear seat cushion tongue

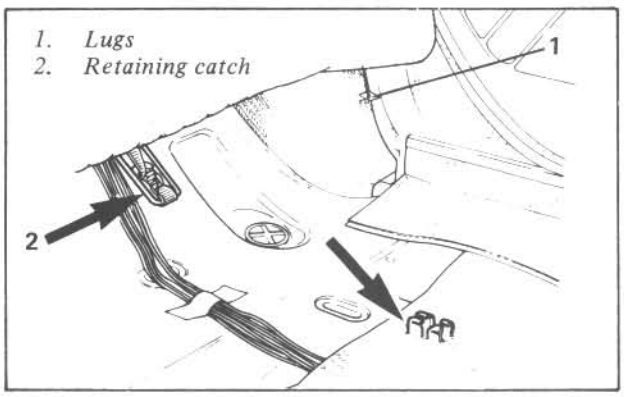

Fig. O:22 Rear seat cushion fixings

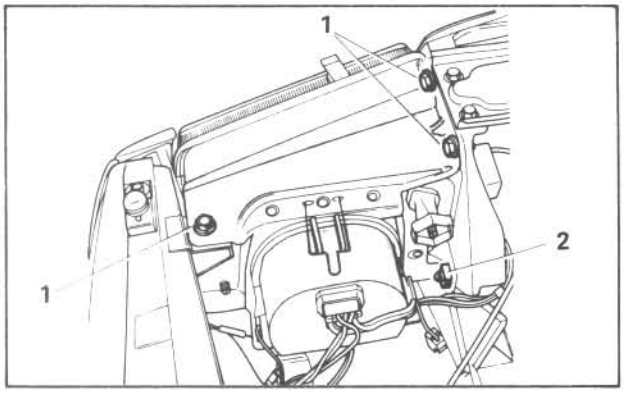

Fig. O:23 Headlamp cover plate

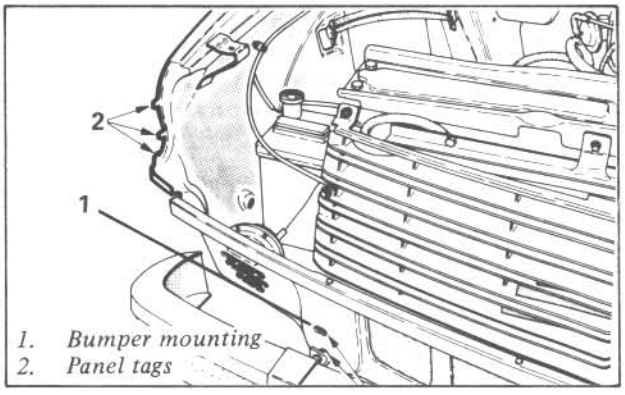

Fig. O:24 Releasing front wing

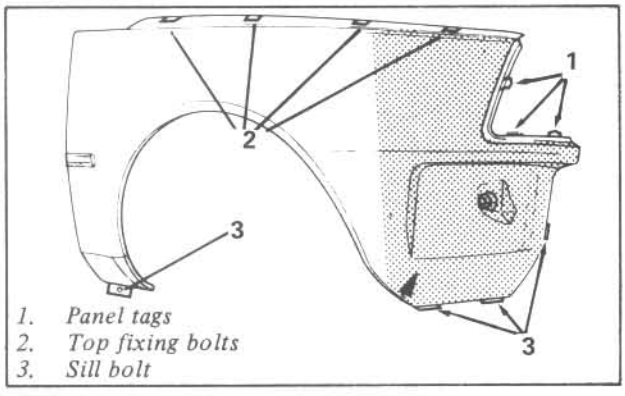

Fig. O:25 Front wing fixings

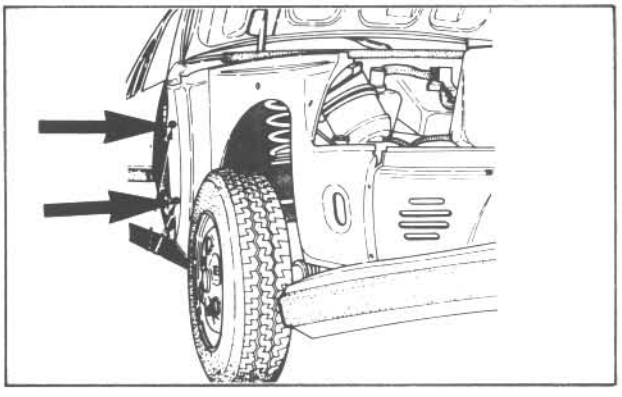

Fig. O:26 Location of door pillar bolts

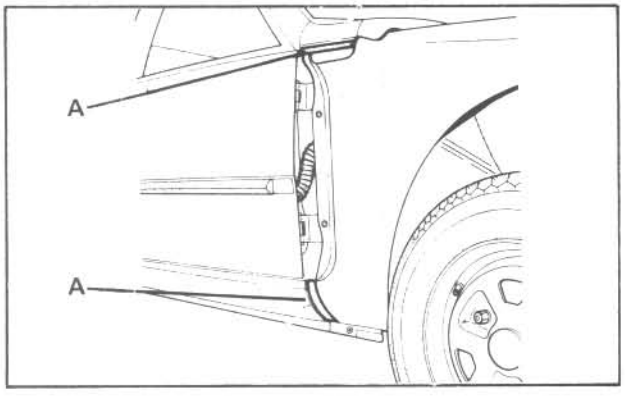

Fig. O:27 Areas to be sealed with mastic

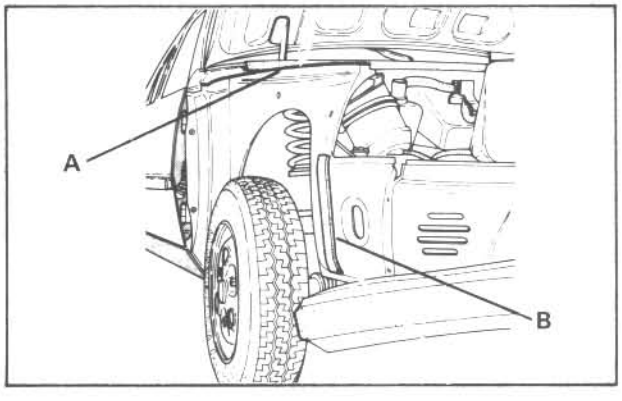

Fig. O:28 Location of foam sealing strips

outer cable and reconnect to the rear of the speedometer. Refit the instrument panel.

FRONT SEAT.....[10]

Replacement

1. Push the seat backward as far as it will go.
2. Undo the two Torx runner screws (1, Fig. O:20) securing the seat inner front mounting to the floor. Remove both screws.
3. Push the seat forward as far as it will go.
4. From underneath the car, undo the two nuts securing the seat runner rear mounting bolts to the floor (2, Fig. O:20).
5. Using a screwdriver, unhook the tensioner clip (3, Fig. O:20).
6. Lift the seat out of the car being careful not to damage the door trim or surrounding trim.
7. Install the seat in the reverse order of removal.

REAR SEAT.....[11]

Cushion - Replacement

1. Pull the central tongue (Fig. O:21) to unlock the cushion frame legs from the floor bracket.
2. Lift the front of the cushion and pull it forwards to remove from the car.
3. Install in the reverse order of removal ensuring that the catch is located securely in the floor bracket.

Rear Seat Backrest - Replacement

1. Raise the two lugs (1, Fig. O:22).
2. Rotate the two knobs (2, Fig. O:22) through 90 degrees and raise the seat backrest to free the mountings.
3. Install in the reverse order of removal ensuring that the backrest is securely located on the top edge.

FRONT WINGS.....[12]

Removal

1. Disconnect the battery earth lead.
2. Remove the body sill trim strip (if fitted).
3. Undo the three bolts (1, Fig. O:23) and lower bolt (2, Fig. O:23) then remove the headlamp cover plate.

Fuego models have 2 mounting bolts at the door pillar, 1 bolt at the sill, 1 bolt at the wheelarch extension, 1 bolt at the front end of the flitch panel, 1 bolt on the bonnet closing panel and 3 bolts on the upper edge wing flange. There are also flange extensions at the headlamp aperture which must be bent aside to release the wing.

4. Disconnect the headlamp wiring and remove the complete light unit.
5. Remove the front grille assembly.
6. Undo the front bumper mountings (1, Fig. O:24) and remove the bumper as detailed earlier in this chapter.
7. Straighten the tags (2, Fig. O:24) and (1, Fig. O:25).
8. Undo the four top fixing bolts (2, Fig. O:25).
9. Undo the single bolt at the base of the door pillar (3, Fig. O:25).
10. Undo the two door pillar retaining bolts which are accessible from under the wing (Fig. O:26).
11. The wing can now be eased away from the body shell.

Installation

1. If a new wing is being fitted, or the original wing has been repaired, it should be painted before installation.
2. Apply a generous amount of mastic sealer to the area arrowed in Fig. O:27.
3. Check the condition of the foam sealing strips (Fig. O:28) and restick if necessary. If there is any doubt about their condition they should be renewed.
4. With the aid of an assistant, align the wing with the door and the bonnet and refit the retaining bolts.
5. Install the remainder of the fittings in the reverse order of removal.
6. Reconnect the battery and check the operation of the lights.

BONNET LOCK PANEL.....[13]

Replacement

1. Disconnect the bonnet release cable as detailed previously.
2. Unclip the radiator overflow pipe from the bonnet lock panel.
3. Remove the central radiator fixing nut and bolt, on OHV engine models or slacken the two additional radiator securing pad brackets on OHC (829/J6R) engine models.
4. Undo the two bolts each side of the lock panel and lift the panel away from its mounting (Fig. O:5).
5. Install the panel in the reverse order of removal, carefully checking the alignment of the bonnet lock before slamming the bonnet shut.

CORROSION.....[14]

We all recognise rust when it starts to appear around parts of the car body. Leave it untreated and it will spread and eventually produce holes which will not only weaken the car body, but will drastically reduce the car's value as well.

The only way to beat rust is to prevent it forming in the first place, or at the very least, slow it down by making sure that any parts where paint has been chipped off are touched-up as soon as possible.

All Renault models are extensively rustproofed at the factory and this treatment should last for several years. However, the complete underbody should be checked at least once a year to make sure that the protective layer has not been damaged.

Accessories

INTRODUCTION . . . . . [1]
RADIO FITTING . . . . . [2]
SUPPRESSION . . . . . [3]
AERIAL FITTING . . . . . [4]
SPEAKER FITTING . . . . . [5]
CHILD SAFETY SEAT . . . . . [6]
TOWBAR FITTING & ELECTRICS . . . . . [7]
SOUNDPROOFING KIT . . . . . [8]

INTRODUCTION . . . . . [1]

Various accessories are available specifically for the Renault 18/Fuego range, which can be added according to your needs. The most comprehensive accessory selection naturally comes from Renault who supply their 'Boutique' accessory range through the authorised dealer network.

In this accessories chapter we give fitting instructions for a variety of accessories listed above. The instructions will also be useful if your car already has a particular accessory fitted, and you wish to change or remove it, when selling the car for example.

When removing or installing any electrical accessory, make sure that the battery is disconnected first. This will avoid the possibility of any short circuits if another component has to be disturbed or disconnected.

RADIO FITTING . . . . . [2]

All Renault 18 and Fuego models have provision for fitting a radio and speaker in the centre console (Fig. P:1) and some models have speaker wiring, an aerial and basic suppression fitted as a "pre-equipment" option.

1. Disconnect the battery.
2. Check the radio is the correct polarity (-ve earth) and that the voltage is correct (12 volt).
3. On Renault 18 models remove the centre console front panel by undoing the six self-tapping screws (1, Fig. P:1) and pulling the panel away from its mounting.

Fuego models are slightly different and the procedure is as follows: Remove the blanking plate from the radio aperture in the centre console. The power supply leads and speaker leads should now be accessible, but on early models it may be necessary to remove one side of the console by removing the fixing screws and clips.

4. The rear of the radio casing must be supported, by fitting a piece of foam rubber of suitable thickness, to the horizontal bulkhead (5, Fig. P:1).
5. Fuego models may require a special mounting bracket depending on the thickness of the set being fitted. If it is less than 52 mm the bracket should be fitted before proceeding with the installation. This bracket is available from Renault dealers under part number 77 01 402 438 (Fig. P:2) or 77 01 402 439 (Fig. P:3). If a set is being fitted that has a case more than 52 mm thick it can be fitted to the console without any additional brackets.
6. Fit the set in position using the washers, embellisher, further washers, then retaining nuts and finally the control knobs.
7. Connect the supply and speaker leads by matching the colours with those coming from the set. The supply lead is wired through the ignition switch so that the radio can be used in either the 'Accessory' or 'On' positions.

Alternative wiring harnesses are available from Renault dealers for mono or stereo systems. The Renault part number for mono installations is 77 01 402 217 and for stereo systems it is 77 01 402 218. The lead for the left-hand speaker is colour coded yellow and that for the right-hand speaker is white.

8. The casing of the set should be earthed to the vehicle using a length of braided cable or thick section wire ensuring that a good electrical contact is made by cleaning the contact area thoroughly.
9. Refit the centre console front cover or side panels as appropriate.
10. Reconnect the battery.

SUPPRESSION . . . . . [3]

Electrical interference is caused by the operation of the various electrical systems in the car. The amount of interference caused by different sources varies between cars, but changes in current flow are picked up by the radio and create noise or 'interference' as it is generally known. The suppression requirements should be checked after the installation of the audio system. Steps can then be taken to counteract the specific problems of your car. However there are certain components that should be

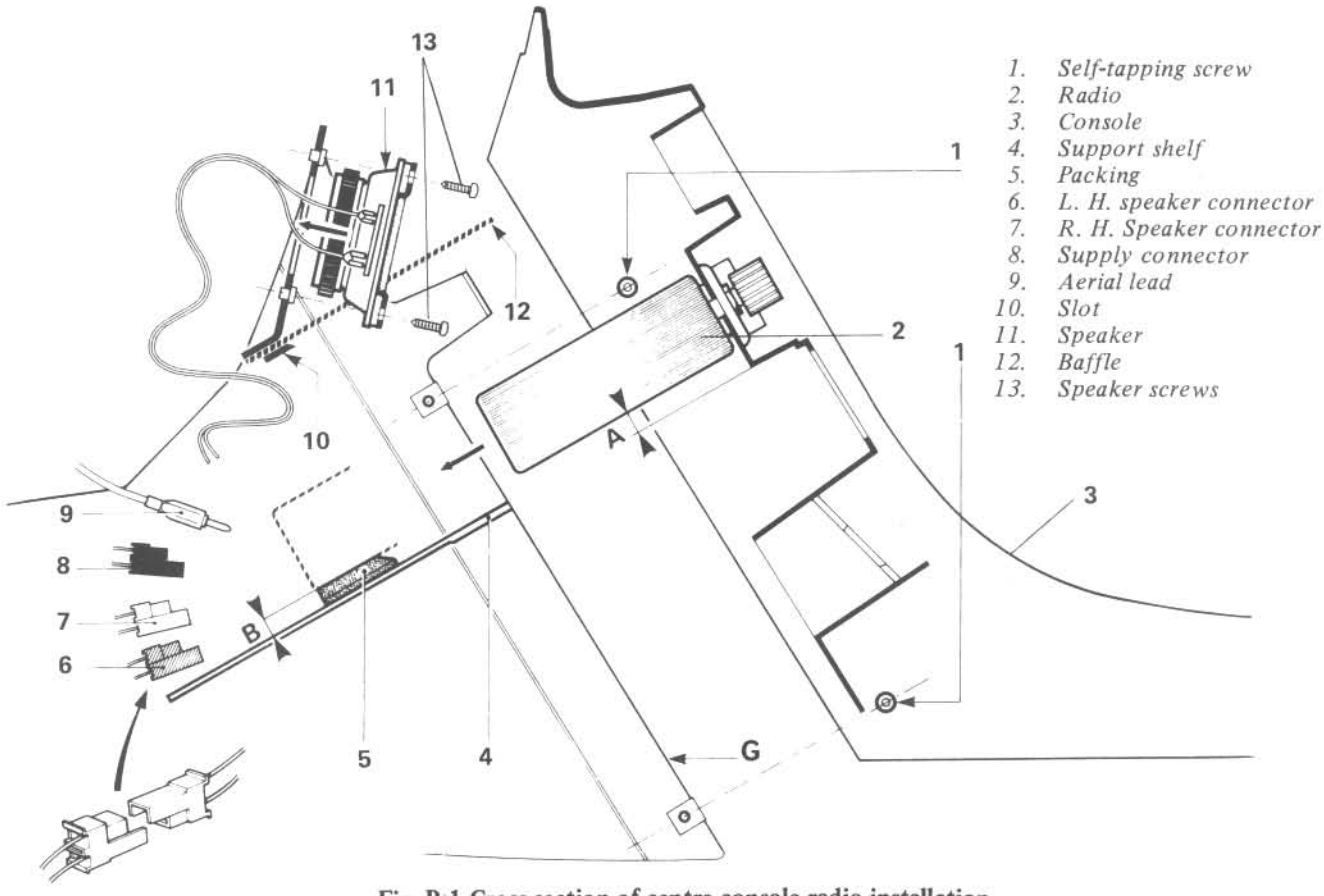

1. *Self-tapping screw*
2. *Radio*
3. *Console*
4. *Support shelf*
5. *Packing*
6. *L. H. speaker connector*
7. *R. H. Speaker connector*
8. *Supply connector*
9. *Aerial lead*
10. *Slot*
11. *Speaker*
12. *Baffle*
13. *Speaker screws*

Fig. P:1 Cross section of centre console radio installation

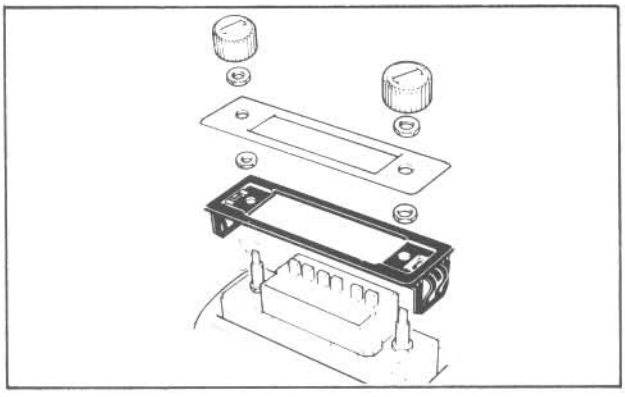

Fig. P:2 Bracket Part No. 77 01 402 438

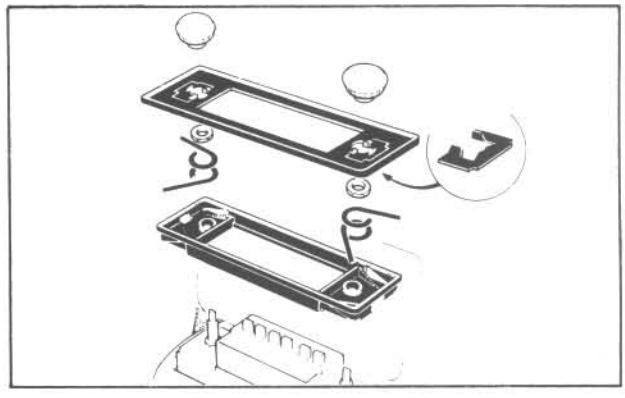

Fig. P:3 Bracket Part No. 77 01 402 439

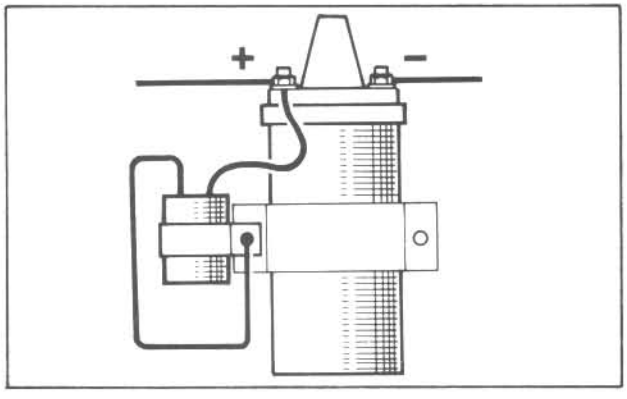

Fig. P:4 Ignition coil suppressor connections

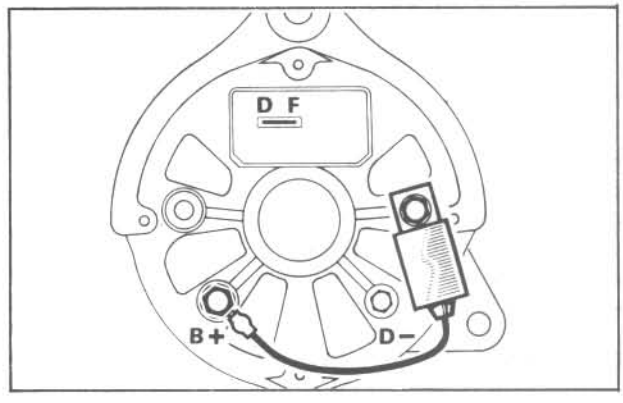

Fig. P:5 Alternator suppressor connections

suppressed as a matter of course. These are the ignition coil and the alternator, but in the case of Renault 18 and Fuego models these components may already be suppressed.

The supply terminal (+)ve of the ignition coil should be connected to the fly lead of a 1 mfd. capacitor and the mounting bracket should be fitted to one of the coil fixing bolts, as shown in Fig. P:4.

The alternator should be suppressed using a 3 or 3.3 mfd (2.2 mfd if the alternator is new) capacitor connected to the (+)ve (large) terminal and earthed to the alternator body as shown in Fig. P:5.

If interference is still present after these initial steps have been taken, the following measures are recommended by Lucas who produce suitable components.

Change the high tension leads to a resistive high tension type. Suppress the distributor cap with in-line suppressors. These fit between the distributor cap and ignition leads, so 5 will be required. A set of spark plug suppressors fit over the plug ends, receiving the ignition lead cap. Finally the ignition coil can be earthed using a bonding strap.

If radio interference is still noticeable after the previous steps, proceed as follows. Disconnect the aerial from the radio and insert a dummy aerial. This is an aerial plug with a polystyrene capacitor from 68 to 82 mfd connected between the pin and shroud. With the engine running, operate the wipers, heater motor, flashing indicators and stop lamps. If any interference happens over the tuning range of the radio, connect an in-line choke such as Lucas part LS 360 in the radio supply line. Any further interference from electrical components requires the connection of capacitors to the supply leads and earth. It may even be necessary to use in-line chokes in the supply leads. Check the earth connections of the engine, transmission, indicator flasher circuit, wiper and washer motors and the heater motor. If necessary, disconnect the earth lead terminal and clean it thoroughly to ensure a good contact.

AERIAL FITTING . . . . . [4]

There are two basic types of radio aerial that are suitable for the Renault 18. One is the roof mounted type and the other is the wing mounted retractable type which can be fitted to either the front scuttle or rear wing.

The advantage of using a rear mounted aerial is that it is far away from engine interference but this advantage is offset to some extent by a loss of sensitivity due to the length of the aerial lead.

Additionally the wing mounted type can be either electrically operated or manual.

The body design of the Fuego is such that a wing mounted aerial cannot be fitted and therefore a roof, windscreen pillar or gutter aerial will have to be selected.

Renault 18 - Front Scuttle Mounted

The mounting hole for the aerial should be made in the nearside front scuttle in the position shown in Fig. P:6. The size of the hole will depend on the particular aerial being fitted and the aerial manufacturer's instructions should be followed in this respect, however if there are no instructions available then a direct measurement can be taken.

To protect the paintwork, masking tape should be applied over the surrounding area. This will enable the position for the hole to be marked accurately and also help to avoid chipping or scratching the paint finish.

1. Disconnect the battery.
2. Mark the position of the aerial mounting hole using the dimensions shown in Fig. P:6, then drill a suitably sized hole in the scuttle panel.
3. Mark and drill a hole in the wing cover plate in such a position that the aerial can be tilted to the rear.
4. Undo the two screws holding the cover plate in position (1 screw above the wing and 1 below) and remove the plate. Clean the area on the underside of the scuttle panel hole until bare metal is visible to ensure a good earth connection.
5. Fit the aerial in position, but do not tighten at this stage.
6. Refit the cover plate and reseal the edges using a suitable mastic sealer.
7. Tilt the aerial to the desired angle and check that it does not foul the tyre, then tighten the mounting nut.
8. Pass the aerial wire through the grommet 1, Fig. P:7, then drill a hole through the scuttle bulkhead in the position shown in 2, Fig. P:7. This hole should be large enough to take a grommet and sealer should be applied to the aerial lead once it has been passed through the grommet.
9. Drill a hole through the instrument panel crossmember approximately 10 mm from the vent under the dashboard (1, Fig. P:8).
10. Fit and seal the grommets in holes 1 and 2 and run the aerial cable across to the radio in the console.

Renault 18 - Rear Wing Mounted

1. Drill a mounting hole for the aerial in the top of the rear wing towards the front and near the boot aperture. Position the mast so that it is angled towards the rear of the car and then tighten the fixing nut.
2. Run the cable through into the inside of the car ensuring that any holes are fitted with grommets and are sealed with mastic.
3. Connect an extension lead, using a correcting capacitor, and route the lead up to the radio. The lead should be positioned under the carpets and kept as far away from any other wiring as possible to avoid causing interference.

Renault 18 - Roof Mounted

1. Unscrew and remove the blanking plug from the roof between the sun visors.

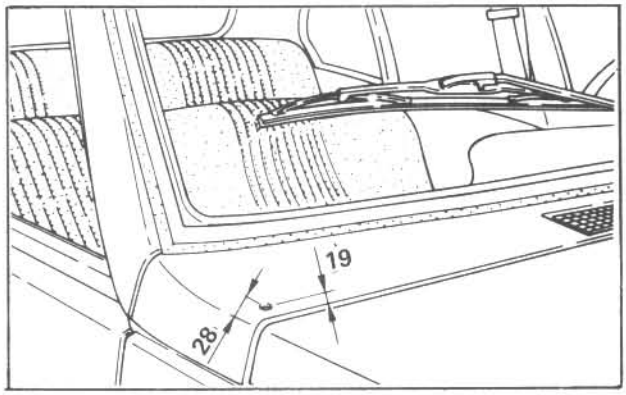

Fig. P:6 Location of wing mounted aerial

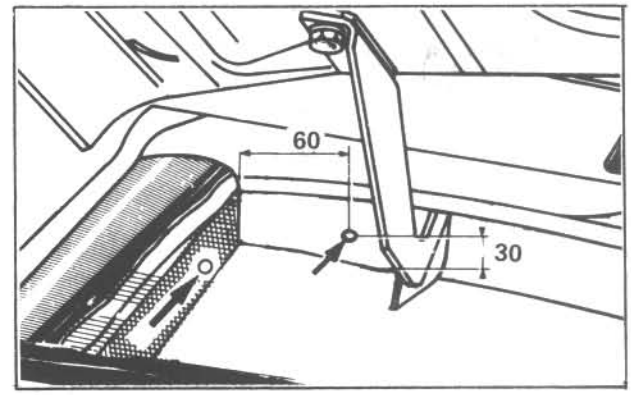

Fig. P:7 Routing aerial lead into car

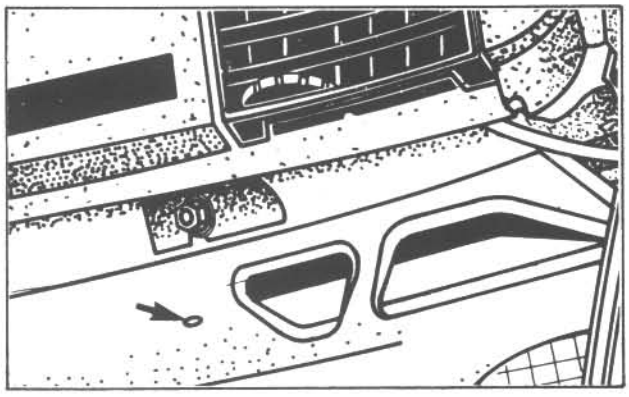

Fig. P:8 Position of aerial lead hole

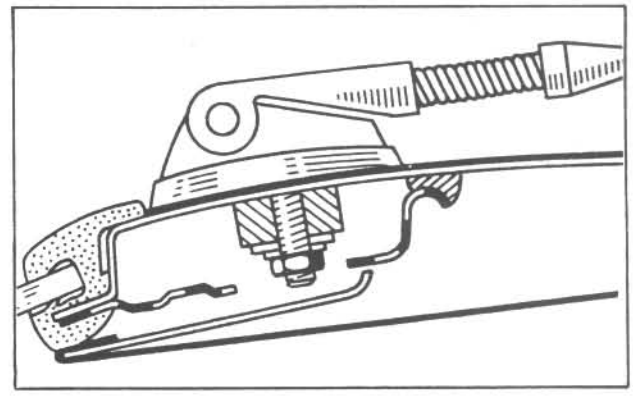

Fig. P:9 Roof aerial mounting

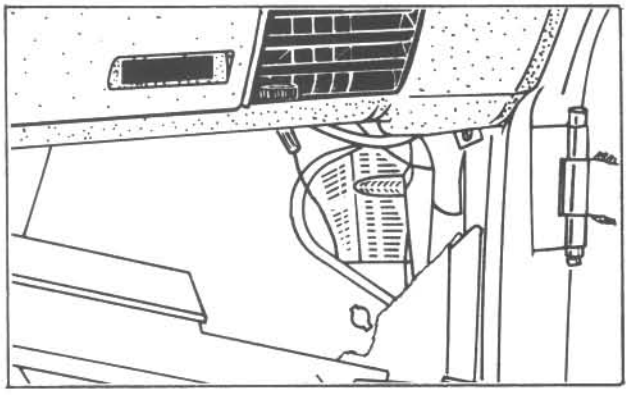

Fig. P:10 Routing roof aerial lead

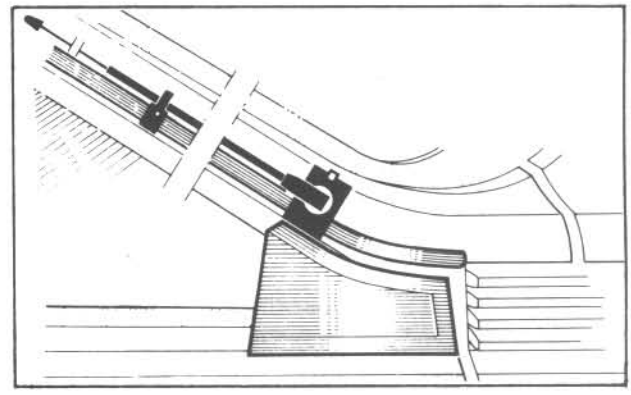

Fig. P:11 Double clamp type gutter aerial

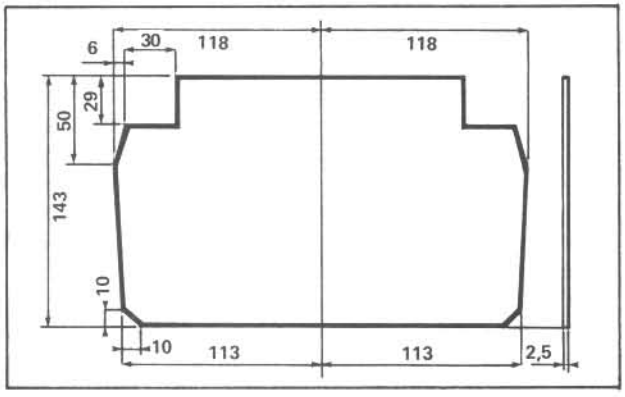

Fig. P:12 Speaker baffle plate

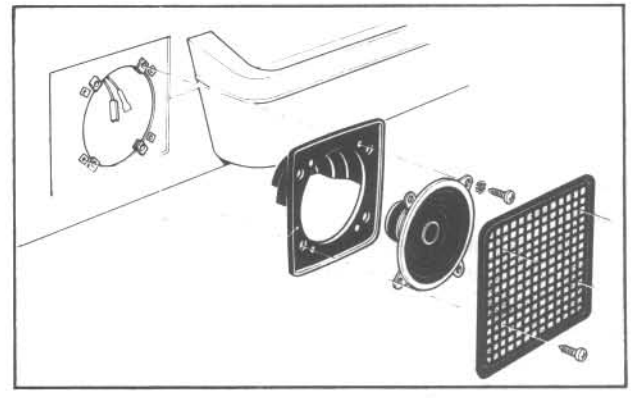

Fig. P:13 Door speaker installation

2. Drill a hole, the correct size for the aerial to be fitted, in the centre of the blanking plug aperture. This will usually be 10 mm diameter, but may be different depending on the make of aerial being fitted.
3. Clean the area on the underside of the hole until bare metal is visible to ensure a good earth contact for the aerial (Fig. P:9).
4. Remove the left-hand sun visor and pass the aerial lead along the upper crossmember and then down the left-hand windscreen pillar. If difficulty is experienced threading the lead down the pillar a piece of stiff wire can be used as a guide.
5. Remove the left-hand glove box and bracket from below the dashboard for access to the side panel.
6. Pull the aerial lead through the hole in the side panel (Fig. P:10) and route it across to the centre console. Clip the lead under the dashboard and refit the glovebox and bracket.
7. Align the aerial mast and tighten the clamping nut then refit the blanking plug and the sun visor.

Fuego - Gutter Aerial

Two types of gutter aerial are available for the Fuego. One has a single clamp fixing and the other a double clamp.

The single clamp type should be attached to the gutter above and forward of the left-hand front door and the double clamp type is fitted near to the external rear view mirror on the left-hand gutter (Fig. P:11).

If the aerial cable is armoured along its whole length it will be necessary to earth the aerial at its mounting point, preferably under the gutter. Good metal to metal contact must be made to ensure satisfactory radio reception.

If the cable is only armoured along part of its length it can be earthed at the point where the cable enters the car.

Route the cable between the windscreen pillar and the rubber seal and run it down to the bottom of the dashboard. Position it under the rubber seal and secure it under the dashboard so that it can be plugged into the radio behind the centre console.

Fuego - Roof Aerial

The roof aerial fitting procedure for Fuego models is identical to that for the Renault 18 with the following exceptions.
1. There is no blanking plug in the roof trim and therefore the hole in the roof lining border has to be located by feeling between the sun visors and then cutting the trim material away.
2. The cable can be drawn into the interior of the car through the aperture for the door top hinge nuts.

SPEAKER FITTING.....[5]

Single Speaker Installation

A single oval speaker 9 cm x 15 cm can be fitted in the centre console for mono reception (11, Fig. P:1).
1. Remove the front of the console as described in the radio fitting section of this chapter.
2. Position the speaker in the hole provided and fit the four retaining screws (13, Fig. P:1).
3. Connect the two speaker wires from the radio.
4. Cut out a piece of cardboard to the dimensions shown in Fig. P:12 and slide it into position below the speaker.
5. Refit the centre console front.

Twin Speaker Installation

For a stereo installation two speakers can be fitted in the front doors. Cars fitted the 'radio pre-equipment option' have all the fittings and wiring installed and merely require the installation of the speaker units. The speakers should be 13 cm in diameter and no more than 72 mm in depth.
1. On cars with the 'radio pre-equipment' option remove the speaker grille by undoing the four cross head screws and pulling the grille away from the door trim (Fig. P:13).
2. Remove the four screws holding the speaker aperture cover and discard the cardboard cover.
3. Fit the speaker into the moulded housing and connect the leads from the radio. Secure the speaker to the door using the screws from the cardboard cover.
4. Refit the grille to the door trim panel.
5. Cars not fitted with the 'radio pre-equipment' option will require the purchase of speaker boxes to complete the installation.
6. Cars with neither 'radio pre-equipment' nor electromagnetic door locks will require the wiring harness to be made up and installed using special grommets where the wires pass through the door frame and door pillar. Two suggested wiring circuits are shown in Figs. P:14 & P:15.

CHILD SAFETY SEAT.....[6]

Only by fitting a safety seat or harness, secured firmly to the car body, can a child have a good chance of surviving a severe road accident without injury. Furthermore, with the child safety seat in position in the rear of the car, a driver can concentrate on the road ahead with less distraction, while the child can enjoy the ride in safety and comfort.

There are many types of child safety seat and child safety belt on the market and it is essential to the child's safety that the seat meets the required safety standards. Britax safety systems are BSI approved and are generally

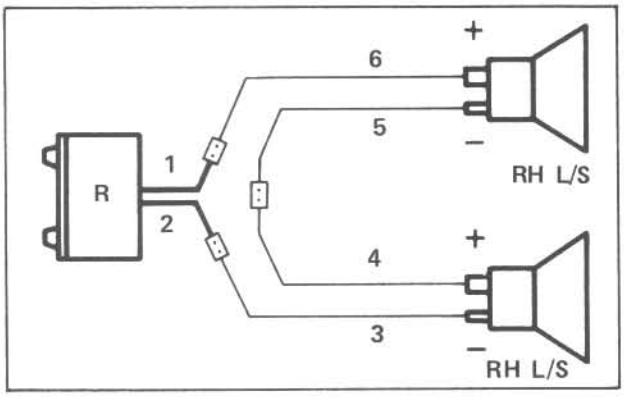

Fig. P:14 Wiring diagram for mono radio

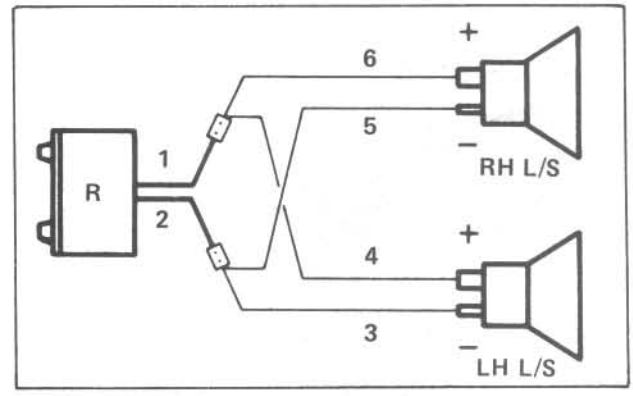

Fig. P:15 Wiring diagram for stereo radio

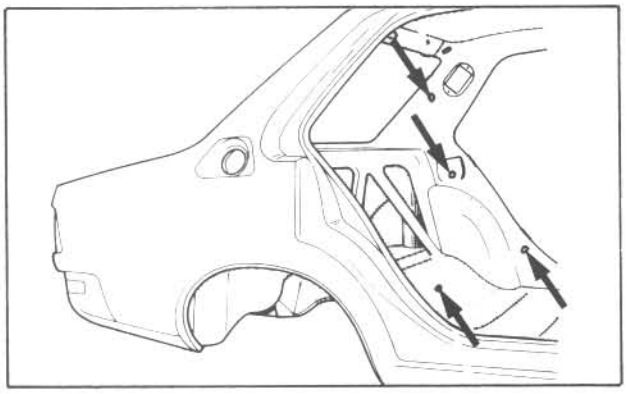

Fig. P:16 Rear seat belt mounting points

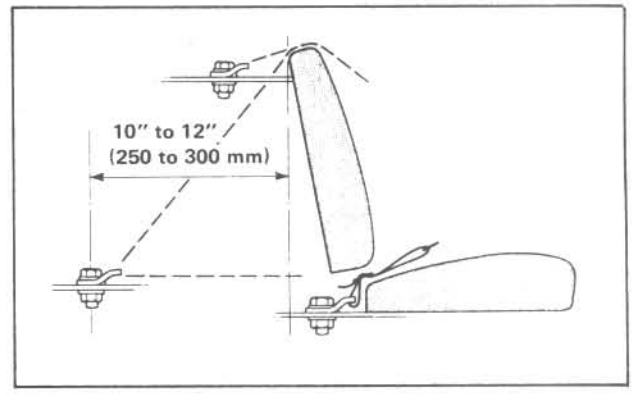

Fig. P:17 Childs safety seat anchorage points

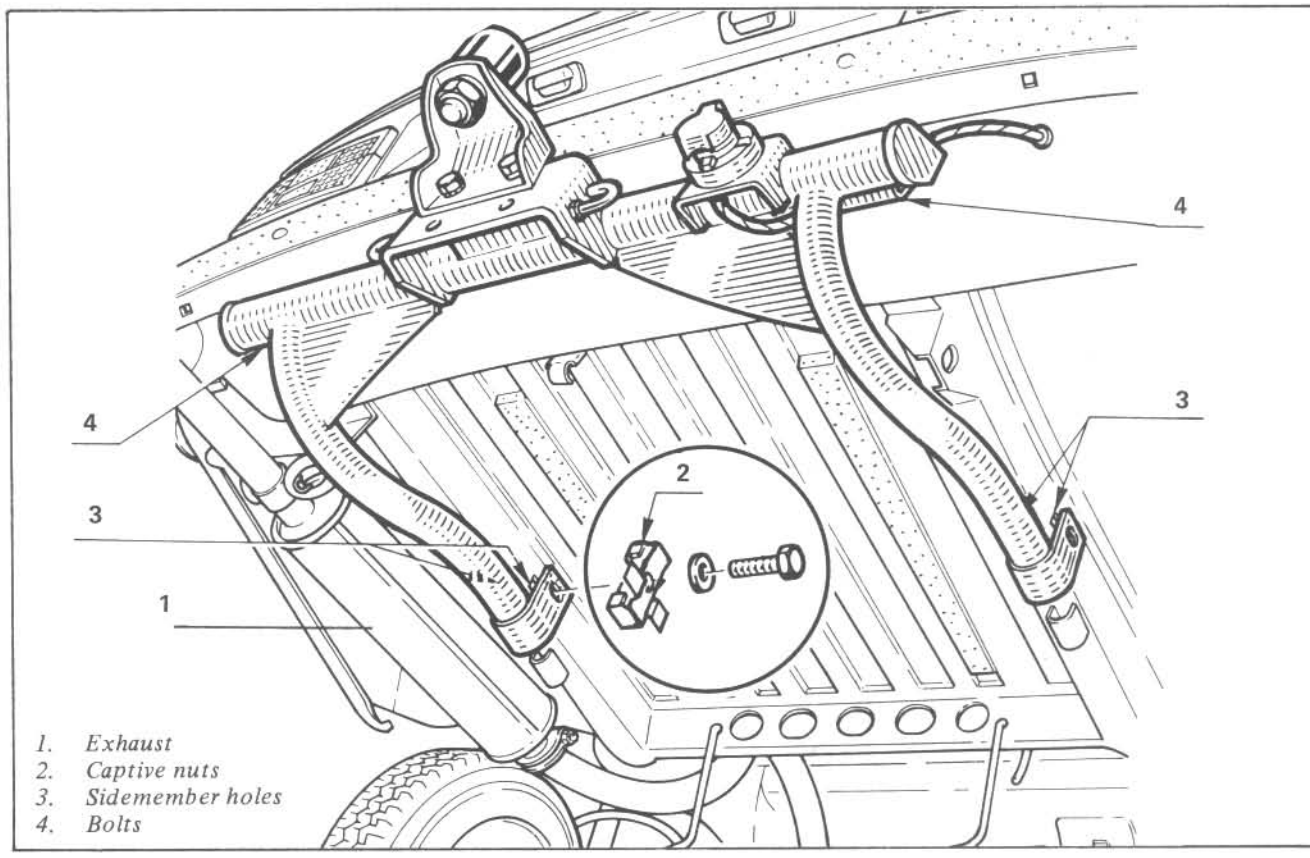

Fig. P:18 Renault 18 towbar mounting points

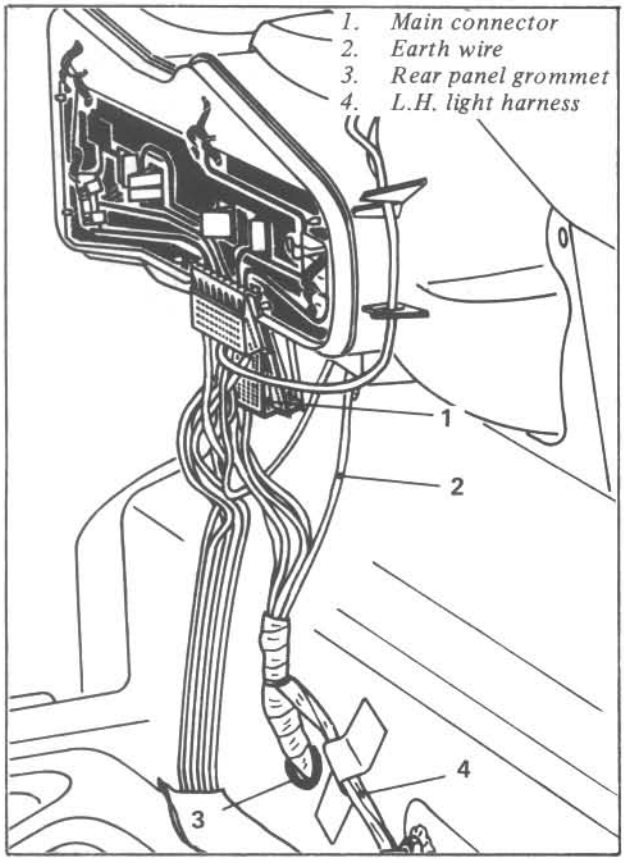

Fig. P:19 Tow bar lighting harness connections

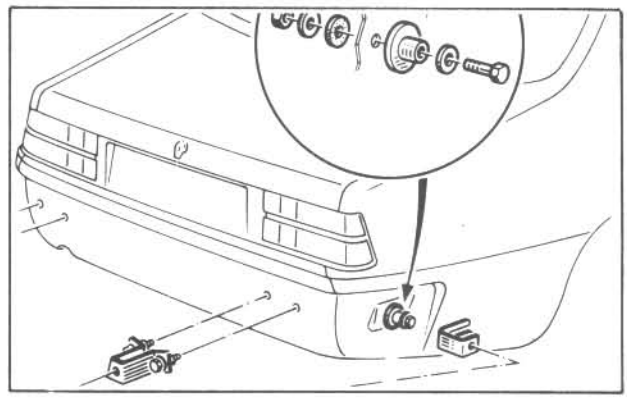

Fig. P:20 Details of bumper side bracket

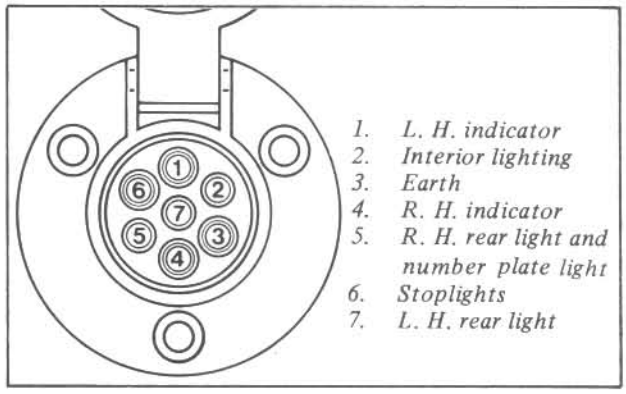

Fig. P:21 Towing socket pin connections

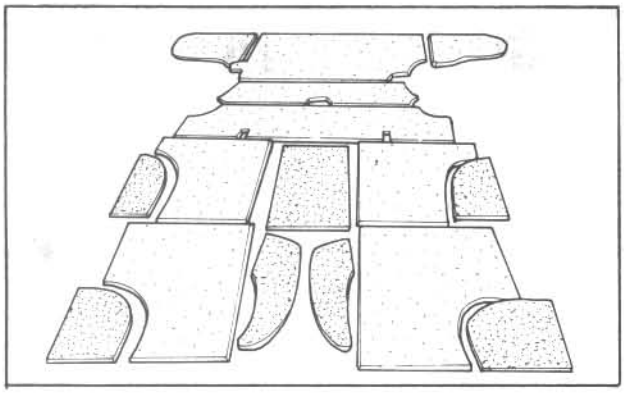

Fig. P:22 Soundproofing materials laid out



Fig. P:23 Applying adhesive to bonnet

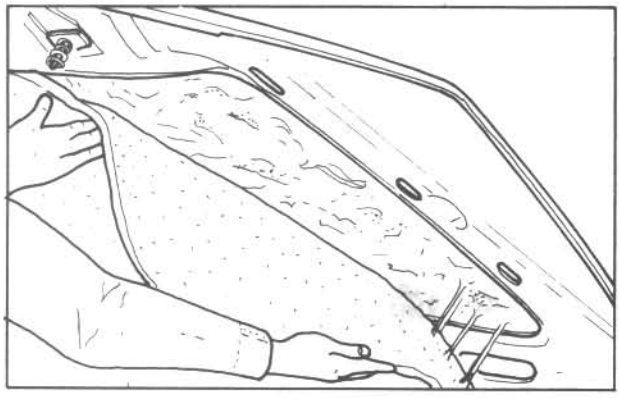

Fig. P:24 Sticking underbonnet felt in place

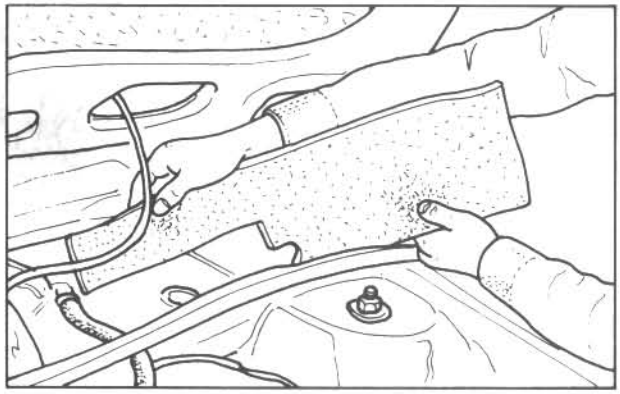

Fig. P:25 Positioning bulkhead sound barrier material

accepted as being among the best on the market.

Britax safety seats can if necessary, be fitted two or three abreast, doubling up the anchor plates at anchorage points where necessary. All Renault 18 and Fuego models are fitted with built-in anchorage points for the fitting of the rear seat harnesses and these are located in the positions shown in Fig. P:16.

Fitting - Saloons

On saloon models, the upper seat straps mount to the parcel shelf and the two holes for these mountings should ideally be located approximately 100 mm behind the rear seat squabs. Check that the parcel shelf is firm and rigid at this point (this is most easily checked from inside the boot). Drill the holes at a distance of 150 to 250 mm apart with a 12 mm drill bit. Bolt on the securing strap bracket and always place the large load spreading washers on either side of the drilled panel.

Fitting - Estates

The upper harness brackets should be fixed to a solid part of the metal floor approximately 250 to 300 mm back from a point directly below the top of the seat back (Fig. P:17) and the same distance apart. Drill the holes with a 12 mm diameter drill bit, then bolt on the two brackets with the adjusters noting that the large load spreading washers go on either side of the drilled panel. *NOTE: Before drilling any holes through the floor, check carefully that the area below is clear of any hydraulic pipes, wiring harnesses or petrol pipes and that there is no danger of drilling through the petrol tank.*

Fit the four restraining strap assemblies to the anchorage points using the short straps at the bottom and the longer ones at the top. Adjust the seat straps to keep the seat as high as possible. Adjust the harness straps to fit as tightly as comfortable and always ensure that the crotch strap is used.

TOWBAR FITTING & ELECTRICS . . . . . [7]

This section covers the fitting of the towbar and lighting kit produced by Renault. Individual kits are available for the 18 and Fuego models which make installation very simple and avoids the need to drill any holes.

Fitting

1. On saloon models remove the spare wheel from its cradle below the boot floor.
2. Working inside the boot undo the four bumper bracket retaining nuts and pull the bumper assembly rearwards being careful not to damage the paintwork.
3. Release the exhaust tailpipe (1, Fig. P:18) to provide clearance on the nearside (this is not necessary on Fuego models).
4. Fit the captive nuts (2, Fig. P:18) in the holes provided in the sidemembers (3, Fig. P:18). They should be installed with the longer end facing upwards and the retaining lug on the outside.
5. Stick the four rubber washers to the holes in the rear panel and then position the towbar frame against the panel. With an assistant holding the frame in position, fit the four bolts into the captive nuts but do not tighten at this stage.
6. Slacken the two bumper side brackets (Fig. P:20) and then refit the bumper assembly.
7. Tighten the bolts in the following order. First tighten the four bumper bracket nuts from inside the car, then the two side brackets and finally the four bolts 4, Fig. P:18.
8. Refit the exhaust tailpipe.
9. Fit the towing ball and bracket at the height appropriate to the caravan or trailer to be towed.

Towbar Electrics

1. Disconnect the battery earth lead.
2. Working inside the car remove both rear light covers.
3. Slide the towbar harness connector up under the right hand bulb holder as far as it will go (1, Fig. P:19).
4. Connect the black earth wire (2, Fig. P:19) to the lower lamp unit fixing screw.
5. Remove the blanking plug from the hole in the base of the rear panel (3, Fig. P:19) and pass the wiring harness through it. Fit a rubber grommet in the hole.
6. Route the single red cable across the rear panel and tape it in position (4, Fig. P:19). Connect the end of the cable to the large grey wire under the left-hand rear light unit.
7. Route the wiring harness above the right-hand fixing bracket and then under the crosstube and up to the socket.
8. Connect the socket wires to match the wiring on the caravan or trailer that is to be towed.

The following list can be used as a guide to the standard wiring connections.

CARAVAN FUNCTIONS	COLOUR OF WIRE
Earth	Black
Stoplights	Pink
R.H. Indicator	Maroon
L.H. Indicator	Grey
Rear lights & number plate lights	Yellow (2 Wires)
Interior lighting	Red

The socket pins that these wires should be connected to are shown in Fig. P:21.

9. When the wiring has been completed, reconnect the battery and test the function of each terminal using a test lamp.
10. Bolt the socket to the towbar and refit the rear light covers.

SOUNDPROOFING .....[8]

Fitting

In any car, a certain amount of noise is transmitted to the passenger compartment and, if of a high enough level, can not only be annoying, but on a long journey can be very tiring. Therefore, the elimination or reduction of this noise is desirable for more enjoyable and safer motoring.

The passengers in a car can be subjected to noise from various sources: the wind rushing round the body and blowing round badly sealed doors; mechanical noise from the engine and transmission; the exhaust; tyres drumming on the road; and the noise caused by the vibration of the car's sheet metal panels. By insulating the body of the car, it is possible to eliminate or considerably reduce a large proportion of this noise.

Sound Service (Oxford) Ltd., of Witney, Oxon, are leading manufacturers of sound proofing materials, and their Autosound kits contain a variety of these, each designed specifically to reduce or eliminate the various types of noise experienced in the car. The following is based on information supplied by the company.

Before doing anything, the front seats should be removed as well as all the carpets and floor mats. Then the floor should be thoroughly cleaned.

When the floor/bulkhead are clear, check for any holes and seal them with the mastic sealing strip supplied in the Autosound kit. This should also be applied to all rubber grommets where cables and pipes pass through the bulkhead and to the area at the bottom of the steering column. The object is to obtain an air-tight seal between the engine and passenger compartments.

All the components of the kit are pre-cut to shape and numbered, and the next step should be to lay them out and identify them (Fig. P:22).

For the under-bonnet area, the Autosound kit includes some items in Neoprene faced felt. The under-bonnet area should be cleaned and degreased first and then the felt should be glued in place with the smooth black faced surface outermost using the adhesive supplied in the kit (Figs. P:23 & P:24).

In practice this allows the sound waves to pass into the fibres of the felt where some of the energy of the vibrating air particles is dissipated as they pass through the fibres and then bounce back from the black outer layer. In this way much of the sound is trapped between the layers, and gradually loses its energy as it bounces to and fro.

Fit the sections of foam backed sound barrier material to the inside and underbonnet areas of the engine bulkhead. The stiff rubber-like facing should be to the outside and adhesive should be applied to the surface of the foam and also to the bulkhead (Fig. P:25). Once the adhesive is touch dry the foam can be pressed into position and an immediate bond will be obtained. Parts need not be stuck all over their entire area, as long as they are held firmly in place.

The damper pads should be fitted to the floor pan next. If the pads are stiff and brittle they should be warmed slightly before fitting to make them pliable and prevent them from cracking.

The remaining sections of sound proofing material can now be installed in the appropriate positions and the carpets and seats refitted. The operation of all lights and instruments should be checked in case any wires have been displaced during fitting.

One further item provided is a roll of Weatherseal tape for sealing doors, etc. Rather than placing this around the entire opening, it is often more effective to simply place it where the air is actually leaking through the seal, and to find this is a simple matter. It is necessary to drive the car with a passenger who should have a section of normal garden hose. By holding one end of the hose to his ear and the other to the door seal, he can determine exactly where the seal is deficient. By marking the extremities of the leak with chalk or some similar means, it is a simple matter to cut the Weatherseal tape to size and install it exactly where needed.

Technical Data

MODEL IDENTIFICATION

Code	Type	Model
1340	18 Saloon	TL, GTL
1341	18 Saloon	TS, GTS (-81), GTL (82-)
1342	18 Saloon	TS, GTS
1343	18 Saloon	TX, GTX
1345	18 Saloon	Turbo
1350	18 Estate	TL
1351	18 Estate	TS, LS (-81), GTL (82-)
1352	18 Estate	GTS
1353	18 Estate	TX, GTX
1360	Fuego Saloon	TL
1362	Fuego Saloon	TS, GTS
1363	Fuego Saloon	TX, GTX

GENERAL DIMENSIONS - mm (in) . . . . . [1]

Length - R18
- 1340 TL, 1341 TS 4369 (172.0)
- 1340 GTL, 1341 GTS 4381 (172.5)
- 1342, 1343, 1345 . . . . . 4390 (172.8)
- 1350, 1352, 1353 . . . . . 4450 (175.2)
- 1351 . . . . . 4460 (175.6)

Length - Fuego
- 1360, 1362, 1363 . . . . . 4358 (171.6)

Width - R18
- 1340 TL, 1341 TS, 1350 . . . . . 1682 (66.2)
- 1340 GTL, 1341 GTS, 1342, 1343
- 1351, 1352, 1353 . . . . . 1689 (66.5)

Width - Fuego
- 1360, 1362, 1363 . . . . . 1692 (66.6)

Height (unladen)
- R18 . . . . . 1405 (55.3)
- Fuego 1315 (51.8)

Wheelbase
- R18 . . . . . 2441 (96.1)
- Fuego 2438 (96)

Ground clearance (laden) 120 (4.7)

VEHICLE WEIGHTS - kg (lb) . . . . . [2]

Kerb weight
- 1340 . . . . . 920 (2029)
- 1341 TS 940 (2072)
- 1341 GTS 950 (2095)
- 1342 . . . . . 965 (2128)
- 1342 auto 985 (2178)
- 1343 . . . . . 1025 (2260)
- 1350 . . . . . 995 (2194)
- 1351 . . . . . 1025 (2260)
- 1352 . . . . . 1085 (2392)
- 1352 auto 1105 (2437)
- 1353 . . . . . 1145 (2525)
- 1360 . . . . . 1010 (2227)
- 1362 . . . . . 1035 (2282)
- 1362 auto 1055 (2326)
- 1363 . . . . . 1080 (2381)

Towing weights	Braked Trailer
1342	1000 (2205)
1342 auto	450/1000 (992/2205)
1343	1000 (2205)
1345	1000 (2205)
1352	1000 (2205)
1352 auto	450/1000 (992/2205)
1353	1000 (2205)
1360	450 (992)
1362	850 (1874)
1363	850 (1874)

ROUTINE MAINTENANCE . . . . . [3]

Specified Lubricants

Engine oil	Multigrade SAE 15W 40/20W 50
Manual gearbox oil:	
4-speed	Tranself EP 80W
5-speed	Tranself B 80W
Automatic transmission fluid	Elf Renaultmatic D2 Mobil ATF 220
Steering rack	Molykote BR2
Driveshaft gearbox splines	Molykote BR2
Suspension arm bearings	Hatmo grease
Steering column shaft splines	Hatmo grease
Wheel bearings	Elf Multi-purpose grease
Driveshaft splines	Elf Multi-purpose grease
Power steering fluid	Elf Renaultmatic D2 Mobil ATF 220
Driveshaft couplings	Elf S47 grease
Anti-freeze	Glaceol AL
Brake fluid	Universal to DOT 3 spec
Fuel octane	4-star (97 octane)

Capacities - litres (pints)

Engine oil (inc filter)	
Engine type	
847	3,25 (5.75)
841, A2M, A6M, 843	4,25 (7.5)
807, A5L	4,5 (8.0)
829, J6R	5,25 (9.5)
Manual gearbox	2,0 (3.5)
Automatic transmission (total)	6,0 (19.5)
Refill capacity	2,0-2,5 (3.5-4.4)
Power assisted steering	1,1 (2.0)

Cooling system:

Engine type	Capacity (inc heater)
847	6 (10.5)
841, A2M, 843, A6M, 807, A5L	6,3 (11.0)
829, J6R	8 (13.1)

Fuel tank capacity - litres (gallons):

Saloon	53 (11.66)
Estate	57 (12.54)
Fuego	57 (12.54)

General - mm (in)

Alternator drive belt deflection:

847	7,0-8,0 (0.28-0.3)
841, A2M, 843, A6M, 807, A5L	2,5-3,5 (0.10-0.15)
829, J6R	5,5-6,5 (0.22-0.26)

Power steering drive belt deflection:

A6M, 843	4,5-5,5 (0.18-0.22)
807	5,0 (0.2)
829, J6R	5,5-6,6 (0.22-0.26)
Clutch cable clearance	2,5 (0.1)
Rear wheel bearing endfloat	0,3 (0.012)

Tyre Pressures - bar (lb/in^2)

	Normal Laden		Fully Laden	
Model	**Front**	**Rear**	**Front**	**Rear**
1340	1,7 (25)	1,8 (26.5)	1,9 (28)	2,0 (29)
1341	1,7 (25)	1,8 (26.5)	1,9 (28)	2,0 (29)
1342	1,8 (26.5)	2,0 (29)	1,9 (27.5)	2,1 (30.5)
1343	1,8 (26.5)	2,0 (29)	1,9 (27.5)	2,1 (30.5)
1345	2,0 (29)	2,2 (32)	2,1 (30.5)	2,3 (33)
1350	1,7 (25)	2,4 (35)	1,8 (26.5)	2,6 (38)
1351	1,7 (25)	2,4 (35)	1,8 (26.5)	2,6 (38)
1352	1,8 (26.5)	2,4 (35)	1,9 (27.5)	2,6 (38)
1353	1,8 (26.5)	2,4 (35)	1,9 (27.5)	2,6 (38)
1360	1,8 (26.5)	2,0 (29)	1,9 (27.5)	2,1 (30.5)
1362	2,0 (29)	2,2 (32)	2,1 (30.5)	2,3 (33)
1363	2,0 (29)	2,2 (32)	2,1 (30.5)	2,3 (33)

For automatic models, add 0,1 bar (1.5 lb/in^2) to the front tyre pressures.

TUNE-UP [4]

Valve clearances - mm (in)

Engine	Inlet	Exhaust
847 (cold)	0,15 (0.006)	0,20 (0.008)
(hot)	0,18 (0.007)	0,25 (0.010)
841, A2M (cold or hot)	0,20 (0.008)	0,25 (0.010)
843, A6M (cold or hot)	0,20 (0.008)	0,25 (0.010)
807, A5L (cold)	0,20 (0.008)	0,25 (0.010)
829, J6R (cold)	0,10 (0.004)	0,25 (0.010)

Spark Plugs

NOTE: That different plug types and manufacturers are sometimes specified for different models.

847	AC 43XLS
	Renault 580LS
	Bosch W8D
	SEV Marchal GT35H
	Champion N12Y
841, A2M	AC 43XLS
	Champion N9Y
	Renault 600LS
A6M	Champion N7Y
	Renault 755LS
843	AC 42XLS
	Champion N7Y
	Renault 755LS
	SEV Marchal 34, 2H
807	Champion N3G
829/J6R	SEV Marchal SCGT 345H
Spark plug gap - mm (in)	0,55-0,65 (0.022-0.26)
A2M engine	0,60-0,70 (0.024-0.28)

Spark plug tightening torque - kg m (lb ft)

All engines except 829, J6R	3-3,5 (22.5-26)
829, J6R engine	1,5 - 2 (11 - 15)

Distributor

Contact breaker gap - mm (in)	0,4 (0.016)
Dwell angle (Contact breaker only)	57° ± 3°
Firing order	1 - 3 - 4 - 2
Number 1 cylinder	Rear (flywheel) end of engine
Rotor rotation	clockwise

Initial advance setting. Stamped on clip fitted to one HT lead.

All initial settings are ± 1°

When setting dynamically, disconnect vacuum pipe.

Engine	Setting at idle speed
847	10° BTDC
- 22	6° BTDC
841 - 25	6° BTDC
- 17	4° BTDC
- 26	10° BTDC
- 18	8° BTDC
A2M - 23	8° BTDC
- 95	4° BTDC
A6M	10° BTDC
843	10° BTDC
807, A5L	12° BTDC
829	10° BTDC
J6R	10° BTDC

Idle Settings

Engine	Idle speed
847	775 ± 25 rpm
841, A2M, A6M	800 ± 25 rpm
Automatic in D	650 ± 25 rpm
843	800 ± 25 rpm
Automatic in D	650 ± 25 rpm
807, A5L	650 ± 25 rpm
829, J6R	850 ± 25 rpm

ENGINE - OHV [5]

Engine Identification

Renault 18

Model		Transmission	Engine
1340	12.78–	4-speed	847-A-7-20
		Automatic	847-B-7-21

1341	12.78–11.81	4-speed	841-C-7-25
	1.79–8.81	5-speed	841-C-7-25
	6.81–	5-speed	A2M-7-23
	12.78–	Automatic	841-D-7-26
1343	11.81–	5-speed	A6M-L-7-25
		Automatic	A6M-M-7-26
1350	9.79–	4-speed	847-A-7-20
		5-speed	847-A-7-20
1351	9.79–8.81	4-speed	841-C-7-25
		Automatic	841-D-7-26
1352	11.81–TS	5-speed	A6M-L-7-25
	6.81–GTL	5-speed	A2M-L-7-25
		Automatic	A6M-M-7-26
1345	11.80–8.82	5-speed	807-A-7-27
	8.82–	5-speed	A5L-B-7-17

Fuego Model			
1360	9.80–	4/5-speed	847-A-7-20
1362	9.80–6.81	5-speed	843-J-7-23
	9.80–6.81	Automatic	843-K-7-24
	6.81–	5-speed	A6M-L-7-25
	6.81–	Automatic	843-K-7-24

General Specifications - mm

Engine Capacity:	
847	1397 cc
841, A2M, A6M, 843	1647 cc
807, A5L	1565 cc
Bore:	
847	76
841, A2M, A6M, 843	79
807, A5L	77
Stroke:	
847	77
841, A2M, A6M, 843	84
807, A5L	84
Compression ratio:	
847, 841, A2M, A6M, 843	9,25:1
807, A5L	8,6:1

847 ENGINE - mm

Cylinder Head

Valve seat angle:	
Inlet	60°
Exhaust	45°
Valve seat width:	
Inlet	1,1 - 1,48
Exhaust	1,4 - 1,70
Valve spring free height	42.0
Valve head diameter:	
Inlet	34,2
Exhaust	29.0

Oil Pump

Minimum oil pressure (in bar) at 80°C	
At idle	0,7 bar
At 4000 rpm	3,5 bar
Clearance between pump and gears	0,2

Camshaft

Endfloat	0,06 - 0,11

Crankshaft

Endfloat	0,25 - 0,23

Pistons, Rings & Con-rods

Small end endfloat	0,31 - 0,57
Piston pin fit	press fit in small end free turning in piston
Piston ring thickness:	
Top compression	1,75
Taper compression	2,0
Oil control	4,0
Piston ring gap	Pre-set

Cylinder Block

Liner bore	76,0
Liner protrusion, less 'O' ring	0,02 - 0,09

841/A6M ENGINE - mm

Cylinder Head

	841	A6M
Valve seat angle	45°	45°
Valve seat width:		
Inlet	1,3 - 1,6	1,5 - 1,8
Exhaust	1,7 - 2,0	1,7 - 2,0
Valve spring free height	48,4	40,25
Valve head diameter:		
Inlet	35,8	38,7
Exhaust	31,5	34,5

Oil Pump

Minimum oil pressure (in bar) at 80°C	
At idle	2 bar
At 4000 rpm	4 bar
Pinion clearance:	
Tooth engaged	0,04 - 0,29
Flats engaged	0,2 - 0,14

Camshaft

Number of bearings	4	4
Endfloat	0,05 - 0,21	0,05 - 0,21

Crankshaft

Endfloat	0,05 - 0,23

Pistons, Rings & Conrods

Small end endfloat	0,31 - 0,57
Piston pin fit	Press fit in small end free turning in piston
Piston ring thickness:	
Top compression	1,75
Taper compression	2
Oil control	4
Piston ring gap	Pre-set

Cylinder Block

Liner bore	79
Liner protrusion, less 'O' ring	1,10 - 0,17

843/A6M ENGINE - mm

Cylinder Head

Valve seat angle . . . . . 45°
Valve seat width:
- Inlet . . . . . 1,5 - 1,8
- Exhaust . . . . . 1,7 - 2,0

Valve head diameter:
- Inlet 38,7
- Exhaust 34,5

Oil Pump

Minimum oil pressure (in bar) at 80°C
- At idle . . . . . 2 bar
- At 4000 rpm . . . . . 4 bar

Clearance between rotors:
- Pinion clearance:
  - Tooth engaged . . . . . 0,04 - 0,29
  - Flats engaged . . . . . 0,2 - 0,14

Camshaft

Endfloat . . . . . 0,05 - 0,21

Crankshaft

Endfloat . . . . . 0,05 - 0,23

Pistons, Rings & Conrods

Small end endfloat . . . . . 0,31 - 0,57
Piston pin fit . . . . . Press fit in small end free turning in piston
Piston ring thickness:
- Top compression 1,75
- Taper compression 2
- Oil control 4

Piston ring gap . . . . . Pre-set

Cylinder Block

Liner bore 77
Liner protrusion, less 'O' ring . . . . . 0,10 - 0,17

807, A5L ENGINE - mm

Cylinder Head

Valve seat angle . . . . . 45°
Valve seat width:
- Inlet . . . . . 1,5 - 1,8
- Exhaust . . . . . 1,7 - 2,0

Valve spring free height 42,20
Valve head diameter:
- Inlet 38,7
- Exhaust 34,5

Oil Pump

Minimum oil pressure (in bar) at 80°C
- At idle . . . . . 2 bar
- At 4000 rpm . . . . . 4 bar

Pinion clearance:
- Tooth engaged . . . . . 0,04 - 0,29
- Flats engaged . . . . . 0,2 - 0,14

Camshaft

Endfloat . . . . . 0,05 - 0,21

Crankshaft

Endfloat . . . . . 0,05 - 0,23

Pistons, Rings & Conrods

Small end endfloat . . . . . 0,31 - 0,57
Piston pin fit . . . . . Fully floating
Piston ring thickness:
- Top compression 1,75

Cylinder Block

Liner bore 77
Liner protrusion, less 'O' ring . . . . . 0,10 - 0,17

Tightening Torques - kg m (lb ft)

Engine	847	841/A2M
Main bearing caps	6,5 (50)	6,5 (50)
Big end caps	4,5 (35)	4,5 (35)
Crankshaft pulley bolt:		
40 mm bolts	—	6,0 (48)
45 mm bolt		7,0 (50)
Flywheel manual	5,0 (35)	5,0 (35)
Automatic	7,0 (50)	7,0 (50)
Cylinder head bolts:		
Cold	5,5 (40)	8,0 (60)
Hot	5,5 (40)	8,5 (65)

Engine	843/A6M	807/A5L
Main bearing caps	6,5 (50)	6,5 (50)
Big end caps	4,5 (35)	4,5 (35)
Crankshaft pulley bolt:		
40 mm bolt	6,0 (45)	6,0 (45)
45 mm bolt	7,0 (50)	7,0 (50)
Flywheel manual	5,0 (35)	5,0 (35)
Automatic	7,0 (50)	7,0 (50)
Cylinder head bolts:		
Cold	8,0 (60)	8,0 (60)
Hot	8,5 (65)	8,5 (65)

ENGINE - OHC . . . . . [6]

Engine Identification

Model		Transmission	Engine
1343	11.81–	5-speed	J6R-L-7-16
1353	11.81–	5-speed	J6R-L-7-16
1363	10.80–	5-speed	829-J-7-10
	8.81–	Automatic	J6R-K-7-11

General Specifications - mm

Capacity	829, J6R	1995
Bore	829, J6R	.88
Stroke	829, J6R	.82
Compression ratio	829, J6R	9,2:1

Cylinder Head

Valve seat angle:
- Inlet . . . . . 60°
- Exhaust . . . . . 45°

Seat width 1,85
Valve spring free height 47
Valve head diameter:
Inlet 44
Exhaust 38,5

Oil Pump

Minimum oil pressure (in bar) at 80°C:
At idle 0,8
At 3000 rpm 3
Rotor endfloat clearance . . . . . 0,02 - 0,10
Rotor to housing clearance . . . . . 0,05 - 0,12
Relief valve clearance in bore . . . . . 0,03 - 0,08

Camshaft

Endfloat . . . . . 0,05 - 0,13

Crankshaft

Endfloat . . . . . 0,05 - 0,25

Pistons, Rings & Conrods

Piston pin fit . . . . . .Press fit in small end free turning in piston
Piston ring thickness:
Top compression 1,75
Taper compression 2
Oil control 4
Piston ring gap . . . . . Pre-set
Small end endfloat . . . . . 0,31 - 0,57

Cylinder Block

Liner bore 88
Liner protrusion, less 'O' ring . . . . . 0,08 - 0,15

Tightening Torques - kg m (lb ft)

Camshaft end nut 2,0 (15)
Camshaft drive plate 5,0 (35)
Main bearing caps 9,0 (70)
Big end caps 5,0 (35)
Crankshaft pulley bolt 8,5 (65)
Flywheel bolts 6,0 (48)
Drive plate bolts 7,0 (50)
Cylinder head bolts:
Cold 9,0 (70)
Oil pump mounting bolts 4,5 (35)

ENGINE ELECTRICS . . . . . [7]

Battery

Polarity connection . . . . . Negative earth
Nominal voltage . . . . . 12 volts
Electrolyte level . . . . . 15 mm above plates

Alternator

Engine	Alternator	Output	Voltage
847	Paris-Rhone	50 amps	14 volts
841, A2M, A6M	SEV Marchal	50 amps	14 volts
843	Ducellier	70 amps	12-14 volts
	Motorola	50 amps	14 volts
	Paris-Rhone	50 amps	14 volts
807, A5L	SEV Marchal	50 amps	13-14 volts
829, J6R	Ducellier	50 amps	14 volts
	Paris-Rhone	50 amps	14 volts
	SEV Marchal	50 amps	14 volts

Starter Motor

Engine		
847	Ducellier	532 0008
	Paris-Rhone	D8E 142
841, A2M, 843, A6M	Ducellier	532 009
	Paris-Rhone	D8E 139
807, A5L	Bosch	A00 2208 122F
	Ducellier	532 008
	Paris-Rhone	D8E 139
829, J6R	Paris-Rhone	D8E 140

Ignition Coil

Contact breaker ignition:
Primary resistance . . . . . 4 - 4,5 ohms
Secondary resistance . . . . . 4000 ohms ± 1500
Early turbo electronic ignition:
Primary resistance . . . . . Less than 10 ohms
Secondary resistance . . . . . 4000 ohms ± 1500
Renix computer ignition coil:
Primary resistance . . . . . Less than 10 ohms
Secondary resistance . . . . . 4000 ohms ± 1500

COOLING SYSTEM . . . . . [8]

Thermostat

Starts to open at . . . . . 86°C
Fully open at:
847 . . . . . 92°C
807, A5L, 841, A2M, 843, A6M . . . . . 96°C
829, J6R . . . . . 95°C

FUEL SYSTEM . . . . . [9]

Fuel Pump Operating Pressure - bar

847 . . . . . 0,17 - 0,265
807, A5L, 841, A2M, 843, A6M . . . . . 0,17 - 0,265
829, J6R . . . . . 0,27 - 0,32

Carburettor Type

847 - 20	Solex	32 EITA - 690
- 20	Solex	32 SEIA - 795
	Solex	32 SEIA - 775
	Zenith	32 IF V 10407
841 - 25	Solex	35 EITA - 691
- 26	Solex	35 EITA - 709
	Weber	32 DARA
A2M - 23	Weber	32 DIR - 98
A6M - 25	Weber	32 DARA - 38
- 26	Weber	32 DARA 39
843 - 23	Weber	32 DARA - 38
- 24	Weber	32 DARA - 39
	Solex	32 SEIA - 775
	Weber	32 DARA - 38, 39
	Zenith	32 IF V 10407
807 - 27	Solex	32 DIS - 752
A5L - 17	Solex	32 DIS - 788

829 - 10	Weber	32 DARA - 40
J6R - 10	Weber	32 DARA - 40
- 11	Weber	32 DARA - 41
- 61	Weber	32 DARA - 42

Carburettor Settings - mm

Solex 32 DIS	752,788		
Initial throttle opening	.0,75		
Pneumatic part opening	5,5 (not adjustable)		
Needle valve washer thickness	.1		
Accelerator pump stroke	.7		
Idle speed ± 50	650		
CO level % ± 0,5	1,5		
Solex 32 EITA	690	691	709
Initital throttle opening			
Extreme cold	.0,95	.0,95	1,3
Medium cold	.0,75	.0,95	.10,5
Fuel level	.12,4	.12,4	.12,4
Pneumatic part open	3,6	3,6	3,6
Idle speed ± 25	775	800	650
CO level %	.2	.2	.2
Solex 32/35 EITA	775		795
Initial throttle opening	0,8		0,8
Choke flap part open	4,2		
Idle speed ± 25 rpm	775		775
CO level % ± 0,5	2,5		2,5

Weber 32 DARA	38	39	40	41	42
Initial throttle opening	.1,35	.1,40	1,3	.1,05	1,3
Fuel level	.7	.7	.7	.7	.7
Float travel	.8	.8	.8	.8	.8
Pneumatic part open setting:					
Depressed	.5	.5	5,5	5,5	5,5
Released	.8	.8	.10	.10	.10,5
Idle speed ± 25 rpm	800	650	800	900	800
CO level% ± 0,5	1,5	1,5	1,5	.1	1,5

Weber 32 DIR	.98
Initial throttle opening	0.9
Fuel height	.7
Float travel	.8
Pneumatic part open	.4
Mechanical part open	.5 ± 0,5
Idle speed ± 25	650
CO level %	.1 - 2
Zenith 32 IF	V 10 407
Initial throttle opening	.0,95
Accelerator pump stroke	.22,8
Fuel height	.11,95 ± 0,1
Idle speed ± 25 rpm	775
CO level % ± 0,5	.2,5 ± 0,5

CLUTCH & GEARBOX . . . . . [10]

Clutch

Operating lever clearance	2,5 mm
Shaft lubricant	Molycote BR.2

Tightening Torques - kg m (lb ft)

Half housing bolts	
7 mm	2,5 (20)
8 mm	3,0 (22)
Rear cover bolts	1,2 (10)
Clutch housing bolts:	
8 mm	2,4 (20)
10 mm	3,5 (25)
Clutch pressure plate bolts	2,0 (18)
Reverse selector fixing bolt	2,4 (20)
Crown wheel bolts	11,0 (80)
Primary shaft nut	12,0 (90)
Differential ring nut lock bolt	2,4 (20)

AUTOMATIC TRANSMISSION . . . . . [11]

Engine Type	Fitting date	Transmission Type	Oil Pressure (bars) light throttle	full throttle
841	-6.82	4139	2,45-2,7	.4
	6.82-	MJ1 500		4,4
A6M	6.82-	MJ1 000		4,4
843	5.82-	4139	2,45-2,7	.4
843	5.82-	MJ1 100		4,4
J6R	8.81-	MJ3 301		4,6

Tightening Torques - kg m

Drive plate bolts	7.0 (50)
Converter to drive plate	2,8 (21)
Oil pump cover	1,0 (10)
Inner bolt	0,5 (5)
Bottom closure plate	0,8 (6)
Sump	0,8 (6)
Casing to final drive	2,0 (15)
Casing assembly:	
Outer bolts	1,9 (15)
Inner bolts	2,8 (21)
Inner studs	1,8 (16)
Output shaft thrust plate	2,0 (15)
Hydraulic distributor bolts	0,7 (6)
Final drive pinion nut	16,0 (115)
Output shaft nut	15,0 (105)

STEERING . . . . . [12]

Front Wheel Alignment - mm

All models (toe-out)	.1 ±1

Tightening Torques - kg m (lb ft)

Steering wheel nut	4,5 (35)
Steering shaft universal joint	3,5 (25)
Steering shaft flexible coupling	1,5 (15)
Track rod to steering arm	3,5 (25)
Track rod end locknut	3,5 (25)
Track rod inner nut	4,0 (30)
Pinion nut	2,2 (20)
Rack mounting bolts	2,5 (20)

FRONT SUSPENSION . . . . . [13]

Tightening Torques - kg m (lb ft)

Shock absorber:	
Top mounting	1,5 (15)
Bottom mounting	6,0 (45)
Fork pin nut	8.0 (60)

Lower arm:
- Inner pivot 11,0 (80)
- Lower swivel 5,0 (35)

Upper arm:
- Inner pivot 10,0 (75)
- Upper swivel 5,0 (35)

Anti-roll bar to arm 1,5 (15)
Driveshaft hub nut 16,0 (115)

REAR SUSPENSION . . . . . [14]

Hub bearing endfloat . . . . . 0 - 0,03 mm

Tightening Torques - kgm

Stub axle nut . . . . . Tighten to 3,0 (22) then slacken by 1/8th turn

Shock absorbers:
- Top mounting 1,5 (15)
- Bottom mounting 3,0 (22)

Centre wishbone:
- Upper mounting 11,0 (80)
- Lower mounting 1,5 (15)
- Lower mounting pivot 4,0 (30)

Trailing arm:
- Front mounting 3,5 (25)
- Rear mounting 5,5 (39)

BRAKES . . . . . [15]

Master Cylinder - mm

Bore 19
Stroke 30
Servo cylinder bore 200

Front Brakes - mm

Type . . . . . Bendix, Girling
Caliper piston bore 48
Brake disc diameter 228
Brake disc max. run-out 0,07
Disc min. thickness (non-ventilated type) 9
Disc min. thickness (ventilated type) 19
Min. pad thickness (non-ventilated disc) 7
Min. pad thickness (ventilated disc) 9

Rear Brakes - mm

Type . . . . . Bendix, Girling
Wheel cylinder bore diameter 22
Drum diameter 180, 25
1342, 1343, 1345, 1352, 1353 228,6
Max. drum diameter after regrind 181,2
1342, 1343, 1345, 1352, 1353 229,6
Lining thickness new 7
Lining min. above rivet head 0,5

Turbo Disc Brakes 1983 Models - mm

	Front	Rear
Caliper piston bore diameter	54	36
Brake disc diameter	260	235,8
Disc min. thickness	17,7	10,5
Pad thickness	18,5	14
Pad min. thickness	9	7

Brake Limiter

Operating pressure (bar)
(car on all four wheels, luggage area empty, driver on board)

Model	Fuel tank Full	Half full	Empty
1340, 1341	31 - 35	28 - 32	25 - 29
1342	41 - 45	39 - 43	37 - 41
1983 model	40 - 36	38 - 34	36 - 32
1343, 1345	26 - 30	23 - 27	20 - 24
1344	21 - 25	18 - 22	15 - 19
1345	26 - 30	23 - 27	20 - 24
1983 model	25 - 21	22 - 18	19 - 15
1350, 1351	28 - 32	25 - 29	22 - 26
1352, 1353	44 - 48	42 - 46	40 - 44
1360	41 - 45	38 - 42	35 - 39
1362	36 - 40	33 - 37	30 - 34
1982 model	31 - 35	28 - 32	25 - 29
1363	26 - 30	23 - 27	20 - 24

Handbrake

Type . . . . . Mechanical upon rear wheels
Handbrake adjustment . . . . . 12 notches
Min. lever travel . . . . . 9 notches
1983 Turbo . . . . . 12 notches

Tightening torques - kgm (lb ft)

Bleed screws 0,8
Caliper hose unions 2,0
Rigid pipe unions 1,4 (15)
Rigid to flexible pipe unions 1,2 (13)
Caliper to stub axle 6,5 (50)
Disc to hub 2,5 (20)
Girling caliper guide bolts 3,5 (25)

GENERAL ELECTRICS . . . . . [16]

Replacement Bulbs - Exterior Lights

Function	Wattage	Fitting
Headlamps		
Halogen H4	55/60W	spring clip
Tungsten	45/50W	spring clip
Front sidelight	4W	bayonet
Front indicator lamp	21W	bayonet
Rear indicator lamp	21W	bayonet
Stop lamp/parking lamp	21/5W	bayonet
Rear foglamp	21W	bayonet
Licence plate lamp	5W	festoon

Replacement Bulbs - Interior Lights

Function	Wattage	Fitting
Warning lamps (instrument panel)	2W	capless
Interior light	7W	festoon
Glovebox	5W	festoon
Luggage area	5W	festoon

Index

Accessories 176
Aerial fitting 178
Alternator 67
Alternator brushes 68
Alternator voltage regulator 68
Anti-freeze 16
Automatic choke:
- Weber DARA carburettor 90
Automatic transmission:
- Adjustments 107
- Computer 107
- Fluid level 14
- Governor 107
- Kick-down switch 110
- Oil seal replacement 110, 112
- Removal & Installation . . . 110, 112
- Torque converter 112

Battery electrolyte level 14
Bleeding the brakes 142
Bonnet release cable 170
Brake caliper 144, 145
Brake disc:
- Front brake 144
- Rear disc (Turbo) 145
Brake fluid level 18
Brake master cylinder 146
Brake pipes & hoses 144
Brake pressure limiter 148
Brake servo unit 148
Bulb replacement 152
Bumpers, front & rear 168

Camshaft:
- OHC Engine 60
- OHV Engine 52
Camshaft drive belt (OHC engine) . . . 58
Camshaft oil seal (OHC engine) 58
Carburettor - Solex:
- Adjustments 34, 88, 90
- Overhaul 88, 90
- Removal & Installation 88
Carburettor - Weber:
- Adjustments 34, 89, 90
- Overhaul 89, 90
- Removal & Installation 88
Carburettor - Zenith:
- Adjustments 34, 89
- Overhaul 89
- Removal & Installation 88
Charging circuit test 67
Child safety seat & belts 180
Clutch cable:
- Adjustment 21, 95
- Replacement 95
Clutch release bearing 96
Clutch replacement 95
Coil (ignition) 72
Coil springs:
- Front suspension 128
- Rear suspension 134
Compression check (engine) 28
Condenser (capacitor) 32
Coolant draining & refilling 77
Coolant level 16
Cooling system fan 80
Crankshaft front & rear oil seals:
- OHC Engine 59, 60
- OHV Engine 46
Cylinder head:
- OHC Engine 60
- OHV Engine 38
Cylinder liners - replacement 50

Door locks 172
Door trim panel 170
Door window winder mechanism . . . 170
Distributor:
- 'Cassette' type contacts 30, 32
- Conventional type contacts 30
- Lubrication 18
Distributor removal & Installation . . . 70
Drive belt:
- Alternator/water pump 18
- Power steering pump 21, 121

Engine mountings:
- OHC Engine 65
- OHV Engine 48
Engine oil & filter 12
Engine overhaul:
- OHC Engine 65
- OHV Engine 50
Engine removal & Installation 57, 65
Exhaust system 57, 65

Front brake pads:
- Replacement 137
- Wear check 20
Front suspension:
- Anti-roll bar 130
- Ball joints 9, 128, 130
Front wheel alignment 114
Front wheel bearings 123
Fuel gauge sender unit 93
Fuel pump 86
Fuel tank Removal & Installation . . . 93
Fuses, relays & flasher unit 154

Gearbox oil level (manual) 14
Gearbox oil seals 96, 98, 100, 105
Gearbox overhaul 100, 105
Gearbox Removal & Installation 98

Handbrake cable:
- Adjust & Replace 148
- Check & Lubricate 20
Headlamps 152
Headlamp washer/wiper 159
Heater control adjustments 82
Heater unit 82
History & Identification 6

Ignition switch 75
Ignition timing 34
Indicator flasher unit 154
Instrument panel 154

Jackshaft (OHC Engine) 59
Jacking procedures 11

MoT test 8, 9

Oil pump:
- OHC Engine 65
- OHV Engine 48
- Pressure test 48, 65

Power steering rack 121

Radiator Removal & Installation 80
Rear brakes:
- Caliper (Turbo model) 145
- Disc (Turbo model) 145
- Shoe replacement 138
- Wear check 20
- Wheel cylinder overhaul 145
Rear lights 152
Rear suspension:
- Anti-roll bar 136
- Axle beam assembly 134
- Coil springs 134
- Wheel bearings 131

Seat belts - check 25
Service Schedule 10
Shock absorbers:
- Front suspension 126
- Rear suspension 134
Spark plugs 26
Speaker fitting 180
Speedometer cable 172
Starter motor 68, 70
Steering column assembly 116
Steering column bushes 116
Steering column lock 116
Steering rack assembly 118, 121
Steering rack bellows 116
Suspension & steering (General check) . 21
Switches 156

Tailgate lock (estate car) 172
Tailgate wiper/washer 24
Technical Data 185-191
Thermostat:
- OHC Engine 78
- OHV Engine 78
- Testing 78
Throttle cable 88
Towbar & Electrics 182
Track rod end joints 116
Tyres:
- Condition 21
- Pressures 185

Valve clearances 28
Valve seats & Guides 42
Water pump:
- OHC Engine 82
- OHV Engine 82
Windscreen washer 25
Windscreen wipers - front & rear 25
Wiring diagrams 160-166

Autodata Car Repair Manuals

show THE BEST way to DO-IT-YOURSELF

The emphasis in this Autodata car repair manual is on all the maintenance and repair operations that the DIY motorist is likely to tackle - even for the first time! Step by step instructions are given in easy-to-understand language with clear line drawings illustrating how each service or repair operation is carried out.

Carry out a complete service on your car

Autodata devote a complete chapter to this very important subject. Checking the fan belt, lubrication, brake adjustment, wheels and tyres, service schedules, etc - all items to be checked on a regular basis.

Tune up for maximum performance and economy

Poor starting, lack of performance or heavy fuel consumption. All these problems can be sorted out and cured by following the comprehensive Tune-Up chapter.

Engine repair and overhaul

All you need to know about checking, diagnosing, repairing and overhauling the engine. From minor repairs like oil seal replacement and fitting a new oil pump to removing the engine and rebuilding it.

Fitting accessories

Here you'll find details on the fitting of a baby seat or child harness, tow bar and lighting socket. Also covered is the installation of a radio or tape player and speaker(s), suppression and much more.

Tackle steering, suspension and brake repairs

The manual helps you identify faults that can develop in the car's steering, suspension and braking systems and explains how they can be rectified quickly and cheaply.

Pass the MoT first time

Once a year the MoT test falls due for vehicles three years old or more. You pay whether the car passes or fails, so it makes sense to know what the tester is looking for. This manual will show you how.

Plus: electrics - body - clutch - gearbox - and more!

There are other chapters devoted to the electrical components, body fittings, clutch, gearbox, fuel system, cooling and automatic transmission where fitted. There are pages showing all the relevant data, tightening torques, trouble shooters and wiring diagrams. The double page contents guide is cross-referenced with an alphabetical index enabling you to quickly find your way to the service or repair operation required.

RAC

"To my mind, Autodata Car Repair Manuals are a valuable aid to the conscientious motorist who takes the job of looking after his car seriously."

P.J. Lovell, C. Eng., F.I. Mech. E. Chief Engineer, The Royal Automobile Club

The press say...

CAR MECHANICS
"A very good example of a manual adapted to suit the needs of the DIY man."

SAFER MOTORING
"Full marks for including routine maintenance operations and information on fitting accessories . . . It is a book I can recommend . . ."

POPULAR MOTORING
". . . they've completely revised their format with a series of new style manuals . . . they're on to a winner."

CARS AND CAR CONVERSIONS
". . . a new layout which puts the accent on simplicity and ease of understanding. All illustrations are line drawings instead of the often more difficult to understand photos."

AUTOCAR
". . . the text has been written very much for the ordinary man, rather than for the trained mechanic."

ISBN 0-85666-323-9