GROUP TAB LOCATOR

	Introduction
0	Lubrication & Maintenance
2	Suspension
3	Differential & Driveline
5	Brakes
6	Clutch
7	Cooling
8A	Audio/Video
8B	Chime/Buzzer
8E	Electronic Control Modules
8F	Engine Systems
8G	Heated Systems
8H	Horn
8I	Ignition Control
8J	Instrument Cluster
8L	Lamps
8M	Message Center
8N	Power Systems
8O	Restraints
8P	Speed Control
8Q	Vehicle Theft Security
8R	Wipers/Washers
8W	Wiring
9	Engine
11	Exhaust System
13	Frame & Bumpers
14	Fuel System
19	Steering
21	Transmission/Transaxle
22	Tires/Wheels
23	Body
24	Heating & Air Conditioning
25	Emissions Control
	Component and System Index
	PCODE Index

Service Manual Comment Forms (Rear of Manual)

INTRODUCTION

TABLE OF CONTENTS

page

VEHICLE SAFETY CERT LABEL
DESCRIPTION 1
VEHICLE IDENTIFICATION NUMBER
DESCRIPTION 2
INTERNATIONAL SYMBOLS
DESCRIPTION 2
FASTENER IDENTIFICATION
DESCRIPTION 3
FASTENER USAGE
DESCRIPTION
FASTENER USAGE 6
THREADED HOLE REPAIR 6
METRIC SYSTEM
DESCRIPTION 6
TORQUE REFERENCES
DESCRIPTION 8
VECI LABEL
DESCRIPTION 9

VEHICLE SAFETY CERT LABEL

DESCRIPTION

A vehicle safety certification label is attached to the rear shut-face of the driver's door. This label indicates date of manufacture (month and year), Gross Vehicle Weight Rating (GVWR), Gross Axle Weight Rating (GAWR) front, Gross Axle Weight Rating (GAWR) rear and the Vehicle Identification Number (VIN). The Month, Day and Hour of manufacture is also included.

All communications or inquiries regarding the vehicle should include the Month-Day-Hour and Vehicle Identification Number.



VEHICLE IDENTIFICATION NUMBER

DESCRIPTION

The Vehicle Identification Number (VIN) is located on the upper left corner of the dash panel, inside the windshield opening. The VIN consists of 17 characters in a combination of letters and numbers that provide specific information about the vehicle. Refer to VIN Code Breakdown table for decoding information.

CROSSFIRE VIN CODE BREAKDOWN

POSITION	INTERPRETATION	CODE = DESCRIPTION
1	Country of Origin	1 = Manufactured By DaimlerChrysler Corporation
2	Make	C = Chrysler
3	Vehicle Type	3 = Passenger Car
4	Other	K = Restraint System Front Air Bags Next Generation (CGW) With Standard Side Air Bag Supplement (CGS)
5	Car Line	N = Crossfire (LHD) P = Crossfire (RHD)
6	Series	6 = “S” Series
6 - Export	Transmission	C = 6 Speed Manual (DED) E = 5 Speed Automatic (DGU)
7	Body Style	9 = Specialty Coupe
8	Engines	L = 3.2L V6 SOHC 18 Valve
9	Check Digit	See explanation in this section
10	Model Year	4 = Model Year
11	Plant	X = Osnabrueck Germany
12 through 17	Sequence Number	6 Digit Sequential Number Assigned By Assembly Plant.

INTERNATIONAL SYMBOLS

DESCRIPTION

The graphic symbols illustrated in the following International Control and Display Symbols Chart are used to identify various instrument controls. The symbols correspond to the controls and displays that are located on the instrument panel.

FASTENER IDENTIFICATION (Continued)

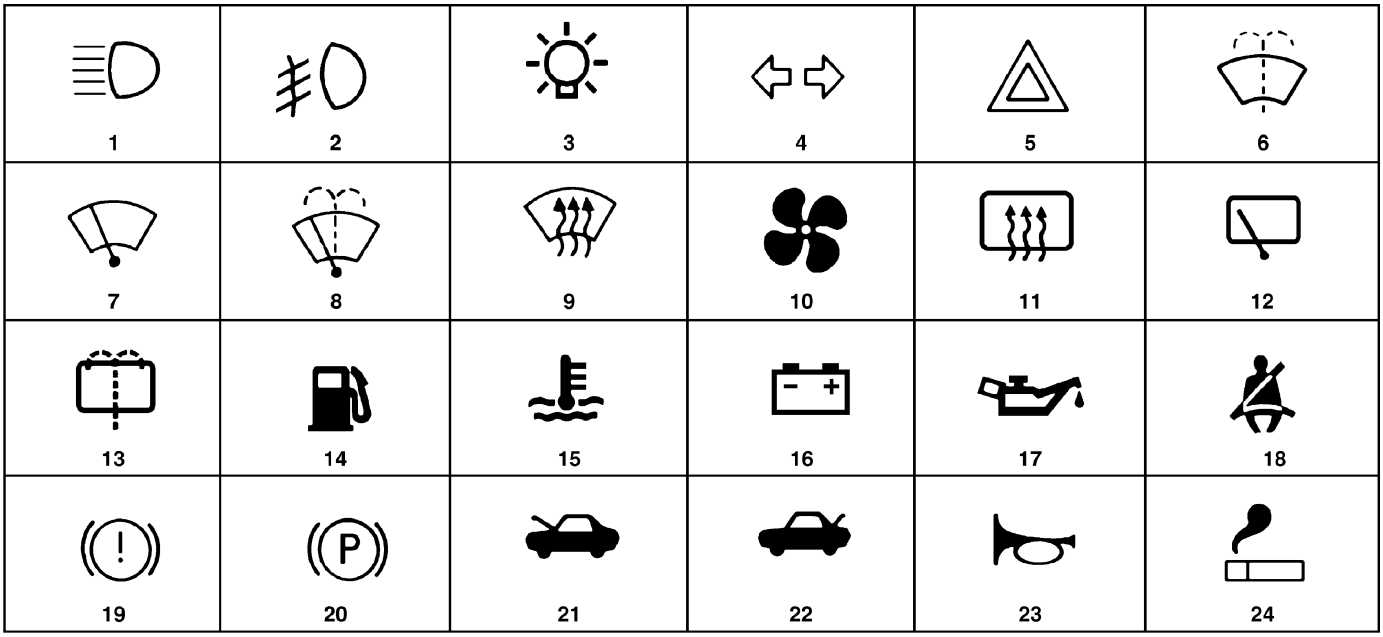

80be4788

1	HIGH BEAM
2	FOG LAMPS
3	HEADLAMP, PARKING LAMPS, PANEL LAMPS
4	TURN WARNING
5	HAZARD WARNING
6	WINDSHIELD WASHER
7	WINDSHIELD WIPER
8	WINDSHIELD WIPER AND WASHER
9	WINDSCREEN DEMISTING AND DEFROSTING
10	VENTILATING FAN
11	REAR WINDOW DEFOGGER
12	REAR WINDOW WIPER
13	REAR WINDOW WASHER
14	FUEL
15	ENGINE COOLANT TEMPERATURE
16	BATTERY CHARGING CONDITION
17	ENGINE OIL
18	SEAT BELT
19	BRAKE FAILURE
20	PARKING BRAKE
21	FRONT HOOD
22	REAR HOOD (DECKLID)
23	HORN
24	LIGHTER

FASTENER IDENTIFICATION

DESCRIPTION

The SAE bolt strength grades range from grade 2 to grade 8. The higher the grade number, the greater the bolt strength. Identification is determined by the line marks on the top of each bolt head. The actual bolt strength grade corresponds to the number of line marks plus 2. The most commonly used metric bolt strength classes are 9.8 and 10.9. The metric strength class identification number is imprinted on the head of the bolt. The higher the class number, the greater the bolt strength. Some metric nuts are imprinted with a single-digit strength class on the nut face. Refer to the Fastener Identification and Fastener Strength Charts.

FASTENER IDENTIFICATION (Continued)

Bolt Markings and Torque - Metric

Commercial Steel Class

Bolt Head Markings

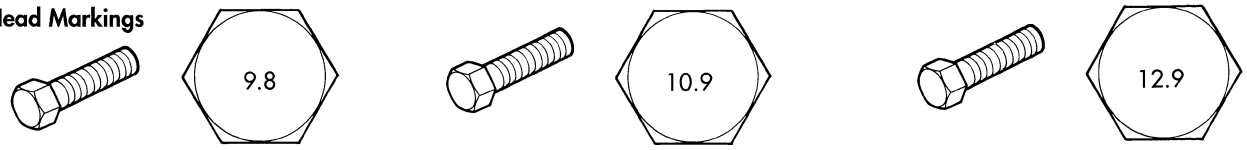

Body Size	Torque				Torque				Torque			
Diam.	Cast Iron		Aluminum		Cast Iron		Aluminum		Cast Iron		Aluminum	
mm	N•m	ft-lb	N•m	ft-lb	N•m	ft-lb	N•m	ft-lb	N•m	ft-lb	N•m	ft-lb
6	9	5	7	4	14	9	11	7	14	9	11	7
7	14	9	11	7	18	14	14	11	23	18	18	14
8	25	18	18	14	32	23	25	18	36	27	28	21
10	40	30	30	25	60	45	45	35	70	50	55	40
12	70	55	55	40	105	75	80	60	125	95	100	75
14	115	85	90	65	160	120	125	95	195	145	150	110
16	180	130	140	100	240	175	190	135	290	210	220	165
18	230	170	180	135	320	240	250	185	400	290	310	230

Bolt Markings and Torque Values - U.S. Customary

SAE Grade Number 5 8

Bolt Head Markings
These are all SAE Grade 5 (3) line

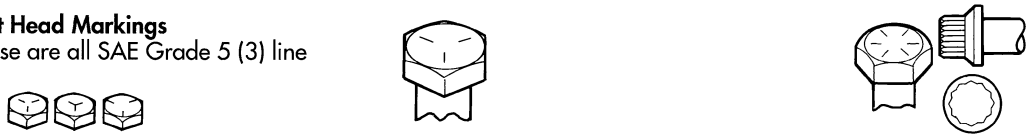

	Bolt Torque - Grade 5 Bolt				Bolt Torque - Grade 8 Bolt			
Body Size	Cast Iron		Aluminum		Cast Iron		Aluminum	
	N•m	ft-lb	N•m	ft-lb	N•m	ft-lb	N•m	ft-lb
1/4 - 20	9	7	8	6	15	11	12	9
- 28	12	9	9	7	18	13	14	10
5/16 - 18	20	15	16	12	30	22	24	18
- 24	23	17	19	14	33	24	25	19
3/8 - 16	40	30	25	20	55	40	40	30
- 24	40	30	35	25	60	45	45	35
7/16 - 14	60	45	45	35	90	65	65	50
- 20	65	50	55	40	95	70	75	55
1/2 - 13	95	70	75	55	130	95	100	75
- 20	100	75	80	60	150	110	120	90
9/16 - 12	135	100	110	80	190	140	150	110
- 18	150	110	115	85	210	155	170	125
5/8 - 11	180	135	150	110	255	190	205	150
- 18	210	155	160	120	290	215	230	170
3/4 - 10	325	240	255	190	460	340	365	270
- 16	365	270	285	210	515	380	410	300
7/8 - 9	490	360	380	280	745	550	600	440
- 14	530	390	420	310	825	610	660	490
1 - 8	720	530	570	420	1100	820	890	660
- 14	800	590	650	480	1200	890	960	710

80bdbd8c

FASTENER IDENTIFICATION (Continued)

HOW TO DETERMINE BOLT STRENGTH

	Mark	Class
Hexagon head bolt	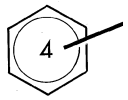 Bolt head No. 4 — 4T; 5 — 5T; 6 — 6T; 7 — 7T; 8 — 8T; 9 — 9T; 10 — 10T; 11 — 11T	
	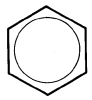 No mark	4T
Hexagon flange bolt w/washer hexagon bolt	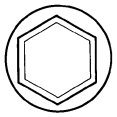 No mark	4T
Hexagon head bolt	 Two protruding lines	5T
Hexagon flange bolt w/washer hexagon bolt	 Two protruding lines	6T
Hexagon head bolt	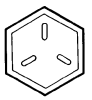 Three protruding lines	7T
Hexagon head bolt	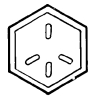 Four protruding lines	8T

	Mark	Class
Stud bolt	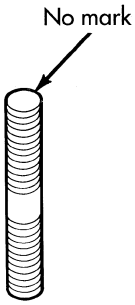	4T
	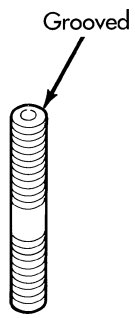	6T
Welded bolt	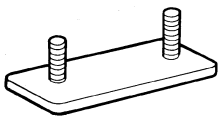	4T

FASTENER USAGE

DESCRIPTION

FASTENER USAGE

WARNING: USE OF AN INCORRECT FASTENER MAY RESULT IN COMPONENT DAMAGE OR PERSONAL INJURY.

Fasteners and torque specifications references in this Service Manual are identified in metric and SAE format.

During any maintenance or repair procedures, it is important to salvage all fasteners (nuts, bolts, etc.) for reassembly. If the fastener is not salvageable, a fastener of equivalent specification must be used.

THREADED HOLE REPAIR

Most stripped threaded holes can be repaired using a Helicoil®. Follow the vehicle or Helicoil® recommendations for application and repair procedures.

METRIC SYSTEM

DESCRIPTION

The metric system is based on quantities of one, ten, one hundred, one thousand and one million.

The following chart will assist in converting metric units to equivalent English and SAE units, or vise versa.

CONVERSION FORMULAS AND EQUIVALENT VALUES

MULTIPLY	BY	TO GET	MULTIPLY	BY	TO GET
in-lbs	x 0.11298	= Newton Meters (N·m)	N·m	x 8.851	= in-lbs
ft-lbs	x 1.3558	= Newton Meters (N·m)	N·m	x 0.7376	= ft-lbs
Inches Hg (60° F)	x 3.377	= Kilopascals (kPa)	kPa	x 0.2961	= Inches Hg
psi	x 6.895	= Kilopascals (kPa)	kPa	x 0.145	= psi
Inches	x 25.4	= Millimeters (mm)	mm	x 0.03937	= Inches
Feet	x 0.3048	= Meters (M)	M	x 3.281	= Feet
Yards	x 0.9144	= Meters	M	x 1.0936	= Yards
mph	x 1.6093	= Kilometers/Hr. (Km/h)	Km/h	x 0.6214	= mph
Feet/Sec	x 0.3048	= Meters/Sec (M/S)	M/S	x 3.281	= Feet/Sec
mph	x 0.4470	= Meters/Sec (M/S)	M/S	x 2.237	= mph
Kilometers/Hr. (Km/h)	x 0.27778	= Meters/Sec (M/S)	M/S	x 3.600	Kilometers/Hr. (Km/h)

COMMON METRIC EQUIVALENTS

1 inch = 25 Millimeters	1 Cubic Inch = 16 Cubic Centimeters
1 Foot = 0.3 Meter	1 Cubic Foot = 0.03 Cubic Meter
1 Yard = 0.9 Meter	1 Cubic Yard = 0.8 Cubic Meter
1 Mile = 1.6 Kilometers	

METRIC SYSTEM (Continued)

Refer to the Metric Conversion Chart to convert torque values listed in metric Newton- meters (N·m). Also, use the chart to convert between millimeters (mm) and inches (in.).

in-lbs to N•m

in- lb	N•m	in-lb	N•m	in-lb	N•m	in-lb	N•m	in-lb	N•m
2	.2260	42	4.7453	82	9.2646	122	13.7839	162	18.3032
4	.4519	44	4.9713	84	9.4906	124	14.0099	164	18.5292
6	.6779	46	5.1972	86	9.7165	126	14.2359	166	18.7552
8	.9039	48	5.4232	88	9.9425	128	14.4618	168	18.9811
10	1.1298	50	5.6492	90	10.1685	130	14.6878	170	19.2071
12	1.3558	52	5.8751	92	10.3944	132	14.9138	172	19.4331
14	1.5818	54	6.1011	94	10.6204	134	15.1397	174	19.6590
16	1.8077	56	6.3270	96	10.8464	136	15.3657	176	19.8850
18	2.0337	58	6.5530	98	11.0723	138	15.5917	178	20.1110
20	2.2597	60	6.7790	100	11.2983	140	15.8176	180	20.3369
22	2.4856	62	7.0049	102	11.5243	142	16.0436	182	20.5629
24	2.7116	64	7.2309	104	11.7502	144	16.2696	184	20.7889
26	2.9376	66	7.4569	106	11.9762	146	16.4955	186	21.0148
28	3.1635	68	7.6828	108	12.2022	148	16.7215	188	21.2408
30	3.3895	70	7.9088	110	12.4281	150	16.9475	190	21.4668
32	3.6155	72	8.1348	112	12.6541	152	17.1734	192	21.6927
34	3.8414	74	8.3607	114	12.8801	154	17.3994	194	21.9187
36	4.0674	76	8.5867	116	13.1060	156	17.6253	196	22.1447
38	4.2934	78	8.8127	118	13.3320	158	17.8513	198	22.3706
40	4.5193	80	9.0386	120	13.5580	160	18.0773	200	22.5966

N•m to in-lbs

N•m	in-lb	N•m	in-lb	N•m	in-lb	N•m	in-lb	N•m	in-lb
.2	1.7702	4.2	37.1747	8.2	72.5792	12.2	107.9837	16.2	143.3882
.4	3.5404	4.4	38.9449	8.4	74.3494	12.4	109.7539	16.4	145.1584
.6	5.3107	4.6	40.7152	8.6	76.1197	12.6	111.5242	16.6	146.9287
.8	7.0809	4.8	42.4854	8.8	77.8899	12.8	113.2944	16.8	148.6989
1	8.8511	5	44.2556	9	79.6601	13	115.0646	17	150.4691
1.2	10.6213	5.2	46.0258	9.2	81.4303	13.2	116.8348	17.2	152.2393
1.4	12.3916	5.4	47.7961	9.4	83.2006	13.4	118.6051	17.4	154.0096
1.6	14.1618	5.6	49.5663	9.6	84.9708	13.6	120.3753	17.6	155.7798
1.8	15.9320	5.8	51.3365	9.8	86.7410	13.8	122.1455	17.8	157.5500
2	17.7022	6	53.1067	10	88.5112	14	123.9157	18	159.3202
2.2	19.4725	6.2	54.8770	10.2	90.2815	14.2	125.6860	18.5	163.7458
2.4	21.2427	6.4	56.6472	10.4	92.0517	14.4	127.4562	19	168.1714
2.6	23.0129	6.6	58.4174	10.6	93.8219	14.6	129.2264	19.5	172.5970
2.8	24.7831	6.8	60.1876	10.8	95.5921	14.8	130.9966	20	177.0225
3	26.5534	7	61.9579	11	97.3624	15	132.7669	20.5	181.4480
3.2	28.3236	7.2	63.7281	11.2	99.1326	15.2	134.5371	21	185.8736
3.4	30.0938	7.4	65.4983	11.4	100.9028	15.4	136.3073	22	194.7247
3.6	31.8640	7.6	67.2685	11.6	102.6730	15.6	138.0775	23	203.5759
3.8	33.6342	7.8	69.0388	11.8	104.4433	15.8	139.8478	24	212.4270
4	35.4045	8	70.8090	12	106.2135	16	141.6180	25	221.2781

ft-lbs to N•m

ft-lb	N•m	ft-lb	N•m	ft-lb	N•m	ft-lb	N•m	ft-lb	N•m
1	1.3558	21	28.4722	41	55.5885	61	82.7049	81	109.8212
2	2.7116	22	29.8280	42	56.9444	62	84.0607	82	111.1770
3	4.0675	23	31.1838	43	58.3002	63	85.4165	83	112.5328
4	5.4233	24	32.5396	44	59.6560	64	86.7723	84	113.8888
5	6.7791	25	33.8954	45	61.0118	65	88.1281	85	115.2446
6	8.1349	26	35.2513	46	62.3676	66	89.4840	86	116.6004
7	9.4907	27	36.6071	47	63.7234	67	90.8398	87	117.9562
8	10.8465	28	37.9629	48	65.0793	68	92.1956	88	119.3120
9	12.2024	29	39.3187	49	66.4351	69	93.5514	89	120.6678
10	13.5582	30	40.6745	50	67.7909	70	94.9073	90	122.0236
11	14.9140	31	42.0304	51	69.1467	71	96.2631	91	123.3794
12	16.2698	32	43.3862	52	70.5025	72	97.6189	92	124.7352
13	17.6256	33	44.7420	53	71.8583	73	98.9747	93	126.0910
14	18.9815	34	46.0978	54	73.2142	74	100.3316	94	127.4468
15	20.3373	35	47.4536	55	74.5700	75	101.6862	95	128.8026
16	21.6931	36	48.8094	56	75.9258	76	103.0422	96	130.1586
17	23.0489	37	50.1653	57	77.2816	77	104.3980	97	131.5144
18	24.4047	38	51.5211	58	78.6374	78	105.7538	98	132.8702
19	25.7605	39	52.8769	59	79.9933	79	107.1196	99	134.2260
20	27.1164	40	54.2327	60	81.3491	80	108.4654	100	135.5820

N•m to ft-lbs

N•m	ft-lb	N•m	ft-lb	N•m	ft-lb	N•m	ft-lb	N•m	ft-lb
1	.7376	21	15.9888	41	30.2400	61	44.9913	81	59.7425
2	1.4751	22	16.2264	42	30.9776	62	45.7289	82	60.4801
3	2.2127	23	16.9639	43	31.7152	63	46.4664	83	61.2177
4	2.9502	24	17.7015	44	32.4527	64	47.2040	84	61.9552
5	3.6878	25	18.4391	45	33.1903	65	47.9415	85	62.6928
6	4.4254	26	19.1766	46	33.9279	66	48.6791	86	63.4303
7	5.1629	27	19.9142	47	34.6654	67	49.4167	87	64.1679
8	5.9005	28	20.6517	48	35.4030	68	50.1542	88	64.9545
9	6.6381	29	21.3893	49	36.1405	69	50.8918	89	65.6430
10	7.3756	30	22.1269	50	36.8781	70	51.6293	90	66.3806
11	8.1132	31	22.8644	51	37.6157	71	52.3669	91	67.1181
12	8.8507	32	23.6020	52	38.3532	72	53.1045	92	67.8557
13	9.5883	33	24.3395	53	39.0908	73	53.8420	93	68.5933
14	10.3259	34	25.0771	54	39.8284	74	54.5720	94	69.3308
15	11.0634	35	25.8147	55	40.5659	75	55.3172	95	70.0684
16	11.8010	36	26.5522	56	41.3035	76	56.0547	96	70.8060
17	12.5386	37	27.2898	57	42.0410	77	56.7923	97	71.5435
18	13.2761	38	28.0274	58	42.7786	78	57.5298	98	72.2811
19	14.0137	39	28.7649	59	43.5162	79	58.2674	99	73.0187
20	14.7512	40	29.5025	60	44.2537	80	59.0050	100	73.7562

in. to mm

in.	mm	in.	mm	in.	mm	in.	mm	in.	mm
.01	.254	.21	5.334	.41	10.414	.61	15.494	.81	20.574
.02	.508	.22	5.588	.42	10.668	.62	15.748	.82	20.828
.03	.762	.23	5.842	.43	10.922	.63	16.002	.83	21.082
.04	1.016	.24	6.096	.44	11.176	.64	16.256	.84	21.336
.05	1.270	.25	6.350	.45	11.430	.65	16.510	.85	21.590
.06	1.524	.26	6.604	.46	11.684	.66	16.764	.86	21.844
.07	1.778	.27	6.858	.47	11.938	.67	17.018	.87	22.098
.08	2.032	.28	7.112	.48	12.192	.68	17.272	.88	22.352
.09	2.286	.29	7.366	.49	12.446	.69	17.526	.89	22.606
.10	2.540	.30	7.620	.50	12.700	.70	17.780	.90	22.860
.11	2.794	.31	7.874	.51	12.954	.71	18.034	.91	23.114
.12	3.048	.32	8.128	.52	13.208	.72	18.288	.92	23.368
.13	3.302	.33	8.382	.53	13.462	.73	18.542	.93	23.622
.14	3.556	.34	8.636	.54	13.716	.74	18.796	.94	23.876
.15	3.810	.35	8.890	.55	13.970	.75	19.050	.95	24.130
.16	4.064	.36	9.144	.56	14.224	.76	19.304	.96	24.384
.17	3.318	.37	9.398	.57	14.478	.77	19.558	.97	24.638
.18	4.572	.38	9.652	.58	14.732	.78	19.812	.98	24.892
.19	4.826	.39	9.906	.59	14.986	.79	20.066	.99	25.146
.20	5.080	.40	10.160	.60	15.240	.80	20.320	1.00	25.400

mm to in.

mm	in.	mm	in.	mm	in.	mm	in.	mm	in.
.01	.00039	.21	.00827	.41	.01614	.61	.02402	.81	.03189
.02	.00079	.22	.00866	.42	.01654	.62	.02441	.82	.03228
.03	.00118	.23	.00906	.43	.01693	.63	.02480	.83	.03268
.04	.00157	.24	.00945	.44	.01732	.64	.02520	.84	.03307
.05	.00197	.25	.00984	.45	.01772	.65	.02559	.85	.03346
.06	.00236	.26	.01024	.46	.01811	.66	.02598	.86	.03386
.07	.00276	.27	.01063	.47	.01850	.67	.02638	.87	.03425
.08	.00315	.28	.01102	.48	.01890	.68	.02677	.88	.03465
.09	.00354	.29	.01142	.49	.01929	.69	.02717	.89	.03504
.10	.00394	.30	.01181	.50	.01969	.70	.02756	.90	.03543
.11	.00433	.31	.01220	.51	.02008	.71	.02795	.91	.03583
.12	.00472	.32	.01260	.52	.02047	.72	.02835	.92	.03622
.13	.00512	.33	.01299	.53	.02087	.73	.02874	.93	.03661
.14	.00551	.34	.01339	.54	.02126	.74	.02913	.94	.03701
.15	.00591	.35	.01378	.55	.02165	.75	.02953	.95	.03740
.16	.00630	.36	.01417	.56	.02205	.76	.02992	.96	.03780
.17	.00669	.37	.01457	.57	.02244	.77	.03032	.97	.03819
.18	.00709	.38	.01496	.58	.02283	.78	.03071	.98	.03858
.19	.00748	.39	.01535	.59	.02323	.79	.03110	.99	.03898
.20	.00787	.40	.01575	.60	.02362	.80	.03150	1.00	.03937

TORQUE REFERENCES

DESCRIPTION

Individual torque charts appear within many of the groups. Refer to the Standard Torque Specifications Chart for torque references not listed in the individual torque charts.

SPECIFIED TORQUE FOR STANDARD BOLTS

Class	Diameter mm	Pitch mm	Specified torque					
			Hexagon head bolt			Hexagon flange bolt		
			N•m	kgf-cm	ft-lbf	N•m	kgf-cm	ft-lbf
4T	6	1	5	55	48 in.-lbf	6	60	52 in.-lbf
	8	1.25	12.5	130	9	14	145	10
	10	1.25	26	260	19	29	290	21
	12	1.25	47	480	35	53	540	39
	14	1.5	74	760	55	84	850	61
	16	1.5	115	1,150	83	—	—	—
5T	6	1	6.5	65	56 in.-lbf	7.5	75	65 in.-lbf
	8	1.25	15.5	160	12	17.5	175	13
	10	1.25	32	330	24	36	360	26
	12	1.25	59	600	43	65	670	48
	14	1.5	91	930	67	100	1,050	76
	16	1.5	140	1,400	101	—	—	—
6T	6	1	8	80	69 in.-lbf	9	90	78 in.-lbf
	8	1.25	19	195	14	21	210	15
	10	1.25	39	400	29	44	440	32
	12	1.25	71	730	53	80	810	59
	14	1.5	110	1,100	80	125	1,250	90
	16	1.5	170	1,750	127	—	—	—
7T	6	1	10.5	110	8	12	120	9
	8	1.25	25	260	19	28	290	21
	10	1.25	52	530	38	58	590	43
	12	1.25	95	970	70	105	1,050	76
	14	1.5	145	1,500	108	165	1,700	123
	16	1.5	230	2,300	166	—	—	—
8T	8	1.25	29	300	22	33	330	24
	10	1.25	61	620	45	68	690	50
	12	1.25	110	1,100	80	120	1,250	90
9T	8	1.25	34	340	25	37	380	27
	10	1.25	70	710	51	78	790	57
	12	1.25	125	1,300	94	140	1,450	105
10T	8	1.25	38	390	28	42	430	31
	10	1.25	78	800	58	88	890	64
	12	1.25	140	1,450	105	155	1,600	116
11T	8	1.25	42	430	31	47	480	35
	10	1.25	87	890	64	97	990	72
	12	1.25	155	1,600	116	175	1,800	130

VECI LABEL

DESCRIPTION

All models have a Vehicle Emission Control Information (VECI) Label. Chrysler permanently attaches the label in the engine compartment. It cannot be removed without defacing information and destroying the label.

The label contains the vehicle's emission specifications and vacuum hose routings. All hoses must be connected and routed according to the label.

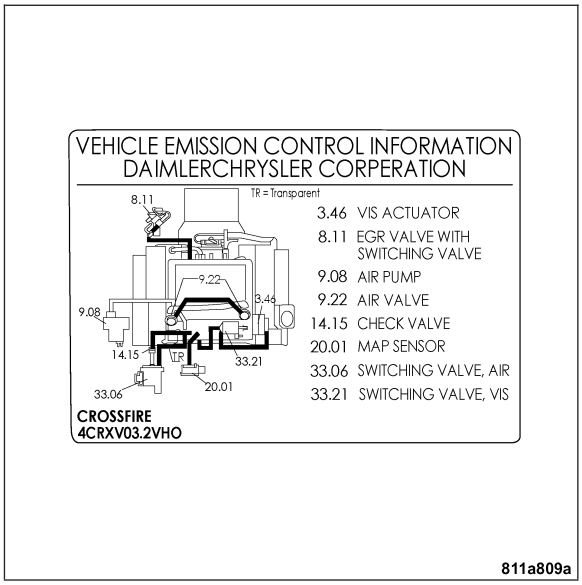

LUBRICATION & MAINTENANCE

TABLE OF CONTENTS

page

LUBRICATION & MAINTENANCE
SPECIFICATIONS - FLUID CAPACITIES 1
FLUID TYPES
DESCRIPTION
ENGINE OIL AND LUBRICANTS 2
DESCRIPTION - HOAT COOLANT 4
DESCRIPTION - AUTOMATIC TRANSMISSION FLUID 5
DESCRIPTION - DIFFERENTIAL LUBRICANT 6
INTERNATIONAL SYMBOLS
DESCRIPTION 6
FLUID FILL/CHECK LOCATIONS
DESCRIPTION 6

page

TOWING
STANDARD PROCEDURE - TOWING 6
JUMP STARTING
STANDARD PROCEDURE
JUMP STARTING 8
HOISTING
STANDARD PROCEDURE - HOISTING 10
MAINTENANCE SCHEDULES
DESCRIPTION - FLEXIBLE SERVICE SYSTEM (FSS) 11
LUBRICATION POINTS
DESCRIPTION 14
EMERGENCY TOW HOOKS
DESCRIPTION 14

LUBRICATION & MAINTENANCE

SPECIFICATIONS - FLUID CAPACITIES

FLUID	CAPACITY
Automatic Transmission Fluid	8.0 L (8.5 qts.)
Brake System	0.5 L (0.5 qts.)
Cooling System	11.2 L (11.8 qts.)
Engine Oil W/ Filter	5.5 L (6.1 qts.)
Fuel	60.0 L (15.8 gal.)
Manual Transmission Fluid	1.5 L (1.6 qts.)
Power Steering	1.0 L (1.1 qts.)
Rear Axle	1.3 L (1.4 qts.)

PARTS AND LUBRICANT RECOMMENDATIONS

When service is required, DaimlerChrysler Motor Corporation recommends that only Mopar® brand parts, lubricants and chemicals be used. Mopar provides the best engineered products for servicing DaimlerChrysler Corporation vehicles.

AUTOMATIC TRANSMISSION FLUID

Use Shell® 3403 automatic transmission fluid or equavalent.

ENGINE COOLANT

The green and the orange engine coolant MUST NOT BE MIXED.

FUEL

Crossfire engines require the use of unleaded fuel to reduce exhaust emissions. Use premium unleaded gasoline having a minimum octane rating of 91 (R+M)/2. Higher octane premium unleaded gasoline can be used if desired.

FLUID CHECK/FILL POINTS AND LUBRICATION LOCATIONS

The fluid check/fill points and lubrication locations are located in each applicable Sections.

FLUID TYPES

DESCRIPTION

ENGINE OIL AND LUBRICANTS

WARNING: NEW OR USED ENGINE OIL CAN BE IRRITATING TO THE SKIN. AVOID PROLONGED OR REPEATED SKIN CONTACT WITH ENGINE OIL. CONTAMINANTS IN USED ENGINE OIL, CAUSED BY INTERNAL COMBUSTION, CAN BE HAZARDOUS TO YOUR HEALTH. THOROUGHLY WASH EXPOSED SKIN WITH SOAP AND WATER. DO NOT WASH SKIN WITH GASOLINE, DIESEL FUEL, THINNER, OR SOLVENTS, HEALTH PROBLEMS CAN RESULT. DO NOT POLLUTE, DISPOSE OF USED ENGINE OIL PROPERLY. CONTACT YOUR DEALER OR GOVERNMENT AGENCY FOR LOCATION OF COLLECTION CENTER IN YOUR AREA.

When service is required, DaimlerChrysler Corporation recommends that only Mopar® brand parts, lubricants and chemicals be used. Mopar® provides the best engineered products for servicing DaimlerChrysler Corporation vehicles.

Only lubricants bearing designations defined by the following organization should be used.

- Society of Automotive Engineers (SAE)
- American Petroleum Institute (API)
- National Lubricating Grease Institute (NLGI)

API SERVICE GRADE CERTIFIED

Use an engine oil that is API Certified. MOPAR® provides engine oils, that meet or exceed this requirement.

SAE VISCOSITY

An SAE viscosity grade is used to specify the viscosity of engine oil. Use only engine oils with multiple viscosities such as 5W-30 or 10W-30. These are specified with a dual SAE viscosity grade which indicates the cold-to-hot temperature viscosity range. Select an engine oil that is best suited to your particular temperature range and variation.

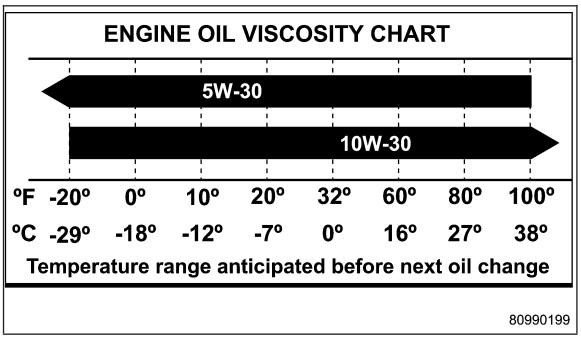

ENERGY CONSERVING OIL

An Energy Conserving type oil is recommended for gasoline engines. The designation of ENERGY CONSERVING is located on the label of an engine oil container.

CONTAINER IDENTIFICATION

Standard engine oil identification notations have been adopted to aid in the proper selection of engine oil. The identifying notations are located on the front label of engine oil plastic bottles and the top of engine oil cans.

This symbol means that the oil has been certified by the American Petroleum Institute (API). DiamlerChrysler only recommend API Certified engine oils. Use Mopar® engine oil or equivalent.



811bb77e

GEAR LUBRICANTS

SAE ratings also apply to multigrade gear lubricants. In addition, API classification defines the lubricants usage. Such as API GL-5 and SAE 75W-90.

LUBRICANTS AND GREASES

Lubricating grease is rated for quality and usage by the NLGI. All approved products have the NLGI symbol on the label. At the bottom of the NLGI symbol is the usage and quality identification letters. Wheel bearing lubricant is identified by the letter “G”. Chassis lubricant is identified by the letter “L”. The letter following the usage letter indicates the quality of the lubricant. The following symbols indicate the highest quality.

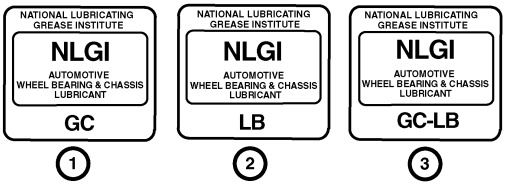

811bb024

SPECIALIZED LUBRICANTS AND OILS

Some maintenance or repair procedures may require the use of specialized lubricants or oils. Consult the appropriate sections in this manual for the correct application of these lubricants.

DESCRIPTION - HOAT COOLANT

WARNING: ANTIFREEZE IS AN ETHYLENE-GLYCOL BASE COOLANT AND IS HARMFUL IF SWALLOWED OR INHALED. IF SWALLOWED, DRINK TWO GLASSES OF WATER AND INDUCE VOMITING. IF INHALED, MOVE TO FRESH AIR AREA. SEEK MEDICAL ATTENTION IMMEDIATELY. DO NOT STORE IN OPEN OR UNMARKED CONTAINERS. WASH SKIN AND CLOTHING THOROUGHLY AFTER COMING IN CONTACT WITH ETHYLENE-GLYCOL. KEEP OUT OF REACH OF CHILDREN. DISPOSE OF GLYCOL BASE COOLANT PROPERLY, CONTACT YOUR DEALER OR GOVERNMENT AGENCY FOR LOCATION OF COLLECTION CENTER IN YOUR AREA. DO NOT OPEN A COOLING SYSTEM WHEN THE ENGINE IS AT OPERATING TEMPERATURE OR HOT UNDER PRESSURE, PERSONAL INJURY CAN RESULT. AVOID RADIATOR COOLING FAN WHEN ENGINE COMPARTMENT RELATED SERVICE IS PERFORMED, PERSONAL INJURY CAN RESULT.

CAUTION: Use of Propylene-Glycol based coolants is not recommended, as they provide less freeze protection and less corrosion protection.

The cooling system is designed around the coolant. The coolant must accept heat from engine metal, in the cylinder head area near the exhaust valves and engine block. Then coolant carries the heat to the radiator where the tube/fin radiator can transfer the heat to the air.

The use of aluminum cylinder blocks, cylinder heads, and water pumps requires special corrosion protection. Mopar® Antifreeze/Coolant, 5 Year/100,000 Mile Formula (MS-9769), or the equivalent ethylene-glycol base coolant with organic corrosion inhibitors (called HOAT, for Hybrid Organic Additive Technology) is recommended. This coolant offers the best engine cooling without corrosion when mixed with 50% ethylene-glycol and 50% distilled water to obtain a freeze point of -37°C (-35°F). If it loses color or becomes contaminated, drain, flush, and replace with fresh properly mixed coolant solution.

CAUTION: Mopar® Antifreeze/Coolant, 5 Year/100,000 Mile Formula (MS-9769) may not be mixed with any other type of antifreeze. Mixing of coolants other than specified (non-HOAT or other HOAT), may result in engine damage that may not be covered under the new vehicle warranty, and decreased corrosion protection.

COOLANT PERFORMANCE

The required ethylene-glycol (antifreeze) and water mixture depends upon climate and vehicle operating conditions. The coolant performance of various mixtures follows:

Pure Water-Water can absorb more heat than a mixture of water and ethylene-glycol. This is for purpose of heat transfer only. Water also freezes at a higher temperature and allows corrosion.

100 percent Ethylene-Glycol-The corrosion inhibiting additives in ethylene-glycol need the presence of water to dissolve. Without water, additives form deposits in system. These act as insulation causing temperature to rise to as high as 149°C (300°F). This temperature is hot enough to melt plastic and soften solder. The increased temperature can result in engine detonation. In addition, 100 percent ethylene-glycol freezes at -22°C (-8°F).

50/50 Ethylene-Glycol and Water-Is the recommended mixture, it provides protection against freezing to -37°C (-35°F). The antifreeze concentration **must always** be a minimum of 44 percent, year-round in all climates. If percentage is lower, engine parts may be eroded by cavitation. Maximum protection against freezing is provided with a 68 percent antifreeze concentration, which prevents freezing down to -67.7°C (-90°F). A higher percentage will freeze at a warmer temperature. Also, a higher percentage of antifreeze can cause the engine to overheat because specific heat of antifreeze is lower than that of water.

CAUTION: Richer antifreeze mixtures cannot be measured with normal field equipment and can cause problems associated with 100 percent ethylene-glycol.

COOLANT SELECTION AND ADDITIVES

The use of aluminum cylinder blocks, cylinder heads and water pumps requires special corrosion protection. Only Mopar® Antifreeze/Coolant, 5 Year/100,000 Mile Formula (glycol base coolant with corrosion inhibitors called HOAT, for Hybrid Organic Additive Technology) is recommended. This coolant offers the best engine cooling without corrosion when mixed with 50% distilled water to obtain a freeze point of -37°C (-35°F). If it loses color or becomes contaminated, drain, flush, and replace with fresh properly mixed coolant solution.

CAUTION: Do not use coolant additives that are claimed to improve engine cooling.

DESCRIPTION - AUTOMATIC TRANSMISSION FLUID

Note: Refer to the maintenance schedules for the recommended maintenance (fluid/filter change) intervals for this transmission.

Note: For fluid level checking procedures, **Refer to Page 21-294** .

TRANSMISSION FLUID

Shell® 3403 Automatic Transmission Fluid (ATF) when new is red in color. The ATF is dyed red so it can be identified from other fluids used in the vehicle such as engine oil or antifreeze. The red color is not permanent and is not an indicator of fluid condition. As the vehicle is driven, the ATF will begin to look darker in color and may eventually become brown. **This is normal.** 3403 also has a unique odor that may change with age. Consequently, **odor and color cannot be used to indicate the fluid condition or the need for a fluid change.**

FLUID ADDITIVES

DaimlerChrysler strongly recommends against the addition of any fluids to the transmission, other than those automatic transmission fluids listed above. Exceptions to this policy are the use of special dyes to aid in detecting fluid leaks.

Various “special” additives and supplements exist that claim to improve shift feel and/or quality. These additives and others also claim to improve converter clutch operation and inhibit overheating, oxidation, varnish, and sludge. These claims have not been supported to the satisfaction of DaimlerChrysler and these additives **must not be used.** The use of transmission “sealers” should also be avoided, since they may adversely affect the integrity of transmission seals.

DESCRIPTION - DIFFERENTIAL LUBRICANT

Note: Refer to the Owner's Manual for the recommended differential lubricant change intervals for this axle.

INTERNATIONAL SYMBOLS

DESCRIPTION

DaimlerChrysler Corporation uses international symbols to identify engine compartment lubricant and fluid inspection and fill locations.

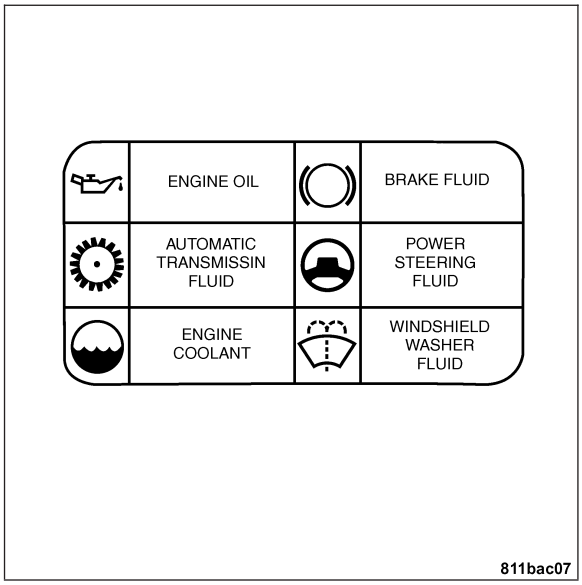

FLUID FILL/CHECK LOCATIONS

DESCRIPTION

The fluid fill/check point locations are located in each applicable service manual section.

TOWING

STANDARD PROCEDURE - TOWING

WARNINGS AND PRECAUTIONS

WARNING: DO NOT ALLOW TOWING ATTACHMENT DEVICES TO CONTACT THE FUEL TANK OR LINES, FUEL LEAK CAN RESULT. DO NOT VENTURE UNDER A LIFTED VEHICLE IF NOT SUPPORTED PROPERLY ON SAFETY STANDS. DO NOT ALLOW PASSENGERS TO RIDE IN A TOWED VEHICLE. USE A SAFETY CHAIN THAT IS INDEPENDENT FROM THE TOWING ATTACHMENT DEVICE.

CAUTION: Do not damage brake lines, exhaust system, shock absorbers, sway bars, or any other under vehicle components when attaching towing device to vehicle. Remove or secure loose or protruding objects from a damaged vehicle before towing. Refer to state and local rules and regulations before towing a vehicle. Do not allow weight of towed vehicle to bear on lower fascia, grill or front structure.

To avoid damage to the front fascia and grille use of a flat bed towing device is recommended. **DO NOT** attempt to tow the vehicle from the front or the rear. Towing from the front is not possible without sustaining damage to the nose/front fascia due to the extended distance between the wheels and the pointed nose/front fascia. Towing from the rear is not possible without sustaining damage to the rear fascia and the exhaust system.

TOWING RECOMMENDATIONS

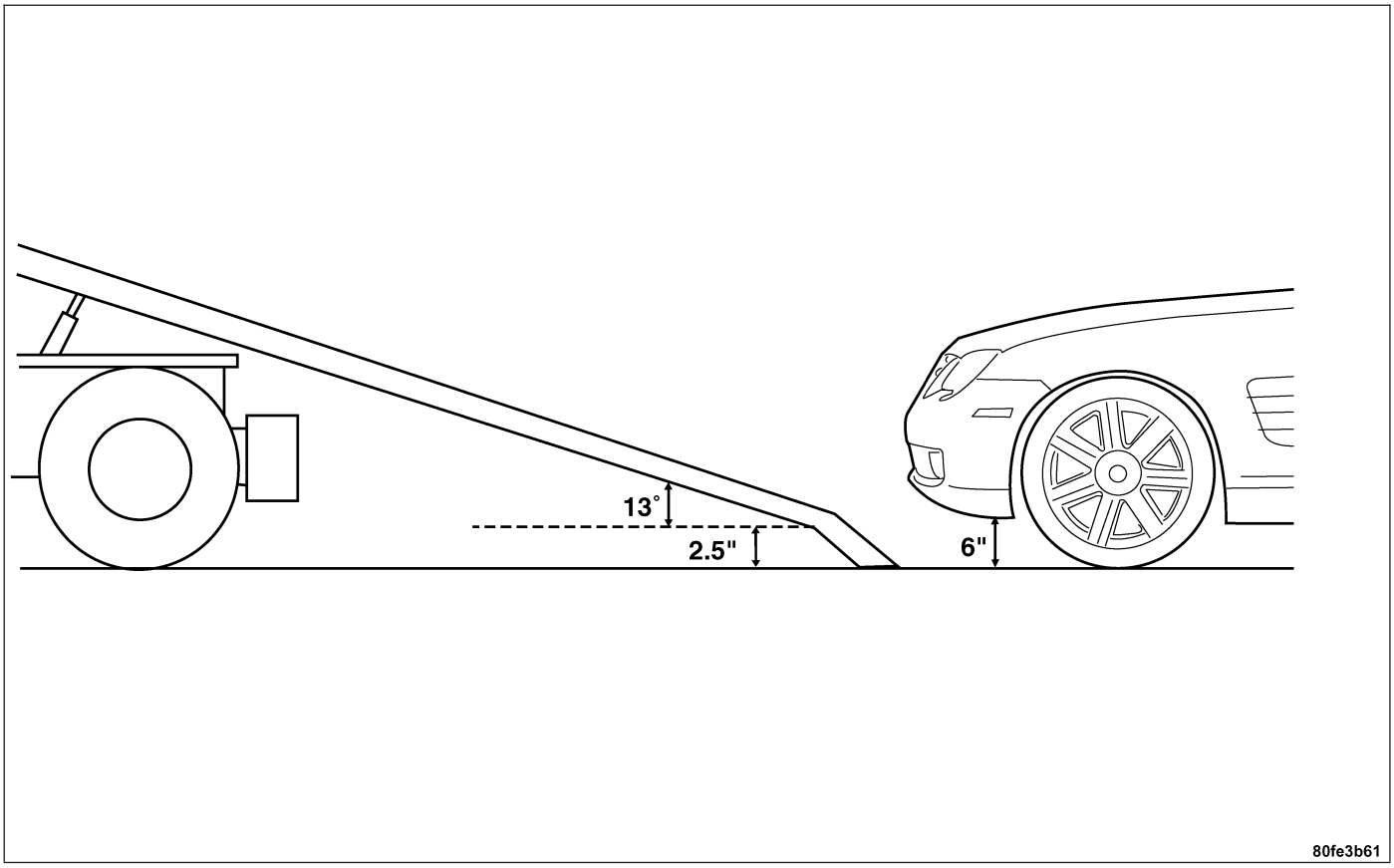

Flat bed towing should be the only method used for the Chrysler Crossfire. The flat bed must have an approach angle less then 13.3° or something must be used (such as wood slats) to raise the overall height of the vehicle during loading.

GROUND CLEARANCE

CAUTION: If vehicle is towed with wheels removed, install lug nuts to retain brake rotors.

A towed vehicle should be raised until the lifted wheels are a minimum 100 mm (4 in.) from the ground. Be sure there is at least 100 mm (4 in.) clearance between the tail pipe and the ground. If necessary, remove the wheels from the lifted end of the vehicle and lower the vehicle closer to the ground, to increase the ground clearance at the rear of the vehicle. Install lug nuts on wheel attaching studs to retain brake rotors.

JUMP STARTING

STANDARD PROCEDURE

JUMP STARTING

WARNING: DO NOT JUMP START A FROZEN BATTERY, PERSONAL INJURY CAN RESULT.

WARNING: WHEN USING A HIGH OUTPUT BOOSTING DEVICE, DO NOT ALLOW BATTERY VOLTAGE TO EXCEED 16 VOLTS. REFER TO INSTRUCTIONS PROVIDED WITH DEVICE BEING USED.

WARNING: DO NOT JUMP START WHEN MAINTENANCE FREE BATTERY INDICATOR DOT IS YELLOW OR BRIGHT COLOR.

WARNING: DO NOT JUMP START A VEHICLE WHEN THE BATTERY FLUID IS BELOW THE TOP OF LEAD PLATES.

WARNING: DO NOT ALLOW JUMPER CABLE CLAMPS TO TOUCH EACH OTHER WHEN CONNECTED TO A BOOSTER SOURCE.

WARNING: DO NOT USE OPEN FLAME NEAR BATTERY. REMOVE METALLIC JEWELRY WORN ON HANDS OR WRISTS TO AVOID INJURY BY ACCIDENTAL ARCING OF BATTERY CURRENT.

CAUTION: When using another vehicle as a booster, do not allow vehicles to touch. Electrical systems can be damaged on either vehicle.

TO JUMP START A DISABLED VEHICLE:

WARNING: SHIELD EYES AND FACE FROM BATTERIES AT ALL TIMES

CAUTION: If the cause of starting problem on disabled vehicle is severe, damage to booster vehicle charging system can result.

1. Raise hood on disabled vehicle and visually inspect engine compartment for:
   - Battery cable clamp condition, clean if necessary.
   - Frozen battery.
   - Yellow or bright color test indicator, if equipped.
   - Low battery fluid level.
   - Generator drive belt condition and tension.
   - Fuel fumes or leakage, correct if necessary.

2. When using another vehicle as a booster source, park the booster vehicle within cable reach. Turn off all accessories, set the parking brake, place the automatic transmission in PARK or the manual transmission in NEUTRAL and turn the ignition OFF.
3. On disabled vehicle, place gear selector in park or neutral and set park brake. Turn off all accessories.
4. Connect positive jumper cable to positive (+) terminal of the disabled battery.
5. Connect other end of positive jumper cable to positive terminal (+) booster battery.
6. Connect negative jumper cable to negative (-) terminal of the booster battery.
7. Make final connection of the negative (-) jumper cable to the ENGINE GROUND of disabled vehicle, away from battery.

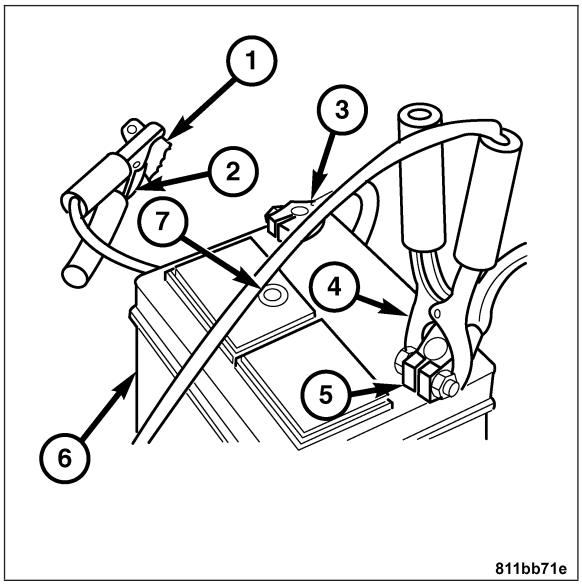

CAUTION: Do not crank starter motor on disabled vehicle for more than 15 seconds, starter will overheat and could fail.

8. Start the engine in the vehicle which has the booster battery, let the engine idle a few minutes, then start the engine in the vehicle with the discharged battery.
9. Allow battery in disabled vehicle to charge to at least 12.4 volts (75% charge) before attempting to start engine. If engine does not start within 15 seconds, stop cranking engine and allow starter to cool (15 minutes), before cranking again.

DISCONNECT CABLE CLAMPS AS FOLLOWS:

1. Disconnect the negative (-) jumper cable clamp from engine ground on disabled vehicle.
2. Disconnect the negative (-) jumper cable clamp from booster vehicle.
3. Disconnect positive (+) jumper cable from battery positive (+) terminal on disabled vehicle.
4. Disconnect positive (+) jumper cable from battery positive (+) terminal on booster vehicle.

HOISTING

STANDARD PROCEDURE - HOISTING

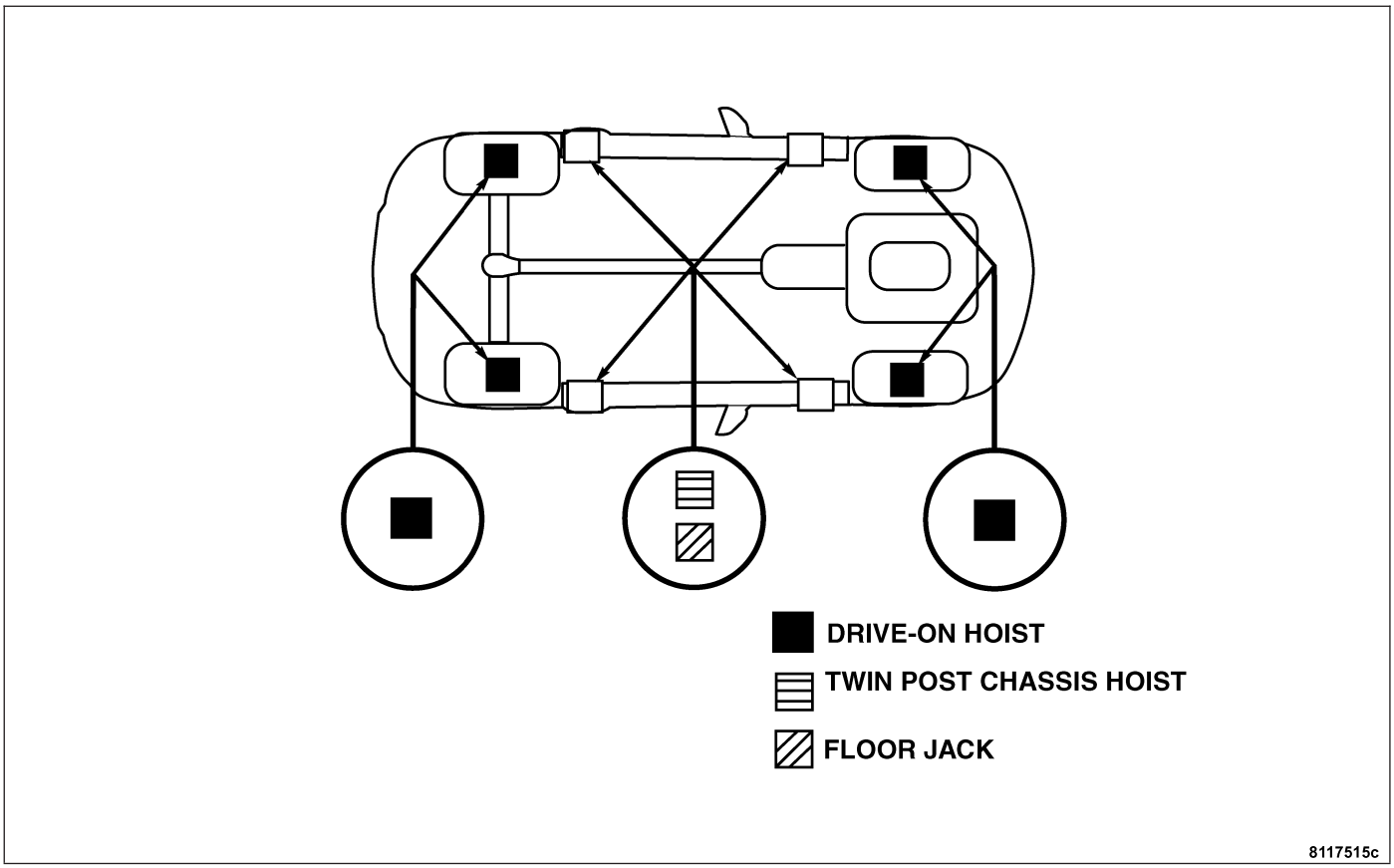

WARNING: THE HOISTING AND JACK LIFTING POINTS PROVIDED ARE FOR A COMPLETE VEHICLE. WHEN THE ENGINE, TRANSMISSION OR REAR SUSPENSION IS REMOVED FROM A VEHICLE, THE CENTER OF GRAVITY IS ALTERED MAKING SOME HOISTING CONDITIONS UNSTABLE. PROPERLY SUPPORT OR SECURE VEHICLE TO HOISTING DEVICE WHEN THESE CONDITIONS EXIST.

CAUTION: Do not position hoisting device on suspension components, damage to vehicle can result.

The vehicle can be lifted with:

- A twin-post, chassis hoist.
- A ramp-type, drive-on hoist.

FLOOR JACK

When properly positioned, a floor jack can be used to lift the vehicle. Support the vehicle in the raised position with jack stands at the front and rear ends of the frame rails.

CAUTION: Do not lift vehicle with a floor jack positioned under:

- **An axle shaft.**
- **A body side sill.**
- **A steering linkage component.**
- **A drive shaft.**
- **The engine or transmission oil pan.**
- **A front suspension arm.**

MAINTENANCE SCHEDULES

DESCRIPTION - FLEXIBLE SERVICE SYSTEM (FSS)

The Flexible Service System (FSS) is a demand-activated engine oil service system. The FSS will illuminate a symbol (2) in the instrument cluister to indicate to the driver when a particular service is due. After a level has dropped below a warning threshold, the remaining distance or the remaining time and the tool symbol (2) are displayed in the panel of the odometer.

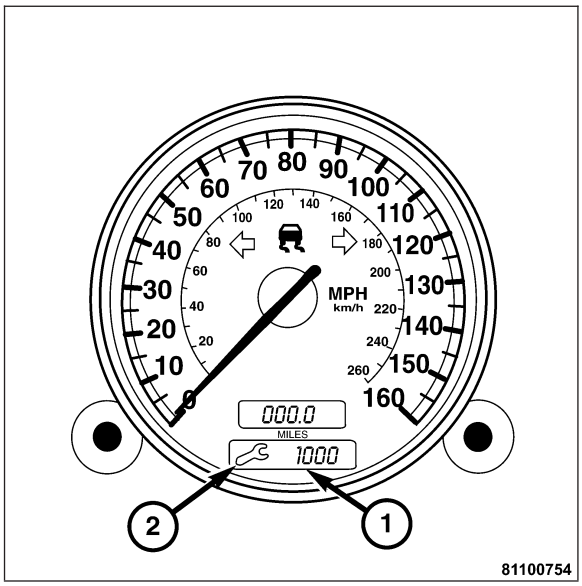

The FSS is supplied the time intervals from the digital clock in the instrument cluster. The remaining information is supplied by the Powertrain Control Module (PCM) and the Controller Antilock Brake (CAB) via the Controller Area Network (CAN) data bus. The data required for FSS from the CAN includes the following:

- The four wheel speed sensors from the CAB.
- Coolant temperature from the PCM.
- Engine speed from the PCM.
- Load torque from the PCM.

TRIP ODOMETER, FSS INDICATOR

This display in the instrument cluster shows the distance traveled since last reset.

To reset:

- Press the button to the left of the display once (with the key in the ON/RUN position).
- Press the button twice (with the key removed or in the OFF/ACC position).

MAIN ODOMETER

This shows the total distance the vehicle has traveled.

The FSS permits a flexible service schedule that is directly related to the operating conditions of the vehicle.

There are two symbols which will appear in the main odometer display field prior to the next suggested service.

This symbol represents Service A.

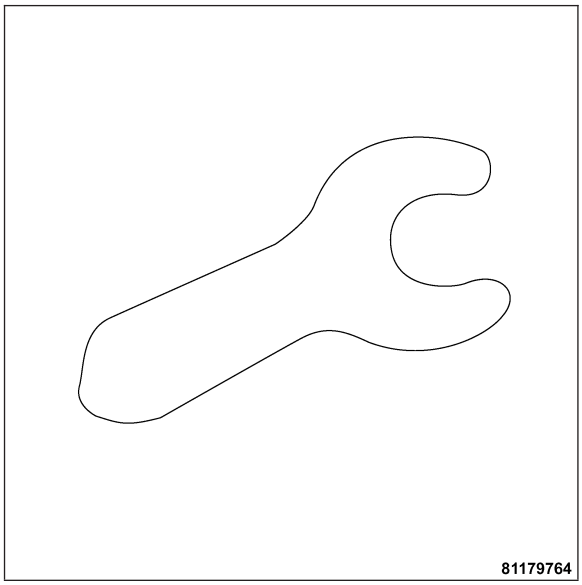

The second symbol represents Service B.

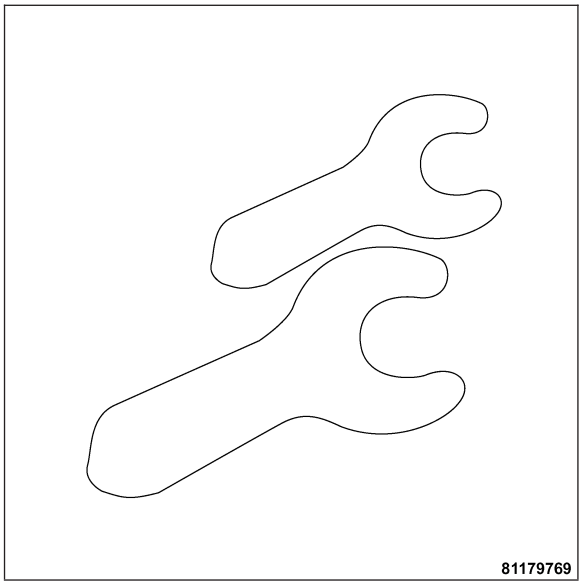

Depending on operating conditions throughout the year, the next service is calculated and displayed next to the this symbol in days remaining before the next service is required.

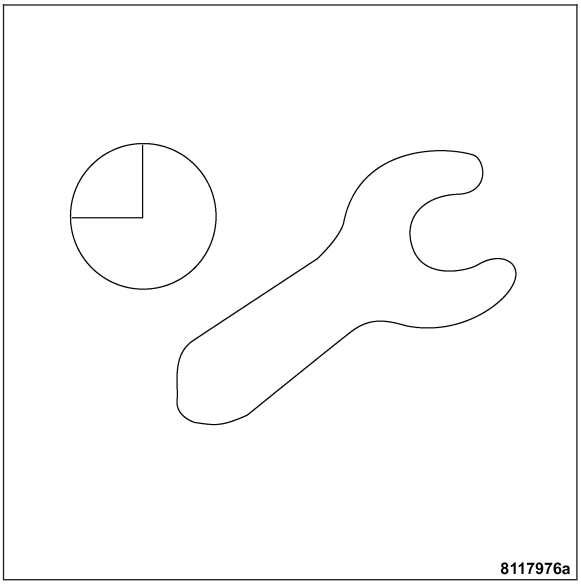

The next service may be calculated and displayed next to this symbol as distance remaining before the next service is required.

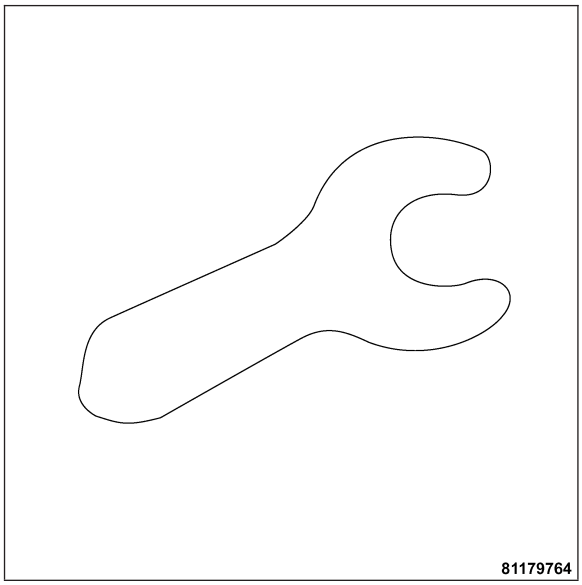

The counter can also be reset by any individual after the indicated service has been performed. To do so:

1. Turn the key to the ON/RUN position.
2. Within one second press the knob/button to the left of the display twice.
3. The present status for days remaining or distance traveled is displayed. Within ten seconds turn the key to OFF.
4. Press and hold the knob/button to the left of the display, while turning the key to ON/RUN again. The present status for days remaining or distance traveled is displayed once more. Continue to hold the knob/button to the left of the display.

After approximately ten seconds, a tone sounds and the display shows 6,000 miles (10,000 km) for approximately ten seconds.

5. Release the knob/button to the left of the display.

If the FSS counter was inadvertently reset, the counter must be reset.

The message is displayed for approximately ten seconds when turning the key to the ON/RUN position, or while driving when reaching the service warning threshold. It can be cancelled manually by pressing the knob/button to the left of the display.

Once the suggested term has passed, the message, plus either the symbol for Service A or the symbol for Service B preceded by a “–” (minus symbol) blinks for approximately thirty seconds and a tone sounds every time when turning the key to the ON/RUN position.

The FSS display can also be called up for approximately ten seconds with the display illuminated by pressing the knob/button to the left of the display twice within one second.

Note: When disconnecting the battery for one or more days at a time, such days will not be counted. Any such days not counted by the FSS can be added.

The interval between services is determined by the type of vehicle operation. Driving at extreme speeds, and cold starts combined with short distance driving in which the engine does not reach normal operating temperature, reduce the interval between services.

LUBRICATION POINTS

DESCRIPTION

Lubrication point locations are located in each applicable Section.

EMERGENCY TOW HOOKS

DESCRIPTION

WARNING: REMAIN AT A SAFE DISTANCE FROM A VEHICLE THAT IS BEING TOWED VIA ITS TOW HOOKS. THE TOW STRAPS/CHAINS COULD BREAK AND CAUSE SERIOUS INJURY.

The tow hooks should be used for **EMERGENCY** purposes only.

CAUTION: DO NOT USE EMERGENCY TOW HOOKS FOR TOW TRUCK HOOK-UP OR HIGHWAY TOWING.

SUSPENSION

TABLE OF CONTENTS

	page
SUSPENSION	
DIAGNOSIS AND TESTING - SUSPENSION AND STEERING SYSTEM	1
SPECIAL TOOLS SUSPENSION	2
WHEEL ALIGNMENT	4
FRONT SUSPENSION	14
REAR SUSPENSION	48

SUSPENSION

DIAGNOSIS AND TESTING - SUSPENSION AND STEERING SYSTEM

CONDITION	POSSIBLE CAUSES	CORRECTION
FRONT END NOISE	1. Loose or worn wheel bearings.	1. Adjust or replace wheel bearings.
	2. Loose or worn steering or suspension components.	2. Tighten or replace components as necessary.
EXCESSIVE PLAY IN STEERING	1. Loose or worn wheel bearings.	1. Adjust or replace wheel bearings.
	2. Loose or worn steering or suspension components.	2. Tighten or replace components as necessary.
	3. Loose or worn steering gear.	3. Adjust or replace steering gear.
FRONT WHEELS SHIMMY	1. Loose or worn wheel bearings.	1. Adjust or replace wheel bearings.
	2. Loose or worn steering or suspension components.	2. Tighten or replace components as necessary.
	3. Tires worn or out of balance.	3. Replace or balance tires.
	4. Alignment.	4. Align vehicle to specifications.
	5. Leaking steering dampener.	5. Replace steering dampener.
VEHICLE INSTABILITY	1. Loose or worn wheel bearings.	1. Adjust or replace wheel bearings.
	2. Loose or worn steering or suspension components.	2. Tighten or replace components as necessary.
	3. Tire pressure.	3. Adjust tire pressure.
	4. Alignment.	4. Align vehicle to specifications.
EXCESSIVE STEERING EFFORT	1. Loose or worn steering gear.	1. Adjust or replace steering gear.
	2. Power steering fluid low.	2. Add fluid and repair leak.
	3. Column coupler binding.	3. Replace coupler.
	4. Tire pressure.	4. Adjust tire pressure.
	5. Alignment.	5. Align vehicle to specifications.

CONDITION	POSSIBLE CAUSES	CORRECTION
VEHICLE PULLS TO ONE SIDE DURING BRAKING	1. Uneven tire pressure. 2. Worn brake components. 3. Air in brake line.	1. Adjust tire pressure. 2. Repair brakes as necessary. 3. Repair as necessary.
VEHICLE LEADS OR DRIFTS FROM STRAIGHT AHEAD DIRECTION ON UNCROWNED ROAD	1. Radial tire lead. 2. Brakes dragging. 3. Weak or broken spring. 4. Uneven tire pressure. 5. Wheel Alignment. 6. Loose or worn steering or suspension components. 7. Cross caster out of specification.	1. Cross front tires. 2. Repair brake as necessary. 3. Replace spring. 4. Adjust tire pressure. 5. Align vehicle. 6. Repair as necessary. 7. Align vehicle.
KNOCKING, RATTLING OR SQUEAKING	1. Worn shock bushings. 2. Loose, worn or bent steering/ suspension components. 3. Worn shock valve.	1. Replace shock. 2. Inspect, tighten or replace components as necessary. 3. Replace shock.
IMPROPER TRACKING	1. Loose, worn or bent track bar. 2. Loose, worn or bent steering/ suspension components.	1. Inspect, tighten or replace component as necessary. 2. Inspect, tighten or replace components as necessary.

SPECIAL TOOLS

SUSPENSION

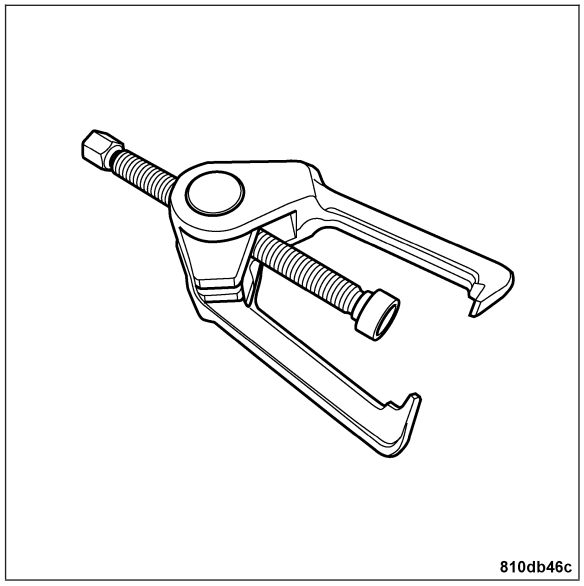

C-3894–A Tie Rod Puller

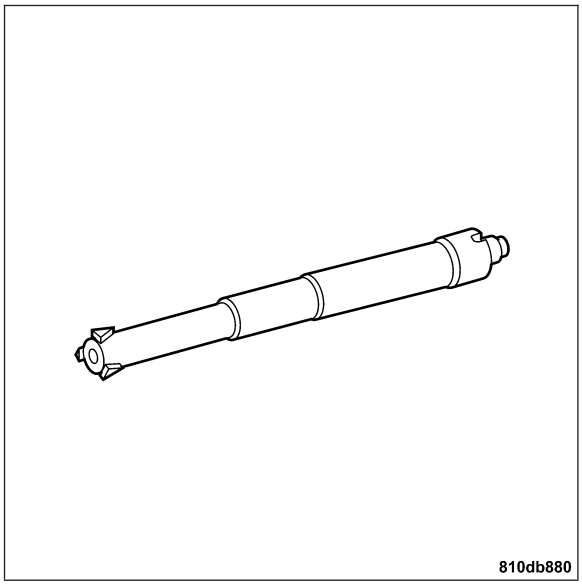

9150 Rear Spring Compressor

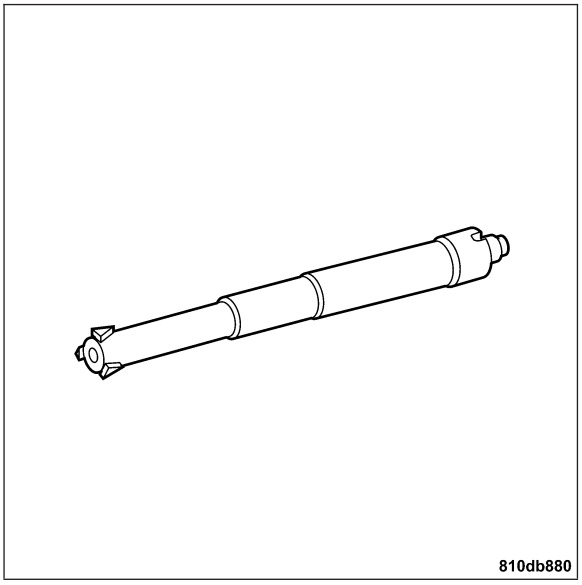

9150 Rear Spring Compressor

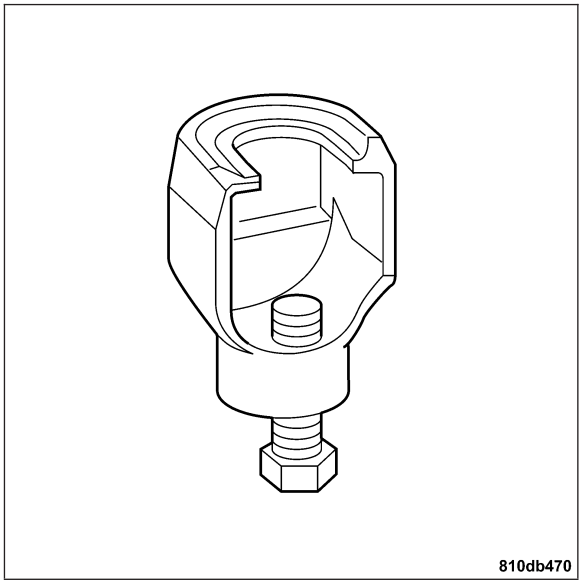

9168 Ball Joint Puller

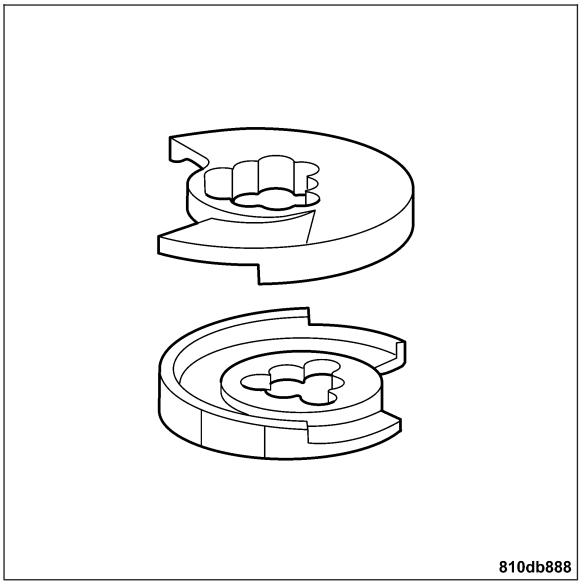

9152 Spring Compressor Plates

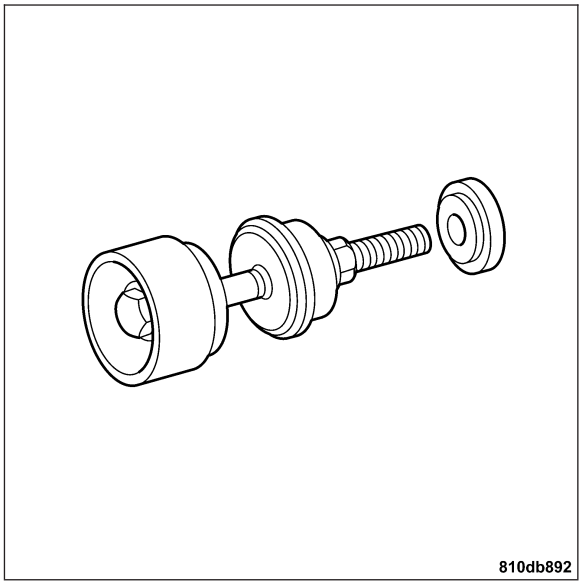

9199 Bearing Tool

WHEEL ALIGNMENT

TABLE OF CONTENTS

page

WHEEL ALIGNMENT
DESCRIPTION 4
OPERATION 5
STANDARD PROCEDURE
STANDARD PROCEDURE - WHEEL ALIGNMENT INSPECTION 6
STANDARD PROCEDURE - CHASSIS ALIGNMENT INSPECTION 7
INSPECTING AND ADJUSTING VEHICLE LEVEL AT FRONT AND REAR AXLES 8
INSPECTING AND ADJUSTING VEHICLE LEVEL AT FRONT AND REAR AXLES WITH AN ELECTRONIC INCLINOMETER 8

page

CHECKING AND ADJUSTING FRONT AXLE CAMBER AND CASTER 8
STANDARD PROCEDURE - CHECKING AND ADJUSTING FRONT TOE-IN 10
STANDARD PROCEDURE - CHECKING TOE-OUT ON TURNS 11
STANDARD PROCEDURE - CHECKING REAR AXLE CAMBER 11
STANDARD PROCEDURE - CHECKING AND ADJUSTING REAR AXLE TOE 12
SPECIFICATIONS
SPECIFICATIONS - WHEEL ALIGNMENT 13
SPECIFICATIONS - SUSPENSION 13

WHEEL ALIGNMENT

DESCRIPTION

CAUTION: Never attempt to modify suspension or steering components by heating or bending.

CAUTION: Components attached with a nut and cotter pin must be torqued to specification. Then if the slot in the nut does not line up with the cotter pin hole, tighten nut until it is aligned. Never loosen the nut to align the cotter pin hole.

Note: Periodic lubrication of the front suspension/steering system components may be required. Rubber bushings must never be lubricated.

Wheel alignment involves the correct positioning of the wheels in relation to the vehicle. The positioning is accomplished through suspension and steering linkage adjustments. An alignment is considered essential for efficient steering, good directional stability and to minimize tire wear. The most important measurements of an alignment are caster, camber and toe position.

OPERATION

CASTER

Is the forward or rearward tilt of the steering knuckle from vertical. Tilting the top of the knuckle rearward provides positive caster. Tilting the top of the knuckle forward provides negative caster. Caster is a directional stability angle. This angle enables the front wheels to return to a straight ahead position after turns. (2) Indicates the spring location. (1) Is the repair bolt for adjusting caster.

- +3 mm Range of adjustment ±25' Caster.

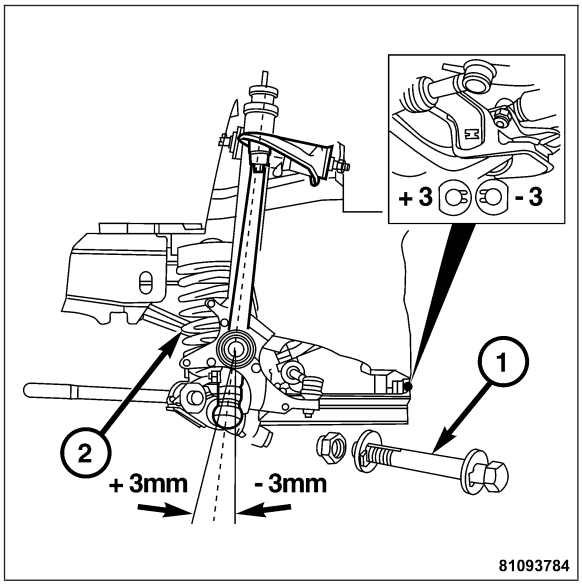

CAMBER

Is the inward or outward tilt of the wheel relative to the center of the vehicle. Tilting the top of the wheel inward provides negative camber (NEG.). Tilting the top of the wheel outward provides positive camber (POS.). Incorrect camber will cause wear on the inside or outside edge of the tire.

- +3 mm Range of adjustment ±25' Camber.

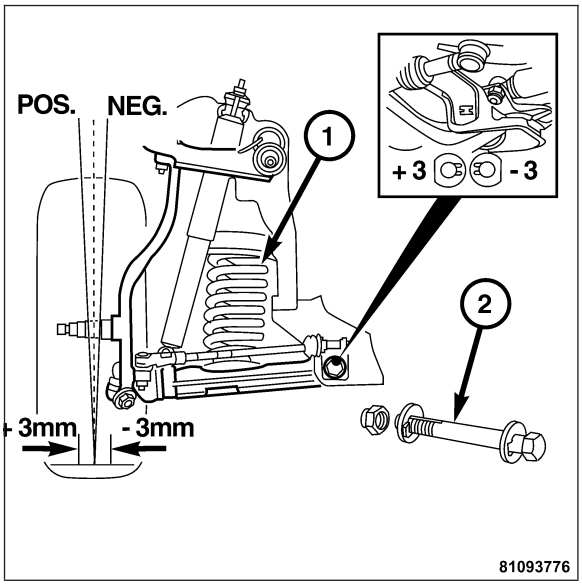

WHEEL TOE POSITION

Is the difference between the leading inside edges (B) and trailing inside edges (A) of the front tires. Incorrect wheel toe position is the most common cause of unstable steering and uneven tire wear. The wheel toe position is the **final** front wheel alignment adjustment.

- Negative Toe (Toe Out) B > A.
- Positive Toe (Toe In) B < A.

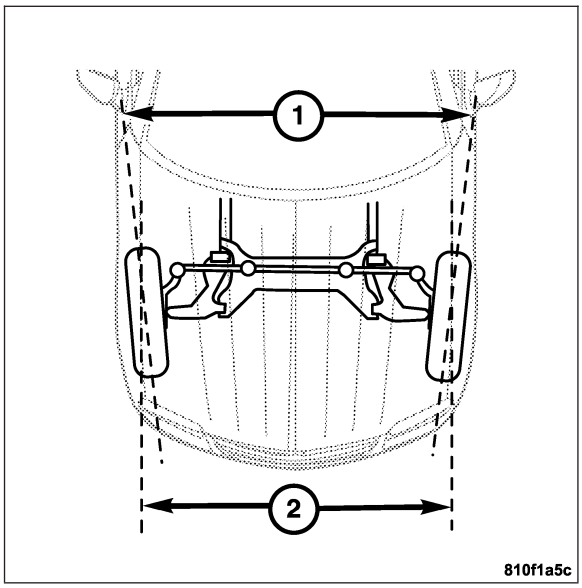

TOE-OUT ON TURNS

Toe-out on turns is the relative positioning (1) of the front wheels while steering through a turn. This compensates for each front wheel's turning radius. As the vehicle encounters a turn, the outboard wheel must travel in a larger radius circle than the inboard wheel. The steering system is designed to make each wheel follow its particular radius circle. To accomplish this, the front wheels must progressively toe outward as the steering is turned from center. This eliminates tire scrubbing and undue tire wear when steering a vehicle through a turn.

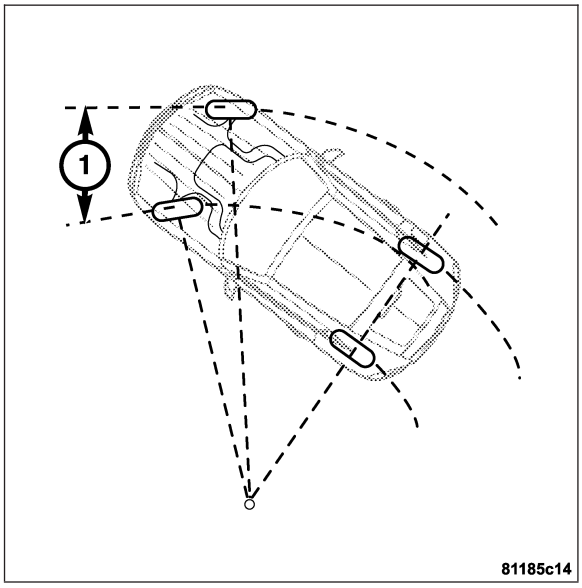

STEERING AXIS INCLINATION ANGLE

Is measured in degrees and is the angle that the steering knuckles are tilted. The inclination angle has a fixed relationship with the camber angle. It will not change except when a spindle or ball stud is damaged or bent. The angle is not adjustable, damaged component(s) must be replaced to correct the steering axis inclination angle.

STANDARD PROCEDURE

STANDARD PROCEDURE - WHEEL ALIGNMENT INSPECTION

1. Inspect the overall condition of the vehicle.
   - The vehicle should be properly aligned and adjusted to a ready to drive condition in which it is most frequently used. The chassis alignment inspection is carried out in reference to the vehicle level.
2. Use the measurement sheet for the chassis alignment inspection.
3. Inspect the tire condition.

- Perform a visual inspection for wear pattern, tread depth and any damage to the tires.

4. Inspect the wheel condition
   - Perform a visual inspection for any damage to the wheels.
5. Inspect the tire pressure.
   - Compare the tire pressure from the door placcard to the current tire pressure, correct the tire pressures if necessary.
6. Inspect the underside of the vehicle.
   - Inspect for any damage, corrosion of chassis parts and supporting body parts, leaks from any components and pipes.
7. Inspect the wheel bearing play.

Note: For the next step the vehicle must be sitting on its wheels.

8. Inspecting the condition of the steering mechanism.
   - With the ignition **OFF**, inspect the steering wheel play. Permissible play around circumference of steering wheel with steering in its center position is a maximum of .984 in. (25 mm).
   - Inspect the play of the tie rods and the drag links.
     - Inspect the track rod and drag link joints by pulling the tire back and forth with force or move steering wheel from left to right and vice versa approx. 100 mm while having a second mechanic feel the track rod and drag link joints.

Note: The right-hand is the pivot joint. This prevents any pivot movement in the drag links. If any play exists replace the tie rod link or the drag link.

   - Inspect the seals and condition of the rubber boots. If the rubber boot is not tight replace the tie rod link or replace the drag link.
   - Inspect the steering coupling. It must not have any play. If necessary, replace the steering coupling.
   - Inspect the steering gear for play. If play exists, adjust the vehicle's steering gear.

STANDARD PROCEDURE - CHASSIS ALIGNMENT INSPECTION

1. Observe the general information on chassis alignment inspection. **Refer to Page 2-6**.
2. Drive the vehicle onto an electronic measuring system.
3. Unlock the turntables and the sliding platforms.
4. Install a brake pedal winch on the brake pedal.
5. Attach the wheel sensors.
6. Perform the initial measurement process.
7. Inspect the vehicle level at the front and the rear axles and adjust if necessary. **Refer to Page 2-6**.
8. Inspect the vehicle level at the front and the rear axles with an electronic inclinometerand adjust if necessary. **Refer to Page 2-6**.
9. Inspect and adjust the rear axle toe. **Refer to Page 2-6**.
10. Inspect and adjust the front axle camber and caster. **Refer to Page 2-6**.
11. Inspect the rear axle camber. **Refer to Page 2-6**.
12. Inspect and adjust the front axle toe. **Refer to Page 2-6**.
13. Perform the final measurement of the vehicle.
14. Detach the sensors.
15. Remove the brake pedal winch.
16. Carefully drive the vehicle off the measuring system.
17. Lock the turntables.

INSPECTING AND ADJUSTING VEHICLE LEVEL AT FRONT AND REAR AXLES

1. Observe the general information on chassis alignment inspection. **Refer to Page 2-6**.
2. Inspect the vehicle level at the front axle by performing the following:
   - Insert measuring device between the retaining bolts of the lower control arm bearing.
   - Position the contact arm of measuring device on the control arm and read off the plumb value of vehicle level, viewed from the center of the vehicle. **Refer to Page 2-6**.
3. Inspect the vehicle level at the rear axle by performing the following:
   1. Loosen right rear frame brace and swivel to one side.
   2. Position contact arm on the rear axle shaft and read off the plumb value of the vehicle level, viewed from the center of the vehicle. **Refer to Page 2-6**.

Note: If the vehicle level at the front or rear axle is outside the tolerance, adjust the vehicle level by changing the springs or spring rubber mounts.

4. Adjust the vehicle level at the front and rear axles.

INSPECTING AND ADJUSTING VEHICLE LEVEL AT FRONT AND REAR AXLES WITH AN ELECTRONIC INCLINOMETER

1. Observe the general information on chassis alignment inspection. **Refer to Page 2-6**.

CAUTION: The measuring plate is magnetic. Information on data media, e.g. floppy disks, credit cards, etc., could be rendered unusable.

Note: Be sure to clean measurement points on the lower wishbone.

Note: Remove any metal shavings on the measuring plate.

2. Install the measuring plate in the recessed area in the lower control arm. The groove in the measuring plate should be at an angle of 90° towards the direction of travel.
3. Inspect the vehicle level at the front axle via control arm inclination. **Refer to Page 2-6**.
4. Inspect the vehicle level at the rear axle via the rear axle shaft inclination. **Refer to Page 2-6**.
5. Adjust the vehicle level at the front and rear axles. If the vehicle level is outside the allowed tolerance at the front or rear axle: Perform the following.
   - Adjust the vehicle level by changing the springs or the spring rubber mounts. **Refer to Page 2-6**.

CHECKING AND ADJUSTING FRONT AXLE CAMBER AND CASTER

CHECKING

1. Observe the general information on chassis alignment check. **Refer to Page 2-6**.
2. Check the vehicle level at the front and rear axles. **Refer to Page 2-6**.
3. Check the vehicle level at the front and rear axles with an electronic clinometer and adjust if necessary. **Refer to Page 2-6**.
4. Check the camber and assign to tabular value. **Refer to Page 2-13**.

Note: Measure with the wheels turned to 20°.

5. Check the caster and assign to tabular value. **Refer to Page 2-13**.

ADJUSTING

1. Raise and support the vehicle.
2. Cover all the attached parts remaining in the vehicle. (area to be repaired)

WARNING: RISK OF INJURY WITH TRAPPED OR CRUSHED FINGERS WHEN WORKING ON SPRINGS OR SPRING-LOADED COMPONENTS.

CAUTION: Use only approved tensioning devices; additionally shield off hazardous area if necessary.

CAUTION: Inspect special tools for damage and proper operation (visual inspection). Wear protective gloves.

Note: Inspect for prior installation of the alignment bolt.

3. For camber, compress the front spring (1). **Refer to Page 2-42**.
4. Install the repair bolt (2). Screw on the nut from the repair kit as far as it will go, but do not tighten it so that the rubber mount on the wishbone can turn when the suspension is compressed and rebounded.
5. Release the front spring (1).
6. Lower the vehicle and settle the suspension by pulling and pushing firmly several times.

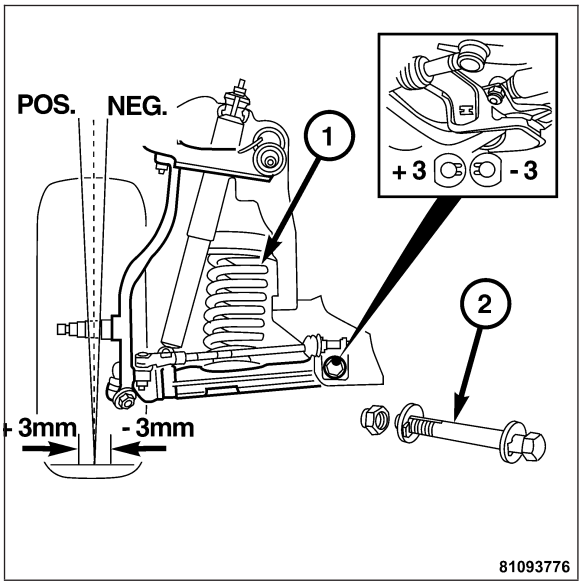

Note: Inspect for prior installation of the alignment bolt.

7. For caster, compress the front spring (2). **Refer to Page 2-42**.
8. Install the repair bolt (1). Screw on the nut from the repair kit as far as it will go, but do not tighten it so that the rubber mount on the wishbone can turn when the suspension is compressed and rebounded.
9. Release the front spring (2).
10. Lower the vehicle and settle the suspension by pulling and pushing firmly several times.

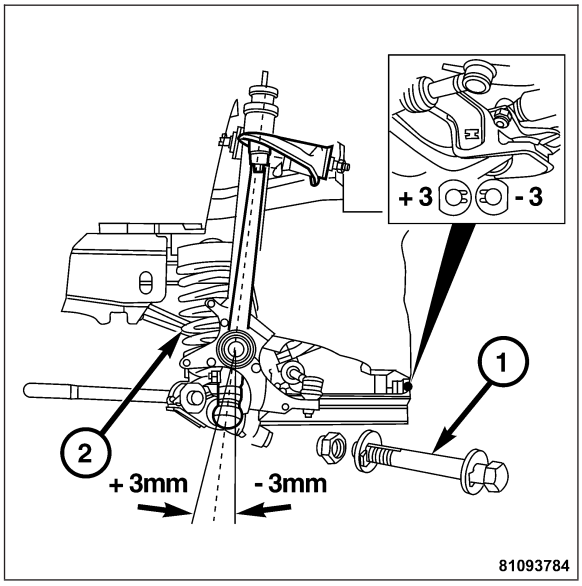

Note: The vehicle level must correlate with the dimension established on the initial measurement.

11. Recheck the vehicle level at the front axle after adjusting the camber and caster.
    - Vehicle level at the front axle. **Refer to Page 2-6**.
    - With an electronic inclinometer. **Refer to Page 2-6**.

Note: After repairing, the adjusting screw must not be turned by the shims, and must be countered when tightening the hexagon nut.

12. Tighten the nut from the repair kit to 120 N·m (88 ft. lbs.)
13. Adjust the rear axle toe. **Refer to Page 2-6**.
14. Adjust the front axle toe. **Refer to Page 2-6**.

STANDARD PROCEDURE - CHECKING AND ADJUSTING FRONT TOE-IN

1. Set the steering wheel in the center position.

Note: The steering gear is in the center position when the separating joint of the steering coupling and the marking notch on the steering gear are above each other. Offset the steering wheel by a maximum of one tooth, if necessary.

2. Check the center position of the steering gear and steering wheel.

Note: The flexible mount of the control arms results in a correspondingly large toe-in value which reduces to the correct dimension in the ready-to-drive condition

3. Install a wheel spreader on the inside of the wheel in the forward direction of travel.

Note: After adjusting toe-in, check rubber boot on inner joint for twisting.

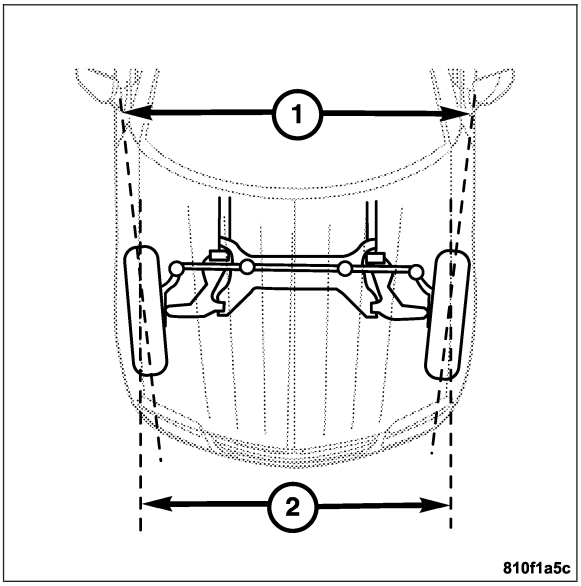

4. Adjust the toe-in by rotating the tie rods. Tighten the lock nut to 50 N·m (37 ft. lbs.).
   - Negative Toe (Toe Out) B > A.
   - Positive Toe (Toe In) B < A.

STANDARD PROCEDURE - CHECKING TOE-OUT ON TURNS

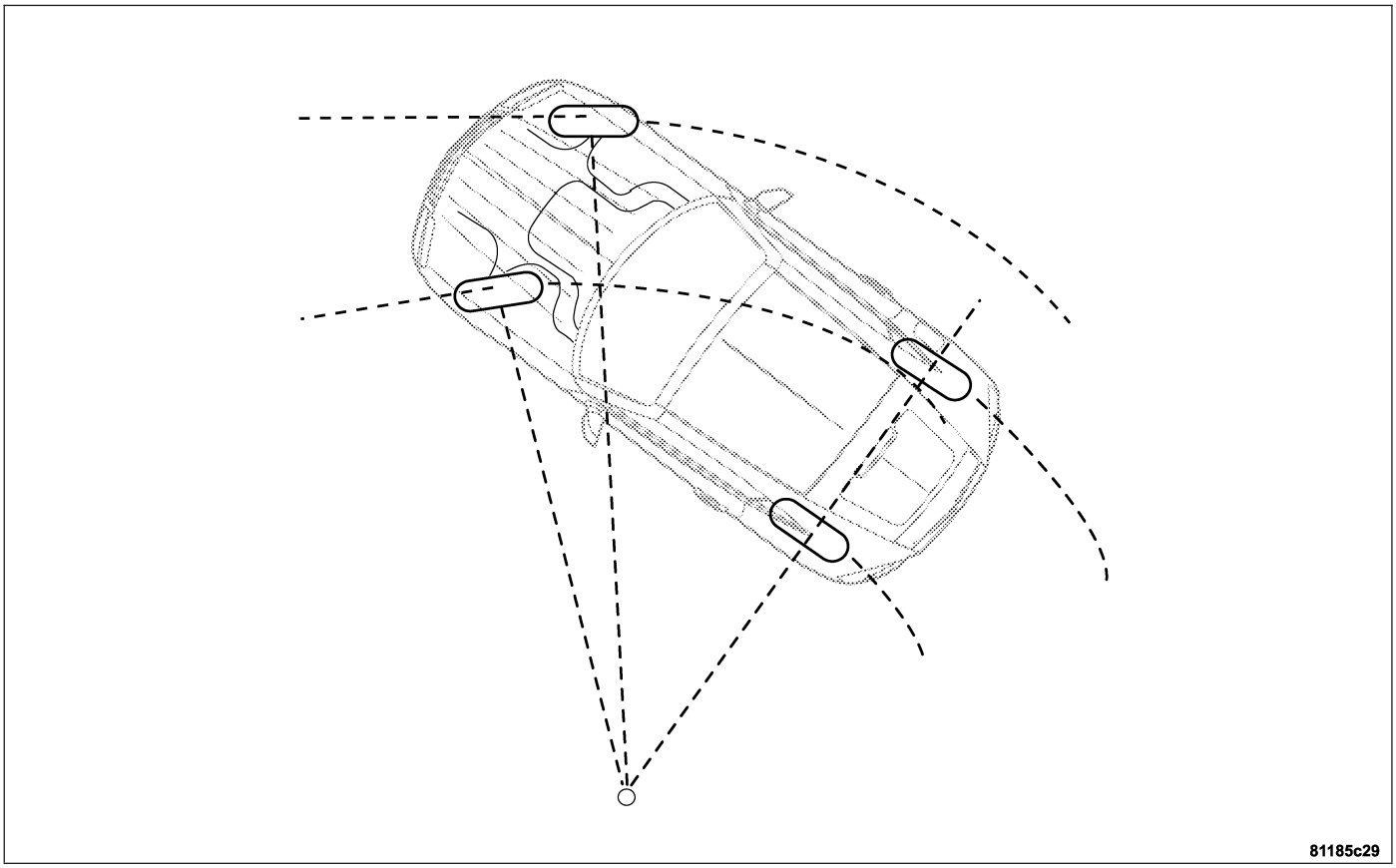

1. Check and adjust the toe-in at the front axle. **Refer to Page 2-6**.
2. Check the toe-out on turns. To check steering geometry measure toe-out on turns. This is the difference in the wheel angle between the wheel on the outside of a curve and the wheel on the inside of a curve when the wheel on the inside of the curve is turned 20°. Greater deviations may be caused as follows whereby it is assumed that camber and caster are adjusted correctly: **Refer to Page 2-6**.
   - Toe-in not adjusted with steering gear in straight ahead position resulting in unequal tie rod lengths.
   - Steering knuckle, steering column or steering intermediate arm bent.
   - On vehicles involved in an accident excessive deviations in the front end (longitudinal frame member, frame cross member, wheelhouse and firewall, or on front axle carrier) which have a negative effect on the adjustment range for camber and caster which can result in greater differences in the toe-out on turns between left and right.

STANDARD PROCEDURE - CHECKING REAR AXLE CAMBER

1. Check the vehicle level at the front and rear axles and adjust if necessary. **Refer to Page 2-6**.
2. Check the vehicle level at the front and rear axles with an electronic inclinometer and adjust if necessary. **Refer to Page 2-6**.

3. Check the rear axle camber. (POS+) = Positive Camber, (NEG-) = Negative Camber. The camber on the rear axle is not adjustable. If a substantial deviations in the rear axle camber are found, the cause may be one of the following: **Refer to Page 2-13**.
   - Too great a difference in the vehicle level between the right and left-hand sides of vehicle.
   - Camber strut bent.
   - Accident damage to the frame floor. Level differences at the mounting points for the rear axle carrier between the left and right sides of the body. Experience shows that bending caused by an accident also has an effect on the toe.

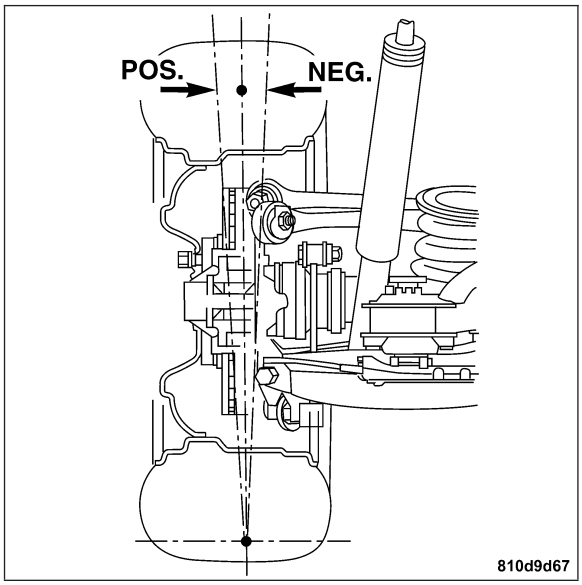

STANDARD PROCEDURE - CHECKING AND ADJUSTING REAR AXLE TOE

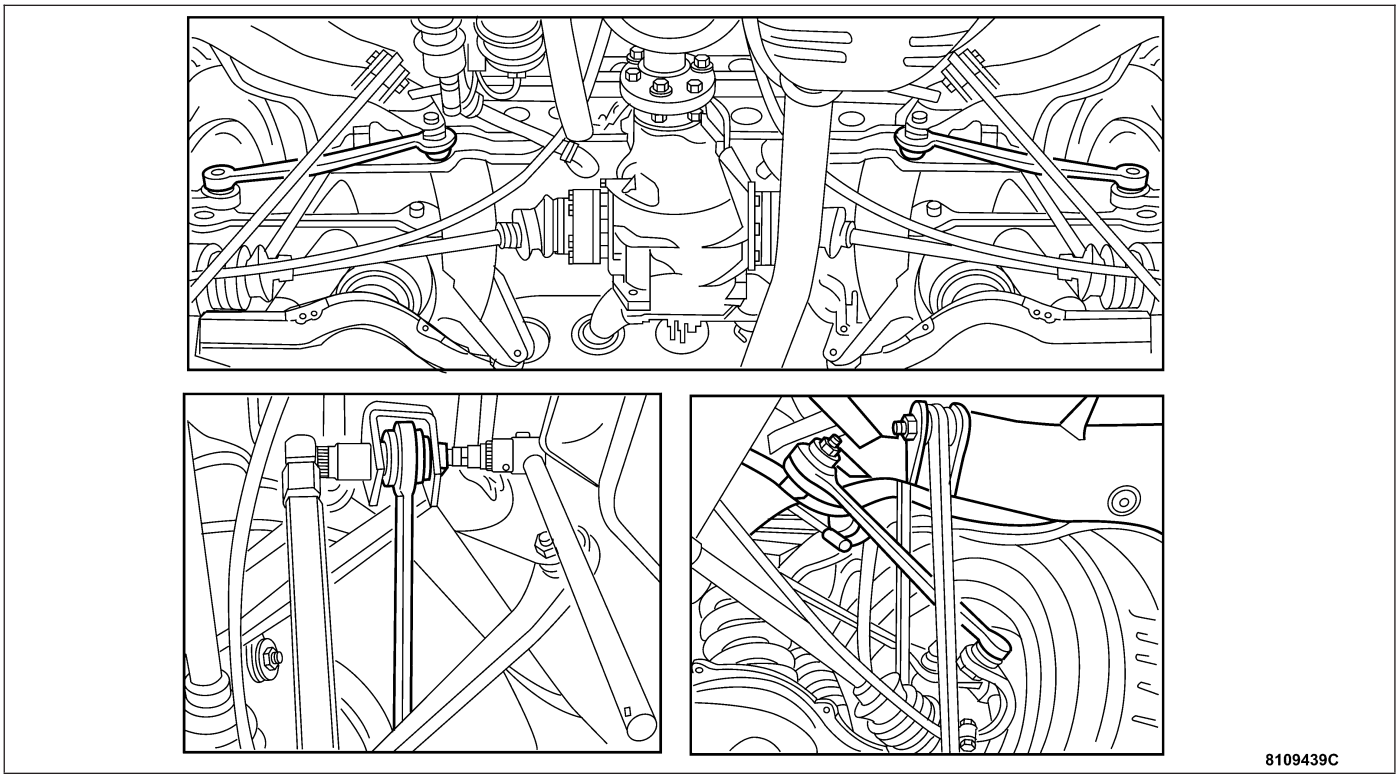

1. Check the vehicle level at the front and rear axles and adjust if necessary. **Refer to Page 2-6**.
2. Check the vehicle level at the front and rear axles with an electronic inclinometer and adjust if necessary. **Refer to Page 2-6**.
3. Adjust the toe with the cam bolt on the mounting of the left and right tie rod on rear axle carrier.

SPECIFICATIONS

SPECIFICATIONS - WHEEL ALIGNMENT

DESCRIPTION	SPECIFICATION
Vehicle level - front axle	1.4° (-2.1/+1.4)
Vehicle level - rear axle	0.4° (±0.8)
Ball point position	30,5±2 mm
Front axle toe-in	0° 20'±10'
Toe-out on turns with wheel on the inside of the curve steered through 20°	-1° 25'±30'
Total rear axle toe	0 ° 33'±7'

ALIGNMENT SPECIFICATIONS	
Front Axle Toe	2.5°
Rear Axle Toe	1.2°
Front Camber	-1° 13' (-1.22°)
Front Caster	5° 12' (5.20°)
Rear Camber	-1° 08' (-1.13°)
Permissible difference in front axle camber between right and left side of vehicle	20'

SPECIFICATIONS - SUSPENSION

TORQUE SPECIFICATIONS

DESCRIPTION	N·m	Ft. Lbs.	In. Lbs.
Steering idler arm to bearing bushing	30	22	266
Repair Nut	120	88.5	1060
Lock Nut	50	37	443
Cam bolt, rear axle tie rod	70	52	620

FRONT SUSPENSION

TABLE OF CONTENTS

page

FRONT SUSPENSION
SPECIFICATIONS
TORQUE CHART - FRONT SUSPENSION . . . 14
KNUCKLE
DESCRIPTION 15
REMOVAL 16
INSTALLATION 20
HUB / BEARING
DESCRIPTION 23
DIAGNOSIS AND TESTING
ADJUSTING WHEEL BEARING 24
REMOVAL 25
INSTALLATION 27
LOWER BALL JOINT
REMOVAL 29
INSTALLATION 32

page

LOWER CONTROL ARM
REMOVAL 34
INSTALLATION 37
UPPER CONTROL ARM
REMOVAL 39
INSTALLATION 39
SHOCK
REMOVAL 40
INSTALLATION 41
SPRING
REMOVAL 42
INSTALLATION 44
STABILIZER BAR
REMOVAL 46
INSTALLATION 47

FRONT SUSPENSION

SPECIFICATIONS

TORQUE CHART - FRONT SUSPENSION

DESCRIPTION	N·m	Ft. Lbs.	In. Lbs.
Front Shock Absorber Upper Nut	18	13	159
Front Shock Absorber Lower Nut	55	41	487
Front Sway Bar To Lower Control Arm Nut	20	15	177
Front Sway Bar Bushing Nuts			
M10	40	30	354
M8	20	15	177
Front Sway Bar To Frame Nut	60	44	531
Upper Control Arm Joint To Steering Knuckle	45	33	398
Clamping Nut	11	8	97
Lower Ball Joint To Steering Knuckle	140	103	1240

DESCRIPTION	N·m	Ft. Lbs.	In. Lbs.
Lower Ball Joint To lower Control Arm	105	77	929
Upper Control Arm To Body Nut	65	50	575
Lower Control Arm To Frame Nut	120	88	1060

KNUCKLE

DESCRIPTION

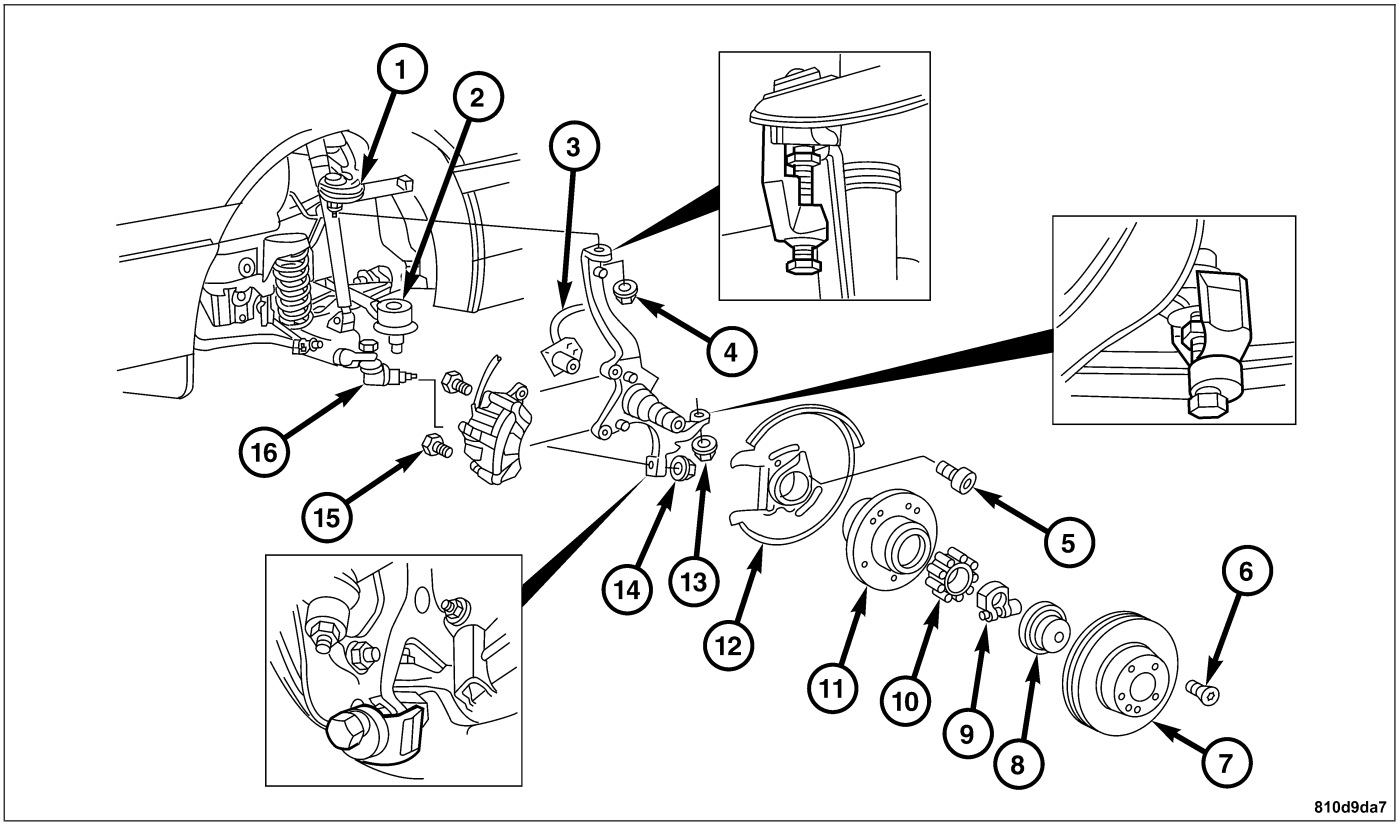

1 - UPPER CONTROL ARM
2 - TIE ROD END
3 - WHEEL SPEED SENSOR
4 - UPPER BALL JOINT NUT
5 - DUST SHIELD BOLT
6 - ROTOR LOCK BOLT
7 - ROTOR
8 - DUST CAP
9 - HUB NUT
10 - BEARING
11 - HUB
12 - DUST SHIELD
13 - TIE ROD END NUT
14 - LOWER BALL JOINT NUT
15 - CALIPER BOLT
16 - LOWER BALL JOINT

The knuckle is a single casting with legs machined for the upper and lower ball joints. The knuckle also has machined mounting locations for the front brake calipers and hub bearing.

REMOVAL

CAUTION: When removing the steering knuckle the shock absorber must remain installed.

1. Raise and support the vehicle.
2. Remove the front wheel and tire assembly.
3. Remove the front disc brake caliper (1). **Refer to Page 5-25**.

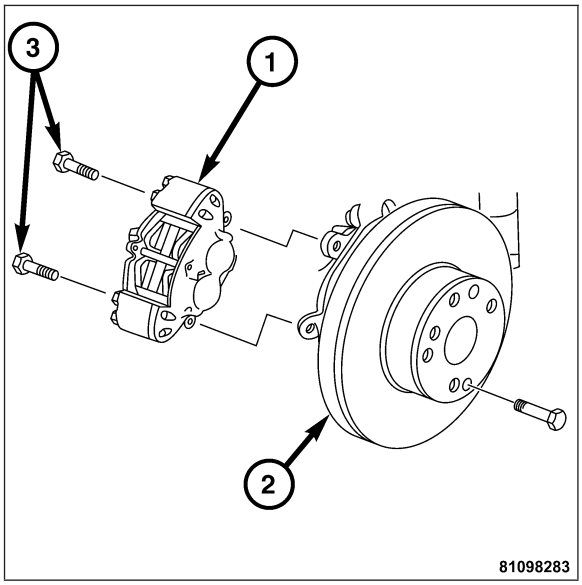

4. Remove the front disc brake rotor (1). **Refer to Page 5-38**.
5. Remove the front wheel hub (3). **Refer to Page 2-25**.

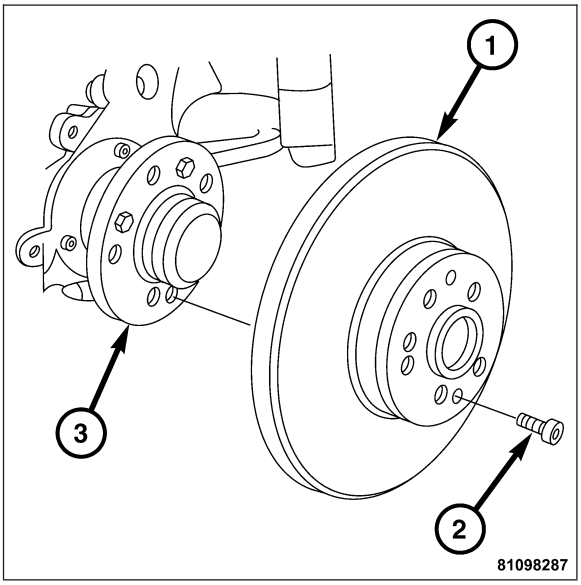

6. Remove the disc brake dust shield by removing the three hex bolts (1).

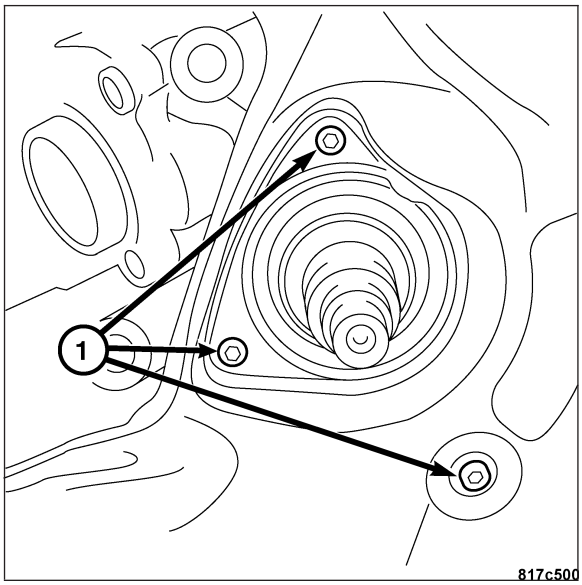

7. Remove the Wheel Speed Sensor (WSS) by removing the bolt and pulling the sensor straight out of the steering knuckle.

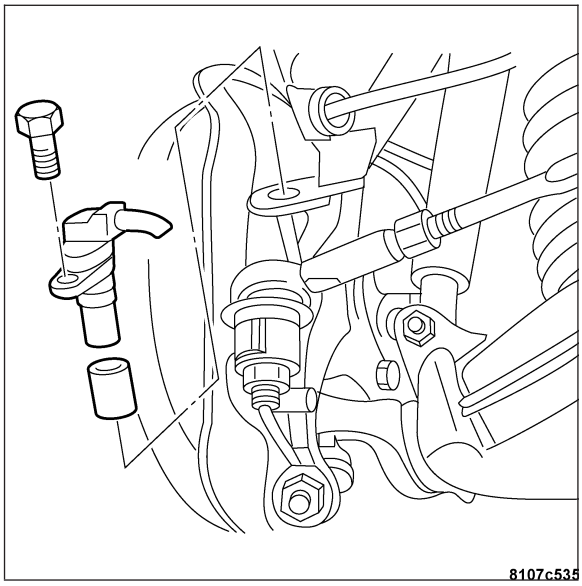

CAUTION: Do not use pneumatic tools to tighten the bolt on the special tool.

Note: Check the ball joint rubber boot for any wear or damage. Repair as necessary.

Note: The use of a allen wrench may be required to hold the stud while turning the nut.

8. Remove the tie rod end from the steering knuckle by removing the nut from the tie rod joint stud. Using Special Tool C-3894-A Two Jaw Puller. Slowly tighten the bolt until the tie rod end joint is pushed out of the steering knuckle.

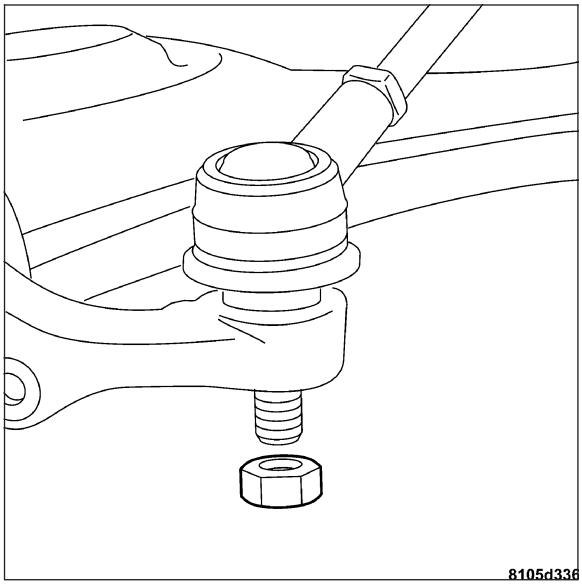

CAUTION: Do not use pneumatic tools to tighten the bolt on the special tool.

Note: The use of a allen wrench may be required to hold the stud while turning the nut.

9. Remove the lower control arm supporting ball joint from the steering knuckle by removing the nut (1) from the ball joint stud.

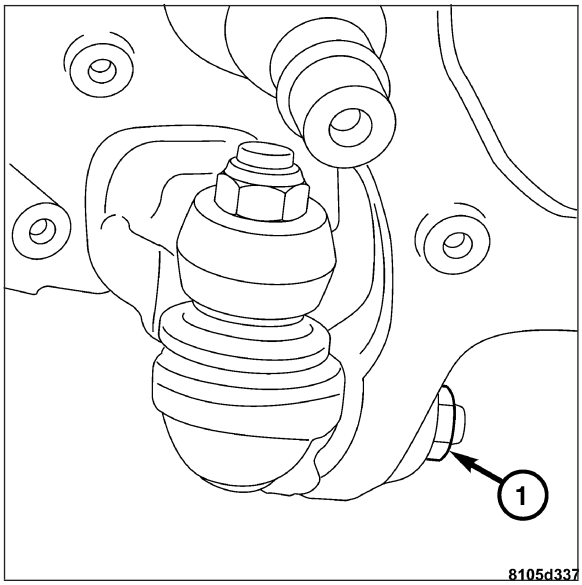

10. Using Special Tool 9168 Ball Joint Puller (2) slowly tighten the bolt until the ball joint (1) is pushed out of the steering knuckle.

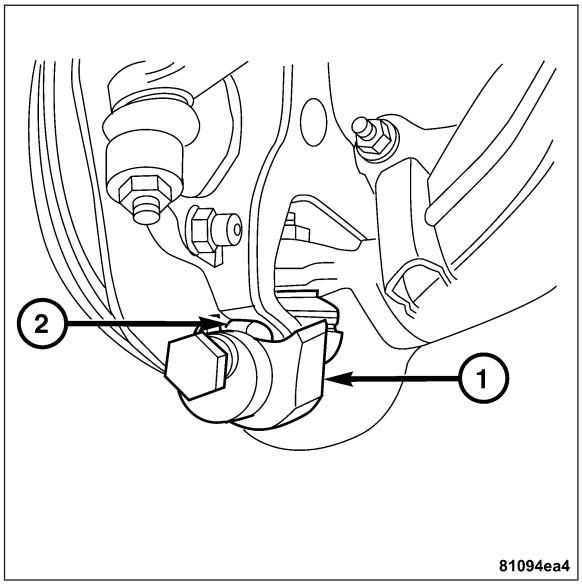

CAUTION: Do not use pneumatic tools to tighten the bolt on the special tool.

Note: The use of a allen wrench may be required to hold the stud while turning the nut.

11. Remove the steering knuckle from the upper control arm by removing the nut (1) from the upper ball joint stud.
12. Using Special Tool 9168 Ball Joint Puller slowly tighten the bolt until the upper ball joint is pushed out of the steering knuckle.

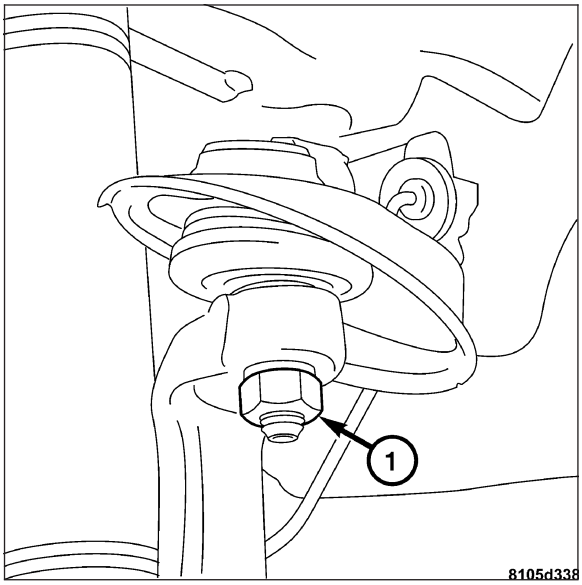

CHECKING

1. Check the lower control arm supporting ball joint by performing the following:
2. Remove the nuts (1) from the lower control arm supporting ball joint.

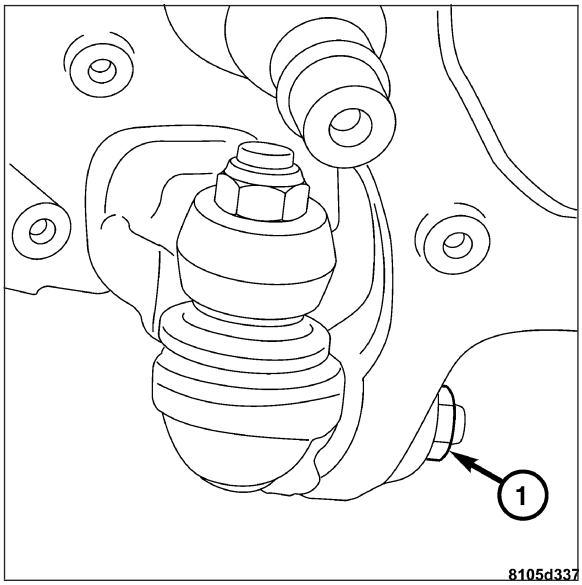

3. Using Special Tool 9168 Ball Joint Puller (2) press out the lower control arm supporting ball joint (1).

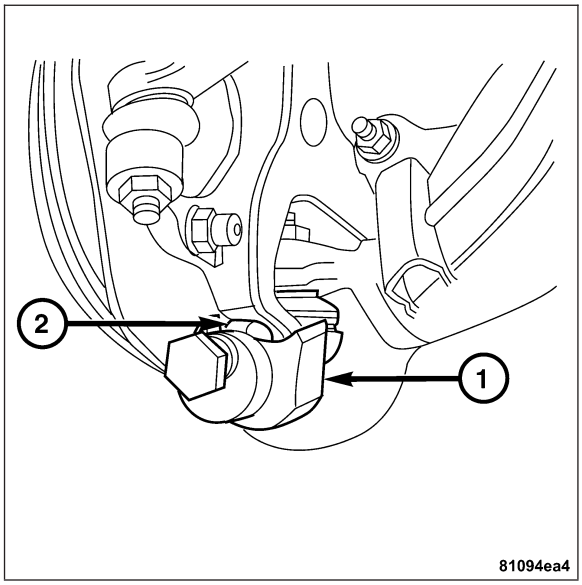

4. Check the lower control arm supporting ball joint. It should be possible to move the ball pivot without any play, jamming or creaking noises. Move the ball pivot in all directions with a tube approximately 6 in. (150 mm) in length. Check the boot for any cracks or damage. If the boot is leaking, replace supporting or follower joint.
5. Measure the steering knuckle, if necessary.

INSTALLATION

1. Install the steering knuckle and nut (1) to the upper ball joint stud. Tighten to 45 N·m (33 ft. lbs.).

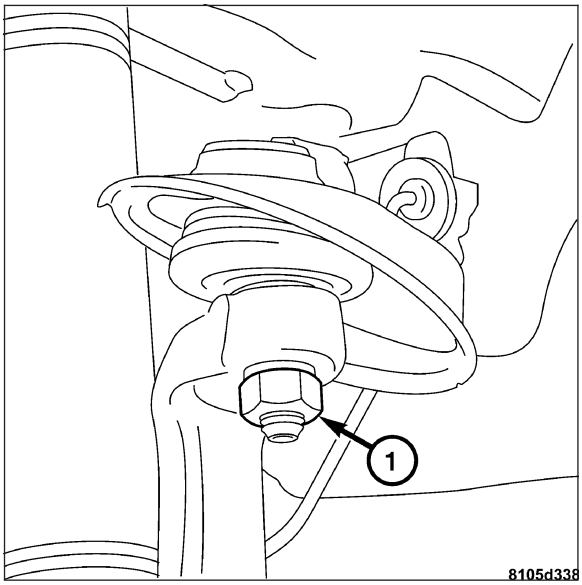

2. Install the steering knuckle and nut to the lower ball joint stud (1). Tighten to 105 N·m (77 ft. lbs.).

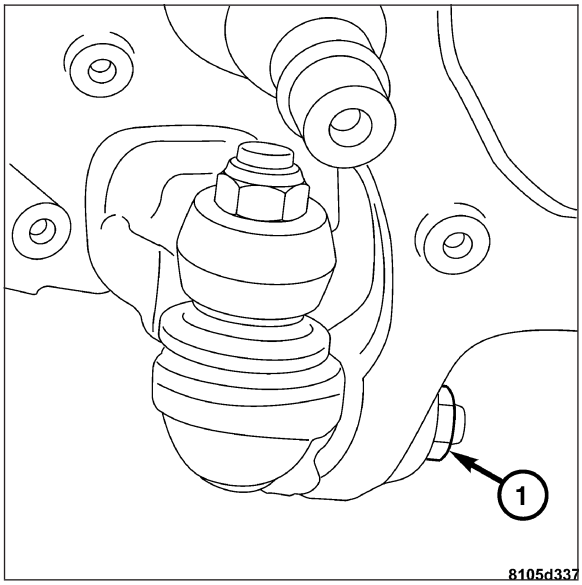

3. Install the tie rod end and nut onto the steering knuckle. Tighten to 50 N·m (37 ft. lbs.).

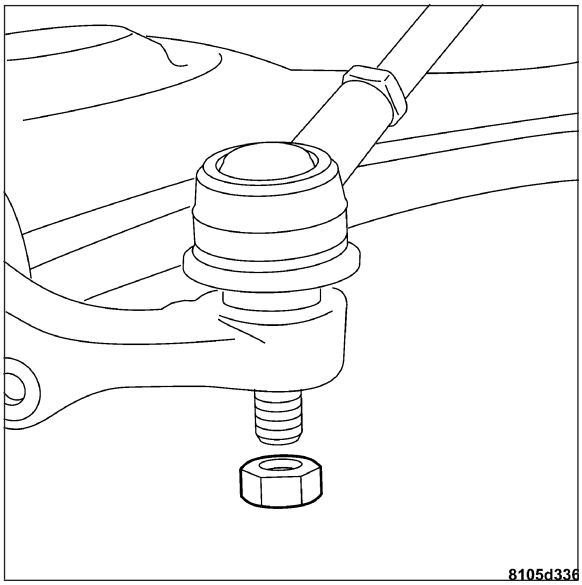

4. Install the Wheel Speed Sensor (WSS) and bolt. Tighten to 22 N·m (16 ft. lbs.).

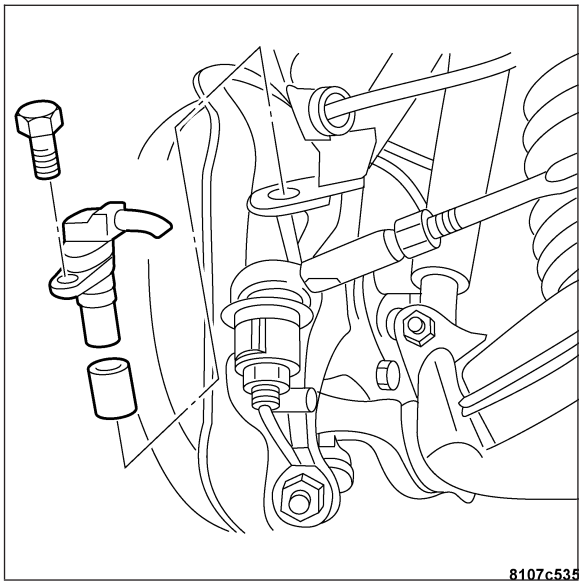

5. Install the disc brake dust shield and three hex bolts (1). Tighten to 22 N·m (16 ft. lbs.).

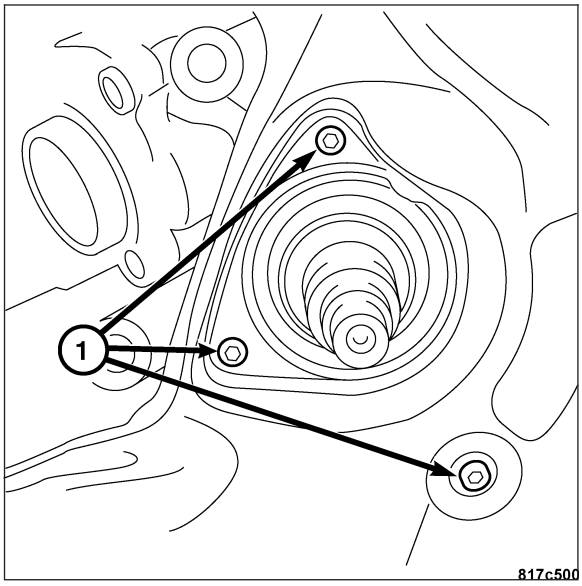

6. Install the front wheel hub (3). **Refer to Page 2-27**.
7. Install the front disc brake rotor (1). **Refer to Page 5-40**.

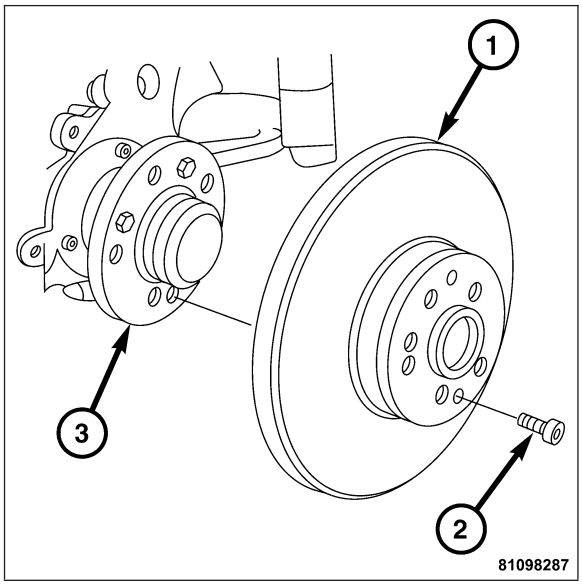

8. Install the front disc brake caliper (1). **Refer to Page 5-32**.
9. Install the front wheel and tire assembly. **Refer to Page 22-42**.
10. Lower the vehicle and check vehicle alignment. **Refer to Page 2-13**.

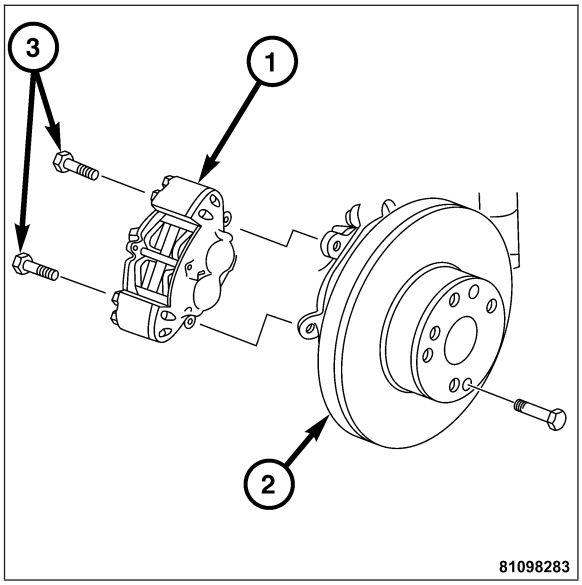

HUB / BEARING

DESCRIPTION

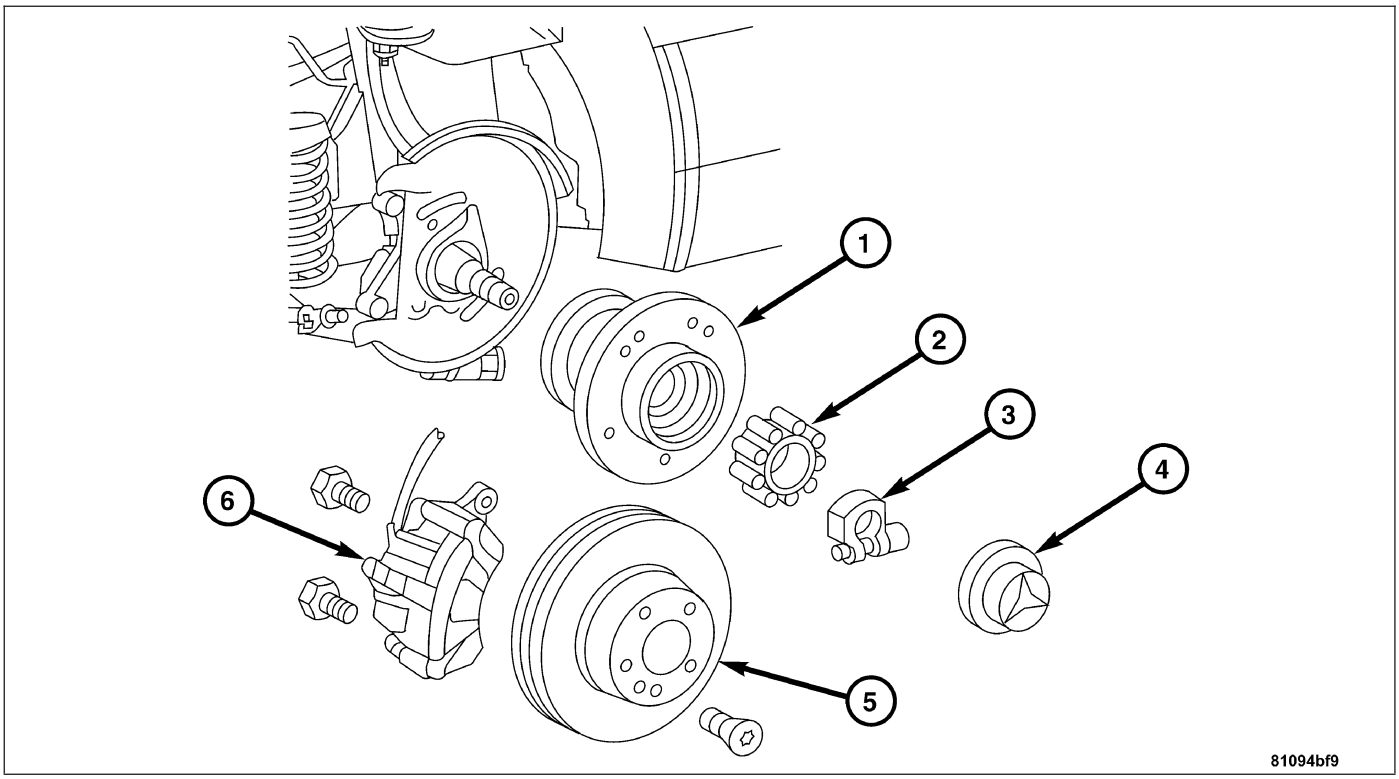

1 - HUB
2 - BEARING
3 - HUB NUT
4 - DUST CAP
5 - ROTOR
6 - CALIPER

The bearing (2) used in the front hub (1) of this vehicle is a roller bearing unit type. This assembly combines the front wheel hub (1) and the front wheel bearing (2) into a two piece unit. The hub nut (3) holds the bearing (2) and the front hub (1) to the steering knuckle's spindle. The hub nut (3) has a locking bolt that locks the hub nut into position on the spindle. The bearing is protected from outside elements by a metal dust cap (4). The bearings (2) can only be replaced as a set. The bearings and the wheel hub can be replaced independently of one another.

DIAGNOSIS AND TESTING

ADJUSTING WHEEL BEARING

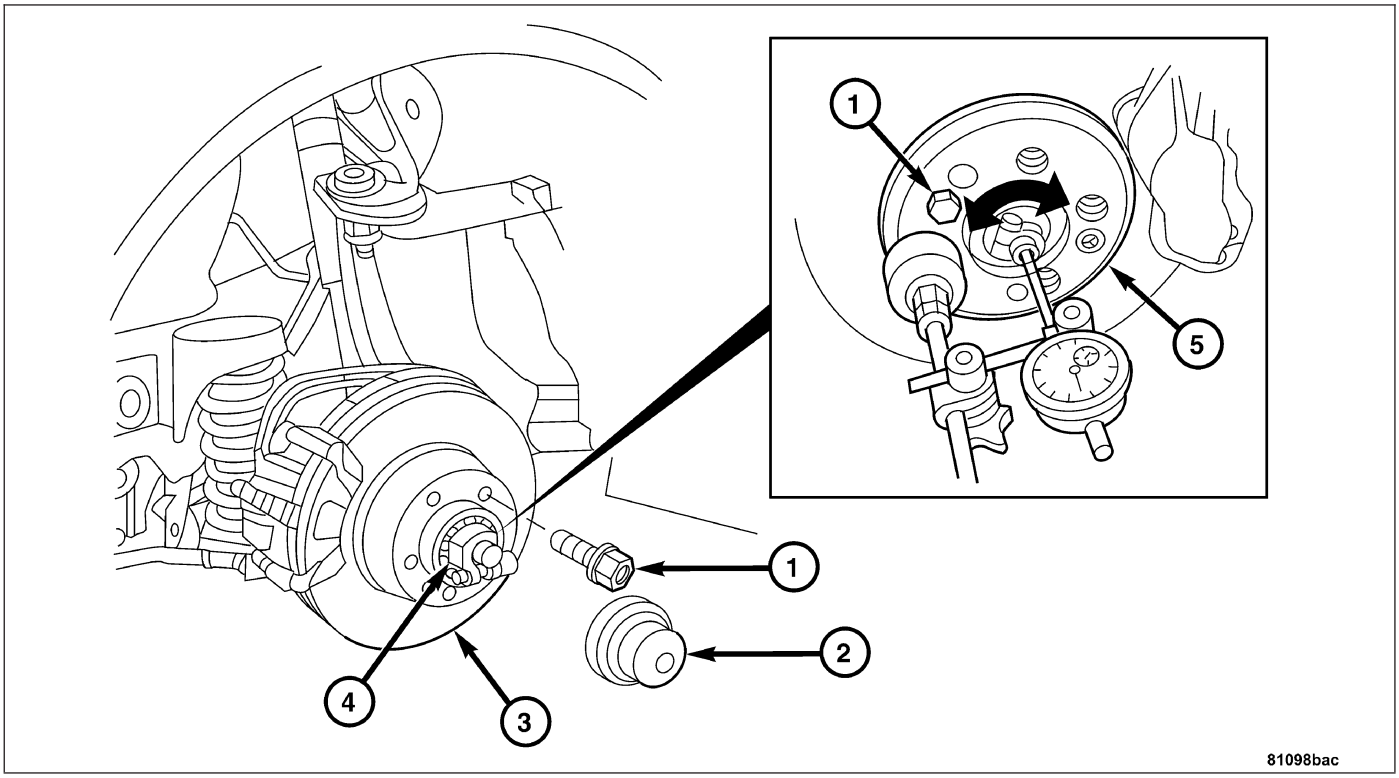

1 - WHEEL BOLT
2 - DUST CAP
3 - ROTOR
4 - HUB NUT
5 - ROTOR LOCK BOLT

1. Remove the wheel and tire assembly.
2. Install a wheel bolt (1) on the opposite side from the brake rotor retaining bolt (5).
3. Press the brake pads back in the brake caliper making sure they do not come in contact with the brake rotor.
4. Remove the dust cap (2).
5. Loosen the hub nut bolt. Turn the hub nut (4) back until a slight end play is achieved.
6. Attach a dial indicator.

CAUTION: Do not turn the wheel hub while taking the measurement.

7. Adjust the wheel bearing end play by turning the hub nut (4) in stages while pushing and pulling the rotor firmly back and forth. Adjust end play to 0.01–0.02mm.
8. Tighten the hub nut bolt to 11 N·m (8 ft. lbs.) and recheck the wheel bearing end play.
9. Remove the dial indicator.
10. Install the wheel hub dust cap (2).
11. Remove the wheel bolt from the rotor.
12. Install the front wheel and tire assembly. **Refer to Page 22-42**.

REMOVAL

1. Raise and support vehicle.
2. Remove the front wheel and tire assembly.
3. Remove and inspect the front disc brake caliper (1). **Refer to Page 5-25**. Inspect for any damage or wear.

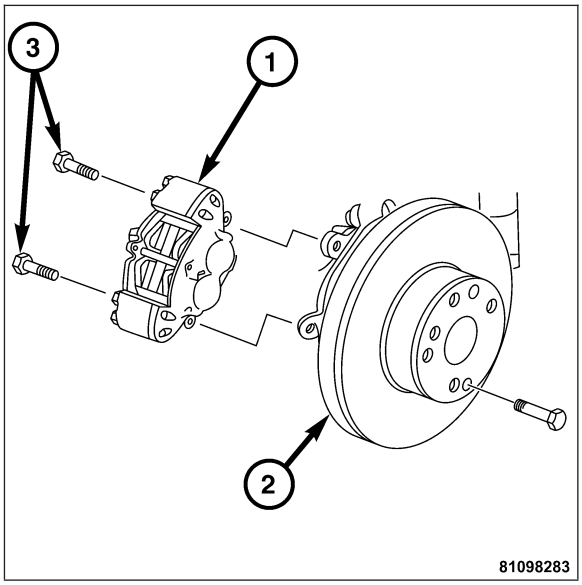

4. Remove and inspect the front disc brake rotor (1). **Refer to Page 5-38**. Inspect for any damage or wear.

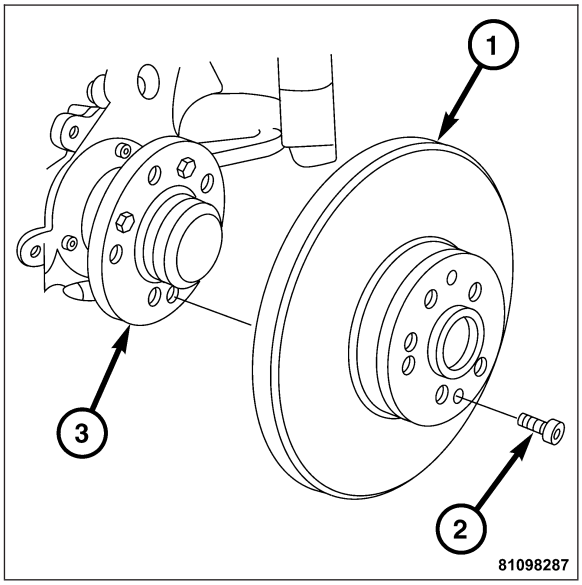

5. Remove the front wheel hub dust cap (4).
6. Loosen the hub nut bolt then remove the hub nut (3) and then remove the tapered roller bearing (2).
7. Remove the front wheel hub (1) from the spindle.

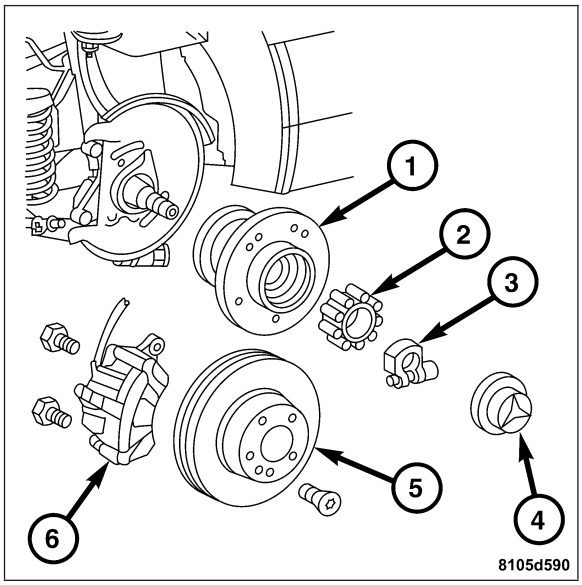

INSPECTING HUB AND BEARINGS

1. Remove the bolts (1) and inspect the front disc brake dust shield and replace if necessary.

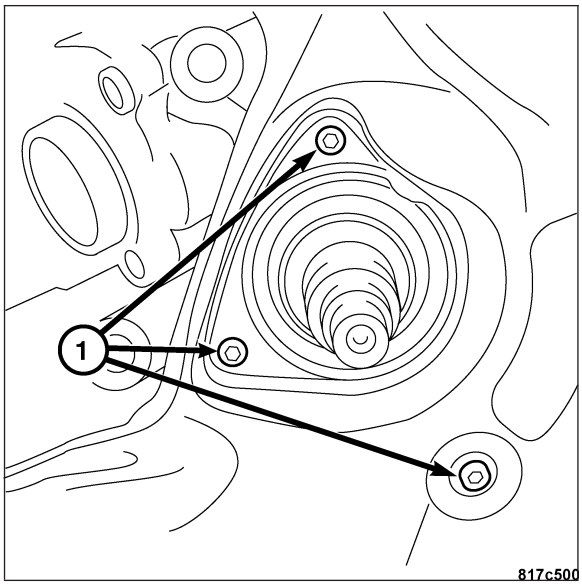

Note: Discoloration may be caused by generated heat due to incorrect bearing end play settings.

CAUTION: Only replace the tapered roller bearing and bearing races in pairs.

2. Inspect the spindle for any discoloration or wear on the bearing seats or the contact surface of the radial seal ring. Replace if necessary. **Refer to Page 2-16**.
3. Inspect the front wheel hub (1). Inspect the threaded bores and the rotor teeth for any wear or damage.
4. Inspect the tapered roller bearing (2), bearing races and the radial seal ring. The tapered roller bearings and bearing races can be reused if:
   - The tapered rollers and bearing races have a smooth, grey running track.
   - No discoloration (indicating, intense heat) is evident.
   - The roller cage and the face ends of the tapered rollers are not worn or damaged.
   - The bearing races sit tight in the wheel hub.

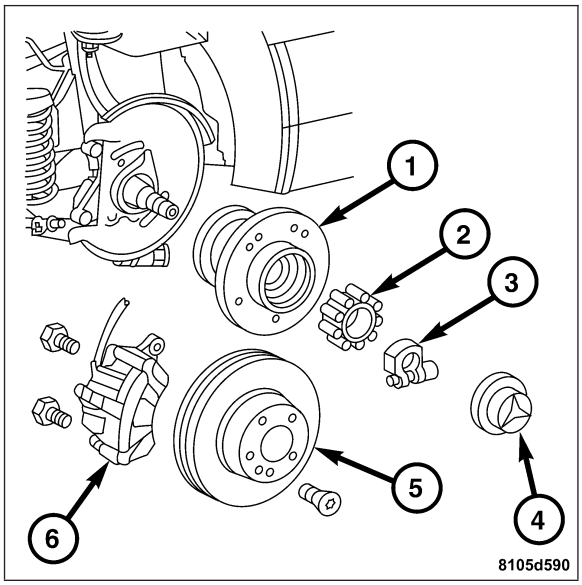

INSTALLATION

1. Pack the front wheel hub (1) with grease, coat the radial seal ring and also pack the space between the sealing lip and the tapered roller bearing (2) with grease. Install the front wheel hub (1) with the inner tapered roller bearing (2) and the radial seal ring onto spindle.
2. Install the hub nut (3) tight enough to hold the rotor (5) in place.

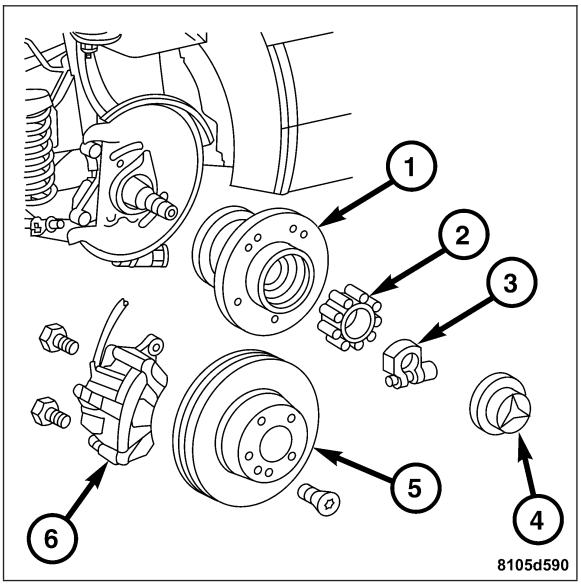

3. Install the front disc brake rotor (1). **Refer to Page 5-40**.

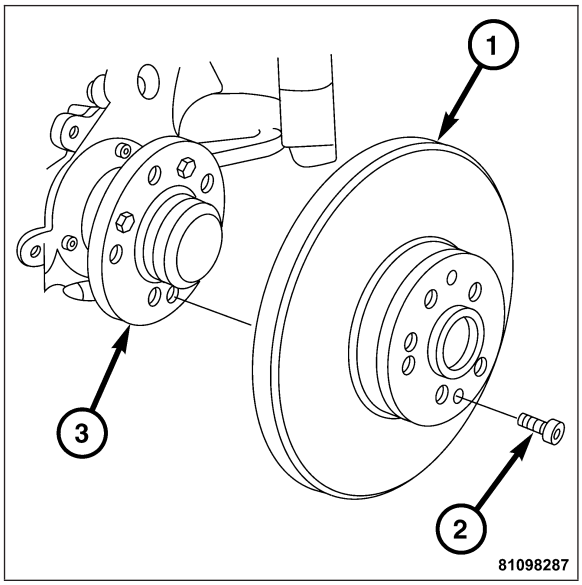

4. Install the front disc brake caliper (6). **Refer to Page 5-32**.

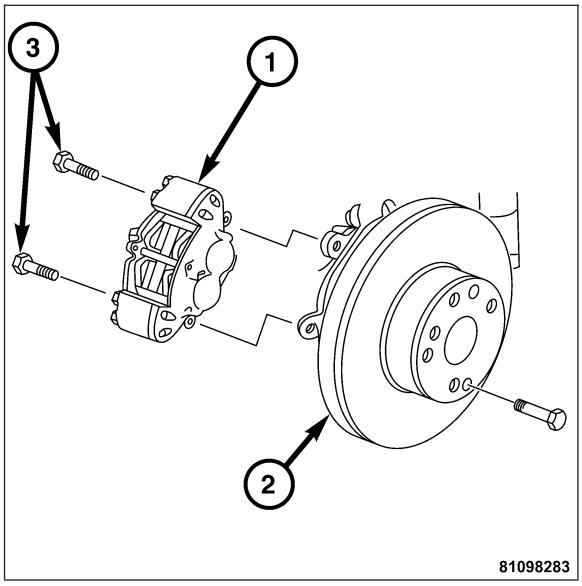

5. Adjust the wheel bearing end play. **Refer to Page 2-24**.
6. Install the dust cap (4).

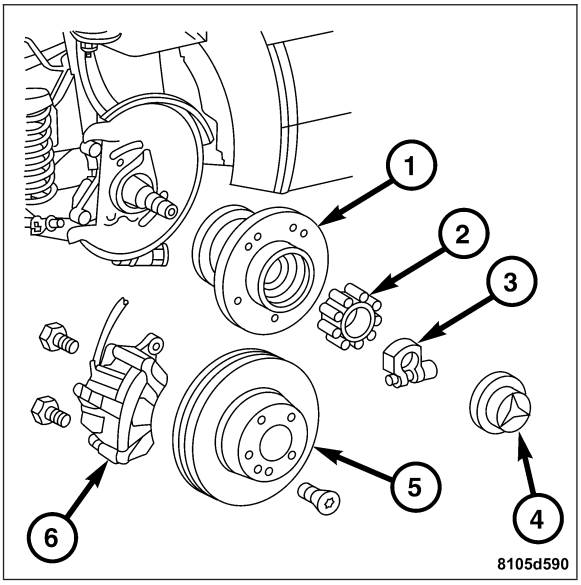

CAUTION: Before driving the vehicle, operate the brake pedal several times until pressure in the brake system is built up and maintained.

7. Install the wheel and tire assembly. **Refer to Page 22-42**.

LOWER BALL JOINT

REMOVAL

1. Raise and support the vehicle.
2. Remove the front wheel and tire assembly.
3. Remove the front disc brake caliper (1). **Refer to Page 5-25**.

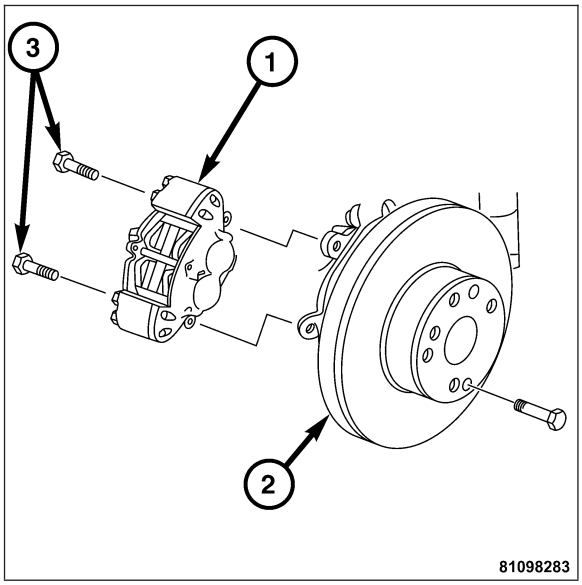

4. Remove the front disc brake rotor (1). **Refer to Page 5-38**.

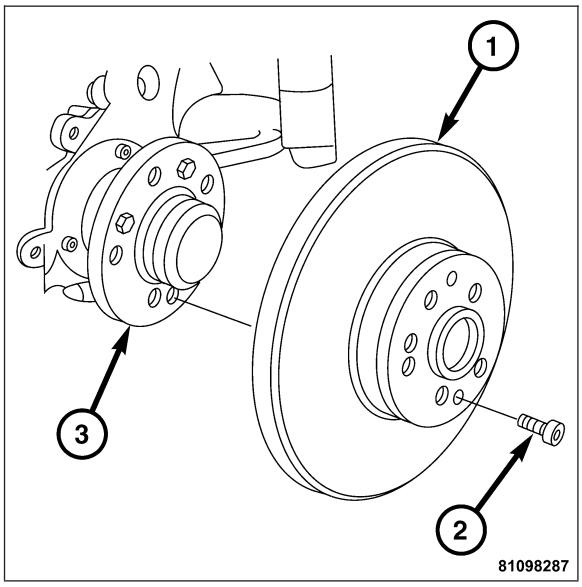

5. Remove the front dust shield by removing the three hex bolts (1).

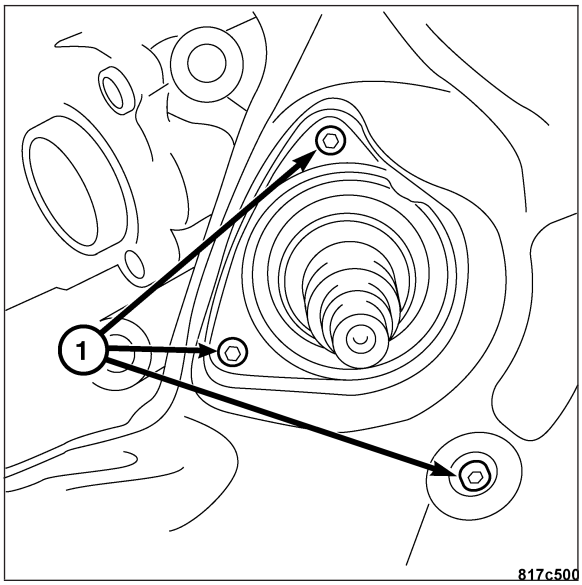

6. Remove the front shock absorber bolt (1). **Refer to Page 2-40**.

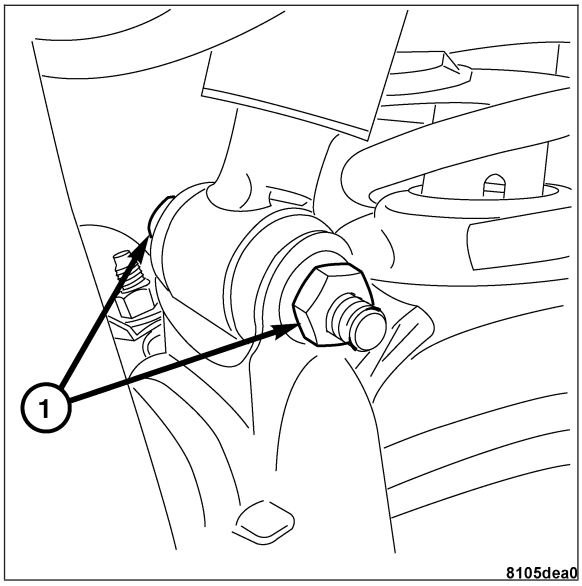

7. Remove the front spring (1). **Refer to Page 2-42**.

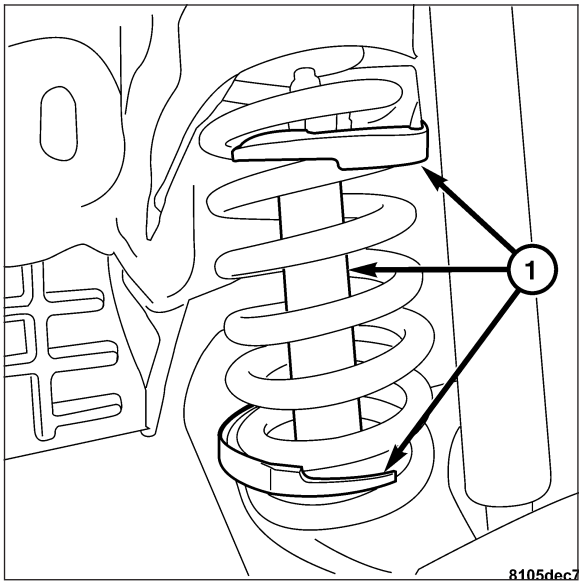

8. Remove the nuts (1 and 2) from the lower ball joint.

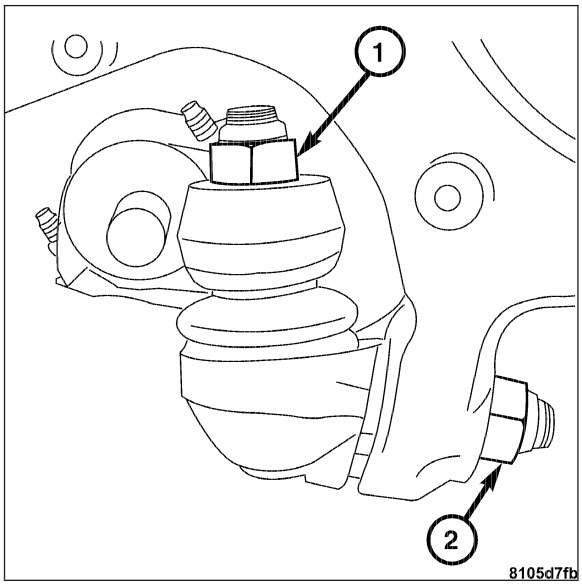

CAUTION: Do not use pneumatic tools to tighten the bolt on the special tool.

9. Using Special Tool 9168 Ball Joint Puller (1) press out the outer ball joint stud from the steering knuckle.

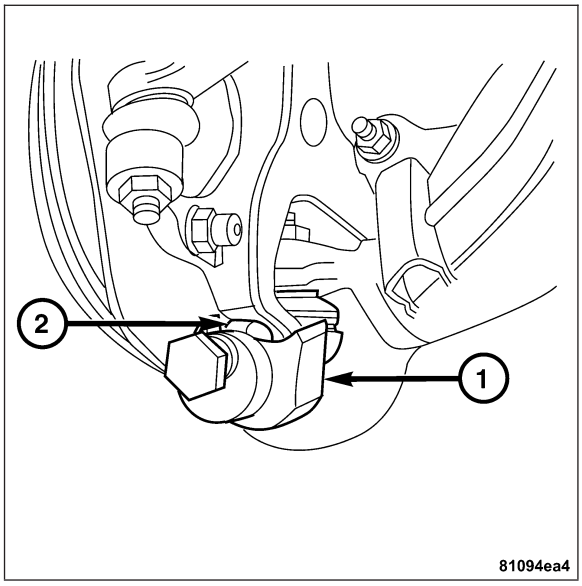

10. Using Special Tool 9168 Ball Joint Puller (2) press out the upper ball joint stud from the lower control arm.

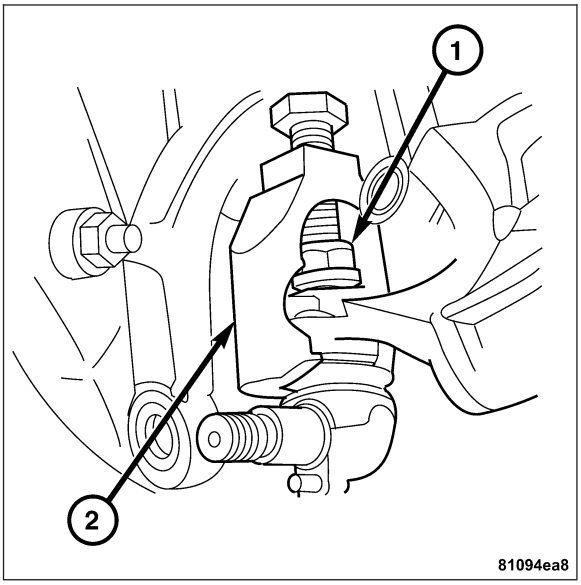

INSTALLATION

1. Clean the ball joint tapered bolt and the mounting hole of the steering knuckle.
2. Install the lower ball joint onto the steering knuckle and the lower control arm.
3. Install both nuts (1 and 2). Tighten to 105 N·m (77 ft. lbs.).

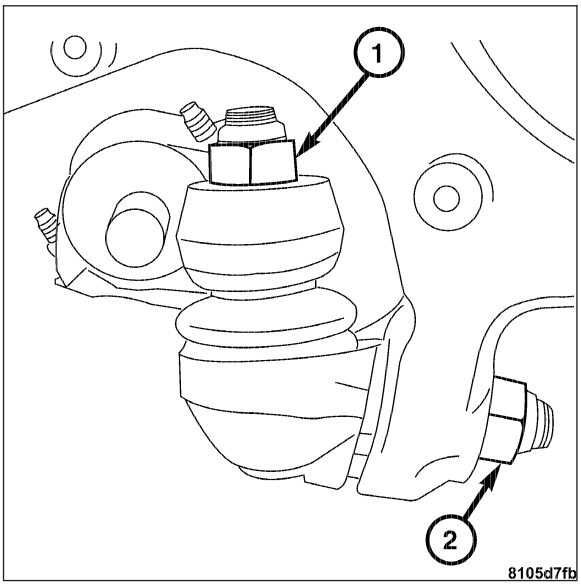

4. Install the front disc brake dust shield by installing and tightening the three hex bolts (1).

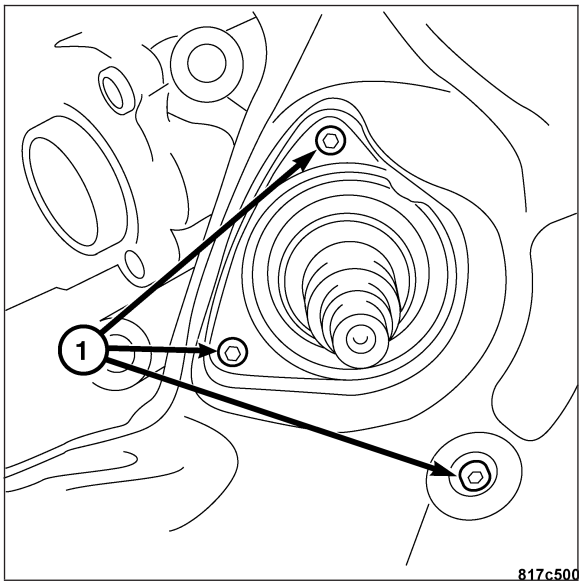

5. Install the front disc brake rotor (1). **Refer to Page 5-40**.

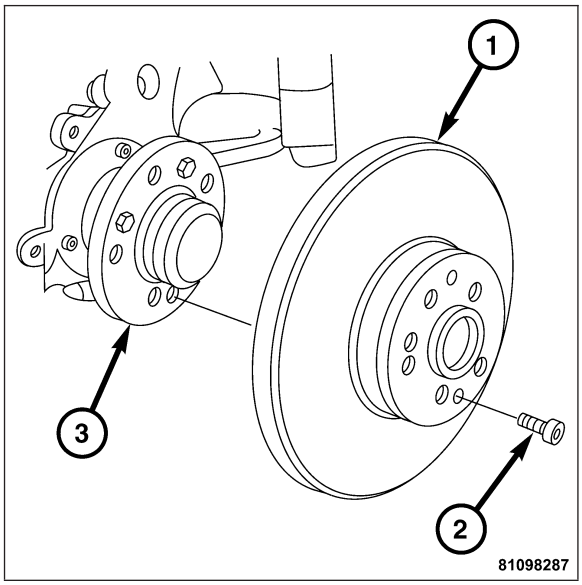

6. Install the front disc brake caliper (1). **Refer to Page 5-32**.

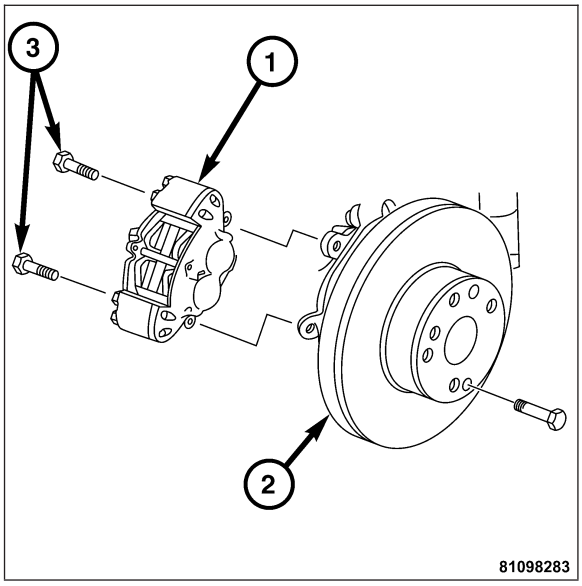

7. Install the compressed front spring (1). **Refer to Page 2-44**.

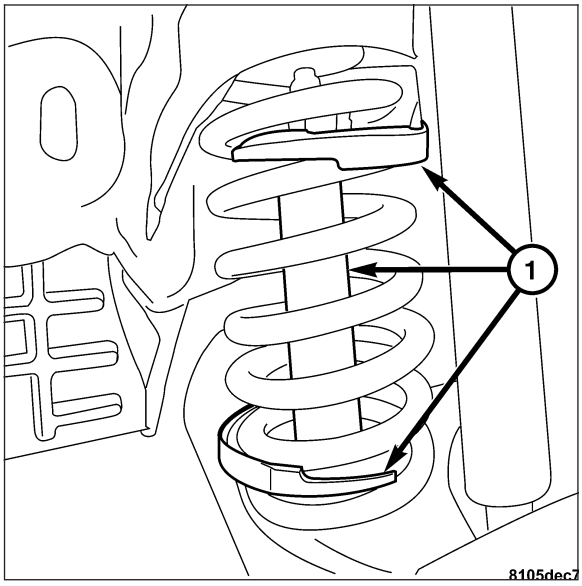

8. Install the front shock absorber bolt and nut (1). **Refer to Page 2-41**.

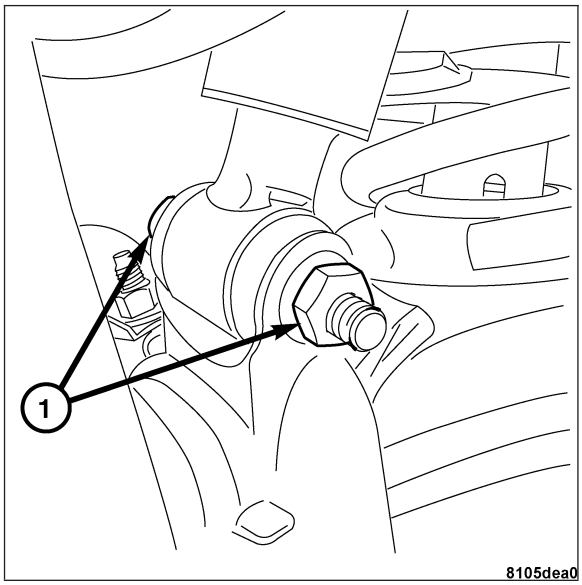

9. Install the front wheel and tire assembly. **Refer to Page 22-42**.

LOWER CONTROL ARM

REMOVAL

1. Remove the front wheel and tire assembly.
2. Remove the front spring. **Refer to Page 2-42**.

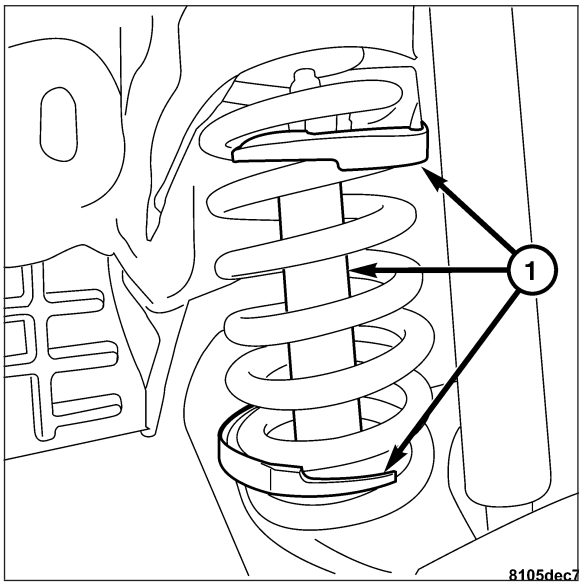

3. Remove the shock absorber lower mounting nut and bolt (1).
4. Pull the shock absorber out of the mounting bracket.

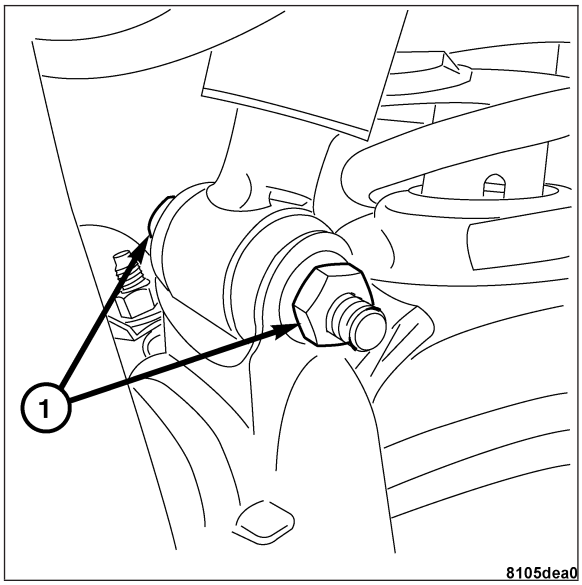

5. Remove the sway bar from the lower control arm by removing the two nuts (1) then removing the clamp.

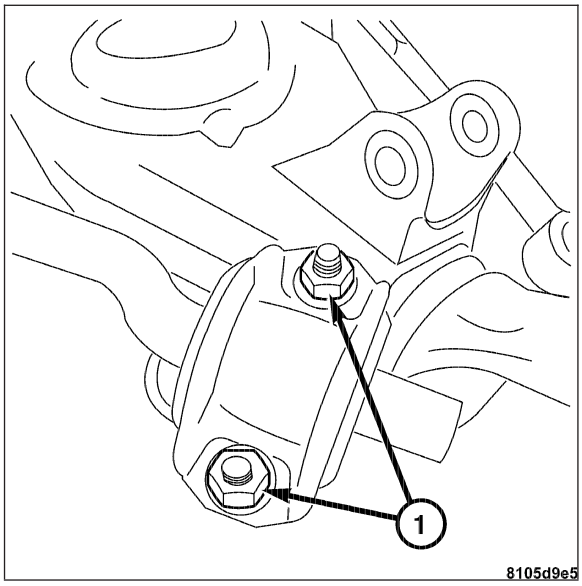

6. Remove the nut (1) attaching the lower control arm to the lower ball joint.

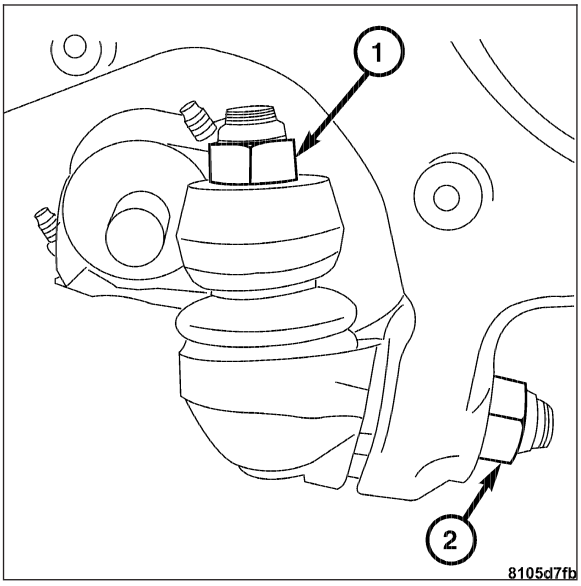

CAUTION: Do not use pneumatic tools to tighten the bolt on the special tool.

7. Using Special Tool 9168 Ball Joint Puller (1) press out the outer ball joint stud from the steering knuckle.

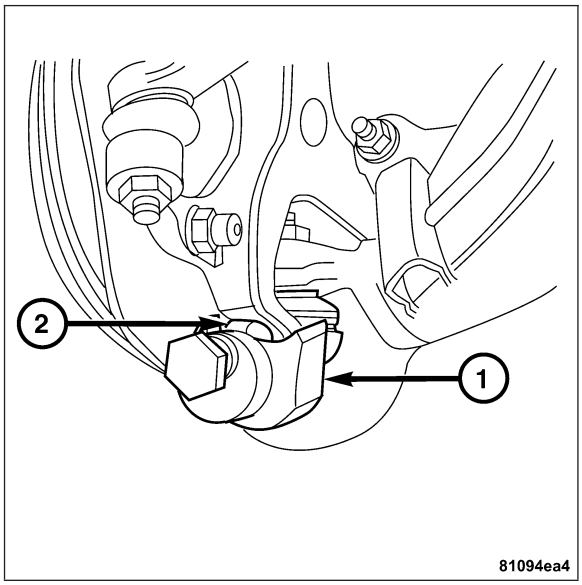

8. Remove the two bolts (1) attaching the lower control arm to the frame.
9. Remove the lower control arm from the vehicle.

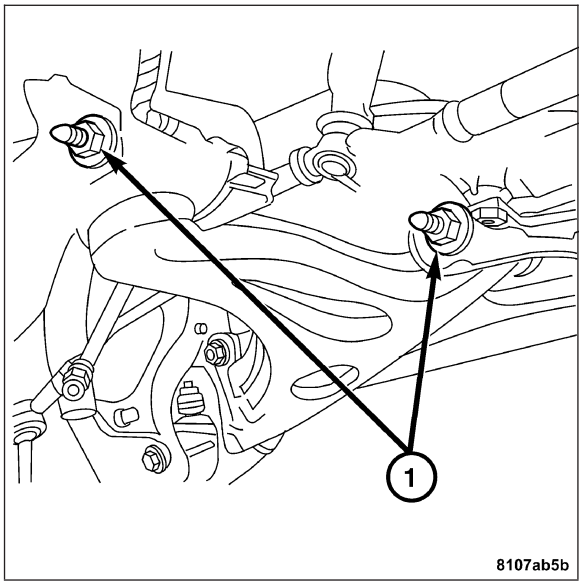

INSTALLATION

1. Install the lower control arm to the vehicle.
2. Install the two bolts (1) attaching the lower control arm to the frame. Tighten to 120 N·m (88 ft. lbs.).

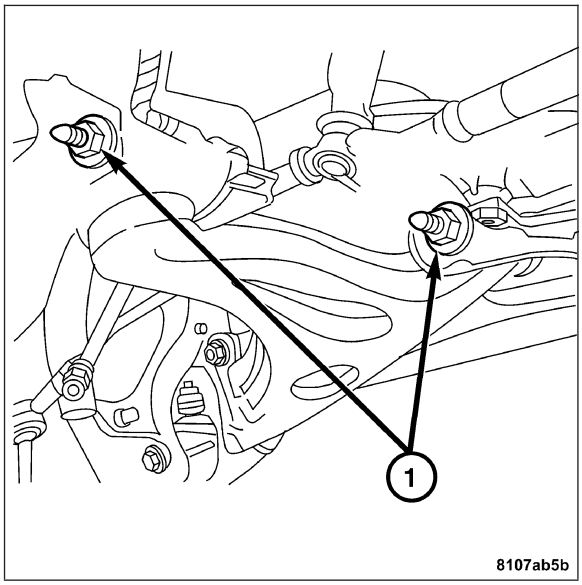

3. Install the nut (2) attaching the lower control arm to the steering knuckle lower ball joint. Tighten to 45 N·m (33 ft. lbs.).

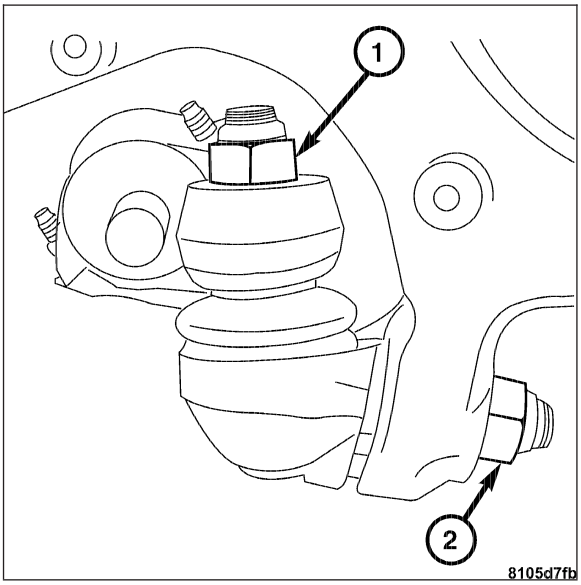

4. Install the sway bar clamp and bolts (1) to the lower control arm. Tighten to 20 N·m (15 ft. lbs.).

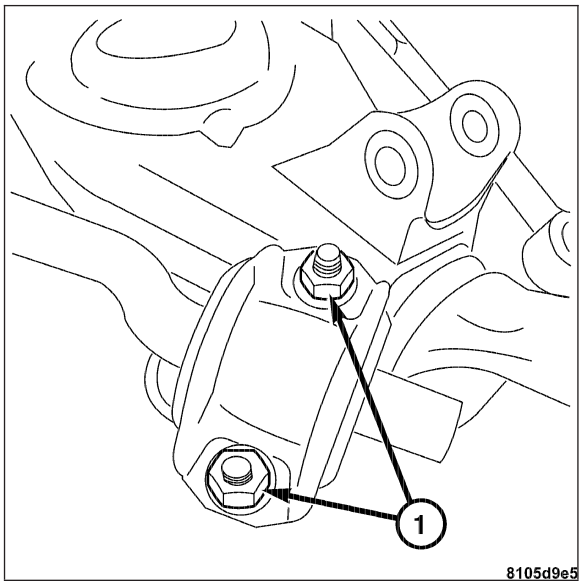

5. Install the shock absorber bolt and nut (1) to the lower control arm. Tighten to 55 N·m (41 ft. lbs.).

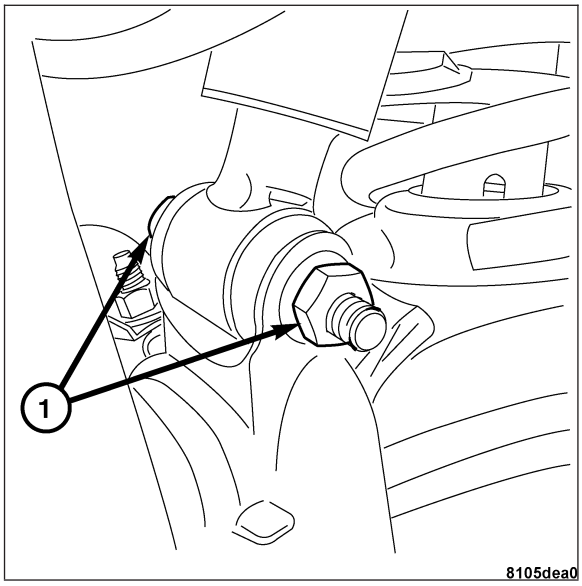

6. Install the front spring (1). **Refer to Page 2-44**.
7. Lower the vehicle and check vehicle alignment. **Refer to Page 2-6**.
8. Install the front wheel and tire assembly. **Refer to Page 22-42**.

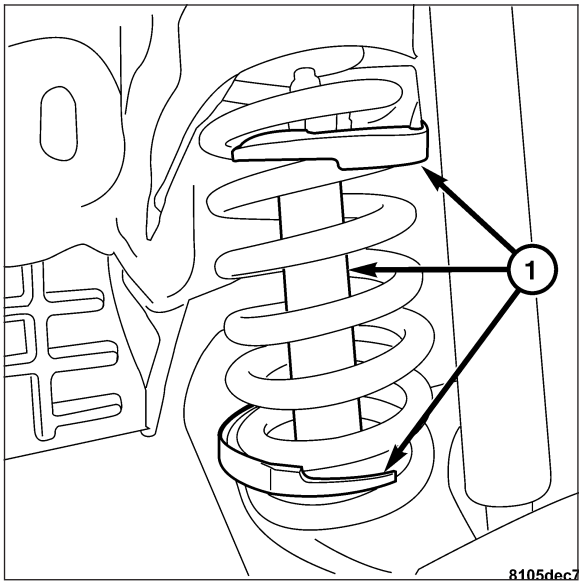

UPPER CONTROL ARM

REMOVAL

Note: If working on the right side remove the air cleaner housing to access the upper control arm bolt and nut.

Note: To remove the upper control arm the shock absorber must remain installed.

1. Remove the front wheel and tire assembly.
2. Wire tie the steering knuckle to the shock absorber (arrow). This is to hold the steering knuckle from falling away from the vehicle.
3. Remove the ball joint nut (3) from the upper control arm (2).

CAUTION: Do not subject the brake hose and any electrical cables to any tension.

CAUTION: Do not use pneumatic tools to tighten the bolt on the tool.

4. Using Special Tool 9168 Ball Joint Puller, press the upper ball joint out of the steering knuckle.
5. Remove the upper control arm (2) from the body by removing the nut and bolt (1) from the inside of the engine compartment on the shock tower.

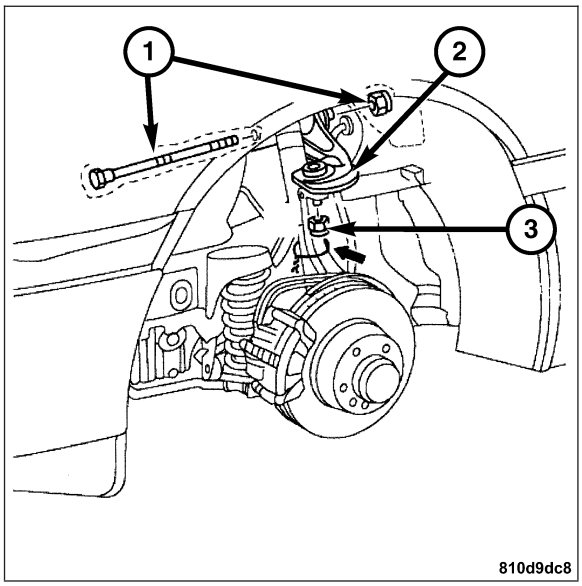

INSTALLATION

WARNING: TIGHTEN ALL NUTS AND BOLTS WITH THE VEHICLE AT NORMAL RIDE HEIGHT.

1. Install the upper control arm (2) and the bolt and nut (1) to the body. Tighten to 65 N·m (48 ft. lbs.)

Note: Clean the ball joint tapered bolt and mounting hole of the steering knuckle.

2. Install the upper ball joint (3) to the steering knuckle. Tighten to 45 N·m (33 ft. lbs.)
3. Remove the wire tie attaching the steering knuckle to the shock absorber.
4. Lower the vehicle and check vehicle alignment. **Refer to Page 2-6**.
5. Install the wheel and tire assembly. **Refer to Page 22-42**.

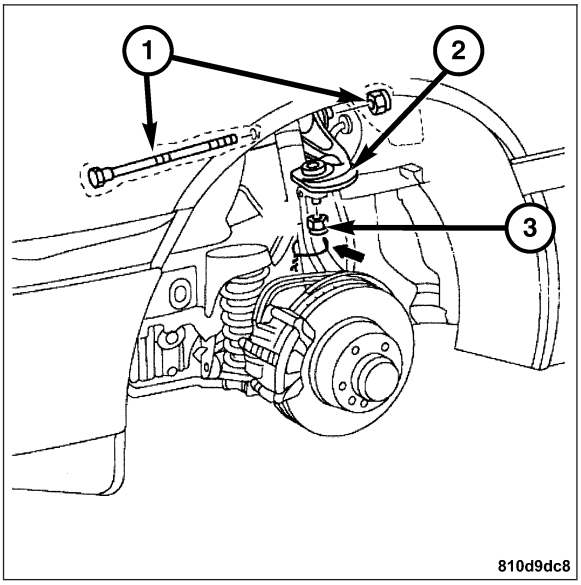

SHOCK

REMOVAL

Note: The vehicle must be standing on its wheels when removing the upper shock absorber mounting.

1. Remove the shock absorber upper mounting nut (1).
2. Remove the washer and rubber mounts.
3. Raise and support the vehicle.

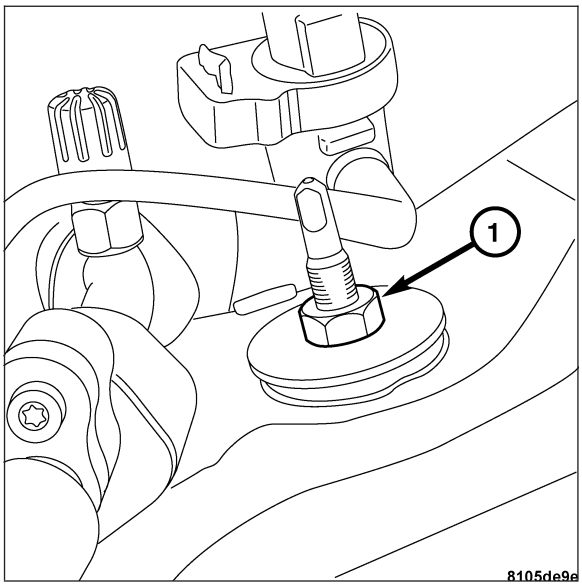

4. Remove the shock absorber nut and bolt (1) from the lower control arm. Then remove the shock from the vehicle by pulling it down and out of the vehicle.
5. Remove any mounting parts from the shock absorber.
6. Inspect all mounting parts for any damage or cracks.

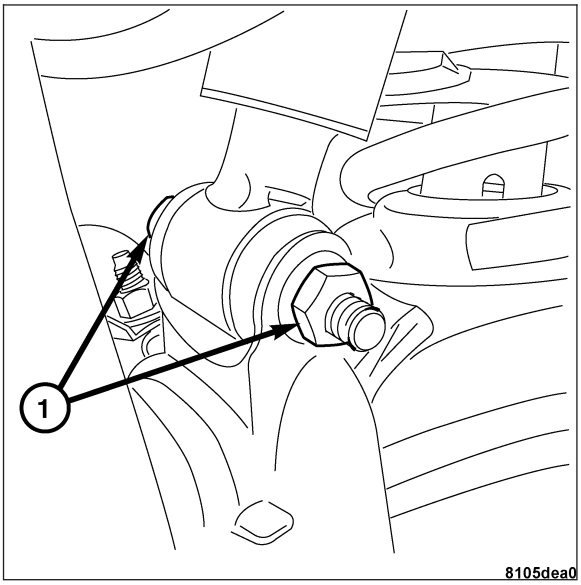

INSTALLATION

1. Install the mounting hardware and bushings to the lower mount and the shock absorber upper mounting stud.
2. Install the shock absorber to the vehicle by inserting the top first and then aligning the lower control arm mounting bracket to the shock absorber.
3. Install the shock absorber lower bolt and nut (1) to the lower control arm shock. Tighten to 55 N·m (41 ft. lbs.).
4. Slowly lower the vehicle making sure to guide the upper shock stud through the mounting hole.

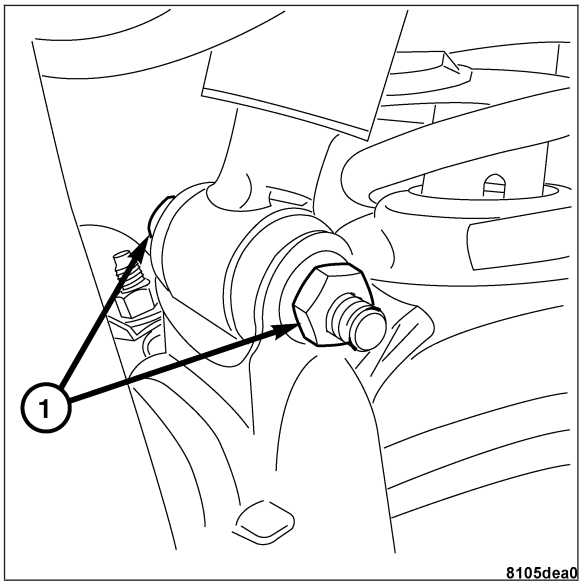

5. Install the rubber mount and washer over the shock absorber stud.
6. Install the shock absorber upper mounting nut (1). Tighten to 18 N·m (13 ft. lbs.).
7. Lower the vehicle and check vehicle alignment. **Refer to Page 2-6**.

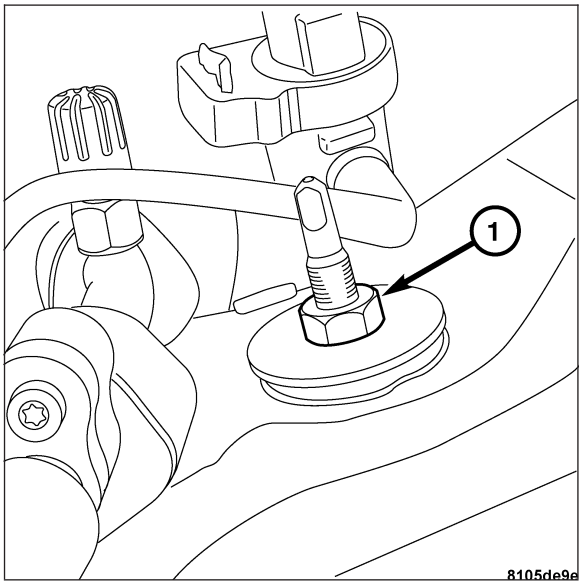

SPRING

REMOVAL

1. With the vehicle resting on its wheels remove the upper shock absorber nut (1).
2. Remove the washer and rubber mount.

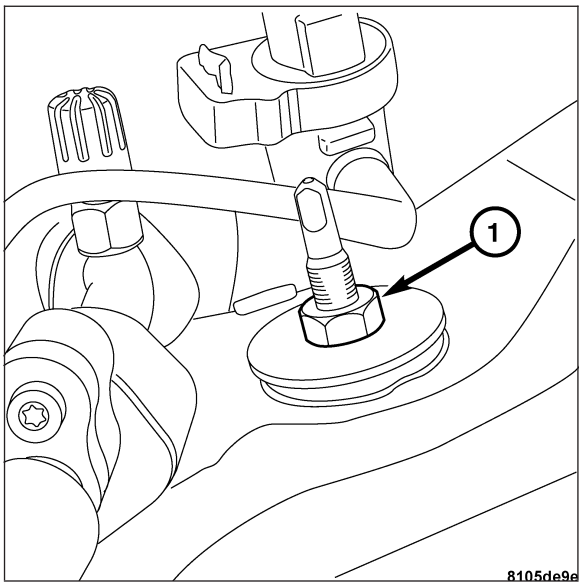

3. Raise and support the vehicle then remove the lower shock absorber bolt and nut (1). Remove the shock from the vehicle.

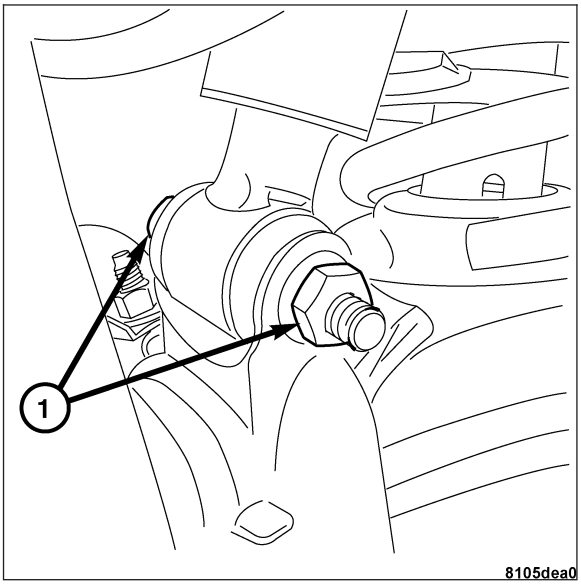

4. Support the lower control arm with a suitable supporting device. Raise the lower control arm up until it is almost level.

WARNING: ONLY USE APPROVED CLAMPING DEVICES AND IF APPROPRIATE ALSO SCREEN OFF THE DANGER AREA. INSPECT SPECIAL TOOLS FOR DAMAGE AND FUNCTION. WEAR SAFETY GLOVES AND EYE PROTECTION.

CAUTION: Risk of injury from hands and fingers being trapped or crushed when working on preloaded springs or spring bodies.

5. Using Special Tool 9151 Spring Compressor and 9152 Clamping Plates (1), carefully compress the front spring.

6. Remove the nuts from the lower control arm mounting bolts.
7. Carefully remove the lower control arm mounting bolts from the body.
8. Lower the supporting device and swing the lower control arm down while holding the front spring. When enough clearance has been achieved from the lower control arm and the upper spring perch, remove the front spring from the vehicle.

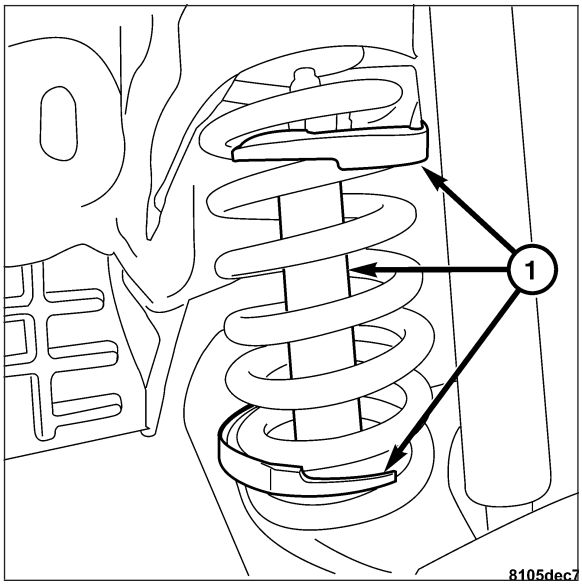

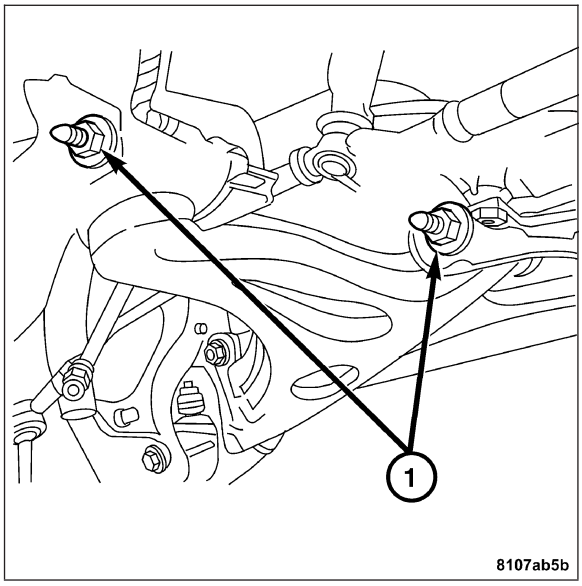

INSTALLATION

1. Install the compressed front spring (1) with the rubber mount to the vehicle.

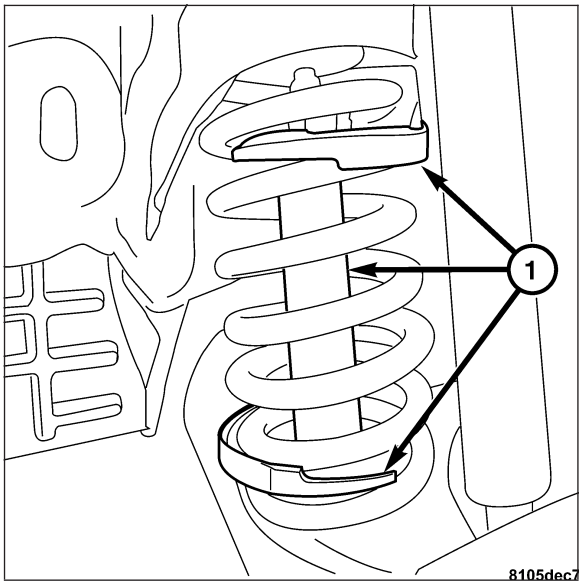

2. Swing the lower control arm up to its mounting position and install the bolts and nuts (1).

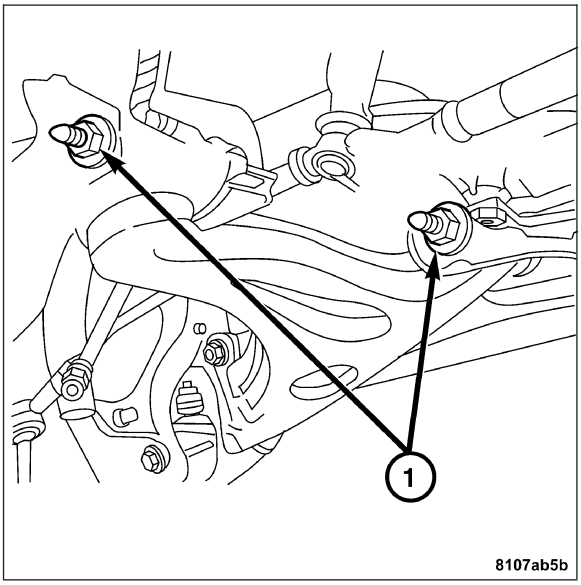

Note: To avoid suspension preload, the vehicle must be at normal ride height before tightening lower control arm bolts.

3. Install the supporting device to the lower control arm. Position the lower control arm so the distance between the spring and the upper and lower perches is snug making sure the spring is in its correct mounting position.
4. Slowly release the front spring making sure it is in its correct mounting position.
5. Lower and remove the supporting device so the lower control arm is in its down position.

6. Install the lower shock mounting hardware (1).

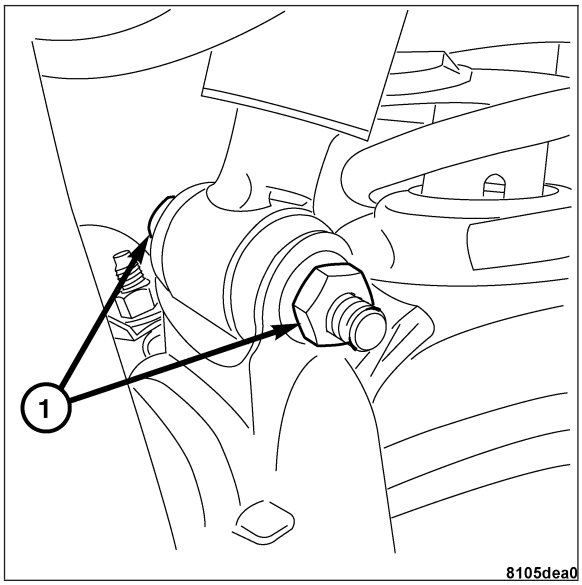

7. Lower the vehicle while guiding the shock into the upper mounting surface.
8. Install the rubber mount and washer over the shock absorber stud.
9. Install the shock absorber upper mounting nut (1). Tighten to 18 N·m (13 ft. lbs.).
10. Tighten the lower control arm to 120 N·m (88 ft. lbs.).
11. Lower the vehicle and check vehicle alignment. **Refer to Page 2-6**.

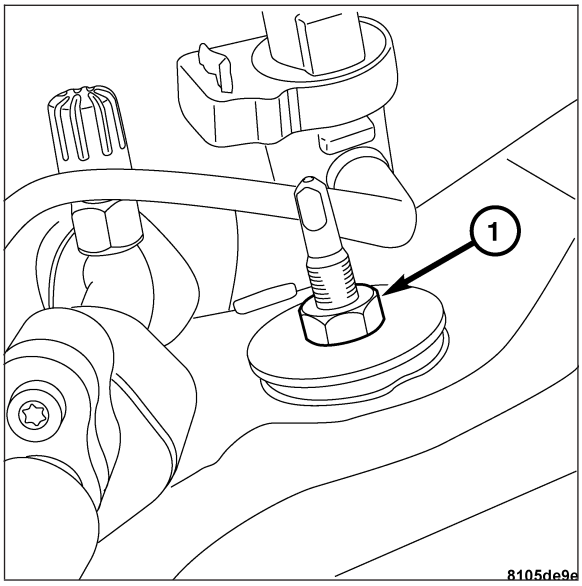

STABILIZER BAR

REMOVAL

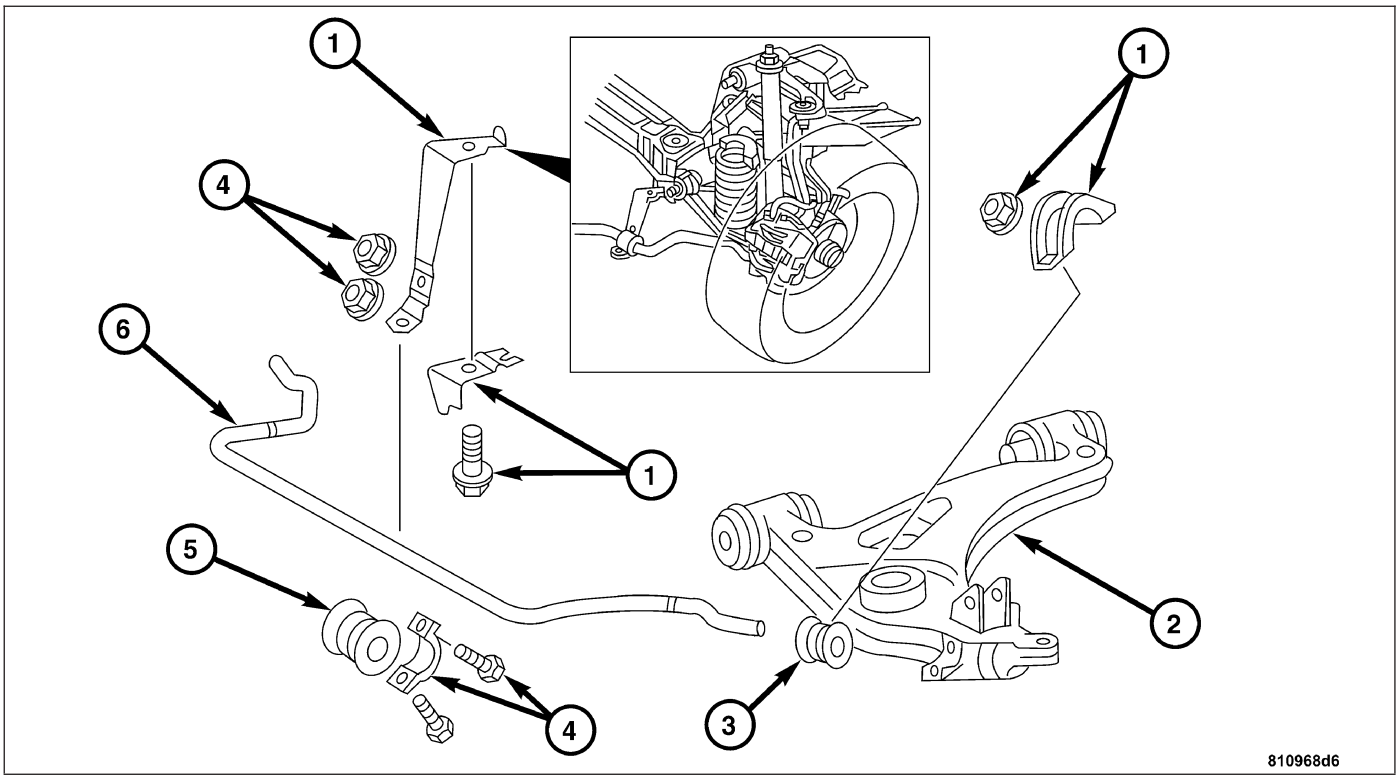

1 - STABILIZER BAR BRACKETS
2 - LOWER CONTROL ARM
3 - RUBBER BUSHING
4 - RETAINER BRACKET BOLTS AND NUTS
5 - RUBBER BUSHINGS
6 - STABILIZER BAR

1. Remove the stabilizer bar brackets (1) from the right and left lower control arms.
2. Remove the stabilizer bar bracket (4) from the retainer bracket.
3. Remove retainer bracket (4) and bracket mounting plate (if necessary).
4. Remove the stabilizer bar (6) from the vehicle.
5. Pull all rubber bushings (3 and 5) off of the stabilizer bar (6).

INSTALLATION

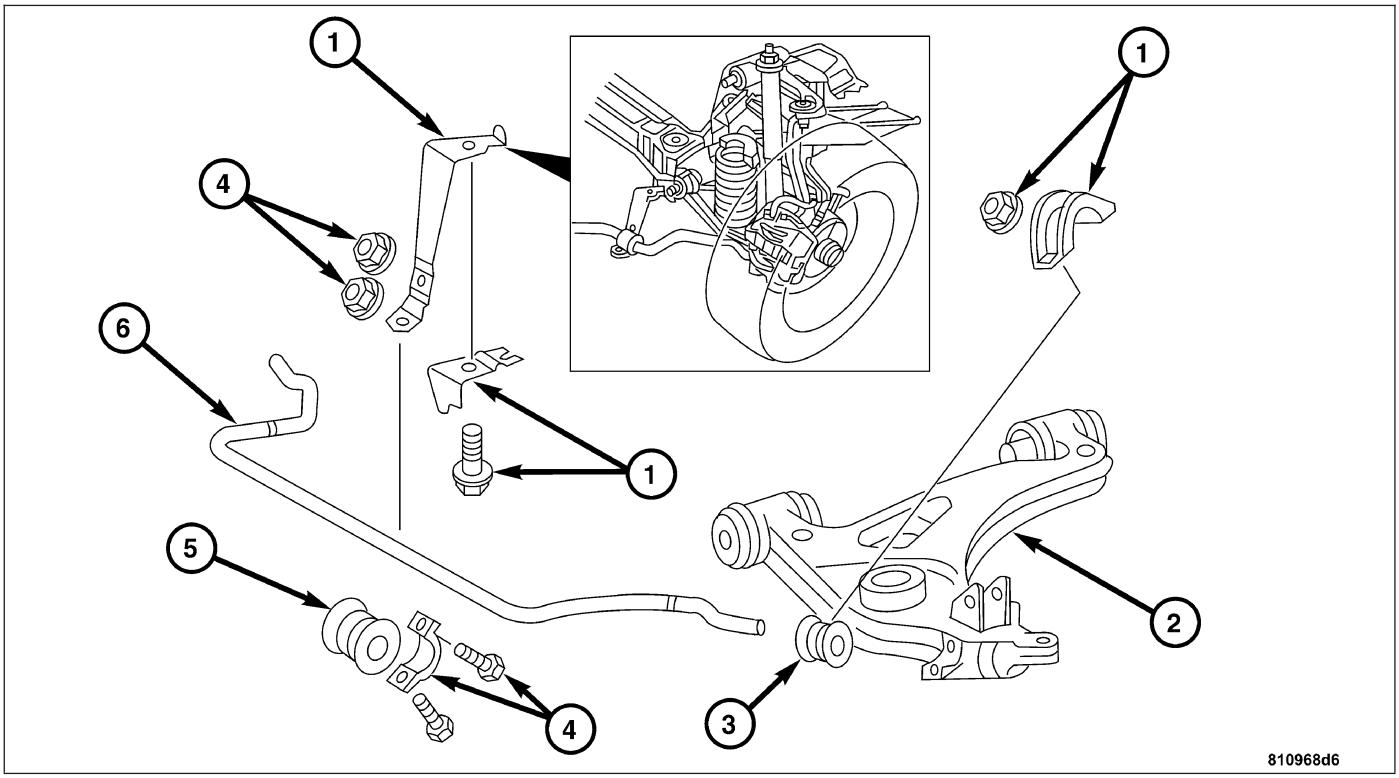

1 - STABILIZER BAR BRACKETS
2 - LOWER CONTROL ARM
3 - RUBBER BUSHING
4 - RETAINER BRACKET BOLTS AND NUTS
5 - RUBBER BUSHINGS
6 - STABILIZER BAR

1. Install both right and left stabilizer bar bushings (3 and 5) onto the stabilizer bar (6).

Note: The lower control arms (2) may need to be raised to accept the stabilizer bar bushing (2) to its mating surface.

2. Install the stabilizer bar (6) to the vehicle by loosely installing the bolts and nuts to all four brackets (1 and 4).
3. Align the stabilizer bar (6) so it is centered in the vehicle.

Note: Due to the preload of the bracket, install the hexagon socket bolt first.

4. Tighten both stabilizer bar bolts to frame.
5. Tighten both stabilizer bar hexagon socket bolts to the retainer (4).
6. Tighten both right and left stabilizer bar bracket nuts to the lower control arm (2). Torque to 20 N·m (15 ft. lbs.).
7. Install the stabilizer bar retainer and mounting plate (if removed).
8. Tighten the retainer bolt (4) to frame (if removed). Torque to 60 N·m (44 ft. lbs.).
9. Tighten the lower retainer nut to the fastening bracket (if removed). Torque to 20 N·m (15 ft. lbs.).
10. Tighten upper retainer lever nut to the fastening bracket (if removed). Torque to 40 N·m (29 ft. lbs.).
11. Lower the vehicle and check vehicle alignment. **Refer to Page 2-6**.

REAR SUSPENSION

TABLE OF CONTENTS

page

REAR SUSPENSION
SPECIFICATIONS 48
CAMBER STRUT
REMOVAL 49
INSTALLATION 50
TRAILING LINK
REMOVAL 50
INSTALLATION 51
LATERAL LINK
REMOVAL 51
INSTALLATION 52
TRACK BAR
REMOVAL 52
INSTALLATION 53
LOWER CONTROL ARM
REMOVAL 53
INSTALLATION 55
KNUCKLE
REMOVAL 58
INSTALLATION 63
HUB / BEARING
REMOVAL 67
INSTALLATION 70
STABILIZER BAR
REMOVAL 72
INSTALLATION 76
SHOCK
REMOVAL 80
INSTALLATION 81
SPRING
REMOVAL 83
INSTALLATION 85
REAR AXLE CARRIER
REMOVAL 87
INSTALLATION 93

REAR SUSPENSION

SPECIFICATIONS

Torque Specifications

Description	N·M	Ft. Lbs.	In. Lbs.
Stabilizer Link to Stabilizer Bar	30	22	266
Stabilizer Bar to Stabilizer Link Nut	20	15	177
Bolt, Stabilizer Bar Clamp	20	15	177
Upper Shock Nut	18	13	159
Shock Absorber to Lower Control Arm	55	41	487
Front Rear Axle Carrier Nut	90	66	797
Rear Axle Carrier Rear Axle Nut	90	66	797
Rear Axle Center Assembly At Front to Rear Axle Carrier	50	37	443

Description	N·M	Ft. Lbs.	In. Lbs.
Rear Axle Center Assembly At Rear to Rear Axle Carrier	110	81	974
Lower Control Arm to Rear Axle Carrier	70	52	620
Lower Control Arm to Wheel Carrier	120	88	1060
Camber Strut to Rear Axle Carrier	70	52	620
Camber Strut to Wheel Carrier	70	52	620
Trailing Link to Rear Axle Carrier	70	52	620
Trailing Link to Wheel Carrier	70	52	620
Lateral Link to Rear Axle Carrier	70	52	620
Lateral Link to Wheel Carrier	30	22	266
Track Bar to Rear Axle Carrier	70	52	620
Track Bar to Wheel Carrier	70	52	620

CAMBER STRUT

REMOVAL

1. Raise and support the vehicle.
2. Remove the wheel and tire assembly.
3. Remove the inner camber strut bolt (1) attaching the camber strut to the rear axle carrier.
4. Remove the outer camber strut bolt (2) attaching the camber strut to the wheel carrier.

Note: Lightly tap the camber strut with a plastic headed hammer to loosen or guide the rubber mounts out of their mounting flanges.

5. Remove the camber strut.

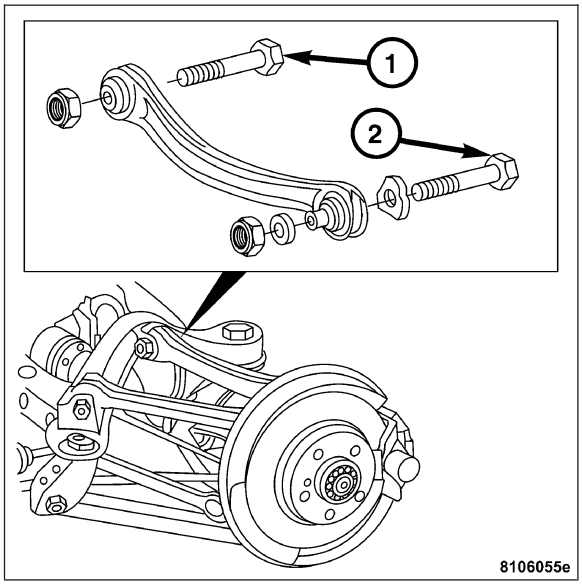

INSTALLATION

1. Install the camber strut onto the vehicle.

CAUTION: Do not tighten to torque value at this point. The vehicle must be in ready-to-drive position.

2. Install the outer camber strut bolt attaching the camber strut to the wheel carrier.

CAUTION: Do not tighten to torque value at this point. The vehicle must be in its ready-to-drive position.

3. Install the inner camber strut bolt attaching the camber strut to the rear axle carrier.
4. Install the wheel and tire assembly.
5. Lower the vehicle so it is not being supported by the lift.
6. Tighten the outer camber strut bolt attaching the camber strut to the wheel carrier to 70 N·m (52 ft. lbs.).
7. Tighten the inner camber strut bolt attaching the camber strut to the rear axle carrier to 70 N·m (52 ft. lbs.).
8. Check vehicle alignment. **Refer to Page 2-6**.

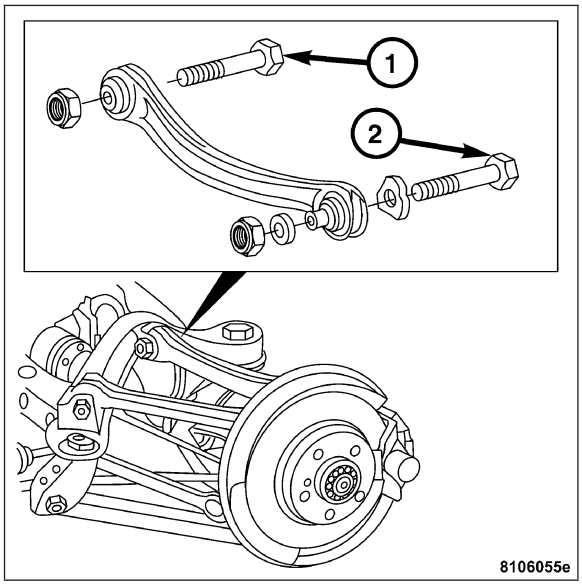

TRAILING LINK

REMOVAL

1. Raise and support the vehicle.
2. Remove the wheel and tire assembly.
3. Remove the inner trailing link bolt (1) attaching the trailing link to the rear axle carrier.
4. Remove the outer trailing link bolt (2) attaching the trailing link to the wheel carrier.

Note: Lightly tap the trailing link with a plastic headed hammer to loosen or guide the rubber mounts out of their mounting flanges.

5. Remove the trailing link.

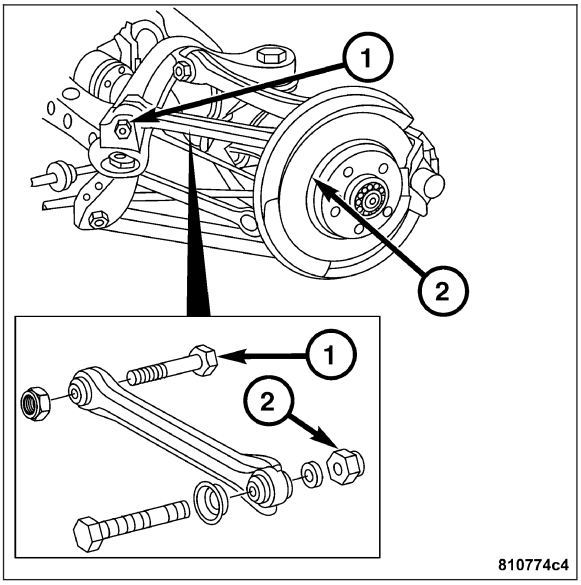

INSTALLATION

1. Install the trailing link onto the vehicle.

CAUTION: Do not tighten to torque value at this point. The vehicle must be in its ready-to-drive position.

2. Install the outer trailing link bolt (2) attaching the trailing link to the wheel carrier.

CAUTION: Do not tighten to torque value at this point. The vehicle must be in its ready-to-drive position.

3. Install the inner trailing link bolt (1) attaching the trailing link to the rear axle carrier.
4. Install the wheel and tire assembly.
5. Lower the vehicle so it is not being supported by the lift.
6. Tighten the outer trailing link bolt attaching the trailing link to the wheel carrier to 70 N·m (52 ft. lbs.).
7. Tighten the inner trailing link bolt attaching the trailing link to the rear axle carrier to 70 N·m (52 ft. lbs.).
8. Check vehicle alignment. **Refer to Page 2-6**.

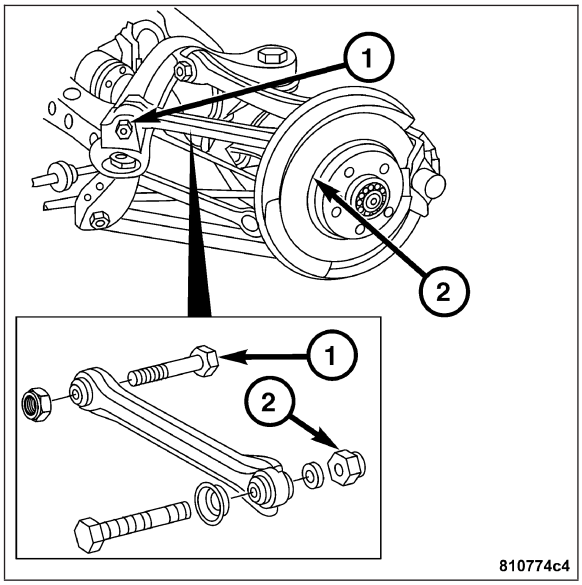

LATERAL LINK

REMOVAL

1. Raise and support the vehicle.
2. Remove the wheel and tire assembly.
3. Remove the inner lateral link bolt attaching the lateral link to the rear axle carrier.
4. Remove the lateral link ball joint nut (2).

CAUTION: Do not use pneumatic tools to tighten the bolt on the tool.

5. Using Special Tool 9168 Ball Joint Puller, remove the outer lateral link ball joint attaching the lateral link to the wheel carrier.

Note: Lightly tap the lateral link with a plastic headed hammer to loosen or guide the rubber mounts out of their mounting flanges.

6. Remove the lateral link (1).

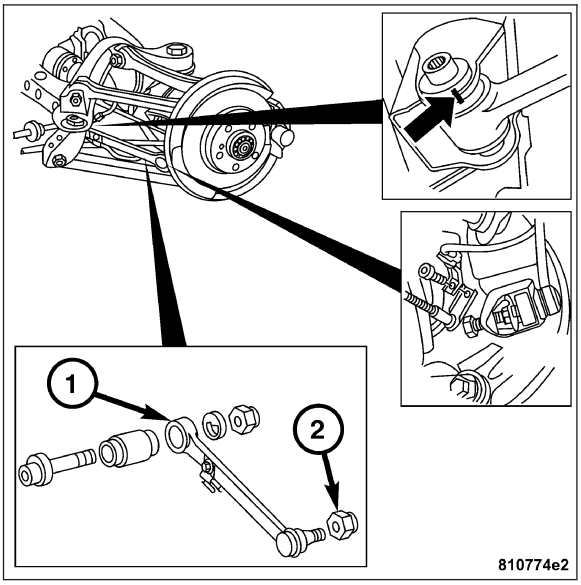

INSTALLATION

1. Install the lateral link onto the vehicle.

CAUTION: The rear axle shaft must be horizontal when tightening the lateral link nuts.

2. Install the outer lateral link ball joint attaching the lateral link to the wheel carrier.

CAUTION: The rear axle shaft must be horizontal when tightening the lateral link nuts.

3. Install the inner lateral link bolt attaching the lateral link to the rear axle carrier.

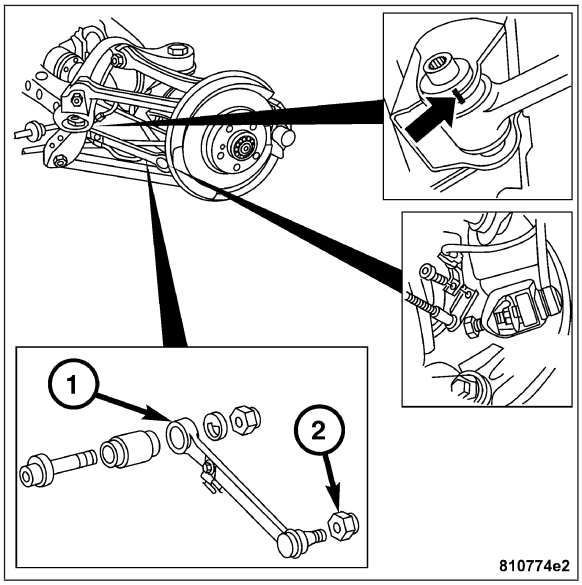

CAUTION: Tighten the nuts and bolts in the "ready-to-drive" position.

4. Tighten the outer lateral link ball joint attaching the lateral link to the wheel carrier to 30 N·m (22 ft. lbs.).
5. Tighten the inner lateral link bolt attaching the lateral link to the rear axle carrier to 70 N·m (52 ft. lbs.).

TRACK BAR

REMOVAL

1. Raise and support the vehicle.
2. Remove the wheel and tire assembly.
3. Remove the inner track bar bolt attaching the track bar to the rear axle carrier.
4. Remove the outer track bar bolt attaching the track bar to the wheel carrier.

Note: Lightly tap the track bar with a plastic headed hammer to loosen or guide the rubber mounts out of their mounting flanges.

5. Remove the track bar.

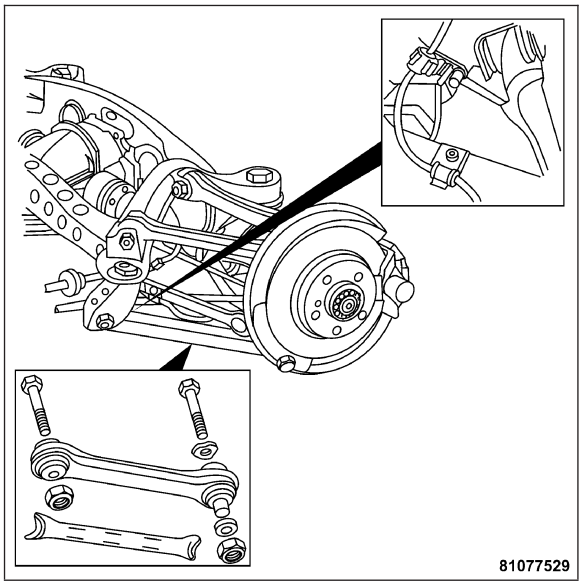

INSTALLATION

1. Install the track bar onto the vehicle.

CAUTION: Do not tighten to torque value at this point. The vehicle must be in its “ready-to-drive” position.

2. Install the outer track bar bolt attaching the track bar to the wheel carrier.

CAUTION: Do not tighten to torque value at this point. The vehicle must be in its “ready-to-drive” position.

3. Install the inner track bar bolt attaching the track bar to the rear axle carrier.
4. Install the wheel and tire assembly.
5. Lower the vehicle so it is not being supported by the lift.
6. Tighten the outer track bar bolt attaching the track bar to the wheel carrier to 70 N·m (52 ft. lbs.).
7. Tighten the inner track bar bolt attaching the track bar to the rear axle carrier to 70 N·m (52 ft. lbs.).
8. Check vehicle alignment. **Refer to Page 2-6**.

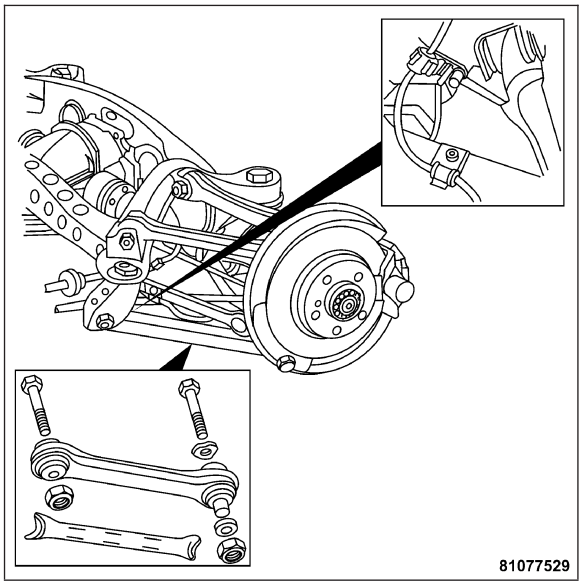

LOWER CONTROL ARM

REMOVAL

1. Remove the rear tire and wheel assembly.
2. Remove the rear lower control arm plastic shield by removing the bolts (1) attaching it to the lower control arm.

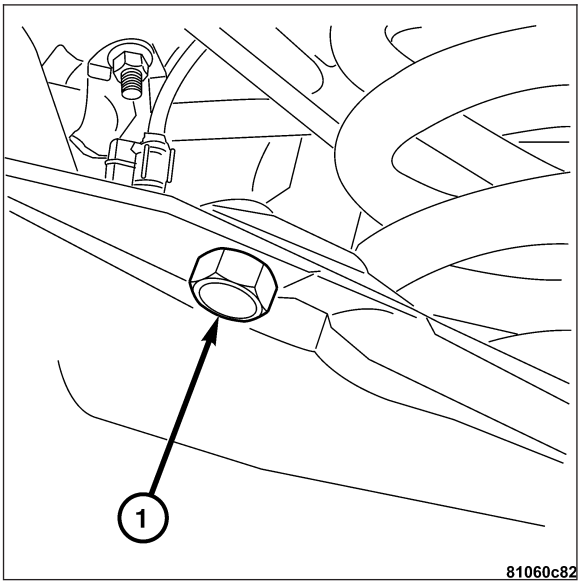

3. Remove the rear spring (1). **Refer to Page 2-83**.

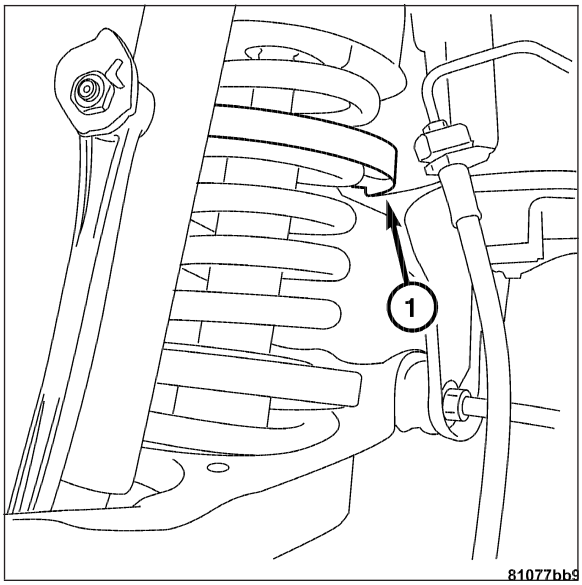

4. Remove the rear shock absorber (1). **Refer to Page 2-80**.

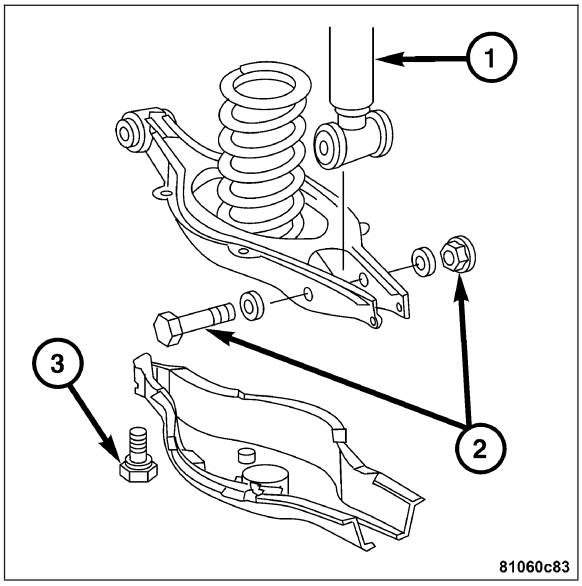

5. Remove the rear stabilizer bar link (1) from the rear lower control arm.

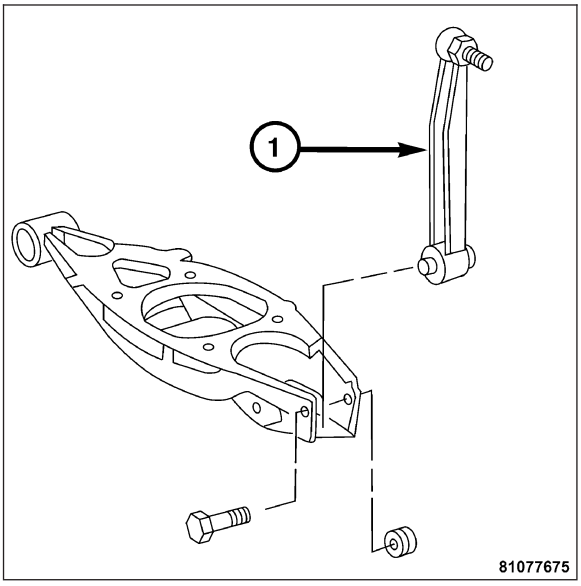

6. Remove the bolt attaching the rear lower control arm to the rear wheel carrier.
7. Remove the rear lower control arm (4) from the vehicle.

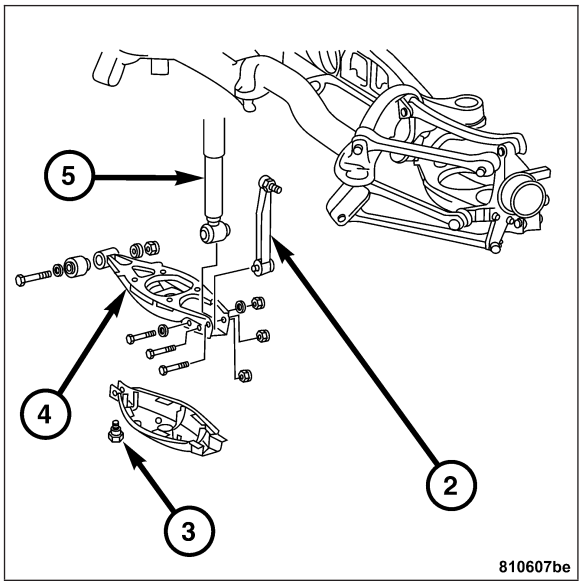

INSTALLATION

1. Install the bolt attaching the rear lower control arm (4) to the rear wheel carrier. Tighten to 70 N·m (52 ft. lbs.)

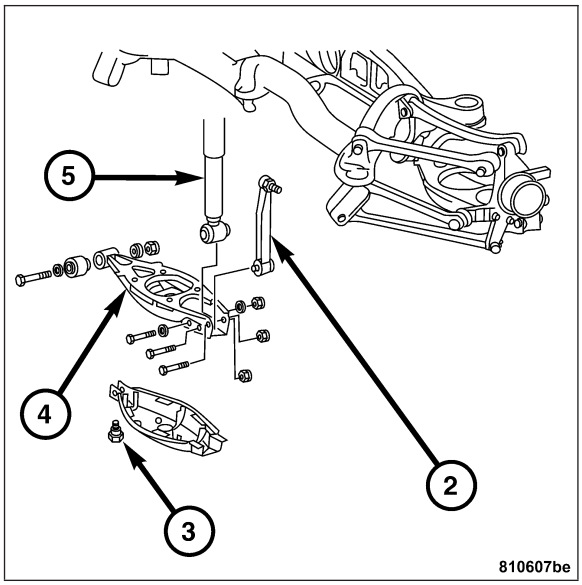

2. Install the rear shock absorber (1). **Refer to Page 2-81**.

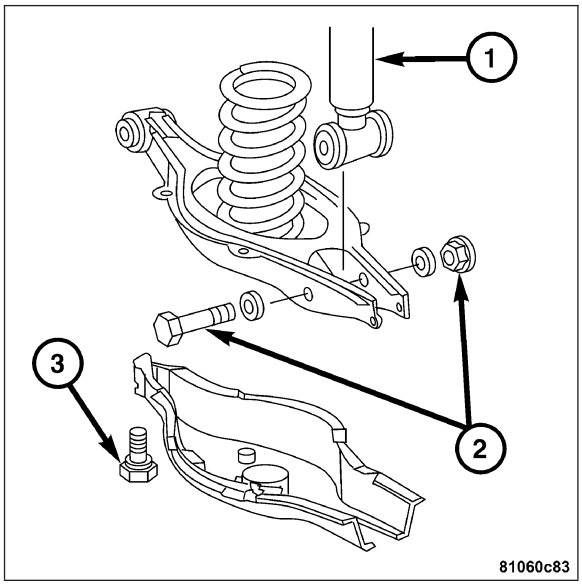

3. Install the rear spring (1). **Refer to Page 2-85**.

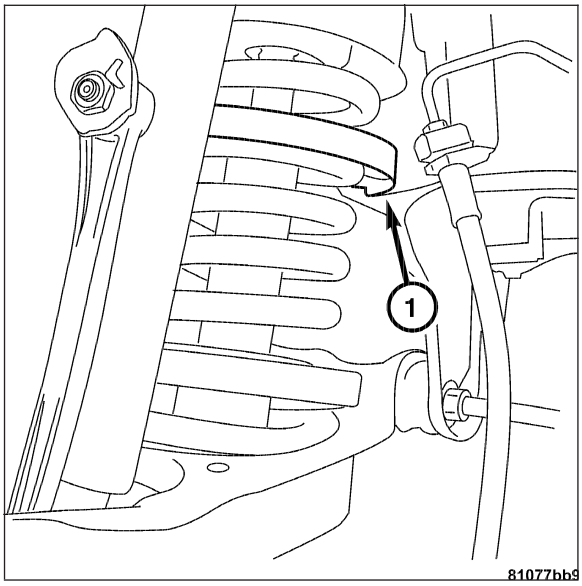

4. Install the rear lower control arm to the vehicle. Tighten to 70 N·m (52 ft. lbs.).

5. Install the rear stabilizer bar link (1) to the rear lower control arm. Tighten to 20 N·m (15 ft. lbs.).

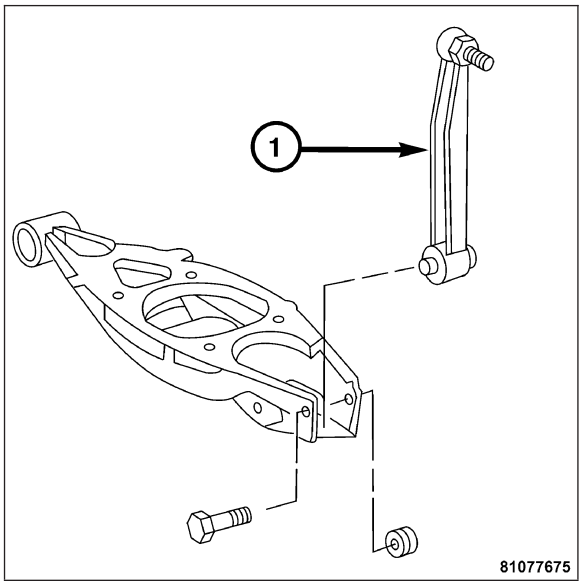

6. Install the rear lower control arm plastic shield bolt (1).
7. Install the wheel and tire assembly.
8. Check vehicle alignment. **Refer to Page 2-6**.

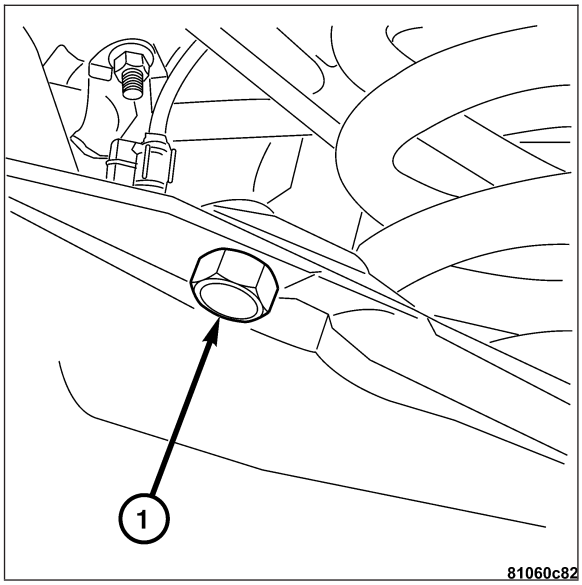

KNUCKLE

REMOVAL

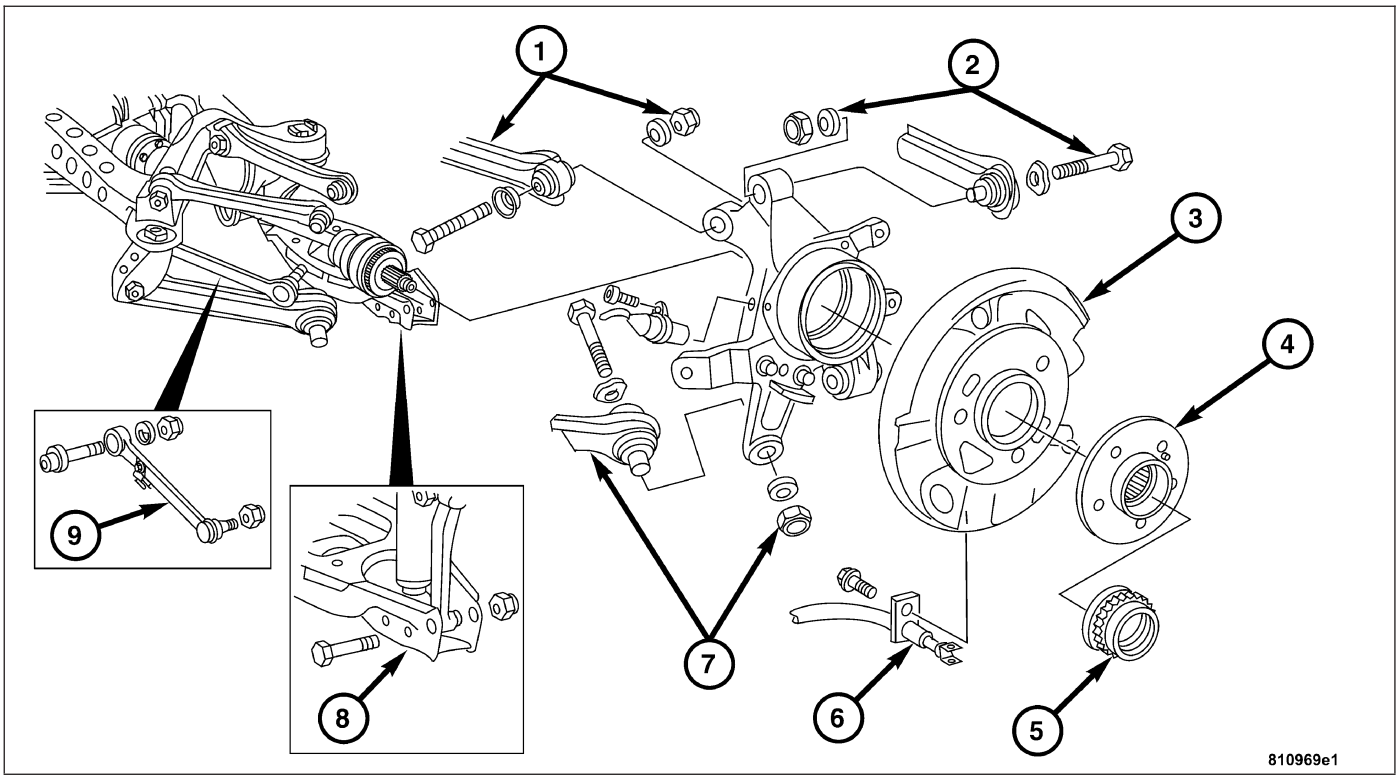

1 - TRAILING LINK
2 - CAMBER STRUT
3 - DUST SHIELD
4 - HUB
5 - AXLE NUT
6 - PARKING BRAKE CABLE
7 - TRACK BAR
8 - LOWER CONTROL ARM
9 - LATERAL LINK

1. Raise and support vehicle.
2. Remove the wheel and tire assembly.
3. Remove the rear disc brake caliper (1). **Refer to Page 5-25**.

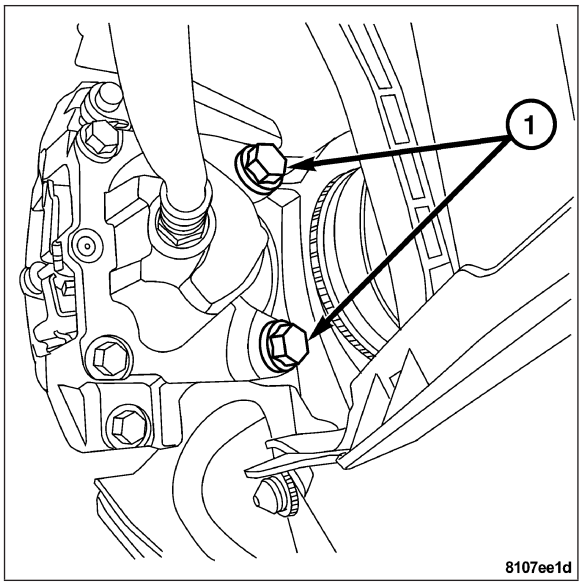

4. Remove the disc brake rotor. **Refer to Page 5-38**.

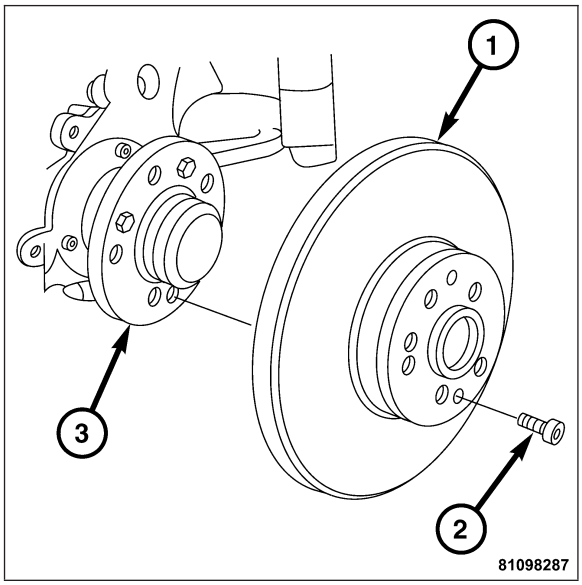

5. Remove the parking brake shoe assembly. **Refer to Page 5-70**.

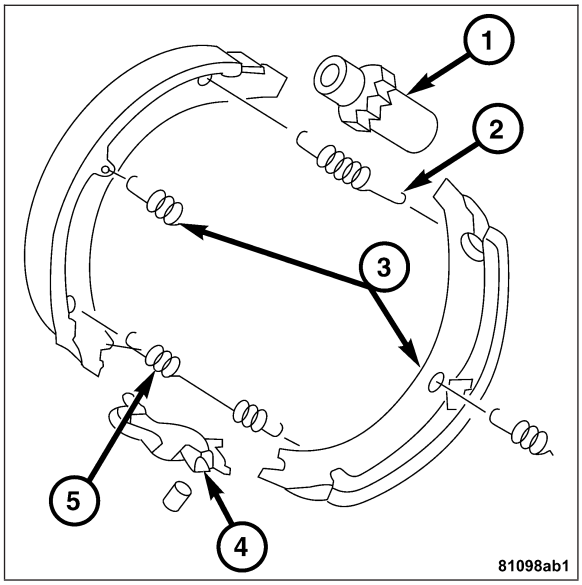

6. Remove the parking brake cable (2). **Refer to Page 5-61**.

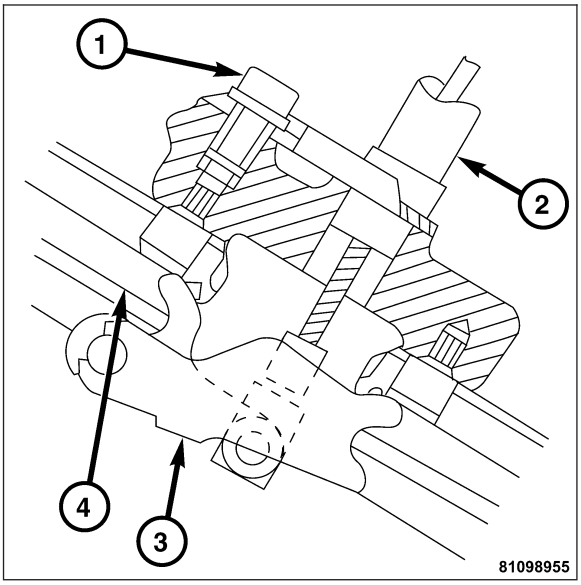

7. Remove the rear Wheel Speed Sensor (2) (WSS). **Refer to Page 5-197**.

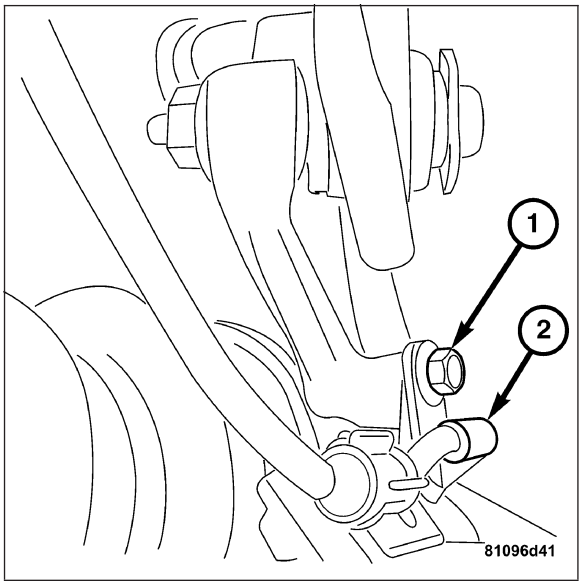

8. Remove the rear axle halfshaft from the rear hub assembly. **Refer to Page 3-4**.

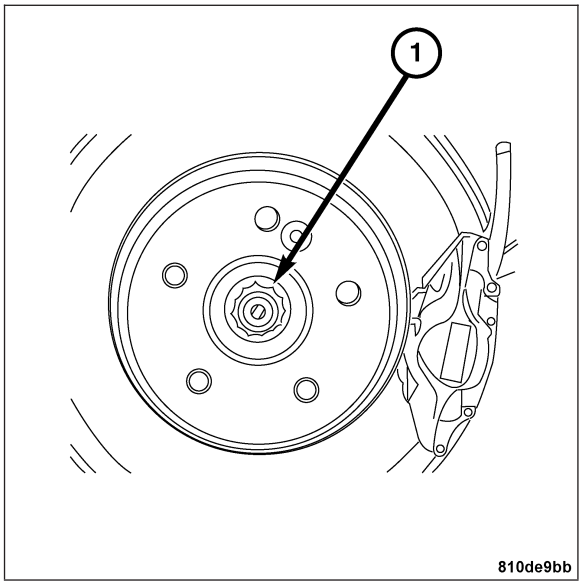

9. Remove the rear disc brake dust shield by removing the hex bolts (1) from the rear hub assembly.

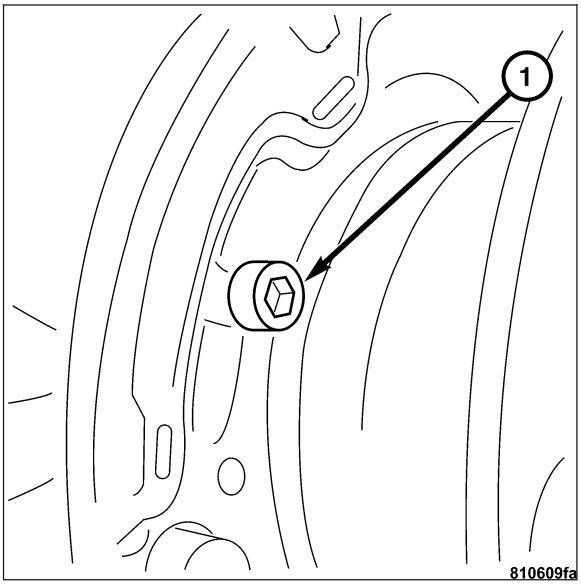

10. Remove the camber strut, nuts and bolts (1-2). **Refer to Page 2-49**.

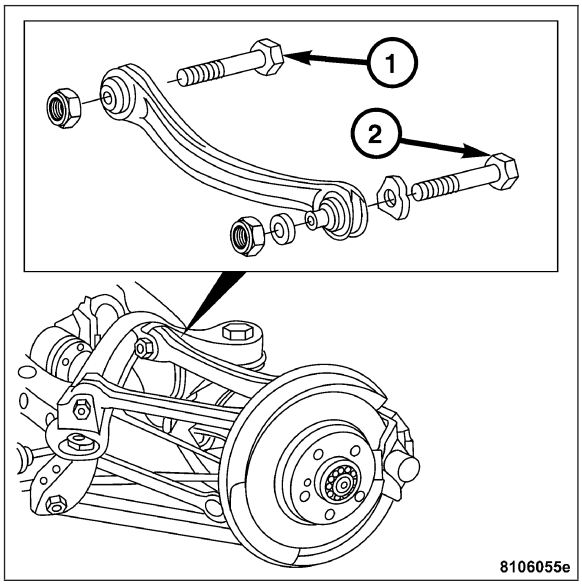

11. Remove the trailing link, nuts and bolts (1-2). **Refer to Page 2-50**.

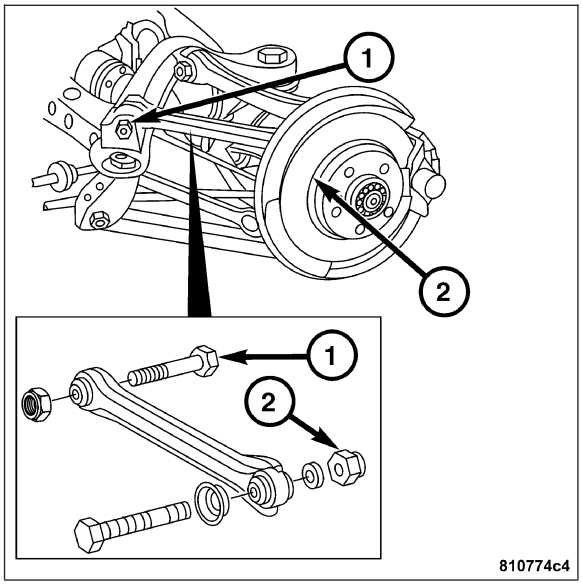

12. Remove the lateral link, nuts and bolts (1-2). **Refer to Page 2-51**.

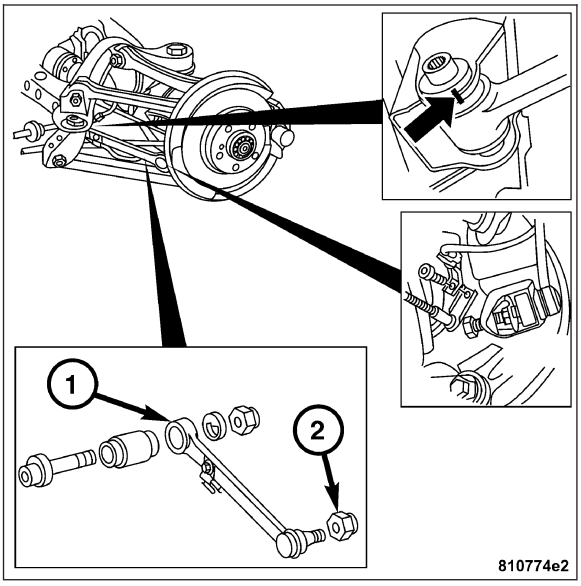

13. Remove the track bar. **Refer to Page 2-52**.
14. Remove the lower control arm. **Refer to Page 2-53**.

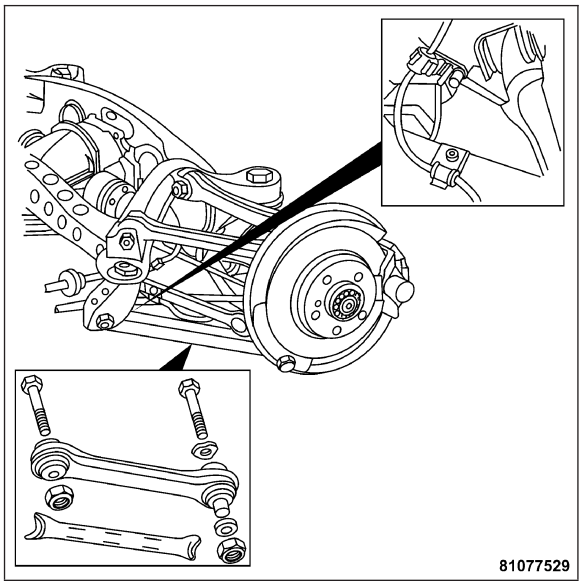

15. Remove the knuckle from the vehicle.
16. Inspect the bearing assembly (5) for any wear or damage, replace if necessary. **Refer to Page 2-67**.

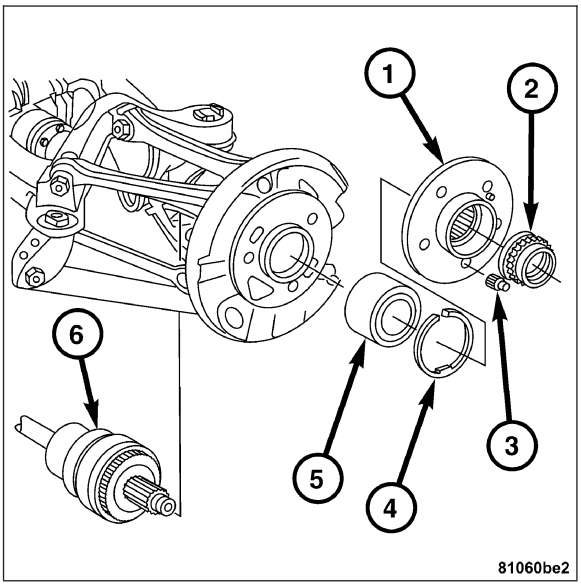

INSTALLATION

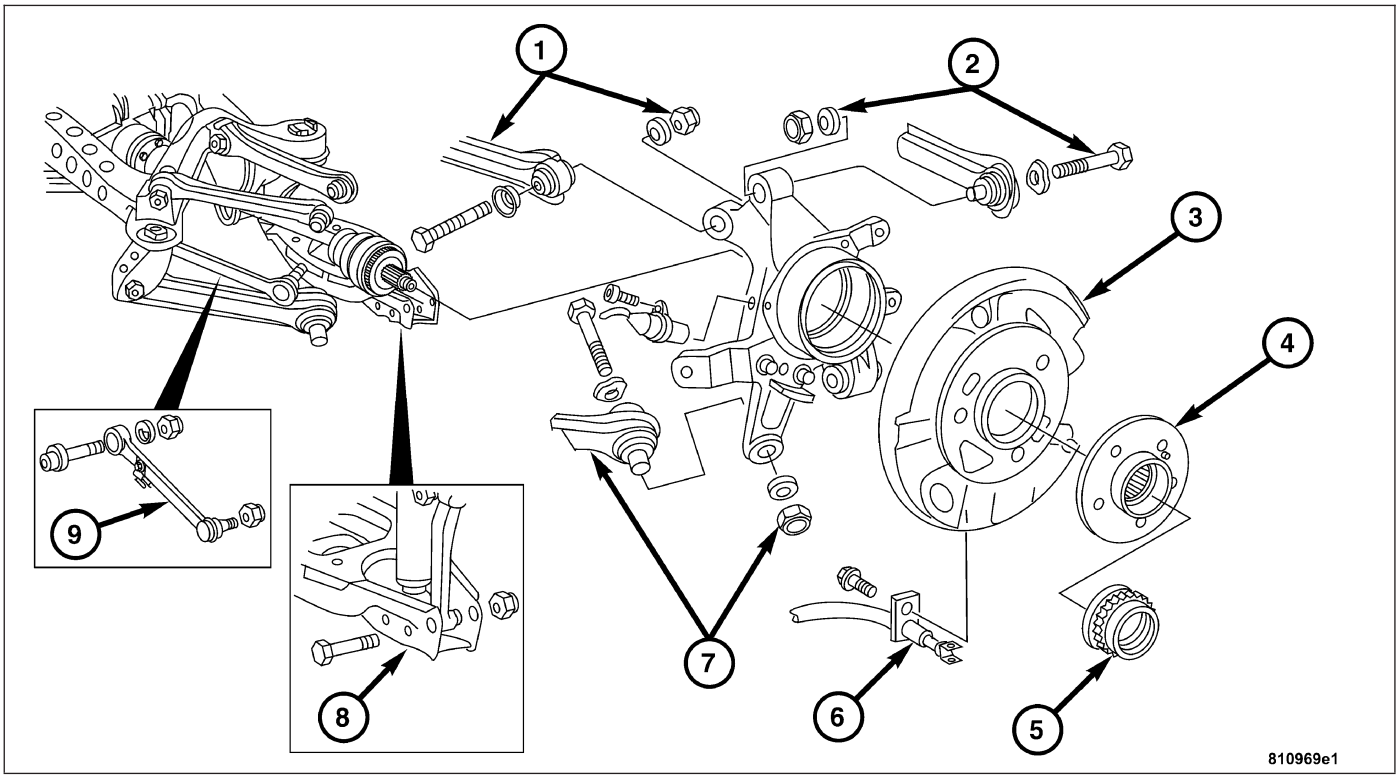

1 - TRAILING LINK
2 - CAMBER STRUT
3 - DUST SHIELD
4 - HUB
5 - AXLE NUT
6 - PARKING BRAKE CABLE
7 - TRACK BAR
8 - LOWER CONTROL ARM
9 - LATERAL LINK

CAUTION: The rear axle halfshaft must be horizontal when tightening all nuts and bolts.

1. Install the knuckle to the vehicle.
2. Install the trailing link, nuts and bolts (1-2). **Refer to Page 2-50**.

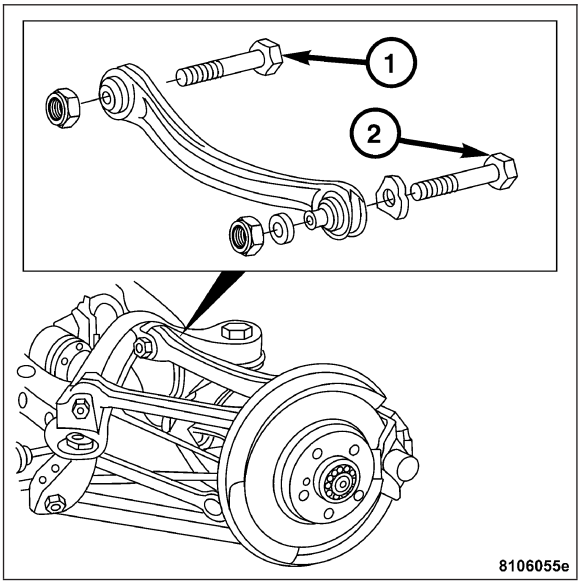

3. Install the trailing link nuts and bolts (1-2). **Refer to Page 2-51**.

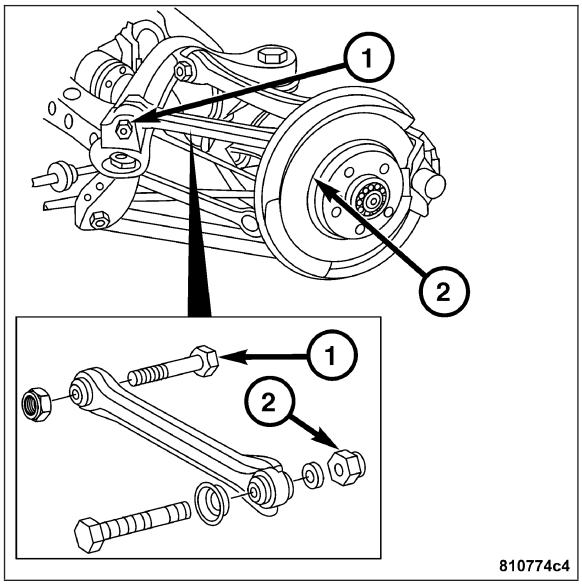

4. Install the lateral link nuts and bolts (1-2). **Refer to Page 2-52**.

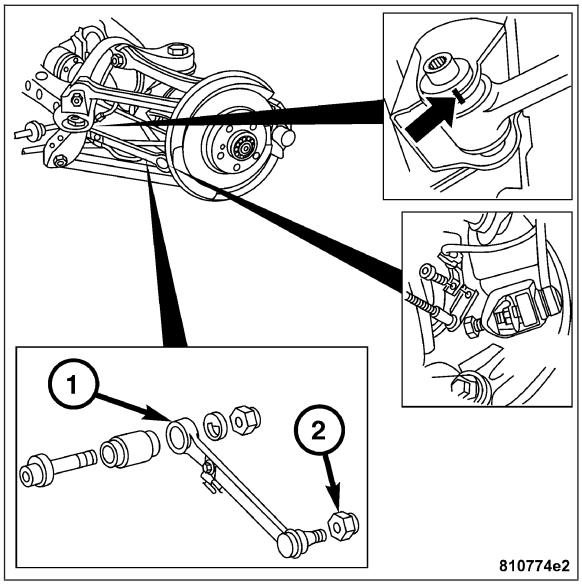

5. Install the track bar nuts and bolts (1-2). **Refer to Page 2-53**.
6. Install the lower control arm. **Refer to Page 2-55**.

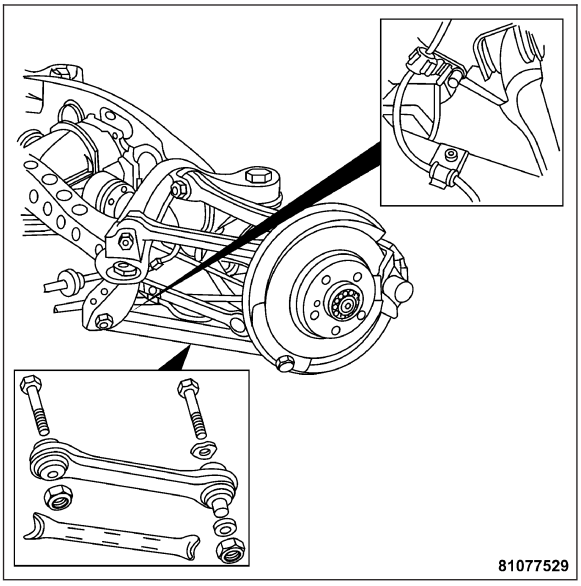

7. Install the rear disc brake dust shield by installing the bolts (1) to the rear hub assembly.

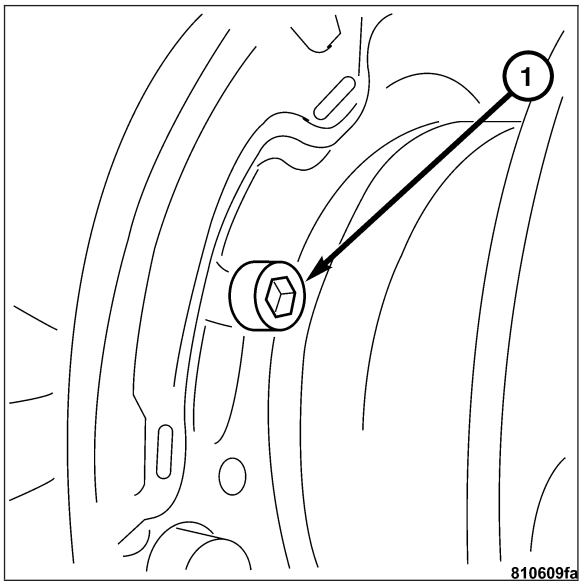

8. Install the rear axle halfshaft to the rear hub assembly. **Refer to Page 3-5**.

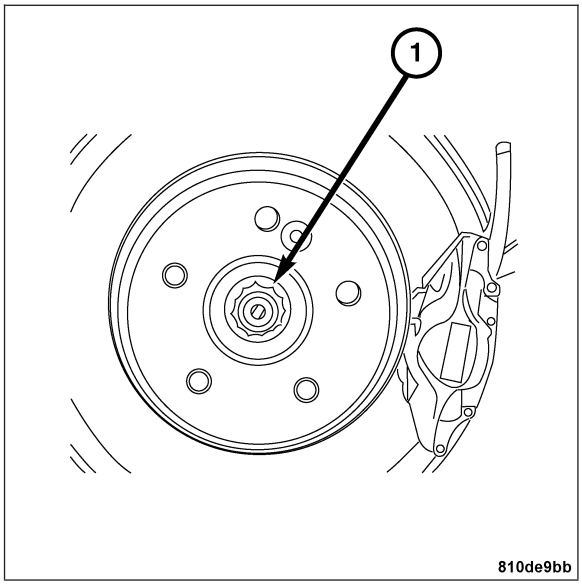

9. Install the rear Wheel Speed Sensor (2) (WSS). **Refer to Page 5-198**.

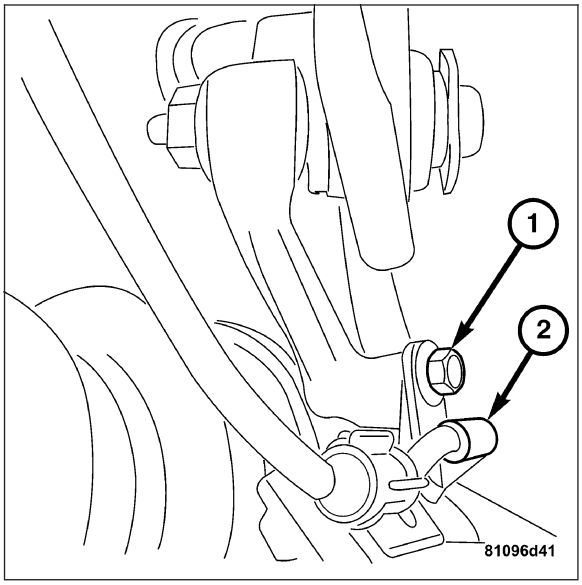

10. Install the parking brake cable (2). **Refer to Page 5-64**.

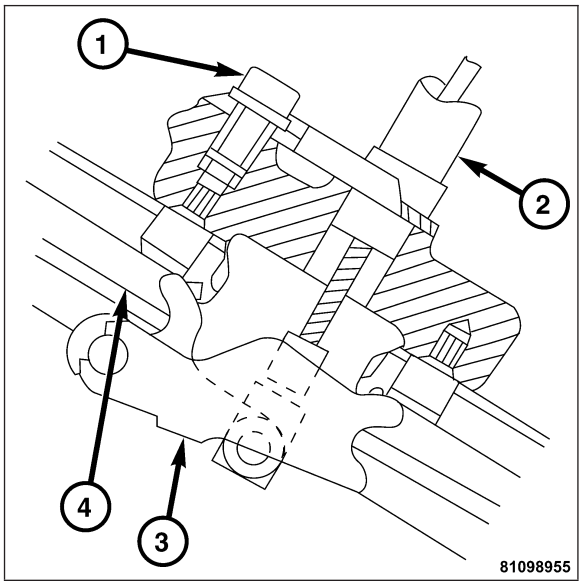

11. Install the parking brake shoe assembly (1-5). **Refer to Page 5-73**.

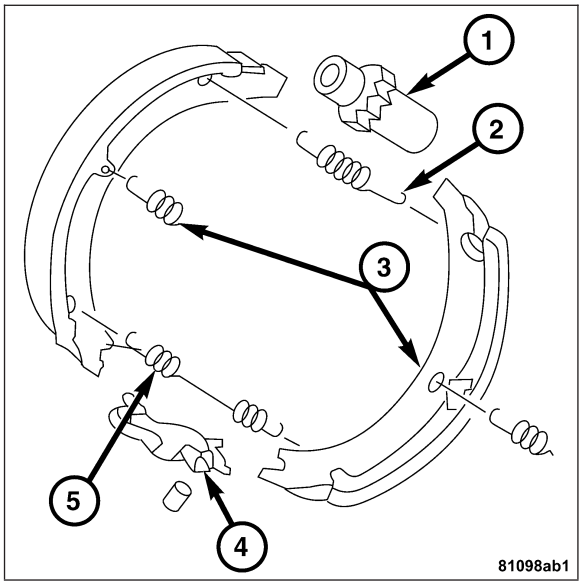

12. Install the disc brake rotor (1). **Refer to Page 5-40**.

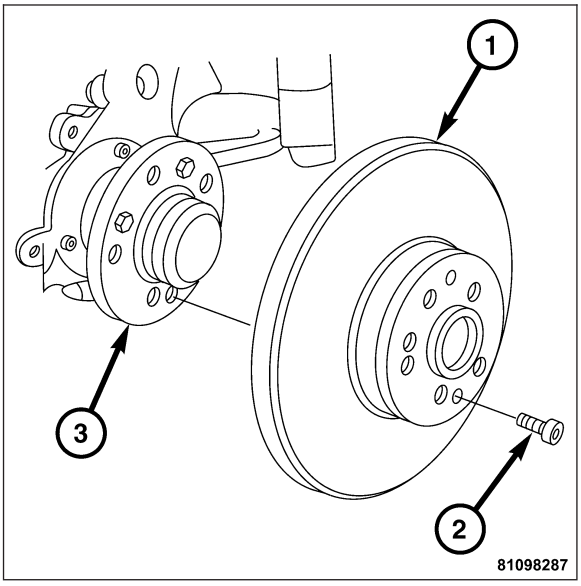

13. Install the rear disc brake caliper and bolts (1). **Refer to Page 5-32**.
14. Install the wheel and tire assembly. **Refer to Page 22-42**.
15. Check vehicle alignment. **Refer to Page 2-6**.

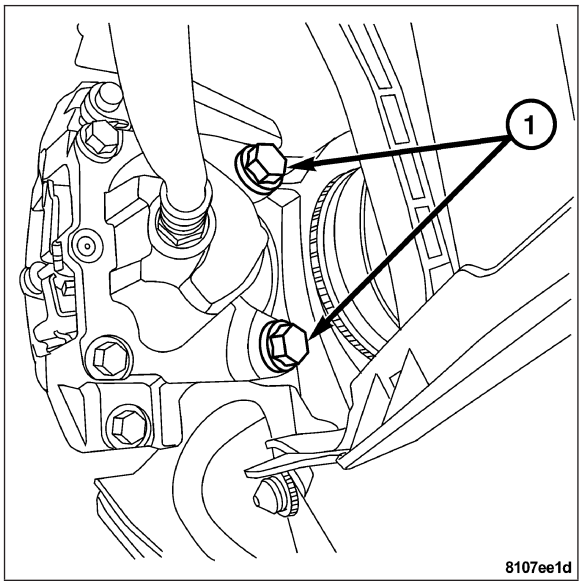

HUB / BEARING

REMOVAL

1. Remove the disc brake calipers and bolts (1).

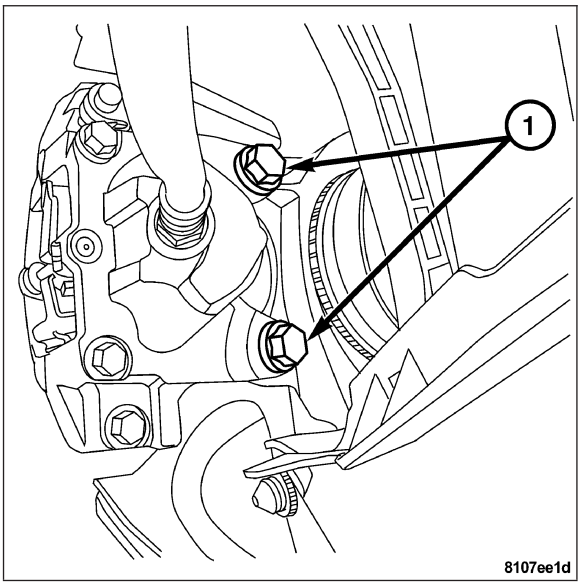

2. Remove rear disc brake rotor (1). **Refer to Page 5-38**.

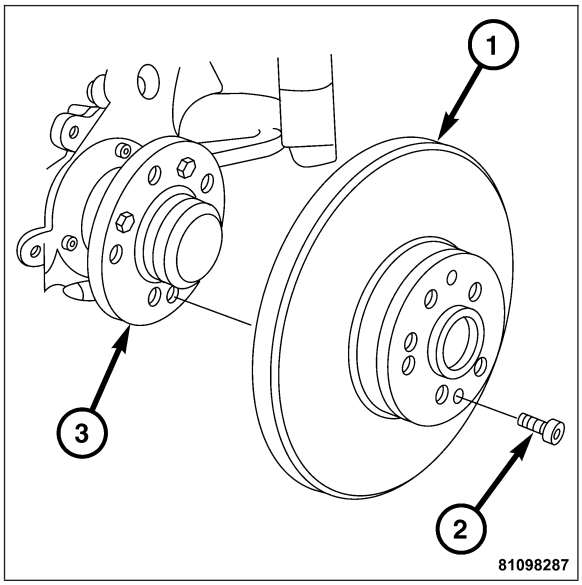

3. Remove the parking brake shoes (1-5). **Refer to Page 5-70**.

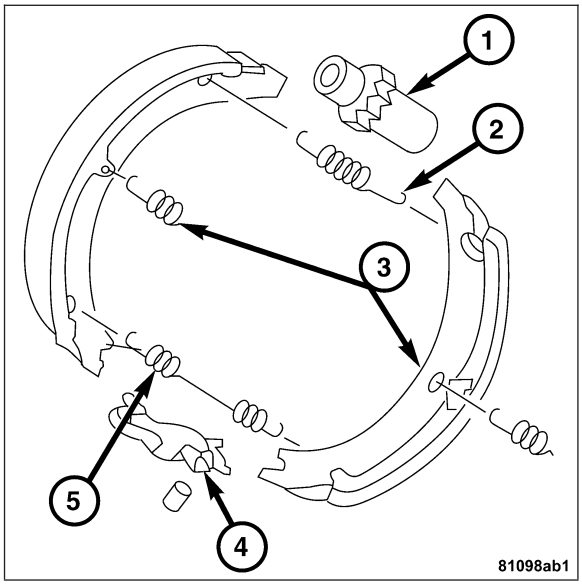

4. Remove the rear axle halfshaft. **Refer to Page 3-4**.

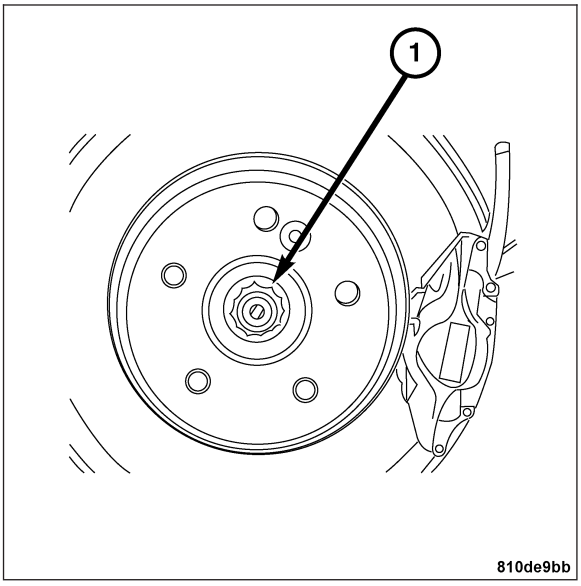

5. Remove the snap ring (4) from the rear hub assembly housing.

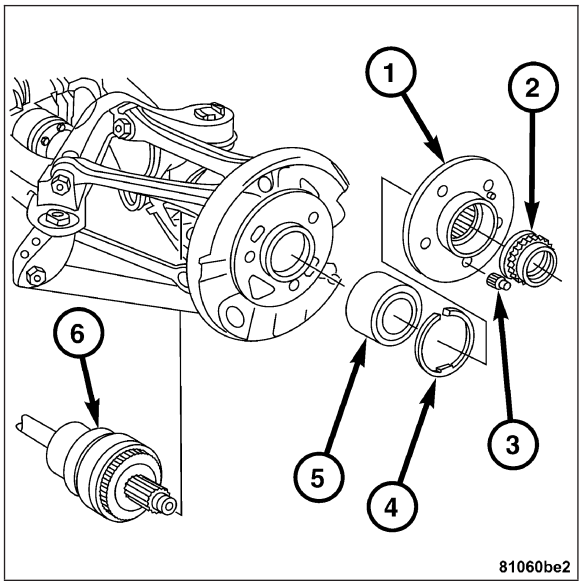

6. Using the Special Tool 9181 Bearing Tool, remove the bearing (4) on the hub (1).

CAUTION: Be sure not to mar or damage the rear axle halfshaft flange while in a vise.

7. Remove the inner bearing race from the rear axle halfshaft flange by screwing the clamping pliers onto the puller then tighten.
8. Clamp the rear axle halfshaft flange in vise.
9. Fit the thrust piece with the large diameter on the rear axle halfshaft flange.
10. Place the complete puller over the inner bearing race.
11. Clamp it firmly at the upper grooves of the clamping pliers over the tapered sleeve of the puller.
12. Pull the inner bearing race off the rear axle halfshaft flange using the puller.
13. Check the lateral and radial runout of the rear axle halfshaft flange. Replace rear axle halfshaft flange if test values are exceeded.
    - Permissible lateral runout 0.001 18 in. (0.03 mm).
    - Permissible radial runout 0.001 18 in. (0.03 mm).

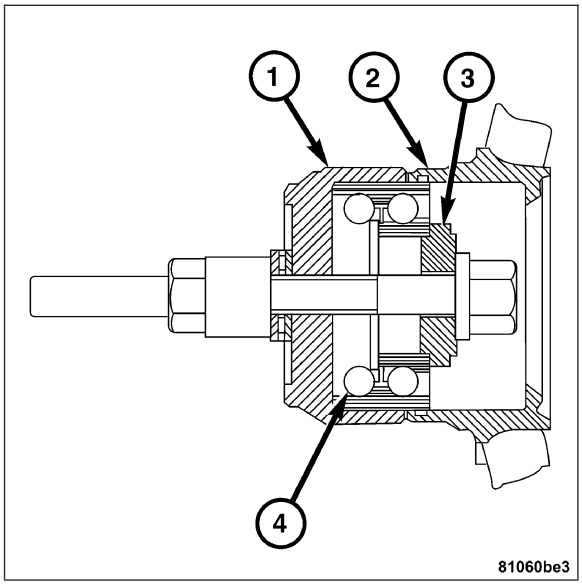

INSTALLATION

1. Using the Special Tool 9199 Bearing Tool (1) install the bearing (2) by pulling it into the wheel carrier (3) until it touches the shoulder of the wheel carrier.

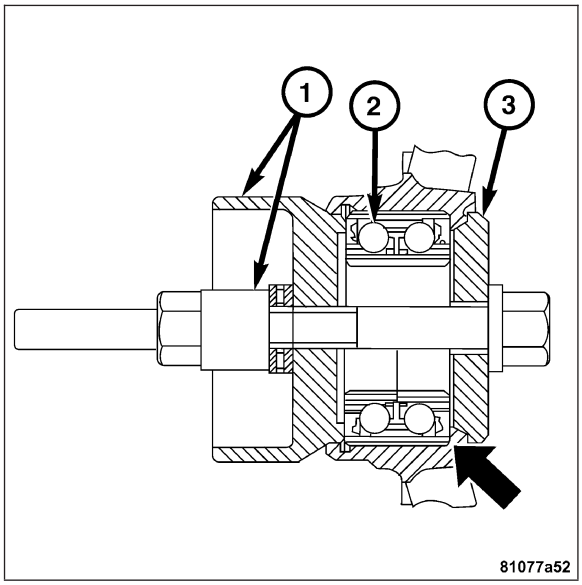

Note: Make sure that the snap ring is correctly fitted in the rear wheel carrier.

2. Install the snap ring (4) into the rear wheel carrier.

Note: Make sure that the pressure plate lies flush against the bearings inner race during insertion.

3. Install the rear axle halfshaft flange (1).

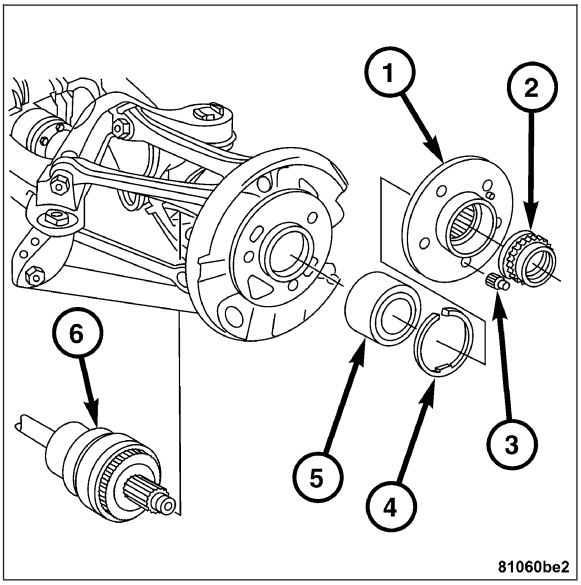

4. Install the parking brake shoes (1-5). **Refer to Page 5-73**.

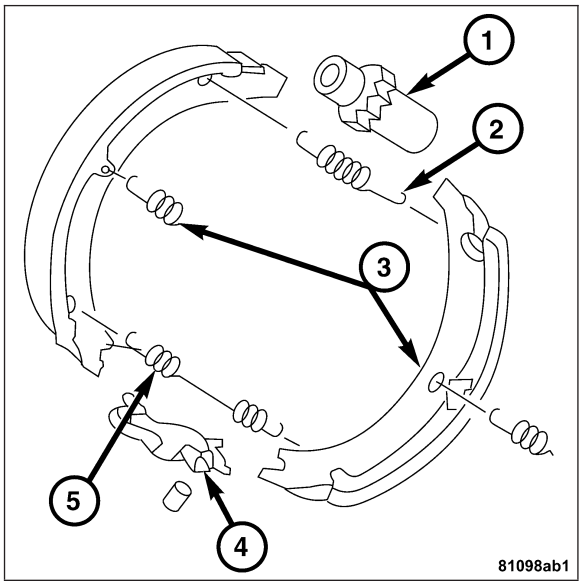

5. Install the disc brake rotor (1). **Refer to Page 5-40**.

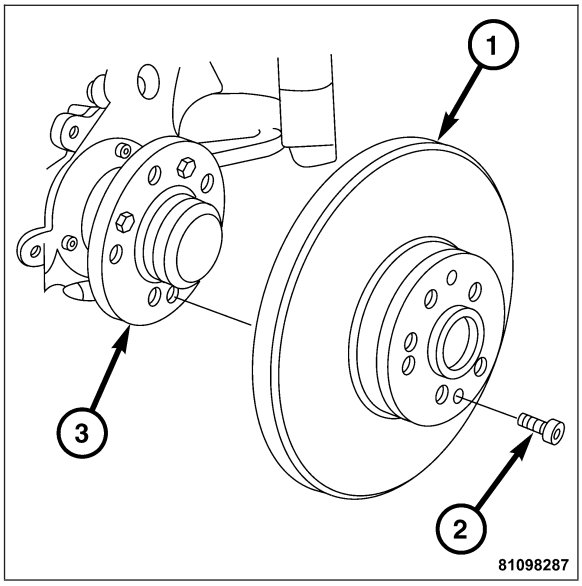

6. Install the rear disc brake caliper bolts (1). **Refer to Page 5-32**.

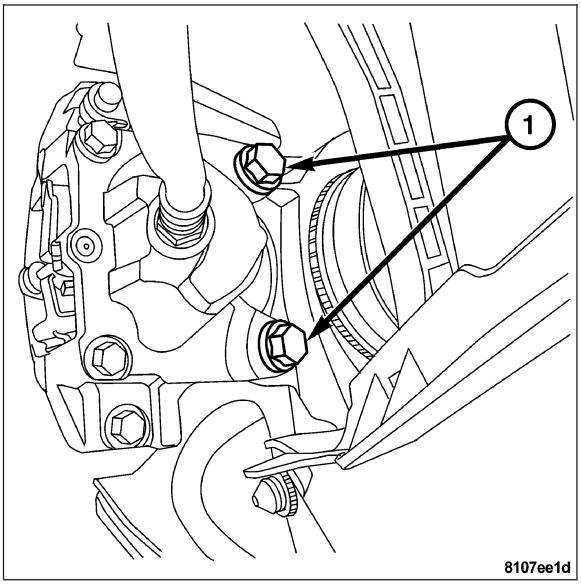

7. Install the rear axle halfshaft. **Refer to Page 3-5**.
8. Install wheel and tire assembly. **Refer to Page 22-42**.

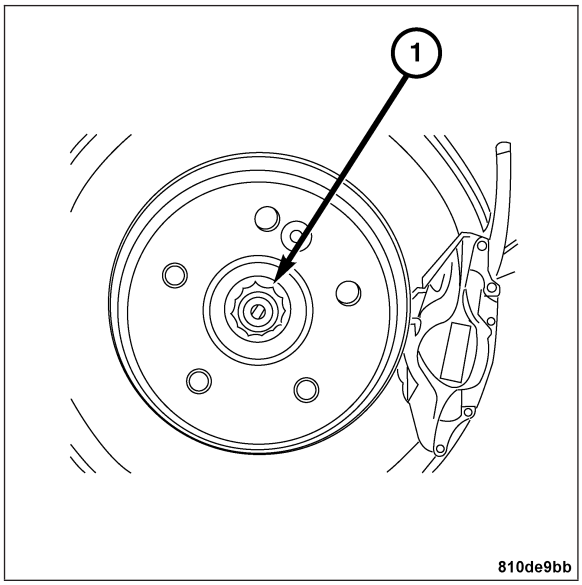

STABILIZER BAR

REMOVAL

1. Raise and support the vehicle.
2. Remove both wheel and tire assemblies.
3. Remove the right and left wheel speed sensors (2). **Refer to Page 5-197**.

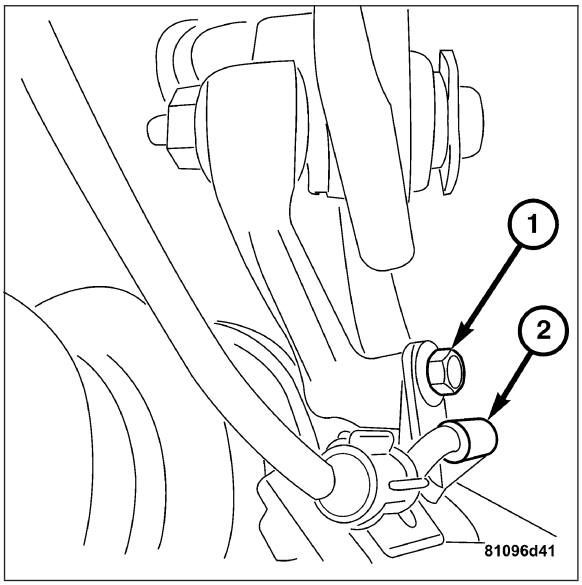

4. Remove the rear brake hoses (1) from the rear brake calipers. **Refer to Page 5-12**.

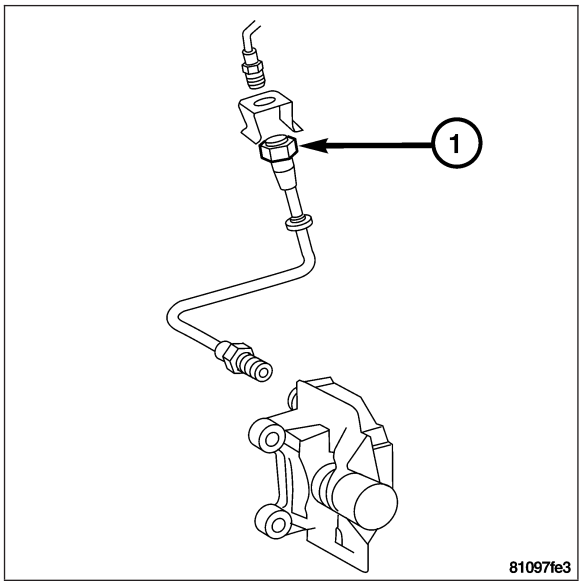

5. Remove the rear springs (1). **Refer to Page 2-83**.

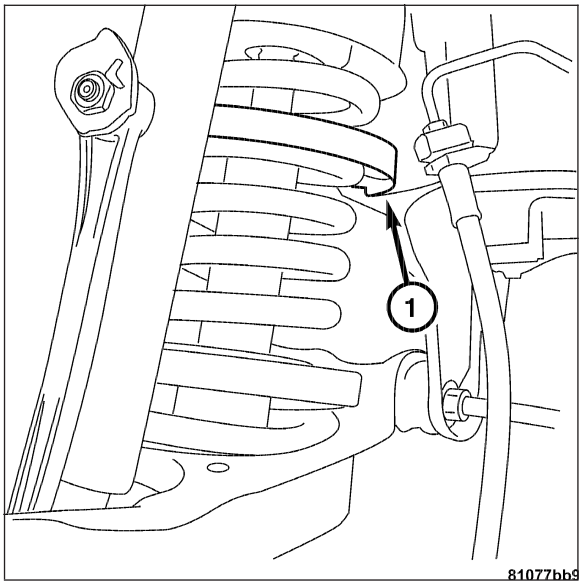

6. Remove the rear shocks (1). **Refer to Page 2-80**.

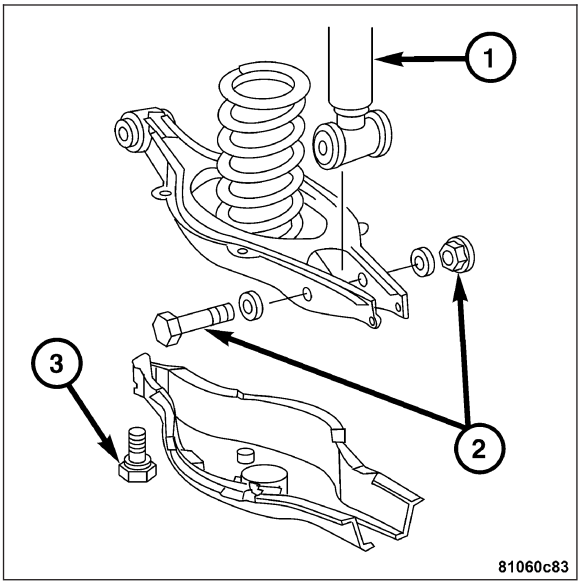

7. Remove the rear parking brake cables (2) from the parking brake equalizer (1). **Refer to Page 5-61**.

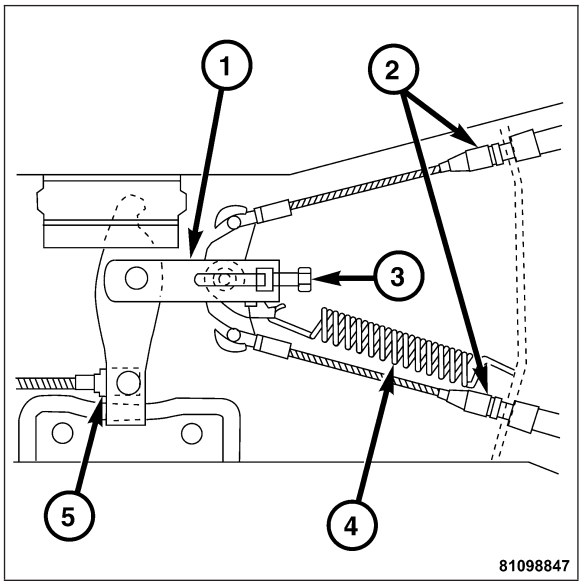

8. Remove the propeller shaft from the rear axle differential carrier. **Refer to Page 3-26**.

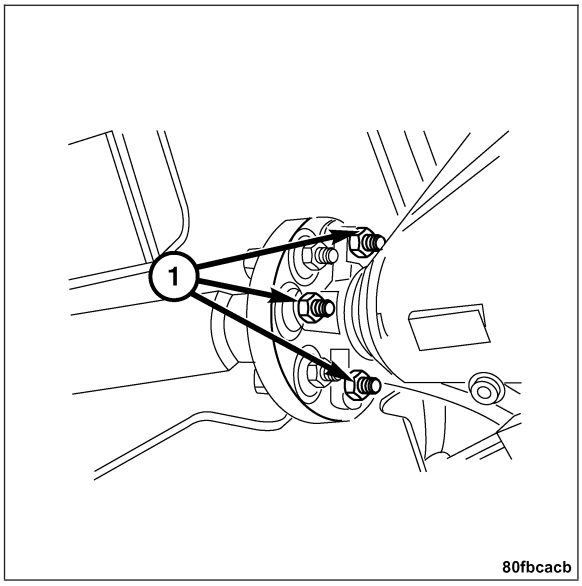

9. Remove the rear stabilizer bar links (2) from the stabilizer bar (1).

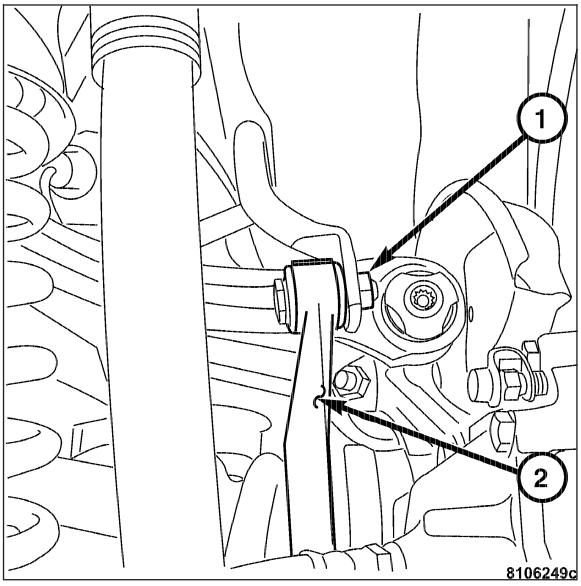

10. Block and support the rear axle carrier (1) with a suitable lifting device (2).

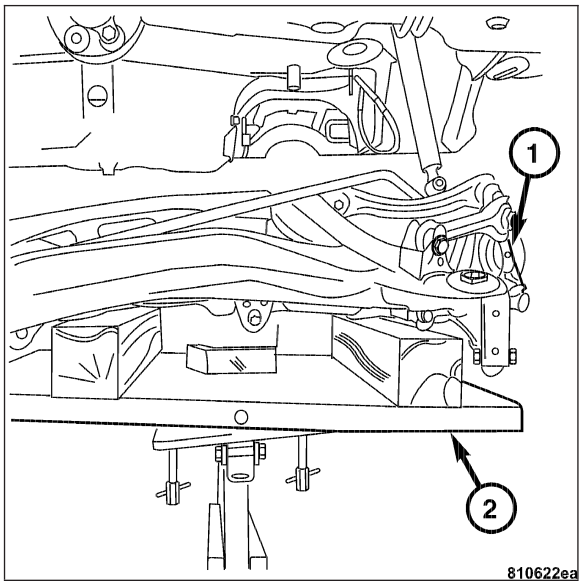

11. Remove the two bolts (1) attaching the rear axle carrier to the front portion of the frame.

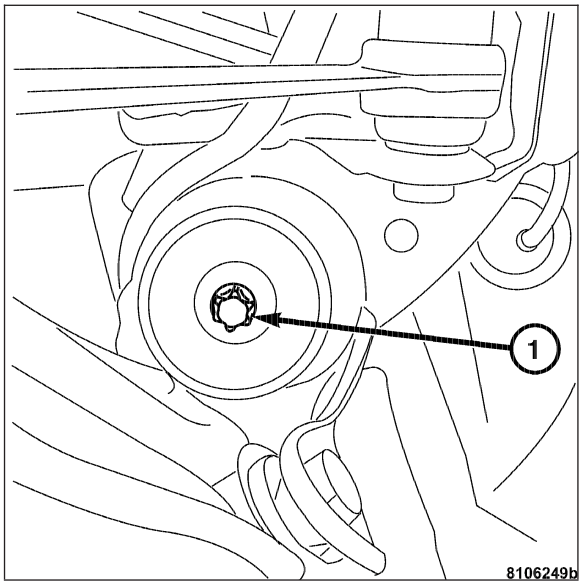

12. Remove the two bolts (2) attaching the rear axle carrier to the rear portion of the frame.
13. Lower the rear differential housing down approximately 4 - 5 inches allowing enough room for the stabilizer bar to be removed from the vehicle.

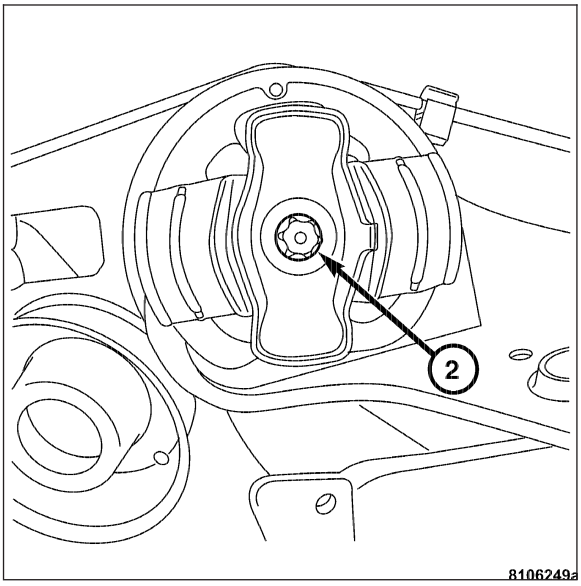

14. Remove the rear stabilizer bar clamps (3) by removing the nuts (1) from the studs and then removing the stabilizer bar (2).
15. Remove the rear stabilizer bar from the vehicle by maneuvering it over the axle carrier and away from the vehicle.

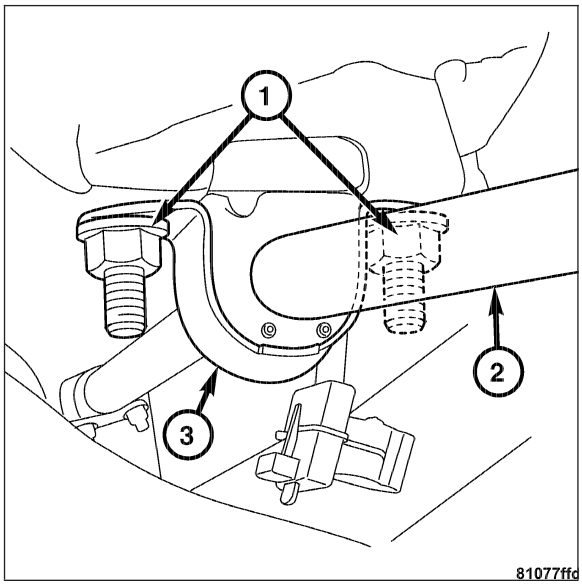

INSTALLATION

1. Install the rear stabilizer bar into the vehicle.
2. Raise the rear differential housing and install the four bolts (1) attaching it to the vehicle. Tighten to 90 N·m (66 ft. lbs.).

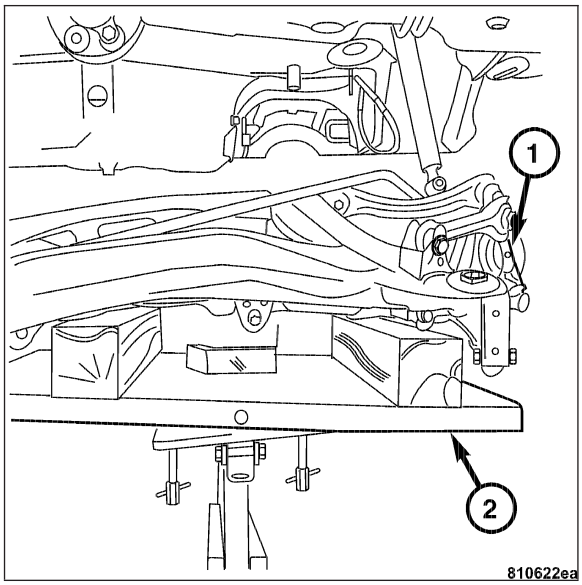

3. Install the rear spring (1). **Refer to Page 2-85**.

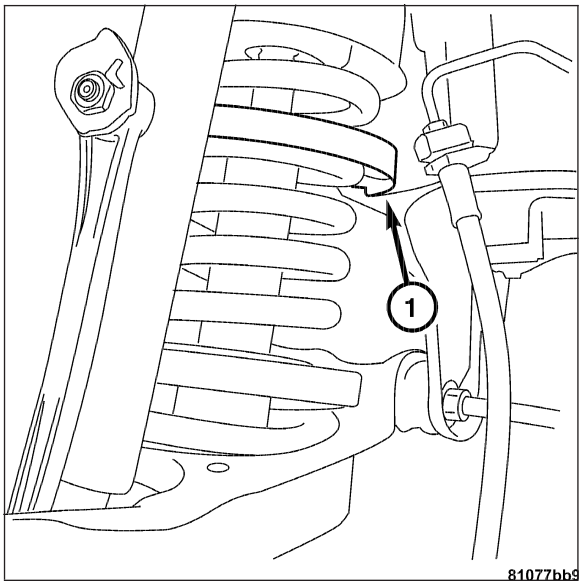

4. Install the rear shock (1). **Refer to Page 2-81**.

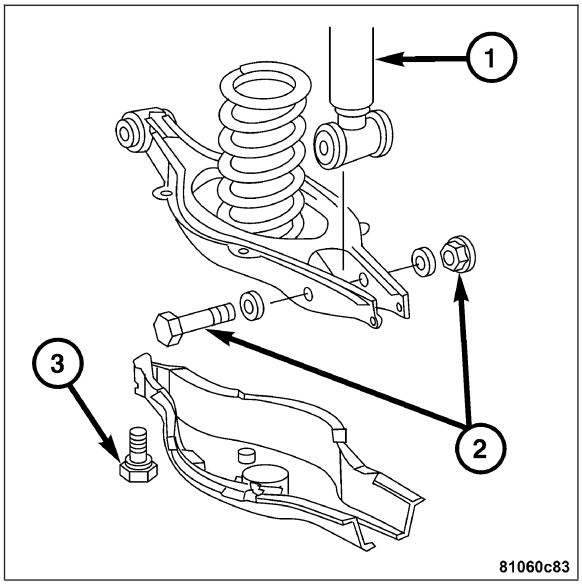

5. Loosely install the rear stabilizer clamps (1-3).

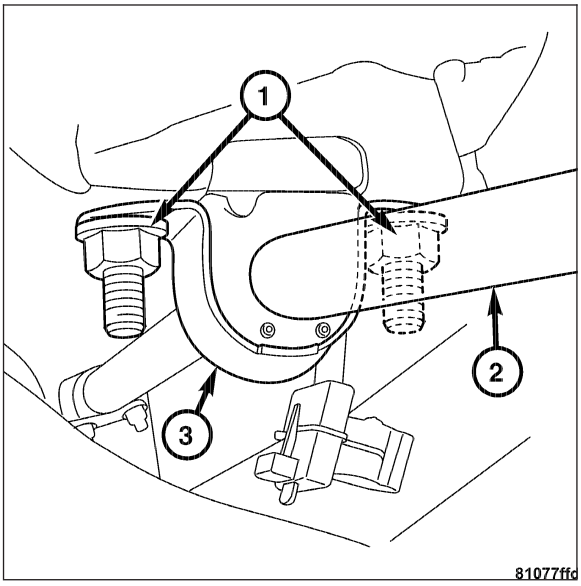

6. Install the rear stabilizer bar links (2) to the rear control arm. Tighten to 30 N·m (22 ft. lbs.).

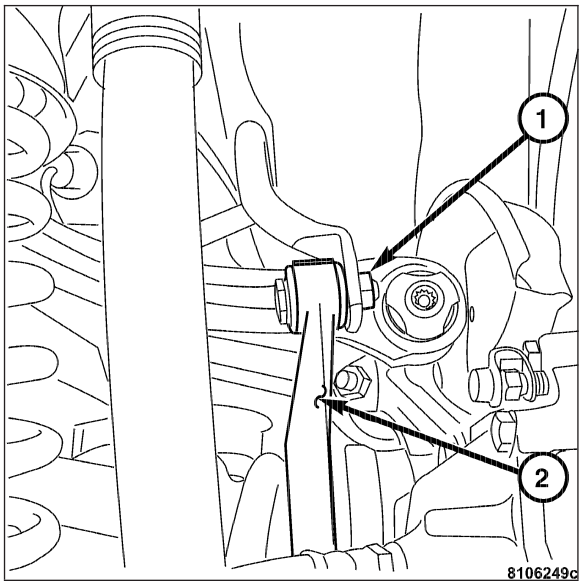

7. Tighten the rear stabilizer clamp nuts (1). Tighten to 20 N·m (15 ft. lbs.).

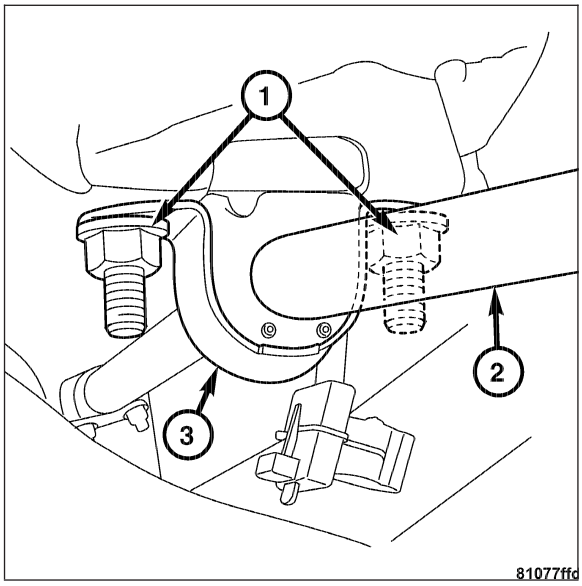

8. Install the propeller shaft to the rear differential carrier. **Refer to Page 3-28**.

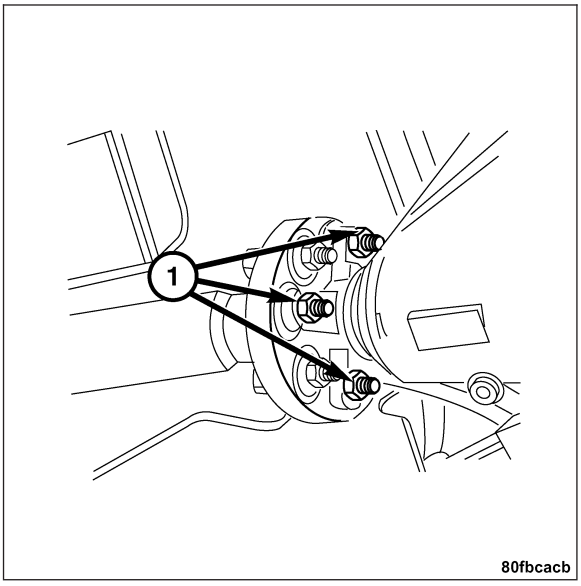

9. Install the rear parking brake cables (2) to the parking brake equalizer (1). **Refer to Page 5-64**.

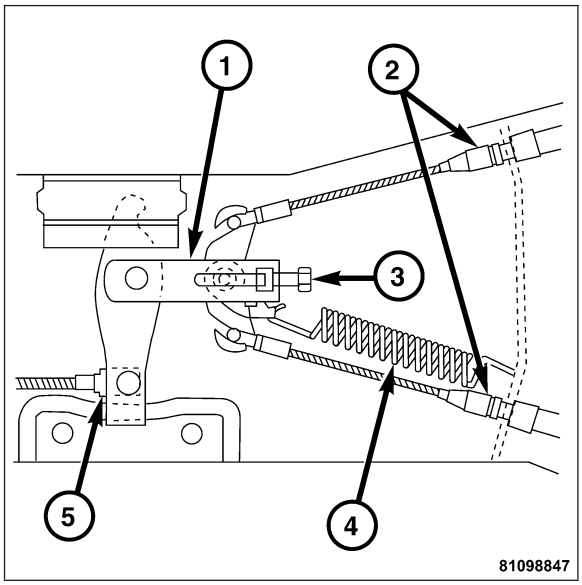

10. Install the rear brake hoses (1) to the rear brake calipers. **Refer to Page 5-73**.

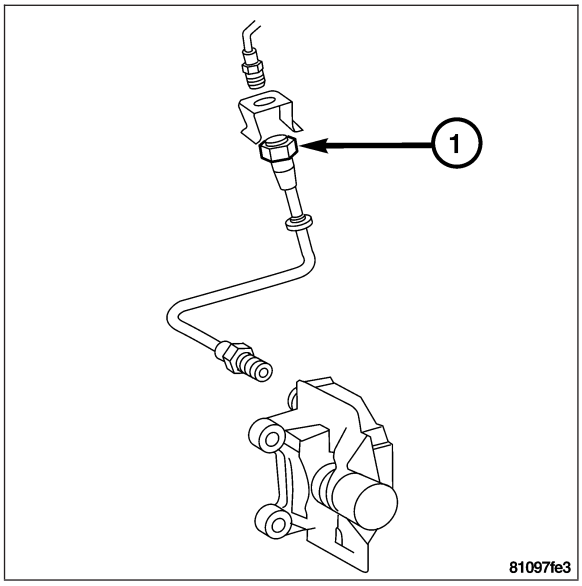

11. Install the rear wheel speed sensors (2). **Refer to Page 5-198**.
12. Install the wheel and tire assembly. **Refer to Page 22-42**.

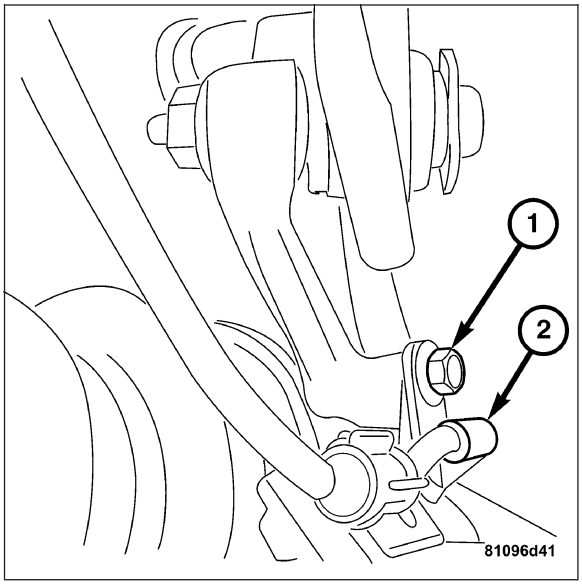

SHOCK

REMOVAL

Note: The vehicle must be standing on its wheels before removing the top shock absorber mounting hardware.

1. Remove the shock absorber upper mounting hardware (1).
2. Raise and support the vehicle.

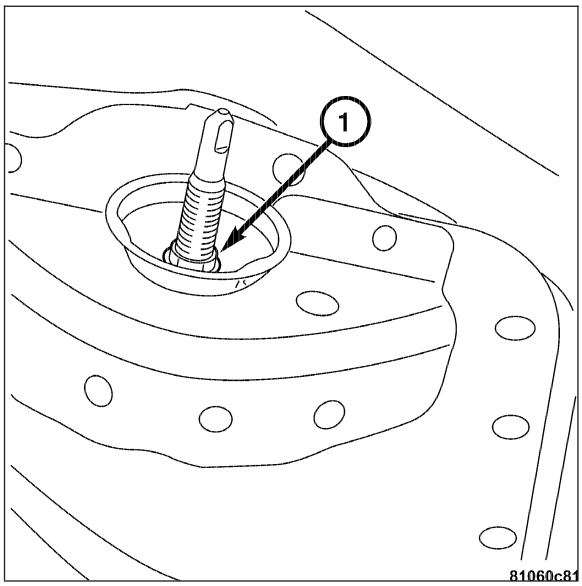

3. Remove the lower control arm plastic cover by removing the bolts (1) attaching the cover to the lower control arm.

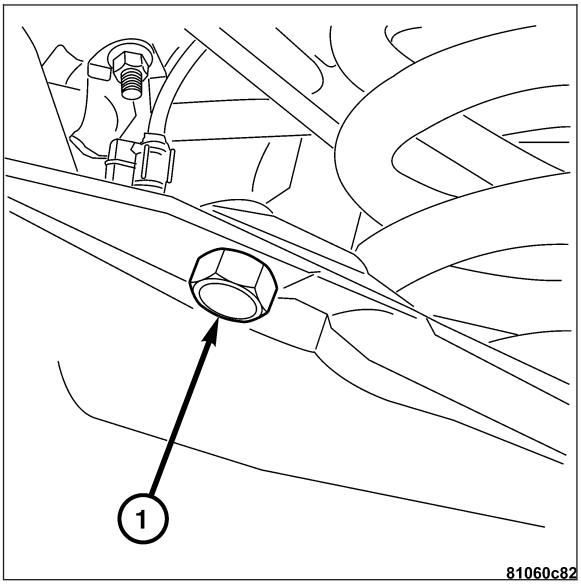

4. Remove the shock absorber (1) from the lower control arm.
5. Inspect the shock absorber.

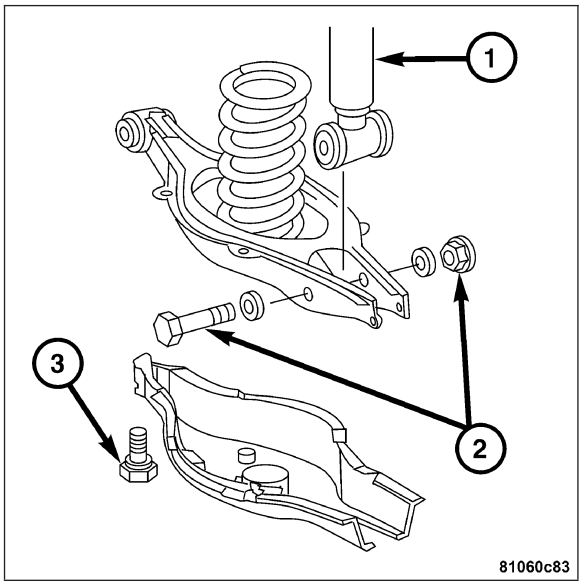

INSTALLATION

1. Install the shock absorber (1) onto the lower control arm then install the bolt and nut (2). Tighten to 55 N·m (41 ft. lbs.).

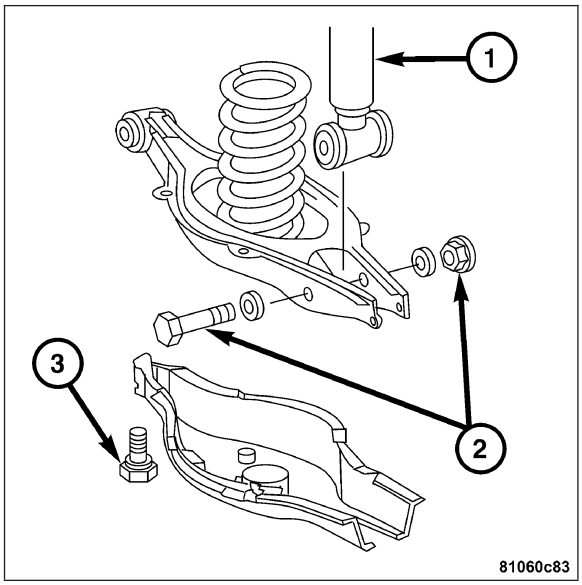

2. Install the lower control arm plastic cover and bolt (1).

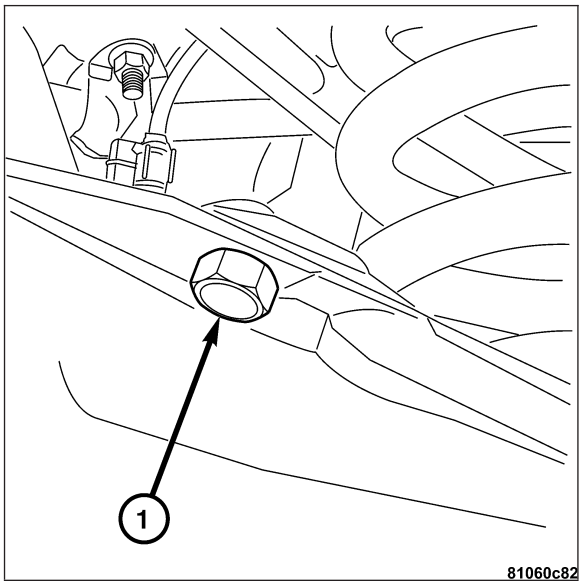

3. Slowly lower the vehicle while guiding the top of the shock into the mounting hole in the frame.
4. Install the top shock absorber mounting hardware (1). Tighten to 18 N·m (13 ft. lbs.).

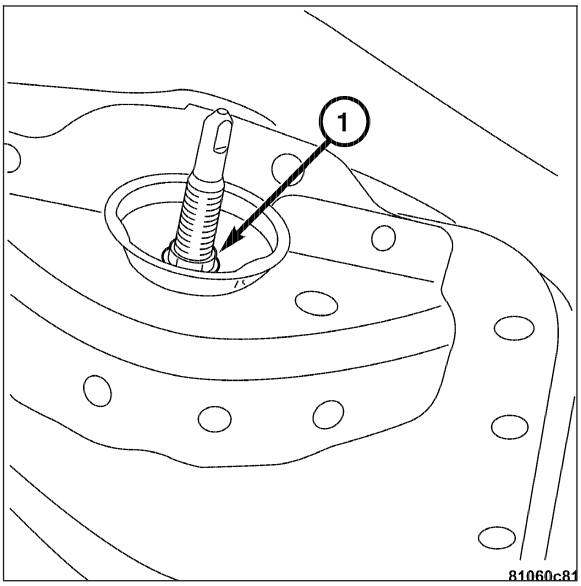

SPRING

REMOVAL

1. Raise and support the vehicle.
2. Remove the wheel and tire assembly.
3. Remove the control arm cover by removing the bolts (1) from the cover.

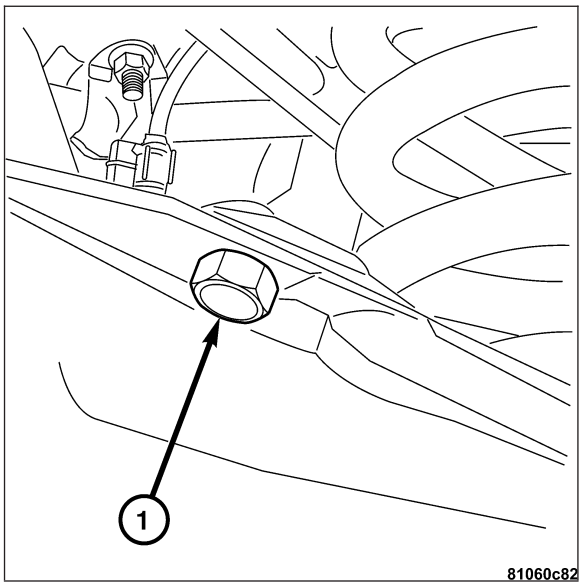

4. Remove the lower shock bolts (2) from the lower control arm.

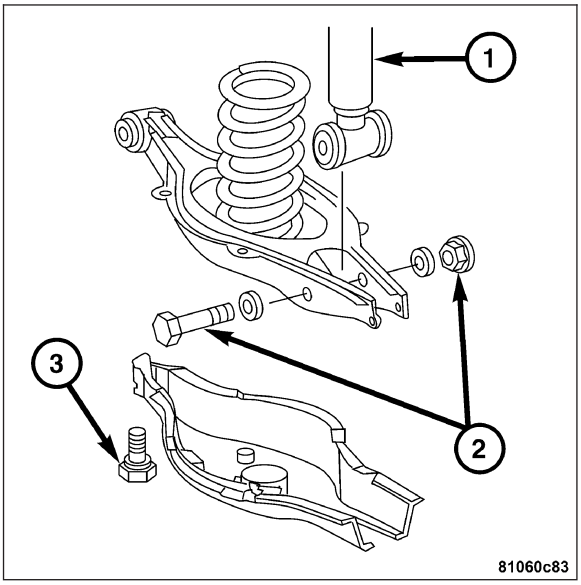

5. Brace the rear suspension lower control arm with a suitable lifting device. Raise the control arm until the half shaft is horizontal. Using Special Tool 9152 Compressor Plates and 9150 Spring Compressor (1) compress the rear spring.

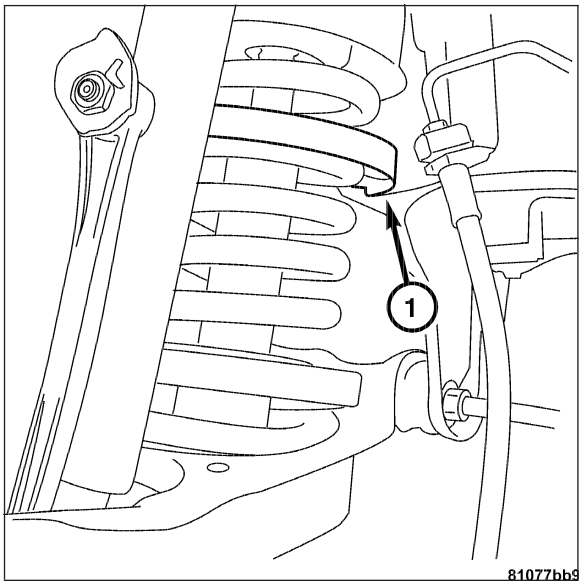

6. Remove the rear bolts on the lower control arm (4) attaching it to the frame. Remove the lifting device.

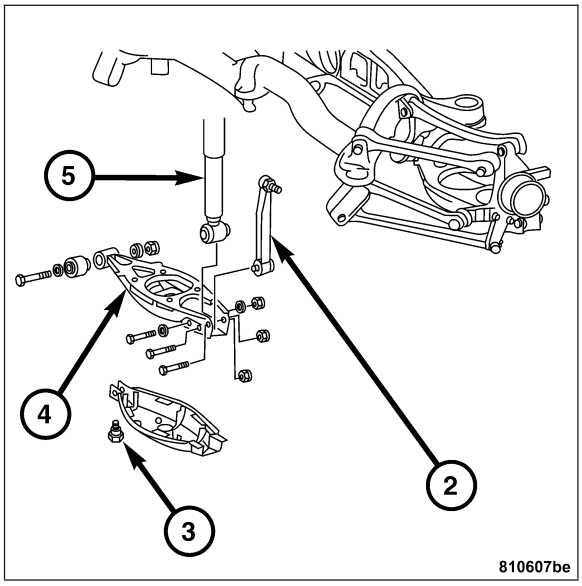

7. Swing the lower control arm (2) down away from the mounting tabs (1) to release the rear spring.
8. Remove the spring from the vehicle.

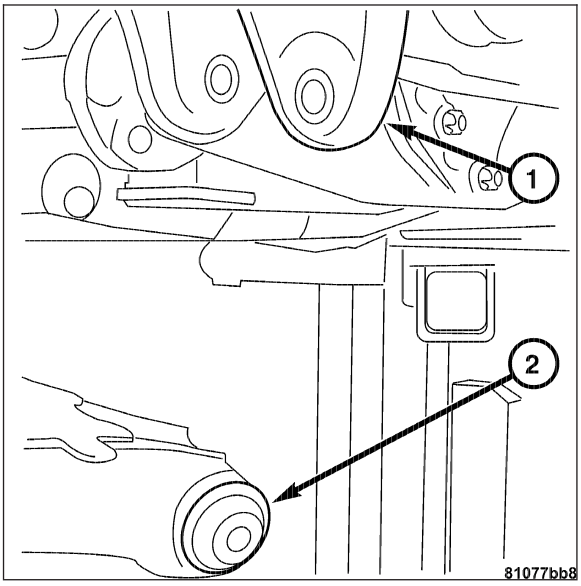

INSTALLATION

1. Install the spring.
2. Swing the lower control arm (2) up and install the bolt attaching it to the frame (1).

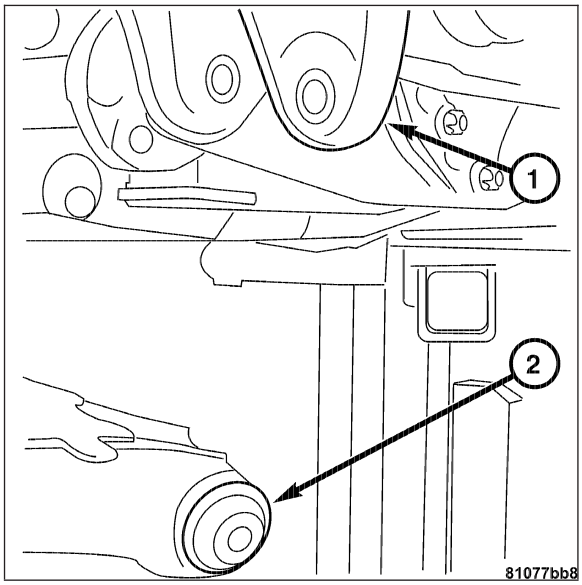

3. Unclamp the spring (1) making sure the spring properly matches the spring perch detents.

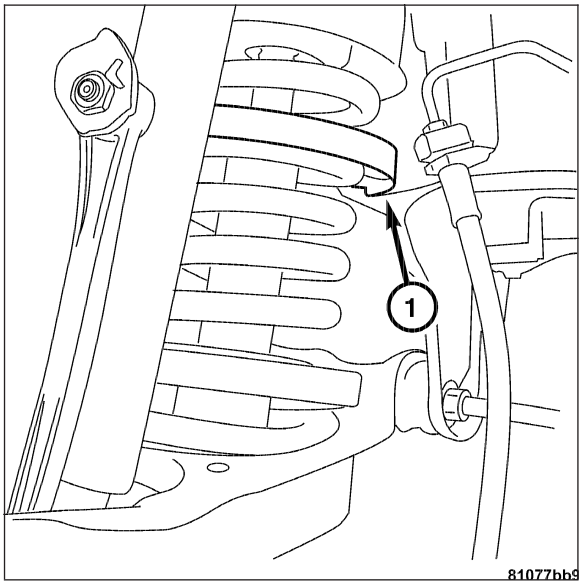

4. Install the lower shock mount (1) to the lower control arm. Tighten to 55 N·m (41 ft. lbs.).

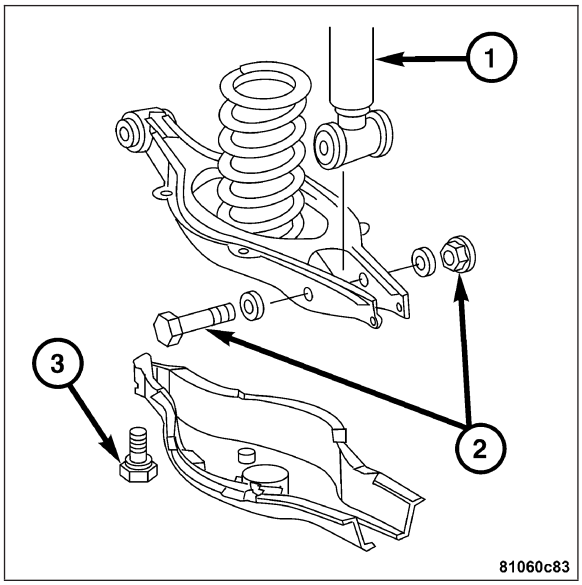

5. Install the control arm cover and bolts (1).
6. Install the wheel and tire assembly. **Refer to Page 22-42**.
7. Check vehicle alignment. **Refer to Page 2-6**.

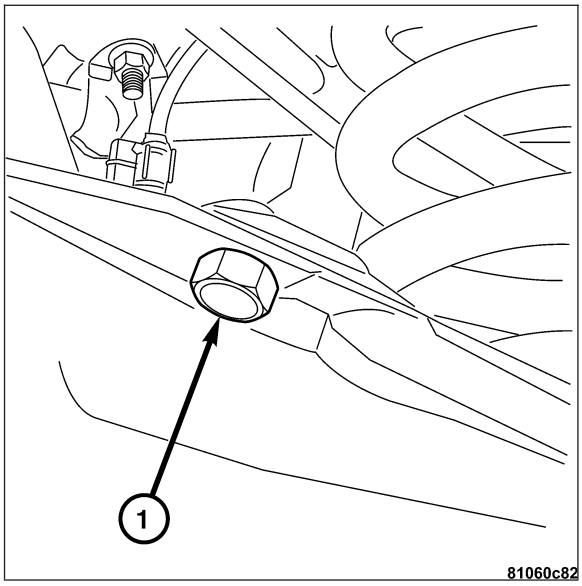

REAR AXLE CARRIER

REMOVAL

1. Raise and support the vehicle.
2. Remove the wheel and tire assembly.
3. Remove the rear disc brake calipers and bolts (1) relocate away from the suspension components with mechanics wire. **Refer to Page 5-25**.

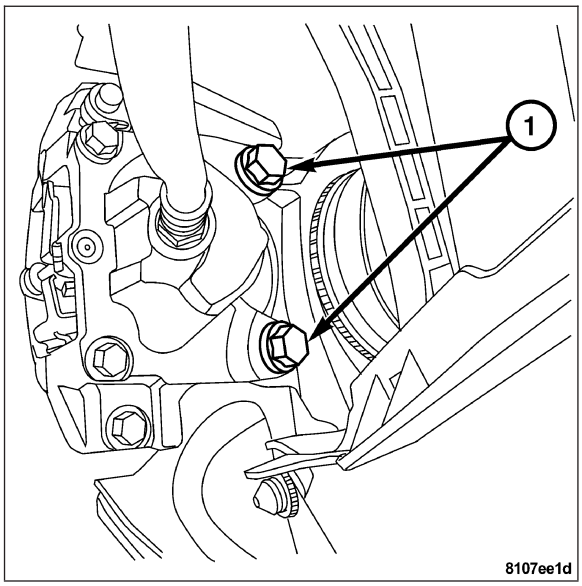

4. Remove rear portion of the exhaust pipes including muffler. **Refer to Page 11-10**.

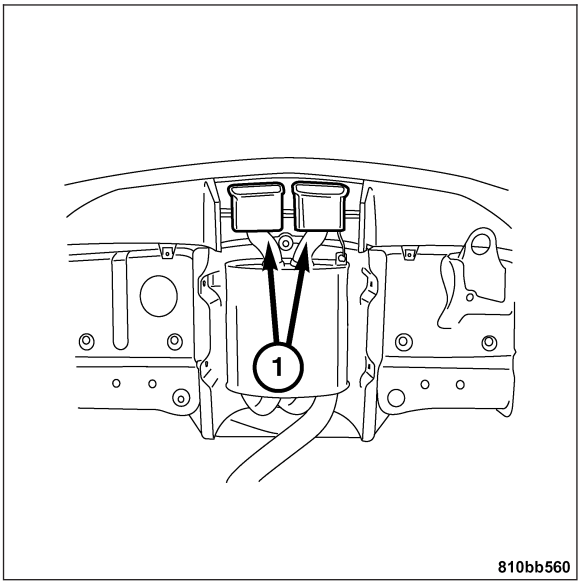

5. Remove the parking brake rear cables (2) from the parking brake cable equalizer (1). **Refer to Page 5-61**.

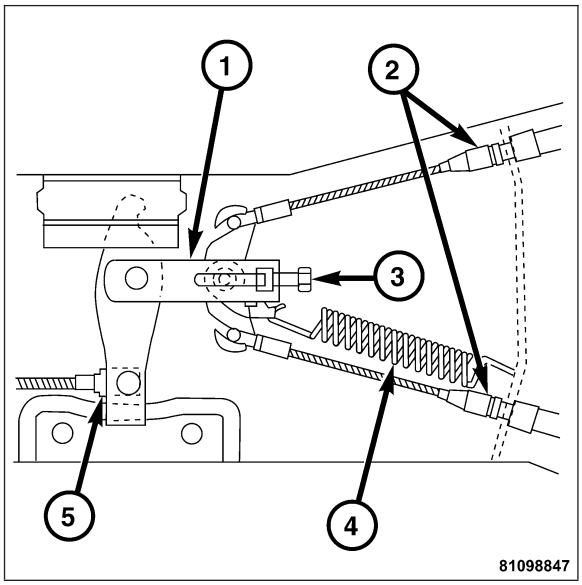

6. Remove the right and left Wheel Speed Sensors (2). **Refer to Page 5-197**.

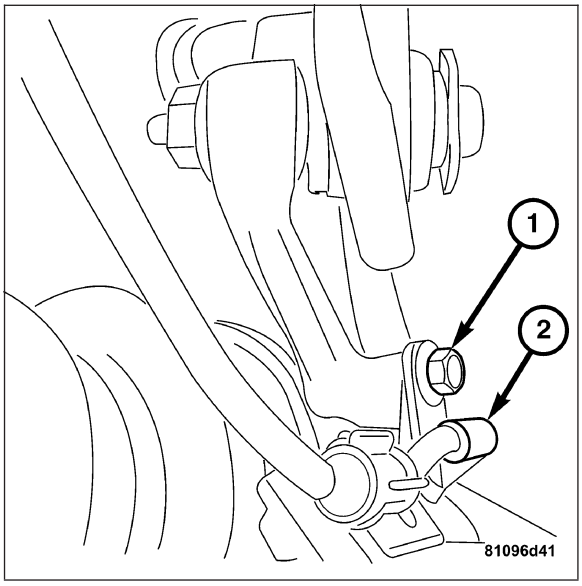

7. Remove the rear axle halfshafts. **Refer to Page 3-4**.

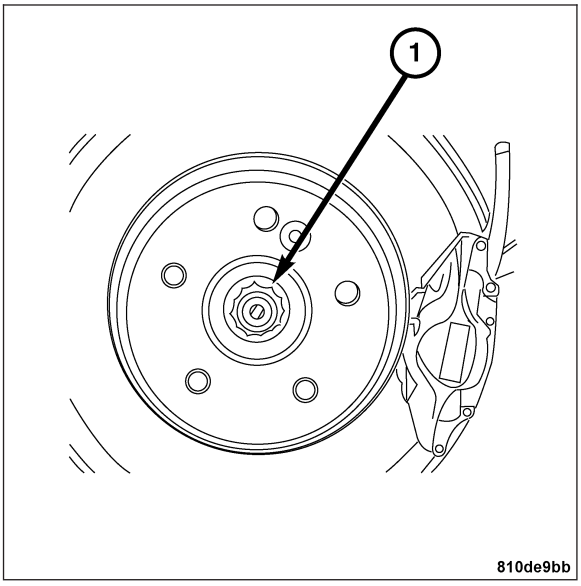

8. Remove the rear springs (1). **Refer to Page 2-83**.

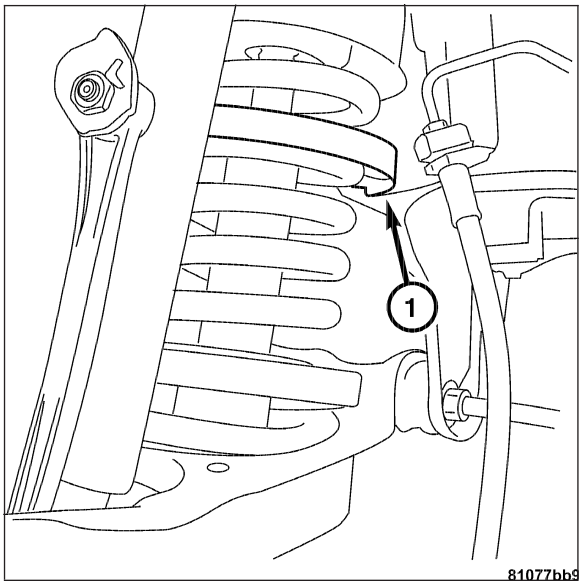

9. Remove the rear shock absorbers (1). **Refer to Page 2-80**.

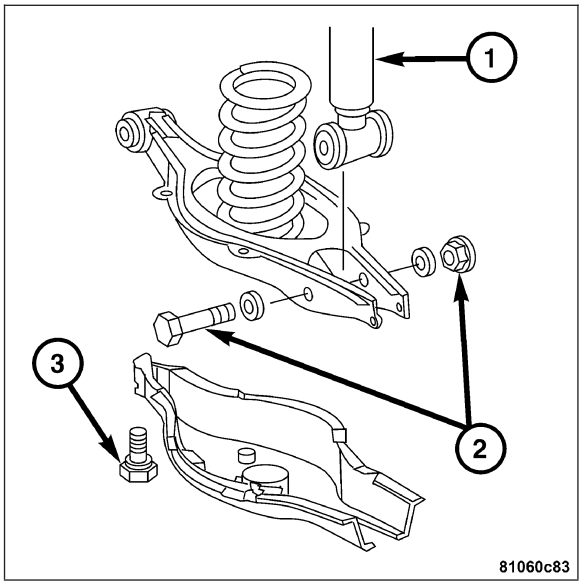

CAUTION: Be sure not to disconnect any of the fuel hoses and lines from the fuel pump assembly.

10. Relocate the fuel pump assembly by removing the bolts (1) and tying it away from the rear axle carrier with mechanics wire.

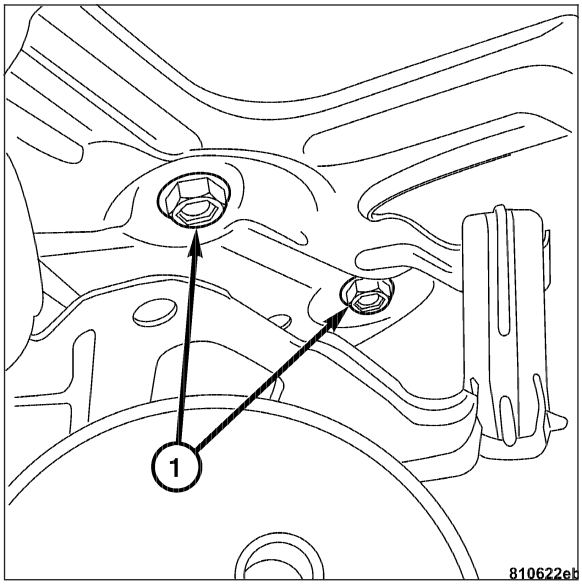

11. Remove the propeller shaft assembly from the rear axle differential carrier. **Refer to Page 3-26**.

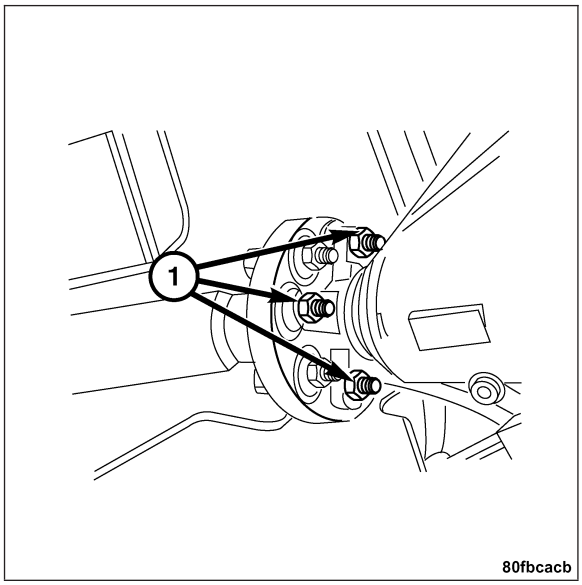

12. Remove the rear axle differential carrier. **Refer to Page 3-41**.

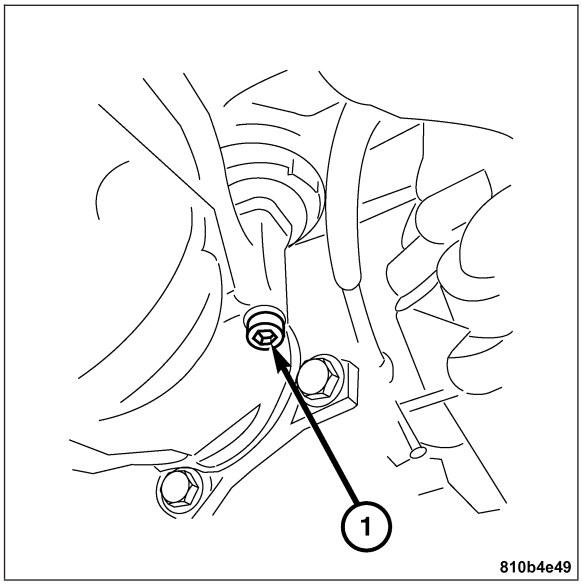

13. Remove the front two bolts (1) from the rear axle carrier attaching it to the frame.

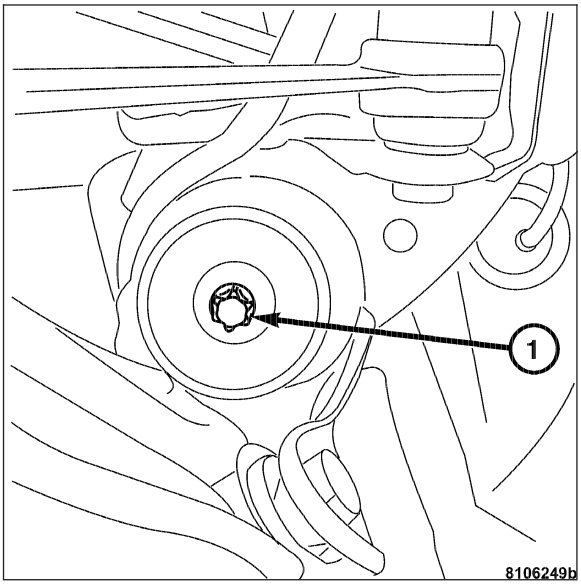

14. Remove the rear two bolts (2) from the rear axle carrier attaching it to the frame.

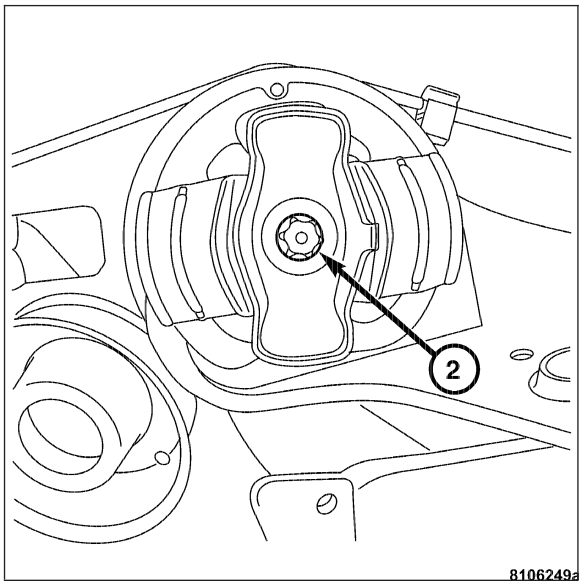

15. Remove the rear axle carrier (1) from the frame by lowering it to the ground with a suitable tool (2).

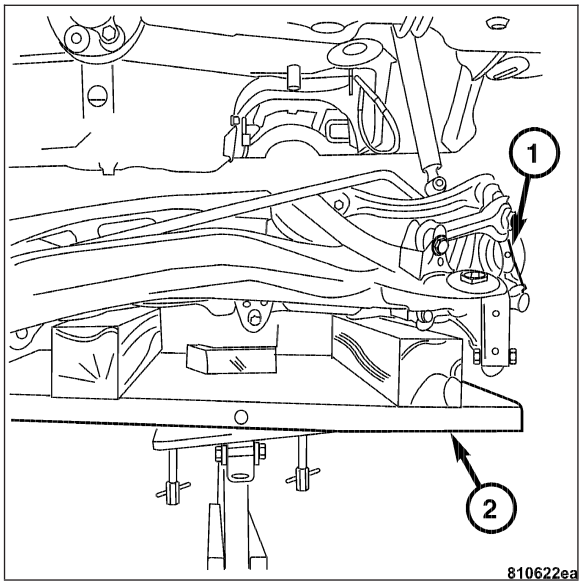

Note: Only remove the following components from the rear axle carrier.

16. Remove the camber strut bolt (1). **Refer to Page 2-49**.

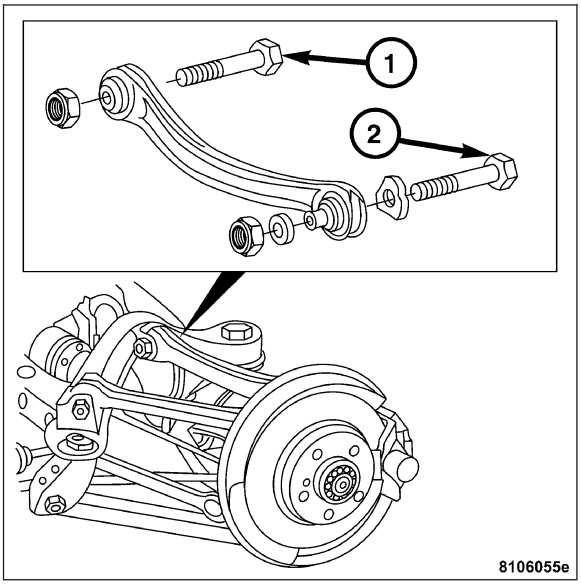

17. Remove the trailing link bolt (1). **Refer to Page 2-50**.

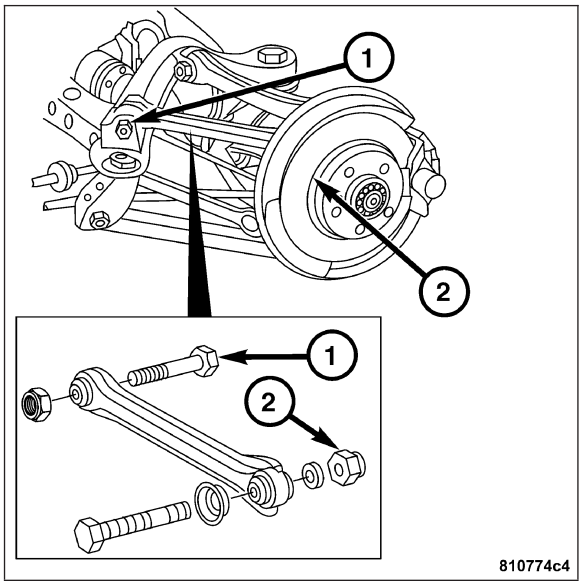

18. Remove the lateral link bolt (1). **Refer to Page 2-51**.

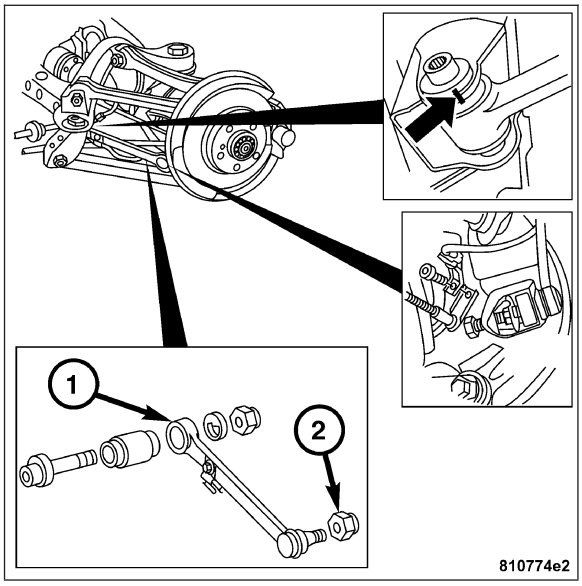

19. Remove the track bar bolt (inner). **Refer to Page 2-52**.

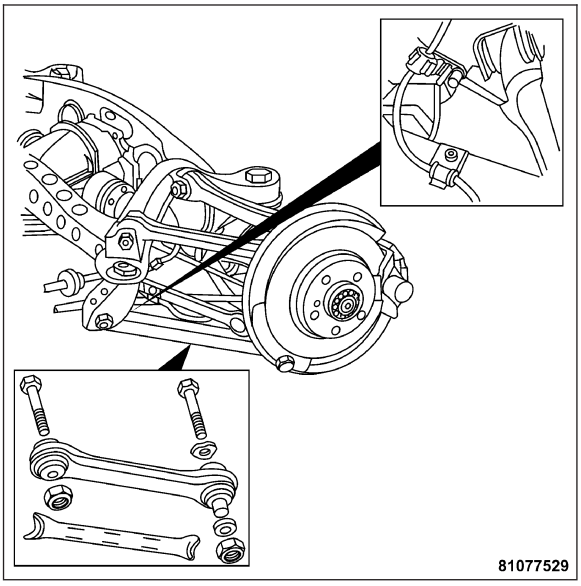

20. Remove the stabilizer bar link (2). **Refer to Page 2-72**.
21. Remove the lower control arm. **Refer to Page 2-53**.

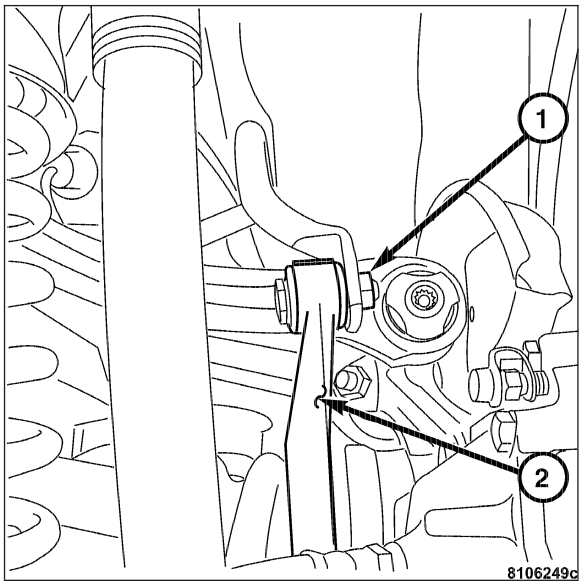

INSTALLATION

1. Install the camber strut bolt (1). **Refer to Page 2-50**.

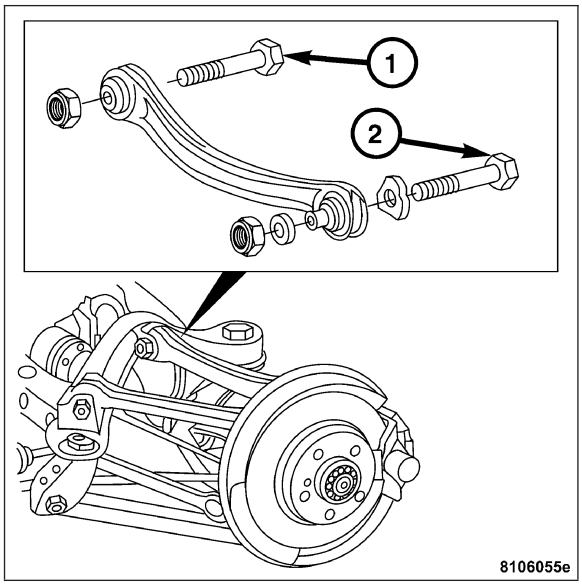

2. Install the trailing link bolt (1). **Refer to Page 2-51**.

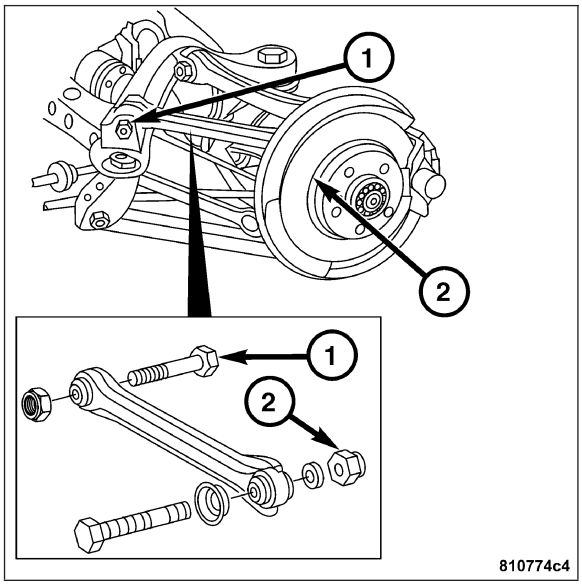

3. Install the lateral link bolt (1). **Refer to Page 2-52**.

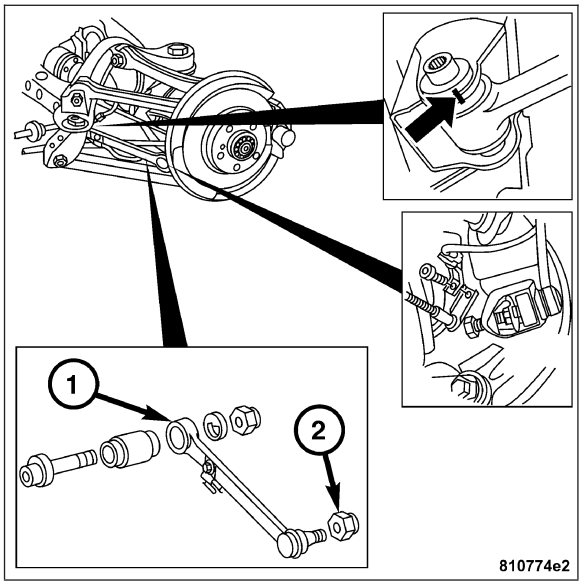

4. Install the track bar bolt. **Refer to Page 2-53**.

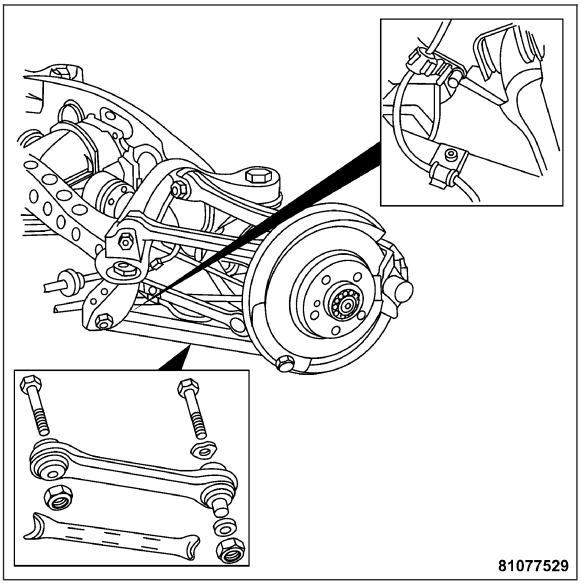

5. Install the stabilizer bar link (2). **Refer to Page 2-76**.
6. Install the lower control arm. **Refer to Page 2-55**.

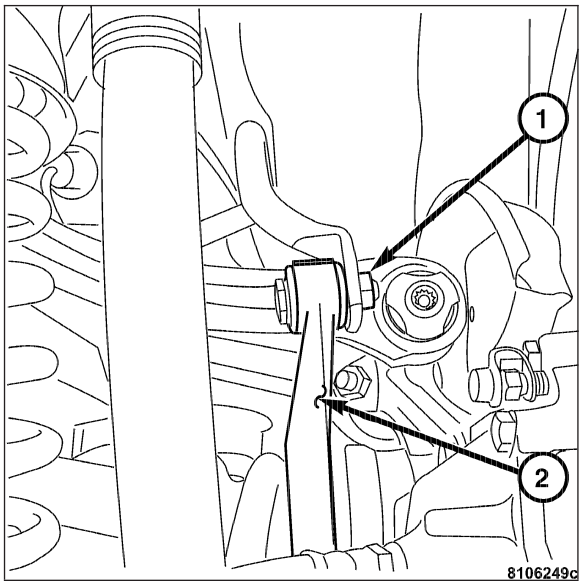

7. Install the rear axle carrier (1) by raising it up and installing the four bolts to the frame. Tighten to 90 N·m (66 ft. lbs.).

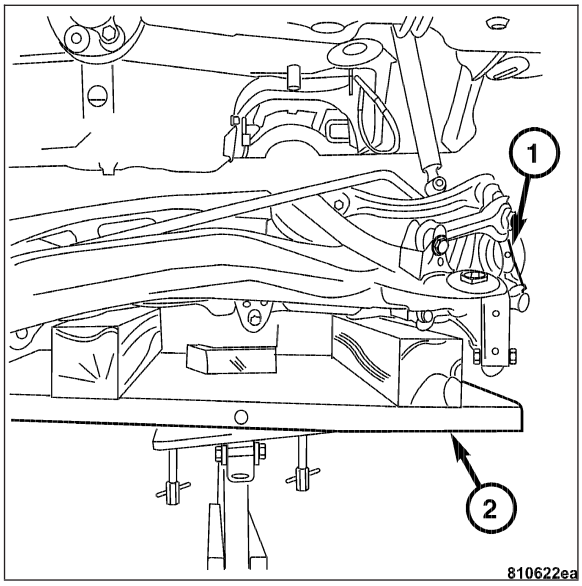

8. Install the rear axle differential carrier. **Refer to Page 3-42**.

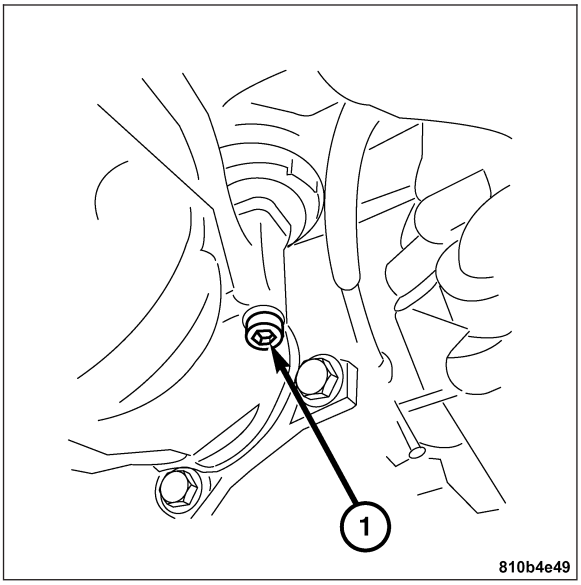

9. Install the propeller shaft assembly to the rear axle differential carrier. **Refer to Page 3-28**.

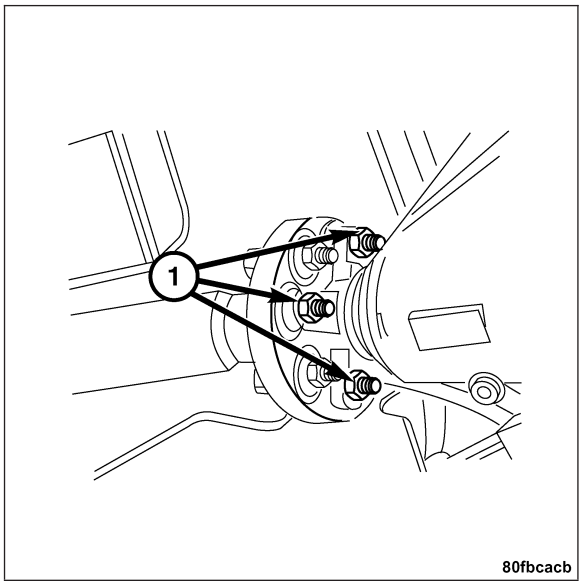

10. Install the fuel pump assembly bolts (1).

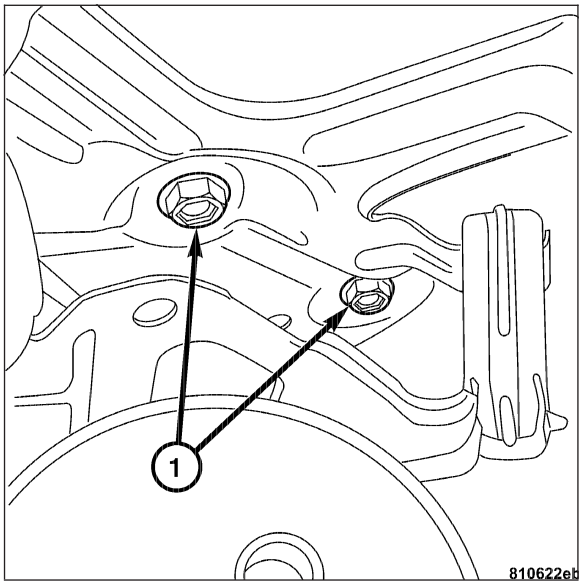

11. Install the rear shock absorbers (1). **Refer to Page 2-81**.

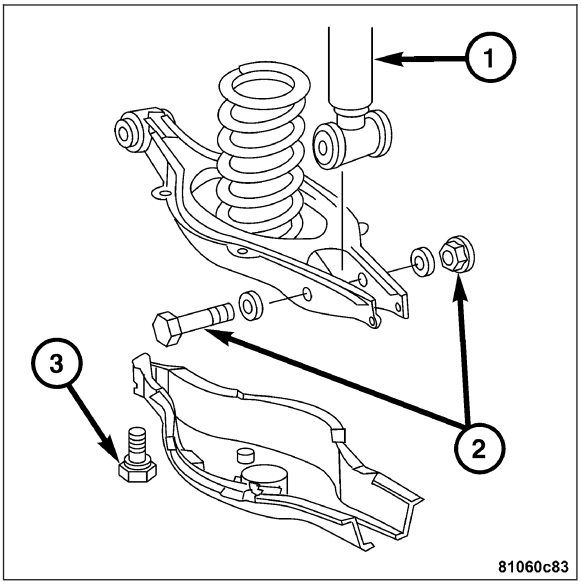

12. Install the rear springs (1). **Refer to Page 2-85**.

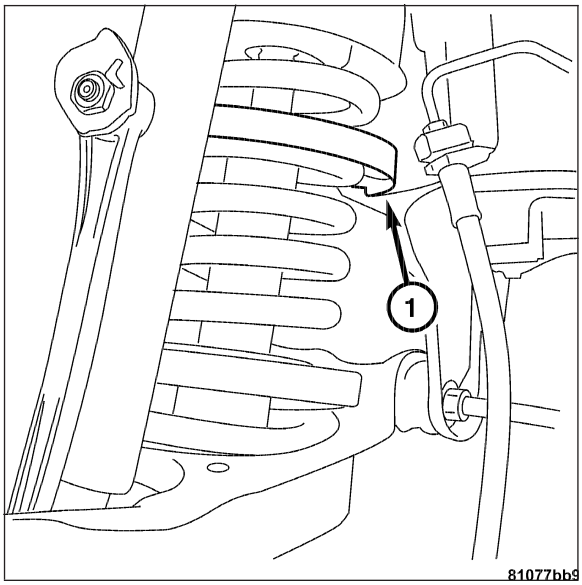

13. Install the rear axle halfshafts. **Refer to Page 3-5**.

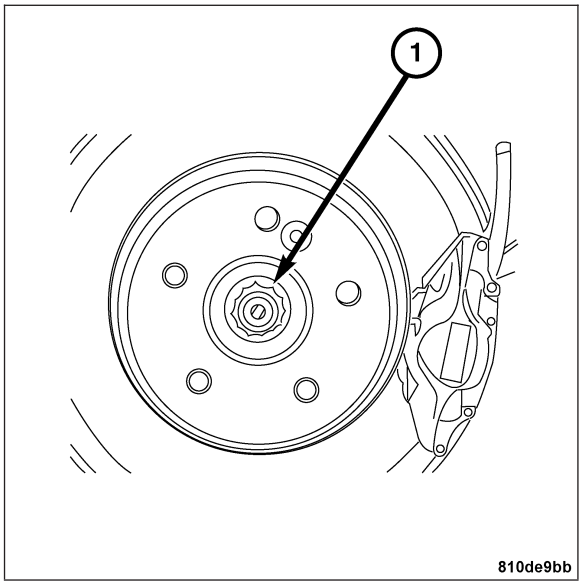

14. Install the right and left Wheel Speed Sensors (2). **Refer to Page 5-198**.

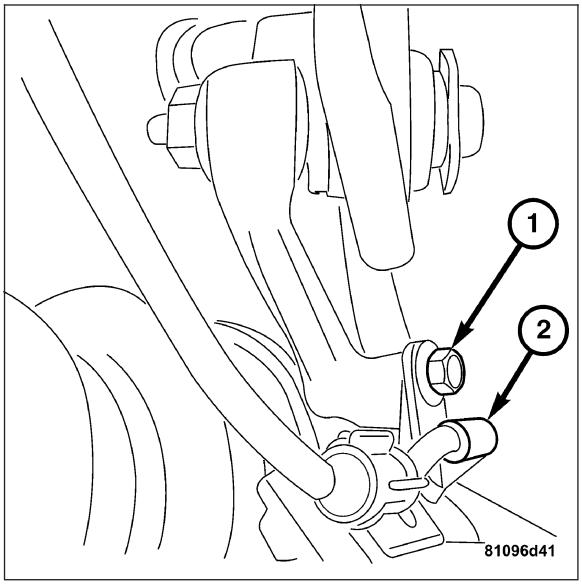

15. Install the parking brake rear cables (2) to the parking brake cable equalizer (1). **Refer to Page 5-64**.

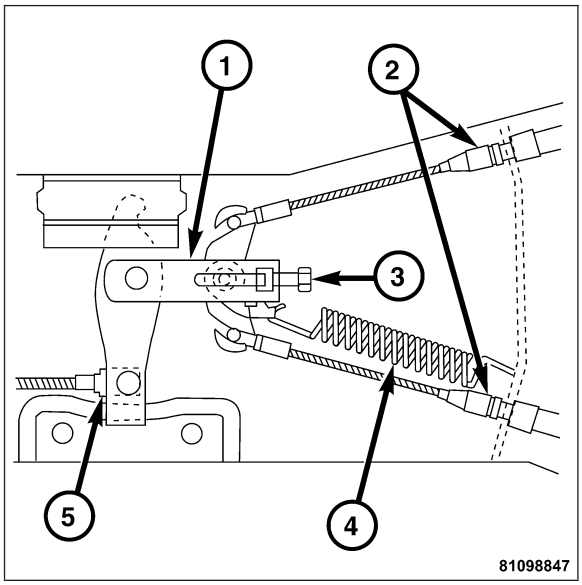

16. Install the rear portion of the exhaust pipes including muffler.

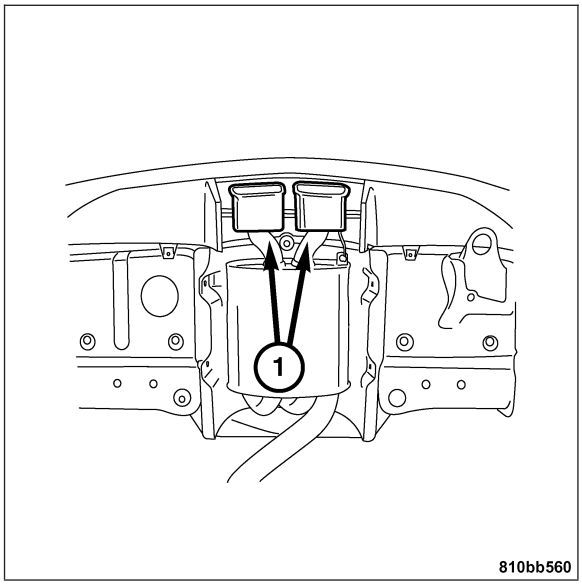

17. Install the rear disc brake calipers and bolts (1). **Refer to Page 5-32**.
18. Install the wheel and tire assembly. **Refer to Page 22-42**.
19. Check vehicle alignment. **Refer to Page 2-6**.

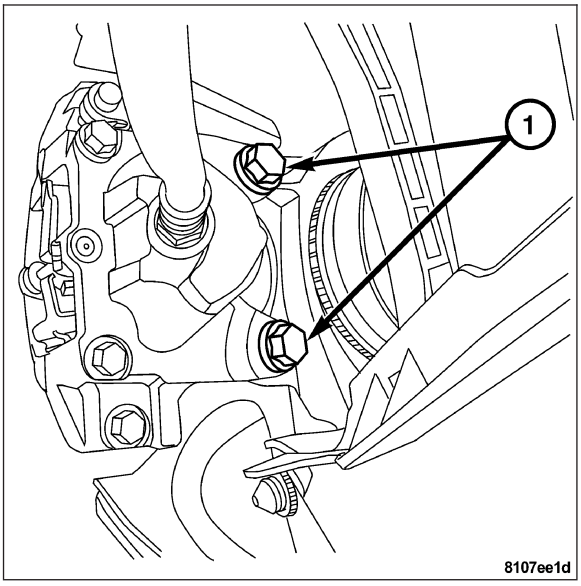

DIFFERENTIAL & DRIVELINE

TABLE OF CONTENTS

	page		page
HALFSHAFTS	1	**REAR DIFFERENTIAL**	37
PROPELLER SHAFT	22		

HALFSHAFTS

TABLE OF CONTENTS

	page		page
HALFSHAFTS		INSTALLATION	9
DESCRIPTION	2	**CV BOOT - OUTER**	
OPERATION	3	REMOVAL	11
DIAGNOSIS AND TESTING - DRIVELINE	3	INSTALLATION	12
REMOVAL	4	**CV JOINT**	
INSTALLATION	5	REMOVAL	14
SPECIFICATIONS - TORQUE	6	INSPECTION	16
CV BOOT - INNER		INSTALLATION	19
REMOVAL	7		

HALFSHAFTS

DESCRIPTION

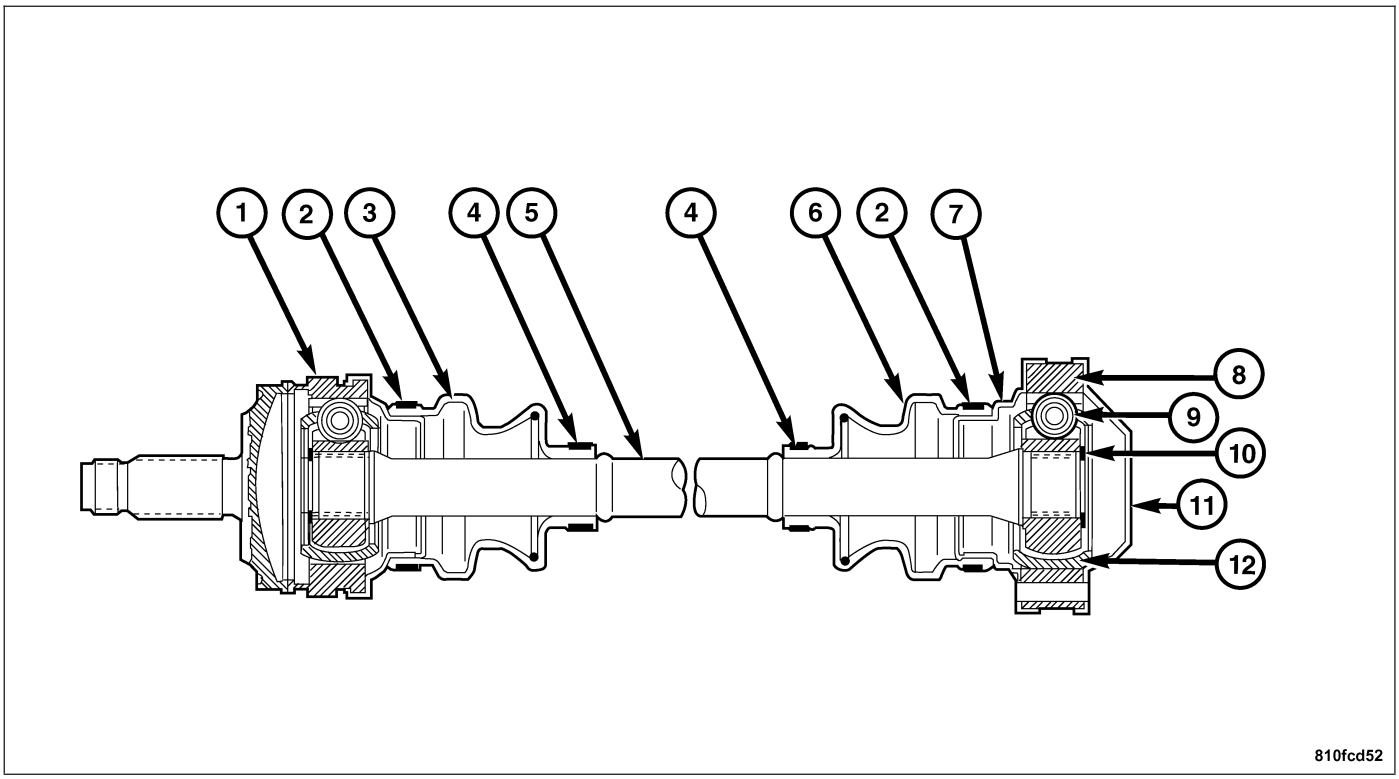

1 - CV JOINT OUTER RACE
2 - RETAINING CLAMP
3 - OUTER BOOT
4 - RETAINING CLAMP
5 - AXLE SHAFT
6 - INNER BOOT
7 - INNER SEAL (INNER SHOWN, OUTER SIMILAR)
8 - JOINT RING (INNER SHOWN, OUTER SIMILAR)
9 - BEARING (INNER SHOWN, OUTER SIMILAR)
10 - CIRCLIP
11 - INNER CV JOINT COVER
12 - OUTER BEARING RETAINER (INNER SHOWN, OUTER SIMILAR)

Articulated halfshafts deliver power from the rear differential to the wheels through constant velocity (CV) joints that minimize vibration.

OPERATION

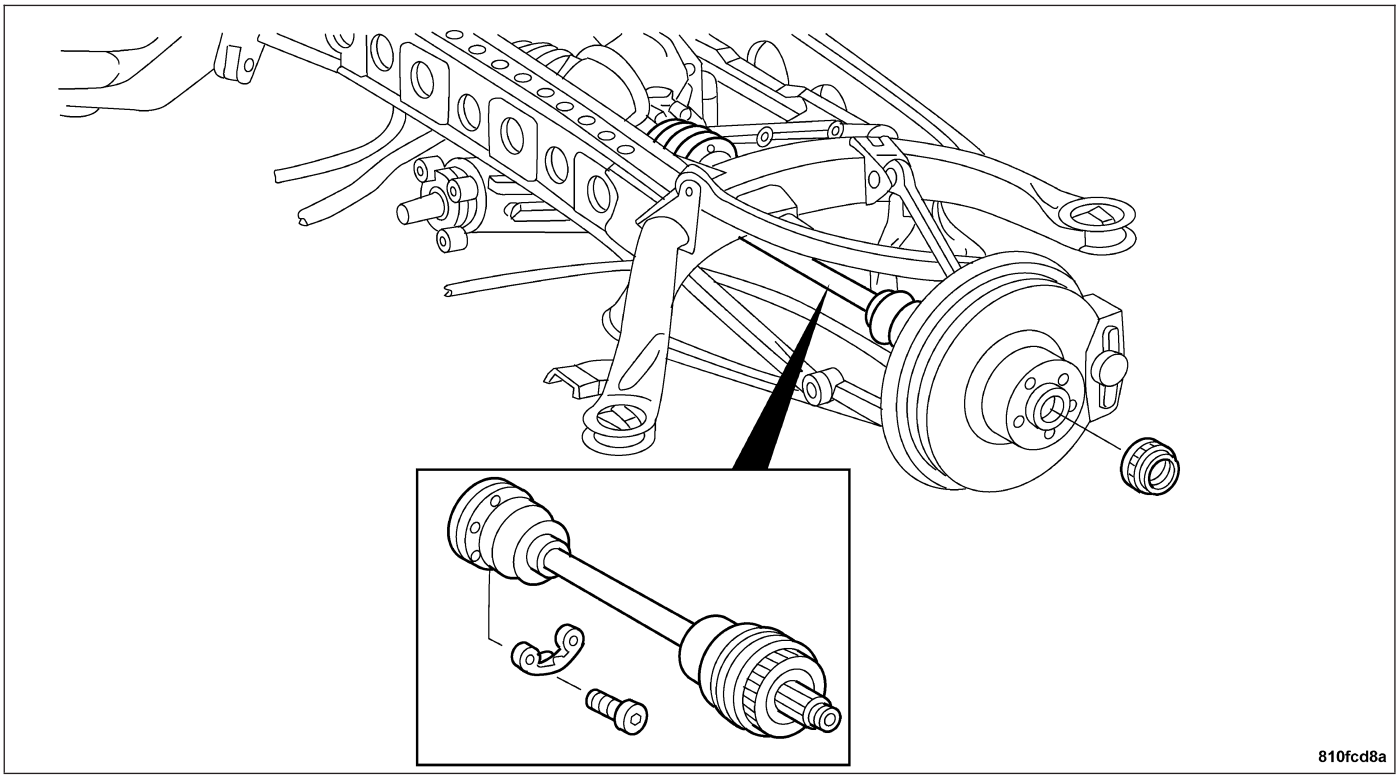

Halfshaft assemblies are designed to transmit power from the differential to the wheels, while allowing for powertrain and suspension flex.

DIAGNOSIS AND TESTING - DRIVELINE

HALFSHAFT VISUAL INSPECTION

1. Check for grease in the vicinity of the inboard and outboard CV joint. If grease is present, this may be a sign that the inner or outer boots, or the retaining clamps are damaged.
2. A light film of grease may appear on the inner CV boot; this is considered normal and should not require replacement of the boot. All inner CV boots are made of silicone rubber; which will allow weeping of the joint lubricant to pass through the boot while in operation.

NOISE AND/OR VIBRATION IN TURNS

A clicking noise and/or a vibration could be caused by one of the following conditions:

1. Damaged inner or outer CV boots or retaining clamps. This will result in the loss and/or contamination of the joint grease, resulting in inadequate lubrication of the joint.
2. Noise may also be caused by another component of the vehicle coming in contact with the halfshafts.

CLUNKING NOISE DURING ACCELERATION

This noise may be a result of one of the following conditions:

1. A torn boot on the inner or outer CV joint of the halfshaft assembly.
2. A loose or missing retaining clamp on the inner or outer CV boot of the halfshaft assembly.
3. A damaged or worn halfshaft CV joint.

SHUDDER OR VIBRATION DURING ACCELERATION

This problem could be a result of:

1. A worn or damaged halfshaft inner joint.
2. A sticking CV joint assembly.
3. Improper wheel alignment.

VIBRATION AT HIGHWAY SPEEDS

This problem could be a result of:

1. Foreign material (mud, snow, etc. packed on the backside of the wheels).
2. Out of balance tires or wheels.
3. Improper tire and/or wheel runout.

REMOVAL

1. Raise and support the vehicle.
2. Remove the rear wheels.
3. Remove the muffler. **Refer to Page 11-10**.
4. Place an index mark across the halfshaft (1) and the differential connecting flange (2) (as shown).

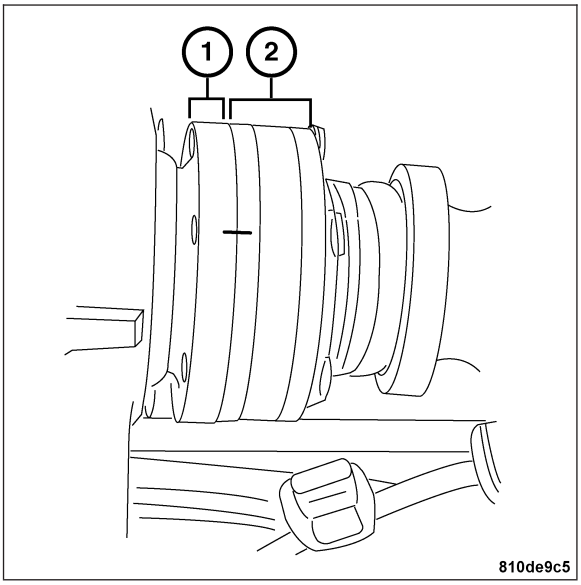

5. Remove the halfshaft outer retaining nut (1).
6. Push the halfshaft outer end through the wheel hub.

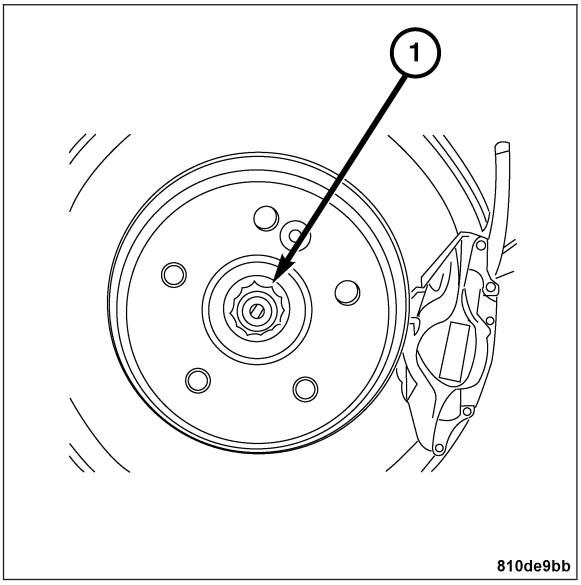

7. Remove the halfshaft retaining bolts and flanges (1).
8. Separate the halfshaft from the differential connecting flange and remove the halfshaft from the vehicle.

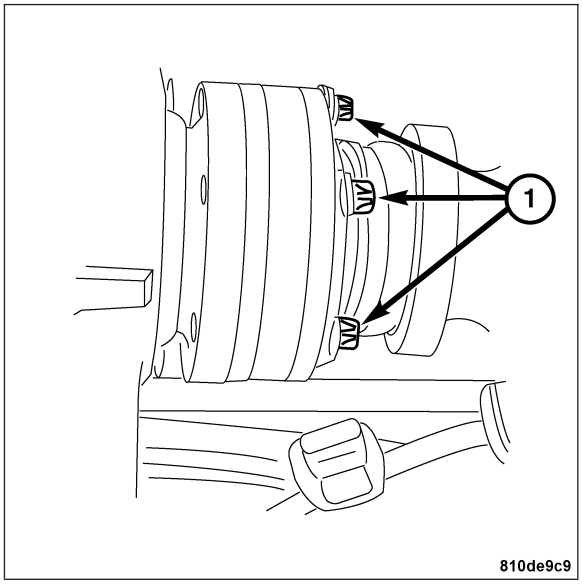

INSTALLATION

1. Insert the halfshaft outer end through the wheel hub.
2. Align the index marks on the differential connecting flange (1) and the halfshaft flange (2).

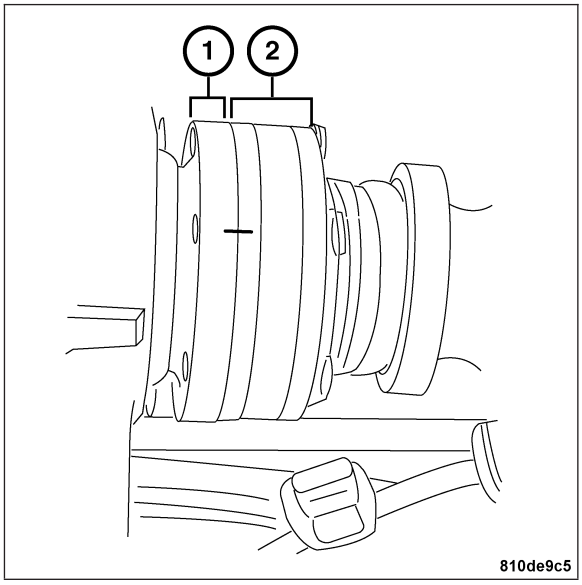

Note: New halfshaft bolts must be used.

3. Lubricate the halfshaft bolts (1) with oil. Install the halfshafts and bolts on the connecting flanges. Tighten the halfshaft bolts to 70 N·m (52 ft. lbs.).

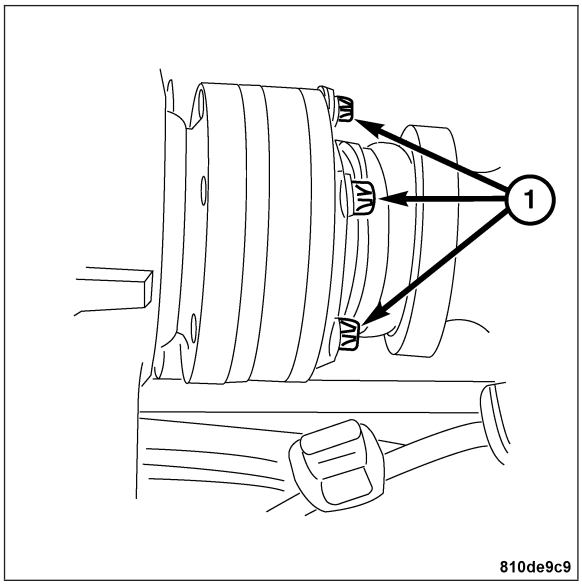

Note: A new halfshaft outer retaining nut must be used.

4. Install the halfshaft outer retaining nut (1). Tighten the nut to 220 N·m (164 ft. lbs.).
5. Install the muffler. **Refer to Page 11-12**.
6. Install the rear wheels. **Refer to Page 22-42**.

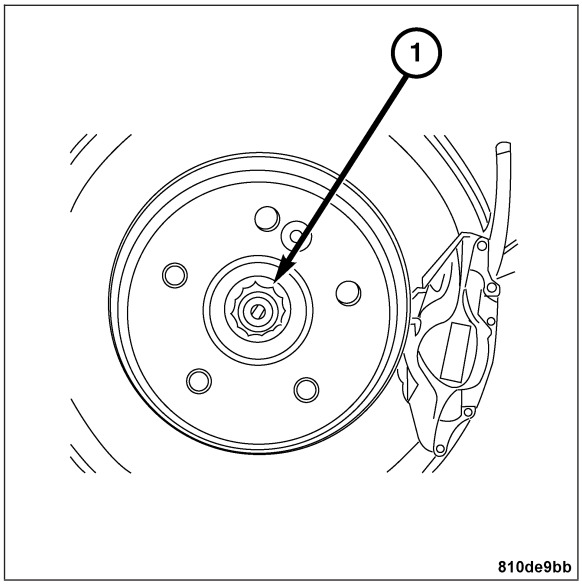

SPECIFICATIONS - TORQUE

TORQUE SPECIFICATIONS

DESCRIPTION	N·m	Ft. Lbs.	In. Lbs.
Halfshaft Outer Retaining Nut	220	164	—
Halfshaft Connecting Flange Bolts	70	52	—

CV BOOT - INNER

REMOVAL

1. Remove the halfshaft from the vehicle. **Refer to Page 3-4**.
2. Remove and discard both inner CV boot retaining clamps (1).

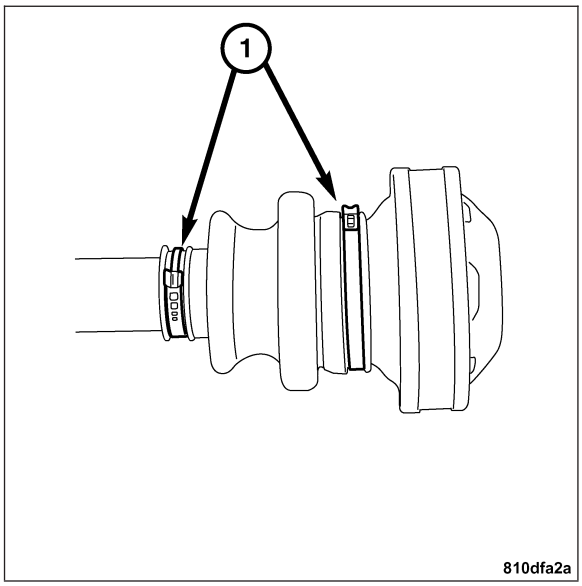

3. Clamp the halfshaft in a vise.
4. Use a suitable tool to remove the inner CV joint cover (1) from the bearing retainer.

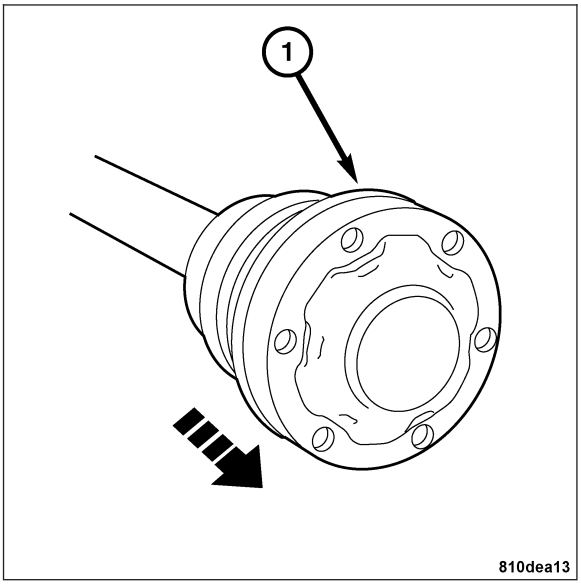

5. Slide the CV boot away from the inner seal (1).
6. Use a suitable tool and remove the inner seal (1) from the bearing retainer.
7. Slide the CV boot, inner seal, and the bearing retainer down the axle shaft away from the inner bearing.
8. Remove the CV joint circlip from the axle shaft.

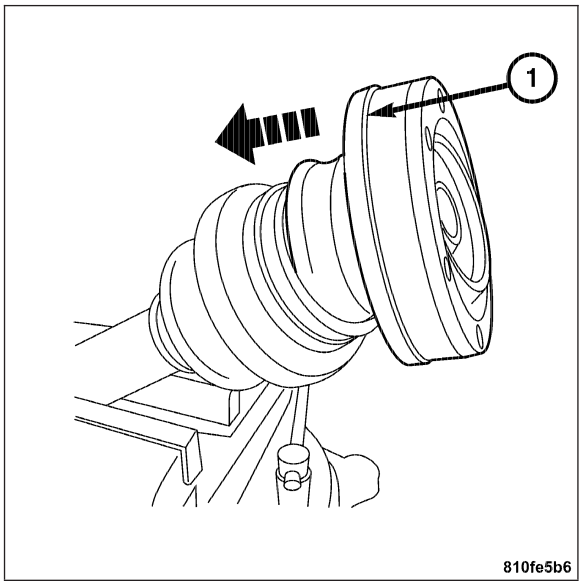

9. Using a press, remove the CV joint bearing (1) from the axle shaft.

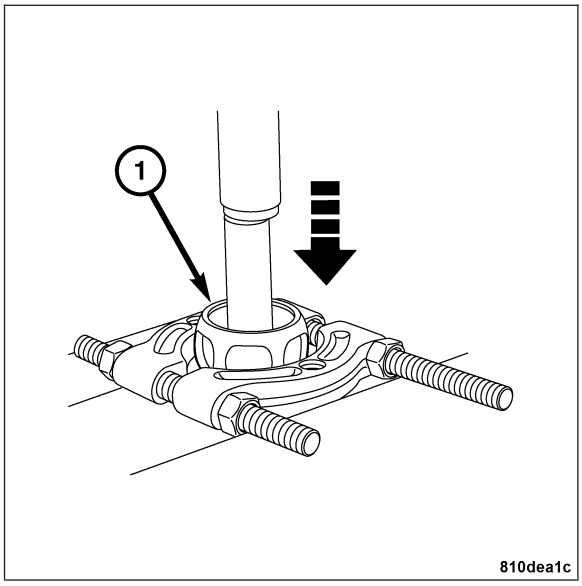

10. Slide the bearing retainer, inner seal, and the inner CV boot off of the axle shaft.

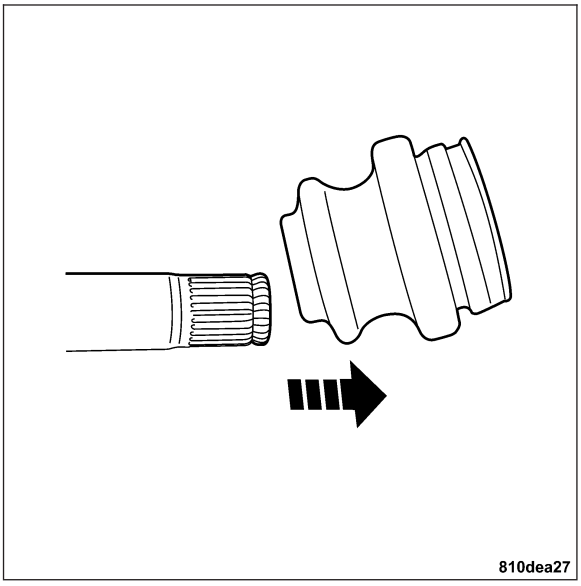

INSTALLATION

1. Clean and inspect the CV joint for wear and pitting. Replace as required. **Refer to Page 3-16**.
2. Remove any road grime and debris from the axle shaft splines.
3. Before installing the CV boot, cover the shaft splines to protect the CV boot during installation.
4. Slide the inner CV boot on the axle shaft.
5. Remove the protective cover from the axle shaft splines.
6. Install the CV joint bearing to the axle shaft.
7. Install the CV joint circlip to the axle shaft.
8. Pack the bearing cavity with grease supplied in the repair kit.
9. Apply a bead of sealant to the outer sealing surface of the inner CV joint ring (as shown).

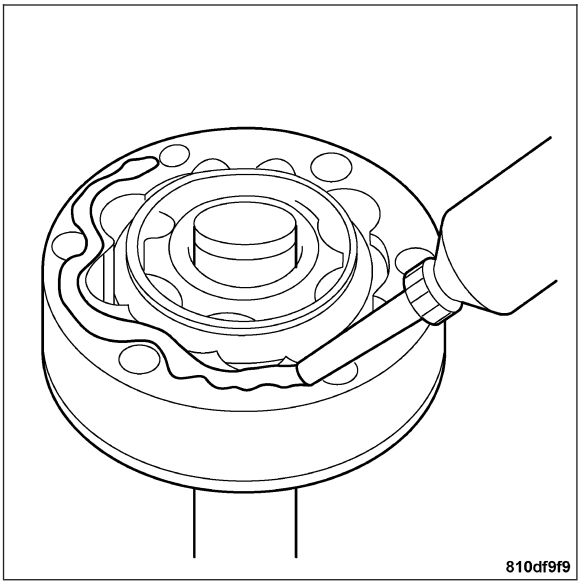

10. Using a mallet, tap on a new inner CV joint cover (1).

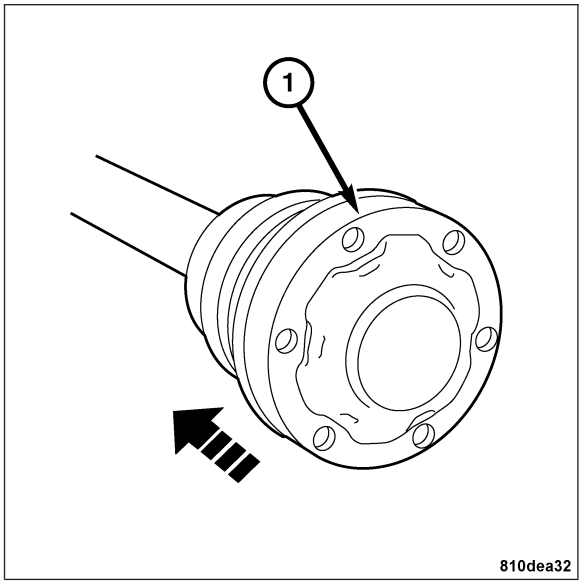

11. Install the CV boot into the sealing groove of the inner seal.
12. Position the inner and outer retaining clamps (1) on the CV boot.

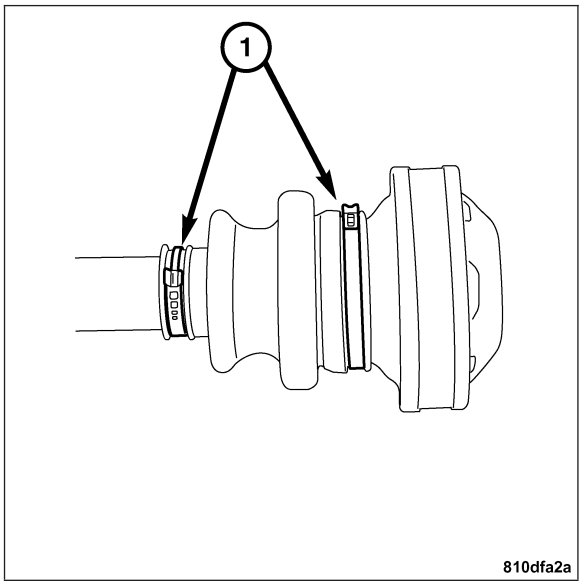

13. Position the crimping tool (1) on the retaining clamp (3).

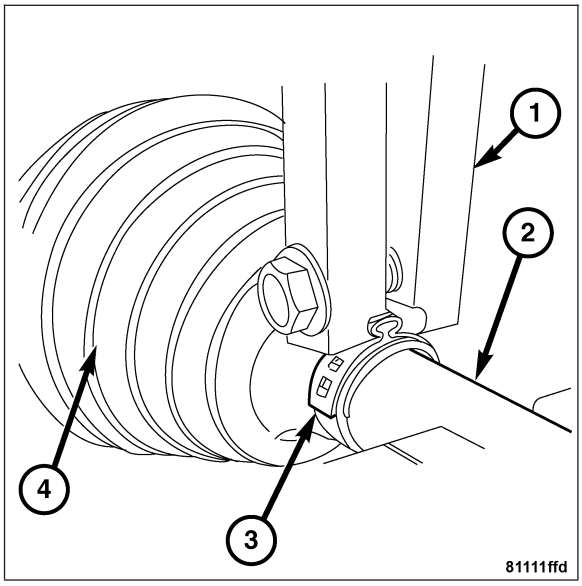

Note: The jaws of the crimping tool must be closed completely for proper sealing.

14. Crimp the new CV boot retaining clamp (3).
15. Install the halfshaft to the vehicle. **Refer to Page 3-5**.

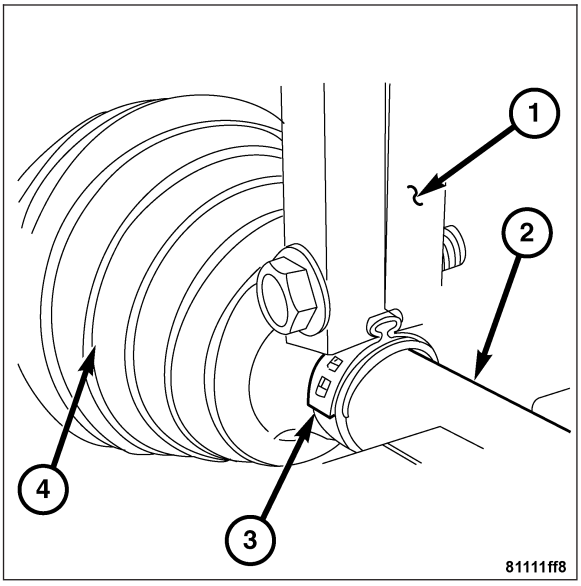

CV BOOT - OUTER

REMOVAL

Note: The outer boot the of the halfshaft can only be replaced after disassembling the inner CV joint.

1. Remove the halfshaft from the vehicle. **Refer to Page 3-4**.
2. Remove the inner CV boot from the halfshaft. **Refer to Page 3-7**.
3. Remove the outer CV boot retaining clamps (1).
4. Remove the outer CV boot (2) from the CV joint inner seal.

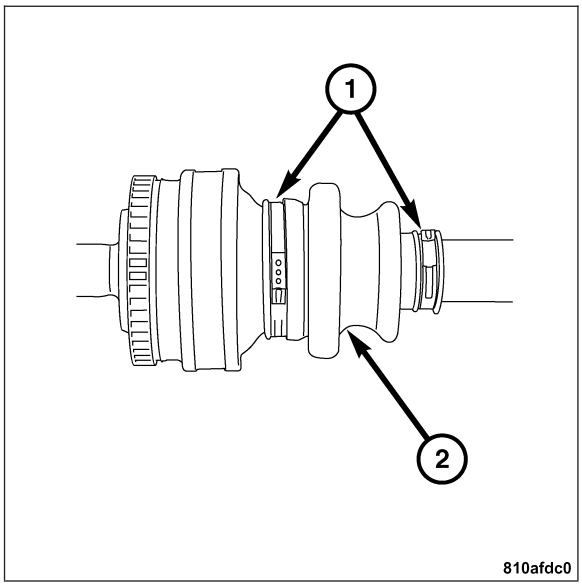

5. Slide the outer CV boot off of the axle shaft.

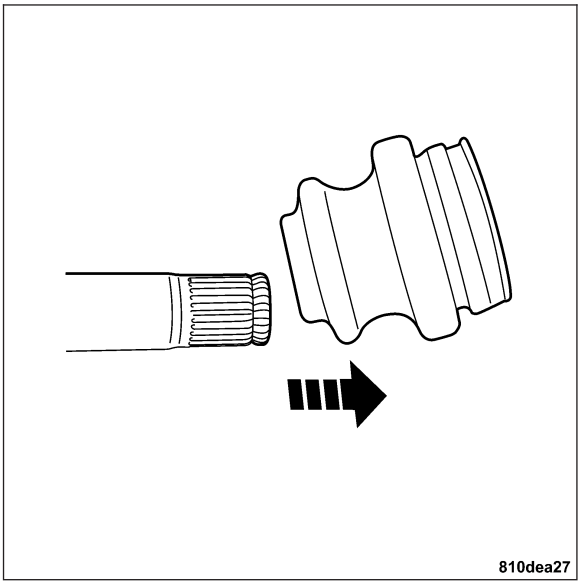

INSTALLATION

1. Pack the outer CV joint cavity with grease supplied in the repair kit.
2. Install the outer CV (1) boot into the sealing groove (2) of the inner seal.

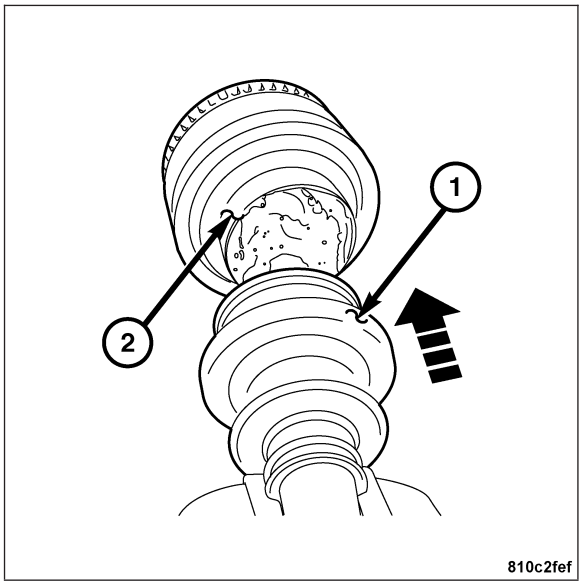

3. Position the inner and outer retaining clamps (1) on the CV boot (2).

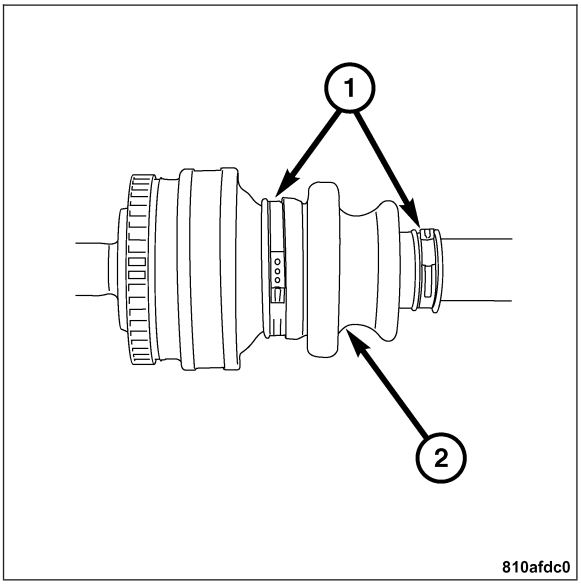

4. Position the crimping tool (1) on the retaining clamp (3).

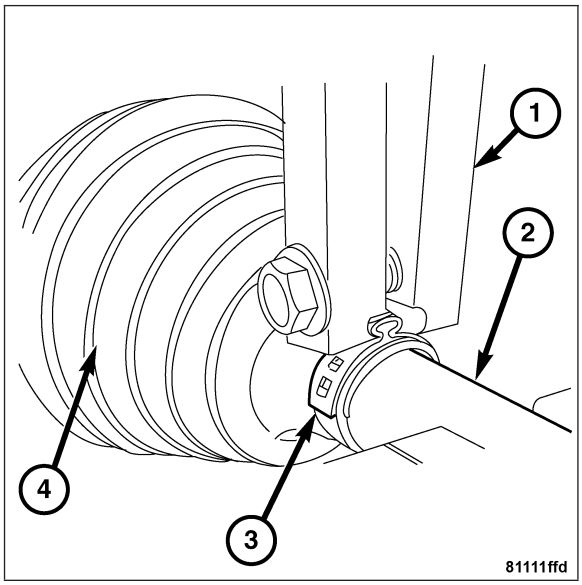

Note: The jaws of the crimping tool must be closed completely for proper sealing.

5. Crimp the new CV boot retaining clamp (3).
6. Install the halfshaft (2) to the vehicle. **Refer to Page 3-5**.

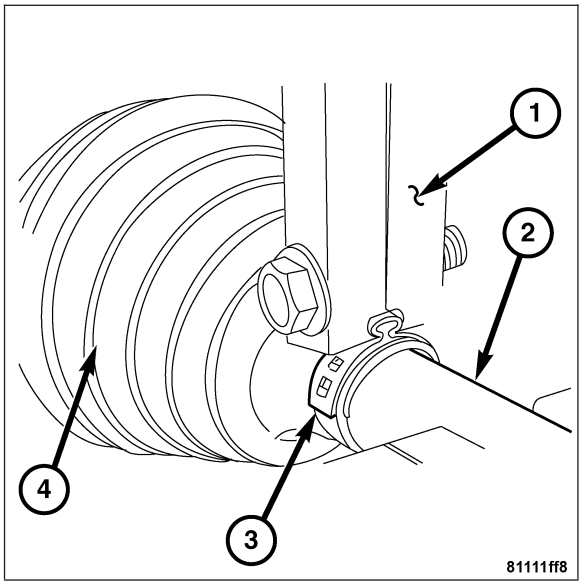

CV JOINT

REMOVAL

1. Remove the halfshaft from the vehicle. **Refer to Page 3-4**.
2. Remove and discard both inner CV boot retaining clamps (1).

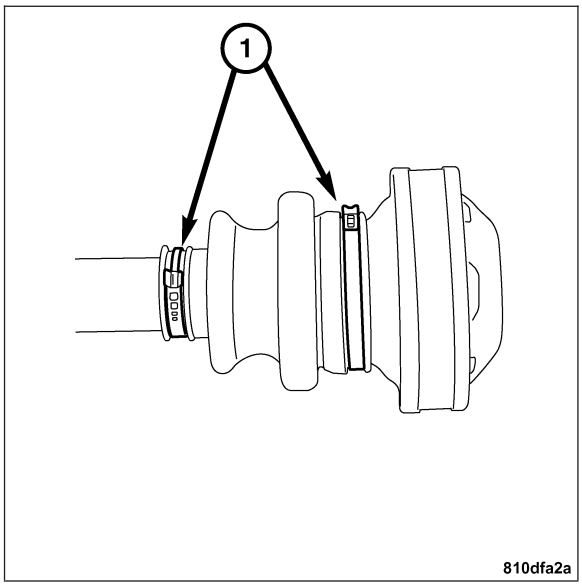

3. Clamp the halfshaft in a vise.
4. Use a suitable tool to remove the inner CV joint cover (1) from the bearing retainer.

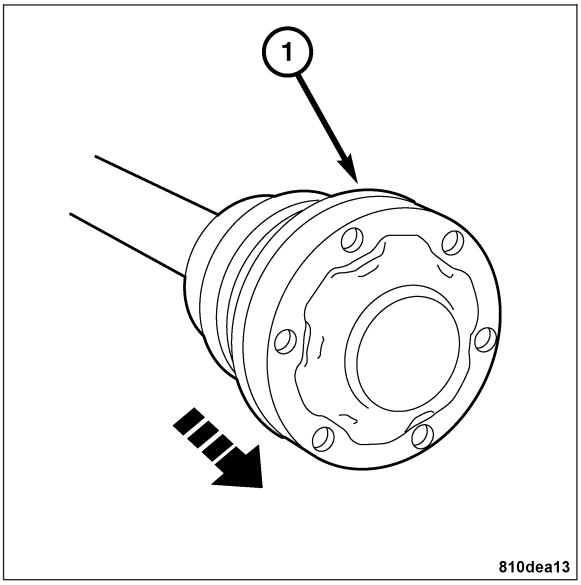

5. Slide the CV boot away from the inner seal (1).
6. Use a suitable tool and remove the inner seal (1) from the bearing retainer.
7. Slide the CV boot, inner seal, and the bearing retainer down the axle shaft away from the inner bearing.
8. Remove the CV joint circlip from the axle shaft.

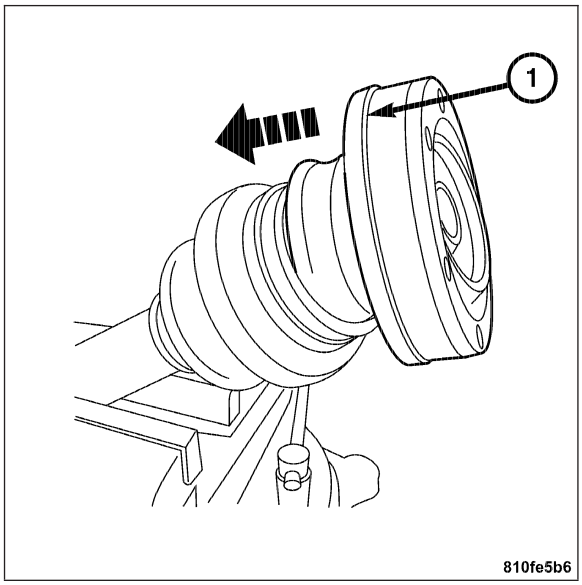

9. Using a press, remove the CV joint bearing (1) from the axle shaft.

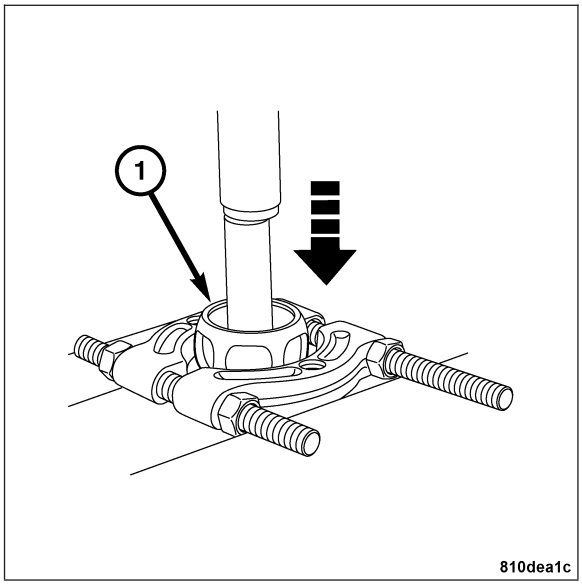

INSPECTION

DISASSEMBLING

1. Before disassembling the CV joint assembly, mark the positions of joint ring, joint hub and the bearing cage with a suitable marking tool.

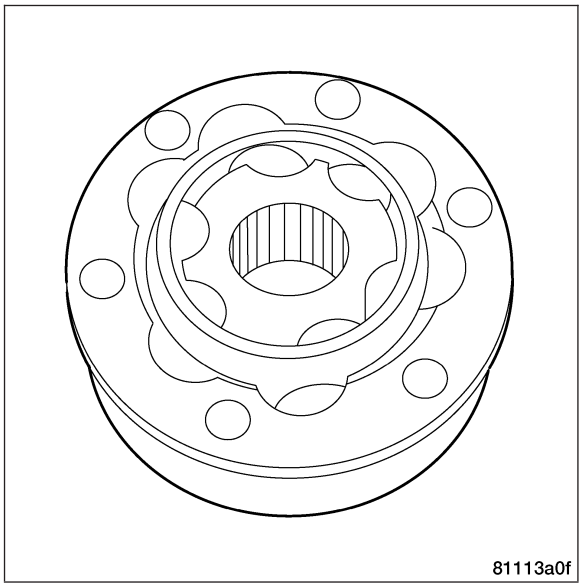

2. Tilt the joint hub with the bearing cage (arrow) and remove the bearing balls one at a time.
3. Remove the joint hub and the bearing cage from the joint ring.

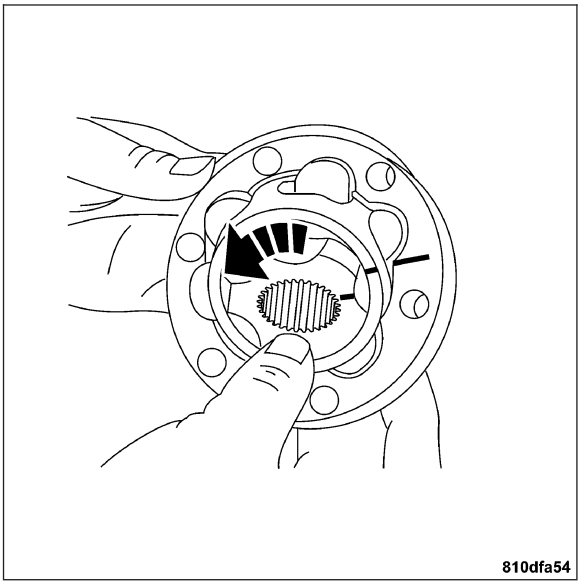

4. Pivot the joint hub 90° relative to the bearing cage and remove it from the assembly.
5. Thoroughly clean all the parts.

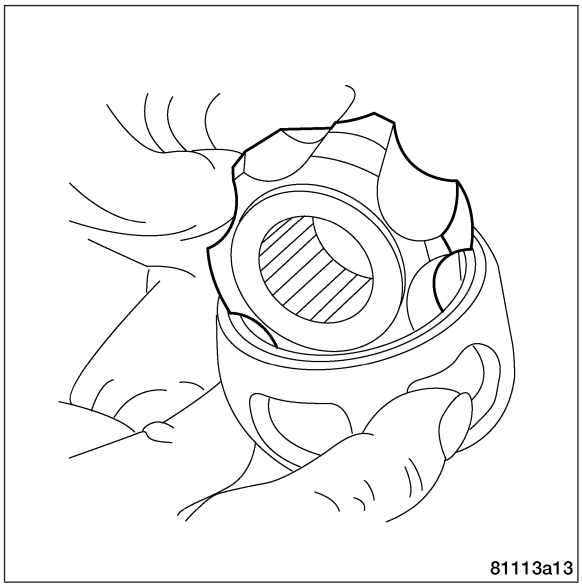

INSPECTION

1. Inspect the roller tracks in the joint ring (1), joint hub (4) and the bearing cage (2). Check the bearing balls (3) themselves for signs of pitting or wear.
2. If these parts are extremely worn, the entire CV joint must be replaced. Smooth areas and tracks caused by the ball bearings are no reason to replace the CV joint.

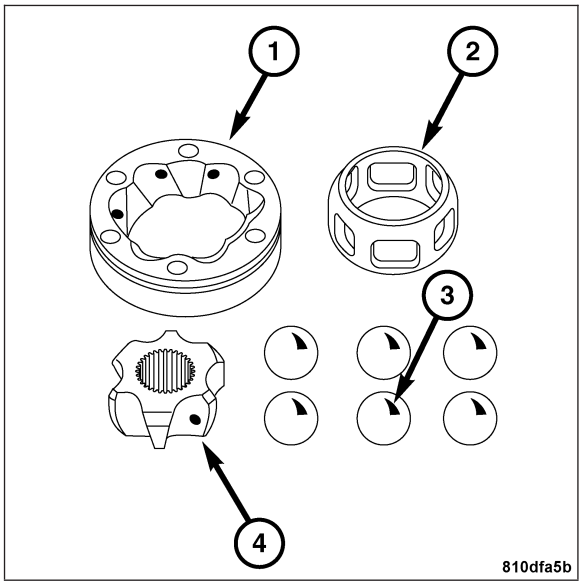

ASSEMBLING

1. Hold the joint hub vertically relative to bearing cage, then guide it into place.

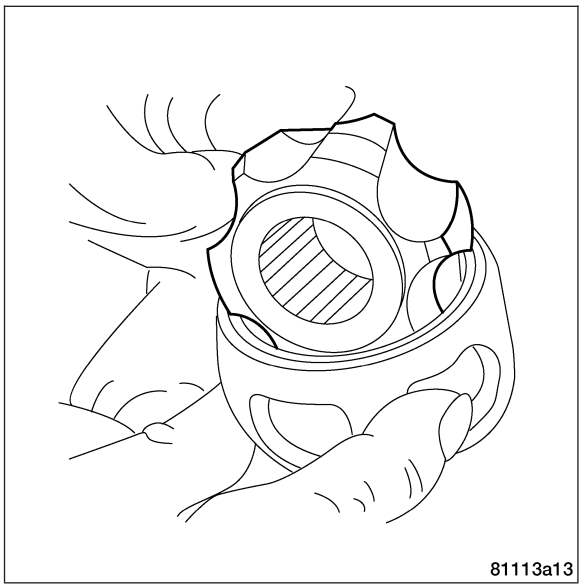

2. Insert one bearing ball, paying attention to the marks on the joint hub and bearing cage.
3. Insert the joint hub with the bearing cage and the bearing ball in the joint ring while ensuring that the markings are properly aligned.

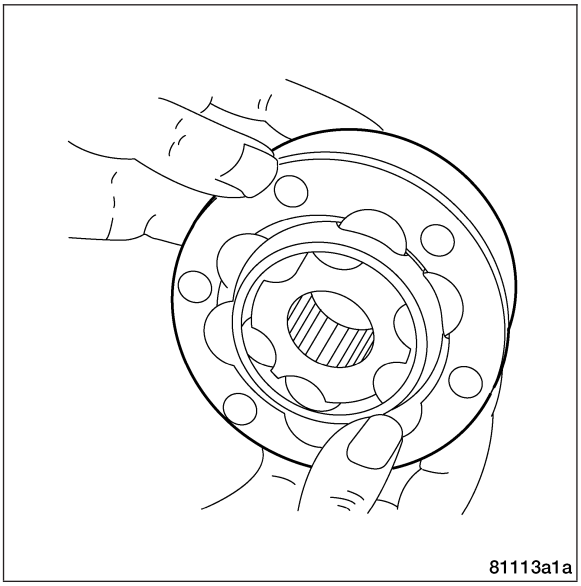

4. If no markings are present when installing the joint ring, ensure that the narrow side of the roller track is always opposite the wide side of the joint hub.

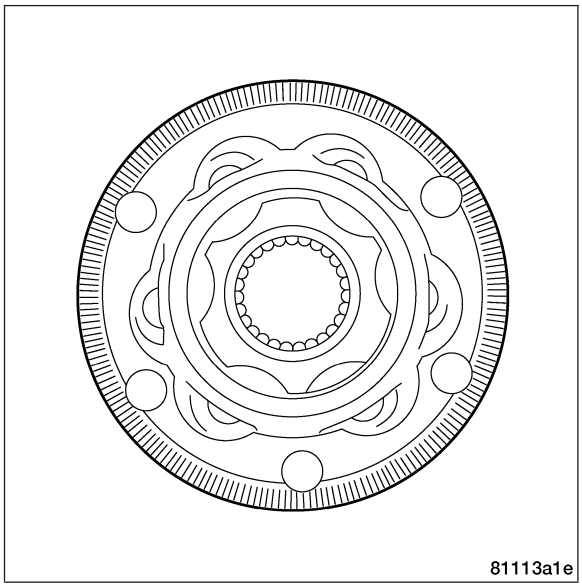

5. Tilt the joint hub out with the bearing cage to allow the bearing balls to be inserted one after the other.

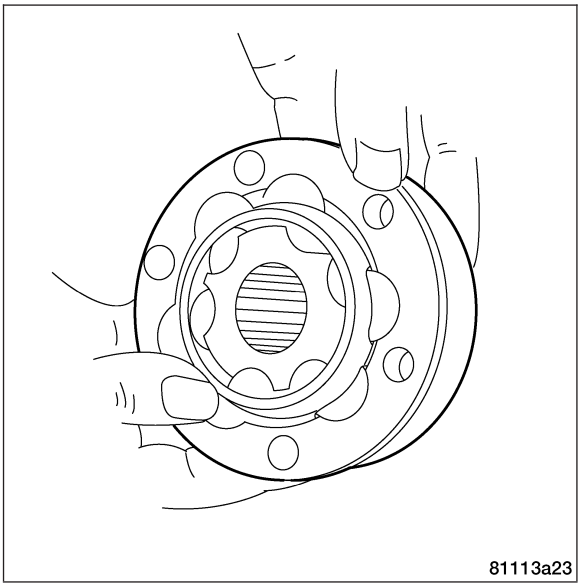

INSTALLATION

1. Before installing the CV boot, cover the shaft splines to protect the CV boot during installation.
2. Slide the inner CV boot on the axle shaft.
3. Remove the protective cover from the axle shaft splines.
4. Install the CV joint bearing to the axle shaft.
5. Install the CV joint circlip to the axle shaft.
6. Pack the bearing cavity with grease supplied in the repair kit.

7. Apply a bead of sealant to the outer sealing surface of the inner CV joint ring (as shown).

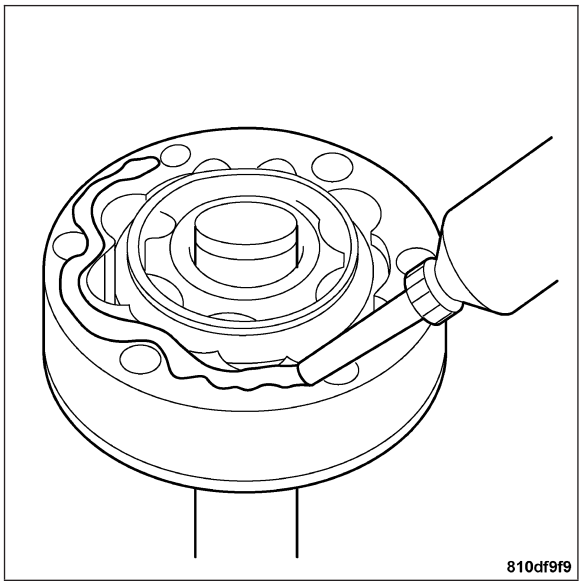

8. Using a mallet, tap on a new inner CV joint cover (1).

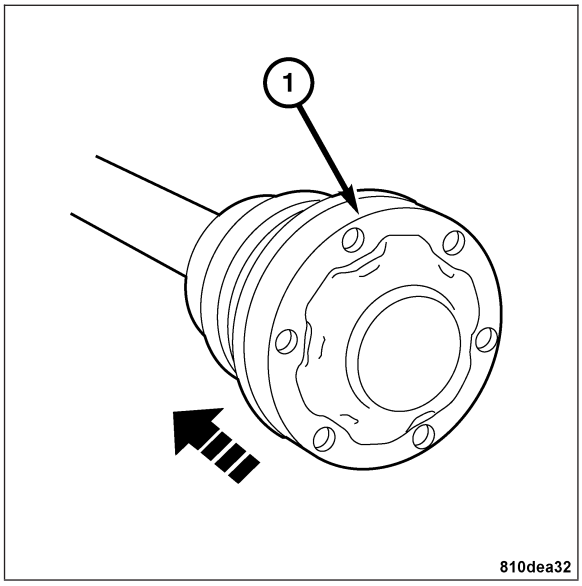

9. Install the CV boot into the sealing groove of the inner seal.
10. Position the inner and outer retaining clamps (1) on the CV boot.

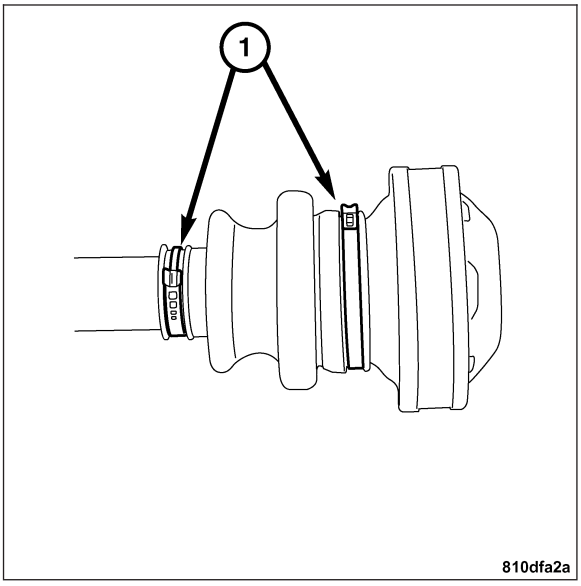

11. Position the crimping tool (1) on the retaining clamp (3).

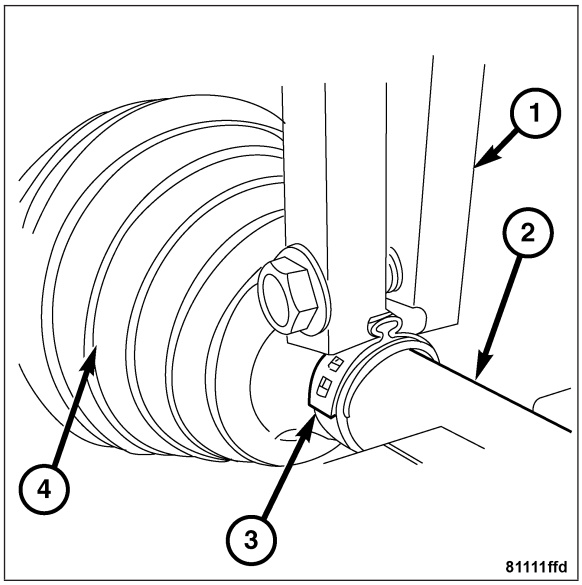

Note: The jaws of the crimping tool must be closed completely for proper sealing.

12. Crimp the new CV boot retaining clamp (3).
13. Install the halfshaft (2) to the vehicle. **Refer to Page 3-5**.

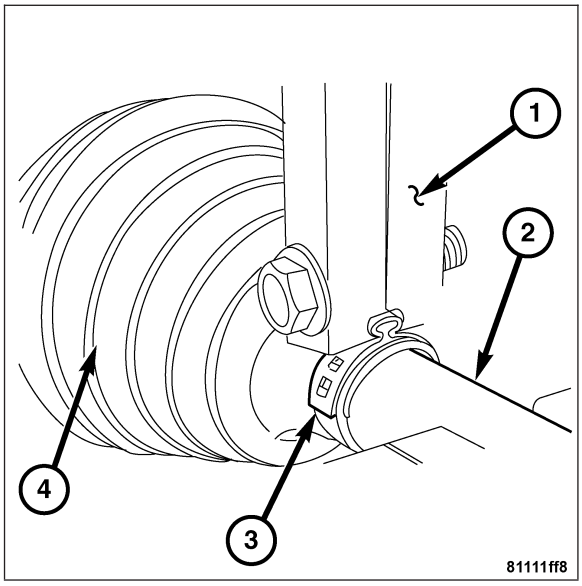

PROPELLER SHAFT

TABLE OF CONTENTS

page

PROPELLER SHAFT
DESCRIPTION 23
WARNING 23
DIAGNOSIS AND TESTING - PROPELLER SHAFT 24
REMOVAL 26
INSTALLATION 28
SPECIFICATIONS
SPECIFICATIONS - CENTERING SLEEVES . 30
SPECIFICATION - RUNOUT 30
SPECIFICATIONS - TORQUE 30
CENTER BEARING
REMOVAL 31
INSTALLATION 32
SINGLE CARDAN UNIVERSAL JOINTS
DISASSEMBLY 32
ASSEMBLY 33
CENTERING AND FITTED SLEEVES
REMOVAL
REMOVAL - CENTERING SLEEVES 35
REMOVAL - FITTED SLEEVES 35
INSTALLATION
INSTALLATION - CENTERING SLEEVES 36
INSTALLATION - FITTED SLEEVES 36

PROPELLER SHAFT

DESCRIPTION

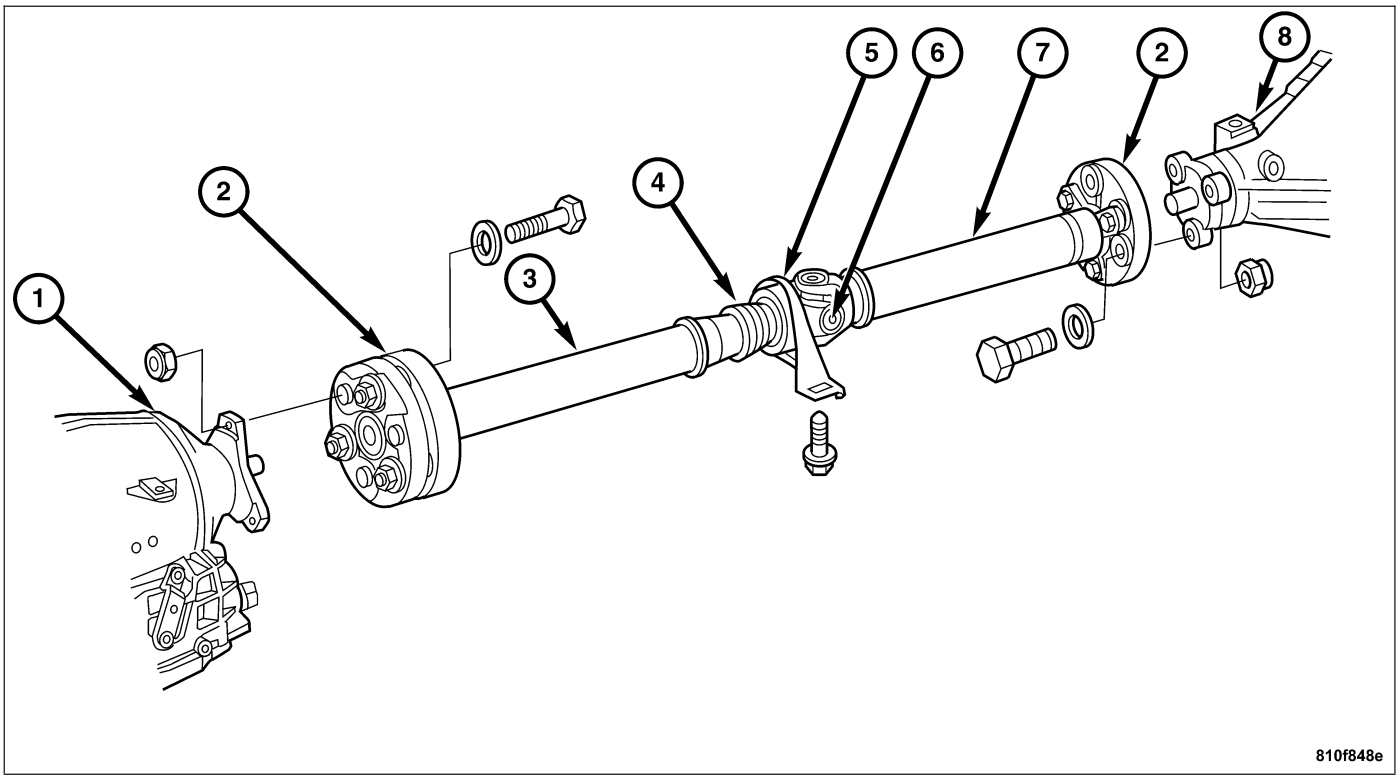

1 - TRANSMISSION
2 - FLEXIBLE DISK
3 - FRONT SECTION
4 - SLIP JOINT
5 - CENTER BEARING
6 - UNIVERSAL JOINT
7 - REAR SECTION
8 - REAR DIFFERENTIAL

A two-piece driveshaft links the transmission and rear axle through two flexible disks and one universal joint to minimize driveline vibrations.

WARNING

Use exact replacement hardware for attaching the propeller shafts. Exact replacement with original Mopar parts will ensure safe operation. The specified torque must always be applied when tightening any fasteners.

CAUTION: Propeller shafts are balanced by the manufacturer. Before undercoating a vehicle, the propeller shaft and universal joints should be covered. This will prevent the undercoating from causing an unbalanced condition and vibration.

CAUTION: Never allow the propeller shaft to drop or hang from universal joint during removal. Suspend the shaft to the vehicles underside with wire to prevent damage to the universal joints.

CAUTION: Protect the machined external surface of the slip yoke from damage after propeller shaft removal. If damaged, the transmission extension seal could be damaged and cause a leak.

DIAGNOSIS AND TESTING - PROPELLER SHAFT

VIBRATION

Tires that are out-of-round, or wheels that are unbalanced, will cause a low frequency vibration.

Brake rotors that are unbalanced will cause a harsh, low frequency vibration.

Driveline vibration can also result from loose or damaged engine mounts.

Propeller shaft vibration increases as the vehicle speed is increased. A vibration that occurs within a specific speed range is not usually caused by a propeller shaft being unbalanced. Defective universal joints, or an incorrect propeller shaft angle, are usually the cause of such a vibration.

DRIVELINE VIBRATION

CONDITION	POSSIBLE CAUSES	CORRECTION
PROPELLER SHAFT NOISE	1. Undercoating or other foreign material on shaft.	1. Clean exterior of shaft and wash with solvent.
	2. Loose or bent U-joint yoke or excessive runout.	2. Install new yoke.
	3. Incorrect driveline angularity.	3. Measure and correct driveline angles.
	4. Worn U-joint bearings.	4. Install new U-joint.
	5. Propeller shaft damaged or out of balance.	5. Install new propeller shaft.
	6. Excessive runout or unbalanced condition.	6. Re-index propeller shaft, test, and evaluate.
	7. Excessive axle yoke deflection.	7. Inspect and replace yoke if necessary.
UNIVERSAL JOINT NOISE	1. Lack of lubrication.	1. Replace U-joints as necessary.

BALANCE

If propeller shaft is suspected of being unbalanced, it can be verified with the following procedure:

1. Raise and support the vehicle.
2. Clean all the foreign material from the propeller shaft and the universal joints.

Note: If the propeller shaft is bent, it must be replaced.

3. Inspect the propeller shaft for missing balance weights, broken welds, and bent areas.
4. Inspect the universal joints to ensure that they are not worn, are properly installed, and are correctly aligned with the shaft.
5. Check the universal joint clamp bolts for proper torque.
6. Check the propeller shaft to transmission and differential flange retaining bolts for proper torque.
7. Remove the wheels and tires. Install the wheel mounting studs to retain the brake rotors.
8. Mark and number the propeller shaft six inches from the transmission end at four positions 90° apart.
9. Run and accelerate the vehicle until vibration occurs. Note the intensity and speed the vibration occurred. Stop the engine.

10. Install a screw clamp (1) at position 1.
11. Start the engine and re-check for vibration. If there is little or no change in vibration, move the clamp to one of the other three positions. Repeat the vibration test.
12. If there is no difference in vibration at the other positions, the source of the vibration may not be the propeller shaft.

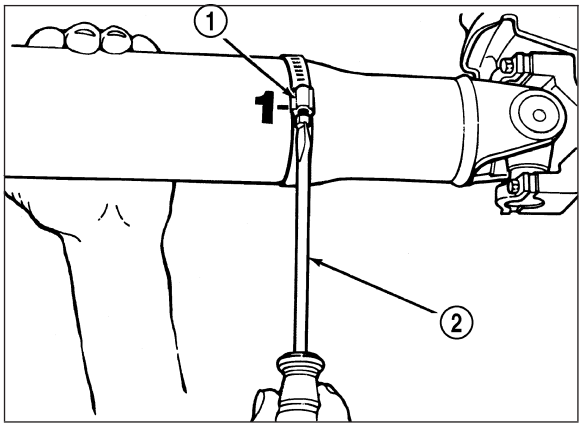

13. If the vibration decreased, install a second clamp and repeat the test.

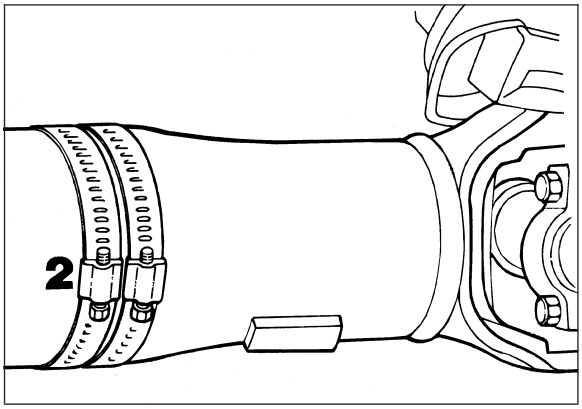

14. If the additional clamp causes an additional vibration, separate the clamps 0.5 inch (13 mm.) above and below the mark). Repeat the vibration test.
15. Increase the distance between the clamps and repeat the test until the amount of vibration is at the lowest level. Bend the slack end of the clamps so the screws will not loosen.
16. If the vibration remains unacceptable, apply the same steps to the differential end of the propeller shaft.
17. Install the wheels and tires. **Refer to Page 22-42**.
18. Lower the vehicle.

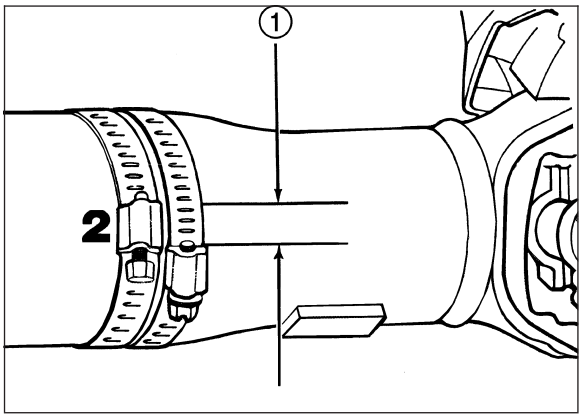

RUNOUT

1. Remove dirt, rust, paint, and undercoating from the propeller shaft surface where the dial indicator will contact the shaft.
2. The dial indicator must be installed perpendicular to the shaft surface.
3. Measure runout at the center and ends of the shaft sufficiently far away from weld areas to ensure that the effects of the weld process will not enter into the measurements.
4. Refer to Runout Specifications chart.
5. If the propeller shaft runout is out of specification, remove the propeller shaft, index the shaft 180°, and re-install the propeller shaft. Measure shaft runout again.
6. If the propeller shaft runout is now within specifications, mark the shaft and yokes for proper orientation.
7. If the propeller shaft runout is not within specifications, verify that the runout of the transmission and axle flanges are within specifications. Correct as necessary and re-measure propeller shaft runout.
8. Replace the propeller shaft if the runout still exceeds the limits.

REMOVAL

Note: Mark the location of the front and rear propeller shaft flange to the transmission output flange and the rear axle pinion flange to maintain proper balance of the driveline.

1. Raise and support the vehicle.
2. Remove the exhaust system. **Refer to Page 11-5**.
3. Remove the center exhaust heat shield nuts (1) and the center heat shield.

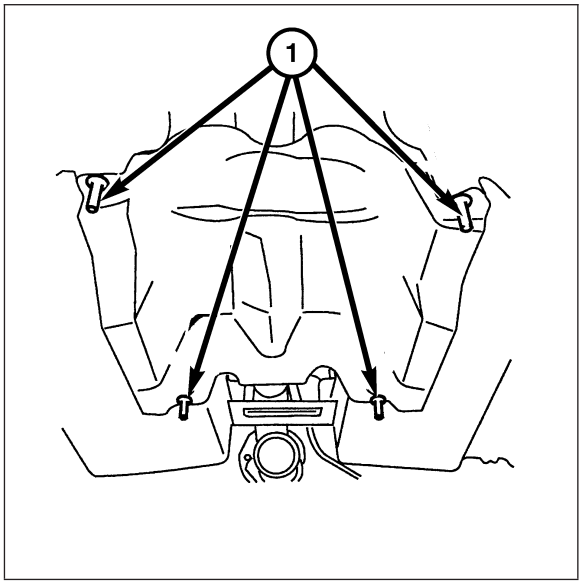

4. Remove the rear transmission tunnel support bracket bolts (1) and the bracket.

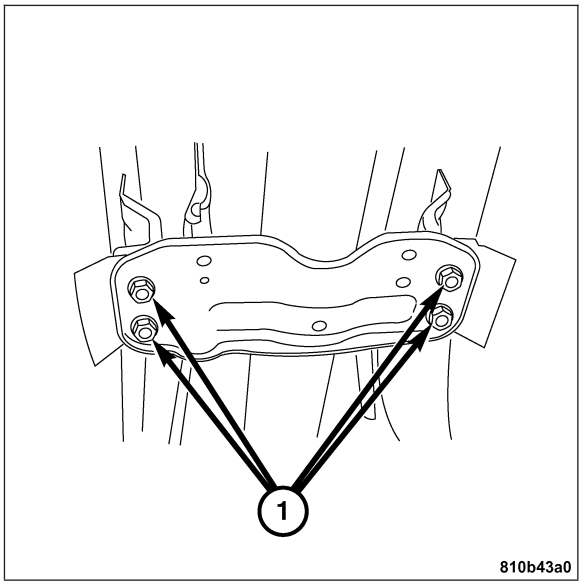

5. Support the transmission with a jack stand.
6. Remove the transmission mount bolts (1).
7. Remove the transmission crossmember bolts (2).
8. Remove the transmission crossmember from the vehicle.

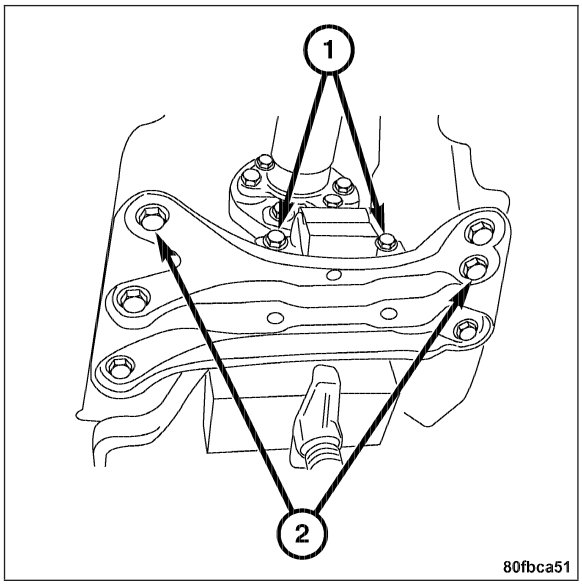

9. Remove the three rear propeller shaft bolts (1) from the rear axle pinion flange.
10. Remove the rear propeller shaft from the rear axle pinion flange.
11. Remove the three front propeller shaft bolts from the transmission output flange.
12. Remove the front propeller shaft from the transmission output flange.

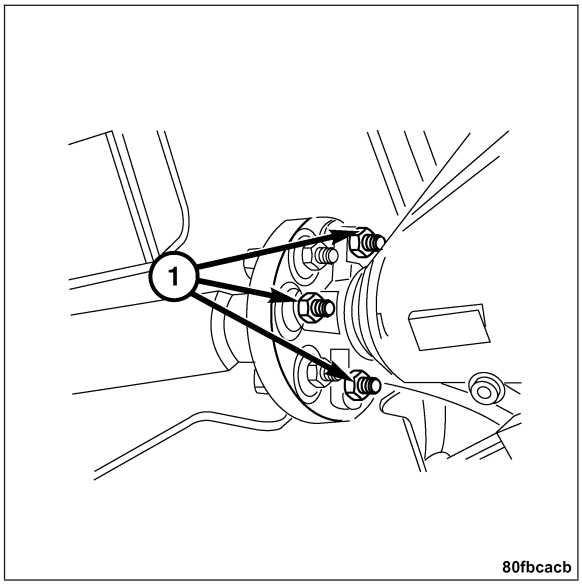

13. Remove the center bearing bracket bolts (1).
14. Carefully remove the propeller shaft from the vehicle.

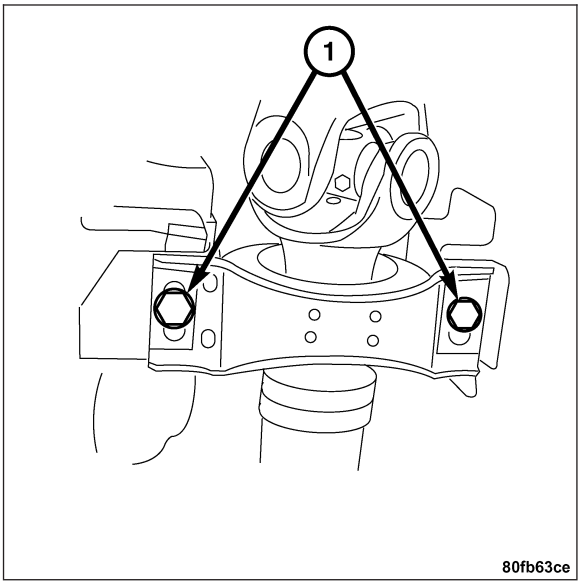

INSTALLATION

Note: Align the marks of the front and rear propeller shaft flange to the transmission output flange and the rear axle pinion flange. Failure to do so will not maintain the proper balance of the driveline.

Note: All self locking nuts and bolts must be replaced.

1. Position the propeller shaft in the vehicle.
2. Support the propeller shaft with a jack stand.
3. Align the center bearing bracket and install the bolts (1). Tighten the bolts to 30 N·m (22 ft. lbs.).

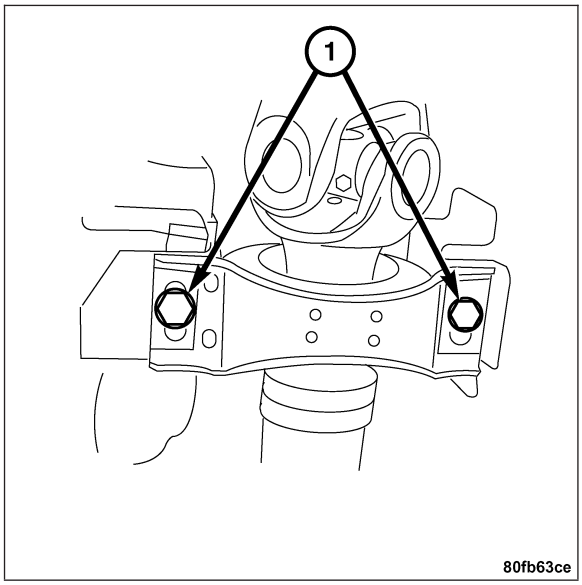

4. Install the rear propeller shaft to the rear axle pinion flange.
5. Install the three rear propeller shaft bolts (1) to the rear axle pinion flange. Tighten the bolts to 60 N·m (44 ft. lbs.).
6. Install the front propeller shaft to the transmission output flange.
7. Install the three front propeller shaft bolts to the transmission output flange. Tighten the bolts to 60 N·m (44 ft. lbs.).

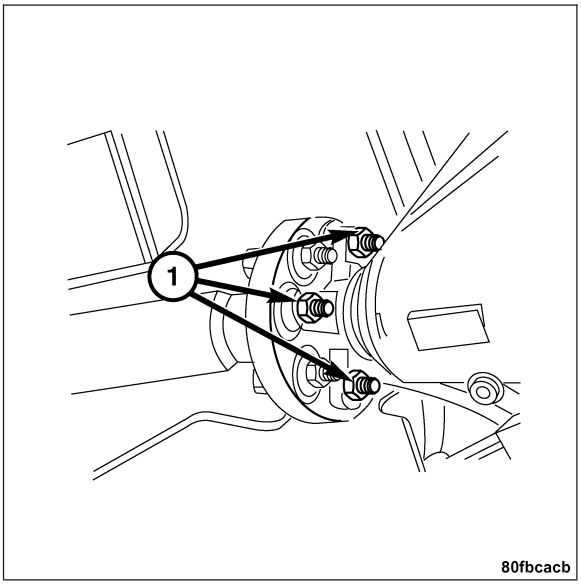

8. Install the transmission tunnel support bracket.
9. Install the transmission tunnel support bracket bolts (1). Tighten the bolts to 20 N·m (15 ft. lbs.).

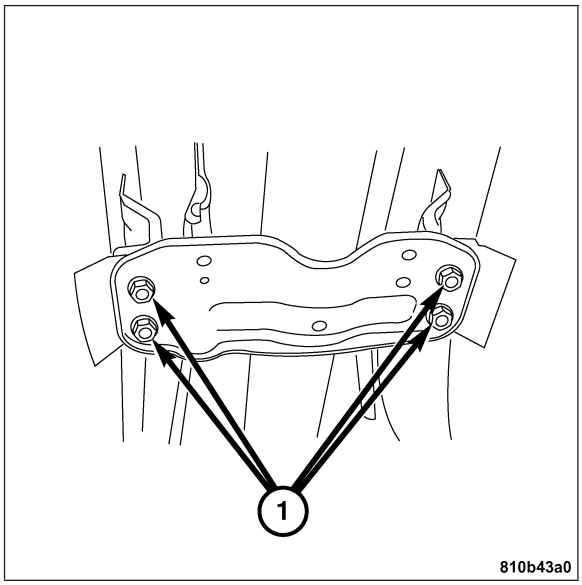

10. Position the transmission crossmember and transmission mount on the vehicle.
11. Install the transmission mount bolts (1). Tighten the bolts to 45 N·m (33 ft. lbs.).
12. Install the transmission crossmember bolts (2). Tighten the bolts to 45 N·m (33 ft. lbs.).

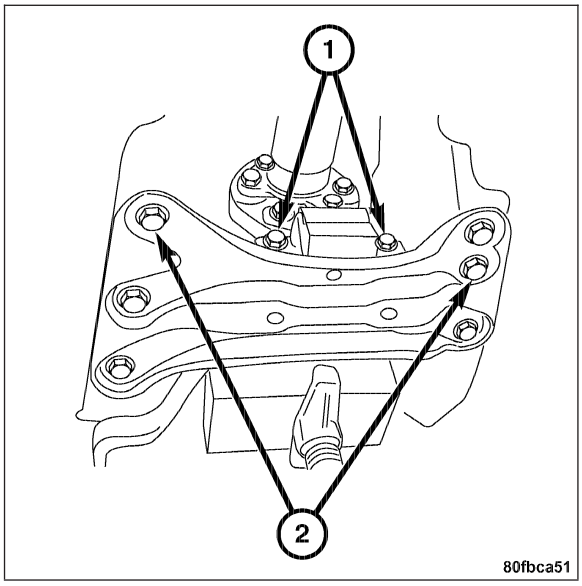

13. Install the rear exhaust heat shield and nuts (1). Tighten the nuts to 10 N·m (89 in. lbs.).
14. Remove the jack stand supporting the transmission.
15. Install the exhaust system. **Refer to Page 11-7**.
16. Lower the vehicle.

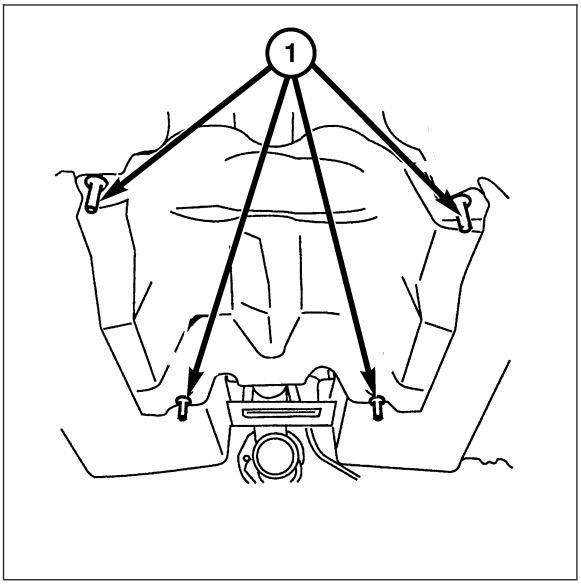

SPECIFICATIONS

SPECIFICATIONS - CENTERING SLEEVES

CENTERING SLEEVE SPECIFICATIONS

DESCRIPTION	In	mm
Automatic Transmission Front Sleeve	1.13	28.8
Automatic Transmission Rear Sleeve	0.98	24.9
Manual Transmission Front Sleeve	1.06	26.8
Manual Transmission Rear Sleeve	1.06	26.9

SPECIFICATION - RUNOUT

Note: Measure front/rear runout approximately 3 inches (76 mm) from the weld seam at each end of the shaft tube for tube lengths over 30 inches. For tube lengths under 30 inches the maximum allowed runout is 0.020 in. (0.50 mm) for the full length of the tube.

RUNOUT SPECIFICATIONS

LOCATION	In.	mm
Front Of Shaft	0.020	0.50
Center Of Shaft	0.025	0.63
Rear Of Shaft	0.020	0.50

SPECIFICATIONS - TORQUE

TORQUE SPECIFICATIONS

DESCRIPTION	N·m	Ft. Lbs.	In. Lbs.
Center Bearing Bracket Bolts	45	33	—
Heat Shield Nuts	10	—	89
Rear Axle Pinion Flange Bolts	60	44	—
Transmission Crossmember Bolts	45	33	—
Transmission Mount Bolts	45	33	—
Transmission Output Flange Bolts	60	44	—
Transmission Tunnel Support Bracket Bolts	20	15	—

CENTER BEARING

REMOVAL

1. Remove the propeller shaft. **Refer to Page 3-31**.
2. Separate the propeller shaft sections.

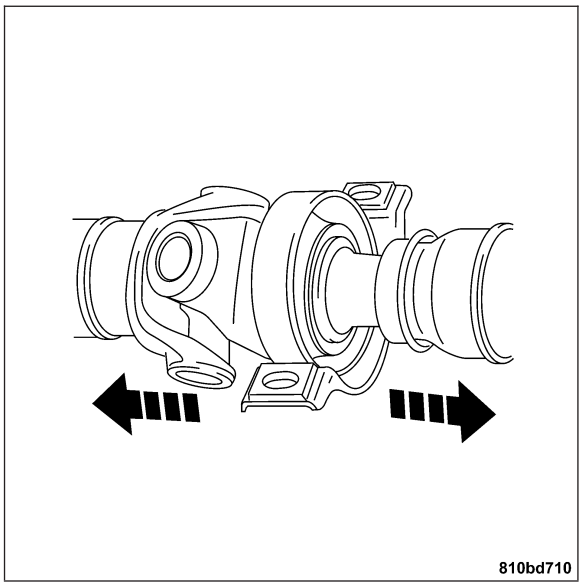

3. Use a jaw puller to remove the rubber mount and the bearing (2) from the propeller shaft (1).

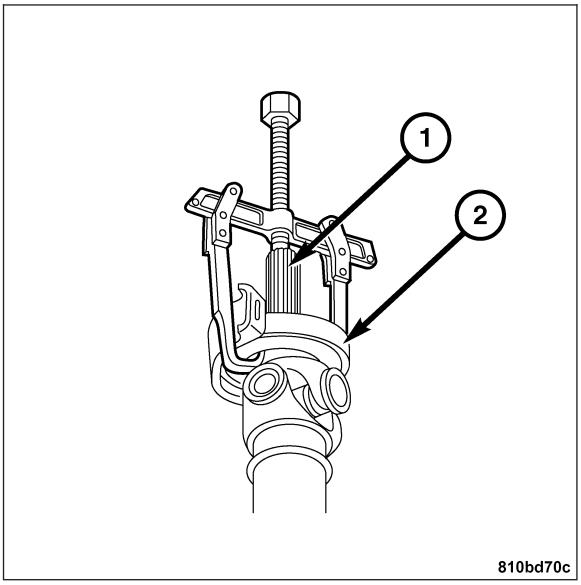

INSTALLATION

1. Press the bearing into the rubber mount.
2. Press the bearing and rubber mount onto the propeller shaft using a shop press and bearing adapter.
3. Grease the propeller shaft splines with Mopar® heavy duty grease.
4. Fit the two propeller shaft sections together.
5. Install the propeller shaft in the vehicle. **Refer to Page 3-28**.

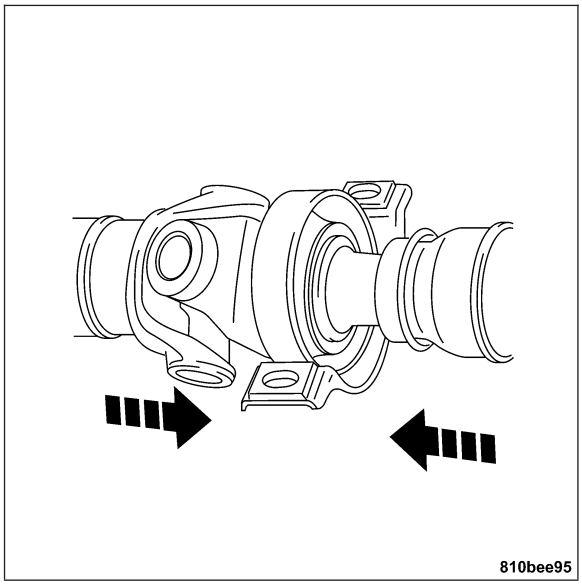

SINGLE CARDAN UNIVERSAL JOINTS

DISASSEMBLY

Note: Individual components of cardan universal joints are not serviceable. If worn or leaking, they must be replaced as an assembly.

1. Remove the propeller shaft. **Refer to Page 3-26**.
2. Tap the outside of the bearing cap assembly with a drift to loosen the snap ring.
3. Remove the snap rings (1) from both sides of the yoke.

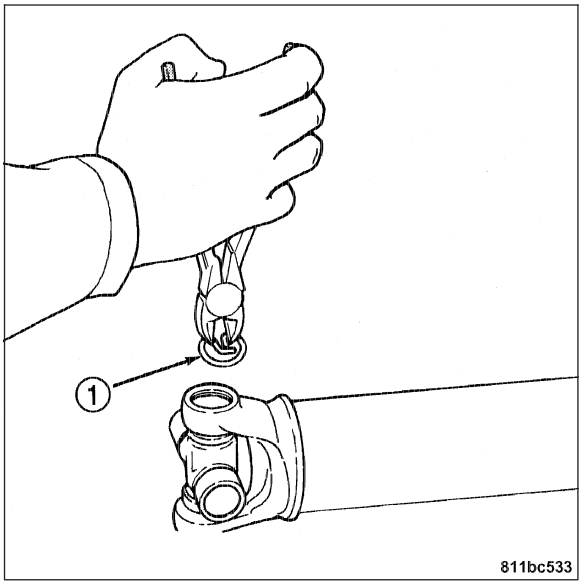

4. Set the yoke in an arbor press or vise with a socket whose inside diameter is large enough to receive the bearing cap positioned beneath the yoke.
5. Position the yoke with the grease fitting, if equipped, pointing up.

6. Place a socket (2) with an outside diameter smaller than the upper bearing cap on the upper bearing cap and press (1) the cap through the yoke to release the lower bearing cap.

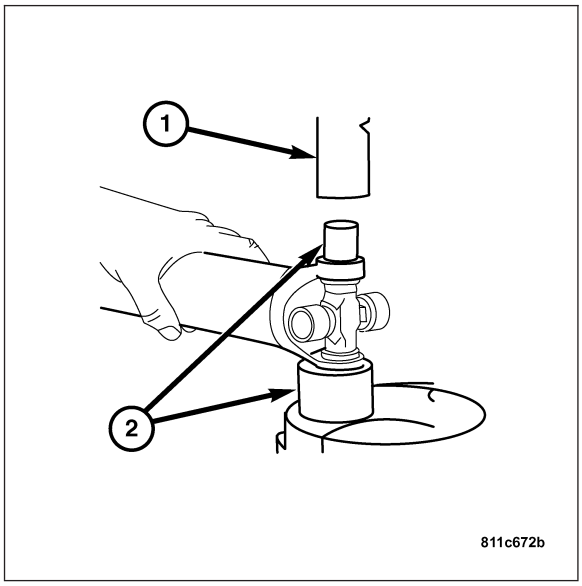

7. If the bearing cap will not pull out of the yoke by hand after pressing, tap the yoke ear near the bearing cap to dislodge the cap.

CAUTION: If the cross or bearing cap are not straight during installation, the bearing cap will score the walls of the yoke bore and damage can occur.

8. To remove the opposite bearing cap, turn the yoke over and straighten the universal joint in the open hole. Then, carefully press the end of the universal joint until the remaining bearing cap can be removed.

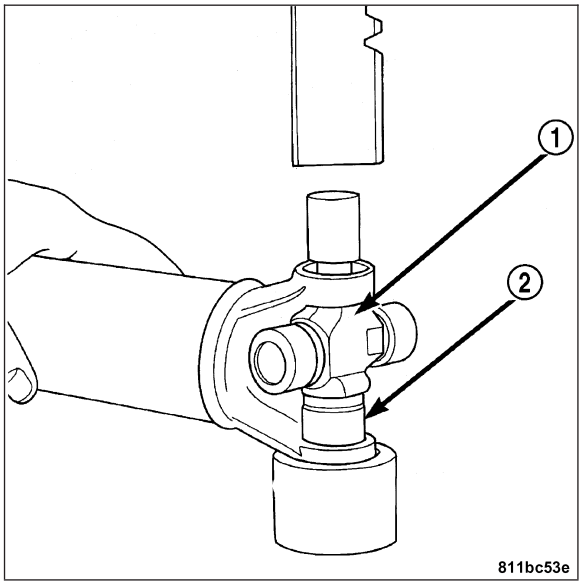

ASSEMBLY

1. Apply Extreme Pressure (EP) N.L.G.I. Grade 1 or 2 grease to the inside of the yoke bores.

2. Position the universal joint (1) in the yoke (2) with its lube fitting, if equipped, pointing up.

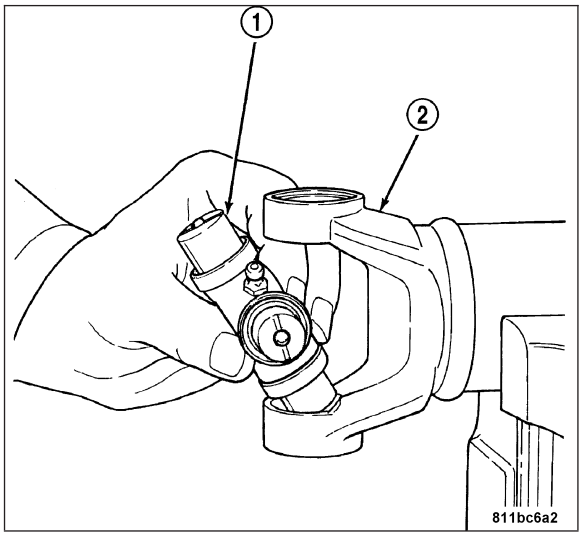

3. Place a bearing cap (1) over the trunnion (2) and align the cap with the yoke bore. Keep the needle bearings upright in the bearing cap.

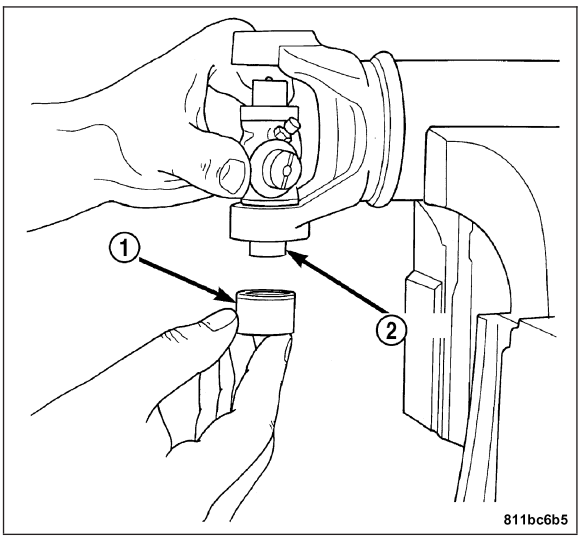

4. Press the bearing cap into the yoke bore enough to clear the snap ring groove.
5. Install a snap ring.

Note: If the joint is stiff or binding, strike the yoke with a soft hammer to seat the needle bearings.

6. Repeat the procedure to install the opposite bearing cap.
7. Add grease to the lube fitting, if equipped.
8. Install the propeller shaft. **Refer to Page 3-28**.

CENTERING AND FITTED SLEEVES

REMOVAL

REMOVAL - CENTERING SLEEVES

1. Remove propeller shaft. **Refer to Page 3-26**.
2. Mark flexible disk (4) relative to flange (2).
3. Remove flexible disk (4) from flange (2).
4. Remove the centering sleeve (3). Use a hammer and chisel if necessary.

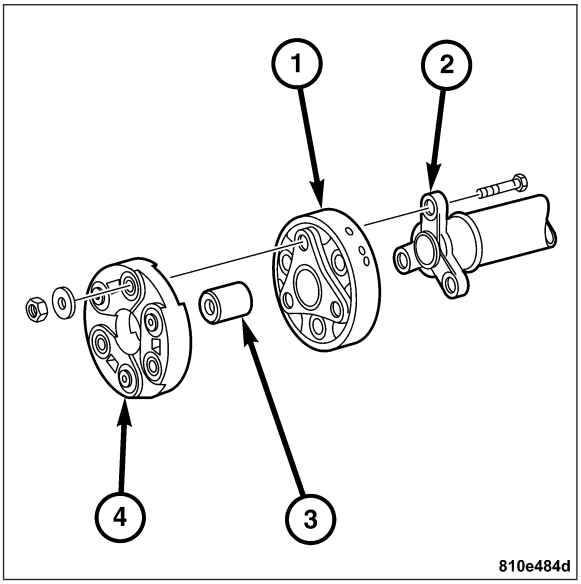

REMOVAL - FITTED SLEEVES

1. Raise and support the vehicle.
2. Remove the flange bolt and nut.
3. Use a drift punch (2) or extension to loosen the fitted sleeve (1).
4. Remove the fitted sleeve (1).

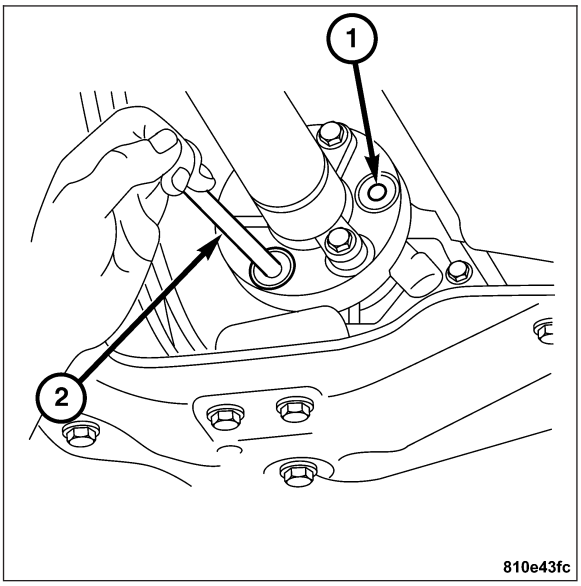

INSTALLATION

INSTALLATION - CENTERING SLEEVES

1. Inspect centering sleeves and flexible disks for cracks and wear. Replace as required.
2. Fill centering sleeve cavities with heavy duty Mopar grease.
3. Press in new sleeves.
4. Measure sleeve depth from top of sleeve to face of flange.
5. Assemble the flange and flexible disk with the new sleeve as marked.
6. Install the propeller shaft. **Refer to Page 3-28**.

INSTALLATION - FITTED SLEEVES

1. Clean and inspect the flexible disk and flange. Replace any worn or damaged parts.
2. Install the new fitted sleeve or sleeves. Tighten the bolts and nuts to 40 N·m (30 ft. lbs.).
3. Lower the vehicle.

REAR DIFFERENTIAL

TABLE OF CONTENTS

page

REAR DIFFERENTIAL
DESCRIPTION 37
OPERATION 37
DIAGNOSIS AND TESTING 37
STANDARD PROCEDURE - DRAIN AND REFILL 40
SPECIFICATIONS - TORQUE 40
SPECIAL TOOLS 41
REAR DIFFERENTIAL HOUSING
REMOVAL 41
INSTALLATION 42
PINION FLANGE SEAL
REMOVAL 43
INSTALLATION 45
DIFFERENTIAL CONNECTING FLANGE SEAL
REMOVAL 46
INSTALLATION 47

REAR DIFFERENTIAL

DESCRIPTION

The rear axle is equipped with a 3.27:1 ratio for the optimum combination of performance and economy.

OPERATION

The axle receives power from the transmission through the propeller shaft. The propeller shaft is connected to the pinion gear which rotates the differential through the gear mesh with the ring gear bolted to the differential case. The engine power is transmitted to the axle shafts through the pinion mate and side gears. The side gears are splined to the axle shafts.

DIAGNOSIS AND TESTING

GEAR NOISE

Axle gear noise can be caused by insufficient lubricant, incorrect backlash, incorrect pinion depth, tooth contact, worn/damaged gears, or the carrier housing not having the proper offset and squareness.

Gear noise usually happens at a specific speed range. The noise can also occur during a specific type of driving condition. These conditions are acceleration, deceleration, coast, or constant load.

When road testing, first warm-up the axle fluid by driving the vehicle at least 5 miles and then accelerate the vehicle to the speed range where the noise is the greatest. Shift out-of-gear and coast through the peak-noise range. If the noise stops or changes greatly:

- Check for insufficient lubricant.
- Incorrect ring gear backlash.
- Gear damage.

Differential side gears and pinions can be checked by turning the vehicle. They usually do not cause noise during straight-ahead driving when the gears are unloaded. The side gears are loaded during vehicle turns. A worn pinion shaft can also cause a snapping or a knocking noise.

BEARING NOISE

The halfshafts, differential and pinion bearings can all produce noise when worn or damaged. Bearing noise can be either a whining, or a growling sound.

Pinion bearings have a constant-pitch noise. This noise changes only with vehicle speed. Pinion bearing noise will be higher pitched because it rotates at a faster rate. Drive the vehicle and load the differential. If bearing noise occurs, the rear pinion bearing is the source of the noise. If the bearing noise is heard during a coast, the front pinion bearing is the source.

Worn or damaged differential bearings usually produce a low pitch noise. Differential bearing noise is similar to pinion bearing noise. The pitch of differential bearing noise is also constant and varies only with vehicle speed.

Rear wheel hub bearings produce noise and vibration when worn or damaged. The noise generally changes when the bearings are loaded. Road test the vehicle. Turn the vehicle sharply to the left and to the right. This will load the bearings and change the noise level. Where bearing damage is slight, the noise is usually not noticeable at speeds above 30 mph.

LOW SPEED KNOCK

Low speed knock is generally caused by worn universal joints. A worn pinion shaft bore will also cause a low speed knock.

VIBRATION

Vibration at the rear of the vehicle is usually caused by a:

- Damaged propeller shaft.
- Missing propeller shaft balance weight(s).
- Worn or out-of-balance wheels.
- Loose wheel studs.
- Worn U-joint(s).
- Damaged rear wheel hub bearings.
- Loose pinion gear nut.
- Excessive pinion yoke run out.
- Damaged halfshafts.

Check for loose or damaged front-end components or engine/transmission mounts. These components can contribute to what appears to be a rear end vibration. Do not overlook engine accessories, brackets and drive belts.

All driveline components should be examined before starting any repair.

DRIVELINE SNAP

A snap or clunk noise when the vehicle is shifted into gear (or the clutch engaged), can be caused by:

- High engine idle speed.
- Transmission shift operation.
- Loose engine/transmission.
- Worn U-joints.
- Loose pinion gear nut and yoke.
- Excessive ring gear backlash.
- Excessive side gear to case clearance.
- Damaged halfshafts.

The source of a snap or a clunk noise can be determined with the assistance of a helper. Raise and support the vehicle on a hoist with the wheels free to rotate. Instruct the helper to shift the transmission into gear. Listen for the noise, a mechanics stethoscope is helpful in isolating the source of a noise.

DIAGNOSTIC CHART

CONDITION	POSSIBLE CAUSES	CORRECTION
WHEEL NOISE	1. Wheel loose.	1. Tighten loose wheel bolts.
	2. Faulty wheel hub bearing.	2. Replace bearing.
DIFFERENTIAL CRACKED	1. Improper adjustment of the differential bearings.	1. Replace differential.
	2. Excessive ring gear backlash.	2. Replace differential.
	3. Erratic clutch operation.	3. Replace differential.
DIFFERENTIAL GEARS SCORED	1. Insufficient lubrication.	1. Replace differential. Fill differential with the correct fluid type and quantity.
	2. Improper grade of lubricant.	2. Replace differential. Fill differential with the correct fluid type and quantity.
LOSS OF LUBRICANT	1. Lubricant level too high.	1. Drain lubricant to the correct level.
	2. Worn differential side seals.	2. Replace seals.
	3. Cracked differential housing.	3. Replace as necessary.
	4. Worn pinion seal.	4. Replace seal.
	5. Worn/scored yoke.	5. Replace yoke and seal.
	6. Differential cover not properly sealed.	6. Remove, clean, and reseal cover.
AXLE OVERHEATING	1. Lubricant level low.	1. Fill differential to correct level.
	2. Improper grade of lubricant.	2. Fill differential with the correct fluid type and quantity.
GEAR TEETH BROKE	1. Overloading.	1. Replace differential.
	2. Erratic clutch operation.	2. Replace differential.
	3. Ice-spotted pavement.	3. Replace differential.
	4. Improper adjustments.	4. Replace differential.
DIFFERENTIAL NOISE	1. Insufficient lubricant.	1. Fill differential with the correct fluid type and quantity.
	2. Improper ring gear and pinion adjustment.	2. Replace differential.
	3. Unmatched ring gear and pinion.	3. Replace differential.
	4. Worn teeth on ring gear and/or pinion.	4. Replace differential.
	5. Loose pinion bearings.	5. Replace differential.
	6. Loose differential bearings.	6. Replace differential.
	7. Misaligned or sprung ring gear.	7. Replace differential.

STANDARD PROCEDURE - DRAIN AND REFILL

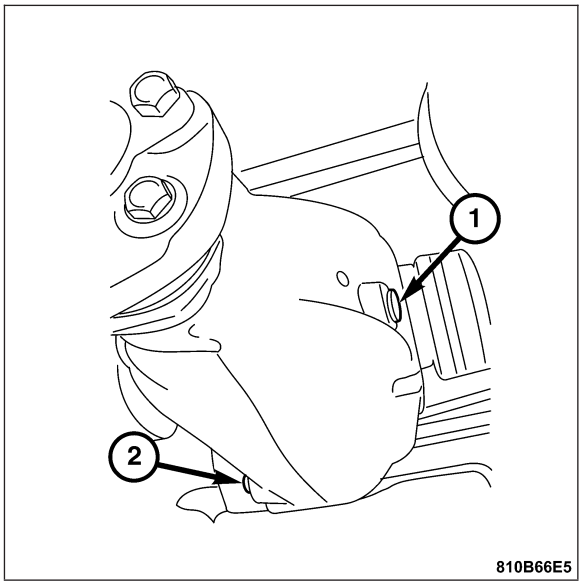

1. Drive the vehicle until the differential lubricant is at the normal operating temperature.
2. Raise and support the vehicle.
3. Remove the differential housing fill plug (1).
4. Position a drain pan under the differential housing drain.
5. Remove the differential housing drain plug (2).
6. Drain the differential housing completely.
7. Install the differential housing drain plug (2). Tighten the drain plug to 50 N·m (37 ft. lbs.).
8. Fill the rear axle to proper specifications.
9. Install the differential housing fill plug (1). Tighten the fill plug to 50 N·m (37 ft. lbs.).

SPECIFICATIONS - TORQUE

TORQUE SPECIFICATIONS

DESCRIPTION	N·m	Ft. Lbs.	In. Lbs.
Differential Housing Cover Bolts	30 + 45°	22 + 45°	—
Differential Housing Front Mounting Bolts	110	82	—
Differential Housing Rear Mounting Bolts	45	33	—
Pinion Shaft Nut	180	133	—

SPECIAL TOOLS

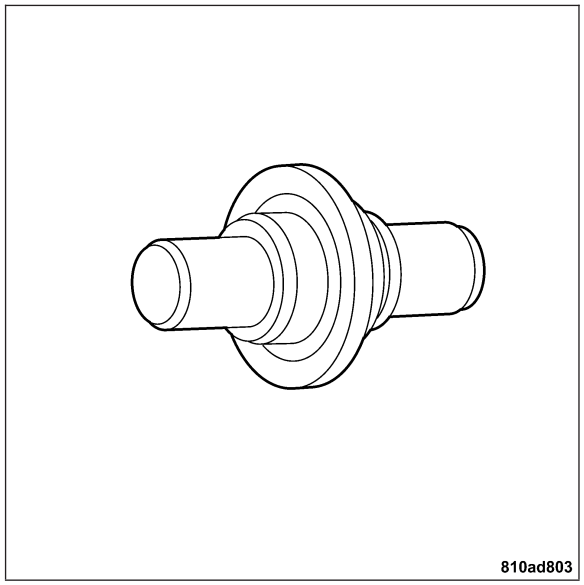

AXLE FLANGE SEAL INSTALLER 9223

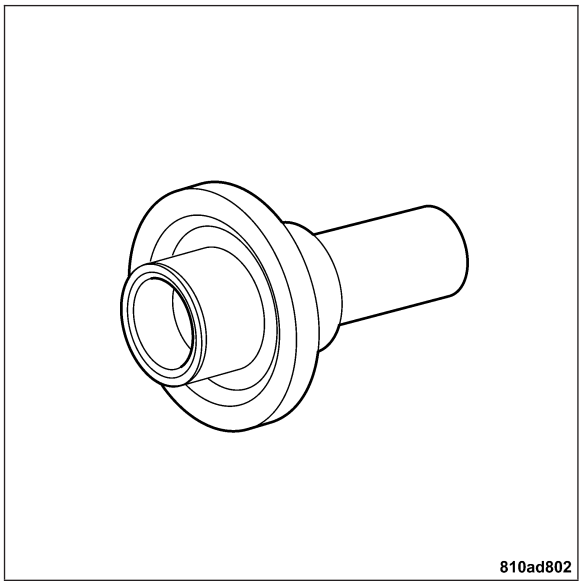

PINION SEAL INSTALLER 9231

REAR DIFFERENTIAL HOUSING

REMOVAL

1. Raise and support the vehicle.
2. Remove the propeller shaft. **Refer to Page 3-26**.
3. Drain the rear differential housing. **Refer to Page 3-40**.
4. Support the differential housing with a jack.
5. Separate the halfshafts from the differential connecting flanges and tie them to the rear differential carrier. **Refer to Page 3-4**.
6. Remove the differential housing front mounting bolt (1).

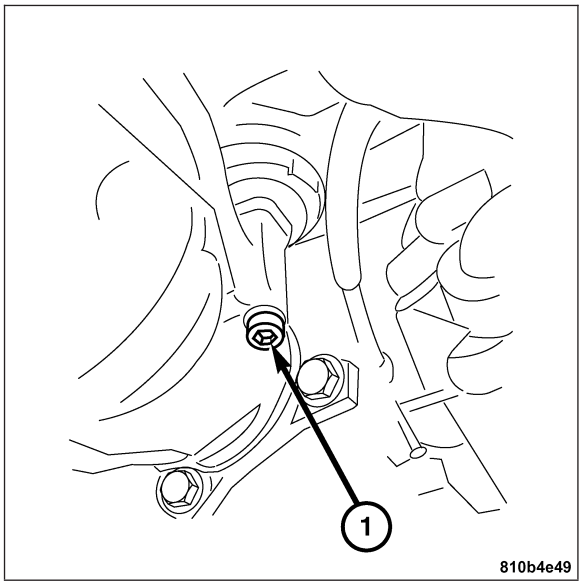

7. Remove the two differential housing rear mounting bolts (1).
8. Remove the differential housing from the vehicle.

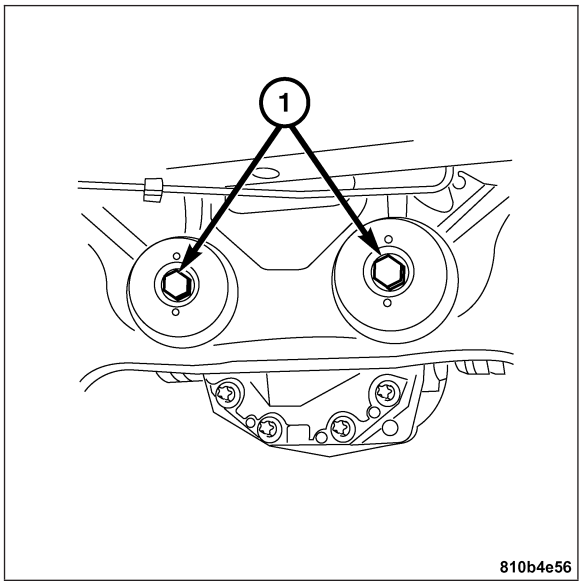

INSTALLATION

Note: Replace the self locking bolts and shims. Lightly oil the bolt at the thread and bolt head contact surfaces.

1. Position the differential housing in the vehicle and support it with a jack.
2. Install the two differential housing rear mounting bolts (1) and washers.

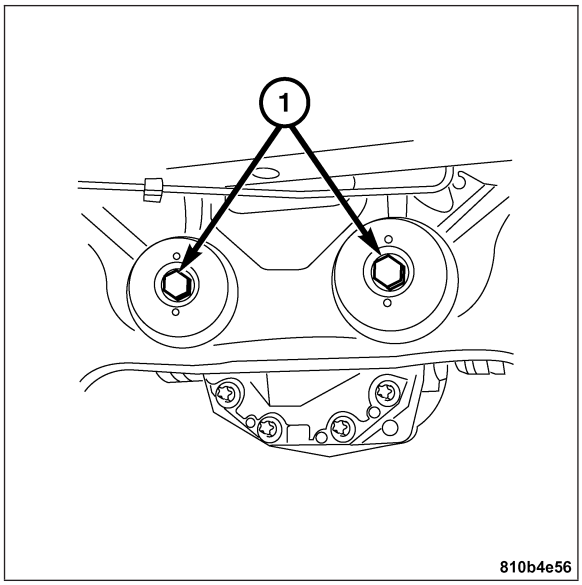

3. Install the differential housing front mounting bolt (1).
4. Tighten the differential housing rear mounting bolts to 110 N·m (82 ft. lbs.).
5. Tighten the differential housing front mounting bolt and nut to 45 N·m (33 ft. lbs.).

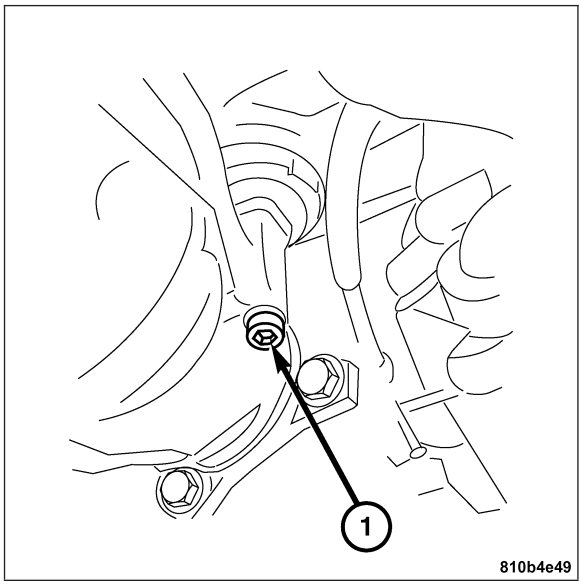

6. Connect the halfshafts to the rear differential connecting flanges. **Refer to Page 3-5**.
7. Remove the differential housing support jack.
8. Install the propeller shaft. **Refer to Page 3-28**.
9. Fill the differential housing to proper specification. **Refer to Page 3-40**.
10. Lower the vehicle.

PINION FLANGE SEAL

REMOVAL

1. Raise and support the vehicle.
2. Drain the differential housing. **Refer to Page 3-40**.
3. Remove the muffler. **Refer to Page 11-10**.
4. Disconnect the propeller shaft from the rear pinion flange and position out of way. **Refer to Page 3-26**.
5. Disconnect the halfshafts at the differential connecting flanges and position them aside. **Refer to Page 3-4**.
6. Use the torque meter (1) to measure resistance to rotation at the pinion flange. Record the amount of friction torque.

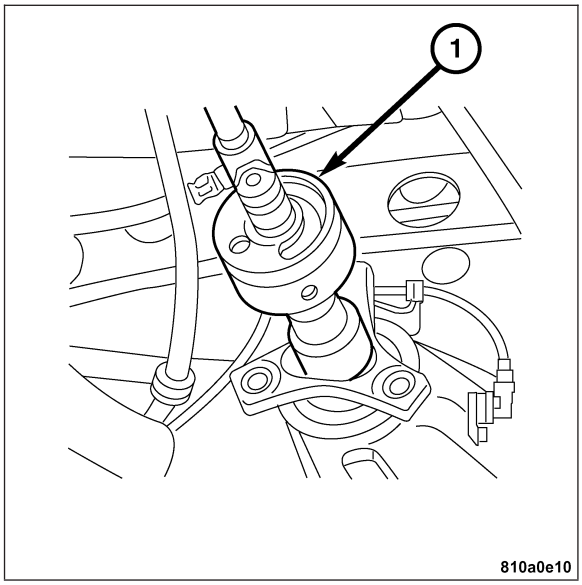

7. Using the Special Tool C-3281 Flange Wrench (2) to hold the pinion flange (1).
8. Remove and discard the collared nut.
9. Remove the pinion flange (1).

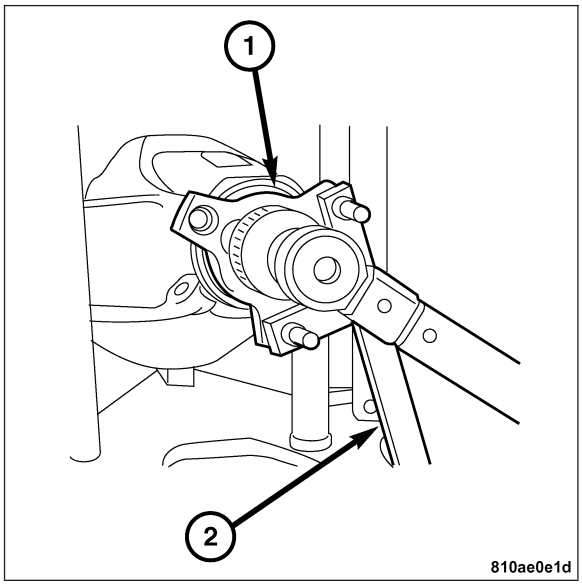

10. Remove the pinion flange seal (1) with a suitable prying tool.

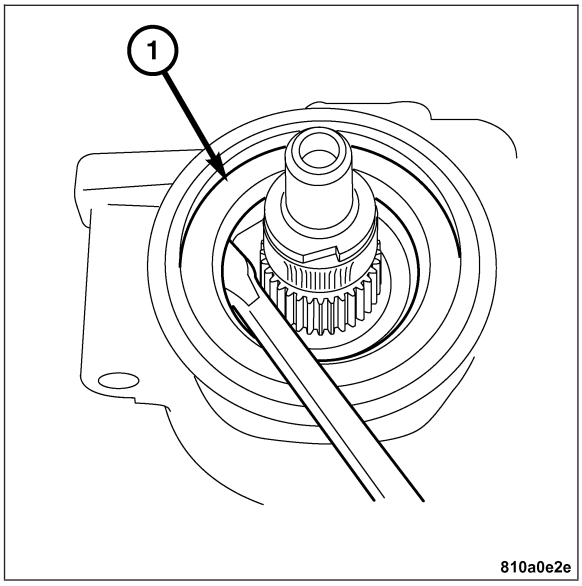

INSTALLATION

1. Remove any burrs or nicks from the seal bore.
2. Drive in a new pinion flange seal (1) using Special Tool 9231 Drift and a mallet.

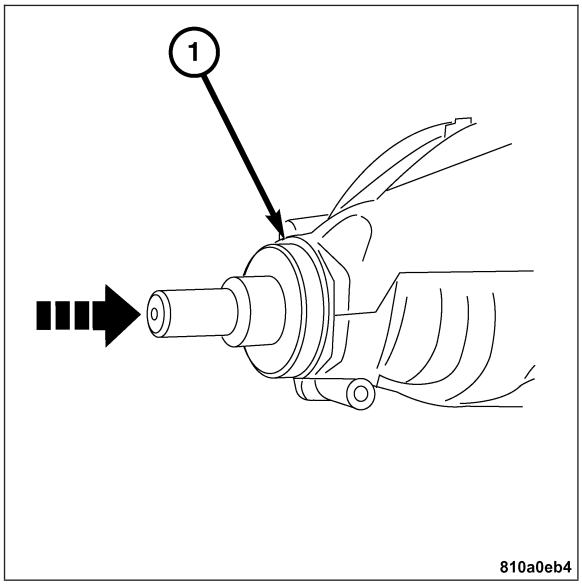

3. Install the pinion flange.
4. Install a new pinion shaft collared nut. Hold the pinion flange (1) with Special Tool C-3281 Flange Wrench (2). Tighten the nut to 180 N·m (133 ft. lbs.).
5. Check the resistance to rotation torque. If the resistance is less than the previously recorded value, tighten the pinion in 5 N·m (44 in. lbs.) increments until the resistance amount is reached.
6. Connect the halfshafts to the differential connecting flanges. **Refer to Page 3-5**.
7. Install the propeller shaft. **Refer to Page 3-28**.
8. Install the muffler. **Refer to Page 11-12**.
9. Fill the differential housing to specification. **Refer to Page 3-40**.
10. Lower the vehicle.

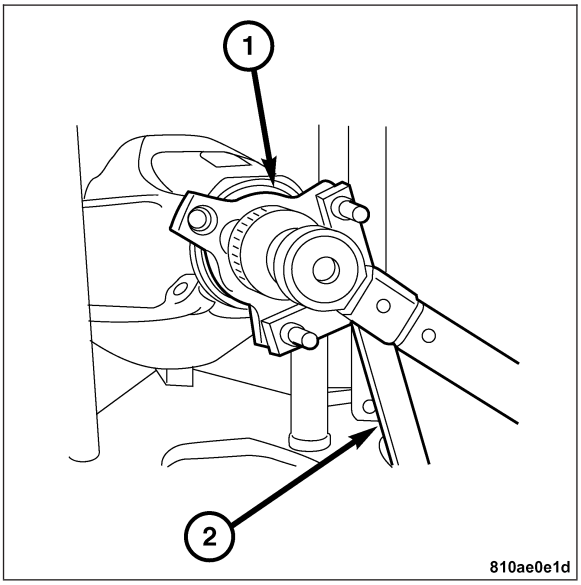

DIFFERENTIAL CONNECTING FLANGE SEAL

REMOVAL

1. Remove the differential housing and place on a suitable work bench. **Refer to Page 3-41**.

Note: If a replacement end cover is fitted, be sure to check whether or not the sealing surface is machined. Use appropriate sealant. Install end cover.

2. Remove the differential housing cover bolts (1) and the cover.

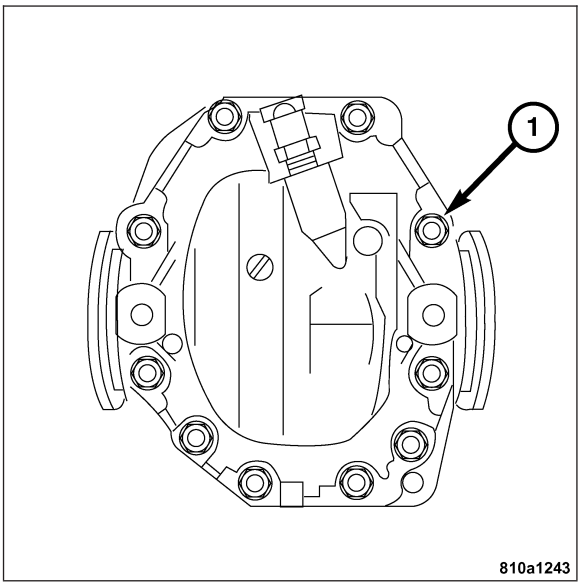

3. Remove the differential connecting flange locking ring (1).
4. Remove the differential connecting flange from the differential housing assembly.
5. Inspect the differential connecting flange for galling or grooving. Replace the differential connecting flange if there are signs of wear.

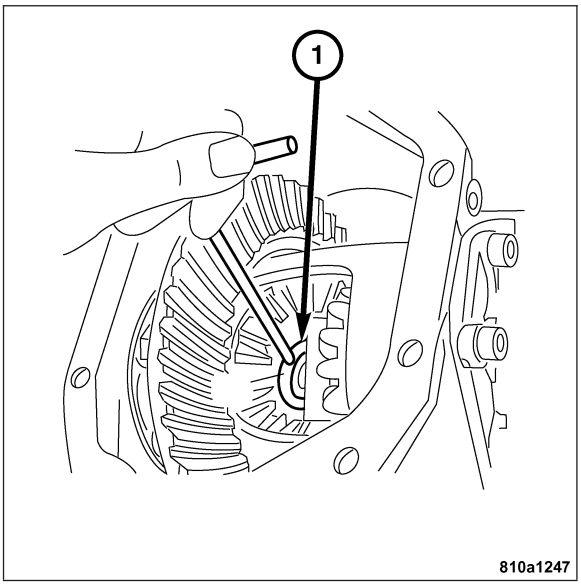

CAUTION: Do not scrape or damage the surface of the seal bore.

6. Remove the differential connecting flange oil seal (1) with a suitable prying tool.

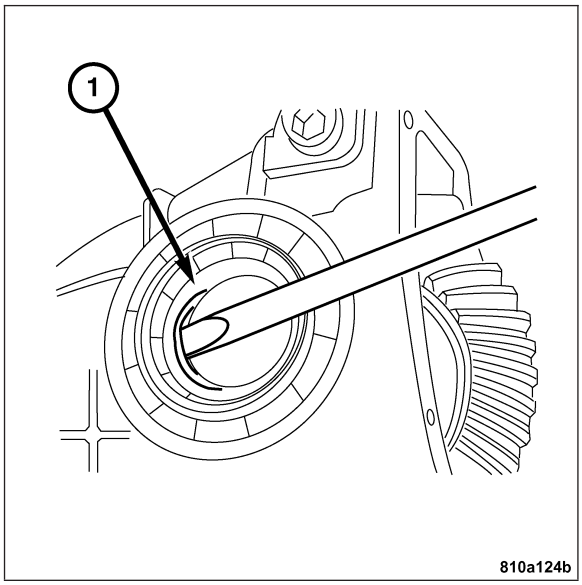

INSTALLATION

1. Using the Special Tool 9223 Drift (1), drive the new differential connecting flange oil seal (2) into the differential housing.
2. Lubricate the seal with hypoid gear oil.

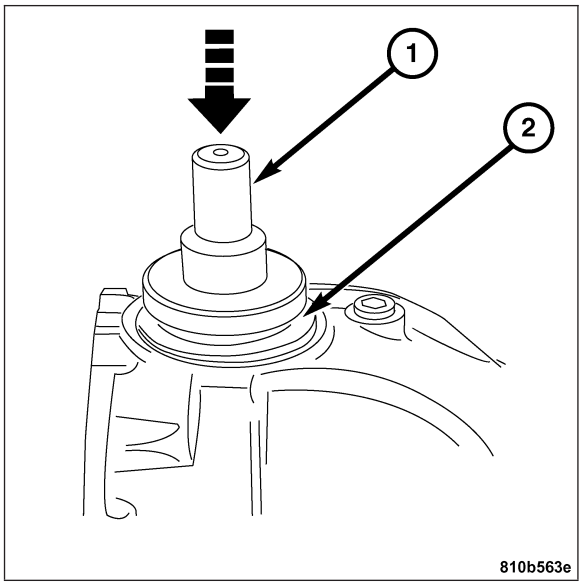

3. Inspect the differential connecting flange sealing surface (1) and dust shield (2). Install the differential connecting flange to the differential housing assembly.

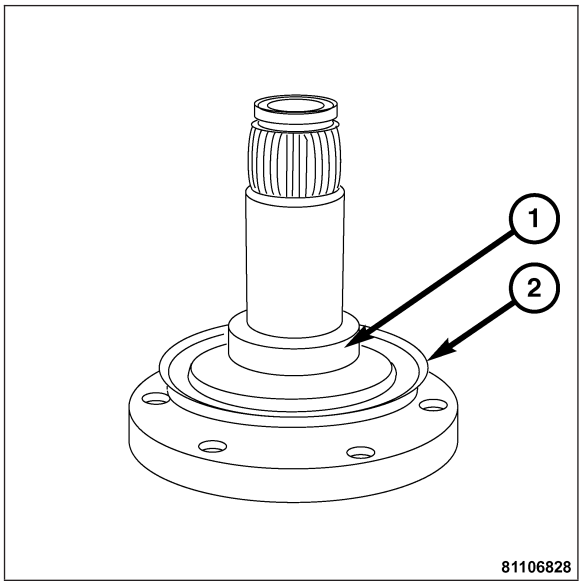

4. Install the differential connecting flange locking ring (1). Check for proper fit.
5. Check axial end play between the differential connecting flange and the differential housing. (.03 mm to .3 mm).

Note: If a replacement cover is fitted, be sure to check whether or not the sealing surface is machined. Use appropriate sealant. Install end cover.

6. Apply a 1.5 mm to 2.0 mm bead of Hylomar sealant to the differential housing cover sealing surface.

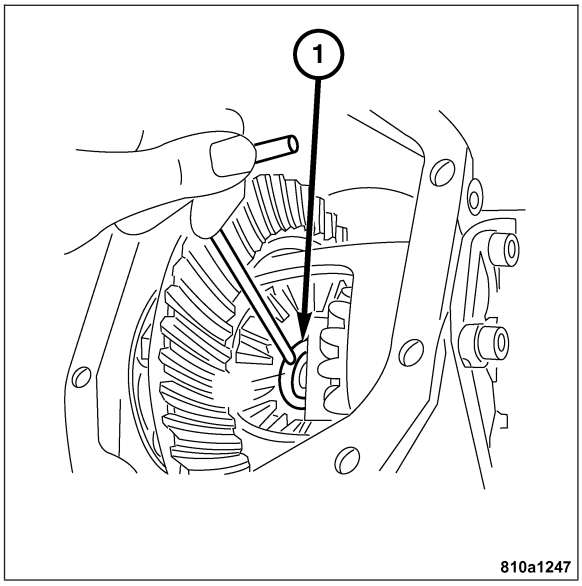

7. Install the differential housing cover.
8. Install the differential housing cover bolts (1). Tighten the bolts to 30 N·m (22 ft. lbs.) plus 45°.
9. Install the differential. **Refer to Page 3-42**.
10. Lower the vehicle.

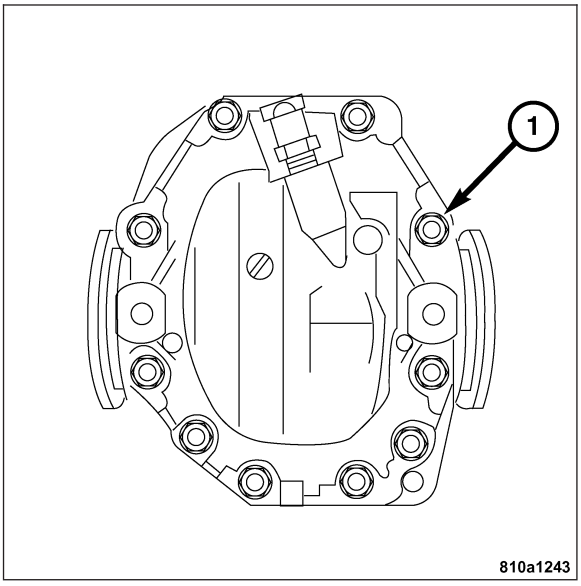

BRAKES

TABLE OF CONTENTS

page

BRAKES - BASE 1
BRAKES - ABS ELECTRICAL DIAGNOSTICS 79

page

BRAKES - ABS SERVICE INFORMATION 187

BRAKES - BASE

TABLE OF CONTENTS

page

BRAKES - BASE
DESCRIPTION 3
WARNING 4
DIAGNOSIS AND TESTING
BASE BRAKE SYSTEM 5
STANDARD PROCEDURE
MANUAL BLEEDING 9
STANDARD PROCEDURE - PRESSURE BLEEDING 9
SPECIFICATIONS
BRAKE COMPONENTS 10
BRAKE LINES
DESCRIPTION 10
DIAGNOSIS AND TESTING
BRAKE HOSES AND LINES 10
STANDARD PROCEDURE
DOUBLE INVERTED FLARING 11
STANDARD PROCEDURE - ISO FLARING . . 11
REMOVAL
FRONT BRAKE HOSE 12
REAR BRAKE HOSE 13
INSTALLATION
FRONT BRAKE HOSE 14
INSTALLATION - REAR BRAKE HOSE 16
BRAKE PADS/SHOES
REMOVAL
FRONT DISC BRAKE PADS 17
REMOVAL - REAR DISC BRAKE PADS 19
INSTALLATION
FRONT DISC BRAKE PADS 20
INSTALLATION - REAR DISC BRAKE PADS . 23
DISC BRAKE CALIPERS
DESCRIPTION 24
OPERATION 24

page

REMOVAL
FRONT DISC BRAKE CALIPER 25
REMOVAL - REAR BRAKE CALIPER 28
DISASSEMBLY - FRONT DISC BRAKE CALIPER 29
CLEANING - DISC BRAKE CALIPER 30
INSPECTION - DISC BRAKE CALIPER 30
ASSEMBLY - FRONT DISC BRAKE CALIPER . . 31
INSTALLATION
FRONT DISC BRAKE CALIPER 32
INSTALLATION - REAR DISC BRAKE CALIPER 35
ROTORS
DIAGNOSIS AND TESTING
DISC BRAKE ROTORS 36
STANDARD PROCEDURE
DISC BRAKE ROTOR MACHINING 38
REMOVAL
FRONT DISC BRAKE ROTOR 38
REMOVAL - REAR DISC BRAKE ROTOR . . . 39
INSTALLATION
FRONT DISC BRAKE ROTOR 40
INSTALLATION - REAR DISC BRAKE ROTOR 42
FLUID
DIAGNOSIS AND TESTING
BRAKE FLUID CONTAMINATION 42
STANDARD PROCEDURE
MASTER CYLINDER FLUID LEVEL 43
SPECIFICATIONS
BRAKE FLUID 43
MASTER CYLINDER
DESCRIPTION
MASTER CYLINDER 44

OPERATION
MASTER CYLINDER 44
DIAGNOSIS AND TESTING
MASTER CYLINDER/POWER BOOSTER 44
DIAGNOSIS AND TESTING - MASTER CYLINDER FLUID LOSS 45
STANDARD PROCEDURE
MASTER CYLINDER BLEEDING PROCEDURE. 46
REMOVAL 46
INSTALLATION 47
POWER BRAKE BOOSTER
DESCRIPTION 48
OPERATION 49
REMOVAL 50
INSTALLATION 51
PEDAL
DESCRIPTION 53
OPERATION 53
REMOVAL 54
INSTALLATION 55
PARKING BRAKE
OPERATION 57
DIAGNOSIS AND TESTING
PARKING BRAKE 58
ADJUSTMENTS
ADJUSTMENT 59
CABLES
REMOVAL 61
INSTALLATION 64
LEVER
REMOVAL 66
INSTALLATION 68
SHOES
REMOVAL 70
INSTALLATION 73
BRAKE FLUID LEVEL SENSOR
REMOVAL 75
INSTALLATION 75
BRAKE PRESSURE SENSOR
REMOVAL 76
INSTALLATION 77
TRAVEL SENSOR
REMOVAL 78
INSTALLATION 78

BRAKES - BASE

DESCRIPTION

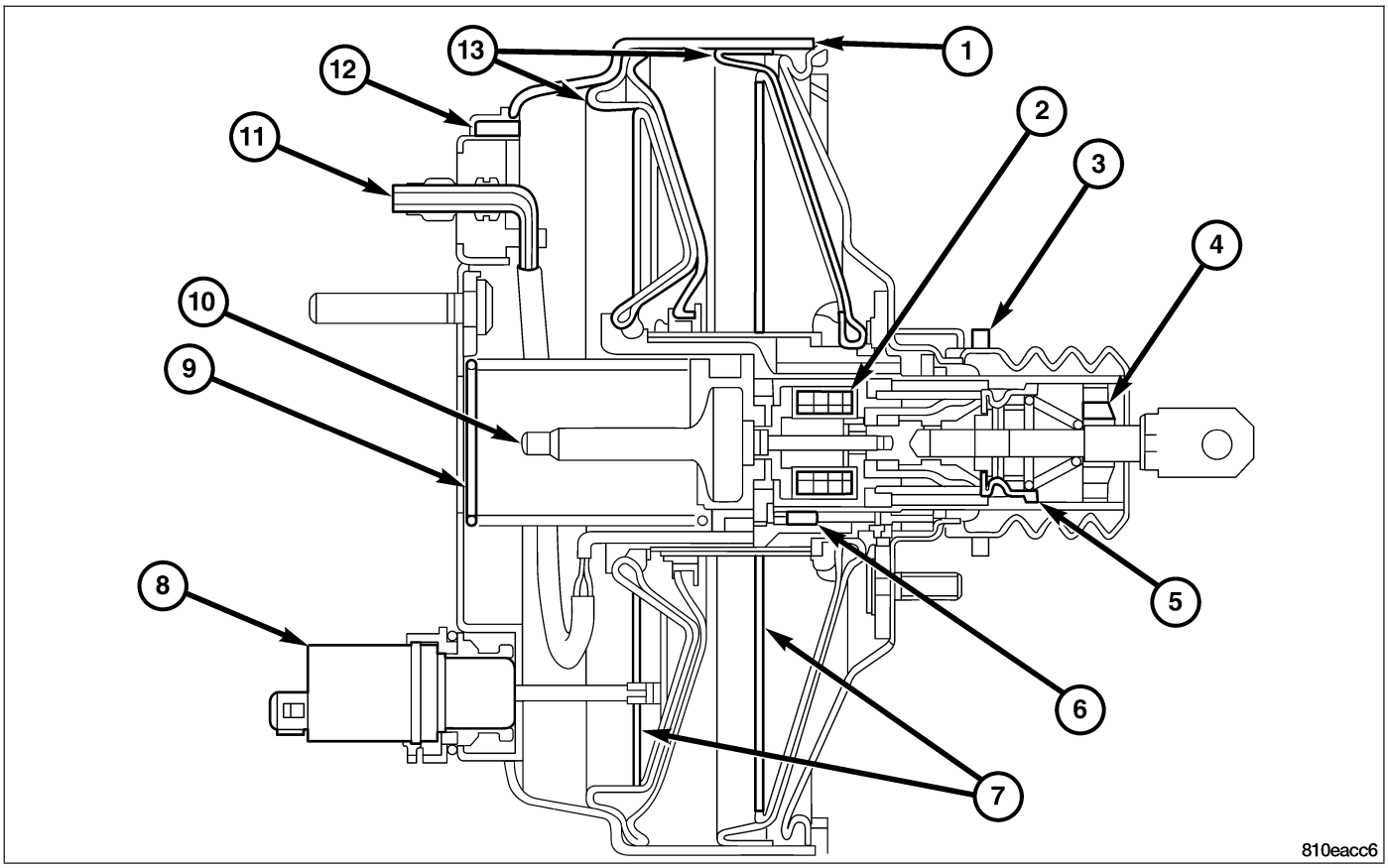

1 - BAS BRAKE BOOSTER
2 - BAS SOLENOID VALVE
3 - AIR FILTER
4 - AIR FILTER
5 - POPPET VALVE
6 - BAS RELEASE SWITCH
7 - VACUUM PISTON
8 - BAS DIAPHRAGM TRAVEL SENSOR
9 - COMPRESSION SPRING
10 - OUTPUT ROD
11 - CABLE CONNECTOR FOR RELEASE SWITCH AND SOLENOID VALVE
12 - VACUUM CONNECTION
13 - POWER DIAPHRAGM

Power brake assist is supplied by a vacuum operated, power brake booster.

Single piston brake calipers (3) are used on the front and on the rear. Ventilated disc brake rotors (2) are used on the front and solid disc brake rotors are used on the rear.

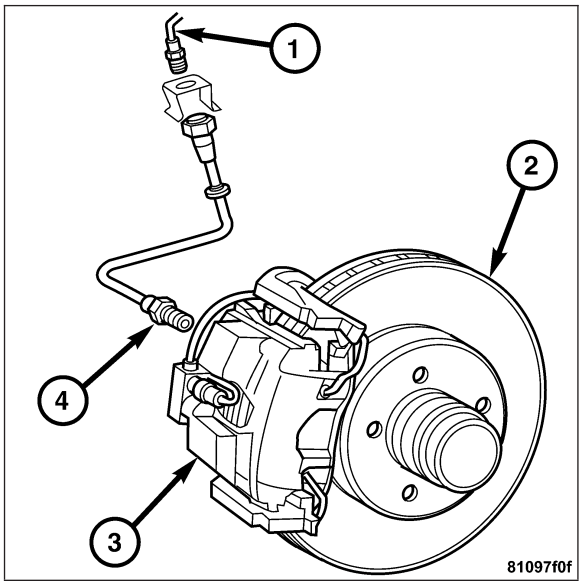

The master cylinder is used for all applications. The master cylinder has an aluminum body and a nylon reservoir with a single filler cap. A fluid level indicator (2) is molded into the top of the reservoir. The fill levels (1) are located on the side.

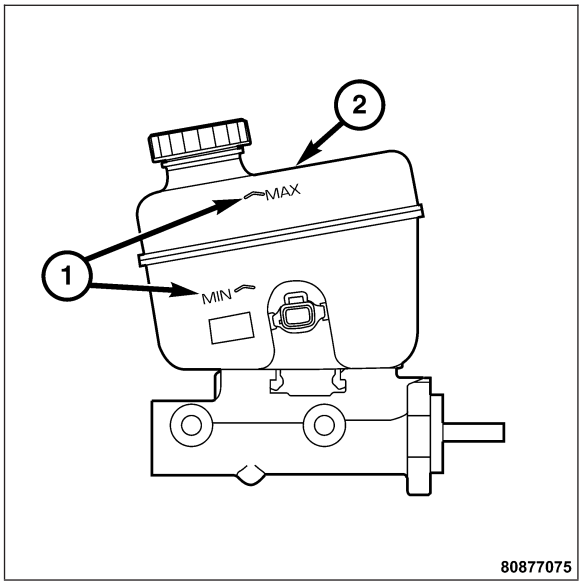

Factory installed brake linings consist of organic base material combined with metallic particles.

WARNING

WARNING: DUST AND DIRT ACCUMULATING ON BRAKE PARTS DURING NORMAL USE MAY CONTAIN ASBESTOS FIBERS FROM AFTERMARKET LININGS. BREATHING EXCESSIVE CONCENTRATIONS OF ASBESTOS FIBERS CAN CAUSE SERIOUS BODILY HARM. EXERCISE CARE WHEN SERVICING BRAKE PARTS. DO NOT CLEAN BRAKE PARTS WITH COMPRESSED AIR OR BY DRY BRUSHING. USE A VACUUM CLEANER SPECIFICALLY DESIGNED FOR THE REMOVAL OF ASBESTOS FIBERS FROM BRAKE COMPONENTS. IF A SUITABLE VACUUM CLEANER IS NOT AVAILABLE, CLEANING SHOULD BE DONE WITH A WATER DAMPENED CLOTH. DO NOT SAND, OR GRIND BRAKE LINING UNLESS EQUIPMENT USED IS DESIGNED TO CONTAIN THE DUST RESIDUE. DISPOSE OF ALL RESIDUE CONTAINING ASBESTOS FIBERS IN SEALED BAGS OR CONTAINERS TO MINIMIZE EXPOSURE TO YOURSELF AND OTHERS. FOLLOW PRACTICES PRESCRIBED BY THE OCCUPATIONAL SAFETY AND HEALTH ADMINISTRATION AND THE ENVIRONMENTAL PROTECTION AGENCY FOR THE HANDLING, PROCESSING, AND DISPOSITION OF DUST OR DEBRIS THAT MAY CONTAIN ASBESTOS FIBERS.

CAUTION: Never use gasoline, kerosene, alcohol, motor oil, transmission fluid, or any fluid containing mineral oil to clean the system components. These fluids damage rubber cups and seals. Use only fresh brake fluid or Mopar brake cleaner to clean or flush brake system components. These are the only cleaning materials recommended. If system contamination is suspected, check the fluid for dirt, discoloration, or separation into distinct layers. Also check the reservoir cap seal for distortion. Drain and flush the system with new brake fluid if contamination is suspected.

CAUTION: Use Mopar brake fluid, or an equivalent quality fluid meeting SAE/DOT standards J1703 and DOT 4. Brake fluid must be clean and free of contaminants. Use fresh fluid from sealed containers only to ensure proper antilock component operation.

CAUTION: Use Mopar multi-mileage or high temperature grease to lubricate caliper slide surfaces, drum brake pivot pins, and shoe contact points on the backing plates. Use multi-mileage grease or GE 661 or Dow 111 silicone grease on caliper slide pins to ensure proper operation.

DIAGNOSIS AND TESTING

BASE BRAKE SYSTEM

The base brake system components consist of front and rear brake pads and calipers. Rear park brake drums and shoes which are internal to the rear rotor. Front and rear brake rotors and brake lines. The master cylinder, booster and the HCU.

Brake diagnosis involves determining if the concern is related to a mechanical, hydraulic, electrical or vacuum operated component.

The first diagnosis step is the preliminary check.

PRELIMINARY BRAKE CHECK

(1) Check the condition of the tires and wheels. Damaged wheels and worn, damaged or under inflated tires can cause a pull, shudder, vibration and a condition similar to grab.

(2) If a complaint was based on noise while braking, check the suspension components. Jounce the front and the rear of vehicle and listen for anything that might be caused by a loose, worn or damaged suspension or steering component.

(3) Inspect the brake fluid level and condition. Note that the brake reservoir fluid level will decrease in proportion to normal lining wear. **ALSO NOTE THAT BRAKE FLUID TENDS TO DARKEN OVER TIME. THIS IS NORMAL AND SHOULD NOT BE MISTAKEN FOR CONTAMINATION**.

(a) If the fluid level is abnormally low, look for any evidence of leaks at the calipers, brake lines, master cylinder and at the HCU.

(b) If the fluid appears to be contaminated, drain out a sample to examine. The system will have to be flushed if the fluid is separated into layers , or contains a substance other than brake fluid. The system seals, cups, hoses, master cylinder and HCU will also have to be replaced after flushing. Use clean brake fluid to flush the system.

(4) Check the parking brake operation. Verify free movement and full release of the cables and the lever. Also note if the vehicle was being operated with parking brake partially applied.

(5) Check the brake pedal operation. Verify that pedal does not bind and has adequate free play. If the pedal lacks free play, check the pedal and the power booster for being loose or for a bind condition. **DO NOT** road test the vehicle until the condition is located and corrected.

(6) Check the boosters vacuum check valve and hose.

(7) If the components checked appear to be OK, road test the vehicle.

ROAD TESTING

(1) If the complaint involved a low brake pedal, pump the pedal and note if it comes back up to the normal height.

(2) Check the brake pedal response with the transmission in neutral and the engine running. The pedal should remain firm under constant foot pressure.

(3) During the road test, make normal and firm brake stops in the 25-40 m.p.h. range. Note any faulty brake operation such as: low pedal, hard pedal, fade, pedal pulsation, pull, grab, drag, noise, etc.

(4) Attempt to stop the vehicle with the parking brake only. **DO NOT exceed 25 m.p.h.** Note any grab, drag, noise, etc.

PEDAL FALLS AWAY

A brake pedal that falls away under steady foot pressure is generally the result of a system leak. The leak point could be a brake line, fitting hose or caliper. If the leaking is severe, fluid will be evident at or around the leaking component.

Internal leakage (seal by-pass) in the master cylinder is caused by worn or damaged piston cups, may also be the concern.

An internal leaking ABS system may also be the problem with no visual leak.

LOW PEDAL

If a low pedal is experienced, pump the pedal several times. If the pedal comes back up, the most likely causes are worn linings, rotors or calipers that are not sliding on the slide pins. The proper course of action is to inspect and replace all the worn components.

SPONGY PEDAL

A spongy pedal is most often caused by air in the system. However, substandard brake hoses can cause a spongy pedal. The proper course of action is to bleed the system, and replace the substandard quality brake hoses if suspected.

HARD PEDAL OR HIGH PEDAL EFFORT

A hard pedal or high pedal effort may be due to a pad that is water soaked, contaminated, glazed or badly worn. The power booster, check valve, check valve seal/grommet or a vacuum leak could also cause hard pedal or high pedal effort.

PEDAL PULSATION

Pedal pulsation is caused by components that are loose or beyond tolerance limits.

The primary cause of a pulsation are, disc brake rotors with excessive lateral runout or thickness variation, loose wheel bearings or calipers and worn or damaged tires.

Note: Some pedal pulsation may be felt during ABS activation.

BRAKE DRAG

Brake drag occurs when the lining is in constant contact with the rotor. Drag can occur at one wheel, all wheels, fronts only or rears only.

Drag is a product of an incomplete brake release. Drag can be minor or severe enough to overheat the linings, rotors and park brake drums.

A minor drag will usually cause slight surface charring of the lining. It can also generate hard spots in the rotors and the park brake drums from the overheat-cool down process. In most cases, the rotors, wheels and tires are quite warm to the touch after the vehicle is stopped.

A severe drag can char the brake linings all the way through. It can also distort and score the rotors to the point of replacement. The wheels, tires and brake components will be extremely hot. In severe cases, the linings may generate smoke as it chars from over-heating.

Common causes of brake drag are:

- Parking Brake partially applied
- Loose/warn wheel bearings

- Seized caliper
- Caliper binding
- Loose caliper mounting
- Mis-assembled components
- Damaged brake lines

If the brake drag occurs at the front, rear or at all wheels, the problem may be related to a blocked master cylinder return port, faulty power booster (binds does not release) or the ABS system.

BRAKE FADE

Brake fade is usually a product of overheating caused by brake drag. However, brake overheating and resulting fade can also be caused by riding the brake pedal, making repeated high deceleration stops in a short time span, or constant braking on steep mountain roads. Refer to the Brake Drag information in this section for causes.

BRAKE PULL

A front brake pull condition could result from:

- Contaminated lining in one caliper
- Seized caliper piston
- Binding caliper
- Loose caliper
- Rusty caliper slide surfaces
- Improper brake pads
- Damaged rotor
- Wheel alignment
- Tire pressure

A worn, damaged wheel bearing or suspension component are further cases of pull. A damaged front tire (bruised, ply separation) can also cause a pull.

A common and frequently misdiagnosed pull condition is where direction of pull changes after a few stops. The cause is a combination of brake drag followed by fade at one of the brake units.

As the dragging brake overheats, efficiency is so reduced that fade occurs. Since the opposite brake units are still functioning normally, its braking effect is magnified. This causes the pull to switch direction in favor of the normally functioning brake unit.

An additional point when diagnosing a change in pull condition concerns brake cool down. Remember that the pull will return to the original direction, if the dragging brake unit is allowed to cool down (and is not seriously damaged).

REAR BRAKE DRAG OR PULL

Rear drag or pull may be caused by an improperly adjusted park brake shoe or a seized parking brake shoe or a seized parking brake cable, contaminated lining, bent or binding shoes or improperly assembled components. This is particularly true when only one wheel is involved. However, when both rear wheels are effected, the master cylinder or ABS system could be at fault.

BRAKES DO NOT HOLD AFTER DRIVING THROUGH DEEP WATER PUDDLES

This condition is generally caused by water soaked brake linings. If the lining is only wet, it can be dried by driving with the brakes lightly applied for a mile or two. However, if the lining is both soaked and dirt contaminated, cleaning and or replacement of the pad will be necessary.

BRAKE LINING CONTAMINATION

Brake lining contamination is mostly a product of leaking calipers or worn seals, driving through deep water puddles, or a lining that has become covered with grease or grit during repair. A contaminated lining should be replaced to avoid further brake concerns.

WHEEL AND TIRE PROBLEMS

Some conditions attributed to brake components may actually be caused by a wheel or tire concern.

A damaged wheel can cause a shudder, vibration and a pull. A worn or damaged tire can also cause pull.

Note: Propshaft angle can also cause vibration/shudder.

Severely worn tires with very little tread left can produce a grab-like condition as the tire loses and recovers traction. Flat spotted tires can cause vibration and generate shudder during brake operation. Tire damage such as a severe bruise, cut, ply separation, low air pressure can cause pull and vibration.

BRAKE NOISES

Some brake noise is common on some disc brakes during the first few stops after a vehicle has been parked overnight or stored. This is primarily due to the formation of trace corrosion (light rust) on metal surfaces. This light corrosion is typically cleared from the metal surfaces after a few brake applications causing the noise to subside.

BRAKE SQUEAK/SQUEAL

Brake squeak or squeal may be due to linings that are wet or contaminated with brake fluid, grease or oil. Glazed linings and rotors can also contribute to squeak, Dirt or foreign material embedded in the brake lining will also cause brake squeal.

A very loud squeak or squeal is frequently a sign of severely worn brake lining. If the lining has worn through the brake shoes in spots, metal-to-metal contact occurs. If the condition is allowed to continue, rotors may become so scored that replacement is necessary.

BRAKE CHATTER

Brake chatter is usually caused by loose or worn components, or glazed/burnt linings. Rotors with hard spots can also contribute to chatter. Additional causes of chatter are out-of-tolerance rotors, brake linings not securely attached to the shoes, loose wheel bearings and contaminated brake linings.

THUMP/CLUNK NOISE

Thumping or clunk noises during braking are frequently NOT caused by brake components. In many cases, such noises are caused by loose or damaged steering, suspension or engine components.

STANDARD PROCEDURE

MANUAL BLEEDING

CAUTION: Do not get brake fluid on any painted surface. Brake fluid can damage paint.

Use Mopar® brake fluid, or an equivalent quality fluid meeting SAE J1703–F and DOT 3 standards only. Use fresh, clean fluid from a sealed container at all times.

DO NOT pump brake pedal at any time while bleeding. Air in the system will be compressed into small bubbles that are distributed throughout the hydraulic system. This will make additional bleeding operations necessary.

DO NOT allow the master cylinder to run out of fluid during bleeding operations. An empty cylinder will allow additional air to be drawn into the system. Check the cylinder fluid level frequently and add fluid as needed.

Bleed only one brake component at a time in the following sequence:

1. Fill the master cylinder reservoir with brake fluid.
2. If calipers are overhauled, open the caliper bleed screws. Then close each bleed screw as fluid starts to drip from it. Top off master cylinder reservoir once more before proceeding.
3. Attach one end of the bleed hose (1) to the bleed screw and insert the opposite end in a glass container (2) partially filled with brake fluid. Be sure the end of the bleed hose is immersed in the brake fluid.
4. Open up the bleeder screw, then have a helper press down on the brake pedal. Once the pedal is down, close the bleeder screw. Repeat bleeding until fluid stream is clear and free of bubbles. Then move to the next wheel.

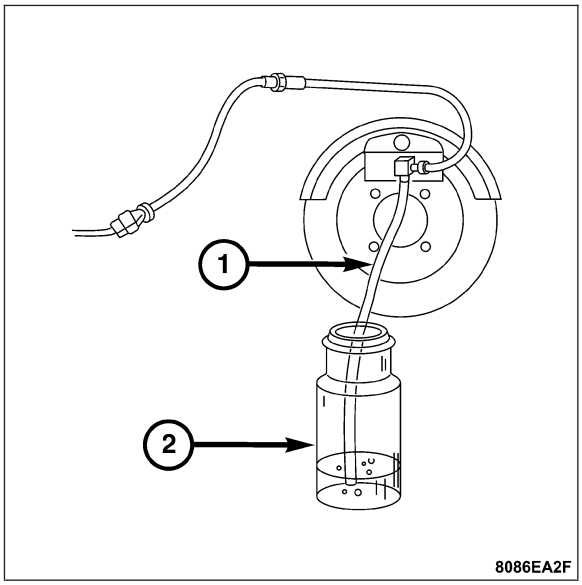

STANDARD PROCEDURE - PRESSURE BLEEDING

CAUTION: Do not get brake fluid on any painted surface. Brake fluid can damage paint.

Use Mopar® brake fluid, or an equivalent quality fluid meeting SAE J1703-F and DOT 4 standards only. Use fresh, clean fluid from a sealed container at all times.

DO NOT pump the brake pedal at any time while bleeding. Air in the system will be compressed into small bubbles that are distributed throughout the hydraulic system. This will make additional bleeding operations necessary.

DO NOT allow the master cylinder to run out of fluid during bleeding operations. An empty cylinder will allow additional air to be drawn into the system. Check the cylinder fluid level frequently and add fluid as needed.

Follow the manufactures instructions carefully when using pressure equipment. **DO NOT** exceed the tank manufactures pressure recommendations. Generally, a tank pressure of 51-67 kPa (15-20 psi) is sufficient for bleeding.

Fill the bleeder tank with recommended brake fluid and purge air from the tank lines before bleeding.

DO NOT pressure bleed without a proper master cylinder adapter. The wrong adapter can lead to leakage, or drawing air back into the system. Use an adapter provided with the equipment.

SPECIFICATIONS

BRAKE COMPONENTS

SPECIFICATIONS

DESCRIPTION	SPECIFICATION
Front Disc Brake Type	Floating
Front Disc Brake Caliper Piston	Single
Front Disc Brake Rotor Type	Ventilated
Front Disc Brake Rotor Diameter	300mm
Front Disc Brake Rotor Max. Thickness Variation	28mm
Rear Disc Brake Caliper Type	Fixed
Rear Disc Brake Rotor Type Diameter	Solid
Rear Disc Brake Rotor Max. Thickness Variation	9mm
Rear Disc Brake Rotor Min. Thickness	7.6mm

TORQUE SPECIFICATIONS

DESCRIPTION	N·m	Ft. Lbs.	In. Lbs.
Brake Booster Mouting Nuts	20	15	177
Front Caliper Anchor Bolts	115	85	1020
Front Caliper Bleed Screw	7	5	62
Front Caliper Slide Pins	25	18	221
Master Cylinder Mounting Nuts	20	15	177
Master Cylinder Primary Brake Line	14	10	124
Master Cylinder Secondary Brake Line	14	10	124
Rear Caliper Anchor Bolts	55	41	487
Rear Caliper Bleed Screw	7	5	62

BRAKE LINES

DESCRIPTION

A flexible rubber hose is used at both front and rear brakes. Double walled steel tubing is used to connect the master cylinder to the major hydraulic braking components and then to the flexible rubber hoses. Double inverted style and ISO style flares are used on the brake lines.

DIAGNOSIS AND TESTING

BRAKE HOSES AND LINES

A flexible rubber hose is used at both front brakes and rear brakes. Inspect the hoses whenever the brake system is serviced, at every engine oil change, or whenever the vehicle is in for service.

Inspect the hoses for surface cracking, scuffing, or worn spots. Replace any brake hose immediately if the fabric casing of the hose is exposed due to cracks or abrasions.

Also check brake hose installation. Faulty installation can result in kinked, twisted hoses, or contact with the wheels and tires or other chassis components. All of these conditions can lead to scuffing, cracking and eventual failure.

The steel brake lines should be inspected periodically for evidence of corrosion, twists, kinks, leaks, or other damage. Heavily corroded lines will eventually rust through causing leaks. In any case, corroded or damaged brake lines should be replaced.

Factory replacement brake lines and hoses are recommended to ensure proper quality and correct length. Care should be taken to make sure that brake line and hose mating surfaces are clean and free from nicks and burrs. Also remember that right and left brake hoses are not interchangeable.

STANDARD PROCEDURE

DOUBLE INVERTED FLARING

A pre-formed metal tube is recommended and preferred for all repairs. However, double-wall steel tube can be used for emergency repair when factory replacement parts are not readily available.

Special bending tools are needed to avoid kinking or twisting of metal brake tubes. Special flaring tools are needed to make double inverted flares or ISO flares.

1. Cut off damaged tube with a Tubing Cutter.
2. Ream the cut edges of the tubing to ensure a proper flare.
3. Install the replacement tube nut on the tube.
4. Insert the tube in the flaring tool.
5. Place the gauge form over the end of the tube.
6. Push the flaring tool through the flaring tool jaws until the tube contacts the recessed notch in the gauge that matches the tube diameter.
7. Tighten the tool bar on the tool.
8. Insert the plug on the gauge in the tube. Then swing the compression disc over the gauge and center the tapered flaring screw in the recess of the compression disc.
9. Tighten the tool handle until the plug gauge is squarely seated on the jaws of the flaring tool. This will start the inverted flare.
10. Remove the plug gauge and complete the inverted flare.

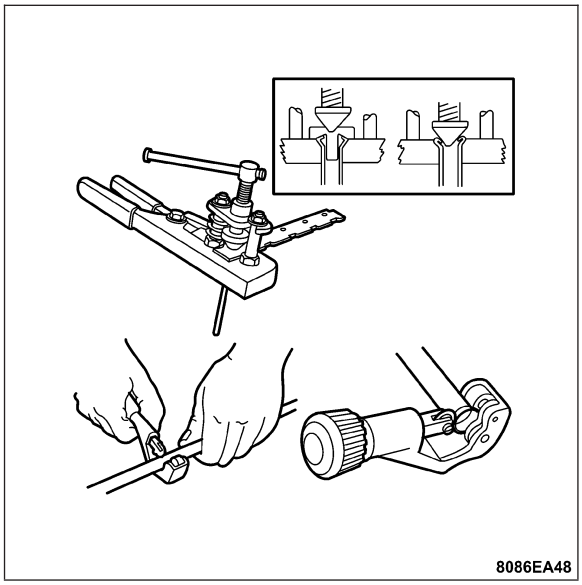

STANDARD PROCEDURE - ISO FLARING

A pre-formed metal tube is recommended and preferred for all repairs. However, double-wall steel tube can be used for emergency repair when factory replacement parts are not readily available.

Special bending tools are needed to avoid kinking or twisting of metal brake tubes. Special flaring tools are needed to make double inverted flares or ISO flares.

To make an ISO flare use Snap-On® Flaring Tool TFM-428 or equivalent.

1. Cut off the damaged tube with a tubing cutter.
2. Remove any burrs from the inside of the tube.
3. Install the tube nut onto the tube.
4. Position the tube in the flaring tool flush with the top of the tool bar. Then tighten the tool bar on the tube.
5. Install the correct size adapter on the flaring tool yoke screw.
6. Lubricate the adapter.
7. Align the adapter and the yoke screw over the tube.
8. Turn the yoke screw in until the adapter is squarely seated on the tool bar.

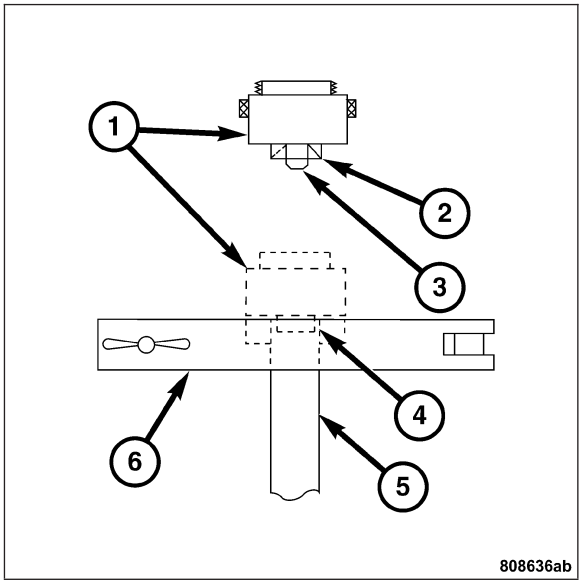

REMOVAL

FRONT BRAKE HOSE

CAUTION: Do not get brake fluid on any painted surface. Brake fluid can damage paint.

1. Raise and support the vehicle.
2. Remove the wheel and tire assembly.
3. Disconnect the brake hose (4) from the caliper (3).

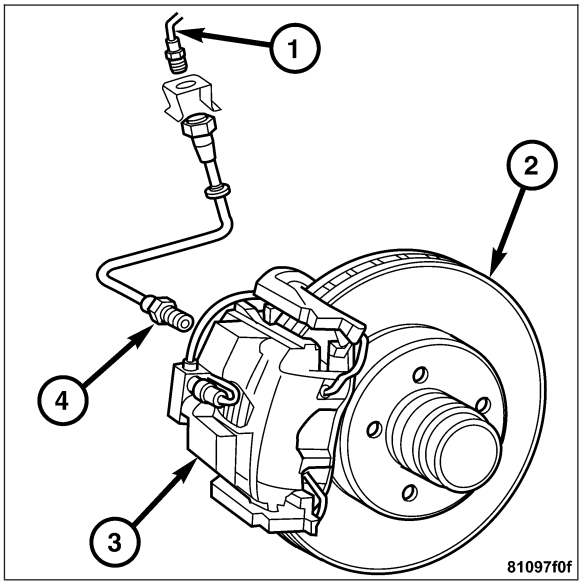

4. Disconnect the brake hose (3) at the brake line (2) connecting point and remove the hose.

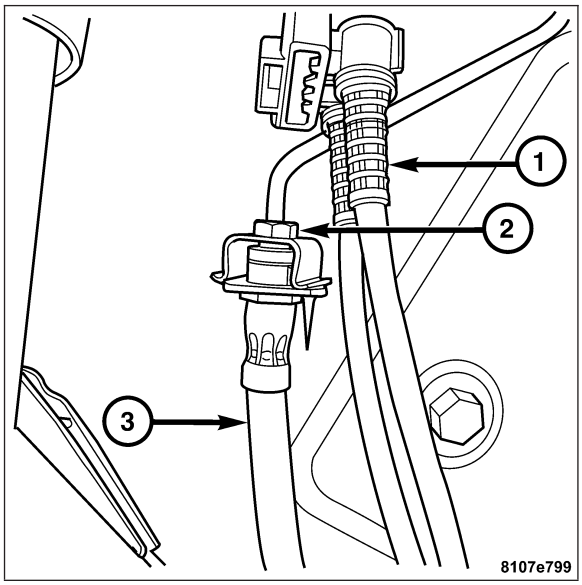

REAR BRAKE HOSE

CAUTION: Do not get brake fluid on any painted surface. Brake fluid can damage paint.

1. Raise and support the vehicle.
2. Remove the wheel and tire assembly.
3. Disconnect the brake hose (1) from the brake line connection.

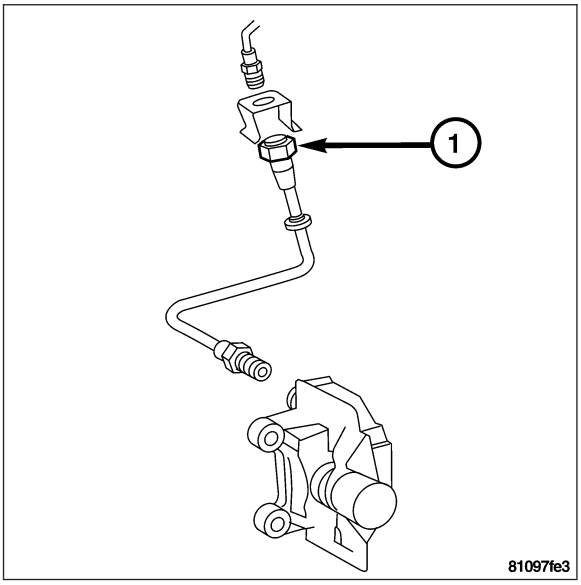

4. Disconnect the brake hose at the caliper (3) and remove the hose.

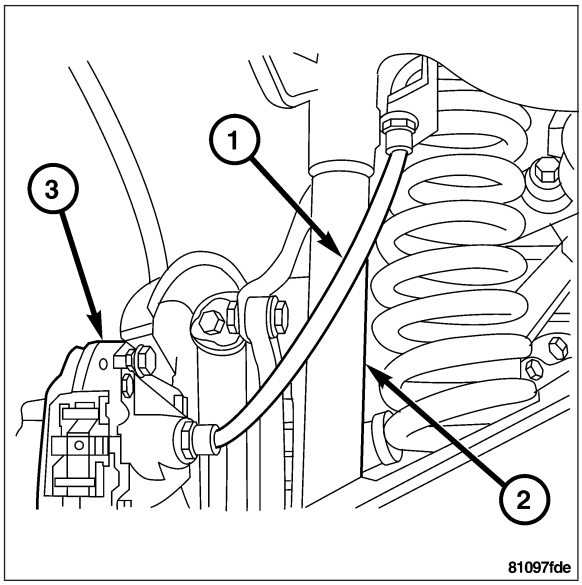

INSTALLATION

FRONT BRAKE HOSE

1. Connect the brake hose (3) to the brake line connection (2).

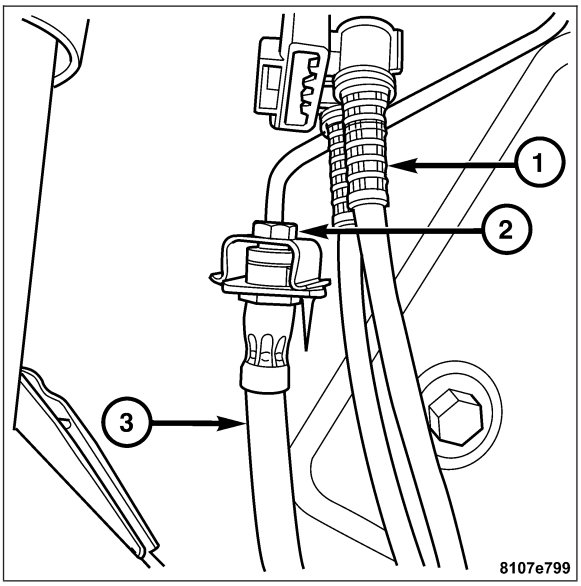

2. Route the brake hose (1) behind the steering knuckle (2) and connect to the caliper.

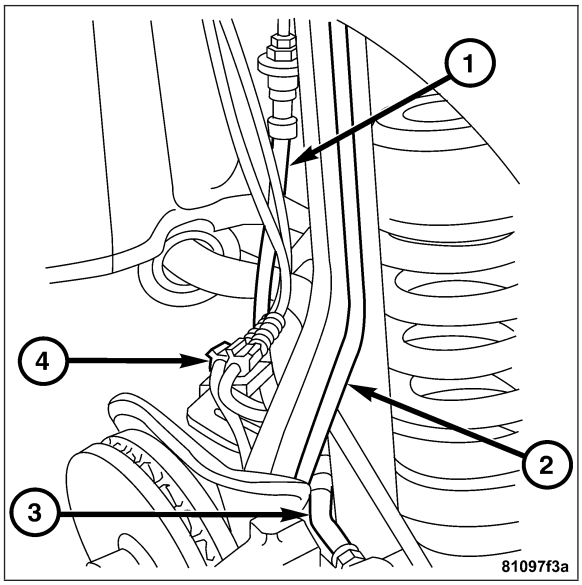

3. Connect the brake hose (4) at the caliper (3).
4. Install the wheel and tire assembly. **Refer to Page 22-42**.
5. Lower the vehicle.
6. Fill and bleed the brake system. **Refer to Page 5-9**. or **Refer to Page 5-9**.

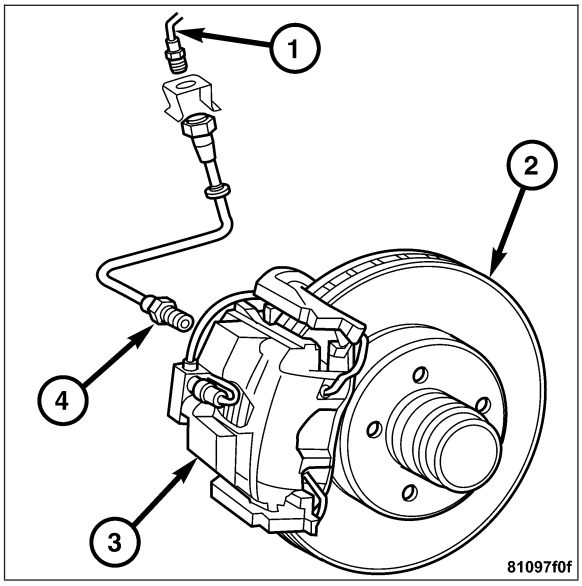

INSTALLATION - REAR BRAKE HOSE

1. Connect the brake hose (1) to the brake line connection.

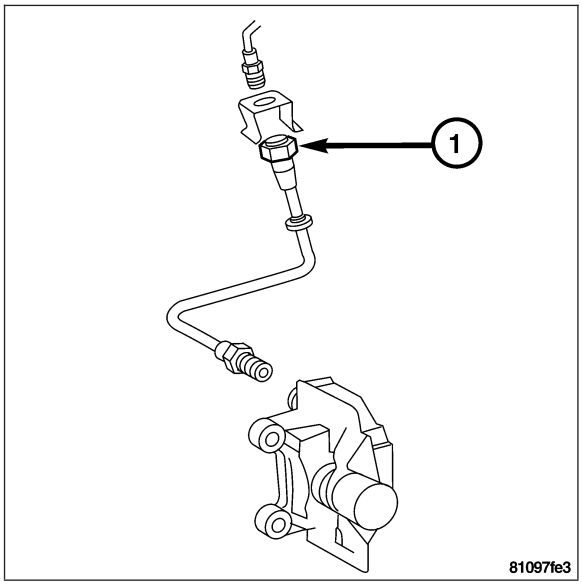

2. Route the brake hose (1) behind the rear shock (2) and connect to the caliper (3).
3. Install the wheel and tire assembly. **Refer to Page 22-42**.
4. Lower the vehicle.
5. Fill and bleed the brake system. **Refer to Page 5-9**. or **Refer to Page 5-9**.

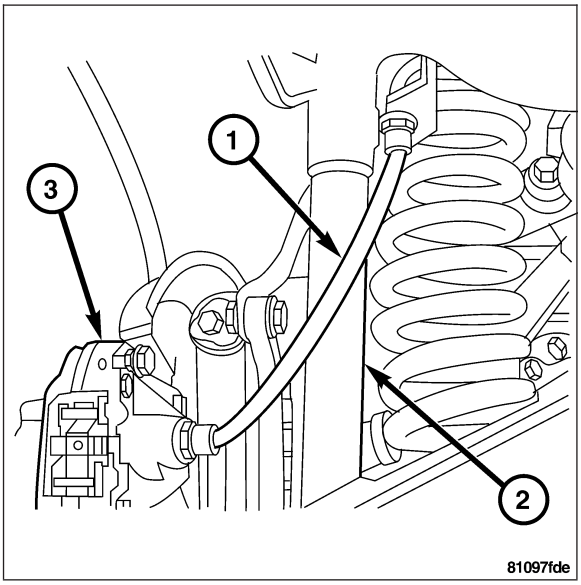

BRAKE PADS/SHOES

REMOVAL

FRONT DISC BRAKE PADS

1. Raise and support the vehicle.
2. Remove the wheel and tire assembly.
3. Drain a small amount of fluid from master cylinder brake reservoir with a **clean** suction gun.
4. Bottom the caliper pistons into the caliper by prying the caliper over.
5. Remove the caliper support spring (2) by prying the spring out of the holes (3) in the caliper (1).

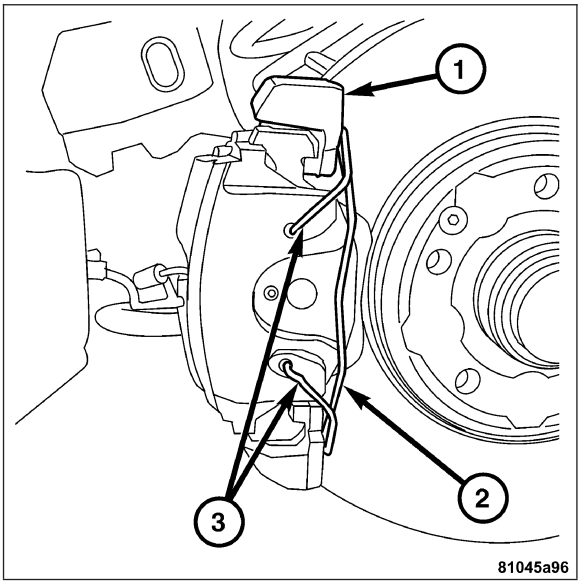

6. Disconnect the brake pad wear indicator harness connector.

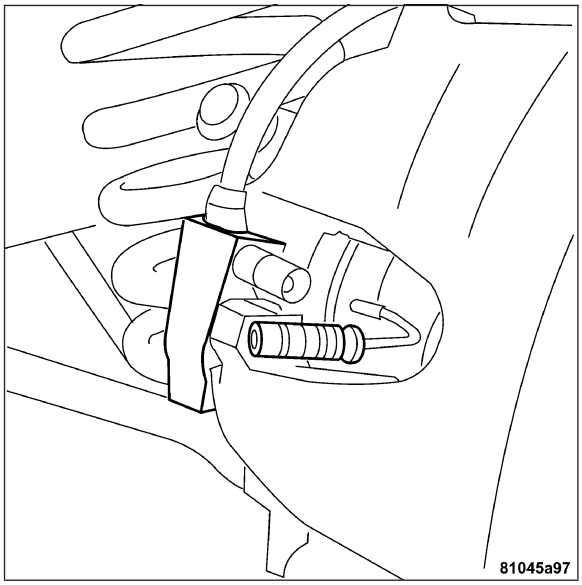

7. Remove the caliper slide pin caps (3) and then remove the caliper slide pins (2) from the caliper (1).

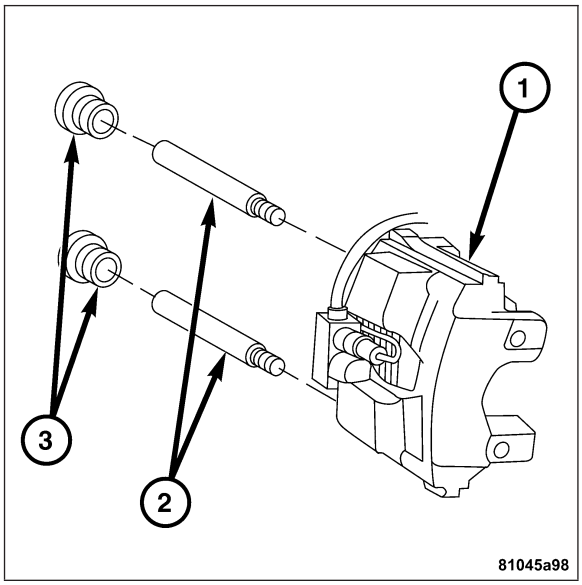

CAUTION: Never allow the disc brake caliper to hang from the brake hose. Damage to the brake hose will result. Provide a suitable support to hang the caliper securely.

8. Remove the caliper (1) from the mounting bracket (2).

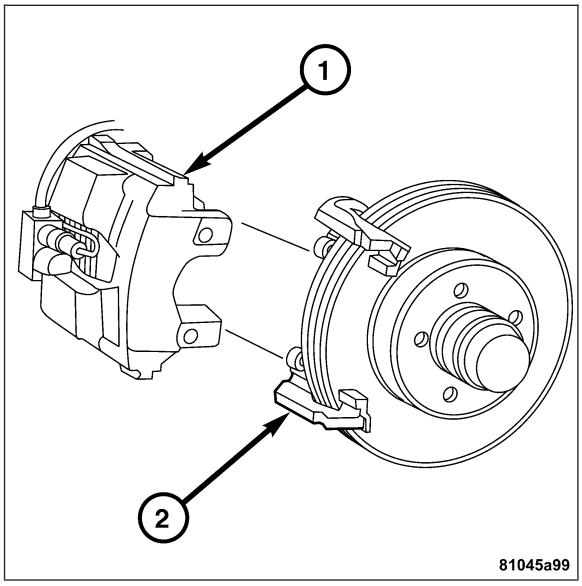

9. Remove the inboard (2) and outboard (3) brake pads from the caliper.

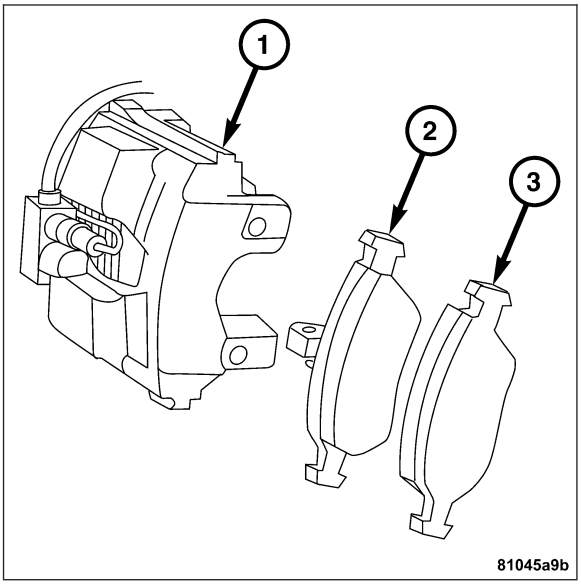

REMOVAL - REAR DISC BRAKE PADS

1. Raise and support the vehicle.
2. Remove the wheel and tire assembly.
3. Drain a small amount of fluid from the master cylinder brake reservoir with a **clean** suction gun.
4. Remove the caliper mounting bolts (1) and remove the caliper from the knuckle.

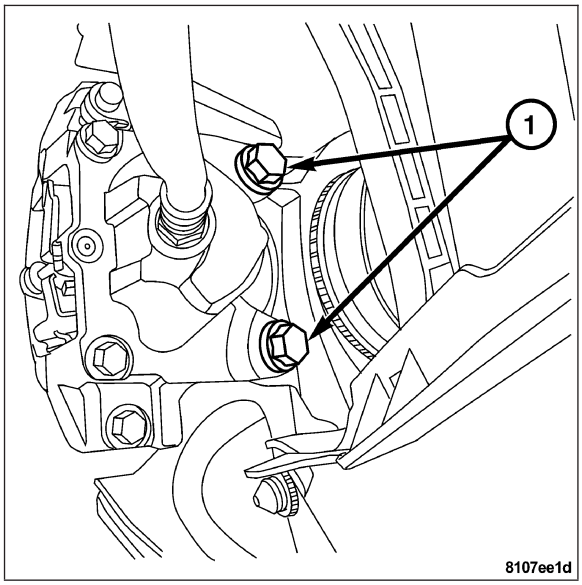

5. Remove the brake hose (1) from the caliper (2) by rotating the caliper while holding the brake hose with a line wrench.

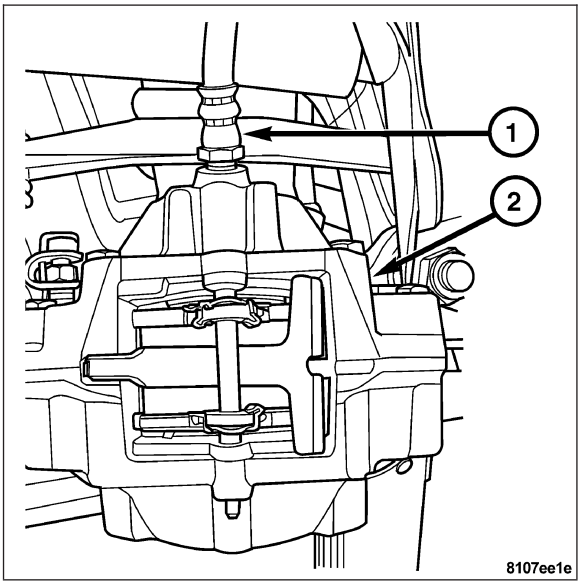

6. Using a suitable punch (1) knock out the retaining pin (4) that holds the pads in place.
7. Remove the anti-rattle clip (3) and remove the brake pads from the caliper (2).

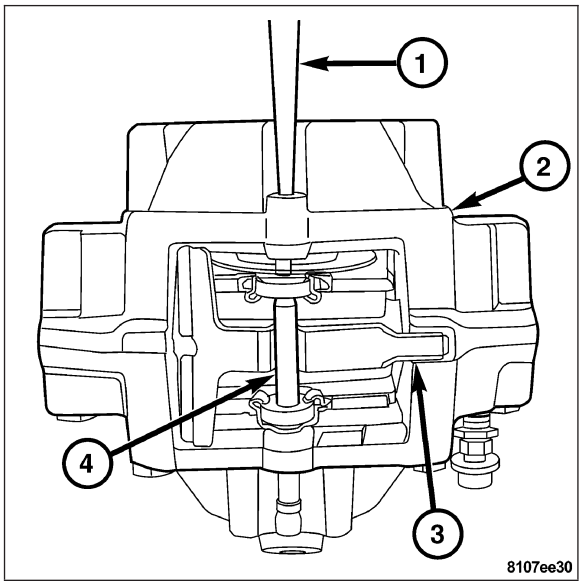

INSTALLATION

FRONT DISC BRAKE PADS

Note: If the caliper is not bottomed out you must do so in order to install the caliper onto the rotor. Use a C-clamp to bottom out caliper.

1. Install the inboard and outboard brake pads (2 and 3) onto the caliper (1).

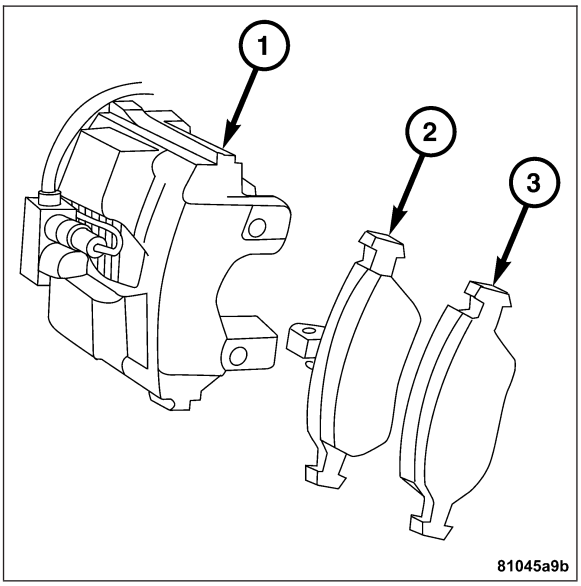

2. Lubricate the slide pins (2) and slide pin caps with silicone grease.

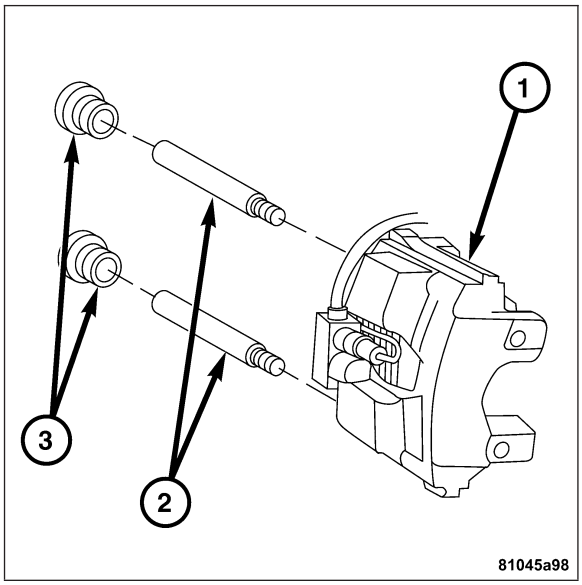

3. Install the caliper (1) on the caliper mounting bracket (2).

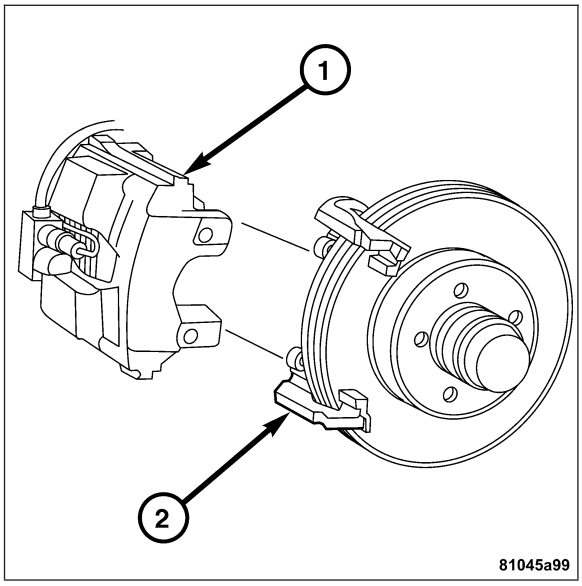

4. Install the caliper slide pins (2) and tighten to 29-41 N·m (21-30 ft. lbs.).
5. Install the caliper slide pin caps (3).

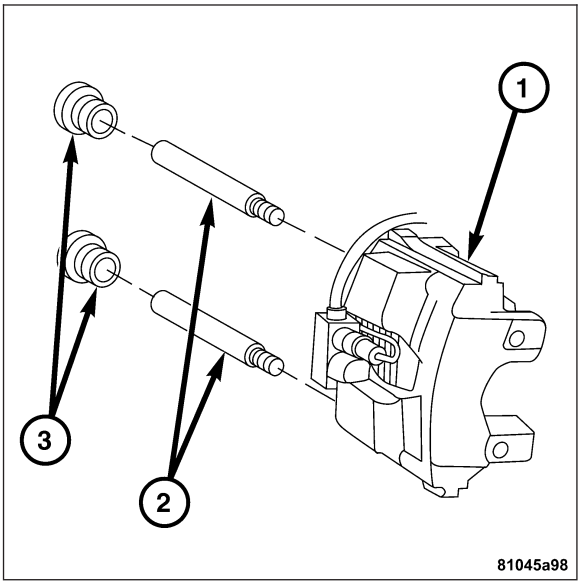

6. Connect the brake pad wear indicator harness connector.

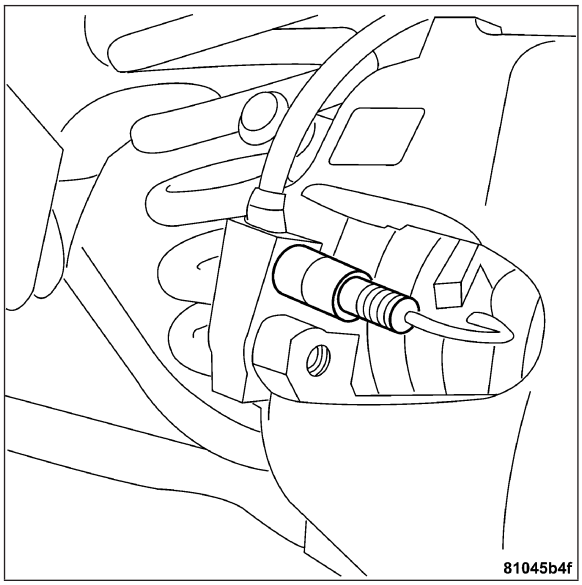

7. Install the caliper support spring (2) in the top end of the caliper under the caliper mounting bracket (1). Then install the other end into the lower caliper hole (3). Hold the spring (2) into the caliper (1) with your thumb while prying the end of the spring (2) out and down under the caliper mounting bracket with a screwdriver.
8. Install wheel and tire assembly. **Refer to Page 22-42**.
9. Lower the vehicle
10. Pump the brake pedal until the caliper pistons and the brake shoes are seated and a firm brake pedal is achieved.
11. Top off the brake fluid reservoir with new fluid and check for leaks.

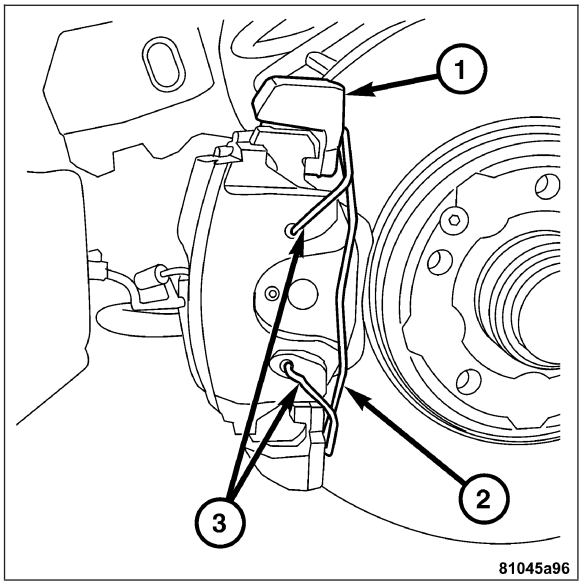

INSTALLATION - REAR DISC BRAKE PADS

Note: If the caliper is not bottomed out you must do so in order to install the caliper onto the rotor. Use a C-clamp to bottom out caliper.

1. Install the brake pads into the caliper by sliding them through the hole in the top of the caliper.
2. Install the anti-rattle clip (3).

Note: Hold the anti-rattle clip down with your thumb while tapping the retaining clip into position.

3. Install the retaining pin (4) through the hole in the side of the caliper (2). Tap the pin (4) into the caliper (2) until it is threaded through both brake pads and over the anti-rattle clip (3).

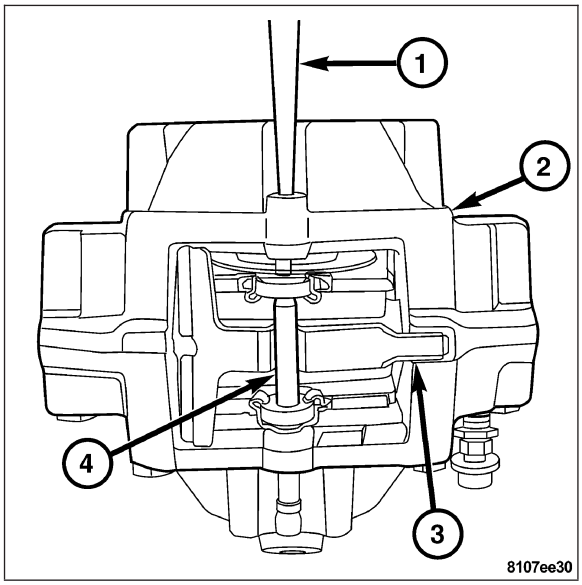

4. Install the brake hose (1) to the caliper (2) by holding the hose with a line wrench and rotating the caliper until tight.

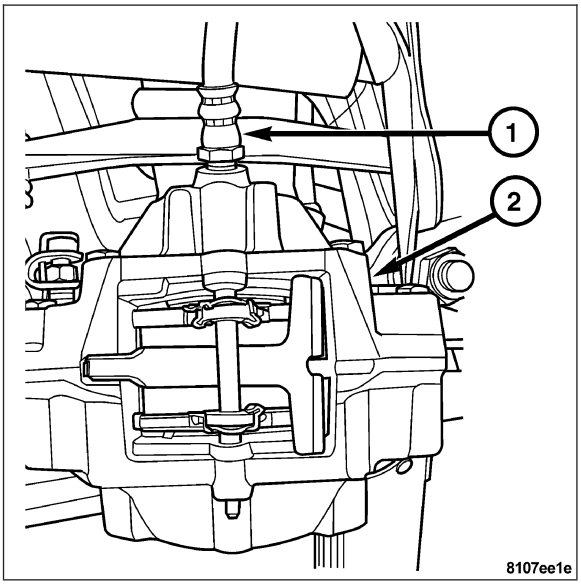

5. Install the caliper onto the knuckle over the rotor.
6. Install mounting bolts (1) and tighten to 29-41 N·m (21-30 ft. lbs.).
7. Install the tire and wheel assembly. **Refer to Page 22-42**.
8. Remove the support and lower the vehicle.
9. Pump the brake pedal until the caliper pistons and the brake shoes are seated and a firm brake pedal is achieved.
10. Top off the brake fluid reservoir with new fluid and check for leaks.
11. Fill and bleed the brake system.
    - Manual **Refer to Page 5-9**.
    - Pressure **Refer to Page 5-9**.

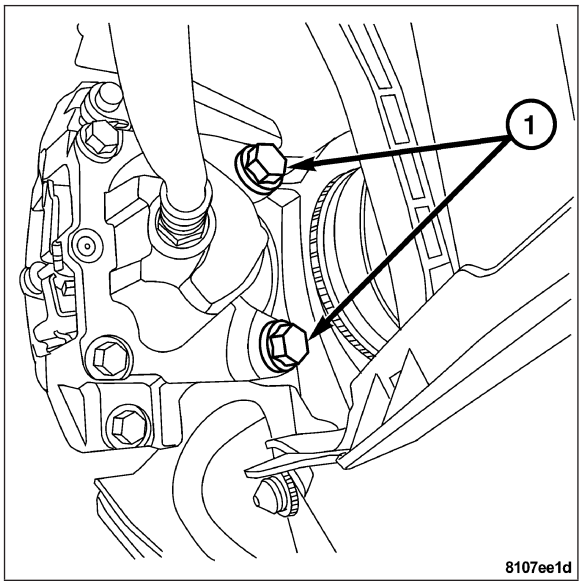

DISC BRAKE CALIPERS

DESCRIPTION

The calipers are a single piston type. The calipers are free to slide laterally on the anchor, this allows continuous compensation for lining wear.

The rear disc brakes consist of fixed single piston style calipers and solid rotors. The rear caliper is mounted to the rear wheel hub. The calipers are directly bolted to the wheel hub with mounting bolts. The disc brake rotor dust shield is mounted to the hub. The disc brake rotor has a built in drum used for the parking brakes. The parking brake shoes are mounted to the wheel hub.

OPERATION

When the brakes are applied fluid pressure is exerted against the caliper piston (2). The fluid pressure is exerted equally and in all directions. This means pressure exerted against the caliper piston (2) and within the caliper bores (3) will be equal.

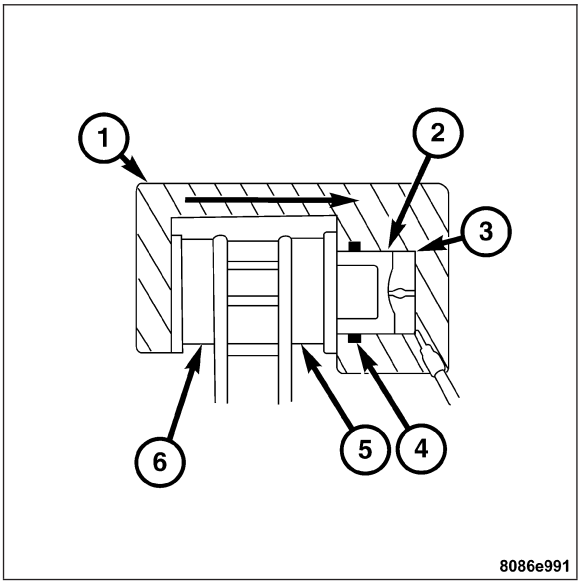

Fluid pressure applied to the pistons is transmitted directly to the inboard brake pad. This forces the pad lining (6) against the inner surface of the disc brake rotor. At the same time, fluid pressure within the piston bores forces the caliper to slide inward on the slide pins. This action brings the outboard brake pad lining into contact with the outer surface of the disc brake rotor.

Fluid pressure acting simultaneously on the pistons (2) and caliper (1) to produces a strong clamping action. When sufficient force is applied, friction will stop the rotors from turning and bring the vehicle to a stop.

Application and release of the brake pedal generates only a very slight movement of the caliper (1) and piston (2). Upon release of the pedal, the caliper and pistons return to a rest position. The brake pads (5 and 6) do not retract an appreciable distance from the rotor. In fact, clearance is usually at, or close to zero. The reasons for this are to keep road debris

from getting between the rotor and lining and in wiping the rotor surface clear each revolution.

The caliper piston seals (5) control the amount of piston (1) extension needed to compensate for normal lining wear.

During brake application the seals (6) are deflected outward by fluid pressure and piston (1) movement. When the brakes (and fluid pressure) are released, the seals (3) relax and retract the piston (1).

The front outboard brake pads have electronic wear indicators. Which when wear is preasant the wear indicator will illuminate a MIL light on the instrument panel telling the operator of the brake pad wear concern.

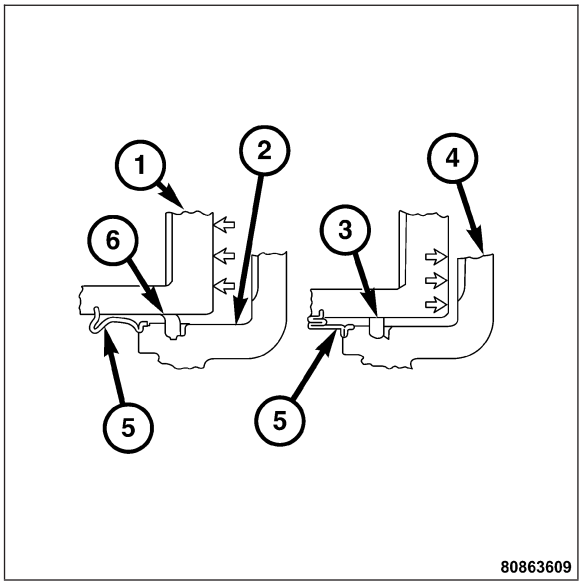

REMOVAL

FRONT DISC BRAKE CALIPER

1. Raise and support the vehicle.
2. Remove the front wheel and tire assembly.
3. Drain a small amount of fluid from the master cylinder brake reservoir with a **clean** suction gun.
4. Disconnect the brake pad wear indicator harness connector.

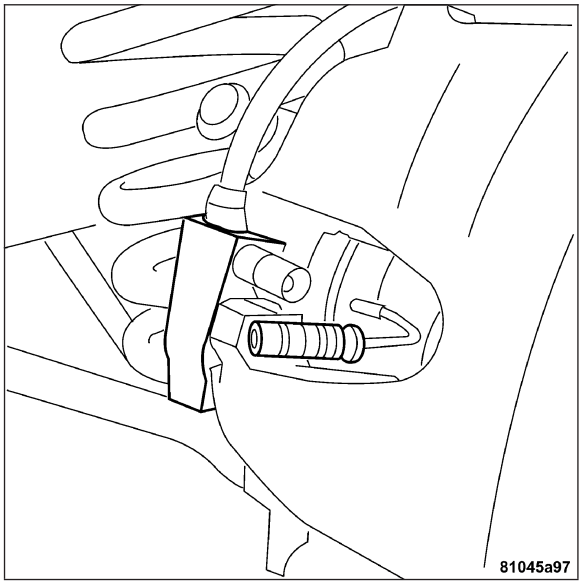

5. Remove brake pad wear indicator (1) from caliper (2) by removing the retaining bolt.
6. Bottom the caliper piston into the caliper by prying the caliper over.

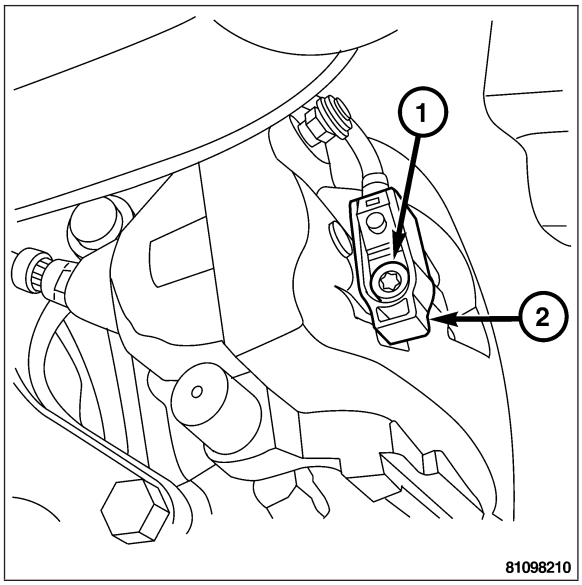

7. Remove the caliper support spring (2) by prying the spring out of the caliper (1).

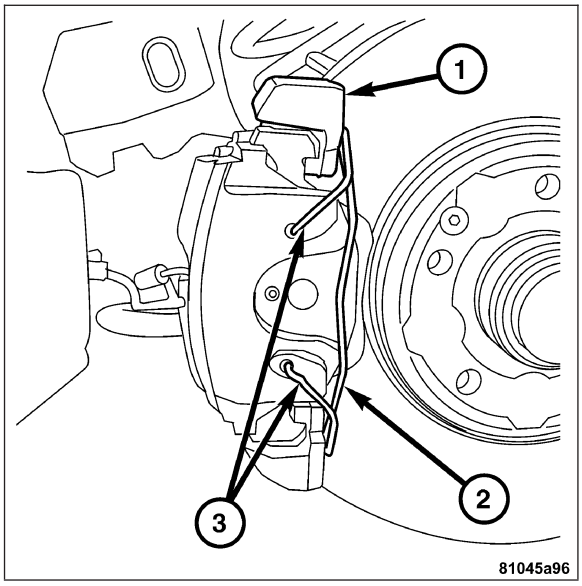

8. Remove the caliper slide pin caps (3) and slide pins (2) from the caliper (1).

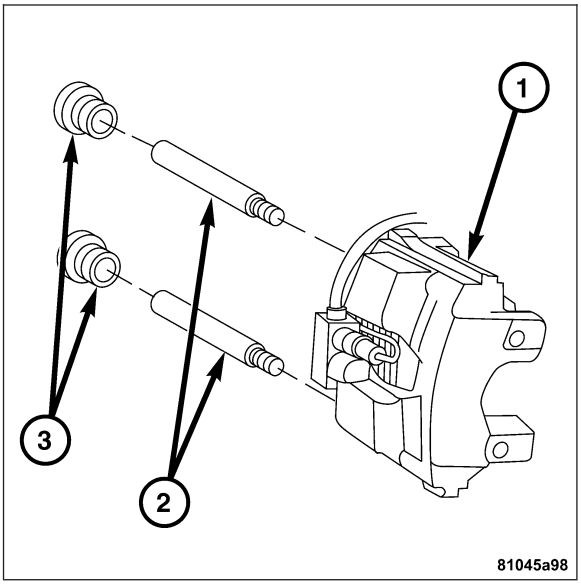

9. Remove the caliper (1) from the mounting bracket (2).

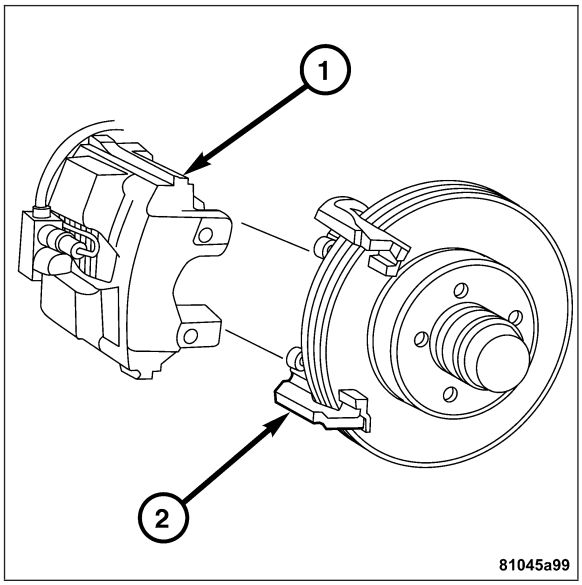

CAUTION: DO NOT get the brake fluid on any painted surfaces. Brake fluid can damage paint.

10. Remove the brake hose (4) from the caliper (3).

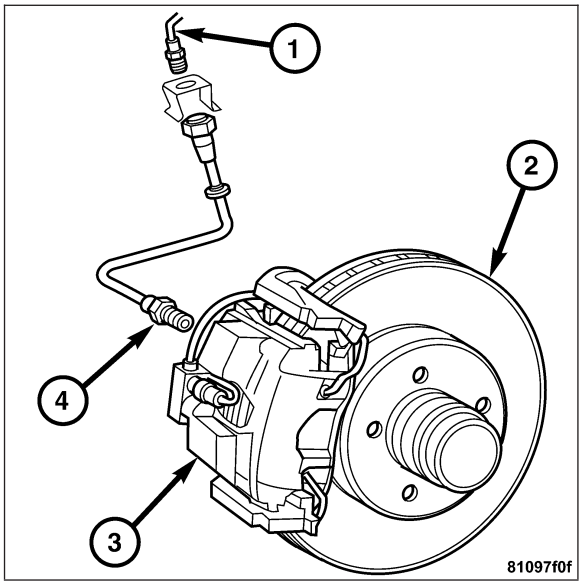

11. Remove the inboard and outboard brake pads (2 and 3) from the caliper (1).
12. Disassemble the caliper to clean and inspect for wear and damage. **Refer to Page 5-29**.

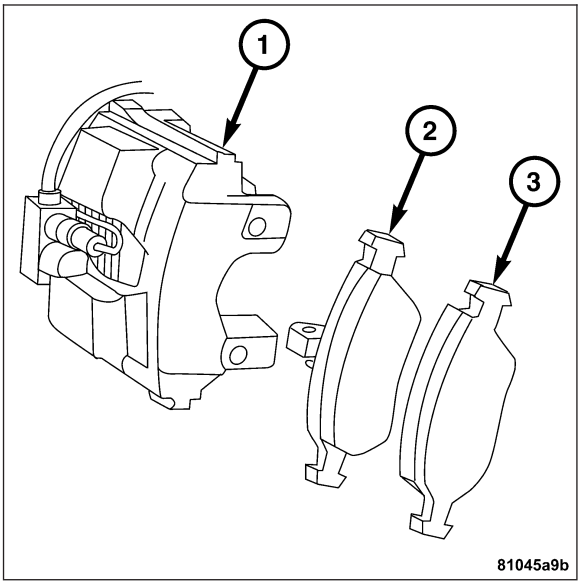

REMOVAL - REAR BRAKE CALIPER

1. Raise and support the vehicle.
2. Remove the rear tire and wheel assembly.
3. Drain a small amount of fluid from the master cylinder brake reservoir with a **clean** suction gun.
4. Remove caliper mounting bolts (1). Then remove the caliper from the knuckle.

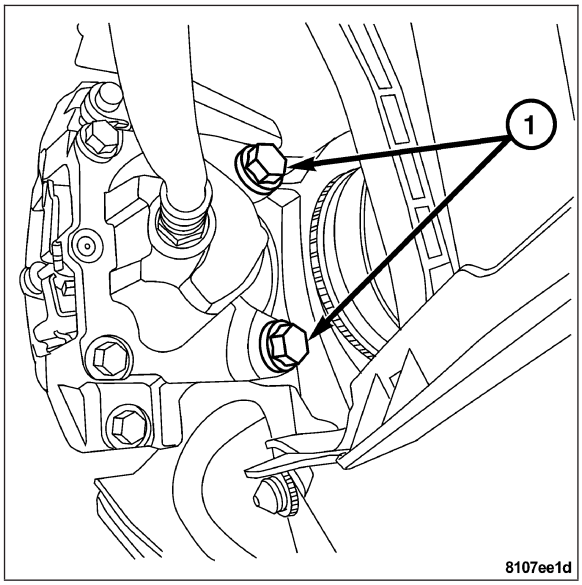

CAUTION: DO NOT get the brake fluid on any painted surfaces. Brake fluid can damage paint.

5. Remove the brake hose (1) by rotating the caliper (2) while holding the brake hose (1) with a wrench.

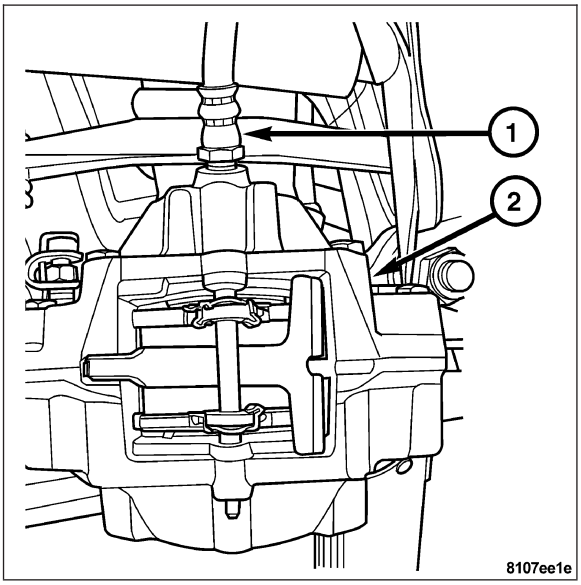

6. Using a suitable punch (1) knock out the retaining pin (4) that holds the pads in place.
7. Remove the anti-rattle clip (3) and remove the brake pads from the caliper (2).
8. Disassemble the caliper to check for wear or damage. **Refer to Page 5-29**.

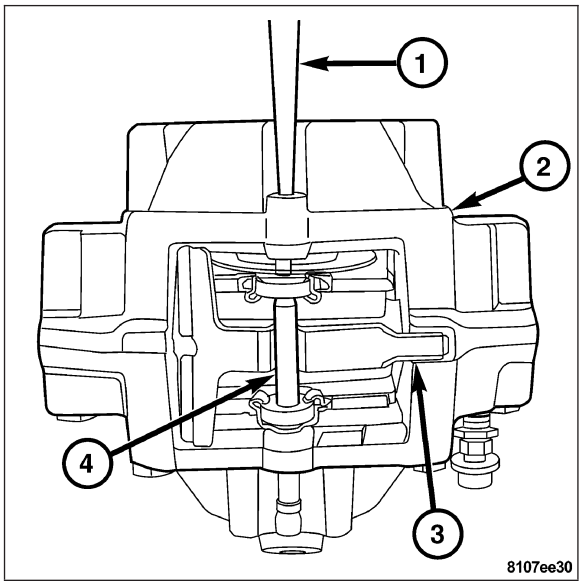

DISASSEMBLY - FRONT DISC BRAKE CALIPER

1. Drain the brake fluid from the caliper.
2. Take a piece of wood and pad it with a one-inch thickness of shop towels. Place this piece (1) in the outboard shoe side of the caliper (2) in front of the piston.

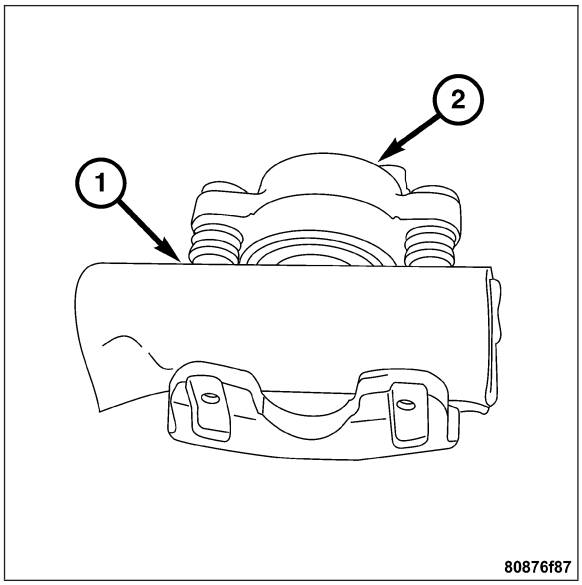

WARNING: NEVER ATTEMPT TO CATCH THE PISTON AS IT LEAVES THE BORE THIS COULD RESULT IN PERSONAL INJURY.

WARNING: DO NOT BLOW THE PISTON OUT OF THE BORE WITH SUSTAINED AIR PRESSURE. THIS COULD RESULT IN A CRACKED PISTON.

3. Remove the caliper piston (2) by using short bursts of low pressure air with a blow gun (1) through the brake hose port. Use only enough air pressure to ease the caliper piston out.

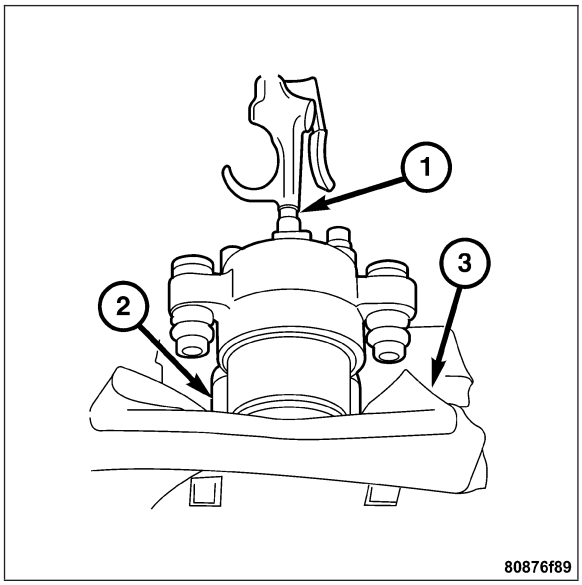

4. Remove the piston dust boot (2) with a suitable pry tool (1) and discard.

CAUTION: DO NOT SCRATCH PISTON BORE WHILE REMOVING THE SEALS.

5. Remove piston seal (2) from the caliper with a suitable tool (1).
6. Remove the caliper bleed screw.
7. Clean the caliper. **Refer to Page 5-30**.

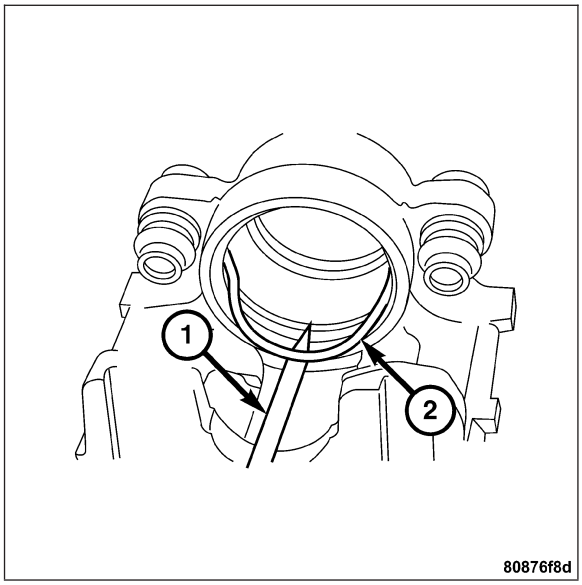

CLEANING - DISC BRAKE CALIPER

CAUTION: DO NOT use gasoline, kerosene, paint thinner or similar solvents. These products may leave a residue that could damage the piston and seal.

Clean the caliper components with clean brake fluid or Brake Clean® only. Wipe the caliper and piston dry with lint free towels or use low pressure compressed air. **Refer to Page 5-30**.

INSPECTION - DISC BRAKE CALIPER

CAUTION: If the caliper piston is replaced, install the same type piston in the caliper. Never interchange phenolic resin and steel caliper pistons. The pistons, seals, seal grooves, caliper bore and piston tolerances are different.

Remove deposits on the piston using a soft brass wire brush or a rough shop towel. Do **not** clean piston with a polishing or emery cloth because this will damage the chrome-plated surface. **Replace** the piston if the chrome-plated surface is damaged.

Clean aluminum version with anodized surfaces (piston and housing bore) with soft rag only.

If the piston is jammed or if the cylinder bores are scored or rusted, replace the complete fixed brake caliper and with the floating brake caliper, replace the cylinder housing. Remove small, light rust spots in the cylinder bore with a polishing cloth. Remove heavy rust spots in front of the groove for the piston seal using fine-grained emery paper (grain size 380 to 500).

ASSEMBLY - FRONT DISC BRAKE CALIPER

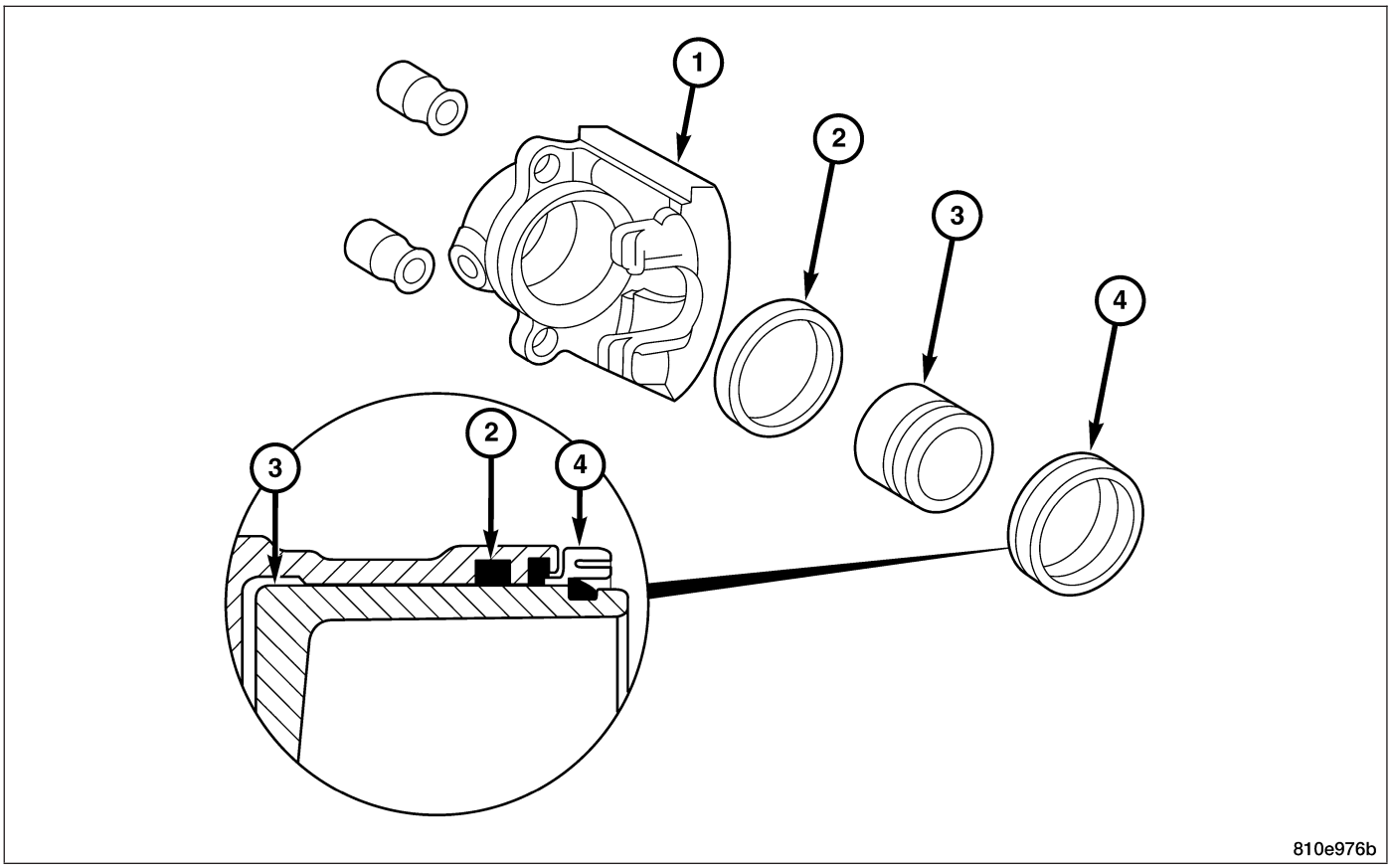

1 - CALIPER
2 - CALIPER PISTON SEAL
3 - CALIPER PISTON
4 - DUST BOOT

CAUTION: Dirt, oil, and solvents can damage caliper seals. Be sure the assembly area is clean and dry.

1. Lubricate the caliper piston, piston seals and piston bore with clean brake fluid.

Note: Verify seal is fully seated into seal groove and not twisted.

2. Install the new piston seal (2) into the seal groove.
3. Install the new dust boot (4) on the caliper piston (3) and seat the dust boot lip into the piston groove.
4. Stretch the dust boot (4) rearward to straighten the boot folds, then move the boot forward until the fold snaps into place.
5. Install the piston (3) into the caliper bore and press the piston down to the bottom of the caliper bore by hand or with the handle of a hammer.
6. Seat the dust boot (4) in caliper (1).
7. Install the new caliper bleed screw.
8. Install the caliper. **Refer to Page 5-32**.

INSTALLATION

FRONT DISC BRAKE CALIPER

1. Install the inboard and outboard brake pads (2 and 3) onto the caliper (1).

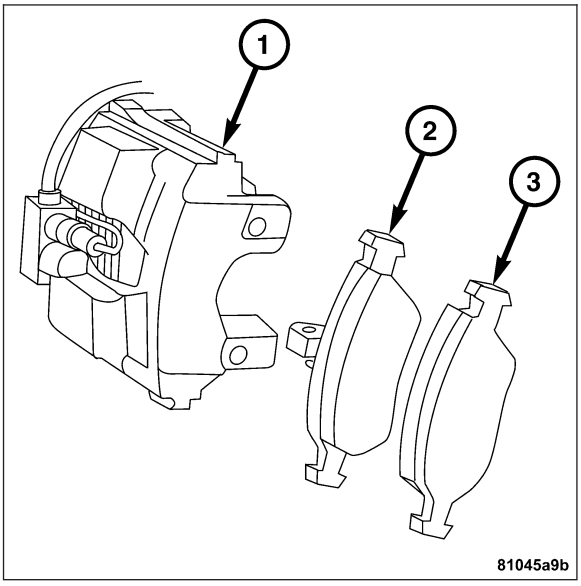

2. Lubricate the slide pins (2) and slide pin bushings with silicone grease.

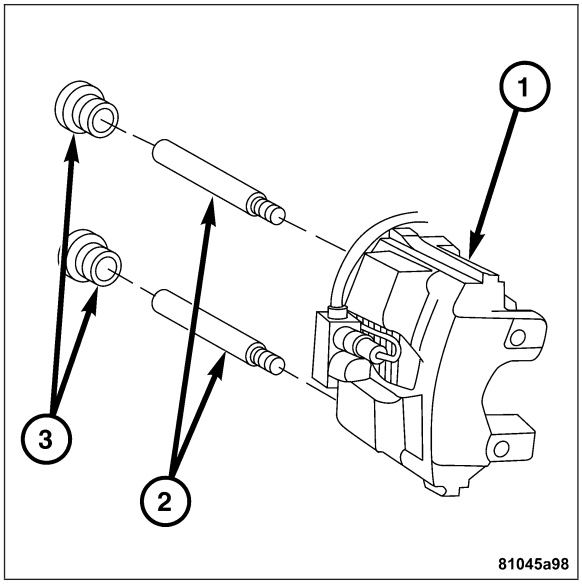

3. Install the caliper (1) on the mounting bracket (2).

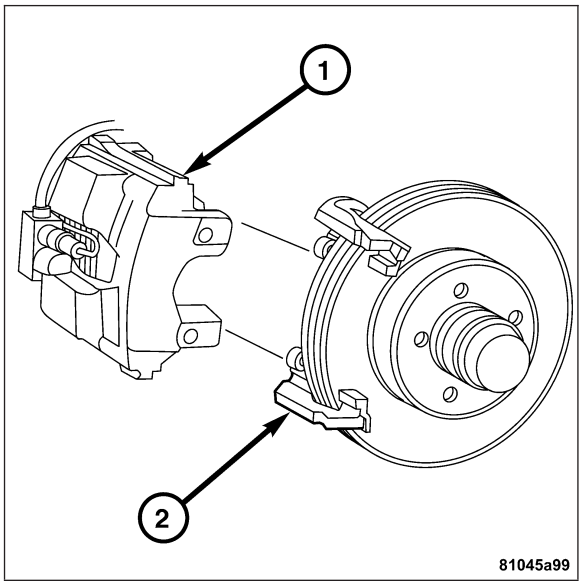

4. Install the caliper slide pins (2) and tighten to 115 N·m (85 ft. lbs.). Then install the caliper slide pin caps (3).

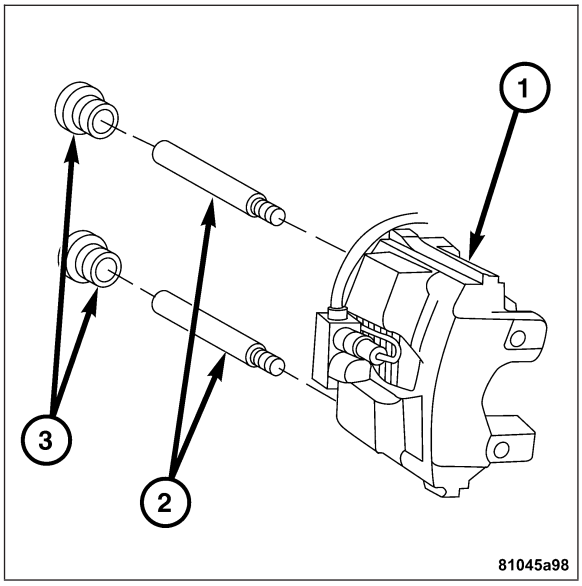

5. Install the brake pad wear indicator (2) onto the caliper. Tighten the bolt to 8 N·m (6 ft. lbs.).

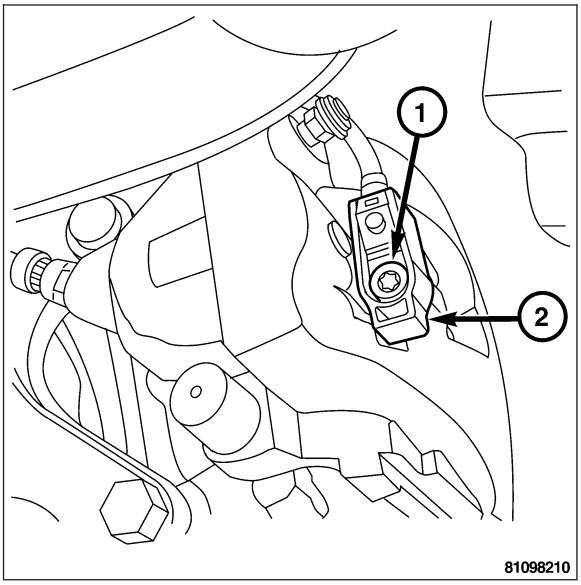

6. Connect the brake wear indicator to the brake pad.

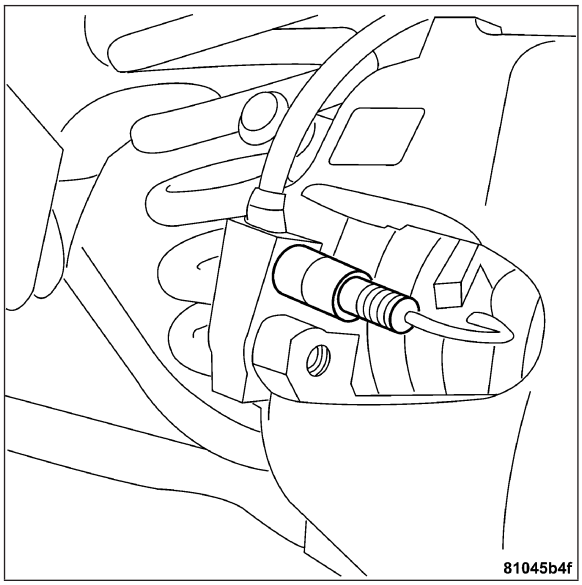

7. Install the caliper support spring (2) in the top end of the caliper and under the mounting bracket (1). Then install the other end into the lower caliper hole (3). Hold the spring (2) into the caliper hole (3) with your thumb while prying the end of the spring (2) out and down under the mounting bracket with a screwdriver.

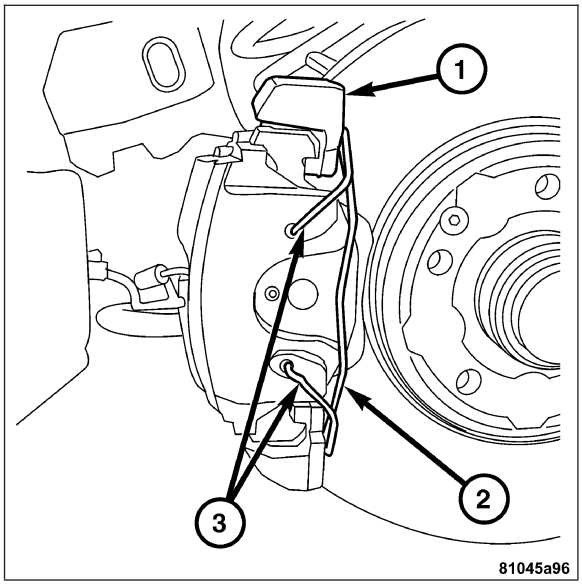

CAUTION: Verify brake hose is not twisted or kinked before tightening the fitting.

8. Connect the brake hose (4) to the caliper (3).
9. Fill and bleed brake system.
   - Manual. **Refer to Page 5-9**.
   - Pressure. **Refer to Page 5-9**.
10. Install the wheel and tire assembly. **Refer to Page 22-42**.

WARNING: DO NOT MOVE THE VEHICLE UNTIL A FIRM BRAKE PEDAL IS ACHIEVED.

11. Verify the brake fluid level and pump up the brake system until the brake pedal is firm.

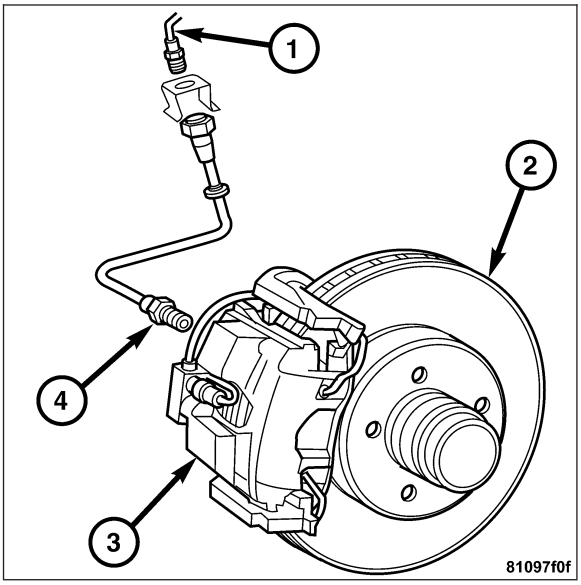

INSTALLATION - REAR DISC BRAKE CALIPER

1. Install the rear brake pads. **Refer to Page 5-20**.
2. Install the brake hose (1) to caliper (2) by holding the brake hose (1) with a wrench and rotating caliper (2) until snug. Fully tighten the brake hose after the caliper is installed.

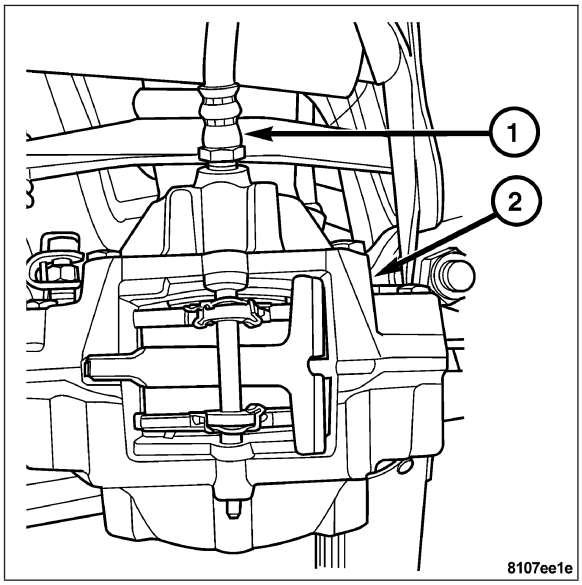

CAUTION: Verify the brake hose is not twisted or kinked before installing the caliper to the knuckle.

3. Install the caliper to the knuckle. Install the mounting bolts. Tighten to 55 N·m (40 ft. lbs.).

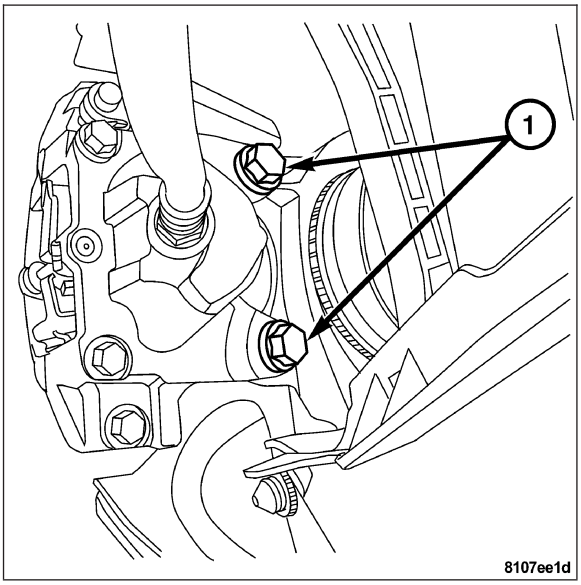

4. Fill and bleed the brake system.
   - Manual. **Refer to Page 5-9**.
   - Pressure. **Refer to Page 5-9**.
5. Install the wheel and tire assembly.

WARNING: DO NOT MOVE VEHICLE UNTIL FIRM BRAKE PEDAL IS OBTAINED.

6. Pump the brake pedal until a firm pedal is achieved.

ROTORS

DIAGNOSIS AND TESTING

DISC BRAKE ROTORS

REAR ROTOR MINIMUM THICKNESS

Minimum usable thickness of the rear disc brake rotor is 0.299 in. (7.6 mm). The thickness specification is located on the center section of the rotor.

Never resurface a rotor if at minimum thickness. Machining the rotor would cause the thickness to fall below the limit.

Measure rotor (2) thickness at the center of the brake shoe contact surface using a micrometer (1). Replace the rotor if worn below minimum thickness, or if refinishing would reduce thickness below the allowable minimum.

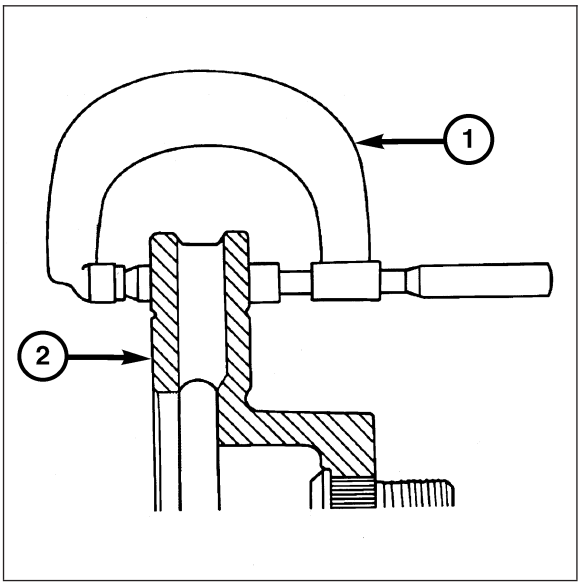

REAR ROTOR THICKNESS VARIATION

Variations in rotor thickness will cause pedal pulsation, noise and shudder.

Measure rotor thickness at a minimum of six points around the rotor face. Position the micrometer approximately 3/4 in.(19 mm) from the rotor outer circumference for each measurement.

Thickness should not vary by more than 0.0005 in. (0.0127 mm.) from point to point on the rotor. Refinish or replace the rotor if necessary.

REAR ROTOR LATERAL RUNOUT

Check rotor lateral runout whenever diagnosis indicates pedal pulsation and rapid, uneven brake lining wear.

The rotor must be securely clamped to the hub to ensure an accurate runout measurement. Secure the rotor with the wheel nuts and 4 or 5 large diameter flat washers on each stud.

Use a dial indicator (1) to check rotor lateral runout. Maximum allowable lateral runout is 0.76 mm (0.003 in.).

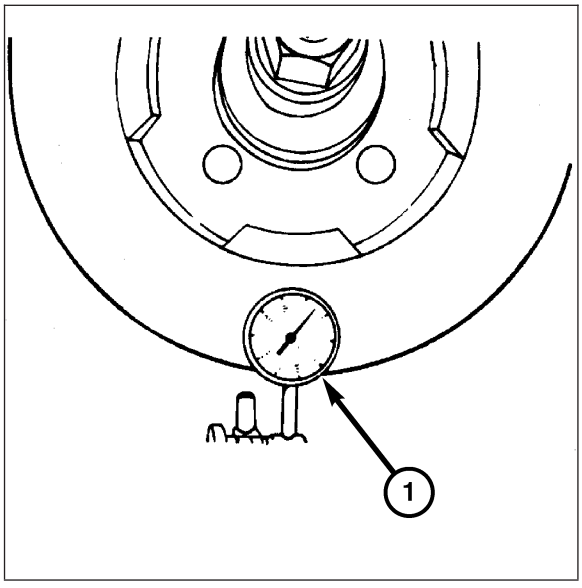

FRONT ROTOR MINIMUM THICKNESS

Rotor minimum thickness is 0.889 in. (22.6 mm). Do not resurface a rotor if at minimum thickness. Machining would cause thickness to fall below this limit.

Measure rotor thickness at the center of the brake shoe contact surface. Replace the rotor if worn below the minimum thickness, or if refinishing would reduce thickness below the allowable limit.

FRONT ROTOR THICKNESS VARIATION

Variations in rotor thickness will cause pedal pulsation, noise and shudder.

Measure rotor (2) thickness a minimum of six points around the rotor face with a micrometer (1). Position the micrometer approximately 3/4 in. (19 mm) from the rotor outer circumference for each measurement.

Thickness should not vary by more than 0.0005 in. (0.0127 mm) from point to point on the rotor. Refinish or replace the rotor if necessary.

Note: A hub mounted on-vehicle lathe is recommended. This type of lathe trues the rotor to the vehicles hub/bearing.

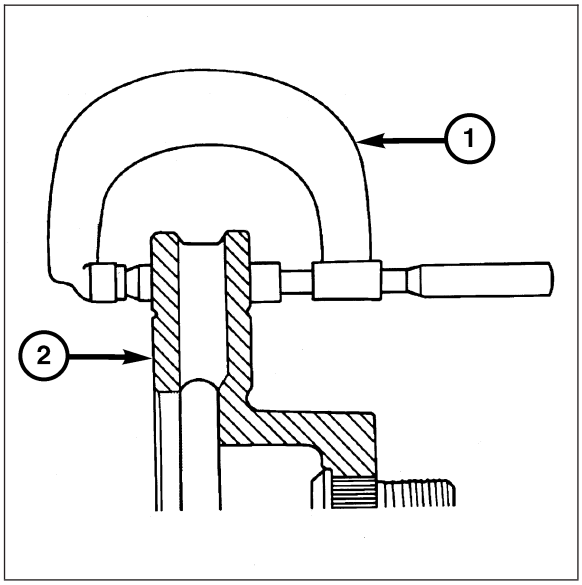

Front rotors and hub/bearings are matched mounted for minimum lateral runout. Before removing the rotor, mark the rotor and hub/bearing to maintain original orientation.

FRONT ROTOR LATERAL RUNOUT

Check rotor lateral runout whenever pedal pulsation, or rapid, uneven brake lining wear has occurred.

The rotor must be securely clamped to the hub to ensure an accurate runout measurement. Secure the rotor with a minimum of 3 lug nuts and large diameter flat washers on each stud.

Use a dial indicator (1) to check lateral runout.

Maximum allowable rotor lateral runout is 0.002 in. (0.05 mm).

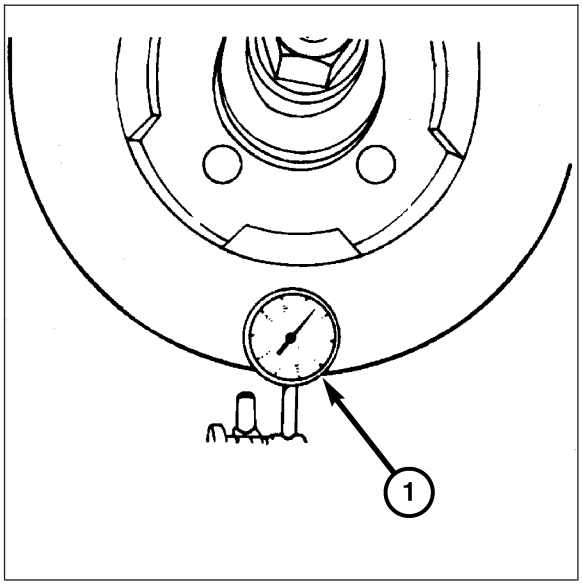

STANDARD PROCEDURE

DISC BRAKE ROTOR MACHINING

WARNING: BRAKE ROTORS THAT DO NOT MEET MINIMUM THICKNESS SPECIFICATIONS BEFORE OR AFTER MACHINING MUST BE REPLACED.

Note: A hub mounted on-vehicle lathe is recommended. This type of lathe trues the rotor to the vehicles hub/bearing.

The disc brake rotor can be machined if scored or worn. The lathe must machine both sides of the rotor simultaneously with dual cutter heads. The rotor mounting surface must be clean before placing on the lathe. Equipment capable of machining only one side at a time may produce a tapered rotor.

REMOVAL

FRONT DISC BRAKE ROTOR

1. Raise and support the vehicle.
2. Remove the wheel and tire assembly.
3. Disconnect the brake pad wear indicator.

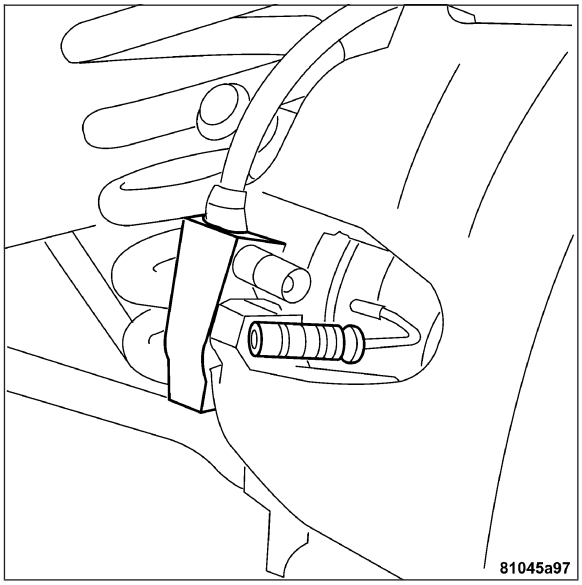

4. Remove the caliper bracket mounting bolts (3) and remove the caliper (1) and bracket as an assembly from the steering knuckle (2).

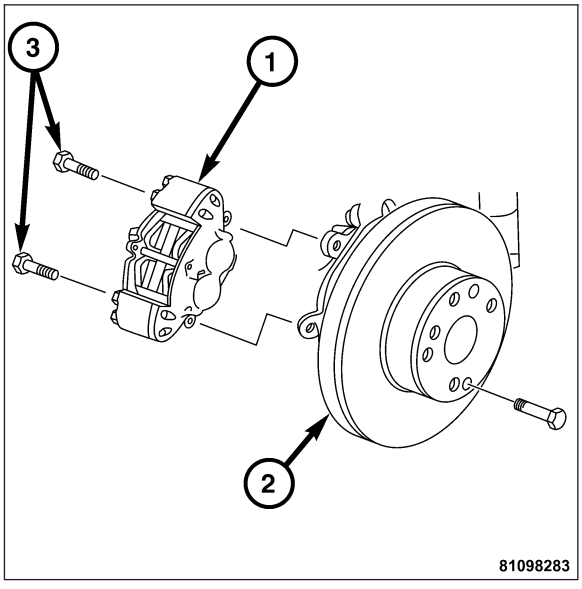

CAUTION: Never allow the disc brake caliper to hang from the brake hose. Damage to the brake hose can result. Provide a suitable support to hang the caliper securely.

5. Remove the retaining bolt (2) and then remove the brake rotor (1) from the wheel hub (3).

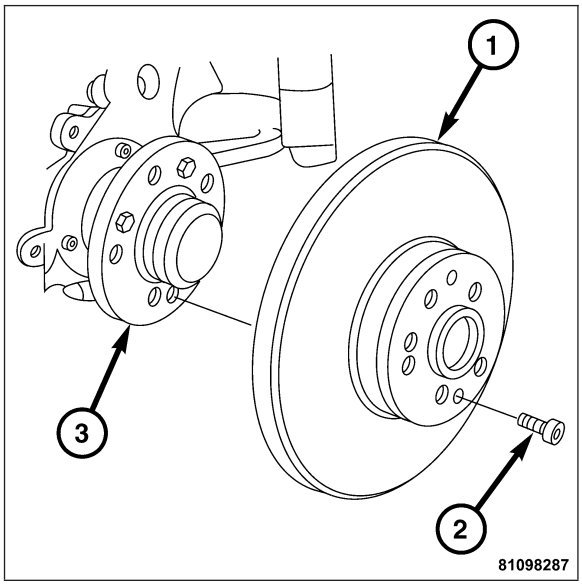

REMOVAL - REAR DISC BRAKE ROTOR

1. Raise and support the vehicle.
2. Remove the wheel and tire assembly.
3. Remove the caliper mounting bolts (1) and remove the caliper from the knuckle.

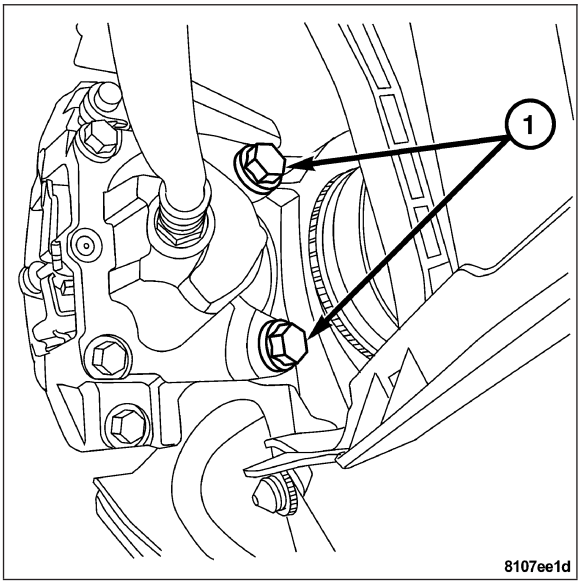

CAUTION: Never allow the disc brake caliper to hang from the brake hose. Damage to the hose can result. Provide a suitable support to hang the caliper securely.

4. Remove the rotor retaining bolt (2) and remove the rotor from the wheel hub (3).

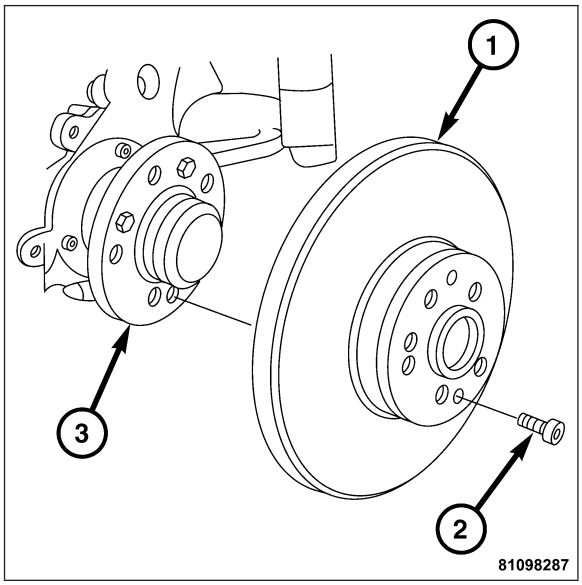

INSTALLATION

FRONT DISC BRAKE ROTOR

1. Install the rotor (1) onto the wheel hub (3).
2. Install the retaining bolt (2). Tighten to 10 N·m (7 ft. lbs.).

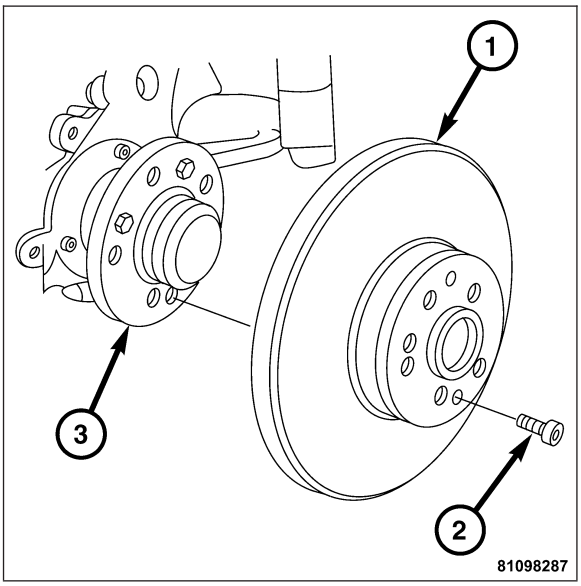

3. Install the caliper and bracket assembly (1) on the knuckle (2). Install the mounting bolts (3) and tighten to 90-115 N·m (66-85 ft. lbs.).

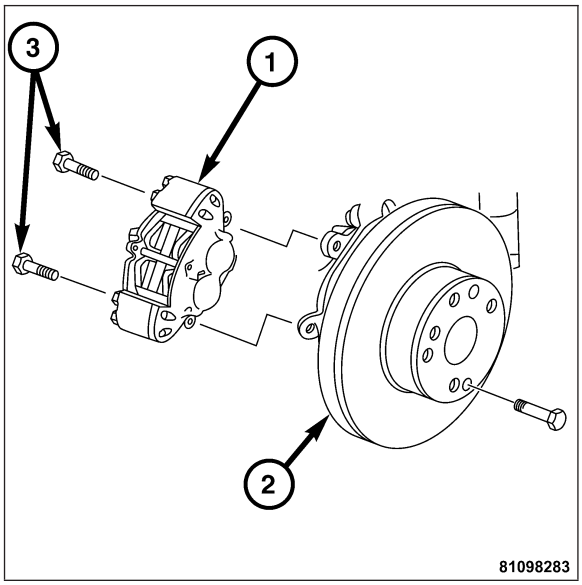

4. Connect the brake pad wear indicator.
5. Install the wheel and tire assembly. **Refer to Page 22-42**.

WARNING: DO NOT MOVE VEHICLE UNTIL FIRM BRAKE PEDAL IS OBTAINED.

6. Pump the brake pedal to seat caliper pistons and brake pads.

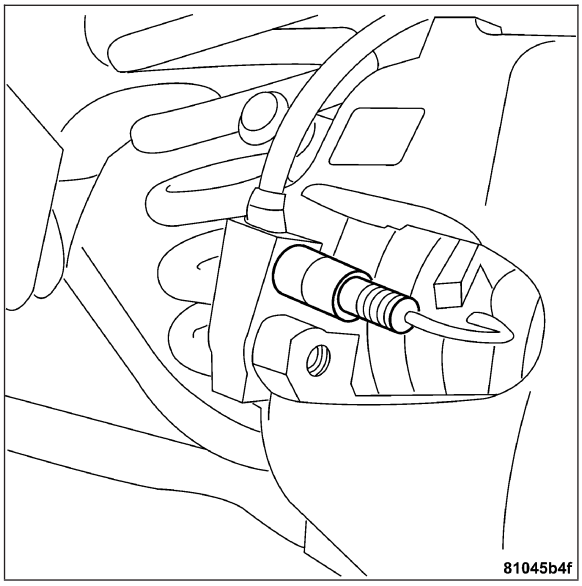

INSTALLATION - REAR DISC BRAKE ROTOR

1. Install the rotor (1) onto the wheel hub (3).
2. Install the rotor retaining bolt (2). Tighten to 10 N·m (7 ft. lbs.).
3. Install caliper assembly onto rotor.

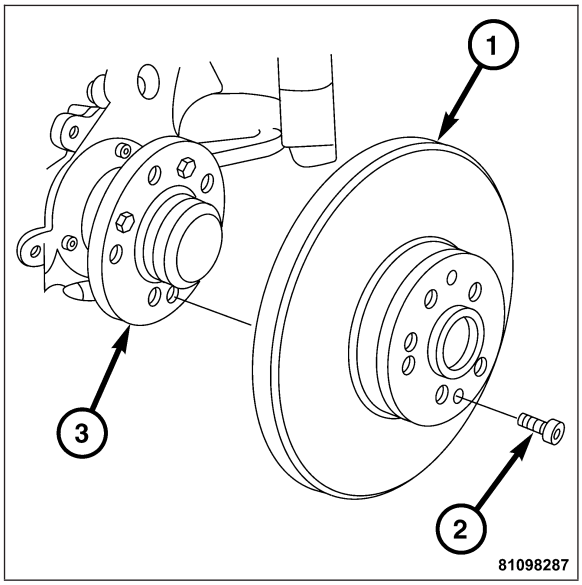

4. Install caliper mounting bolts (1). Tighten to 90-115 N·m (66-85 ft. lbs.).
5. Install the wheel and tire assembly. **Refer to Page 22-42**.

WARNING: DO NOT MOVE THE VEHICLE UNTIL A FIRM BRAKE PEDAL IS OBTAINED.

6. Pump the brake pedal to seat the caliper pistons and the brake shoes.

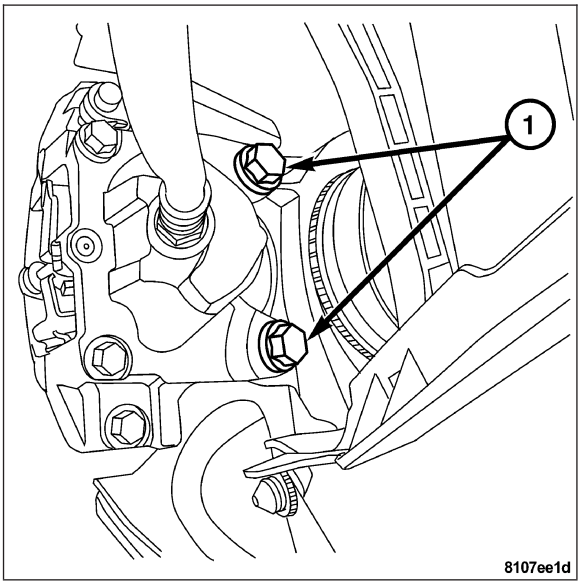

FLUID

DIAGNOSIS AND TESTING

BRAKE FLUID CONTAMINATION

Indications of fluid contamination are swollen or deteriorated rubber parts.

Swollen rubber parts indicate the presence of petroleum in the brake fluid.

To test for contamination, put a small amount of drained brake fluid in clear glass jar. If fluid separates into layers, there is mineral oil or other fluid contamination of the brake fluid.

If brake fluid is contaminated, drain and thoroughly flush system. Replace master cylinder with reservoir, caliper seals, HCU and all hydraulic fluid hoses.

STANDARD PROCEDURE

MASTER CYLINDER FLUID LEVEL

Always clean the master cylinder reservoir and cap before adding fluid. This will prevent dirt from falling in the reservoir and contaminating the brake fluid.

The reservoir (2) has a ″MIN” and a “MAX” mark (1) on the side. Always fill to the “MAX” mark.

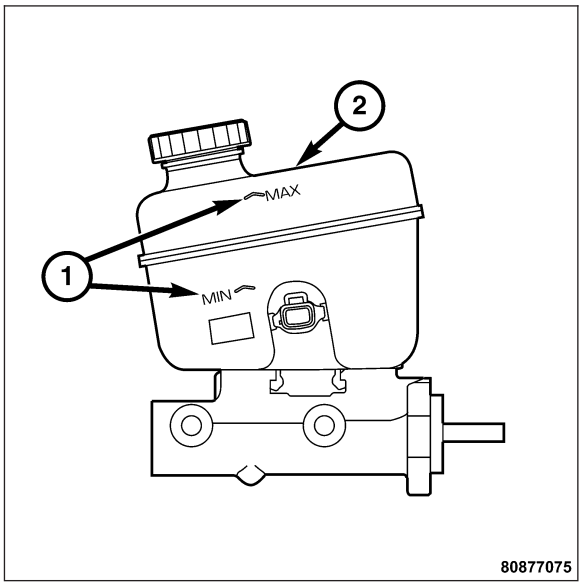

SPECIFICATIONS

BRAKE FLUID

CAUTION: Never use reclaimed brake fluid or fluid from an container which has been left open. An open container of brake fluid will absorb moisture from the air and contaminate the fluid.

CAUTION: Never use any type of a petroleum-based fluid in the brake hydraulic system. Use of such type fluids will result in seal damage of the vehicle brake hydraulic system causing a failure of the vehicle brake system. Petroleum based fluids would be items such as engine oil, transmission fluid, power steering fluid, etc.

The brake fluid used in this vehicle must conform to DOT 4 specifications and SAE J1703 standards. No other type of brake fluid is recommended or approved for usage in the vehicle brake system. Use only Mopar® brake fluid or an equivalent from a tightly sealed container.

MASTER CYLINDER

DESCRIPTION

MASTER CYLINDER

The master cylinder body is made of aluminum and contains a primary and secondary piston assembly. The cylinder body including the piston assemblies are not serviceable. If diagnosis indicates an internal problem with the cylinder body, it must be replaced as an assembly. The master cylinder has a removable reservoir and fluid level indicator (2). The reservoir, reservoir grommets, reservoir cap and fluid level switch are the only replaceable parts on the master cylinder.

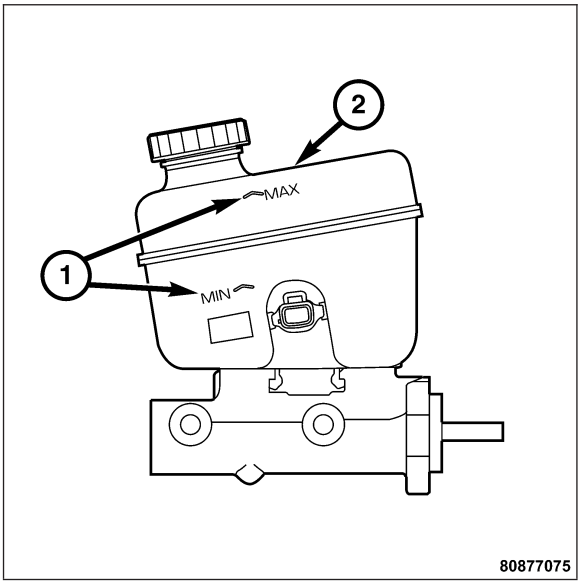

OPERATION

MASTER CYLINDER

The master cylinder bore contains a primary and secondary piston. The primary piston supplies hydraulic pressure to the front brakes. The secondary piston supplies hydraulic pressure to the rear brakes. The master cylinder reservoir stores reserve brake fluid for the hydraulic brake circuits.

DIAGNOSIS AND TESTING

MASTER CYLINDER/POWER BOOSTER

Note: Inspect and repair any external fluid leaks before performing test.

1. Start the engine and inspect the booster vacuum hose connections. A hissing noise indicates a vacuum leak. Correct any vacuum leaks before proceeding.
2. Stop the engine and shift the transmission into Neutral.
3. Pump the brake pedal until all the vacuum reserve in the booster is depleted.
4. Press and hold the brake pedal under a light foot pressure. The pedal should hold firm, if the pedal falls away the master cylinder or HCU may be faulty (internal leakage).
5. Start the engine and note the pedal action. It should fall away slightly under a light foot pressure and then hold firm. If no pedal action is discernible, power booster, vacuum supply, or vacuum check valve is faulty. Proceed to the POWER BOOSTER VACUUM TEST.
6. If the POWER BOOSTER VACUUM TEST passes, rebuild the booster vacuum reserve as follows: Release the brake pedal. Increase the engine speed to 1500 rpm, close the throttle and then turn off the engine.
7. Wait a minimum of 90 seconds and try the brake action again. The booster should provide two or more vacuum assisted pedal applications. If the vacuum assist is not provided, some component of the booster is faulty.

POWER BOOSTER VACUUM TEST

1. Connect the vacuum gauge (7) to the booster check valve (3) with the short length of hose (2) and the T-fitting (1).
2. Start and run the engine at a curb idle speed for one minute.
3. Observe the vacuum supply. If the vacuum supply is not adequate, repair the vacuum supply.
4. Clamp the hose shut (5) between the vacuum source and the check valve.
5. Stop the engine and observe the vacuum gauge (7).
6. If the vacuum drops more than one inch HG (33 millibars) within 15 seconds, the booster diaphragm, check valve or check valve seal/grommet is faulty.

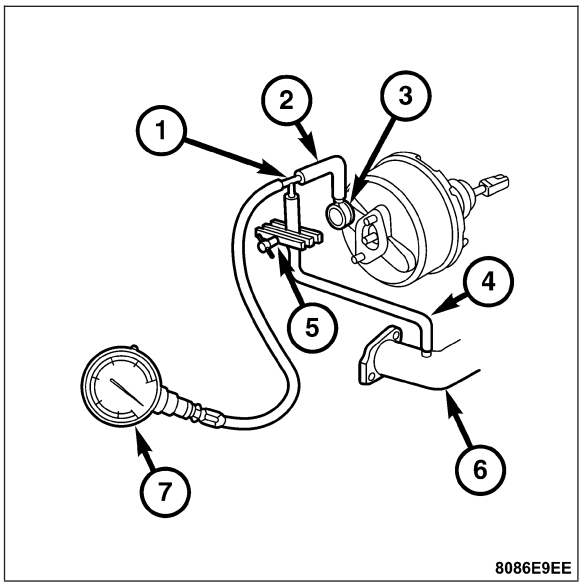

POWER BOOSTER CHECK VALVE TEST

1. Disconnect the vacuum hose from the check valve.
2. Remove the check valve (1) and the valve seal (3) from the booster.
3. Use a hand operated vacuum pump for this test.
4. Apply 51-67 kPa (15-20 in.) of vacuum at the large end of the check valve (2).
5. The vacuum should hold steady. If the gauge on the pump indicates a vacuum loss the check valve and seal should be replaced.

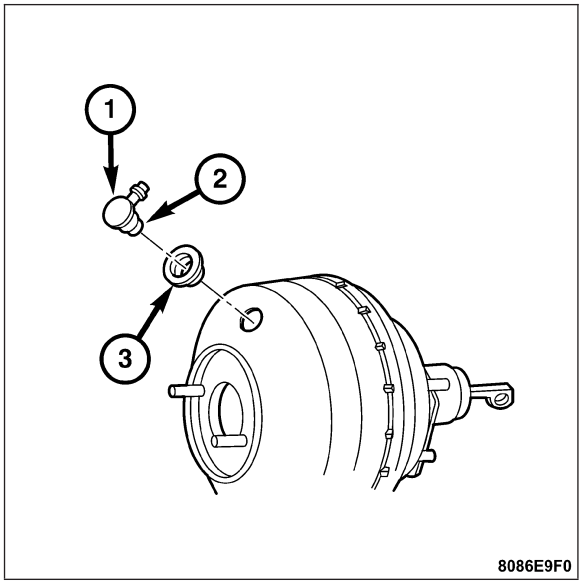

DIAGNOSIS AND TESTING - MASTER CYLINDER FLUID LOSS

In case of brake fluid loss which is not visible, it should be checked whether brake fluid has entered the brake booster through a leaking secondary seal in the master brake cylinder:

1. Remove master brake cylinder.
2. Visually inspect the inside of the brake booster for traces of brake fluid.
3. Replace the brake booster if brake fluid is present.

STANDARD PROCEDURE

MASTER CYLINDER BLEEDING PROCEDURE

A new master cylinder should be bled before installation on the vehicle. Required bleeding tools include bleed tubes and a wood dowel to stroke the pistons. Bleed tubes can be fabricated from brake line.

1. Mount the master cylinder in a vise with brass jaws.
2. Attach the bleed tubes to the cylinder outlet ports. Then position each tube end into the bottom of the reservoir.
3. Fill the reservoir with fresh brake fluid.
4. Press the cylinder pistons inward with the wood dowel. Then release the pistons and allow them to return under spring pressure. Continue the bleeding operations until all the air bubbles are no longer visible in fluid.

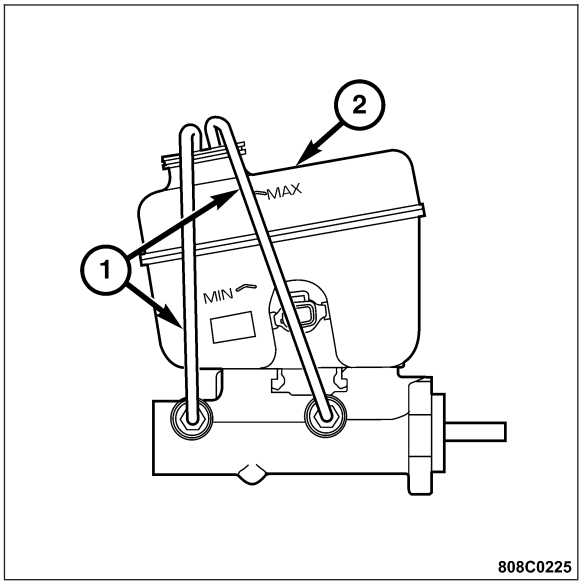

REMOVAL

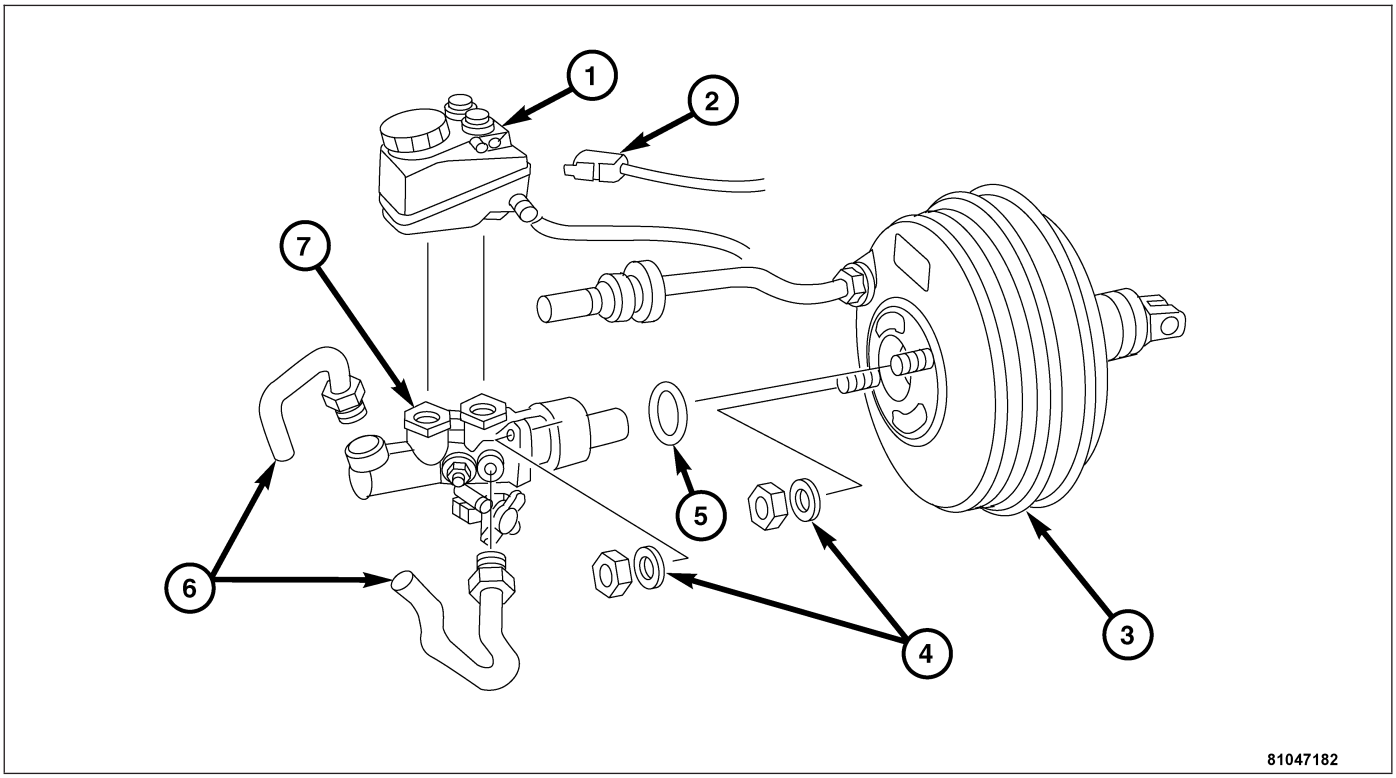

1 - FLUID RESERVOIR
2 - FLUID LEVEL SENSOR CONNECTOR
3 - POWER BOOSTER
4 - MASTER CYLINDER NUTS
5 - O-RING
6 - BRAKE LINES
7 - MASTER CYLINDER

CAUTION: Do not get brake fluid on any painted surfaces. Brake fluid can damage paint.

1. Disconnect the brake fluid level sensor harness connector (2) from the reservoir (1).
2. Disconnect the master cylinder brake fluid pressure sensor harness connectors.
3. Remove brake lines (6) from master cylinder (7).
4. Remove the nuts (4) that attach the master cylinder to the booster studs.

WARNING: DO NOT TILT THE MASTER BRAKE CYLINDER WHEN REMOVING FROM THE BRAKE BOOSTER. IF TILTED, THE BRAKE ROD CAN BE DISCONNECTED FROM THE MASTER CYLINDER.

5. Remove the master cylinder (7) from the booster (3).

INSTALLATION

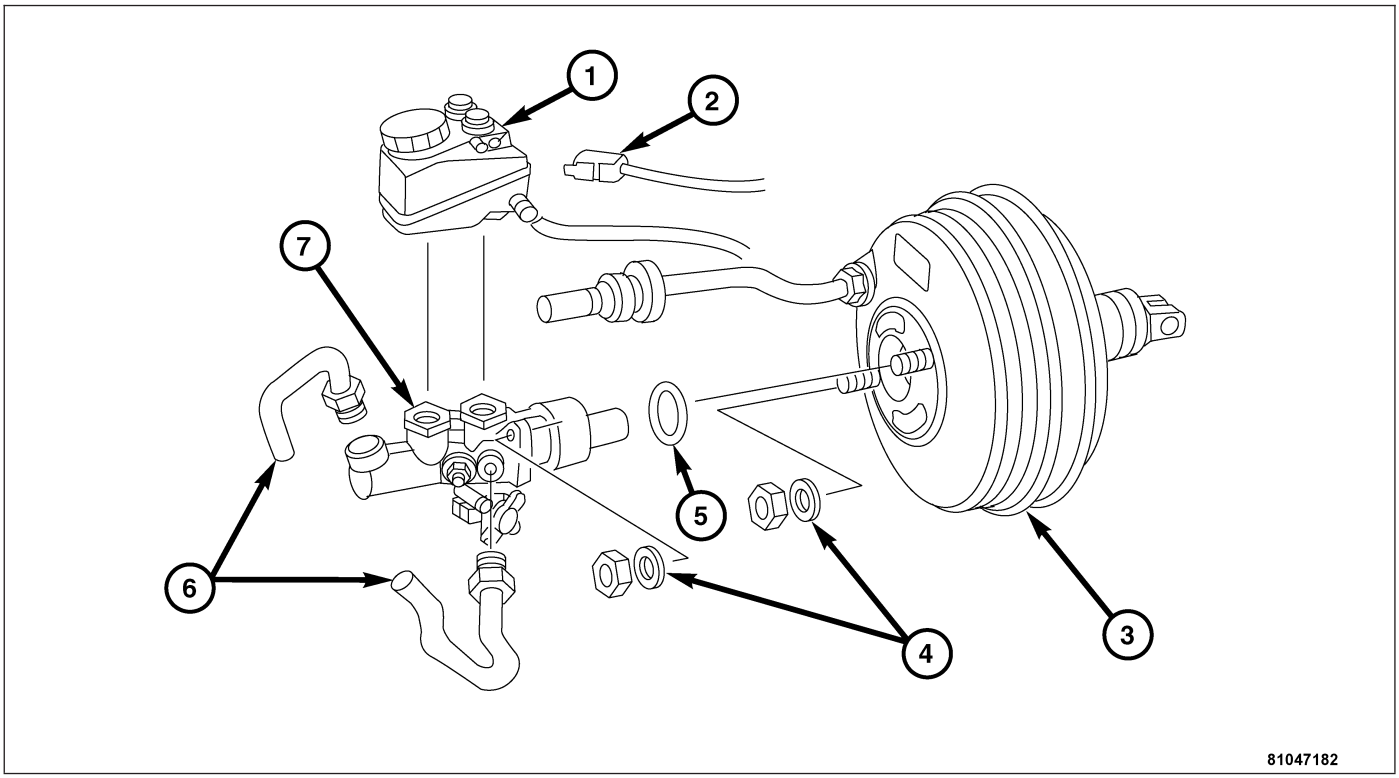

1 - FLUID RESERVOIR
2 - FLUID LEVEL SENSOR CONNECTOR
3 - POWER BOOSTER
4 - MASTER CYLINDER NUTS
5 - O-RING
6 - BRAKE LINES
7 - MASTER CYLINDER

1. Bleed the master cylinder on a bench. **Refer to Page 5-46**.
2. Install the master cylinder (7) to the booster (3). Install the mounting nuts (4) and tighten to 20 N·m (15 lb. lbs.).
3. Install the brake lines (6) to the master cylinder (7). Tighten to 14 N·m (10 ft. lbs.).
4. Connect the fluid level sensor harness connector (2) to the fluid reservoir (1).
5. Fill and bleed the brake system.
   - Manual. **Refer to Page 5-9**.
   - Pressure. **Refer to Page 5-9**.

POWER BRAKE BOOSTER

DESCRIPTION

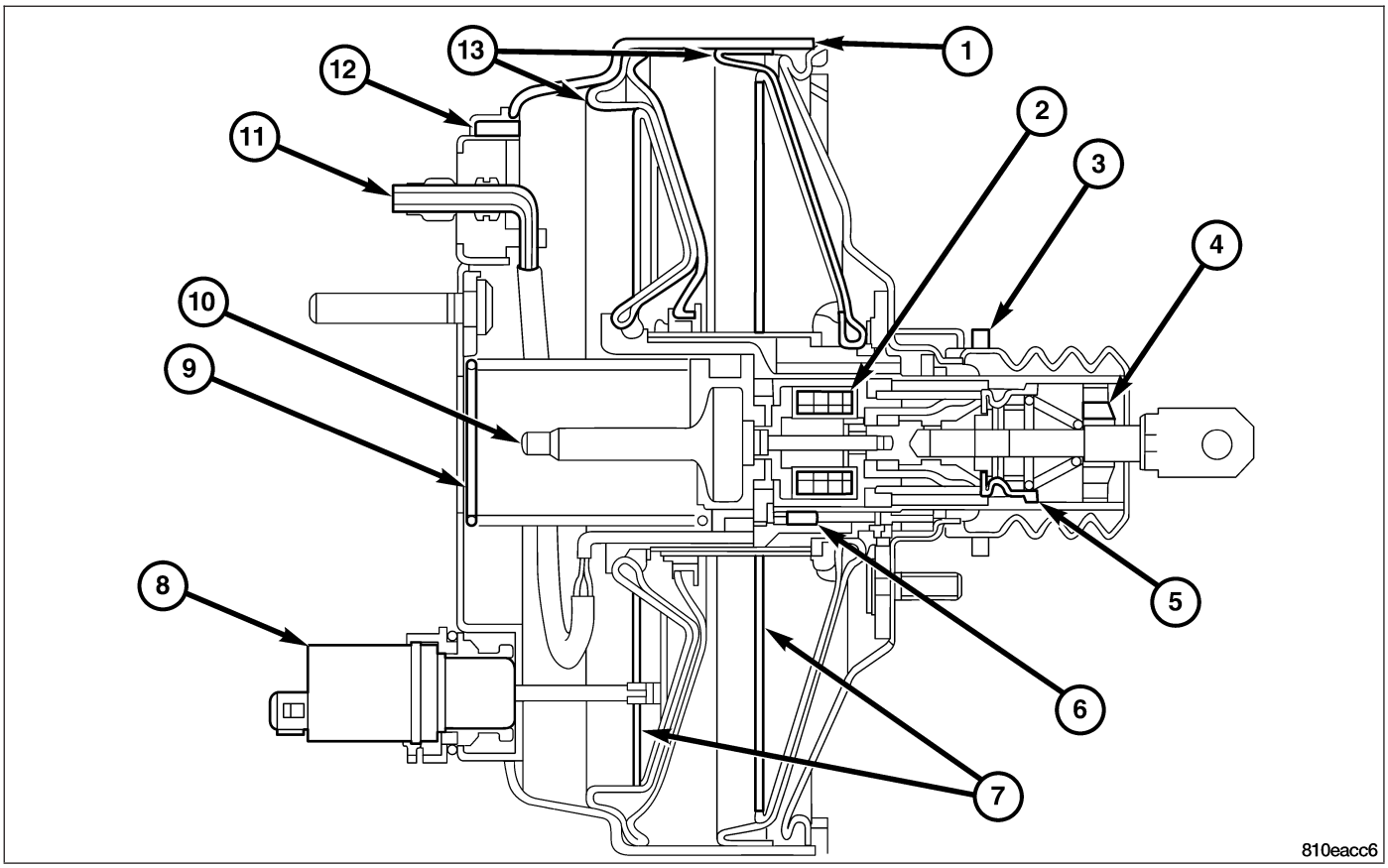

1 - BAS BRAKE BOOSTER
2 - BAS SOLENOID VALVE
3 - AIR FILTER
4 - AIR FILTER
5 - POPPET VALVE
6 - BAS RELEASE SWITCH
7 - VACUUM PISTON
8 - BAS DIAPHRAGM TRAVEL SENSOR
9 - COMPRESSION SPRING
10 - OUTPUT ROD
11 - CABLE CONNECTOR FOR RELEASE SWITCH AND SOLENOID VALVE
12 - VACUUM CONNECTION
13 - POWER DIAPHRAGM

The vacuum-powered brake booster has two diaphragms. The BAS solenoid valve (2) and the BAS release switch (6) are built into the vacuum-powered brake booster (1) and cannot be serviced. The entire vacuum-powered brake booster must be replaced if the BAS solenoid valve (2) or the BAS release switch (6) need to be replaced.

The BAS diaphragm travel sensor (8) and if necessary the BAS control module (NOT SHOWN) are the only components that can be serviced.

OPERATION

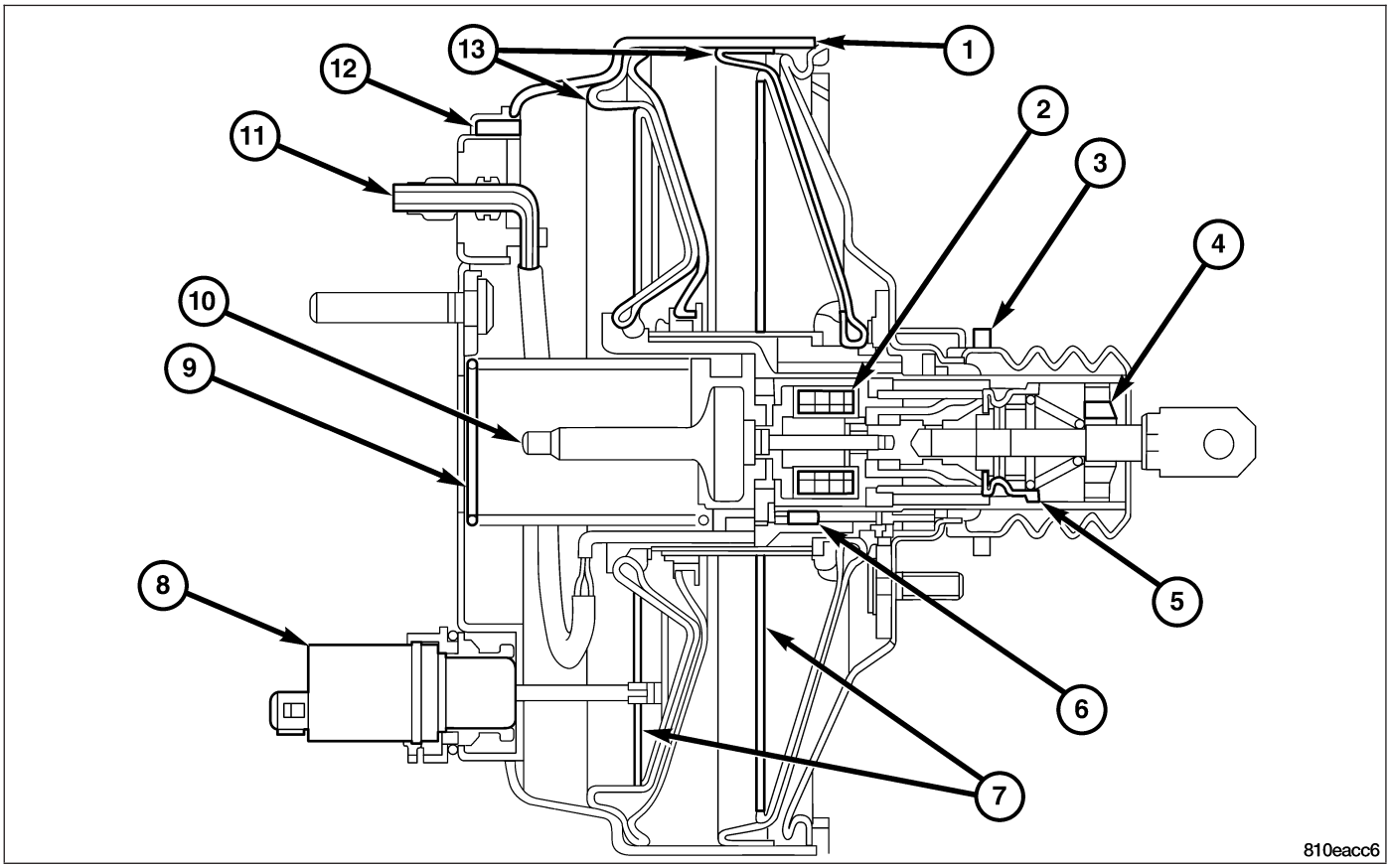

1 - BAS BRAKE BOOSTER
2 - BAS SOLENOID VALVE
3 - AIR FILTER
4 - AIR FILTER
5 - POPPET VALVE
6 - BAS RELEASE SWITCH
7 - VACUUM PISTON
8 - BAS DIAPHRAGM TRAVEL SENSOR
9 - COMPRESSION SPRING
10 - OUTPUT ROD
11 - CABLE CONNECTOR FOR RELEASE SWITCH AND SOLENOID VALVE
12 - VACUUM CONNECTION
13 - POWER DIAPHRAGM

The BAS vacuum-powered brake booster functions like a typical brake booster.

An emergency stop is detected by the BAS control module by the BAS diaphragm travel sensor (8). In the case of a BAS brake application, the BAS solenoid valve (2) opens the poppet valve (5), which admits atmospheric pressure from inside the vehicle from the air filters (3-4) located at the rear of the BAS vacuum-powered brake booster (1).

The full assistance from the brake booster is transmitted to the master cylinder from the output rod (10). When the brake application is terminated, the control module receives a signal from the BAS release switch (6) and the BAS solenoid valve (2) closes again. The BAS assistance is terminated.

REMOVAL

1. Remove the master cylinder. **Refer to Page 5-46**.
2. Disconnect the vacuum hose (1) at the booster check valve (2).

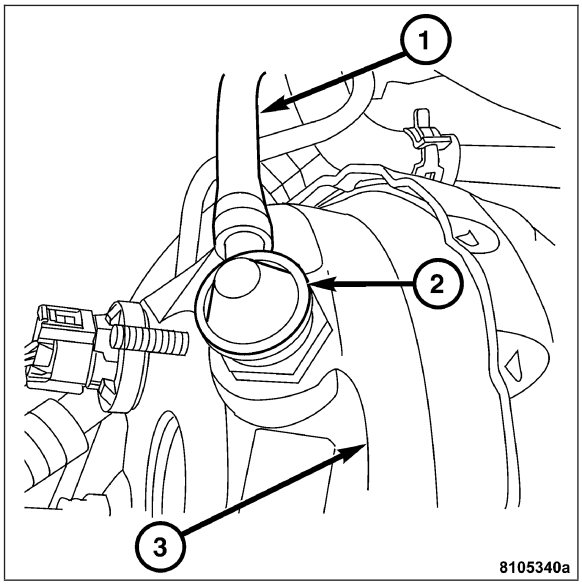

3. Remove the brake rod pin retaining clip (4) that holds the boosters push rod (1) to the pedal (3). Then slide the push rod off the pin (2).

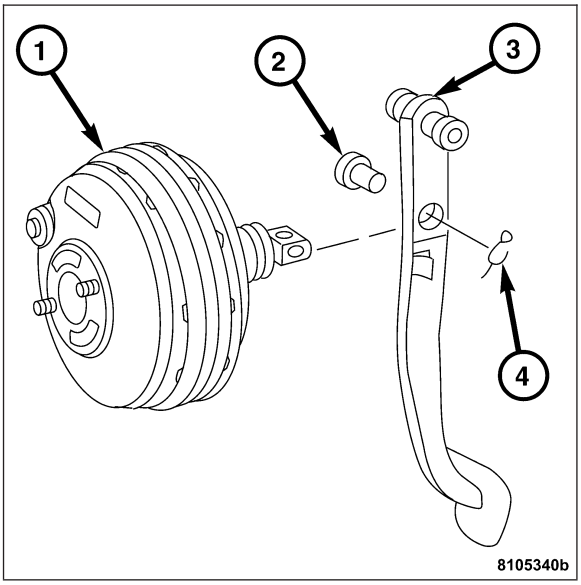

4. Remove the booster retaining nuts (2) and the gasket (3) that attach the booster (1) to the dash panel.
5. Slide booster forward, tilt the booster upward slightly, then remove the booster from the engine compartment.

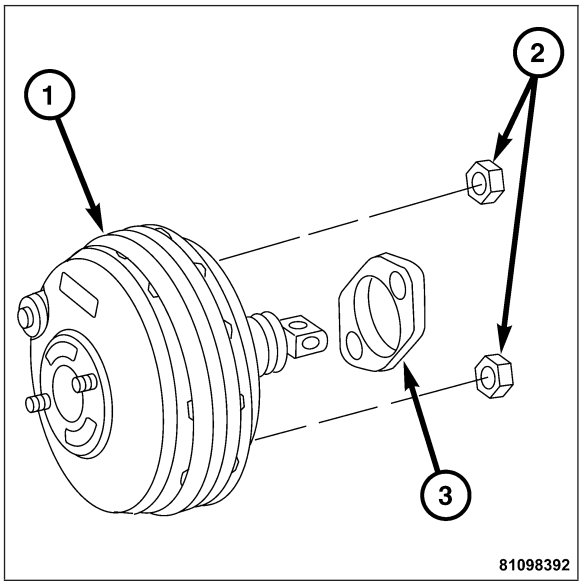

INSTALLATION

1. Install a new booster gasket (3).
2. Align and position the booster (1) on the dash panel.
3. Lubricate the pedal pin with Mopar multi-mileage grease.
4. Install the booster retaining nuts (2). Tighten to 39 N·m (29 ft. lbs.).

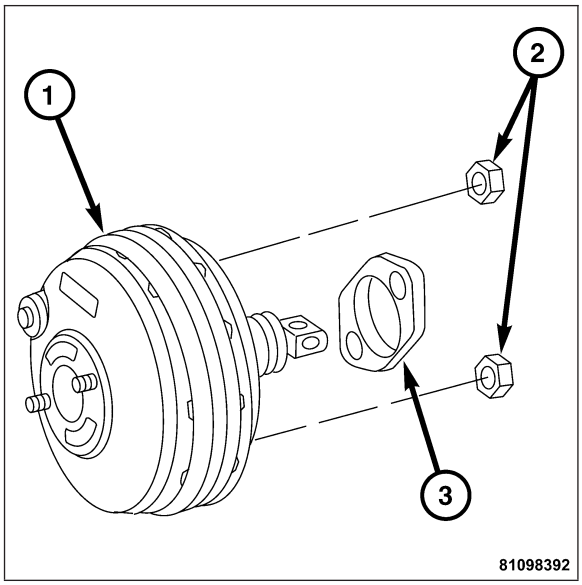

5. Install the brake rod pin (2) and retaining clip (4).

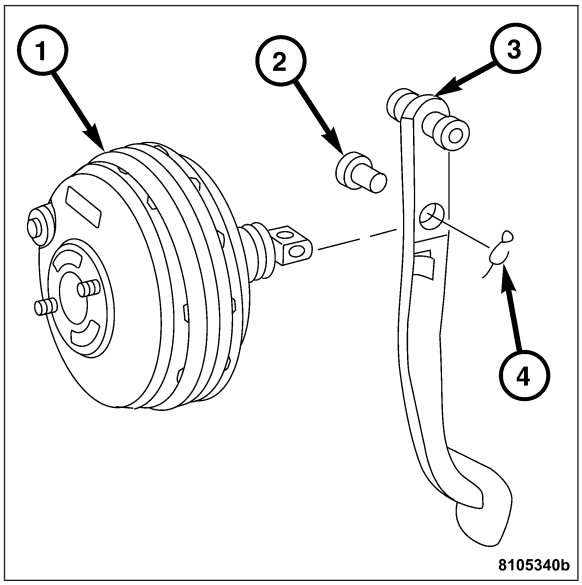

6. Check the condition of the grommet (2) that secures the check valve in the booster (3). Replace the grommet if it is worn or damaged. Install the vacuum hose (1) to booster check valve.
7. Install the master cylinder with a new gasket and retaining nuts. **Refer to Page 5-47**.

WARNING: THE MASTER CYLINDER INSTALLATION PROCEDURE MUST BE PERFORM AS WRITTEN OR DAMAGE TO THE BOOSTER/MASTER CYLINDER MAY OCCUR.

8. Fill and bleed the brake system.
   - Manual. **Refer to Page 5-9**.
   - Pressure. **Refer to Page 5-9**.

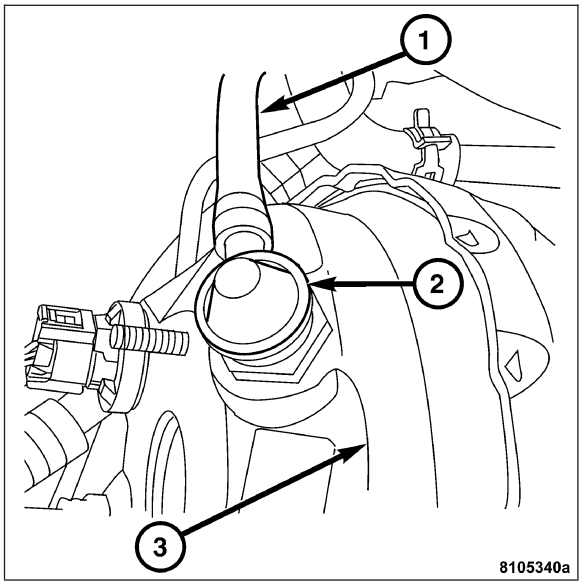

PEDAL

DESCRIPTION

A suspended type brake pedal (5) is used, the pedal pivots on a shaft (3) mounted in the pedal support bracket. The bracket is attached to the bulkhead.

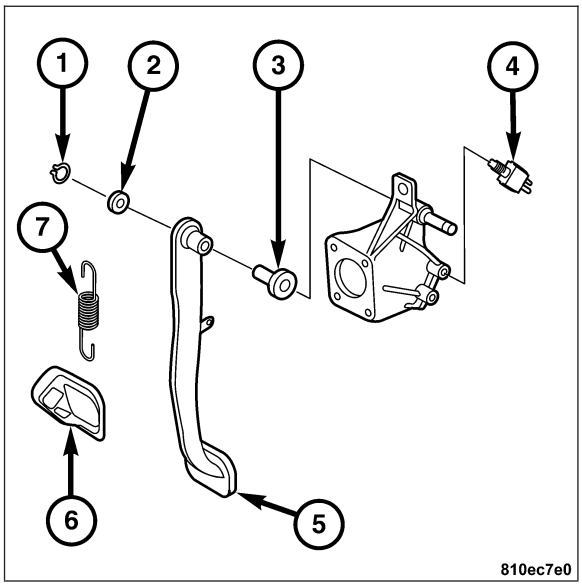

OPERATION

The brake pedal (3) is attached to the booster push rod (1). When the pedal is depressed, the primary booster push rod is depressed which moves the booster secondary rod. The booster secondary rod depresses the master cylinder piston.

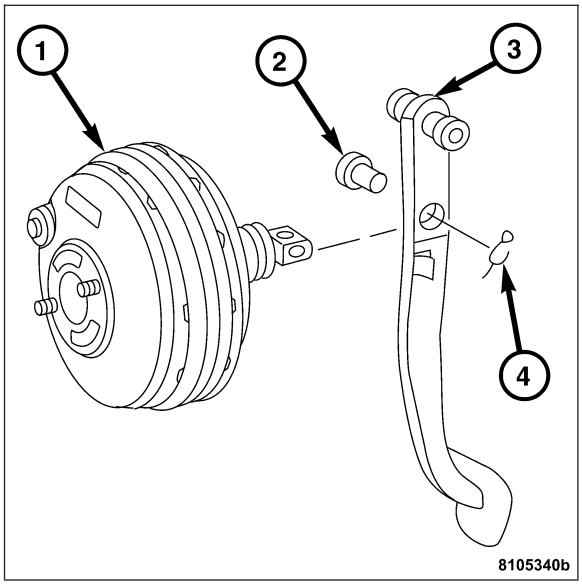

REMOVAL

1. Remove the instrument panel lower cover (2) off of the instrument panel.

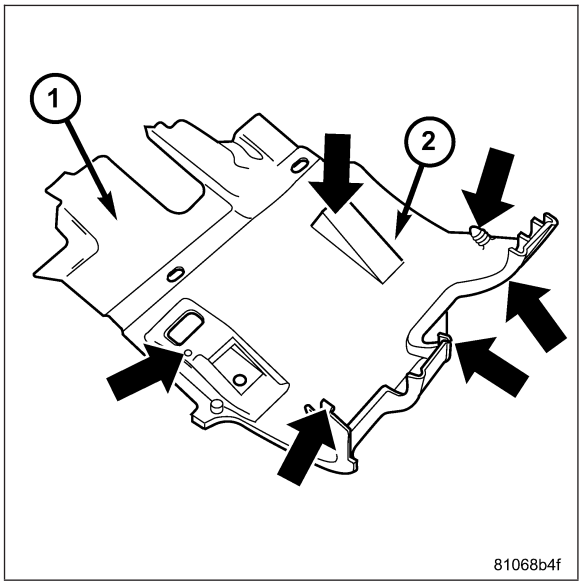

2. Disconnect the stop lamp connector from the stop lamp switch (1).

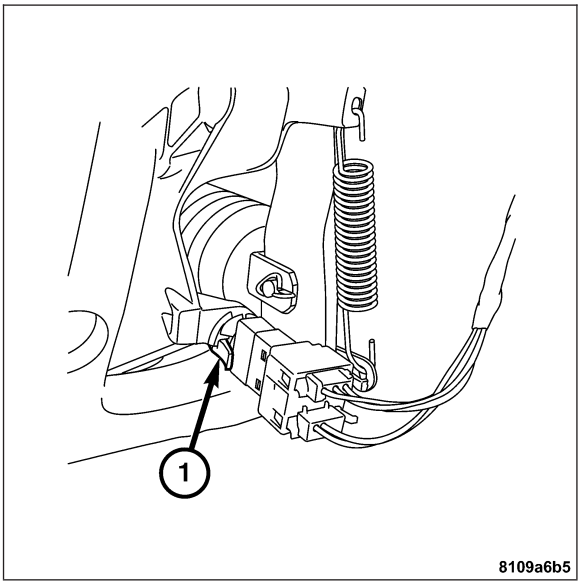

3. Remove the return spring (7).
4. Remove the c-clip (1).
5. Remove the washer (2).
6. Remove the bushing (3).
7. Remove the brake pedal from the bracket (5).

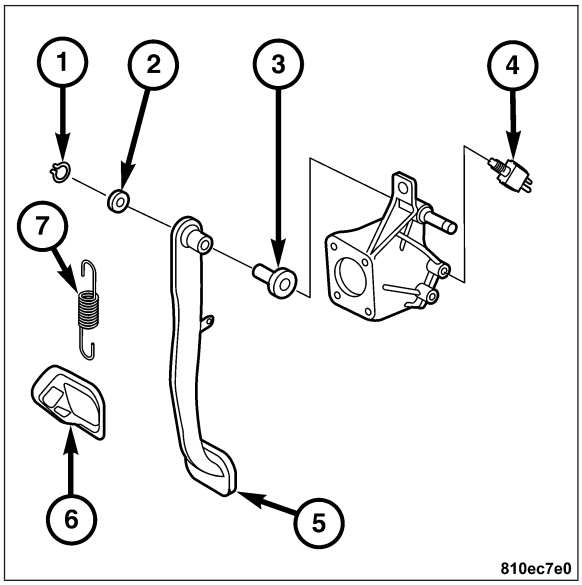

INSTALLATION

1. Install the brake pedal (5) to the bracket.
2. Install the bushing (3).
3. Install the washer (2).
4. Install the c-clip (1).
5. Install the return spring (7).

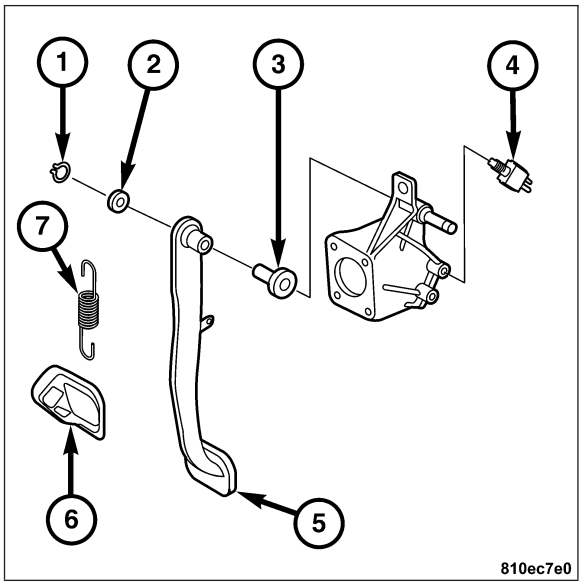

6. Install the stop lamp switch electrical connector (1) to the stop lamp switch.

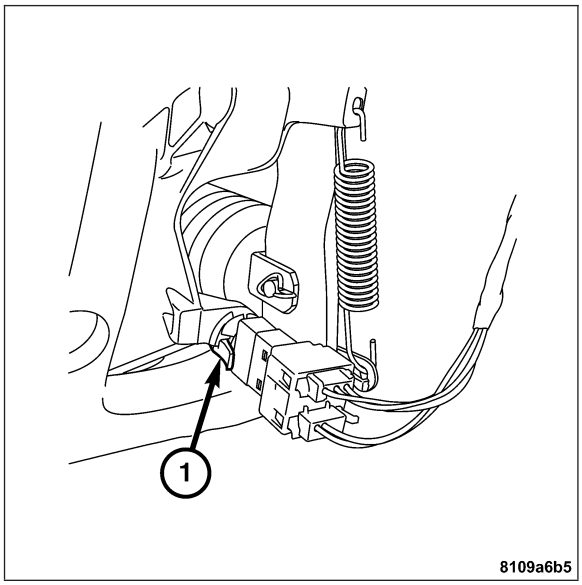

7. Install the instrument panel lower cover (2) to the instrument panel.

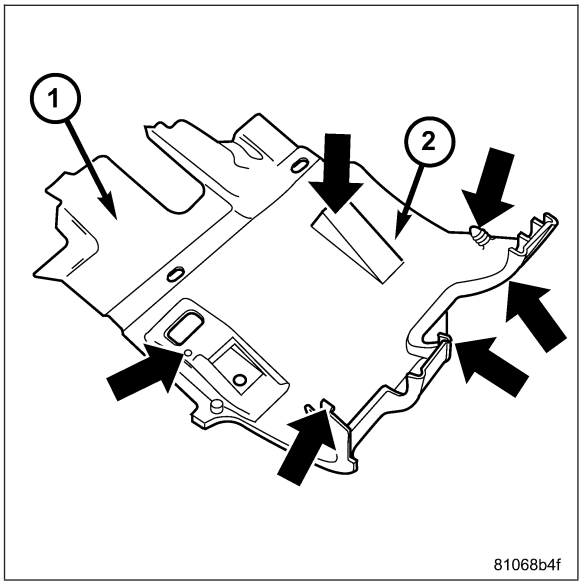

PARKING BRAKE

OPERATION

The parking brakes are operated by an automatic tensioner mechanism built into the hand lever (2) and cable system (1). The front cable (1) is connected to the hand lever and the equalizer.

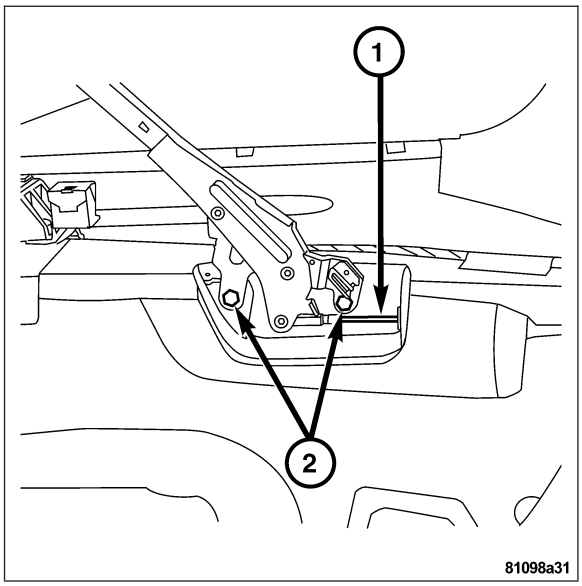

A set of drum type brake shoes are used for parking brakes. The shoes are mounted to the rear wheel hub. The parking brake drum is integrated into the rear disc brake rotor. The parking brake system consists of the adjuster (1), upper and lower return springs (2-5), hold down springs (3) and the actuator (4).

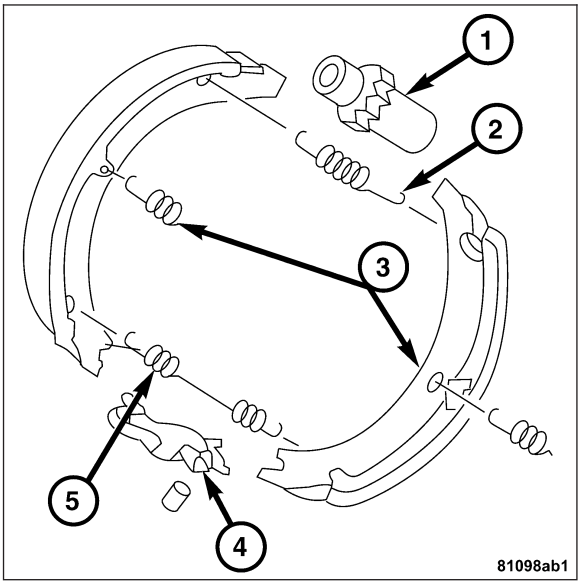

Parking brake cable (2) adjustment is controlled by an cable equalizer mechanism (1). The rear cables (2) are attached to the equalizer which uses a return spring to maintain tension and slides on the body. The front cable (5) is bolted to the equalizer (1) and the parking brake lever. The equalizer tensioner bolt (3) is used to take up the slack in the cables and as a final adjustment to the parking brake system.

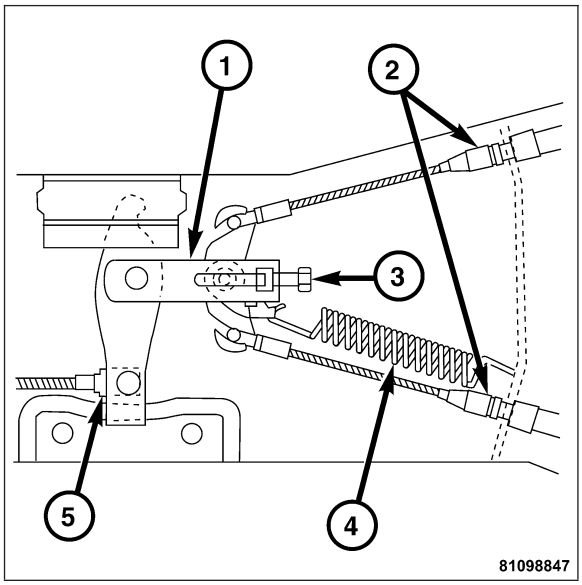

The rear cables (2) attached to the equalizer and then to the parking brake shoe actuator (3) which pushes the brake shoes against the drum in the rear rotor.

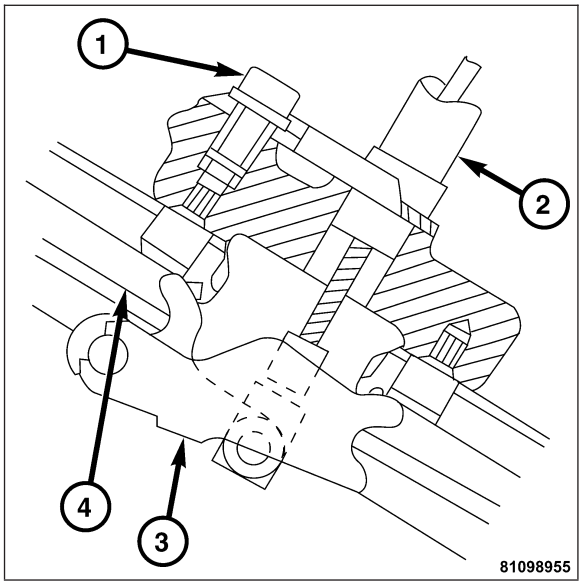

DIAGNOSIS AND TESTING

PARKING BRAKE

Note: Parking brake adjustment is controlled by an equalizer cable tensioner and does require adjustment. The only adjustment that may be necessary would be to the equalizer tensioning bolt.

The parking brake switch is in circuit with the red warning lamp in the dash. The switch will cause the lamp to illuminate only when the parking brakes are applied. If the lamp remains on after parking brake release, the switch or wires are faulty.

If the red lamp comes on a fault has occurred in the front or rear brake hydraulic system.

If the red warning lamp and yellow warning lamp come on, the electronic brake distribution may be at fault.

In most cases, the actual cause of an improperly functioning parking brake (too loose/too tight/won't hold), can be traced to a parking brake component.

Note: The leading cause of improper parking brake operation, is excessive clearance between the parking brake shoes and the shoe braking surface. Excessive clearance is a result of lining and/or drum wear, drum surface machined oversize.

Excessive parking brake lever travel (sometimes described as a loose lever or too loose condition), is the result of worn brake shoes, improper brake shoe adjustment, or improperly assembled brake parts.

A too loose condition can also be caused by inoperative or improperly assembled parking brake shoe parts.

A condition where the parking brakes do not hold, will most probably be due to a wheel brake component.

Items to look for when diagnosing a parking brake problem, are:

- Brake shoe wear
- Drum surface (in rear rotor) machined oversize
- Front cable not secured to lever
- Rear cable not attached to actuator
- Rear cable seized
- Parking brake lever not seated
- Parking brake lever bind

ADJUSTMENTS

ADJUSTMENT

Note: Adjust the parking brake only if the hand brake lever can be pulled up more than 3 notches without having an adequate solid braking effect.

1. Raise and support the vehicle.
2. Loosen the parking brake cable tensioning bolt (3).
3. Remove one wheel bolt on each rear wheel.

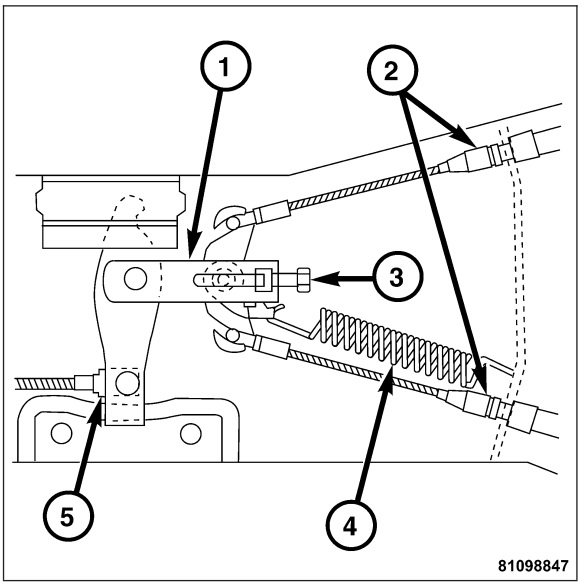

4. Rotate the rear wheel (2) until the parking brake adjuster wheel (1) can be seen through the removed rear wheel bolt. Then using a screwdriver or suitable tool (3), turn the adjusting wheel (1) until the parking brake shoes are applied and the rear wheel (2) no longer turns freely.
   - Right side: Turn the adjusting wheel from the bottom to top.
   - Left side: Turn the adjusting wheel from the top to bottom.

Note: When slackening the adjusting wheels ensure that both sides are turned back by the same number of teeth.

5. Turn the adjusting wheel back until the rear wheel turns freely.

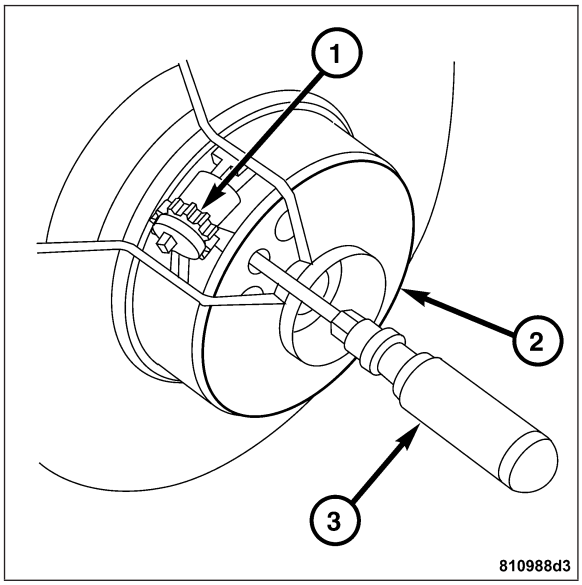

6. Tighten the parking brake cable tensioning bolt (3) until the parking brake cables (2) no longer sag.
7. Firmly apply the parking brake several times.

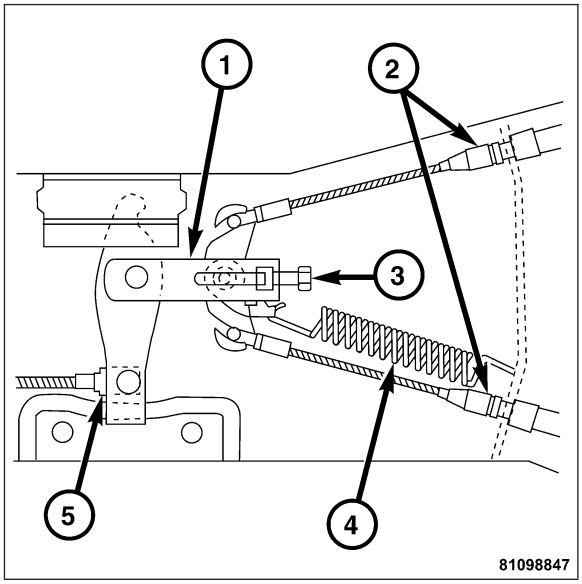

8. To fine adjust the parking brake. Tighten the parking brake tensioning bolt (3) until the parking brake lever can be moved one tooth with a moderate effort of approximately 90-120 N·m.
9. Install the wheel bolt and tighten to 110 N·m (81 ft. lbs.).

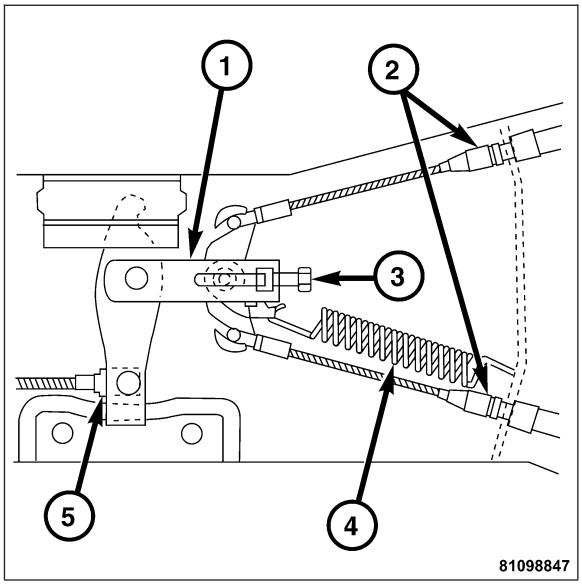

CABLES

REMOVAL

1. Raise and support the vehicle.
2. Remove the wheel and tire assembly.
3. Remove the rear caliper assembly bolts (1). **Refer to Page 5-25**.

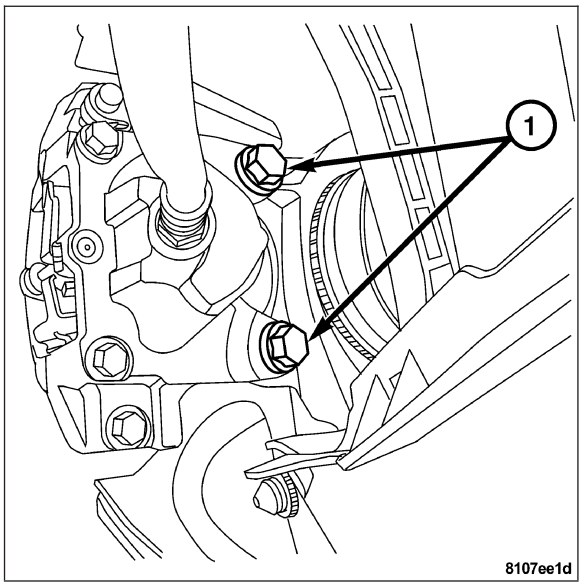

4. Remove the rear brake rotor (1). **Refer to Page 5-38**.

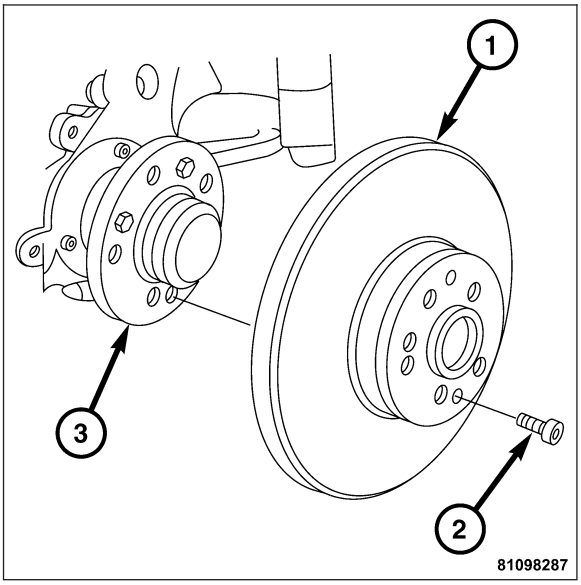

5. Remove the parking brake shoe assembly (1-5). **Refer to Page 5-70**.

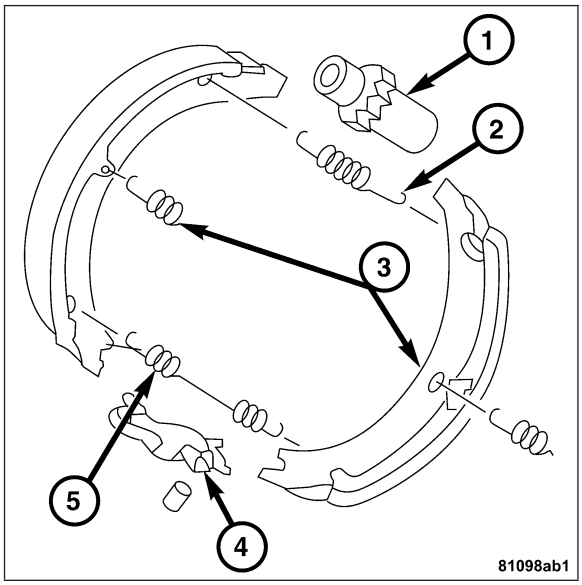

6. Loosen the parking brake cable equalizer tensioner bolt (3).

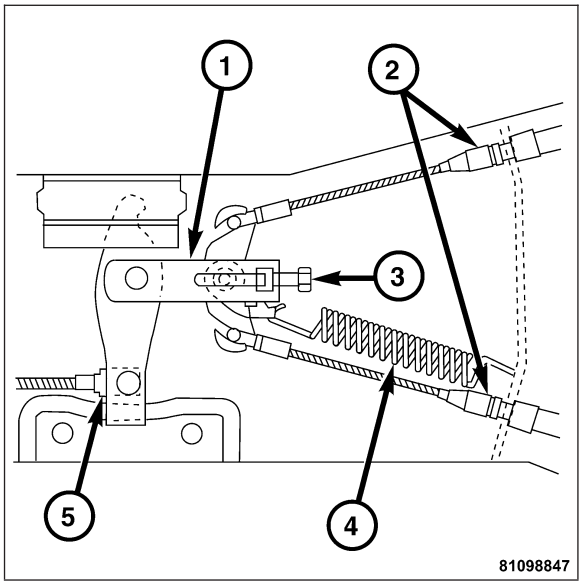

7. Remove the front parking brake cable to the parking brake cable equalizer (1) retaining bolt (5).

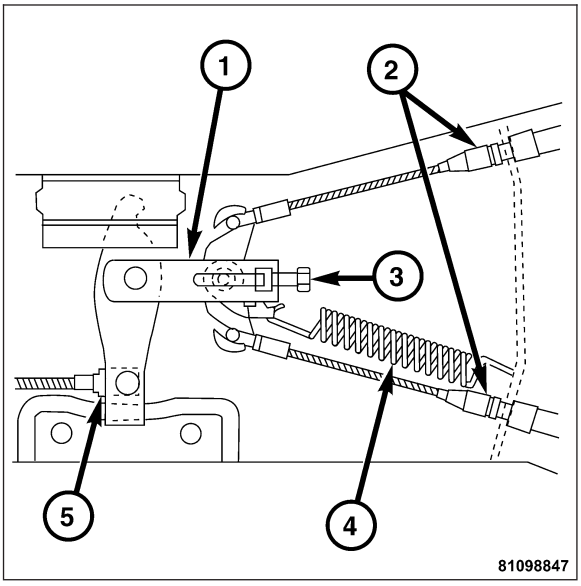

8. Remove the parking brake cables (2) from the parking brake cable equalizer (1).

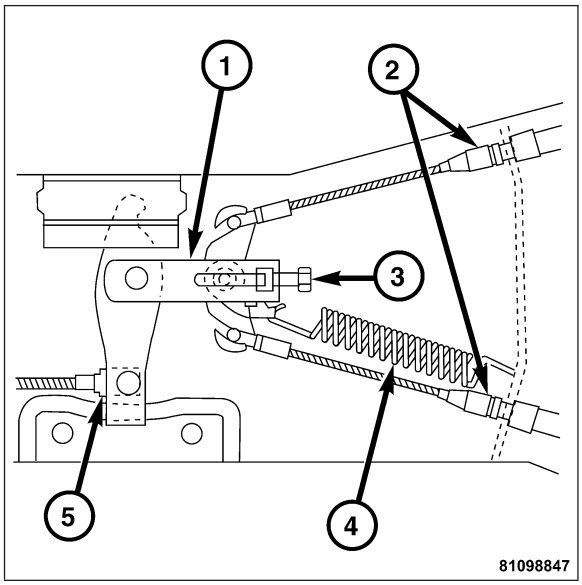

9. Remove the parking brake shoe actuator arm by pulling the actuator arm (3) away from the rear wheel carrier assembly.
10. Open the actuator arm (3) top cover exposing the parking brake cable pin.
11. Push the cable pin through the arm and remove the actuator from the cable (2).
12. Remove the parking brake cable (2) from the rear wheel carrier assembly (4) by removing the mounting bolt (1).
13. Pull the parking brake cable (2) from the eyelets and remove it from vehicle.

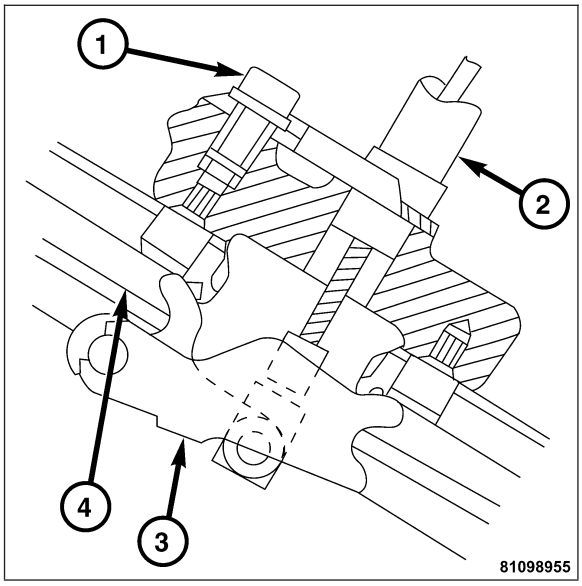

INSTALLATION

1. Install the parking brake cable through the eyelets.
2. Attach the parking brake cable (2) to the rear wheel carrier assembly (4) by installing the mounting bolt (1). Tighten to 20 N·m (15 ft. lbs.).
3. Push the cable pin through the arm (3) attaching the actuator to the cable (2).
4. Close the actuator arm top cover (3) encasing the cable pin.
5. Install the actuator arm (3) to the rear wheel carrier assembly (4) ensuring the actuator rests on the brass pins and it is not binding.

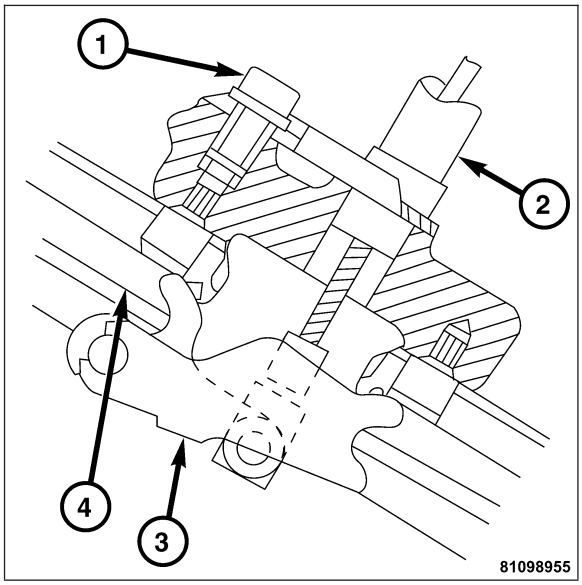

6. Install the parking brake cables (2) to the parking brake cable equalizer.
7. Install the parking brake cable equalizer to the front parking brake cable mounting bolt (5).

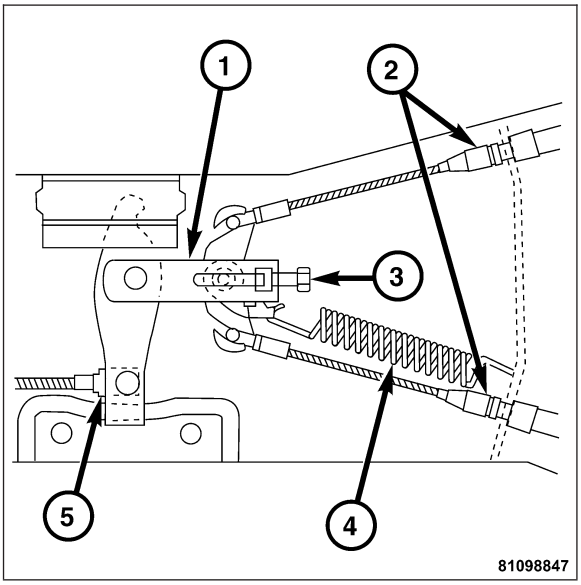

8. Install the parking brake shoe assembly (1-5). **Refer to Page 5-73**.

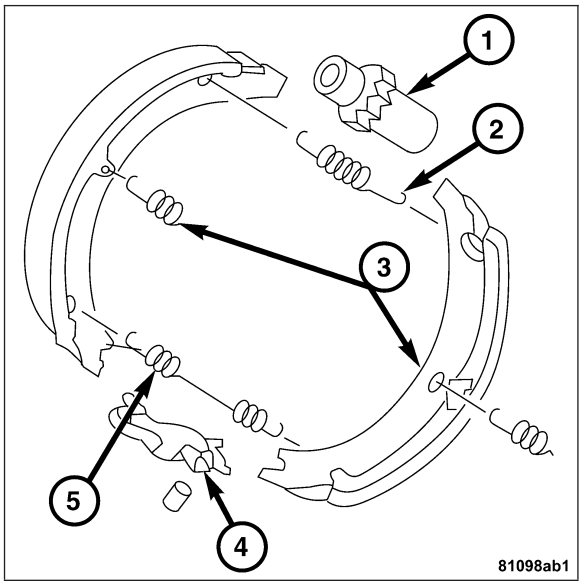

9. Install the rear brake rotor (1). **Refer to Page 5-40**.

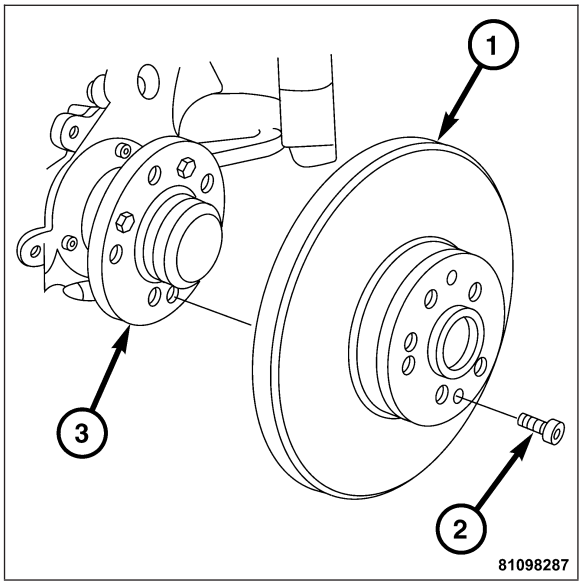

10. Install the rear caliper assembly bolts (1). **Refer to Page 5-32**.
11. Adjust the parking brakes. **Refer to Page 5-59**.
12. Install the wheel and tire assembly. **Refer to Page 22-42**.
13. Lower vehicle and verify parking brake operation. If parking brakes need to be adjusted. **Refer to Page 5-59**.

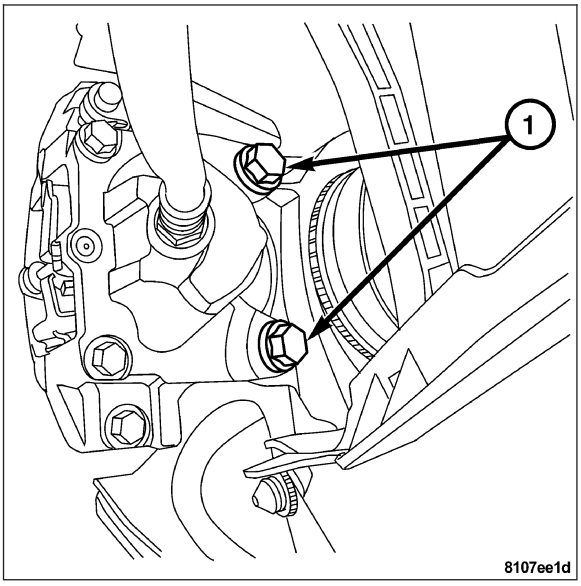

LEVER

REMOVAL

1. Remove the parking brake equalizer (1) return spring (4).
2. Loosen the parking brake equalizer tensioning bolt (3).
3. Remove the bolt (6) at the parking brake equalizer (1) attaching the front parking brake cable to the equalizer.

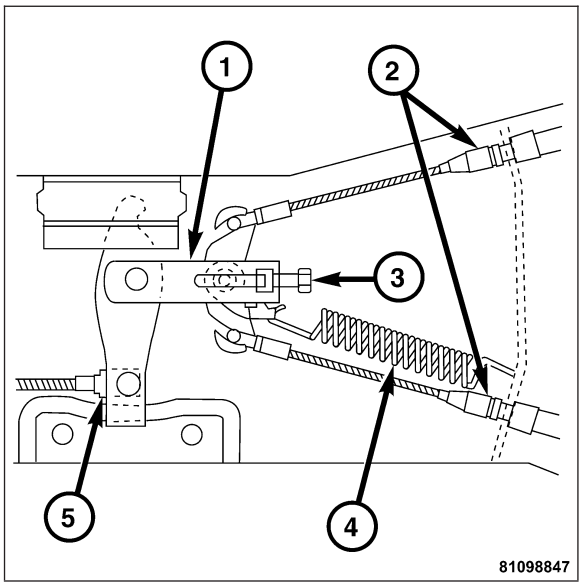

Note: The rubber handle can only be removed from the parking brake lever with great force (suction). If necessary cut open with a suitable tool.

4. Remove the shifter bezel (1). **Refer to Page 23-173**.

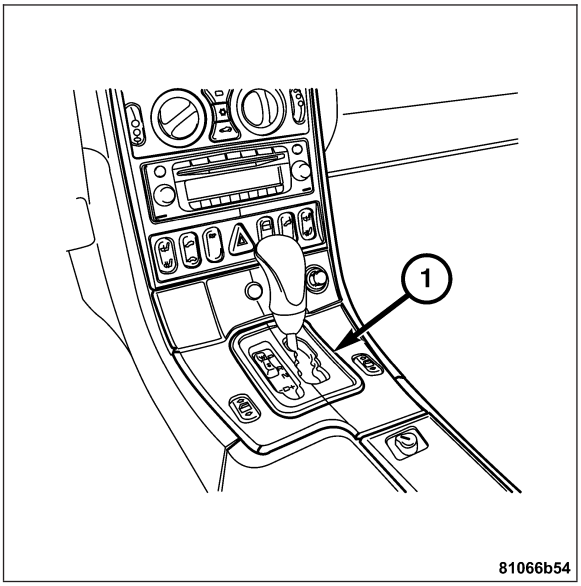

5. Pull the rubber handle (1) off of the parking brake lever.
6. Remove the center console (2). **Refer to Page 23-173**.
7. Disconnect the parking brake switch harness connector.

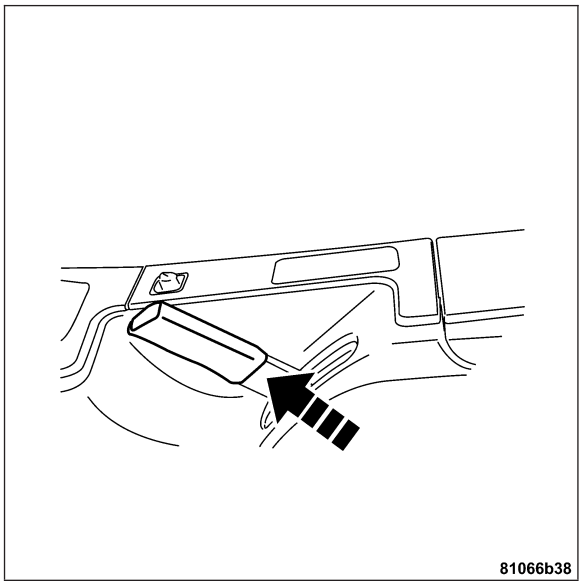

Note: The front parking brake cable will come with the parking brake handle as an assembly.

8. Remove the mounting bolts (2) and pull out the parking brake lever assembly (1) using a forward motion.

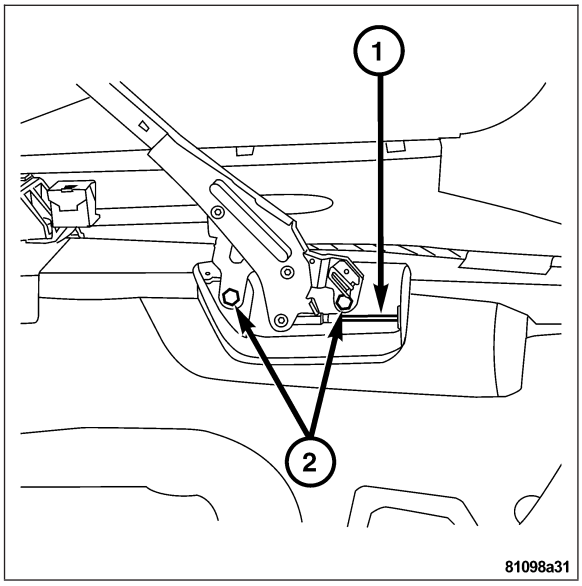

INSTALLATION

1. Install the front parking brake cable (1) through the hole in the floor. Then install the parking brake lever and bolts (2). Tighten to 20 N·m (15 ft. lbs.).
2. Connect the parking brake switch harness connector.

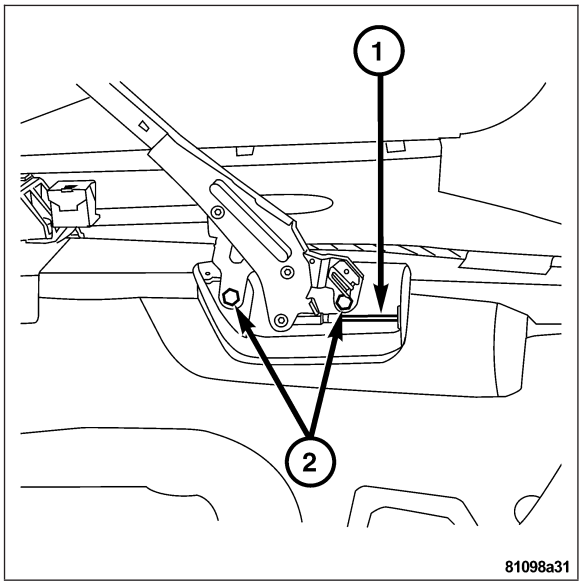

3. Install the center console (2). **Refer to Page 23-183**.
4. Install the rubber handle (1) onto the parking brake lever.

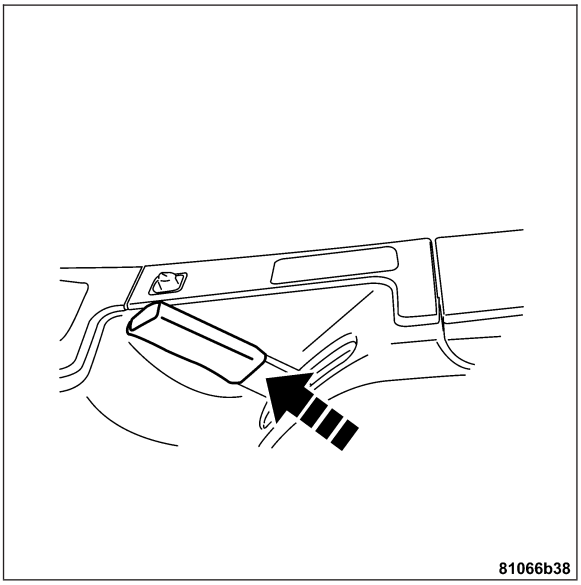

5. Install the shift bezel (1). **Refer to Page 23-183**.

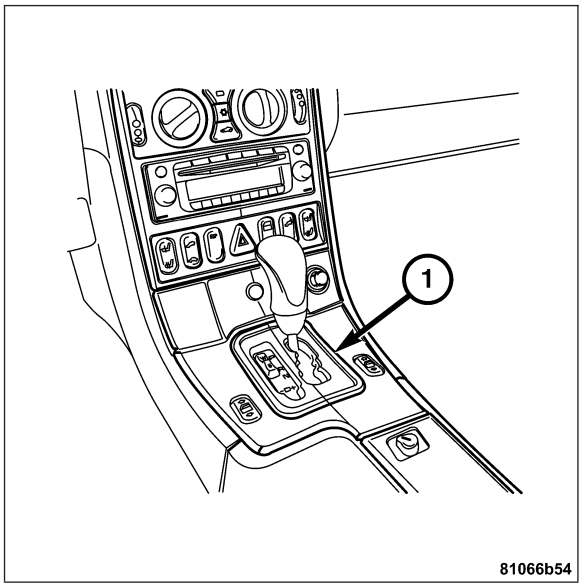

6. Install the parking brake cable equalizer (1) to the front parking brake cable mounting bolts (5).

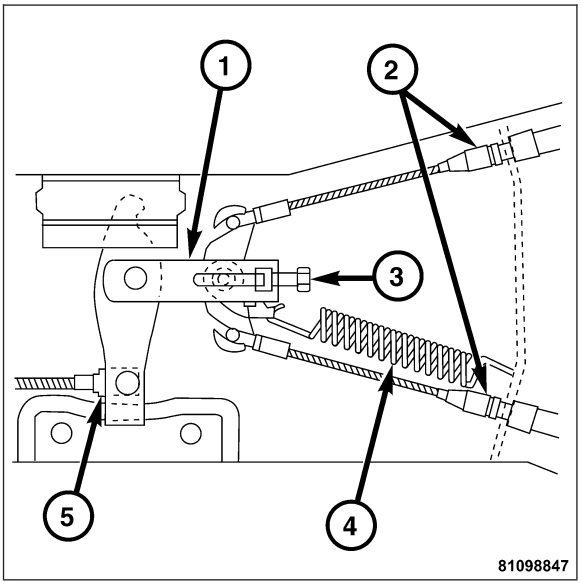

7. Tighten the parking brake equalizer tensioning bolt (3).
8. Attach the return spring (4) from the equalizer (1) to the body frame.
9. Adjust the parking brake. **Refer to Page 5-59**.

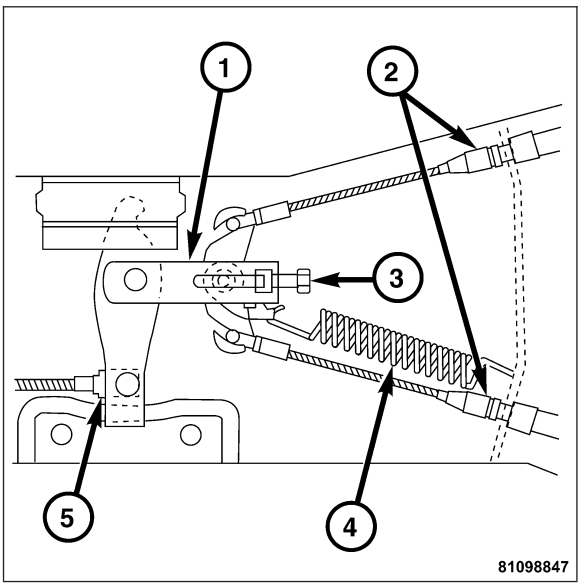

SHOES

REMOVAL

1. Raise and support the vehicle.
2. Remove wheel and tire assembly.
3. Remove the caliper assembly bolts (1). **Refer to Page 5-25**.

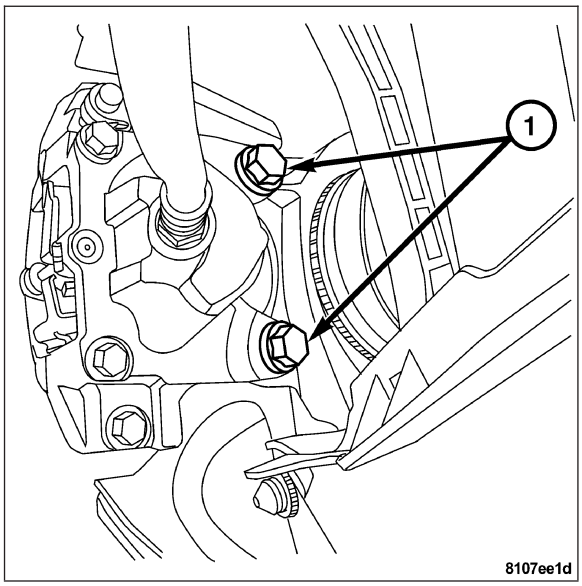

4. Remove the disc brake rotor (1). **Refer to Page 5-38**.

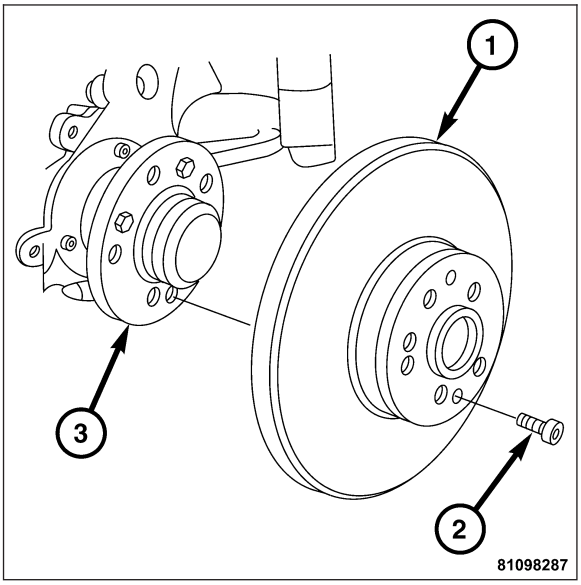

5. Release the parking brake equalizer tensioning bolt (3).

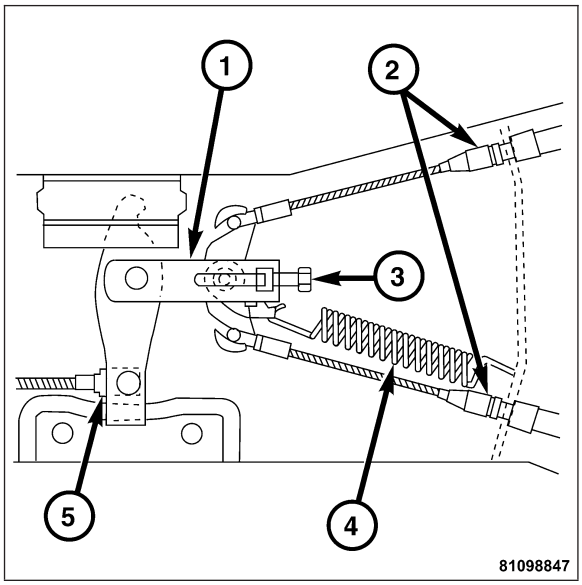

6. Remove the parking brake shoe (1) return spring using a hooked pick (2).

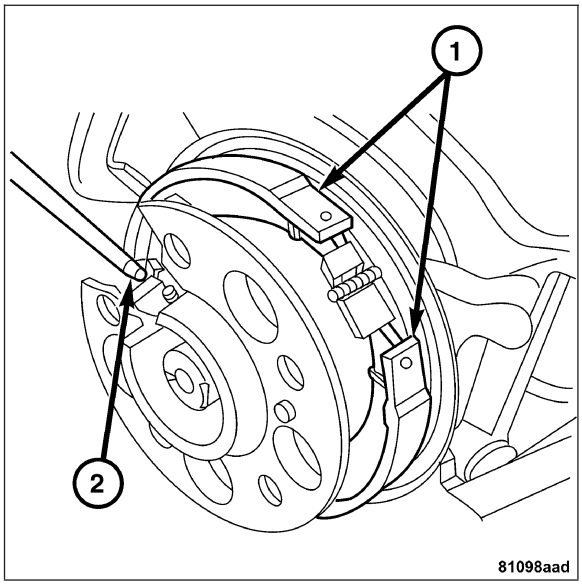

7. Remove the parking brake shoe (1) hold down spring (3) using a pair of needle-nose pliers (2).
8. Remove the parking brake shoes (1) by lifting them over rear axle shaft flange.

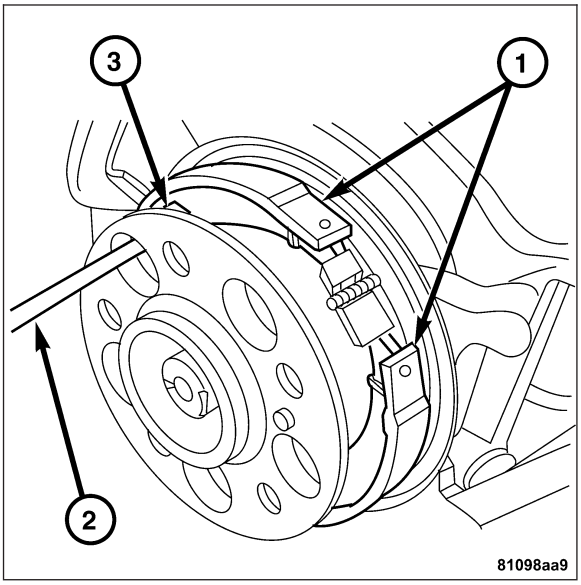

9. Remove the upper parking brake shoe return spring (2).
10. Remove the expanding lock (4).

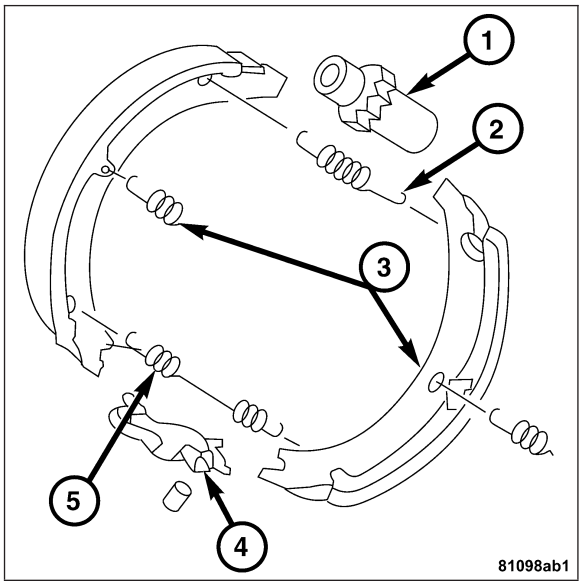

11. The parking brake shoe assembly consists of the following components:
    - (1) Adjuster.
    - (2) Upper return spring.
    - (3) Hold down spring.
    - (4) Expanding lock.
    - (5) Lower return spring.

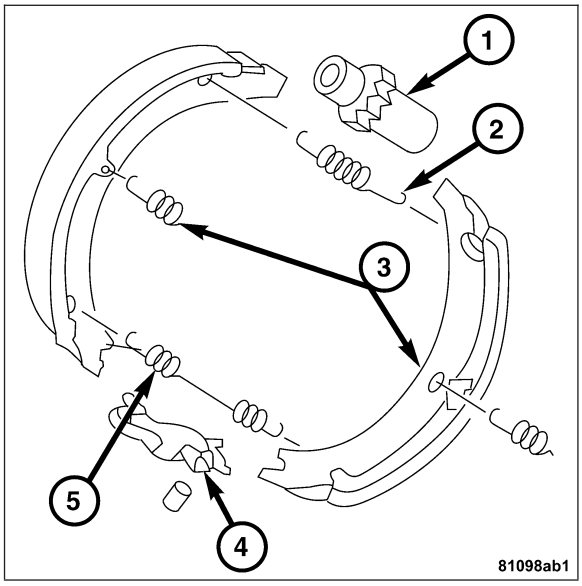

INSTALLATION

Note: Coat all bearing and sliding surfaces on the expanding lock with Anti-seize.

1. Install the parking brake adjuster (1).
2. Install the upper return spring (2).
3. Install the parking brake shoes by placing the assembly over rear axle shaft flange.
4. Install the hold down spring (3) by using a pair of needle-nose pliers (2).

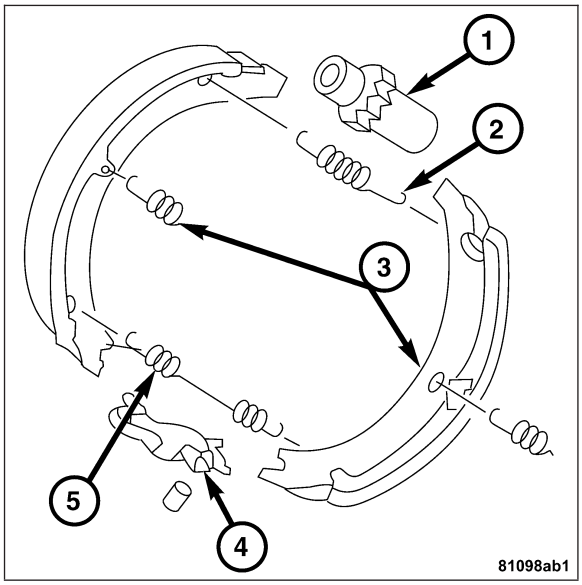

5. Install the return spring by using a hooked tool or needle-nose pliers (2).

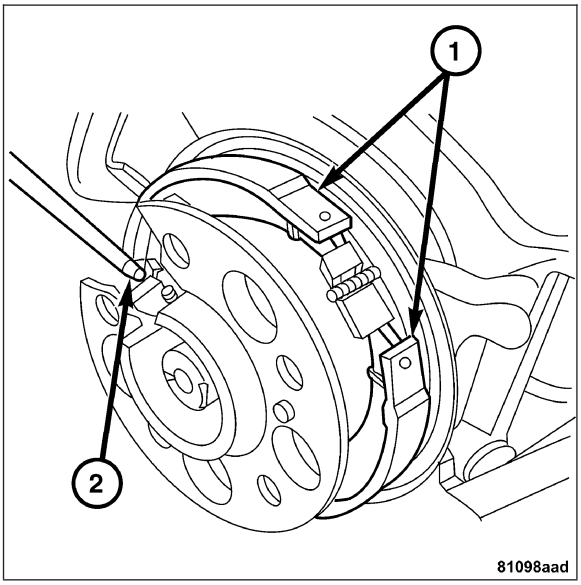

6. Tighten the bolt (3) on the parking brake cable equalizer. **Refer to Page 5-64**.

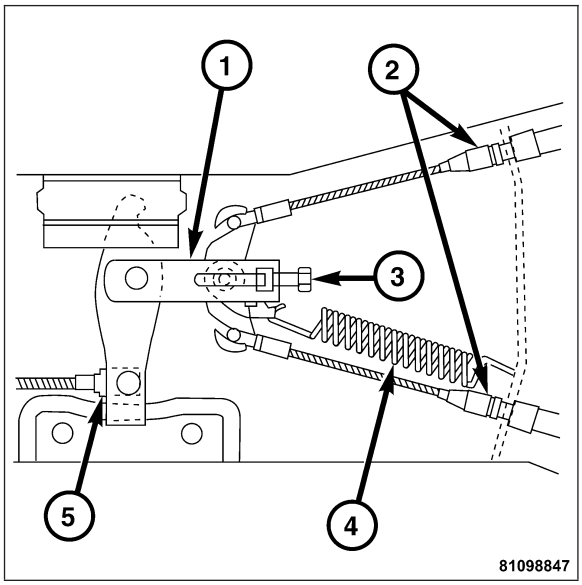

7. Install the disc brake rotors (1). **Refer to Page 5-40**.

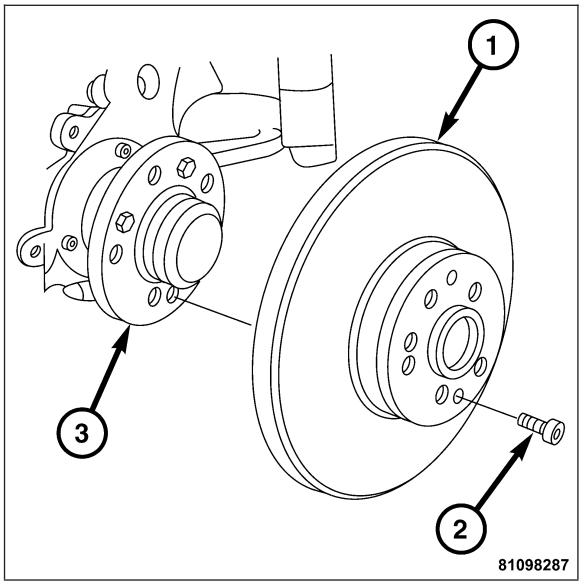

8. Install the caliper assembly bolts (1). **Refer to Page 5-32**.
9. Install the wheel and tire assembly. **Refer to Page 22-42**.

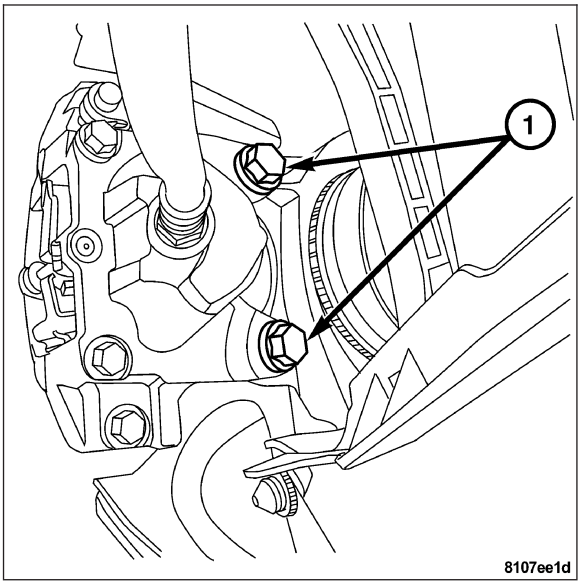

BRAKE FLUID LEVEL SENSOR

REMOVAL

CAUTION: Do not get brake fluid on any painted surfaces. Brake fluid can damage painted surfaces.

Note: The brake fluid level sensor cannot be replaced by itself. You must remove the fluid reservoir.

1. Disconnect the brake fluid level sensor harness connector.
2. Remove the screw attaching the fluid reservoir to the master cylinder.
3. Remove the fluid reservoir from the master cylinder.

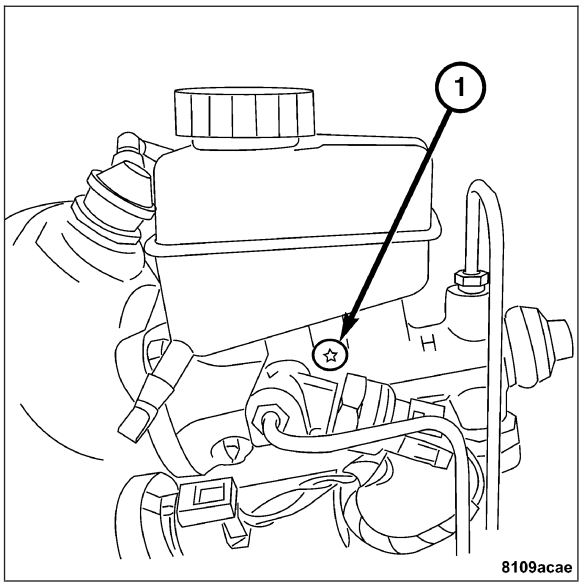

INSTALLATION

1. Install the fluid reservoir to the master cylinder.
2. Install the screw (1) attaching the fluid reservoir to the master cylinder.
3. Connect the brake fluid level sensor harness connector.
4. Fill the reservoir with MOPAR® brake fluid to the proper level.
5. Bleed the braking system. **Refer to Page 5-46**. and **Refer to Page 5-9**.

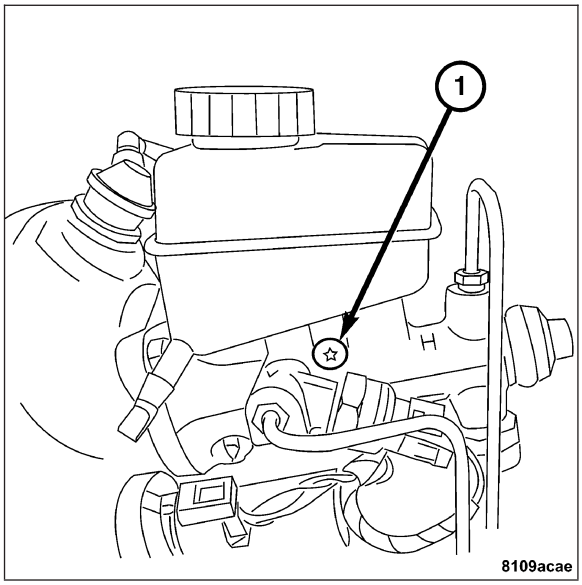

BRAKE PRESSURE SENSOR

REMOVAL

1. Remove the master cylinder (1). **Refer to Page 5-46**.

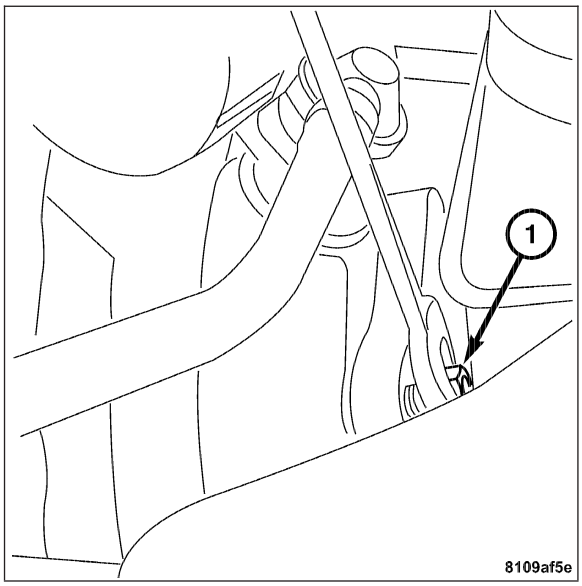

2. Remove the brake pressure sensors (1) from the master cylinder.

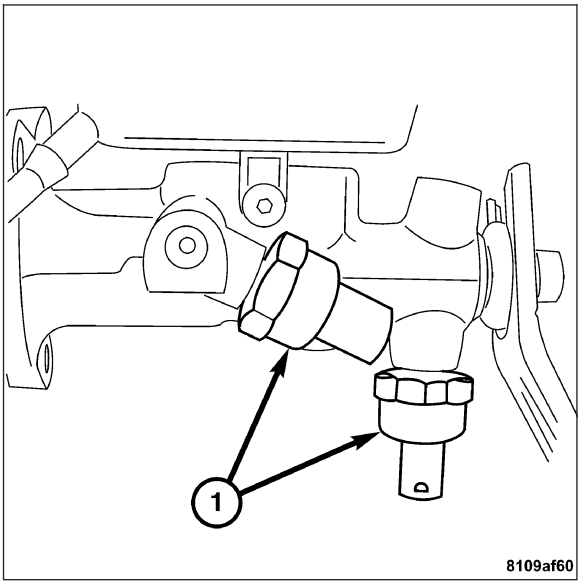

INSTALLATION

1. Install the brake pressure sensors (1).

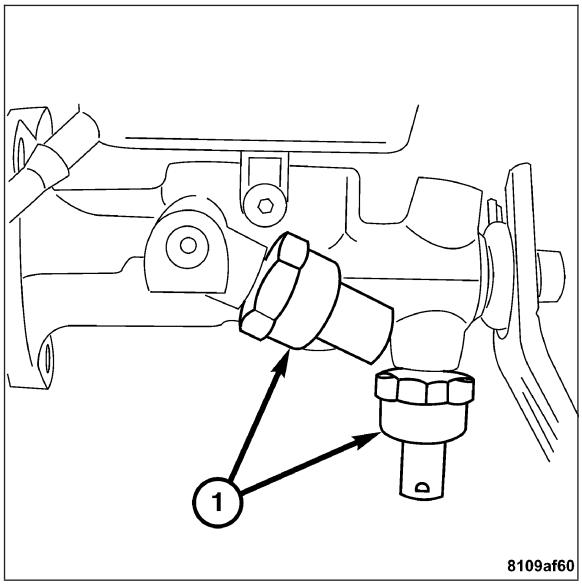

2. Install the master cylinder (1). **Refer to Page 5-47**.
3. Bleed the braking system. **Refer to Page 5-9**.

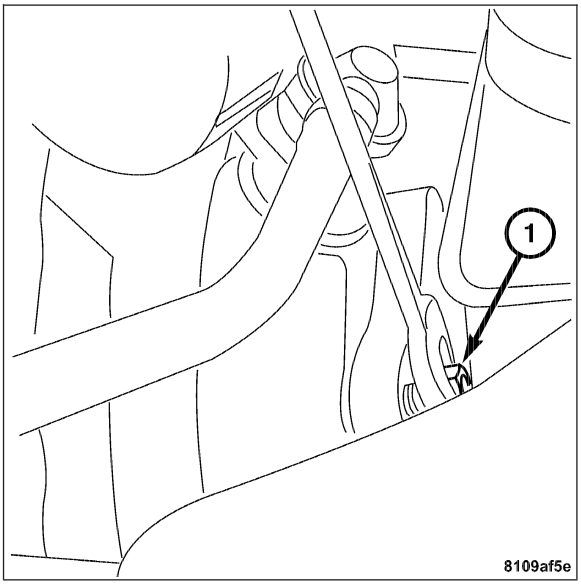

TRAVEL SENSOR

REMOVAL

WARNING: THE DIAPHRAGM TRAVEL SENSOR SEALING RING MAY BE SUCKED INTO THE BRAKE BOOSTER IF VACUUM IS PRESENT. IF THIS HAPPENS, THE BRAKE BOOSTER MUST BE REPLACED.

1. Operate the brake pedal several times until the vacuum in the brake booster is reduced.
2. Unplug the BAS diaphragm travel sensor harness connector.
3. Remove the locking ring (1) by using a suitable pick tool to lift the locking ring up and off the BAS diaphragm travel sensor.
4. Pull the BAS diaphragm travel sensor out of the brake booster.
5. Remove the O-ring from the BAS diaphragm travel sensor.

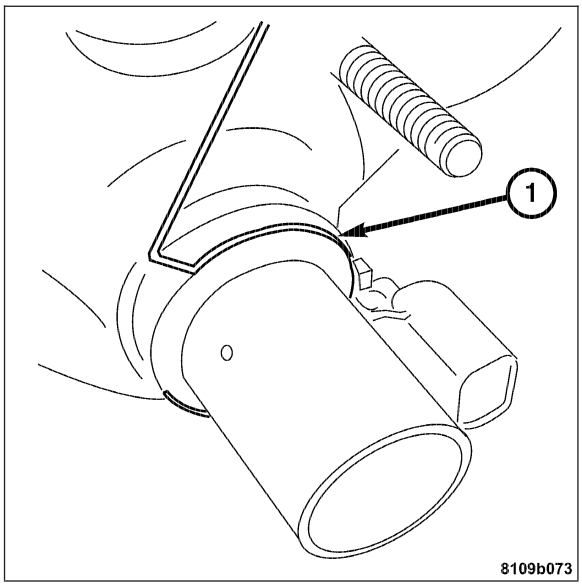

INSTALLATION

1. Insert a new O-ring into the groove in the brake booster and ensure that it is correctly seated.
2. Rub some soapy water onto the front of the diaphragm travel sensor so that the O-ring does not bind when inserted.
3. Replace locking ring (1) and ensure that it is correctly seated.
4. Connect the electrical harness connector to the travel sensor.

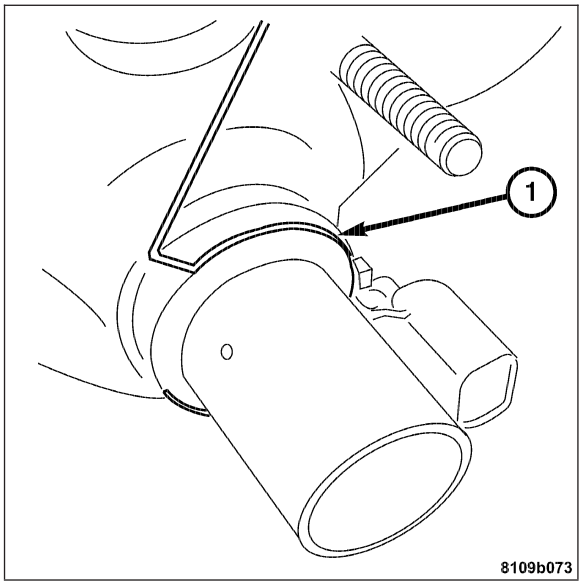

BRAKES - ABS ELECTRICAL DIAGNOSTICS

TABLE OF CONTENTS

page

ELECTRICAL - ESP ELECTRICAL DIAGNOSTICS
DIAGNOSIS AND TESTING
CAB INTERNAL FAILURE 80
CAB SYSTEM UNDERVOLTAGE 82
CAB SYSTEM OVERVOLTAGE 85
CAN BUS COMMUNICATION GENERAL MALFUNCTION 88
NO CAN COMMUNICATIONS WITH PCM . . . 90
NO CAN COMMUNICATIONS WITH TCM . . . 92
PCM NOT IDENTIFIED OR INCORRECT 94
LEFT FRONT WHEEL SPEED SENSOR CIRCUIT 95
RIGHT FRONT WHEEL SPEED SENSOR CIRCUIT 101
LEFT REAR WHEEL SPEED SENSOR CIRCUIT 107
RIGHT REAR WHEEL SPEED SENSOR CIRCUIT 113
ESP YAW RATE SENSOR CIRCUIT 119
STEERING ANGLE SENSOR CIRCUIT 124
ESP BRAKE PRESSURE SENSOR 1 CIRCUIT 128
ESP BRAKE PRESSURE SENSOR 2 CIRCUIT 133
ESP LATERAL ACCELERATION SENSOR CIRCUIT 138
BRAKE LAMP SWITCH CIRCUIT 143
ABS VERIFICATION TEST 148
SCHEMATICS AND DIAGRAMS 149

page

ELECTRICAL - BAS ELECTRICAL DIAGNOSTICS
DIAGNOSIS AND TESTING
CAB INTERNAL FAILURE 153
CAB SYSTEM UNDERVOLTAGE 155
CAB SYSTEM OVERVOLTAGE 158
PCM NOT IDENTIFIED OR INCORRECT . . . 161
CAN BUS COMMUNICATION GENERAL MALFUNCTION 162
NO CAN COMMUNICATIONS WITH PCM . . 164
BAS RELEASE SWITCH CIRCUIT 166
BAS TRAVEL SENSOR CIRCUIT 171
BRAKE LAMP SWITCH CIRCUIT 176
BAS SOLENOID VALVE CIRCUIT 181
ABS VERIFICATION TEST 185
SCHEMATICS AND DIAGRAMS 186

ELECTRICAL - ESP ELECTRICAL DIAGNOSTICS

DIAGNOSIS AND TESTING

CAB INTERNAL FAILURE

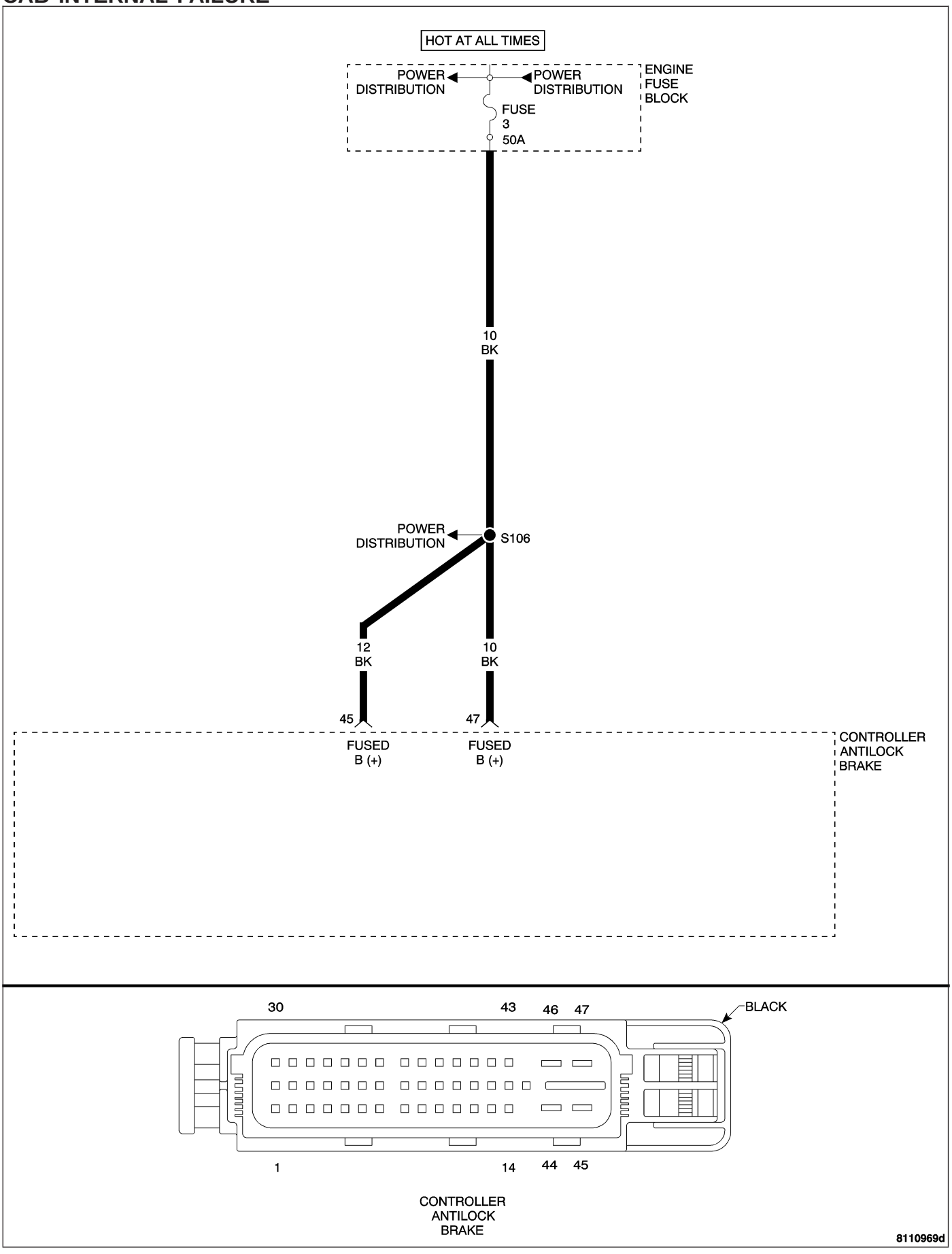

CAB INTERNAL FAILURE — CONTINUED

When Monitored and Set Condition

- When Monitored: Continuous.
- Set Condition: If the Controller Antilock Brake (CAB) detects an internal malfunction, the DTC is set.

POSSIBLE CAUSES
FUSED B(+) CIRCUIT
CONTROLLER ANTILOCK BRAKE

For a complete Electronic Stability Program (ESP) Circuit Diagram **Refer to Page 5-149**.

Diagnostic Test

1. MEASURE THE VOLTAGE OF THE CAB FUSED B(+) CIRCUIT

Turn the ignition off.

Disconnect the CAB harness connector.

Note: Check connectors - Clean/repair as necessary.

Turn the ignition on.

Measure the voltage of the Fused B(+) circuit at cavity 45 of the CAB harness connector.

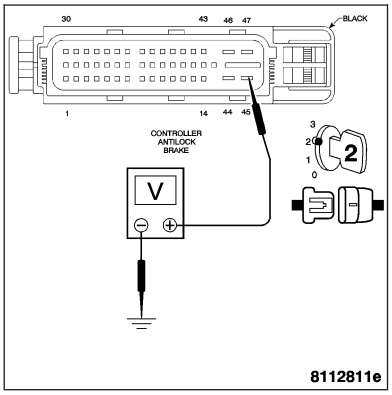

Is the voltage between 12 and 16 volts?

Yes >> Go to 2

No >> System voltage must be between 12 and 16 volts. Repair the voltage concern as necessary.
Perform ABS VERIFICATION TEST.

2. MEASURE THE VOLTAGE OF THE CAB FUSED B(+) CIRCUIT

With the ignition on.

Measure the voltage of the Fused B(+) circuit at cavity 47 of the CAB harness connector.

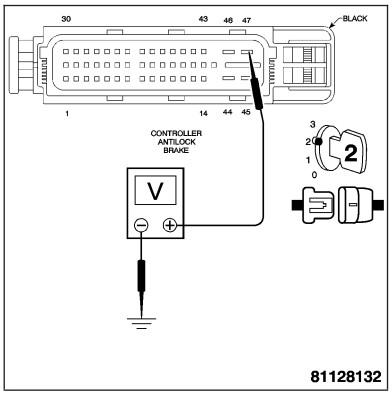

Is the voltage between 12 and 16 volts?

Yes >> Replace the Controller Antilock Brake. **Refer to Page 8E-63**.
Perform ABS VERIFICATION TEST.

No >> System voltage must be between 12 and 16 volts. Repair the voltage concern as necessary.
Perform ABS VERIFICATION TEST.

CAB SYSTEM UNDERVOLTAGE

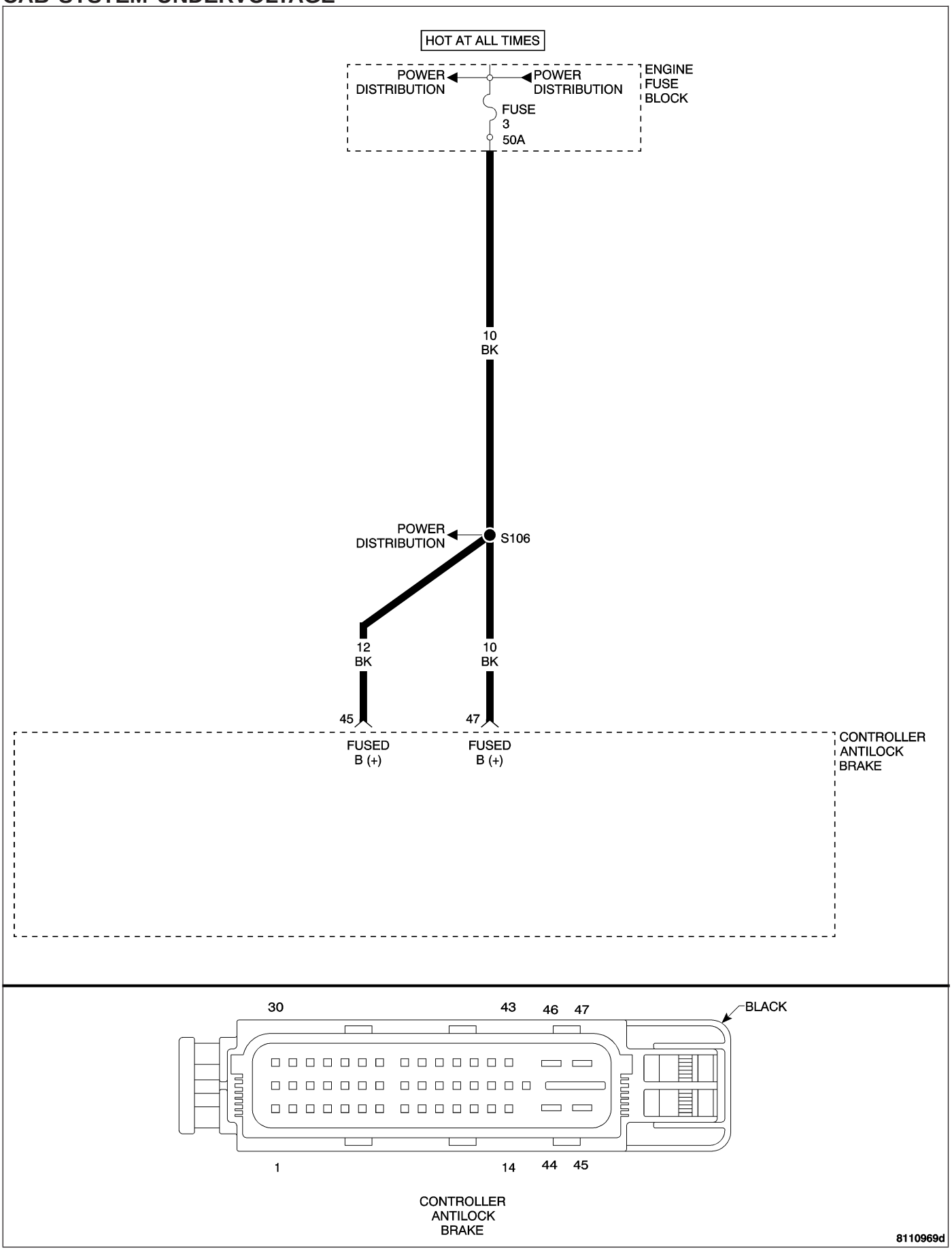

CAB SYSTEM UNDERVOLTAGE — CONTINUED

When Monitored and Set Condition

- When Monitored: Ignition on. The Controller Antilock Brake (CAB) monitors the Fused B(+) circuit voltage above 6 MPH every 7 milliseconds for proper system voltage.
- Set Condition: If the voltage is below 9.5 volts, the Diagnostic Trouble Code (DTC) is set.

POSSIBLE CAUSES
BATTERY VOLTAGE LOW
FUSED B(+) CIRCUIT OPEN
CONTROLLER ANTILOCK BRAKE

For a complete Electronic Stability Program (ESP) Circuit Diagram **Refer to Page 5-149**.

Diagnostic Test

1. WITH THE DRB III®, READ DTCs

Turn the ignition on.
With the DRB III®, erase DTCs.
Turn the ignition off.
Turn the ignition on.
Start the engine.
Drive the vehicle above 10 MPH for at least 20 seconds.
Stop the vehicle.
With the DRB III®, read DTCs.

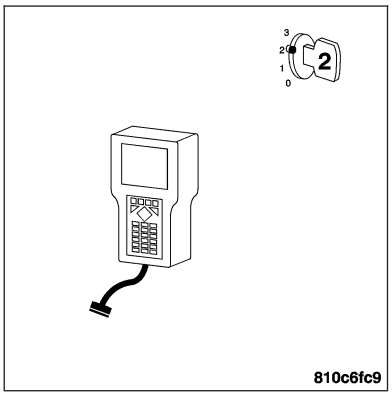

Does the DRB III® display a System Undervoltage DTC?

Yes >> Go to 2

No >> The condition that caused this DTC to set is currently not present. Inspect the related wiring harness for a possible intermittent condition.

2. MEASURE THE BATTERY VOLTAGE

Start the engine.
Measure the battery voltage with the engine running.

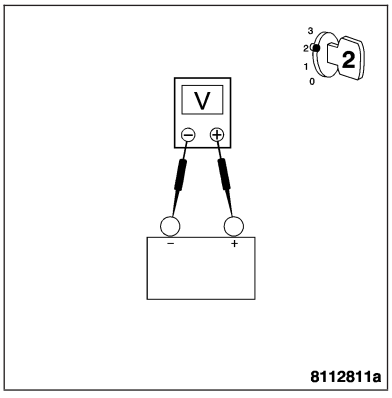

Is the battery voltage below 10 volts?

Yes >> Refer to the appropriate service information for charging system testing and repair.
Perform ABS VERIFICATION TEST.

No >> Go to 3

CAB SYSTEM UNDERVOLTAGE — CONTINUED

3. MEASURE THE VOLTAGE OF THE FUSED B(+) CIRCUIT

Turn the ignition off.

Disconnect the CAB harness connector.

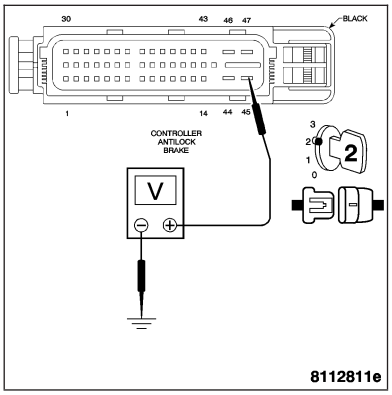

Note: Check connectors - Clean/repair as necessary.

Turn the ignition on.

Measure the voltage of the Fused B(+) circuit at cavity 45 of the CAB harness connector.

Is the voltage above 10 volts?

Yes >> Go to 4

No >> Repair the Fused B(+) circuit for an open.
Perform ABS VERIFICATION TEST.

4. MEASURE THE VOLTAGE OF THE FUSED B(+) CIRCUIT

With the ignition on.

Measure the voltage of the Fused B(+) circuit at cavity 47 of the CAB harness connector.

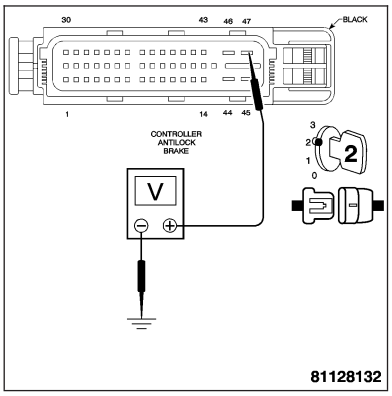

Is the voltage above 10 volts?

Yes >> Replace the Controller Antilock Brake. **Refer to Page 8E-63**.
Perform ABS VERIFICATION TEST.

No >> Repair the Fused B(+) circuit for an open.
Perform ABS VERIFICATION TEST.

CAB SYSTEM OVERVOLTAGE

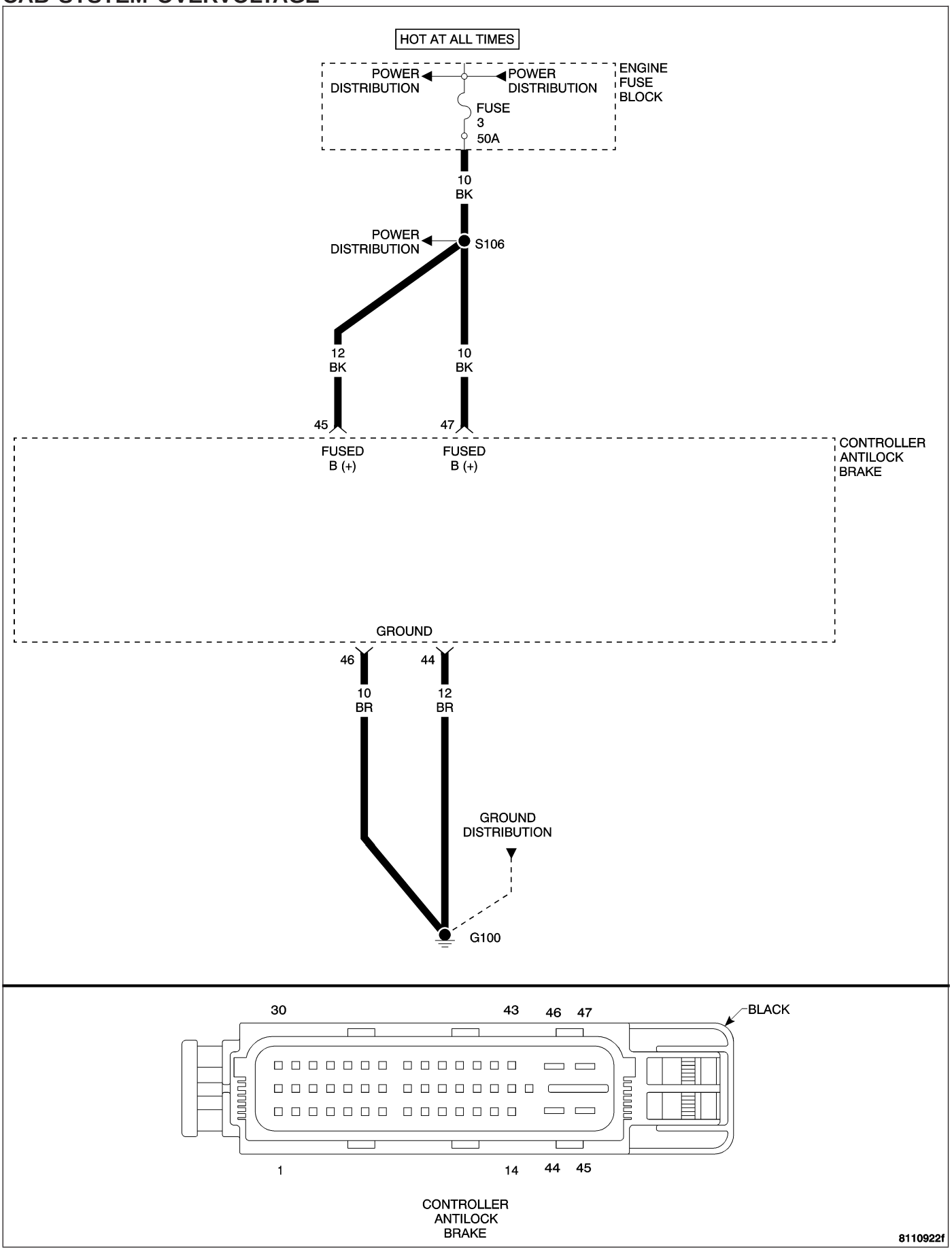

CAB SYSTEM OVERVOLTAGE — CONTINUED

When Monitored and Set Condition

- When Monitored: Ignition on. The Controller Antilock Brake (CAB) monitors the Fused B(+) circuit at all times for proper system voltage.
- Set Condition: If the voltage is above 16 volts for greater than 500 milliseconds (ms), the Diagnostic Trouble Code (DTC) is set.

POSSIBLE CAUSES
SYSTEM VOLTAGE HIGH
GROUND CIRCUIT OPEN
CONTROLLER ANTILOCK BRAKE

For a complete Electronic Stability Program (ESP) Circuit Diagram **Refer to Page 5-149**.

Diagnostic Test

1. WITH THE DRB III®, READ DTCs

Turn the ignition on.
With the DRB III®, erase DTCs.
Turn the ignition off.
Turn the ignition on.
Start the engine.
With the DRB III®, read DTCs.

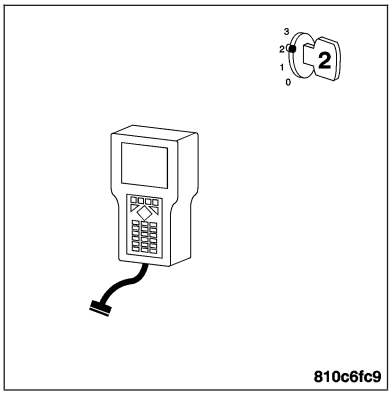

Does the DRB III® display a System Overvoltage DTC?

Yes >> Go to 2

No >> The condition that caused this DTC to set is currently not present. Inspect the related wiring harness for a possible intermittent condition.

2. MEASURE THE BATTERY VOLTAGE

Start the engine.
Raise engine speed above 1,800 RPM.
Measure the battery voltage.

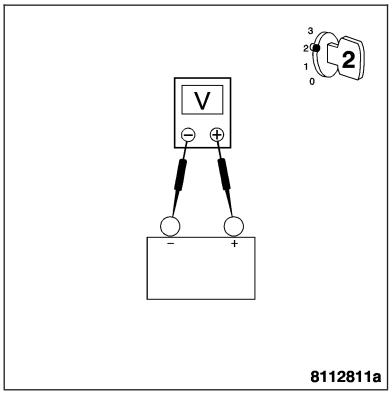

Is the voltage above 16 volts?

Yes >> Refer to the appropriate service information for charging system testing and repair.
Perform ABS VERIFICATION TEST.

No >> Go to 3

CAB SYSTEM OVERVOLTAGE — CONTINUED

3. MEASURE THE RESISTANCE OF THE GROUND CIRCUIT

Turn the ignition off.

Disconnect the CAB connector.

Note: Check connectors - Clean/repair as necessary.

Measure the resistance between ground and the Ground circuit at cavity 46 of the CAB harness connector.

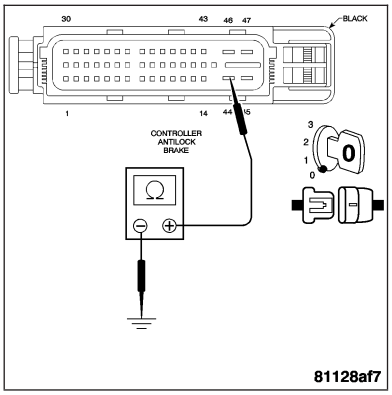

Is the resistance below 5.0 ohms?

Yes >> Go to 4

No >> Repair the Ground circuit for an open.
Perform ABS VERIFICATION TEST.

4. MEASURE THE RESISTANCE OF THE GROUND CIRCUIT

With the ignition off.

Measure the resistance between ground and the Ground circuit at cavity 44 of the CAB harness connector.

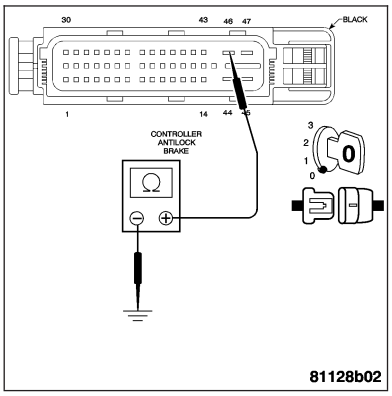

Is the resistance below 5.0 ohms?

Yes >> Replace the Controller Antilock Brake. **Refer to Page 8E-63**.
Perform ABS VERIFICATION TEST.

No >> Repair the Ground circuit for an open.
Perform ABS VERIFICATION TEST.

CAN BUS COMMUNICATION GENERAL MALFUNCTION

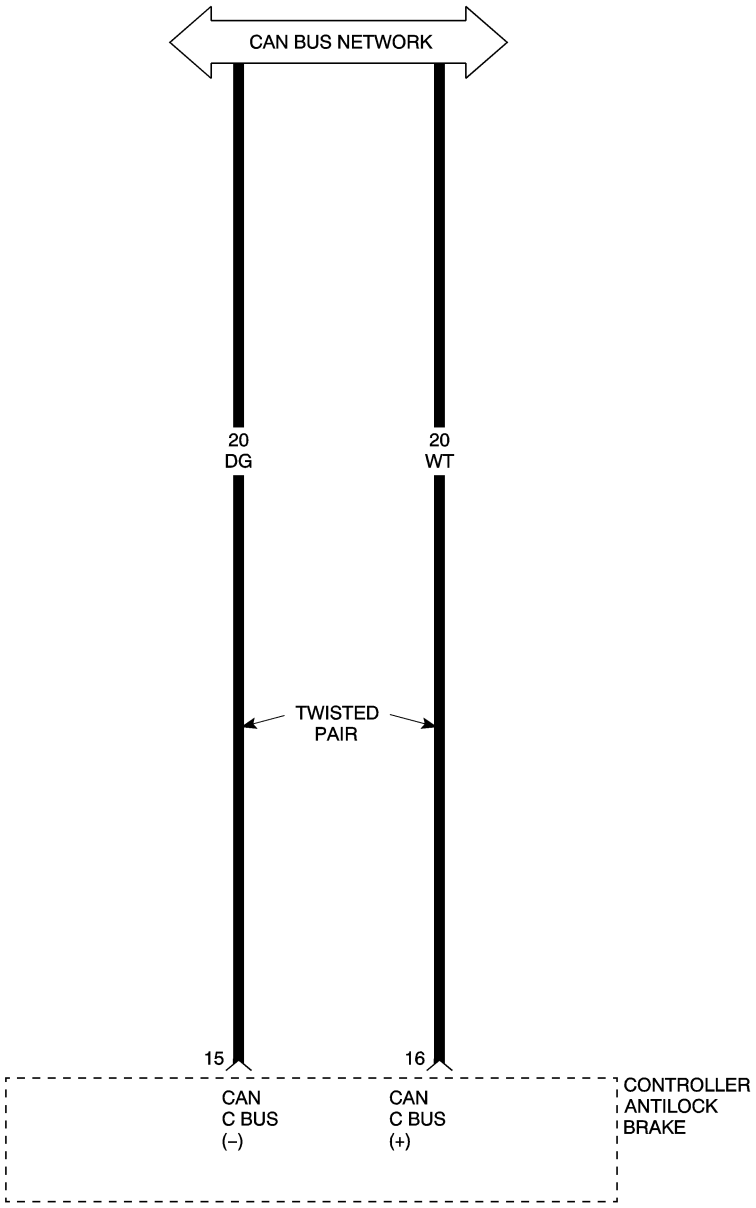

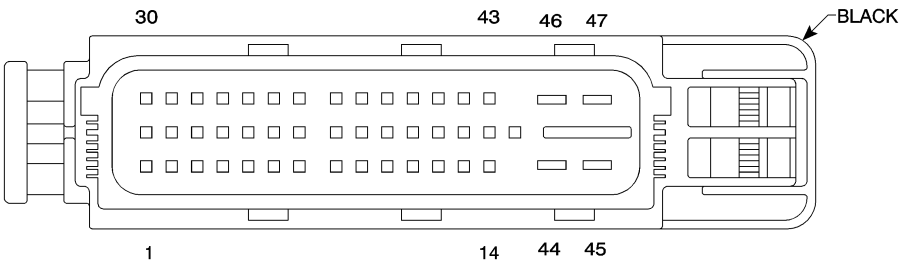

CONTROLLER
ANTILOCK
BRAKE

8110c3cd

CAN BUS COMMUNICATION GENERAL MALFUNCTION — CONTINUED

When Monitored and Set Condition

- When Monitored: With the ignition on.
- Set Condition: CAN Bus communication failure between the Controller Antilock Brake (CAB) and the CAN Bus network.

POSSIBLE CAUSES
CAN BUS CIRCUIT(S) OPEN
CONTROLLER ANTILOCK BRAKE

For a complete Electronic Stability Program (ESP) Circuit Diagram **Refer to Page 5-149**.

Diagnostic Test

1. MEASURE THE RESISTANCE OF THE CAN C BUS (+) CIRCUIT

Turn the ignition off.

Disconnect the CAB harness connector.

Disconnect the harness connectors of the other modules on the CAN Bus network.

Note: Check connectors - Clean/repair as necessary.

Measure the resistance of the CAN C Bus (+) circuit from the CAB harness connector to the harness connectors of the other modules on the CAN Bus network.

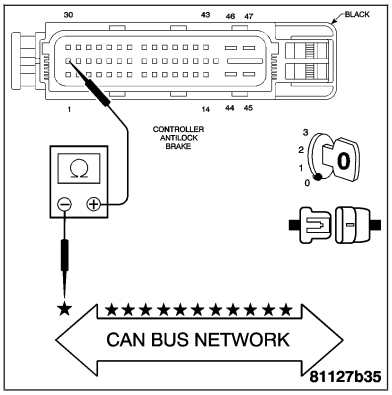

Is the resistance below 1.0 ohm?

Yes >> Go to 2

No >> Repair the CAN C Bus (+) circuit for an open.
Perform ABS VERIFICATION TEST.

2. MEASURE THE RESISTANCE OF THE CAN C BUS (-) CIRCUIT

With the ignition off.

Measure the resistance of the CAN C Bus (-) circuit from the CAB harness connector to the harness connectors of the other modules on the CAN Bus network.

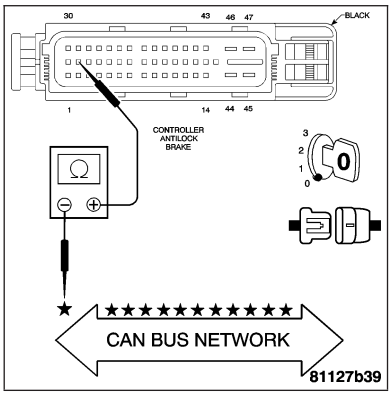

Is the resistance below 1.0 ohm?

Yes >> Replace the Controller Antilock Brake. **Refer to Page 8E-63**.
Perform ABS VERIFICATION TEST.

No >> Repair the CAN C Bus (-) circuit for an open.
Perform ABS VERIFICATION TEST.

NO CAN COMMUNICATIONS WITH PCM

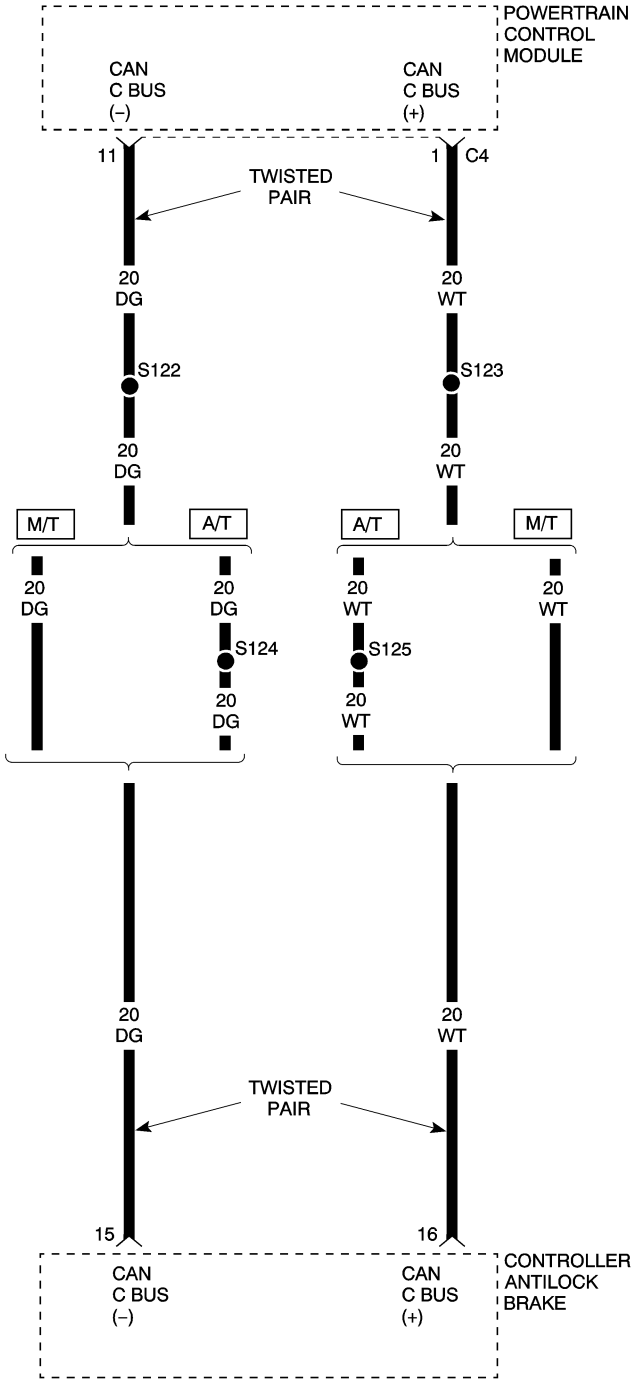

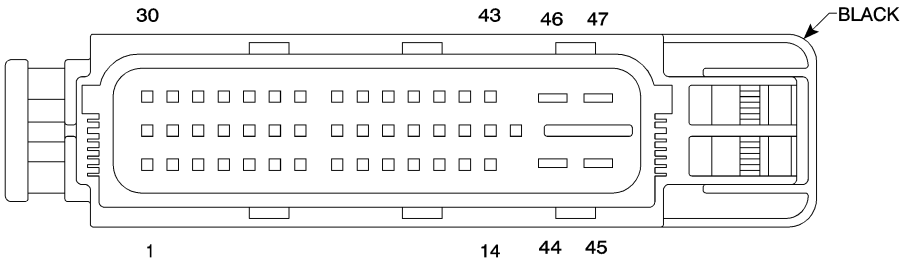

CONTROLLER ANTILOCK BRAKE

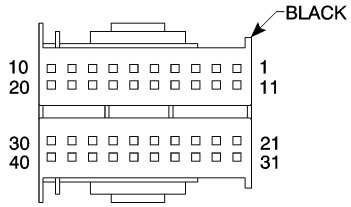

POWERTRAIN CONTROL MODULE – C4

8110bcac

NO CAN COMMUNICATIONS WITH PCM — CONTINUED

When Monitored and Set Condition

- When Monitored: With the ignition on.
- Set Condition: CAN Bus communication failure between the Controller Antilock Brake (CAB) and the Powertrain Control Module (PCM).

POSSIBLE CAUSES
CAN BUS CIRCUIT(S) OPEN
CONTROLLER ANTILOCK BRAKE

For a complete Electronic Stability Program (ESP) Circuit Diagram **Refer to Page 5-149**.

Diagnostic Test

1. MEASURE THE RESISTANCE OF THE CAN C BUS (+) CIRCUIT

Turn the ignition off.

Disconnect the CAB harness connector.

Disconnect the PCM harness connector.

Note: Check connectors - Clean/repair as necessary.

Measure the resistance of the CAN C Bus (+) circuit from the CAB harness connector to the PCM harness connector.

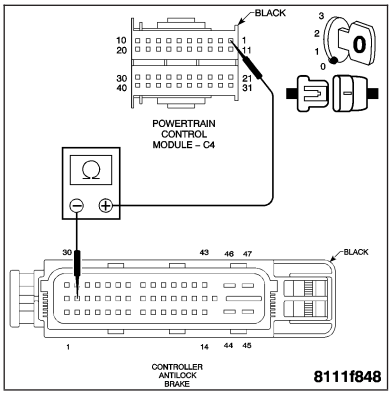

Is the resistance below 1.0 ohm?

Yes >> Go to 2

No >> Repair the CAN C Bus (+) circuit for an open.
Perform ABS VERIFICATION TEST.

2. MEASURE THE RESISTANCE OF THE CAN C BUS (-) CIRCUIT

With the ignition off.

Measure the resistance of the CAN C Bus (-) circuit from the CAB harness connector to the PCM harness connector.

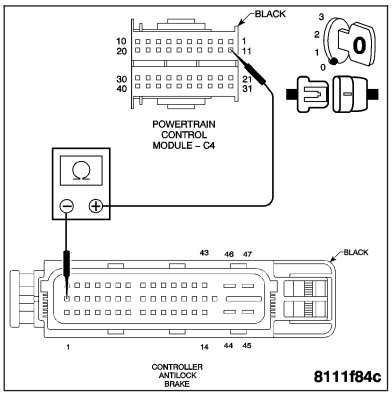

Is the resistance below 1.0 ohm?

Yes >> Replace the Controller Antilock Brake. **Refer to Page 8E-63**.
Perform ABS VERIFICATION TEST.

No >> Repair the CAN C Bus (-) circuit for an open.
Perform ABS VERIFICATION TEST.

NO CAN COMMUNICATIONS WITH TCM

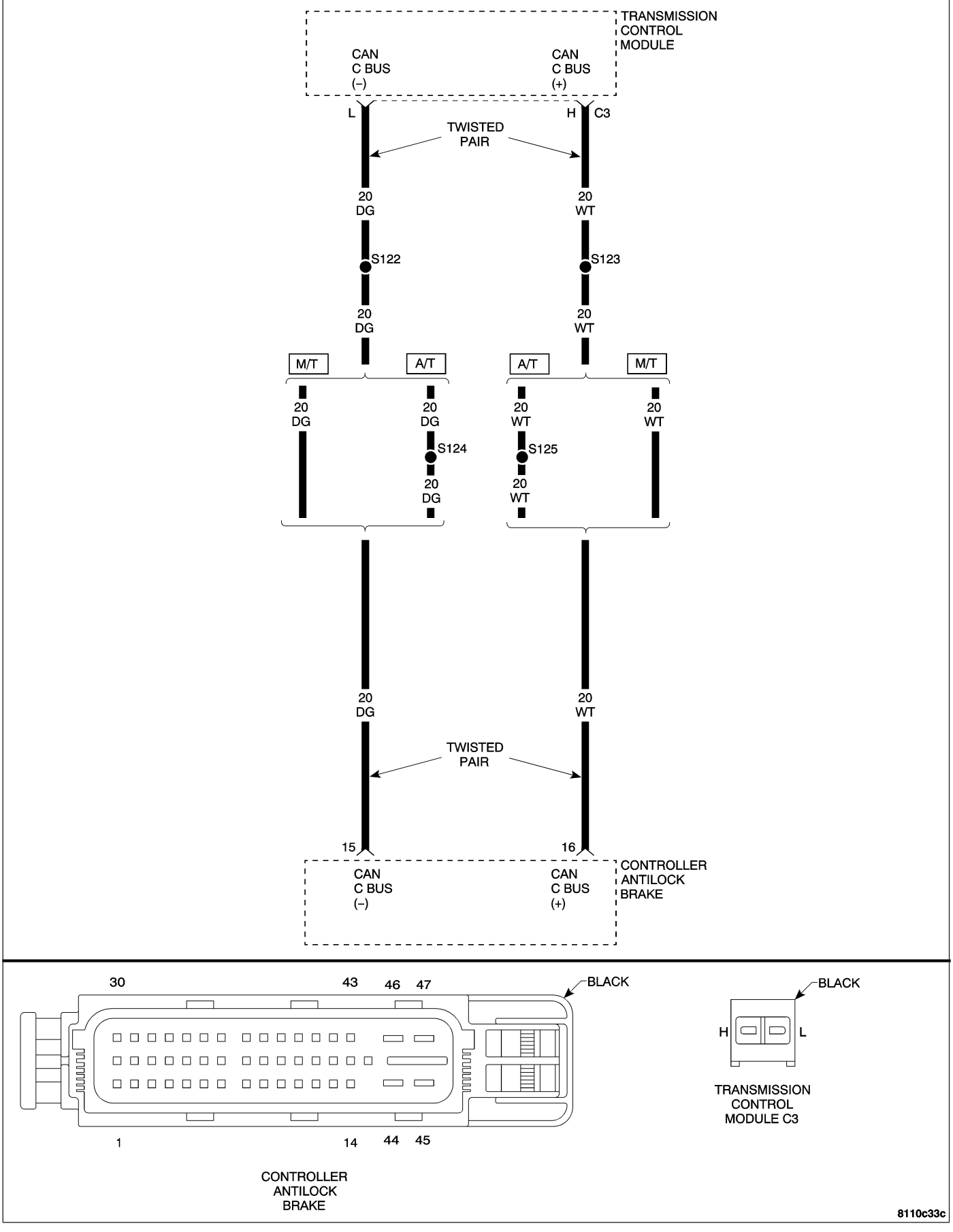

NO CAN COMMUNICATIONS WITH TCM — CONTINUED

When Monitored and Set Condition

- When Monitored: With the ignition on.
- Set Condition: CAN Bus communication failure between the Controller Antilock Brake (CAB) and the Transmission Control Module (TCM).

POSSIBLE CAUSES
CAN BUS CIRCUIT(S) OPEN
CONTROLLER ANTILOCK BRAKE

For a complete Electronic Stability Program (ESP) Circuit Diagram **Refer to Page 5-149**.

Diagnostic Test

1. MEASURE THE RESISTANCE OF THE CAN C BUS (+) CIRCUIT

Turn the ignition off.

Disconnect the CAB harness connector.

Disconnect the TCM harness connector.

Note: Check connectors - Clean/repair as necessary.

Measure the resistance of the CAN C Bus (+) circuit from the CAB harness connector to the TCM harness connector.

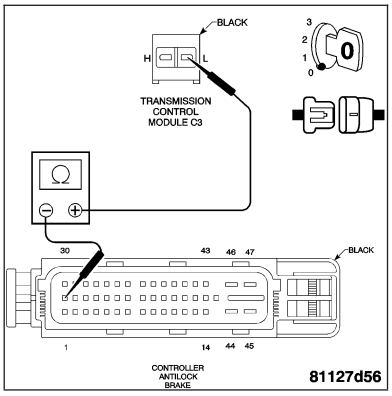

Is the resistance below 1.0 ohm?

Yes >> Go to 2

No >> Repair the CAN C Bus (+) circuit for an open.
Perform ABS VERIFICATION TEST.

2. MEASURE THE RESISTANCE OF THE CAN C BUS (-) CIRCUIT

With the ignition off.

Measure the resistance of the CAN C Bus (-) circuit from the CAB harness connector to the TCM harness connector.

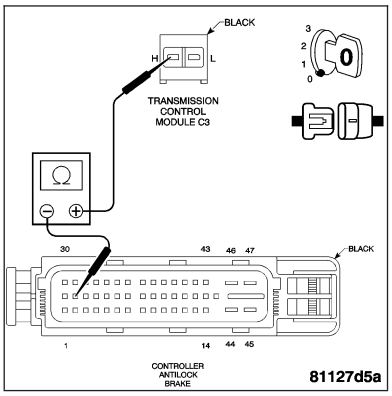

Is the resistance below 1.0 ohm?

Yes >> Replace the Controller Antilock Brake. **Refer to Page 8E-63**.
Perform ABS VERIFICATION TEST.

No >> Repair the CAN C Bus (-) circuit for an open.
Perform ABS VERIFICATION TEST.

PCM NOT IDENTIFIED OR INCORRECT

When Monitored and Set Condition

- When Monitored: Continuous.
- Set Condition: If the Controller Antilock Brake (CAB) detects an invalid Powertrain Control Module (PCM), the DTC is set.

POSSIBLE CAUSES
CONTROLLER ANTILOCK BRAKE

For a complete Electronic Stability Program (ESP) Circuit Diagram **Refer to Page 5-149**.

Diagnostic Test

1. WITH THE DRB III®, READ DTCs

Turn the ignition on.
With the DRB III®, erase DTCs.
Turn the ignition off.
Turn the ignition on.
Start the engine.

CAUTION: Ensure braking capability is available before road testing.
Drive the vehicle above 10 MPH for at least 20 seconds.
Stop the vehicle.
With the DRB III®, read DTCs.

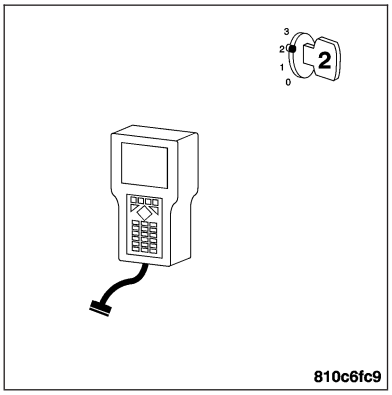

Does the DRB III® display a PCM Not Identified or Incorrect DTC?

Yes >> Replace the Controller Antilock Brake. **Refer to Page 8E-63**.
Perform ABS VERIFICATION TEST.

No >> The condition that caused this DTC to set is currently not present.
Perform ABS VERIFICATION TEST.

LEFT FRONT WHEEL SPEED SENSOR CIRCUIT

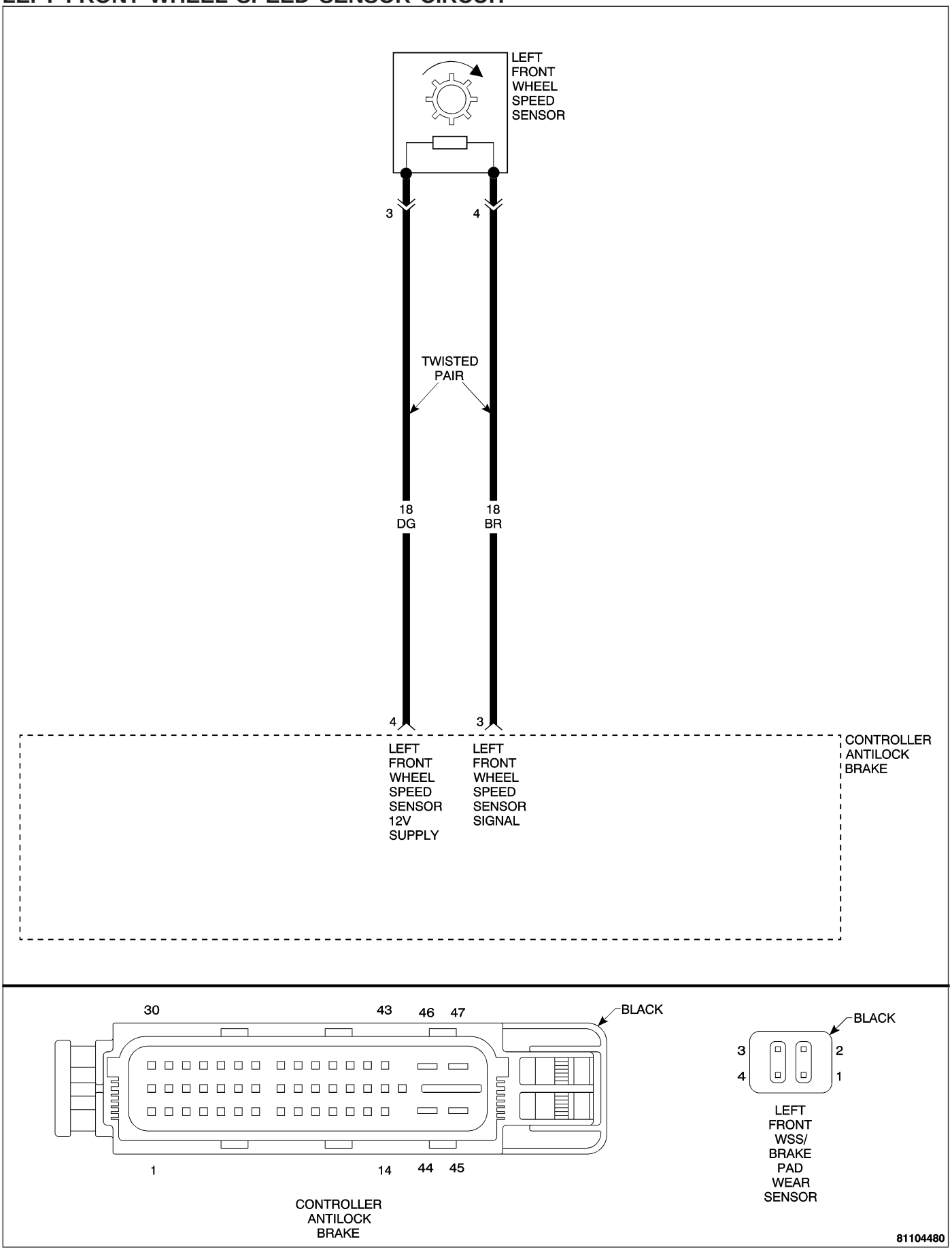

LEFT FRONT WHEEL SPEED SENSOR CIRCUIT — CONTINUED

When Monitored and Set Condition

- When Monitored (Supply circuit): Ignition on. The Controller Antilock Brake (CAB) monitors the wheel speed circuit every 7 milliseconds (ms).
- When Monitored (Signal circuit): Wheel speed comparison is checked at drive off or every 7 milliseconds (ms). Sensor Signal continuity is checked every 7 milliseconds. Wheel speed phase length supervision is checked every 7 milliseconds.
- Set Condition (Supply circuit): If the CAB detects an open or shorted wheel speed sensor circuit, the Diagnostic Trouble Code (DTC) will set.
- Set Condition (Signal circuit): If, during an ABS stop, the CAB commands any valve solenoid on for an extended length of time, and does not see a corresponding wheel speed change, the Diagnostic Trouble Code (DTC) is set. The DTC can also set if the Signal is missing or erratic.

POSSIBLE CAUSES
WHEEL SPEED SENSOR MALFUNCTION
SENSOR CIRCUITS SHORTED OR OPEN
SENSOR OR TONE WHEEL DAMAGE
WHEEL SPEED SENSOR
CONTROLLER ANTILOCK BRAKE

For a complete Electronic Stability Program (ESP) Circuit Diagram **Refer to Page 5-149**.

Diagnostic Test

1. WITH THE DRB III®, READ DTCs

Turn the ignition on.
With the DRB III®, record and erase DTCs.
Turn the ignition off.
Turn the ignition on.
With the DRB III®, read DTCs.

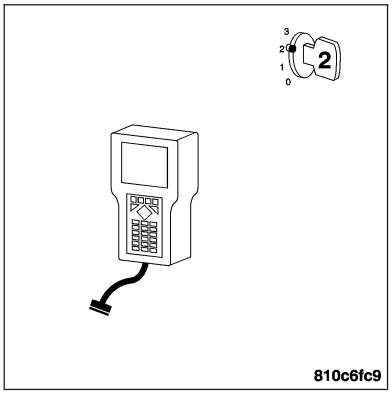

Does the DRB III® display a Left Front Wheel Speed Sensor Circuit Failure DTC?

Yes >> Go to 2
No >> Go to 12

2. INSPECT THE LEFT FRONT WHEEL SPEED SENSOR

Turn the ignition off.
Inspect the Left Front Wheel Speed Sensor and connector.

Is the Sensor or Connector damaged?

Yes >> Repair as necessary.
Perform ABS VERIFICATION TEST.
No >> Go to 3

LEFT FRONT WHEEL SPEED SENSOR CIRCUIT — CONTINUED

3. MEASURE THE VOLTAGE OF THE LEFT FRONT WHEEL SPEED SENSOR 12 VOLT SUPPLY CIRCUIT

With the ignition off.
Disconnect the Left Front Wheel Speed Sensor harness connector.

Note: Check connectors - Clean/repair as necessary.
Turn the ignition on.
Measure the voltage of the Left Front Wheel Speed Sensor 12 Volt Supply circuit at the Left Front Wheel Speed Sensor harness connector.

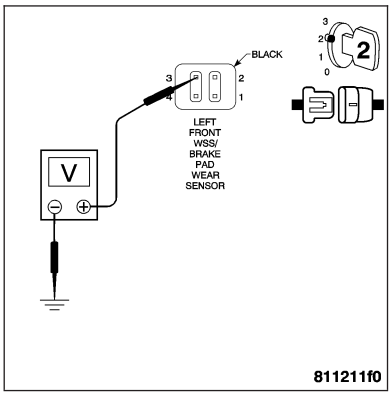

Is the voltage approximately 12 volts?

Yes >> Go to 7

No >> Go to 4

4. MEASURE THE VOLTAGE OF THE LEFT FRONT WHEEL SPEED SENSOR 12 VOLT SUPPLY CIRCUIT

Turn the ignition off.
Measure the voltage of the Left Front Wheel Speed Sensor 12 Volt Supply circuit at the Left Front Wheel Speed Sensor harness connector.

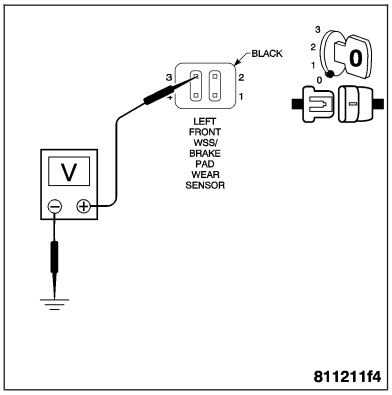

Is the voltage 0 volts?

Yes >> Go to 5

No >> Replace the Controller Antilock Brake. **Refer to Page 8E-63**.
Perform ABS VERIFICATION TEST.

5. MEASURE THE RESISTANCE BETWEEN GROUND AND THE LEFT FRONT WHEEL SPEED SENSOR 12 VOLT SUPPLY CIRCUIT

With the ignition off.
Disconnect the CAB harness connector.

Note: Check connectors - Clean/repair as necessary.
Measure the resistance between ground and the Left Front Wheel Speed Sensor 12 Volt Supply circuit at the CAB harness connector.

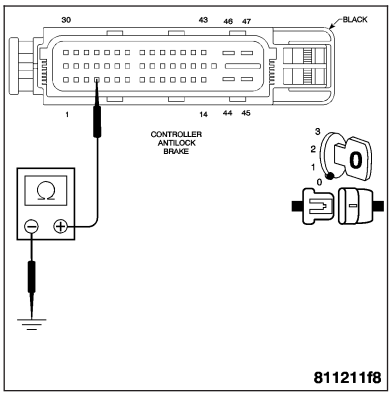

Is the resistance below 15k ohms?

Yes >> Repair the Left Front Wheel Speed Sensor 12 Volt Supply circuit for a short to ground.
Perform ABS VERIFICATION TEST.

No >> Go to 6

LEFT FRONT WHEEL SPEED SENSOR CIRCUIT — CONTINUED

6. MEASURE THE RESISTANCE OF THE LEFT FRONT WHEEL SPEED SENSOR 12 VOLT SUPPLY CIRCUIT

With the ignition off.

Measure the resistance of the Left Front Wheel Speed Sensor 12 Volt Supply circuit from the CAB harness connector to the Left Front Wheel Speed Sensor harness connector.

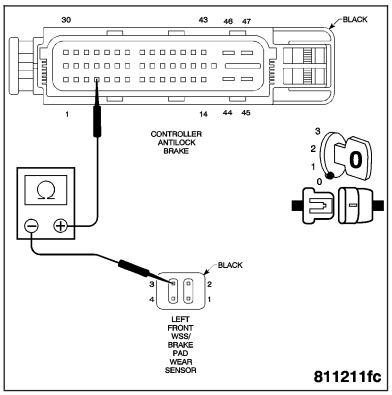

Is the resistance below 5.0 ohms?

Yes >> Go to 7

No >> Repair the Left Front Wheel Speed Sensor 12 Volt Supply circuit for an open.
Perform ABS VERIFICATION TEST.

7. MEASURE THE RESISTANCE OF THE LEFT FRONT WHEEL SPEED SENSOR SIGNAL CIRCUIT

With the ignition off.

Reconnect the CAB harness connector.

Measure the resistance between ground and the Left Front Wheel Speed Sensor Signal circuit.

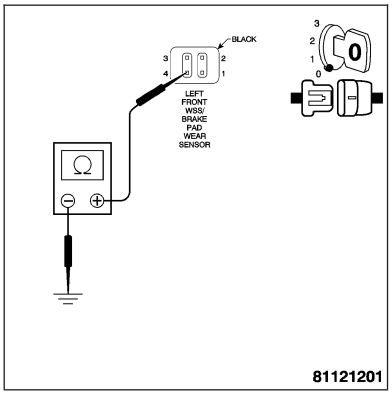

Is the resistance less than 100 ohms?

Yes >> Go to 10

No >> Go to 8

8. MEASURE THE RESISTANCE OF THE LEFT FRONT WHEEL SPEED SENSOR SIGNAL CIRCUIT

With the ignition off.

Measure the resistance between ground and the Left Front Wheel Speed Sensor Signal circuit.

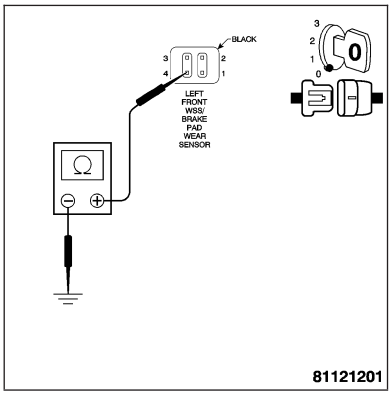

Is the resistance greater than 300 ohms?

Yes >> Go to 9

No >> Replace the Left Front Wheel Speed Sensor. **Refer to Page 5-194**.
Perform ABS VERIFICATION TEST.

LEFT FRONT WHEEL SPEED SENSOR CIRCUIT — CONTINUED

9. MEASURE THE RESISTANCE OF THE LEFT FRONT WHEEL SPEED SENSOR SIGNAL CIRCUIT

With the ignition off.

Disconnect the CAB harness connector.

Note: Check connectors - Clean/repair as necessary.

Measure the resistance of the Left Front Wheel Speed Sensor Signal circuit from the CAB harness connector to the Left Front Wheel Speed Sensor harness connector.

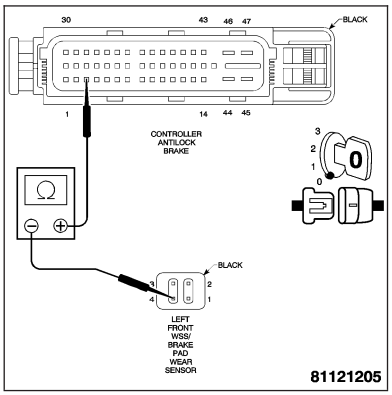

Is the resistance below 5.0 ohms?

Yes >> Go to 11

No >> Repair the Left Front Wheel Speed Sensor Signal circuit for an open.
Perform ABS VERIFICATION TEST.

10. MEASURE THE RESISTANCE BETWEEN GROUND AND THE LEFT FRONT WHEEL SPEED SENSOR SIGNAL CIRCUIT

With the ignition off.

Measure the resistance between ground and the Left Front Wheel Speed Sensor Signal circuit at the CAB harness connector.

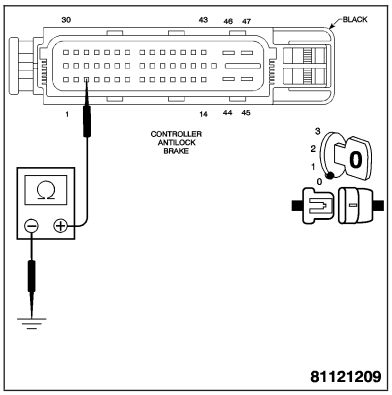

Is the resistance below 15k ohms?

Yes >> Repair the Left Front Wheel Speed Sensor Signal circuit for a short to ground.
Perform ABS VERIFICATION TEST.

No >> Go to 11

11. MEASURE THE RESISTANCE BETWEEN THE LEFT FRONT WHEEL SPEED SENSOR 12 VOLT SUPPLY CIRCUIT AND THE SENSOR SIGNAL CIRCUIT

With the ignition off.

Measure the resistance between the Left Front Wheel Speed Sensor 12 Volt Supply circuit and the Left Front Wheel Speed Sensor Signal circuit at the CAB harness connector.

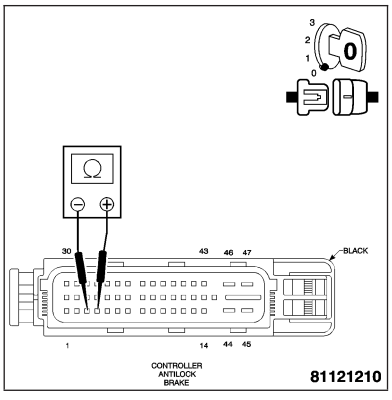

Is the resistance below 1000.0 ohms?

Yes >> Repair the Left Front Wheel Speed Sensor 12 Volt Supply circuit for a short to the Left Front Wheel Speed Sensor Signal circuit.
Perform ABS VERIFICATION TEST.

No >> Replace the Controller Antilock Brake. **Refer to Page 8E-63**.
Perform ABS VERIFICATION TEST.

LEFT FRONT WHEEL SPEED SENSOR CIRCUIT — CONTINUED

12. VISUALLY INSPECT COMPONENTS FOR DAMAGE AND CORRECT INSTALLATION

Visually inspect the related wiring harness and connectors. Look for any chafed, pierced, pinched, or partially broken wires. Look for broken, bent, pushed out, or corroded terminals.

Visually inspect the Left Front Wheel Speed Sensor, connector and tone wheel for damage and correct installation.

Are there any visible Sensor, connector or tone wheel concerns?

Yes >> Correct the sensor, connector or tone wheel concerns as necessary.
Perform ABS VERIFICATION TEST.

No >> Go to 13

13. MONITOR ALL WHEEL SPEED SENSORS WITH THE DRB III®

With the DRB III®, erase DTCs.

Start the engine.

With an assistant to drive, use the DRB III® to monitor all wheel speed sensors. Slowly accelerate as straight as possible from a stop to 15 MPH.

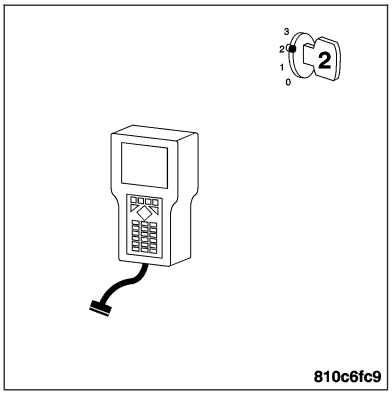

Is the Left Front Wheel Speed Sensor Signal 0 or differing from others by more than 3 MPH?

Yes >> Replace the Left Front Wheel Speed Sensor. **Refer to Page 5-194**.
Perform ABS VERIFICATION TEST.

No >> Inspect and repair the related wiring harness for a possible intermittent condition.
Perform ABS VERIFICATION TEST.

RIGHT FRONT WHEEL SPEED SENSOR CIRCUIT

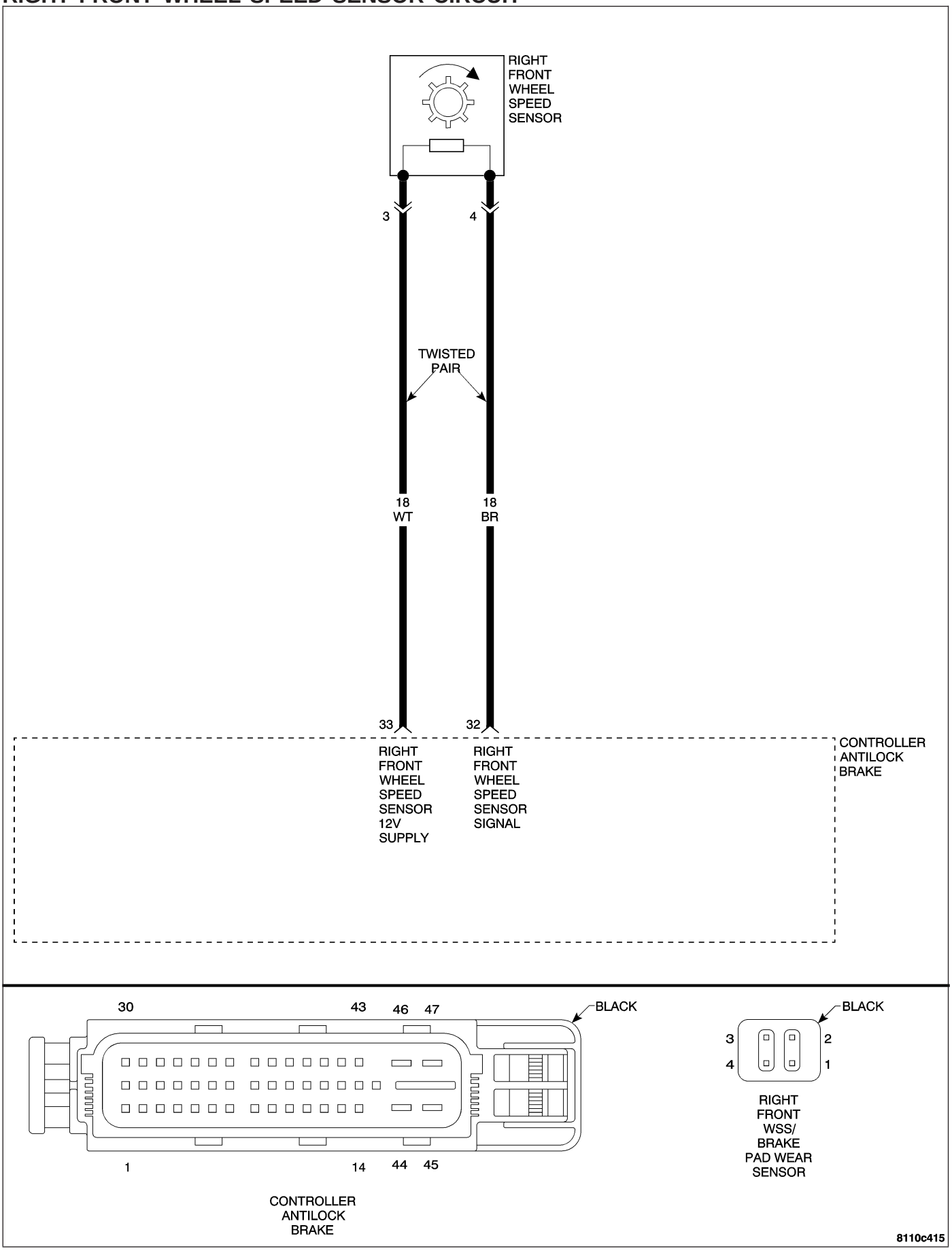

RIGHT FRONT WHEEL SPEED SENSOR CIRCUIT — CONTINUED

When Monitored and Set Condition

- When Monitored (Supply circuit): Ignition on. The Controller Antilock Brake (CAB) monitors the wheel speed circuit every 7 milliseconds (ms).
- When Monitored (Signal circuit): Wheel speed comparison is checked at drive off or every 7 milliseconds (ms). Sensor Signal continuity is checked every 7 milliseconds. Wheel speed phase length supervision is checked every 7 milliseconds.
- Set Condition (Supply circuit): If the CAB detects an open or shorted wheel speed sensor circuit, the Diagnostic Trouble Code (DTC) will set.
- Set Condition (Signal circuit): If, during an ABS stop, the CAB commands any valve solenoid on for an extended length of time, and does not see a corresponding wheel speed change, the Diagnostic Trouble Code (DTC) is set. The DTC can also set if the Signal is missing or erratic.

POSSIBLE CAUSES
WHEEL SPEED SENSOR MALFUNCTION
SENSOR CIRCUITS SHORTED OR OPEN
SENSOR OR TONE WHEEL DAMAGE
WHEEL SPEED SENSOR
CONTROLLER ANTILOCK BRAKE

For a complete Electronic Stability Program (ESP) Circuit Diagram **Refer to Page 5-149**.

Diagnostic Test

1. WITH THE DRB III®, READ DTCs

Turn the ignition on.
With the DRB III®, record and erase DTCs.
Turn the ignition off.
Turn the ignition on.
With the DRB III®, read DTCs.

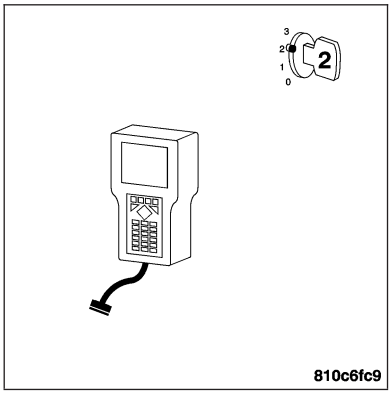

Does the DRB III® display a Right Front Wheel Speed Sensor Circuit Failure DTC?

Yes >> Go to 2

No >> Go to 12

2. INSPECT THE RIGHT FRONT WHEEL SPEED SENSOR

Turn the ignition off.
Inspect the Right Front Wheel Speed Sensor and connector.

Is the Sensor or Connector damaged?

Yes >> Repair as necessary.
Perform ABS VERIFICATION TEST.

No >> Go to 3

RIGHT FRONT WHEEL SPEED SENSOR CIRCUIT — CONTINUED

3. MEASURE THE VOLTAGE OF THE RIGHT FRONT WHEEL SPEED SENSOR 12 VOLT SUPPLY CIRCUIT

With the ignition off.

Disconnect the Right Front Wheel Speed Sensor harness connector.

Note: Check connectors - Clean/repair as necessary.

Turn the ignition on.

Measure the voltage of the Right Front Wheel Speed Sensor 12 Volt Supply circuit at the Right Front Wheel Speed Sensor harness connector.

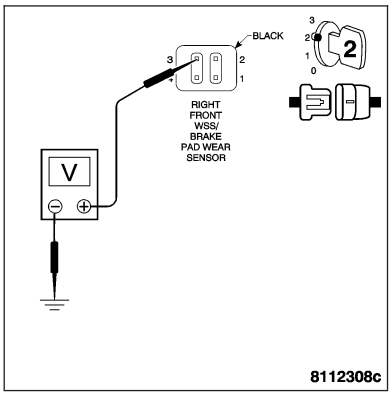

Is the voltage approximately 12 volts?

Yes >> Go to 7

No >> Go to 4

4. MEASURE THE VOLTAGE OF THE RIGHT FRONT WHEEL SPEED SENSOR 12 VOLT SUPPLY CIRCUIT

Turn the ignition off.

Measure the voltage of the Right Front Wheel Speed Sensor 12 Volt Supply circuit at the Right Front Wheel Speed Sensor harness connector.

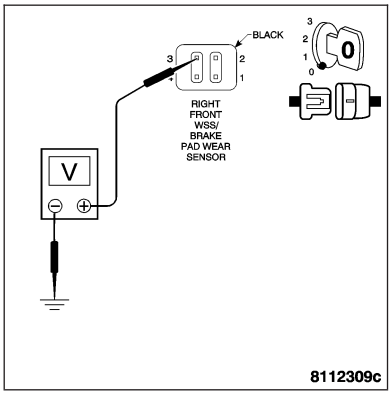

Is the voltage 0 volts?

Yes >> Go to 5

No >> Replace the Controller Antilock Brake. **Refer to Page 8E-63**.
Perform ABS VERIFICATION TEST.

5. MEASURE THE RESISTANCE BETWEEN GROUND AND THE RIGHT FRONT WHEEL SPEED SENSOR 12 VOLT SUPPLY CIRCUIT

With the ignition off.

Disconnect the CAB harness connector.

Note: Check connectors - Clean/repair as necessary.

Measure the resistance between ground and the Right Front Wheel Speed Sensor 12 Volt Supply circuit at the CAB harness connector.

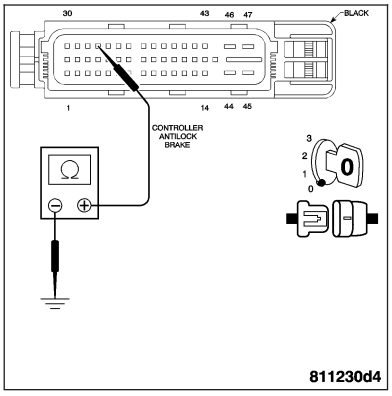

Is the resistance below 15k ohms?

Yes >> Repair the Right Front Wheel Speed Sensor 12 Volt Supply circuit for a short to ground.
Perform ABS VERIFICATION TEST.

No >> Go to 6

RIGHT FRONT WHEEL SPEED SENSOR CIRCUIT — CONTINUED

6. MEASURE THE RESISTANCE OF THE RIGHT FRONT WHEEL SPEED SENSOR 12 VOLT SUPPLY CIRCUIT

With the ignition off.

Measure the resistance of the Right Front Wheel Speed Sensor 12 Volt Supply circuit from the CAB harness connector to the Right Front Wheel Speed Sensor harness connector.

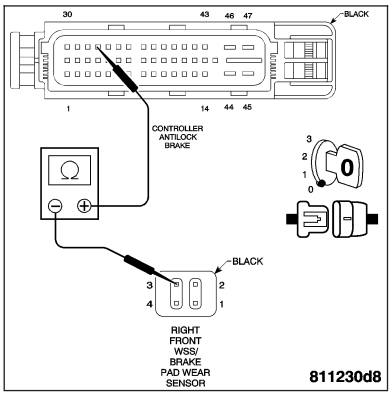

Is the resistance below 5.0 ohms?

Yes >> Go to 7

No >> Repair the Right Front Wheel Speed Sensor 12 Volt Supply circuit for an open.
Perform ABS VERIFICATION TEST.

7. MEASURE THE RESISTANCE OF THE RIGHT FRONT WHEEL SPEED SENSOR SIGNAL CIRCUIT

With the ignition off.

Reconnect the CAB harness connector.

Measure the resistance between ground and the Right Front Wheel Speed Sensor Signal circuit.

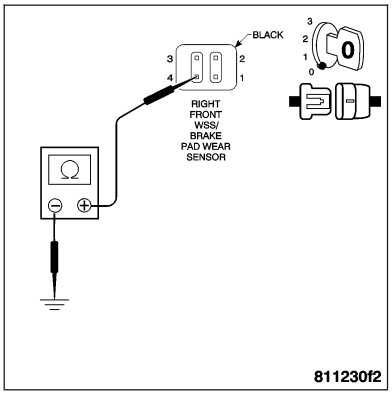

Is the resistance less than 100 ohms?

Yes >> Go to 10

No >> Go to 8

8. MEASURE THE RESISTANCE OF THE RIGHT FRONT WHEEL SPEED SENSOR SIGNAL CIRCUIT

With the ignition off.

Measure the resistance between ground and the Right Front Wheel Speed Sensor Signal circuit.

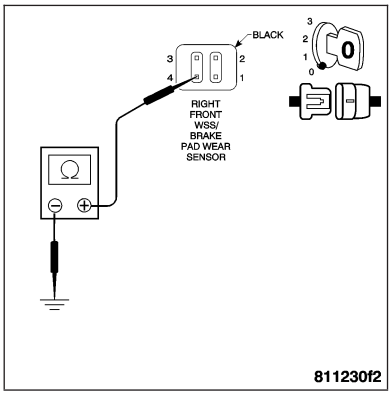

Is the resistance greater than 300 ohms?

Yes >> Go to 9

No >> Replace the Right Front Wheel Speed Sensor. **Refer to Page 5-194**.
Perform ABS VERIFICATION TEST.

RIGHT FRONT WHEEL SPEED SENSOR CIRCUIT — CONTINUED

9. MEASURE THE RESISTANCE OF THE RIGHT FRONT WHEEL SPEED SENSOR SIGNAL CIRCUIT

With the ignition off.

Disconnect the CAB harness connector.

Note: Check connectors - Clean/repair as necessary.

Measure the resistance of the Right Front Wheel Speed Sensor Signal circuit from the CAB harness connector to the Right Front Wheel Speed Sensor harness connector.

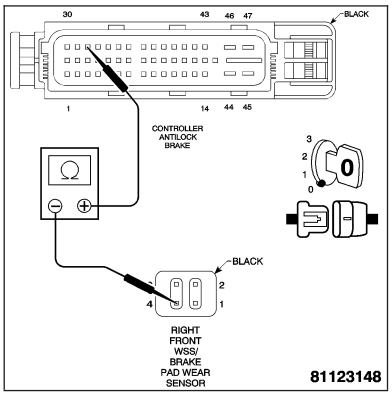

Is the resistance below 5.0 ohms?

Yes >> Go to 11

No >> Repair the Right Front Wheel Speed Sensor Signal circuit for an open.
Perform ABS VERIFICATION TEST.

10. MEASURE THE RESISTANCE BETWEEN GROUND AND THE RIGHT FRONT WHEEL SPEED SENSOR SIGNAL CIRCUIT

With the ignition off.

Measure the resistance between ground and the Right Front Wheel Speed Sensor Signal circuit at the CAB harness connector.

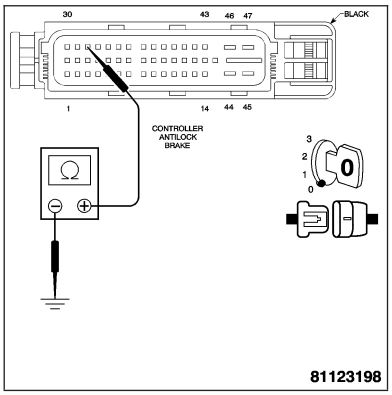

Is the resistance below 15k ohms?

Yes >> Repair the Right Front Wheel Speed Sensor signal circuit for a short to ground.
Perform ABS VERIFICATION TEST.

No >> Go to 11

11. MEASURE THE RESISTANCE BETWEEN THE RIGHT FRONT WHEEL SPEED SENSOR 12 VOLT SUPPLY CIRCUIT AND THE SENSOR SIGNAL CIRCUIT

With the ignition off.

Measure the resistance between the Right Front Wheel Speed Sensor 12 Volt Supply circuit and the Right Front Wheel Speed Sensor Signal circuit at the CAB harness connector.

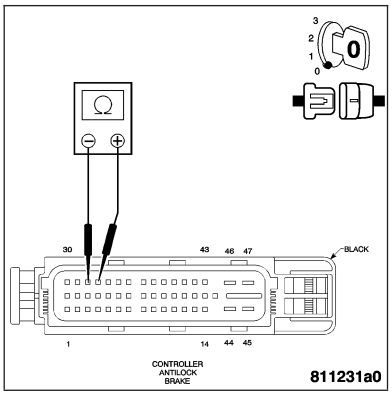

Is the resistance below 1000.0 ohms?

Yes >> Repair the Right Front Wheel Speed Sensor 12 Volt Supply circuit for a short to the Right Front Wheel Speed Sensor Signal circuit.
Perform ABS VERIFICATION TEST.

No >> Replace the Controller Antilock Brake. **Refer to Page 8E-63**.
Perform ABS VERIFICATION TEST.

RIGHT FRONT WHEEL SPEED SENSOR CIRCUIT — CONTINUED

12. VISUALLY INSPECT COMPONENTS FOR DAMAGE AND CORRECT INSTALLATION

Visually inspect the related wiring harness and connectors. Look for any chafed, pierced, pinched, or partially broken wires. Look for broken, bent, pushed out, or corroded terminals.

Visually inspect the Right Front Wheel Speed Sensor, connector and tone wheel for damage and correct installation.

Are there any visible Sensor, connector or tone wheel concerns?

Yes >> Correct the sensor, connector or tone wheel concerns as necessary.
Perform ABS VERIFICATION TEST.

No >> Go to 13

13. MONITOR ALL WHEEL SPEED SENSORS WITH THE DRB III®

With the DRB III®, erase DTCs.

Start the engine.

With an assistant to drive, use the DRB III® to monitor all wheel speed sensors. Slowly accelerate as straight as possible from a stop to 15 MPH.

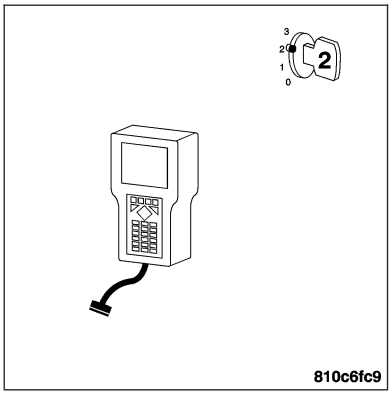

Is the Right Front Wheel Speed Sensor Signal 0 or differing from others by more than 3 MPH?

Yes >> Replace the Right Front Wheel Speed Sensor. **Refer to Page 5-194**.
Perform ABS VERIFICATION TEST.

No >> Inspect and repair the related wiring harness for a possible intermittent condition.
Perform ABS VERIFICATION TEST.

LEFT REAR WHEEL SPEED SENSOR CIRCUIT

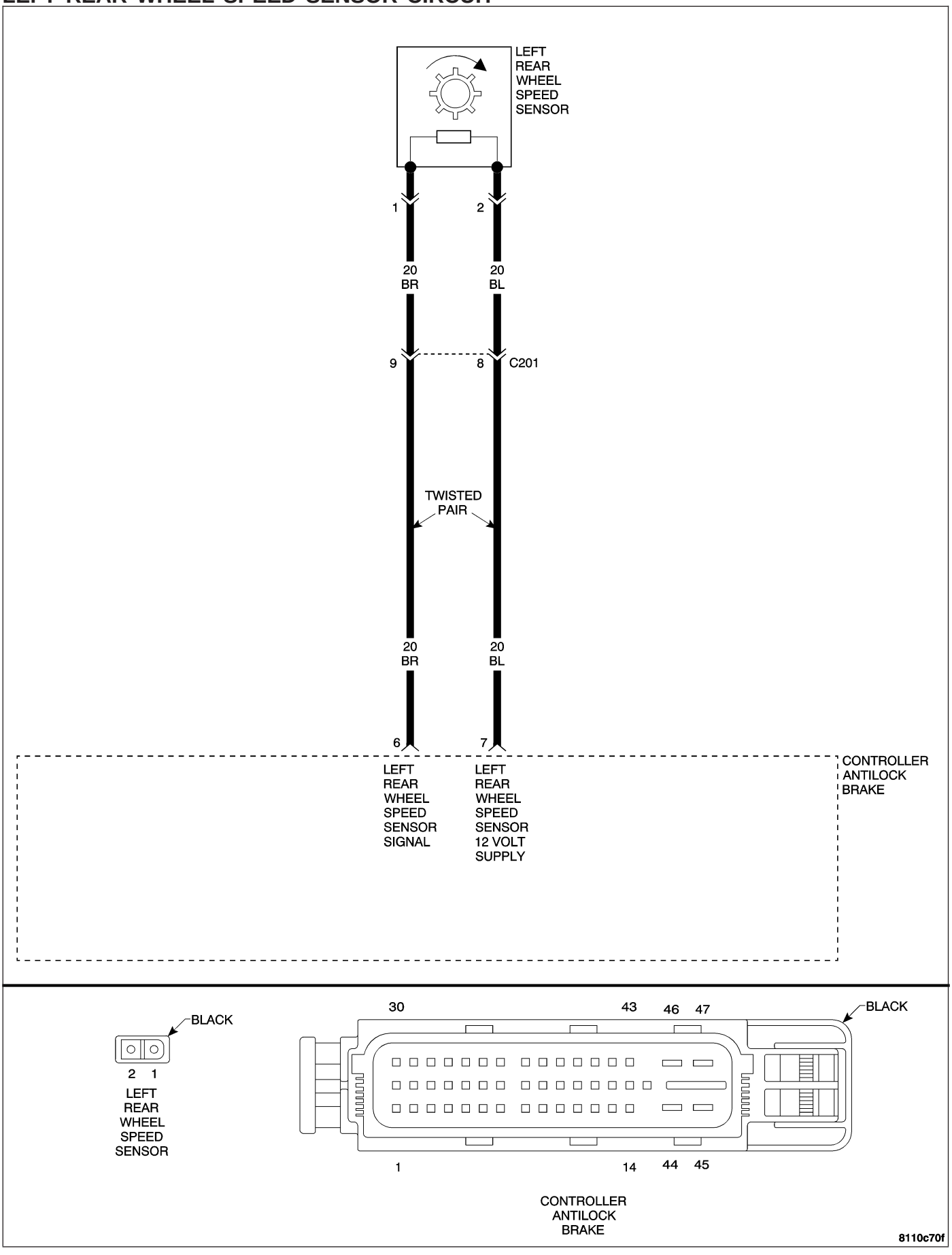

LEFT REAR WHEEL SPEED SENSOR CIRCUIT — CONTINUED

When Monitored and Set Condition

- When Monitored (Supply circuit): Ignition on. The Controller Antilock Brake (CAB) monitors the wheel speed circuit every 7 milliseconds (ms).
- When Monitored (Signal circuit): Wheel speed comparison is checked at drive off or every 7 milliseconds (ms). Sensor Signal continuity is checked every 7 milliseconds. Wheel speed phase length supervision is checked every 7 milliseconds.
- Set Condition (Supply circuit): If the CAB detects an open or shorted wheel speed sensor circuit, the Diagnostic Trouble Code (DTC) will set.
- Set Condition (Signal circuit): If, during an ABS stop, the CAB commands any valve solenoid on for an extended length of time, and does not see a corresponding wheel speed change, the Diagnostic Trouble Code (DTC) is set. The DTC can also set if the Signal is missing or erratic.

POSSIBLE CAUSES
WHEEL SPEED SENSOR MALFUNCTION
SENSOR CIRCUITS SHORTED OR OPEN
SENSOR OR TONE WHEEL DAMAGE
WHEEL SPEED SENSOR
CONTROLLER ANTILOCK BRAKE

For a complete Electronic Stability Program (ESP) Circuit Diagram **Refer to Page 5-149**.

Diagnostic Test

1. WITH THE DRB III®, READ DTCs

Turn the ignition on.
With the DRB III®, record and erase DTCs.
Turn the ignition off.
Turn the ignition on.
With the DRB III®, read DTCs.

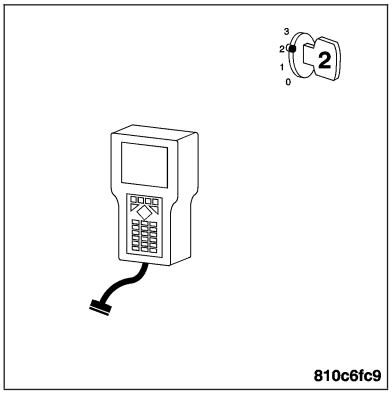

Does the DRB III® display a Left Rear Wheel Speed Sensor Circuit Failure DTC?

Yes >> Go to 2

No >> Go to 12

2. INSPECT THE LEFT REAR WHEEL SPEED SENSOR

Turn the ignition off.
Inspect the Left Rear Wheel Speed Sensor and connector.

Is the Sensor or Connector damaged?

Yes >> Repair as necessary.
Perform ABS VERIFICATION TEST.

No >> Go to 3

LEFT REAR WHEEL SPEED SENSOR CIRCUIT — CONTINUED

3. MEASURE THE VOLTAGE OF THE LEFT REAR WHEEL SPEED SENSOR 12 VOLT SUPPLY CIRCUIT

With the ignition off.
Disconnect the Left Rear Wheel Speed Sensor harness connector.

Note: Check connectors - Clean/repair as necessary.
Turn the ignition on.
Measure the voltage of the Left Rear Wheel Speed Sensor 12 Volt Supply circuit at the Left Rear Wheel Speed Sensor harness connector.

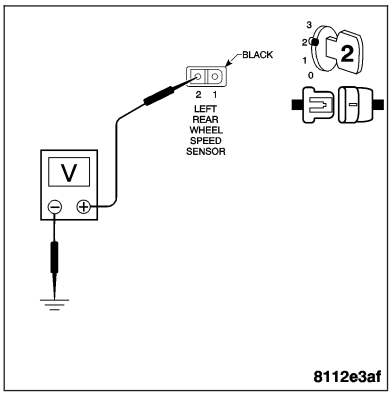

Is the voltage approximately 12 volts?

Yes >> Go to 7

No >> Go to 4

4. MEASURE THE VOLTAGE OF THE LEFT REAR WHEEL SPEED SENSOR 12 VOLT SUPPLY CIRCUIT

Turn the ignition off.
Measure the voltage of the Left Rear Wheel Speed Sensor 12 Volt Supply circuit at the Left Rear Wheel Speed Sensor harness connector.

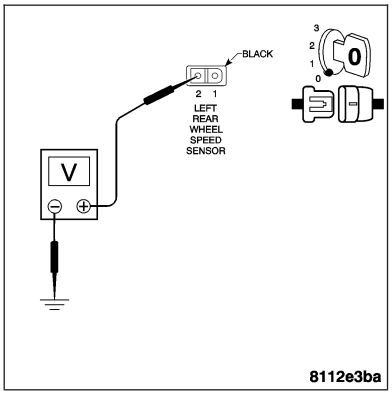

Is the voltage 0 volts?

Yes >> Go to 5

No >> Replace the Controller Antilock Brake. **Refer to Page 8E-63**.
Perform ABS VERIFICATION TEST.

5. MEASURE THE RESISTANCE BETWEEN GROUND AND THE LEFT REAR WHEEL SPEED SENSOR 12 VOLT SUPPLY CIRCUIT

With the ignition off.
Disconnect the CAB harness connector.

Note: Check connectors - Clean/repair as necessary.
Measure the resistance between ground and the Left Rear Wheel Speed Sensor 12 Volt Supply circuit at the CAB harness connector.

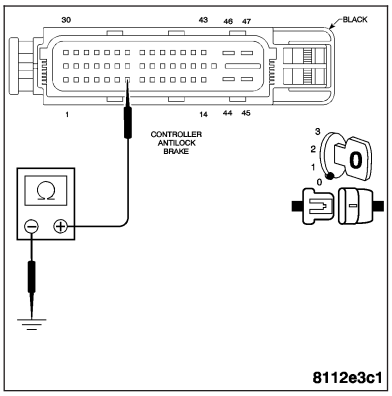

Is the resistance below 15k ohms?

Yes >> Repair the Left Rear Wheel Speed Sensor 12 Volt Supply circuit for a short to ground.
Perform ABS VERIFICATION TEST.

No >> Go to 6

LEFT REAR WHEEL SPEED SENSOR CIRCUIT — CONTINUED

6. MEASURE THE RESISTANCE OF THE LEFT REAR WHEEL SPEED SENSOR 12 VOLT SUPPLY CIRCUIT

With the ignition off.

Measure the resistance of the Left Rear Wheel Speed Sensor 12 Volt Supply circuit from the CAB harness connector to the Left Rear Wheel Speed Sensor harness connector.

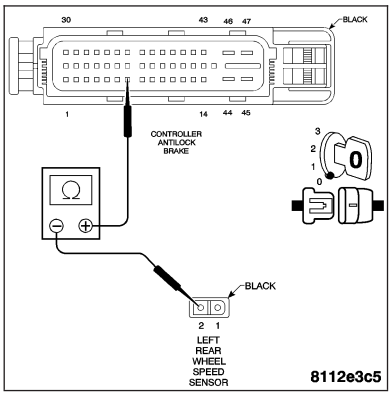

Is the resistance below 5.0 ohms?

Yes >> Go to 7

No >> Repair the Left Rear Wheel Speed Sensor 12 Volt Supply circuit for an open.
Perform ABS VERIFICATION TEST.

7. MEASURE THE RESISTANCE OF THE LEFT REAR WHEEL SPEED SENSOR SIGNAL CIRCUIT

With the ignition off.

Reconnect the CAB harness connector.

Measure the resistance between ground and the Left Rear Wheel Speed Sensor Signal circuit.

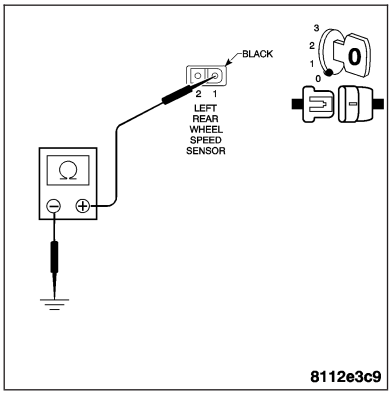

Is the resistance less than 100 ohms?

Yes >> Go to 10

No >> Go to 8

8. MEASURE THE RESISTANCE OF THE LEFT REAR WHEEL SPEED SENSOR SIGNAL CIRCUIT

With the ignition off.

Measure the resistance between ground and the Left Rear Wheel Speed Sensor Signal circuit.

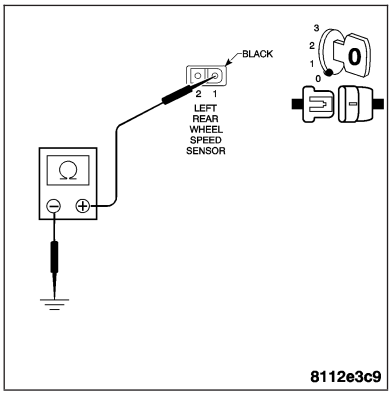

Is the resistance greater than 300 ohms?

Yes >> Go to 9

No >> Replace the Left Rear Wheel Speed Sensor. **Refer to Page 5-197**.
Perform ABS VERIFICATION TEST.

LEFT REAR WHEEL SPEED SENSOR CIRCUIT — CONTINUED

9. MEASURE THE RESISTANCE OF THE LEFT REAR WHEEL SPEED SENSOR SIGNAL CIRCUIT

With the ignition off.

Disconnect the CAB harness connector.

Note: Check connectors - Clean/repair as necessary.

Measure the resistance of the Left Rear Wheel Speed Sensor Signal circuit from the CAB harness connector to the Left Rear Wheel Speed Sensor harness connector.

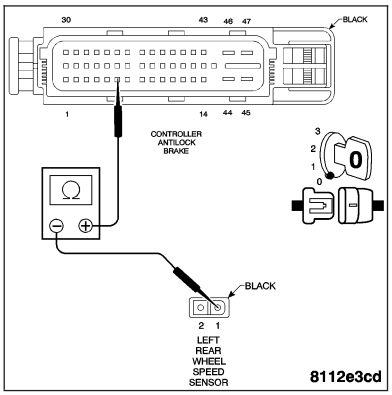

Is the resistance below 5.0 ohms?

Yes >> Go to 11

No >> Repair the Left Rear Wheel Speed Sensor Signal circuit for an open.
Perform ABS VERIFICATION TEST.

10. MEASURE THE RESISTANCE BETWEEN GROUND AND THE LEFT REAR WHEEL SPEED SENSOR SIGNAL CIRCUIT

With the ignition off.

Measure the resistance between ground and the Left Rear Wheel Speed Sensor Signal circuit at the CAB harness connector.

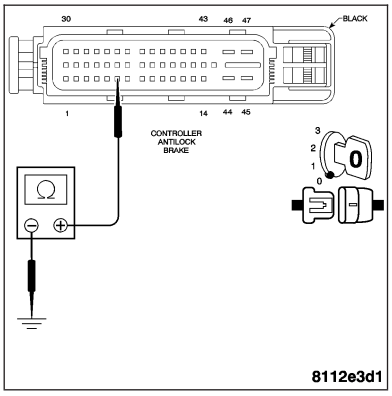

Is the resistance below 15k ohms?

Yes >> Repair the Left Rear Wheel Speed Sensor Signal circuit for a short to ground.
Perform ABS VERIFICATION TEST.

No >> Go to 11

11. MEASURE THE RESISTANCE BETWEEN THE LEFT REAR WHEEL SPEED SENSOR 12 VOLT SUPPLY CIRCUIT AND THE SENSOR SIGNAL CIRCUIT

With the ignition off.

Measure the resistance between the Left Rear Wheel Speed Sensor 12 Volt Supply circuit and the Left Rear Wheel Speed Sensor Signal circuit at the CAB harness connector.

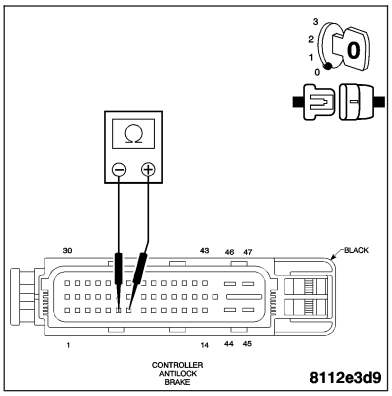

Is the resistance below 1000.0 ohms?

Yes >> Repair the Left Rear Wheel Speed Sensor 12 Volt Supply circuit for a short to the Left Rear Wheel Speed Sensor Signal circuit.
Perform ABS VERIFICATION TEST.

No >> Replace the Controller Antilock Brake. **Refer to Page 8E-63**.
Perform ABS VERIFICATION TEST.

LEFT REAR WHEEL SPEED SENSOR CIRCUIT — CONTINUED

12. VISUALLY INSPECT COMPONENTS FOR DAMAGE AND CORRECT INSTALLATION

Visually inspect the related wiring harness and connectors. Look for any chafed, pierced, pinched, or partially broken wires. Look for broken, bent, pushed out, or corroded terminals.

Visually inspect the Left Rear Wheel Speed Sensor, connector and tone wheel for damage and correct installation.

Are there any visible Sensor, connector or tone wheel concerns?

Yes >> Correct the sensor, connector or tone wheel concerns as necessary.
Perform ABS VERIFICATION TEST.

No >> Go to 13

13. MONITOR ALL WHEEL SPEED SENSORS WITH THE DRB III®

With the DRB III®, erase DTCs.

Start the engine.

With an assistant to drive, use the DRB III® to monitor all wheel speed sensors. Slowly accelerate as straight as possible from a stop to 15 MPH.

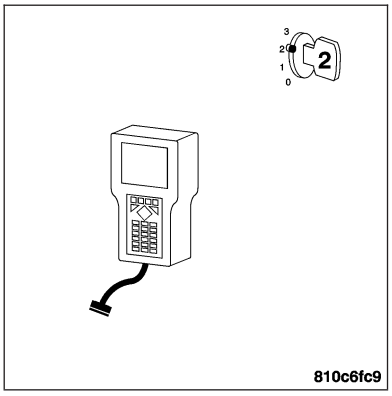

Is the Left Rear Wheel Speed Sensor Signal 0 or differing from others by more than 3 MPH?

Yes >> Replace the Left Rear Wheel Speed Sensor. **Refer to Page 5-197**.
Perform ABS VERIFICATION TEST.

No >> Inspect and repair the related wiring harness for a possible intermittent condition.
Perform ABS VERIFICATION TEST.

RIGHT REAR WHEEL SPEED SENSOR CIRCUIT

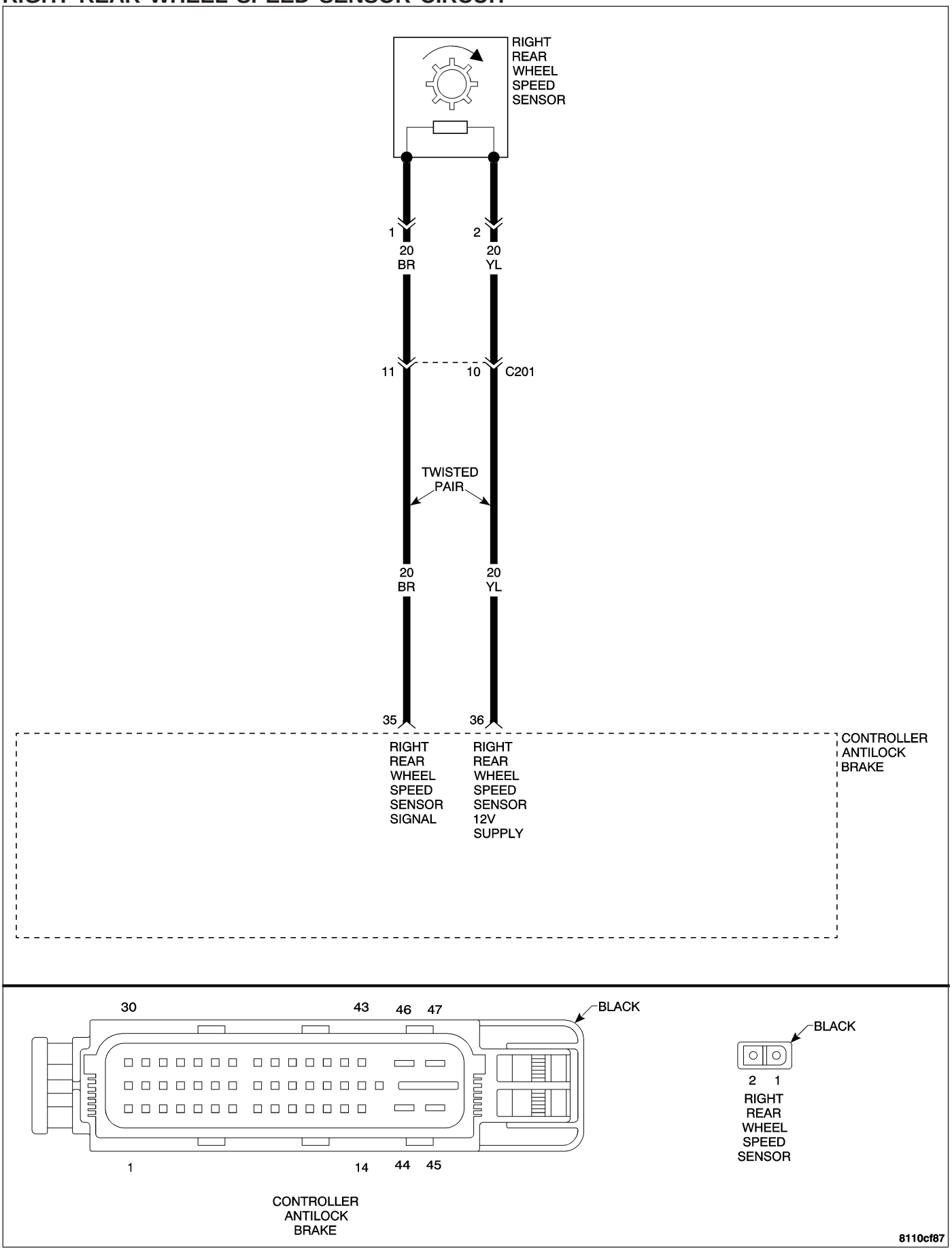

RIGHT REAR WHEEL SPEED SENSOR CIRCUIT — CONTINUED

When Monitored and Set Condition

- When Monitored (Supply circuit): Ignition on. The Controller Antilock Brake (CAB) monitors the wheel speed circuit every 7 milliseconds (ms).
- When Monitored (Signal circuit): Wheel speed comparison is checked at drive off or every 7 milliseconds (ms). Sensor Signal continuity is checked every 7 milliseconds. Wheel speed phase length supervision is checked every 7 milliseconds.
- Set Condition (Supply circuit): If the CAB detects an open or shorted wheel speed sensor circuit, the Diagnostic Trouble Code (DTC) will set.
- Set Condition (Signal circuit): If, during an ABS stop, the CAB commands any valve solenoid on for an extended length of time, and does not see a corresponding wheel speed change, the Diagnostic Trouble Code (DTC) is set. The DTC can also set if the Signal is missing or erratic.

POSSIBLE CAUSES
WHEEL SPEED SENSOR MALFUNCTION
SENSOR CIRCUITS SHORTED OR OPEN
SENSOR OR TONE WHEEL DAMAGE
WHEEL SPEED SENSOR
CONTROLLER ANTILOCK BRAKE

For a complete Electronic Stability Program (ESP) Circuit Diagram **Refer to Page 5-149**.

Diagnostic Test

1. WITH THE DRB III®, READ DTCs

Turn the ignition on.
With the DRB III®, record and erase DTCs.
Turn the ignition off.
Turn the ignition on.
With the DRB III®, read DTCs.

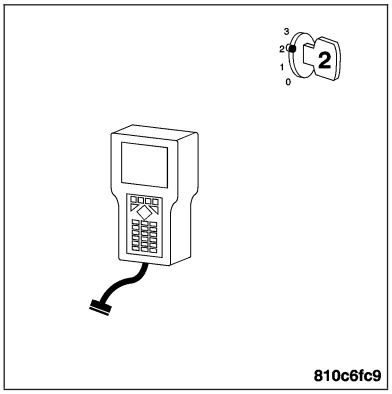

Does the DRB III® display a Right Rear Wheel Speed Sensor Circuit Failure DTC?

Yes >> Go to 2

No >> Go to 12

2. INSPECT THE RIGHT REAR WHEEL SPEED SENSOR

Turn the ignition off.
Inspect the Right Rear Wheel Speed Sensor and connector.

Is the Sensor or Connector damaged?

Yes >> Repair as necessary.
Perform ABS VERIFICATION TEST.

No >> Go to 3

RIGHT REAR WHEEL SPEED SENSOR CIRCUIT — CONTINUED

3. MEASURE THE VOLTAGE OF THE RIGHT REAR WHEEL SPEED SENSOR 12 VOLT SUPPLY CIRCUIT

With the ignition off.

Disconnect the Right Rear Wheel Speed Sensor connector.

Note: Check connectors - Clean/repair as necessary.

Turn the ignition on.

Measure the voltage of the Right Rear Wheel Speed Sensor 12 Volt Supply circuit at the Right Rear Wheel Speed Sensor harness connector.

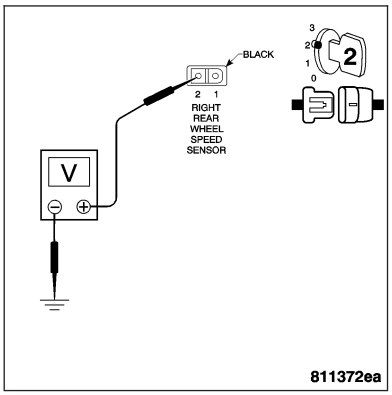

Is the voltage approximately 12 volts?

Yes >> Go to 7

No >> Go to 4

4. MEASURE THE VOLTAGE OF THE RIGHT REAR WHEEL SPEED SENSOR 12 VOLT SUPPLY CIRCUIT

Turn the ignition off.

Measure the voltage of the Right Rear Wheel Speed Sensor 12 Volt Supply circuit at the Right Rear Wheel Speed Sensor harness connector.

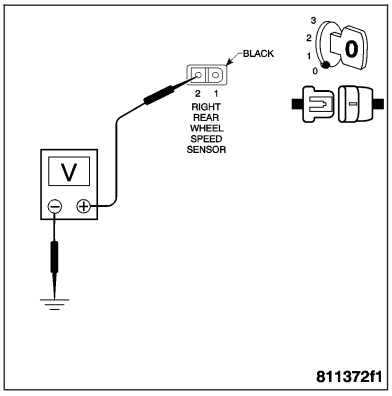

Is the voltage 0 volts?

Yes >> Go to 5

No >> Replace the Controller Antilock Brake. **Refer to Page 8E-63**.
Perform ABS VERIFICATION TEST.

5. MEASURE THE RESISTANCE BETWEEN GROUND AND THE RIGHT REAR WHEEL SPEED SENSOR 12 VOLT SUPPLY CIRCUIT

Turn the ignition off.

Disconnect the CAB harness connector.

Note: Check connectors - Clean/repair as necessary.

Measure the resistance between ground and the Right Rear Wheel Speed Sensor 12 Volt Supply circuit at the CAB harness connector.

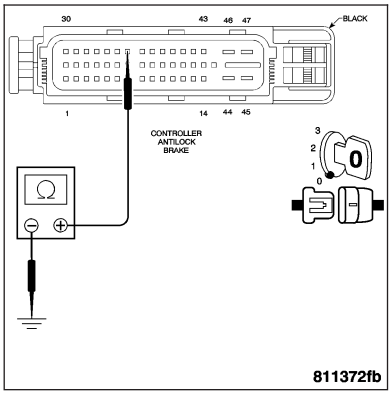

Is the resistance below 15k ohms?

Yes >> Repair the Right Rear Wheel Speed Sensor 12 Volt Supply circuit for a short to ground.
Perform ABS VERIFICATION TEST.

No >> Go to 6

RIGHT REAR WHEEL SPEED SENSOR CIRCUIT — CONTINUED

6. MEASURE THE RESISTANCE OF THE RIGHT REAR WHEEL SPEED SENSOR 12 VOLT SUPPLY CIRCUIT

With the ignition off.

Measure the resistance of the Right Rear Wheel Speed Sensor 12 Volt Supply circuit from the CAB harness connector to the Right Rear Wheel Speed Sensor harness connector.

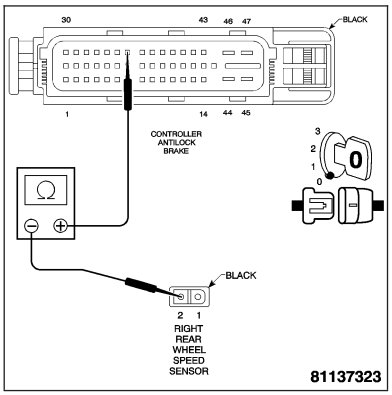

Is the resistance below 5.0 ohms?

Yes >> Go to 7

No >> Repair the Right Rear Wheel Speed Sensor 12 volt supply circuit for an open.
Perform ABS VERIFICATION TEST.

7. MEASURE THE RESISTANCE OF THE RIGHT REAR WHEEL SPEED SENSOR SIGNAL CIRCUIT

With the ignition off.

Reconnect the CAB harness connector.

Measure the resistance between ground and the Right Rear Wheel Speed Sensor Signal circuit.

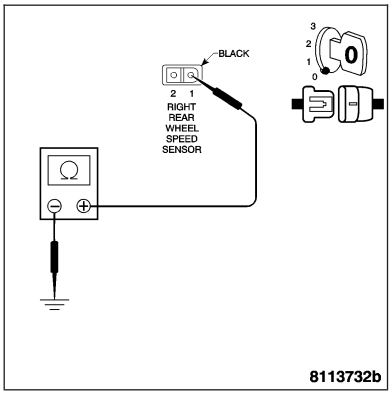

Is the resistance less than 100 ohms?

Yes >> Go to 10

No >> Go to 8

8. MEASURE THE RESISTANCE OF THE RIGHT REAR WHEEL SPEED SENSOR SIGNAL CIRCUIT

With the ignition off.

Measure the resistance between ground and the Right Rear Wheel Speed Sensor Signal circuit.

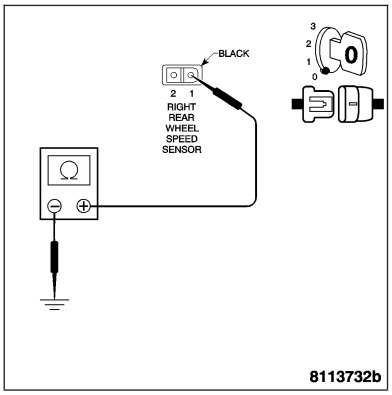

Is the resistance greater than 300 ohms?

Yes >> Go to 9

No >> Replace the Right Rear Wheel Speed Sensor. **Refer to Page 5-197**.
Perform ABS VERIFICATION TEST.

RIGHT REAR WHEEL SPEED SENSOR CIRCUIT — CONTINUED

9. MEASURE THE RESISTANCE OF THE RIGHT REAR WHEEL SPEED SENSOR SIGNAL CIRCUIT

With the ignition off.

Disconnect the CAB harness connector.

Note: Check connectors - Clean/repair as necessary.

Measure the resistance of the Right Rear Wheel Speed Sensor Signal circuit from the CAB harness connector to the Right Rear Wheel Speed Sensor harness connector.

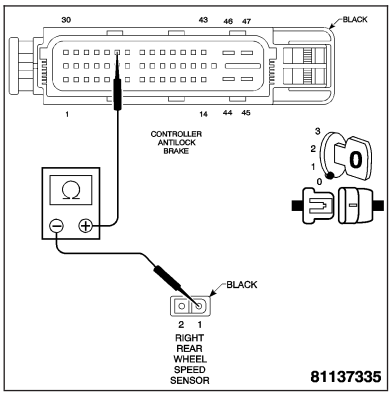

Is the resistance below 5.0 ohms?

Yes >> Go to 11

No >> Repair the Right Rear Wheel Speed Sensor Signal circuit for an open.
Perform ABS VERIFICATION TEST.

10. MEASURE THE RESISTANCE BETWEEN GROUND AND THE RIGHT REAR WHEEL SPEED SENSOR SIGNAL CIRCUIT

With the ignition off.

Measure the resistance between ground and the Right Rear Wheel Speed Sensor Signal circuit at the CAB harness connector.

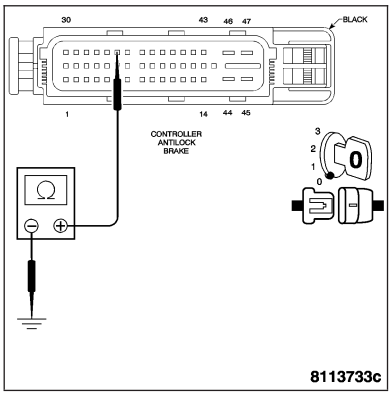

Is the resistance below 15k ohms?

Yes >> Repair the Right Rear Wheel Speed Sensor Signal circuit for a short to ground.
Perform ABS VERIFICATION TEST.

No >> Go to 11

11. MEASURE THE RESISTANCE BETWEEN THE RIGHT REAR WHEEL SPEED SENSOR 12 VOLT SUPPLY CIRCUIT AND THE SENSOR SIGNAL CIRCUIT

With the ignition off.

Measure the resistance between the Right Rear Wheel Speed Sensor 12 Volt Supply circuit and the Right Rear Wheel Speed Sensor Signal circuit at the CAB harness connector.

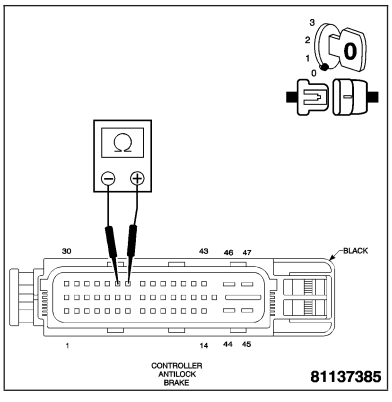

Is the resistance below 1000.0 ohms?

Yes >> Repair the Right Rear Wheel Speed Sensor 12 Volt Supply circuit for a short to the Right Rear Wheel Speed Sensor Signal circuit.
Perform ABS VERIFICATION TEST.

No >> Replace the Controller Antilock Brake. **Refer to Page 8E-63**.
Perform ABS VERIFICATION TEST.

RIGHT REAR WHEEL SPEED SENSOR CIRCUIT — CONTINUED

12. VISUALLY INSPECT COMPONENTS FOR DAMAGE AND CORRECT INSTALLATION

Visually inspect the related wiring harness and connectors. Look for any chafed, pierced, pinched, or partially broken wires. Look for broken, bent, pushed out, or corroded terminals.

Visually inspect the Right Rear Wheel Speed Sensor, connector and tone wheel for damage and correct installation.

Are there any visible Sensor, connector or tone wheel concerns?

Yes >> Correct the sensor, connector or tone wheel concerns as necessary.
Perform ABS VERIFICATION TEST.

No >> Go to 13

13. MONITOR ALL WHEEL SPEED SENSORS WITH THE DRB III®

With the DRB III®, erase DTCs.

Start the engine.

With an assistant to drive, use the DRB III® to monitor all wheel speed sensors. Slowly accelerate as straight as possible from a stop to 15 MPH.

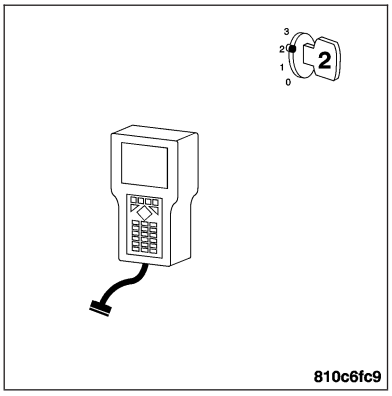

Is the Right Rear Wheel Speed Sensor Signal 0 or differing from others by more than 3 MPH?

Yes >> Replace the Right Rear Wheel Speed Sensor. **Refer to Page 5-197**.
Perform ABS VERIFICATION TEST.

No >> Inspect and repair the related wiring harness for a possible intermittent condition.
Perform ABS VERIFICATION TEST.

ESP YAW RATE SENSOR CIRCUIT

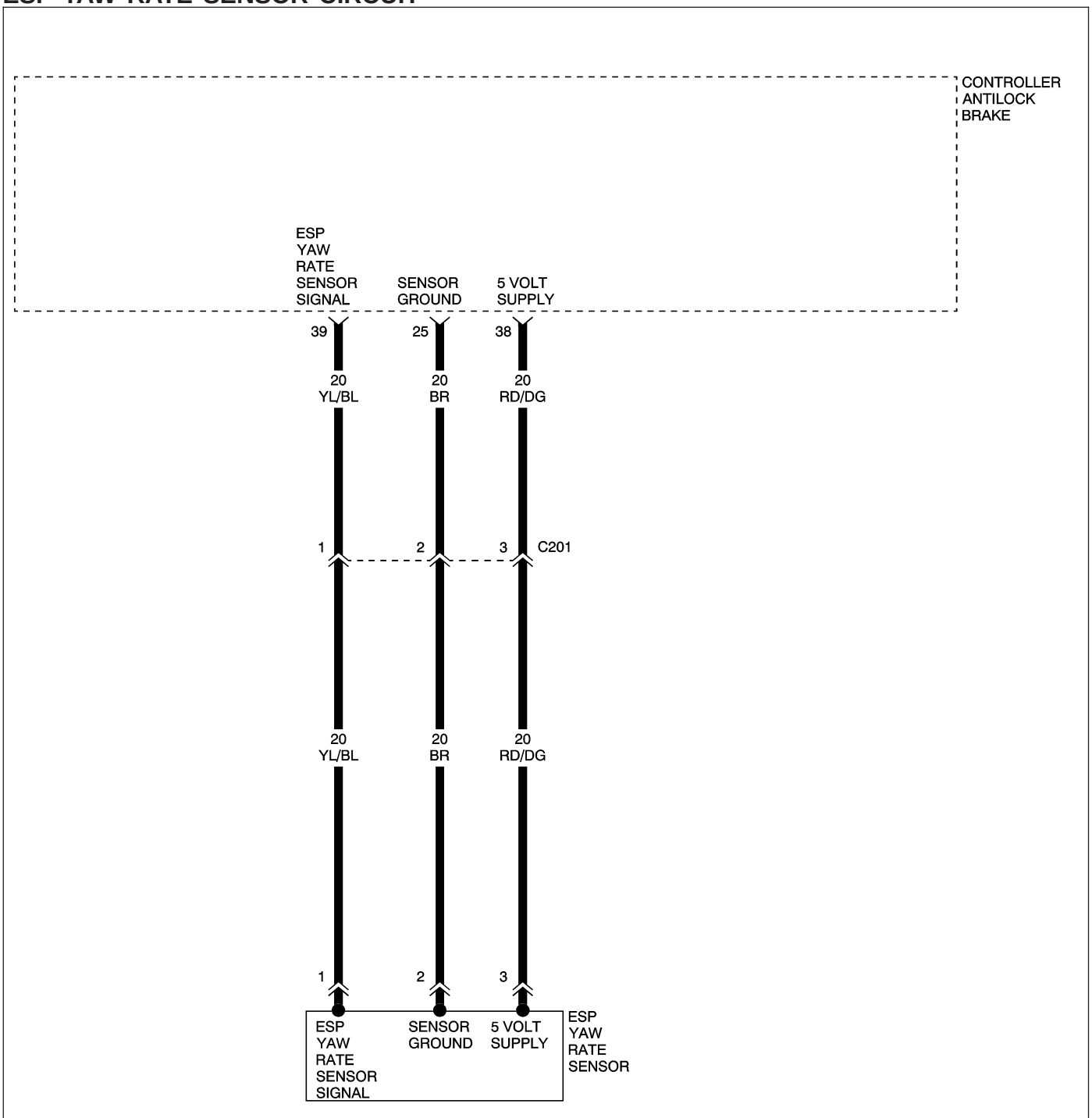

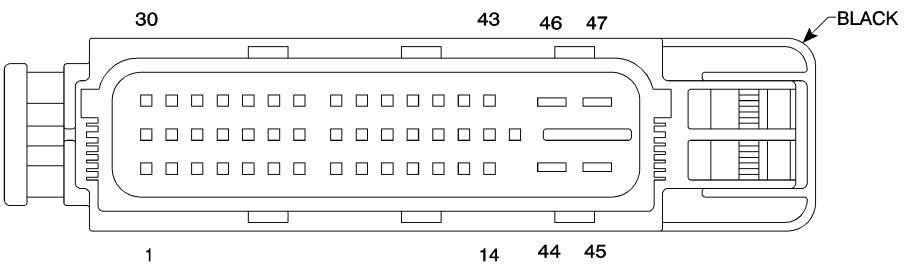

CONTROLLER ANTILOCK BRAKE

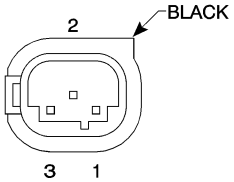

ESP YAW RATE SENSOR

8114917b

ESP YAW RATE SENSOR CIRCUIT — CONTINUED

When Monitored and Set Condition

- When Monitored: Ignition on.
- Set Condition: The Controller Antilock Brake (CAB) detects an Electronic Stability Program (ESP) Yaw Rate Sensor malfunction.

POSSIBLE CAUSES
YAW RATE SENSOR SIGNAL CIRCUIT SHORT TO VOLTAGE
YAW RATE SENSOR SIGNAL CIRCUIT SHORT TO 5-VOLT SUPPLY CIRCUIT
YAW RATE SENSOR SIGNAL CIRCUIT SHORT TO GROUND
YAW RATE SENSOR SIGNAL CIRCUIT SHORT TO SENSOR GROUND CIRCUIT
YAW RATE SENSOR SIGNAL CIRCUIT OPEN
YAW RATE SENSOR 5-VOLT SUPPLY CIRCUIT OPEN
YAW RATE SENSOR 5-VOLT SUPPLY CIRCUIT SHORT TO GROUND
YAW RATE SENSOR GROUND CIRCUIT OPEN
YAW RATE SENSOR
CONTROLLER ANTILOCK BRAKE

For a complete Electronic Stability Program (ESP) Circuit Diagram **Refer to Page 5-149**.

Diagnostic Test

1. MEASURE THE VOLTAGE OF THE ESP YAW RATE SENSOR SIGNAL CIRCUIT

Turn the ignition off.

Disconnect the CAB harness connector.

Disconnect the ESP Yaw Rate Sensor harness connector.

Note: Check connectors - Clean/repair as necessary.

Turn the ignition on.

Measure the voltage of the ESP Yaw Rate Sensor Signal circuit at the ESP Yaw Rate Sensor harness connector.

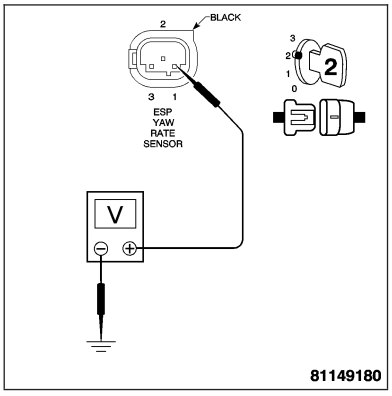

Is voltage present?

Yes >> Repair the ESP Yaw Rate Sensor Signal circuit for a short to voltage.
Perform ABS VERIFICATION TEST.

No >> Go to 2

ESP YAW RATE SENSOR CIRCUIT — CONTINUED

2. MEASURE THE RESISTANCE BETWEEN THE ESP YAW RATE SIGNAL CIRCUIT AND THE 5-VOLT SUPPLY CIRCUIT

With the ignition off.

Measure the resistance between the ESP Yaw Rate Sensor Signal circuit and the 5-Volt Supply circuit in the ESP Yaw Rate Sensor harness connector.

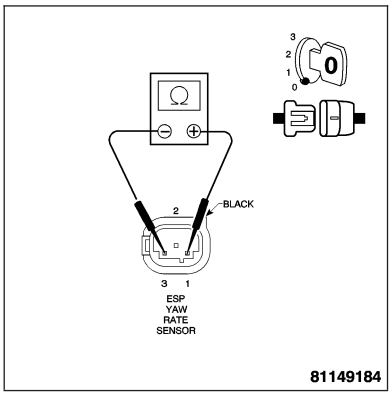

Is the resistance below 10K ohms?

Yes >> Repair the ESP Yaw Rate Sensor Signal circuit for a short to the 5-Volt Supply circuit.
Perform ABS VERIFICATION TEST.

No >> Go to 3

3. MEASURE THE RESISTANCE OF THE ESP YAW RATE SENSOR SIGNAL CIRCUIT

With the ignition off.

Measure the resistance of the ESP Yaw Rate Sensor Signal circuit from the CAB harness connector to the ESP Yaw Rate Sensor harness connector.

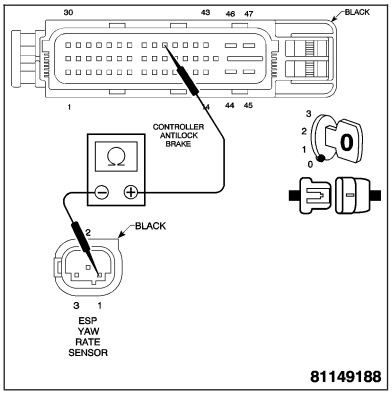

Is the resistance below 5.0 ohms?

Yes >> Go to 4

No >> Repair the ESP Yaw Rate Sensor Signal circuit for an open.
Perform ABS VERIFICATION TEST.

4. MEASURE THE RESISTANCE BETWEEN GROUND AND THE ESP YAW RATE SENSOR GROUND CIRCUIT

With the ignition off.

Measure the resistance between ground and the Sensor Ground circuit.

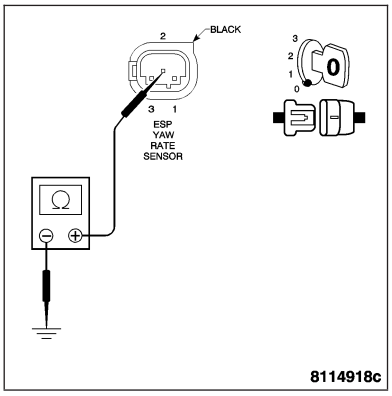

Is the resistance below 10K ohms?

Yes >> Repair the Sensor Ground circuit for a short to ground.
Perform ABS VERIFICATION TEST.

No >> Go to 5

ESP YAW RATE SENSOR CIRCUIT — CONTINUED

5. MEASURE THE VOLTAGE OF THE 5-VOLT SUPPLY CIRCUIT

With the ignition off.

Reconnect the CAB harness connector.

Turn the ignition on.

Measure the voltage of the 5-Volt Supply circuit at the ESP Yaw Rate Sensor harness connector.

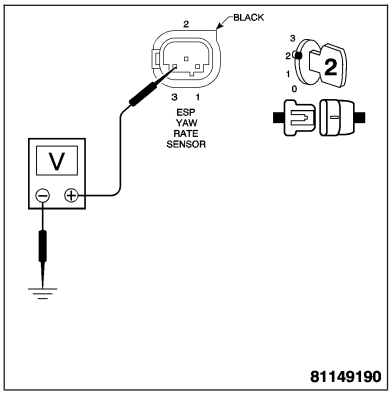

Is the voltage between 4.5 and 5.0 volts?

Yes >> Go to 6

No >> Go to 8

6. MEASURE THE RESISTANCE BETWEEN GROUND AND THE ESP YAW RATE SENSOR SIGNAL CIRCUIT

Turn the ignition off.

Disconnect the CAB harness connector.

Note: Check connectors - Clean/repair as necessary.

Measure the resistance between ground and the ESP Yaw Rate Sensor Signal circuit.

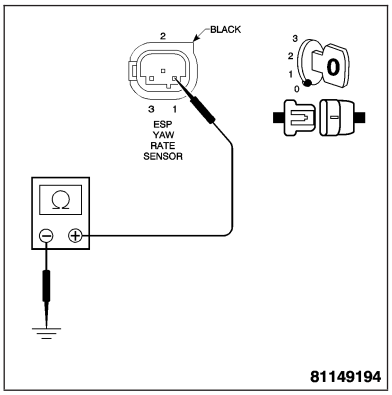

Is the resistance below 10K ohms?

Yes >> Repair the ESP Yaw Rate Sensor Signal circuit for a short to ground.
Perform ABS VERIFICATION TEST.

No >> Go to 7

7. MEASURE THE RESISTANCE BETWEEN THE ESP YAW RATE SENSOR SIGNAL CIRCUIT AND THE SENSOR GROUND CIRCUIT

With the ignition off.

Measure the resistance between the ESP Yaw Rate Sensor Signal circuit and the Sensor Ground circuit in the ESP Yaw Rate Sensor harness connector.

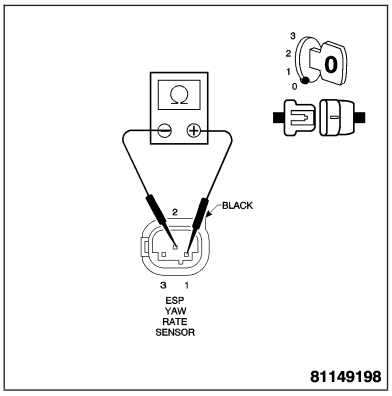

Is the resistance below 10K ohms?

Yes >> Repair the ESP Yaw Rate Sensor Signal circuit for a short to the Sensor Ground circuit.
Perform ABS VERIFICATION TEST.

No >> Replace the ESP Yaw Rate Sensor. **Refer to Page 5-201**.
Perform ABS VERIFICATION TEST.

ESP YAW RATE SENSOR CIRCUIT — CONTINUED

8. MEASURE THE RESISTANCE BETWEEN GROUND AND THE ESP YAW RATE SENSOR 5-VOLT SUPPLY CIRCUIT

Turn the ignition off.

Disconnect the CAB harness connector.

Note: Check connectors - Clean/repair as necessary.

Measure the resistance between ground and the 5-Volt Supply circuit.

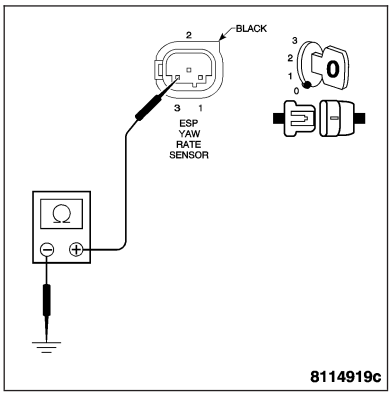

Is the resistance below 10K ohms?

Yes >> Repair the 5-Volt Supply circuit for a short to ground.
Perform ABS VERIFICATION TEST.

No >> Go to 9

9. MEASURE THE RESISTANCE OF THE ESP YAW RATE SENSOR 5-VOLT SUPPLY CIRCUIT

With the ignition off.

Measure the resistance of the 5-Volt Supply circuit from the ESP Yaw Rate Sensor harness connector to the CAB harness connector.

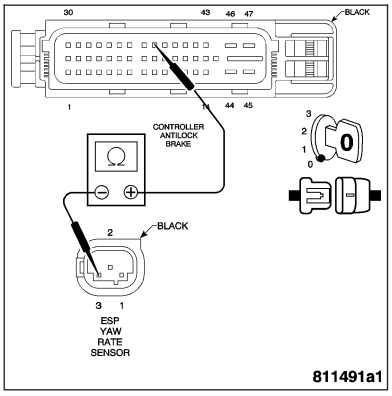

Is the resistance below 5.0 ohms?

Yes >> Replace the Controller Antilock Brake. **Refer to Page 8E-63**.
Perform ABS VERIFICATION TEST.

No >> Repair the ESP Yaw Rate Sensor 5-Volt Supply circuit for an open.
Perform ABS VERIFICATION TEST.

STEERING ANGLE SENSOR CIRCUIT

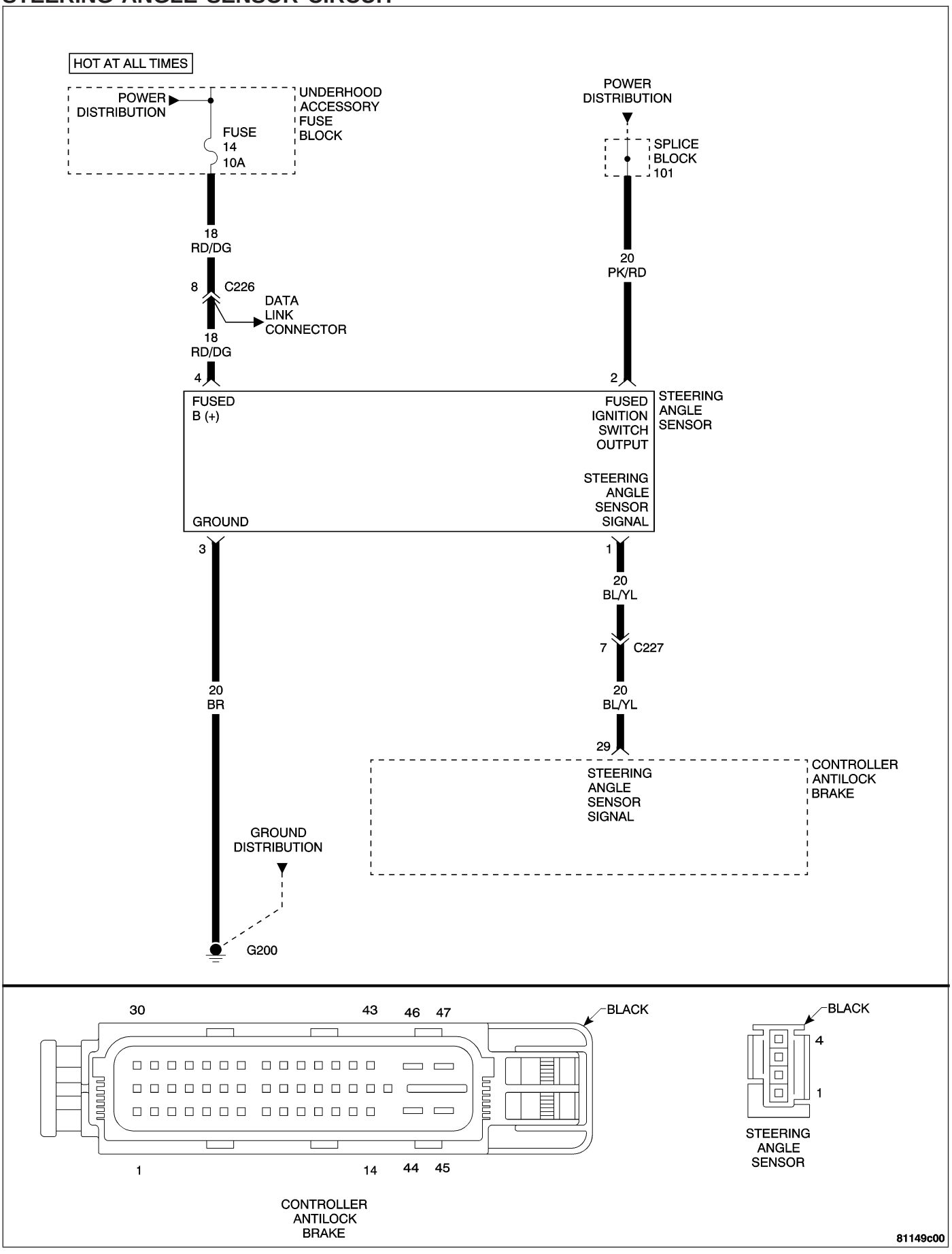

STEERING ANGLE SENSOR CIRCUIT — CONTINUED

When Monitored and Set Condition

- When Monitored: With the ignition on. The Controller Antilock Brake (CAB) monitors the status of the Steering Angle Sensor.
- Set Condition: The DTC will set if a malfunction is detected between the CAB and the Steering Angle Sensor.

POSSIBLE CAUSES
FUSED B(+) CIRCUIT OPEN
STEERING ANGLE SENSOR SIGNAL CIRCUIT OPEN
STEERING ANGLE SENSOR SIGNAL CIRCUIT SHORT TO GROUND
STEERING ANGLE SENSOR SIGNAL CIRCUIT SHORT TO VOLTAGE
STEERING ANGLE SENSOR
CONTROLLER ANTILOCK BRAKE

For a complete Electronic Stability Program (ESP) Circuit Diagram **Refer to Page 5-149**.

Diagnostic Test

1. MEASURE STEERING ANGLE SENSOR FUSED B(+) CIRCUIT VOLTAGE

Note: Inspect Fuse 14 located in the Underhood Accessory Fuse Block. If the fuse is open, repair the cause of the open fuse before continuing.

Turn the ignition off.

Disconnect the Steering Angle Sensor harness connector.

Note: Check connectors - Clean/repair as necessary.

Turn the ignition on.

Measure the voltage of the Fused B(+) circuit at the Steering Angle Sensor harness connector.

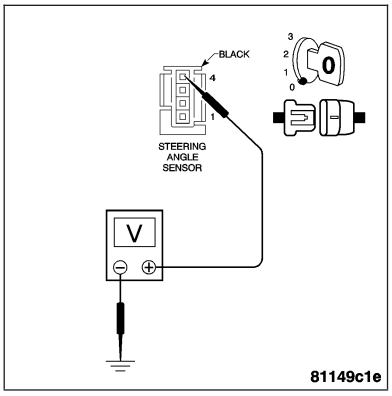

Is the voltage above 10 volts?

Yes >> Go to 2

No >> Repair the Steering Angle Sensor Fused B(+) circuit. Perform ABS VERIFICATION TEST.

STEERING ANGLE SENSOR CIRCUIT — CONTINUED

2. MEASURE THE STEERING ANGLE SENSOR SIGNAL CIRCUIT RESISTANCE

Turn the ignition off.

Disconnect the CAB harness connector.

Note: Check connectors - Clean/repair as necessary.

Measure the resistance of the Steering Angle Sensor Signal circuit from the CAB harness connector to the Steering Angle Sensor harness connector.

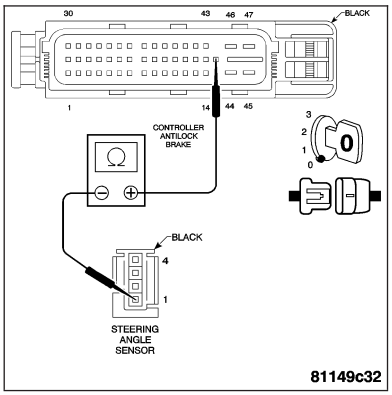

Is the resistance below 5.0 ohms?

Yes >> Go to 3

No >> Repair the Steering Angle Sensor Signal circuit for an open.
Perform ABS VERIFICATION TEST.

3. MEASURE THE STEERING ANGLE SENSOR SIGNAL CIRCUIT RESISTANCE

With the ignition off.

Measure the resistance between ground and the Steering Angle Sensor Signal circuit.

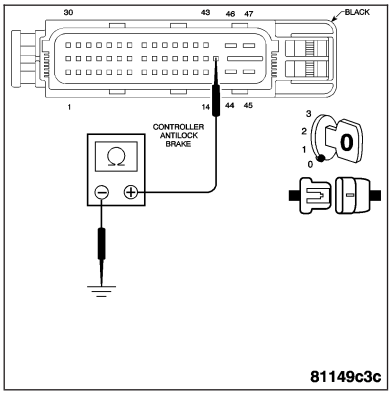

Is the resistance below 10K ohms?

Yes >> Repair the Steering Angle Sensor Signal circuit for a short to ground.
Perform ABS VERIFICATION TEST.

No >> Go to 4

4. MEASURE THE VOLTAGE OF THE STEERING ANGLE SENSOR SIGNAL CIRCUIT

Turn the ignition on.

Measure the voltage of the Steering Angle Sensor Signal circuit at the Steering Angle Sensor harness connector.

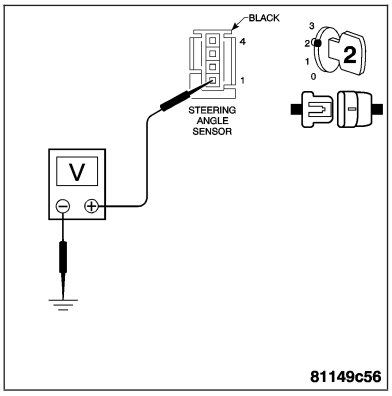

Is voltage present?

Yes >> Repair the Steering Angle Sensor Signal circuit for a short to voltage.
Perform ABS VERIFICATION TEST.

No >> Go to 5

STEERING ANGLE SENSOR CIRCUIT — CONTINUED

5. MEASURE THE STEERING ANGLE SENSOR GROUND CIRCUIT RESISTANCE

Turn the ignition off.
Measure the resistance between ground and the Sensor Ground circuit.

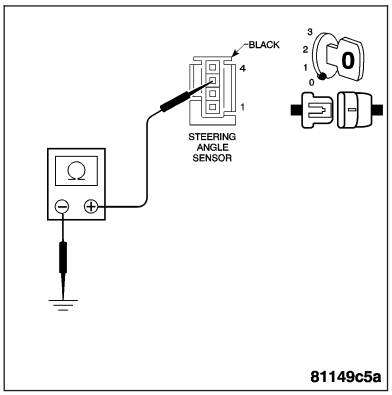

Is the resistance below 5.0 ohms?

Yes >> Replace the Steering Angle Sensor. **Refer to Page 5-200**.
Perform ABS VERIFICATION TEST.

No >> Repair the Sensor Ground circuit for an open.
Perform ABS VERIFICATION TEST.

ESP BRAKE PRESSURE SENSOR 1 CIRCUIT

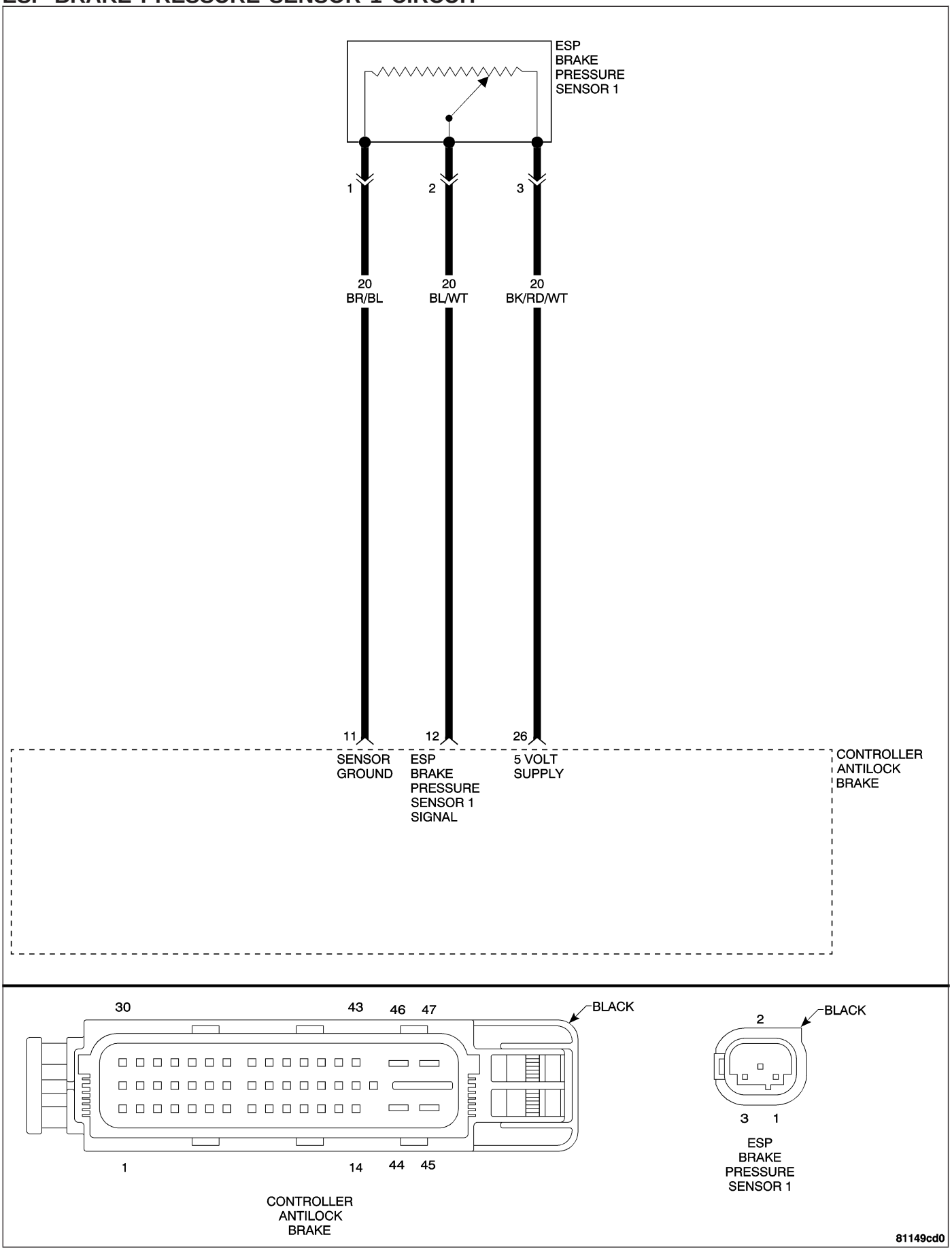

ESP BRAKE PRESSURE SENSOR 1 CIRCUIT — CONTINUED

When Monitored and Set Condition

- When Monitored: Ignition on.
- Set Condition: The Controller Antilock Brake (CAB) detects an Electronic Stability Program (ESP) Brake Pressure Sensor 1 malfunction.

POSSIBLE CAUSES
BRAKE PRESSURE SENSOR SIGNAL CIRCUIT SHORT TO VOLTAGE
BRAKE PRESSURE SENSOR SIGNAL CIRCUIT SHORT TO 5-VOLT SUPPLY CIRCUIT
BRAKE PRESSURE SENSOR SIGNAL CIRCUIT SHORT TO GROUND
BRAKE PRESSURE SENSOR SIGNAL CIRCUIT SHORT TO SENSOR GROUND CIRCUIT
BRAKE PRESSURE SENSOR SIGNAL CIRCUIT OPEN
BRAKE PRESSURE SENSOR 5-VOLT SUPPLY CIRCUIT OPEN
BRAKE PRESSURE SENSOR 5-VOLT SUPPLY CIRCUIT SHORT TO GROUND
BRAKE PRESSURE SENSOR GROUND CIRCUIT OPEN
BRAKE PRESSURE SENSOR
CONTROLLER ANTILOCK BRAKE

For a complete Electronic Stability Program (ESP) Circuit Diagram **Refer to Page 5-149**.

Diagnostic Test

1. MEASURE THE VOLTAGE OF THE ESP BRAKE PRESSURE SENSOR 1 SIGNAL CIRCUIT

Turn the ignition off.

Disconnect the CAB harness connector.

Disconnect the ESP Brake Pressure Sensor 1 harness connector.

Note: Check connectors - Clean/repair as necessary.

Turn the ignition on.

Measure the voltage of the ESP Brake Pressure Sensor 1 Signal circuit at the ESP Brake Pressure Sensor 1 harness connector.

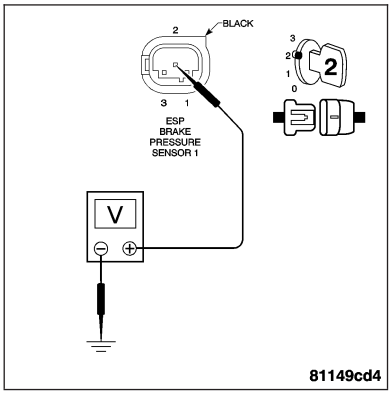

Is voltage present?

Yes >> Repair the ESP Brake Pressure Sensor 1 Signal circuit for a short to voltage.
Perform ABS VERIFICATION TEST.

No >> Go to 2

ESP BRAKE PRESSURE SENSOR 1 CIRCUIT — CONTINUED

2. MEASURE THE RESISTANCE BETWEEN THE ESP BRAKE PRESSURE 1 SIGNAL CIRCUIT AND THE 5-VOLT SUPPLY CIRCUIT

Turn the ignition off.

Measure the resistance between the ESP Brake Pressure Sensor 1 Signal circuit and the 5-Volt Supply circuit in the ESP Brake Pressure Sensor 1 harness connector.

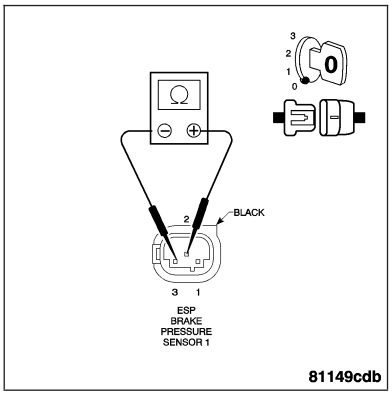

Is the resistance below 10K ohms?

Yes >> Repair the ESP Brake Pressure Sensor 1 Signal circuit for a short to the 5-Volt Supply circuit.
Perform ABS VERIFICATION TEST.

No >> Go to 3

3. MEASURE THE RESISTANCE OF THE ESP BRAKE PRESSURE SENSOR 1 SIGNAL CIRCUIT

With the ignition off.

Measure the resistance of the ESP Brake Pressure Sensor 1 Signal circuit from the CAB harness connector to the ESP Brake Pressure Sensor 1 harness connector.

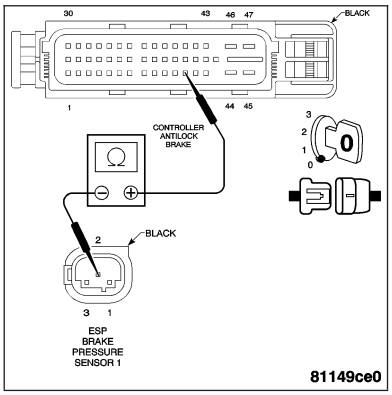

Is the resistance below 5.0 ohms?

Yes >> Go to 4

No >> Repair the ESP Brake Pressure Sensor 1 Signal circuit for an open.
Perform ABS VERIFICATION TEST.

4. MEASURE THE RESISTANCE BETWEEN GROUND AND THE ESP BRAKE PRESSURE SENSOR 1 GROUND CIRCUIT

With the ignition off.

Measure the resistance between ground and the Sensor Ground circuit.

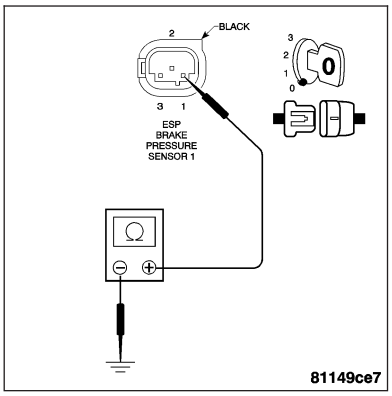

Is the resistance below 10K ohms?

Yes >> Repair the Sensor Ground circuit for a short to ground.
Perform ABS VERIFICATION TEST.

No >> Go to 5

ESP BRAKE PRESSURE SENSOR 1 CIRCUIT — CONTINUED

5. MEASURE THE VOLTAGE OF THE 5-VOLT SUPPLY CIRCUIT

With the ignition off.

Reconnect the CAB harness connector.

Turn the ignition on.

Measure the voltage of the 5-Volt Supply circuit at the ESP Brake Pressure Sensor 1 harness connector.

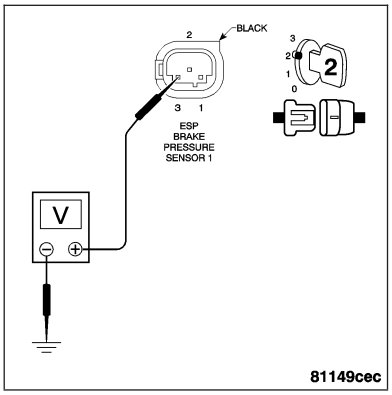

Is the voltage between 4.5 and 5.0 volts?

Yes >> Go to 6

No >> Go to 8

6. MEASURE THE RESISTANCE BETWEEN GROUND AND THE ESP BRAKE PRESSURE SENSOR 1 SIGNAL CIRCUIT

Turn the ignition off.

Disconnect the CAB harness connector.

Note: Check connectors - Clean/repair as necessary.

Measure the resistance between ground and the ESP Brake Pressure Sensor 1 Signal circuit.

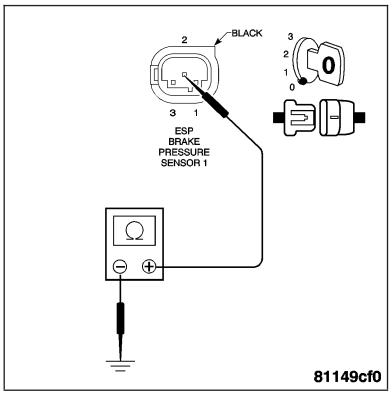

Is the resistance below 10K ohms?

Yes >> Repair the ESP Brake Pressure Sensor 1 Signal circuit for a short to ground.
Perform ABS VERIFICATION TEST.

No >> Go to 7

7. MEASURE THE RESISTANCE BETWEEN THE ESP BRAKE PRESSURE SENSOR 1 SIGNAL CIRCUIT AND THE SENSOR GROUND CIRCUIT

With the ignition off.

Measure the resistance between the ESP Brake Pressure Sensor 1 Signal circuit and the Sensor Ground circuit in the ESP Brake Pressure Sensor 1 harness connector.

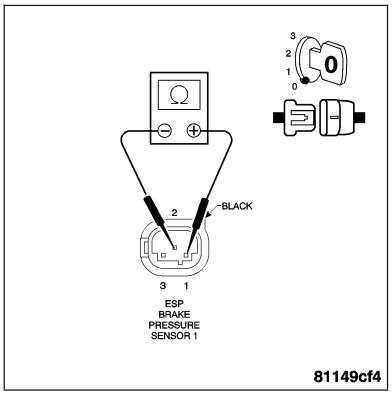

Is the resistance below 10K ohms?

Yes >> Repair the ESP Brake Pressure Sensor 1 Signal circuit for a short to the Sensor Ground circuit.
Perform ABS VERIFICATION TEST.

No >> Replace the ESP Brake Pressure Sensor 1. **Refer to Page 5-201**.
Perform ABS VERIFICATION TEST.

ESP BRAKE PRESSURE SENSOR 1 CIRCUIT — CONTINUED

8. MEASURE THE RESISTANCE BETWEEN GROUND AND THE ESP BRAKE PRESSURE SENSOR 5-VOLT SUPPLY CIRCUIT

Turn the ignition off.

Disconnect the CAB harness connector.

Note: Check connectors - Clean/repair as necessary.

Measure the resistance between ground and the 5-Volt Supply circuit.

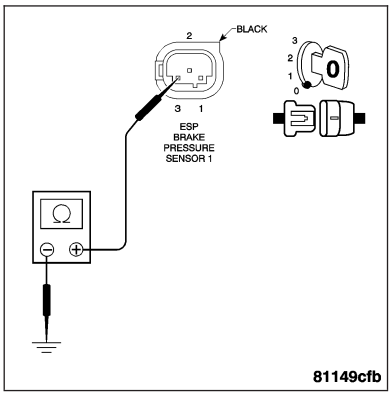

Is the resistance below 10K ohms?

Yes >> Repair the 5-Volt Supply circuit for a short to ground.
Perform ABS VERIFICATION TEST.

No >> Go to 9

9. MEASURE THE RESISTANCE OF THE ESP BRAKE PRESSURE SENSOR 5-VOLT SUPPLY CIRCUIT

With the ignition off.

Measure the resistance of the 5-Volt Supply circuit from the ESP Brake Pressure Sensor 1 harness connector to the CAB harness connector.

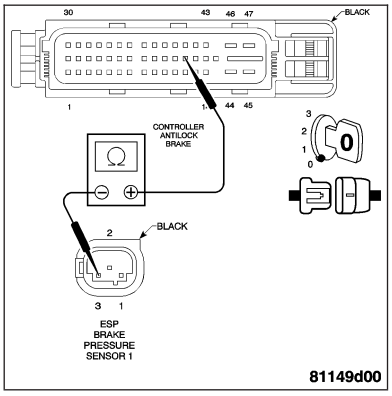

Is the resistance below 5.0 ohms?

Yes >> Replace the Controller Antilock Brake. **Refer to Page 8E-63**.
Perform ABS VERIFICATION TEST.

No >> Repair the ESP Brake Pressure Sensor 5-Volt Supply circuit for an open.
Perform ABS VERIFICATION TEST.

ESP BRAKE PRESSURE SENSOR 2 CIRCUIT

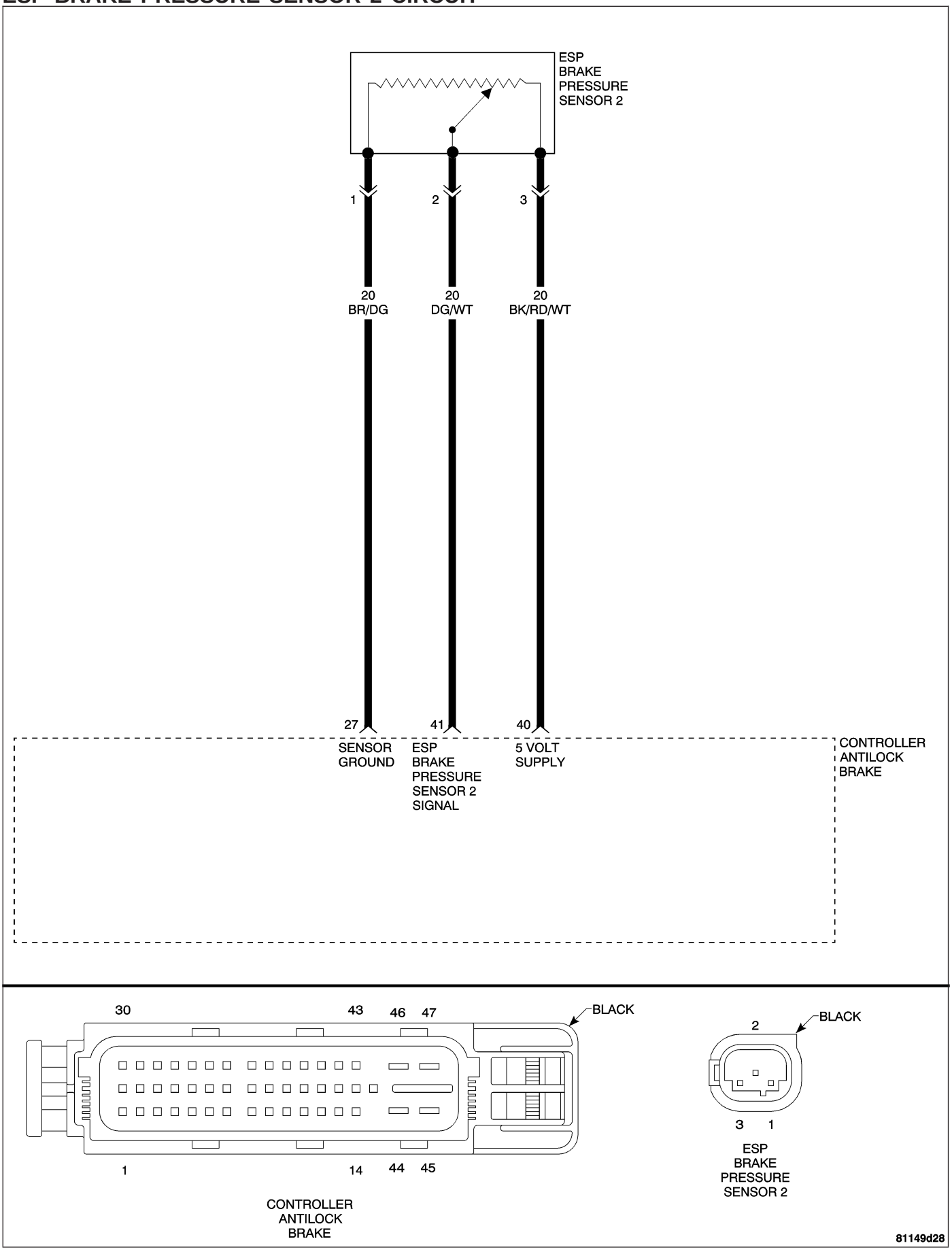

ESP BRAKE PRESSURE SENSOR 2 CIRCUIT — CONTINUED

When Monitored and Set Condition

- When Monitored: Ignition on.
- Set Condition: The Controller Antilock Brake (CAB) detects an Electronic Stability Program (ESP) Brake Pressure Sensor 2 malfunction.

POSSIBLE CAUSES
BRAKE PRESSURE SENSOR SIGNAL CIRCUIT SHORT TO VOLTAGE
BRAKE PRESSURE SENSOR SIGNAL CIRCUIT SHORT TO 5-VOLT SUPPLY CIRCUIT
BRAKE PRESSURE SENSOR SIGNAL CIRCUIT SHORT TO GROUND
BRAKE PRESSURE SENSOR SIGNAL CIRCUIT SHORT TO SENSOR GROUND CIRCUIT
BRAKE PRESSURE SENSOR SIGNAL CIRCUIT OPEN
BRAKE PRESSURE SENSOR 5-VOLT SUPPLY CIRCUIT OPEN
BRAKE PRESSURE SENSOR 5-VOLT SUPPLY CIRCUIT SHORT TO GROUND
BRAKE PRESSURE SENSOR GROUND CIRCUIT OPEN
BRAKE PRESSURE SENSOR
CONTROLLER ANTILOCK BRAKE

For a complete Electronic Stability Program (ESP) Circuit Diagram **Refer to Page 5-149**.

Diagnostic Test

1. MEASURE THE VOLTAGE OF THE ESP BRAKE PRESSURE SENSOR 2 SIGNAL CIRCUIT

Turn the ignition off.

Disconnect the CAB harness connector.

Disconnect the ESP Brake Pressure Sensor 2 harness connector.

Note: Check connectors - Clean/repair as necessary.

Turn the ignition on.

Measure the voltage of the ESP Brake Pressure Sensor 2 Signal circuit at the ESP Brake Pressure Sensor 2 harness connector.

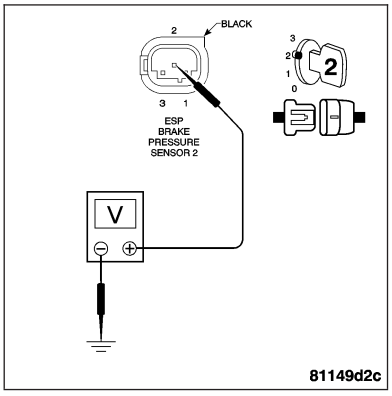

Is voltage present?

Yes >> Repair the ESP Brake Pressure Sensor 2 Signal circuit for a short to voltage.
Perform ABS VERIFICATION TEST.

No >> Go to 2

ESP BRAKE PRESSURE SENSOR 2 CIRCUIT — CONTINUED

2. MEASURE THE RESISTANCE BETWEEN THE ESP BRAKE PRESSURE 2 SIGNAL CIRCUIT AND THE 5-VOLT SUPPLY CIRCUIT

Turn the ignition off.

Measure the resistance between the ESP Brake Pressure Sensor 2 Signal circuit and the 5-Volt Supply circuit in the ESP Brake Pressure Sensor 2 harness connector.

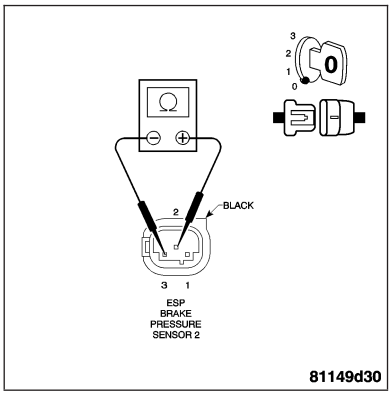

Is the resistance below 10K ohms?

Yes >> Repair the ESP Brake Pressure Sensor 2 Signal circuit for a short to the 5-Volt Supply circuit.
Perform ABS VERIFICATION TEST.

No >> Go to 3

3. MEASURE THE RESISTANCE OF THE ESP BRAKE PRESSURE SENSOR 2 SIGNAL CIRCUIT

With the ignition off.

Measure the resistance of the ESP Brake Pressure Sensor 2 Signal circuit from the CAB harness connector to the ESP Brake Pressure Sensor 2 harness connector.

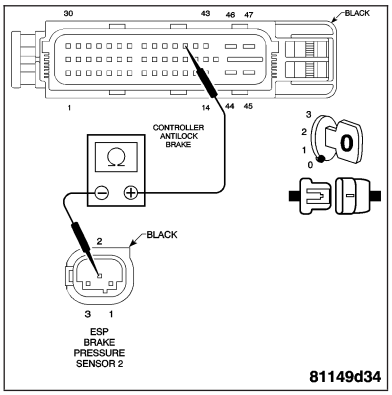

Is the resistance below 5.0 ohms?

Yes >> Go to 4

No >> Repair the ESP Brake Pressure Sensor 2 Signal circuit for an open.
Perform ABS VERIFICATION TEST.

4. MEASURE THE RESISTANCE BETWEEN GROUND AND THE ESP BRAKE PRESSURE SENSOR 2 GROUND CIRCUIT

With the ignition off.

Measure the resistance between ground and the Sensor Ground circuit.

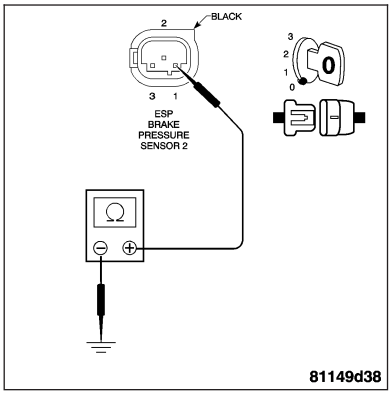

Is the resistance below 10K ohms?

Yes >> Repair the Sensor Ground circuit for a short to ground.
Perform ABS VERIFICATION TEST.

No >> Go to 5

ESP BRAKE PRESSURE SENSOR 2 CIRCUIT — CONTINUED

5. MEASURE THE VOLTAGE OF THE 5-VOLT SUPPLY CIRCUIT

With the ignition off.

Reconnect the CAB harness connector.

Turn the ignition on.

Measure the voltage of the 5-Volt Supply circuit at the ESP Brake Pressure Sensor 2 harness connector.

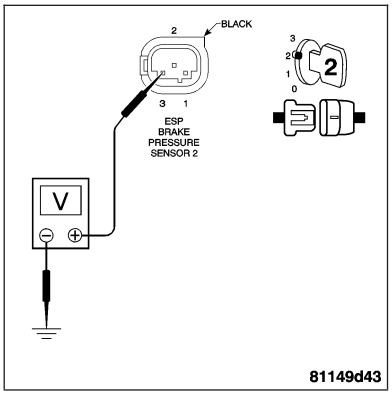

Is the voltage between 4.5 and 5.0 volts?

Yes >> Go to 6

No >> Go to 8

6. MEASURE THE RESISTANCE BETWEEN GROUND AND THE ESP BRAKE PRESSURE SENSOR 2 SIGNAL CIRCUIT

Turn the ignition off.

Disconnect the CAB harness connector.

Note: Check connectors - Clean/repair as necessary.

Measure the resistance between ground and the ESP Brake Pressure Sensor 2 Signal circuit.

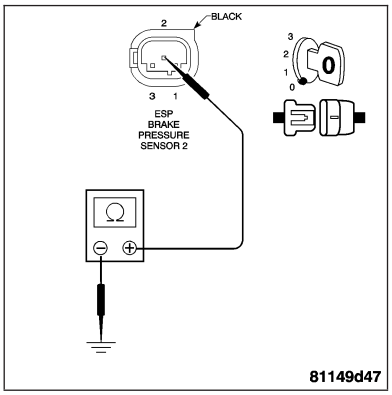

Is the resistance below 10K ohms?

Yes >> Repair the ESP Brake Pressure Sensor 2 Signal circuit for a short to ground.
Perform ABS VERIFICATION TEST.

No >> Go to 7

7. MEASURE THE RESISTANCE BETWEEN THE ESP BRAKE PRESSURE SENSOR 2 SIGNAL CIRCUIT AND THE SENSOR GROUND CIRCUIT

With the ignition off.

Measure the resistance between the ESP Brake Pressure Sensor 2 Signal circuit and the Sensor Ground circuit in the ESP Brake Pressure Sensor 2 harness connector.

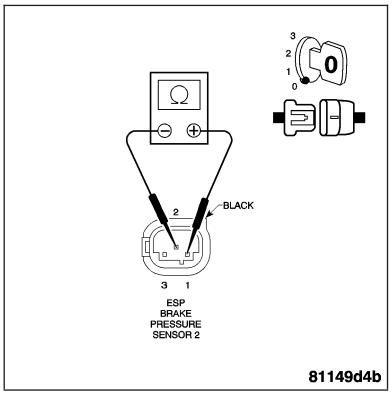

Is the resistance below 10K ohms?

Yes >> Repair the ESP Brake Pressure Sensor 2 Signal circuit for a short to the Sensor Ground circuit.
Perform ABS VERIFICATION TEST.

No >> Replace the ESP Brake Pressure Sensor 2. **Refer to Page 5-201**.
Perform ABS VERIFICATION TEST.

ESP BRAKE PRESSURE SENSOR 2 CIRCUIT — CONTINUED

8. MEASURE THE RESISTANCE BETWEEN GROUND AND THE ESP BRAKE PRESSURE SENSOR 5-VOLT SUPPLY CIRCUIT

Turn the ignition off.

Disconnect the CAB harness connector.

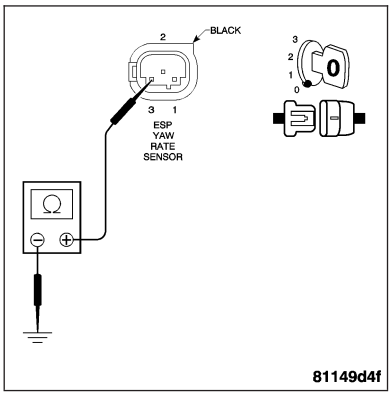

Note: Check connectors - Clean/repair as necessary.

Measure the resistance between ground and the 5-Volt Supply circuit.

Is the resistance below 10K ohms?

Yes >> Repair the 5-Volt Supply circuit for a short to ground.
Perform ABS VERIFICATION TEST.

No >> Go to 9

9. MEASURE THE RESISTANCE OF THE ESP BRAKE PRESSURE SENSOR 5-VOLT SUPPLY CIRCUIT

With the ignition off.

Measure the resistance of the 5-Volt Supply circuit from the ESP Brake Pressure Sensor 2 harness connector to the CAB harness connector.

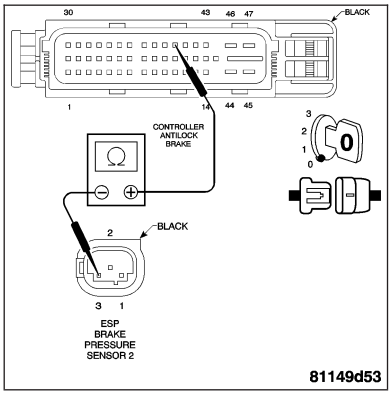

Is the resistance below 5.0 ohms?

Yes >> Replace the Controller Antilock Brake. **Refer to Page 8E-63**.
Perform ABS VERIFICATION TEST.

No >> Repair the ESP Brake Pressure Sensor 5-Volt Supply circuit for an open.
Perform ABS VERIFICATION TEST.

ESP LATERAL ACCELERATION SENSOR CIRCUIT

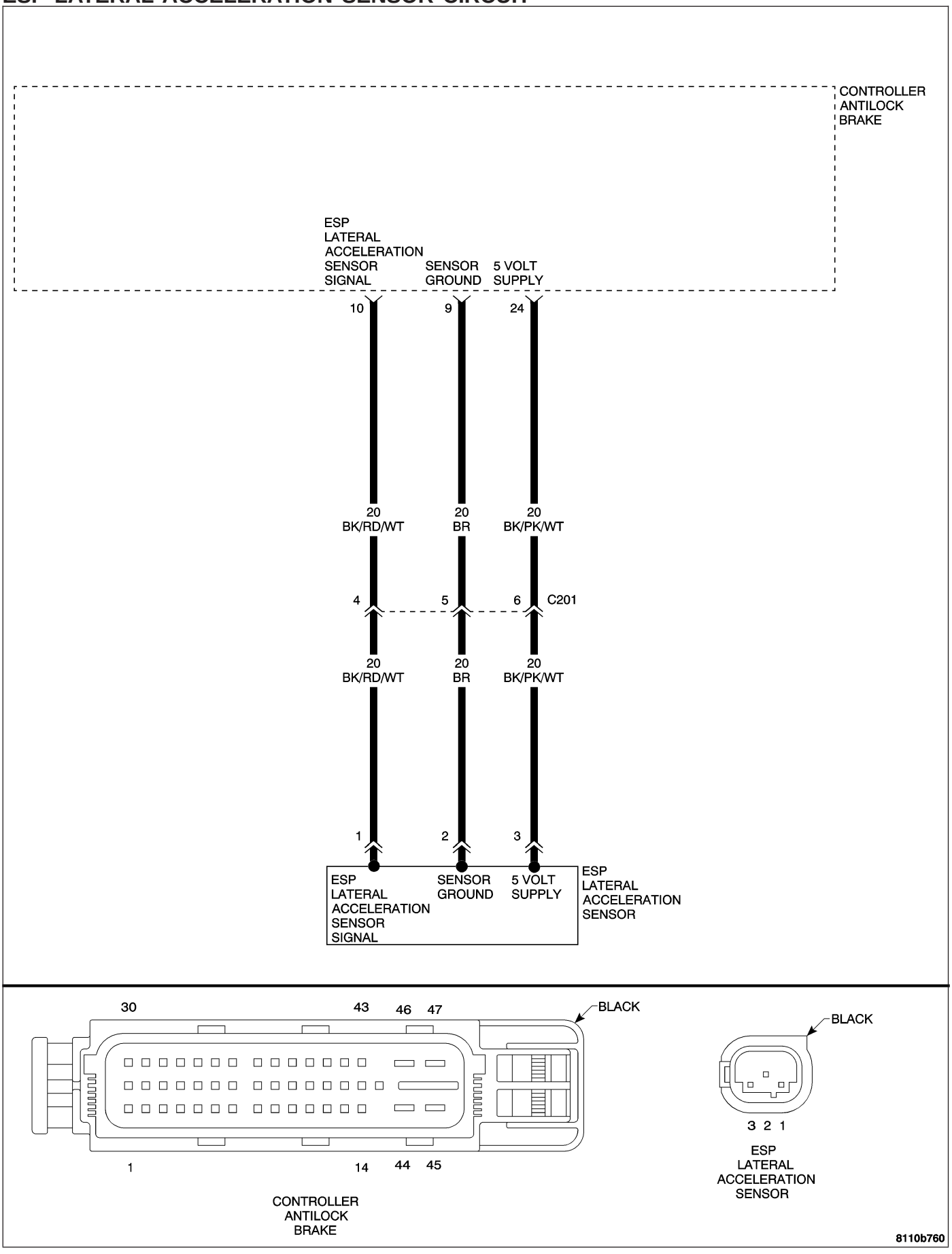

ESP LATERAL ACCELERATION SENSOR CIRCUIT — CONTINUED

When Monitored and Set Condition

- When Monitored: Ignition on.
- Set Condition: The Controller Antilock Brake (CAB) detects an Electronic Stability Program (ESP) Lateral Acceleration Sensor malfunction.

POSSIBLE CAUSES
LATERAL ACCELERATION SENSOR SIGNAL CIRCUIT SHORT TO VOLTAGE
LATERAL ACCELERATION SENSOR SIGNAL CIRCUIT SHORT TO 5-VOLT SUPPLY CIRCUIT
LATERAL ACCELERATION SENSOR SIGNAL CIRCUIT SHORT TO GROUND
LATERAL ACCELERATION SENSOR SIGNAL CIRCUIT SHORT TO SENSOR GROUND CIRCUIT
LATERAL ACCELERATION SENSOR SIGNAL CIRCUIT OPEN
LATERAL ACCELERATION SENSOR 5-VOLT SUPPLY CIRCUIT OPEN
LATERAL ACCELERATION SENSOR 5-VOLT SUPPLY CIRCUIT SHORT TO GROUND
LATERAL ACCELERATION SENSOR GROUND CIRCUIT OPEN
LATERAL ACCELERATION SENSOR
CONTROLLER ANTILOCK BRAKE

For a complete Electronic Stability Program (ESP) Circuit Diagram **Refer to Page 5-149**.

Diagnostic Test

1. MEASURE THE VOLTAGE OF THE ESP LATERAL ACCELERATION SENSOR SIGNAL CIRCUIT

Turn the ignition off.

Disconnect the CAB harness connector.

Disconnect the ESP Lateral Acceleration Sensor harness connector.

Note: Check connectors - Clean/repair as necessary.

Turn the ignition on.

Measure the voltage of the ESP Lateral Acceleration Sensor Signal circuit at the ESP Lateral Acceleration Sensor harness connector.

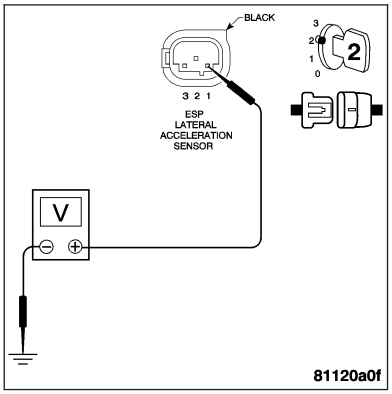

Is voltage present?

Yes >> Repair the ESP Lateral Acceleration Sensor Signal circuit for a short to voltage.
Perform ABS VERIFICATION TEST.

No >> Go to 2

ESP LATERAL ACCELERATION SENSOR CIRCUIT — CONTINUED

2. MEASURE THE RESISTANCE BETWEEN THE ESP LATERAL ACCELERATION SIGNAL CIRCUIT AND THE 5-VOLT SUPPLY CIRCUIT

With the ignition off.

Measure the resistance between the ESP Lateral Acceleration Sensor Signal circuit and the 5-Volt Supply circuit in the ESP Lateral Acceleration Sensor harness connector.

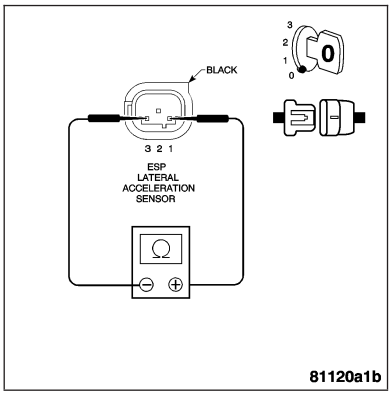

Is the resistance below 10K ohms?

Yes >> Repair the ESP Lateral Acceleration Sensor Signal circuit for a short to the 5-Volt Supply circuit.
Perform ABS VERIFICATION TEST.

No >> Go to 3

3. MEASURE THE RESISTANCE OF THE ESP LATERAL ACCELERATION SENSOR SIGNAL CIRCUIT

With the ignition off.

Measure the resistance of the ESP Lateral Acceleration Sensor Signal circuit from the CAB harness connector to the ESP Lateral Acceleration Sensor harness connector.

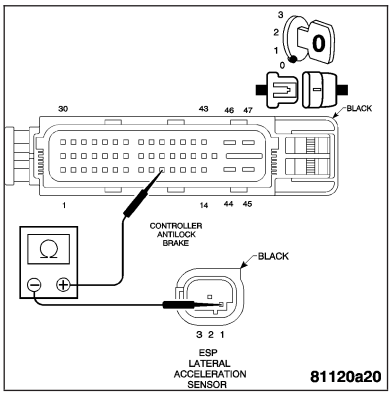

Is the resistance below 5.0 ohms?

Yes >> Go to 4

No >> Repair the ESP Lateral Acceleration Sensor Signal circuit for an open.
Perform ABS VERIFICATION TEST.

4. MEASURE THE RESISTANCE BETWEEN GROUND AND THE ESP LATERAL ACCELERATION SENSOR GROUND CIRCUIT

With the ignition off.

Measure the resistance between ground and the Sensor Ground circuit.

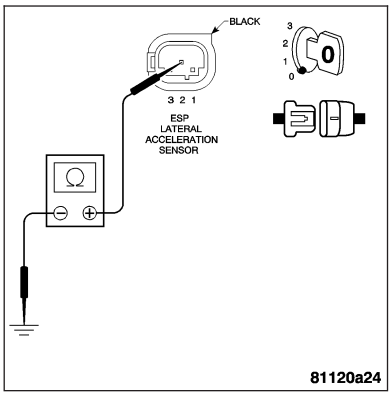

Is the resistance below 10K ohms?

Yes >> Repair the Sensor Ground circuit for a short to ground.
Perform ABS VERIFICATION TEST.

No >> Go to 5

ESP LATERAL ACCELERATION SENSOR CIRCUIT — CONTINUED

5. MEASURE THE VOLTAGE OF THE 5-VOLT SUPPLY CIRCUIT

With the ignition off.

Reconnect the CAB harness connector.

Turn the ignition on.

Measure the voltage of the 5-Volt Supply circuit in the ESP Lateral Acceleration Sensor harness connector.

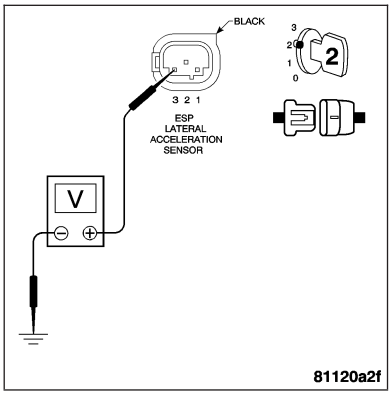

Is the voltage between 4.5 and 5.0 volts?

Yes >> Go to 6

No >> Go to 8

6. MEASURE THE RESISTANCE BETWEEN GROUND AND THE ESP LATERAL ACCELERATION SENSOR SIGNAL CIRCUIT

Turn the ignition off.

Disconnect the CAB harness connector.

Note: Check connectors - Clean/repair as necessary.

Measure the resistance between ground and the ESP Lateral Acceleration Sensor Signal circuit.

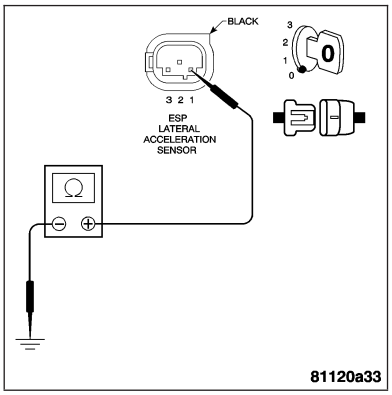

Is the resistance below 10K ohms?

Yes >> Repair the ESP Lateral Acceleration Sensor Signal circuit for a short to ground.
Perform ABS VERIFICATION TEST.

No >> Go to 7

7. MEASURE THE RESISTANCE BETWEEN THE ESP LATERAL ACCELERATION SENSOR SIGNAL CIRCUIT AND THE SENSOR GROUND CIRCUIT

With the ignition off.

Measure the resistance between the ESP Lateral Acceleration Sensor Signal circuit and the Sensor Ground circuit in the ESP Lateral Acceleration Sensor harness connector.

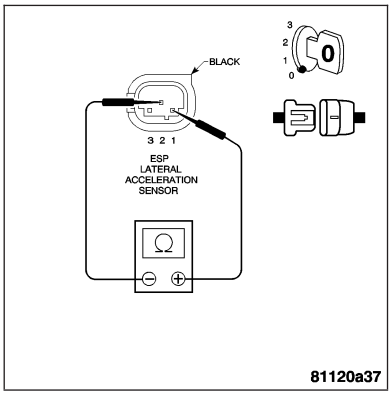

Is the resistance below 10K ohms?

Yes >> Repair the ESP Lateral Acceleration Sensor Signal circuit for a short to the Sensor Ground circuit.
Perform ABS VERIFICATION TEST.

No >> Replace the ESP Lateral Acceleration Sensor. **Refer to Page 5-200**.
Perform ABS VERIFICATION TEST.

ESP LATERAL ACCELERATION SENSOR CIRCUIT — CONTINUED

8. MEASURE THE RESISTANCE BETWEEN GROUND AND THE ESP LATERAL ACCELERATION SENSOR 5-VOLT SUPPLY CIRCUIT

Turn the ignition off.

Disconnect the CAB harness connector.

Note: Check connectors - Clean/repair as necessary.

Measure the resistance between ground and the 5-Volt Supply circuit.

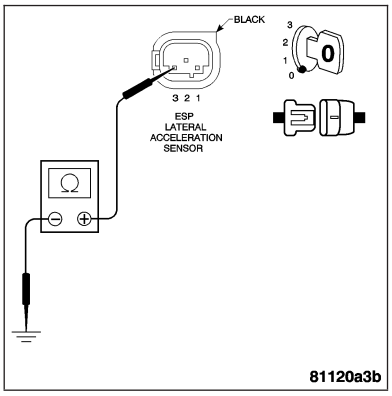

Is the resistance below 10K ohms?

Yes >> Repair the 5-Volt Supply circuit for a short to ground.
Perform ABS VERIFICATION TEST.

No >> Go to 9

9. MEASURE THE RESISTANCE OF THE ESP LATERAL ACCELERATION SENSOR 5-VOLT SUPPLY CIRCUIT

With the ignition off.

Measure the resistance of the 5-Volt Supply circuit from the ESP Lateral Acceleration Sensor harness connector to the CAB harness connector.

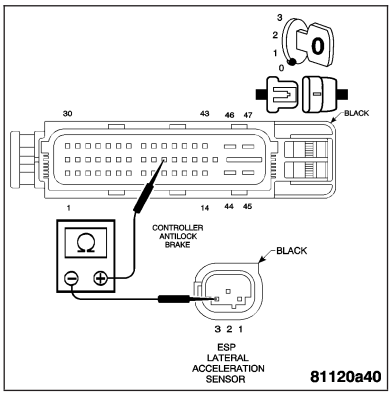

Is the resistance below 5.0 ohms?

Yes >> Replace the Controller Antilock Brake. **Refer to Page 8E-63**.
Perform ABS VERIFICATION TEST.

No >> Repair the ESP Lateral Acceleration Sensor 5-Volt Supply circuit for an open.
Perform ABS VERIFICATION TEST.

BRAKE LAMP SWITCH CIRCUIT

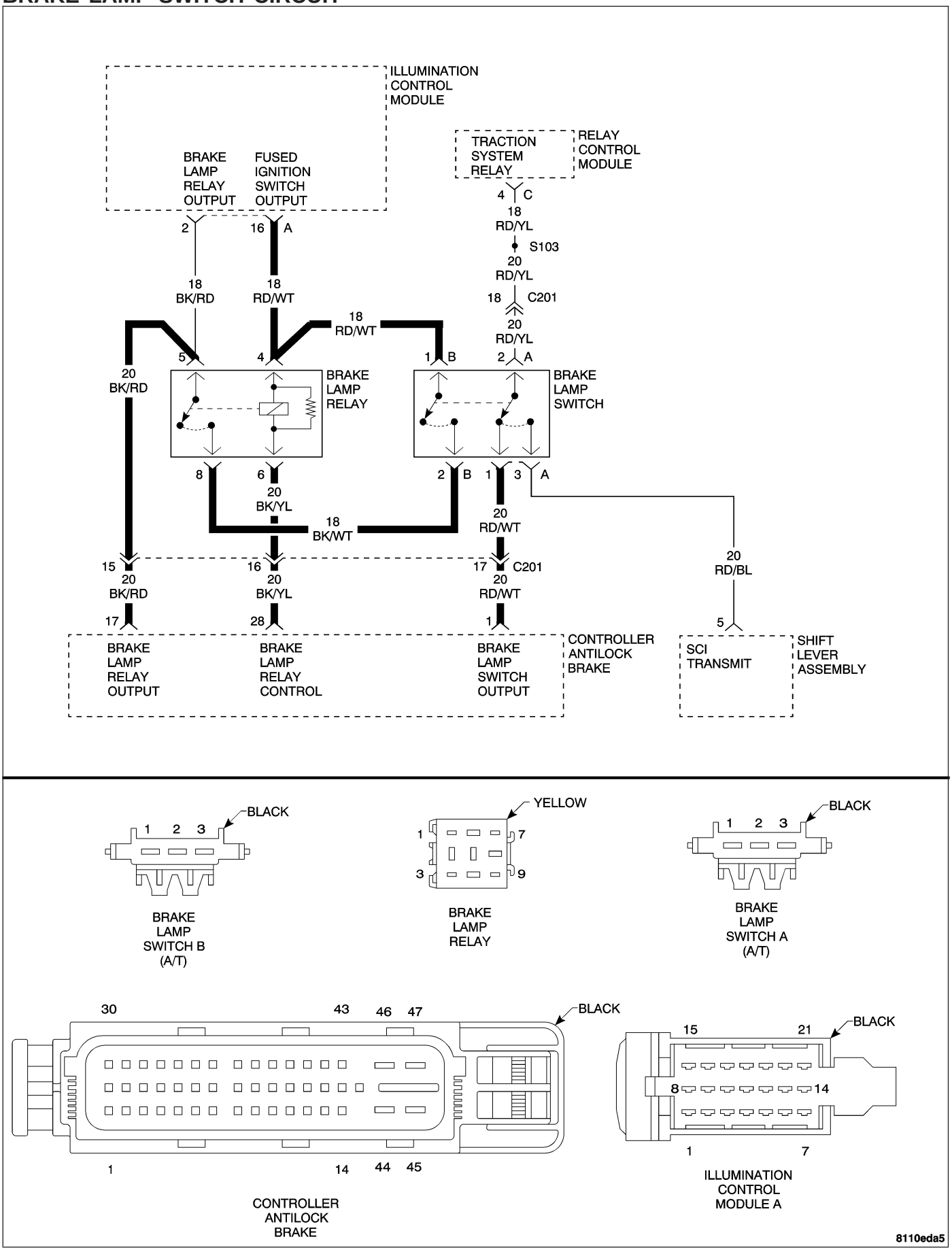

BRAKE LAMP SWITCH CIRCUIT — CONTINUED

When Monitored and Set Condition

- When Monitored: With the ignition on.
- Set Condition: The Controller Antilock Brake (CAB) detects an abnormal condition on the Brake Lamp Switch circuit.

POSSIBLE CAUSES
FUSED IGNITION SWITCH OUTPUT CIRCUIT OPEN
BRAKE LAMP SWITCH OUTPUT CIRCUIT OPEN
BRAKE LAMP SWITCH OUTPUT CIRCUIT SHORTED
BRAKE LAMP SWITCH
BRAKE LAMP RELAY
CONTROLLER ANTILOCK BRAKE

For a complete Electronic Stability Program (ESP) Circuit Diagram **Refer to Page 5-149**.

Diagnostic Test

1. MEASURE BRAKE LAMP SWITCH VOLTAGE

Note: Inspect Fuse 2 located in the Illumination Control Module/IP Fuse Block. If the fuse is open, repair the cause of the open fuse before continuing.
Turn the ignition off.
Disconnect the Brake Lamp Switch harness connector.
Note: Check connectors - Clean/repair as necessary.
Turn the ignition on.
Measure the voltage of the Fused Ignition Switch Output circuit at the Brake Lamp Switch harness connector.

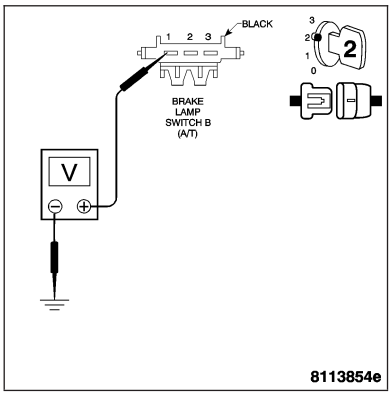

Is the voltage above 10 volts?

Yes >> Go to 2

No >> Repair the Fused Ignition Switch Output circuit for an open.
Perform ABS VERIFICATION TEST.

2. MEASURE THE RESISTANCE BETWEEN THE BRAKE LAMP SWITCH AND THE BRAKE LAMP RELAY

With the ignition off.
Remove the Brake Lamp Relay.
Note: Check connectors - Clean/repair as necessary.
Measure the resistance of the circuit from the Brake Lamp Switch harness connector B cavity 2 to the Brake Lamp Relay harness connector cavity 8.

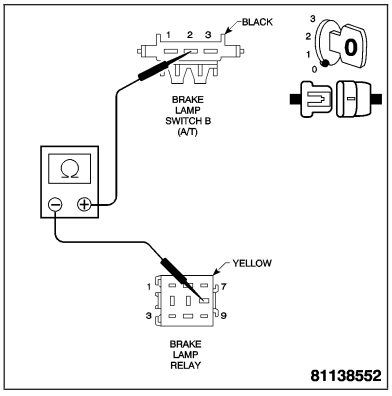

Is the resistance below 5.0 ohms?

Yes >> Go to 3

No >> Repair the circuit for an open.
Perform ABS VERIFICATION TEST.

BRAKE LAMP SWITCH CIRCUIT — CONTINUED

3. MEASURE THE RESISTANCE BETWEEN THE BRAKE LAMP SWITCH AND THE CAB

With the ignition off.

Disconnect the CAB harness connector.

Note: Check connectors - Clean/repair as necessary.

Measure the resistance of the Brake Lamp Switch Output circuit from the Brake Lamp Switch harness connector to the CAB harness connector.

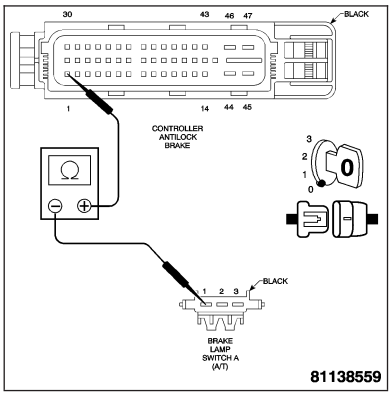

Is the resistance below 5.0 ohms?

Yes >> Go to 4

No >> Repair the Brake Lamp Switch Output circuit for an open.
Perform ABS VERIFICATION TEST.

4. MEASURE BRAKE LAMP RELAY VOLTAGE

With the ignition off.

Reconnect the Brake Lamp Switch harness connector.

Turn the ignition on.

Have an assistant depress the brake pedal while measuring the voltage at the Brake Lamp Relay harness connector cavity 8.

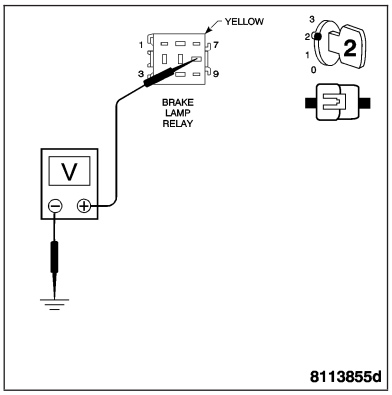

Is the voltage above 10 volts?

Yes >> Go to 5

No >> Replace the Brake Lamp Switch.
Perform ABS VERIFICATION TEST.

5. MEASURE THE RESISTANCE BETWEEN THE BRAKE LAMP RELAY AND THE CAB

Turn the ignition off.

Measure the resistance of the Brake Lamp Relay Control circuit between the Brake Lamp Relay harness connector and the CAB harness connector.

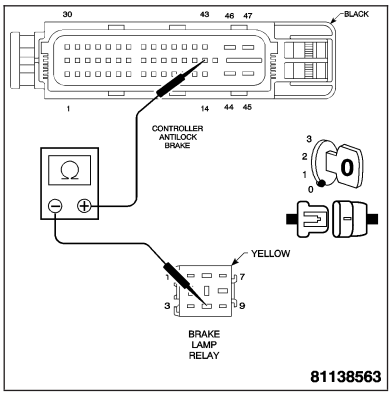

Is the resistance below 5.0 ohms?

Yes >> Go to 6

No >> Repair the Brake Lamp Relay control circuit between the Brake Lamp Relay and the CAB for an open.
Perform ABS VERIFICATION TEST.

BRAKE LAMP SWITCH CIRCUIT — CONTINUED

6. MEASURE BRAKE LAMP RELAY CONTROL CIRCUIT VOLTAGE

Turn the ignition on.

Measure the voltage of the Brake Lamp Relay Control circuit at the CAB harness connector.

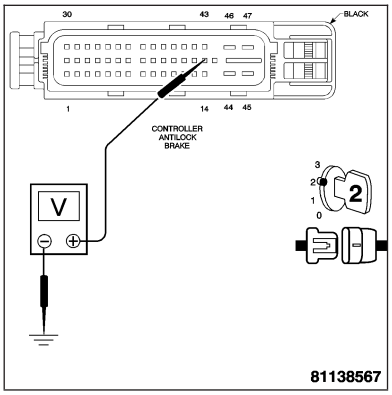

Is voltage present?

Yes >> Repair the Brake Lamp Relay Control circuit for a short to voltage.
Perform ABS VERIFICATION TEST.

No >> Go to 7

7. MEASURE BRAKE LAMP RELAY CONTROL CIRCUIT VOLTAGE

Turn the ignition off.

Install a jumper wire between cavities 4 and 6 of the Brake Lamp Relay harness connector.

Turn the ignition on.

Measure the voltage of the Brake Lamp Relay Control circuit at the CAB harness connector.

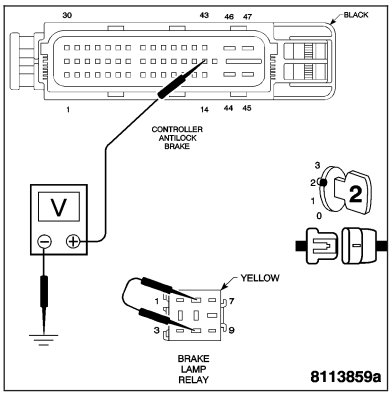

Is the voltage above 10 volts?

Yes >> Go to 8

No >> Repair the Brake Lamp Relay Control circuit for an open.
Perform ABS VERIFICATION TEST.

8. MEASURE BRAKE LAMP RELAY OUTPUT CIRCUIT RESISTANCE

With the ignition off and the jumper wire removed from the Brake Lamp Relay harness connector.

Measure the resistance of the Brake Lamp Relay Output circuit from the Brake Lamp Relay harness connector to the CAB harness connector.

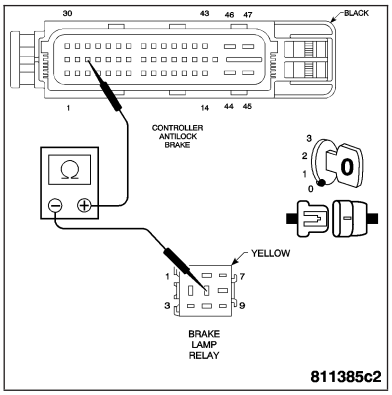

Is the resistance below 5.0 ohms?

Yes >> Go to 9

No >> Repair the Brake Lamp Relay Output circuit for an open.
Perform ABS VERIFICATION TEST.

BRAKE LAMP SWITCH CIRCUIT — CONTINUED

9. MEASURE BRAKE LAMP RELAY OUTPUT CIRCUIT VOLTAGE

Turn the ignition on.

Measure the voltage of the Brake Lamp Relay Output circuit at the CAB harness connector.

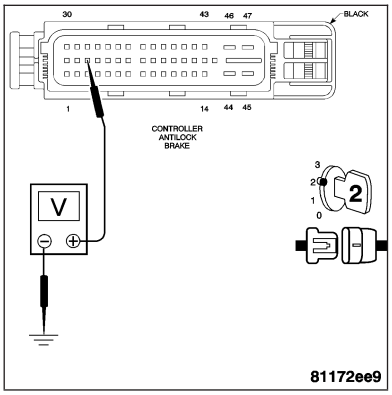

Is voltage present?

Yes >> Repair the Brake Lamp Relay Output circuit for a short to voltage.
Perform ABS VERIFICATION TEST.

No >> Go to 10

10. MEASURE BRAKE LAMP RELAY OUTPUT CIRCUIT VOLTAGE

Turn the ignition off.

Install a jumper wire between cavities 8 and 5 of the Brake Lamp Relay harness connector.

Turn the ignition on.

Have an assistant depress the brake pedal while measuring the voltage of the Brake Lamp Relay Output circuit at the CAB harness connector.

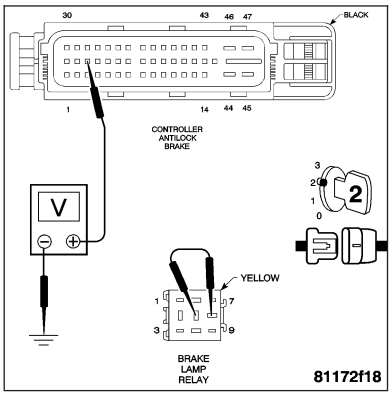

Is the voltage above 10 volts?

Yes >> Replace the Controller Antilock Brake. **Refer to Page 8E-63**.
Perform ABS VERIFICATION TEST.

No >> Replace the Brake Lamp Relay.
Perform ABS VERIFICATION TEST.

ABS VERIFICATION TEST

ABS VERIFICATION TEST

1.

Turn the ignition off.

Disconnect all jumper wires and reconnect all previously disconnected components and connectors.

With the DRB III®, erase all Diagnostic Trouble Codes (DTCs) from ALL modules. Start the engine and allow it to run for 2 minutes.

Turn the ignition off and wait 5 seconds. Turn the ignition on and using the DRB III®, read DTCs from ALL modules.

CAUTION: Ensure braking capability is available before road testing.

Note: For sensor signal and pump motor faults, the CAB must sense all 4 wheels at 25 km/h (15 MPH) before the CAB will extinguish the indicator lamp.

Road test the vehicle for a minimum of 5 minutes. Perform several antilock braking stops.

Again, with the DRB III®, confirm that no DTCs are present and that all components are functioning properly.

If there are no DTCs present and all components are functioning properly, the repair is complete.

Are any DTCs present?

YES >> Repair is not complete, refer to appropriate symptom.

NO >> Repair is complete.

SCHEMATICS AND DIAGRAMS

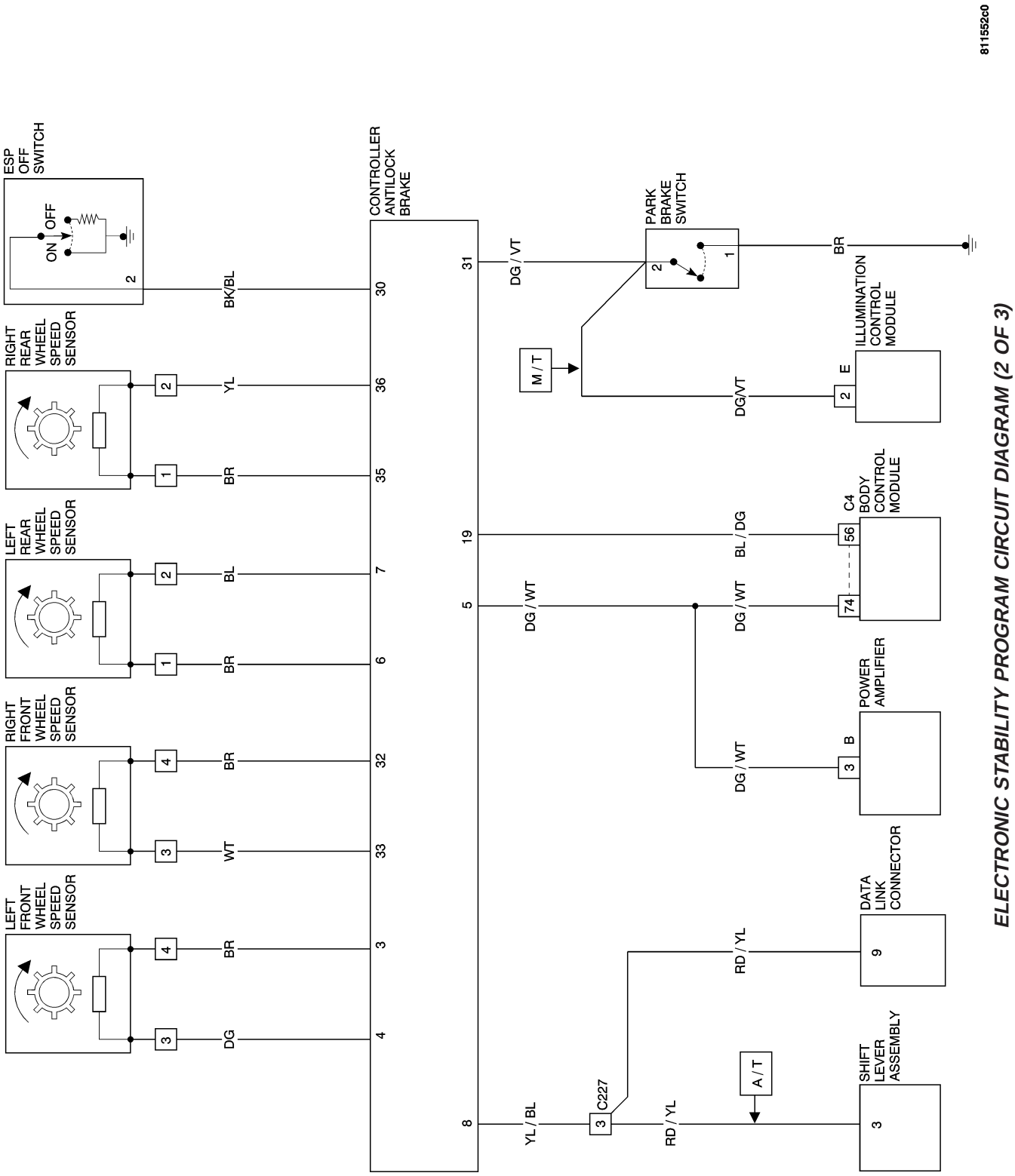

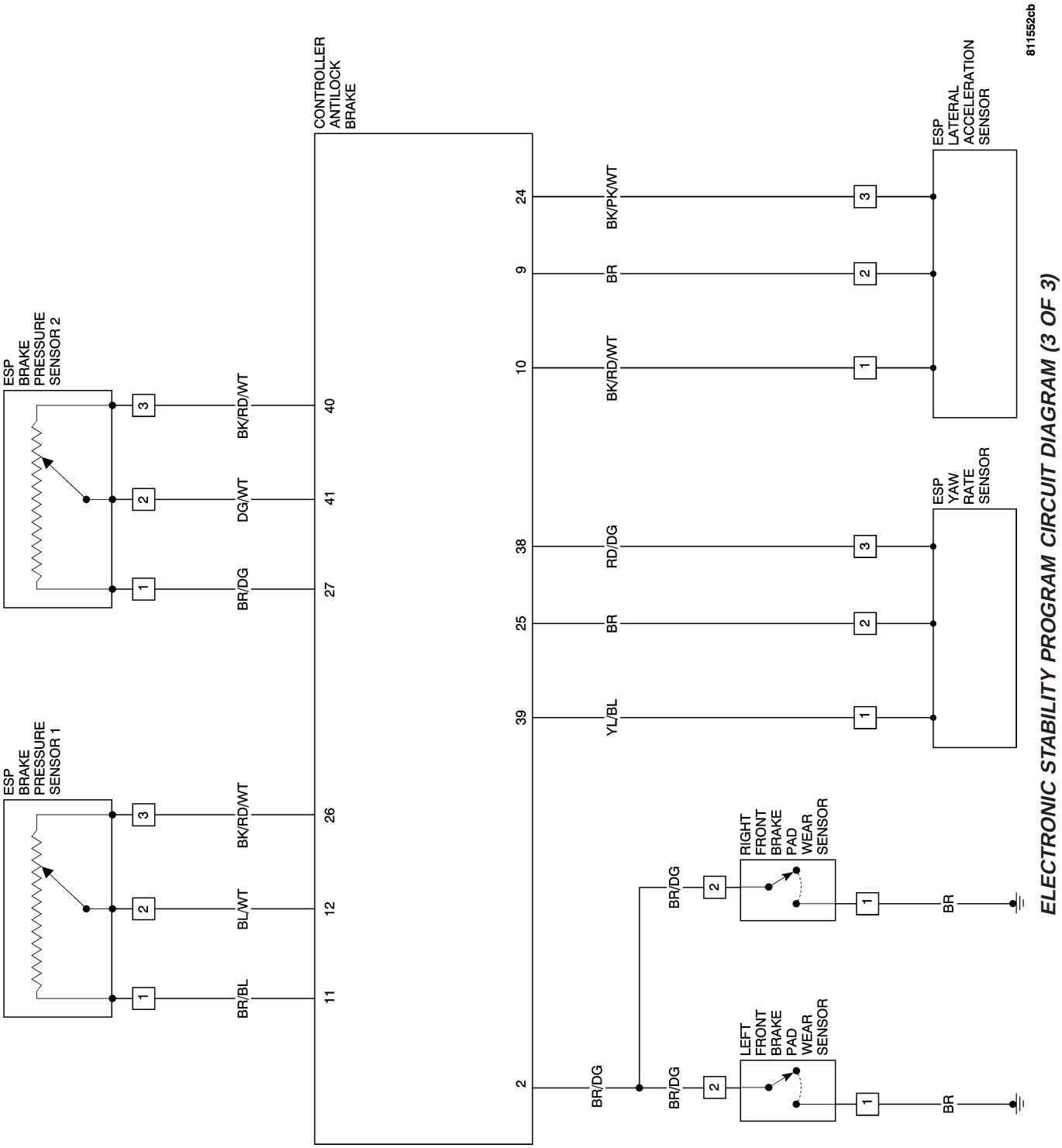

ELECTRONIC STABILITY PROGRAM CIRCUIT DIAGRAM (3 OF 3)

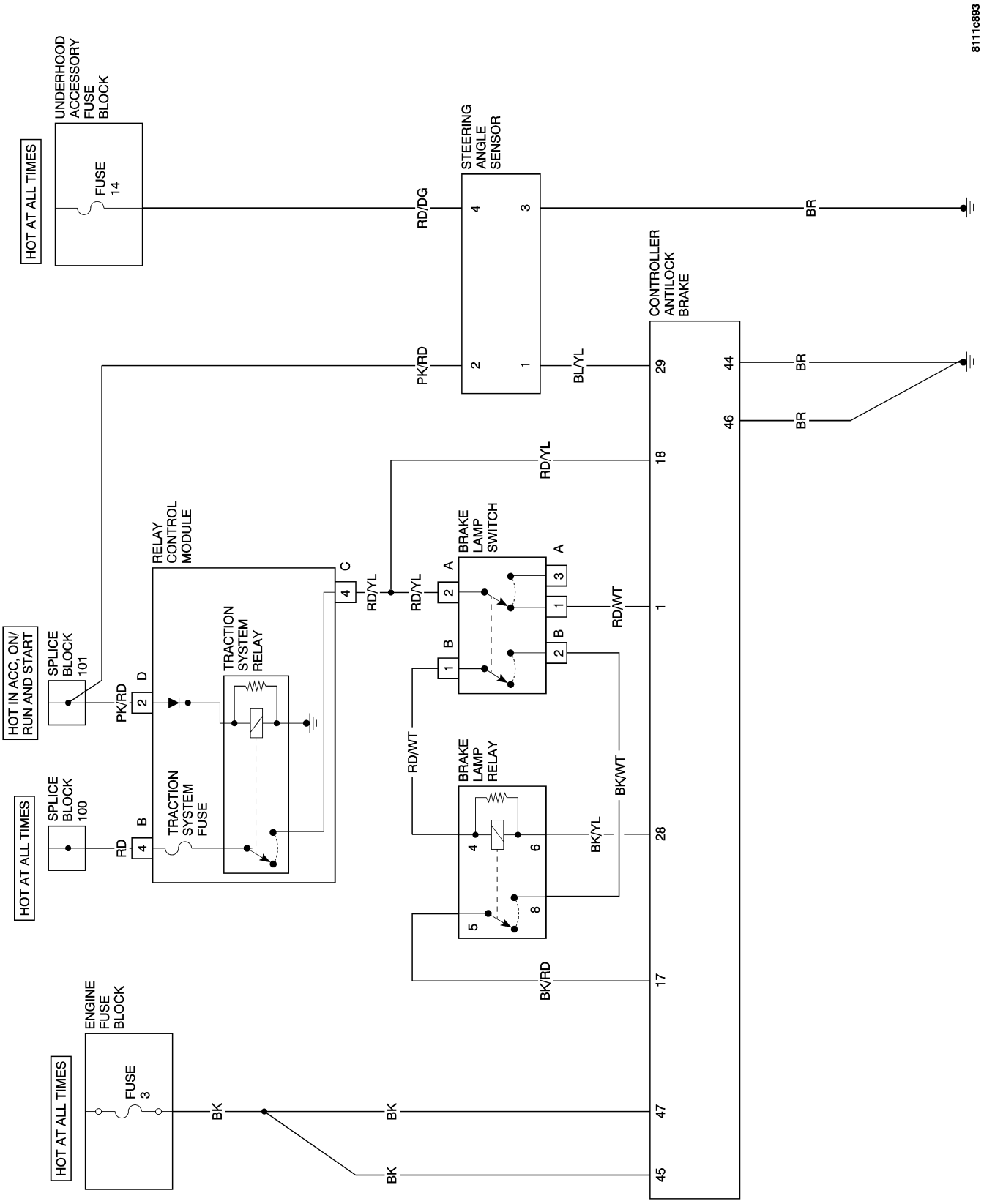

ELECTRONIC STABILITY PROGRAM CIRCUIT DIAGRAM (1 OF 3)

ELECTRICAL - BAS ELECTRICAL DIAGNOSTICS

DIAGNOSIS AND TESTING

CAB INTERNAL FAILURE

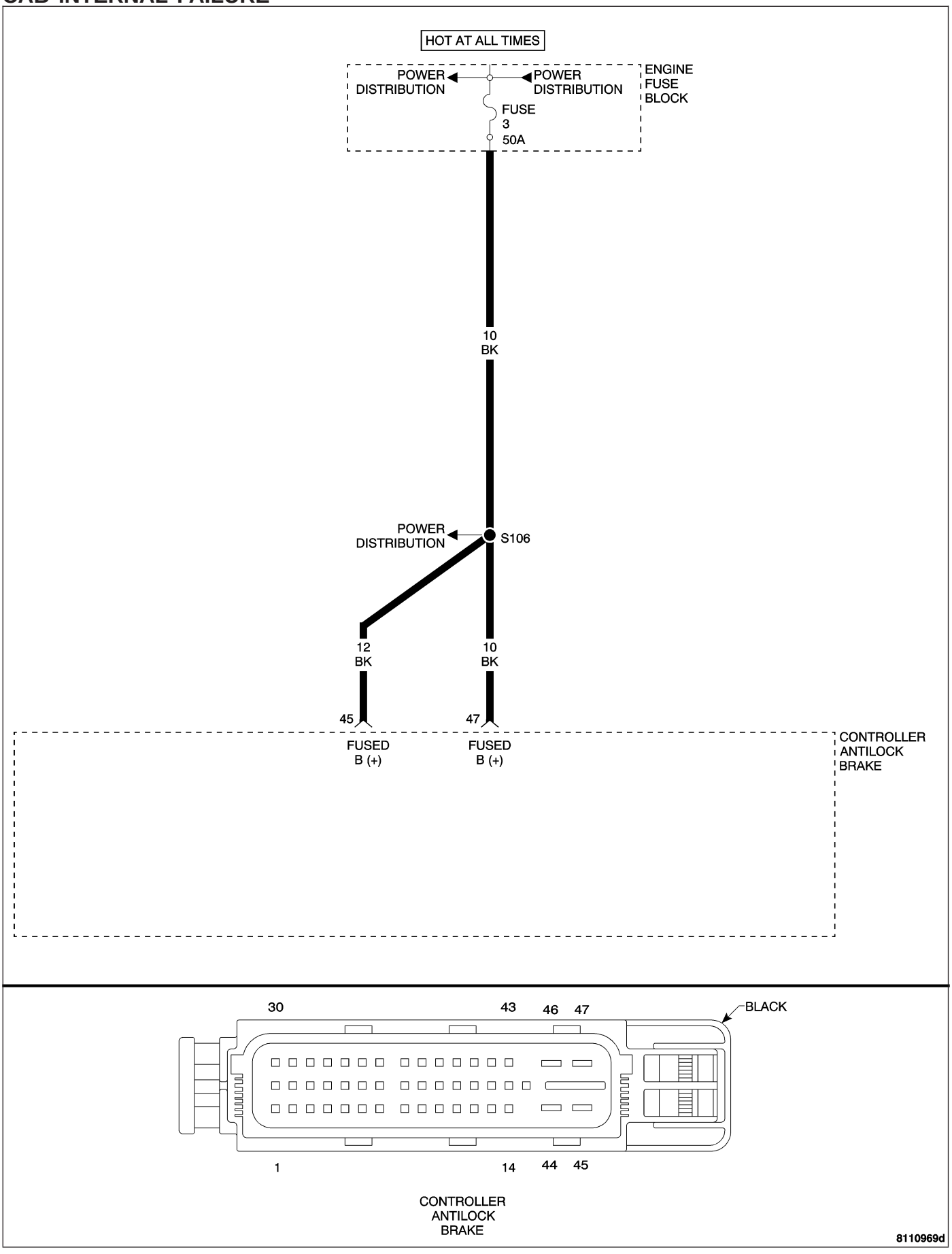

CAB INTERNAL FAILURE — CONTINUED

When Monitored and Set Condition

- When Monitored: Continuous.
- Set Condition: If the Controller Antilock Brake (CAB) detects an internal malfunction, the DTC is set.

POSSIBLE CAUSES
FUSED B(+) CIRCUIT
CONTROLLER ANTILOCK BRAKE

For a complete Brake Assist System (BAS) Circuit Diagram **Refer to Page 5-149**.

Diagnostic Test

1. MEASURE THE VOLTAGE OF THE CAB FUSED B(+) CIRCUIT

Turn the ignition off.

Disconnect the CAB harness connector.

Note: Check connectors - Clean/repair as necessary.

Turn the ignition on.

Measure the voltage of the Fused B(+) circuit at cavity 45 of the CAB harness connector.

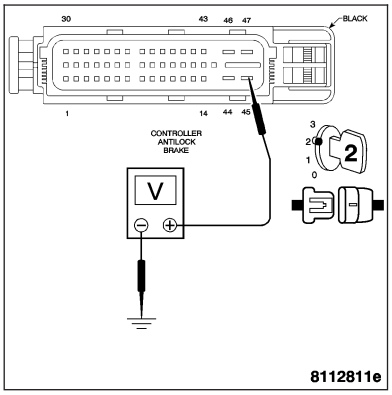

Is the voltage between 12 and 16 volts?

Yes >> Go to 2

No >> System voltage must be between 12 and 16 volts. Repair the voltage concern as necessary.
Perform ABS VERIFICATION TEST.

2. MEASURE THE VOLTAGE OF THE CAB FUSED B(+) CIRCUIT

With the ignition on.

Measure the voltage of the Fused B(+) circuit at cavity 47 of the CAB harness connector.

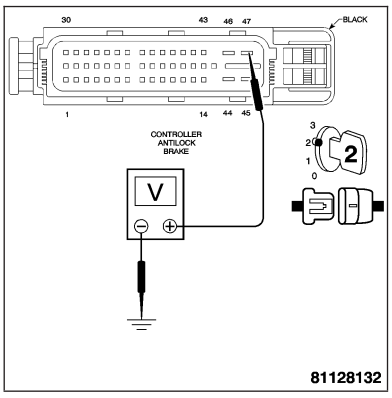

Is the voltage between 12 and 16 volts?

Yes >> Replace the Controller Antilock Brake. **Refer to Page 8E-63**.
Perform ABS VERIFICATION TEST.

No >> System voltage must be between 12 and 16 volts. Repair the voltage concern as necessary.
Perform ABS VERIFICATION TEST.

CAB SYSTEM UNDERVOLTAGE

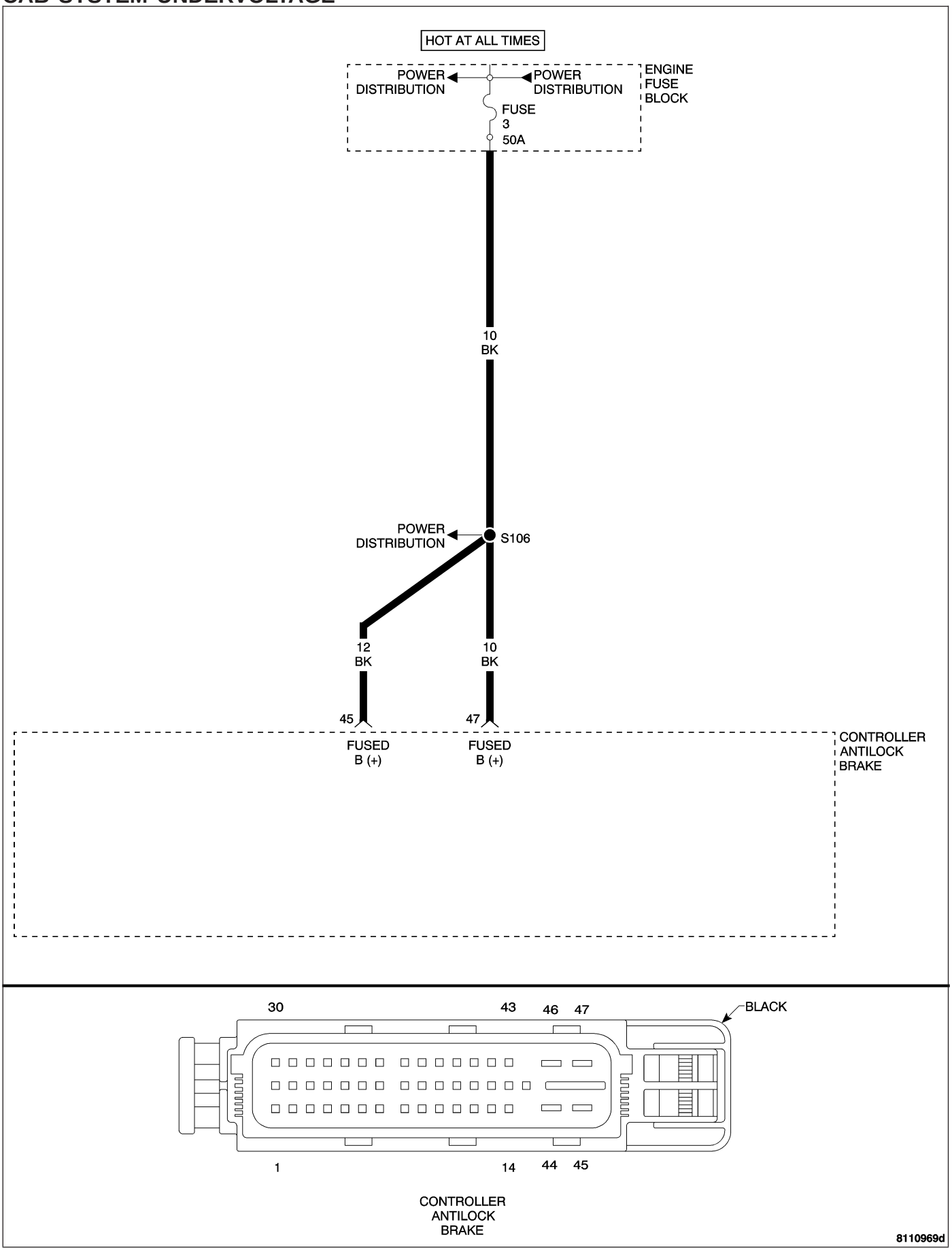

CAB SYSTEM UNDERVOLTAGE — CONTINUED

When Monitored and Set Condition

- When Monitored: Ignition on. The Controller Antilock Brake (CAB) monitors the Fused B(+) circuit voltage above 6 MPH every 7 milliseconds for proper system voltage.
- Set Condition: If the voltage is below 9.5 volts, the Diagnostic Trouble Code (DTC) is set.

POSSIBLE CAUSES
BATTERY VOLTAGE LOW
FUSED B(+) CIRCUIT OPEN
CONTROLLER ANTILOCK BRAKE

For a complete Brake Assist System (BAS) Circuit Diagram **Refer to Page 5-149**.

Diagnostic Test

1. WITH THE DRB III®, READ DTCs

Turn the ignition on.
With the DRB III®, erase DTCs.
Turn the ignition off.
Turn the ignition on.
Start the engine.
Drive the vehicle above 10 MPH for at least 20 seconds.
Stop the vehicle.
With the DRB III®, read DTCs.

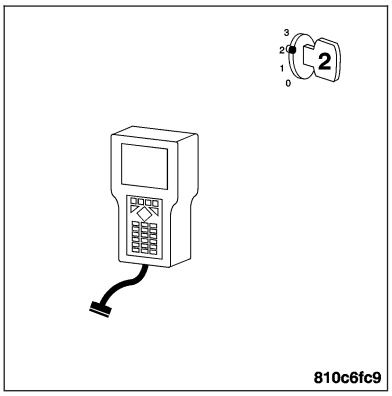

Does the DRB III® display a System Undervoltage DTC?

Yes >> Go to 2

No >> The condition that caused this DTC to set is currently not present. Inspect the related wiring harness for a possible intermittent condition.

2. MEASURE THE BATTERY VOLTAGE

Start the engine.
Measure the battery voltage with the engine running.

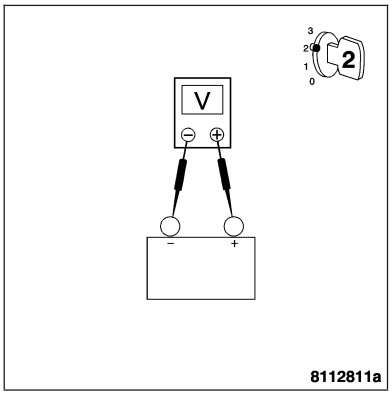

Is the battery voltage below 10 volts?

Yes >> Refer to the appropriate service information for charging system testing and repair.
Perform ABS VERIFICATION TEST.

No >> Go to 3

CAB SYSTEM UNDERVOLTAGE — CONTINUED

3. MEASURE THE VOLTAGE OF THE FUSED B(+) CIRCUIT

Turn the ignition off.

Disconnect the CAB harness connector.

Note: Check connectors - Clean/repair as necessary.

Turn the ignition on.

Measure the voltage of the Fused B(+) circuit at cavity 45 of the CAB harness connector.

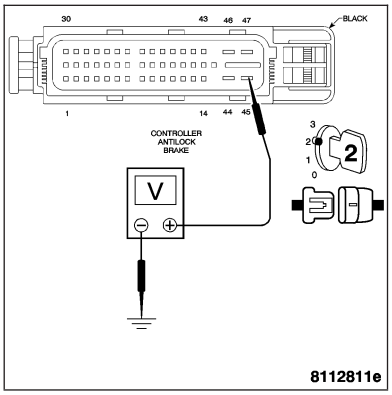

Is the voltage above 10 volts?

Yes >> Go to 4

No >> Repair the Fused B(+) circuit for an open.
Perform ABS VERIFICATION TEST.

4. MEASURE THE VOLTAGE OF THE FUSED B(+) CIRCUIT

With the ignition on.

Measure the voltage of the Fused B(+) circuit at cavity 47 of the CAB harness connector.

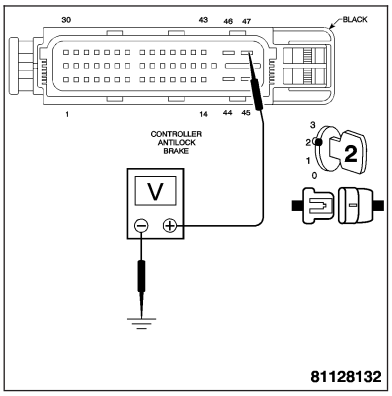

Is the voltage above 10 volts?

Yes >> Replace the Controller Antilock Brake. **Refer to Page 8E-63**.
Perform ABS VERIFICATION TEST.

No >> Repair the Fused B(+) circuit for an open.
Perform ABS VERIFICATION TEST.

CAB SYSTEM OVERVOLTAGE

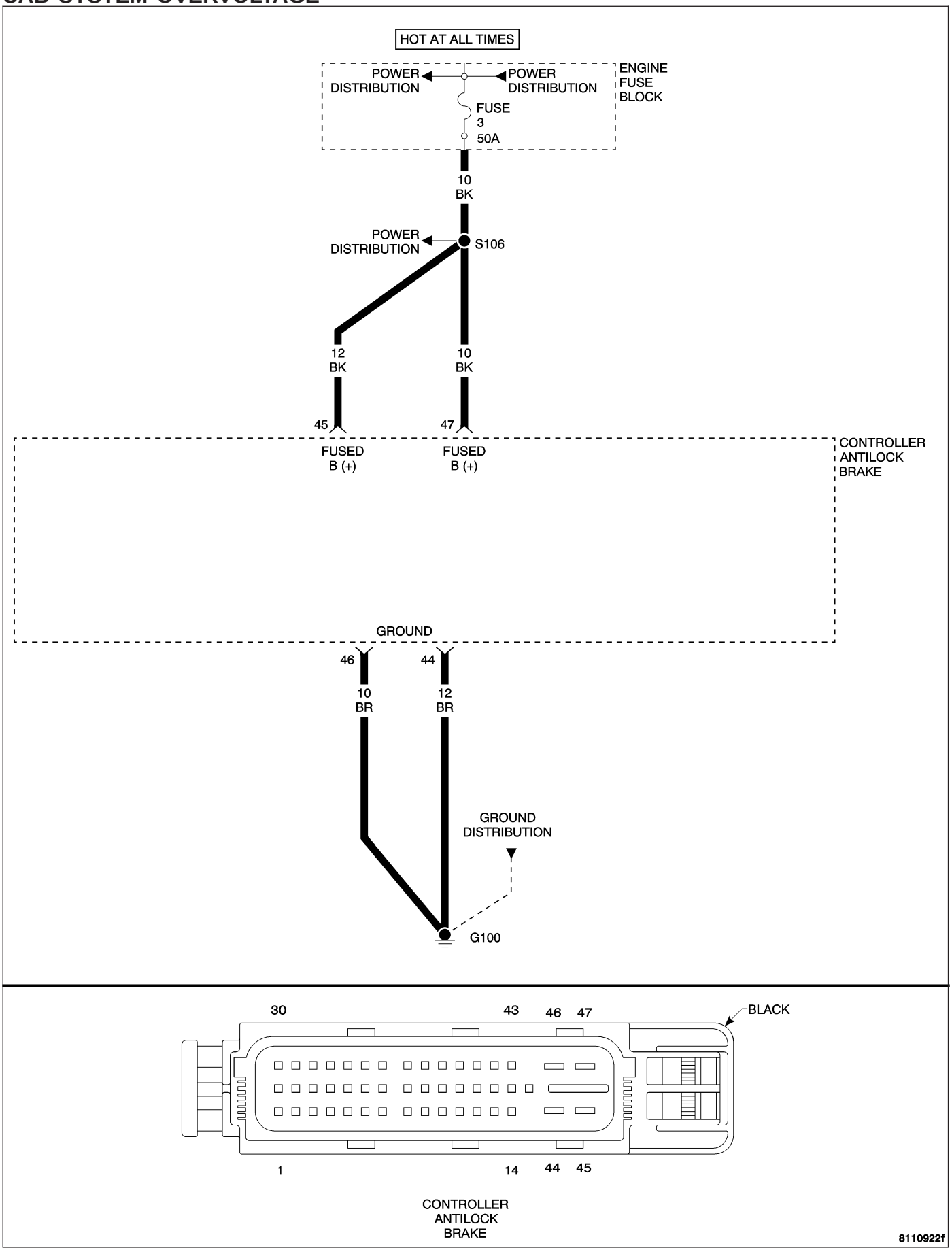

CAB SYSTEM OVERVOLTAGE — CONTINUED

When Monitored and Set Condition

- When Monitored: Ignition on. The Controller Antilock Brake (CAB) monitors the Fused B(+) circuit at all times for proper system voltage.
- Set Condition: If the voltage is above 16 volts for greater than 500 milliseconds (ms), the Diagnostic Trouble Code (DTC) is set.

POSSIBLE CAUSES
SYSTEM VOLTAGE HIGH
GROUND CIRCUIT OPEN
CONTROLLER ANTILOCK BRAKE

For a complete Brake Assist System (BAS) Circuit Diagram **Refer to Page 5-149**.

Diagnostic Test

1. WITH THE DRB III®, READ DTCs

Turn the ignition on.
With the DRB III®, erase DTCs.
Turn the ignition off.
Turn the ignition on.
Start the engine.
With the DRB III®, read DTCs.

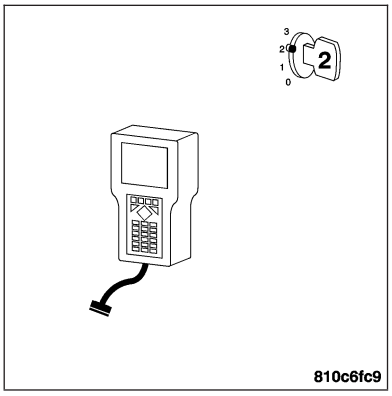

Does the DRB III® display a System Overvoltage DTC?

Yes >> Go to 2

No >> The condition that caused this DTC to set is currently not present. Inspect the related wiring harness for a possible intermittent condition.

2. MEASURE THE BATTERY VOLTAGE

Start the engine.
Raise engine speed above 1,800 RPM.
Measure the battery voltage.

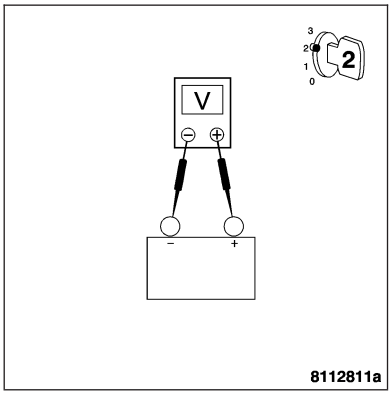

Is the voltage above 16 volts?

Yes >> Refer to the appropriate service information for charging system testing and repair.
Perform ABS VERIFICATION TEST.

No >> Go to 3

CAB SYSTEM OVERVOLTAGE — CONTINUED

3. MEASURE THE RESISTANCE OF THE GROUND CIRCUIT

Turn the ignition off.

Disconnect the CAB connector.

Note: Check connector - Clean/repair as necessary.

Measure the resistance between ground and the Ground circuit at cavity 46 of the CAB harness connector.

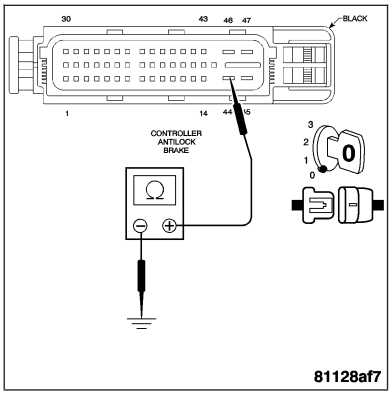

Is the resistance below 5.0 ohms?

Yes >> Go to 4

No >> Repair the Ground circuit for an open.
Perform ABS VERIFICATION TEST.

4. MEASURE THE RESISTANCE OF THE GROUND CIRCUIT

With the ignition off.

Measure the resistance between ground and the Ground circuit at cavity 44 of the CAB harness connector.

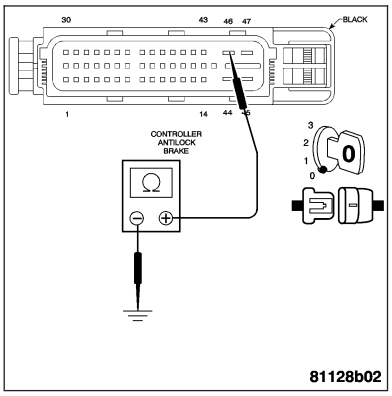

Is the resistance below 5.0 ohms?

Yes >> Replace the Controller Antilock Brake. **Refer to Page 8E-63**.
Perform ABS VERIFICATION TEST.

No >> Repair the Ground circuit for an open.
Perform ABS VERIFICATION TEST.

PCM NOT IDENTIFIED OR INCORRECT

When Monitored and Set Condition

- When Monitored: Continuous.
- Set Condition: If the Controller Antilock Brake (CAB) detects an invalid Powertrain Control Module (PCM), the DTC is set.

POSSIBLE CAUSES
CONTROLLER ANTILOCK BRAKE

For a complete Brake Assist System (BAS) Circuit Diagram **Refer to Page 5-149**.

Diagnostic Test

1. WITH THE DRB III®, READ DTCs

Turn the ignition on.
With the DRB III®, erase DTCs.
Turn the ignition off.
Turn the ignition on.
Start the engine.

CAUTION: Ensure braking capability is available before road testing.
Drive the vehicle above 10 MPH for at least 20 seconds.
Stop the vehicle.
With the DRB III®, read DTCs.

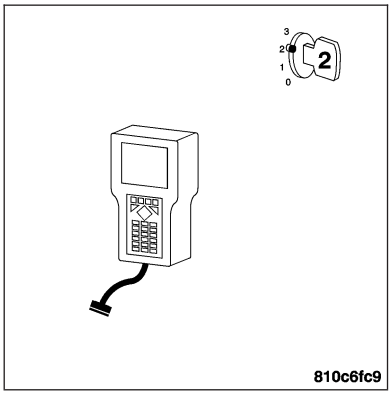

Does the DRB III® display a PCM Not Identified or Incorrect DTC?

Yes >> Replace the Controller Antilock Brake. **Refer to Page 8E-63**.
Perform ABS VERIFICATION TEST.

No >> The condition that caused this DTC to set is currently not present.
Perform ABS VERIFICATION TEST.

CAN BUS COMMUNICATION GENERAL MALFUNCTION

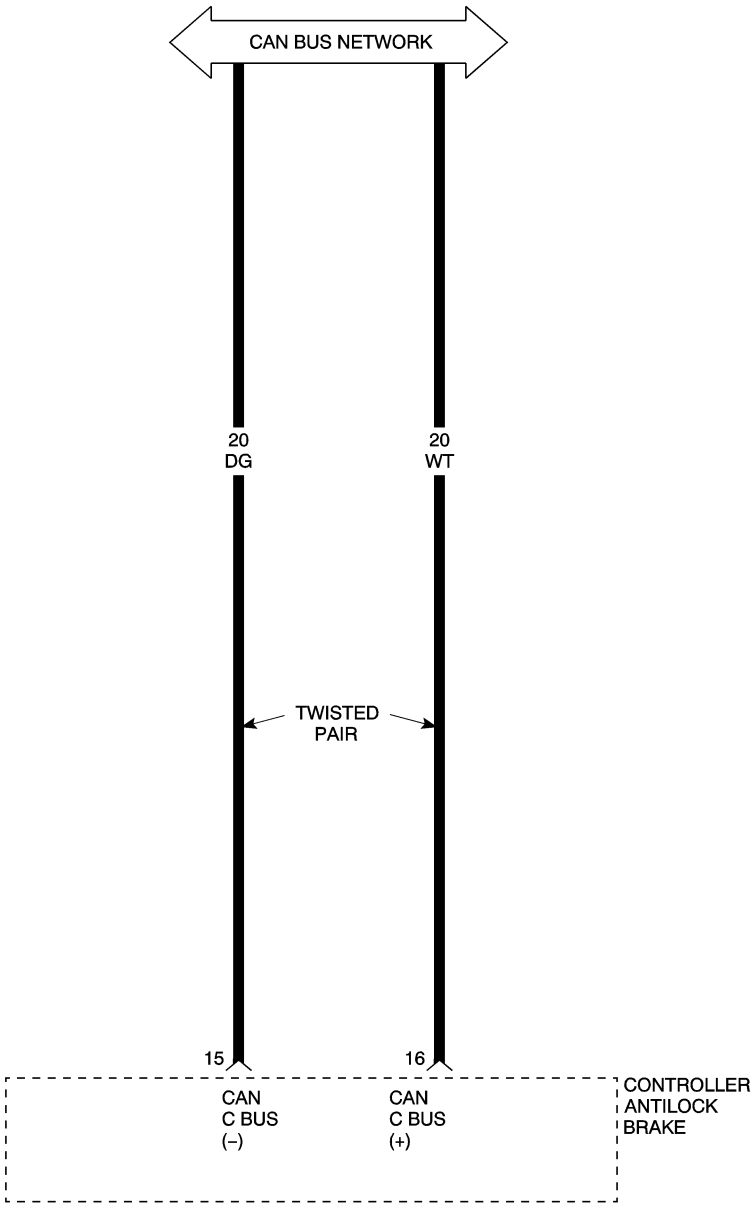

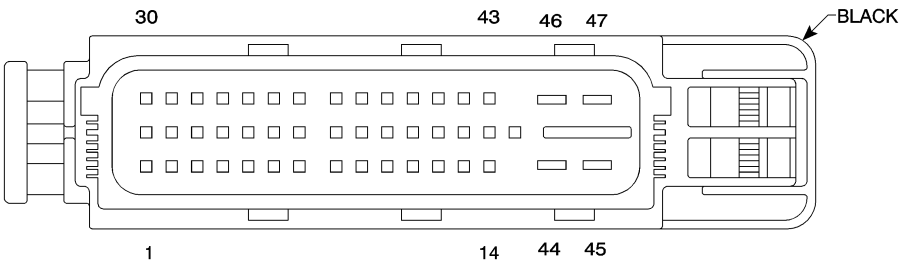

CONTROLLER
ANTILOCK
BRAKE

8110c3cd

CAN BUS COMMUNICATION GENERAL MALFUNCTION — CONTINUED

When Monitored and Set Condition

- When Monitored: With the ignition on.
- Set Condition: CAN Bus communication failure between the Controller Antilock Brake (CAB) and the CAN Bus network.

POSSIBLE CAUSES
CAN BUS CIRCUIT(S) OPEN
CONTROLLER ANTILOCK BRAKE

For a complete Brake Assist System (BAS) Circuit Diagram **Refer to Page 5-149**.

Diagnostic Test

1. MEASURE THE RESISTANCE OF THE CAN C BUS (+) CIRCUIT

Turn the ignition off.

Disconnect the CAB harness connector.

Disconnect the harness connectors of the other modules on the CAN Bus network.

Note: Check connectors - Clean/repair as necessary.

Measure the resistance of the CAN C Bus (+) circuit from the CAB harness connector to the harness connectors of the other modules on the CAN Bus network.

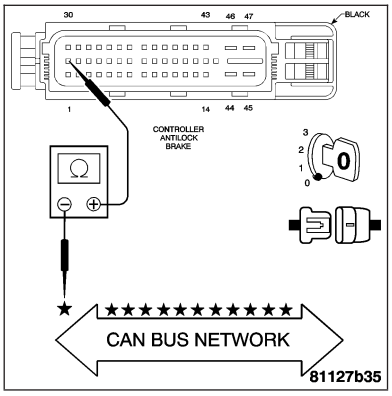

Is the resistance below 1.0 ohm?

Yes >> Go to 2

No >> Repair the CAN C Bus (+) circuit for an open.
Perform ABS VERIFICATION TEST.

2. MEASURE THE RESISTANCE OF THE CAN C (-) BUS CIRCUIT

With the ignition off.

Measure the resistance of the CAN C Bus (-) circuit from the CAB harness connector to the harness connectors of the other modules on the CAN Bus network.

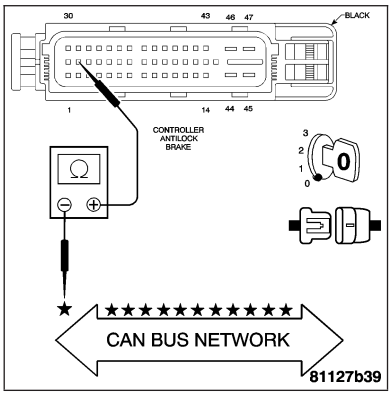

Is the resistance below 1.0 ohm?

Yes >> Replace the Controller Antilock Brake. **Refer to Page 8E-63**.
Perform ABS VERIFICATION TEST.

No >> Repair the CAN C Bus (-) circuit for an open.
Perform ABS VERIFICATION TEST.

NO CAN COMMUNICATIONS WITH PCM

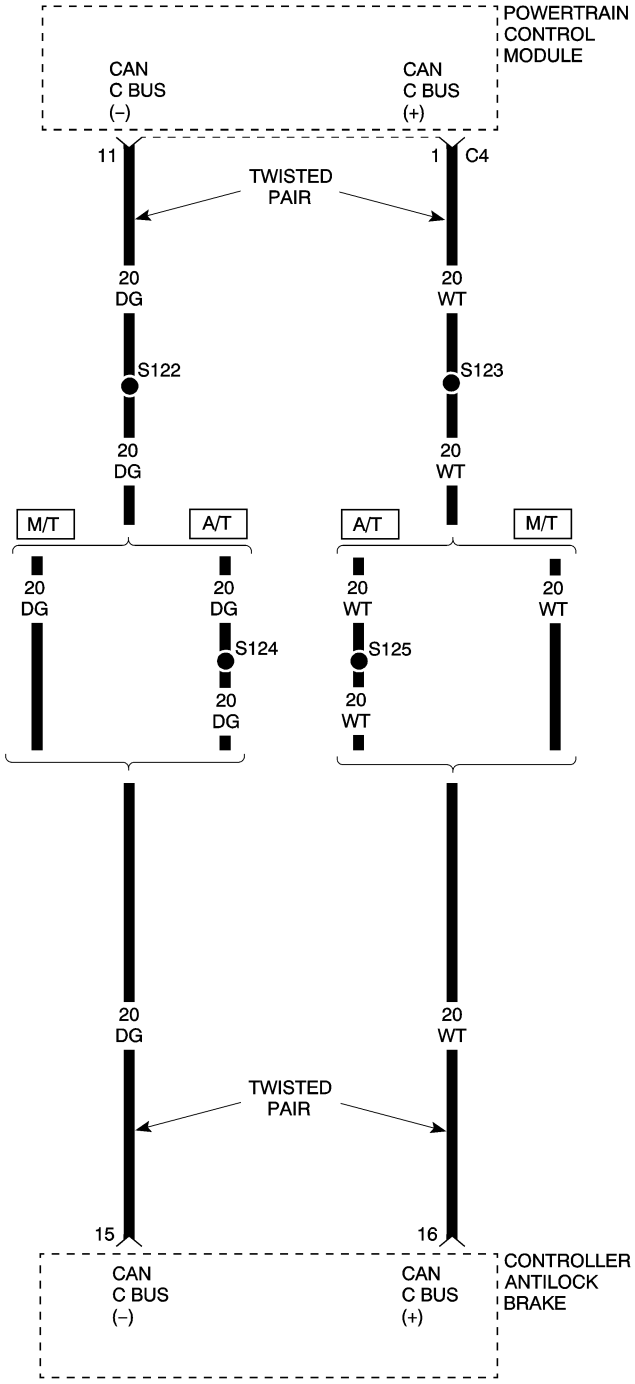

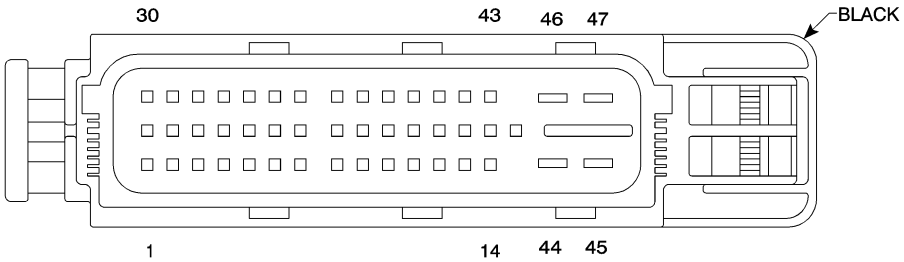

CONTROLLER ANTILOCK BRAKE

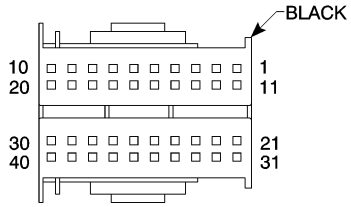

POWERTRAIN CONTROL MODULE – C4

8110bcac

NO CAN COMMUNICATIONS WITH PCM — CONTINUED

When Monitored and Set Condition

- When Monitored: With the ignition on.
- Set Condition: CAN Bus communication failure between the Controller Antilock Brake (CAB) and the Powertrain Control Module (PCM).

POSSIBLE CAUSES
CAN BUS CIRCUIT(S) OPEN
CONTROLLER ANTILOCK BRAKE

For a complete Brake Assist System (BAS) Circuit Diagram **Refer to Page 5-149**.

Diagnostic Test

1. MEASURE THE RESISTANCE OF THE CAN C BUS (+) CIRCUIT

Turn the ignition off.

Disconnect the CAB harness connector.

Disconnect the PCM harness connector.

Note: Check connectors - Clean/repair as necessary.

Measure the resistance of the CAN C Bus (+) circuit from the CAB harness connector to the PCM harness connector.

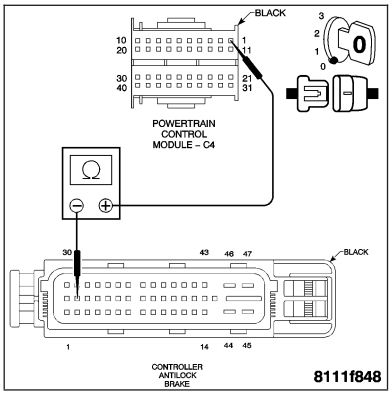

Is the resistance below 1.0 ohm?

Yes >> Go to 2

No >> Repair the CAN C Bus (+) circuit for an open.
Perform ABS VERIFICATION TEST.

2. MEASURE THE RESISTANCE OF THE CAN C BUS (-) CIRCUIT

With the ignition off.

Measure the resistance of the CAN C Bus (-) circuit from the CAB harness connector to the PCM harness connector.

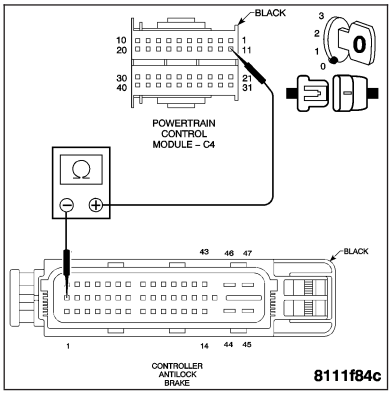

Is the resistance below 1.0 ohm?

Yes >> Replace the Controller Antilock Brake. **Refer to Page 8E-63**.
Perform ABS VERIFICATION TEST.

No >> Repair the CAN C Bus (-) circuit for an open.
Perform ABS VERIFICATION TEST.

BAS RELEASE SWITCH CIRCUIT

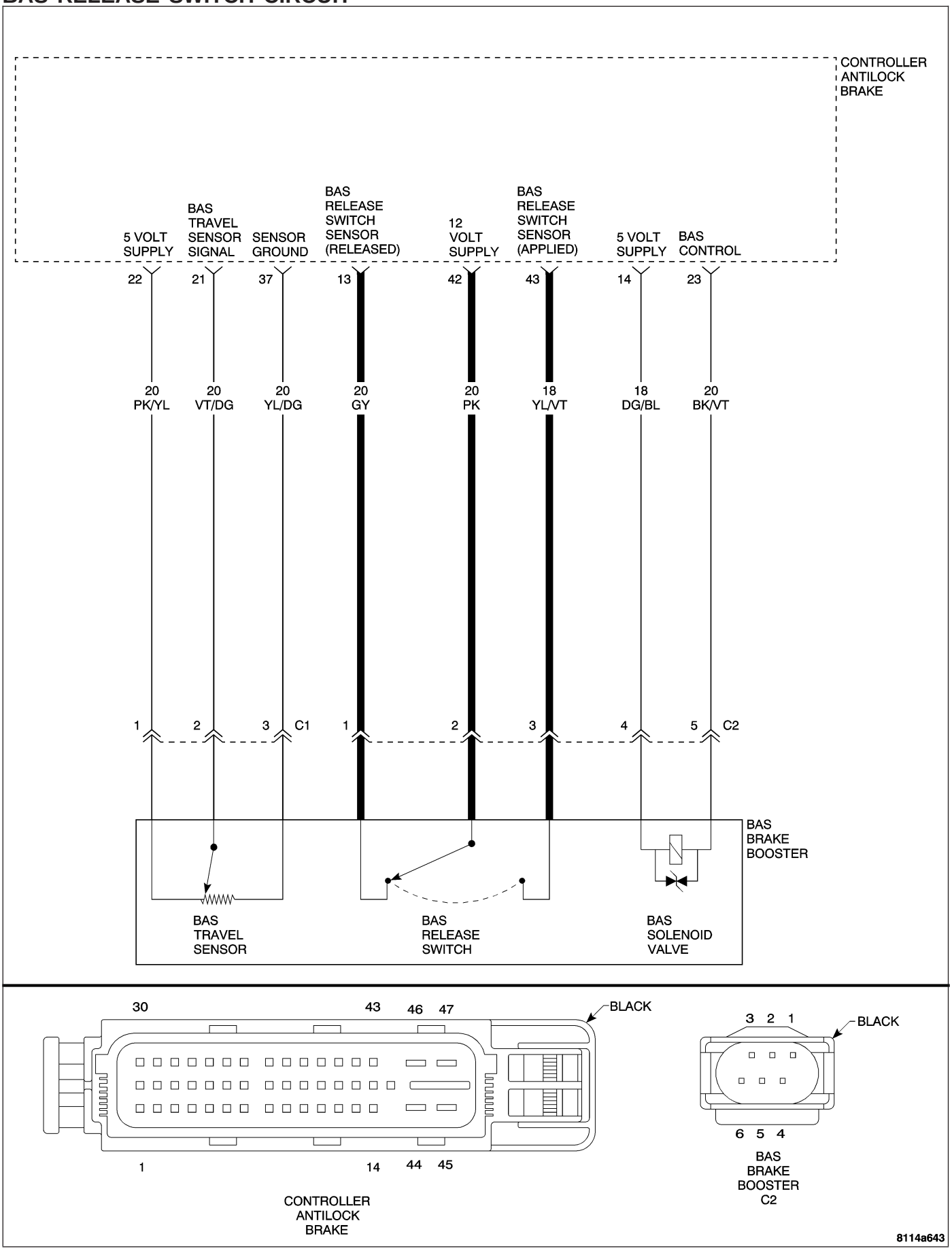

BAS RELEASE SWITCH CIRCUIT — CONTINUED

When Monitored and Set Condition

- When Monitored: Ignition on.
- Set Condition: The Controller Antilock Brake (CAB) detects a Brake Assist System (BAS) Release Switch malfunction.

POSSIBLE CAUSES
BAS RELEASE SWITCH SENSE (REFERENCE) CIRCUIT SHORT TO VOLTAGE
BAS RELEASE SWITCH SENSE (REFERENCE) CIRCUIT SHORT TO SENSE (APPLIED) CIRCUIT
BAS RELEASE SWITCH SENSE (REFERENCE) CIRCUIT SHORT TO GROUND
BAS RELEASE SWITCH SENSE (REFERENCE) CIRCUIT SHORT TO 12 VOLT SUPPLY CIRCUIT
BAS RELEASE SWITCH SENSE (REFERENCE) CIRCUIT OPEN
BAS RELEASE SWITCH SENSE (APPLIED) CIRCUIT OPEN
BAS RELEASE SWITCH SENSE (APPLIED) CIRCUIT SHORT TO GROUND
BAS RELEASE SWITCH 12 VOLT SUPPLY CIRCUIT OPEN
BAS RELEASE SWITCH
CONTROLLER ANTILOCK BRAKE

For a complete Brake Assist System (BAS) Circuit Diagram **Refer to Page 5-149**.

Diagnostic Test

1. MEASURE THE VOLTAGE OF THE BAS RELEASE SWITCH SENSE (APPLIED) CIRCUIT

Turn the ignition off.

Disconnect the BAS Brake Booster harness connector.

Note: Check connectors - Clean/repair as necessary.

Turn the ignition on.

Measure the voltage of the BAS Release Switch Sense (Applied) circuit at the BAS Brake Booster harness connector.

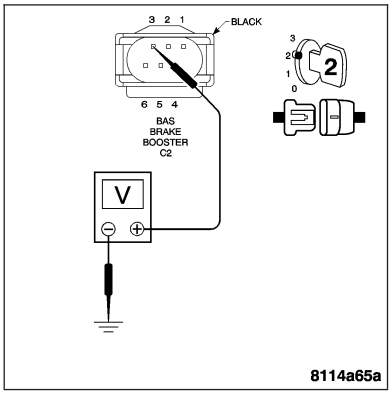

Is the voltage above 5.0 volts?

Yes >> Repair the BAS Release Switch Sense (Applied) circuit for a short to voltage.
Perform ABS VERIFICATION TEST.

No >> Go to 2

BAS RELEASE SWITCH CIRCUIT — CONTINUED

2. MEASURE THE RESISTANCE BETWEEN THE BAS RELEASE SWITCH SENSE (APPLIED) CIRCUIT AND THE SENSE (REFERENCE) CIRCUIT

With the ignition off.

Disconnect the CAB harness connector.

Note: Check connectors - Clean/repair as necessary.

Measure the resistance between the BAS Release Switch Sense (Applied) circuit and the Sense (Reference) circuit in the BAS Brake Booster harness connector.

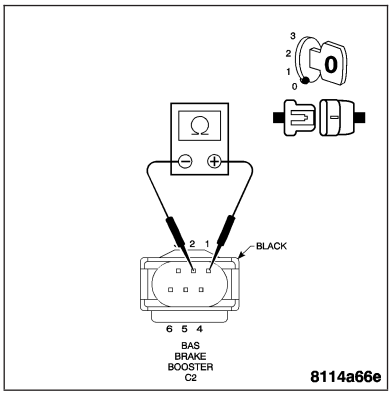

Is the resistance below 5.0 ohms?

Yes >> Repair the BAS Release Switch Sense (Applied) circuit for a short to the Sense (Reference) circuit.
Perform ABS VERIFICATION TEST.

No >> Go to 3

3. MEASURE THE RESISTANCE OF THE BAS RELEASE SWITCH SENSE (APPLIED) CIRCUIT

With the ignition off.

Measure the resistance of the BAS Release Switch Sense (Applied) circuit from the CAB harness connector to the BAS Brake Booster harness connector.

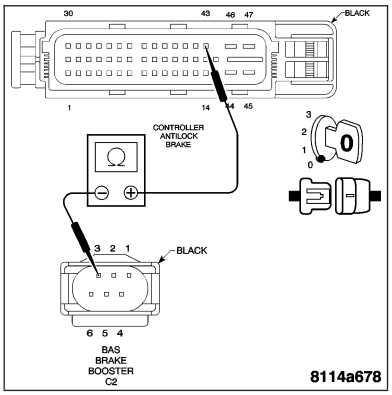

Is the resistance below 5.0 ohms?

Yes >> Go to 4

No >> Repair the BAS Release Switch Sense (Applied) circuit for an open.
Perform ABS VERIFICATION TEST.

4. MEASURE THE RESISTANCE BETWEEN GROUND AND THE BAS RELEASE SWITCH 12 VOLT SUPPLY CIRCUIT

With the ignition off.

Measure the resistance between ground and the BAS Release Switch 12 Volt Supply circuit.

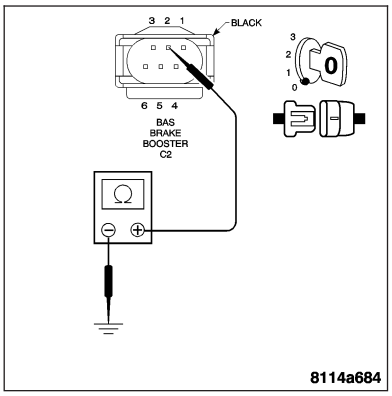

Is the resistance below 100 ohms?

Yes >> Repair the BAS Release Switch 12 Volt Supply circuit for a short to ground.
Perform ABS VERIFICATION TEST.

No >> Go to 5

BAS RELEASE SWITCH CIRCUIT — CONTINUED

5. MEASURE THE VOLTAGE OF THE SENSE (REFERENCE) CIRCUIT

With the ignition off.

Reconnect the CAB harness connector.

Turn the ignition on.

Measure the voltage of the BAS Release Switch Sense (Reference) circuit at the BAS Brake Booster harness connector.

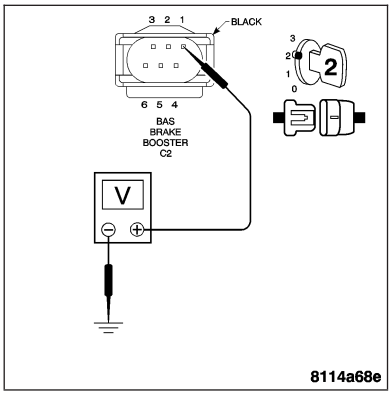

Is the voltage between 10 and 12 volts?

Yes >> Go to 6

No >> Go to 8

6. MEASURE THE RESISTANCE BETWEEN GROUND AND THE BAS RELEASE SWITCH SENSE (APPLIED) CIRCUIT

Turn the ignition off.

Disconnect the CAB harness connector.

Note: Check connectors - Clean/repair as necessary.

Measure the resistance between ground and the BAS Release Switch Sense (Applied) circuit.

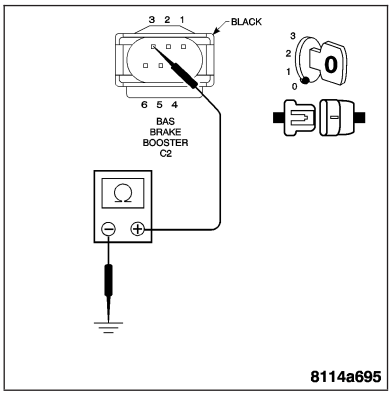

Is the resistance below 100 ohms?

Yes >> Repair the BAS Release Switch Sense (Applied) circuit for a short to ground.
Perform ABS VERIFICATION TEST.

No >> Go to 7

7. MEASURE THE RESISTANCE BETWEEN THE BAS RELEASE SWITCH SENSE (APPLIED) CIRCUIT AND THE 12 VOLT SUPPLY CIRCUIT

With the ignition off.

Measure the resistance between the BAS Release Switch Sense (Applied) circuit and the BAS Release Switch 12 Volt Supply circuit in the BAS Brake Booster harness connector.

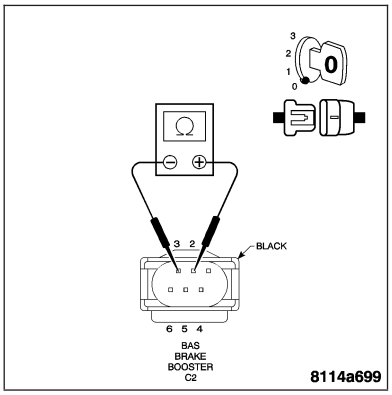

Is the resistance below 100 ohms?

Yes >> Repair the BAS Release Switch Sense (Applied) circuit for a short to the BAS Release Switch 12 Volt Supply circuit.
Perform ABS VERIFICATION TEST.

No >> Replace the BAS Brake Booster. **Refer to Page 5-50**.
Perform ABS VERIFICATION TEST.

BAS RELEASE SWITCH CIRCUIT — CONTINUED

8. MEASURE THE RESISTANCE BETWEEN GROUND AND THE BAS RELEASE SWITCH SENSOR (RELEASED) CIRCUIT

Turn the ignition off.

Disconnect the CAB harness connector.

Note: Check connectors - Clean/repair as necessary.

Measure the resistance between ground and the BAS Release Switch Sensor (Released) circuit at the BAS Brake Booster harness connector.

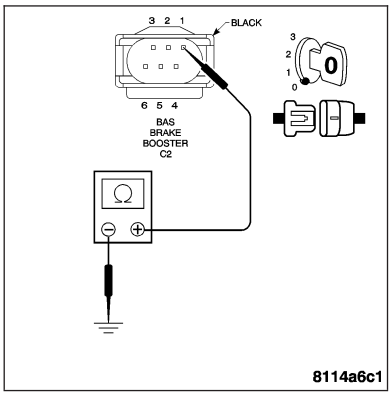

Is the resistance below 100 ohms?

Yes >> Repair the BAS Release Switch Sensor (Released) circuit for a short to ground.
Perform ABS VERIFICATION TEST.

No >> Go to 9

9. MEASURE THE RESISTANCE OF THE BAS RELEASE SWITCH SENSE (RELEASED) CIRCUIT

With the ignition off.

Measure the resistance of the BAS Release Switch Sensor (Released) circuit at the BAS Brake Booster harness connector and the CAB harness connector.

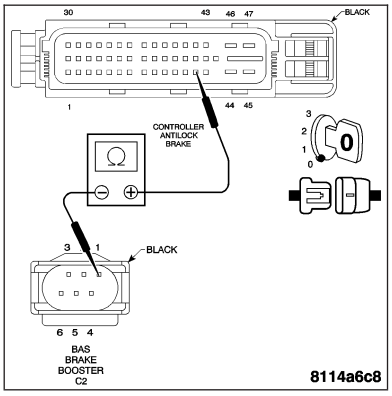

Is the resistance below 5.0 ohms?

Yes >> Replace the Controller Antilock Brake. **Refer to Page 8E-63**.
Perform ABS VERIFICATION TEST.

No >> Repair the BAS Release Switch Sensor (Released) circuit for an open.
Perform ABS VERIFICATION TEST.

BAS TRAVEL SENSOR CIRCUIT

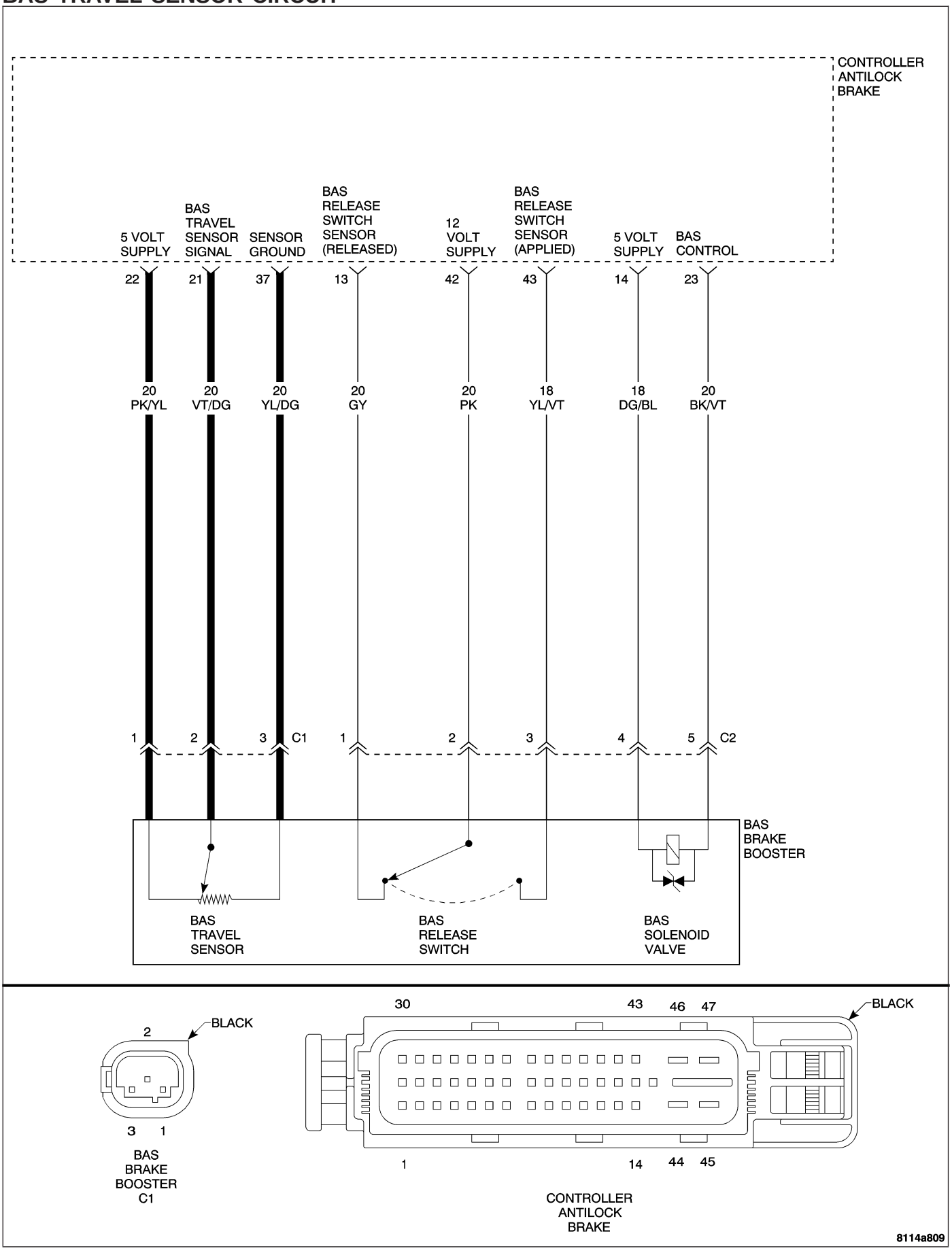

BAS TRAVEL SENSOR CIRCUIT — CONTINUED

When Monitored and Set Condition

- When Monitored: Ignition on.
- Set Condition: The Controller Antilock Brake (CAB) detects a Brake Assist System (BAS) Travel Sensor malfunction.

POSSIBLE CAUSES
BAS TRAVEL SENSOR SIGNAL CIRCUIT SHORT TO VOLTAGE
BAS TRAVEL SENSOR SIGNAL CIRCUIT SHORT TO 5-VOLT SUPPLY CIRCUIT
BAS TRAVEL SENSOR SIGNAL CIRCUIT SHORT TO GROUND
BAS TRAVEL SENSOR SIGNAL CIRCUIT SHORT TO GROUND CIRCUIT
BAS TRAVEL SENSOR SIGNAL CIRCUIT OPEN
BAS TRAVEL SENSOR 5-VOLT SUPPLY CIRCUIT OPEN
BAS TRAVEL SENSOR 5-VOLT SUPPLY CIRCUIT SHORT TO GROUND
BAS TRAVEL SENSOR GROUND CIRCUIT OPEN
BAS TRAVEL SENSOR
CONTROLLER ANTILOCK BRAKE

For a complete Brake Assist System (BAS) Circuit Diagram **Refer to Page 5-149**.

Diagnostic Test

1. MEASURE THE VOLTAGE OF THE BAS TRAVEL SENSOR SIGNAL CIRCUIT

Turn the ignition off.

Disconnect the BAS Brake Booster harness connector.

Note: Check connectors - Clean/repair as necessary.

Turn the ignition on.

Measure the voltage of the BAS Travel Sensor Signal circuit at the BAS Brake Booster harness connector.

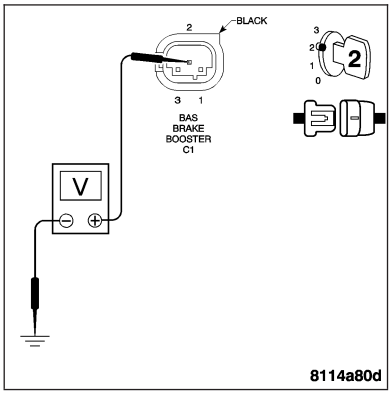

Is the voltage above 5.0 volts?

Yes >> Repair the BAS Travel Sensor Signal circuit for a short to voltage.
Perform ABS VERIFICATION TEST.

No >> Go to 2

BAS TRAVEL SENSOR CIRCUIT — CONTINUED

2. MEASURE THE RESISTANCE BETWEEN THE BAS TRAVEL SENSOR SIGNAL CIRCUIT AND THE 5-VOLT SUPPLY CIRCUIT

With the ignition off.

Disconnect the CAB harness connector.

Note: Check connectors - Clean/repair as necessary.

Measure the resistance between the BAS Travel Sensor Signal circuit and the 5-Volt supply circuit in the BAS Brake Booster harness connector.

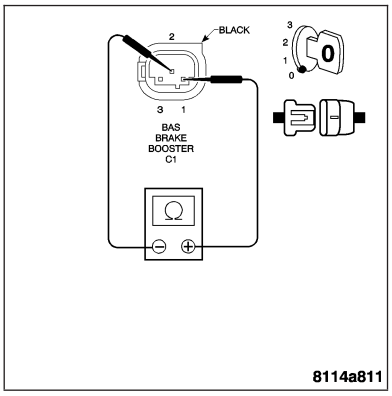

Is the resistance below 5.0 ohms?

Yes >> Repair the BAS Travel Sensor Signal circuit for a short to the 5-Volt Supply circuit.
Perform ABS VERIFICATION TEST.

No >> Go to 3

3. MEASURE THE RESISTANCE OF THE BAS TRAVEL SENSOR SIGNAL CIRCUIT

With the ignition off.

Measure the resistance of the BAS Travel Sensor Signal circuit from the CAB harness connector to the BAS Brake Booster harness connector.

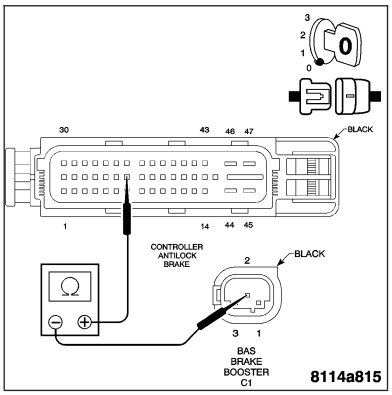

Is the resistance below 5.0 ohms?

Yes >> Go to 4

No >> Repair the BAS Travel Sensor Signal circuit for an open.
Perform ABS VERIFICATION TEST.

4. MEASURE THE RESISTANCE BETWEEN GROUND AND THE BAS TRAVEL SENSOR GROUND CIRCUIT

With the ignition off.

Measure the resistance between ground and the BAS Travel Sensor Ground circuit.

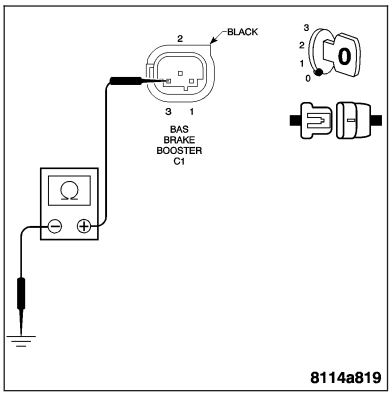

Is the resistance below 100 ohms?

Yes >> Repair the BAS Travel Sensor Ground circuit for a short to ground.
Perform ABS VERIFICATION TEST.

No >> Go to 5

BAS TRAVEL SENSOR CIRCUIT — CONTINUED

5. MEASURE THE VOLTAGE OF THE 5-VOLT SUPPLY CIRCUIT

With the ignition off.

Reconnect the CAB harness connector.

Turn the ignition on.

Measure the voltage of the BAS Travel Sensor 5-Volt Supply circuit at the BAS Brake Booster harness connector.

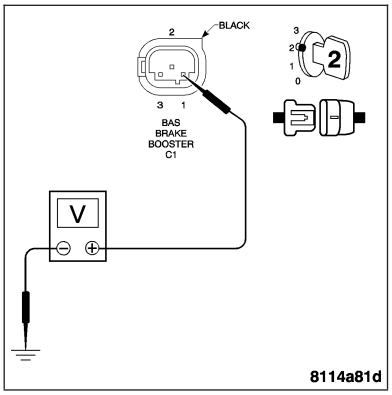

Is the voltage between 4.5 and 5.0 volts?

Yes >> Go to 6

No >> Go to 8

6. MEASURE THE RESISTANCE BETWEEN GROUND AND THE BAS TRAVEL SENSOR SIGNAL CIRCUIT

Turn the ignition off.

Disconnect the CAB harness connector.

Note: Check connectors - Clean/repair as necessary.

Measure the resistance between ground and the BAS Travel Sensor Signal circuit.

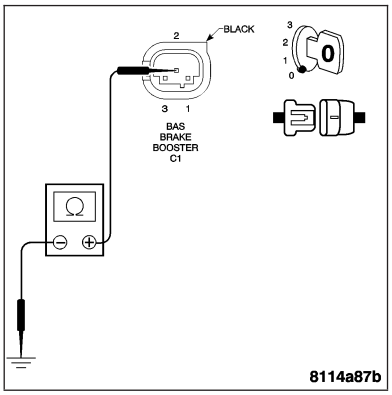

Is the resistance below 100 ohms?

Yes >> Repair the BAS Travel Sensor Signal circuit for a short to ground.
Perform ABS VERIFICATION TEST.

No >> Go to 7

7. MEASURE THE RESISTANCE BETWEEN THE BAS TRAVEL SENSOR SIGNAL CIRCUIT AND THE GROUND CIRCUIT

With the ignition off.

Measure the resistance between the BAS Travel Sensor Signal circuit and the BAS Travel Sensor Ground circuit in the BAS Brake Booster harness connector.

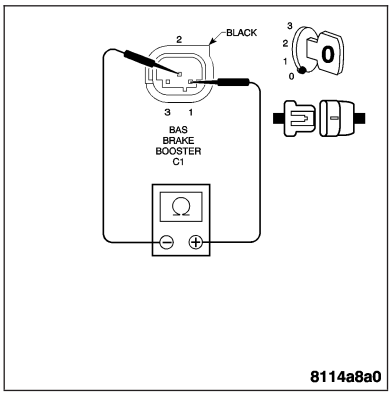

Is the resistance below 100 ohms?

Yes >> Repair the BAS Travel Sensor Signal circuit for a short to the BAS Travel Sensor Ground circuit.
Perform ABS VERIFICATION TEST.

No >> Replace the BAS Brake Booster. **Refer to Page 5-50**.
Perform ABS VERIFICATION TEST.

BAS TRAVEL SENSOR CIRCUIT — CONTINUED

8. MEASURE THE RESISTANCE BETWEEN GROUND AND THE BAS TRAVEL SENSOR 5-VOLT SUPPLY CIRCUIT

Turn the ignition off.

Disconnect the CAB harness connector.

Note: Check connectors - Clean/repair as necessary.

Measure the resistance between ground and the 5-Volt Supply circuit.

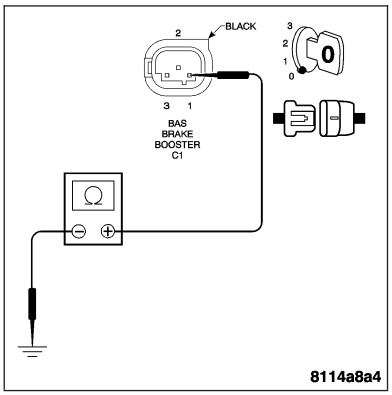

Is the resistance below 100 ohms?

Yes >> Repair the 5-Volt Supply circuit for a short to ground.
Perform ABS VERIFICATION TEST.

No >> Go to 9

9. MEASURE THE RESISTANCE OF THE BAS TRAVEL SENSOR 5-VOLT SUPPLY CIRCUIT

With the ignition off.

Measure the resistance of the 5-Volt Supply circuit from the BAS Brake Booster harness connector to the CAB harness connector.

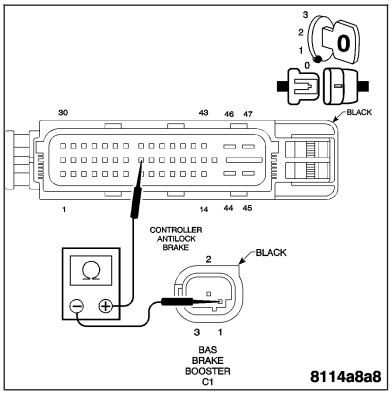

Is the resistance below 5.0 ohms?

Yes >> Replace the Controller Antilock Brake. **Refer to Page 8E-63**.
Perform ABS VERIFICATION TEST.

No >> Repair the BAS Travel Sensor 5-Volt Supply circuit for an open.
Perform ABS VERIFICATION TEST.

BRAKE LAMP SWITCH CIRCUIT

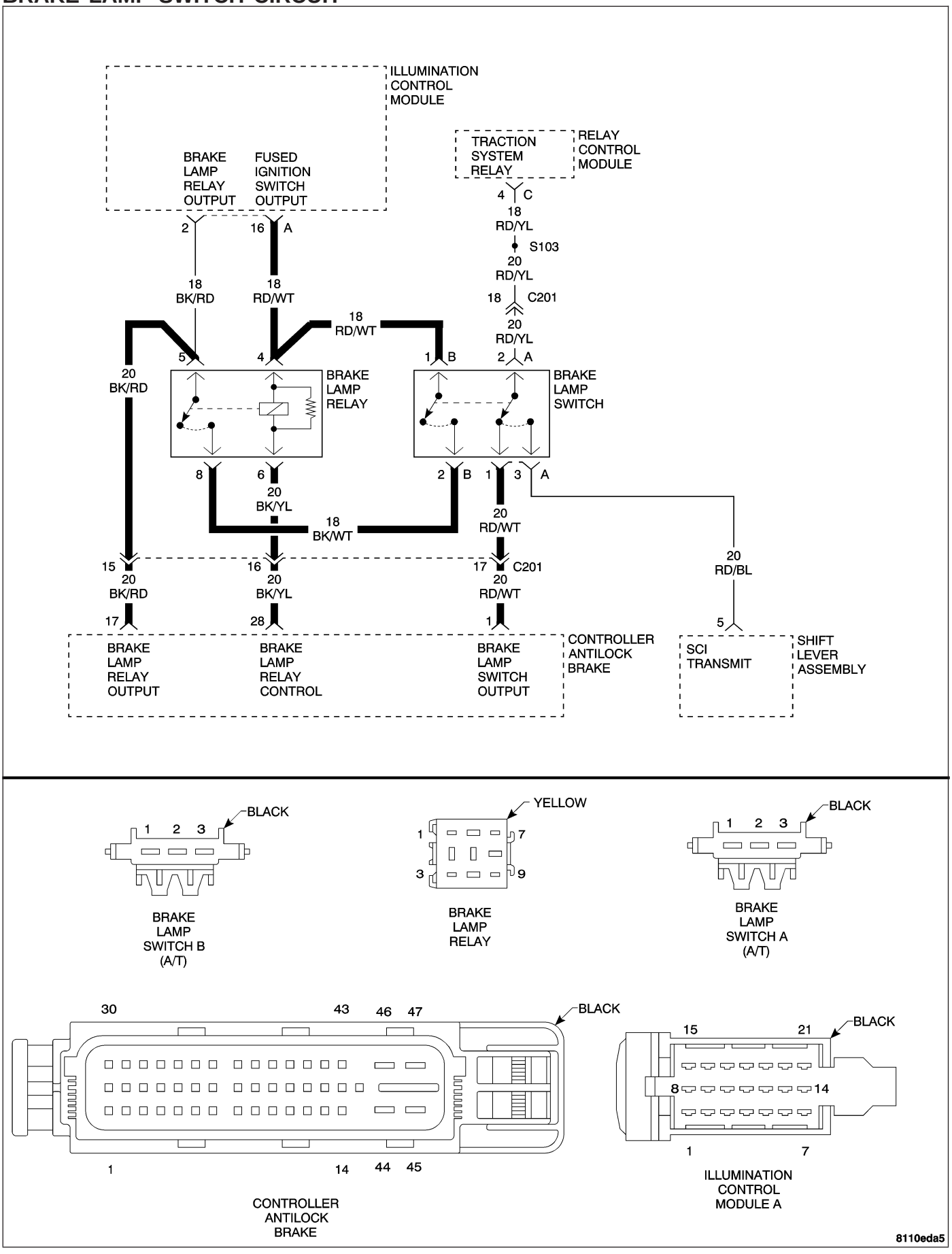

BRAKE LAMP SWITCH CIRCUIT — CONTINUED

When Monitored and Set Condition

- When Monitored: With the ignition on.
- Set Condition: The Controller Antilock Brake (CAB) detects an abnormal condition on the Brake Lamp Switch circuit.

POSSIBLE CAUSES
FUSED IGNITION SWITCH OUTPUT CIRCUIT OPEN
BRAKE LAMP SWITCH OUTPUT CIRCUIT OPEN
BRAKE LAMP SWITCH OUTPUT CIRCUIT SHORTED
BRAKE LAMP SWITCH
BRAKE LAMP RELAY
CONTROLLER ANTILOCK BRAKE

For a complete Brake Assist System (BAS) Circuit Diagram **Refer to Page 5-149**.

Diagnostic Test

1. MEASURE BRAKE LAMP SWITCH VOLTAGE

Note: Inspect Fuse 2 located in the Illumination Control Module/IP Fuse Block. If the fuse is open, repair the cause of the open fuse before continuing.
Turn the ignition off.

Disconnect the Brake Lamp Switch harness connector.

Note: Check connectors - Clean/repair as necessary.
Turn the ignition on.

Measure the voltage of the Fused Ignition Switch Output circuit at the Brake Lamp Switch harness connector.

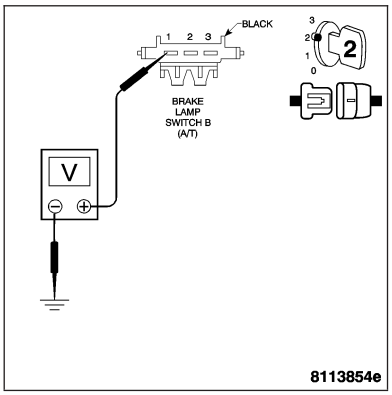

Is the voltage above 10 volts?

Yes >> Go to 2

No >> Repair the Fused Ignition Switch Output circuit for an open.
Perform ABS VERIFICATION TEST.

2. MEASURE THE RESISTANCE BETWEEN THE BRAKE LAMP SWITCH AND THE BRAKE LAMP RELAY

With the ignition off.

Remove the Brake Lamp Relay.

Note: Check connectors - Clean/repair as necessary.
Measure the resistance of the circuit from the Brake Lamp Switch harness connector B cavity 2 to the Brake Lamp Relay harness connector cavity 8.

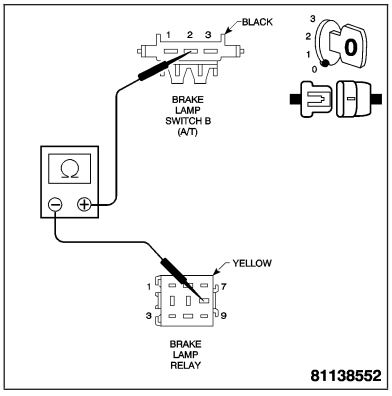

Is the resistance below 5.0 ohms?

Yes >> Go to 3

No >> Repair the circuit for an open.
Perform ABS VERIFICATION TEST.

BRAKE LAMP SWITCH CIRCUIT — CONTINUED

3. MEASURE THE RESISTANCE BETWEEN THE BRAKE LAMP SWITCH AND THE CAB

With the ignition off.

Disconnect the CAB harness connector.

Note: Check connectors - Clean/repair as necessary.

Measure the resistance of the Brake Lamp Switch Output circuit from the Brake Lamp Switch harness connector to the CAB harness connector.

Is the resistance below 5.0 ohms?

Yes >> Go to 4

No >> Repair the Brake Lamp Switch Output circuit for an open.
Perform ABS VERIFICATION TEST.

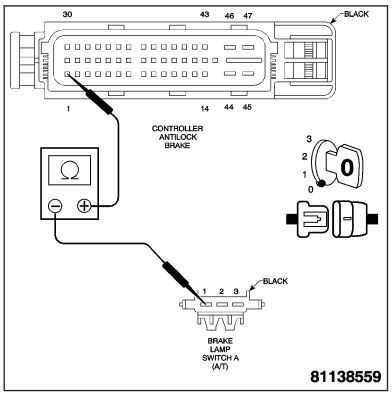

4. MEASURE BRAKE LAMP RELAY VOLTAGE

With the ignition off.

Reconnect the Brake Lamp Switch harness connector.

Turn the ignition on.

Have an assistant depress the brake pedal while measuring the voltage at the Brake Lamp Relay harness connector cavity 8.

Is the voltage above 10 volts?

Yes >> Go to 5

No >> Replace the Brake Lamp Switch.
Perform ABS VERIFICATION TEST.

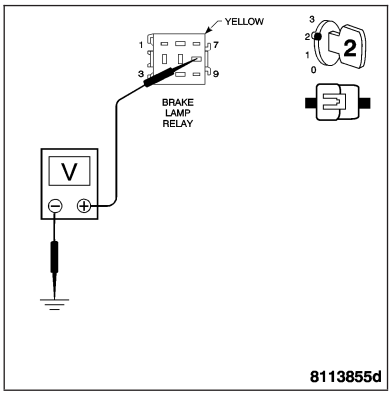

5. MEASURE THE RESISTANCE BETWEEN THE BRAKE LAMP RELAY AND THE CAB

Turn the ignition off.

Measure the resistance of the Brake Lamp Relay Control circuit between the Brake Lamp Relay harness connector and the CAB harness connector.

Is the resistance below 5.0 ohms?

Yes >> Go to 6

No >> Repair the Brake Lamp Relay control circuit between the Brake Lamp Relay and the CAB for an open.
Perform ABS VERIFICATION TEST.

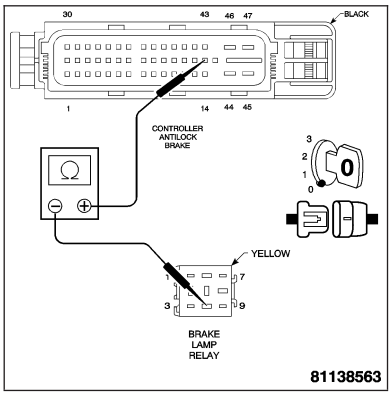

BRAKE LAMP SWITCH CIRCUIT — CONTINUED

6. MEASURE BRAKE LAMP RELAY CONTROL CIRCUIT VOLTAGE

Turn the ignition on.

Measure the voltage of the Brake Lamp Relay Control circuit at the CAB harness connector.

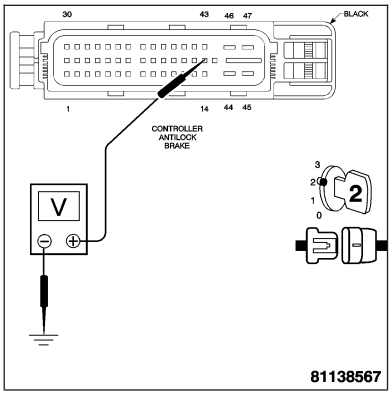

Is voltage present?

Yes >> Repair the Brake Lamp Relay Control circuit for a short to voltage.
Perform ABS VERIFICATION TEST.

No >> Go to 7

7. MEASURE BRAKE LAMP RELAY CONTROL CIRCUIT VOLTAGE

Turn the ignition off.

Install a jumper wire between cavities 4 and 6 of the Brake Lamp Relay harness connector.

Turn the ignition on.

Measure the voltage of the Brake Lamp Relay Control circuit at the CAB harness connector.

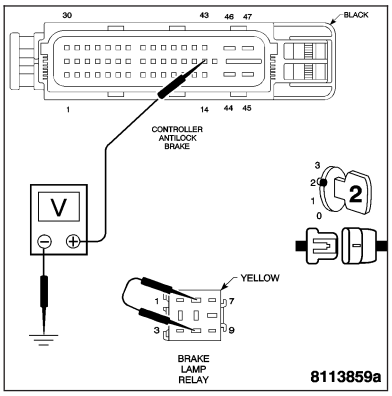

Is the voltage above 10 volts?

Yes >> Go to 8

No >> Repair the Brake Lamp Relay Control circuit for an open.
Perform ABS VERIFICATION TEST.

8. MEASURE BRAKE LAMP RELAY OUTPUT CIRCUIT RESISTANCE

With the ignition off and the jumper wire removed from the Brake Lamp Relay harness connector.

Measure the resistance of the Brake Lamp Relay Output circuit from the Brake Lamp Relay harness connector to the CAB harness connector.

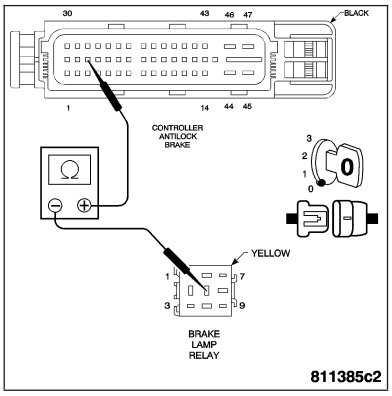

Is the resistance below 5.0 ohms?

Yes >> Go to 9

No >> Repair the Brake Lamp Relay Output circuit for an open.
Perform ABS VERIFICATION TEST.

BRAKE LAMP SWITCH CIRCUIT — CONTINUED

9. MEASURE BRAKE LAMP RELAY OUTPUT CIRCUIT VOLTAGE

Turn the ignition on.

Measure the voltage of the Brake Lamp Relay Output circuit at the CAB harness connector.

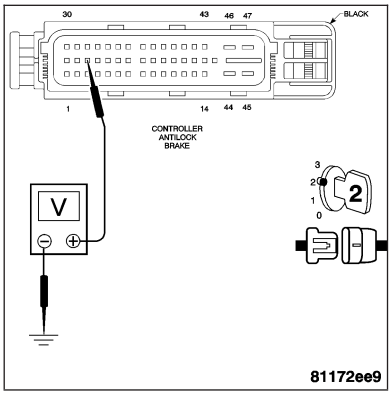

Is voltage present?

Yes >> Repair the Brake Lamp Relay Output circuit for a short to voltage.
Perform ABS VERIFICATION TEST.

No >> Go to 10

10. MEASURE BRAKE LAMP RELAY OUTPUT CIRCUIT VOLTAGE

Turn the ignition off.

Install a jumper wire between cavities 8 and 5 of the Brake Lamp Relay harness connector.

Turn the ignition on.

Have an assistant depress the brake pedal while measuring the voltage of the Brake Lamp Relay Output circuit at the CAB harness connector.

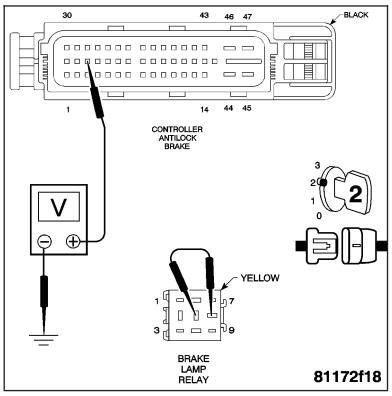

Is the voltage above 10 volts?

Yes >> Replace the Controller Antilock Brake. **Refer to Page 8E-63**.
Perform ABS VERIFICATION TEST.

No >> Replace the Brake Lamp Relay.
Perform ABS VERIFICATION TEST.

BAS SOLENOID VALVE CIRCUIT

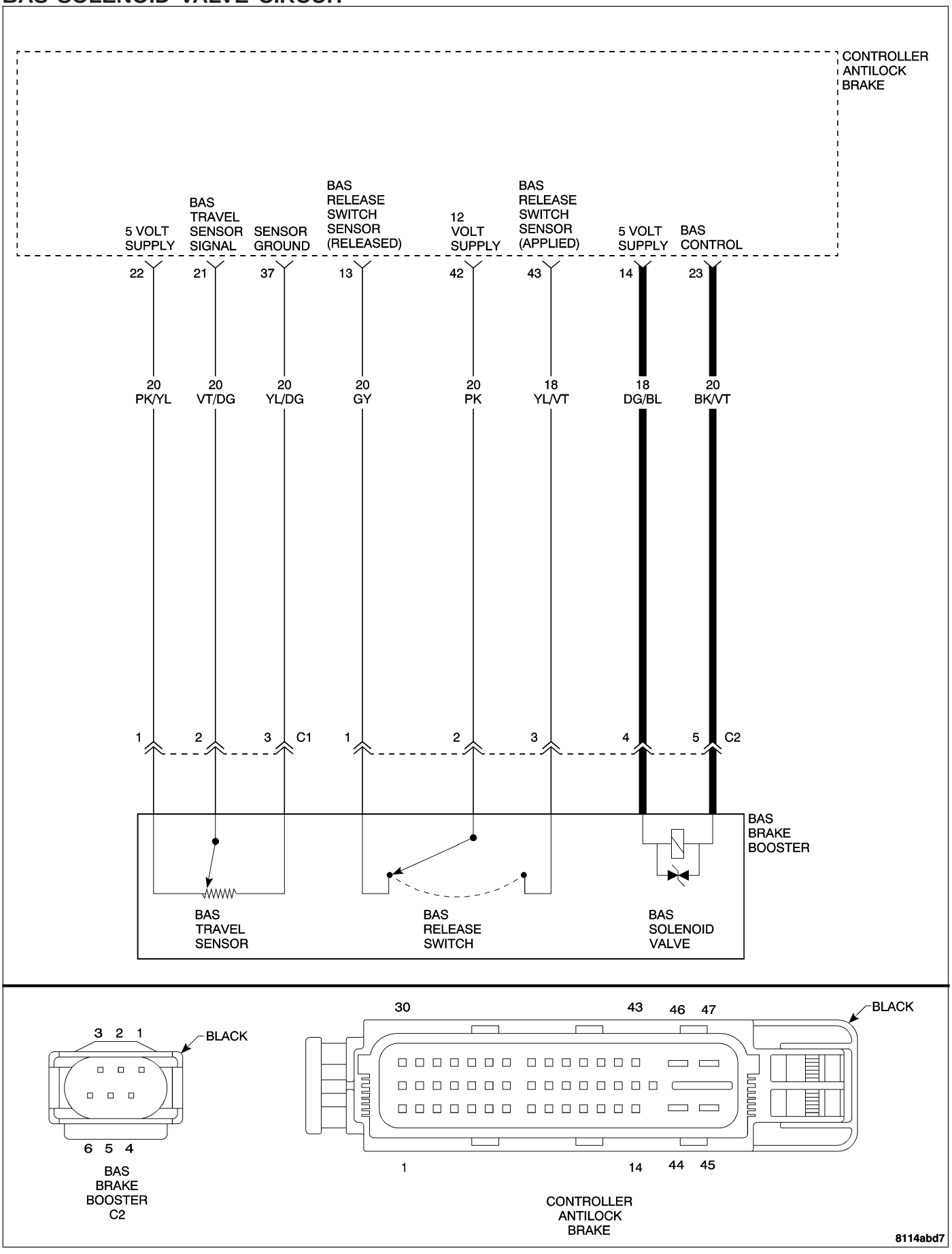

BAS SOLENOID VALVE CIRCUIT — CONTINUED

When Monitored and Set Condition

- When Monitored: With the ignition on.
- Set Condition: The Controller Antilock Brake (CAB) detects a Brake Assist System (BAS) Solenoid Valve malfunction.

POSSIBLE CAUSES
BAS SOLENOID VALVE 5-VOLT SUPPLY CIRCUIT SHORT TO VOLTAGE
BAS SOLENOID VALVE CONTROL CIRCUIT SHORT TO VOLTAGE
BAS SOLENOID VALVE CIRCUITS SHORT TO EACH OTHER
BAS SOLENOID VALVE 5-VOLT SUPPLY CIRCUIT SHORT TO GROUND
BAS SOLENOID VALVE CONTROL CIRCUIT SHORT TO GROUND
BAS SOLENOID VALVE 5-VOLT SUPPLY CIRCUIT OPEN
BAS SOLENOID VALVE CONTROL CIRCUIT OPEN
CONTROLLER ANTILOCK BRAKE

For a complete Brake Assist System (BAS) Circuit Diagram **Refer to Page 5-149**.

Diagnostic Test

1. MEASURE THE RESISTANCE OF THE BAS SOLENOID VALVE 5-VOLT SUPPLY CIRCUIT

Turn the ignition off.

Disconnect the CAB harness connector.

Disconnect the BAS Brake Booster harness connector.

Note: Check connectors - Clean/repair as necessary.
Measure the resistance of the BAS Solenoid Valve 5-Volt Supply circuit from the CAB harness connector to the BAS Brake Booster harness connector.

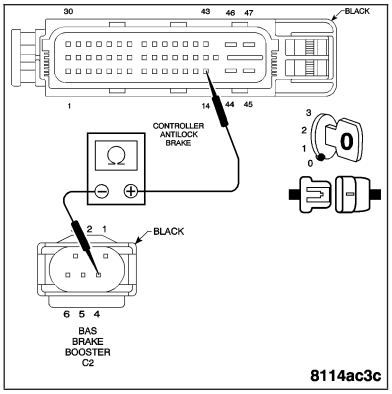

Is the resistance below 5.0 ohms?

Yes >> Go to 2

No >> Repair the BAS Solenoid Valve 5-Volt Supply circuit for an open.
Perform ABS VERIFICATION TEST.

BAS SOLENOID VALVE CIRCUIT — CONTINUED

2. MEASURE THE RESISTANCE OF THE BAS SOLENOID VALVE CONTROL CIRCUIT

With the ignition off.

Measure the resistance of the BAS Solenoid Valve Control circuit from the CAB harness connector to the BAS Brake Booster harness connector.

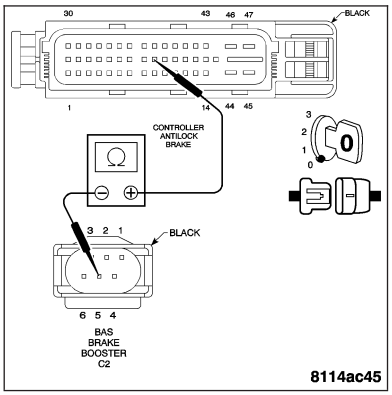

Is the resistance below 5.0 ohms?

Yes >> Go to 3

No >> Repair the BAS Solenoid Valve Control circuit for an open.
Perform ABS VERIFICATION TEST.

3. MEASURE THE RESISTANCE OF THE BAS SOLENOID VALVE CIRCUITS

With the ignition off.

Measure the resistance between the BAS Solenoid Valve circuits at the BAS Brake Booster harness connector.

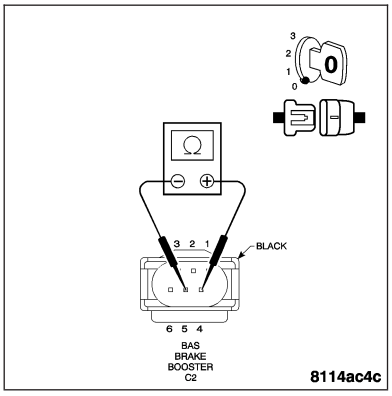

Is the resistance below 10K ohms?

Yes >> Repair the BAS Solenoid Valve circuits for a short to each other.
Perform ABS VERIFICATION TEST.

No >> Go to 4

4. MEASURE THE VOLTAGE OF THE BAS SOLENOID VALVE 5-VOLT SUPPLY CIRCUIT

Turn the ignition on.

Measure the voltage of the BAS Solenoid Valve 5-Volt Supply circuit at the BAS Brake Booster harness connector.

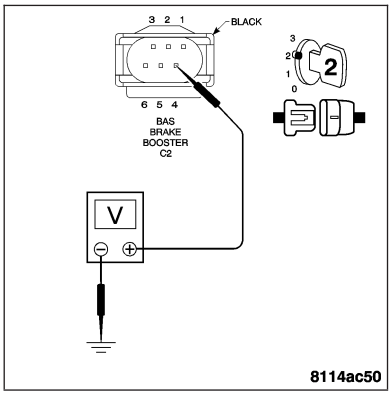

Is voltage present?

Yes >> Repair the BAS Solenoid Valve 5-Volt Supply circuit for a short to voltage.
Perform ABS VERIFICATION TEST.

No >> Go to 5

BAS SOLENOID VALVE CIRCUIT — CONTINUED

5. MEASURE THE VOLTAGE OF THE BAS SOLENOID VALVE CONTROL CIRCUIT

With the ignition on.

Measure the voltage of the BAS Solenoid Valve Control circuit at the BAS Brake Booster harness connector.

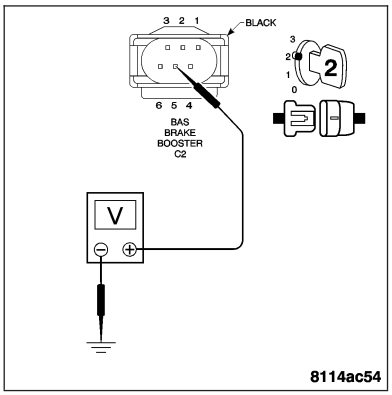

Is voltage present?

Yes >> Repair the BAS Solenoid Valve Control circuit for a short to voltage.
Perform ABS VERIFICATION TEST.

No >> Go to 6

6. MEASURE THE RESISTANCE OF THE BAS SOLENOID VALVE 5-VOLT SUPPLY CIRCUIT

Turn the ignition off.

Measure the resistance between ground and the BAS Solenoid Valve 5-Volt Supply circuit.

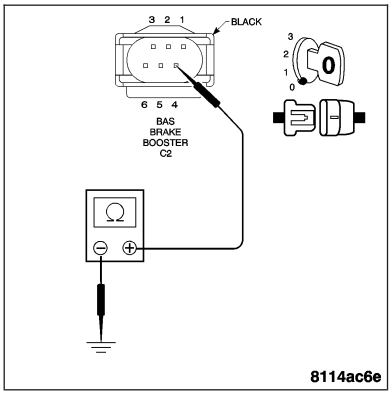

Is the resistance below 10K ohms?

Yes >> Repair the BAS Solenoid Valve 5-Volt Supply circuit for a short to ground.
Perform ABS VERIFICATION TEST.

No >> Go to 7

7. MEASURE THE RESISTANCE OF THE BAS SOLENOID VALVE CONTROL CIRCUIT

With the ignition off.

Measure the resistance between ground and the BAS Solenoid Valve Control circuit.

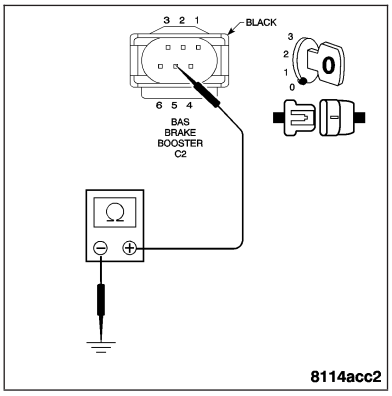

Is the resistance below 10K ohms?

Yes >> Repair the BAS Solenoid Valve Control circuit for a short to ground.
Perform ABS VERIFICATION TEST.

No >> Replace the BAS Brake Booster. **Refer to Page 5-50**.
Perform ABS VERIFICATION TEST.

ABS VERIFICATION TEST

1.

Turn the ignition off.

Disconnect all jumper wires and reconnect all previously disconnected components and connectors.

With the DRB III®, erase all Diagnostic Trouble Codes (DTCs) from ALL modules. Start the engine and allow it to run for 2 minutes.

Turn the ignition off and wait 5 seconds. Turn the ignition on and using the DRB III®, read DTCs from ALL modules.

CAUTION: Ensure braking capability is available before road testing.

Note: For sensor signal and pump motor faults, the CAB must sense all 4 wheels at 25 km/h (15 MPH) before the CAB will extinguish the indicator lamp.

Road test the vehicle for a minimum of 5 minutes. Perform several antilock braking stops.

Again, with the DRB III®, confirm that no DTCs are present and that all components are functioning properly.

If there are no DTCs present and all components are functioning properly, the repair is complete.

Are any DTCs present?

YES >> Repair is not complete, refer to appropriate symptom.

NO >> Repair is complete.

SCHEMATICS AND DIAGRAMS

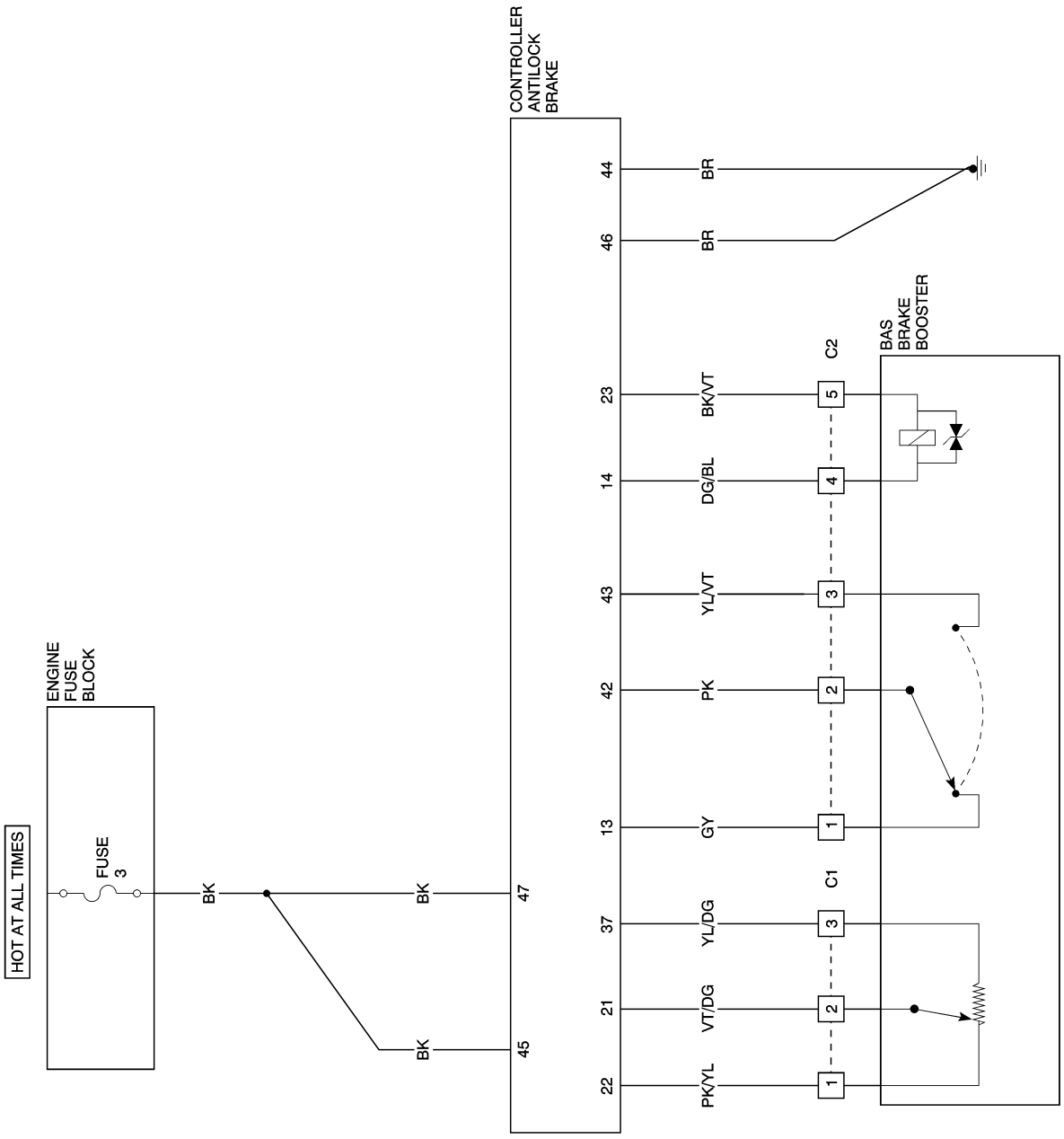

BRAKE ASSIST SYSTEM CIRCUIT DIAGRAM

BRAKES - ABS SERVICE INFORMATION

TABLE OF CONTENTS

page

BRAKES - ESP SERVICE INFORMATION
DESCRIPTION 188
OPERATION - ELECTRONIC STABILITY PROGRAM (ESP) 189
DIAGNOSIS AND TESTING - INSPECTION AND ROAD TEST 191
SPECIFICATIONS - TORQUE CHART 192
FRONT WHEEL SPEED SENSOR
DESCRIPTION 193
OPERATION 193
REMOVAL 194
INSTALLATION 195
REAR WHEEL SPEED SENSOR
DESCRIPTION 196
OPERATION 196
REMOVAL 197
INSTALLATION 198
LATERAL ACCELERATION SENSOR
DESCRIPTION 199
OPERATION 199
REMOVAL 200
INSTALLATION 200
STEERING ANGLE SENSOR
DESCRIPTION 200
OPERATION 200
REMOVAL 200
INSTALLATION 200
YAW RATE SENSOR
DESCRIPTION 201
OPERATION 201

page

REMOVAL 201
INSTALLATION 201
BRAKE PRESSURE SENSOR
DESCRIPTION 201
OPERATION 201
REMOVAL 201
INSTALLATION 201
TRAVEL SENSOR
DESCRIPTION 201
OPERATION 202
REMOVAL 202
INSTALLATION 202
SOLENOID VALVE
DESCRIPTION 202
OPERATION 202
REMOVAL 202
INSTALLATION 202
RELEASE SWITCH
DESCRIPTION 203
OPERATION 203
REMOVAL 203
INSTALLATION 203
HYDRAULIC/MECHANICAL
STANDARD PROCEDURE - BLEEDING ABS BRAKE SYSTEM 203
HCU (HYDRAULIC CONTROL UNIT)
DESCRIPTION 204
OPERATION 204
REMOVAL 205
INSTALLATION 206

BRAKES - ESP SERVICE INFORMATION

DESCRIPTION

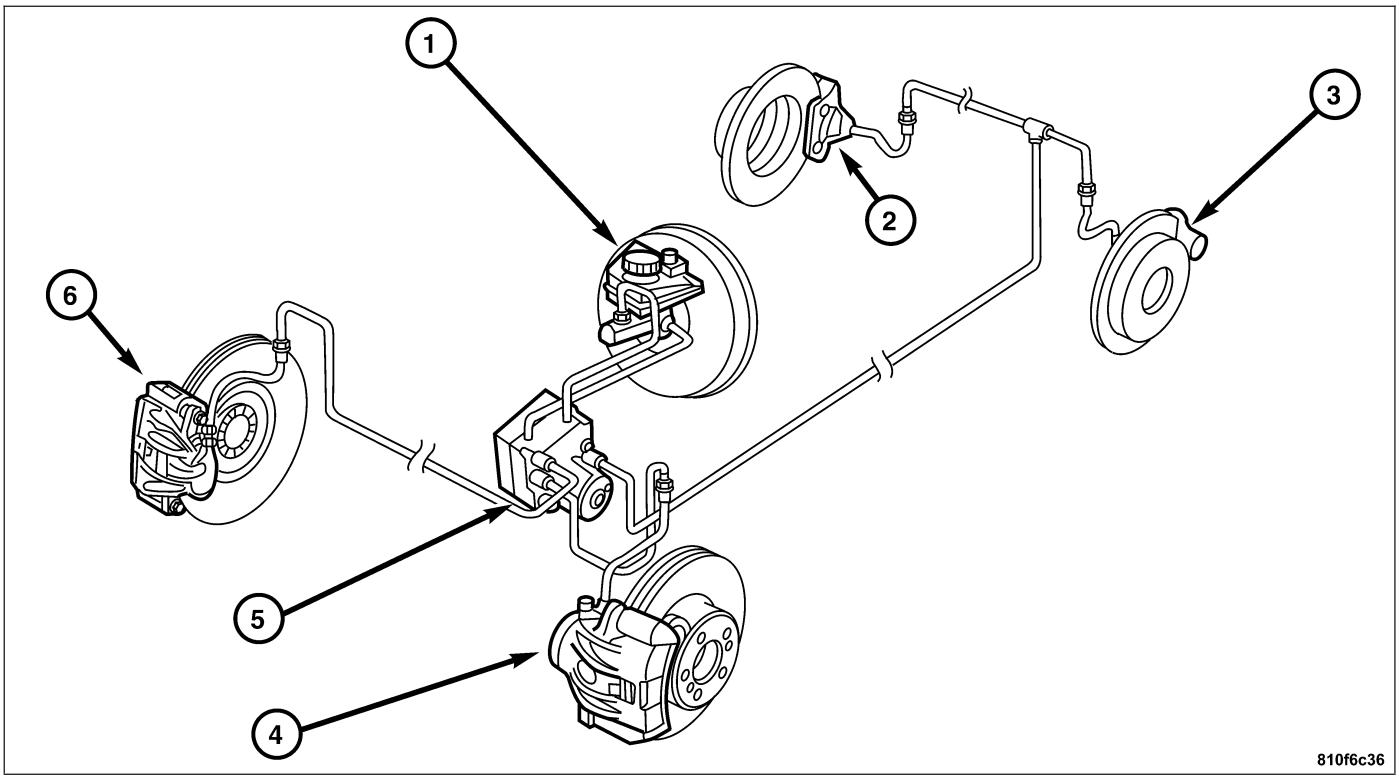

1 - MASTER BRAKE CYLINDER
2 - RIGHT REAR WHEEL SPEED SENSOR
3 - LEFT REAR WHEEL SPEED SENSOR
4 - LEFT FRONT WHEEL SPEED SENSOR
5 - ABS HYDRAULIC UNIT
6 - RIGHT FRONT WHEEL SPEED SENSOR

This section covers the physical and operational descriptions and the on-car service procedures for Electronic Stability Program (ESP).

The purpose of this four-channel design ESP is to prevent wheel lockup under braking conditions on virtually any type of road surface. Antilock braking is desirable because a vehicle that is stopped without locking the wheels retains directional stability and some steering capability. This allows the driver to retain greater control of the vehicle during braking. The ABS system features the following components. Refer to the proper repair procedures for further diagnosis.

- Master brake cylinder. **Refer to Page 5-44**.
- Front wheel speed sensors. **Refer to Page 5-193**.
- Rear wheel speed sensors. **Refer to Page 5-196**.
- ABS hydraulic system. **Refer to Page 5-204** - DESCRIPTION).

OPERATION - ELECTRONIC STABILITY PROGRAM (ESP)

NORMAL BRAKING

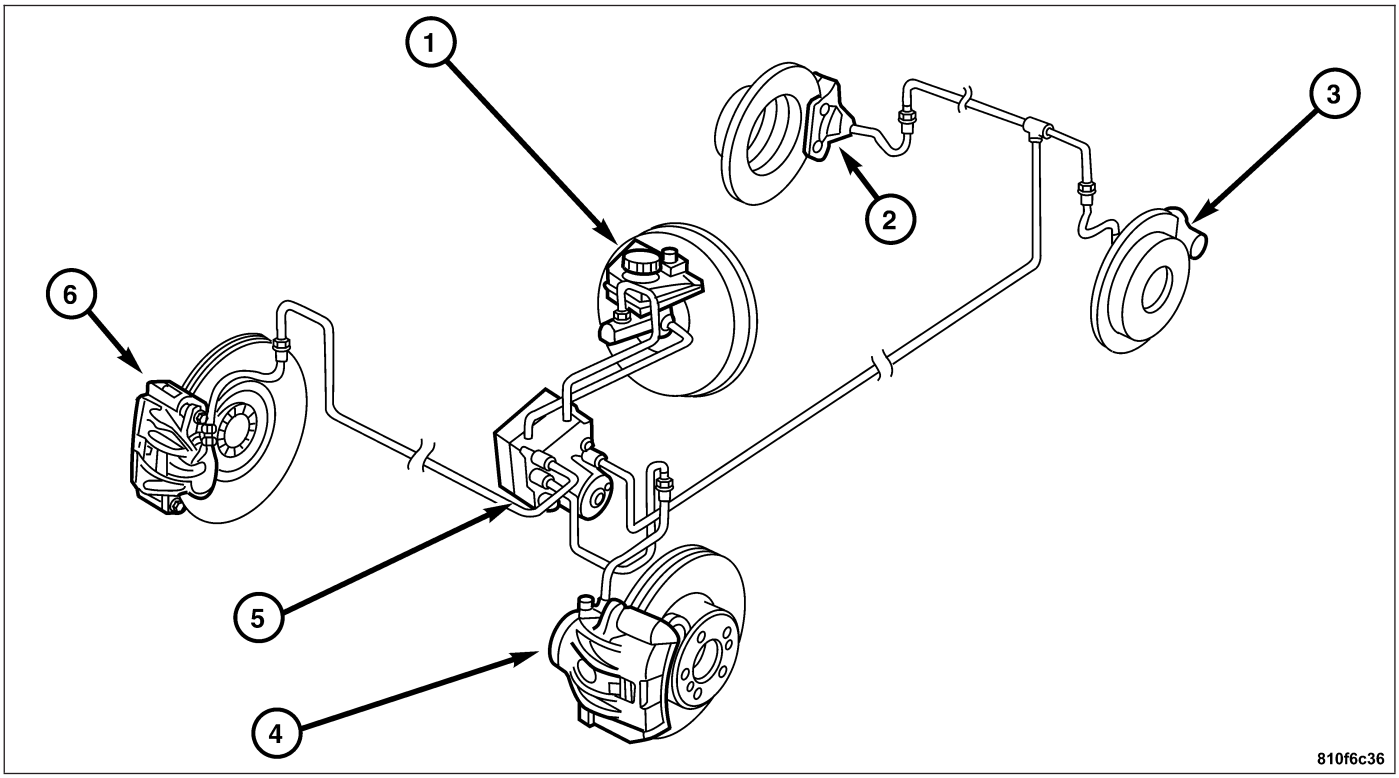

1 - MASTER BRAKE CYLINDER
2 - RIGHT REAR WHEEL SPEED SENSOR
3 - LEFT REAR WHEEL SPEED SENSOR
4 - LEFT FRONT WHEEL SPEED SENSOR
5 - ABS HYDRAULIC UNIT
6 - RIGHT FRONT WHEEL SPEED SENSOR

Under normal braking conditions, the ABS functions are the same as a standard base brake system with a diagonally split master cylinder and conventional vacuum assist.

ABS BRAKING

ABS operation is available at vehicle speeds above 5 mph (8 km/h). If a wheel locking is detected during a brake application, the brake system enters the ABS mode. During ABS braking, hydraulic pressure in the four wheel circuits is modulated to prevent any wheel from locking. Each wheel circuit is designed with a set of electric solenoids to allow modulation. Wheel lockup may be perceived at the very end of an ABS stop and is considered normal.

During an ABS stop, the brakes hydraulic system is still diagonally split. However, the brake system pressure is further split into four control channels. During antilock operation of the vehicle's brake system, the wheels are controlled independently and are on separate control channels.

The system can build, hold and release pressure at each wheel, depending on signals generated by the wheel speed sensors (WSS) at each wheel and received at the controller antilock brake (CAB).

NOISE AND BRAKE PEDAL FEEL

During ABS braking, some brake pedal movement may be felt. In addition, ABS braking will create a ticking, popping, or groaning noises heard by the driver. This is normal and is due to the pressurized fluid being transferred between the master cylinder and the brakes themselves. If an ABS operation occurs during hard braking, some pulsation may be felt in the vehicle body due to fore-and-aft movement of the suspension as brake pressures are modulated.

At the end of an ABS stop, the ABS is turned off when the vehicle is slowed to a speed of 3 mph (5 km/h). There may be a slight brake pedal drop anytime that the ABS is deactivated, such as at the end of the stop when the vehicle speed is less than 3 mph (5 km/h) or during an ABS stop where the ABS is no longer required. These conditions exist when a vehicle is being stopped on a road surface with patches of ice, loose gravel, or sand. Also, stopping a vehicle on a bumpy road surface activates the ABS system due to “wheel hop” caused by bumps in the road.

TIRE NOISE AND MARKS

Although the ABS system prevents complete wheel lockup, some wheel slip is desired in order to achieve optimum braking performance. Wheel slip is defined as follows: “0” percent slip means the wheel is rolling freely. “100” percent slip means the wheel is fully locked. During brake pressure modulation, wheel slip is allowed to reach up to “25 - 30” percent. This means that the wheel rolling velocity is “25 - 30” percent less than that of a free rolling wheel at a given vehicle speed. This slip may result in some tire chirping, depending on the road surface. This sound should not be interpreted as a total wheel lockup.

Complete wheel lockup normally leaves heavy black tire marks on dry pavement. An ABS stop will not leave heavy black tire marks since the wheel never reaches a fully locked condition. However, tire marks may be noticeable as light patched marks. This is a normal ABS occurrence.

START-UP CYCLE

There is a antilock warning indicator lamp in the instrument cluster. When the ignition is switched on (ignition switch in position ″2″), the antilock warning indicator lamp in the instrument cluster illuminates, this is referred to as a bulb check the antilock warning indicator lamp then goes out after the engine is started. If the antilock warning indicator lamp illuminates when the engine is running, there may be a fault in the ABS system. The system is at this point inoperative, but full operation of the normal braking system is retained without ABS protection.

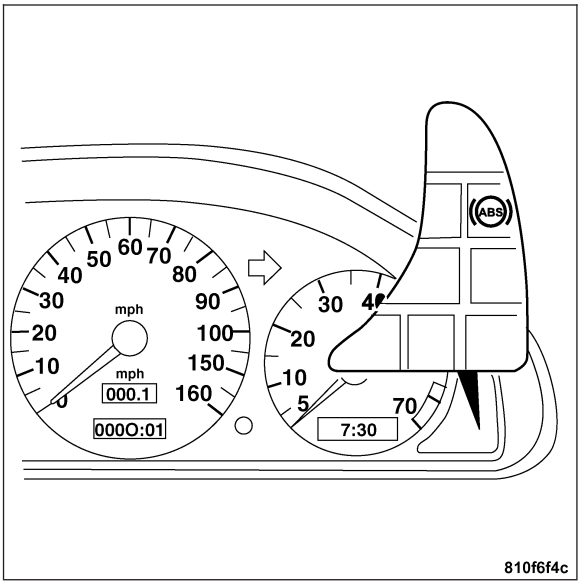

DRIVE MODE

The system carries out a self-check after start-up. At the same time, the return pump in the hydraulic control unit (HCU) also starts up briefly (this may be felt in the brake pedal). If a fault is found in the process, the antilock warning indicator lamp illuminates. Any system faults which occur while driving also cause the antilock warning indicator lamp to illuminate and stay on constantly.

If the antilock warning indicator lamp comes on while driving and then goes out again after a short time, the cause may be a battery under-voltage.

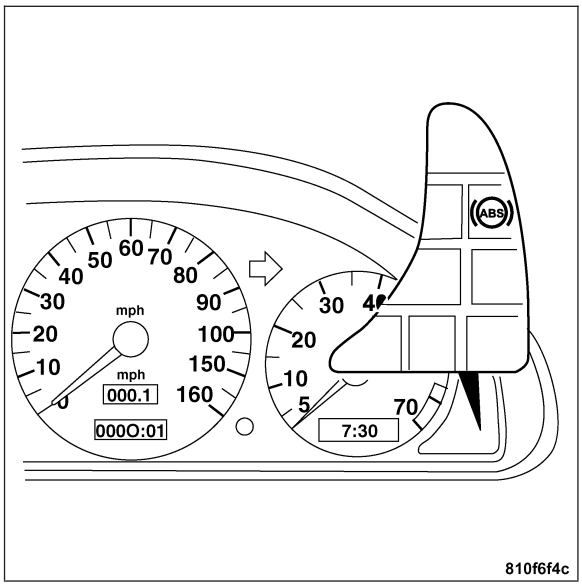

PREMATURE ABS CYCLING

Symptoms of premature ABS cycling include: clicking sounds from the solenoid valves, pump/motor running, and pulsations in the brake pedal. Premature ABS cycling can occur at any braking rate of the vehicle and on any type of road surface. The amber antilock warning indicator lamp may illuminate but no fault codes are stored in the controller antilock brake (CAB).

Premature ABS cycling is a condition that needs to be correctly assessed when diagnosing problems with the antilock brake system. It may be necessary to use a DRBIII® scan tool to detect and verify any premature ABS cycling.

Check the following common causes when diagnosing premature ABS cycling: damaged tone wheels, incorrect tone wheels, damaged steering knuckle wheel speed sensor mounting bosses, loose wheel speed sensor mounting bolts, excessive tone wheel runout, excessively large tone wheel-to-wheel speed sensor air gap, or a damaged speed sensor head face. Give special attention to these components when diagnosing a vehicle exhibiting premature ABS cycling.

After diagnosing a defective component, repair or replacement is required. When the component repair or replacement is completed, test drive the vehicle to verify that any premature ABS cycling has been corrected.

DIAGNOSIS AND TESTING - INSPECTION AND ROAD TEST

1. Visually inspect the ABS for any damaged or disconnected components or connectors.
2. Verify that the brake lamps are operational. If they are not, repair them prior to continuing.
3. Connect the DRB III® scan tool to the Data Link Connector located under the instrument panel to the left of the steering column. If the DRB III® does not power-up, check the power and ground supplies to the connector.
4. Turn the ignition key to the ON position. Select ANTILOCK BRAKES.
5. Read and record any Diagnostic Trouble Codes (DTCs). If any DTCs are present, refer to the appropriate diagnostic information.

Note: Diagnostic trouble codes (DTCs) are kept in the controller's memory until either erased by the technician using the DRB III®, or erased automatically after 3500 miles or 255 ignition key cycles, whichever occurs first. DTCs are retained by the controller even if the ignition is turned off or the battery is disconnected. More than one DTC can be stored at a time. When accessed, the number of occurrences and the DTC that is stored are displayed.

If no concerns are observed, it may be necessary to road test the vehicle.

Many ABS conditions perceived to be a concern by the driver may be a normal operating condition. To become familiarized with the normal operating characteristics of this antilock brake system, **Refer to Page 5-189**.

WARNING: CONDITIONS THAT RESULT IN TURNING ON THE AMBER ANTILOCK WARNING INDICATOR LAMP MAY INDICATE REDUCED BRAKING ABILITY.

Before road testing a brake complaint vehicle, note whether the red brake warning indicator lamp or the amber antilock warning indicator lamp, or both are turned on. If it is the red brake warning indicator lamp, there is a brake hydraulic problem that must be corrected before driving the vehicle. **Refer to Page 5-5** . If the red brake warning indicator lamp is illuminated, there may also be a possibility that there is an ABS problem and the amber antilock warning indicator lamp is not able to illuminate, so the instrument cluster turns on the red brake warning indicator lamp by default.

If the amber antilock warning indicator lamp is on; road test the vehicle as described below. While only the amber antilock warning indicator lamp is on, the ABS is not functional. The ability to stop the car using the normal brake system should not be affected.

6. Turn the key to the OFF position and then back to the ON position. Note whether the amber antilock warning indicator lamp continues to stay on.
7. If the amber antilock warning indicator lamp stays on, drive the car to a speed of approximately 15 mph (25 km/h) to complete the “ABS Start-Up” and “Drive-Off Cycle. **Refer to Page 5-44**. If at this time the amber antilock warning indicator lamp stays on, refer to the Appropriate Diagnostic Information.
8. If the amber antilock warning indicator lamp goes out at any time, drive the vehicle a short distance. Accelerate the vehicle to a speed of at least 40 mph (64 km/h). Bring the vehicle to a complete stop, braking hard enough to cause the ABS to cycle. Repeat this action several times. Using the DRB III®, read and record any Diagnostic Trouble Codes (DTCs). If any DTCs are present, refer to the Appropriate Diagnostic Information.

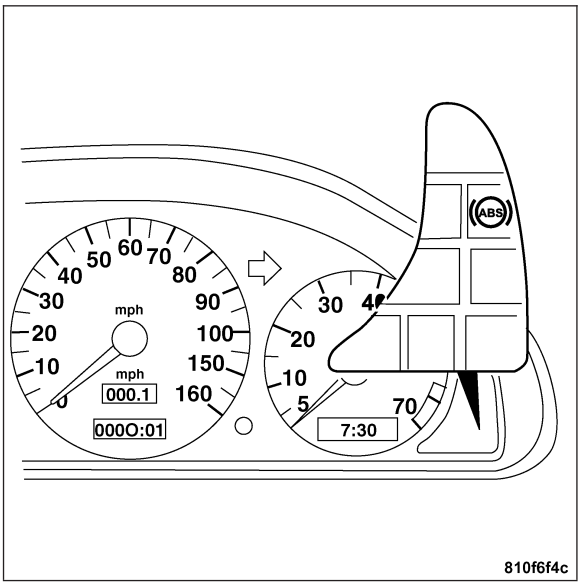

SPECIFICATIONS - TORQUE CHART

TORQUE SPECIFICATIONS

DESCRIPTION	N·m	Ft. Lbs.	In. Lbs.
Wheel Speed Sensors Front Sensor Bolt	12-14	—	106-124
Wheel Speed Sensors Rear Sensor Bolt	12-14	—	106-124

FRONT WHEEL SPEED SENSOR

DESCRIPTION

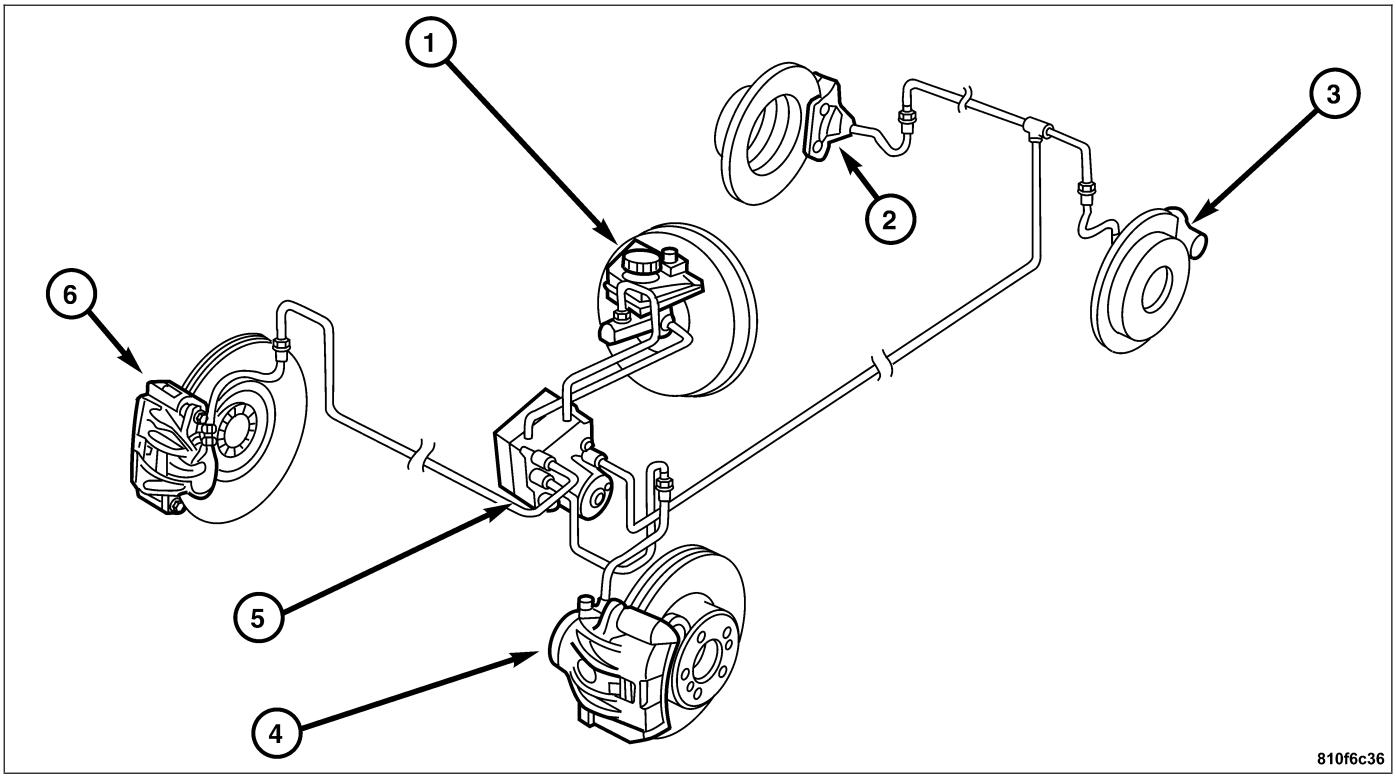

1 - MASTER BRAKE CYLINDER
2 - RIGHT REAR WHEEL SPEED SENSOR
3 - LEFT REAR WHEEL SPEED SENSOR
4 - LEFT FRONT WHEEL SPEED SENSOR
5 - ABS HYDRAULIC UNIT
6 - RIGHT FRONT WHEEL SPEED SENSOR

A wheel speed sensor is used at each wheel. The front sensors are mounted to the steering knuckles. Tone wheels are mounted to the outboard ends of the front axle shafts. The gear type tone wheel serves as the trigger mechanism for each sensor. The wheel speed sensor's function is to supply the current wheel speed to the CAB.

OPERATION

The wheel speed sensors convert the wheel speed into a digital signal. The CAB sends 12 volts to the wheel speed sensors. The wheel speed sensor has an internal magneto resistance bridge that alters the voltage and amperage of the signal circuit. This voltage and amperage is changed by magnetic induction when the toothed tone wheel passes by the wheel speed sensor head. This digital signal is sent to the CAB. The CAB measures the voltage and amperage of the digital signal for each wheel. The magnetic field of the wheel speed sensor is intersected by the teeth of a rotor. This changes the magnetic field and the coil induces an AC voltage. The frequency of this alternating current, governed by the number of teeth on the reluctor, fluctuates to reflect variations in wheel speed, is also proportional to wheel speed.

REMOVAL

1. Remove the bolts (2) attaching the flange to the steering knuckle.
2. Remove the wheel speed sensor (1) from the steering knuckle.

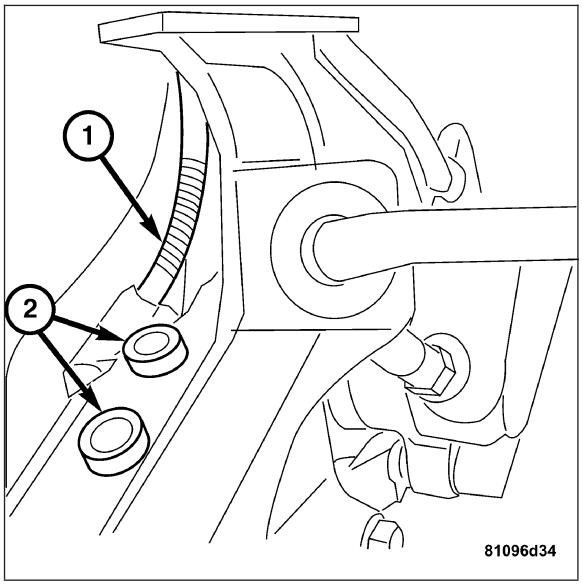

3. Disconnect the wheel speed / brake wear indicator wire harness connector (2) from the body mount connector (1).

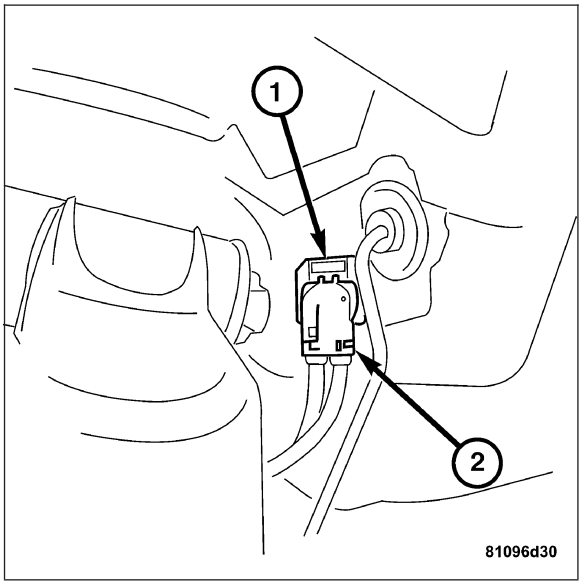

INSTALLATION

1. Connect the wheel speed sensor / brake wear indicator wire harness connector (2) to the body mount connector (1).

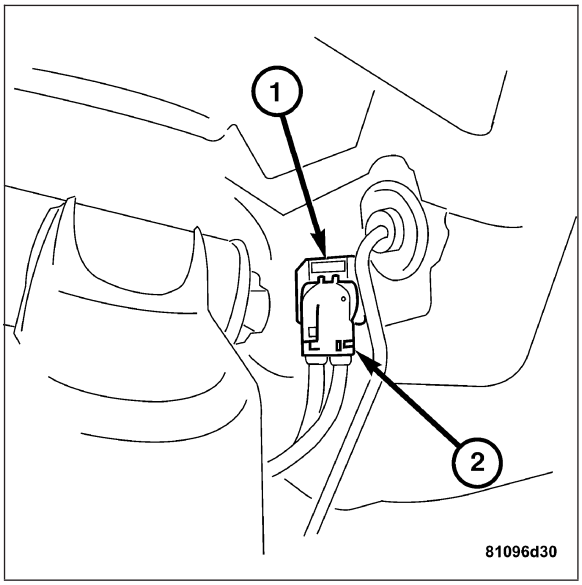

2. Install the wheel speed sensor (1) to the steering knuckle.
3. Install the bolts (2) attaching the flange to the steering knuckle. Tighten to 12 N·m (106 in. lbs.).

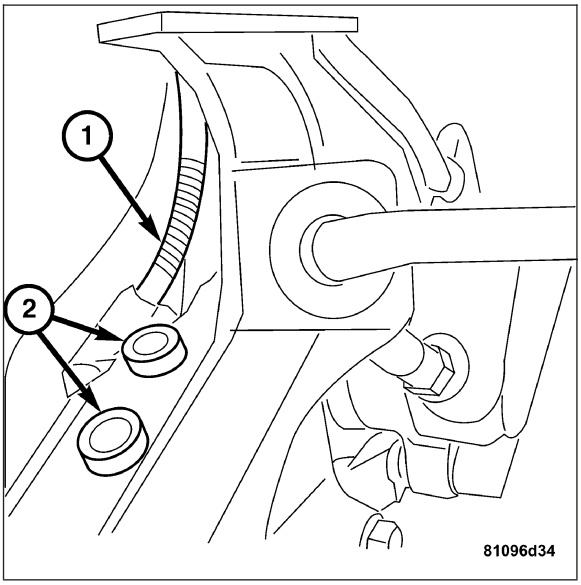

REAR WHEEL SPEED SENSOR

DESCRIPTION

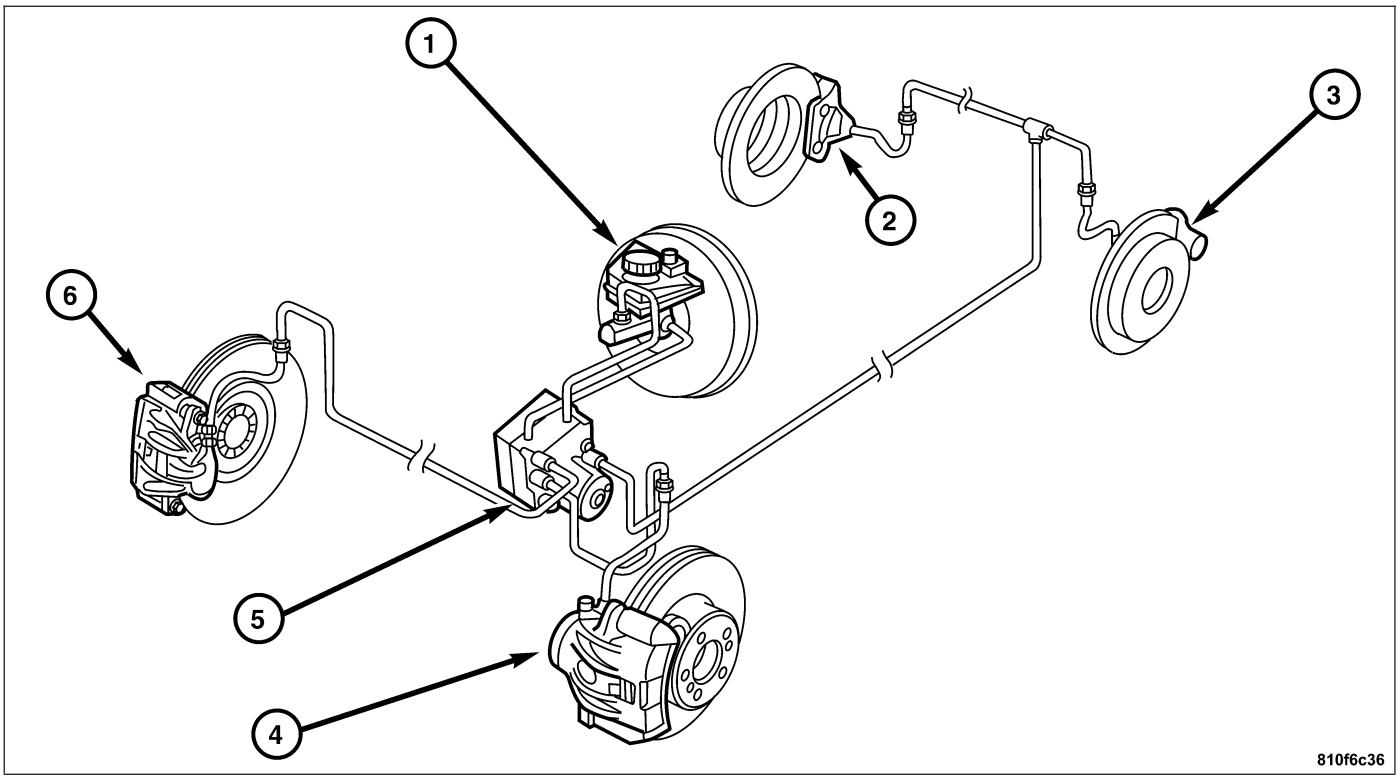

1 - MASTER BRAKE CYLINDER
2 - RIGHT REAR WHEEL SPEED SENSOR
3 - LEFT REAR WHEEL SPEED SENSOR
4 - LEFT FRONT WHEEL SPEED SENSOR
5 - ABS HYDRAULIC UNIT
6 - RIGHT FRONT WHEEL SPEED SENSOR

A wheel speed sensor is used at each rear wheel. The gear type tone wheel serves as the trigger mechanism for each of the front wheel speed sensors.

OPERATION

The sensors convert wheel speed into a digital signal. The CAB sends 12 volts to the sensors. The sensor has an internal magneto resistance bridge that alters the voltage and amperage of the signal circuit. This voltage and amperage is changed by magnetic induction when the toothed tone wheel passes the wheel speed sensor. This digital signal is sent to the CAB. The CAB measures the voltage and amperage of the digital signal for each wheel.

REMOVAL

1. Remove the bolt (1) attaching the wheel speed sensor to the rear knuckle.
2. Remove the rear wheel speed sensor (2) from the knuckle.

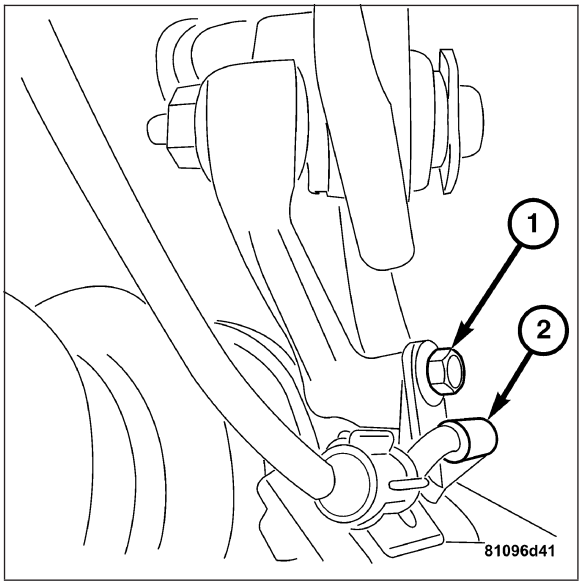

3. Pull the rubber grommet (1) out of the body. Unhook the wheel speed sensor wire harness from the mount (2).

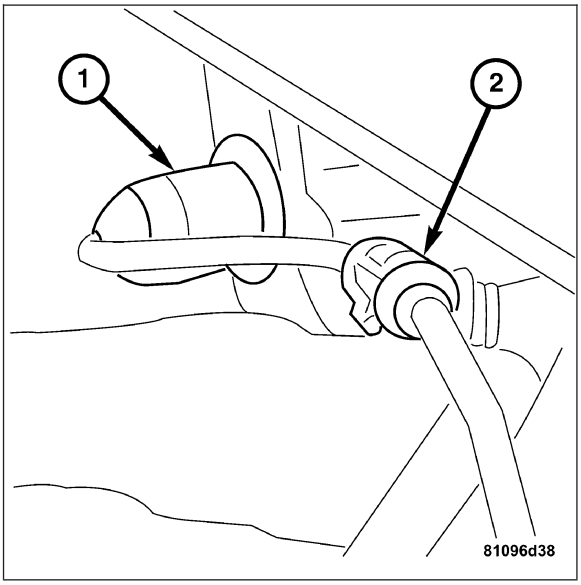

4. Disconnect the wheel speed sensor harness connector (1).

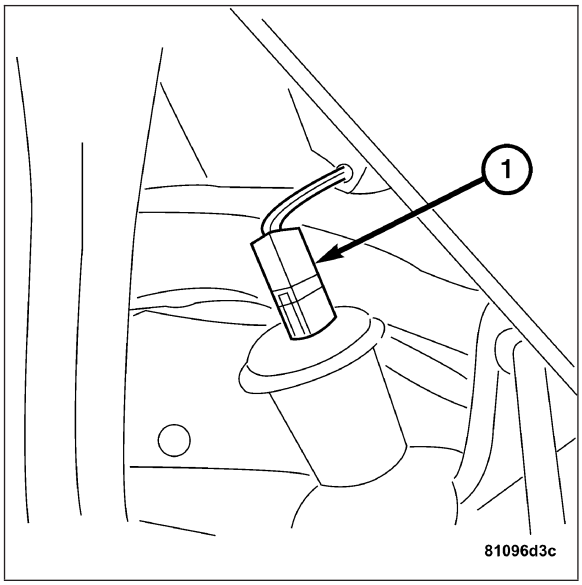

INSTALLATION

1. Connect the wheel speed sensor wire harness connector (1).

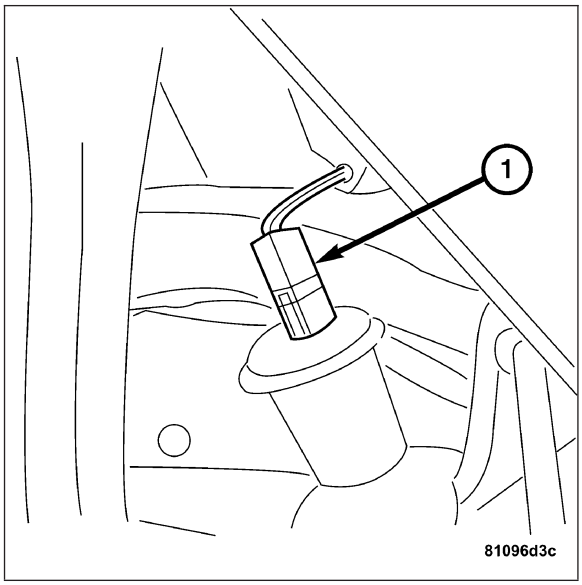

2. Install the rubber grommet (1) to the body and then hook the wheel speed sensor wire harness to the mount (2).

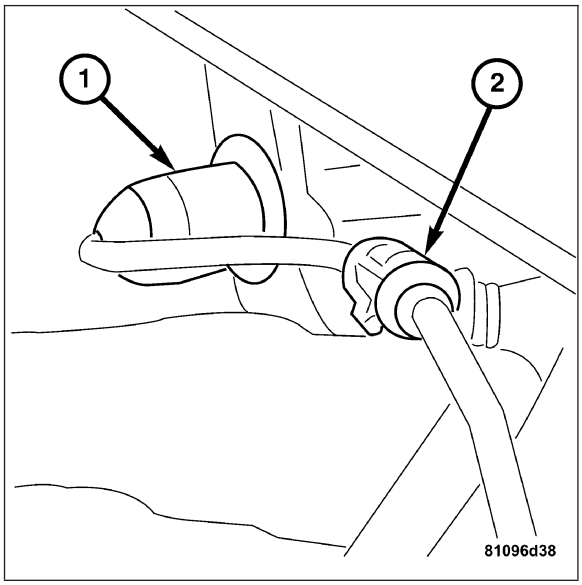

3. Install the wheel speed sensor (2) to the knuckle.
4. Install the bolt (1) attaching the wheel speed sensor to the knuckle. Tighten to 12 N·m (106 in. lbs.).

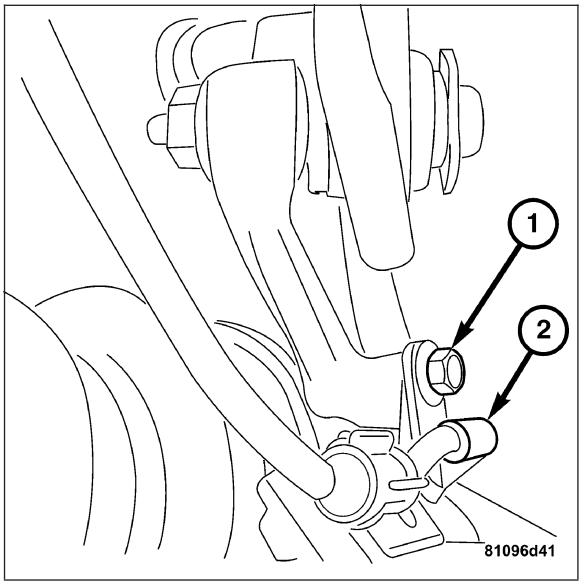

LATERAL ACCELERATION SENSOR

DESCRIPTION

The lateral acceleration sensor is located under the the center console behind the gear shifter assembly. This sensor is used to inform the ESP control module the amount of lateral acceleration forces during cornering.

OPERATION

The lateral acceleration sensor measures the amount of lateral acceleration during cornering. This sensor uses a spring/mass type element to measure the amount of lateral acceleration. The lateral acceleration that occurs during cornering causes the spring/mass element to move from its normal position to a position corresponding to the magnitude of the lateral acceleration. Every change in the spring/mass element position changes the output voltage of the sensor.

REMOVAL

1. Remove the rear center console. **Refer to Page 23-173**.
2. Disconnect the lateral acceleration sensor harness connector.
3. Unclip the lateral acceleration sensor.

INSTALLATION

1. Install the lateral acceleration sensor.
2. Connect the lateral acceleration harness connector.
3. Install the rear center console. **Refer to Page 23-183**.

STEERING ANGLE SENSOR

DESCRIPTION

A steering angle sensor is used to sense the steering angle specified by the driver's actions. The steering angle sensor is part of the clock spring assembly within the steering column.

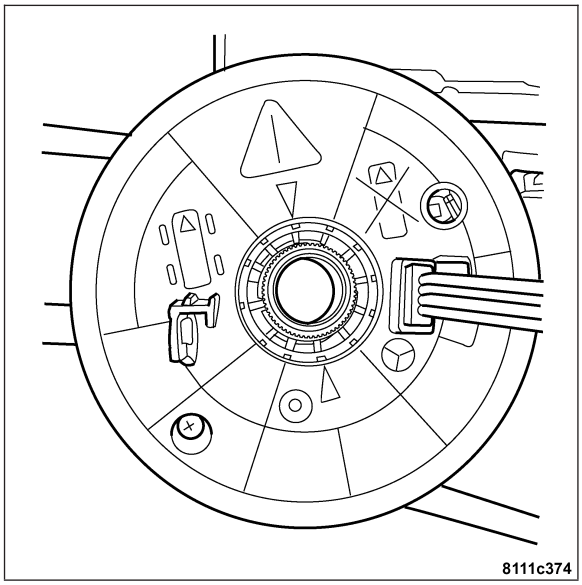

OPERATION

The steering angle sensor is a digital sensor with nine light-emitting diodes. The diodes within the sensor are used to detect rotation and position of the steering wheel. This sensor can detect the steering wheel rotation and position up to 720° of rotation. The steering angle sensor has continous battery voltage supplied by fuse 14 in the under-hood accessory fuse block.

REMOVAL

Refer to the clockspring removal procedure **Refer to Page 8O-94**.

INSTALLATION

Refer to the clockspring installation procedure **Refer to Page 8O-96**.

YAW RATE SENSOR

DESCRIPTION

The yaw rate sensor is located under the the center console behind the gear shifter assembly. This sensor is used to detect the swerving motion of the vehicle.

OPERATION

The yaw rate sensor is used to measure the yaw rate of the vehicle. When the vehicle turns, acceleration forces are produced which cause torsion. This torsion change within the sensor is proportional of the yaw rate of the vehicle.

REMOVAL

1. Remove the rear center console. **Refer to Page 23-173**.
2. Disconnect the yaw rate sensor harness connector.
3. Remove the two nuts, then remove the yaw rate sensor.

INSTALLATION

1. Install the yaw rate sensor and the nuts.
2. Connect the yaw rate sensor harness connector.
3. Install the rear center console. **Refer to Page 23-183**.

BRAKE PRESSURE SENSOR

DESCRIPTION

There are two brake pressure sensors incorporated into the master cylinder on this vehicle. These sensors are used to monitor brake pressures for the front and rear brake hydraulic systems.

OPERATION

These sensors are used to measure brake fluid pressure within the master cylinder. The sensors send a analog voltage signal to the ESP/BAS control module.

REMOVAL

Refer to Page 5-76

INSTALLATION

Refer to Page 5-77

TRAVEL SENSOR

DESCRIPTION

The BAS travel sensor is a device used to detect an emergency stop. The BAS travel sensor is located on the power brake booster.

OPERATION

The BAS travel sensor (3) reports the position of the brake booster diaphragm plate to the Controller Antilock Brake (CAB). The BAS travel sensor rod is attached to the brake booster diaphragm plate (2). The diaphragm plate is located internal to the brake booster (1), and the sensor rod moves proportionally to the travel of the brake pedal. The travel sensor is used as an input to the CAB to determine the amount of driver braking effort.

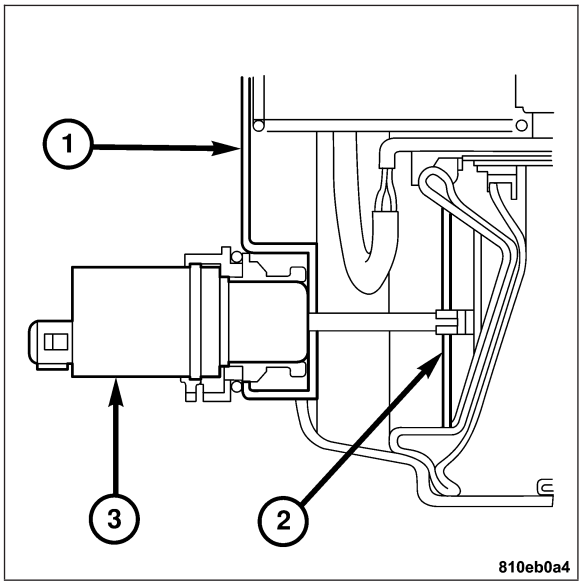

REMOVAL

1. For the travel sensor removal procedure **Refer to Page 5-78**.

INSTALLATION

1. For the travel sensor installation procedure, **Refer to Page 5-78**.

SOLENOID VALVE

DESCRIPTION

The BAS solenoid valve is an electrically activated device used to increase brake assist.

OPERATION

The BAS solenoid valve is activated by the Controller Antilock Brake (CAB) Module. When activated, a poppet valve opens and allows atmospheric pressure to enter the rear of the power brake booster diaphragm and increases the brake pressure.

REMOVAL

The solenoid valve is part of the brake booster assembly. Refer to the brake booster removal procedure **Refer to Page 5-50**.

INSTALLATION

The solenoid valve is part of the brake booster assembly. Refer to the brake booster installation procedure **Refer to Page 5-51**.

RELEASE SWITCH

DESCRIPTION

The BAS release switch is a device used to signal the Controller Antilock Brake (CAB) module that the brake is released.

OPERATION

When the force on the brake pedal is removed, movement on the brake booster control valve occurs. When this occurs, the signal is sent to the Controller Antilock Brake (CAB) Module.

REMOVAL

The release switch is part of the brake booster assembly. Refer to the brake booster removal procedure **Refer to Page 5-50**.

INSTALLATION

The release switch is part of the brake booster assembly. Refer to the brake booster installation procedure **Refer to Page 5-51**.

HYDRAULIC/MECHANICAL

STANDARD PROCEDURE - BLEEDING ABS BRAKE SYSTEM

The base brake's hydraulic system must be bled anytime air enters the hydraulic system. The ABS though, particularly the ICU (HCU), should only need to be bled when the HCU is replaced or removed from the vehicle. The ABS must always be bled anytime it is suspected that the HCU has ingested air. Under most circumstances that require the bleeding of the brakes hydraulic system, only the base brake hydraulic system needs to be bled.

When bleeding the ABS system, the following bleeding sequence must be followed to insure complete and adequate bleeding.

1. Make sure all hydraulic fluid lines are installed and properly torqued.
2. Connect the DRB III® scan tool to the Data Link Connector. The connector is located under the lower steering column cover to the left of the steering column.
3. Using the DRB III®, check to make sure the CAB does not have any fault codes stored. If it does, clear them using the DRB III®.

WARNING: WHEN BLEEDING THE BRAKE SYSTEM WEAR SAFETY GLASSES. A CLEAR BLEED TUBE MUST BE ATTACHED TO THE BLEEDER SCREWS AND SUBMERGED IN A CLEAR CONTAINER FILLED PART WAY WITH CLEAN BRAKE FLUID. DIRECT THE FLOW OF BRAKE FLUID AWAY FROM YOURSELF AND THE PAINTED SURFACES OF THE VEHICLE. BRAKE FLUID AT HIGH PRESSURE MAY COME OUT OF THE BLEEDER SCREWS WHEN OPENED.

4. Bleed the base brake system using the standard pressure **Refer to Page 5-9**.
5. Using the DRB III®, select ANTILOCK BRAKES, followed by MISCELLANEOUS, then BLEED BRAKES. Follow the instructions displayed. When the scan tool displays TEST COMPLETED, disconnect the scan tool and proceed.
6. Bleed the base brake system a second time. Check brake fluid level in the reservoir periodically to prevent emptying, causing air to enter the hydraulic system.
7. Fill the master cylinder reservoir to the full level.
8. Test drive the vehicle to be sure the brakes are operating correctly and that the brake pedal does not feel spongy.

HCU (HYDRAULIC CONTROL UNIT)

DESCRIPTION

The CAB is a microprocessor-based device which monitors the Antilock Brake System (ABS) during normal braking and controls it when the vehicle is in an ABS stop. The CAB is mounted to the Hydraulic Control Unit (HCU) (3) as part of the Integrated Control Unit (ICU). The CAB uses a 47-way electrical connector on the vehicle wiring harness. The power source for the CAB is through the Hot at All Times 50 amp Engine Fuse Block (2) (fuse 3).

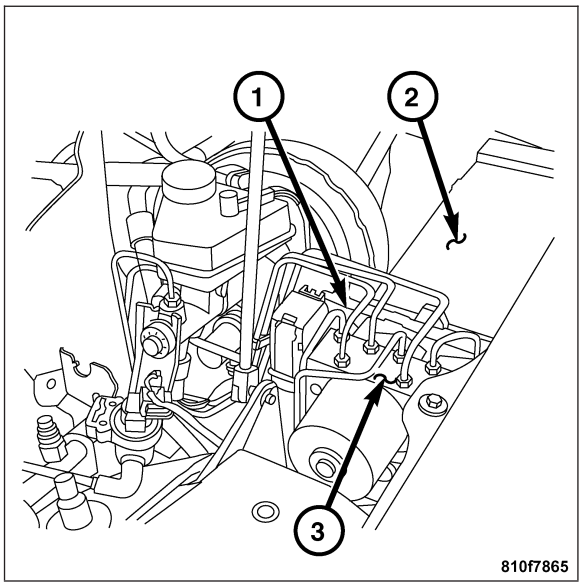

OPERATION

All switching components of the ABS system are combined in the ABS hydraulic unit. A 2/2-way valve for build-up/hold pressure or hold/reduce pressure functions is used on each wheel for control. At the rear, the same valves are used for both wheels. The return pump integrated in the hydraulic unit is used to return the brake fluid during the pressure reduction phase.

An increase in pressure compared to the pressure controlled by the master brake cylinder is not possible during the ABS control phase. A muffler is fitted for each brake circuit to reduce delivery noise. During the ABS pressure reduction phase, the brake fluid flows back to the return pumps via the low-pressure accumulators.

NORMAL BRAKING FUNCTION

When the driver is applying the brake pedal during a no wheel spin or slip situation, the vehicle builds pressure in the brake hydraulic system to engage the brakes and stop the vehicle. The hydraulic shuttle valve internal to the ICU closes with every brake pedal application so pressure is not created at the inlet to the pump/motor and the vehicle stops normally.

ABS BRAKING FUNCTION

During a stop where one wheel is slipping because the driver is attempting to stop the vehicle at a faster rate than is allowed by the surface on which the tires are riding, the hydraulic shuttle valve closes upon brake application so that the pump/motor cannot siphon brake fluid from the master cylinder. The normally open and normally closed valves modulate (build/decay) the brake hydraulic pressure as required. The pump/motor is switched on so that the brake fluid from the low pressure accumulators is returned to the master cylinder circuits. The brake fluid is routed to either the master cylinder or the wheel brake, depending on the position of the normally open valve.

ABS TRACTION CONTROL FUNCTION

The vehicle in the traction control TC (ASR) mode. If the drive wheel is spinning and brake pressure is required to reduce its speed. The normally open TC (ASR) valve is energized to isolate the brake fluid being pumped from the master cylinder and to isolate the driven wheel. The normally open TC (ASR) valve bypasses the pump output back to the master cylinder at a fixed pressure setting. The normally open and normally closed valves modulate (build/decay) the brake pressure as required to slow the spinning wheel.

REMOVAL

1. Clean off the top of the HCU, especially around the hydraulic lines (1-6). Be sure there is not any debris that could fall into the brake line holes.

Note: Risk of confusion! Mark the hydraulic lines and the corresponding connections before removing them from the HCU.

2. Remove the hydraulic lines from the HCU. Seal off the hydraulic lines and connections with suitable plugs.
   - Right rear wheel (1)
   - Master cylinder front (2)
   - Right front wheel (3)
   - Left front wheel (4)
   - Left rear wheel (5)
   - Master cylinder rear (6)

3. Disconnect the hydraulic controller unit harness connector (1) from the CAB.
4. Remove the HCU upwards, by carefully pushing the hydraulic lines to one side and carefully pull up.

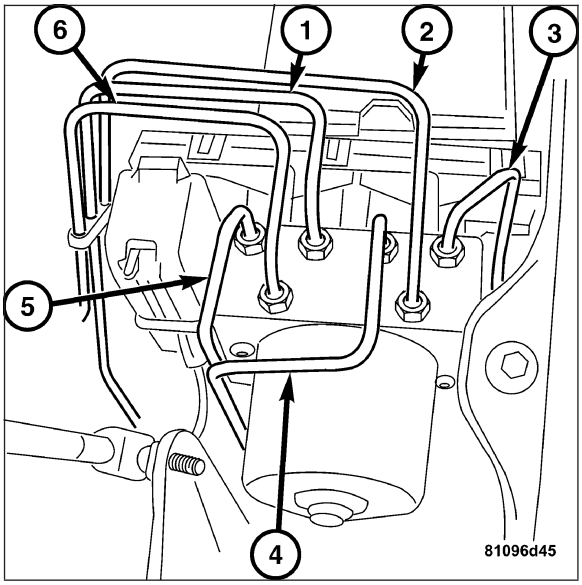

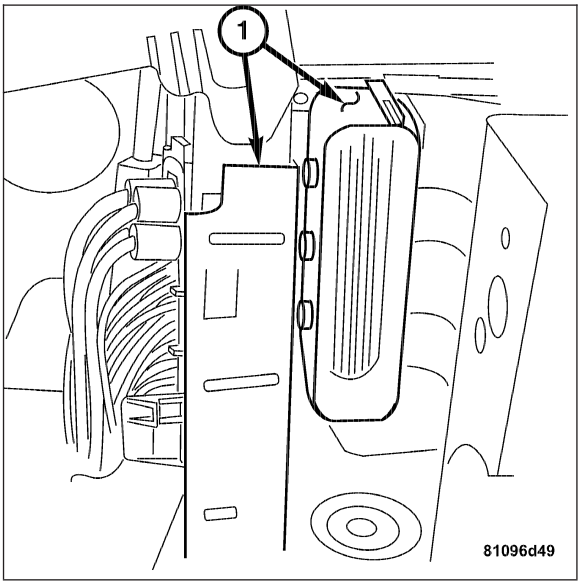

INSTALLATION

1. Inspect the seating and condition of the rubber grommets and replace if necessary.

CAUTION: Do not wrongfully connect hydraulic lines. Trace the line routing to the corresponding wheel if necessary.

2. Install the brake lines (1-6). Pay very close attention to the locations when installing the hydraulic lines. **DO NOT** cross thread.
   - Right rear wheel (1)
   - Master cylinder front (2)
   - Right front wheel (3)
   - Left front wheel (4)
   - Left rear wheel (5)
   - Master cylinder rear (6)

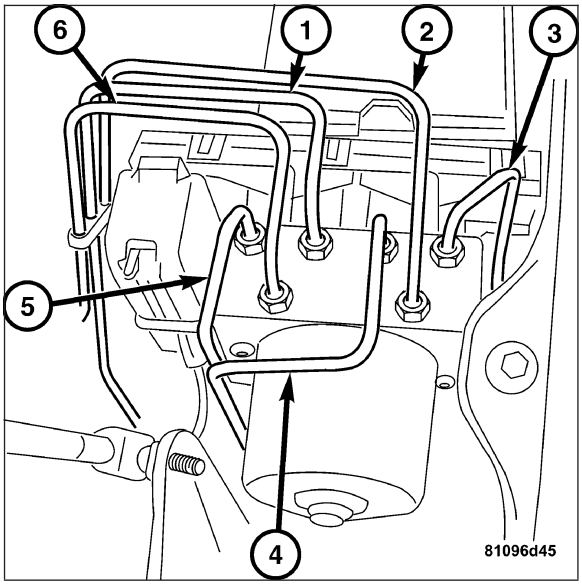

3. Connect the hydraulic controler unit harness connector (1) to the CAB.
4. Bleed the brake system. **Refer to Page 5-9**.
5. Connect the DRBIII® and read any DTCs, then clear any applicable codes.

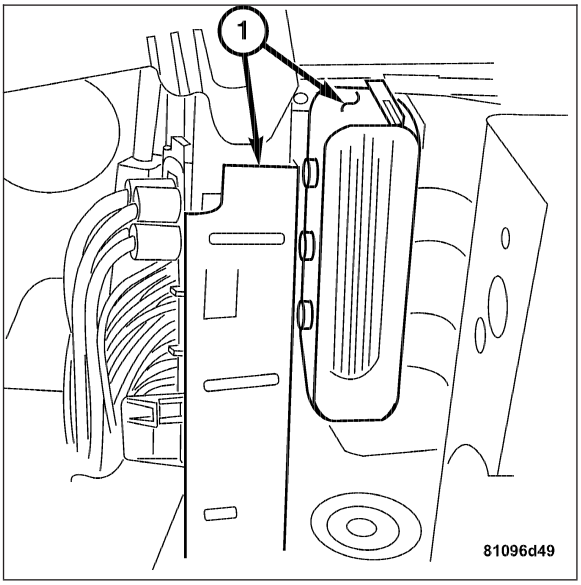

CLUTCH

TABLE OF CONTENTS

	page
CLUTCH	
DESCRIPTION	1
OPERATION	2
WARNING	2
DIAGNOSIS AND TESTING	2
STANDARD PROCEDURE	
MASTER CYLINDER BLEEDING	7
SPECIFICATIONS	8
SPECIAL TOOLS	8
CLUTCH DISC	
REMOVAL	9
INSTALLATION	10
CLUTCH COVER	
DESCRIPTION	12
OPERATION	12
REMOVAL	12
INSTALLATION	13
MASTER CYLINDER - CLUTCH	
REMOVAL	15
INSTALLATION	17
RELEASE BEARING/SLAVE CYLINDER	
DESCRIPTION	19
OPERATION	19
REMOVAL	20
INSTALLATION	20
FLYWHEEL	
DESCRIPTION	21
OPERATION	21
DIAGNOSIS AND TESTING	21
REMOVAL	22
INSTALLATION	23
PILOT BEARING	
REMOVAL	23
INSTALLATION	23
CLUTCH PEDAL	
REMOVAL	24
INSTALLATION	25

CLUTCH

DESCRIPTION

The clutch mechanism consists of a flywheel, a single, dry-type disc, and a diaphragm style clutch cover. A hydraulic linkage is used to operate the clutch release bearing. The flywheel is bolted to the rear flange of the crankshaft. The clutch pressure plate is bolted to the flywheel with the clutch disc located between these two components. The clutch system provides a mechanical, but still easily detachable, link between the engine and the transmission. The system is designed to ensure that the full torque output of the engine is transfered to the transmission while isolating the transmission from the engine firing pulses to minimize concerns such as gear rattle.

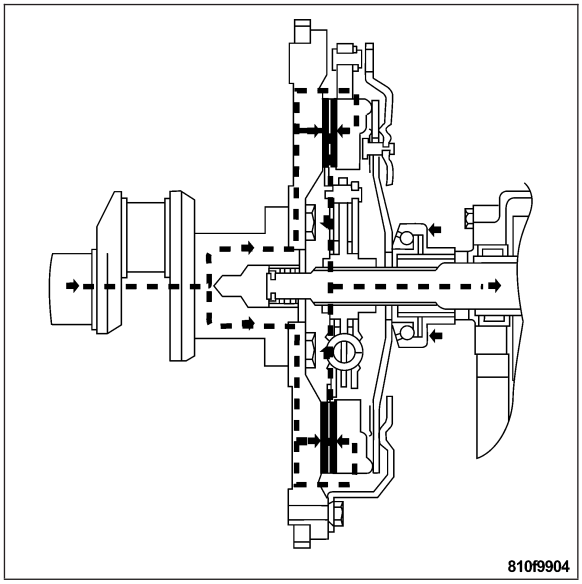

OPERATION

The clutch operates with leverage, clamping force and friction. The disc serves as the friction element, the diaphragm-style clutch cover provides the clamping force. The clutch pedal, hydraulic linkage and the release bearing provide the leverage.

The reservoir is mounted on the dash panel. The clutch master cylinder push rod is connected to the clutch pedal. When the clutch pedal is depressed, the slave cylinder is operated by the clutch master cylinder mounted on the pedal assembly. The release bearing then depresses the clutch cover spring fingers, thereby releasing pressure on the clutch disc and allowing the engine crankshaft to spin independently of the transmission input shaft.

WARNING

WARNING: EXERCISE CARE WHEN SERVICING CLUTCH COMPONENTS. FACTORY INSTALLED CLUTCH DISCS DO NOT CONTAIN ASBESTOS FIBERS. DUST AND DIRT ON CLUTCH PARTS MAY CONTAIN ASBESTOS FIBERS FROM AFTERMARKET COMPONENTS. BREATHING EXCESSIVE CONCENTRATIONS OF THESE FIBERS CAN CAUSE SERIOUS BODILY HARM. WEAR A RESPIRATOR DURING SERVICE AND NEVER CLEAN CLUTCH COMPONENTS WITH COMPRESSED AIR OR WITH A DRY BRUSH. EITHER CLEAN THE COMPONENTS WITH A WATER DAMPENED RAG OR USE A VACUUM CLEANER SPECIFICALLY DESIGNED FOR REMOVING ASBESTOS FIBERS AND DUST. DO NOT CREATE DUST BY SANDING A CLUTCH DISC. REPLACE THE DISC IF THE FRICTION MATERIAL IS DAMAGED OR CONTAMINATED. DISPOSE OF ALL DUST AND DIRT CONTAINING ASBESTOS FIBERS IN SEALED BAGS OR CONTAINERS. THIS WILL HELP MINIMIZE EXPOSURE TO YOURSELF AND TO OTHERS. FOLLOW ALL RECOMMENDED SAFETY PRACTICES PRESCRIBED BY THE OCCUPATIONAL SAFETY AND HEALTH ADMINISTRATION (OSHA) AND THE ENVIRONMENTAL PROTECTION AGENCY (EPA), FOR THE HANDLING AND DISPOSAL OF PRODUCTS CONTAINING ASBESTOS.

DIAGNOSIS AND TESTING

Drive the vehicle at normal speeds. Shift the transmission through all gear ranges and observe clutch action. If the clutch chatters, grabs, slips or does not release properly, remove and inspect the clutch components. If the problem is noise or hard shifting, further diagnosis may be needed as the transmission or another driveline component may be at fault.

CLUTCH CONTAMINATION

Fluid contamination is a frequent cause of clutch malfunctions. Oil, water or hydraulic clutch fluid on the clutch disc and pressure plate surfaces will cause chatter, slip and grab. Inspect components for oil, hydraulic fluid or water/road splash contamination.

Oil contamination indicates a leak at either the rear main seal or transmission input shaft. Hydraulic clutch fluid leaks are usually from damaged slave cylinder seals. Heat buildup caused by slippage between the clutch cover, disc and flywheel can bake the oil residue onto the components. The glaze-like residue ranges in color from amber to black.

Road splash contamination is dirt/water entering the clutch housing due to loose bolts, housing cracks. Driving through deep water puddles can force water/road splash into the housing through such openings.

IMPROPER RELEASE OR IMPROPER CLUTCH ENGAGEMENT

Clutch release or engagement problems are caused by wear or damaged clutch components. A visual inspection of the release components will usually reveal the problem component.

Release problems can result in hard shifting and noise. Look for leaks at the clutch hydraulic cylinders and interconnecting line. Also worn/loose clutch disc, clutch cover or release bearing.

Engagement problems can result in slip, chatter/shudder and noisy operation. The causes may be clutch disc contamination, wear, distortion or flywheel damage. Visually inspect to determine the actual cause of the problem.

CLUTCH MISALIGNMENT

Clutch components must be in proper alignment with the crankshaft and transmission input shaft. Misalignment caused by excessive runout or warpage of any clutch component will cause grab, chatter and improper clutch release.

CLUTCH COVER AND DISC RUNOUT

Check the clutch disc before installation. Axial (face) runout of a **new** disc should not exceed 0.50 mm (0.020 in.). Measure runout about 6 mm (1/4 in.) from the outer edge of the disc facing. Obtain another disc if runout is excessive.

Check condition of the clutch before installation. A warped cover or diaphragm spring will cause grab and incomplete release or engagement. Be careful when handling the cover and disc. Impact can distort the cover, diaphragm spring, release fingers and the hub of the clutch disc.

Use an alignment tool when positioning the disc on the flywheel. The tool prevents accidental misalignment which could result in cover distortion and disc damage.

A frequent cause of clutch cover distortion (and subsequent misalignment) is improper bolt tightening.

FLYWHEEL RUNOUT

Check flywheel runout whenever misalignment is suspected. Flywheel runout should not exceed 0.08 mm (0.003 in.). Measure runout at the outer edge of the flywheel face with a dial indicator.

Common causes of runout are:

- Heat warpage
- Improper machining
- Incorrect bolt tightening
- Improper seating on crankshaft flange shoulder
- Foreign material on crankshaft flange

Flywheel machining is not recommended. The flywheel clutch surface is machined to a unique contour and machining will negate this feature. Minor flywheel scoring can be cleaned up by hand with 180 grit emery or with surface grinding equipment. Remove only enough material to reduce scoring (approximately 0.001 - 0.003 in.). Heavy stock removal is **not recommended.** Replace the flywheel if scoring is severe and deeper than 0.076 mm (0.003 in.). Excessive stock removal can result in flywheel cracking or warpage after installation; it can also weaken the flywheel and interfere with proper clutch release.

Clean the crankshaft flange before mounting the flywheel. Dirt and grease on the flange surface may cock the flywheel causing excessive runout. Use new bolts when remounting a flywheel and secure the bolts with Mopar Lock And Seal or equivalent. Tighten flywheel bolts to specified torque only. Overtightening can distort the flywheel hub causing runout.

DIAGNOSIS CHART

The diagnosis chart describes common clutch problems, causes and correction. Conditions, causes and corrective action are outlined in the indicated columns.

CONDITION	POSSIBLE CAUSES	CORRECTION
DISC FACING WORN OUT	1. Normal wear.	1. Replace cover and disc.
	2. Driver frequently rides (slips) the clutch. Results in rapid overheating and wear.	2. Replace cover and disc.
	3. Insufficient clutch cover diaphragm spring tension.	3. Replace cover and disc.
CLUTCH DISC FACING CONTAMINATED WITH OIL, GREASE, OR HYDRAULIC CLUTCH FLUID.	1. Leak at rear main engine seal or transmission input shaft seal.	1. Replace appropriate seal.
	2. Excessive amount of grease applied to the input shaft splines.	2. Remove grease and apply the correct amount of grease.
	3. Road splash, water entering housing.	3. Replace clutch disc. Clean clutch cover and reuse if in good condition.
	4. Slave cylinder leaking.	4. Replace hydraulic slave cylinder.
CLUTCH IS RUNNING PARTIALLY DISENGAGED.	1. Release bearing sticking or binding and does not return to the normal running position.	1. Verify failure. Replace the release bearing/slave cylinder and transmission front bearing retainer as necessary.
FLYWHEEL BELOW MINIMUM THICKNESS SPECIFICATION.	1. Improper flywheel machining. Flywheel has excessive taper or excessive material removal.	1. Replace flywheel.
CLUTCH DISC, COVER AND/OR DIAPHRAGM SPRING WARPED OR DISTORTED.	1. Rough handling. Impact bent cover, spring, or disc.	1. Replace disc or cover as necessary.
	2. Improper bolt tightening procedure.	2. Tighten clutch cover using proper procedure.
FACING ON FLYWHEEL SIDE OF DISC TORN, GOUGED, OR WORN.	1. Flywheel surface scored or nicked.	2. Correct surface condition if possible. Replace flywheel and disc as necessary.
	2. Clutch disc sticking or binding on transmission input shaft.	2. Lubricate splines with high temperature grease.
CLUTCH DISC FACING BURNT. FLYWHEEL AND COVER PRESSURE PLATE SURFACES HEAVILY GLAZED.	1. Frequent operation under high loads or hard acceleration conditions.	1. Correct condition of flywheel and pressure plate surface. Replace clutch cover and disc. Alert driver to problem cause.
	2. Driver frequently rides (slips) clutch. Results in rapid wear and overheating of disc and cover.	2. Correct condition of flywheel and pressure plate surface. Replace clutch cover and disc. Alert driver to problem cause.

CONDITION	POSSIBLE CAUSES	CORRECTION
CLUTCH DISC BINDS ON INPUT SHAFT SPLINES.	1. Clutch disc hub splines damaged during installation.	1. Clean, smooth, and lubricate hub splines if possible. Replace disc if necessary.
	2. Input shaft splines rough, damaged, or corroded.	2. Clean, smooth, and lubricate shaft splines if possible. Replace input shaft if necessary.
CLUTCH DISC RUSTED TO FLYWHEEL AND/OR PRESSURE PLATE.	1. Clutch not used for an extended period of time (e.g. long term vehicle storage).	1. Sand rusted surfaces with 180 grit sanding paper. Replace clutch cover and flywheel if necessary.
PILOT BEARING SEIZED, LOOSE, OR ROLLERS ARE WORN.	1. Bearing cocked during installation.	1. Install and lubricate a new bearing.
	2. Bearing defective.	2. Install and lubricate a new bearing.
	3. Bearing not lubricated.	3. Install and lubricate a new bearing.
	4. Clutch misalignment.	4. Inspect clutch and correct as necessary. Install and lubricate a new bearing.
CLUTCH WILL NOT DISENGAGE PROPERLY.	1. Low hydraulic clutch fluid level.	1. Replace hydraulic clutch components as necessary.
	2. Clutch cover loose.	2. Follow proper bolt tightening procedure.
	3. Clutch disc bent or distorted.	3. Replace clutch disc.
	4. Clutch cover diaphragm spring bent or warped.	4. Replace clutch cover.
	5. Clutch disc installed backwards.	5. Remove and install clutch disc correctly.
	6. Clutch master or slave cylinder failure.	6. Replace hydraulic components as necessary.
CLUTCH PEDAL SQUEAK.	1. Pivot pin loose.	1. Tighten pivot pin if possible. Replace clutch pedal if necessary.
	2. Master cylinder bushing not lubricated.	2. Lubricate master cylinder bushing.
	3. Pedal bushings worn out or cracked.	3. Replace and lubricate bushings.
CLUTCH MASTER OR SLAVE CYLINDER PLUNGER DRAGGING AND/OR BINDING	1. Master or slave cylinder components worn or corroded.	1. Replace hydraulic clutch components as necessary.
RELEASE BEARING IS NOISY.	1. Release bearing defective or damaged.	1. Replace release bearing/slave cylinder.

CONDITION	POSSIBLE CAUSES	CORRECTION
CONTACT SURFACE OF RELEASE BEARING DAMAGED.	1. Clutch cover incorrect or release fingers bent or distorted.	1. Replace clutch cover and release bearing/slave cylinder.
	2. Release bearing defective or damaged.	2. Replace the release bearing/ slave cylinder.
	3. Release bearing misaligned.	3. Check and correct runout of clutch components. Check front bearing sleeve for damage/ alignment. Repair as necessary.
PARTIAL ENGAGEMENT OF CLUTCH DISC. ONE SIDE OF DISC IS WORN AND THE OTHER SIDE IS GLAZED AND LIGHTLY WORN.	1. Clutch pressure plate position incorrect.	1. Replace clutch disc and cover.
	2. Clutch cover, spring, or release fingers bent or distorted.	2. Replace clutch disc and cover.
	3. Clutch disc damaged or distorted.	2. Replace clutch disc.
	4. Clutch misalignment.	4. Check alignment and runout of flywheel, disc and clutch cover. Correct as necessary.

STANDARD PROCEDURE

MASTER CYLINDER BLEEDING

WARNING: RISK OF POISONING DUE TO SWALLOWING BRAKE FLUID. RISK OF INJURY DUE TO BRAKE FLUID COMING INTO CONTACT WITH THE SKIN AND EYES.

Note: Only pour brake fluid into suitable, appropriately marked containers. Wear protective clothing and safety glasses when handling brake fluid.

1. Remove the brake master cylinder reservoir cap.
2. Connect a pressure bleeder to the brake master cylinder reservoir.

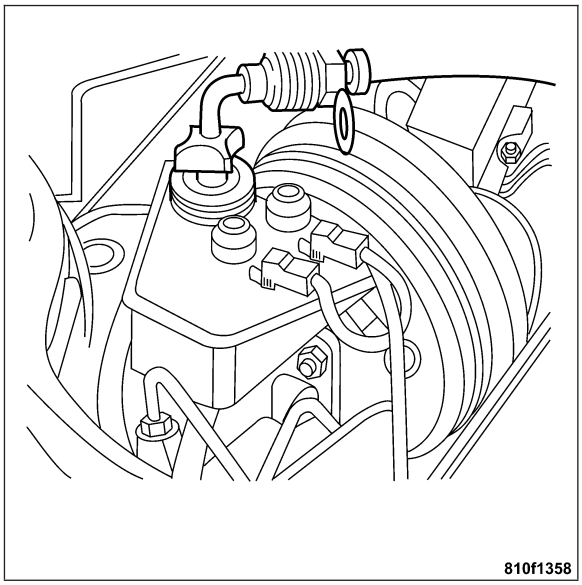

3. Raise and support the vehicle.
4. Open the bleeder screw (1) on the slave cylinder.
5. Allow the brake fluid to flow until there are no bubbles and fluid is clear.
6. Close the bleeder screw.
7. Lower the vehicle.
8. Disconnect the pressure bleeder.
9. Install the brake master cylinder reservoir cap.
10. Check the operation of the clutch.

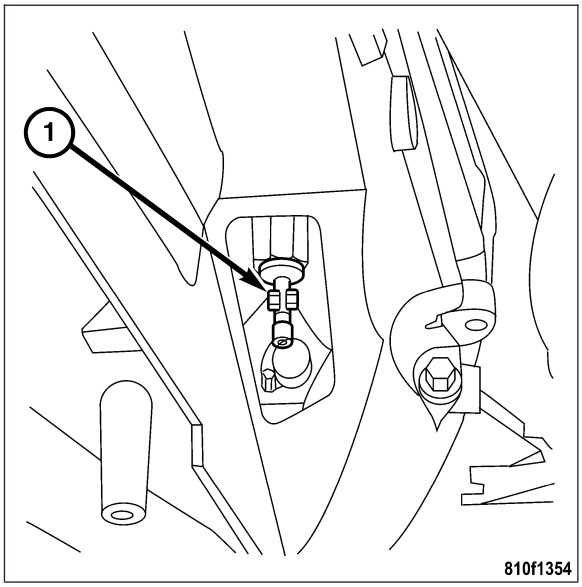

SPECIFICATIONS

TORQUE SPECIFICATIONS

DESCRIPTION	N·m	Ft. Lbs.	In. Lbs.
Flywheel Bolts	45	33	398
Slave Cylinder Bolts	10	7	89
Clutch Cover Bolts	25	18	221

SPECIAL TOOLS

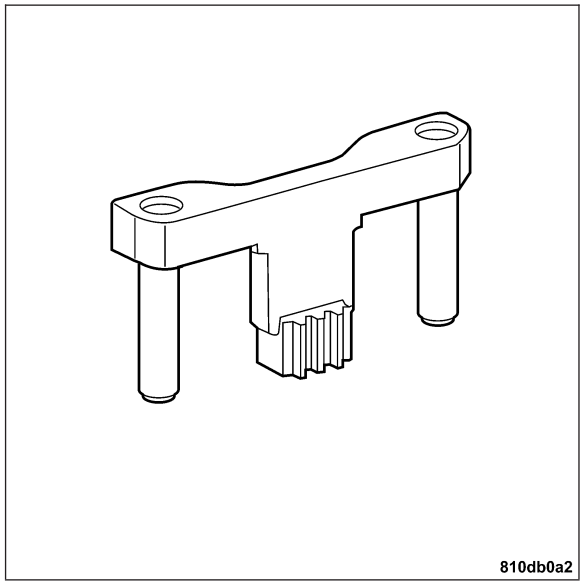

9102 FLYWHEEL LOCKING TOOL

CLUTCH DISC

REMOVAL

1. Remove the transmission **Refer to Page 21-344**.

Note: Remove clutch cover bolts 1 to 1 1/2 turns at a time.

2. Loosen the bolts (1) on the clutch cover.
3. Mark the relation of the clutch cover to the flywheel.
4. Remove the bolts (1) on the clutch cover.

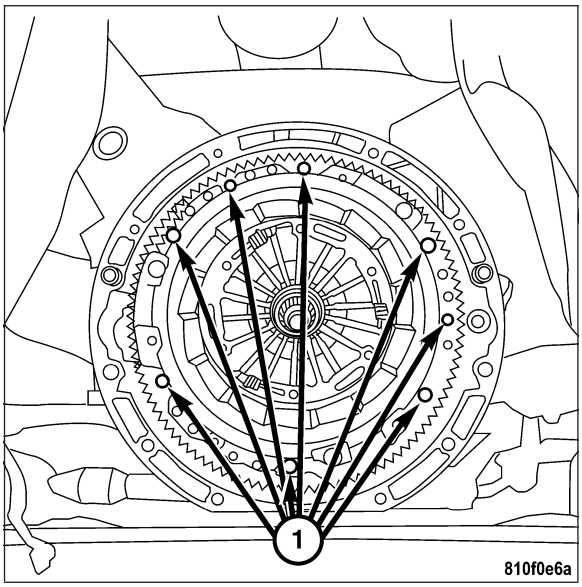

5. Remove the clutch cover (1) and the clutch disc (2).

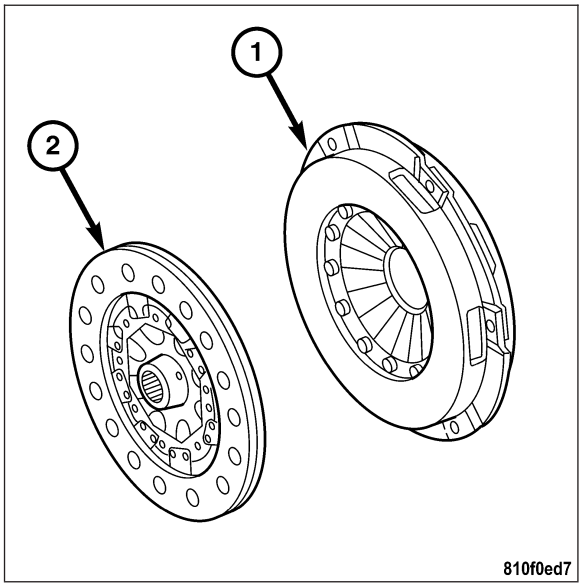

INSTALLATION

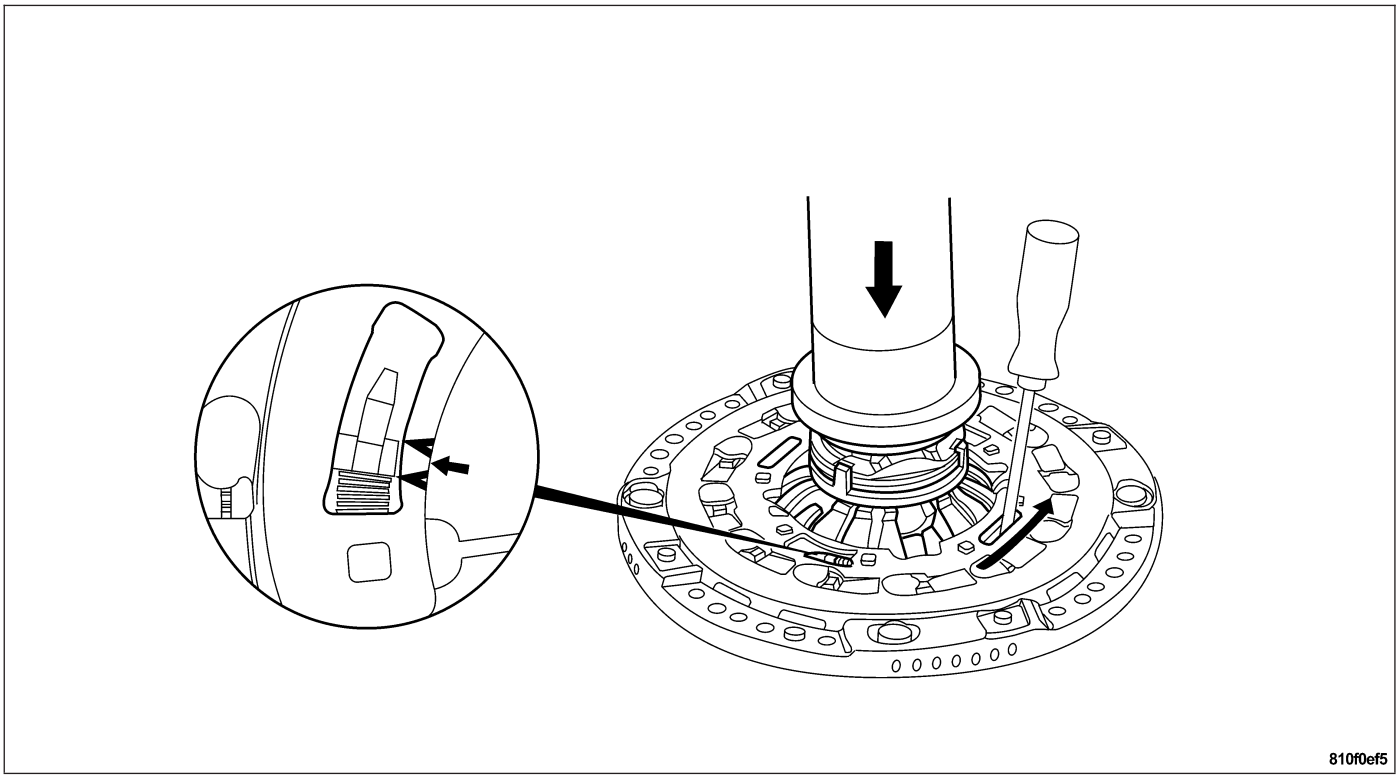

1. If the clutch cover is to be reused adjustment is required. Use an old release bearing or a length of pipe to release diaphragm pressure. Set the adjusting ring to the mark as shown.
2. Position the clutch disc and clutch cover on the flywheel.
3. Loosely install the clutch cover bolts (1).

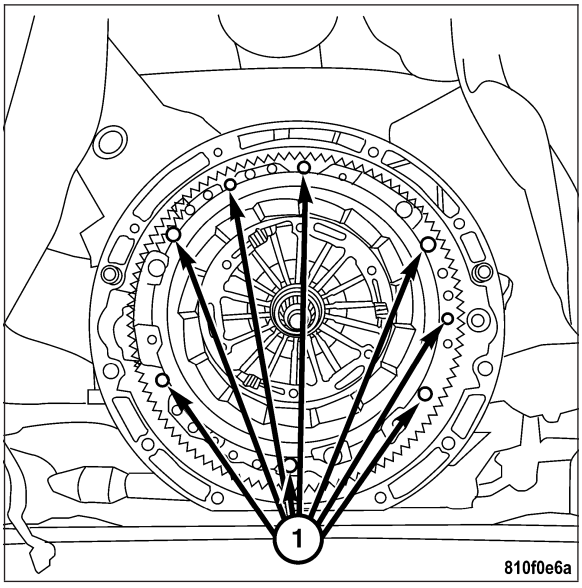

4. Install a universal clutch alignment tool (1).
5. Align the clutch disc.

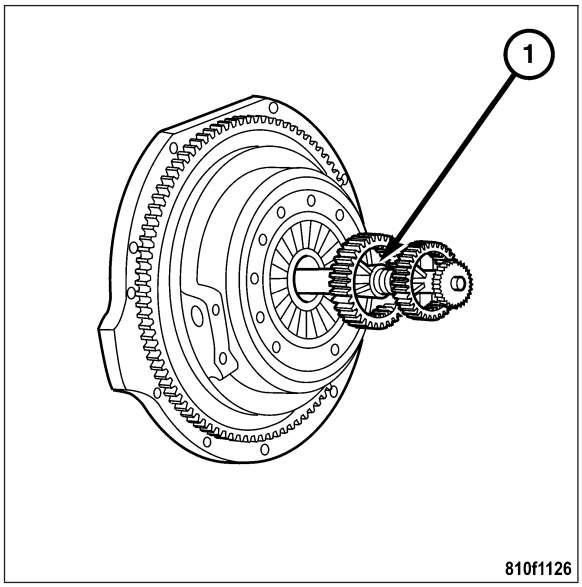

Note: Tighten the clutch cover bolts 1 to 1½ turns at a time.

6. Tighten the clutch cover bolts (1) until all bolts are fully seated. Tighten the bolts to 25 N·m (18 ft. lbs.).

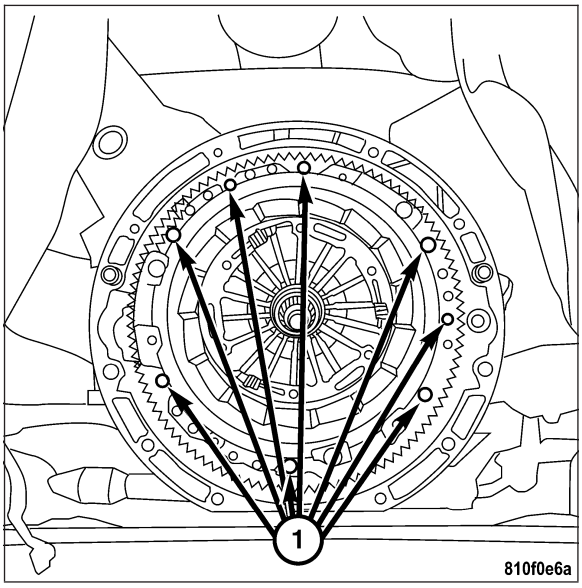

7. Remove the clutch alignment tool (1).
8. Install the transmission **Refer to Page 21-347**.

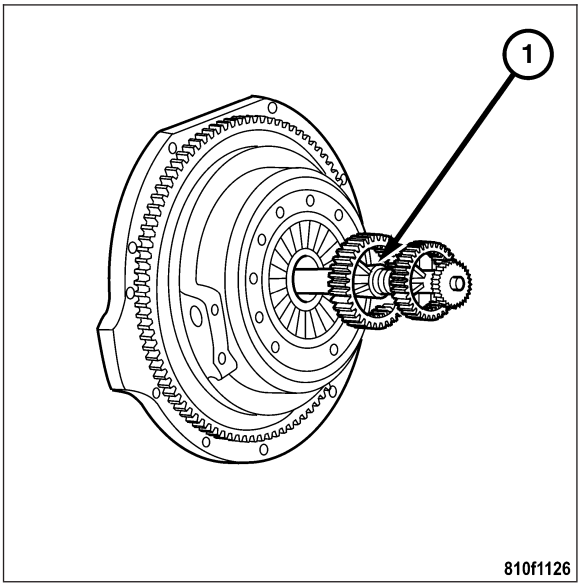

CLUTCH COVER

DESCRIPTION

The clutch cover assembly is a diaphragm type with a one-piece spring and multiple release fingers. The clutch cover is attached to the engine flywheel with eight bolts.

OPERATION

The clutch cover (1) assembly clamps the clutch disc against the flywheel. When the release bearing is depressed, the pressure exerted on the clutch disc by the clutch cover spring is decreased. As additional force is applied to the release bearing, the bearing presses the diaphragm spring fingers (2) inward on the fulcrums. This action moves the clutch cover (1) rearward relieving the clamped force on the disc. The clutch disc is disengaged and freewheeling at this point.

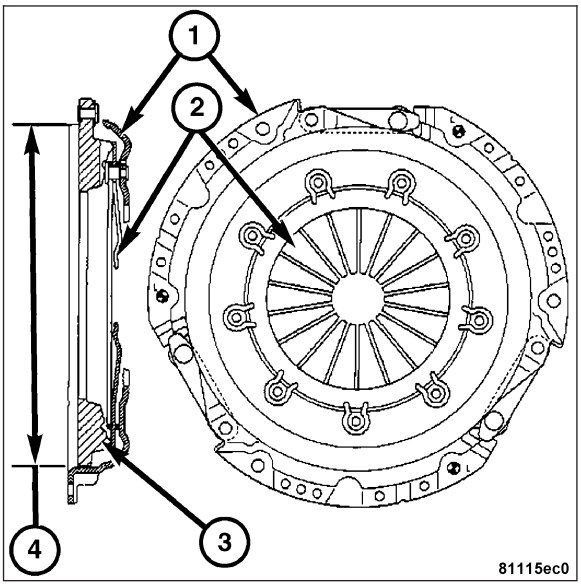

REMOVAL

1. Remove the transmission **Refer to Page 21-344**.
2. Loosen the bolts (1) on the clutch cover.
3. Mark the relation of the clutch cover to the flywheel.

Note: Remove clutch cover bolts 1 to 1 1/2 turns at a time.

4. Remove the bolts (1) on the clutch cover.

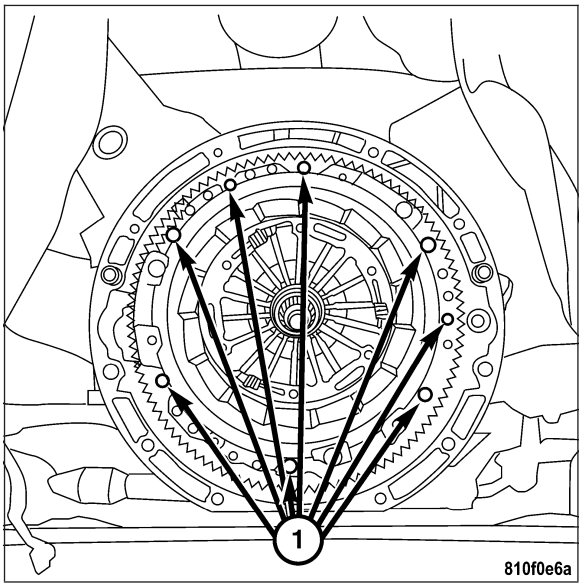

5. Remove the clutch cover (1).

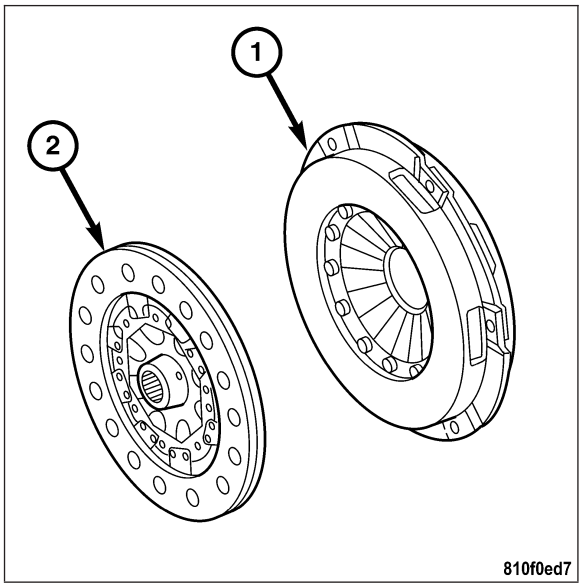

INSTALLATION

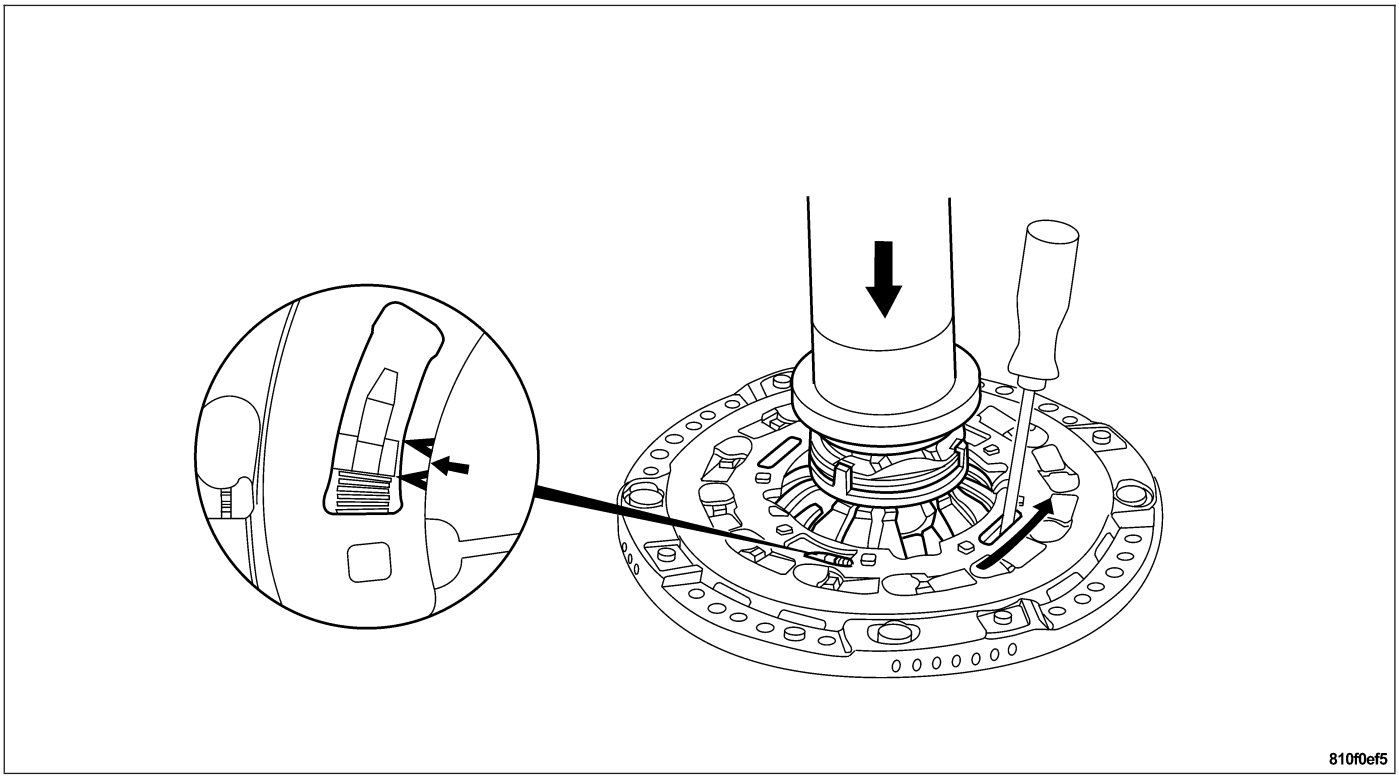

1. If the clutch cover is to be reused, adjustment is required. Use an old release bearing or a length of pipe to release diaphragm pressure. Set the adjusting ring to the mark as shown.

2. Position the clutch disc and clutch cover on the flywheel.
3. Loosely install the clutch cover bolts (1).

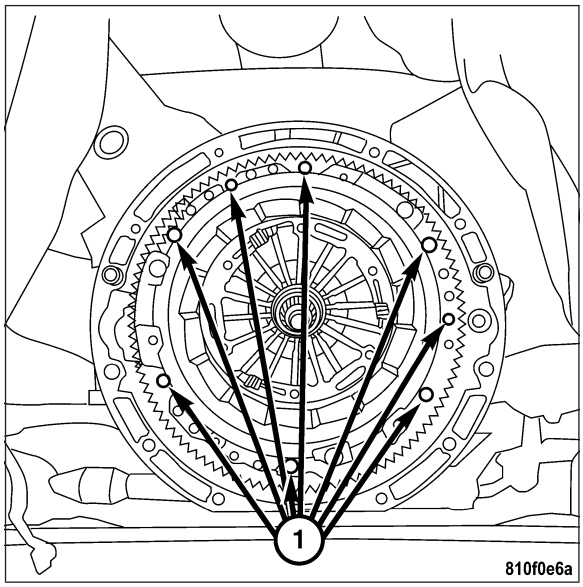

4. Install a universal clutch alignment tool (1).
5. Align the clutch disc.

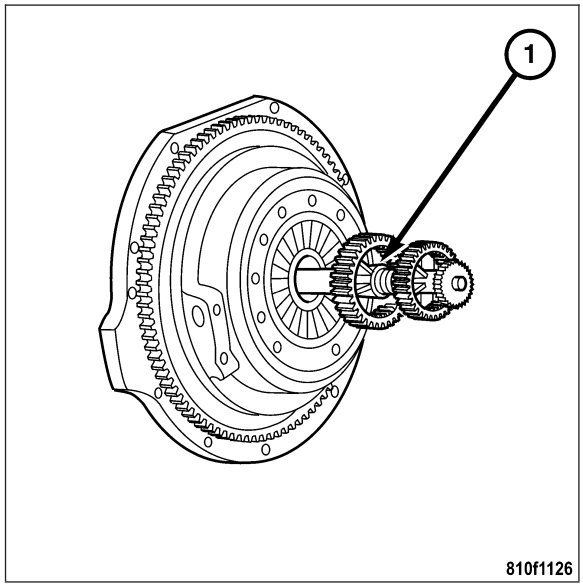

Note: Tighten the clutch cover bolts 1 to 1½ turns at a time.

6. Tighten the clutch cover bolts (1) until all bolts are fully seated. Tighten to 25 N·m (18 ft. lbs.).

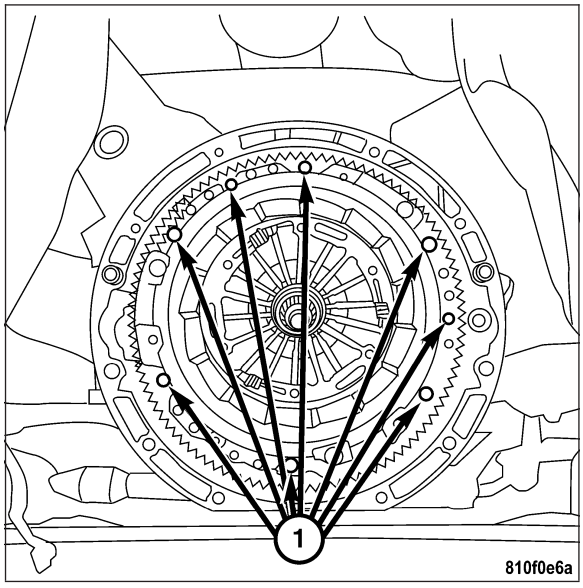

7. Remove the clutch alignment tool (1).
8. Install the transmission **Refer to Page 21-347**.

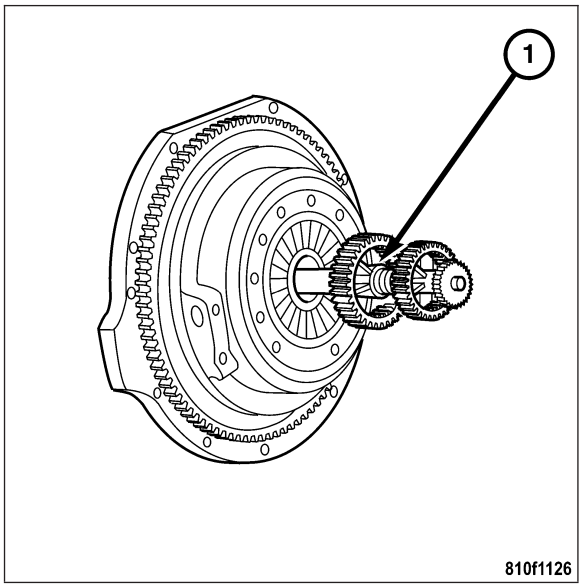

MASTER CYLINDER - CLUTCH

REMOVAL

WARNING: RISK OF POISONING DUE TO SWALLOWING BRAKE FLUID. RISK OF INJURY DUE TO BRAKE FLUID COMING INTO CONTACT WITH THE SKIN AND EYES.

Note: Only pour brake fluid into suitable, appropriately marked containers. Wear protective clothing and safety glasses when handling brake fluid.

1. Remove the lower driver side instrument panel (5) **Refer to Page 23-149**.
2. Remove the illumination control module (4).

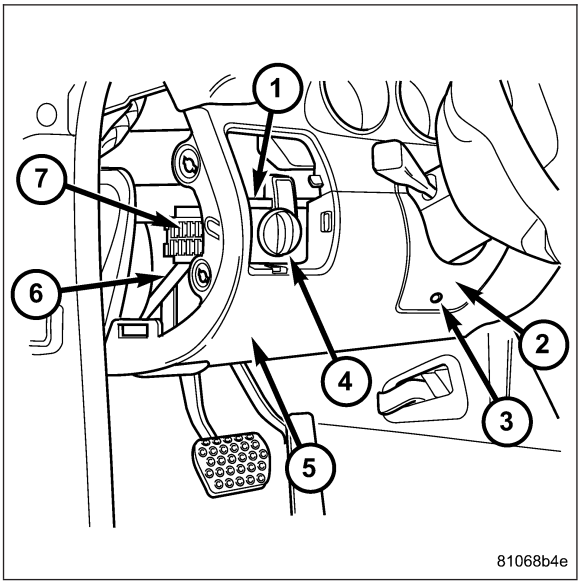

CAUTION: Avoid contamination in interior with brake fluid.

3. Clamp the clutch master cylinder supply hose (1) from the brake master cylinder reservoir.
4. Disconnect the clutch master cylinder supply hose (1) at the clutch master cylinder.

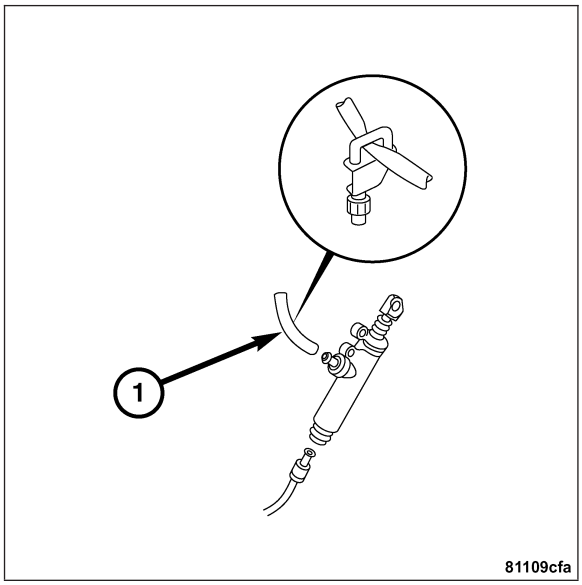

5. Disconnect the clutch master cylinder pressure line (1) at the clutch master cylinder and cap the line.

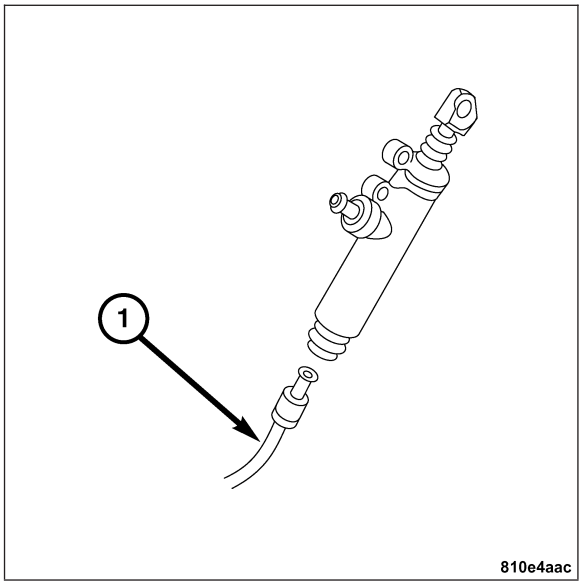

6. Remove the clutch pedal spring (3), circlip (1), and retaining nuts (2).
7. Rotate the clutch master cylinder counter-clockwise and remove from the vehicle.

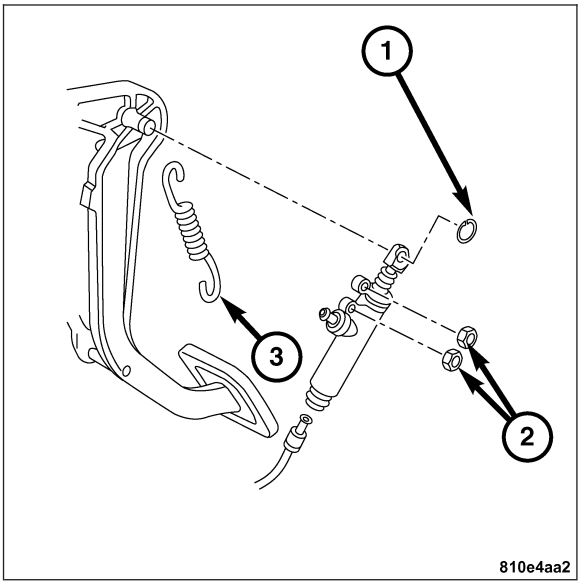

INSTALLATION

WARNING: RISK OF POISONING DUE TO SWALLOWING BRAKE FLUID. RISK OF INJURY DUE TO BRAKE FLUID COMING INTO CONTACT WITH THE SKIN AND EYES.

Note: Only pour brake fluid into suitable, appropriately marked containers. Wear protective clothing and safety glasses when handling brake fluid.

1. Position the clutch master cylinder on the pedal and pivot it clockwise.
2. Install the retaining nuts (2) on the bracket assembly. Tighten nuts to 10 N·m (89 in. lbs.).
3. Install the circlip (1) at the pedal stud.
4. Install the spring (3) to the pedal.

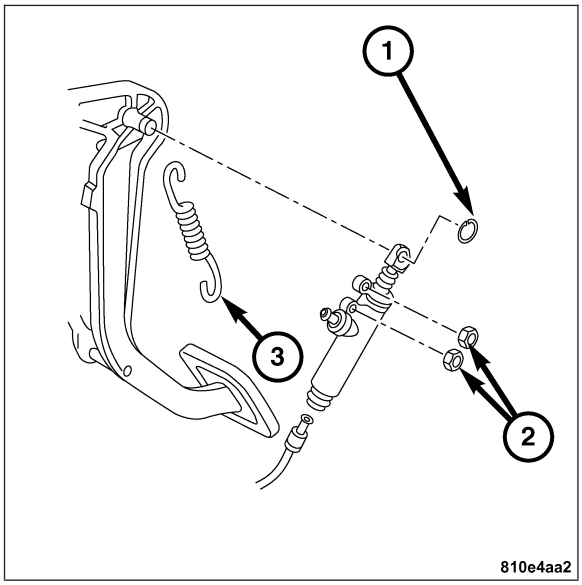

5. Connect the clutch master cylinder fluid pressure line (1).

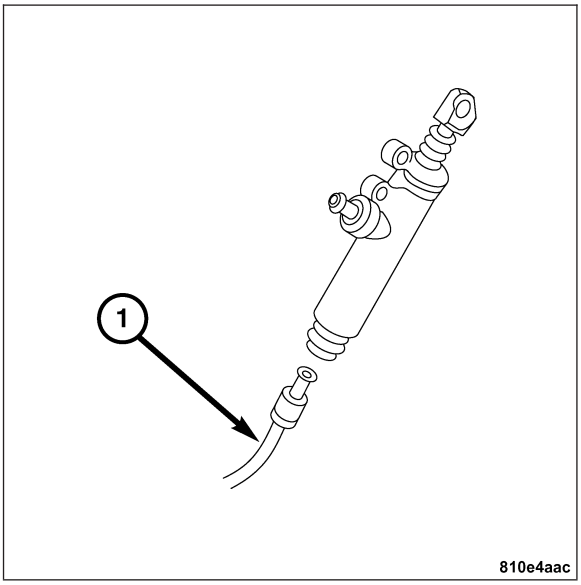

6. Connect the clutch master cylinder fluid supply hose (1).
7. Remove the clamp from the clutch master cylinder supply hose.

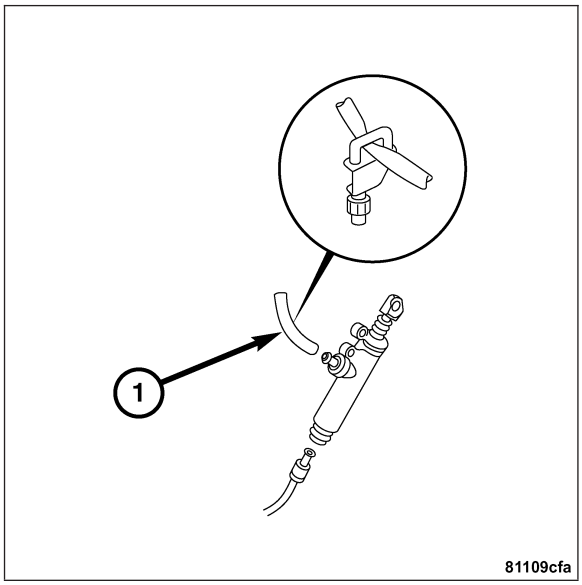

8. Install the illumination control module (4).
9. Install the lower drivers side instrument panel (5) **Refer to Page 23-155**.
10. Bleed the hydraulic clutch system **Refer to Page 6-7**.
11. Check for proper clutch actuation.

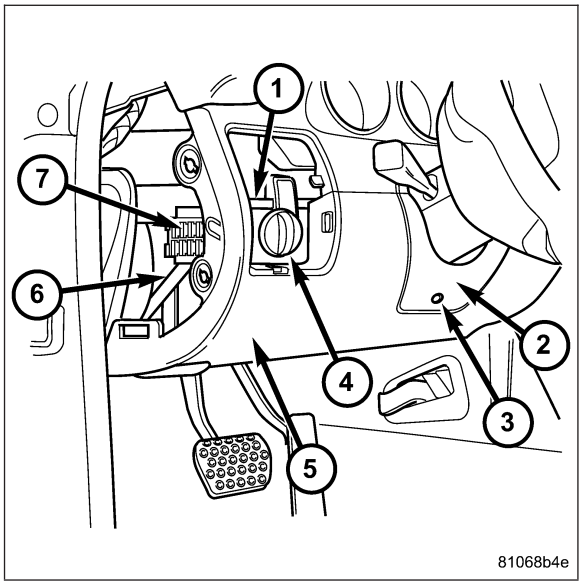

RELEASE BEARING/SLAVE CYLINDER

DESCRIPTION

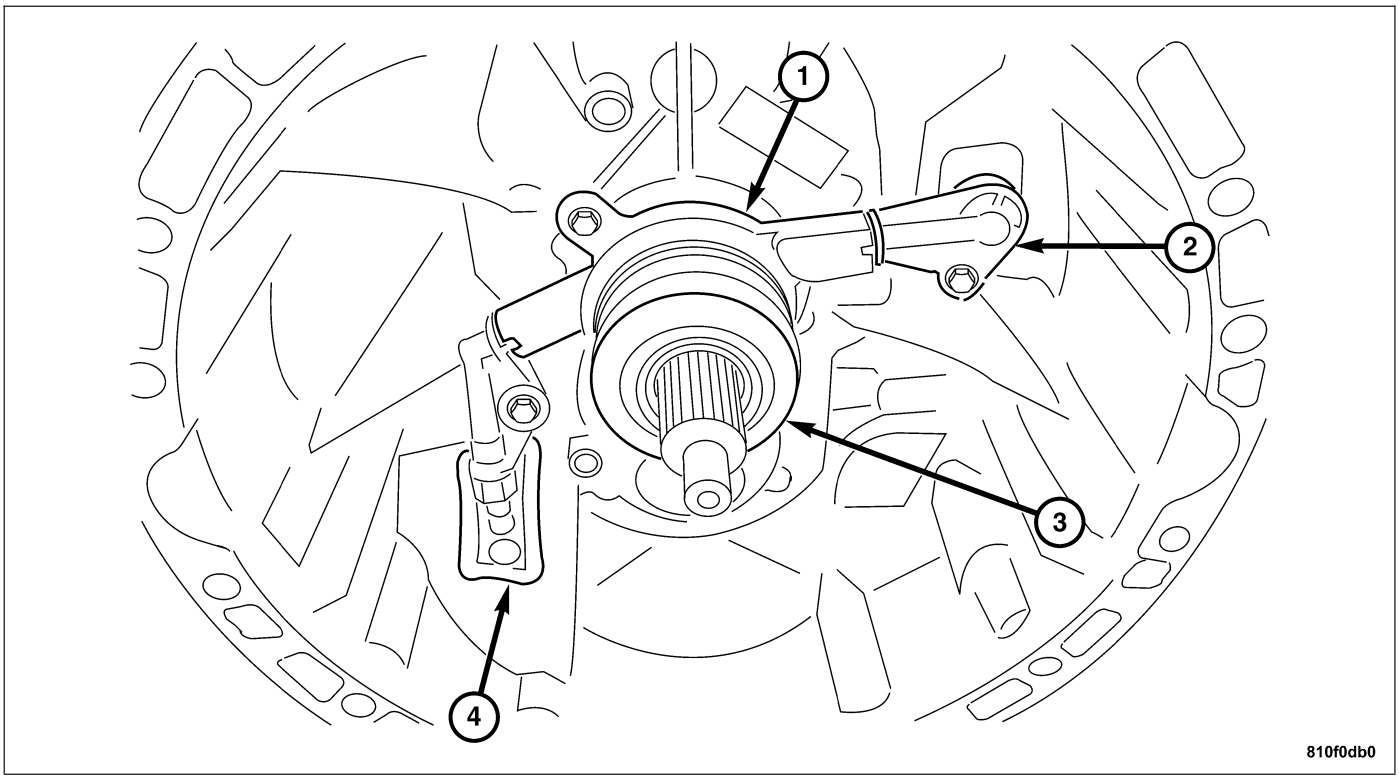

1 - SLAVE CYLINDER
2 - FLUID LINE
3 - RELEASE BEARING
4 - BLEEDER SCREW

The clutch release bearing is integrated with the clutch slave cylinder for smooth operation. By eliminating the clutch release fork, less effort is required to release the clutch. Even pressure application to the release bearing increases the life of the bearing.

OPERATION

The release bearing is operated by a slave cylinder in the clutch housing. The slave cylinder force causes the release bearing to move into contact with the diaphragm spring. As additional force is applied, the bearing presses the diaphragm spring fingers inward on the fulcrums. This action moves the pressure plate rearward relieving clamping force on the clutch disc. Releasing pedal pressure removes clutch hydraulic pressure. The release bearing then moves away from the diaphragm spring which allows the pressure plate to exert clamping force on the clutch disc.

REMOVAL

WARNING: RISK OF POISONING DUE TO SWALLOWING BRAKE FLUID. RISK OF INJURY DUE TO BRAKE FLUID COMING INTO CONTACT WITH THE SKIN AND EYES.

Note: Only pour brake fluid into suitable, appropriately marked containers. Wear protective clothing and safety glasses when handling brake fluid.

1. Remove the transmission **Refer to Page 21-344**.
2. Remove the clutch slave cylinder/release bearing bolts (1).
3. Remove the clutch slave cylinder/release bearing and plastic washer from transmission bell housing.
4. Inspect the clutch slave cylinder/release bearing for signs of leakage and wear.
5. Replace all worn parts as necessary.

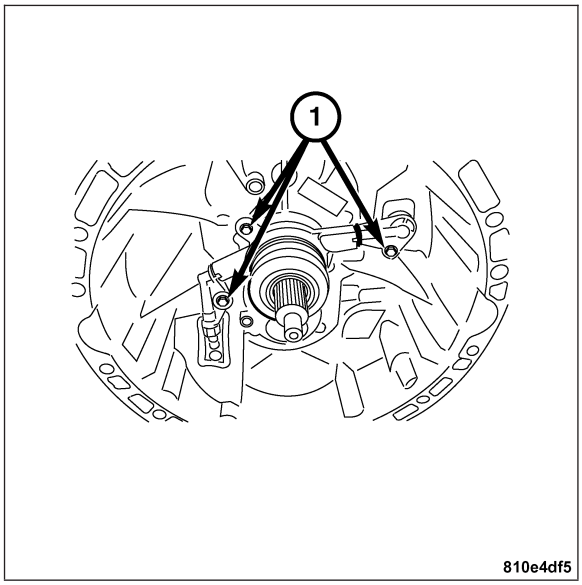

INSTALLATION

1. Position the slave cylinder/release bearing in the bell housing.
2. Install the slave cylinder/release bearing bolts (1). Tighten the bolts to 10 N·m (89 in. lbs.).
3. Install the transmission **Refer to Page 21-347**.
4. Bleed the hydraulic clutch system **Refer to Page 6-7**.

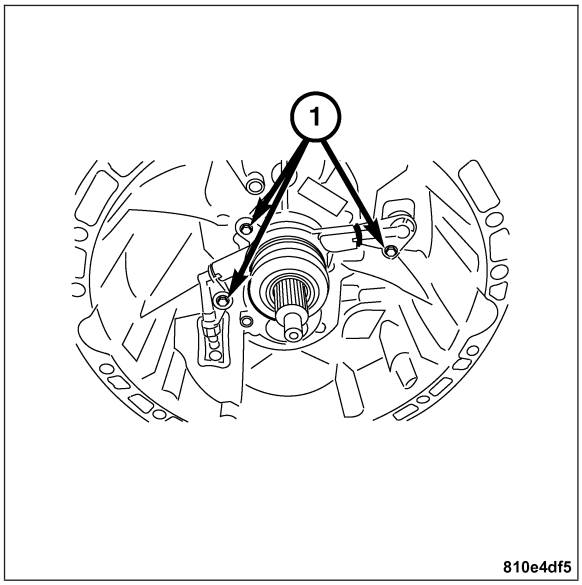

FLYWHEEL

DESCRIPTION

The flywheel is a heavy plate bolted to the rear of the crankshaft. The flywheel incorporates the ring gear around the outer circumference to mesh with the starter to permit engine cranking. The rear face of the flywheel serves as the driving member to the clutch disc.

OPERATION

The flywheel serves to dampen the engine firing pulses. The heavy weight of the flywheel relative to the rotating mass of the engine components serves to stabilize the flow of power to the remainder of the drivetrain. The crankshaft has the tendency to attempt to speed up and slow down in response to the cylinder firing pulses. The flywheel dampens these impulses by absorbing energy when the crankshaft speeds and releasing the energy back into the system when the crankshaft slows down.

DIAGNOSIS AND TESTING

Check flywheel runout whenever misalignment is suspected. Flywheel runout should not exceed 0.08 mm (0.003 in.). Measure runout at the outer edge of the flywheel face with a dial indicator.

Common causes of runout are:

- Heat warpage
- Improper machining
- Incorrect bolt tightening
- Improper seating on crankshaft flange shoulder
- Foreign material on crankshaft flange

REMOVAL

1. Remove the clutch **Refer to Page 6-9**.
2. Install Special Tool 9102 (1) Flywheel. Locking Tool.

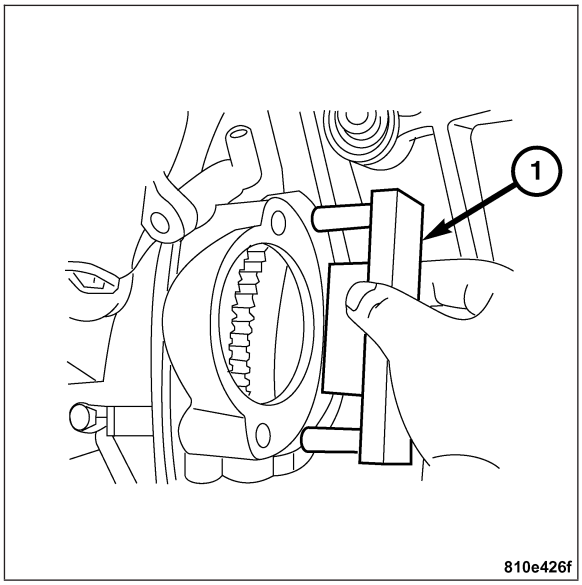

3. Remove and discard the flywheel bolts (1).
4. Remove the flywheel spacer (2) and the flywheel (3).
5. Inspect the flywheel for wear or cracking.
6. Inspect the starter ring gear for wear and missing teeth.

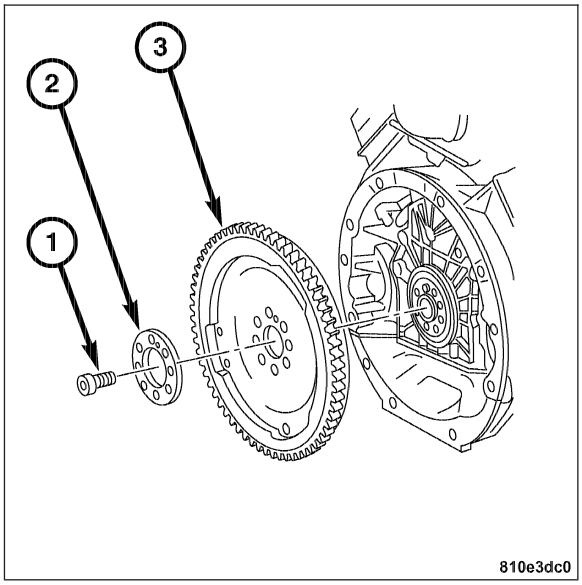

INSTALLATION

Note: If a new flywheel is installed, perform initialization in the Powertrain Control Module with the DRBIII in the menu point ″Control module adaptation″.

Note: Align flywheel on straight pin in crankshaft.

1. Position the flywheel (3) on the crankshaft.
2. Install the spacer (2) and **new** flywheel bolts (1).

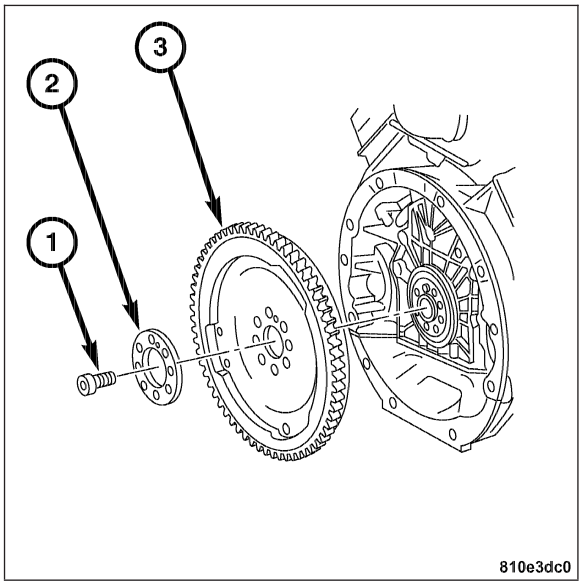

3. Install Special Tool 9102 (1) Flywheel Locking Tool.
4. Tighten the flywheel bolts to 45 N·m (33 ft. lbs.). For final torque, rotate the flywheel bolts an additional 45° clockwise.
5. Install the clutch **Refer to Page 6-10**.
6. Remove Special Tool 9102 Flywheel Locking Tool.
7. Install the transmission **Refer to Page 21-347**.

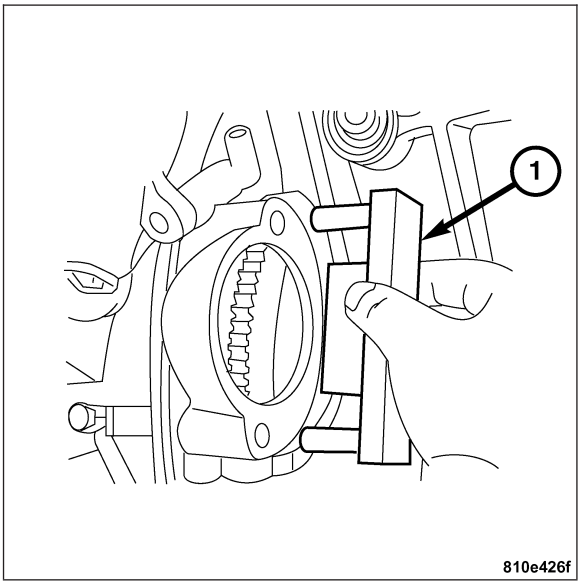

PILOT BEARING

REMOVAL

1. Remove the transmission.
2. Remove pressure plate and clutch disc.
3. Remove pilot bearing with an internal (blind hole) puller.

INSTALLATION

1. Lubricate new bearing with Mopar high temperature bearing grease or equivalent.
2. Start new bearing into crankshaft by hand, then seat bearing with clutch alignment tool.
3. Lightly scuff sand flywheel surface with 180 grit emery cloth. Then clean surface with wax and grease remover.
4. Install clutch disc and clutch cover **Refer to Page 6-10**.
5. Install the transmission **Refer to Page 21-347**.

CLUTCH PEDAL

REMOVAL

1. Remove the driver side lower instrument panel **Refer to Page 23-149**.
2. Remove the driver side upper instrument panel (1) **Refer to Page 23-149**.

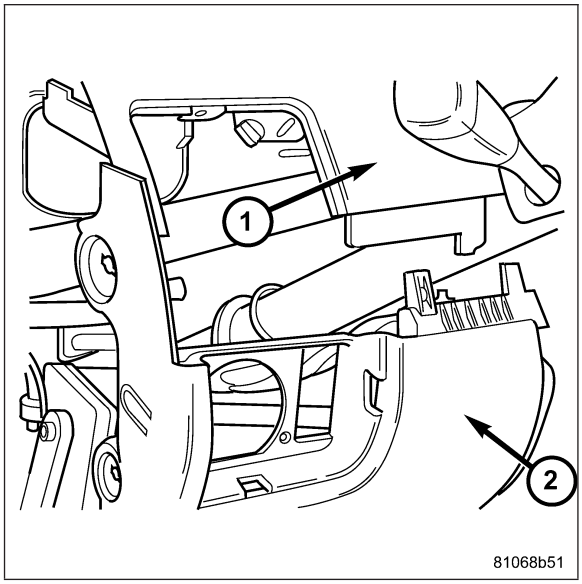

3. Disconnect the clutch master cylinder fluid pressure line (1) **Refer to Page 6-15**.

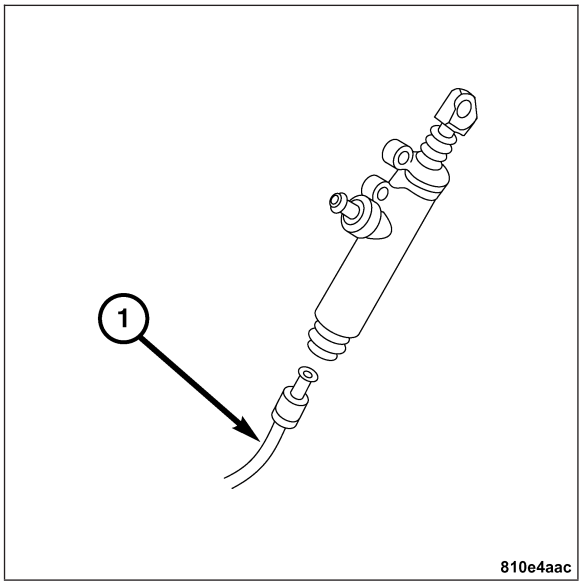

4. Disconnect the clutch pedal position switch.
5. Remove the circlip (2) and the return spring (3).
6. Remove the clutch pedal from the pivot (1).

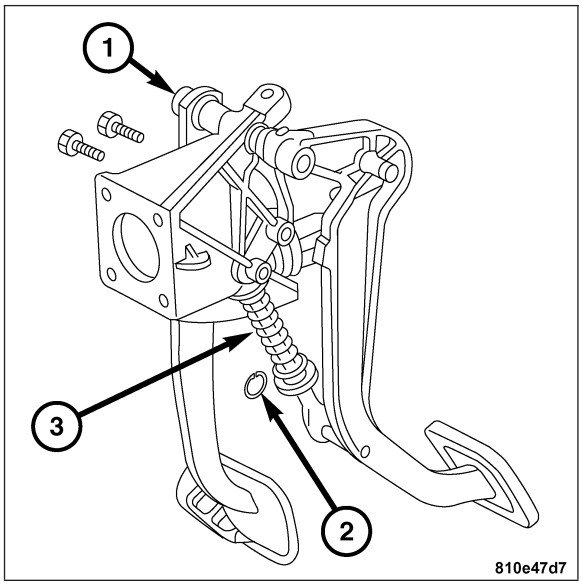

INSTALLATION

1. Install the clutch pedal on the bracket the pivot (1).
2. Install the return spring (3) and the circlip (2).

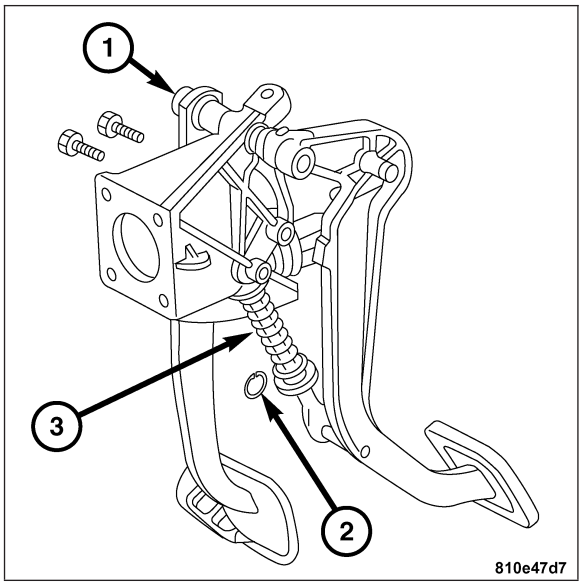

3. Install the clutch master cylinder fluid pressure line (1) **Refer to Page 6-17**.

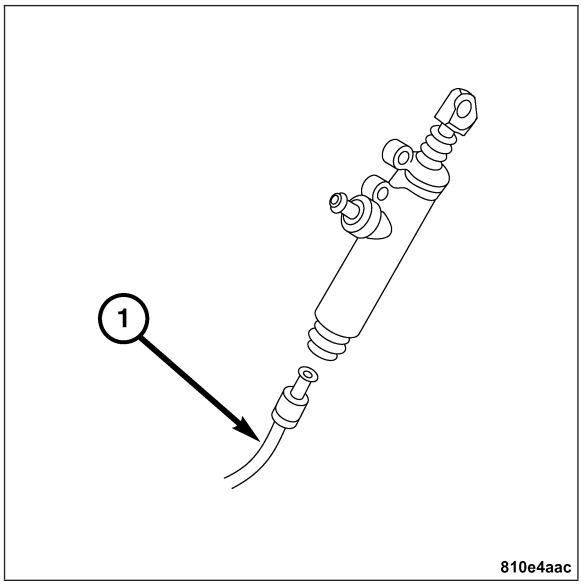

4. Install the driver side upper instrument panel (1) **Refer to Page 23-155**.
5. Install the driver side lower instrument panel **Refer to Page 23-155**.

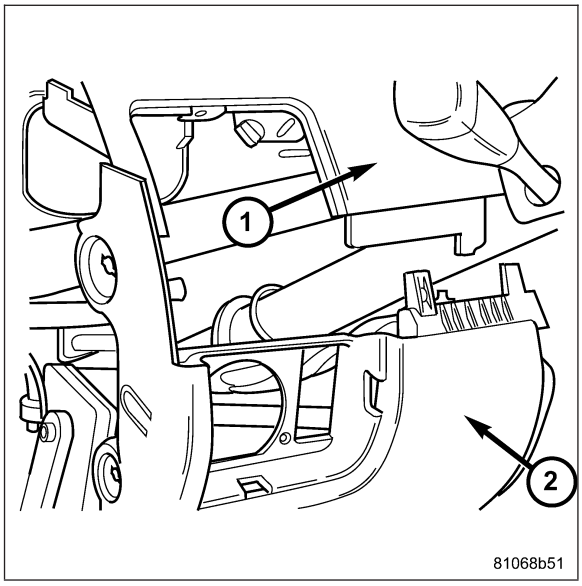

COOLING

TABLE OF CONTENTS

	page		page
COOLING - ELECTRICAL DIAGNOSTICS	1	**COOLING - SERVICE INFORMATION**	11

COOLING - ELECTRICAL DIAGNOSTICS

TABLE OF CONTENTS

	page		page
COOLING - ELECTRICAL DIAGNOSTICS		*RADIATOR COOLING FAN ALWAYS ON	6
DESCRIPTION	1	POWERTRAIN VERIFICATION TEST – VER 3	9
OPERATION	1	SCHEMATICS AND DIAGRAMS	10
DIAGNOSIS AND TESTING			
*RADIATOR COOLING FAN INOPERATIVE	2		

COOLING - ELECTRICAL DIAGNOSTICS

DESCRIPTION

The radiator cooling fan system is comprised of the radiator fan control module, powertrain control module, and the radiator fan motor. The radiator fan control module acts as the “relay” for the cooling fan circuit. The module is mounted to the inner fender. The powertrain control module acts as the “input” to the module to command the fan operation. The radiator cooling fan is made up of a multiple bladed fan. The cooling fan motor is a high speed DC type.

OPERATION

The radiator cooling fan is designed to keep the cooling system operating at a set temperature. The cooling fan operates when the engine coolant temperature exceeds 106 degrees Celsius or when the A/C has been requested on. The powertrain control module sends an input to the radiator fan control module to activate the cooling fan. The radiator fan control module receives voltage from fuse 2 (50 amp) in the engine fuse block. The radiator fan control module is grounded through G100.

DIAGNOSIS AND TESTING

*RADIATOR COOLING FAN INOPERATIVE

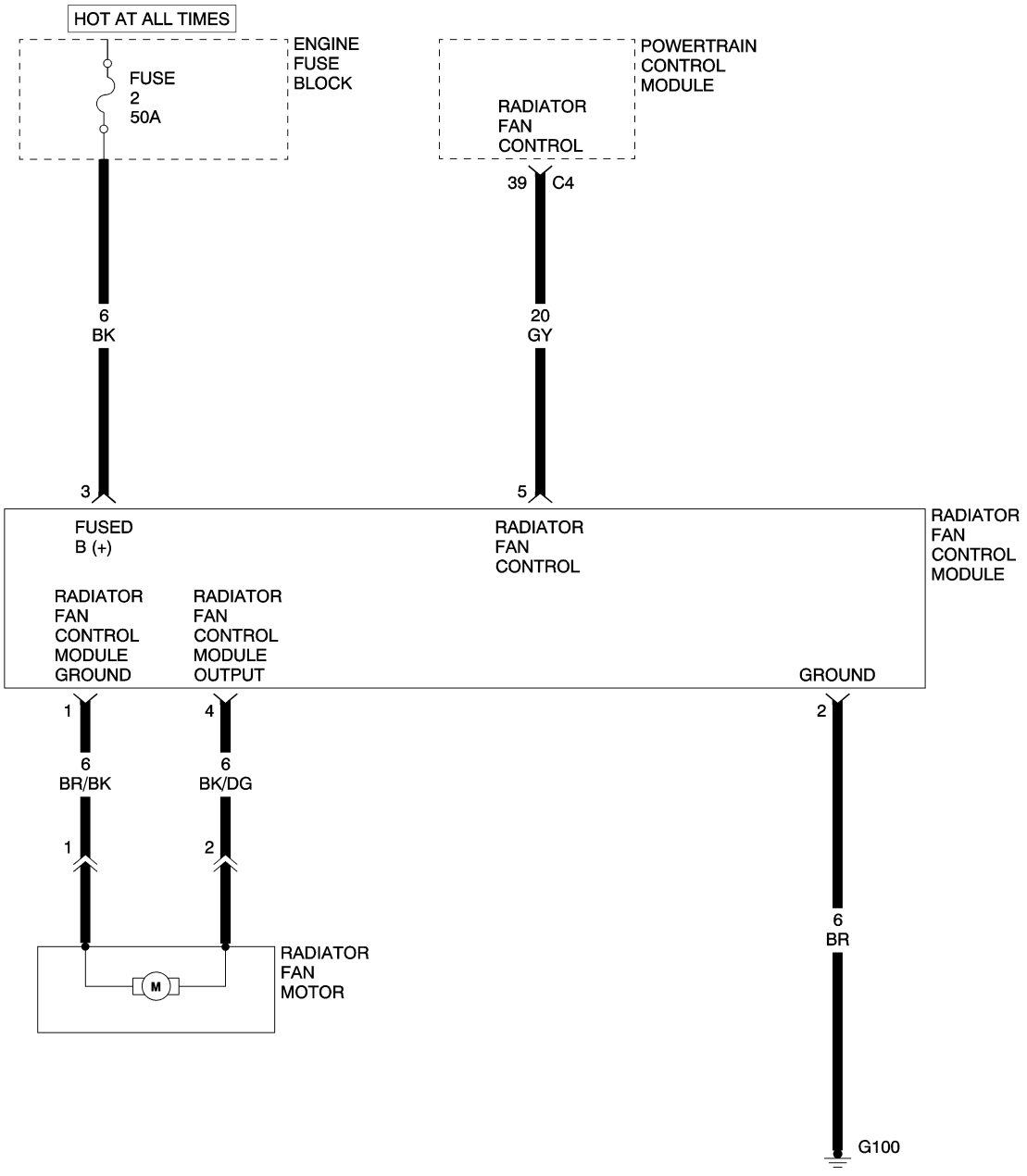

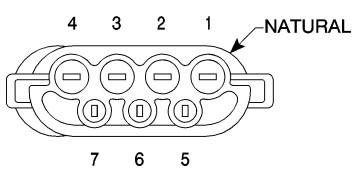

RADIATOR FAN CONTROL MODULE

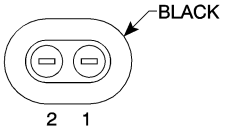

RADIATOR FAN MOTOR

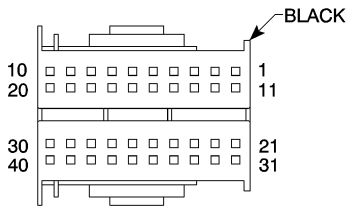

POWERTRAIN CONTROL MODULE – C4

810e63f1

*RADIATOR COOLING FAN INOPERATIVE — CONTINUED

POSSIBLE CAUSES
FUSED B(+) CIRCUIT OPEN
GROUND CIRCUIT OPEN
RADIATOR FAN CONTROL MODULE OUTPUT CIRCUIT OPEN
RADIATOR FAN CONTROL MODULE GROUND CIRCUIT OPEN
RADIATOR FAN CONTROL CIRCUIT OPEN
RADIATOR FAN CONTROL MODULE
RADIATOR FAN MOTOR

For a complete Radiator Cooling Fan Circuit Diagram, **Refer to Page 7-10**.

Diagnostic Test

1. ACTUATE RADIATOR COOLING FAN WITH DRB III®

Turn the ignition on.
With the DRB III®, actuate the Radiator Cooling Fan.

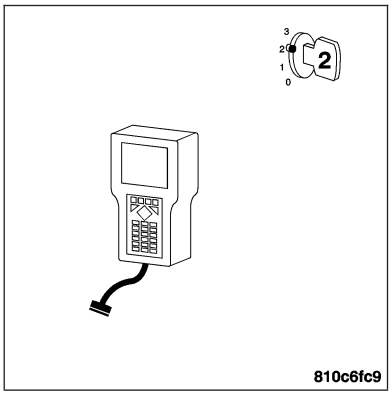

Is the Radiator Cooling Fan operating?

Yes >> Replace the Powertrain Control Module. **Refer to Page 8E-56**
Perform POWERTRAIN VERIFICATION TEST - VER 3.

No >> Go to 2

2. CHECKING THE FUSED B(+) CIRCUIT

Turn the ignition off.
Disconnect the Radiator Fan Control Module harness connector.

Note: Check connectors — Clean/repair as necessary.
Turn the ignition on.
Measure the voltage of the Fused B(+) circuit at the Radiator Fan Control Module harness connector.

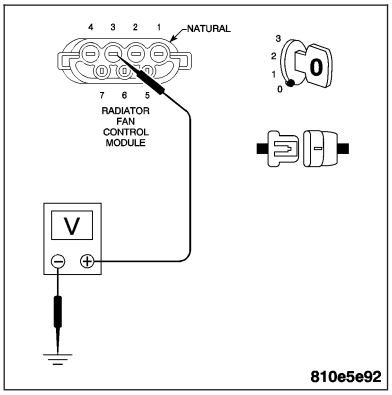

Is the voltage above 11 volts?

Yes >> Go to 3

No >> Repair the Fused B(+) circuit for an open.
Perform POWERTRAIN VERIFICATION TEST - VER 3.

*RADIATOR COOLING FAN INOPERATIVE — CONTINUED

3. CHECKING THE GROUND CIRCUIT

Turn the ignition off.
Measure the resistance between ground and the module Ground circuit.

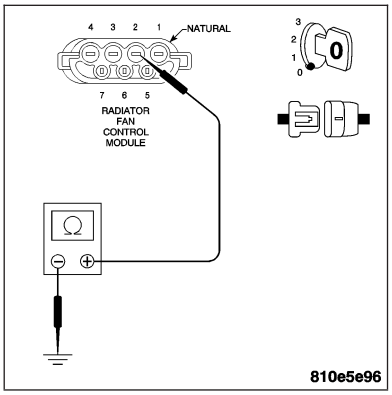

Is the resistance below 5.0 ohms?

Yes >> Go to 4

No >> Repair the module Ground circuit for an open.
Perform POWERTRAIN VERIFICATION TEST - VER 3.

4. CHECKING THE RADIATOR FAN CONTROL CIRCUIT

With the ignition off.
Disconnect the Powertrain Control Module (PCM) C4 harness connector.

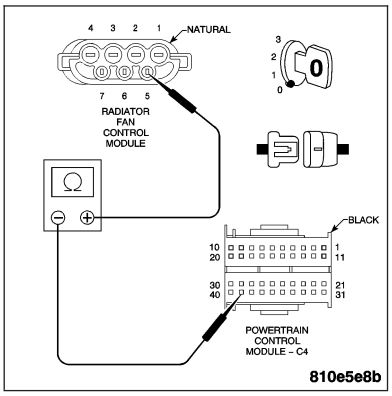

Note: Check connectors — Clean/repair as necessary.
Measure the resistance of the Radiator Fan Control circuit from the Radiator Fan Control Module harness connector to the PCM harness connector.

Is the resistance below 5.0 ohms?

Yes >> Go to 5

No >> Repair the Radiator Fan Control circuit for an open.
Perform POWERTRAIN VERIFICATION TEST - VER 3.

5. CHECKING THE RADIATOR FAN CONTROL MODULE OUTPUT CIRCUIT

With the ignition off.
Disconnect the Radiator Fan Motor harness connector.

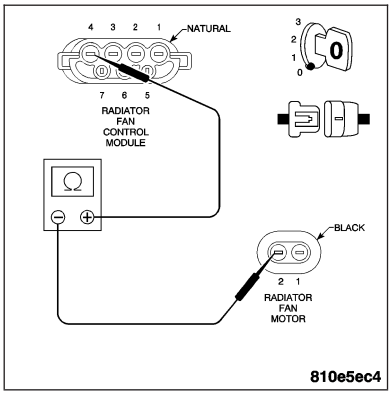

Note: Check connectors — Clean/repair as necessary.
Measure the resistance of the Radiator Fan Control Module Output circuit from the Radiator Fan Control Module harness connector to the Radiator Fan Motor harness connector.

Is the resistance below 5.0 ohms?

Yes >> Go to 6

No >> Repair the Radiator Fan Control Module Output circuit for an open.
Perform POWERTRAIN VERIFICATION TEST - VER 3.

*RADIATOR COOLING FAN INOPERATIVE — CONTINUED

6. CHECKING THE RADIATOR FAN CONTROL MODULE GROUND CIRCUIT

With the ignition off.

Measure the resistance of the Radiator Fan Control Module Ground circuit from the Radiator Fan Control Module harness connector to the Radiator Fan Motor harness connector.

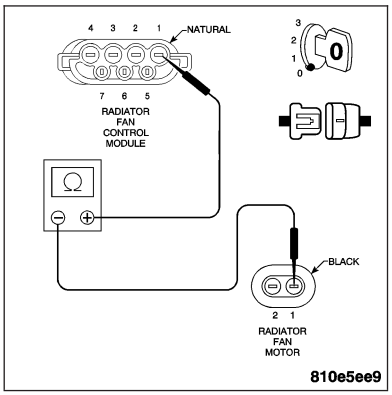

Is the resistance below 5.0 ohms?

Yes >> Go to 7

No >> Repair the Radiator Fan Control Module Ground circuit for an open.
Perform POWERTRAIN VERIFICATION TEST - VER 3.

7. CHECKING THE RADIATOR FAN MOTOR

With the ignition off.

Measure the resistance of the Radiator Fan Motor.

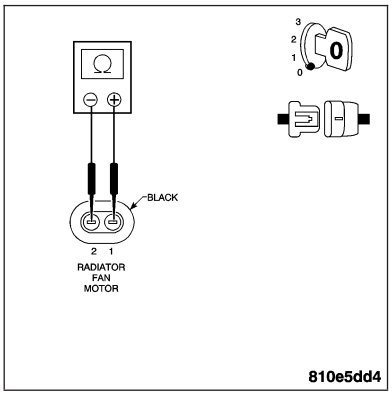

Is the resistance below 5.0 ohms?

Yes >> Replace the Radiator Fan Control Module. **Refer to Page 7-29**
Perform POWERTRAIN VERIFICATION TEST - VER 3.

No >> Replace the Radiator Fan Motor. **Refer to Page 7-26**
Perform POWERTRAIN VERIFICATION TEST - VER 3.

*RADIATOR COOLING FAN ALWAYS ON

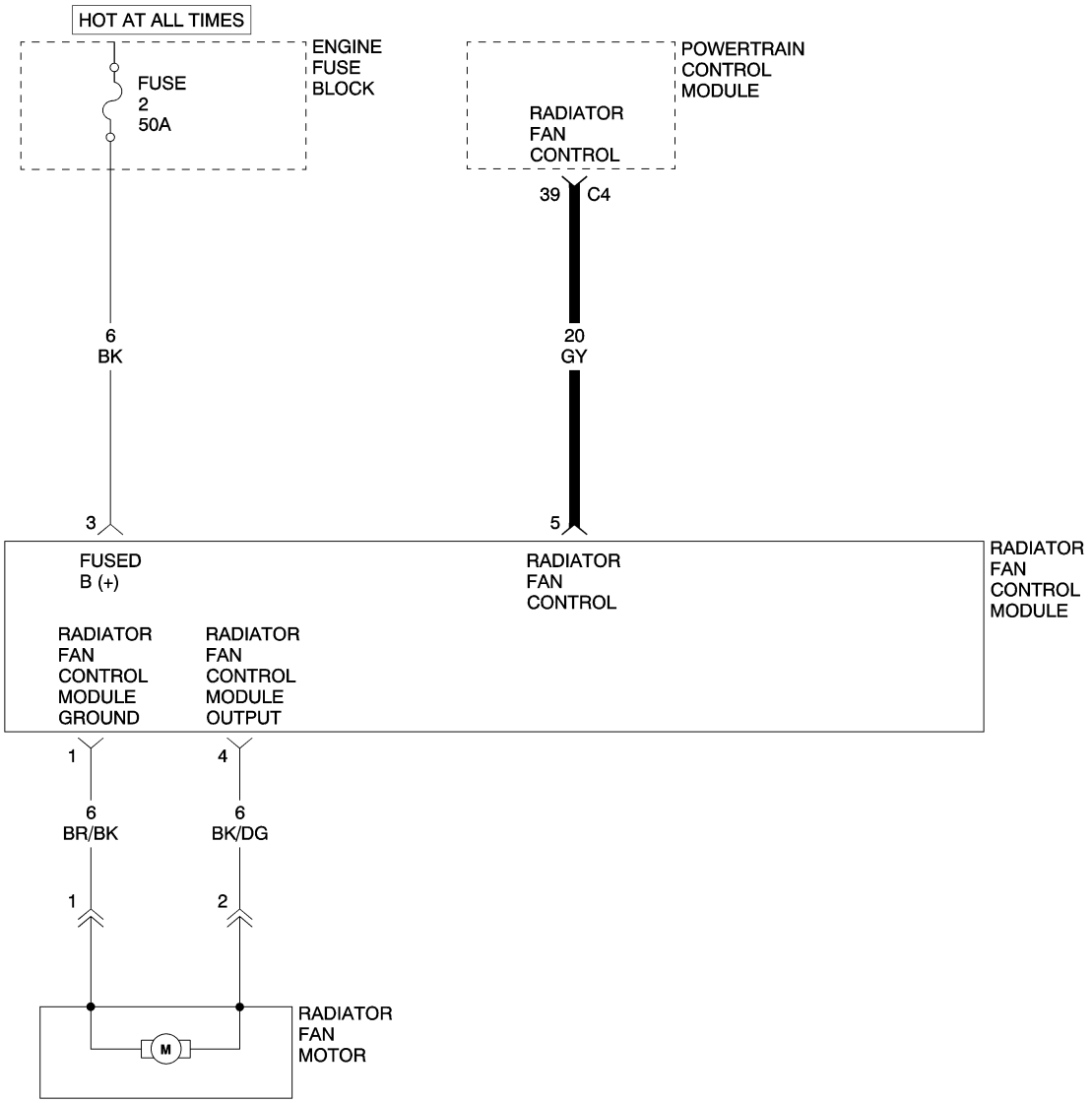

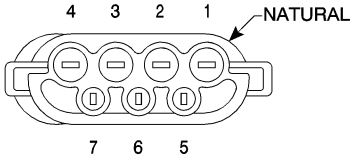

RADIATOR FAN CONTROL MODULE

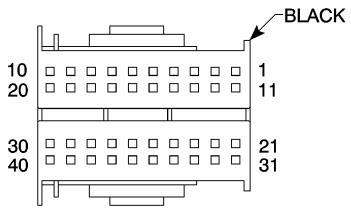

POWERTRAIN CONTROL MODULE – C4

810e63e6

*RADIATOR COOLING FAN ALWAYS ON — CONTINUED

POSSIBLE CAUSES
RADIATOR FAN CONTROL CIRCUIT SHORTED TO GROUND
RADIATOR FAN CONTROL MODULE
A/C SWITCH CIRCUIT MALFUNCTION
POWERTRAIN CONTROL MODULE

For a complete Radiator Cooling Fan Circuit Diagram, **Refer to Page 7-10**.

Diagnostic Test

1. CHECKING DRBIII® FOR A/C SWITCH STATUS

Turn the ignition on.
Insure that the A/C Switch is off.
With the DRBIII® in Inputs/Outputs, check the status of the A/C Switch.

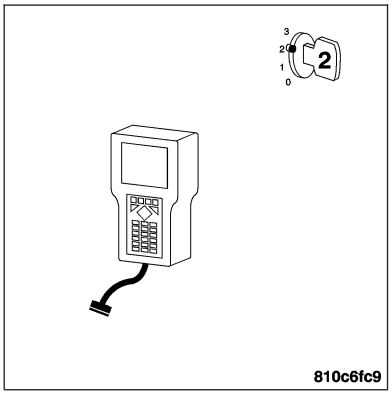

Does the DRBIII® display A/C Switch ON?

Yes >> Repair the A/C Switch circuit.
Perform POWERTRAIN VERIFICATION TEST - VER 3.

No >> Go to 2

2. CHECKING THE RADIATOR FAN CONTROL CIRCUIT

Turn the ignition off.
Disconnect the Radiator Fan Control Module harness connector.
Disconnect the Powertrain Control Module (PCM) C4 harness connector.

Note: Check connectors — Clean/repair as necessary.
Measure the resistance between ground and the Radiator Fan Control circuit.

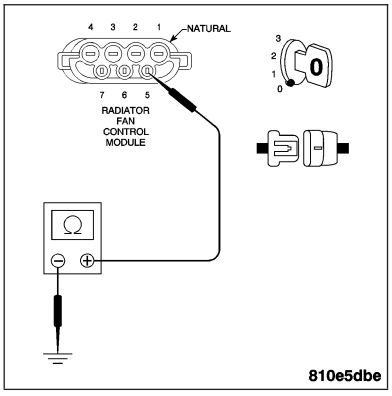

Is the resistance below 5.0 ohms?

Yes >> Repair the Radiator Fan Control circuit for a short to ground.
Perform POWERTRAIN VERIFICATION TEST - VER 3.

No >> Go to 3

*RADIATOR COOLING FAN ALWAYS ON — CONTINUED

3. CHECKING THE POWERTRAIN CONTROL MODULE

With the ignition off.

Reconnect the PCM C4 harness connector.

Measure the resistance between ground and the Radiator Fan Control circuit at the Radiator Fan Control Module harness connector.

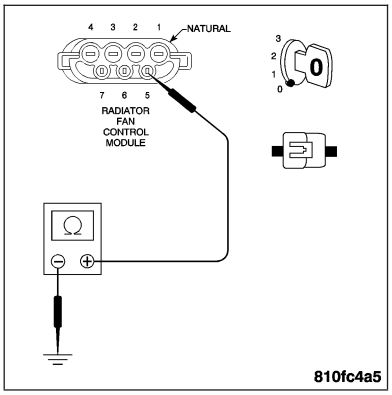

Is the resistance below 5.0 ohms?

Yes >> Replace the Powertrain Control Module. **Refer to Page 8E-56**
Perform POWERTRAIN VERIFICATION TEST - VER 3.

No >> Replace the Radiator Fan Control Module. **Refer to Page 7-29**
Perform POWERTRAIN VERIFICATION TEST - VER 3.

POWERTRAIN VERIFICATION TEST – VER 3

1.

Note: If the PCM has been replaced, the PCM version coding must be updated with the DRB III®.

Inspect the vehicle to ensure that all components related to the repair are connected properly.

With the DRB III®, clear DTCs and Reset Memory for all engine values.

Run the engine for one warm-up cycle to verify operation.

Road test the vehicle. Use all accessories that may be related to this repair.

With the DRB III®, confirm that no DTCs are present and that all components are functioning properly.

If this test is being performed after a No Trouble Code test, verify the symptom is no longer present.

If the symptom is still present, or any other symptom or DTC is present refer to the appropriate category and perform the corresponding symptom.

Refer to any Technical Service Bulletins that may apply.

If there are no DTCs present and all components are functioning properly, the repair is complete.

Are any DTCs present?

YES >> Repair is not complete, refer to appropriate symptom.

NO >> Repair is complete.

SCHEMATICS AND DIAGRAMS

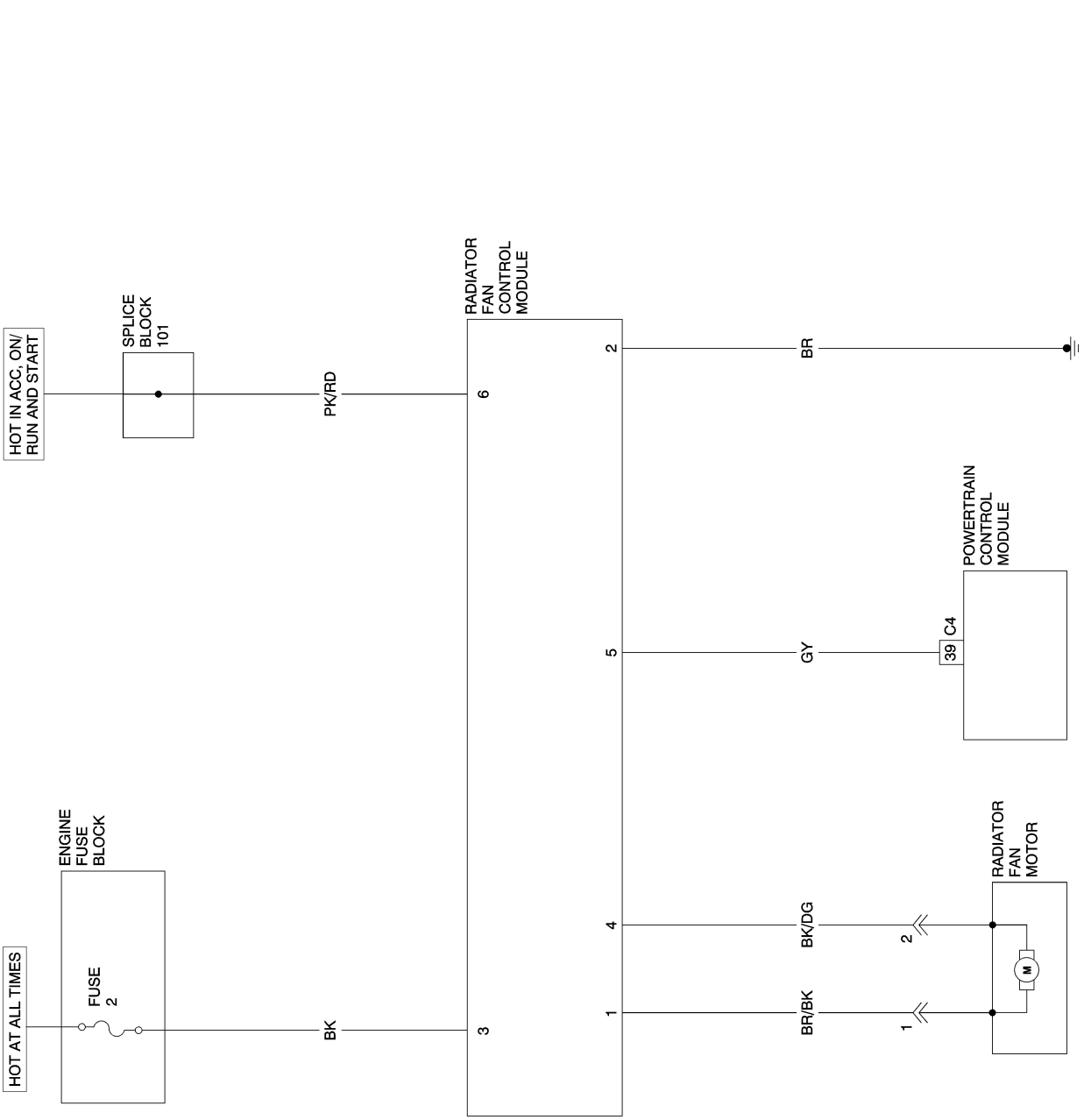

RADIATOR COOLING FAN CIRCUIT DIAGRAM

COOLING - SERVICE INFORMATION

TABLE OF CONTENTS

page

COOLING - SERVICE INFORMATION
DESCRIPTION 11
OPERATION
ENGINE COOLING SYSTEM 12
DIAGNOSIS AND TESTING
ENGINE COOLING SYSTEM OVERHEATING . 12
COOLING SYSTEM LEAK 13
CLEANING 14
INSPECTION 14
SPECIFICATIONS-TORQUE 14
SPECIAL TOOLS 15
ENGINE 16
ACCESSORY DRIVE 42
TRANSMISSION 49

COOLING - SERVICE INFORMATION

DESCRIPTION

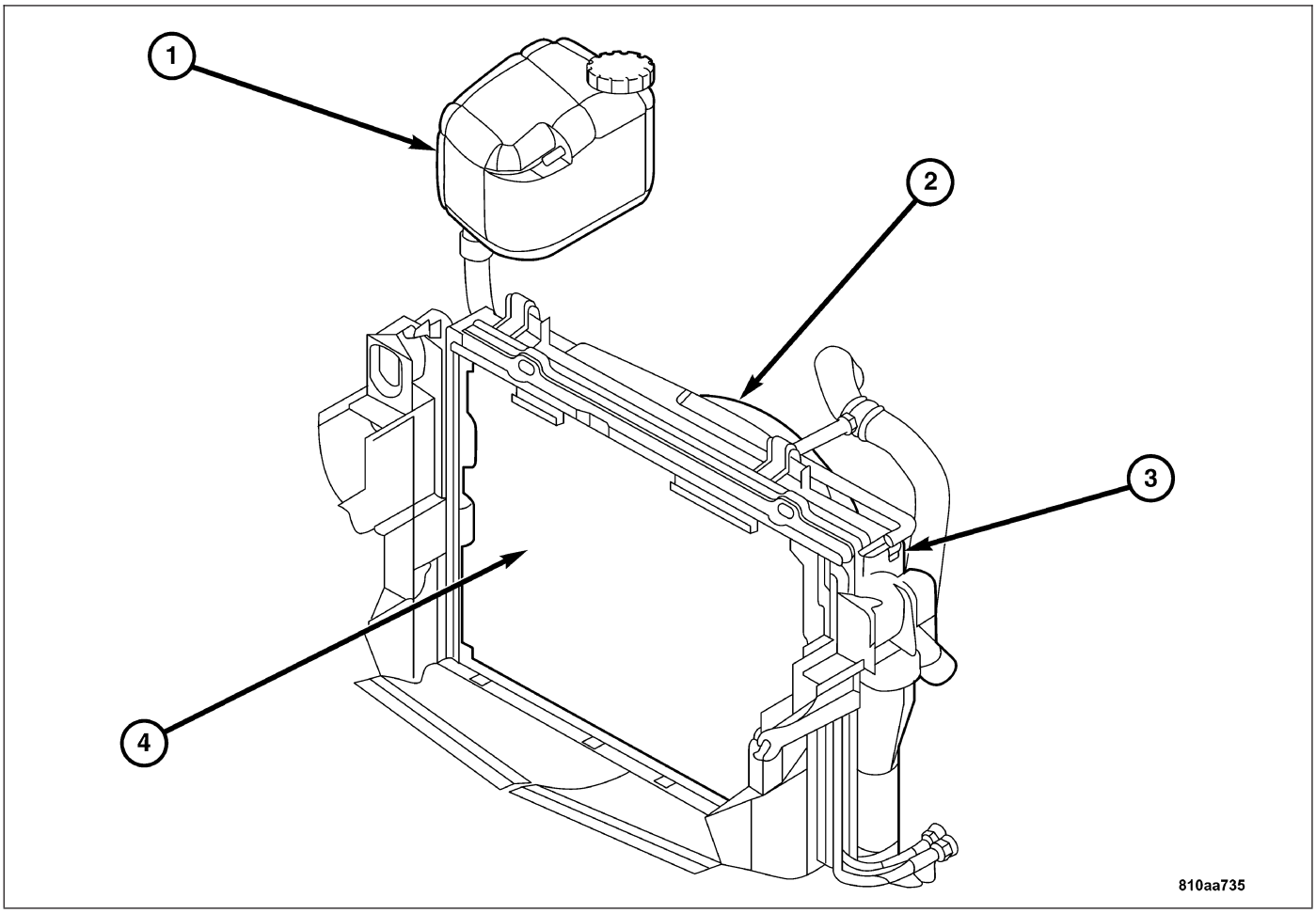

A conventional cross-flow aluminum core radiator (4) cools the engine. The coolant recovery reservoir (1) includes a coolant level sensor. A bypass circuit and additional coolant circulation pump can continue to circulate coolant through the heater core when the engine is off. A level sensor in the coolant recovery reservoir notifies the driver if there is insufficient coolant by illuminating the low engine coolant warning lamp in the instrument cluster. An electric fan (2) which is switched on and off by the radiator fan control module draws air for added cooling when needed.

OPERATION

ENGINE COOLING SYSTEM

CAUTION: The cooling system is designed to function with a 50/50 mixture of Mopar® Antifreeze/Coolant, 5 Year/100,000 Mile Formula (MS-9769) or equivalent, and distilled water. Higher concentrations may result in poor cooling performance and premature water pump seal failure. This antifreeze/coolant may not be mixed or substituted with any other type.

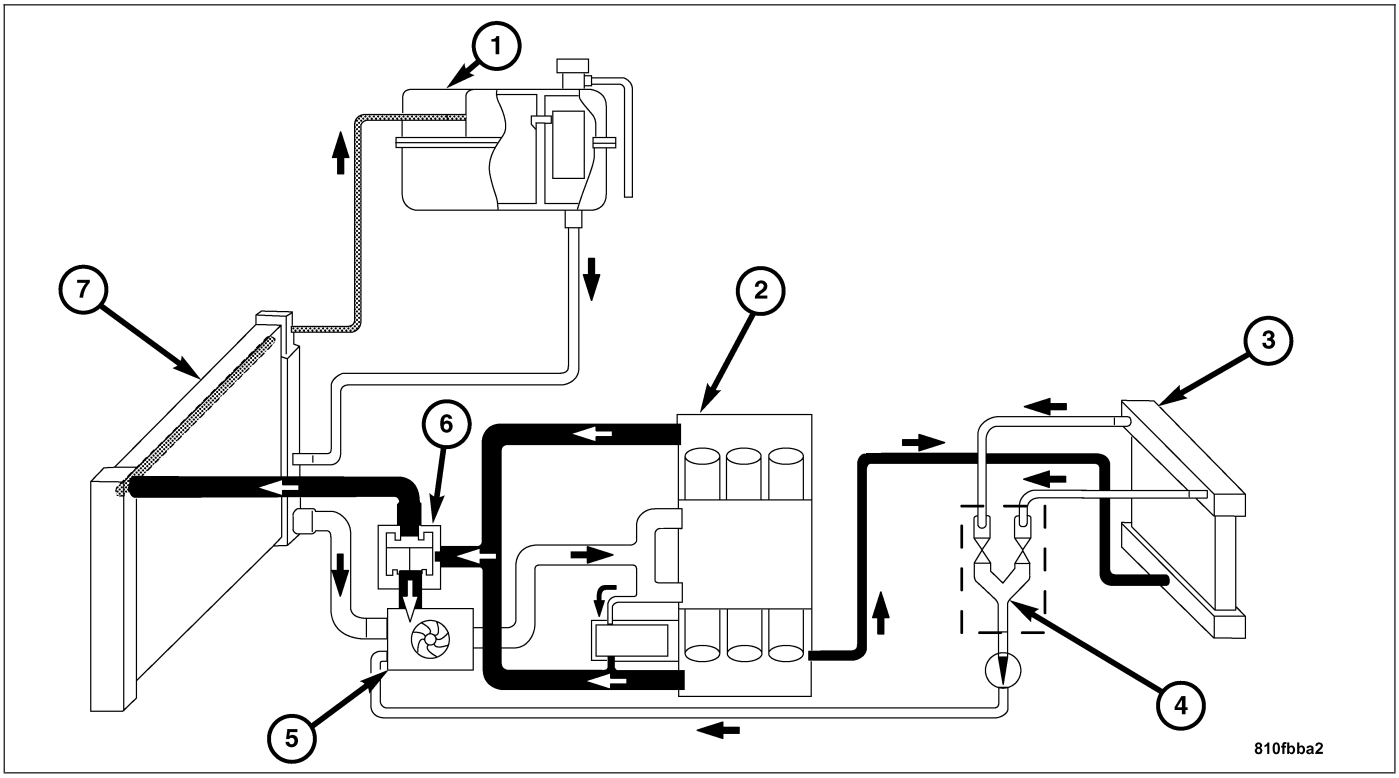

1 - COOLANT RESERVOIR
2 - ENGINE BLOCK
3 - HEATER CORE
4 - COOLANT CIRCULATION VALVE
5 - COOLANT CIRCULATION PUMP
6 - THERMOSTAT
7 - RADIATOR

- When engine is cold: Thermostat (6) is closed, cooling system has no flow through the radiator (7). The coolant flows through the engine, heater core (3), coolant recovery reservoir (1) and an internal engine by-pass.
- When engine (2) is warm: Thermostat (6) is open, coolant flows through the radiator (7), heater core (3), coolant recovery reservoir (1) and by-pass.

The cooling systems primary purpose is to maintain engine temperature in a range that will provide satisfactory engine performance and emission levels under all expected driving conditions. It also provides hot coolant for heater, and cooling for automatic transmission fluid. It does this by transferring heat from engine metal to coolant, moving this heated coolant to the radiator, and then transferring this heat to the ambient air.

DIAGNOSIS AND TESTING

ENGINE COOLING SYSTEM OVERHEATING

Establish what driving conditions caused the complaint. Abnormal loads on the cooling system such as the following may be the cause:

- Prolonged Idle

- Very High Ambient Temperature
- Slight Wind At Idle
- Slow Traffic
- Traffic Jams
- High Speed
- Steep Grades

Driving techniques that avoid overheating are:

- Idle with A/C off when temperature gauge is at end of normal range.

1. RECENT SERVICE OR ACCIDENT REPAIR:

Determine if any recent service has been performed on vehicle that may affect cooling system. This may be:

- Engine adjustments (incorrect timing)
- Slipping engine accessory drive belt(s)
- Brakes (possibly dragging)
- Changed parts. Incorrect water pump, or pump rotating in wrong direction due to belt not correctly routed.
- Reconditioned radiator or cooling system refilling (possibly under filled or air trapped in system).

COOLING SYSTEM LEAK

With engine not running, wipe the coolant recovery reservoir neck sealing seat clean.

Attach a radiator pressure tester (1) to the coolant recovery reservoir with Special Tool 9107 Pressure Tester Adaptor (2). Apply 104 kPa (15 psi) pressure to the cooling system. If the pressure drops more than 2 psi in 2 minutes inspect all points for external leaks.

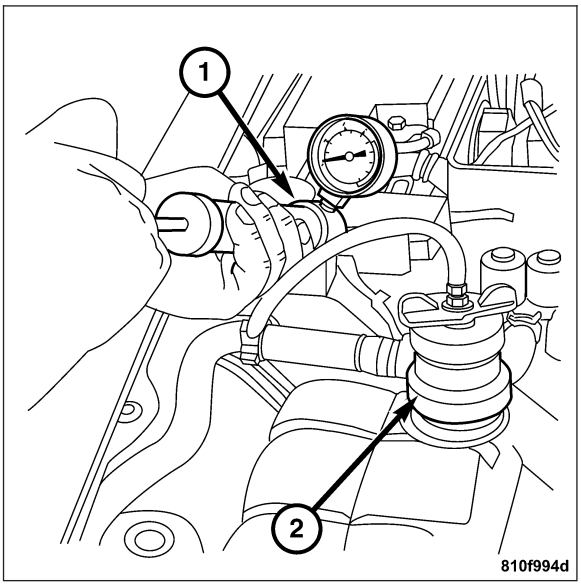

All hoses, radiator and heater, should be moved while at 15 psi since some leaks occur while driving due to engine rock, vibration, etc.

If there are no external leaks after the gauge dial shows a drop in pressure, detach the tester. Start engine and run the engine to normal operating temperature in order to open the thermostat and allow the coolant to expand. Reattach the tester. If the needle on the dial fluctuates it indicates a combustion leak, usually a head gasket leak.

WARNING: WITH TOOL IN PLACE PRESSURE BUILDS UP FAST. ANY EXCESSIVE AMOUNT OF PRESSURE BUILT UP BY CONTINUOUS ENGINE OPERATION MUST BE RELEASED TO A SAFE PRESSURE POINT. NEVER PERMIT PRESSURE TO EXCEED 138 kPa (20 psi).

If the needle on the dial does not fluctuate, race the engine a few times. If an abnormal amount of coolant or steam is emitted from the tail pipe, it may indicate a faulty head gasket, cracked engine block or cylinder head.

There may be internal leaks which can be determined by removing the oil dipstick. If water globules appear intermixed with the oil it will indicate an internal leak in the engine. If there is an internal leak, the engine must be disassembled for repair.

CLEANING

Drain cooling system and refill with clean water. Refer to drain and fill procedures in this section. **Refer to Page 7-18**.

Run engine with radiator cap installed until upper radiator hose is hot. Stop engine and drain water from system. If water is dirty; fill, run, and drain system again, until water runs clear. Refill cooling system with a 50/50 mixture of the recommended antifreeze/coolant and distilled water.

INSPECTION

After performing a cleaning/flush procedure, inspect all hoses, clamps and connections for deterioration and leaks. Inspect radiator and heater core for leaks.

SPECIFICATIONS-TORQUE

TORQUE SPECIFICATIONS

DESCRIPTION	N·m	Ft. Lbs.	In. Lbs.
Belt Tensioner Bolts	14	10	—
Condensor Bolts	10	—	89
Coolant Recovery Reservoir Nuts	5	—	44
Idler Pulley Screw	10	—	89
Transmission Cooler Line Nuts	20	15	—
Transmission Cooler Line Banjp Bolts	20	15	—
Transmission Cooler Line Reainer Bolts	10	—	89
Water Outlet Housing Bolts	10	—	89
Water Pump Pulley Bolts	10	—	89
Water Pump M6 Bolts	10	—	89
Water Pump M8 Bolts	35	26	—

SPECIAL TOOLS

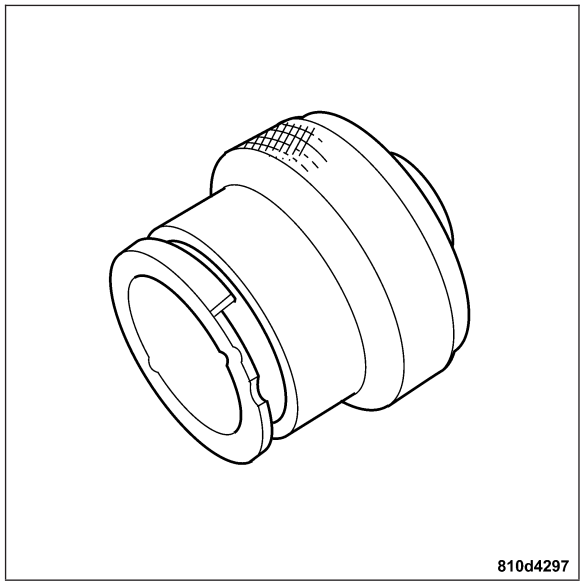

PRESSURE TESTER ADAPTER 9107

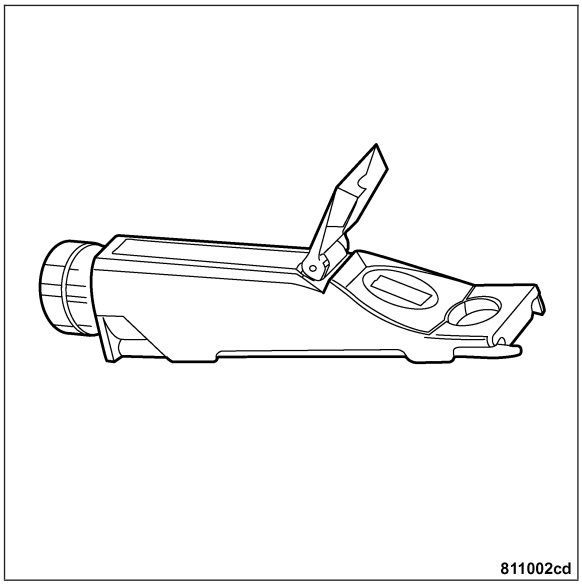

REFRACTOMETER 8286

ENGINE

TABLE OF CONTENTS

page

COOLANT
- DESCRIPTION - HOAT COOLANT 16
- OPERATION 17
- DIAGNOSIS AND TESTING - COOLANT CONCENTRATION TESTING 17
- STANDARD PROCEDURE
  - DRAINING COOLING SYSTEM 18
  - STANDARD PROCEDURE - REFILLING COOLING SYSTEM 18
  - STANDARD PROCEDURE - COOLING SYSTEM REVERSE FLUSHING 19

COOLANT LEVEL SENSOR
- REMOVAL 20
- INSTALLATION 20

ENGINE COOLANT THERMOSTAT
- DESCRIPTION 21
- OPERATION 21
- DIAGNOSIS AND TESTING 22
- REMOVAL 23
- INSTALLATION 23

COOLANT RECOVERY RESERVOIR
- OPERATION 24
- REMOVAL 24
- INSTALLATION 25

RADIATOR FAN
- REMOVAL 26
- INSTALLATION 27

RADIATOR FAN CONTROL MODULE
- REMOVAL 29
- INSTALLATION 29

ENGINE COOLANT TEMPERATURE SENSOR
- OPERATION 29
- REMOVAL 29
- INSTALLATION 31

RADIATOR
- DESCRIPTION 32
- REMOVAL 33
- CLEANING 34
- INSPECTION 34
- INSTALLATION 35

PRESSURE CAP
- OPERATION 36
- WARNING 36
- CLEANING 36

WATER PUMP
- DESCRIPTION 36
- REMOVAL 37
- INSPECTION 38
- INSTALLATION 40

COOLANT

DESCRIPTION - HOAT COOLANT

WARNING: ANTIFREEZE IS AN ETHYLENE-GLYCOL BASE COOLANT AND IS HARMFUL IF SWALLOWED OR INHALED. IF SWALLOWED, DRINK TWO GLASSES OF WATER AND INDUCE VOMITING. IF INHALED, MOVE TO FRESH AIR AREA. SEEK MEDICAL ATTENTION IMMEDIATELY. DO NOT STORE IN OPEN OR UNMARKED CONTAINERS. WASH SKIN AND CLOTHING THOROUGHLY AFTER COMING IN CONTACT WITH ETHYLENE-GLYCOL. KEEP OUT OF REACH OF CHILDREN. DISPOSE OF GLYCOL BASE COOLANT PROPERLY, CONTACT YOUR DEALER OR GOVERNMENT AGENCY FOR LOCATION OF COLLECTION CENTER IN YOUR AREA. DO NOT OPEN A COOLING SYSTEM WHEN THE ENGINE IS AT OPERATING TEMPERATURE OR HOT UNDER PRESSURE, PERSONAL INJURY CAN RESULT. AVOID RADIATOR COOLING FAN WHEN ENGINE COMPARTMENT RELATED SERVICE IS PERFORMED, PERSONAL INJURY CAN RESULT.

CAUTION: Use of Propylene-Glycol based coolants is not recommended, as they provide less freeze protection and less corrosion protection.

The cooling system is designed around the coolant. The coolant must accept heat from engine metal, in the cylinder head area near the exhaust valves and engine block. Then coolant carries the heat to the radiator where the tube/fin radiator can transfer the heat to the air.

The use of aluminum cylinder blocks, cylinder heads, and water pumps requires special corrosion protection. Mopar® Antifreeze/Coolant, 5 Year/100,000 Mile Formula (MS-9769), or the equivalent ethylene-glycol base coolant with organic corrosion inhibitors (called HOAT, for Hybrid Organic Additive Technology) is recommended. This coolant offers the best engine cooling without corrosion when mixed with 50% ethylene-glycol and 50% distilled water to obtain a freeze point of -37°C (-35°F). If it loses color or becomes contaminated, drain, flush, and replace with fresh properly mixed coolant solution.

CAUTION: Mopar® Antifreeze/Coolant, 5 Year/100,000 Mile Formula (MS-9769) may not be mixed with any other type of antifreeze. Mixing of coolants other than specified (non-HOAT or other HOAT), may result in engine damage that may not be covered under the new vehicle warranty, and decreased corrosion protection.

COOLANT PERFORMANCE

The required ethylene-glycol (antifreeze) and water mixture depends upon climate and vehicle operating conditions. The coolant performance of various mixtures follows:

Pure Water-Water can absorb more heat than a mixture of water and ethylene-glycol. This is for purpose of heat transfer only. Water also freezes at a higher temperature and allows corrosion.

100 percent Ethylene-Glycol-The corrosion inhibiting additives in ethylene-glycol need the presence of water to dissolve. Without water, additives form deposits in system. These act as insulation causing temperature to rise to as high as 149°C (300°F). This temperature is hot enough to melt plastic and soften solder. The increased temperature can result in engine detonation. In addition, 100 percent ethylene-glycol freezes at -22°C (-8°F).

50/50 Ethylene-Glycol and Water-Is the recommended mixture, it provides protection against freezing to -37°C (-34°F). The antifreeze concentration **must always** be a minimum of 44 percent, year-round in all climates. If percentage is lower, engine parts may be eroded by cavitation. Maximum protection against freezing is provided with a 68 percent antifreeze concentration, which prevents freezing down to -67.7°C (-90°F). A higher percentage will freeze at a warmer temperature. Also, a higher percentage of antifreeze can cause the engine to overheat because specific heat of antifreeze is lower than that of water.

CAUTION: Richer antifreeze mixtures cannot be measured with normal field equipment and can cause problems associated with 100 percent ethylene-glycol.

COOLANT SELECTION AND ADDITIVES

The use of aluminum cylinder blocks, cylinder heads and water pumps requires special corrosion protection. Only Mopar® Antifreeze/Coolant, 5 Year/100,000 Mile Formula (glycol base coolant with corrosion inhibitors called HOAT, for Hybrid Organic Additive Technology) is recommended. This coolant offers the best engine cooling without corrosion when mixed with 50% distilled water to obtain to obtain a freeze point of -37°C (-35°F). If it loses color or becomes contaminated, drain, flush, and replace with fresh properly mixed coolant solution.

CAUTION: Do not use coolant additives that are claimed to improve engine cooling.

OPERATION

Coolant flows through the engine block absorbing the heat from the engine, then flows to the radiator where the cooling fins in the radiator transfers the heat from the coolant to the atmosphere. During cold weather the antifreeze/coolant prevents water present in the cooling system from freezing within temperatures indicated by mixture ratio of coolant to water.

DIAGNOSIS AND TESTING - COOLANT CONCENTRATION TESTING

Coolant concentration should be checked when any additional coolant was added to the cooling system or after a coolant drain, flush and refill. The coolant mixture offers optimum engine cooling and protection against corrosion when mixed to a freeze point of -37°C (-34°F) to -46°C (-50°F). The use of a hydrometer or a refractometer can be used to test coolant concentration.

A hydrometer will test the amount of glycol in a mixture by measuring the specific gravity of the mixture. The higher the concentration of antifreeze/coolant, the larger the number of balls that will float, and higher the freeze protection.

A Refractometer, Special Tool 8286, will test the amount of antifreeze/coolant in a coolant mixture by measuring the amount a beam of light bends as it passes through the fluid.

CAUTION: Do not mix types of coolant—corrosion protection will be severely reduced.

STANDARD PROCEDURE

DRAINING COOLING SYSTEM

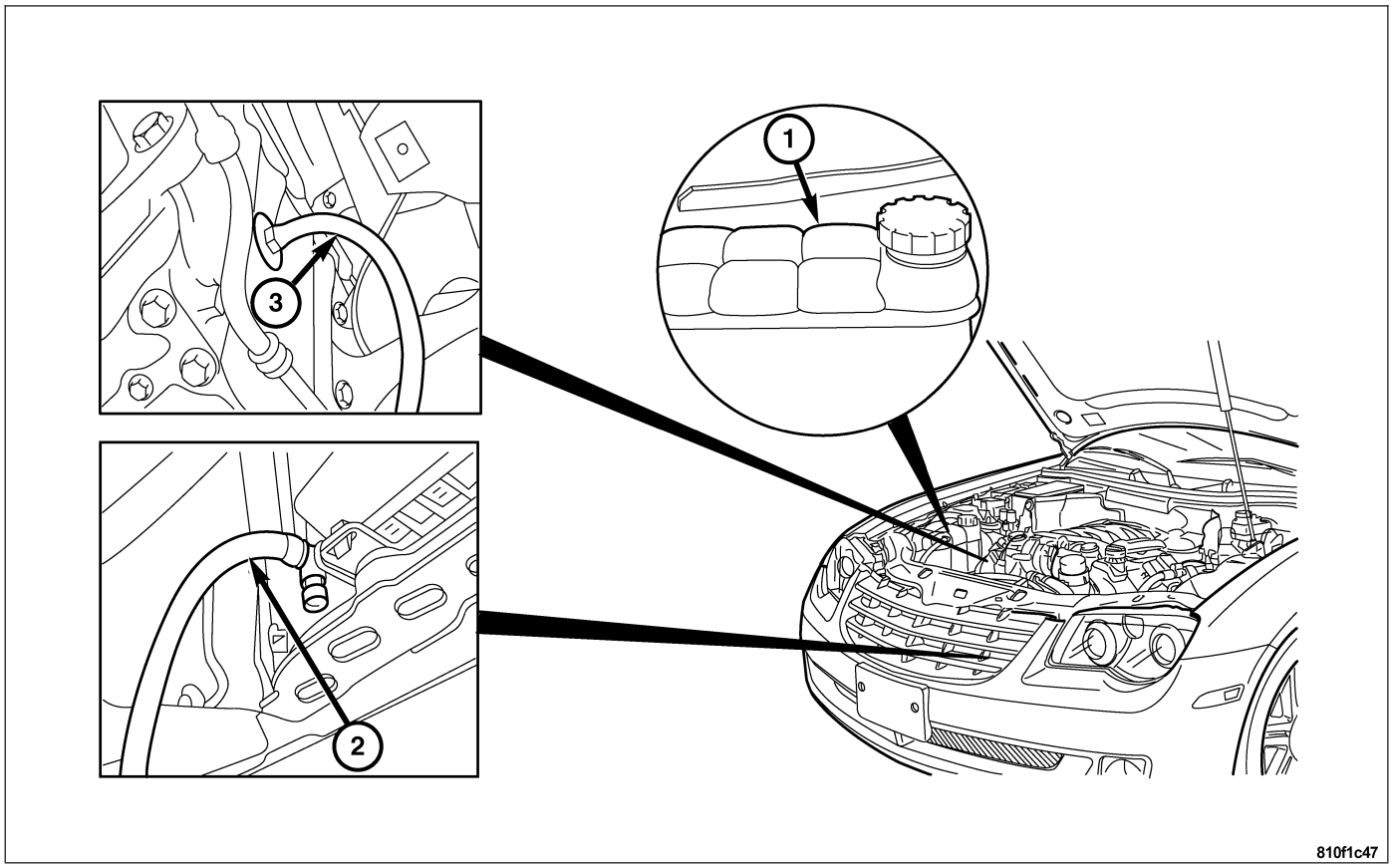

WARNING: DO NOT REMOVE THE CYLINDER BLOCK DRAIN PLUGS OR LOOSEN THE RADIATOR DRAINCOCK WITH SYSTEM HOT AND UNDER PRESSURE. SERIOUS BURNS FROM COOLANT CAN OCCUR.

1. DO NOT remove pressure cap first. With engine cold, raise and support the vehicle on a hoist and locate radiator draincock.

Note: Radiator draincock is located on the left/lower side of radiator facing to rear of vehicle.

2. Attach one end of a hose to the draincock (2). Put the other end into a clean container. Open draincock and drain coolant from radiator. This will empty the coolant recovery reservoir (1). The coolant does not have to be removed from the tank unless the system is being refilled with a fresh mixture. When tank is empty, remove pressure cap and continue draining cooling system.

STANDARD PROCEDURE - REFILLING COOLING SYSTEM

1. Tighten the radiator draincock and the cylinder block drain plug(s) (if removed).

CAUTION: Failure to purge air from the cooling system can result in an overheating condition and severe engine damage.

2. Fill system using a 50/50 mixture of antifreeze/coolant and low mineral content water. Fill the coolant recovery reservoir to service line and install pressure cap.

Note: The engine cooling system will push any remaining air into the coolant recovery reservoir within about an hour of normal driving. As a result, a drop in coolant level in the coolant recovery reservoir may occur. If the engine cooling system overheats and pushes coolant into the overflow side of the coolant recovery reservoir, this coolant will be drawn back into the cooling system ONLY IF THE PRESSURE CAP IS LEFT ON RESERVOIR. Removing the pressure cap breaks the vacuum path between the two bottle sections and the coolant will not return to cooling system.

3. With heater control unit in the HEAT position, operate engine with coolant recovery reservoir cap in place.
4. Add coolant to coolant recovery reservoir as necessary. **Only add coolant to the coolant recovery reservoir when the engine is cold. Coolant level in a warm engine will be higher due to thermal expansion.**

Note: The coolant recovery reservoir has two chambers. Coolant will normally only be in the outboard (larger) of the two. The inboard chamber is only to recover coolant in the event of an overheat or after a recent service fill. The inboard chamber should normally be empty. If there is coolant in the overflow side of the coolant recovery reservoir (after several warm/cold cycles of the engine) and coolant level is above cold full when cold, disconnect the end of the overflow hose at the radiator and lower it into a clean container. Allow coolant to drain into the container until emptied. Reconnect overflow hose to radiator.

STANDARD PROCEDURE - COOLING SYSTEM REVERSE FLUSHING

CAUTION: The cooling system normally operates at 97-110 kPa (14-16 psi) pressure. Exceeding this pressure may damage the radiator or hoses.

Reverse flushing of the cooling system is the forcing of water through the cooling system. This is done using air pressure in the opposite direction of normal coolant flow. It is usually only necessary with very dirty systems with evidence of partial plugging.

CHEMICAL CLEANING

If visual inspection indicates the formation of sludge or scaly deposits, use a radiator cleaner (Mopar Radiator Kleen or equivalent) before flushing. This will soften scale and other deposits and aid the flushing operation.

CAUTION: Be sure instructions on the container are followed.

REVERSE FLUSHING RADIATOR

Disconnect the radiator hoses from the radiator. Attach a section of radiator hose to the radiator bottom outlet fitting and insert the flushing gun. Connect a water supply hose and air supply hose to the flushing gun.

CAUTION: The cooling system normally operates at 97-110 kPa (14 -16 psi) pressure. Exceeding this pressure may damage the radiator or hoses.

Allow the radiator to fill with water. When radiator is filled, apply air in short blasts allowing radiator to refill between blasts. Continue this reverse flushing until clean water flows out through rear of radiator cooling tube passages. For more information, refer to operating instructions supplied with flushing equipment. Have radiator cleaned more extensively by a radiator repair shop.

COOLANT LEVEL SENSOR

REMOVAL

1. Partially drain the cooling system. **Refer to Page 7-18**.
2. Disconnect the coolant level sensor harness connector (1).
3. Depress the locking tabs and pull the coolant level sensor (2) from the coolant recovery reservoir.

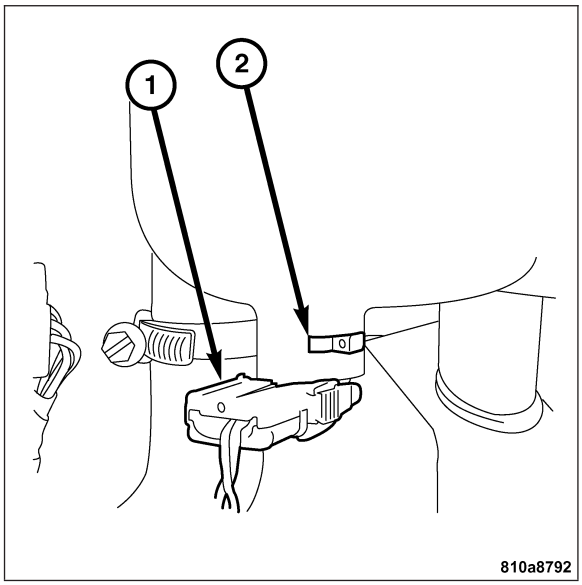

INSTALLATION

1. Lubricate the new coolant level sensor o-ring with coolant.
2. Push the coolant level sensor (2) into the coolant recovery reservoir until it snaps into place.
3. Connect the coolant level sensor harness connector (1).
4. Refill the cooling system. **Refer to Page 7-18**.
5. Start the engine and check for coolant leaks.
6. Recheck the coolant level and adjust as necessary.

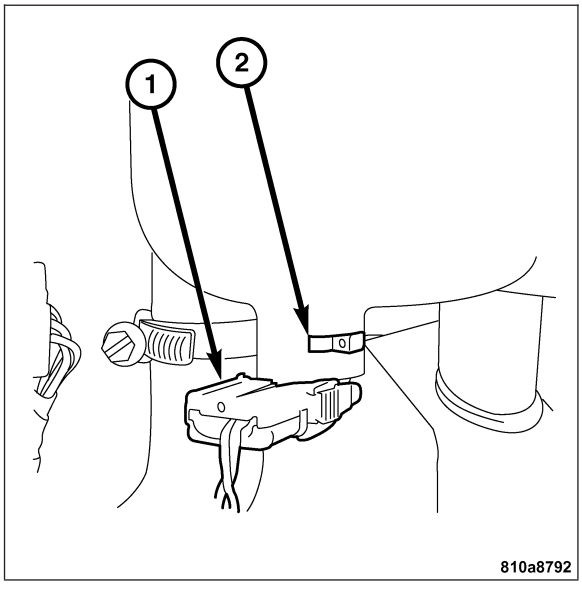

ENGINE COOLANT THERMOSTAT

DESCRIPTION

CAUTION: Do not operate an engine without a thermostat, except for servicing or testing.

A pellet-type thermostat controls the operating temperature of the engine by controlling the amount of coolant flow to the radiator. On all engines the thermostat is closed below 195°F (90°C). Above this temperature, coolant is allowed to flow to the radiator. This provides quick engine warm up and overall temperature control.

The same thermostat is used for winter and summer seasons. An engine should not be operated without a thermostat, except for servicing or testing. Operating without a thermostat causes other problems. These are:

- Longer engine warm-up time
- Unreliable warm-up performance
- Increased exhaust emissions
- Crankcase condensation

This condensation can result in sludge formation.

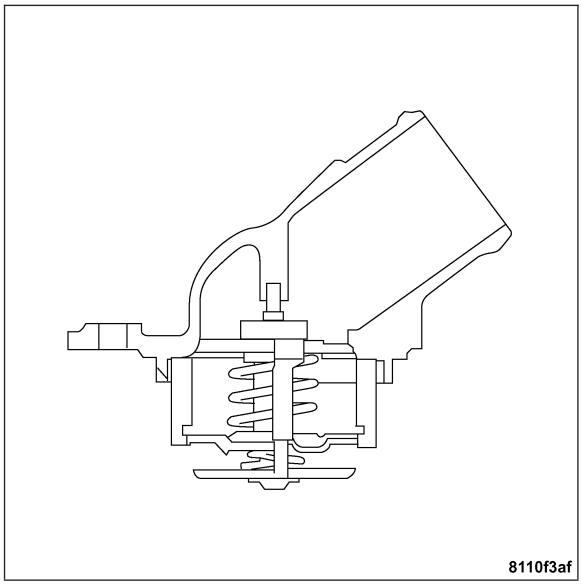

OPERATION

The wax pellet is located in a sealed container at the spring end of the thermostat. When heated, the pellet expands, overcoming closing spring tension and water pump pressure to force the valve to open.

DIAGNOSIS AND TESTING

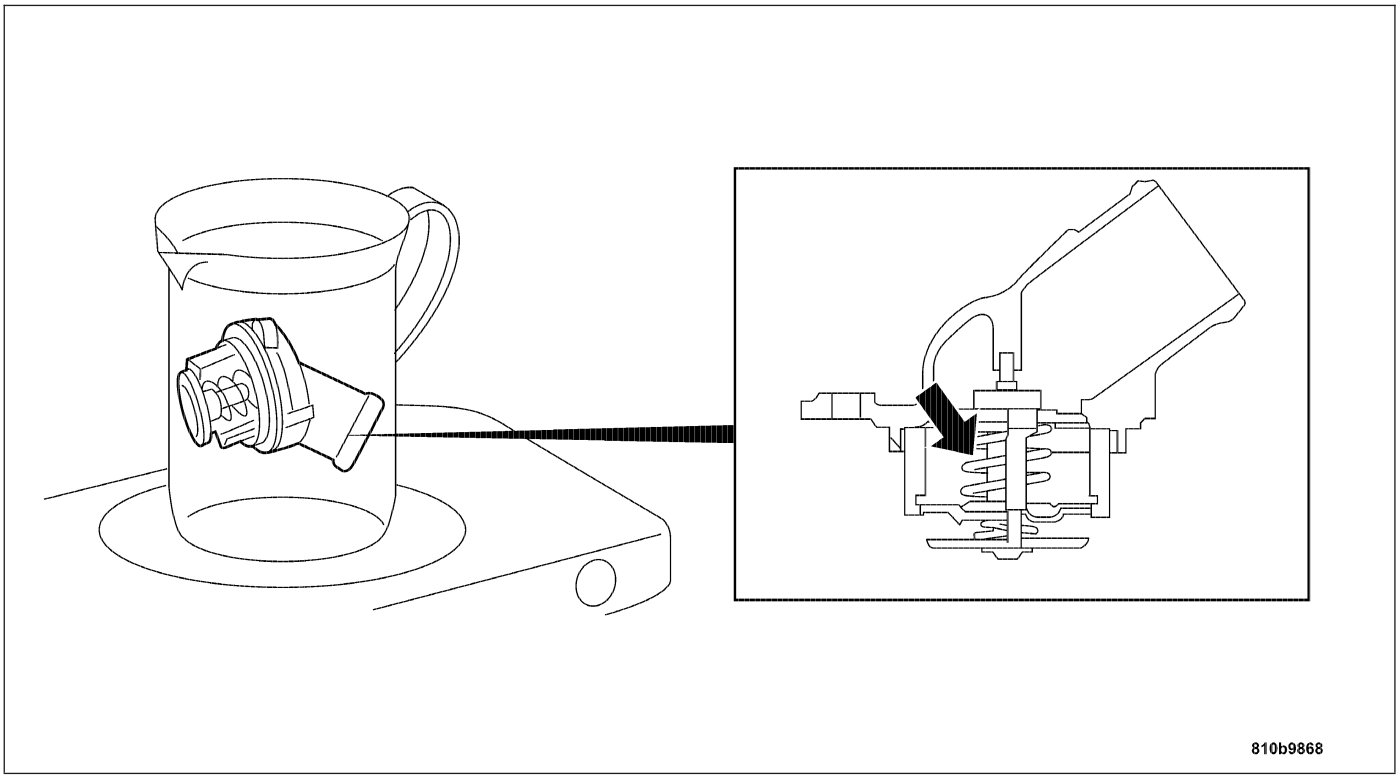

1. Remove the thermostat. **Refer to Page 7-23**.
2. Suspend the thermostat in a container of water.

CAUTION: Never use a welding torch or soldering torch as the sudden introduction of heat alters the structure of the metal!

3. Heat the container and thermostat.

Note: The rate of increase should not be more than 1°C to 2°C/min from about 8 °C below the start of opening of the coolant thermostat.

4. Measure the temperature of the water.
5. Heat water to the fully open temperature of the thermostat and then measure the stroke.
6. If the specifications are not achieved, install a new coolant thermostat.

REMOVAL

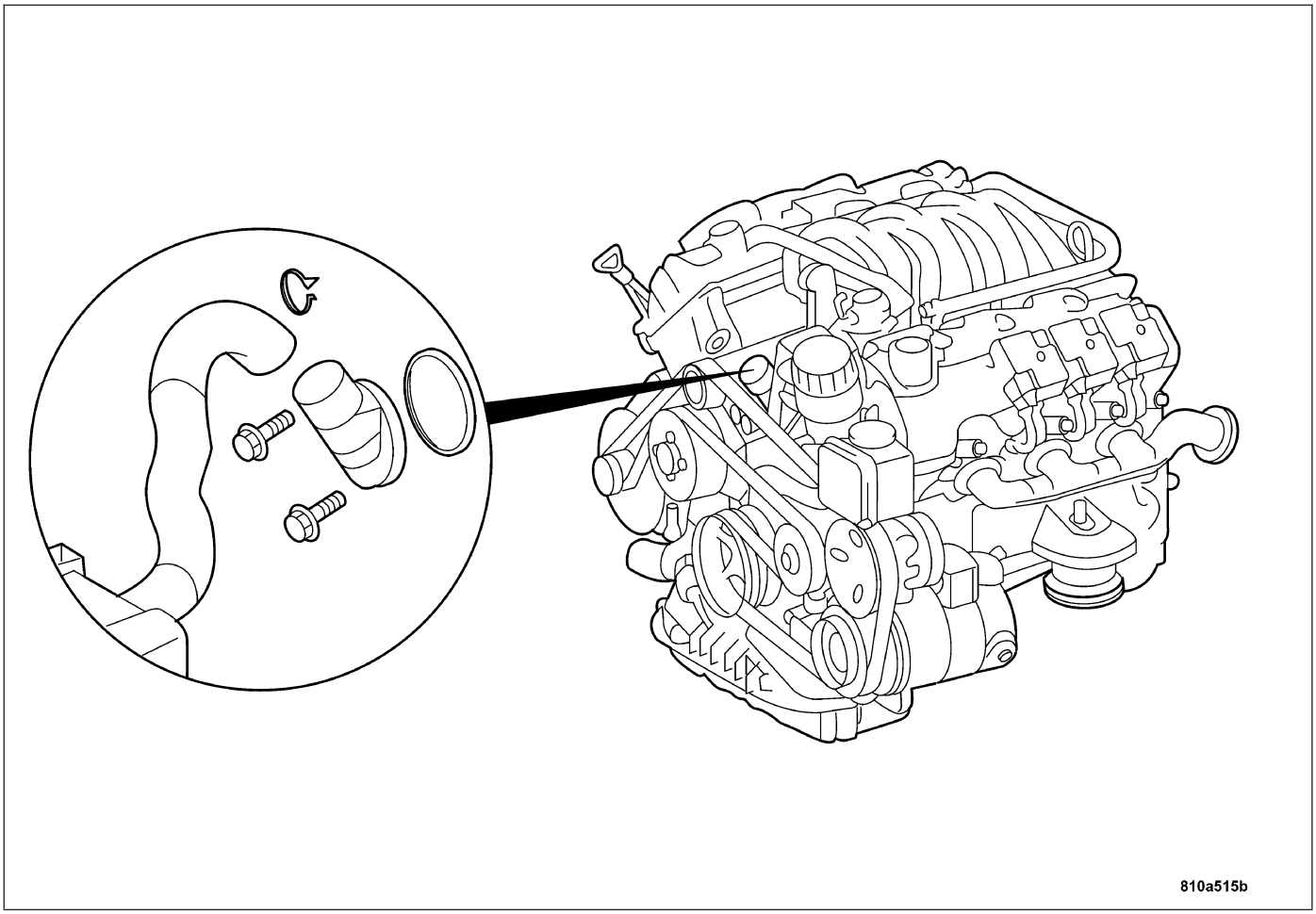

1. Remove the air cleaner housing. **Refer to Page 9-608**.
2. Partially drain the cooling system. **Refer to Page 7-18**.
3. Disconnect the upper radiator hose.

Note: The thermostat housing and the thermostat are serviced as an assembly. The thermostat cannot be service separately.

4. Remove the thermostat housing retaining bolts and remove the thermostat and housing from the engine.

INSTALLATION

1. Install the thermostat housing with a new o-ring. Tighten the bolts to 10 N·m (89 in. lbs.).
2. Connect the upper radiator hose.
3. Fill the cooling system. **Refer to Page 7-18**.
4. Start the engine and check for coolant leaks.
5. Recheck the coolant level and adjust as necessary.

COOLANT RECOVERY RESERVOIR

OPERATION

The pressure chamber keeps the coolant free of trapped air, provides a volume for expansion and contraction, and provides a convenient and safe method for checking and adjusting coolant level at atmospheric pressure. It also provides some reserve coolant to cover minor leaks, evaporation or boiling losses. The overflow chamber allows coolant recovery in case of an overheat.

REMOVAL

1. Disconnect the negative battery cable.
2. Partially drain the cooling system. **Refer to Page 7-18**.
3. Disconnect the coolant hose from the radiator (1).
4. Disconnect the coolant level sensor harness connector (2) at the coolant recovery reservoir.

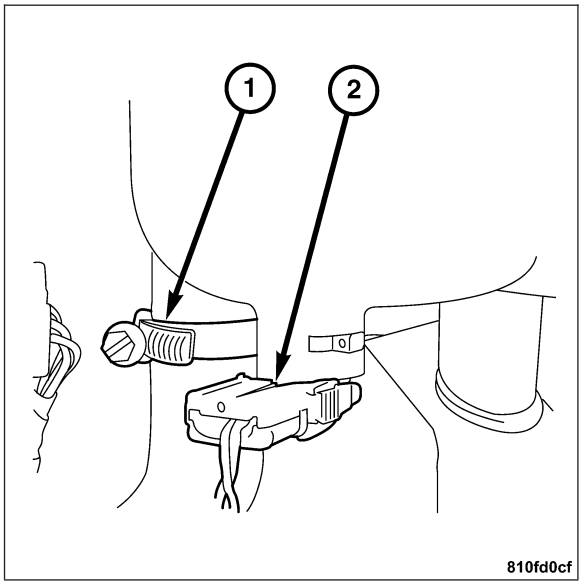

5. Disconnect the coolant overflow hose (1).
6. Remove the two retaining nuts (2) and lift the coolant recovery reservoir from the engine compartment.

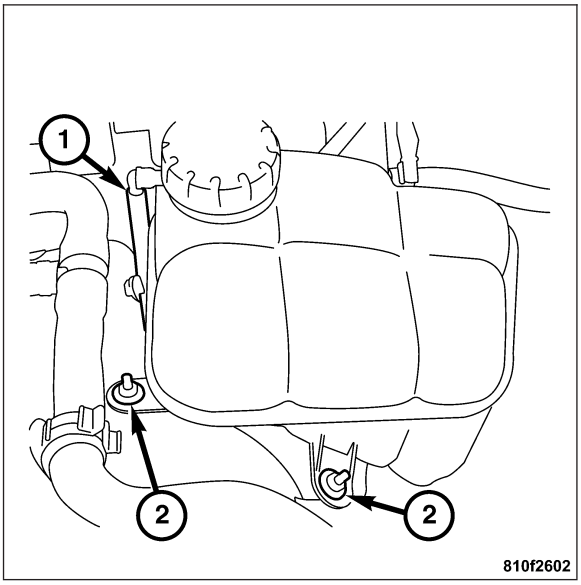

INSTALLATION

1. Position the coolant recovery reservoir in the engine compartment.
2. Install the two retaining nuts (2). Tighten the nuts to 5 N·m (44 in. lbs.).
3. Connect the coolant overflow hose (1).

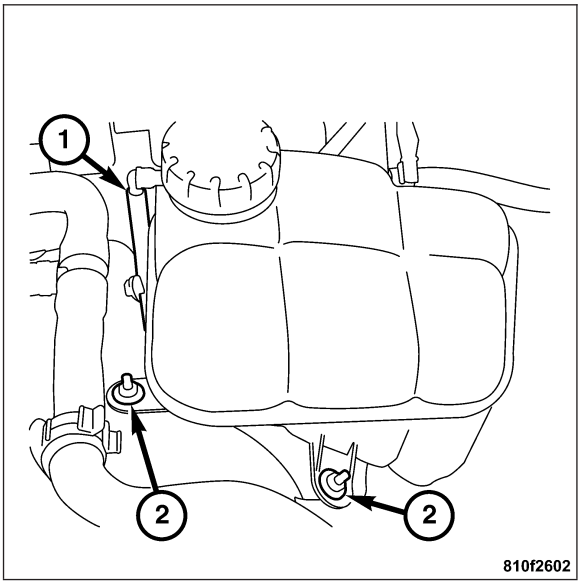

4. Connect the coolant level sensor harness connector (2).
5. Connect the coolant hose (1) from the radiator.
6. Fill the cooling system. **Refer to Page 7-18**.
7. Start the engine and check for coolant leaks.
8. Recheck the coolant level.
9. Connect the negative battery cable.

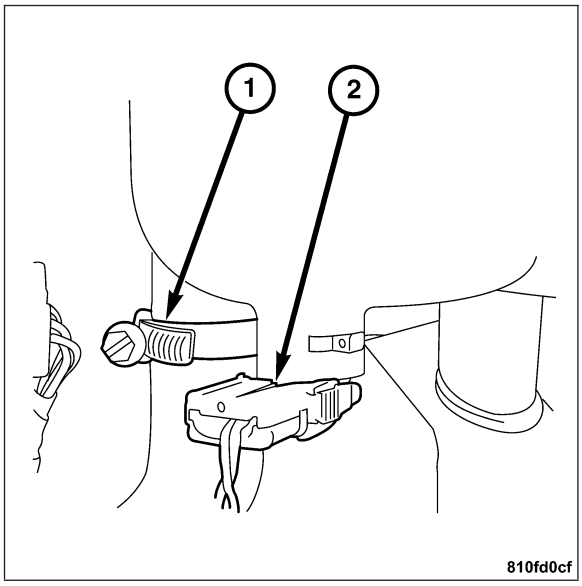

RADIATOR FAN

REMOVAL

1. Disconnect the negative battery cable.
2. Disconnect the radiator fan harness connector (1).

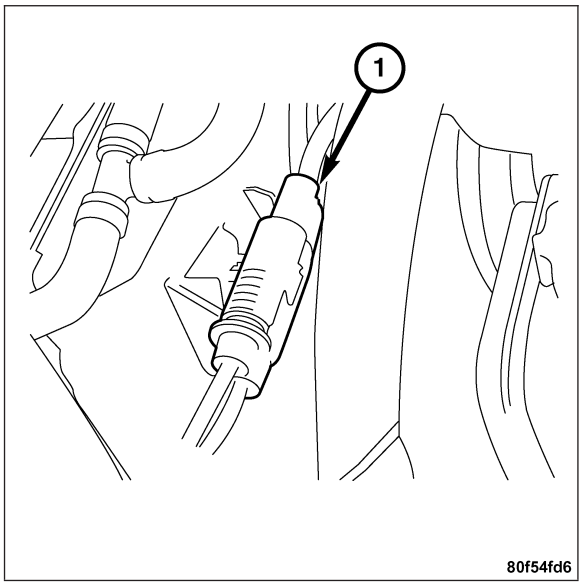

3. Remove the coolant hose (1) from the mounting bracket (2).

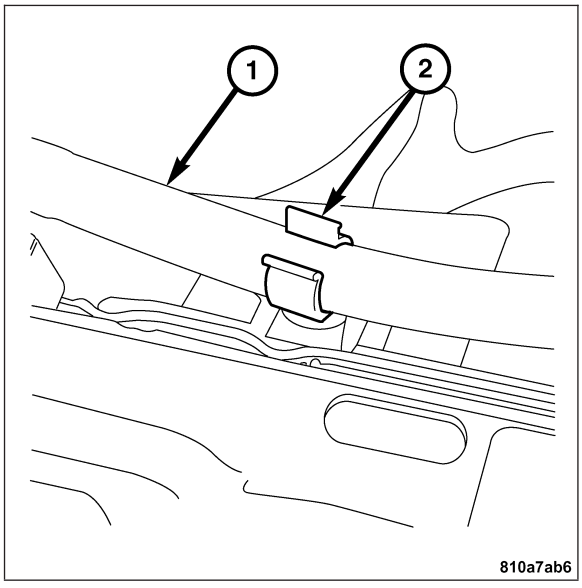

4. Remove the radiator fan hold down clamps (1).

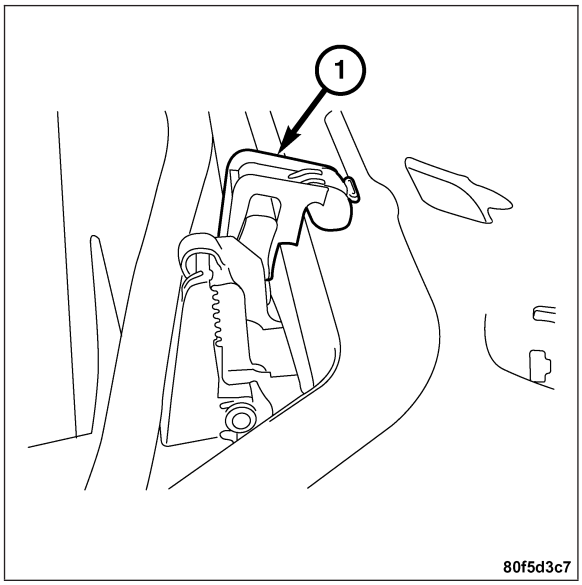

5. Lift the radiator fan up and out of the vehicle.

INSTALLATION

Note: The two retaining studs of the radiator fan must be located at the bottom in the rubber mounts. Lightly lubricate the two retaining studs (1).

1. Position the radiator fan in the rubber mounts.

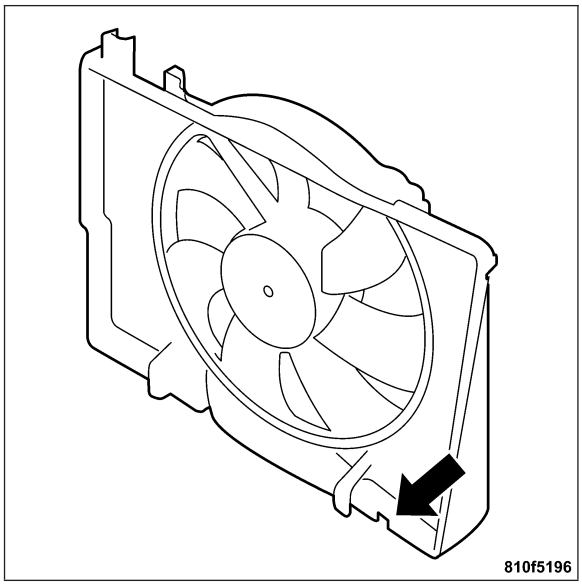

2. Install the radiator fan hold down clamps (1).

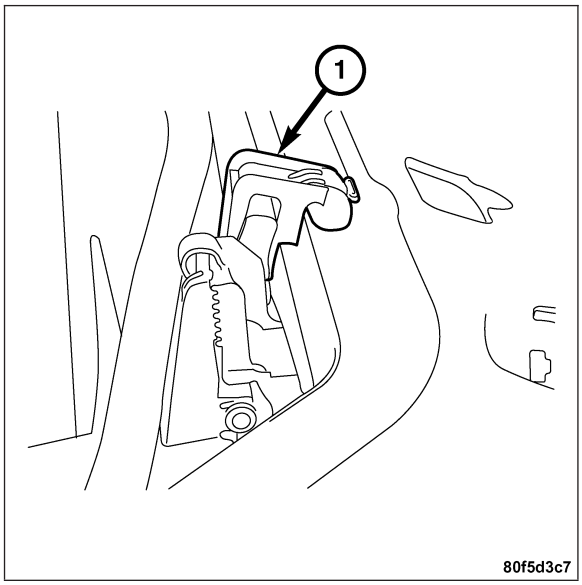

3. Route the coolant hose (1) through the bracket (2) on the radiator fan.

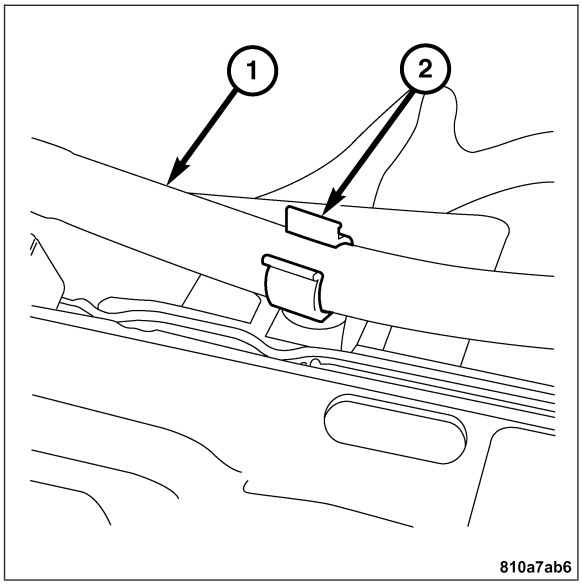

4. Connect the radiator fan harness connector (1).

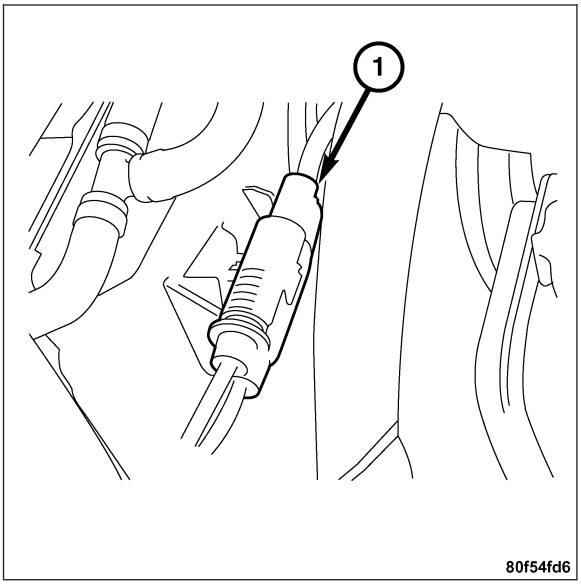

5. Connect the negative battery cable.

RADIATOR FAN CONTROL MODULE

REMOVAL

1. Disconnect the negative battery cable.
2. Disconnect the radiator fan control module harness connector (2).
3. Remove the retaining nuts at the top and bottom of the cooling fan module (1).
4. Remove the cooling fan module from the engine compartment.

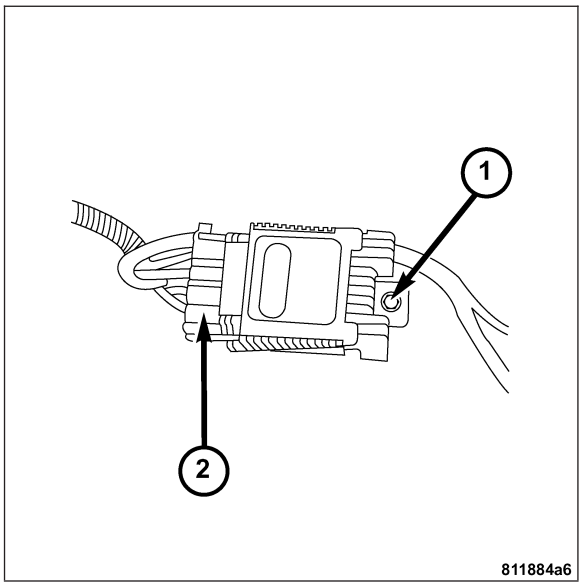

INSTALLATION

1. Position the radiator fan control module on the inner fender well studs.
2. Install the upper and lower retaining nuts and tighten to 10 N·m (89 in. lbs.).
3. Connect the radiator fan control module harness connector.
4. Connect the negative battery cable.

ENGINE COOLANT TEMPERATURE SENSOR

OPERATION

The engine coolant temperature sensor provides an input to the powertrain control module (PCM). As coolant temperature varies, the engine coolant temperture sensor resistance changes, resulting in a different input voltage to the PCM.

When the engine is cold, the PCM will demand slightly richer air-fuel mixtures and higher idle speeds until normal operating temperatures are reached.

The engine coolant sensor input also determines operation of the radiator fan.

REMOVAL

1. Disconnect the negative battery cable.
2. Partially drain the cooling system. **Refer to Page 7-18**.

3. Disconnect the engine coolant temperature sensor harness connector (1).

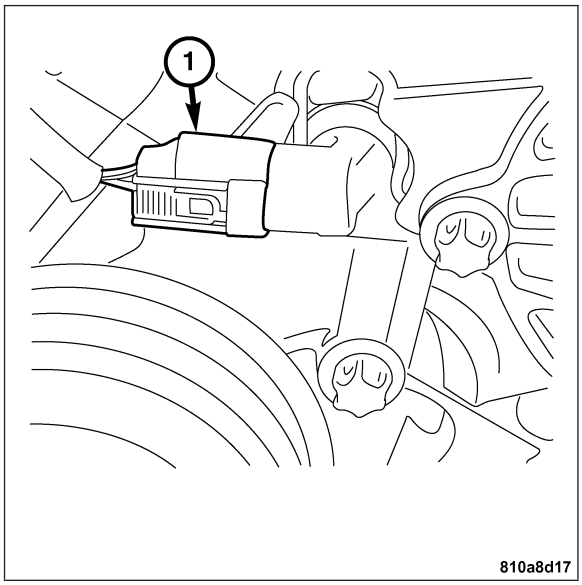

4. Remove the engine coolant temperature sensor retaining clip (1) and the sensor.

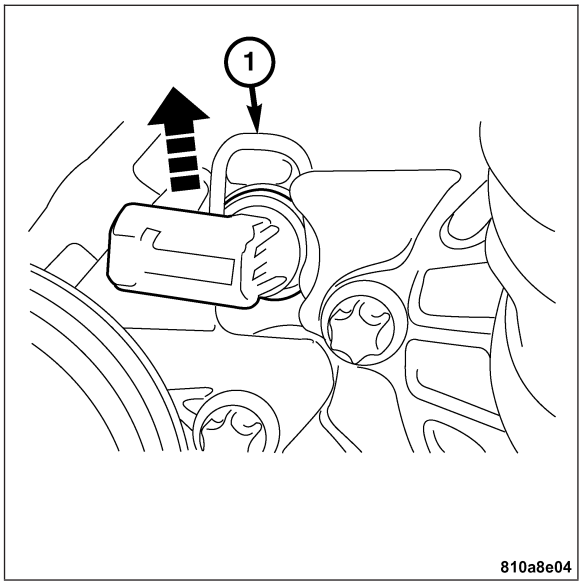

INSTALLATION

1. Clean any debris or corrosion from the engine coolant temperature sensor mounting surface.
2. Use a small amount of petroleum jelly to lubricate the sensor seal.
3. Install the engine coolant temperature sensor and retaining clip.
4. Connect the engine coolant temperature sensor harness connector (1).
5. Fill the cooling system. **Refer to Page 7-18**.
6. Connect the negative battery cable.

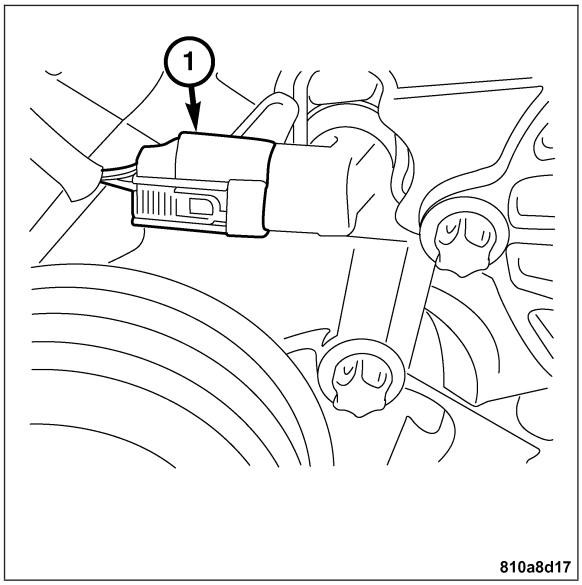

RADIATOR

DESCRIPTION

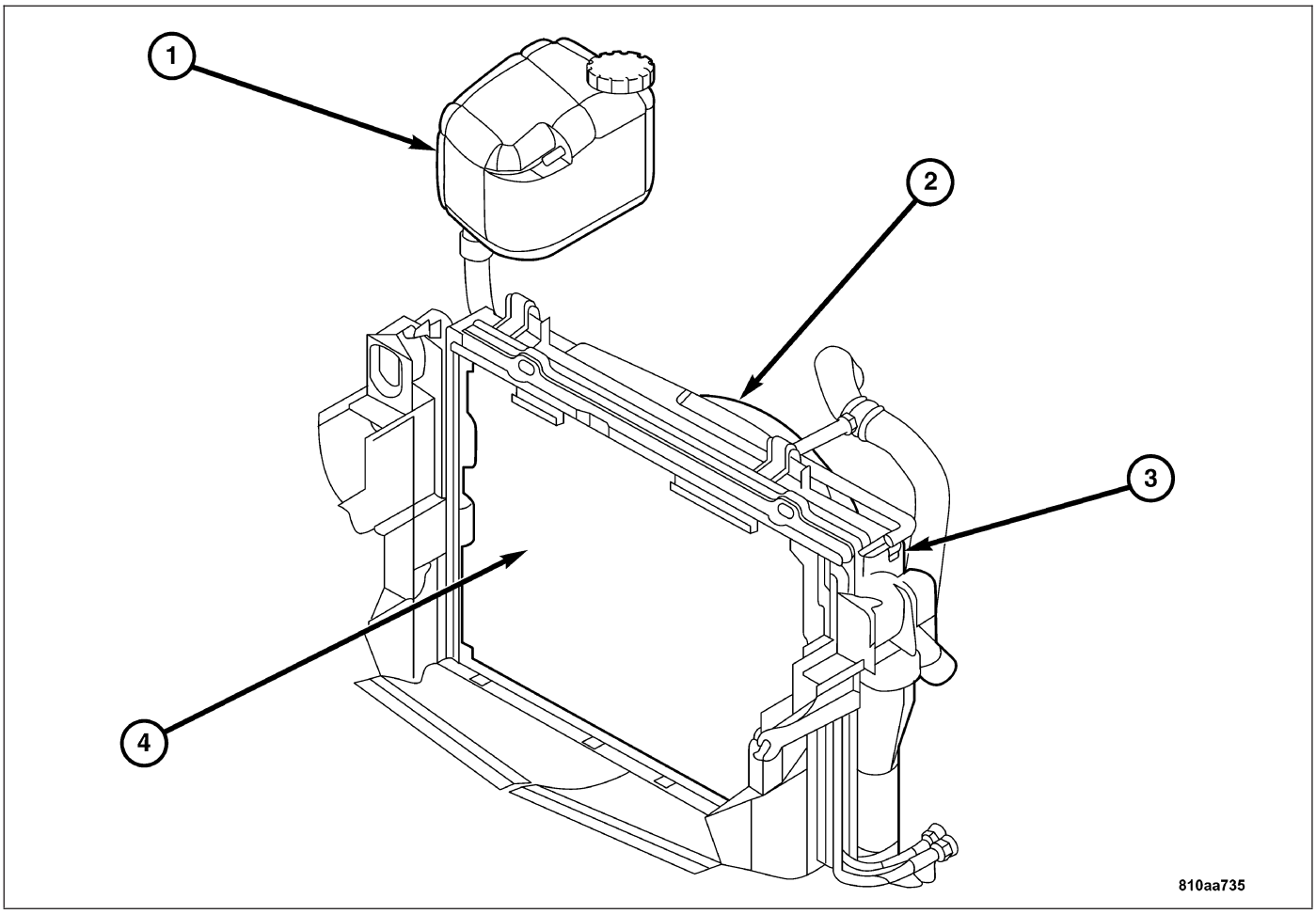

The Crossfire has a cross flow type radiator (4) with plastic side tanks (3).

Plastic tanks, while stronger than brass, are subject to damage by impact, such as from tools or wrenches. Handle radiator with care.

REMOVAL

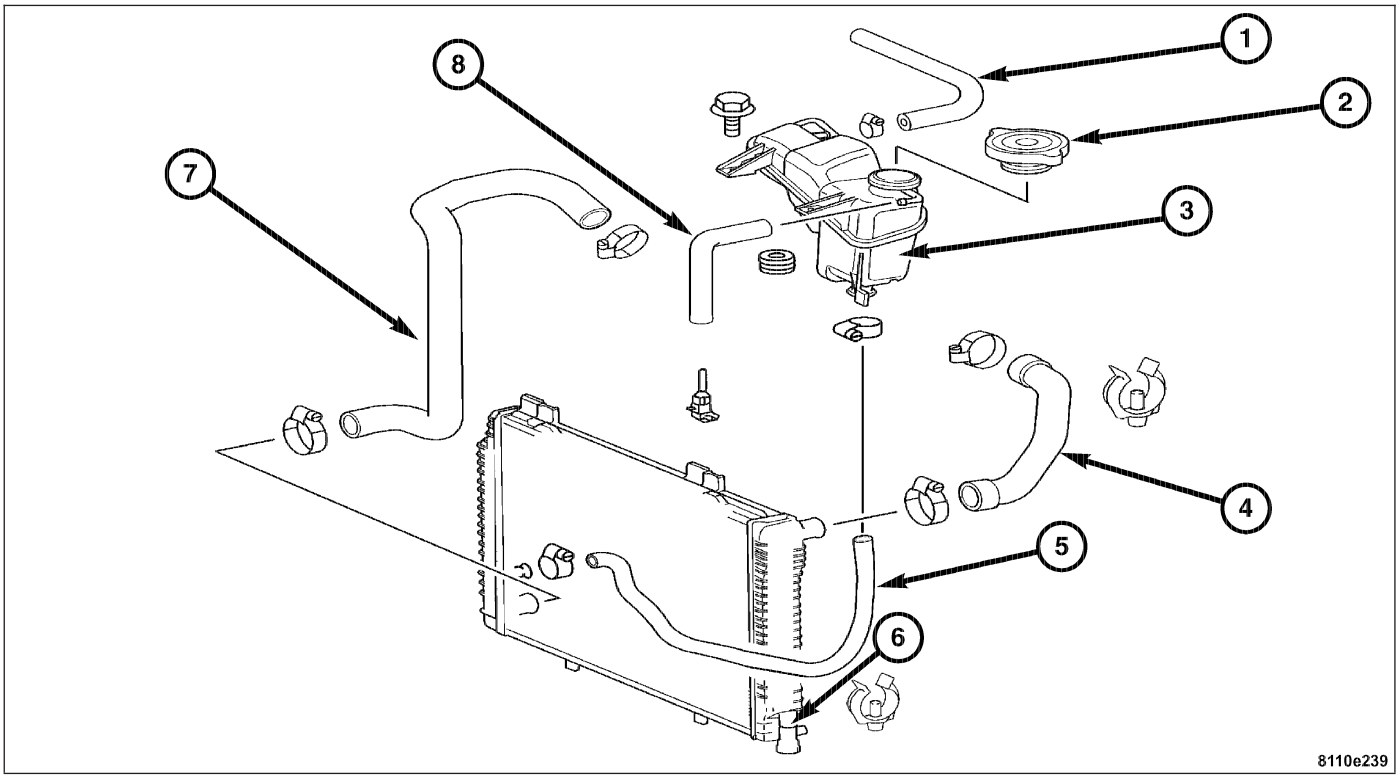

1. Disconnect the negative battery cable.
2. Remove the radiator fan. **Refer to Page 7-26**.
3. Drain the cooling system. **Refer to Page 7-18**.
4. Remove the air cleaner inlet tubes.
5. Disconnect the upper radiator hose (4).
6. Disconnect the lower radiator hose (7) and coolant recovery reservoir hose (5).
7. Disconnect the transmission cooler lines and fit together with coupler (automatic transmission only). **Refer to Page 7-49**.

8. Remove the radiator hold down clamps (1).

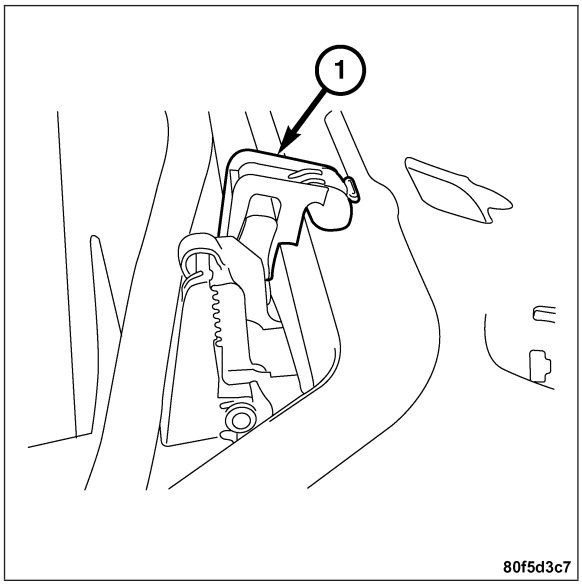

9. Tilt the radiator forward and remove the A/C condenser to the radiator retaining bolts (1).
10. Remove the radiator from the vehicle.

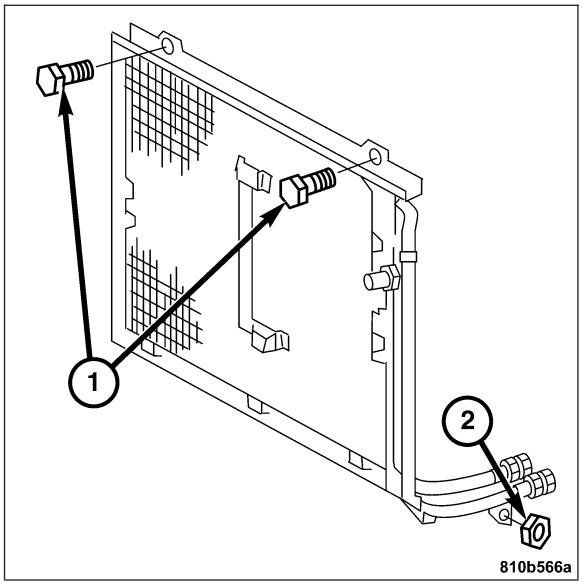

CLEANING

Clean radiator fins with the engine cold, apply cold water and compressed air to the back (engine side) of the radiator to flush the radiator of debris.

INSPECTION

The radiator cooling fins should be checked for damage or deterioration. Inspect cooling fins to make sure they are not bent or crushed, these areas result in reduced heat exchange causing the cooling system to operate at higher temperatures. Inspect the plastic end tanks for cracks, damage or leaks.

INSTALLATION

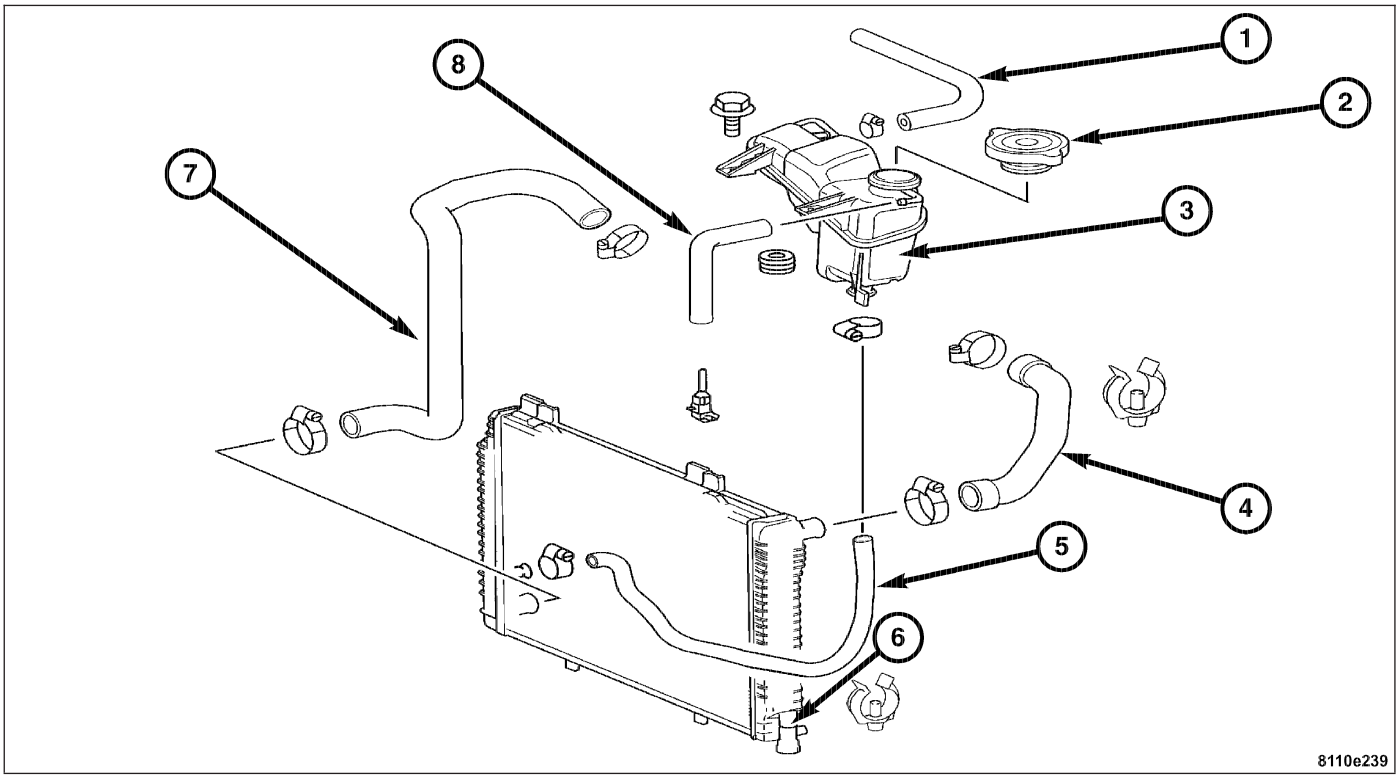

1. Position the radiator in vehicle.
2. Connect the lower radiator hose (7) and the coolant recovery reservoir hose (5).
3. Connect the upper radiator hose (4).
4. Install the A/C condenser to the radiator retaining bolts. Tighten the bolts to 10 N·m (89 in. lbs.).
5. Install the radiator retaining clamps (1).
6. Install the radiator fan. **Refer to Page 7-27**.
7. Connect the transmission cooler lines (automatic transmission only). **Refer to Page 7-50**.
8. Install the air inlet tubes.
9. Fill the cooling system. **Refer to Page 7-18**.
10. Connect the negative battery cable.
11. Start the engine and check for coolant leaks.
12. Recheck the coolant level.

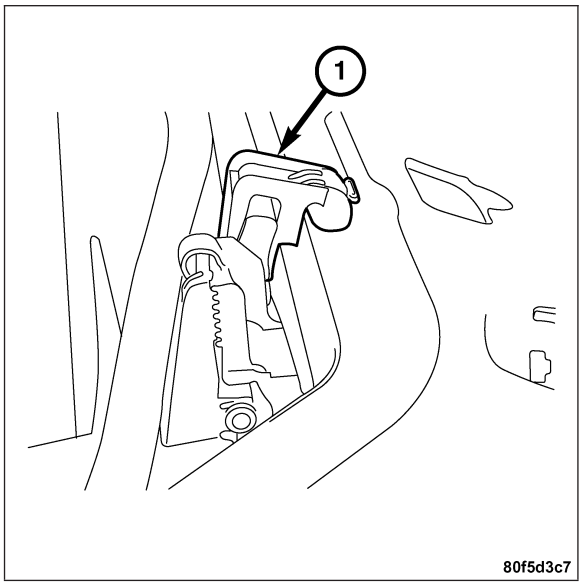

PRESSURE CAP

OPERATION

The pressure cap allows the cooling system to operate at higher than atmospheric pressure which raises the coolant boiling point, thus allowing increased radiator cooling capacity. The pressure cap releases pressure at some point within a range of 110 kPa ± 14 kPa (16 psi ± 2 psi).

CAUTION: Use only the pressure cap specified for this vehicle. Use of other pressure caps can lead to coolant loss and overheating.

WARNING

WARNING: THE WARNING WORDS DO NOT OPEN HOT ON THE COOLANT RECOVERY RESERVOIR PRESSURE CAP IS A SAFETY PRECAUTION. WHEN HOT, PRESSURE BUILDS UP IN COOLING SYSTEM. TO PREVENT SCALDING OR INJURY, THE COOLANT RECOVERY RESERVOIR PRESSURE CAP SHOULD NOT BE REMOVED WHILE THE SYSTEM IS HOT AND/OR UNDER PRESSURE.

There is no need to remove the pressure cap at any time except for the following purposes:

- Checking and adjust antifreeze freeze point.
- Refilling system with new coolant.
- Conducting service procedures.
- Checking for vacuum leaks.

CLEANING

Clean the radiator pressure cap using a mild soap and water only.

WATER PUMP

DESCRIPTION

The water pump has a die cast aluminum housing and a swept vane impeller. It bolts directly to the timing chain cover.

REMOVAL

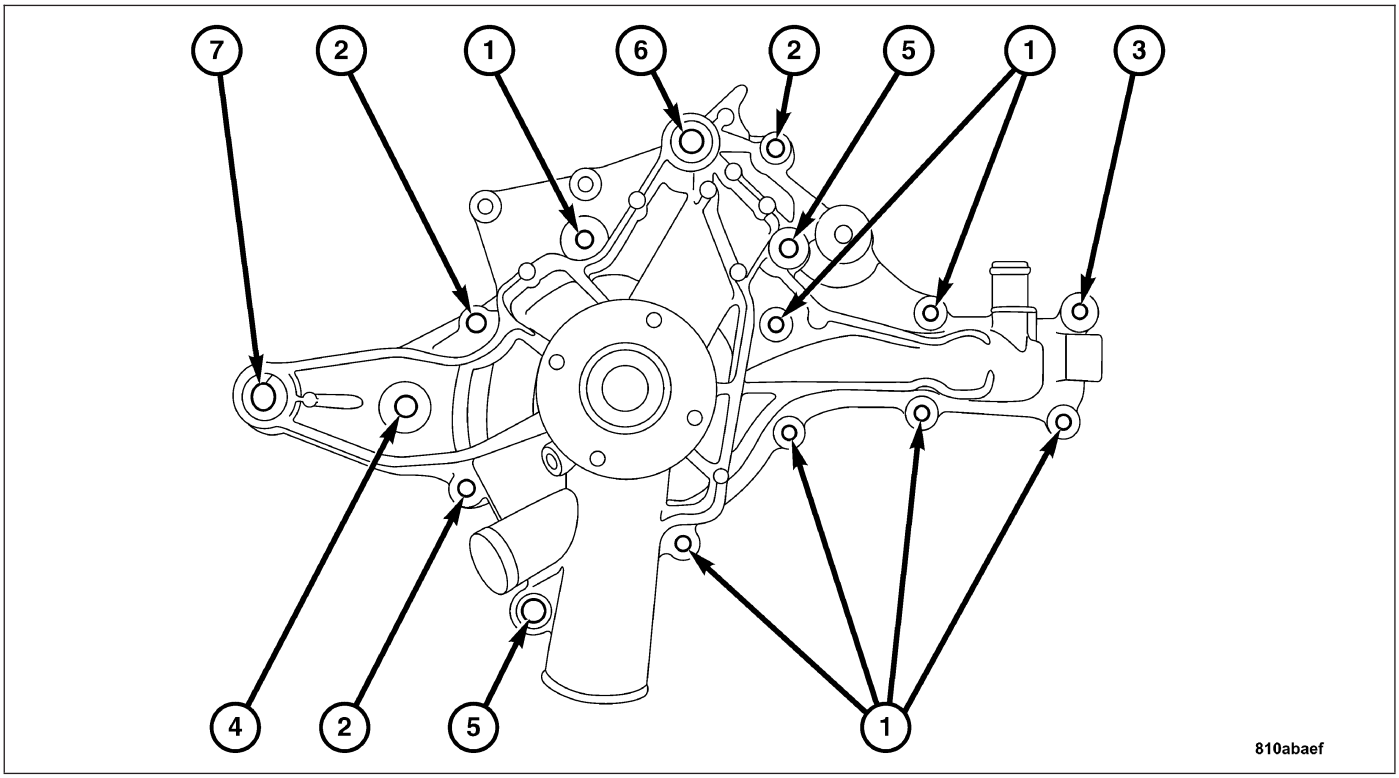

1 - BOLT M6X19
2 - BOLT M6X43
3 - BOLT M8X80
4 - BOLT M8X90
5 - BOLT M8X110
6 - BOLT M8X135
7 - BOLT M10X110

1. Disconnect the negative battery cable.
2. Drain the cooling system. **Refer to Page 7-18**.
3. Remove the air cleaner.
4. Remove the radiator fan. **Refer to Page 7-26**.
5. Remove the accessory drive belt. **Refer to Page 7-45**.
6. Remove the belt tensioner. **Refer to Page 7-44**.

7. Disconnect the lower radiator (2) hose and the coolant bypass hose (1).

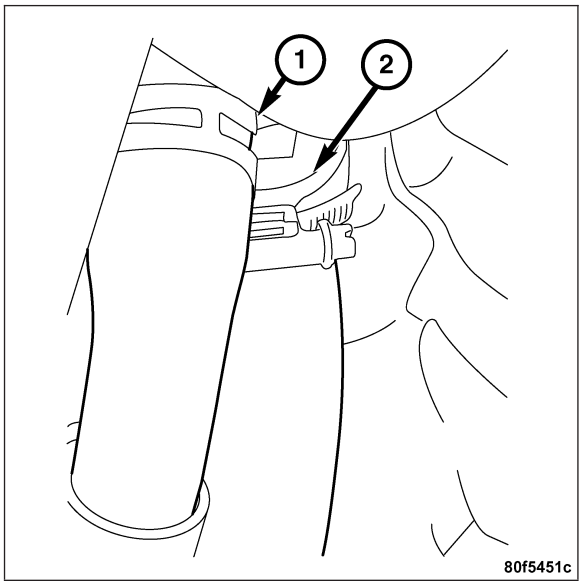

8. Remove the water pump pulley (2) and the idler pulley (1).
9. Remove the water pump retaining bolts and water pump.

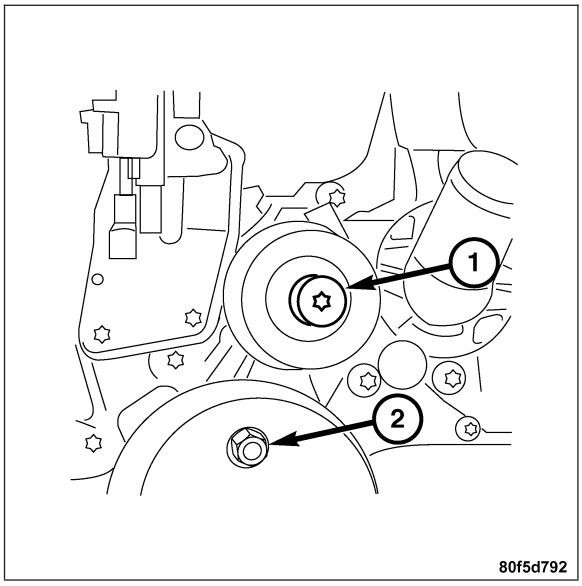

INSPECTION

Note: It is normal for the water pump to weep a small amount of coolant from the weep hole (black stain on water pump body). Do not replace the water pump if this condition exists. Replace the water pump if a heavy deposit or a steady flow of engine coolant is evident from the weep hole. This indicates a shaft seal failure and pump must be replaced. Be sure to perform a thorough analysis before replacing water pump.

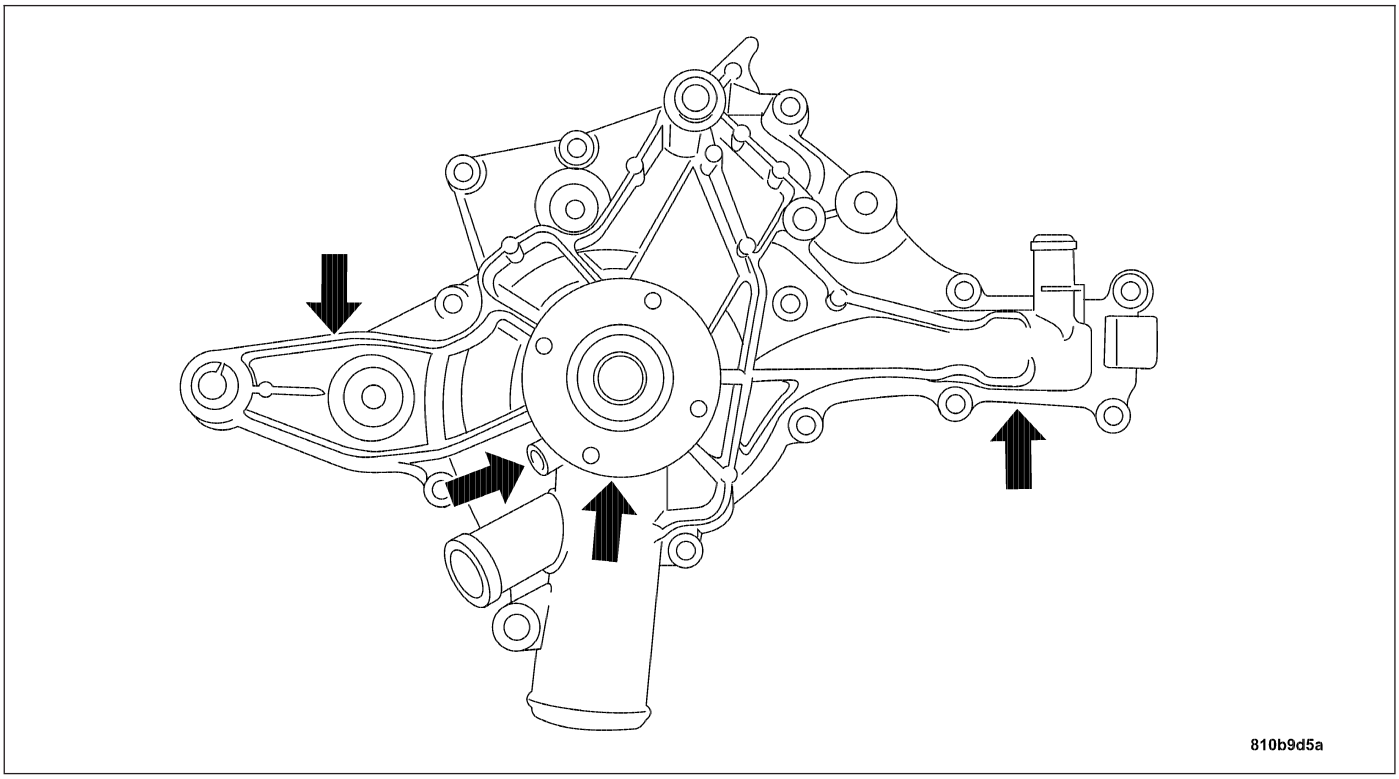

Inspect and replace the water pump if it has any of the following defects:

1. Damage or cracks on the pump body.
2. Coolant leaks; if the seal is leaking, this will be evident by traces of thick deposits of dried coolant draining from the pump weep hole. A thin black stain below pump weep hole/passage is considered normal operation.
3. Impeller rubs against the engine front cover.
4. Excessively loose or rough turning bearing.

INSTALLATION

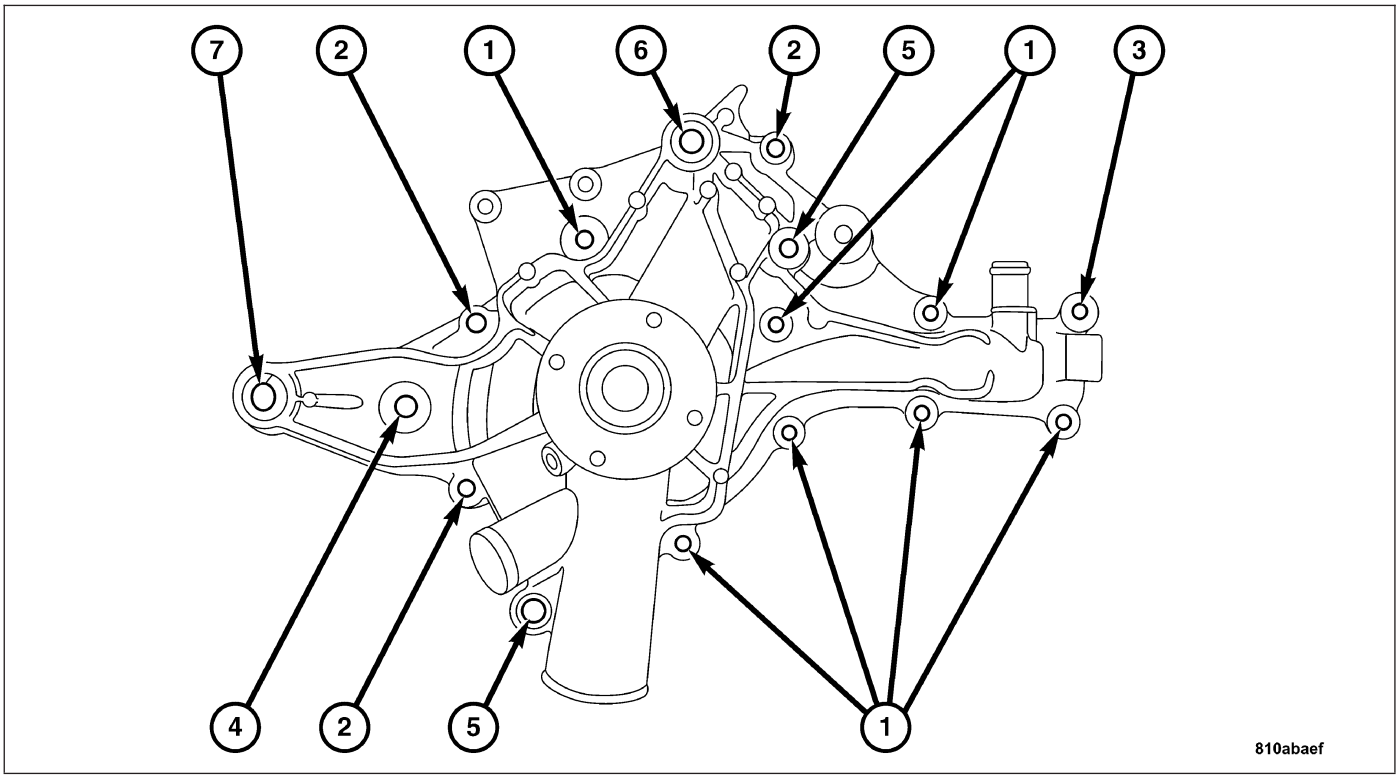

1 - BOLT M6X19
2 - BOLT M6X43
3 - BOLT M8X80
4 - BOLT M8X90
5 - BOLT M8X110
6 - BOLT M8X135
7 - BOLT M10X110

1. Clean all gasket surfaces.
2. Position the water pump with a new gasket on the timing chain cover.
3. Install the water pump bolts in the correct positions. Tighten the bolts to 35 N·m (26 ft. lbs.).
4. Install the belt tensioner. **Refer to Page 7-44**.

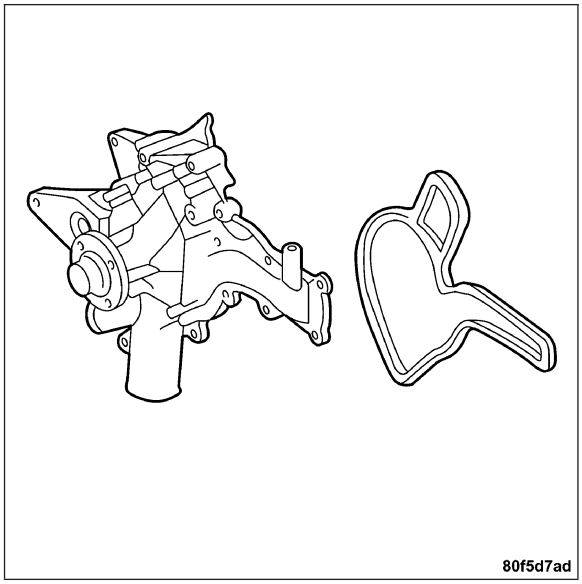

5. Install the water pump pulley and bolts (2). Tighten the water pump pulley bolts to 10 N·m (89 in. lbs.).
6. Install the idler pulley and screw. Tighten the idler pulley screw to 10 N·m (89 in. lbs.).
7. Connect the lower radiator hose (2) and coolant by pass hose (1).
8. Install the accessory drive belt. **Refer to Page 7-46**.
9. Install the radiator fan. **Refer to Page 7-27**.
10. Install the air cleaner.
11. Connect the negative battery cable.
12. Fill the cooling system. **Refer to Page 7-18**.
13. Start the engine and check for coolant leaks.
14. Recheck the coolant level.

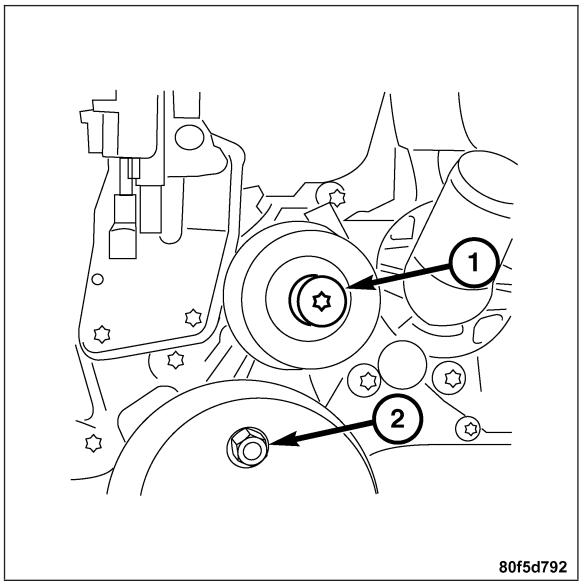

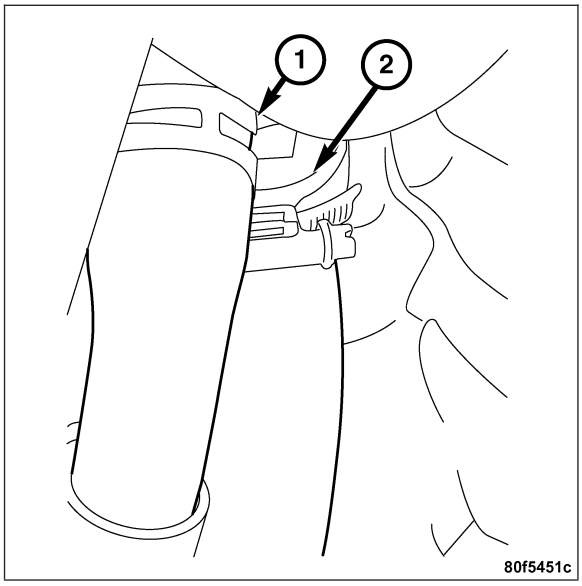

ACCESSORY DRIVE

TABLE OF CONTENTS

page

ACCESSORY DRIVE
- DESCRIPTION 42
- OPERATION 42
- DIAGNOSIS AND TESTING - ACCESSORY DRIVE BELT 43
- SPECIFICATIONS-TORQUE 43

BELT TENSIONER
- REMOVAL 44
- INSTALLATION 44

page

DRIVE BELT
- REMOVAL 45
- CLEANING 45
- INSPECTION 45
- INSTALLATION 46

IDLER PULLEY
- REMOVAL 47
- INSTALLATION 48

ACCESSORY DRIVE

DESCRIPTION

A single, serpentine style belt drives all of the engine accessories. The accessory drive includes an automatic tensioner, making adjustments unnecessary for the life of the belt.

OPERATION

The accessory drive belt provides the link between the engine crankshaft and the engine accessories. Tension on the accessory drive belt is maintained by an automatic belt tensioner.

1. Crankshaft
2. A/C Compressor
3. Power Steering Pump
4. Idler Pulley
5. Generator
6. Water Pump
7. Tensioner

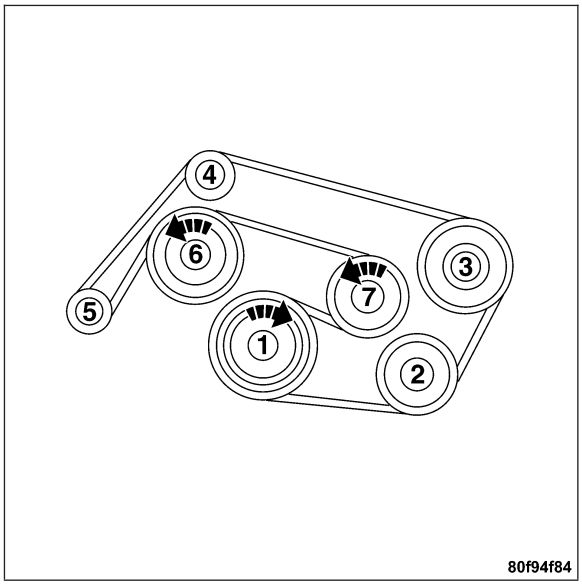

DIAGNOSIS AND TESTING - ACCESSORY DRIVE BELT

CONDITION	POSSIBLE CAUSE	CORRECTION
INSUFFICIENT ACCESSORY OUTPUT DUE TO BELT SLIPPAGE	1. Belt too loose.	1. Check engine accessories and replace belt tensioner as necessary.
	2. Belt excessively glazed or worn.	2. Replace the belt.
BELT SQUEAL WHEN ACCELERATING ENGINE	1. Belt too loose.	1. Check engine accessories and replace belt tensioner as necessary.
	2. Belt glazed.	2. Replace belt.
BELT CHIRP AT IDLE	1. Belt too loose.	1. Check engine accessories and replace belt tensioner as necessary.
	2. Foreign material imbedded in belt.	2. Replace belt.
	3. Non-uniform belt.	3. Replace belt.
	4. Misaligned pulley(s).	4. Align accessories.
	5. Non-uniform groove or eccentric pulley.	5. Replace pulley(s).
BELT ROLLED OVER IN GROOVE OR BELT JUMPS OFF	1. Broken cord in belt.	1. Replace belt.
	2. Belt too loose, or too tight.	2. Check engine accessories and replace belt tensioner as necessary.
	3. Misaligned pulleys.	3. Align accessories.
	4. Non-uniform grooves or eccentric pulley.	4. Replace pulley(s).

SPECIFICATIONS-TORQUE

TORQUE SPECIFICATIONS

DESCRIPTION	N·m	Ft. Lbs.	In. Lbs.
Idler Pulley Screw	20	15	—
Belt Tensioner Bolts	25	18	—

BELT TENSIONER

REMOVAL

1. Remove the accessory drive belt. **Refer to Page 7-45**.
2. Remove the belt tensioner retaining bolts (1) and the belt tensioner (2).

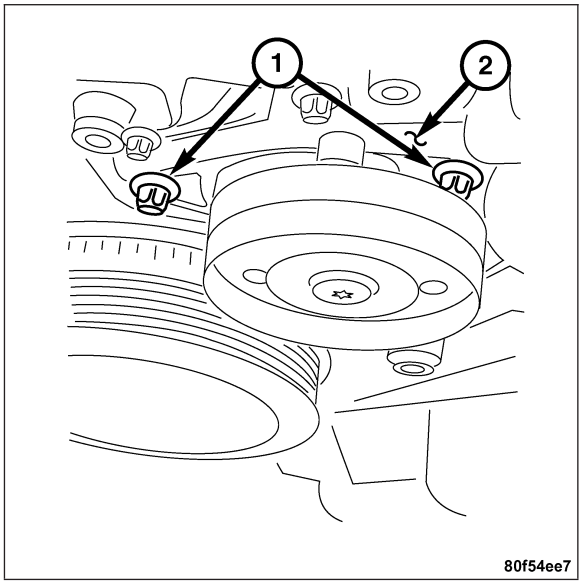

INSTALLATION

1. Position the belt tensioner (2) on the timing chain cover.
2. Install the belt tensioner bolts (1). Tighten the bolts to 25 N·m (18 ft. lbs.).
3. Install the accessory drive belt. **Refer to Page 7-46**.

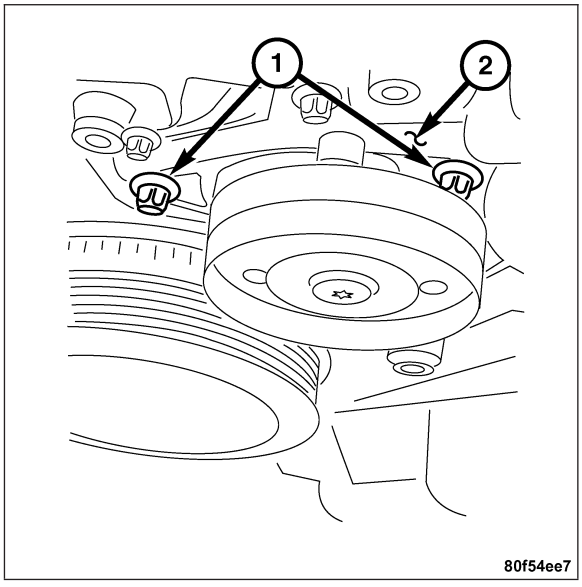

DRIVE BELT

REMOVAL

1. Rotate the belt tensioner (1) with a wrench and lock in place with a 5mm pin (2) or drift.
2. Remove the accessory drive belt from the pulleys.
3. Inspect the accessory drive belt. Refer to damage patterns. **Refer to Page 7-45**.
4. Inspect the pulleys for wear or damage.
5. Replace the accessory drive belt or pulleys as required.

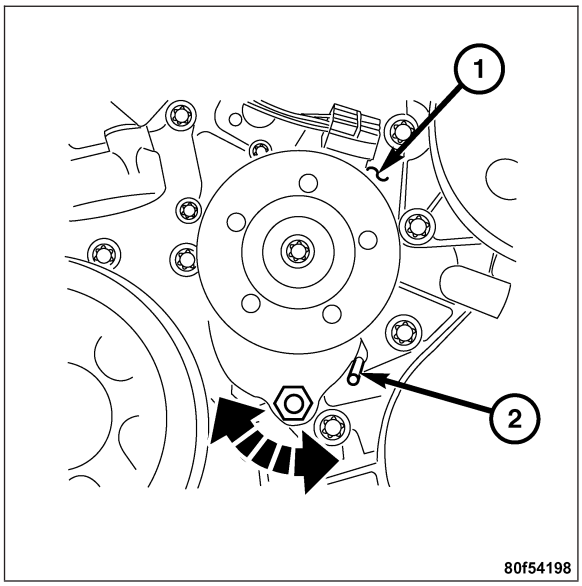

CLEANING

Clean all foreign debris from the belt pulley grooves. The belt pulleys must be free of oil, grease, and coolant before installing the drive belt.

INSPECTION

Belt replacement is necessary for any or all of the following conditions:

- Excessive wear
- Frayed cords
- Severe glazing

The accessory drive belt may develop minor cracks across the ribbed side (1) due to reverse bending. These minor cracks are considered normal and acceptable. Parallel cracks (2) are not considered normal and should be cause for belt replacement.

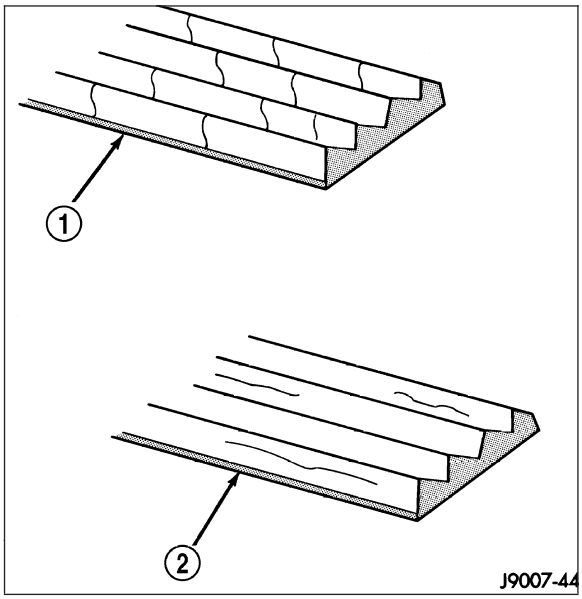

Note: Do not use any type of belt dressing or restorer on the accessory drive belt.

INSTALLATION

1. Position the accessory drive belt on the pulleys.
   1. Crankshaft
   2. A/C Compressor
   3. Power Steering Pump
   4. Idler Pulley
   5. Generator
   6. Water Pump
   7. Tensioner

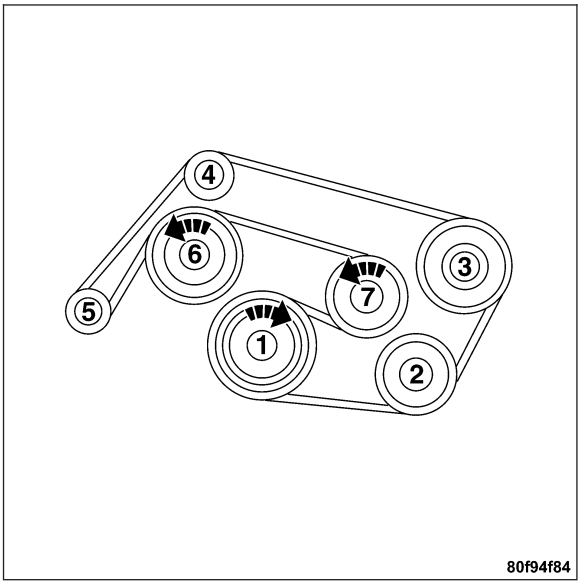

2. Rotate the belt tensioner (1) clockwise and remove the 5mm pin (2).
3. Allow the belt tensioner (1) to rest on the accessory drive belt.
4. Release the belt tensioner and remove the wrench.

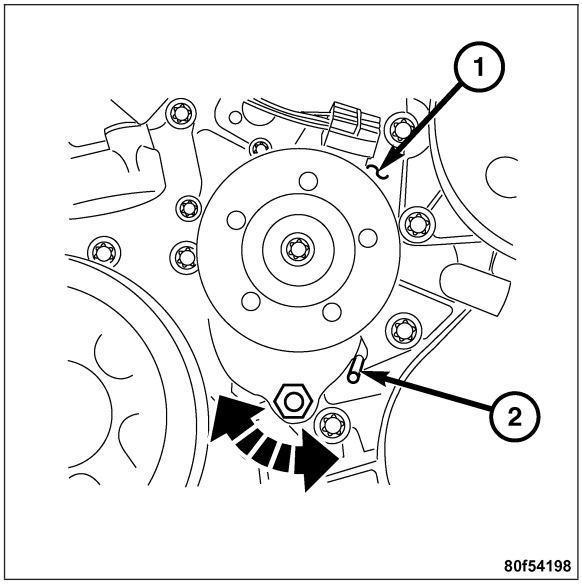

IDLER PULLEY

REMOVAL

1. Remove accessory drive belt. **Refer to Page 7-45**.
2. Remove the idler pulley screw cover (1).

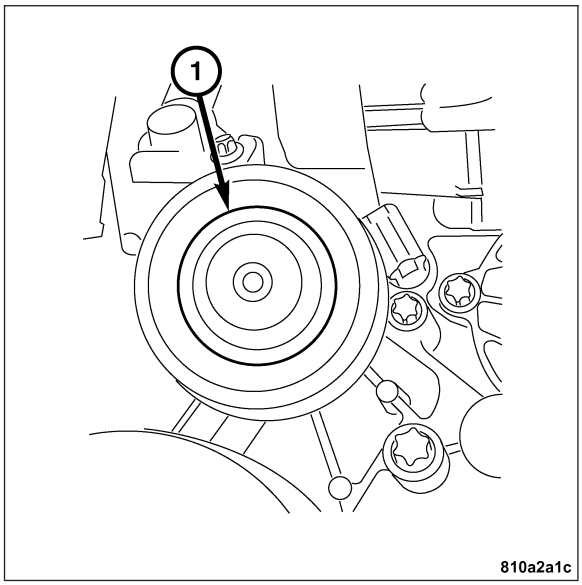

3. Remove the screw (1) and idler pulley from the water pump.
4. Check the pulley bearing for looseness and noise. Replace if necessary.

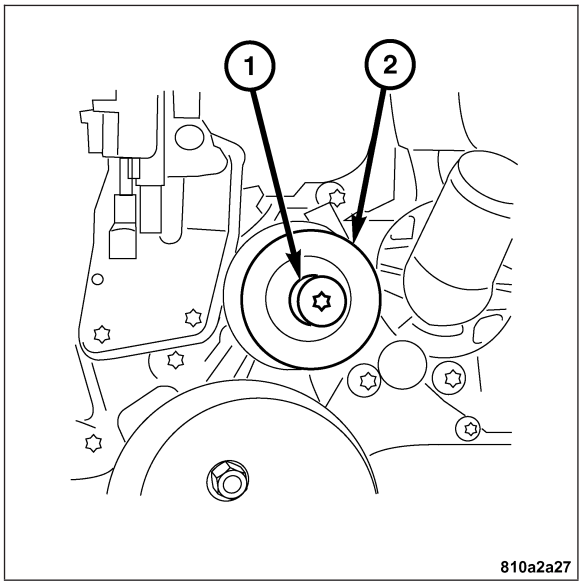

INSTALLATION

1. Position the idler pulley (2) on the water pump with the screw (1).
2. Tighten the idler pulley screw to 20 N·m (15 ft. lbs.).

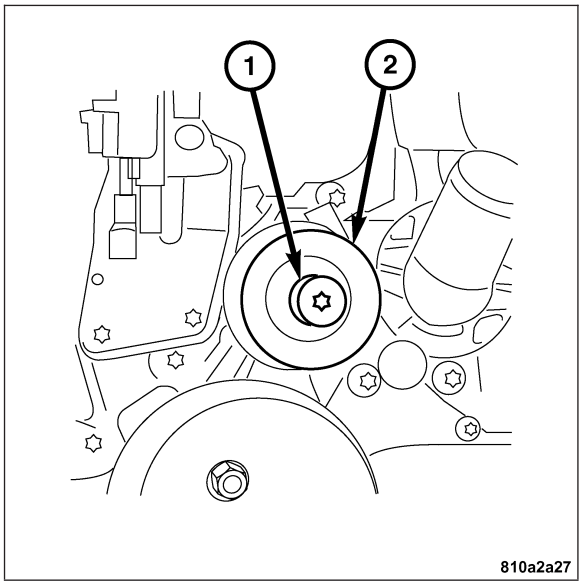

3. Install the screw cover (1) on the idler pulley.
4. Install the accessory drive belt. **Refer to Page 7-46**.

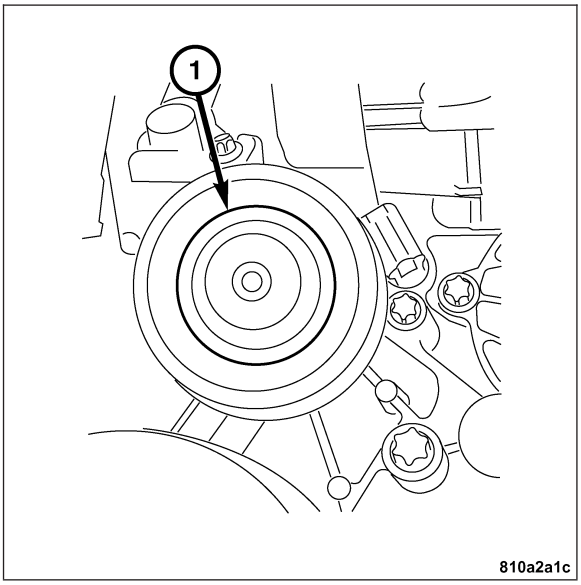

TRANSMISSION

TABLE OF CONTENTS

	page		page
TRANSMISSION COOLER LINES		INSTALLATION	50
REMOVAL	49		

TRANSMISSION COOLER LINES

REMOVAL

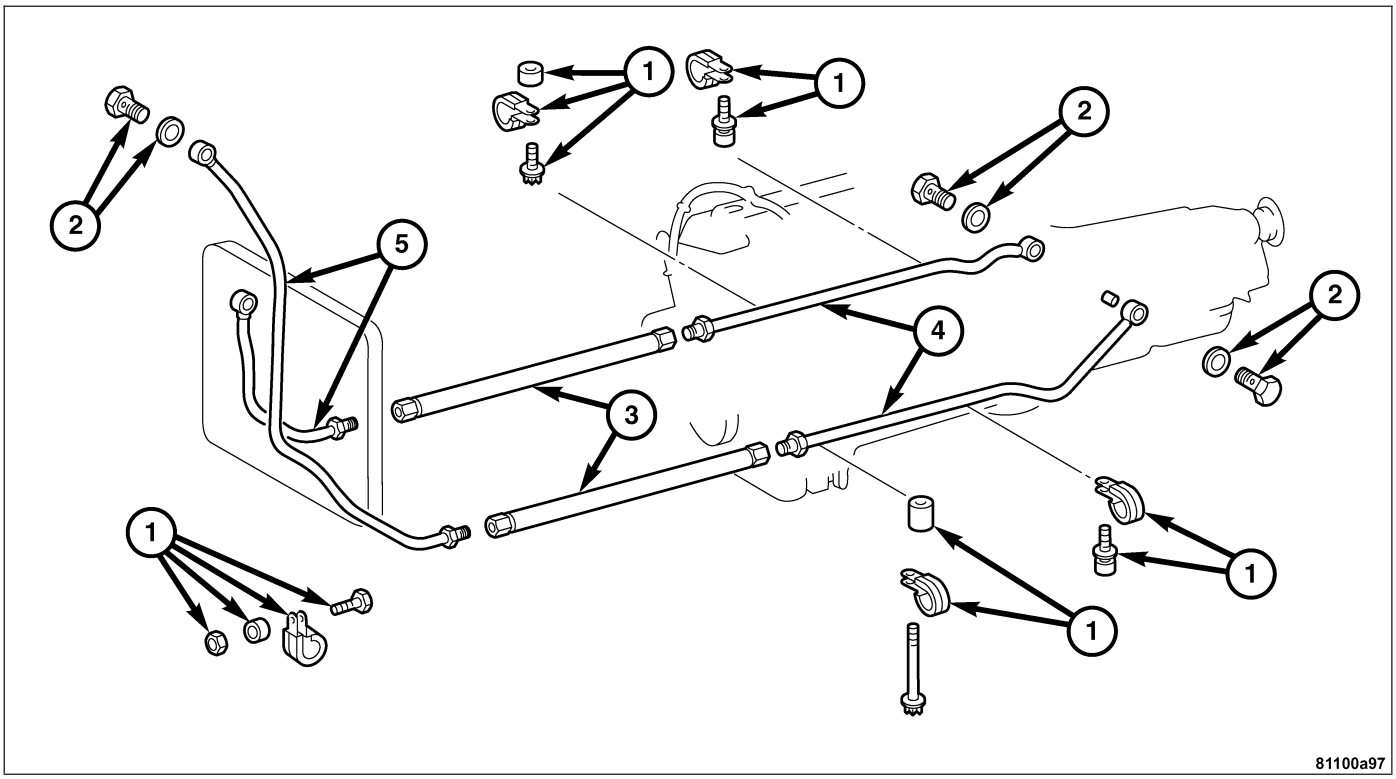

1. TRANSMISSION LINE RETAINERS
2. BANJO BOLTS
3. FLEXIBLE LINES
4. STEEL LINES
5. COPPER LINES

Note: To service the front copper transmission cooler lines (5) the radiator must be removed. Refer to Page 7-33.

1. Raise and support the vehicle.
2. Remove the lower splash shield.
3. Disconnect the fittings at either end of the line being serviced.
4. Remove the line retainers (1) and the cooler line(s) as necessary.

INSTALLATION

1. Position the cooler line(s) and loosely connect the fittings.
2. Install the retainers and bolts for the cooler line(s).

Note: Replace the copper washers if the banjo bolts are removed.

3. Tighten the cooler line fittings or banjo bolts to 20 N·m (15 ft. lbs.).
4. Tighten the transmission cooler line retaining bolts to 10 N·m (89 in. lbs.).
5. Lower the vehicle.
6. Install the radiator if removed. **Refer to Page 7-35**.
7. Check the transmission fluid level. **Refer to Page 21-294**.

AUDIO/VIDEO

TABLE OF CONTENTS

	page		page
AUDIO - ELECTRICAL DIAGNOSTICS	1	**AUDIO - SERVICE INFORMATION**	18

AUDIO - ELECTRICAL DIAGNOSTICS

TABLE OF CONTENTS

	page		page
AUDIO - ELECTRICAL DIAGNOSTICS		*NO SOUND FROM RIGHT DOOR SPEAKERS	10
DIAGNOSIS AND TESTING		*NO SOUND FROM LEFT REAR SPEAKER	12
*RADIO INOPERATIVE	2	*NO SOUND FROM RIGHT REAR SPEAKER	14
*NO SOUND FROM ALL SPEAKERS	5	BODY VERIFICATION TEST	16
*NO SOUND FROM LEFT DOOR SPEAKERS	8	SCHEMATICS AND DIAGRAMS	17

AUDIO - ELECTRICAL DIAGNOSTICS

DIAGNOSIS AND TESTING

*RADIO INOPERATIVE

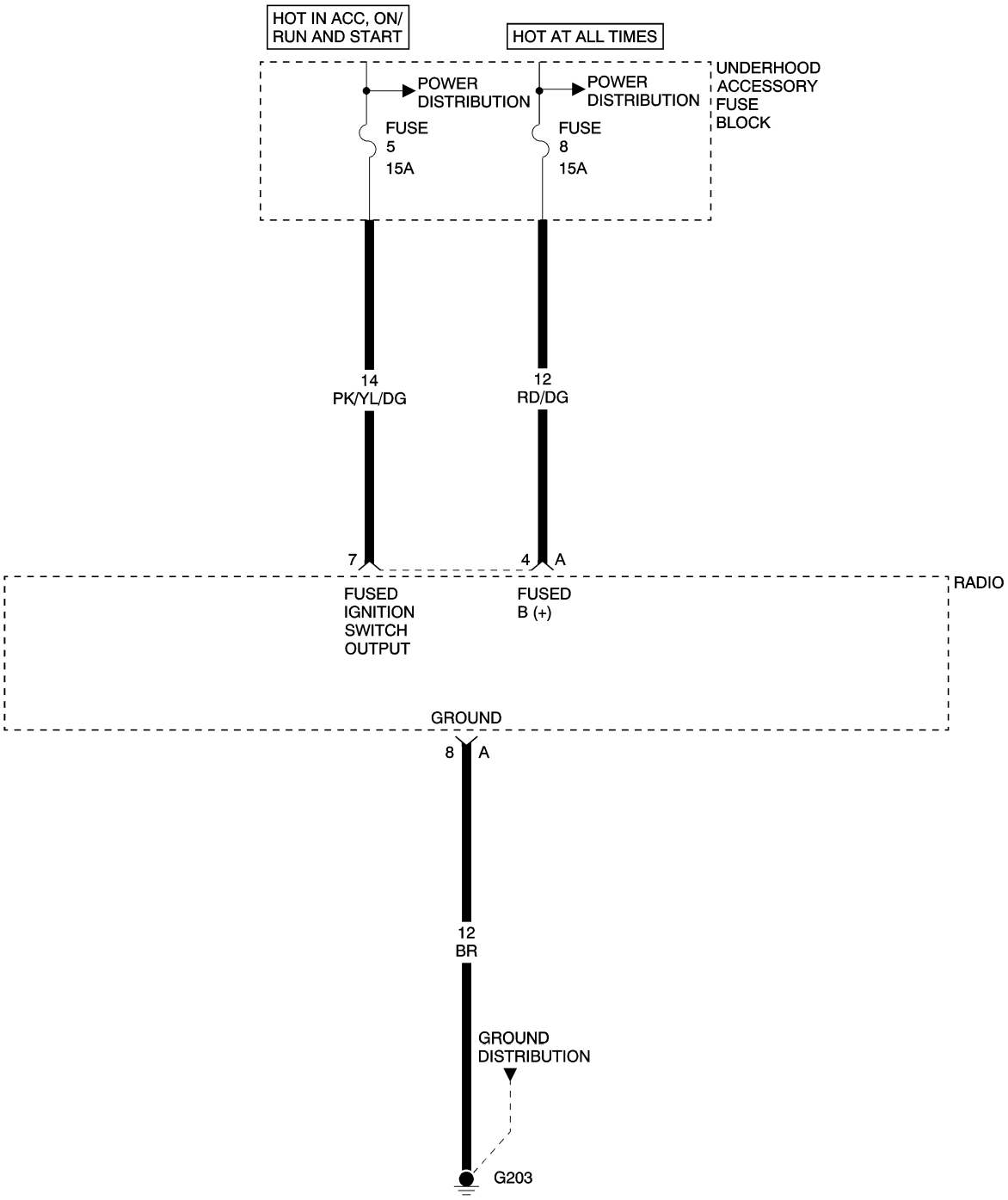

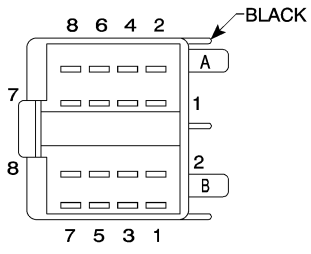

RADIO

*RADIO INOPERATIVE — CONTINUED

POSSIBLE CAUSES
FUSED IGNITION SWITCH OUTPUT CIRCUIT OPEN
FUSED B(+) CIRCUIT OPEN
GROUND CIRCUIT OPEN
RADIO

For a complete Audio System Circuit Diagram, **Refer to Page 8A-17**.

Diagnostic Test

1. MEASURE RADIO FUSED IGNITION SWITCH OUTPUT CIRCUIT VOLTAGE

Note: Inspect Fuse 5 and Fuse 8 located in the Underhood Accessory Fuse Block. If either fuse is open, repair the cause of the open fuse before continuing.

Turn the ignition off.

Disconnect the Radio harness connector.

Note: Check connector - Clean/repair as necessary.

Turn the ignition on.

Measure the voltage of the Fused Ignition Switch Output circuit at the Radio harness connector cavity 7 (connector A).

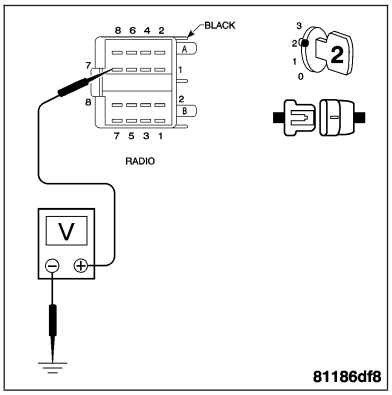

Is the voltage above 10 volts?

Yes >> Go to 2

No >> Repair the Radio Fused Ignition Switch Output circuit for an open.
Perform BODY VERIFICATION TEST.

2. MEASURE RADIO FUSED B(+) CIRCUIT VOLTAGE

With the ignition on.

Measure the voltage of the Fused B(+) circuit at the Radio harness connector cavity 4 (connector A).

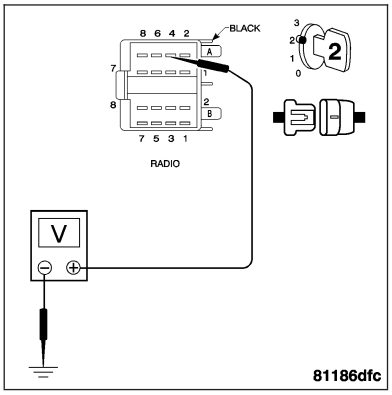

Is the voltage above 10 volts?

Yes >> Go to 3

No >> Repair the Radio Fused B(+) circuit for an open.
Perform BODY VERIFICATION TEST.

*RADIO INOPERATIVE — CONTINUED

3. MEASURE RADIO GROUND CIRCUIT RESISTANCE

Turn the ignition off.

Measure the resistance between ground and the Ground circuit at cavity 8 (connector A) of the Radio harness connector.

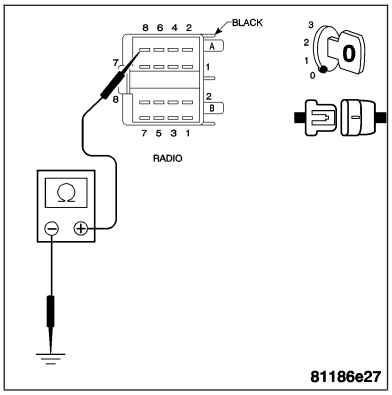

Is the resistance below 5.0 ohms?

Yes >> Replace the Radio. **Refer to Page 8A-27**.
Perform BODY VERIFICATION TEST.

No >> Repair the Ground circuit for an open.
Perform BODY VERIFICATION TEST.

*NO SOUND FROM ALL SPEAKERS

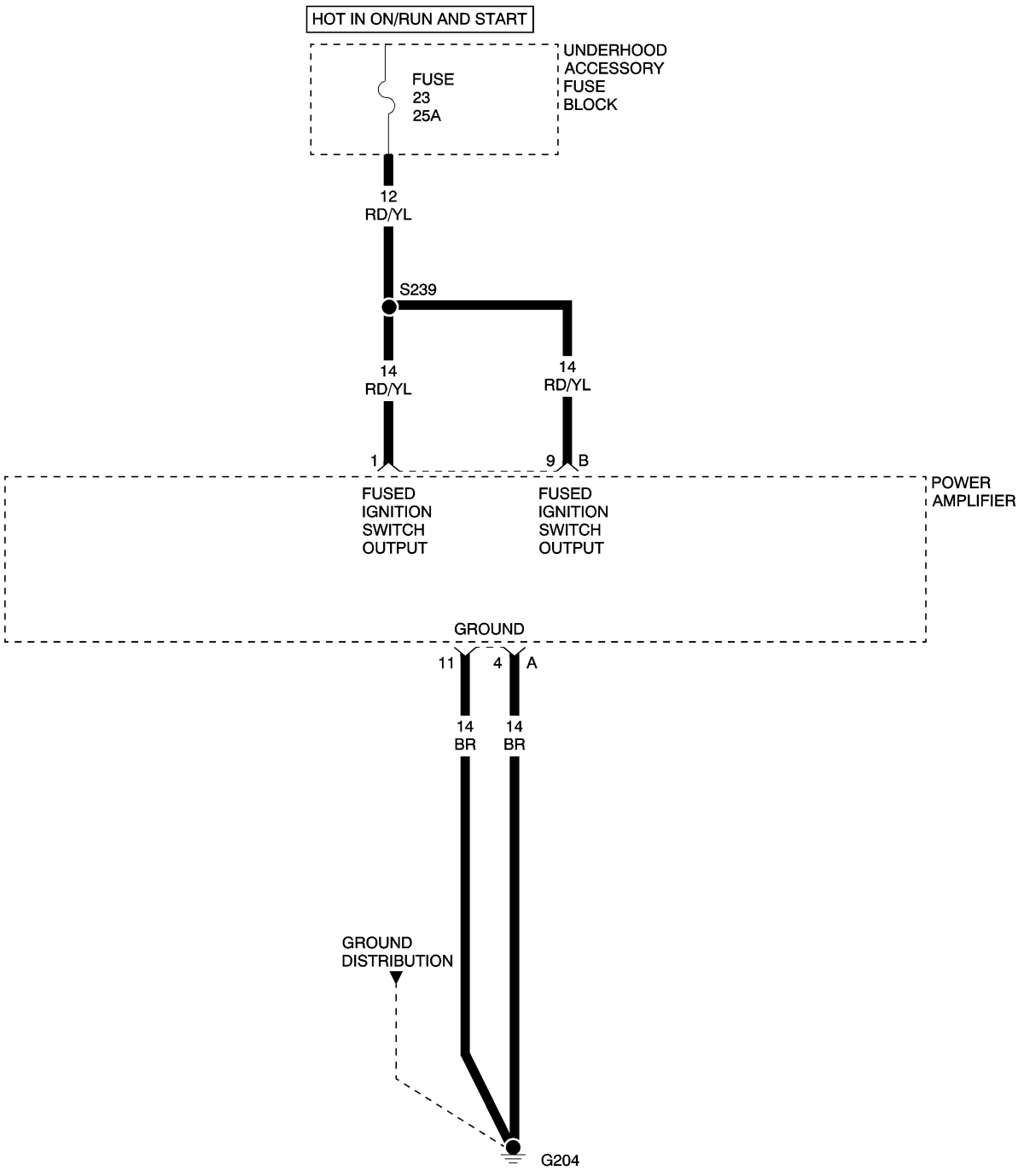

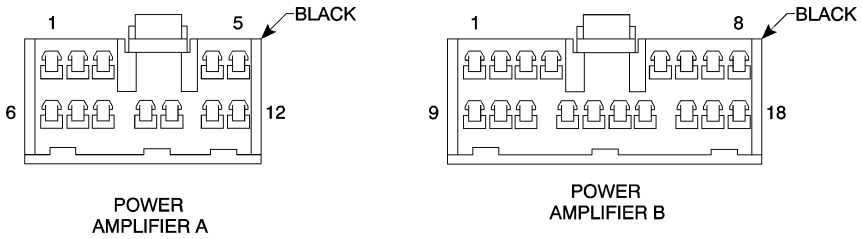

*NO SOUND FROM ALL SPEAKERS — CONTINUED

POSSIBLE CAUSES
FUSED IGNITION SWITCH OUTPUT CIRCUIT OPEN
GROUND CIRCUIT OPEN
POWER AMPLIFIER

For a complete Audio System Circuit Diagram, **Refer to Page 8A-17**.

Diagnostic Test

1. MEASURE POWER AMPLIFIER FUSED IGNITION SWITCH OUTPUT CIRCUIT VOLTAGE

Note: Inspect Fuse 23 located in the Underhood Accessory Fuse Block. If the fuse is open, repair the cause of the open fuse before continuing.

Turn the ignition off.

Disconnect the Power Amplifier harness connector.

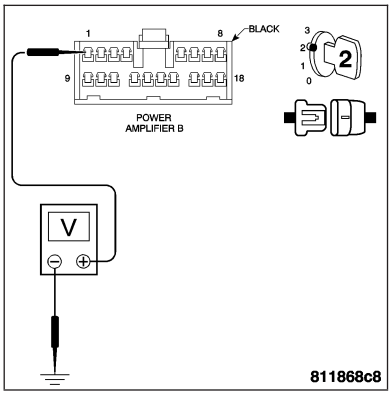

Note: Check connector - Clean/repair as necessary.
Turn the ignition on.

Measure the voltage of the Fused Ignition Switch Output circuit at the Power Amplifier harness connector cavity 1 (connector B).

Is the voltage above 10 volts?

Yes >> Go to 2

No >> Repair the Power Amplifier Fused Ignition Switch Output circuit for an open.
Perform BODY VERIFICATION TEST.

2. MEASURE POWER AMPLIFIER FUSED IGNITION SWITCH OUTPUT CIRCUIT VOLTAGE

With the ignition on.

Measure the voltage of the Fused Ignition Switch Output circuit at the Power Amplifier harness connector cavity 9 (connector B).

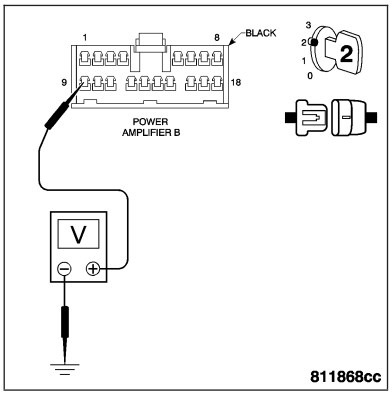

Is the voltage above 10 volts?

Yes >> Go to 3

No >> Repair the Power Amplifier Fused Ignition Switch Output circuit for an open.
Perform BODY VERIFICATION TEST.

*NO SOUND FROM ALL SPEAKERS — CONTINUED

3. MEASURE POWER AMPLIFIER GROUND CIRCUIT RESISTANCE

Turn the ignition off.

Measure the resistance between ground and the Ground circuit at cavity 11 (connector A) of the Power Amplifier harness connector.

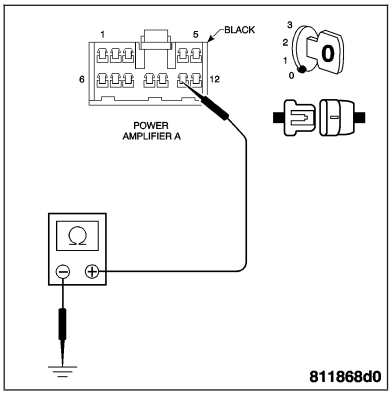

Is the resistance below 5.0 ohms?

Yes >> Go to 4

No >> Repair the Ground circuit for an open.
Perform BODY VERIFICATION TEST.

4. MEASURE POWER AMPLIFIER GROUND CIRCUIT RESISTANCE

With the ignition off.

Measure the resistance between ground and the Ground circuit at cavity 4 (connector A) of the Power Amplifier harness connector.

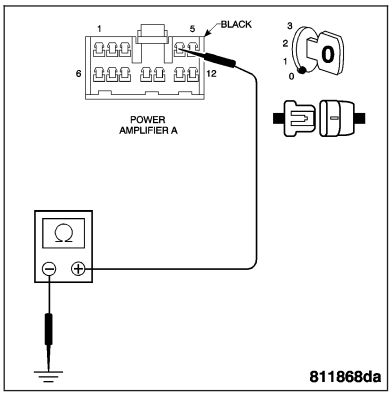

Is the resistance below 5.0 ohms?

Yes >> Replace the Power Amplifier. **Refer to Page 8A-20**.
Perform BODY VERIFICATION TEST.

No >> Repair the Ground circuit for an open.
Perform BODY VERIFICATION TEST.

*NO SOUND FROM LEFT DOOR SPEAKERS

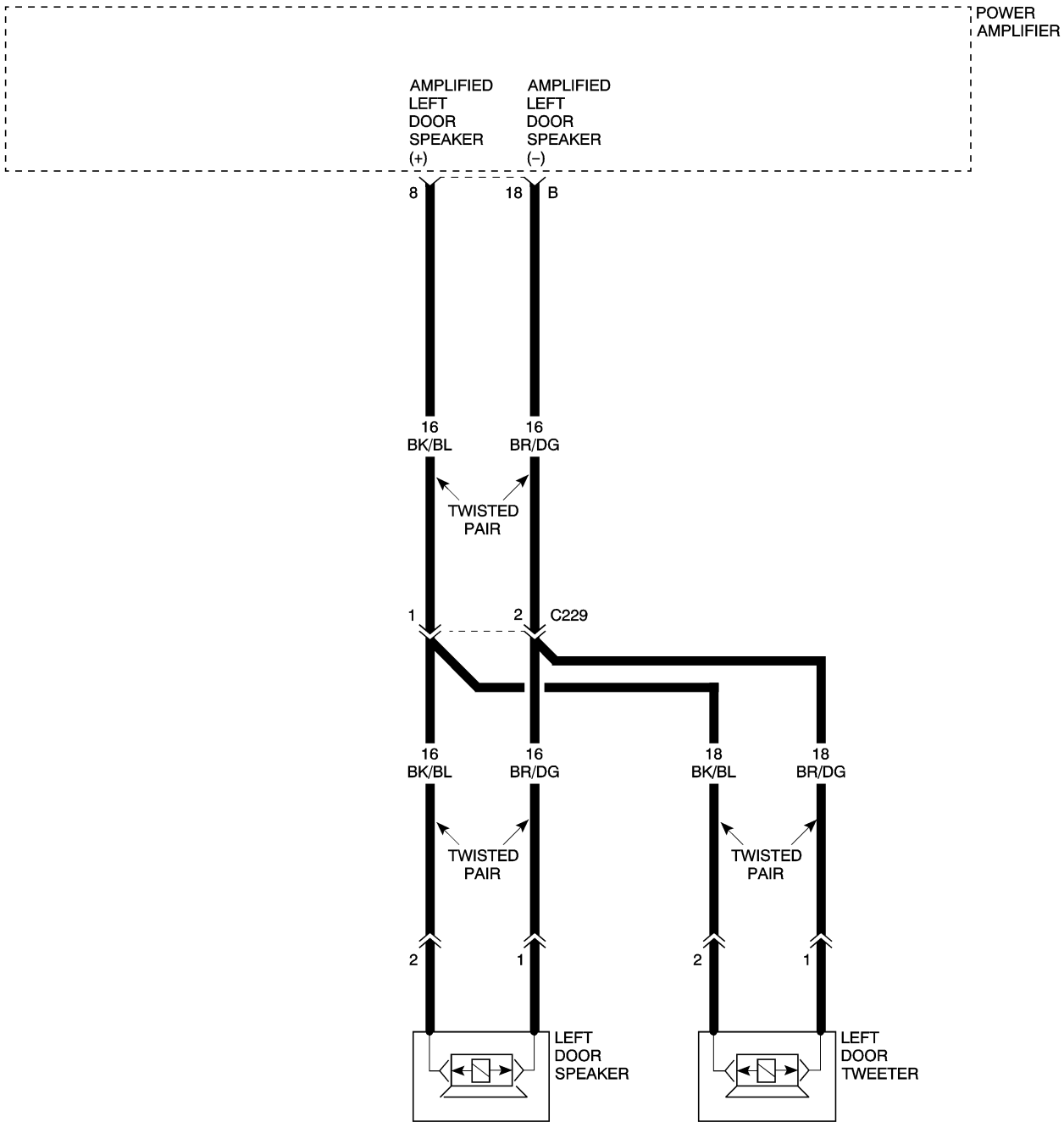

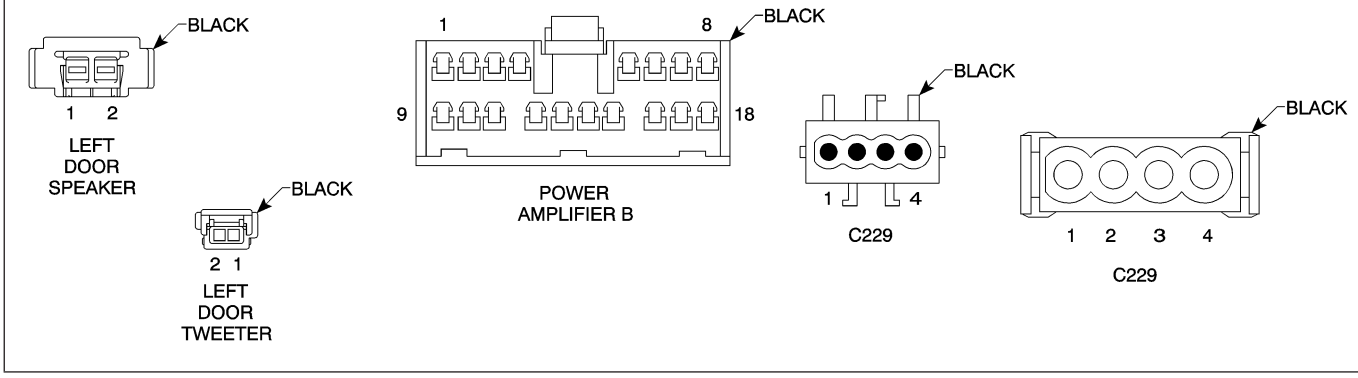

*NO SOUND FROM LEFT DOOR SPEAKERS — CONTINUED

POSSIBLE CAUSES
AMPLIFIED LEFT DOOR SPEAKER (+) CIRCUIT OPEN
AMPLIFIED LEFT DOOR SPEAKER (-) CIRCUIT OPEN
POWER AMPLIFIER

For a complete Audio System Circuit Diagram, **Refer to Page 8A-17**.

Diagnostic Test

1. MEASURE LEFT DOOR SPEAKER CIRCUIT RESISTANCE

Turn the ignition off.

Disconnect the Power Amplifier harness connector.

Note: Check connectors - Clean/repair as necessary.
Disconnect the Left Door Speaker harness connector.

Note: Check connectors - Clean/repair as necessary.
Connect a jumper wire between cavity 1 and cavity 2 of the Iline harness connector C229.

Measure the resistance between cavity 8 (connector B) and cavity 18 (connector B) of the Power Amplifier harness connector.

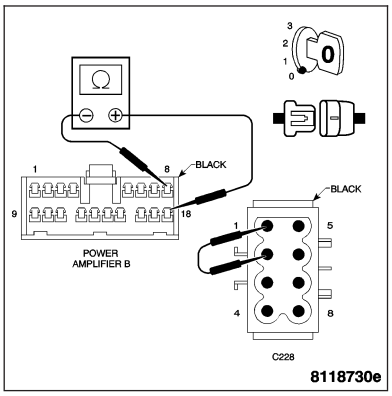

Is the resistance below 5.0 ohms?

Yes >> Replace the Power Amplifier. **Refer to Page 8A-20**.
Perform BODY VERIFICATION TEST.

No >> Repair the Amplified Left Door Speaker (+) or (-) circuit for an open.
Perform BODY VERIFICATION TEST.

*NO SOUND FROM RIGHT DOOR SPEAKERS

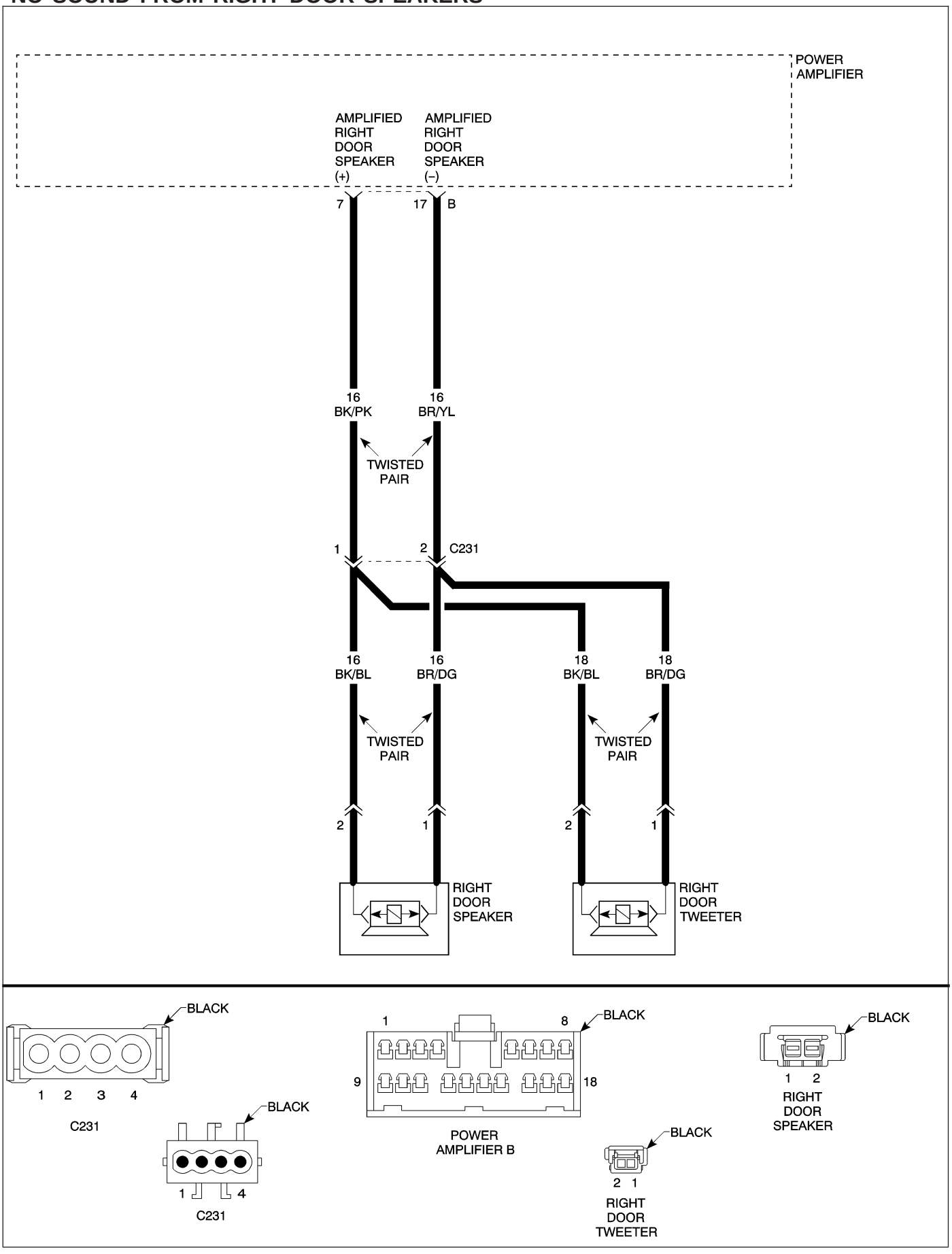

*NO SOUND FROM RIGHT DOOR SPEAKERS — CONTINUED

POSSIBLE CAUSES
AMPLIFIED RIGHT DOOR SPEAKER (+) CIRCUIT OPEN
AMPLIFIED RIGHT DOOR SPEAKER (-) CIRCUIT OPEN
POWER AMPLIFIER

For a complete Audio System Circuit Diagram, **Refer to Page 8A-17**.

Diagnostic Test

1. MEASURE RIGHT DOOR SPEAKER CIRCUIT RESISTANCE

Turn the ignition off.

Disconnect the Power Amplifier harness connector.

Note: Check connectors - Clean/repair as necessary.
Disconnect the Right Door Speaker harness connector.

Note: Check connectors - Clean/repair as necessary.
Connect a jumper wire between cavity 1 and cavity 2 of the Iline harness connector C231.

Measure the resistance between cavity 7 (connector B) and cavity 17 (connector B) of the Power Amplifier harness connector.

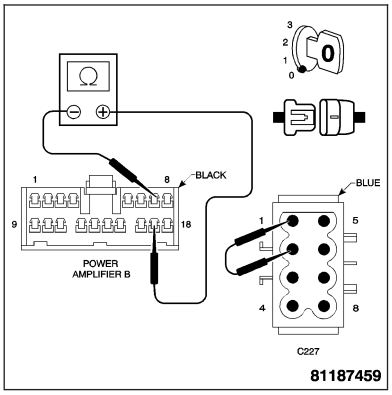

Is the resistance below 5.0 ohms?

Yes >> Replace the Power Amplifier. **Refer to Page 8A-20**.
Perform BODY VERIFICATION TEST.

No >> Repair the Amplified Right Door Speaker (+) or (-) circuit for an open.
Perform BODY VERIFICATION TEST.

*NO SOUND FROM LEFT REAR SPEAKER

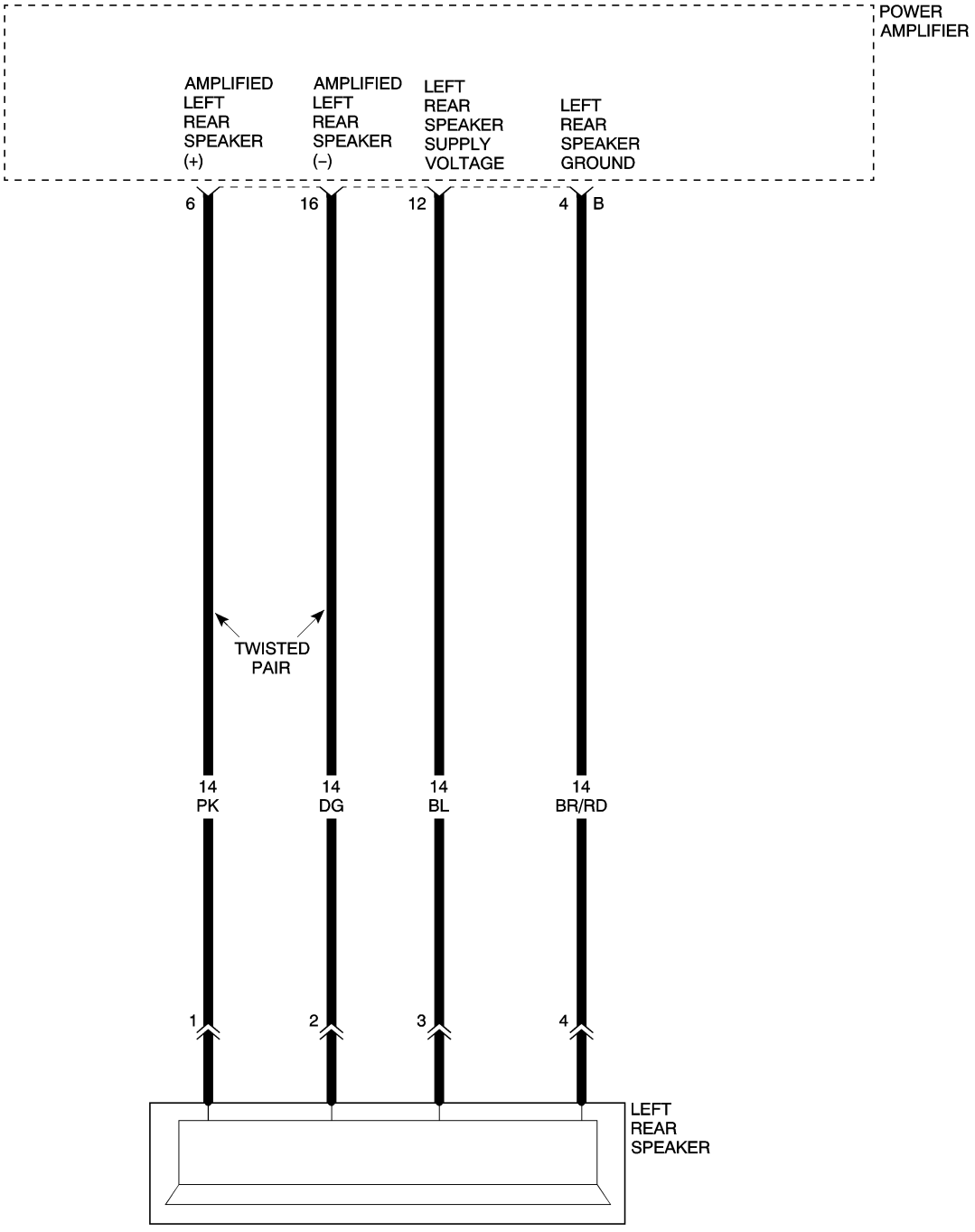

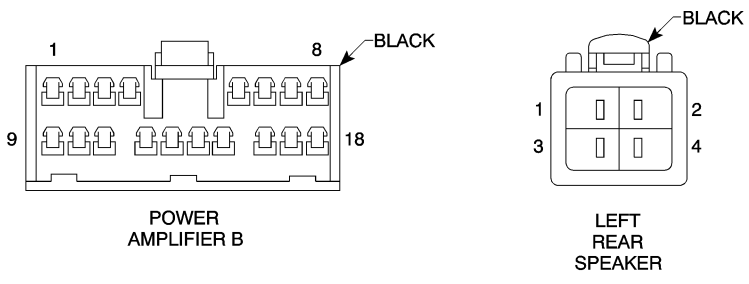

*NO SOUND FROM LEFT REAR SPEAKER — CONTINUED

POSSIBLE CAUSES
AMPLIFIED LEFT REAR SPEAKER (+) CIRCUIT OPEN
AMPLIFIED LEFT REAR SPEAKER (-) CIRCUIT OPEN
LEFT REAR SPEAKER SUPPLY VOLTAGE CIRCUIT OPEN
LEFT REAR SPEAKER GROUND CIRCUIT OPEN
LEFT REAR SPEAKER

For a complete Audio System Circuit Diagram, **Refer to Page 8A-17**.

Diagnostic Test

1. MEASURE LEFT REAR SPEAKER CIRCUIT RESISTANCE

Turn the ignition off.

Disconnect the Power Amplifier harness connector.

Note: Check connectors - Clean/repair as necessary.

Disconnect the Left Rear Speaker harness connector.

Note: Check connectors - Clean/repair as necessary.

Connect a jumper wire between cavity 1 and cavity 2 of the Left Rear Speaker harness connector.

Measure the resistance between cavity 6 (connector B) and cavity 16 (connector B) of the Power Amplifier harness connector.

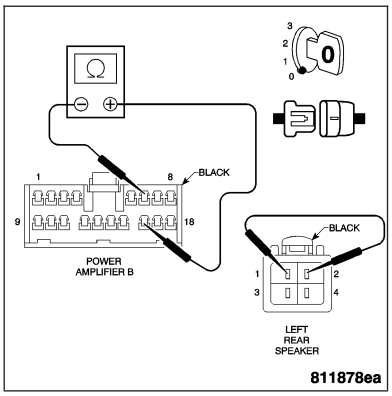

Is the resistance below 5.0 ohms?

Yes >> Go to 2

No >> Repair the Amplified Left Rear Speaker (+) or (-) circuit for an open.
Perform BODY VERIFICATION TEST.

2. MEASURE LEFT REAR SPEAKER CIRCUIT RESISTANCE

With the ignition off.

Connect a jumper wire between cavity 3 and cavity 4 of the Left Rear Speaker harness connector.

Measure the resistance between cavity 12 (connector B) and cavity 4 (connector B) of the Power Amplifier harness connector.

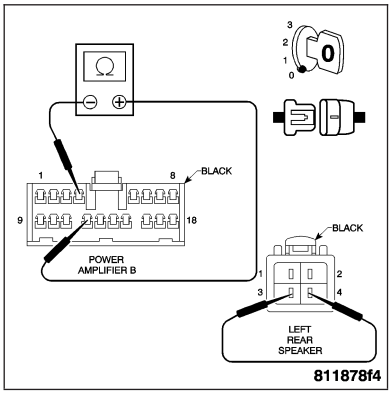

Is the resistance below 5.0 ohms?

Yes >> Replace the Left Rear Speaker. **Refer to Page 8A-29**.
Perform BODY VERIFICATION TEST.

No >> Repair the Left Rear Speaker Ground circuit or Supply Voltage circuit for an open.
Perform BODY VERIFICATION TEST.

*NO SOUND FROM RIGHT REAR SPEAKER

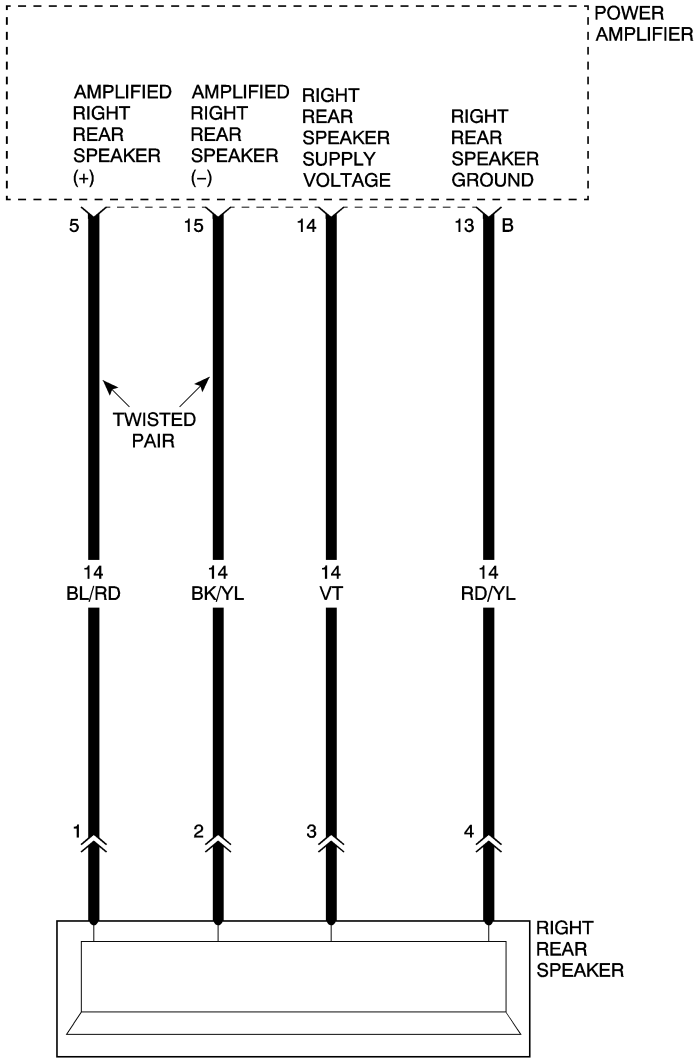

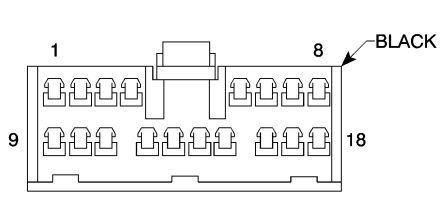

POWER AMPLIFIER B

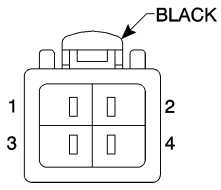

RIGHT REAR SPEAKER

81187c0d

*NO SOUND FROM RIGHT REAR SPEAKER — CONTINUED

POSSIBLE CAUSES
AMPLIFIED RIGHT REAR SPEAKER (+) CIRCUIT OPEN
AMPLIFIED RIGHT REAR SPEAKER (-) CIRCUIT OPEN
RIGHT REAR SPEAKER SUPPLY VOLTAGE CIRCUIT OPEN
RIGHT REAR SPEAKER GROUND CIRCUIT OPEN
RIGHT REAR SPEAKER

For a complete Audio System Circuit Diagram, **Refer to Page 8A-17**.

Diagnostic Test

1. MEASURE RIGHT REAR SPEAKER CIRCUIT RESISTANCE

Turn the ignition off.

Disconnect the Power Amplifier harness connector.

Note: Check connectors - Clean/repair as necessary.

Disconnect the Right Rear Speaker harness connector.

Note: Check connectors - Clean/repair as necessary.

Connect a jumper wire between cavity 1 and cavity 2 of the Right Rear Speaker harness connector.

Measure the resistance between cavity 5 (connector B) and cavity 15 (connector B) of the Power Amplifier harness connector.

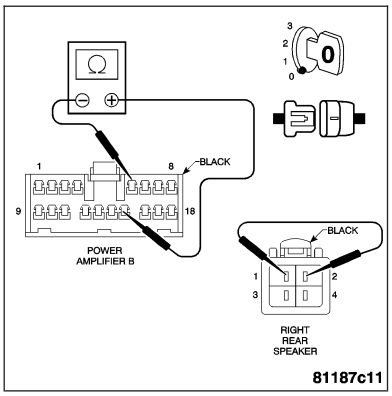

Is the resistance below 5.0 ohms?

Yes >> Go to 2

No >> Repair the Amplified Right Rear Speaker (+) or (-) circuit for an open.
Perform BODY VERIFICATION TEST.

2. MEASURE RIGHT REAR SPEAKER CIRCUIT RESISTANCE

With the ignition off.

Connect a jumper wire between cavity 3 and cavity 4 of the Right Rear Speaker harness connector.

Measure the resistance between cavity 14 (connector B) and cavity 13 (connector B) of the Power Amplifier harness connector.

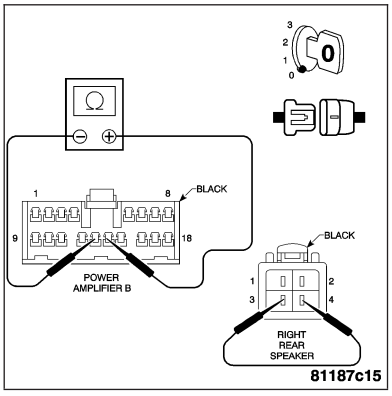

Is the resistance below 5.0 ohms?

Yes >> Replace the Right Rear Speaker. **Refer to Page 8A-29**.
Perform BODY VERIFICATION TEST.

No >> Repair the Right Rear Speaker Ground circuit or Supply Voltage circuit for an open.
Perform BODY VERIFICATION TEST.

BODY VERIFICATION TEST

1.

Turn the ignition off.

Disconnect all jumper wires and reconnect all previously disconnected components and connectors.

Note: If the SKREEM or the PCM was replaced, refer to the service information for proper programming procedures.

If the Body Control Module was replaced, turn the ignition on for 15 seconds (to allow the new BCM to learn VIN) or engine may not start.

Program all RKE transmitters and other options as necessary.

With the DRB III®, erase all Diagnostic Trouble Codes (DTCs) from ALL modules. Start the engine and allow it to run for 2 minutes. Operate all functions of the system that caused the original complaint.

Ensure that all accessories are turned off and the battery is fully charged.

Turn the ignition off and wait 5 seconds. Turn the ignition on and using the DRB III®, read DTCs from ALL modules.

Are any DTCs present or is the original complaint still present?

Are any DTCs present?

YES >> Repair is not complete, refer to appropriate symptom.

NO >> Repair is complete.

SCHEMATICS AND DIAGRAMS

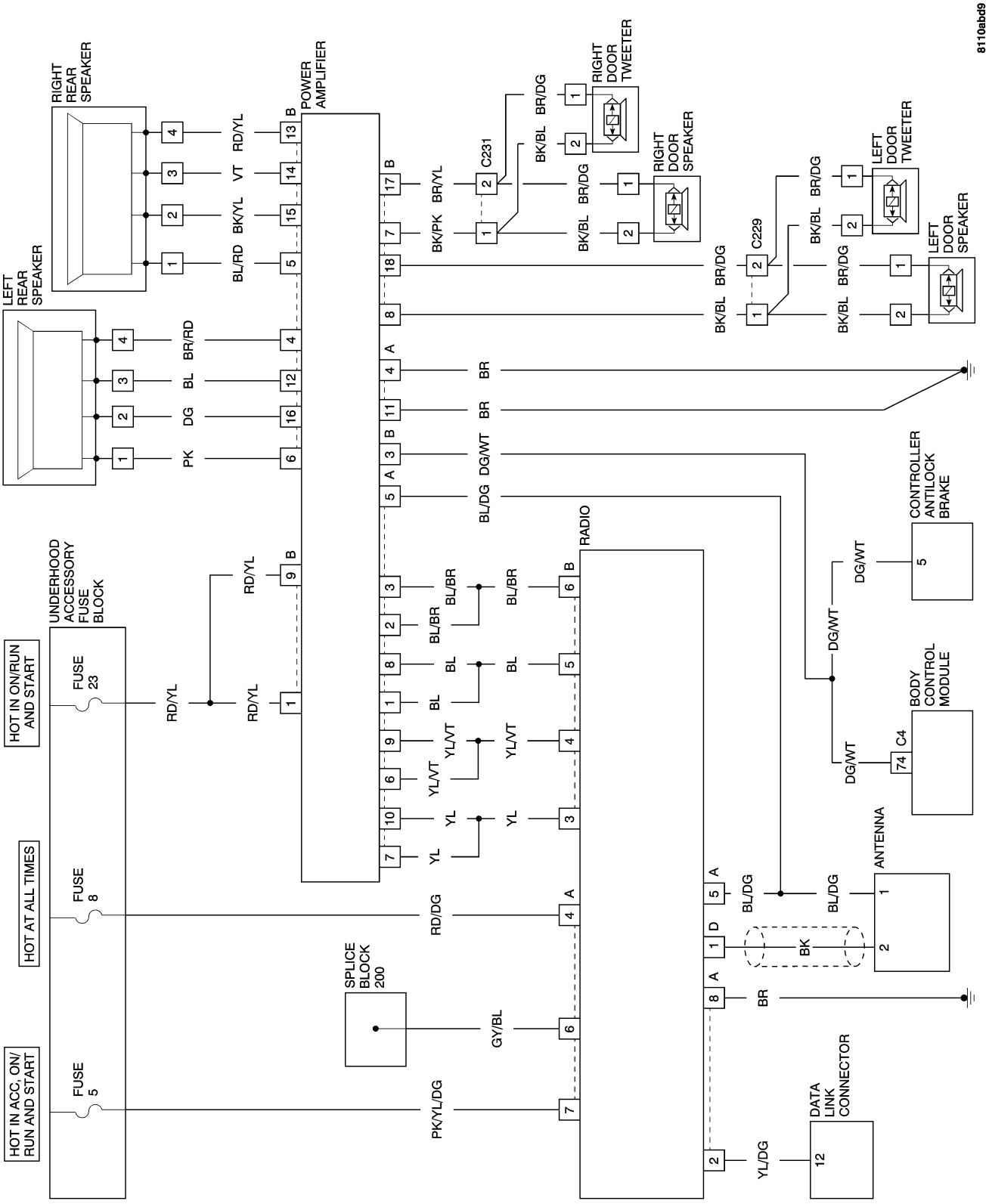

AUDIO - SERVICE INFORMATION

TABLE OF CONTENTS

page

AUDIO - SERVICE INFORMATION
- DESCRIPTION 19
- OPERATION 20
- DIAGNOSIS AND TESTING - AUDIO SYSTEM . 20
- SPECIAL TOOLS 20

AMPLIFIER
- REMOVAL 20
- INSTALLATION 22

REAR WINDOW ANTENNA MODULE
- REMOVAL 23
- INSTALLATION 23

REAR WINDOW ANTENNA
- DESCRIPTION 24
- STANDARD PROCEDURE - ANTENNA GRID REPAIR 24
- REMOVAL 25
- INSTALLATION 26

RADIO
- REMOVAL 27
- INSTALLATION 28

SPEAKER
- REMOVAL
  - LOWER DOOR SPEAKER 29
  - REMOVAL - REAR PANEL SPEAKER 29
  - REMOVAL - TWEETER SPEAKER 30
- INSTALLATION
  - LOWER DOOR SPEAKER 31
  - INSTALLATION - REAR PANEL SPEAKER . . . 33
  - INSTALLATION - TWEETER SPEAKER 34

AUDIO - SERVICE INFORMATION

DESCRIPTION

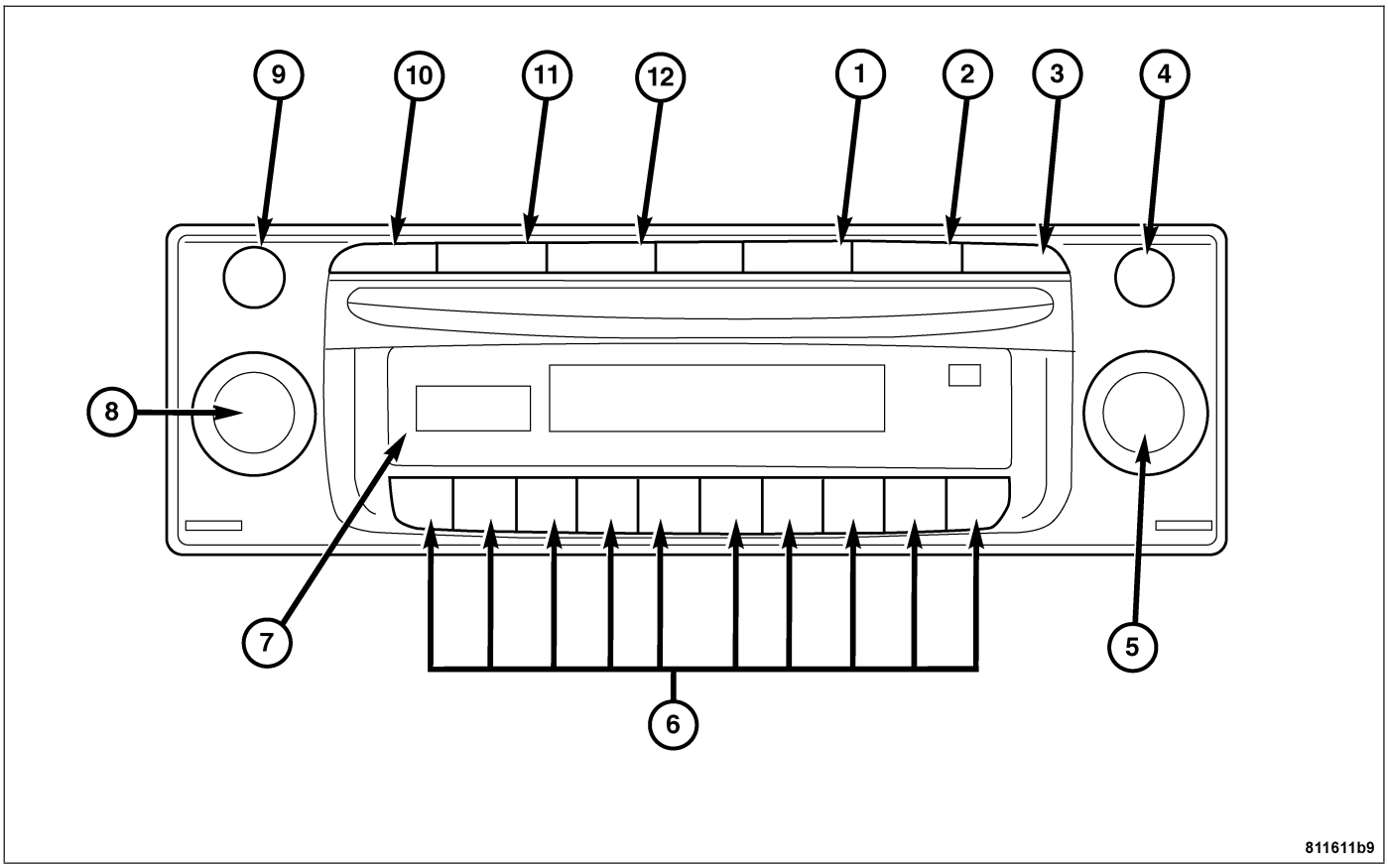

1 - CD BUTTON
2 - FM RADIO BUTTON
3 - AM RADIO BUTTON
4 - MANUAL FREQUENCY SETTING BUTTON
5 - RIGHT ROTARY CONTROL/PUSH BUTTON
6 - MULTIFUNCTION BUTTONS
7 - DISPLAY
8 - VOLUME CONTROL — ON/OFF SWITCH
9 - CD EJECT BUTTON
10 - MUTE BUTTON
11 - SOUND BUTTON
12 - SUB-MENU SELECTION BUTTON

The audio system is standard factory-installed equipment. The system uses an ignition switched source of battery current so that the system will only operate when the ignition switch is in the ON/RUN or START positions.

The audio system includes the following components:

- Antenna
- Rear Window Antenna Module
- Power Amplifier
- Radio Receiver
- Speakers

OPERATION

For detailed operation instructions for the factory installed audio system, refer to the Understanding Your Instrument Panel section in the Owner's Manual.

DIAGNOSIS AND TESTING - AUDIO SYSTEM

For complete audio system diagnosis, see audio electrical diagnostics in this section.

SPECIAL TOOLS

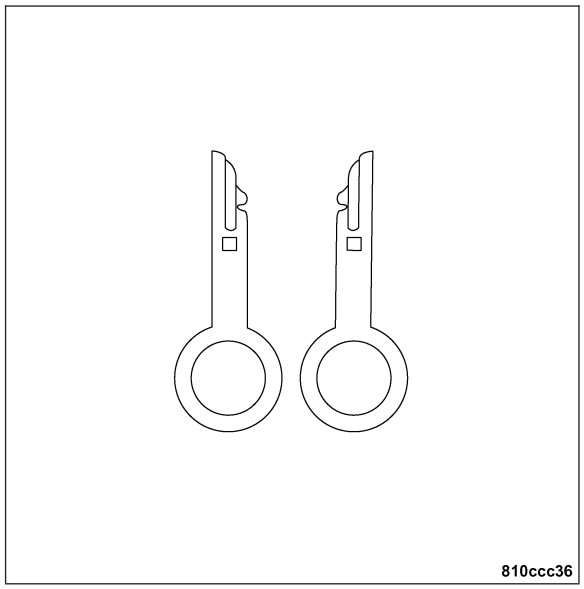

Radio Removal Tool 3241

AMPLIFIER

REMOVAL

1. Disconnect the negative battery cable.
2. Remove the passenger door sill trim panel and kick trim panel.
3. Fold back the carpeting in the passenger footwell.
4. Remove the insulating panel.

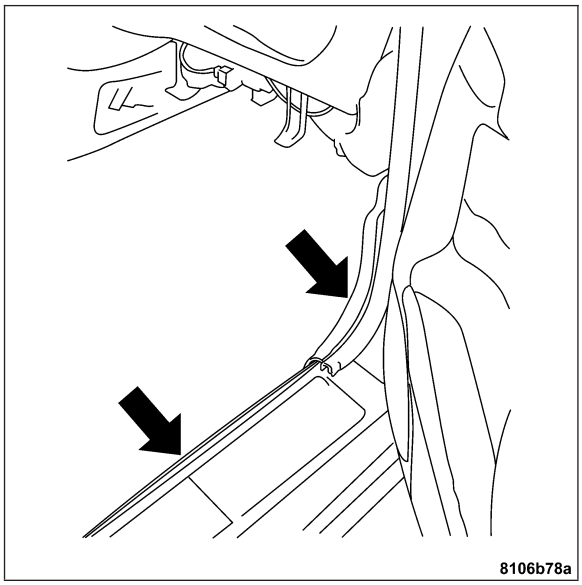

Note: It is not necessary to remove the electrical connectors to rotate the base plate in the passenger footwell.

5. Remove the plastic retaining nuts (1) from the floor panel and rotate the base plate exposing the amplifier.

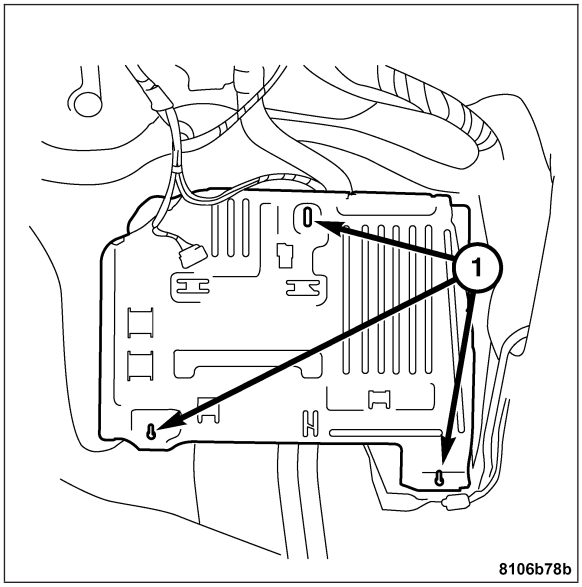

6. Remove the four amplifier retaining screws (1) from the base plate, and disconnect the amplifier harness connector. Remove the amplifier from the base plate.

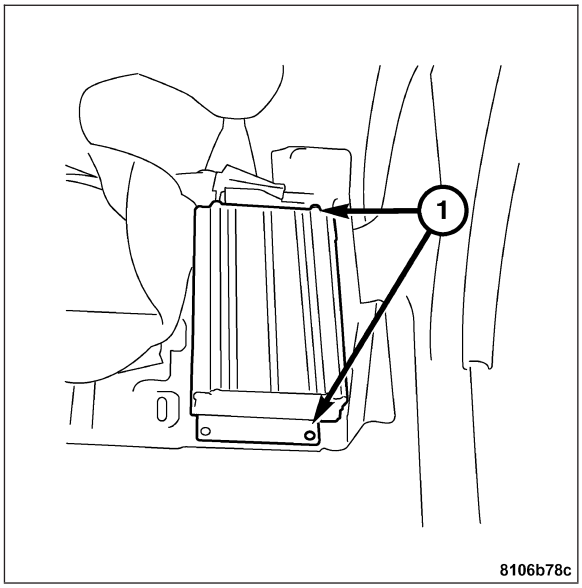

INSTALLATION

1. Connect the amplifier harness connector and attach the amplifier to the base plate with the four retaining screws (1).

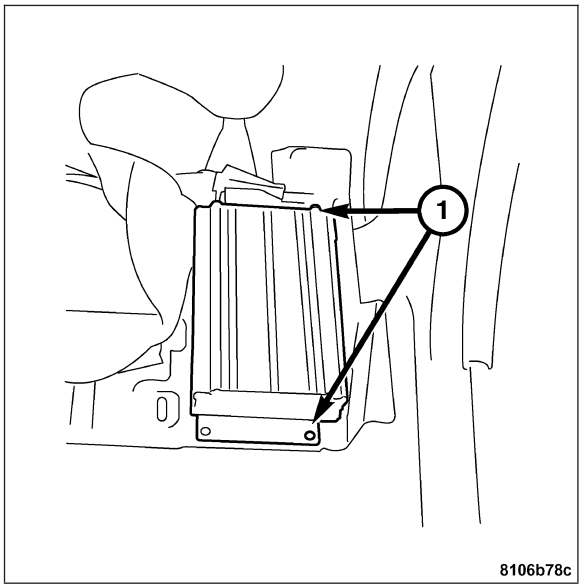

2. Rotate the base plate and install it over the mounting studs on the floor panel.

Note: Be sure not to pinch or cause interference with the wiring harnesses while locating the base plate to the floor mounting studs.

3. Install the plastic retaining nuts (1) and secure the base plate to the vehicle floor.

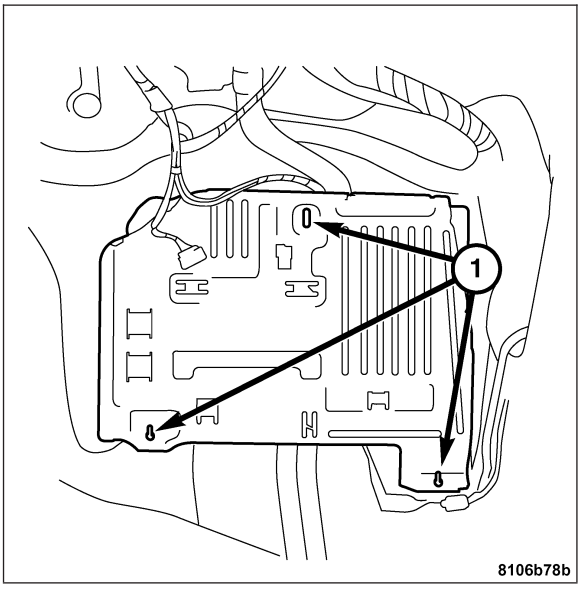

4. Install the insulating panel.
5. Install the carpeting in the passenger footwell.
6. Install the door sill panel and kick trim panel.
7. Connect the negative battery cable.

REAR WINDOW ANTENNA MODULE

REMOVAL

1. Disconnect the negative battery cable.
2. Remove the liftgate interior trim panel. **Refer to Page 23-48**.
3. Disconnect the antenna module harness connectors.
4. Remove the retaining screw (1) and remove the antenna module from the vehicle.

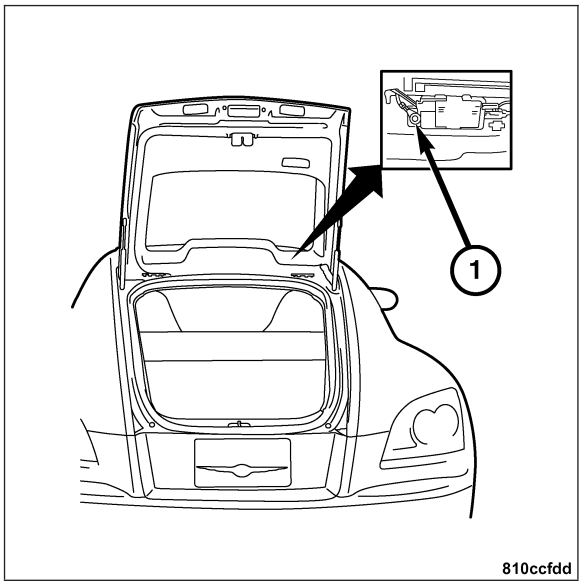

INSTALLATION

1. Install the rear window antenna module to the liftgate and attach with the retaining screw (3) and secure.
2. Install the rear window antenna module harness connectors (2).

Note: Use care when routing harnesses and allow sufficient clearance near trim panel pinch points.

3. Install the liftgate interior trim panel. **Refer to Page 23-49**.
4. Connect the negative battery cable.

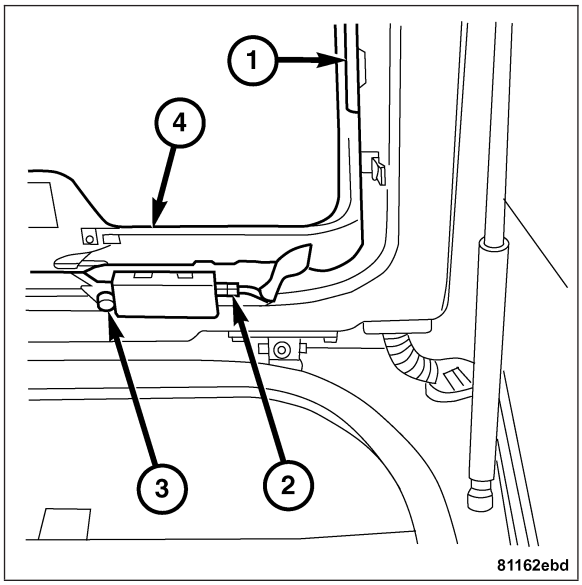

REAR WINDOW ANTENNA

DESCRIPTION

The liftgate glass contains the audio antenna (4) attached to the inside surface. Grid lines running horizontally form the antenna, which terminates to bus bars (1) at either side. Blade type terminals, also attached to the inside glass surface at the bus bars, form the beginning connection point for the radio frequency signal.

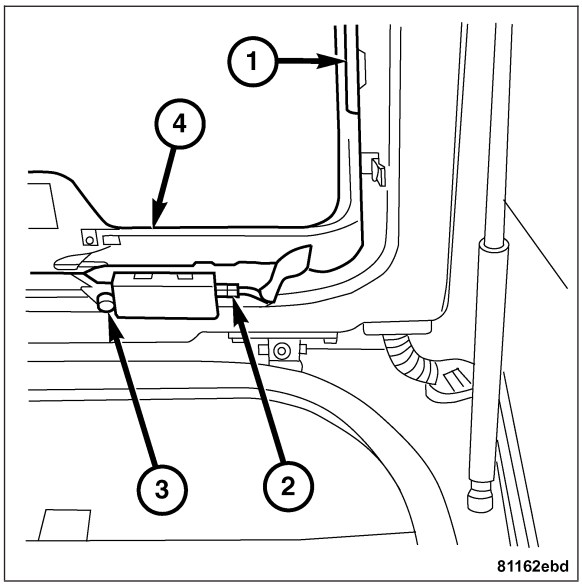

STANDARD PROCEDURE - ANTENNA GRID REPAIR

Repair of the rear glass antenna bus bars and terminals can be accomplished using a Mopar Rear Window Defogger Repair Kit (Part Number 4267922) or equivalent.

WARNING: MATERIALS CONTAINED IN THE REPAIR KIT MAY CAUSE SKIN OR EYE IRRITATION. THE KIT CONTAINS EPOXY RESIN AND AMINE TYPE HARDENER, WHICH ARE HARMFUL IF SWALLOWED. AVOID CONTACT WITH THE SKIN AND EYES. FOR SKIN CONTACT, WASH THE AFFECTED AREAS WITH SOAP AND WATER. FOR CONTACT WITH THE EYES, FLUSH WITH PLENTY OF WATER. DO NOT TAKE INTERNALLY. IF TAKEN INTERNALLY, INDUCE VOMITING AND CALL A PHYSICIAN IMMEDIATELY. USE WITH ADEQUATE VENTILATION. DO NOT USE NEAR FIRE OR FLAME. CONTAINS FLAMMABLE SOLVENTS. KEEP OUT OF THE REACH OF CHILDREN.

1. Mask the repair area (3) on the inside of the rear glass so that the conductive epoxy can be applied neatly. Extend the epoxy application onto the rear glass antenna (2) or bus bar on each side of the break (1).

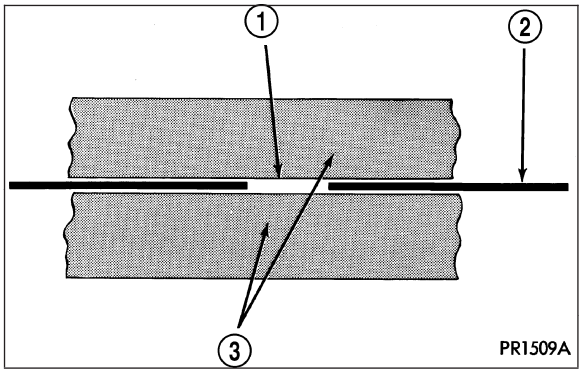

2. Follow the instructions in the repair kit for preparing the damaged area.
3. Remove the package separator clamp and mix the two conductive epoxy components thoroughly within the packaging. Fold the package in half and cut the center corner to dispense the epoxy.
4. For rear glass antenna bus bar repairs, mask the area to be repaired with masking tape or a template.
5. Apply the epoxy through the slit in the masking tape or template. Overlap both ends of the break by at least 0.75 inch (19 mm).

6. For a rear glass antenna terminal replacement, mask the adjacent areas so the epoxy can be extended onto the adjacent bus bar. Apply a thin layer of epoxy to the area where the terminal was previously fastened and onto the adjacent bus bar line.
7. Apply a thin layer of conductive epoxy to the terminal and place it in the proper location on the rear glass antenna bus bar. To prevent the terminal from moving while the epoxy is curing, it must be wedged or clamped.
8. Carefully remove the masking tape or template.

CAUTION: Do not allow the glass surface to exceed 400° F (204° C) or the glass may fracture.

9. Allow the epoxy to cure for 24 hours at room temperature.
10. After the conductive epoxy is properly cured, remove the wedge or clamp from the terminal. Do not attach the wire harness connectors until the curing process is complete.
11. Check the operation of the rear glass antenna bus bar and/or terminal(s) with the audio system performance levels.

REMOVAL

WARNING: DO NOT OPERATE THE VEHICLE WITHIN 24 HOURS OF REAR WINDOW GLASS INSTALLATION. IT TAKES AT LEAST 24 HOURS FOR URETHANE ADHESIVE TO CURE. IF IT IS NOT CURED, THE REAR WINDOW GLASS MAY NOT PERFORM PROPERLY IN AN ACCIDENT. BE SURE TO REFER TO THE URETHANE MANUFACTURE'S DIRECTIONS FOR CURING TIME SPECIFICATIONS, AND DO NOT USE ADHESIVE AFTER ITS EXPIRATION DATE.

CAUTION: Open the door glass before installing the rear window to avoid pressurizing the passenger compartment if a door is slammed before the urethane bonding is fully cured. Water leaks can result.

1. Disconnect the negative battery cable.
2. Open the liftgate and remove the liftgate interior trim panel. **Refer to Page 23-48**.
3. Disconnect the center high mount stop lamp (CHMSL) harness connector and remove the CHMSL assembly from the liftgate. **Refer to Page 8L-92**.

4. Disconnect the rear window defogger (1) and rear window antenna (2) harness connectors from the liftgate glass terminals.
5. Remove the liftgate glass.

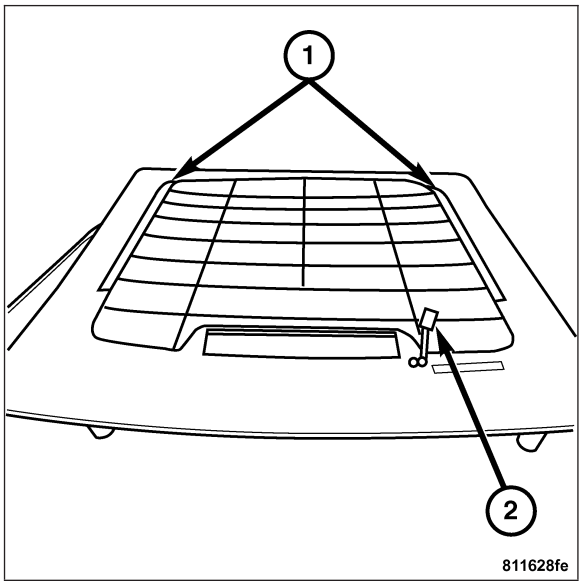

INSTALLATION

1. Install the liftgate glass.
2. Connect the rear window defogger (3) and the rear window antenna (1) harness connectors to the liftgate glass terminals.
3. Install the center high mount stop lamp (CHMSL) assembly to the liftgate (2), and connect the CHMSL harness connector. **Refer to Page 8L-93**.
4. Install the liftgate interior trim panel. **Refer to Page 23-49**.
5. Connect the negative battery cable.

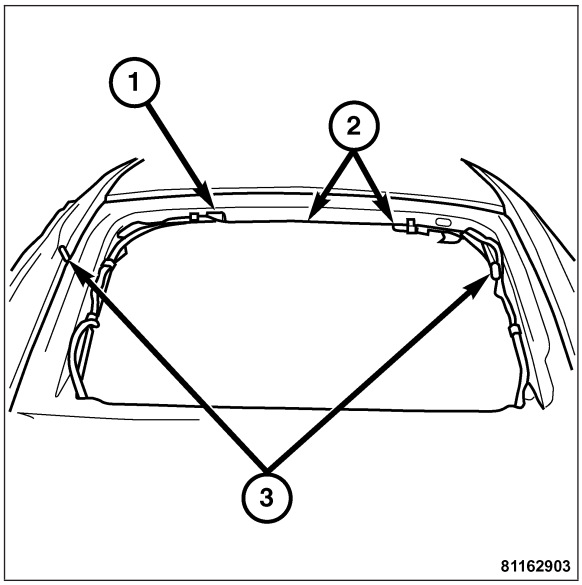

RADIO

REMOVAL

WARNING: DISABLE THE AIRBAG SYSTEM BEFORE ATTEMPTING ANY STEERING WHEEL, STEERING COLUMN, SEAT BELT TENSIONER, SIDE AIRBAG, OR INSTRUMENT PANEL COMPONENT DIAGNOSIS OR SERVICE. DISCONNECT AND ISOLATE THE BATTERY NEGATIVE (GROUND) CABLE, THEN WAIT TWO MINUTES FOR THE AIR BAG SYSTEM CAPACITOR TO DISCHARGE BEFORE PERFORMING FURTHER DIAGNOSIS OR SERVICE. THIS IS THE ONLY SURE WAY TO DISABLE THE AIRBAG SYSTEM. FAILURE TO TAKE THE PROPER PRECAUTIONS COULD RESULT IN ACCIDENTAL AIRBAG DEPLOYMENT AND POSSIBLE PERSONAL INJURY.

1. Record customer defined presets.
2. Disconnect the negative battery cable.
3. Remove the radio by performing the following:
   - Using Special Tool 3291 Radio Removal tool, insert the tools into the slots with the jagged edge toward the center of the radio until a slight click is heard.
   - Gently pull the tool rings along with the radio rearward.

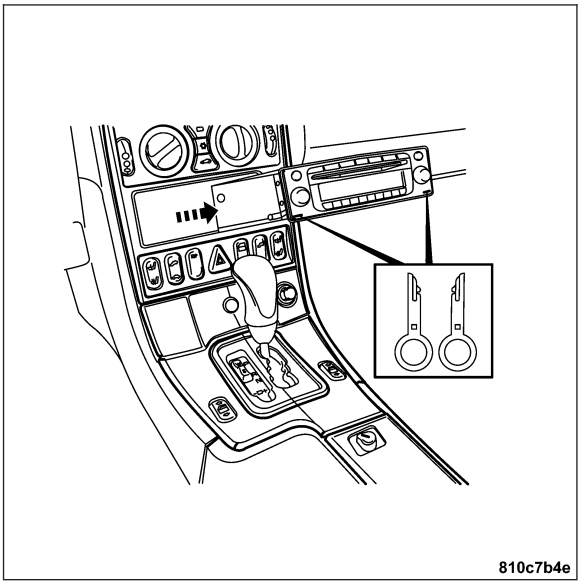

4. Press in on the flexible detents at the sides of the radio after you have removed it to release the tools.

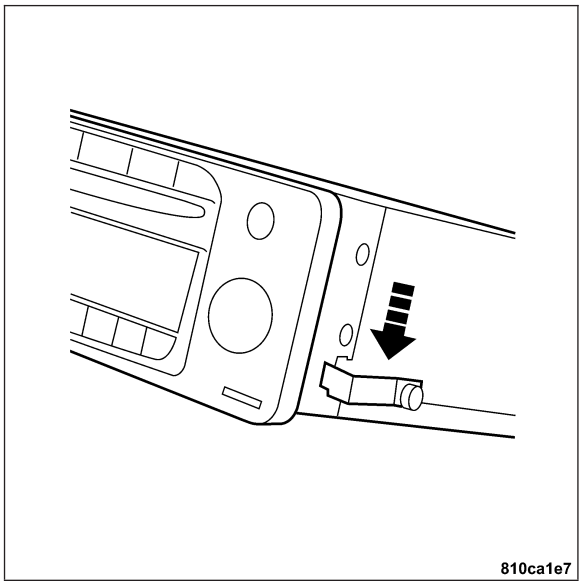

5. Disconnect the radio harness connectors.
6. Remove the radio.

INSTALLATION

1. Connect the radio harness connectors.
2. Align and gently guide the radio into the opening fully until it clicks.
3. Connect the negative battery cable.
4. Restore customer defined presets.

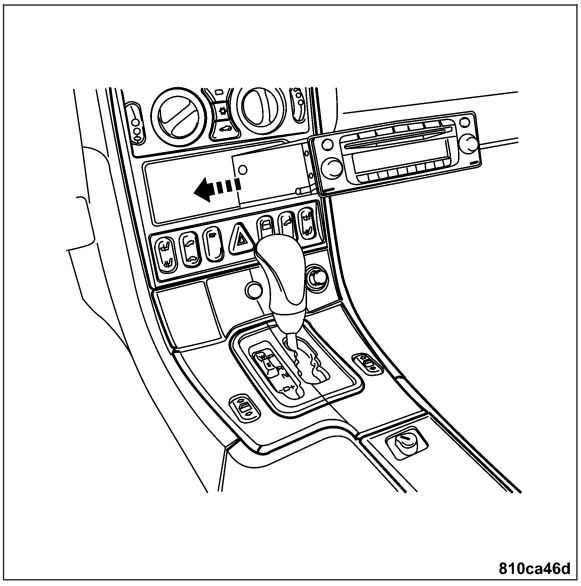

SPEAKER

REMOVAL

LOWER DOOR SPEAKER

WARNING: DISABLE THE AIRBAG SYSTEM BEFORE ATTEMPTING ANY STEERING WHEEL, STEERING COLUMN, SEAT BELT TENSIONER, SIDE AIRBAG, OR INSTRUMENT PANEL COMPONENT DIAGNOSIS OR SERVICE. DISCONNECT AND ISOLATE THE BATTERY NEGATIVE (GROUND) CABLE, THEN WAIT TWO MINUTES FOR THE AIR BAG SYSTEM CAPACITOR TO DISCHARGE BEFORE PERFORMING FURTHER DIAGNOSIS OR SERVICE. THIS IS THE ONLY SURE WAY TO DISABLE THE AIRBAG SYSTEM. FAILURE TO TAKE THE PROPER PRECAUTIONS COULD RESULT IN ACCIDENTAL AIRBAG DEPLOYMENT AND POSSIBLE PERSONAL INJURY.

1. Disconnect the negative battery cable.
2. Remove the door interior trim panel. **Refer to Page 23-108**.
3. Disconnect the lower door speaker harness connector.
4. Remove the lower door speaker retaining screws (1).
5. Remove the lower door speaker together with the plastic frame and the speaker cover.

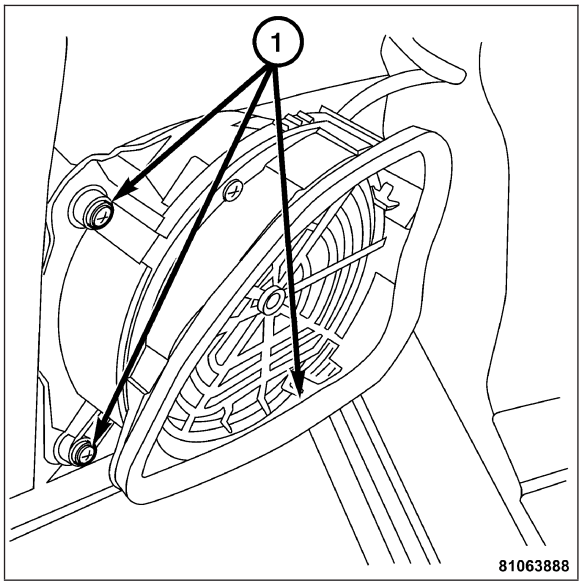

REMOVAL - REAR PANEL SPEAKER

1. Move the seats and tilt the seat back all the way to the front position.
2. Remove the door sill molding.
3. Remove the edge plate and the door edge molding.

CAUTION: The speaker grille is plastic and may break if too much force is applied in one place.

4. Using a trim stick, remove the speaker grille (3) from the back panel carpet.
5. Fold the back panel carpet to one side, enough to see the retaining nuts (4).
6. Remove the retaining nuts (4), then remove the speaker shroud (1) from the inner mounting frame (2).

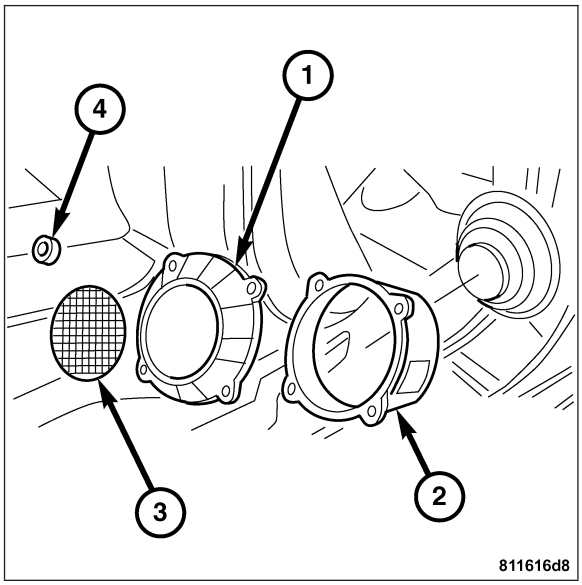

7. Disconnect the rear panel speaker harness connector (2).
8. Remove the inner mounting frame (1) together with the left or right rear panel speaker from the vehicle.

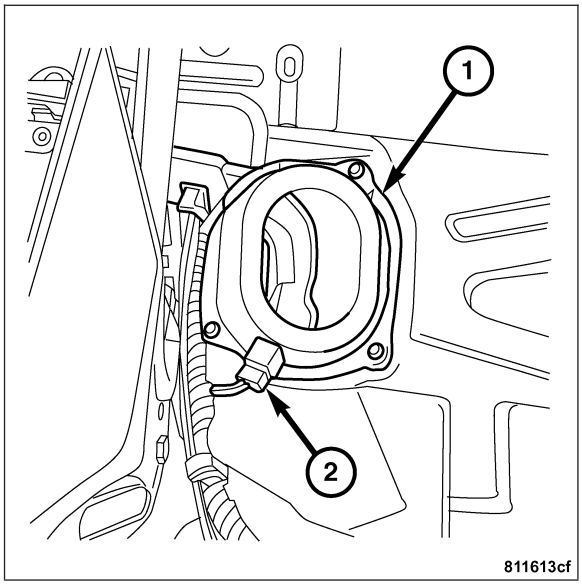

REMOVAL - TWEETER SPEAKER

WARNING: DISABLE THE AIRBAG SYSTEM BEFORE ATTEMPTING ANY STEERING WHEEL, STEERING COLUMN, SEAT BELT TENSIONER, SIDE AIRBAG, OR INSTRUMENT PANEL COMPONENT DIAGNOSIS OR SERVICE. DISCONNECT AND ISOLATE THE BATTERY NEGATIVE (GROUND) CABLE, THEN WAIT TWO MINUTES FOR THE AIR BAG SYSTEM CAPACITOR TO DISCHARGE BEFORE PERFORMING FURTHER DIAGNOSIS OR SERVICE. THIS IS THE ONLY SURE WAY TO DISABLE THE AIRBAG SYSTEM. FAILURE TO TAKE THE PROPER PRECAUTIONS COULD RESULT IN ACCIDENTAL AIRBAG DEPLOYMENT AND POSSIBLE PERSONAL INJURY.

1. Disconnect the negative battery cable.
2. Remove the door interior trim panel (1). **Refer to Page 23-108**.

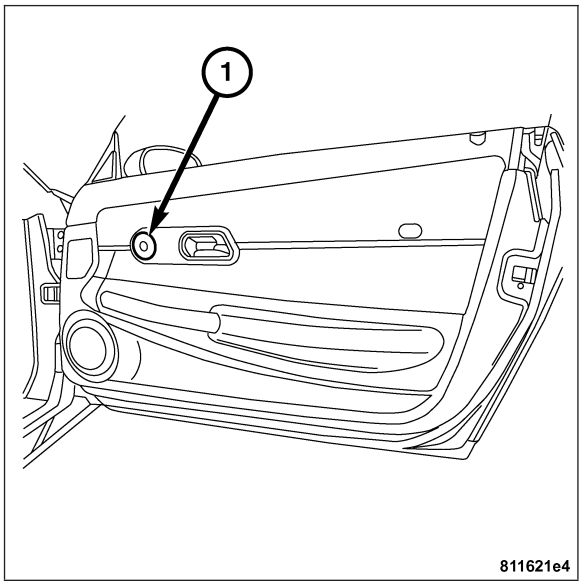

3. Disconnect the tweeter speaker harness connector (2).
4. Release the retaining tabs and remove the tweeter speaker (1) from the door interior trim panel.

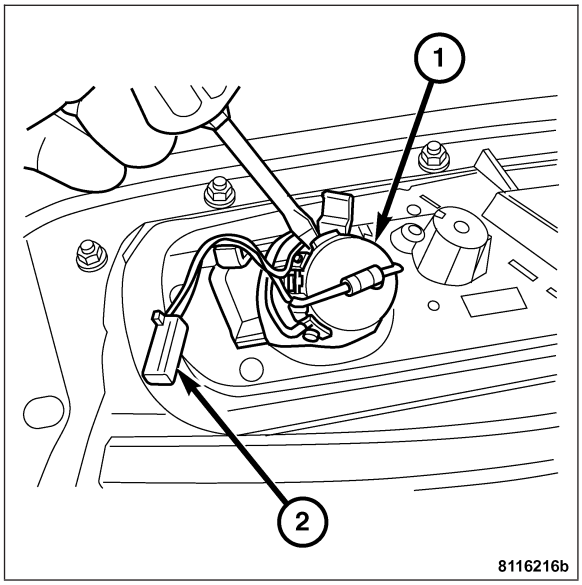

INSTALLATION

LOWER DOOR SPEAKER

WARNING: DISABLE THE AIRBAG SYSTEM BEFORE ATTEMPTING ANY STEERING WHEEL, STEERING COLUMN, SEAT BELT TENSIONER, SIDE AIRBAG, OR INSTRUMENT PANEL COMPONENT DIAGNOSIS OR SERVICE. DISCONNECT AND ISOLATE THE BATTERY NEGATIVE (GROUND) CABLE, THEN WAIT TWO MINUTES FOR THE AIR BAG SYSTEM CAPACITOR TO DISCHARGE BEFORE PERFORMING FURTHER DIAGNOSIS OR SERVICE. THIS IS THE ONLY SURE WAY TO DISABLE THE AIRBAG SYSTEM. FAILURE TO TAKE THE PROPER PRECAUTIONS COULD RESULT IN ACCIDENTAL AIRBAG DEPLOYMENT AND POSSIBLE PERSONAL INJURY.

1. Install the lower door speaker together with the plastic frame (1) and the speaker cover (2).
2. Connect the lower door speaker harness connector (4).
3. Install the lower door speaker retaining screws (3) and secure.

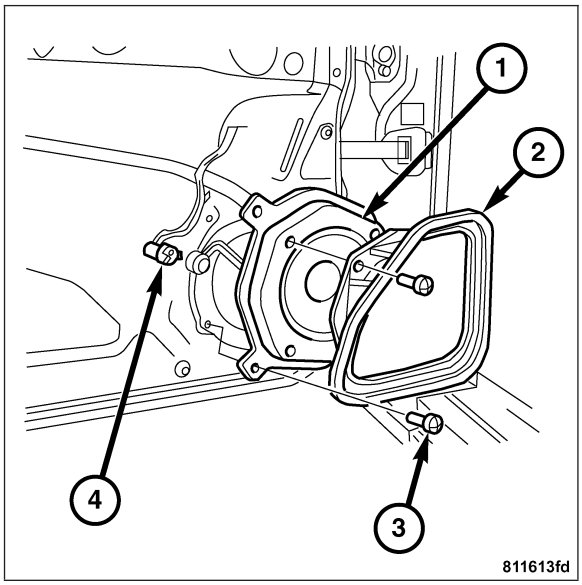

4. Install the door interior trim panel. **Refer to Page 23-109**.
5. Connect the negative battery cable.

INSTALLATION - REAR PANEL SPEAKER

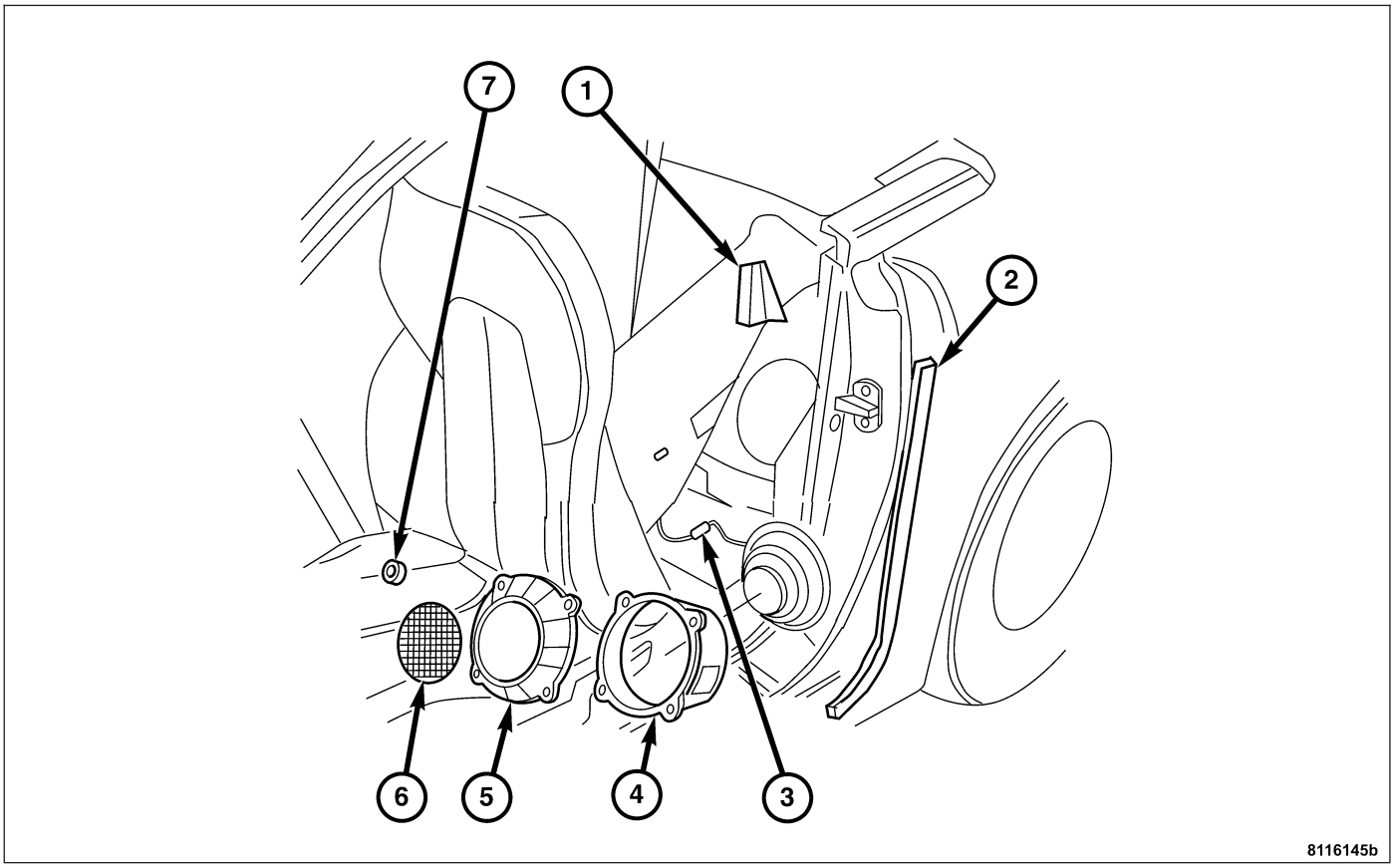

1 - EDGE PLATE
2 - EDGE MOLDING
3 - SPEAKER HARNESS CONNECTOR
4 - INNER MOUNTING FRAME
5 - SPEAKER SHROUD
6 - SPEAKER GRILLE
7 - RETAINING NUT

1. Install the inner mounting frame (4) together with the left or right rear panel speaker into the opening of the rear panel.
2. Connect the rear panel speaker harness connector (3).
3. Install the speaker shroud (5) to the inner mounting frame (4).
4. Install the retaining nuts (7) and secure, then unfold the back panel carpet.
5. Install the rear panel speaker grille (6).
6. Install the door edge molding (2) and the edge plate (1).
7. Install the door sill molding.
8. Move seats and seat back into normal position.

INSTALLATION - TWEETER SPEAKER

WARNING: DISABLE THE AIRBAG SYSTEM BEFORE ATTEMPTING ANY STEERING WHEEL, STEERING COLUMN, SEAT BELT TENSIONER, SIDE AIRBAG, OR INSTRUMENT PANEL COMPONENT DIAGNOSIS OR SERVICE. DISCONNECT AND ISOLATE THE BATTERY NEGATIVE (GROUND) CABLE, THEN WAIT TWO MINUTES FOR THE AIR BAG SYSTEM CAPACITOR TO DISCHARGE BEFORE PERFORMING FURTHER DIAGNOSIS OR SERVICE. THIS IS THE ONLY SURE WAY TO DISABLE THE AIRBAG SYSTEM. FAILURE TO TAKE THE PROPER PRECAUTIONS COULD RESULT IN ACCIDENTAL AIRBAG DEPLOYMENT AND POSSIBLE PERSONAL INJURY.

1. Install the tweeter speaker (1) into the door interior trim panel (2).
2. Connect the tweeter speaker harness connector (3).
3. Install the door interior trim panel (2). **Refer to Page 23-109**.
4. Connect the negative battery cable.

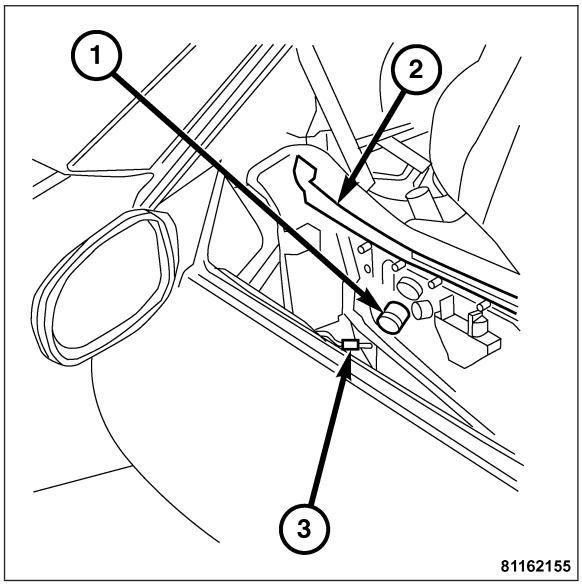

CHIME/BUZZER

TABLE OF CONTENTS

page

CHIME/BUZZER - ELECTRICAL DIAGNOSTICS . . . 1

page

CHIME/BUZZER - SERVICE INFORMATION 3

CHIME/BUZZER - ELECTRICAL DIAGNOSTICS

TABLE OF CONTENTS

page

CHIME/BUZZER - ELECTRICAL DIAGNOSTICS
SCHEMATICS AND DIAGRAMS 2

CHIME/BUZZER - ELECTRICAL DIAGNOSTICS

SCHEMATICS AND DIAGRAMS

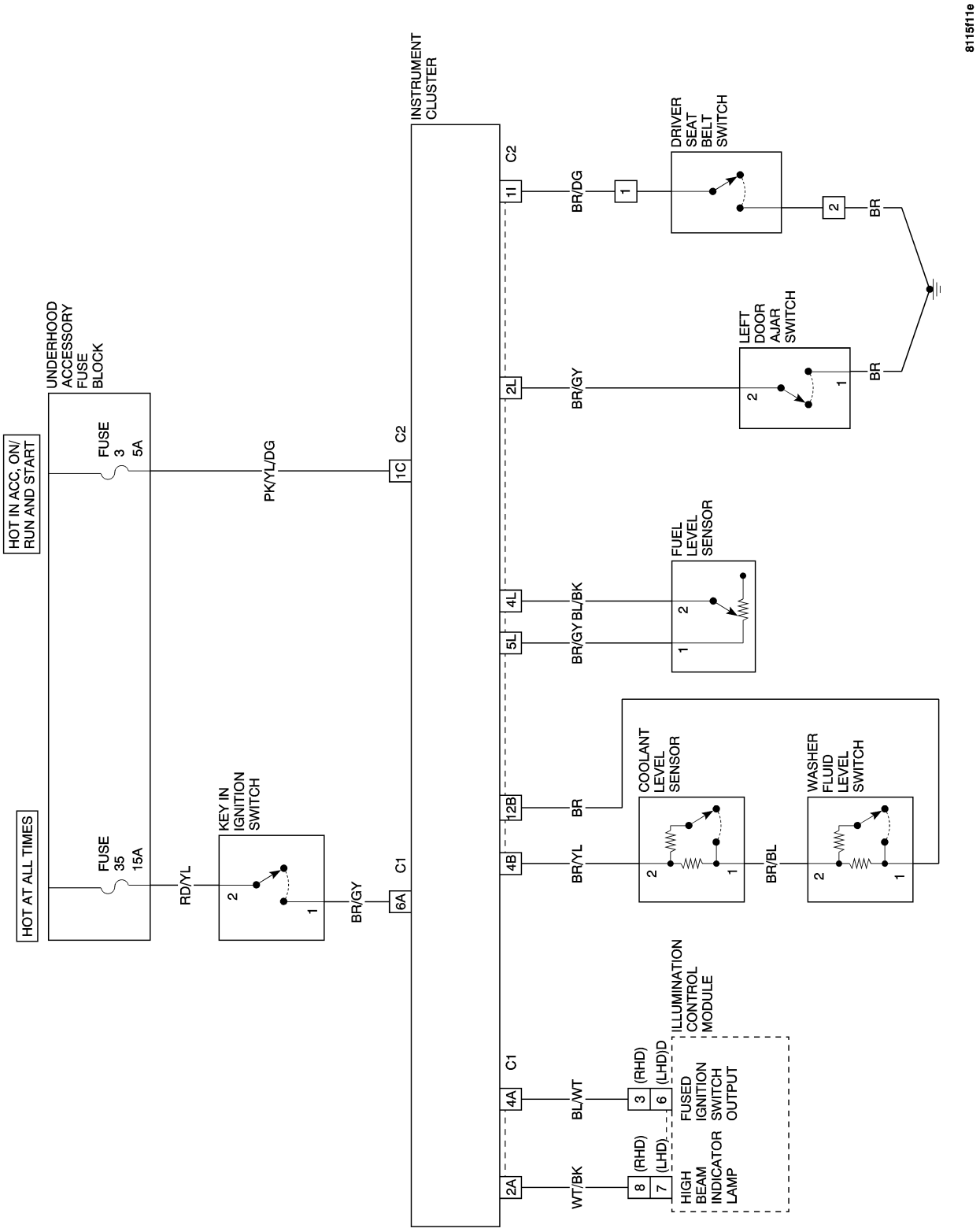

CHIME/BUZZER - SERVICE INFORMATION

TABLE OF CONTENTS

page

CHIME TONE GENERATOR
DESCRIPTION
DESCRIPTION 3

page

DIAGNOSIS AND TESTING - CHIME WARNING SYSTEM 4
OPERATION 5

CHIME TONE GENERATOR

DESCRIPTION

DESCRIPTION

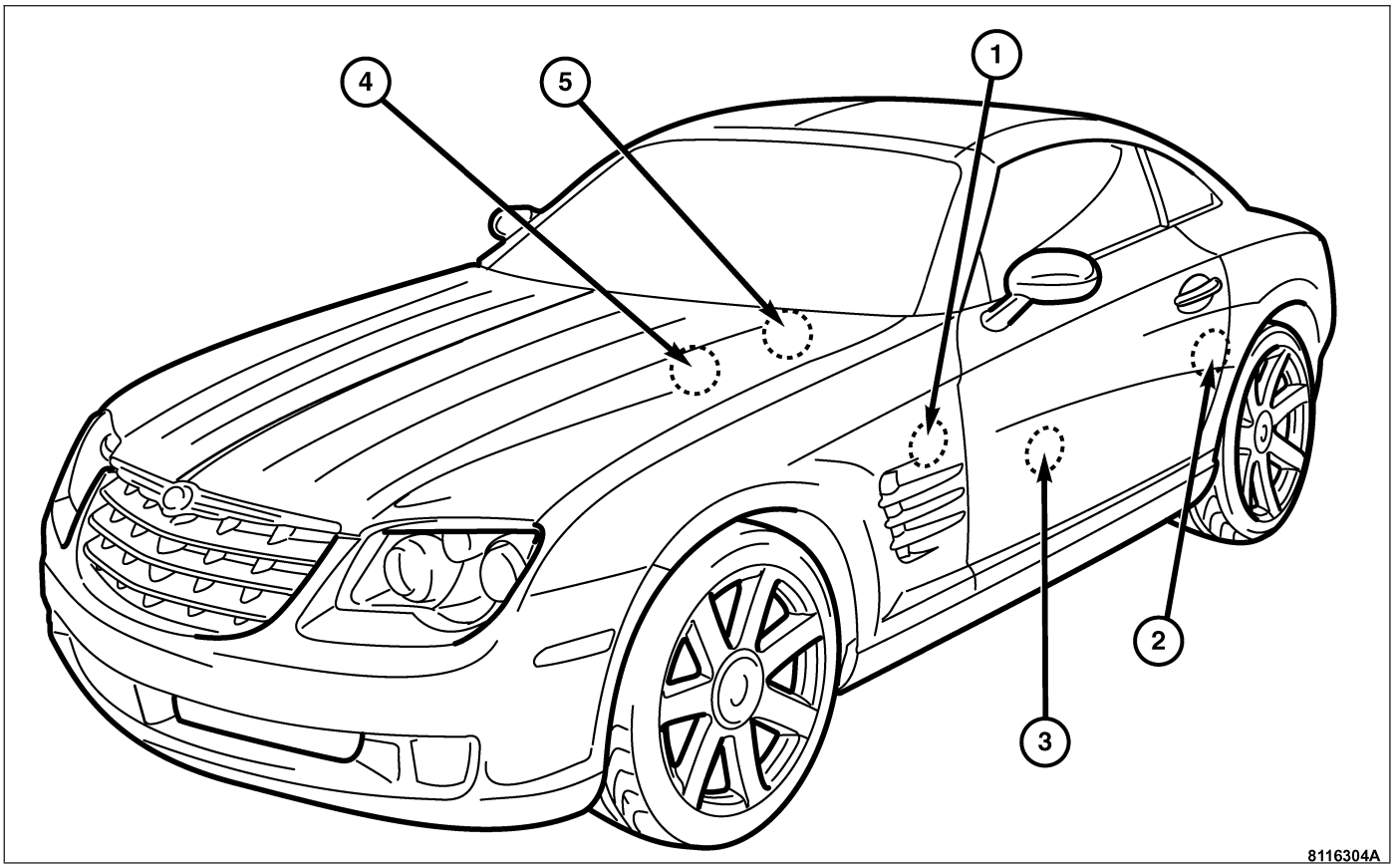

1 - HEADLAMP SWITCH
2 - DOOR AJAR SWITCH
3 - SEAT BELT SWITCH
4 - ILLUMINATION CONTROL MODULE
5 - INSTRUMENT CLUSTER

The chime warning system uses a single chime tone generator that is integral to the Instrument Cluster to provide an audible indication of vehicle conditions that may require the attention of the vehicle operator. The chime warning system includes the following major components:

- Headlamp Switch
- Door Ajar Switch
- Seat Belt Switch

- Ignition Switch
- Instrument Cluster
- Coolant Level Sensor
- Fuel Level Sensor
- Washer Fluid Level Sensor

Hard wired circuitry connects many of the chime warning system components to each other through the electrical system of the vehicle.

If the Instrument Cluster or the chime tone generator are damaged or faulty, the Instrument Cluster assembly must be replaced.

DIAGNOSIS AND TESTING - CHIME WARNING SYSTEM

Refer to the appropriate wiring information. Conventional diagnostic methods may not prove conclusive in the diagnosis of the Instrument Cluster. The most reliable, efficient and accurate means to diagnose the Instrument Cluster and the Controller Area Network (CAN) data bus network inputs for the chime warning system requires the use of a DRB III® scan tool and the appropriate diagnostic information.

WARNING: DISABLE THE AIRBAG SYSTEM BEFORE ATTEMPTING ANY STEERING WHEEL, STEERING COLUMN, OR INSTRUMENT PANEL COMPONENT DIAGNOSIS OR SERVICE. DISCONNECT AND ISOLATE THE BATTERY NEGATIVE (GROUND) CABLE, THEN WAIT TWO MINUTES FOR THE AIRBAG SYSTEM CAPACITOR TO DISCHARGE BEFORE PERFORMING FURTHER DIAGNOSIS OR SERVICE. THIS IS THE ONLY SURE WAY TO DISABLE THE AIRBAG SYSTEM. FAILURE TO TAKE THE PROPER PRECAUTIONS COULD RESULT IN ACCIDENTAL AIRBAG DEPLOYMENT AND POSSIBLE PERSONAL INJURY.

CHIME WARNING SYSTEM DIAGNOSIS

CONDITION	POSSIBLE CAUSES	CORRECTION
NO SEAT BELT WARNING CHIME WITH SEAT BELT UNBUCKLED, BUT OTHER CHIME FEATURES OK	1. Seat belt switch ground circuit open.	1. Check for continuity between the ground circuit of the wire harness connector for the seat belt switch and a good ground. Repair the ground circuit, if required.
	2. Seat belt switch sense circuit open.	2. Check for continuity between the seat belt switch sense circuit of the wire harness connector for the seat belt switch and the instrument cluster wire harness connector. Repair the seat belt switch sense circuit, if required.
	3. Faulty seat belt switch.	3. Check for continuity between the ground circuit and the seat belt switch sense circuit of the seat belt switch pigtail wire connector. There should be continuity with the seat belt unbuckled. Replace the faulty seat belt, if required.
SEAT BELT WARNING CHIME SOUNDS WITH SEAT BELT BUCKLED	1. Seat belt switch sense circuit shorted.	1. With the wire harness connector for the seat belt switch and the instrument cluster wire harness connector disconnected, there should be no continuity between the seat belt switch sense circuit and a good ground. Repair the seat belt switch sense circuit, if required.
	2. Faulty seat belt switch.	2. Check for continuity between the ground circuit and the seat belt switch sense circuit of the seat belt switch pigtail wire connector. There should be no continuity with the seat belt buckled. Replace the faulty seat belt, if required.

CONDITION	POSSIBLE CAUSES	CORRECTION
NO KEY IN IGNITION OR HEADLAMPS-ON WARNING CHIME WITH DRIVER SIDE DOOR OPEN	1. Faulty door ajar switch or circuits.	1. Check that interior lights illuminate with the driver door open. If not OK, repair the interior lighting system as required.
	2. Faulty headlamp switch (illumination control module) or circuits.	2. Check for proper exterior lighting operation. If not OK, repair the exterior lighting system as required.
	3. Key in ignition switch sense circuit open.	2. Check for continuity between the key in ignition switch sense circuit of the instrument panel wire harness connector for the ignition switch and the body wire harness connector for the underhood accessory fuse block. Repair the key in ignition switch sense circuit, if required.
	4. Faulty ignition switch.	3. Check for continuity between the two terminals in the ignition switch connector. There should be continuity with a key in the ignition lock cylinder. Replace the faulty ignition switch, if required.
CHIME SOUNDS WITH DRIVER SIDE FRONT DOOR OPEN	1. Key in ignition switch sense circuit shorted.	1. Disconnect the instrument panel wire harness connector for the ignition switch and the body wire harness connector for the underhood accessory fuse block. There should be no continuity between the key in ignition switch sense circuit of the instrument panel wire harness connector for the ignition switch and a good ground. Repair the key in ignition switch sense circuit, if required.
	2. Faulty ignition switch.	2. Check for continuity between the two terminals in the ignition switch connector. There should be no continuity with the key removed from the ignition lock cylinder. Replace the faulty ignition switch, if required.
NO CHIMES AT ALL TIMES	1. Faulty Instrument Cluster.	1. Use a DRB III® scan tool and refer to the appropriate diagnostic information. Replace the faulty Instrument Cluster, if required

OPERATION

The chime warning system components operate on battery voltage received through fuse 35 in the Underhood Accessory Fuse Block on a non-switched B(+) circuit so that the system may operate regardless of the ignition switch position.

The chime warning system provides an audible indication to the vehicle operator under the following conditions:

- **Fasten Seat Belt Warning** - The Instrument Cluster chime tone generator will generate repetitive chimes to announce that an input from the seat belt switch indicates the driver side seat belt is not fastened. Unless the driver side seat belt is fastened, the chimes will continue to sound for a short duration each time the ignition switch is turned to the On position or until the driver side seat belt is fastened.
- **Head/Park Lights-On Warning** - The Instrument Cluster chime tone generator will generate repetitive chimes to indicate that the exterior lamps are turned On with the driver side door opened. The chime will continue to sound until the exterior lamps are turned Off, the driver side door is closed, or the ignition switch is turned to the On position.

- **Key-In-Ignition Warning** - The Instrument Cluster chime tone generator will generate repetitive chimes at a fast rate to indicate that the key is in the ignition cylinder with the driver side door opened and the ignition switch in the Off position. The chime will continue to sound until the key is removed from the ignition lock cylinder, the driver side door is closed, or the ignition switch is turned to the On position.
- **Warning Beep Support** - The Instrument Cluster chime tone generator will generate a short series of beeps to provide an audible alert to the vehicle operator of certain visual warning indications displayed by the Instrument Cluster.

The Instrument Cluster provides chime tones for all available features in the chime warning system. The Instrument Cluster relies upon message inputs received from other modules over the Controller Area Network (CAN) data bus network to provide chime tones for all of the remaining chime warning system features.

The internal programming of the Instrument Cluster determines the priority of each chime tone request input that is received, as well as the rate and duration of each chime tone that is to be generated.

ELECTRONIC CONTROL MODULES

TABLE OF CONTENTS

page

ELECTRONIC CONTROL MODULES - ELECTRICAL DIAGNOSTICS 1

page

ELECTRONIC CONTROL MODULES - SERVICE INFORMATION 52

ELECTRONIC CONTROL MODULES - ELECTRICAL DIAGNOSTICS

TABLE OF CONTENTS

page

ELECTRONIC CONTROL MODULES - ELECTRICAL DIAGNOSTICS
DIAGNOSIS AND TESTING
*DRB III® DOES NOT POWER UP 2
*NO RESPONSE FROM POWERTRAIN CONTROL MODULE 4
*NO RESPONSE FROM OCCUPANT RESTRAINT CONTROLLER 10
*NO RESPONSE FROM INSTRUMENT CLUSTER 13
*NO RESPONSE FROM UNIVERSAL GARAGE DOOR OPENER/TIRE PRESSURE MONITOR 17
*NO RESPONSE FROM A/C HEATER CONTROL MODULE 21

page

*NO RESPONSE FROM CONTROLLER ANTILOCK BRAKE 25
*NO RESPONSE FROM SHIFT LEVER ASSEMBLY 29
*NO RESPONSE FROM TRANSMISSION CONTROL MODULE 33
*NO RESPONSE FROM BODY CONTROL MODULE 36
*NO RESPONSE FROM SENTRY KEY REMOTE ENTRY MODULE 40
BODY VERIFICATION TEST 44
SCHEMATICS AND DIAGRAMS 45

ELECTRONIC CONTROL MODULES - ELECTRICAL DIAGNOSTICS

DIAGNOSIS AND TESTING

*DRB III® DOES NOT POWER UP

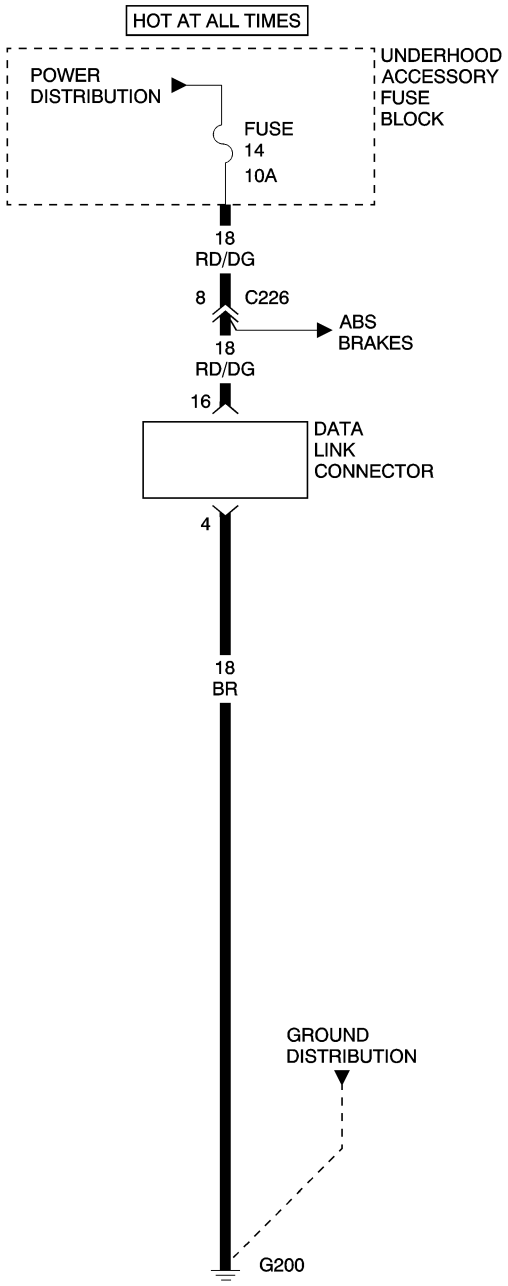

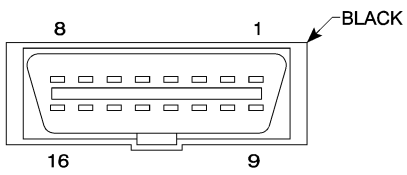

DATA LINK CONNECTOR

8113dd6e

*DRB III® DOES NOT POWER UP — CONTINUED

POSSIBLE CAUSES
FUSED B(+) CIRCUIT OPEN
GROUND CIRCUIT OPEN

For a complete Data Link Connector Circuit Diagram, **Refer to Page 8E-45**.

Diagnostic Test

1. MEASURE THE VOLTAGE OF THE DLC POWER CIRCUIT

Note: If the LEDs do not light or no sound is emitted at start up, check for loose cable connections or a bad cable. Check the vehicle battery voltage (data link 16-way connector cavity 16). A minimum of 11 volts is required to adequately power the DRB III®. Check for a proper ground at DLC cavity 4. If all connections are proper between the DRB III® and the vehicle or other devices and the vehicle battery is fully charged, an inoperative DRB III® may be the result of a faulty cable.

Turn the ignition off.

Measure the voltage of the Fused B(+) circuit at cavity 16 of the Data Link Connector.

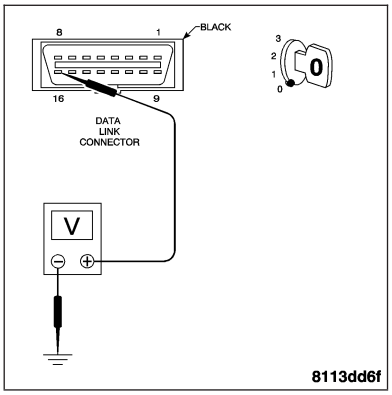

Is the voltage above 11 volts?

Yes >> Go to 2

No >> System voltage must be above 11 volts. Check Fuse 14 in the Underhood Accessory Fuse Block. Repair the voltage concern as necessary.
Perform BODY VERIFICATION TEST.

2. MEASURE THE RESISTANCE OF THE DLC GROUND CIRCUIT

Measure the resistance between ground the Ground circuit at cavity 4 of the Data Link Connector.

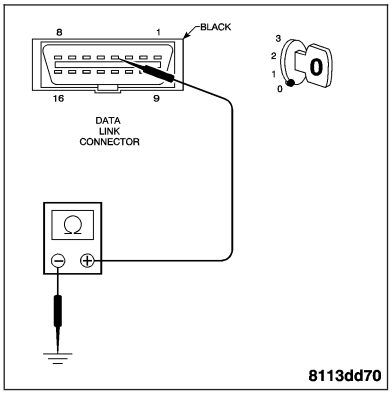

Is the resistance below 5.0 ohms?

Yes >> Inspect the DRB III® for a possible malfunction.
Perform BODY VERIFICATION TEST.

No >> Repair the DLC Ground circuit for an open.
Perform BODY VERIFICATION TEST.

*NO RESPONSE FROM POWERTRAIN CONTROL MODULE

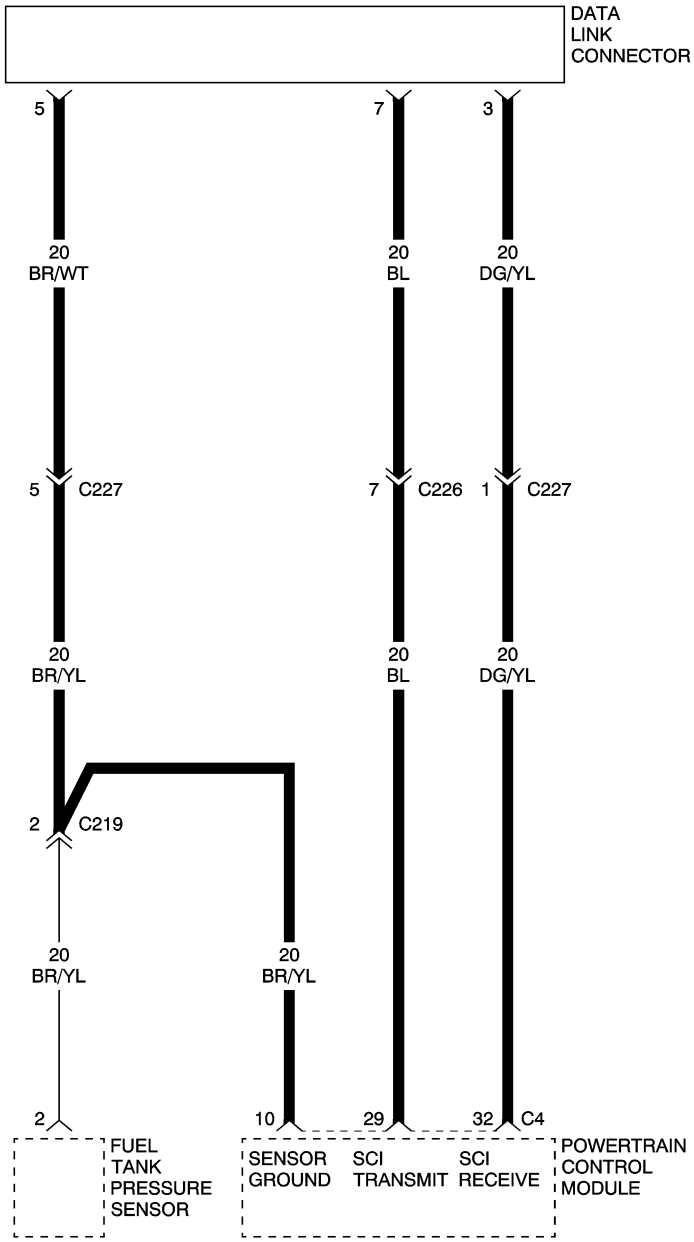

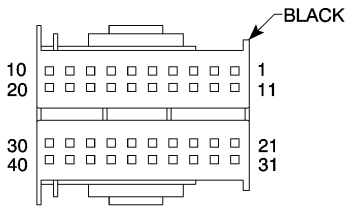

POWERTRAIN
CONTROL
MODULE – C4

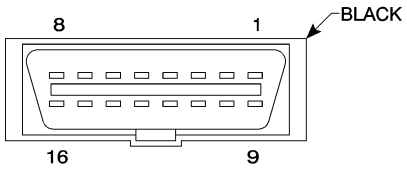

DATA
LINK
CONNECTOR

8113dd65

*NO RESPONSE FROM POWERTRAIN CONTROL MODULE — CONTINUED

POSSIBLE CAUSES
FUSED B+ CIRCUIT OPEN
FUSED ENGINE CONTROL RELAY OUTPUT CIRCUIT OPEN
PCM GROUND CIRCUITS
SCI RECEIVE CIRCUIT OPEN
SCI RECEIVE CIRCUIT SHORTED TO GROUND
SCI RECEIVE CIRCUIT SHORTED TO VOLTAGE
SCI TRANSMIT CIRCUIT OPEN
SCI TRANSMIT CIRCUIT SHORTED TO GROUND
SCI TRANSMIT CIRCUIT SHORTED TO VOLTAGE
SENSOR GROUND CIRCUIT OPEN
SENSOR GROUND CIRCUIT SHORTED TO VOLTAGE
POWERTRAIN CONTROL MODULE

For a complete Data Link Connector Circuit Diagram, **Refer to Page 8E-45**.

Diagnostic Test

1. FUSED B(+) CIRCUIT OPEN

Turn the ignition off.

Disconnect the PCM C5 harness connector.

Note: Check connector — Clean/repair as necessary.

Turn the ignition on.

Measure the voltage of the Fused Ignition Switch Output circuit at the PCM C5 harness connector.

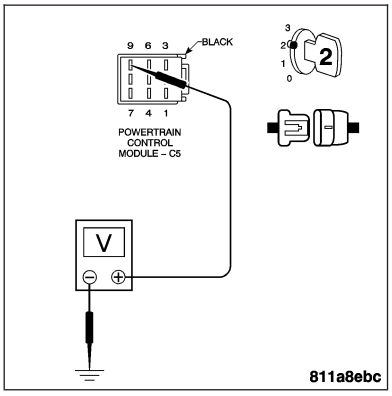

Is the voltage above 10 volts?

Yes >> Go to 2

No >> Repair the Fused Ignition Switch Output circuit for an open.

Perform POWERTRAIN VERIFICATION TEST - VER 2.

*NO RESPONSE FROM POWERTRAIN CONTROL MODULE — CONTINUED

2. FUSED ENGINE CONTROL RELAY OUTPUT CIRCUIT OPEN

Turn the ignition on.

Measure the voltage of the Fused Engine Control Relay Output circuit at the PCM C5 harness connector.

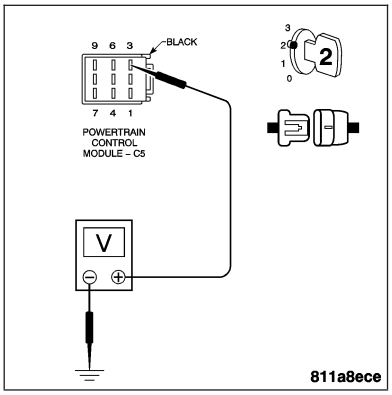

Is the voltage above 10 volts?

Yes >> Go to 3

No >> Repair the Fused Engine Control Relay Output circuit for an open.
Perform POWERTRAIN VERIFICATION TEST - VER 2.

3. PCM GROUND CIRCUITS OPEN

Turn the ignition off.

Measure the resistance of the Ground circuits from the PCM C5 harness connector.

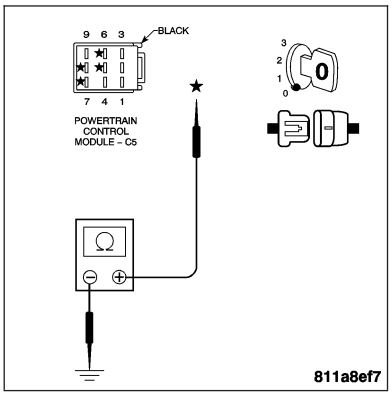

Is the resistance below 5.0 ohms on each ground circuit?

Yes >> Go to 4

No >> Repair the Ground circuit(s) for an open.
Perform POWERTRAIN VERIFICATION TEST - VER 2.

4. SCI RECEIVE CIRCUIT OPEN

With the ignition off.

Disconnect the PCM C4 harness connector.

Note: Check connector — Clean/repair as necessary.

Measure the resistance of the PCM SCI Receive circuit from the PCM C4 harness connector to the DLC.

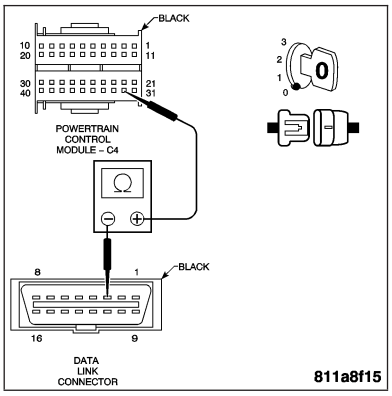

Is the resistance below 5.0 ohms?

Yes >> Go to 5

No >> Repair the PCM SCI Receive circuit for an open.
Perform POWERTRAIN VERIFICATION TEST - VER 2.

*NO RESPONSE FROM POWERTRAIN CONTROL MODULE — CONTINUED

5. SCI RECEIVE CIRCUIT SHORTED TO GROUND

With the ignition off.
Measure the resistance between ground and the PCM SCI Receive circuit.

Is the resistance below 100 kohms?

Yes >> Repair the PCM SCI Receive circuit for a short to ground. Perform POWERTRAIN VERIFICATION TEST - VER 2.

No >> Go to 6

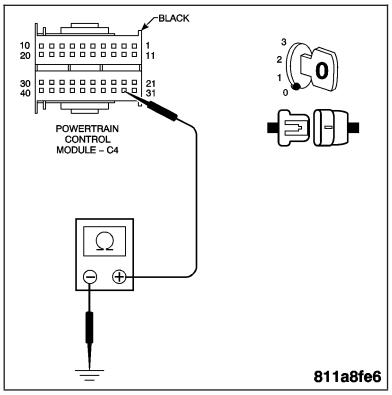

6. SCI RECEIVE CIRCUIT SHORTED TO VOLTAGE

Turn the ignition on.
Measure the voltage of the PCM SCI Receive circuit at the DLC.

Is the voltage above 0.5 volt?

Yes >> Repair the PCM SCI Receive circuit for a short to voltage. Perform POWERTRAIN VERIFICATION TEST - VER 2.

No >> Go to 7

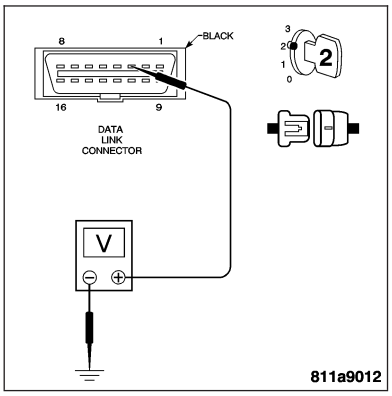

7. SCI TRANSMIT CIRCUIT OPEN

Turn the ignition off.
Measure the resistance of the PCM SCI Transmit circuit from the PCM harness connector to the DLC.

Is the resistance below 5.0 ohms?

Yes >> Go to 8

No >> Repair the PCM SCI Transmit circuit for an open. Perform POWERTRAIN VERIFICATION TEST - VER 2.

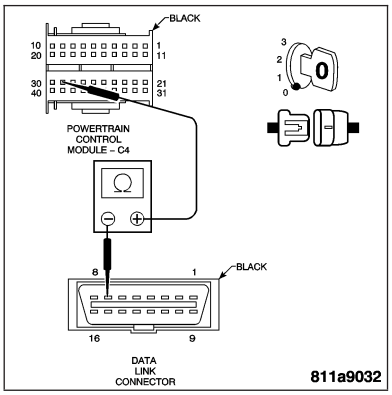

*NO RESPONSE FROM POWERTRAIN CONTROL MODULE — CONTINUED

8. SCI TRANSMIT CIRCUIT SHORTED TO GROUND

With the ignition off.
Measure the resistance between ground and the PCM SCI Transmit circuit.

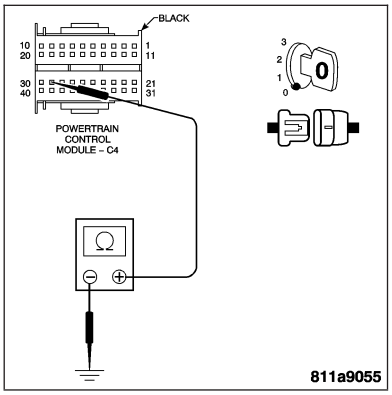

Is the resistance below 100 kohms?

Yes >> Repair the PCM SCI Transmit circuit for a short to ground. Perform POWERTRAIN VERIFICATION TEST - VER 2.

No >> Go to 9

9. SCI TRANSMIT CIRCUIT SHORTED TO VOLTAGE

Turn the ignition on.
Measure the voltage of the PCM SCI Transmit circuit at the DLC.

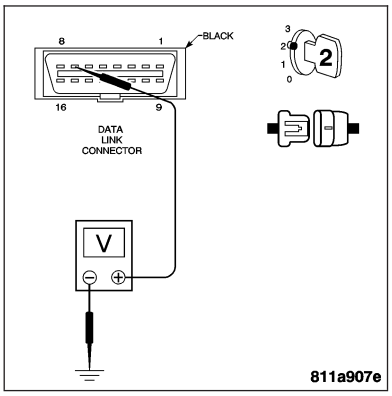

Is the voltage above 0.5 volt?

Yes >> Repair the PCM SCI Transmit circuit for a short to voltage. Perform POWERTRAIN VERIFICATION TEST - VER 2.

No >> Go to 10

10. SENSOR GROUND CIRCUIT OPEN

Turn the ignition off.
Measure the resistance of the Sensor Ground circuit from the PCM C5 harness connector, cavity 10, to the DLC.

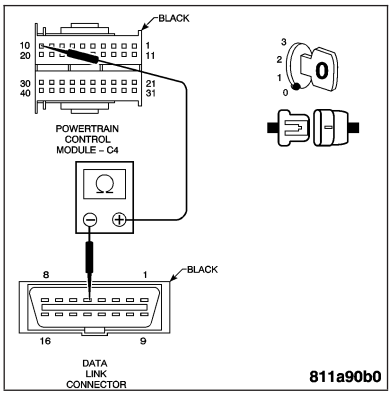

Is the resistance below 5.0 ohms?

Yes >> Go to 11

No >> Repair the Sensor Ground circuit for an open. Perform POWERTRAIN VERIFICATION TEST - VER 2.

*NO RESPONSE FROM POWERTRAIN CONTROL MODULE — CONTINUED

11. SENSOR GROUND CIRCUIT SHORTED TO VOLTAGE

Turn the ignition on.
Measure the voltage of the Sensor Ground circuit at the DLC.

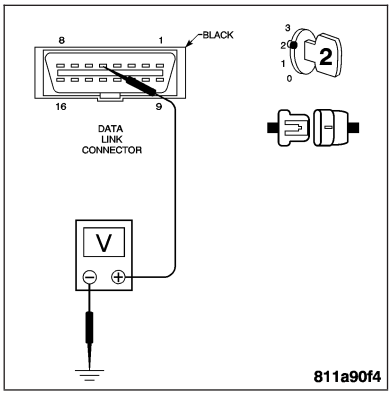

Is the voltage above 0.5 volt?

Yes >> Repair the Sensor Ground circuit for a short to voltage.
Perform POWERTRAIN VERIFICATION TEST - VER 2.

No >> Replace the Powertrain Control Module. **Refer to Page 8E-56**.
Perform POWERTRAIN VERIFICATION TEST - VER 2.

*NO RESPONSE FROM OCCUPANT RESTRAINT CONTROLLER

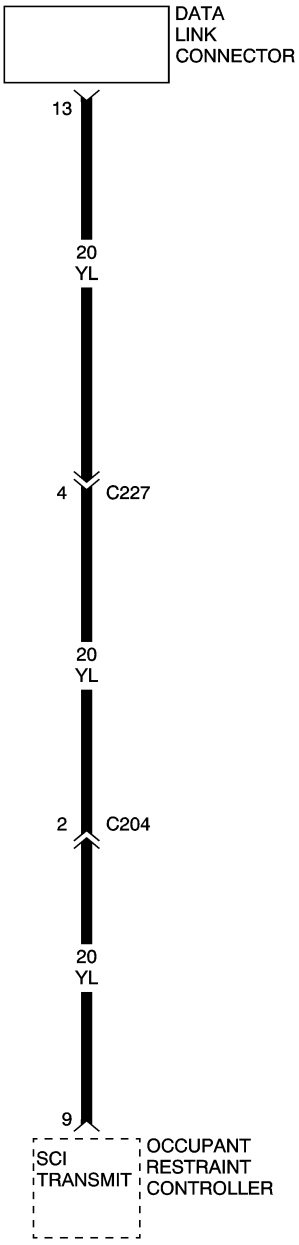

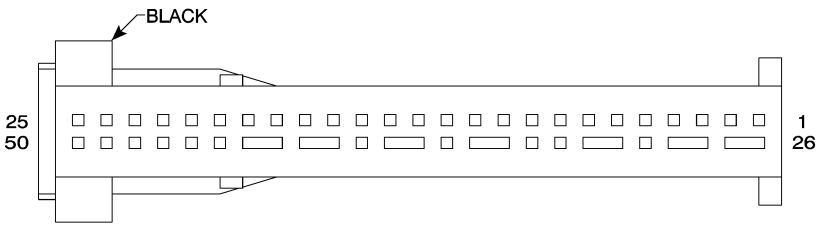

OCCUPANT
RESTRAINT
CONTROLLER

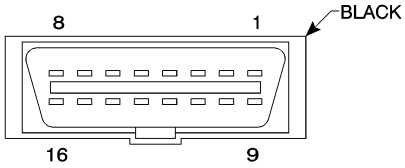

DATA
LINK
CONNECTOR

8113dd5e

*NO RESPONSE FROM OCCUPANT RESTRAINT CONTROLLER — CONTINUED

POSSIBLE CAUSES
FUSED IGNITION SWITCH OUTPUT CIRCUIT OPEN
ORC GROUND CIRCUIT OPEN
SCI TRANSMIT CIRCUIT OPEN
SCI TRANSMIT CIRCUIT SHORTED TO GROUND
SCI TRANSMIT CIRCUIT SHORTED TO VOLTAGE
OCCUPANT RESTRAINT CONTROLLER

For a complete Data Link Connector Circuit Diagram, **Refer to Page 8E-45**.

Diagnostic Test

1. FUSED IGNITION SWITCH OUTPUT CIRCUIT OPEN

WARNING: TURN THE IGNITION OFF, DISCONNECT THE BATTERY AND WAIT TWO MINUTES BEFORE PROCEEDING.

Turn the ignition off.

Disconnect the Occupant Restraint Controller (ORC) harness connector.

Note: Check connector — Clean/repair as necessary.

Turn the ignition on.

Measure the voltage of the Fused Ignition Switch Output circuit at the ORC harness connector.

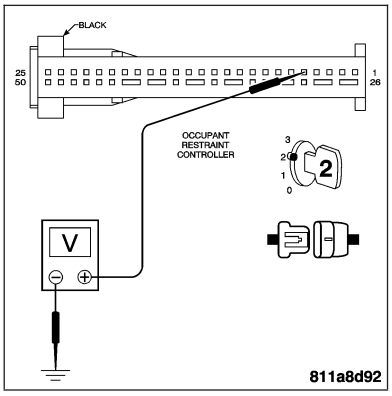

Is the voltage above 10 volts?

Yes >> Go to 2

No >> Repair the Fused Ignition Switch Output circuit for an open.

WARNING: WHEN RECONNECTING AIRBAG SYSTEM COMPONENTS, THE IGNITION MUST BE TURNED OFF AND THE BATTERY MUST BE DISCONNECTED.

Perform AIRBAG VERIFICATION TEST.

2. ORC GROUND CIRCUIT OPEN

Turn the ignition off.

Measure the resistance of the Ground circuit from the ORC harness connector.

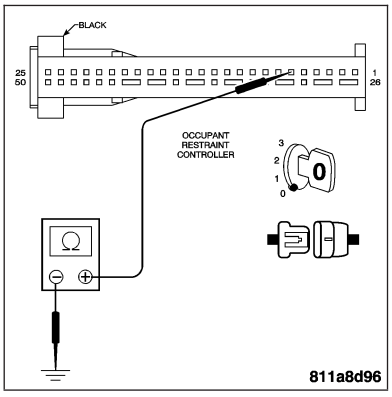

Is the resistance below 5.0 ohms?

Yes >> Go to 3

No >> Repair the Ground circuit for an open.

WARNING: WHEN RECONNECTING AIRBAG SYSTEM COMPONENTS, THE IGNITION MUST BE TURNED OFF AND THE BATTERY MUST BE DISCONNECTED.

Perform AIRBAG VERIFICATION TEST.

*NO RESPONSE FROM OCCUPANT RESTRAINT CONTROLLER — CONTINUED

3. SCI TRANSMIT CIRCUIT OPEN

With the ignition off.

Measure the resistance of the SCI Transmit circuit from the ORC harness connector to the DLC.

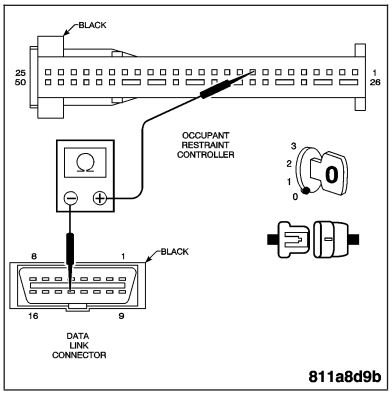

Is the resistance below 5.0 ohms?

Yes >> Go to 4

No >> Repair the SCI Transmit circuit for an open.

WARNING: WHEN RECONNECTING AIRBAG SYSTEM COMPONENTS, THE IGNITION MUST BE TURNED OFF AND THE BATTERY MUST BE DISCONNECTED.

Perform AIRBAG VERIFICATION TEST.

4. SCI TRANSMIT CIRCUIT SHORTED TO GROUND

With the ignition off.

Measure the resistance between ground and the SCI Transmit circuit.

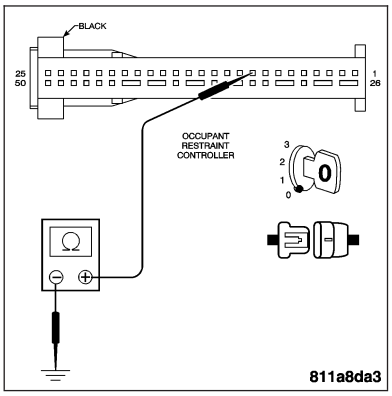

Is the resistance below 100 kohms?

Yes >> Repair the SCI Transmit circuit for a short to ground.

WARNING: WHEN RECONNECTING AIRBAG SYSTEM COMPONENTS, THE IGNITION MUST BE TURNED OFF AND THE BATTERY MUST BE DISCONNECTED.

Perform AIRBAG VERIFICATION TEST.

No >> Go to 5

5. SCI TRANSMIT CIRCUIT SHORTED TO VOLTAGE

Turn the ignition on.

Measure the voltage of the SCI Transmit circuit at the ORC connector.

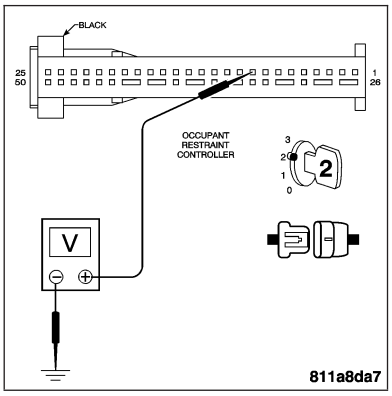

Is the voltage above 0.5 volt?

Yes >> Repair the SCI Transmit circuit for a short to voltage.

WARNING: WHEN RECONNECTING AIRBAG SYSTEM COMPONENTS, THE IGNITION MUST BE TURNED OFF AND THE BATTERY MUST BE DISCONNECTED.

Perform AIRBAG VERIFICATION TEST.

No >> Replace the Occupant Restraint Controller. **Refer to Page 8O-89**.

WARNING: IF THE OCCUPANT RESTRAINT CONTROLLER IS DROPPED AT ANY TIME, IT MUST BE REPLACED.

WARNING: WHEN RECONNECTING AIRBAG SYSTEM COMPONENTS, THE IGNITION MUST BE TURNED OFF AND THE BATTERY MUST BE DISCONNECTED.

Perform AIRBAG VERIFICATION TEST.

*NO RESPONSE FROM INSTRUMENT CLUSTER

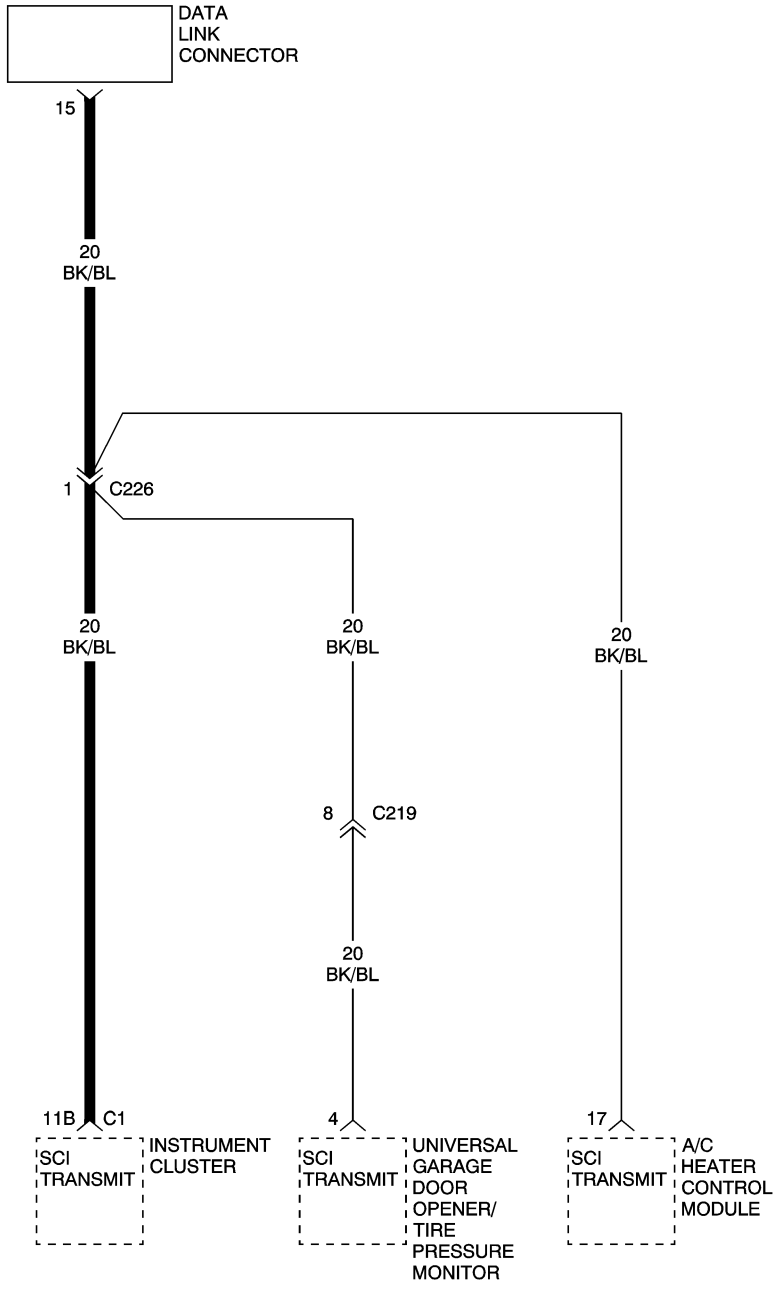

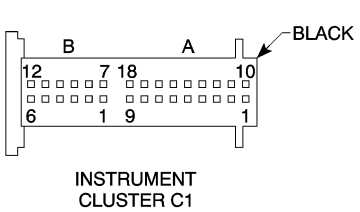

INSTRUMENT
CLUSTER C1

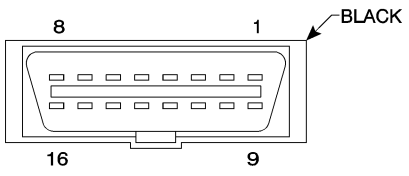

DATA
LINK
CONNECTOR

8113dd58

*NO RESPONSE FROM INSTRUMENT CLUSTER — CONTINUED

POSSIBLE CAUSES
FUSED B+ CIRCUIT OPEN
FUSED IGNITION SWITCH OUTPUT CIRCUIT(S) OPEN
IC GROUND CIRCUIT(S) OPEN
SCI TRANSMIT CIRCUIT OPEN
SCI TRANSMIT CIRCUIT SHORTED TO GROUND
SCI TRANSMIT CIRCUIT SHORTED TO VOLTAGE
INSTRUMENT CLUSTER

For a complete Data Link Connector Circuit Diagram, **Refer to Page 8E-45**.

Diagnostic Test

1. FUSED B+ CIRCUIT OPEN

Turn the ignition off.
Disconnect the IC harness connectors.

Note: Check connector — Clean/repair as necessary.
Turn the ignition on.
Measure the voltage of the Fused B+ circuit at the IC harness connector.

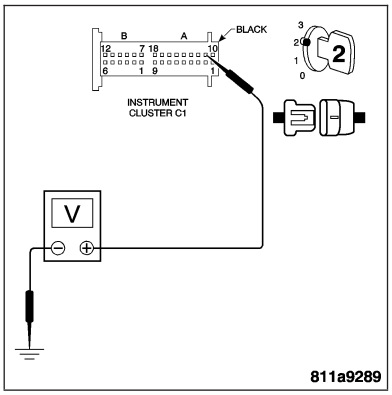

Is the voltage above 10 volts?

Yes >> Go to 2

No >> Repair the Fused B+ circuit for an open.
Perform BODY VERIFICATION TEST.

2. FUSED IGNITION SWITCH OUTPUT CIRCUIT(S) OPEN

With the ignition on.
Measure the voltage of the Fused Ignition Switch Output circuits at the IC harness connectors.

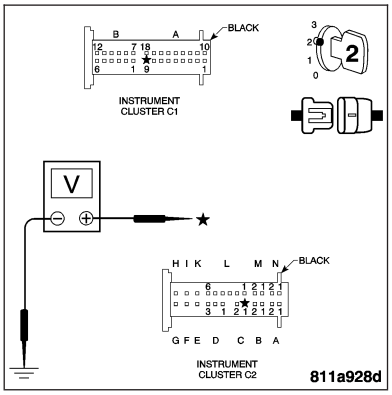

Is the voltage above 10 volts?

Yes >> Go to 3

No >> Repair the Fused Ignition Switch Output circuit(s) for an open.
Perform BODY VERIFICATION TEST.

*NO RESPONSE FROM INSTRUMENT CLUSTER — CONTINUED

3. GROUND CIRCUIT(S) OPEN

Turn the ignition off.

Measure the resistance of the Ground circuits from the IC harness connector.

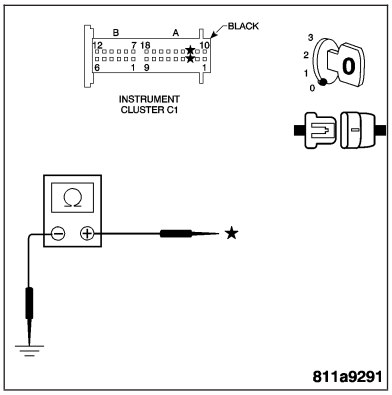

Is the resistance below 5.0 ohms?

Yes >> Go to 4

No >> Repair the Ground circuit(s) for an open.
Perform BODY VERIFICATION TEST.

4. SCI TRANSMIT CIRCUIT OPEN

With the ignition off.

Measure the resistance of the SCI Transmit circuit from the IC harness connector to the DLC.

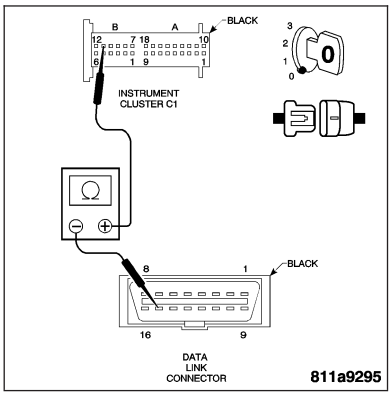

Is the resistance below 5.0 ohms?

Yes >> Go to 5

No >> Repair the SCI Transmit circuit for an open.
Perform BODY VERIFICATION TEST.

5. SCI TRANSMIT CIRCUIT SHORTED TO GROUND

With the ignition off.

Measure the resistance between ground and the SCI Transmit circuit.

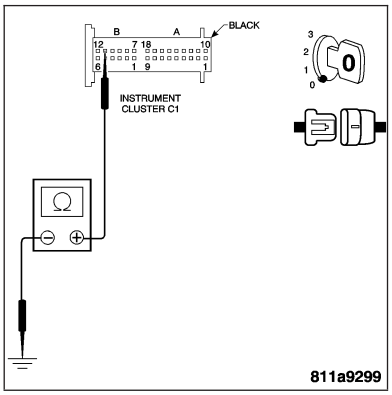

Is the resistance below 100 kohms?

Yes >> Repair the SCI Transmit circuit for a short to ground.
Perform BODY VERIFICATION TEST.

No >> Go to 6

*NO RESPONSE FROM INSTRUMENT CLUSTER — CONTINUED

6. SCI TRANSMIT CIRCUIT SHORTED TO VOLTAGE

Turn the ignition on.
Measure the voltage of the SCI Transmit circuit at the IC.

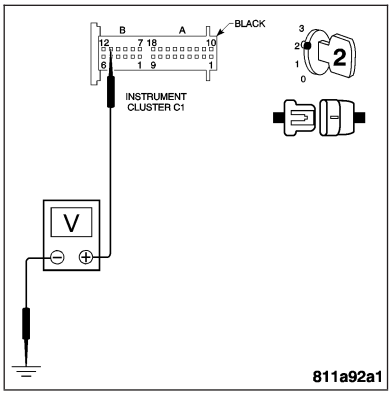

Is the voltage above 0.5 volt?

Yes >> Repair the SCI Transmit circuit for a short to voltage. Perform BODY VERIFICATION TEST.

No >> Replace the Instrument Cluster. **Refer to Page 8J-83**. Perform BODY VERIFICATION TEST.

*NO RESPONSE FROM UNIVERSAL GARAGE DOOR OPENER/TIRE PRESSURE MONITOR

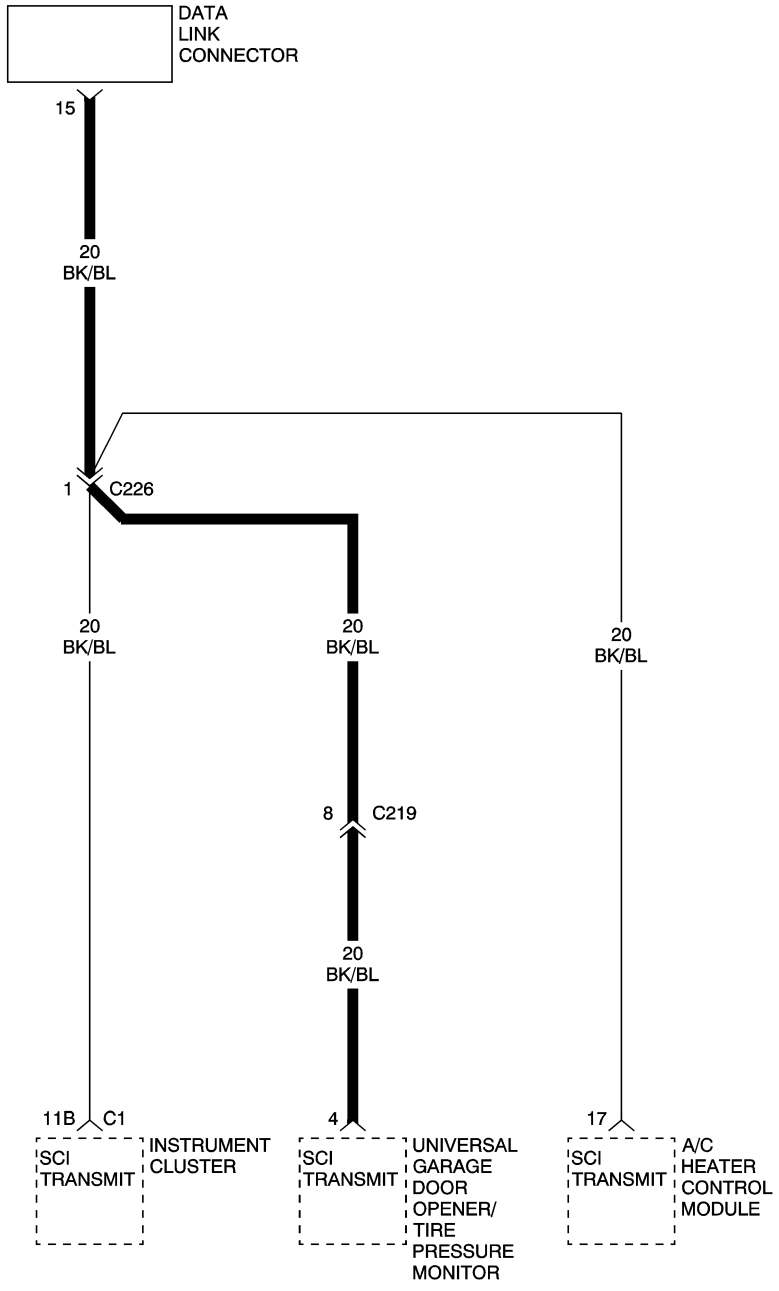

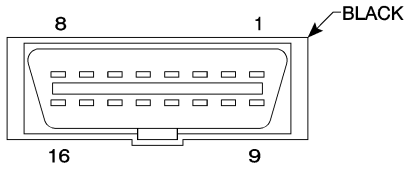

DATA
LINK
CONNECTOR

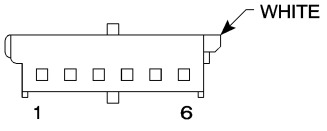

UNIVERSAL
GARAGE
DOOR
OPENER/
TIRE
PRESSURE
MONITOR

8113dd4f

***NO RESPONSE FROM UNIVERSAL GARAGE DOOR OPENER/TIRE PRESSURE MONITOR — CONTINUED**

POSSIBLE CAUSES
FUSED B+ CIRCUIT OPEN
FUSED IGNITION SWITCH OUTPUT CIRCUIT OPEN
GROUND CIRCUIT OPEN
SCI TRANSMIT CIRCUIT OPEN
SCI TRANSMIT CIRCUIT SHORTED TO GROUND
SCI TRANSMIT CIRCUIT SHORTED TO VOLTAGE
UGDO/TIRE PRESSURE MONITOR

For a complete Data Link Connector Circuit Diagram, **Refer to Page 8E-45**.

Diagnostic Test

1. FUSED B+ CIRCUIT OPEN

Turn the ignition off.
Disconnect the UGDO/TPM harness connector.

Note: Check connector — Clean/repair as necessary.
Turn the ignition on.
Measure the voltage of the Fused B+ circuit at the UGDO/TPM harness connector.

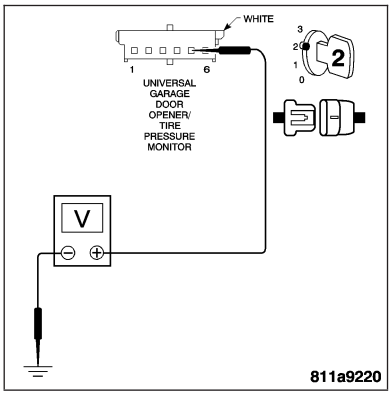

Is the voltage above 10 volts?

Yes >> Go to 2

No >> Repair the Fused B+ circuit for an open.
Perform BODY VERIFICATION TEST.

2. FUSED IGNITION SWITCH OUTPUT CIRCUIT OPEN

With the ignition on.
Measure the voltage of the Fused Ignition Switch Output circuit at the UGDO/TPM harness connector.

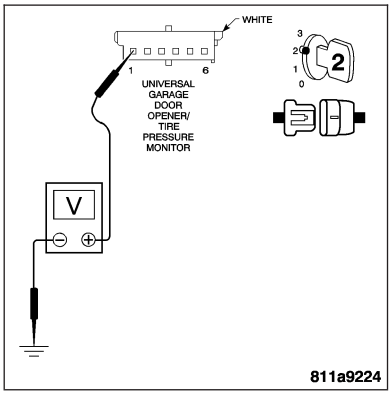

Is the voltage above 10 volts?

Yes >> Go to 3

No >> Repair the Fused Ignition Switch Output circuit for an open.
Perform BODY VERIFICATION TEST.

***NO RESPONSE FROM UNIVERSAL GARAGE DOOR OPENER/TIRE PRESSURE MONITOR — CONTINUED**

3. GROUND CIRCUIT OPEN

Turn the ignition off.

Measure the resistance of the Ground circuit from the UGDO/TPM harness connector.

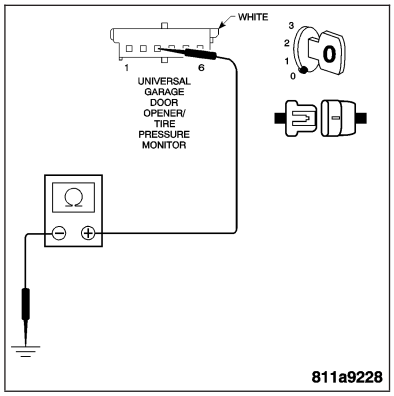

Is the resistance below 5.0 ohms?

Yes >> Go to 4

No >> Repair the Ground circuit for an open.
Perform BODY VERIFICATION TEST.

4. SCI TRANSMIT CIRCUIT OPEN

With the ignition off.

Measure the resistance of the SCI Transmit circuit from the UGDO/TPM harness connector to the DLC.

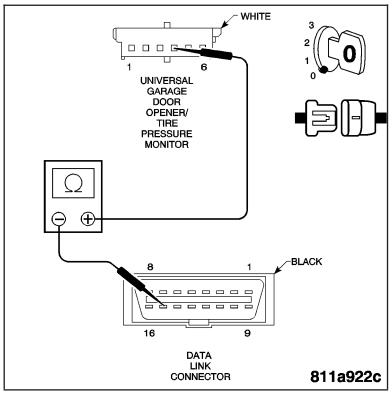

Is the resistance below 5.0 ohms?

Yes >> Go to 5

No >> Repair the SCI Transmit circuit for an open.
Perform BODY VERIFICATION TEST.

5. SCI TRANSMIT CIRCUIT SHORTED TO GROUND

With the ignition off.

Measure the resistance between ground and the SCI Transmit circuit.

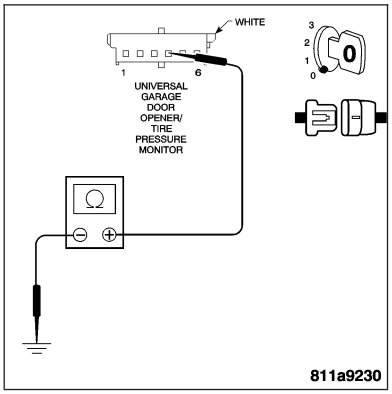

Is the resistance below 100 kohms?

Yes >> Repair the SCI Transmit circuit for a short to ground.
Perform BODY VERIFICATION TEST.

No >> Go to 6

*NO RESPONSE FROM UNIVERSAL GARAGE DOOR OPENER/TIRE PRESSURE MONITOR — CONTINUED

6. SCI TRANSMIT CIRCUIT SHORTED TO VOLTAGE

Turn the ignition on.
Measure the voltage of the SCI Transmit circuit at the UGDO.

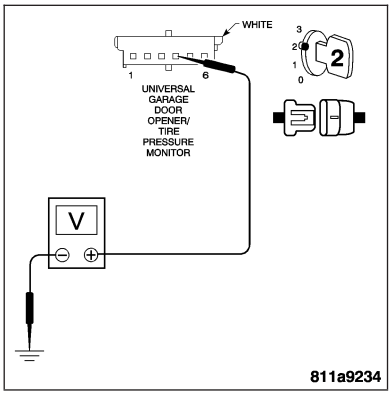

Is the voltage above 0.5 volt?

Yes >> Repair the SCI Transmit circuit for a short to voltage. Perform BODY VERIFICATION TEST.

No >> Replace the Universal Garage Door Opener/Tire Pressure Monitor. **Refer to Page 8M-3**.
Perform BODY VERIFICATION TEST.

*NO RESPONSE FROM A/C HEATER CONTROL MODULE

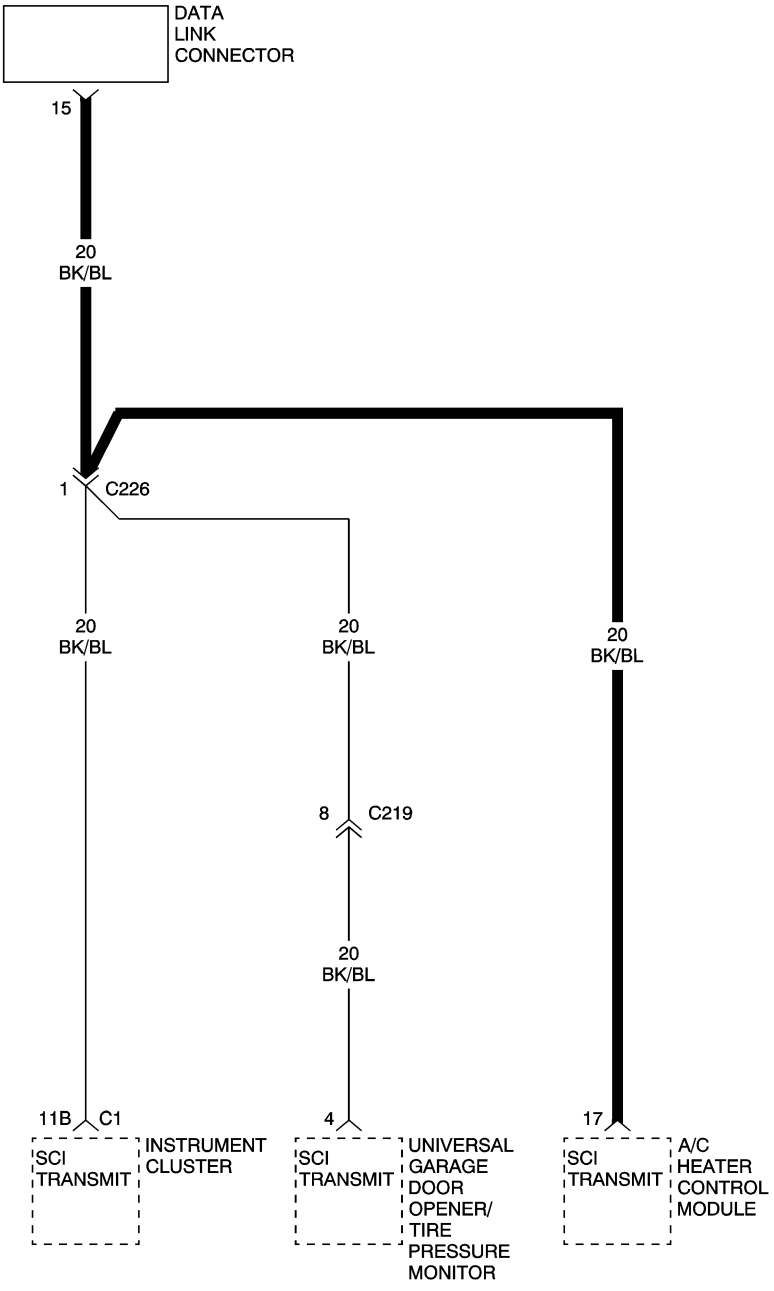

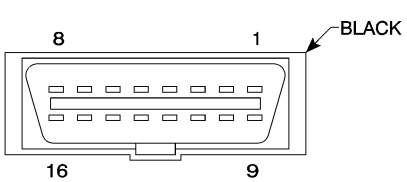

DATA
LINK
CONNECTOR

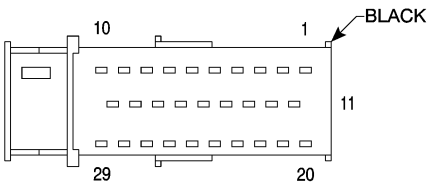

A/C
HEATER
CONTROL
MODULE

8113dd46

*NO RESPONSE FROM A/C HEATER CONTROL MODULE — CONTINUED

POSSIBLE CAUSES
FUSED B+ CIRCUIT OPEN
FUSED IGNITION SWITCH OUTPUT CIRCUIT(S) OPEN
GROUND CIRCUIT OPEN
SCI TRANSMIT CIRCUIT OPEN
SCI TRANSMIT CIRCUIT SHORTED TO GROUND
SCI TRANSMIT CIRCUIT SHORTED TO VOLTAGE
A/C HEATER CONTROL MODULE

For a complete Data Link Connector Circuit Diagram, **Refer to Page 8E-45**.

Diagnostic Test

1. FUSED B+ CIRCUIT OPEN

Turn the ignition off.
Disconnect the A/C Heater Control Module harness connector.

Note: Check connector — Clean/repair as necessary.
Turn the ignition on.
Measure the voltage of the Fused B+ circuit at the A/C Heater Control Module harness connector.

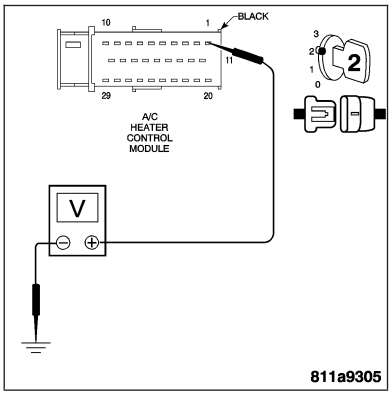

Is the voltage above 10 volts?

Yes >> Go to 2

No >> Repair the Fused B+ circuit for an open.
Perform BODY VERIFICATION TEST.

2. FUSED IGNITION SWITCH OUTPUT CIRCUIT(S) OPEN

With the ignition on.
Measure the voltage of the Fused Ignition Switch Output circuits at the A/C Heater Control Module harness connector.

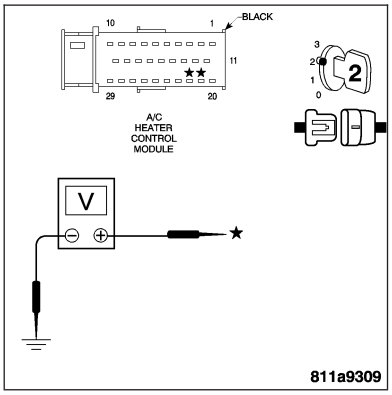

Is the voltage above 10 volts?

Yes >> Go to 3

No >> Repair the Fused Ignition Switch Output circuit(s) for an open.
Perform BODY VERIFICATION TEST.

*NO RESPONSE FROM A/C HEATER CONTROL MODULE — CONTINUED

3. GROUND CIRCUIT OPEN

Turn the ignition off.

Measure the resistance of the Ground circuit from the A/C Heater Control Module harness connector.

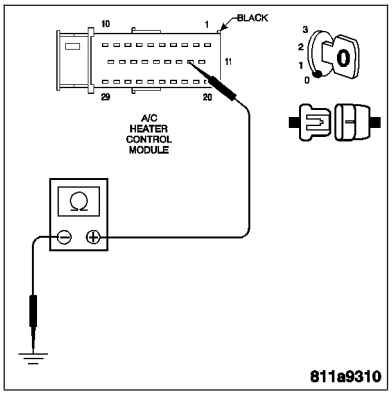

Is the resistance below 5.0 ohms?

Yes >> Go to 4

No >> Repair the Ground circuit for an open.
Perform BODY VERIFICATION TEST.

4. SCI TRANSMIT CIRCUIT OPEN

With the ignition off.

Measure the resistance of the SCI Transmit circuit from the A/C Heater Control Module harness connector to the DLC.

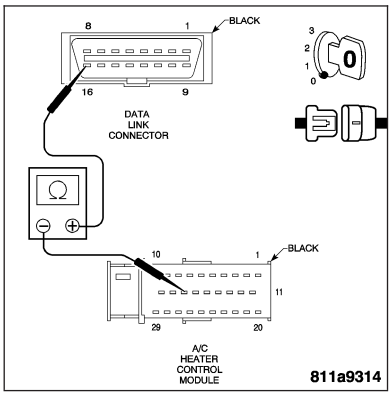

Is the resistance below 5.0 ohms?

Yes >> Go to 5

No >> Repair the SCI Transmit circuit for an open.
Perform BODY VERIFICATION TEST.

5. SCI TRANSMIT CIRCUIT SHORTED TO GROUND

With the ignition off.

Measure the resistance between ground and the SCI Transmit circuit.

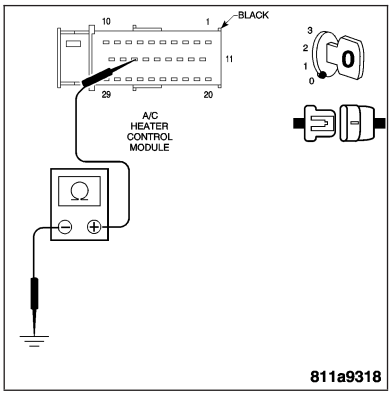

Is the resistance below 100 kohms?

Yes >> Repair the SCI Transmit circuit for a short to ground.
Perform BODY VERIFICATION TEST.

No >> Go to 6

*NO RESPONSE FROM A/C HEATER CONTROL MODULE — CONTINUED

6. SCI TRANSMIT CIRCUIT SHORTED TO VOLTAGE

Turn the ignition on.

Measure the voltage of the SCI Transmit circuit at the A/C Heater Control Module.

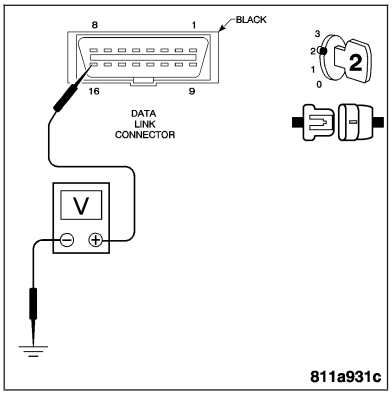

Is the voltage above 0.5 volt?

Yes >> Repair the SCI Transmit circuit for a short to voltage.
Perform BODY VERIFICATION TEST.

No >> Replace the A/C Heater Control Module. **Refer to Page 24-79** .
Perform BODY VERIFICATION TEST.

*NO RESPONSE FROM CONTROLLER ANTILOCK BRAKE

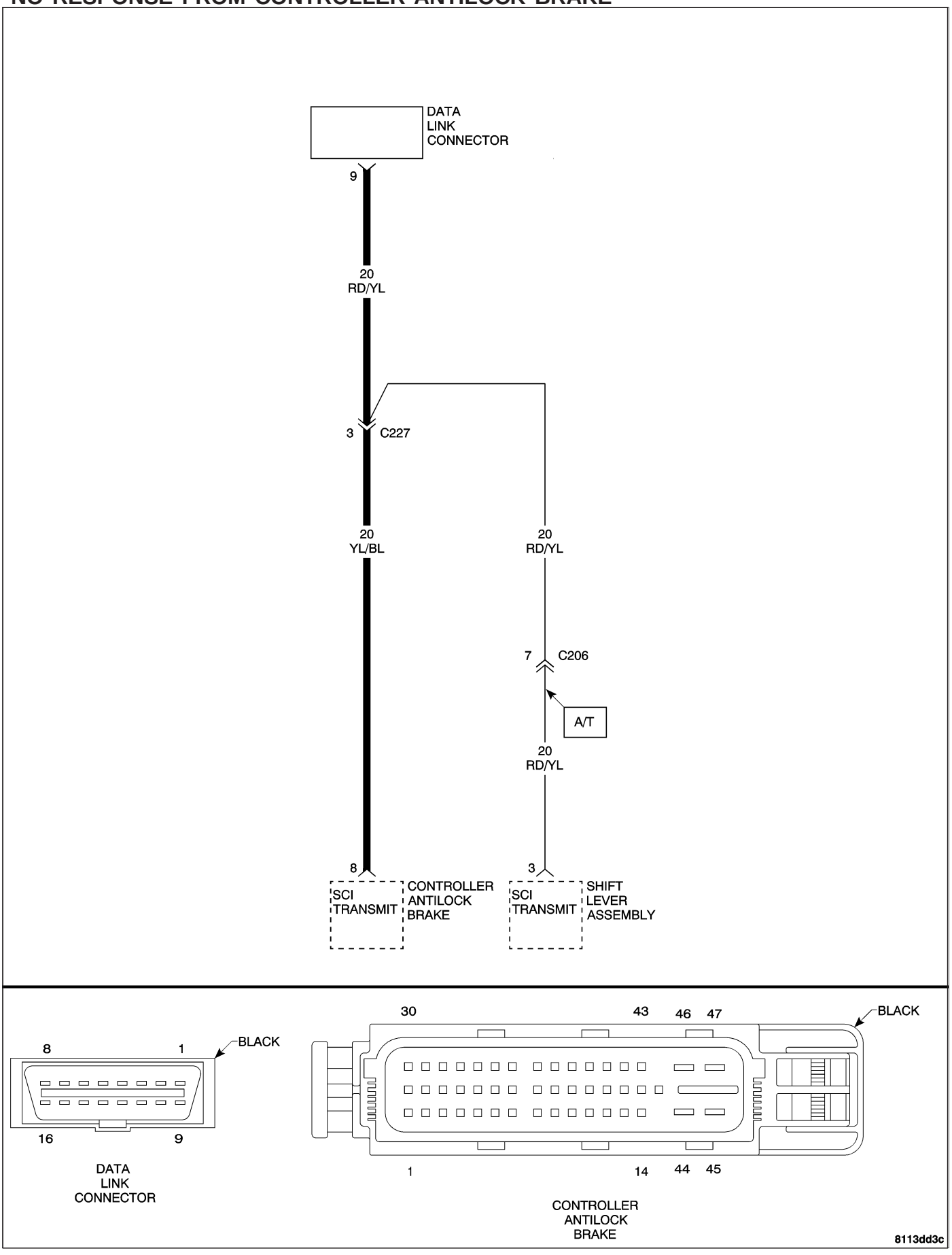

*NO RESPONSE FROM CONTROLLER ANTILOCK BRAKE — CONTINUED

POSSIBLE CAUSES
FUSED B+ CIRCUIT(S) OPEN
TRACTION SYSTEM RELAY OUTPUT CIRCUIT OPEN
GROUND CIRCUIT(S) OPEN
SCI TRANSMIT CIRCUIT OPEN
SCI TRANSMIT CIRCUIT SHORTED TO GROUND
SCI TRANSMIT CIRCUIT SHORTED TO VOLTAGE
CONTROLLER ANTILOCK BRAKE MODULE

For a complete Data Link Connector Circuit Diagram, **Refer to Page 8E-45**.

Diagnostic Test

1. FUSED B+ CIRCUIT(S) OPEN

Turn the ignition off.
Disconnect the CAB harness connector.

Note: Check connector — Clean/repair as necessary.
Turn the ignition on.
Measure the voltage of the Fused B+ circuits at the CAB harness connector.

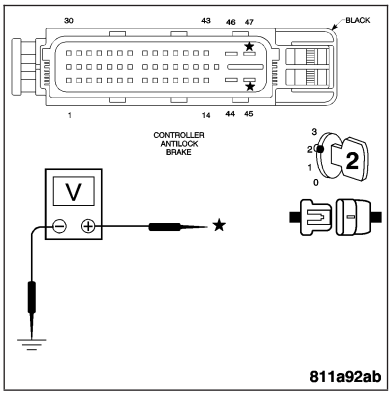

Is the voltage above 10 volts?

Yes >> Go to 2

No >> Repair the Fused B+ circuit(s) for an open.
Perform ABS VERIFICATION TEST.

2. TRACTION SYSTEM RELAY OUTPUT CIRCUIT OPEN

With the ignition on.
Measure the voltage of the Traction System Relay Output circuit at the CAB harness connector.

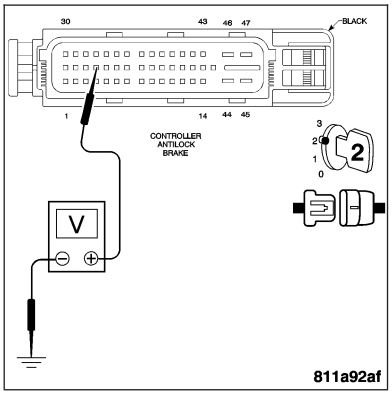

Is the voltage above 10 volts?

Yes >> Go to 3

No >> Repair the Traction System Relay Output circuit for an open.
Perform ABS VERIFICATION TEST.

*NO RESPONSE FROM CONTROLLER ANTILOCK BRAKE — CONTINUED

3. GROUND CIRCUIT(S) OPEN

Turn the ignition off.

Measure the resistance of the Ground circuits from the CAB harness connector.

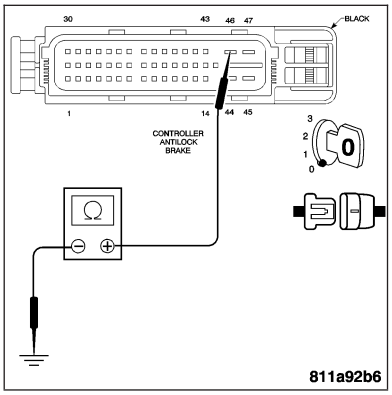

Is the resistance below 5.0 ohms?

Yes >> Go to 4

No >> Repair the Ground circuit(s) for an open. Perform ABS VERIFICATION TEST.

4. SCI TRANSMIT CIRCUIT OPEN

With the ignition off.

Measure the resistance of the SCI Transmit circuit from the CAB harness connector to the DLC.

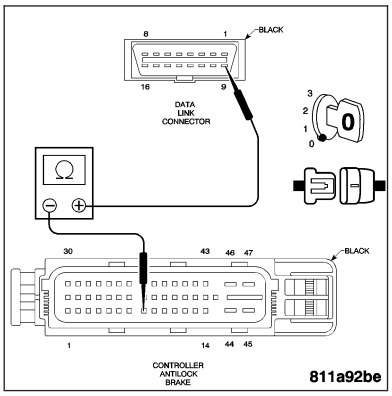

Is the resistance below 5.0 ohms?

Yes >> Go to 5

No >> Repair the SCI Transmit circuit for an open. Perform ABS VERIFICATION TEST.

5. SCI TRANSMIT CIRCUIT SHORTED TO GROUND

With the ignition off.

Measure the resistance between ground and the SCI Transmit circuit.

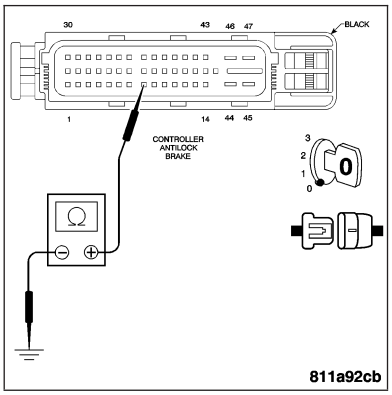

Is the resistance below 100 kohms?

Yes >> Repair the SCI Transmit circuit for a short to ground. Perform ABS VERIFICATION TEST.

No >> Go to 6

*NO RESPONSE FROM CONTROLLER ANTILOCK BRAKE — CONTINUED

6. SCI TRANSMIT CIRCUIT SHORTED TO VOLTAGE

Turn the ignition on.
Measure the voltage of the SCI Transmit circuit at the CAB.

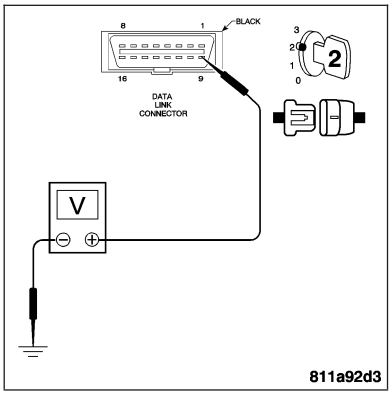

Is the voltage above 0.5 volt?

Yes >> Repair the SCI Transmit circuit for a short to voltage.
Perform ABS VERIFICATION TEST.

No >> Replace the Controller Antilock Brake Module. **Refer to Page 8E-63**.
Perform ABS VERIFICATION TEST.

*NO RESPONSE FROM SHIFT LEVER ASSEMBLY

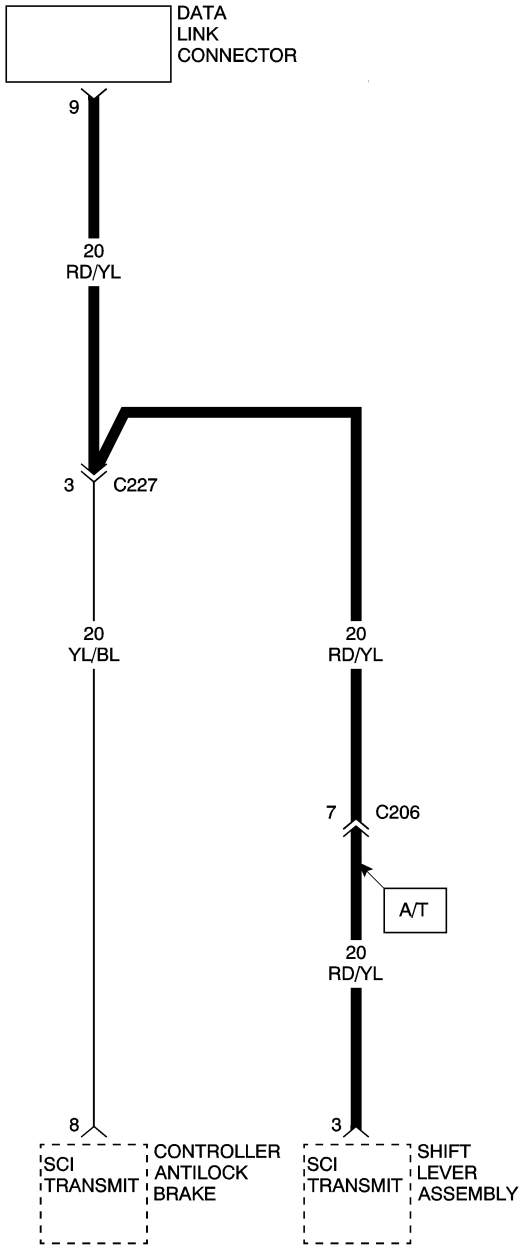

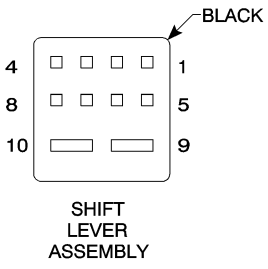

SHIFT
LEVER
ASSEMBLY

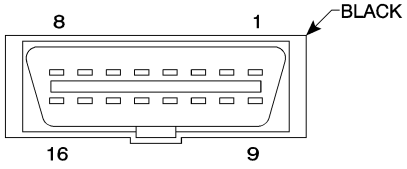

DATA
LINK
CONNECTOR

8113dd32

*NO RESPONSE FROM SHIFT LEVER ASSEMBLY — CONTINUED

POSSIBLE CAUSES
TRACTION SYSTEM RELAY OUTPUT CIRCUIT OPEN
FUSED IGNITION SWITCH OUTPUT CIRCUIT OPEN
GROUND CIRCUIT OPEN
SCI TRANSMIT CIRCUIT OPEN
SCI TRANSMIT CIRCUIT SHORTED TO GROUND
SCI TRANSMIT CIRCUIT SHORTED TO VOLTAGE
SHIFT LEVER ASSEMBLY

For a complete Data Link Connector Circuit Diagram, **Refer to Page 8E-45**.

Diagnostic Test

1. TRACTION SYSTEM RELAY OUTPUT CIRCUIT OPEN

Turn the ignition off.
Disconnect the SLA harness connector.

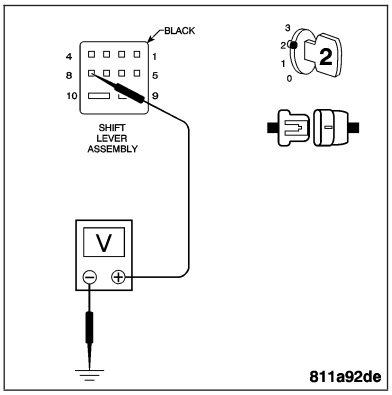

Note: Check connector — Clean/repair as necessary.
Turn the ignition on.
Measure the voltage of the Traction System Relay Output circuit at the SLA harness connector.

Is the voltage above 10 volts?

Yes >> Go to 2

No >> Repair the Traction System Relay Output circuit for an open.
Perform NAG1 TRANSMISSION VERIFICATION TEST.

2. FUSED IGNITION SWITCH OUTPUT CIRCUIT OPEN

With the ignition on.
Measure the voltage of the Fused Ignition Switch Output circuit at the SLA harness connector.

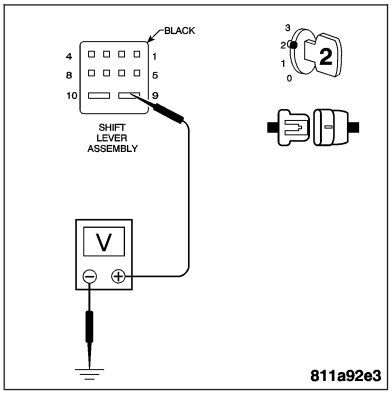

Is the voltage above 10 volts?

Yes >> Go to 3

No >> Repair the Fused Ignition Switch Output circuit for an open.
Perform NAG1 TRANSMISSION VERIFICATION TEST.

*NO RESPONSE FROM SHIFT LEVER ASSEMBLY — CONTINUED

3. GROUND CIRCUIT OPEN

Turn the ignition off.

Measure the resistance of the Ground circuit from the SLA harness connector.

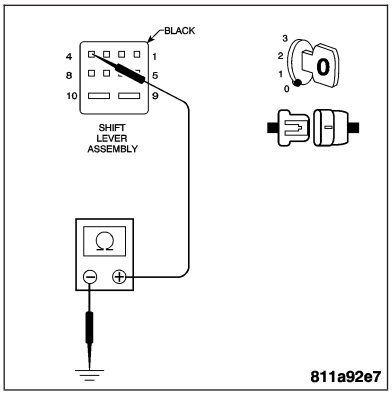

Is the resistance below 5.0 ohms?

Yes >> Go to 4

No >> Repair the Ground circuit for an open.
Perform NAG1 TRANSMISSION VERIFICATION TEST.

4. SCI TRANSMIT CIRCUIT OPEN

With the ignition off.

Measure the resistance of the SCI Transmit circuit from the SLA harness connector to the DLC.

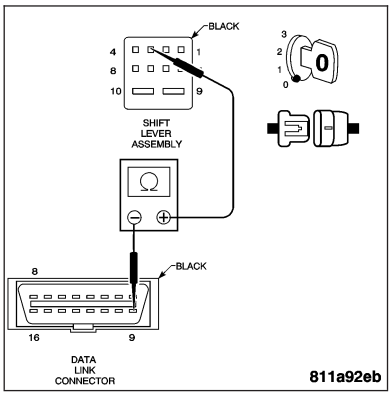

Is the resistance below 5.0 ohms?

Yes >> Go to 5

No >> Repair the SCI Transmit circuit for an open.
Perform NAG1 TRANSMISSION VERIFICATION TEST.

5. SCI TRANSMIT CIRCUIT SHORTED TO GROUND

With the ignition off.

Measure the resistance between ground and the SCI Transmit circuit.

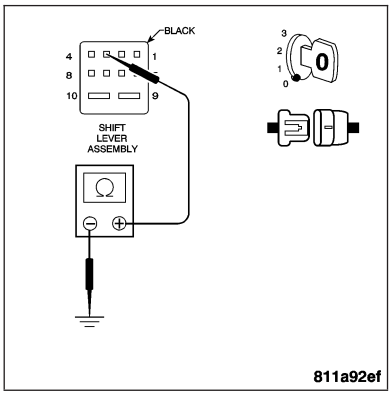

Is the resistance below 100 kohms?

Yes >> Repair the SCI Transmit circuit for a short to ground.
Perform NAG1 TRANSMISSION VERIFICATION TEST.

No >> Go to 6

*NO RESPONSE FROM SHIFT LEVER ASSEMBLY — CONTINUED

6. SCI TRANSMIT CIRCUIT SHORTED TO VOLTAGE

Turn the ignition on.
Measure the voltage of the SCI Transmit circuit at the SLA.

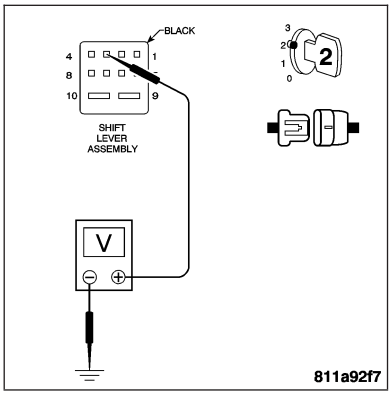

Is the voltage above 0.5 volt?

Yes >> Repair the SCI Transmit circuit for a short to voltage.
Perform NAG1 TRANSMISSION VERIFICATION TEST.

No >> Replace the Shift Lever Assembly. **Refer to Page 21-340** .
Perform NAG1 TRANSMISSION VERIFICATION TEST.

*NO RESPONSE FROM TRANSMISSION CONTROL MODULE

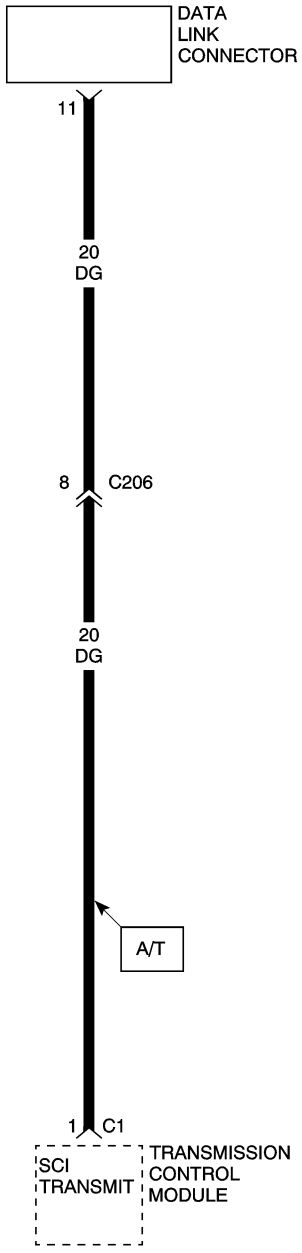

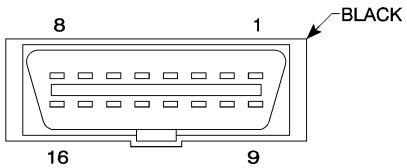

DATA
LINK
CONNECTOR

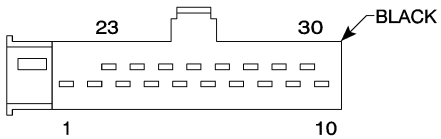

TRANSMISSION
CONTROL
MODULE C1

8113dd2c

*NO RESPONSE FROM TRANSMISSION CONTROL MODULE — CONTINUED

POSSIBLE CAUSES
TRACTION SYSTEM RELAY OUTPUT CIRCUIT OPEN
GROUND CIRCUIT OPEN
SCI TRANSMIT CIRCUIT OPEN
SCI TRANSMIT CIRCUIT SHORTED TO GROUND
SCI TRANSMIT CIRCUIT SHORTED TO VOLTAGE
TRANSMISSION CONTROL MODULE

For a complete Data Link Connector Circuit Diagram, **Refer to Page 8E-45**.

Diagnostic Test

1. TRACTION SYSTEM RELAY OUTPUT CIRCUIT OPEN

Turn the ignition off.
Disconnect the TCM harness connector.

Note: Check connector — Clean/repair as necessary.
Turn the ignition on.
Measure the voltage of the Traction System Relay Output circuit at the TCM harness connector.

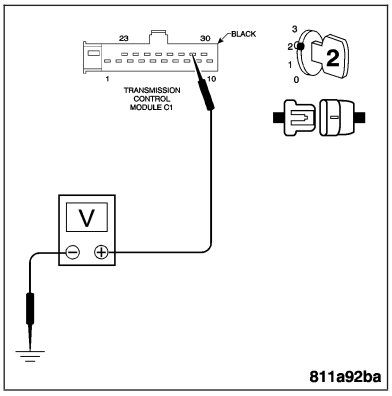

Is the voltage above 10 volts?

Yes >> Go to 2

No >> Repair the Traction System Relay Output circuit for an open.
Perform NAG1 TRANSMISSION VERIFICATION TEST.

2. GROUND CIRCUIT OPEN

Turn the ignition off.
Measure the resistance of the Ground circuit from the TCM harness connector.

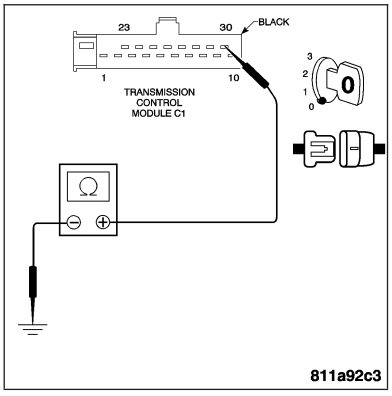

Is the resistance below 5.0 ohms?

Yes >> Go to 3

No >> Repair the Ground circuit for an open.
Perform NAG1 TRANSMISSION VERIFICATION TEST.

*NO RESPONSE FROM TRANSMISSION CONTROL MODULE — CONTINUED

3. SCI TRANSMIT CIRCUIT OPEN

With the ignition off.
Measure the resistance of the SCI Transmit circuit from the TCM harness connector to the DLC.

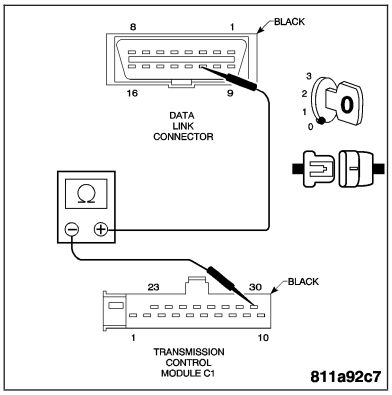

Is the resistance below 5.0 ohms?

Yes >> Go to 4

No >> Repair the SCI Transmit circuit for an open.
Perform NAG1 TRANSMISSION VERIFICATION TEST.

4. SCI TRANSMIT CIRCUIT SHORTED TO GROUND

With the ignition off.
Measure the resistance between ground and the SCI Transmit circuit.

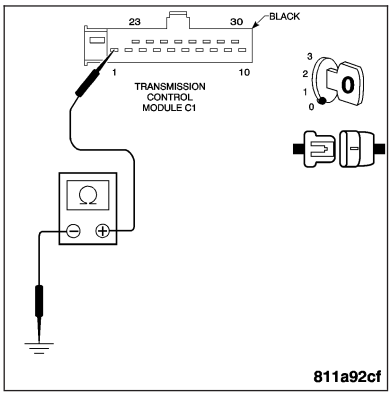

Is the resistance below 100 kohms?

Yes >> Repair the SCI Transmit circuit for a short to ground.
Perform NAG1 TRANSMISSION VERIFICATION TEST.

No >> Go to 5

5. SCI TRANSMIT CIRCUIT SHORTED TO VOLTAGE

Turn the ignition on.
Measure the voltage of the SCI Transmit circuit at the TCM.

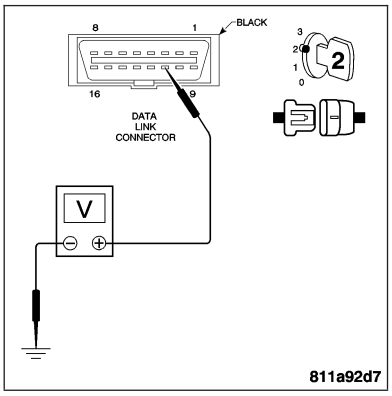

Is the voltage above 0.5 volt?

Yes >> Repair the SCI Transmit circuit for a short to voltage.
Perform NAG1 TRANSMISSION VERIFICATION TEST.

No >> Replace the Transmission Control Module. **Refer to Page 8E-60** .
Perform NAG1 TRANSMISSION VERIFICATION TEST.

*NO RESPONSE FROM BODY CONTROL MODULE

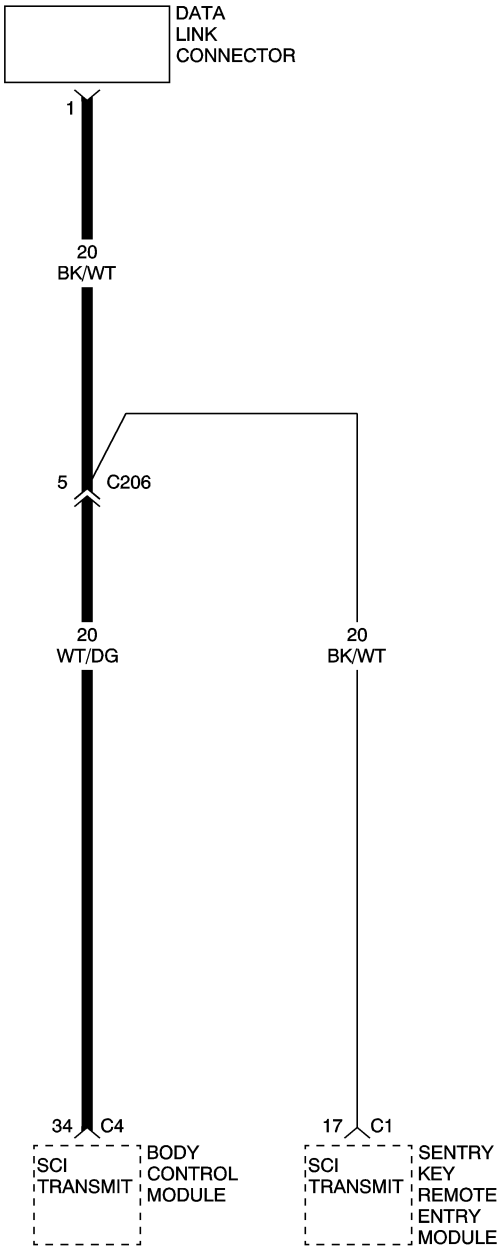

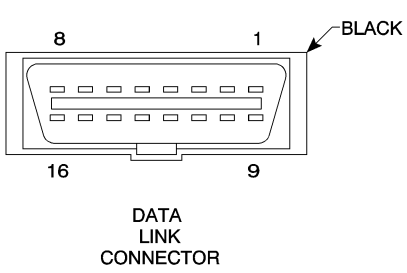

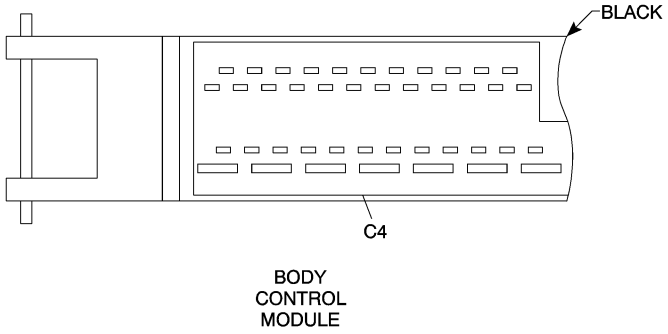

8113dd26

*NO RESPONSE FROM BODY CONTROL MODULE — CONTINUED

POSSIBLE CAUSES
FUSED B+ CIRCUIT(S) OPEN
FUSED IGNITION SWITCH OUTPUT CIRCUIT(S) OPEN
GROUND CIRCUIT(S) OPEN
SCI TRANSMIT CIRCUIT OPEN
SCI TRANSMIT CIRCUIT SHORTED TO GROUND
SCI TRANSMIT CIRCUIT SHORTED TO VOLTAGE
BODY CONTROL MODULE

For a complete Data Link Connector Circuit Diagram, **Refer to Page 8E-45**.

Diagnostic Test

1. FUSED B+ CIRCUIT(S) OPEN

Turn the ignition off.
Disconnect the BCM harness connectors.

Note: Check connector — Clean/repair as necessary.
Turn the ignition on.
Measure the voltage of the Fused B+ circuits at the BCM harness connector.

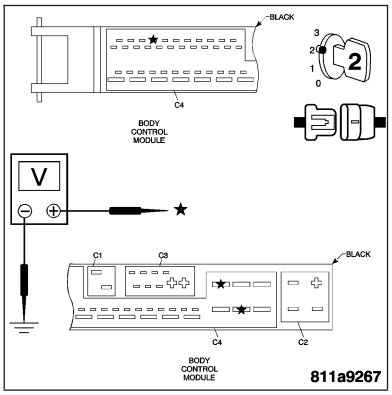

Is the voltage above 10 volts?

Yes >> Go to 2

No >> Repair the Fused B+ circuit(s) for an open.
Perform BODY VERIFICATION TEST.

2. FUSED IGNITION SWITCH OUTPUT CIRCUIT(S) OPEN

With the ignition on.
Measure the voltage of the Fused Ignition Switch Output circuits at the BCM harness connectors.

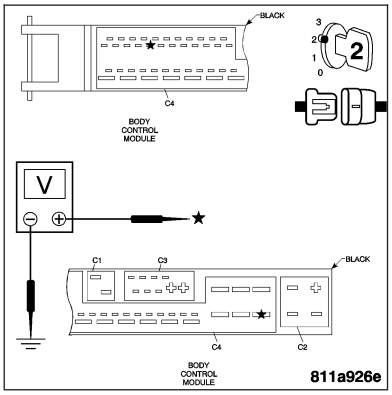

Is the voltage above 10 volts?

Yes >> Go to 3

No >> Repair the Fused Ignition Switch Output circuit(s) for an open.
Perform BODY VERIFICATION TEST.

*NO RESPONSE FROM BODY CONTROL MODULE — CONTINUED

3. GROUND CIRCUIT(S) OPEN

Turn the ignition off.

Measure the resistance of the Ground circuits from the BCM harness connector.

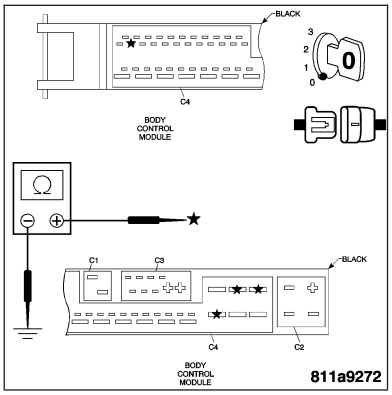

Is the resistance below 5.0 ohms?

Yes >> Go to 4

No >> Repair the Ground circuit(s) for an open.
Perform BODY VERIFICATION TEST.

4. SCI TRANSMIT CIRCUIT OPEN

With the ignition off.

Measure the resistance of the SCI Transmit circuit from the BCM harness connector to the DLC.

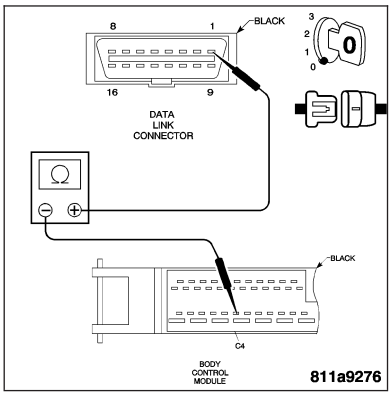

Is the resistance below 5.0 ohms?

Yes >> Go to 5

No >> Repair the SCI Transmit circuit for an open.
Perform BODY VERIFICATION TEST.

5. SCI TRANSMIT CIRCUIT SHORTED TO GROUND

With the ignition off.

Measure the resistance between ground and the SCI Transmit circuit.

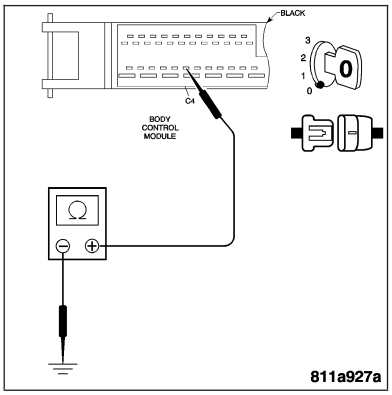

Is the resistance below 100 kohms?

Yes >> Repair the SCI Transmit circuit for a short to ground.
Perform BODY VERIFICATION TEST.

No >> Go to 6

*NO RESPONSE FROM BODY CONTROL MODULE — CONTINUED

6. SCI TRANSMIT CIRCUIT SHORTED TO VOLTAGE

Turn the ignition on.
Measure the voltage of the SCI Transmit circuit at the BCM.

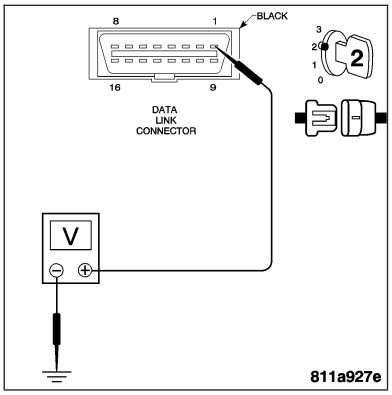

Is the voltage above 0.5 volt?

Yes >> Repair the SCI Transmit circuit for a short to voltage.
Perform BODY VERIFICATION TEST.

No >> Replace the Body Control Module. **Refer to Page 8E-72**.
Perform BODY VERIFICATION TEST.

*NO RESPONSE FROM SENTRY KEY REMOTE ENTRY MODULE

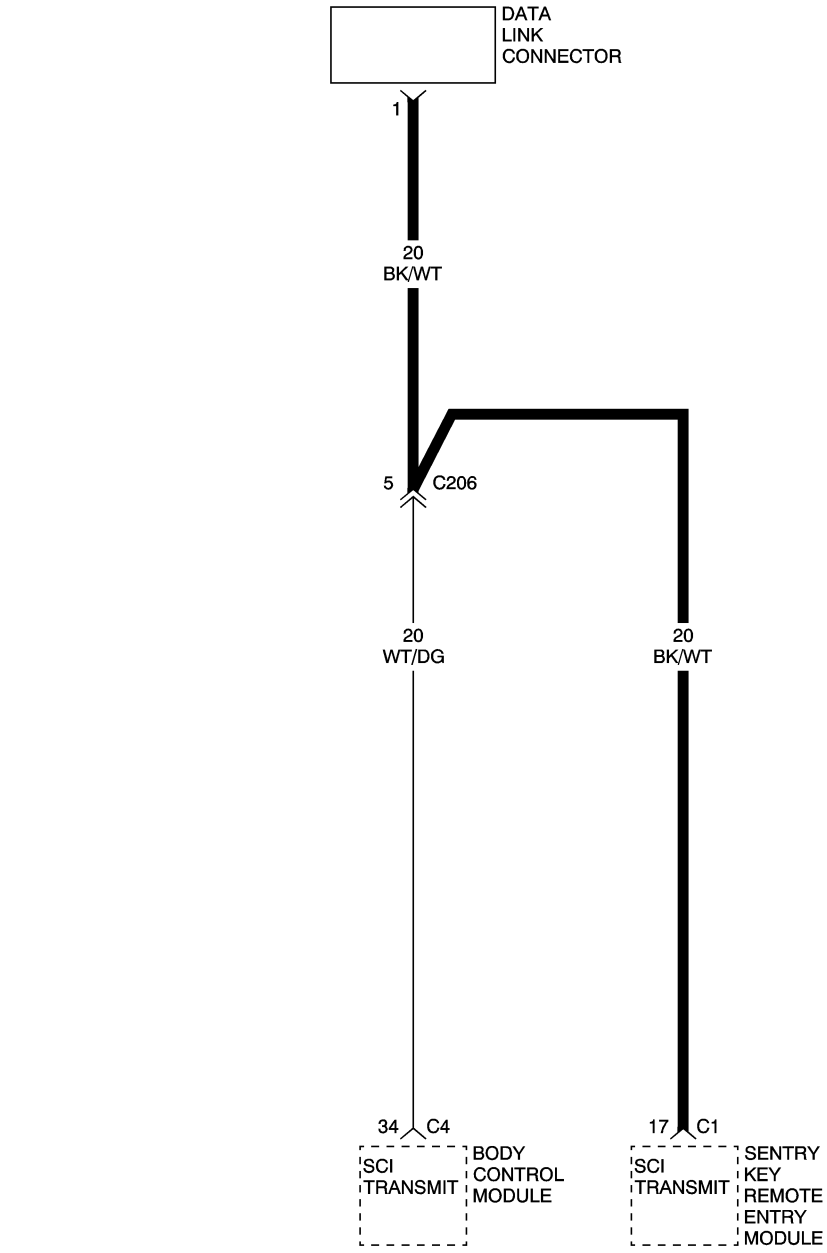

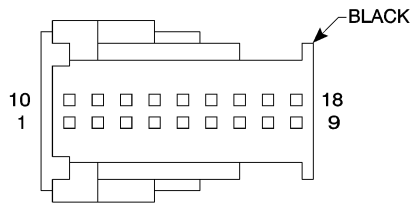

SENTRY
KEY
REMOTE
ENTRY
MODULE C1

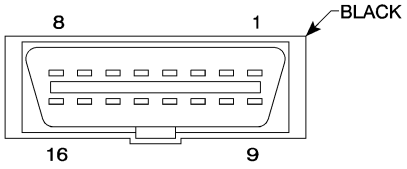

DATA
LINK
CONNECTOR

8113dd20

*NO RESPONSE FROM SENTRY KEY REMOTE ENTRY MODULE — CONTINUED

POSSIBLE CAUSES
FUSED B+ CIRCUIT OPEN
FUSED IGNITION SWITCH OUTPUT CIRCUIT OPEN
GROUND CIRCUIT OPEN
SCI TRANSMIT CIRCUIT OPEN
SCI TRANSMIT CIRCUIT SHORTED TO GROUND
SCI TRANSMIT CIRCUIT SHORTED TO VOLTAGE
SENTRY KEY REMOTE ENTRY MODULE

For a complete Data Link Connector Circuit Diagram, **Refer to Page 8E-45**.

Diagnostic Test

1. FUSED B+ CIRCUIT OPEN

Turn the ignition off.
Disconnect the SKREEM C1 harness connector.

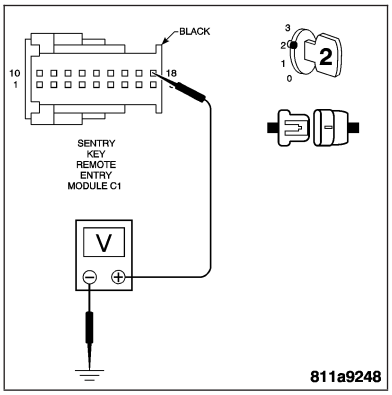

Note: Check connector — Clean/repair as necessary.
Turn the ignition on.
Measure the voltage of the Fused B+ circuit at the SKREEM harness connector.

Is the voltage above 10 volts?

Yes >> Go to 2

No >> Repair the Fused B+ circuit for an open.
Perform BODY VERIFICATION TEST.

2. FUSED IGNITION SWITCH OUTPUT CIRCUIT OPEN

With the ignition on.
Measure the voltage of the Fused Ignition Switch Output circuit at the SKREEM harness connector.

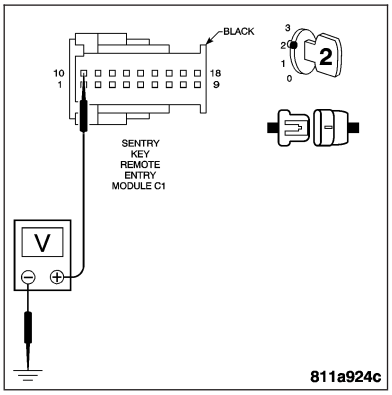

Is the voltage above 10 volts?

Yes >> Go to 3

No >> Repair the Fused Ignition Switch Output circuit for an open.
Perform BODY VERIFICATION TEST.

*NO RESPONSE FROM SENTRY KEY REMOTE ENTRY MODULE — CONTINUED

3. GROUND CIRCUIT OPEN

Turn the ignition off.

Measure the resistance of the Ground circuit from the SKREEM harness connector.

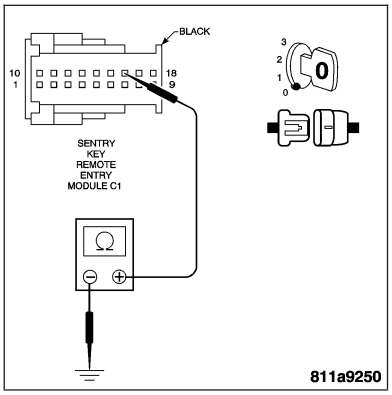

Is the resistance below 5.0 ohms?

Yes >> Go to 4

No >> Repair the Ground circuit for an open.
Perform BODY VERIFICATION TEST.

4. SCI TRANSMIT CIRCUIT OPEN

With the ignition off.

Measure the resistance of the SCI Transmit circuit from the SKREEM harness connector to the DLC.

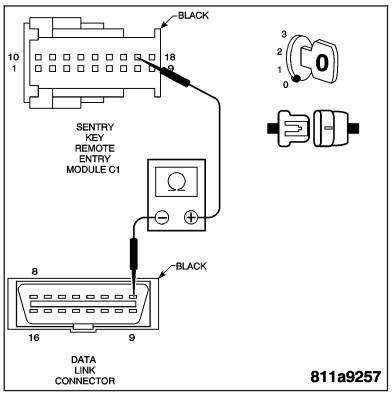

Is the resistance below 5.0 ohms?

Yes >> Go to 5

No >> Repair the SCI Transmit circuit for an open.
Perform BODY VERIFICATION TEST.

5. SCI TRANSMIT CIRCUIT SHORTED TO GROUND

With the ignition off.

Measure the resistance between ground and the SCI Transmit circuit.

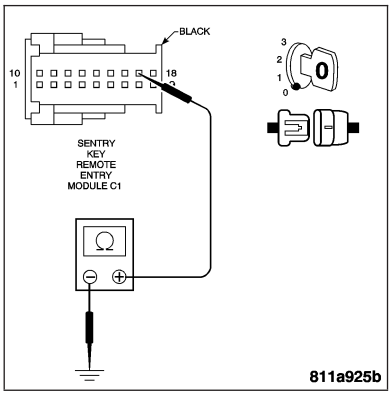

Is the resistance below 100 kohms?

Yes >> Repair the SCI Transmit circuit for a short to ground.
Perform BODY VERIFICATION TEST.

No >> Go to 6

*NO RESPONSE FROM SENTRY KEY REMOTE ENTRY MODULE — CONTINUED

6. SCI TRANSMIT CIRCUIT SHORTED TO VOLTAGE

Turn the ignition on.
Measure the voltage of the SCI Transmit circuit at the SKREEM.

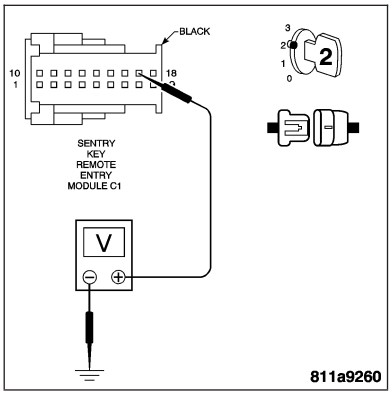

Is the voltage above 0.5 volt?

Yes >> Repair the SCI Transmit circuit for a short to voltage.
Perform BODY VERIFICATION TEST.

No >> Replace the Sentry Key Remote Entry Module. **Refer to Page 8E-70** .
Perform BODY VERIFICATION TEST.

BODY VERIFICATION TEST

1.

Turn the ignition off.

Disconnect all jumper wires and reconnect all previously disconnected components and connectors.

Note: If the SKREEM or the PCM was replaced, refer to the service information for proper programming procedures.

If the Body Control Module was replaced, turn the ignition on for 15 seconds (to allow the new BCM to learn VIN) or engine may not start.

Program all RKE transmitters and other options as necessary.

With the DRB III®, erase all Diagnostic Trouble Codes (DTCs) from ALL modules. Start the engine and allow it to run for 2 minutes. Operate all functions of the system that caused the original complaint.

Ensure that all accessories are turned off and the battery is fully charged.

Turn the ignition off and wait 5 seconds. Turn the ignition on and using the DRB III®, read DTCs from ALL modules.

Are any DTCs present or is the original complaint still present?

Are any DTCs present?

YES >> Repair is not complete, refer to appropriate symptom.

NO >> Repair is complete.

SCHEMATICS AND DIAGRAMS

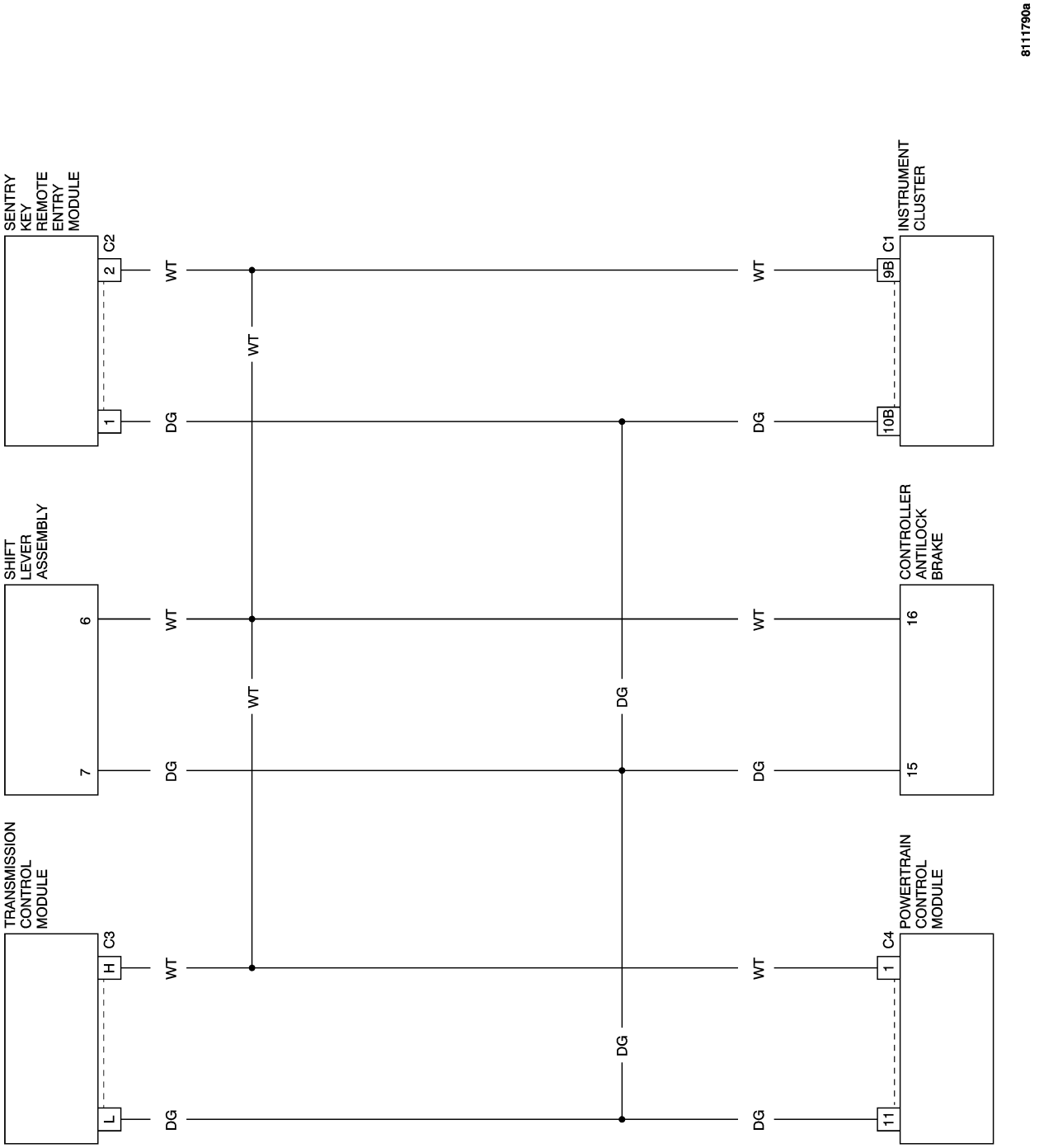

CAN B BUS - AUTOMATIC TRANSMISSION

81117984

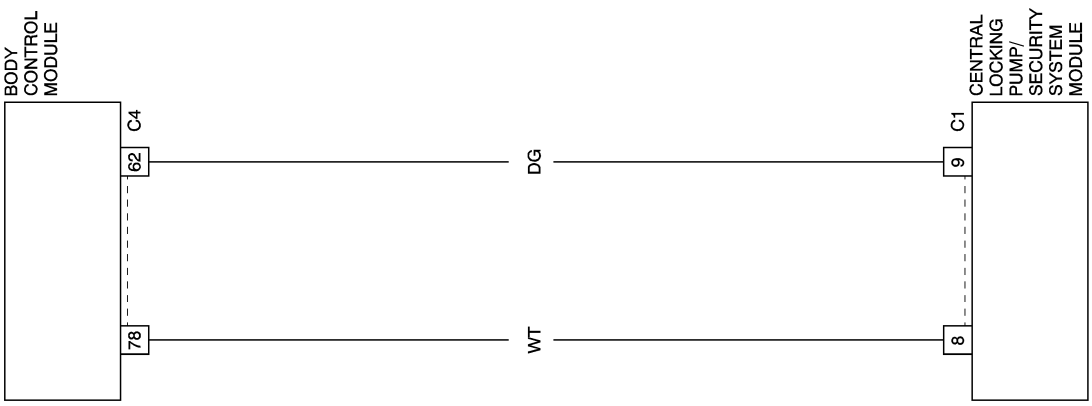

CAN C BUS

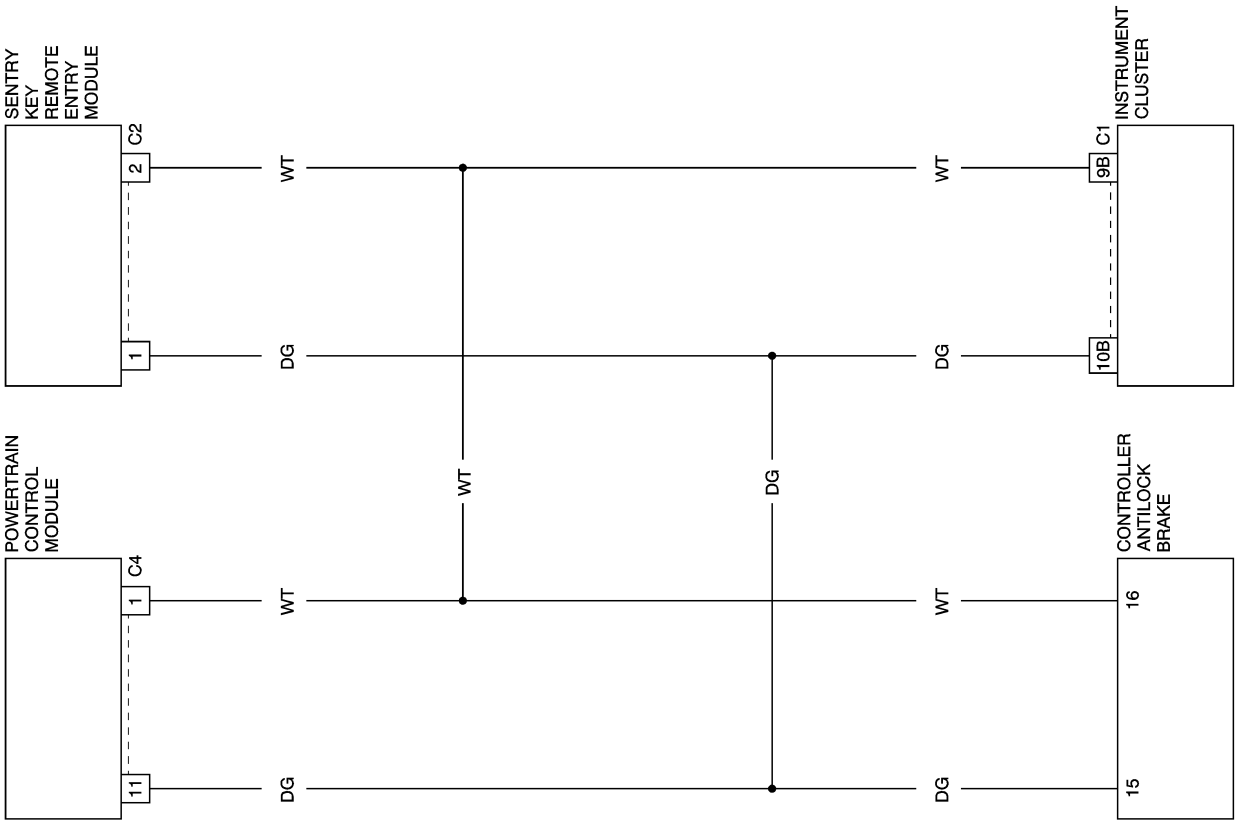

CAN B BUS - MANUAL TRANSMISSION

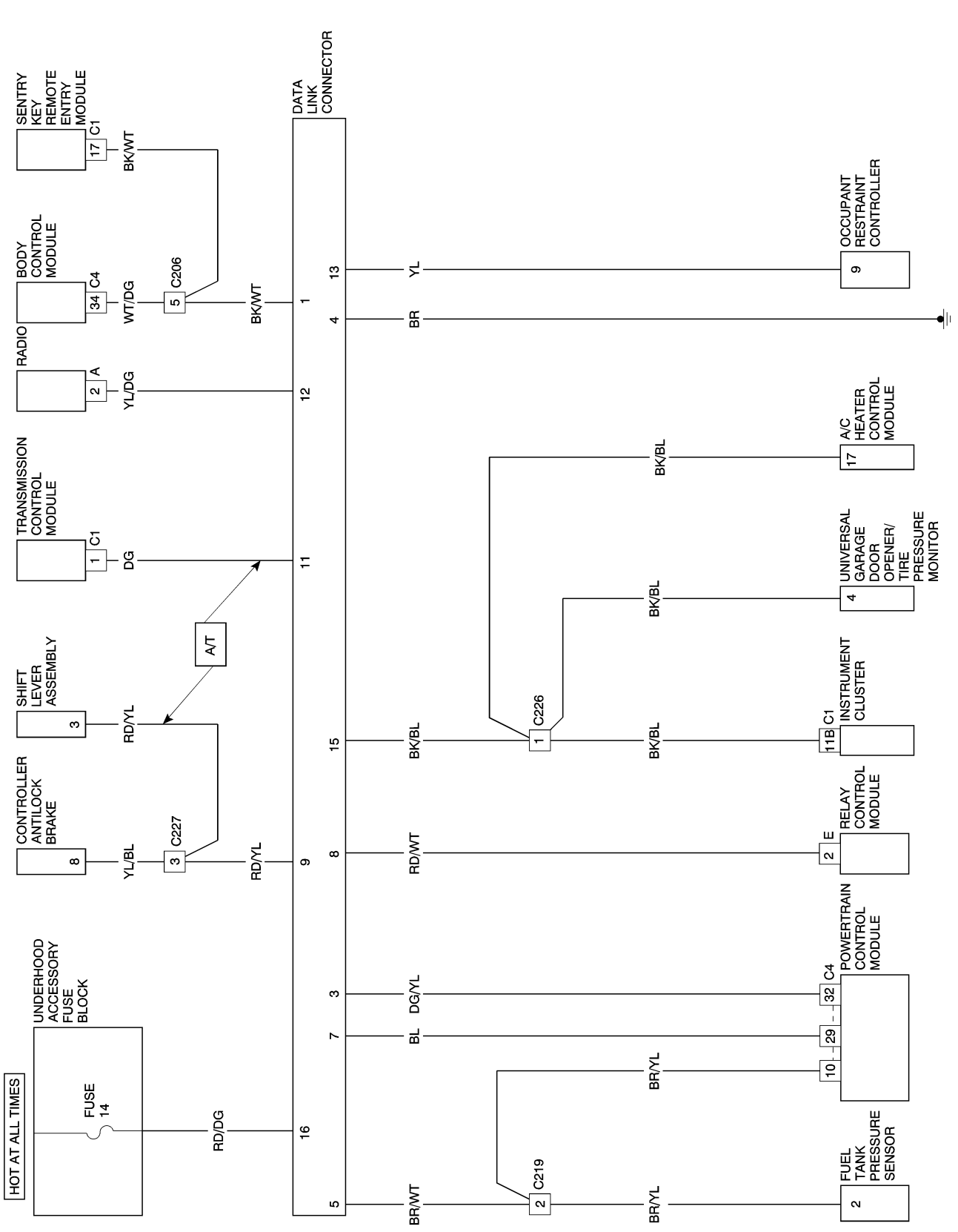

DATA LINK CONNECTOR CIRCUIT DIAGRAM

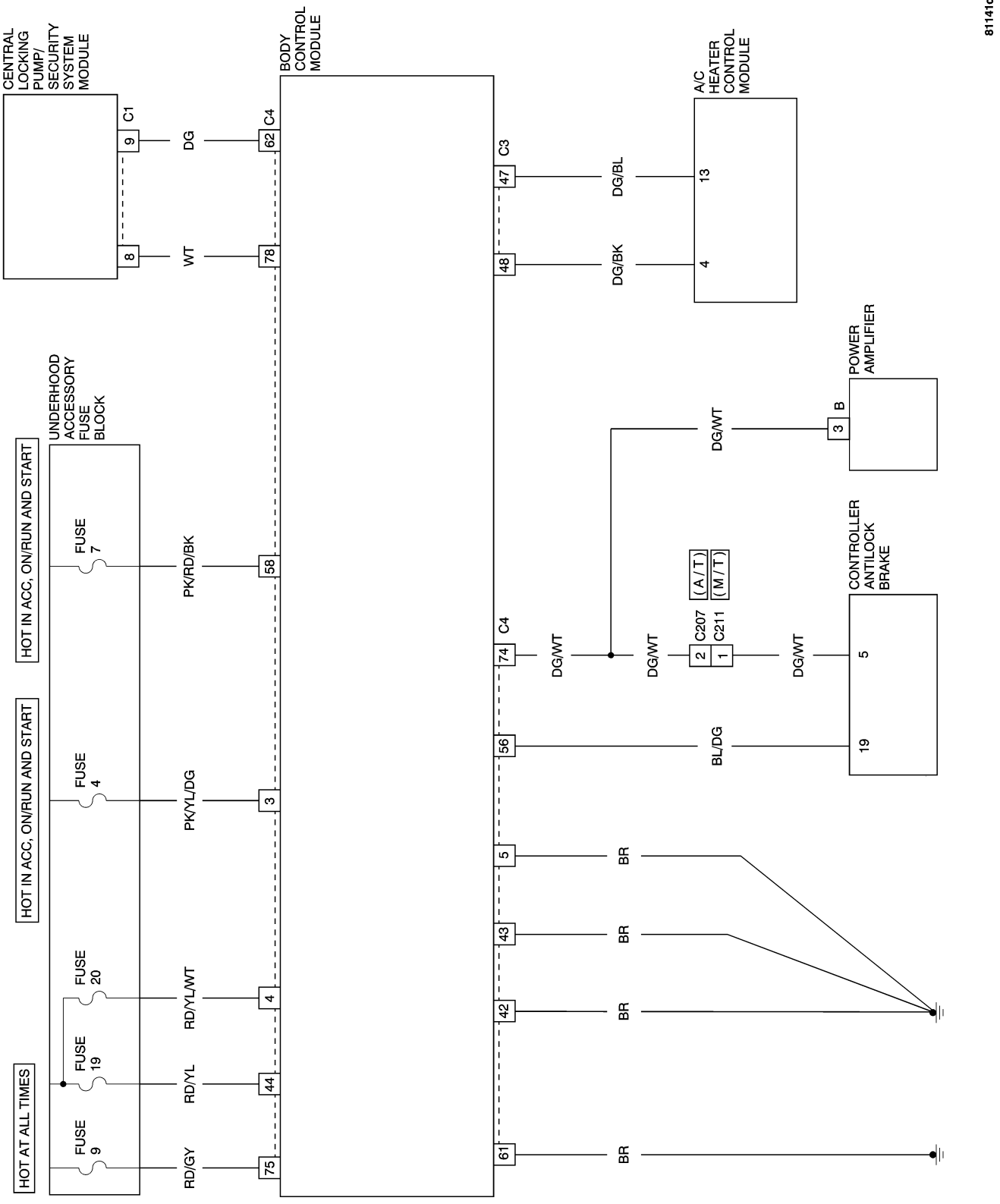

BODY CONTROL MODULE CIRCUIT DIAGRAM (1 OF 3)

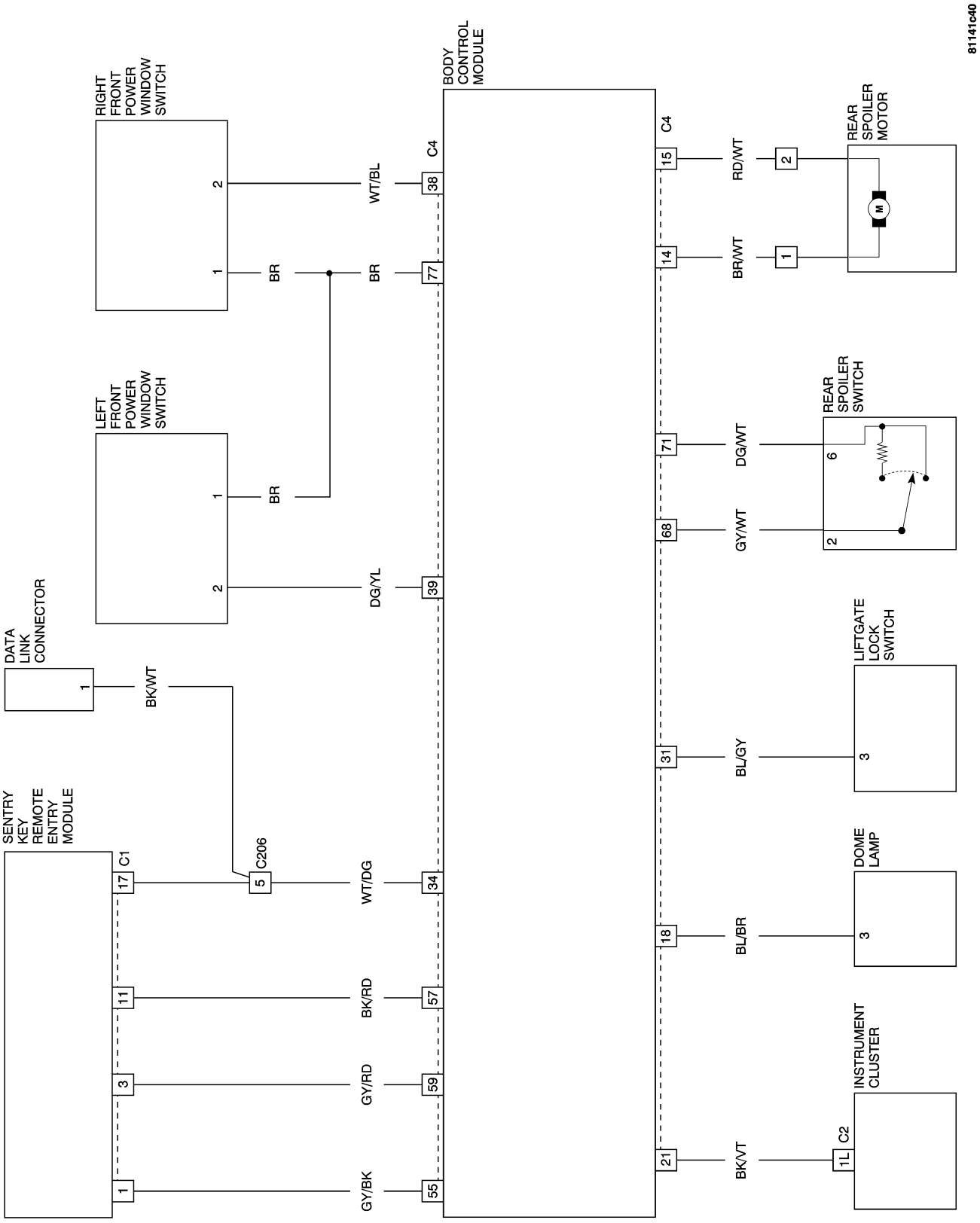

BODY CONTROL MODULE CIRCUIT DIAGRAM (2 OF 3)

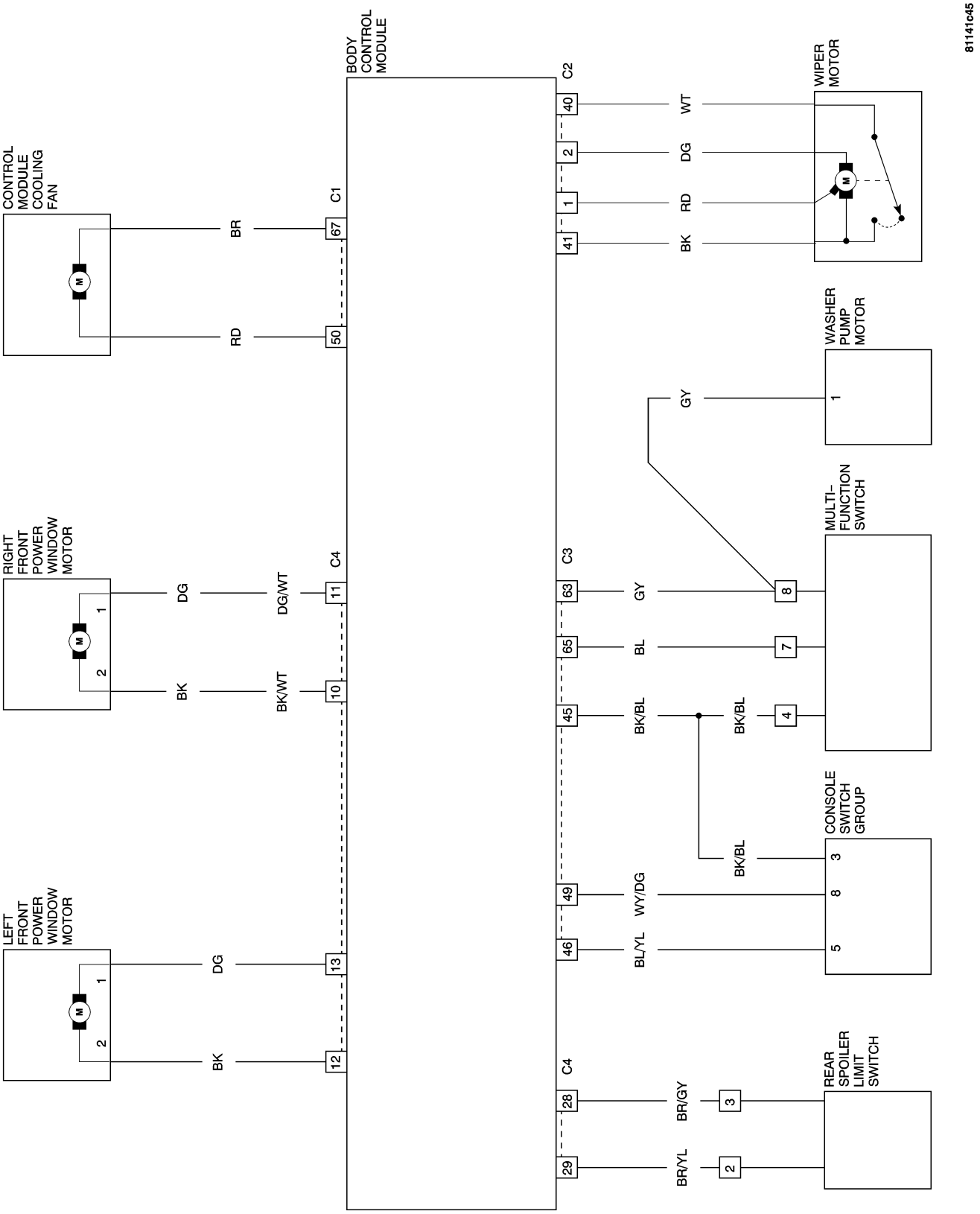
81141c45
BODY CONTROL MODULE CIRCUIT DIAGRAM (3 OF 3)
BODY CONTROL MODULE
C1
C2
C3
C4
CONTROL MODULE COOLING FAN
RIGHT FRONT POWER WINDOW MOTOR
LEFT FRONT POWER WINDOW MOTOR
WIPER MOTOR
WASHER PUMP MOTOR
MULTI-FUNCTION SWITCH
CONSOLE SWITCH GROUP
REAR SPOILER LIMIT SWITCH
BR
RD
DG
BK
DG/WT
BK/WT
WT
GY
BL
BK/BL
WY/DG
BL/YL
BR/GY
BR/YL

ELECTRONIC CONTROL MODULES - SERVICE INFORMATION

TABLE OF CONTENTS

page

COMMUNICATION
DESCRIPTION 52
OPERATION 52
DATA LINK CONNECTOR
DESCRIPTION 53
OPERATION 53
POWERTRAIN CONTROL MODULE
DESCRIPTION 54
OPERATION 54
STANDARD PROCEDURE - PCM/SKREEM PROGRAMMING 54
REMOVAL 56
INSTALLATION 57
TRANSMISSION CONTROL MODULE
DESCRIPTION 58
OPERATION 58
STANDARD PROCEDURE - TCM QUICK LEARN 59
REMOVAL 60
INSTALLATION 61
CONTROLLER ANTILOCK BRAKE
DESCRIPTION 62

page

OPERATION 62
REMOVAL 63
INSTALLATION 64
SECURITY SYSTEM MODULE
DESCRIPTION 65
OPERATION 65
REMOVAL 67
INSTALLATION 68
SENTRY KEY REMOTE ENTRY MODULE
DESCRIPTION 69
OPERATION 69
REMOVAL SKREEM 70
INSTALLATION SKREEM 70
BODY CONTROL MODULE
DESCRIPTION 71
OPERATION 71
REMOVAL 72
INSTALLATION 73

COMMUNICATION

DESCRIPTION

The Controller Area Network (CAN) data bus system is a multiplex system used for vehicle communications. Multiplexing is a system that enables the transmission of several messages over a single channel or circuit.

Many of the control modules in a vehicle require information from the same sensing device. Multiplexing reduces wire harness complexity, sensor current loads and controller hardware because each sensing device is connected to only one controller, which reads and distributes the sensor information to the other controllers over the data bus. Also, because each controller on the data bus can access the controller sensor inputs to every other controller on the data bus, more function and feature capabilities are possible.

A multiplex system allows the information flowing between controllers to be monitored using a diagnostic scan tool. This system allows a control module to broadcast message data out onto the bus where all other control modules can read the messages that are being sent. When a module reads a message on the data bus that it requires, it relays that message to its microprocessor. Each module ignores the messages on the data bus that it does not recognize.

OPERATION

Data exchange between modules is achieved by serial transmission of encoded data over a broadcast network. The Controller Area Network (CAN) data bus messages are carried over the bus in the form of variable pulse width modulated signals. The engine CAN data bus speed is 125 Kilo-bits per second (Kbps) (ignition on) while the interior CAN data bus speed is 83 Kilo-bits per second (Kbps).

The voltage network used to transmit messages requires biasing and termination. Each module on the CAN data bus system provides its own biasing and termination. Each module terminates the bus through a terminating resistor and a terminating capacitor. The Powertrain Control Module is the dominant node for the CAN engine data bus system and the Body Control Module is the dominant node for the CAN interior data bus system.

The CAN bus uses low and high voltage levels to generate signals. The voltage on the bus varies between zero and two and one-half volts. The low and high voltage levels are generated by means of variable-pulse width modulation to form signals of varying length.

When a module is transmitting on the bus, it is reading the bus at the same time to ensure message integrity.

DATA LINK CONNECTOR

DESCRIPTION

The Data Link Connector (DLC) (1) is located at the lower edge of the instrument panel (3) near the hood release (2). The exposed connector terminals are protected by a plastic cover which flips open if access is needed.

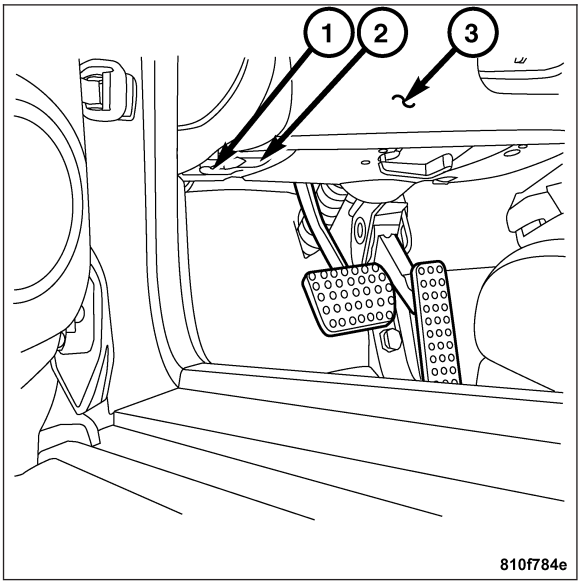

OPERATION

The 16-way Data Link Connector (DLC) provides a link between the DRBIII® scan tool and the vehicle electronic control modules.

POWERTRAIN CONTROL MODULE

DESCRIPTION

The Powertrain Control Module (1) is concealed in the engine compartment inside the Control Module Box (2) located next to the Battery (3).

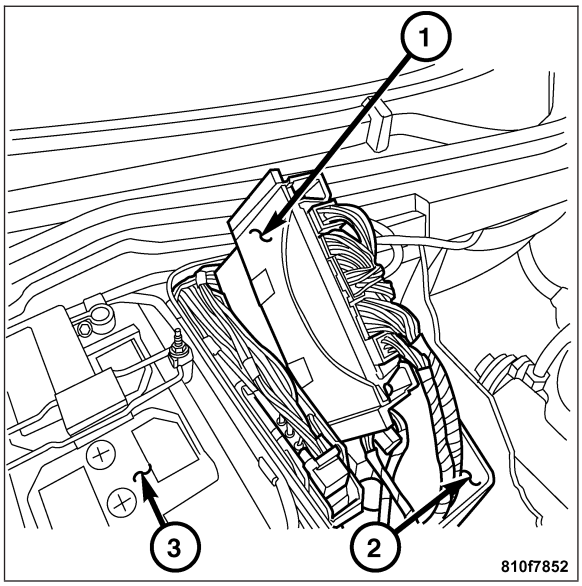

The Powertrain Control Module utilizes integrated circuitry and information carried on the Controller Area Network (CAN) data bus along with many hard wired inputs to monitor many sensor and switch inputs throughout the vehicle. In response to those inputs, the internal circuitry and programming of the Powertrain Control Module allow it to control and integrate many electronic functions and features of the vehicle through both hard wired outputs and the transmission of electronic message outputs to other electronic modules in the vehicle over the CAN data bus.

The Powertrain Control Module for this model is serviced only as a complete unit. A Powertrain Control Module can only be repaired by, or replaced through an authorized electronic warranty repair station. Refer to the latest version of the warranty policies and procedures manual for a current listing of authorized electronic repair stations.

OPERATION

The Powertrain Control Module is a pre-programmed, microprocessor-based digital computer. It regulates ignition timing, air-fuel ratio, emission control devices, charging system, certain transmission features, speed control, air conditioning compressor clutch engagement and idle speed. The Powertrain Control Module can adapt its programming to meet changing operating conditions.

The Powertrain Control Module receives input signals from various switches and sensors. Based on these inputs, the Powertrain Control Module regulates various engine and vehicle operations through different system components. These components are referred to as Powertrain Control Module outputs. The sensors and switches that provide inputs to the Powertrain Control Module are considered Powertrain Control Module inputs.

The Powertrain Control Module adjusts ignition timing based upon inputs it receives from sensors that react to: engine rpm, manifold absolute pressure, engine coolant temperature, throttle position, transmission gear selection (automatic transmission), vehicle speed and the brake switch.

The Powertrain Control Module adjusts idle speed based on inputs it receives from sensors that react to: throttle position, vehicle speed, transmission gear selection, engine coolant temperature and from inputs it receives from the air conditioning clutch switch and brake switch.

Based on inputs that it receives, the Powertrain Control Module adjusts ignition timing. The Powertrain Control Module also adjusts the generator charge rate through control of the generator field and provides speed control operation.

STANDARD PROCEDURE - PCM/SKREEM PROGRAMMING

Note: Before replacing the PCM, be sure to check the related component/circuit integrity for failures not detected due to a double fault in the circuit. Most PCM failures are caused by internal component failures (i.e. relays and solenoids) and shorted circuits (i.e. pull-ups, drivers, and switched circuits). These failures are difficult to detect when a double fault has occurred and only one DTC has been set.

When a Powertrain Control Module (PCM) and the Sentry Key Remote Entry Module (SKREEM) are replaced at the same time, perform the following steps:

1. Program the new PCM.
2. Program the new Sentry Key Remote Entry Module.

3. Replace all ignition keys and program them to the new Sentry Key Remote Entry Module.

PROGRAMMING THE PCM

The Sentry Key Remote Entry System Secret Key is an ID code that is unique to each Sentry Key Remote Entry Module. This code is programmed and stored in the Sentry Key Remote Entry Module, the PCM, and the ignition key transponder chip(s). When replacing the PCM, it is necessary to program the secret key into the new PCM using the DRBIII® scan tool.

Note: If three attempts are made to enter secure access mode using an incorrect PIN, secured access mode will be locked out for one hour. To exit this lockout mode, turn the ignition switch to the ON position for one hour, then enter the correct PIN. (Ensure all accessories are turned off. Also monitor the battery state and connect a battery charger if necessary).

PROGRAMMING THE SENTRY KEY REMOTE ENTRY MODULE

Note: Be sure to enter the correct country code. If the incorrect country code is programmed into the Sentry Key Remote Entry Module, it cannot be changed and the Sentry Key Remote Entry Module must be replaced.

1. Program ignition keys to the Sentry Key Remote Entry Module.

Note: If the PCM and the Sentry Key Remote Entry Module are replaced at the same time, all vehicle ignition keys will need to be replaced and programmed to the new Sentry Key Remote Entry Module.

PROGRAMMING IGNITION KEYS TO THE SENTRY KEY REMOTE ENTRY MODULE

Note: A maximum of eight keys can be learned to each Sentry Key Remote Entry Module. Once a key is learned to an Sentry Key Remote Entry Module it (the key) cannot be transferred to another vehicle.

1. Obtain ignition keys to be programmed from the customer (8 keys maximum).
2. Using the DRBIII®, erase all ignition keys.
3. Program all of the ignition keys.

If ignition key programming is unsuccessful, the DRBIII® will display a failure message.

REMOVAL

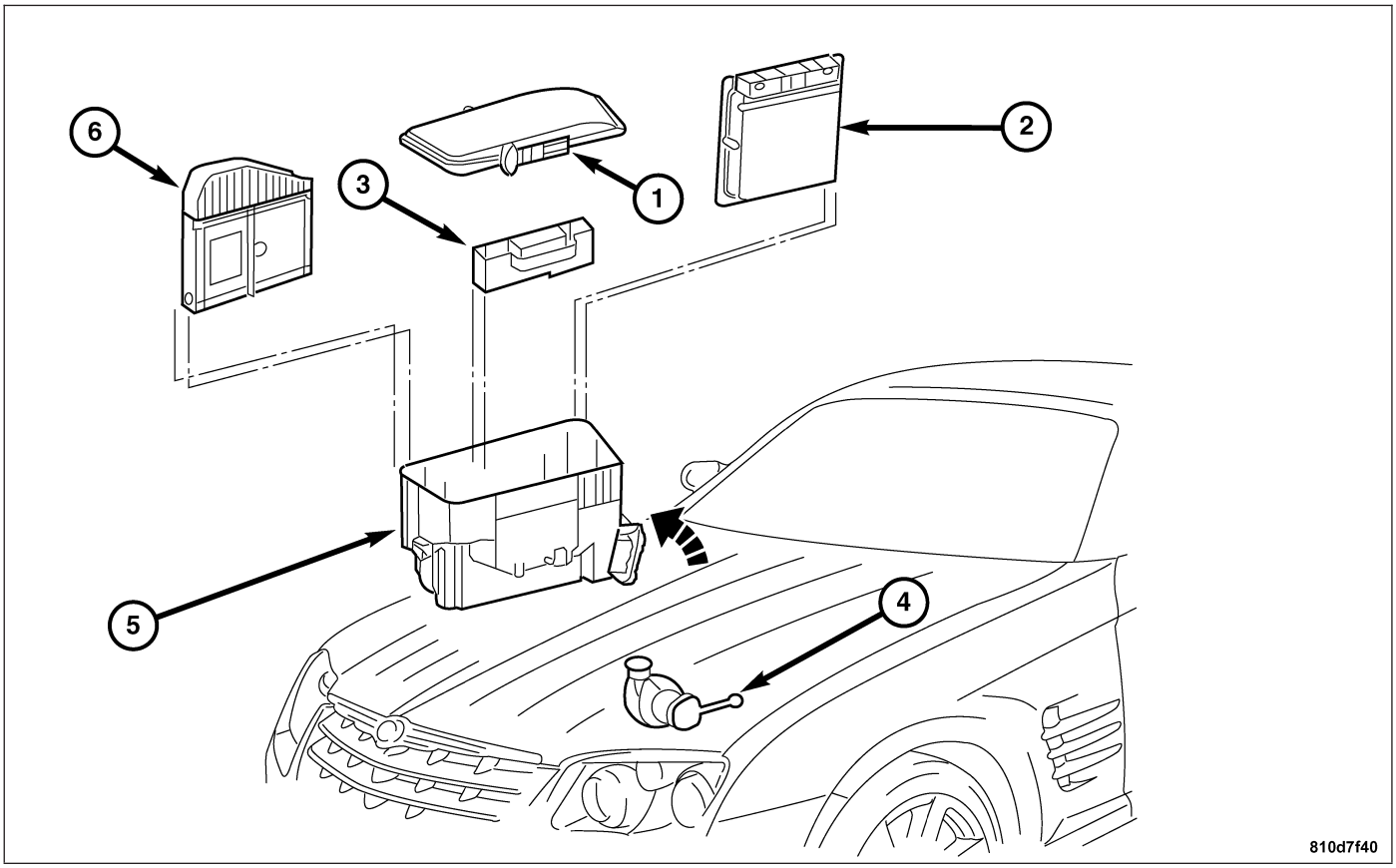

1 - CONTROL MODULE BOX COVER
2 - POWERTRAIN CONTROL MODULE
3 - RELAY CONTROL MODULE
4 - CONTROL MODULE BOX COOLING FAN
5 - CONTROL MODULE BOX
6 - BODY CONTROL MODULE

1. Disconnect the negative battery cable.
2. Slide the clips forward to remove the plastic control module box cover (1).
3. Holding the metal powertrain control module retaining clip back, pull the powertrain control module (2) up and out of the control module box (5).
4. Disconnect the electrical connectors and remove the powertrain control module (2).

INSTALLATION

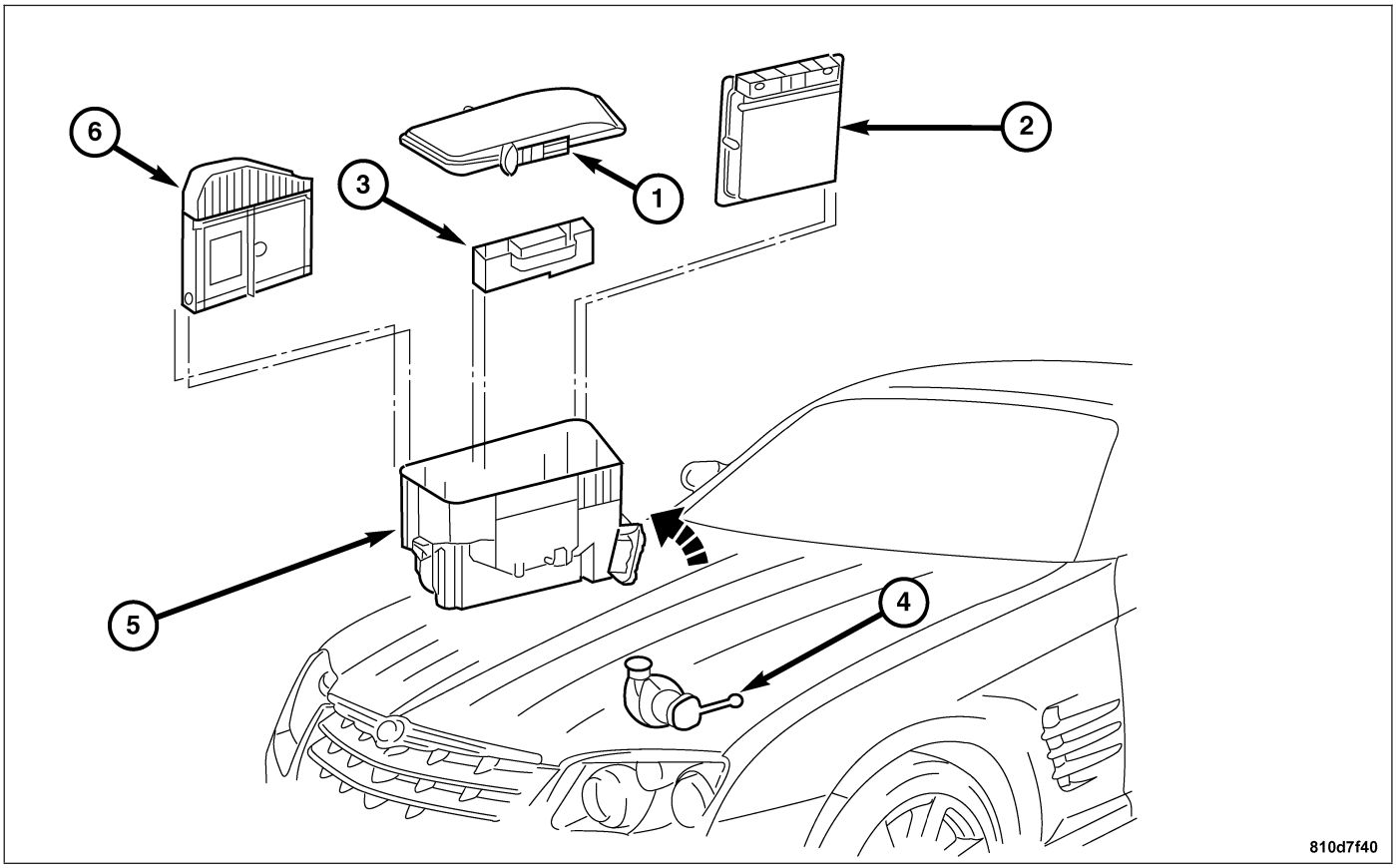

1 - CONTROL MODULE BOX COVER
2 - POWERTRAIN CONTROL MODULE
3 - RELAY CONTROL MODULE
4 - CONTROL MODULE BOX COOLING FAN
5 - CONTROL MODULE BOX
6 - BODY CONTROL MODULE

1. Connect the electrical connectors to the powertrain control module (2).
2. Install the powertrain control module into the control module box (5).
3. Install the plastic control module box cover (1) and slide the clips rearward to lock the cover.
4. Connect the negative battery cable.

TRANSMISSION CONTROL MODULE

DESCRIPTION

The Transmission Control Module (1) is located in the interior passenger compartment on the passenger side. It is mounted behind a base plate (3) in the passenger side footwell next to the Radio Amplifier (2). The carpet must be pulled pack and the base plate unfastened and flipped down in order to access the Transmission Control Module.

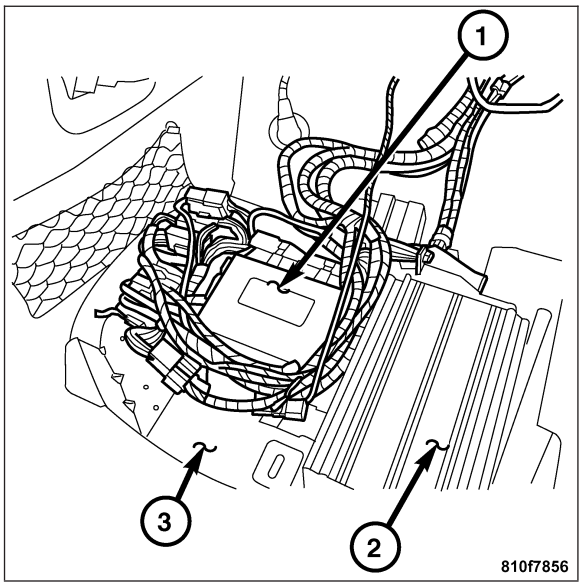

OPERATION

The Transmission Control Module controls all electronic operations of the transmission. The Transmission Control Module receives information regarding vehicle operation from both direct and indirect inputs and selects the operational mode of the transmission. Direct inputs are hardwired to and used specifically by the Transmission Control Module. Indirect inputs originate from other components/modules and are shared with the Transmission Control Module via the vehicle Controller Area Network (CAN) bus.

Some examples of **direct inputs** to the Transmission Control Module are:

- Battery (B+) Voltage
- Traction System Relay
- Trans Temp Sensor - P/N Switch
- N2 and N3 Speed Sensors
- Transmission Oil Temperature Sensor

Some examples of **indirect inputs** to the Transmission Control Module are:

- Controller Area Network (CAN) Bus Modules
- DRBIII® Scan Tool Communication
- Shift Lever Assembly
- Brake Lamp Switch

Based on the information received from these various inputs, the Transmission Control Module determines the appropriate shift schedule and shift points, depending on the present operating conditions and driver demand. This is possible through the control of various direct and indirect outputs.

Some examples of Transmission Control Module **direct outputs** are:

- 1-2/4-5 Solenoid
- 2-3 Solenoid
- 3-4 Solenoid
- TCC Solenoid
- Modulation Pressure Solenoid
- Shift Pressure Solenoid

Some examples of Transmission Control Module **indirect outputs** are:

- Transmission Temperature (to Powertrain Control Module)
- Shift Lever Position (to Powertrain Control Module)

In addition to monitoring inputs and controlling outputs, the Transmission Control Module has other important responsibilities and functions:

- Storing and selecting appropriate Shift Schedules
- System self-diagnostics
- Diagnostic capabilities (with DRBIII® scan tool)

Note: If the TCM has been replaced, the "TCM Quick Learn" procedure must be performed. Refer to Page 8E-58.

BATTERY FEED

A fused, direct battery feed to the Transmission Control Module is used for continuous power. This battery voltage is necessary to retain adaptive learn values in the Transmission Control Module's RAM (Random Access Memory). When the battery (B+) is disconnected, this memory is lost. When the battery (B+) is restored, this memory loss is detected by the Transmission Control Module and a Diagnostic Trouble Code (DTC) is set.

LIMP-HOME MODE

In order to ensure safe driving and to prevent further damage to the automatic transmission, the Transmission Control Module switches to limp-home mode in the event of a critical failure. A diagnostic trouble code assigned to the failure is stored in memory. All solenoid and regulating valves are thus de-energized. The result is that the gear last engaged remains engaged, the modulating pressure and shift pressure rise to the maximum levels, and the torque converter lockup clutch is disarmed. In order to preserve the operability of the vehicle to some extent, the automatic transmission internal hydraulic control can be used to engage second gear or reverse by: stopping the vehicle, switching off the engine, moving the shift selector lever to Park, waiting at least ten seconds, starting the engine, and moving the shift selector lever to drive to access second gear, or moving the shift selector lever to Reverse if needed. The limp-home function remains active until the failure is corrected or the stored diagnostic trouble code is erased. Sporadic failures may also be reset by switching the ignition switch from Off to On.

STANDARD PROCEDURE - TCM QUICK LEARN

The quick learn procedure requires the use of the DRB III® scan tool.

This program allows the electronic transmission system to recalibrate itself. This will provide the proper transmission operation. The quick learn procedure should be performed if any of the following procedures are performed:

- Transmission Assembly Replacement
- Transmission Control Module Replacement
- Solenoid Pack Replacement
- Clutch Plate and/or Seal Replacement
- Valve Body Replacement or Recondition

To perform the Quick Learn Procedure, the following conditions must be met:

- The brakes must be applied
- The engine speed must be above 500 rpm
- The shift lever position must stay in Park until prompted to shift to Drive
- The shift lever position must stay in Drive after the Shift to Drive prompt until the DRBIII® indicates the procedure is complete
- The calculated oil temperature must be above 60° and below 200°

REMOVAL

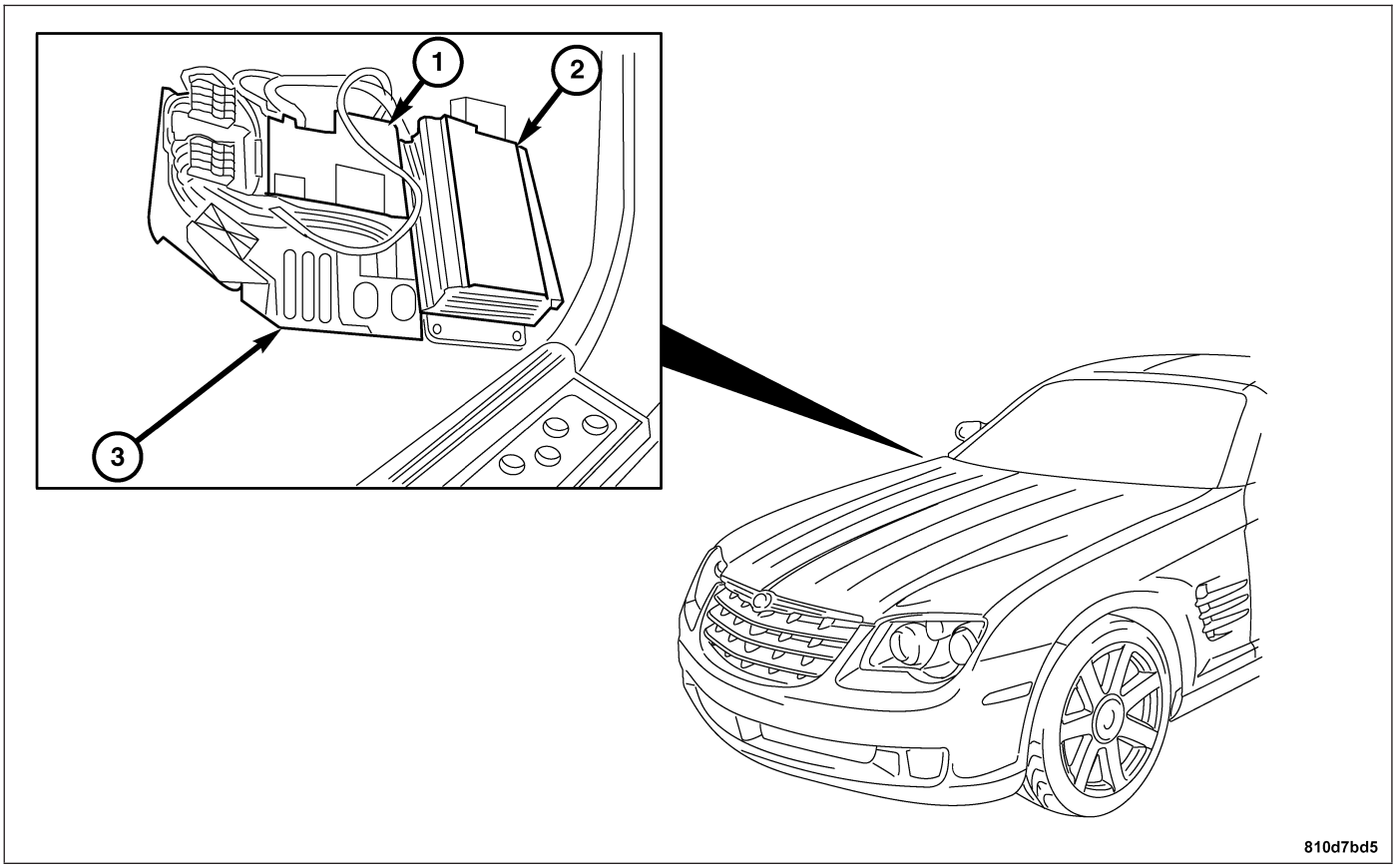

1 - TRANSMISSION CONTROL MODULE
2 - POWER AMPLIFIER
3 - BASE PLATE

1. Disconnect the negative battery cable.
2. Remove the passenger floor mat and pull the carpet back in the front portion of the footwell.
3. Remove the plastic nuts holding the base plate (3) to the passenger footwell and pull the base plate (3) down.
4. Remove the screws holding the transmission control module (1) to the base plate (3).
5. Disconnect the electrical connectors and remove the transmission control module (1).

INSTALLATION

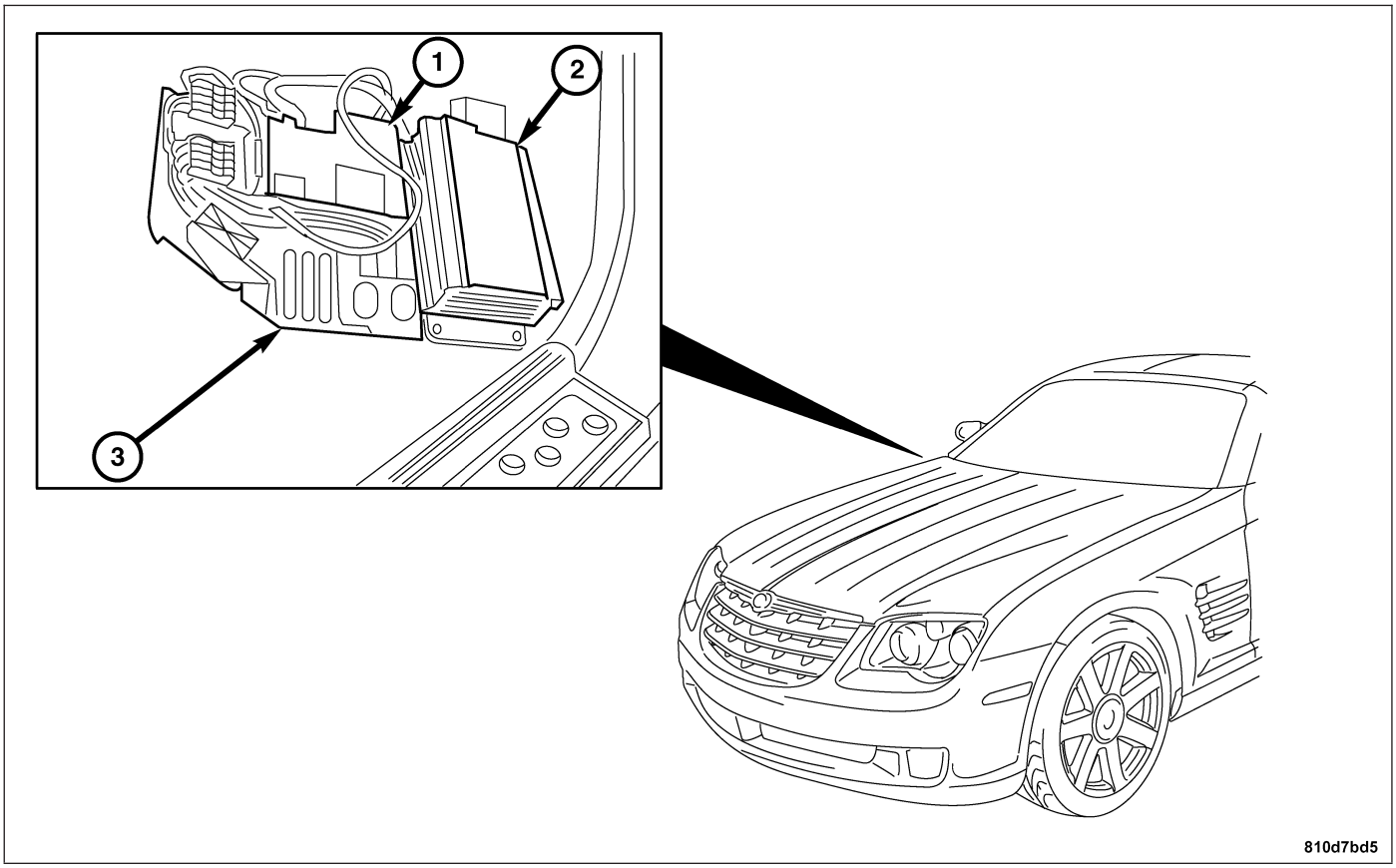

1 - TRANSMISSION CONTROL MODULE
2 - POWER AMPLIFIER
3 - BASE PLATE

1. Connect the electrical connectors to the transmission control module (1).
2. Install the screws holding the transmission control module (1) to the base plate (3).
3. Turn the base plate (3) and realign it with the mounting studs on the vehicle floor.

Note: Be sure not to pinch or cause interference with the wiring harnesses while locating the base plate to the vehicle floor studs.

4. Install the plastic nuts and secure the base plate (3) to the passenger side lower dash panel.
5. Push the carpet in the front part of the passenger footwell up into its original position and install the passenger floor mat.
6. Connect the negative battery cable.

CONTROLLER ANTILOCK BRAKE

DESCRIPTION

The Controller Antilock Brake (CAB) (1) is located in the engine compartment in front of the Underhood Accessory Fuse Block (2).

The CAB is a microprocessor-based device which monitors the Antilock Brake System (ABS) during normal braking and controls it when the vehicle is in an ABS stop. The CAB is mounted to the Hydraulic Control Unit (HCU) (3) as part of the Integrated Control Unit (ICU). The CAB uses a 47-way electrical connector on the vehicle wiring harness. The CAB is powered through Fuse 3 (50 amp) located in the engine fuse block.

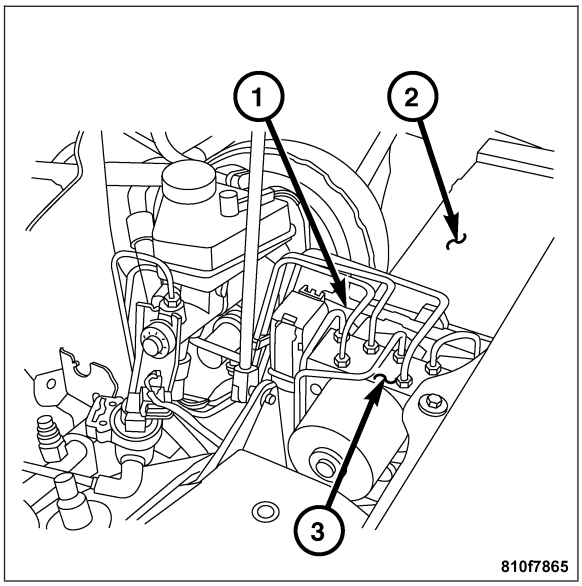

OPERATION

The primary functions of the Controller Antilock Brake (CAB) are to:

- Monitor the Antilock Brake System (ABS) for proper operation.
- Detect wheel locking or wheel slipping tendencies by monitoring the speed of all four wheels of the vehicle.
- Control fluid modulation to the wheel brakes while the system is in an ABS mode.
- Store diagnostic information.
- Provide communication to the DRBIII® scan tool while in diagnostic mode.
- Illuminate the amber ABS warning indicator lamp.
- Illuminate the brake assist (BAS)/electronic stability program (ESP) lamp on the instrument panel when a traction control event occurs.

The CAB constantly monitors the Antilock Brake System for proper operation. If the CAB detects a fault, it will turn on the amber ABS warning indicator lamp and disable the Antilock Braking System. The normal base braking system will remain operational.

The CAB continuously monitors the speed of each wheel through the signals generated by the wheel speed sensors to determine if any wheel is beginning to lock. When a wheel locking tendency is detected, the CAB commands the CAB command coils to actuate. The coils then open and close the valves in the Hydraulic Control Unit (HCU) that modulate brake fluid pressure in some or all of the hydraulic circuits. The CAB continues to control pressure in individual hydraulic circuits until a locking tendency is no longer present.

The CAB contains a self-diagnostic program that monitors the Antilock Brake System for system faults. When a fault is detected, the amber ABS warning indicator lamp is turned on and the Diagnostic Trouble Code (DTC) is then stored in a diagnostic program memory. These DTCs will remain in the CAB memory even after the ignition has been turned off. The DTCs can be read and cleared from the CAB memory by a technician using the DRBIII® scan tool.

CAB INPUTS

- Wheel speed sensors (four)
- Brake lamp switch
- System and pump voltage

- Ground
- ESP OFF switch
- Diagnostic communication

CAB OUTPUTS

- Amber ABS warning indicator lamp actuation (via CAN Bus)
- Instrument cluster communication (via CAN Bus)
- BAS/ESP indicator lamp
- Diagnostic communication

REMOVAL

1. Disconnect the negative battery cable.
2. Clean the top of the Hydraulic Control Unit (HCU) near the hydraulic lines.

Note: Risk of confusion! Mark hydraulic lines and corresponding connections before disassembling.

3. Unscrew the hydraulic lines (1–6) from the HCU. Seal off the hydraulic lines and connections with plugs.

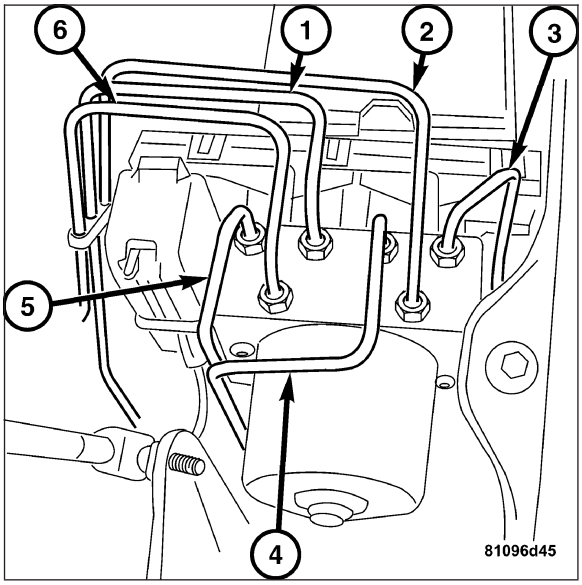

4. Disconnect the Controller Antilock Brake (CAB) harness connector.
5. Unscrew the retaining bracket from the Integrated Control Unit (ICU).
6. Pull the ICU upwards, carefully pushing the hydraulic lines to one side.
7. Unscrew the CAB from the HCU and pull off carefully.

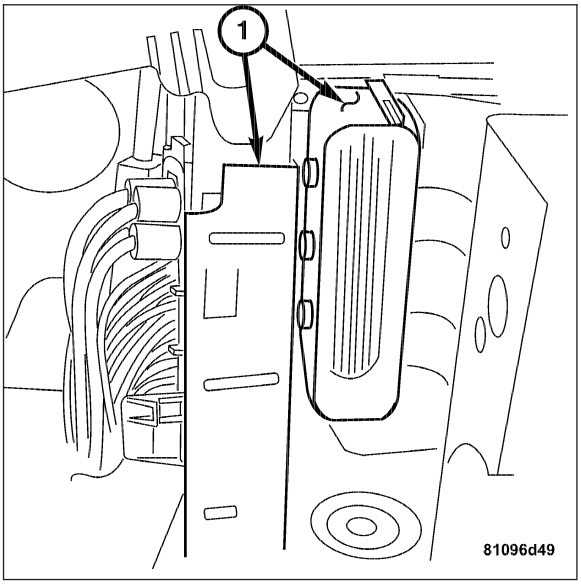

INSTALLATION

1. Install the Controller Antilock Brake (CAB) to the Hydraulic Control Unit (HCU) with the screws.
2. Check the seating and condition of the Integrated Control Unit (ICU) rubber grommets and replace if necessary.
3. Install the ICU to the retaining bracket with the screws.

CAUTION: Do not wrongfully connect hydraulic lines. Trace the line routing to the corresponding wheel if necessary.

4. Install the brake lines (1-6). Pay close attention to the markings when attaching the hydraulic lines.

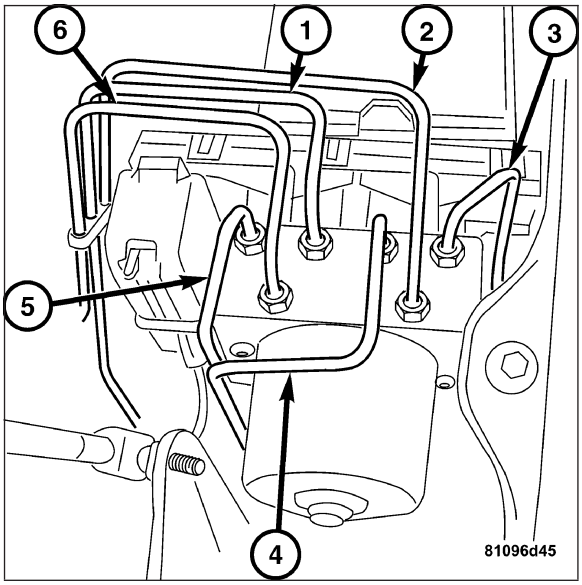

5. Reconnect the CAB harness connector (1).

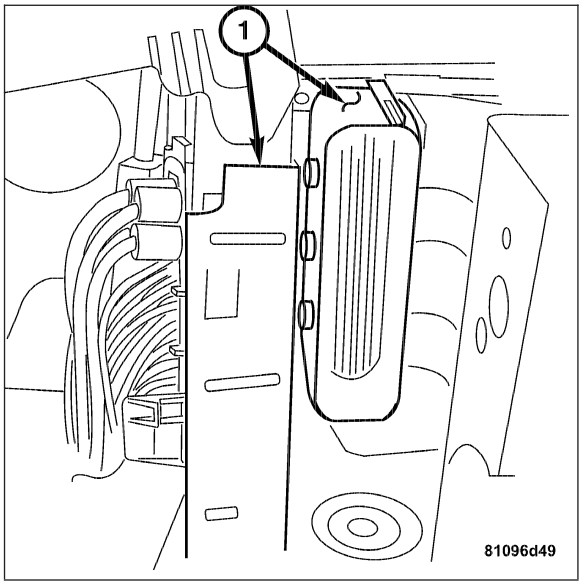

6. Connect the negative battery cable.
7. Bleed the brake system. **Refer to Page 5-9**.
8. Read the fault memory and erase.

SECURITY SYSTEM MODULE

DESCRIPTION

The Central Locking Pump/Security System Module (3) uses a combination of electrical wires (2) and air pressure/vacuum lines (1). The Central Locking Pump/Security System Module is located in the right rear of the luggage compartment underneath the trunk floor covering (4). It is wrapped in a sound deadening material in order to operate quietly without disturbing the vehicle operator.

The Central Locking Pump/Security System Module controls the air and vacuum lines that handle the locking and unlocking of the vehicle doors, the liftgate, and the fuel tank door.

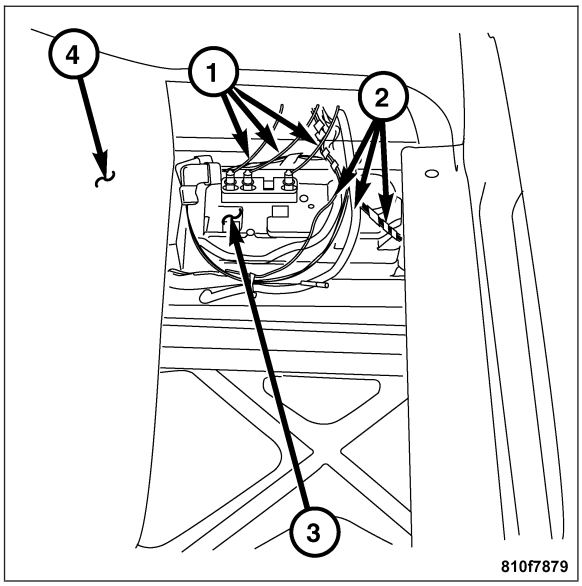

OPERATION

VEHICLE LOCKING/UNLOCKING

To unlock, the Body Control Module is actuated by the SKREEM. The Body Control Module then sends the signal to the Central Locking Pump/Security System Module (CLP/SSM) via the Controller Area Network (CAN) Bus. The CLP/SSM pump motor starts running and supplies air pressure. The door lock actuators are pressurized. When a pressure threshold is reached in the system, the pump is switched off by an internal pressure switch. The pressure in the system is then released by the CLP/SSM and the unlocking operation is completed. The locking procedure is accomplished in a fashion opposite to the unlocking operation. However, the next time the remote control button is pressed, the CLP/SSM is also actuated by connecting it to ground by the second control lead on the SKREEM. The direction of rotation for the CLP/SSM pump motor is reversed, thereby providing the vacuum required to lock. In order to avoid unlocking the vehicle unintentionally, the vehicle is relocked by the CLP/SSM via the SKREEM. Relocking is accomplished after unlocking with the remote control when: a door is not opened within 40 seconds, the key is not inserted into the ignition lock, the interior power door lock switch is not actuated, only the liftgate is opened after unlocking. The CLP/SSM reads the signals (door contacts, trunk lid, interior power door lock switch) and actuates the power door lock actuators. The vehicle security alarm is also activated by the relocking function.

AUTOMATIC LOCKING/UNLOCKING

Upon reaching a speed of 15 km/h (9 MPH), the vehicle doors are locked automatically. The fuel tank flap remains unlocked. If, after automatic locking, the vehicle is unlocked with the interior power door lock switch, this state is maintained until a door is opened or until the ignition is switched off. Automatic locking is accomplished again only upon reaching the specified speed. The logic circuitry for this function is integrated into the CLP/SSM. The automatic locking function can be activated or deactivated with the DRB III®. An alternative is to use the interior power door lock switch with the ignition switched on by pressing and holding the door lock switch for more than 5 seconds in either the lock (auto locking switched on) or unlock (auto locking switched off) position. The alternative of enabling/disabling the auto locking system by using the interior power door lock switch can also be inhibited with the DRB III®.

EMERGENCY UNLOCKING

In the event of a vehicle collision, the doors are unlocked automatically by a crash sensor integrated into the CLP/SSM. The doors are unlocked after a delay time of 8 to 11 seconds. The emergency unlocking function interrupts all functions performed by the CLP/SSM, which are reactivated only after interrupting the ignition. The emergency unlocking function is only active when the vehicle is unlocked from the outside.

VEHICLE RELOCKING

In order to avoid unlocking the vehicle unintentionally, the vehicle is relocked by the CLP/SSM via the SKREEM. Relocking is accomplished after unlocking with the remote control when: a door is not opened within 40 seconds, the key is not inserted into the ignition lock, or the interior power door lock switch is not actuated. The CLP/SSM reads the signals (door contacts, interior power door lock switch) and actuates the power door lock actuators. The vehicle security alarm is also activated by the relocking function.

ANTI-THEFT SYSTEM

Once the anti-theft alarm system is set, the anti-theft alarm can be triggered if:

- The doors, hood, or hatch is opened
- The radio is removed (disconnected electrically)
- The ignition is jumped
- The glove box is opened
- The anti-theft tow sensor is tripped
- The alarm siren is tripped

The inputs ready for triggering an alarm are checked twice per second by the CLP/SSM. If two sequential checks of the same input indicate that the input is not in the non-actuated state, the audible alarm Siren is triggered and the front and rear lamps flash.

SIREN

The vehicle theft system alarm Siren contains a built in rechargeable battery back up and can sound if its electrical circuits are disconnected or if the vehicle battery cables are disconnected. The Siren can also sound if the electrical circuits between it and the CLP/SSM are disconnected. Once triggered, the Siren can only be silenced by unlocking the vehicle with the RF key transmitter or by unlocking the vehicle with the mechanical key.

ANTI-THEFT SWITCH/ANTI-THEFT TOW SENSOR

The Anti-Theft Tow Sensor is an inclination sensor that contains electrodes which are partially immersed in an electrically conductive liquid. If the conductive value between the electrodes changes, the sensor recognizes a change in the inclination of the vehicle. When the vehicle is parked, the value for the vehicle position is stored. If the vehicle is moved with a certain inclination in longitudinal and/or lateral direction for a certain time when the anti-theft alarm system is activated, the Anti-Theft Tow Sensor transmits an alarm signal to the CLP/SSM. In order to allow the vehicle to be towed or transported without sounding the alarm Siren, the Anti-Theft Tow Sensor can be deactivated by pressing the Anti-Theft Switch which is located in the passenger compartment on the center console in front of the shift lever.

REMOVAL

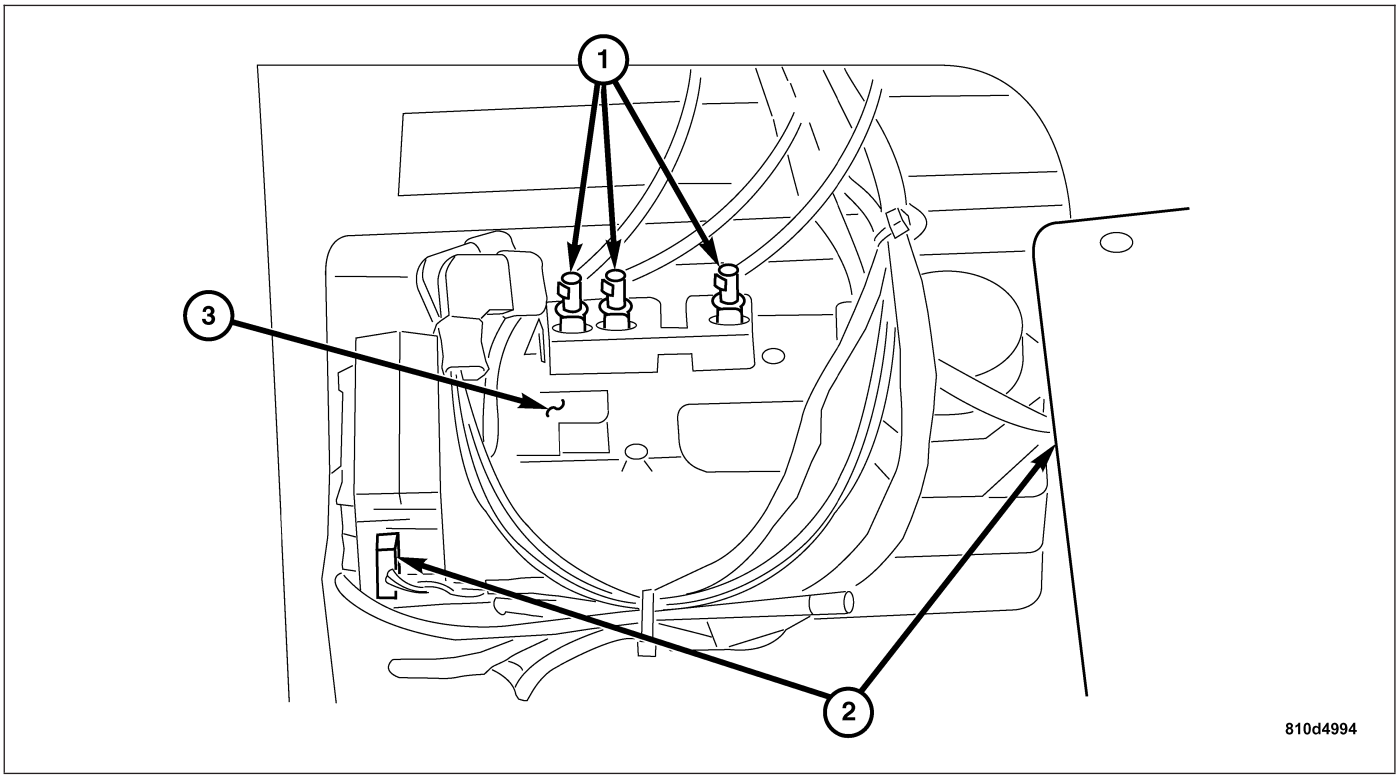

1 - AIR LINES
2 - ELECTRICAL CONNECTORS
3 - CENTRAL LOCKING PUMP/SECURITY SYSTEM MODULE

1. Disconnect the negative battery cable.
2. Remove the trunk floor covering.
3. Remove the vehicle jacking assembly.
4. Remove the sound deadening foam material from the central locking pump/security system module.
5. Disconnect the air lines (1) and the electrical connectors (2) from the central locking pump/security system module (3) and remove the module.

INSTALLATION

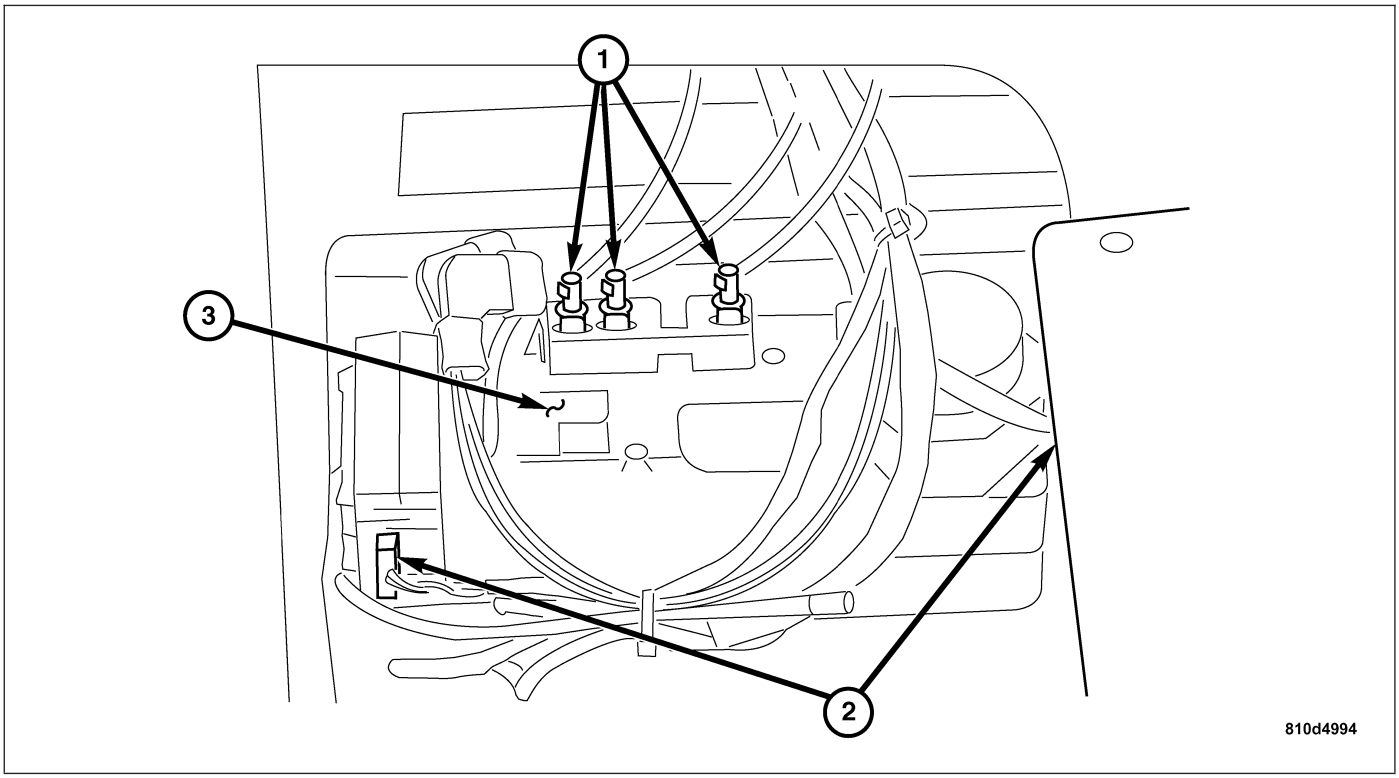

1 - AIR LINES
2 - ELECTRICAL CONNECTORS
3 - CENTRAL LOCKING PUMP/SECURITY SYSTEM MODULE

1. Install the central locking pump/security system module (3) into the trunk and connect the air lines (1) and the electrical connectors (2).
2. Install the sound deadening foam covering to the central locking pump/security system module.
3. Install the vehicle jacking assembly into the trunk next to the central locking pump/security system module.
4. Install the trunk floor covering.
5. Connect the negative battery cable.

SENTRY KEY REMOTE ENTRY MODULE

DESCRIPTION

The Sentry Key Remote Entry Module (SKREEM) (1) is located underneath the top pad of the instrument panel (2) behind the Instrument Cluster. The SKREEM works in conjunction with the vehicle locking/unlocking remote control and the Central Locking Pump/Security System Module to lock and unlock the vehicle.

The SKREEM is also the primary component of the sentry key system. The SKREEM has a halo-like Antenna Ring that connects by wires to the SKREEM and is mounted around the Ignition Lock Cylinder. The SKREEM cannot be adjusted or repaired. If faulty or damaged, the unit must be replaced.

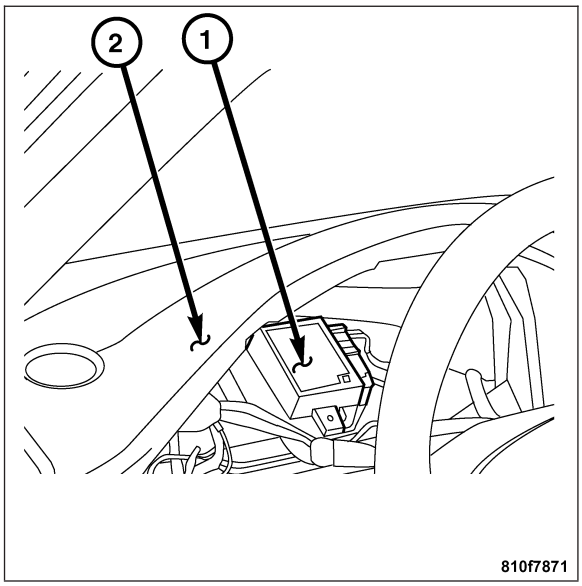

OPERATION

The Sentry Key Remote Entry Module (SKREEM) has the following functions: receiving and evaluating the Radio Frequency (RF) keyless entry remote signal, actuation of door locks in conjunction with the Central Locking Pump/Security System Module, and enabling the vehicle theft security alarm with confirmation via the turn signals. When the RKE transmitter is operated, an RF signal is transmitted. If the SKREEM recognizes the RF signal as valid, it actuates the Central Locking Pump/Security System Module through the Body Control Module. The vehicle is then locked or unlocked through the power locks system. Connected to the SKREEM is a Sentry Key Antenna Ring which surrounds the ignition lock cylinder. When the ignition is switched on, the Sentry Key Antenna Ring is supplied with power. A data block is transmitted inductively via the Sentry Key Antenna Ring to the SKREEM and then on to the Powertrain Control Module. If the antenna ring data block content is invalid or if vehicle battery power is too low to build up enough power for the antenna ring, the Powertrain Control Module will not receive the proper signal. This is displayed with the message “Start Error” in the Instrument Cluster.

The SKREEM contains an RF transceiver and a microprocessor. The SKREEM transmits RF signals to and receives RF signals from the ignition key transponder through a tuned Sentry Key Antenna Ring that is wired to the SKREEM. If the Sentry Key Antenna Ring is not mounted properly around the ignition lock cylinder housing, communication problems between the SKREEM and the ignition key may arise. These communication problems will result in ignition key transponder-related faults. The SKREEM also communicates over the Controller Area Network (CAN) data bus with the Powertrain Control Module (PCM), the Instrument Cluster, the Body Control Module (BCM), and/or the DRB III® scan tool.

The SKREEM retains in memory the ID numbers of any ignition key transponder that is programmed into it. For added system security each SKREEM is programmed with a unique secret key code. This code is stored in memory, sent over the CAN data bus to the PCM, and is encoded to the transponder of every ignition key that is programmed into the SKREEM.

In the event that a SKREEM replacement is required, the secret key code can be transferred to the new SKREEM from the PCM using the DRB III® scan tool and the ignition key system replacement programming procedure. Proper completion of the ignition key system initialization will allow the existing ignition keys to be programmed into the new SKREEM so that new keys will not be required. In the event that the original secret key code cannot be recovered, SKREEM replacement will also require new ignition keys. The DRB III® scan tool will alert the technician during the key reprogramming procedure if new ignition keys are required.

The sentry key system performs a self-test each time the ignition switch is turned to the On position and will store fault information in the form of Diagnostic Trouble Codes (DTCs) in SKREEM memory if a system malfunction is detected. The SKREEM can be diagnosed and any stored DTCs can be retrieved using a DRB III® scan tool. Refer to the appropriate diagnostic information.

REMOVAL

SKREEM

1. Disconnect the negative battery cable.
2. Remove the instrument cluster. **Refer to Page 8J-83**.
3. Disconnect the 2-pin CAN bus harness connector (1) from the SKREEM.
4. Disconnect the 2-pin harness connector for the sentry key antenna ring.
5. Disconnect the 18-pin harness connector (1) from the SKREEM.
6. Press the retaining tabs apart.
7. Remove the SKREEM from the base plate.

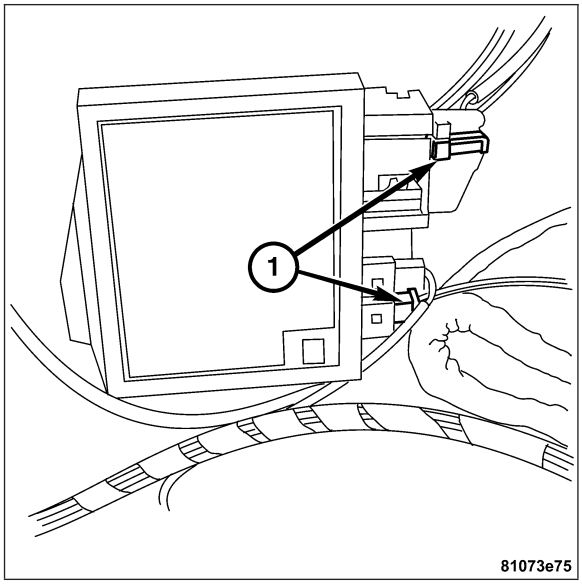

INSTALLATION

SKREEM

1. Install the SKREEM to the base plate.
2. Connect the 18-pin harness connector and the 2-pin CAN bus harness connector (1) to the SKREEM.
3. Connect the 2-pin harness connector for the sentry key antenna ring.
4. Install the instrument cluster. **Refer to Page 8J-84**.
5. Connect the negative battery cable.

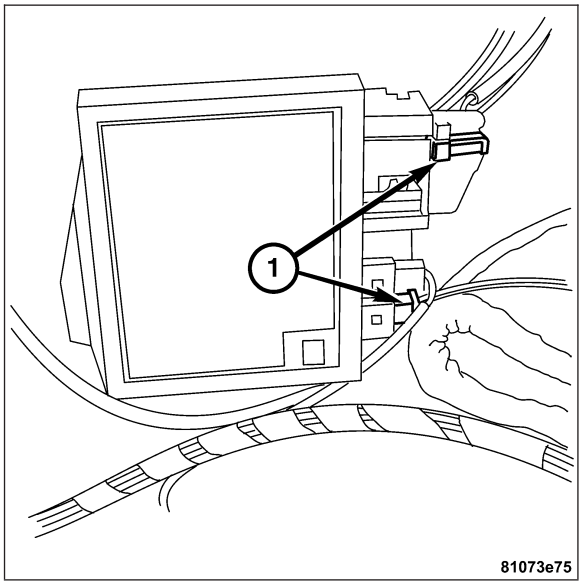

BODY CONTROL MODULE

DESCRIPTION

BODY CONTROL MODULE

The Body Control Module (BCM) (1) is concealed in the engine compartment inside of the Control Module Box (2) located next to the battery (3).

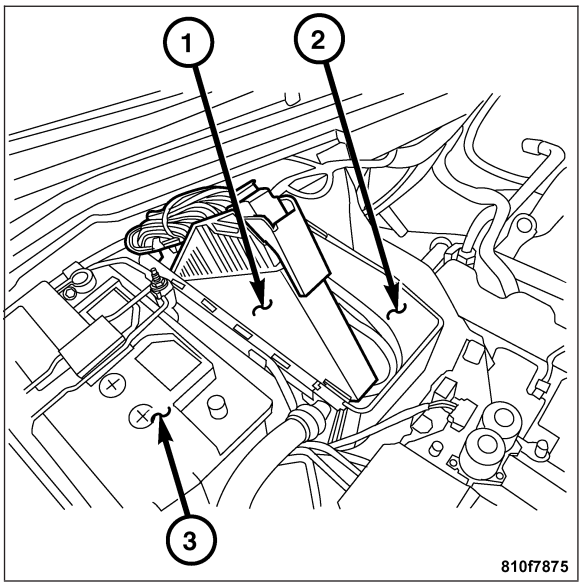

The BCM utilizes integrated circuitry and information carried on the Controller Area Network (CAN) bus along with many hardwired inputs to monitor many sensor and switch inputs throughout the vehicle. In response to those inputs, the internal circuitry and programming of the BCM allows it to control and integrate many electronic functions and features of the vehicle through both hardwired outputs and the transmission of electronic message outputs to other electronic modules in the vehicle over the CAN data bus.

The BCM for this model is serviced only as a complete unit. A BCM can only be repaired by or replaced through an authorized electronic warranty repair station. Refer to the latest version of the Warranty Policies and Procedures manual for a current listing of authorized electronic repair stations.

CONTROL MODULE COOLING FAN

A Control Module Cooling Fan is located inside of the front lower section of the Control Module Box (2). The Cooling Fan is wired to the BCM and is switched on when the ignition is On. The Cooling Fan is attached to a duct which pulls cabin temperature air from the passenger compartment and circulates it into the Control Module Box in order to decrease the heat that may be generated by the Powertrain Control Module (PCM), the BCM, and the Relay Control Module.

OPERATION

The Body Control Module is designed to control and integrate many of the electronic features and functions of the vehicle. The microprocessor-based Body Control Module hardware and software monitors many hardwired switch and sensor inputs as well as those resources it shares with other electronic modules in the vehicle through its communication over the Controller Area Network (CAN) bus. The internal programming of the Body Control Module microprocessor allows the Body Control Module to determine the tasks it needs to perform and their priorities. The Body Control Module programming then performs those tasks and provides features through both CAN bus communication with other electronic modules and hardwired outputs to a number of relays. These relays provide the Body Control Module with the ability to control numerous high current accessory systems in the vehicle.

The Body Control Module circuitry operates on battery current received through fuses in the Underhood Accessory Fuse Block on a non-switched fused B(+) circuit, a fused ignition switch output (start-on/run) circuit, and a fused ignition switch output (start-on/run-accessory) circuit. This arrangement allows the Body Control Module to provide some features regardless of the ignition switch position. The Body Control Module circuitry is grounded through the chassis behind the right side lower A-pillar kick panel.

The Body Control Module monitors its own internal circuitry as well as many of its input and output circuits and will store a Diagnostic Trouble Code (DTC) in electronic memory for any failure it detects. These DTCs can be retrieved and diagnosed using a DRBIII® scan tool. Refer to the appropriate diagnostic information.

REMOVAL

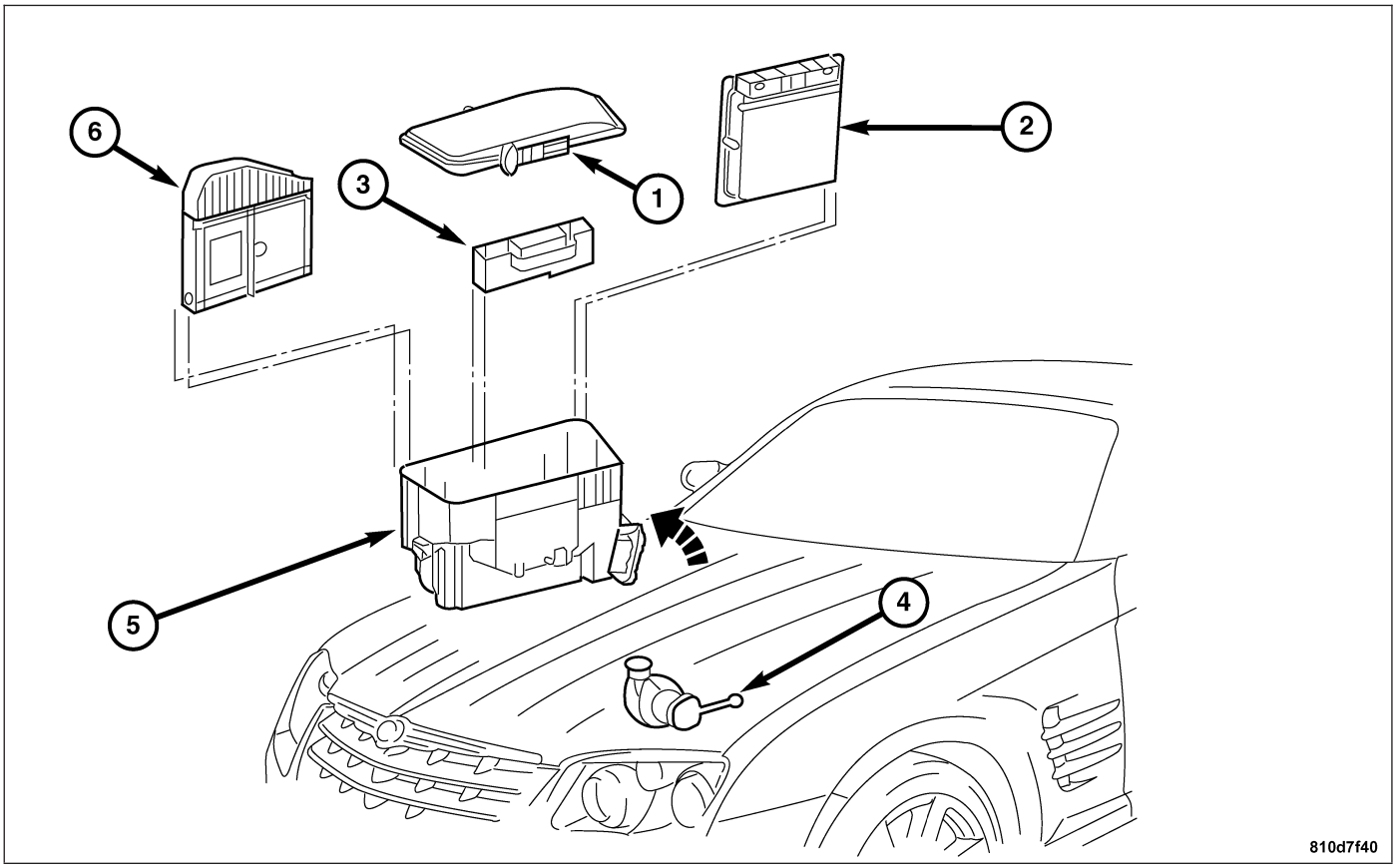

1 - CONTROL MODULE BOX COVER
2 - POWERTRAIN CONTROL MODULE
3 - RELAY CONTROL MODULE
4 - CONTROL MODULE BOX COOLING FAN
5 - CONTROL MODULE BOX
6 - BODY CONTROL MODULE

1. Disconnect the negative battery cable.
2. Slide the clips forward to remove the plastic control module box cover (1).
3. Holding the metal body control module retaining clip back, pull the body control module (6) up and out of the control module box (5).
4. Disconnect the electrical connectors by first sliding the grey windshield wiper connector lock to the right and removing the windshield wiper electrical connector. Then, pull the metal body control module connector lock up to unlock and disconnect the rest of the body control module electrical connectors.

INSTALLATION

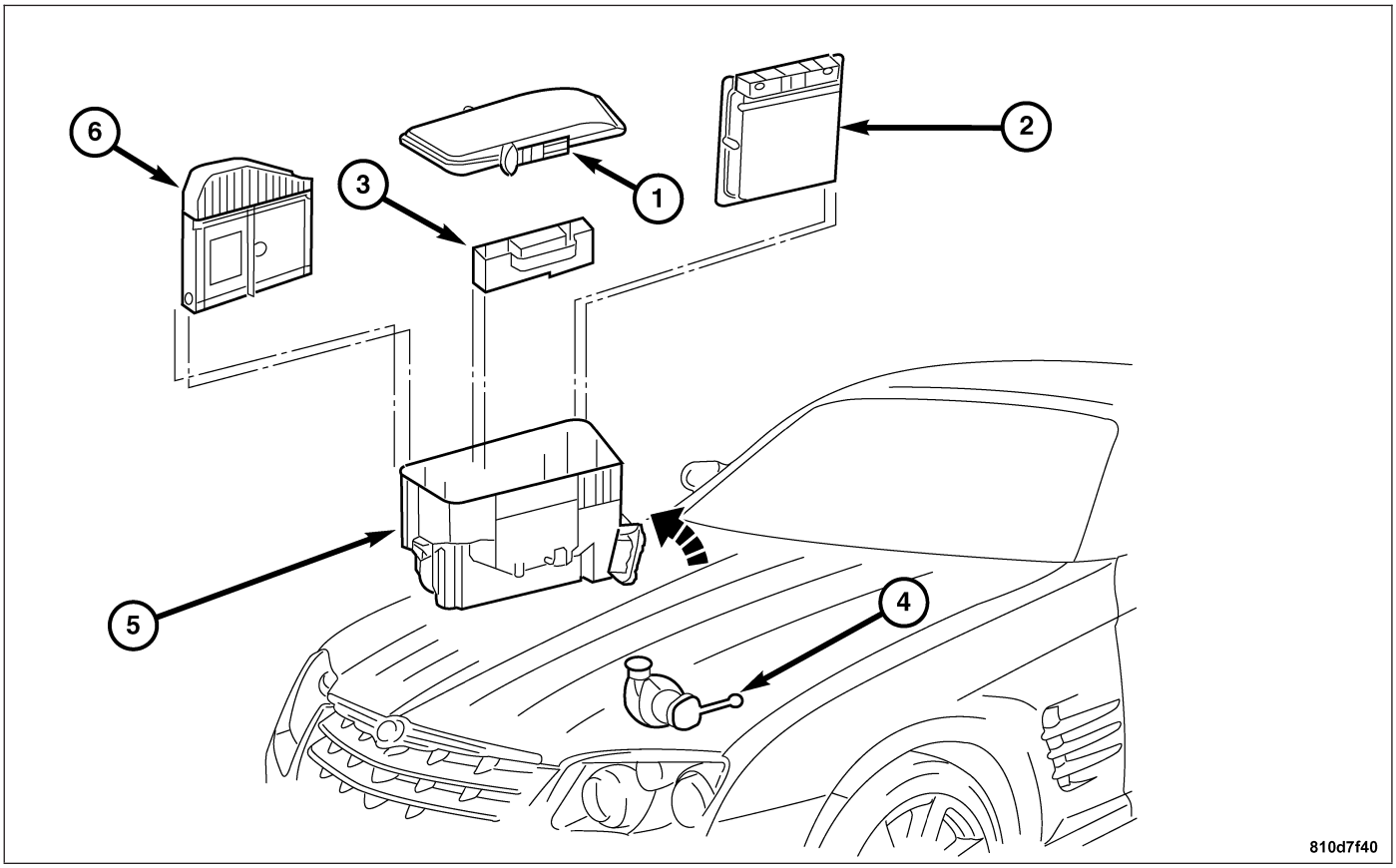

1 - CONTROL MODULE BOX COVER
2 - POWERTRAIN CONTROL MODULE
3 - RELAY CONTROL MODULE
4 - CONTROL MODULE BOX COOLING FAN
5 - CONTROL MODULE BOX
6 - BODY CONTROL MODULE

1. Connect the electrical connectors to the body control module (6) and push the metal body control module connector lock down to lock the connector assembly. Then, connect the windshield wiper electrical connector to the body control module and slide the grey windshield wiper connector lock to the left to lock it.
2. Install body control module into the control module box (5).
3. Install the plastic control module box cover (1) and slide the clips rearward to lock the cover.
4. Connect the negative battery cable.

ENGINE SYSTEMS

TABLE OF CONTENTS

page

BATTERY SYSTEM 1
CHARGING SYSTEM 24
STARTING SYSTEM 32

BATTERY SYSTEM

TABLE OF CONTENTS

page

BATTERY SYSTEM
DESCRIPTION 2
OPERATION 2
DIAGNOSIS AND TESTING - BATTERY SYSTEM 2
CLEANING 5
INSPECTION 6
SPECIFICATIONS 6
SPECIAL TOOLS 7
BATTERY
DESCRIPTION 7
OPERATION 8
DIAGNOSIS AND TESTING - BATTERY 9
STANDARD PROCEDURE
CHARGING BATTERY 10
STANDARD PROCEDURE - USING MICRO 420 BATTERY TESTER 12
STANDARD PROCEDURE - OPEN-CIRCUIT VOLTAGE TEST 13
STANDARD PROCEDURE - IGNITION-OFF DRAW TEST 14
STANDARD PROCEDURE - CHECKING BATTERY ELECTROLYTE LEVEL 16
REMOVAL - BATTERY 17
INSTALLATION - BATTERY 18
CABLES
DESCRIPTION 19
OPERATION 19
DIAGNOSIS AND TESTING - BATTERY CABLES 19
TRAY
DESCRIPTION 22
OPERATION 22
REMOVAL 23
INSTALLATION 23

BATTERY SYSTEM

DESCRIPTION

A single 12-volt battery is standard factory-installed equipment on this model. All of the components of the battery system are located within the engine compartment of the vehicle. The battery system for this vehicle covers the following related components, which are covered in further detail later in this section of the service manual:

- **Battery** - The storage battery provides a reliable means of storing a renewable source of electrical energy within the vehicle.
- **Battery Cables** - The battery cables connect the battery terminal posts to the vehicle electrical system.
- **Battery Hold-down** - The battery hold-down hardware secures the battery in the battery tray in the engine compartment.
- **Battery Tray** - The battery tray provides a secure mounting location in the vehicle for the battery and an anchor point for the battery hold-down hardware.

For battery system maintenance schedules and jump starting procedure, see the owner's manual in the vehicle glove box. Optionally, refer to the Lubrication and Maintenance section of this manual for the recommended battery maintenance schedules and for the proper battery jump starting procedure. While battery charging can be considered a maintenance procedure, the battery charging procedures and related information are located later in this section of this service manual. This was done because the battery must be fully charged before any battery system diagnosis or testing procedures can be performed.

OPERATION

The battery system is designed to provide a safe, efficient, reliable and mobile means of delivering and storing electrical energy. This electrical energy is required to operate the engine starting system, as well as to operate many of the other vehicle accessory systems for limited durations while the engine and/or the charging system are not operating. The battery system is also designed to provide a reserve of electrical energy to supplement the charging system for short durations while the engine is running and the electrical current demands of the vehicle exceed the output of the charging system. In addition to delivering and storing electrical energy for the vehicle, the battery system serves as a capacitor and voltage stabilizer for the vehicle electrical system. It absorbs most abnormal or transient voltages caused by the switching of any of the electrical components or circuits in the vehicle.

DIAGNOSIS AND TESTING - BATTERY SYSTEM

The battery, starting, and charging systems in the vehicle operate with one another and must be tested as a complete system. In order for the engine to start and the battery to maintain its charge properly, all of the components that are used in these systems must perform within specifications. It is important that the battery, starting, and charging systems be thoroughly tested and inspected any time a battery needs to be charged or replaced. The cause of abnormal battery discharge, overcharging or early battery failure must be diagnosed and corrected before a battery is replaced and before a vehicle is returned to service. The service information for these systems has been separated within this service manual to make it easier to locate the specific information you are seeking. However, when attempting to diagnose any of these systems, it is important that you keep their interdependency in mind.

The diagnostic procedures used for the battery, starting, and charging systems include the most basic conventional diagnostic methods, to the more sophisticated On-Board Diagnostics (OBD) built into the Powertrain Control Module (PCM). Use of an induction-type milliampere ammeter, a volt/ohmmeter, a battery charger, a carbon pile rheostat (load tester) and a 12-volt test lamp may be required. All OBD-sensed systems are monitored by the PCM. Each monitored circuit is assigned a Diagnostic Trouble Code (DTC). The PCM will store a DTC in electronic memory for any failure it detects. Refer to Charging System **Refer to Page 8F-24** for the proper charging system on-board diagnostic test procedures.

MICRO 420 ELECTRICAL SYSTEM TESTER

The Micro 420 automotive battery tester is designed to help dealership technicians diagnose a defective battery. Follow the instruction manual supplied with the tester to properly diagnose a vehicle. If the instruction manual is not available, refer to the standard procedure in this section, which includes the directions for using the Micro 420 electrical system tester.

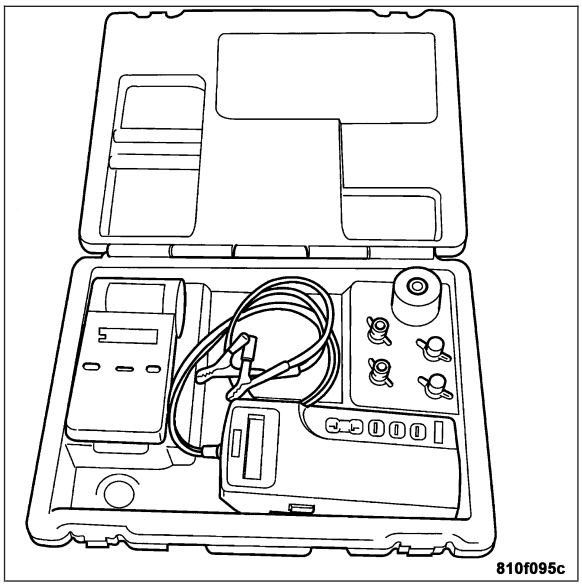

CONDITION	POSSIBLE CAUSES	CORRECTION
THE BATTERY SEEMS WEAK OR DEAD WHEN ATTEMPTING TO START THE ENGINE.	1. The electrical system ignition-off draw is excessive.	1. Refer to the IGNITION-OFF DRAW TEST Standard Procedure for the proper test procedures. Repair the excessive ignition-off draw as required.
	2. The charging system is faulty.	2. Determine if the charging system is performing to specifications. Refer to Charging System for additional charging system diagnosis and testing procedures. Repair the faulty charging system as required.
	3. The battery is discharged.	3. Determine the battery state-of-charge using the Micro 420 battery tester. Refer to the Standard Procedures in this section for additional test procedures. Charge the faulty battery as required.
	4. The battery terminal connections are loose or corroded.	4. Refer to Battery Cables for the proper battery cable diagnosis and testing procedures. Clean and tighten the battery terminal connections as required.
	5. The battery has an incorrect size or rating for this vehicle.	5. Refer to Battery System Specifications for the proper size and rating. Replace an incorrect battery as required.
	6. The battery is faulty.	6. Determine the battery cranking capacity using the Micro 420 battery tester. Refer to the Standard Procedures in this section for additional test procedures. Replace the faulty battery as required.
	7. The starting system is faulty.	7. Determine if the starting system is performing to specifications. Refer to Starting System for the proper starting system diagnosis and testing procedures. Repair the faulty starting system as required.
	8. The battery is physically damaged.	8. Inspect the battery for loose terminal posts or a cracked and leaking case. Replace the damaged battery as required.

CONDITION	POSSIBLE CAUSES	CORRECTION
THE BATTERY STATE OF CHARGE CANNOT BE MAINTAINED.	1. The battery has an incorrect size or rating for this vehicle.	1. Refer to Battery System Specifications for the proper specifications. Replace an incorrect battery as required.
	2. The battery terminal connections are loose or corroded.	2. Refer to Battery Cable for the proper cable diagnosis and testing procedures. Clean and tighten the battery terminal connections as required.
	3. The electrical system ignition-off draw is excessive.	3. Refer to the IGNITION-OFF DRAW TEST Standard Procedure for the proper test procedures. Repair the faulty electrical system as required.
	4. The battery is faulty.	4. Test the battery using the Micro 420 battery tester. Refer to Standard Procedures for additional test procedures. Replace the faulty battery as required.
	5. The starting system is faulty.	5. Determine if the starting system is performing to specifications. Refer to Starting System for the proper starting system diagnosis and testing procedures. Repair the faulty starting system as required.
	6. The charging system is faulty.	6. Determine if the charging system is performing to specifications using the Micro 420 battery. Refer to Charging System for additional charging system diagnosis and testing procedures. Repair the faulty charging system as required.
	7. Electrical loads exceed the output of the charging system.	7. Inspect the vehicle for aftermarket electrical equipment which might cause excessive electrical loads.
	8. Slow driving or prolonged idling with high-amperage draw systems in use.	8. Advise the vehicle operator as required.
THE BATTERY WILL NOT ACCEPT A CHARGE.	1. The battery is faulty.	1. Test the battery using the Micro 420 battery tester. Charge or replace the faulty battery as required.

ABNORMAL BATTERY DISCHARGING

Any of the following conditions can result in abnormal battery discharging:

1. A faulty or incorrect charging system component. Refer to Charging System for additional charging system diagnosis and testing procedures. **Refer to Page 8F-24**.
2. A faulty or incorrect battery. Use the Micro 420 battery tester and refer to Battery System for additional battery diagnosis and testing procedures.
3. A faulty circuit or component causing excessive ignition-off draw.
4. Electrical loads that exceed the output of the charging system. This can be due to equipment installed after manufacture, or repeated short trip use.
5. A faulty or incorrect starting system component. Refer to Starting System for the proper starting system diagnosis and testing procedures. **Refer to Page 8F-33**.
6. Corroded or loose battery posts and/or terminal clamps.
7. Slow driving speeds (heavy traffic conditions) or prolonged idling, with high-amperage draw systems in use.

CLEANING

The following information details the recommended cleaning procedures for the battery and related components. In addition to the maintenance schedules found in this service manual and the owner's manual, it is recommended that these procedures be performed any time the battery or related components must be removed for vehicle service.

1. Clean the battery cable terminal clamps (2) of all corrosion. Remove any corrosion using a wire terminal brush (1) or a post and terminal cleaning tool, and a sodium bicarbonate (baking soda) and warm water cleaning solution.

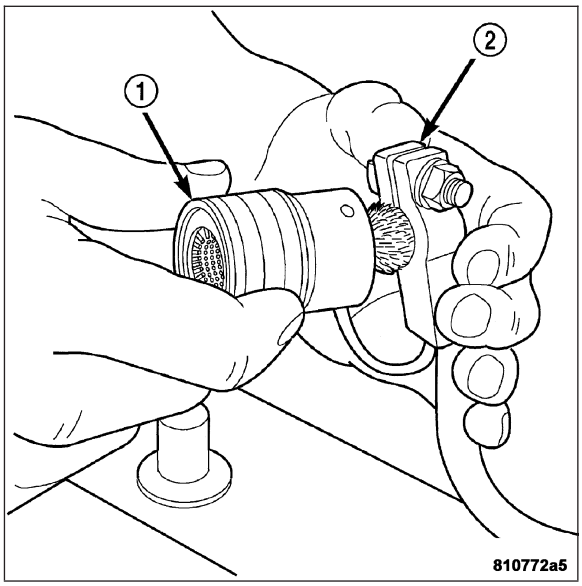

2. Clean the battery tray and battery hold-down hardware of all corrosion. Remove any corrosion using a wire brush and a sodium bicarbonate (baking soda) and warm water cleaning solution. Paint any exposed bare metal.
3. If the removed battery (3) is to be reinstalled, clean the outside of the battery case and the top cover with a sodium bicarbonate (baking soda) and warm water cleaning solution (2) using a stiff bristle parts cleaning brush (1) to remove any acid film. Rinse the battery with clean water. Ensure that the cleaning solution does not enter the battery cells through the vent holes. If the battery is being replaced, refer to Battery System Specifications for the factory-installed battery specifications. Confirm that the replacement battery is the correct size and has the correct ratings for the vehicle.

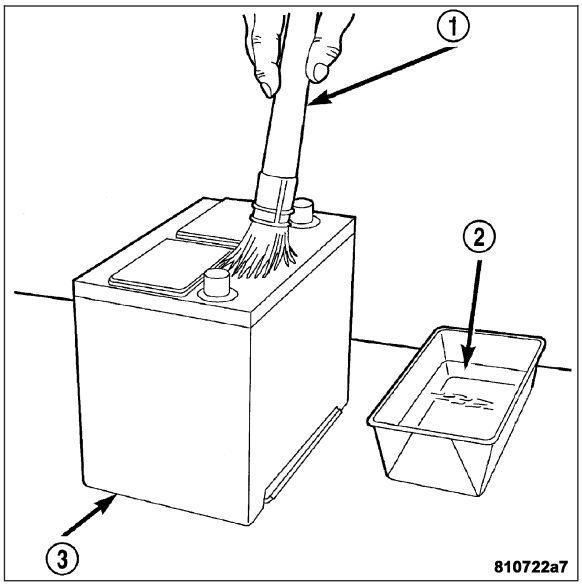

4. Clean any corrosion from the battery (3) and the battery terminal posts and battery cables (2) with a wire brush or a post and terminal cleaner (1), and a sodium bicarbonate (baking soda) and warm water cleaning solution.

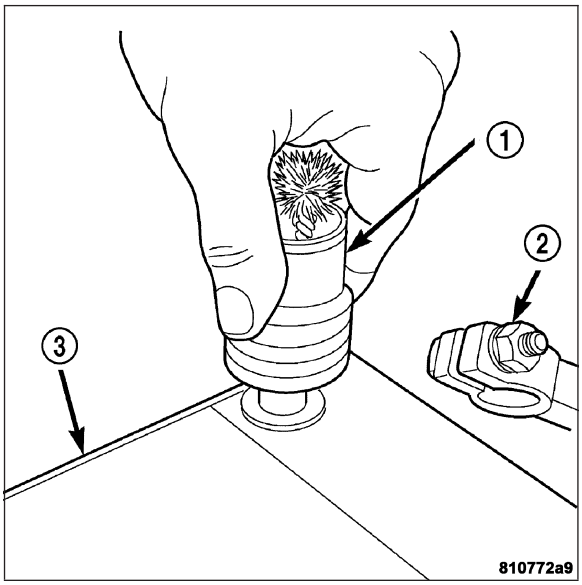

INSPECTION

The following information details the recommended inspection procedures for the battery and related components. In addition to the maintenance schedules found in this service manual and the owner's manual, it is recommended that these procedures be performed any time the battery or related components must be removed for vehicle service.

1. Inspect the battery cable terminal clamps for damage. Replace any battery cable that has a damaged or deformed terminal clamp.
2. Inspect the battery tray and battery hold-down hardware for damage. Replace any damaged parts.
3. Inspect the battery case for cracks or other damage that could result in electrolyte leaks. Also, check the battery terminal posts for looseness. Batteries with damaged cases or loose terminal posts must be replaced.

SPECIFICATIONS

The battery Group Size number, the Cold Cranking Amperage (CCA) rating, and the Reserve Capacity (RC) rating or Ampere-Hours (AH) rating can be found on the original equipment battery label. Be certain that a replacement battery has the correct Group Size number, as well as CCA, and RC or AH ratings that equal or exceed the original equipment specification for the vehicle being serviced. Battery sizes and ratings are discussed in more detail below.

- **Group Size** - The outside dimensions and terminal placement of the battery conform to standards established by the Battery Council International (BCI). Each battery is assigned a BCI Group Size number to help identify a correctly-sized replacement.
- **Cold Cranking Amperage** - The Cold Cranking Amperage (CCA) rating specifies how much current (in amperes) the battery can deliver for thirty seconds at -18° C (0° F). Terminal voltage must not fall below 7.2 volts during or after the thirty second discharge period. The CCA required is generally higher as engine displacement increases, depending also upon the starter current draw requirements.
- **Reserve Capacity** - The Reserve Capacity (RC) rating specifies the time (in minutes) it takes for battery terminal voltage to fall below 10.5 volts, at a discharge rate of 25 amperes. RC is determined with the battery fully-charged at 26.7° C (80° F). This rating estimates how long the battery might last after a charging system failure, under minimum electrical load.
- **Ampere-Hours** - The Ampere-Hours (AH) rating specifies the current (in amperes) that a battery can deliver steadily for twenty hours, with the voltage in the battery not falling below 10.5 volts. This rating is also sometimes identified as the twenty-hour discharge rating.

BATTERY CLASSIFICATIONS & RATINGS

Part Number	BCI Group Size Classification	Cold Cranking Amperage	Reserve Capacity	Ampere - Hours	Load Test Amperage
	48	700		74	265

SPECIAL TOOLS

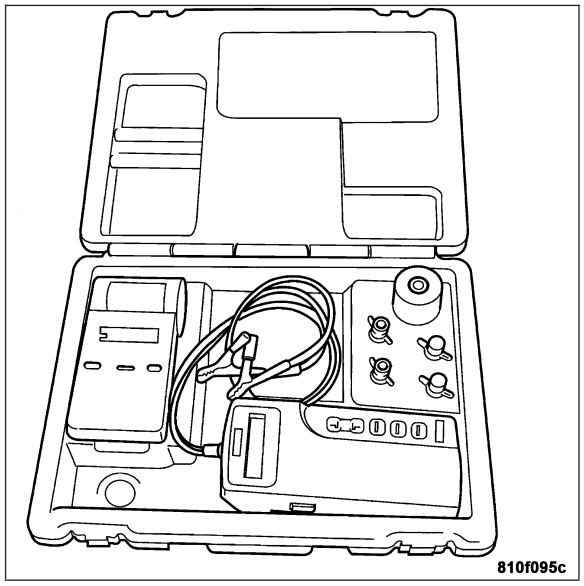

Micro 420 Battery Tester

BATTERY

DESCRIPTION

A large capacity, low-maintenance storage battery (3) is standard factory-installed equipment on this model. Male post type terminals made of a soft lead material protrude from the top of the molded plastic battery case to provide the means for connecting the battery to the vehicle electrical system. The battery positive terminal post (2) is visibly larger in diameter than the negative terminal post (4), for easy identification. The symbols **+** and **–** are also molded into the top of the battery case adjacent to their respective positive and negative terminal posts for additional identification confirmation. Refer to Battery Cables in the index of this service manual for the location of more information on the battery cables that connect the battery to the vehicle electrical system. **Refer to Page 8F-19**.

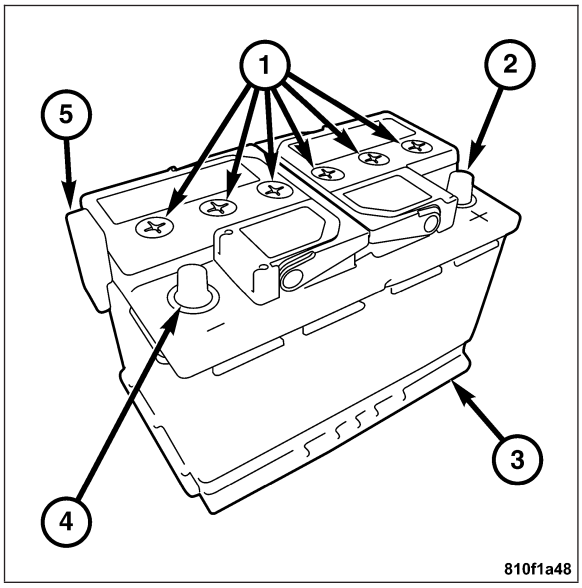

This battery is designed to provide a safe, efficient and reliable means of storing electrical energy in a chemical form. This means of energy storage allows the battery to produce the electrical energy required to operate the engine starting system, as well as to operate many of the other vehicle accessory systems for limited durations while the engine and/or the charging system are not operating. The battery is made up of six individual cells that are connected in series. Each cell contains positively charged plate groups that are connected with lead straps to the positive terminal post, and negatively charged plate groups that are connected with lead straps to the negative terminal post. Each plate consists of a stiff mesh framework or grid coated with lead dioxide (positive plate) or sponge lead (negative plate). Insulators or plate separators made of a non-conductive material are inserted between the positive and negative plates to prevent them from contacting or shorting against one another. These dissimilar metal plates are submerged in a sulfuric acid and water solution called an electrolyte.

The factory-installed low-maintenance battery has removable battery cell caps (1). Distilled water can be added to this battery. The battery is not sealed and has a vent (5). The chemical composition of the metal coated plates within the low-maintenance battery reduces battery gassing and water loss, at normal charge and discharge rates. Therefore, the battery should not require additional water in normal service. If the electrolyte level in this battery does become low, distilled water must be added. However, rapid loss of electrolyte can be caused by an overcharging condition. Be certain to diagnose the charging system after replenishing the water in the battery for a low electrolyte condition and before returning the vehicle to service. **Refer to Page 8F-24**.

For battery maintenance schedules and jump starting procedures, see the owner's manual in the vehicle glove box. Optionally, refer to Maintenance Schedules and Jump Starting, Towing and Hoisting in the index of this service manual for the location of the recommended battery maintenance schedules and the proper battery jump starting procedures. While battery charging can be considered a maintenance procedure, the battery charging procedures and information are located in the service procedures section of this service manual. This was done because the battery must be fully-charged before any battery diagnosis or testing procedures can be performed. **Refer to Page 8F-10**.

OPERATION

The battery is designed to store electrical energy in a chemical form. When an electrical load is applied to the terminals of the battery, an electrochemical reaction occurs. This reaction causes the battery to discharge electrical current from its terminals. As the battery discharges, a gradual chemical change takes place within each cell. The sulfuric acid in the electrolyte combines with the plate materials, causing both plates to slowly change to lead sulfate. At the same time, oxygen from the positive plate material combines with hydrogen from the sulfuric acid, causing the electrolyte to become mainly water. The chemical changes within the battery are caused by the movement of excess or free electrons between the positive and negative plate groups. This movement of electrons produces a flow of electrical current through the load device attached to the battery terminals.

As the plate materials become more similar chemically, and the electrolyte becomes less acid, the voltage potential of each cell is reduced. However, by charging the battery with a voltage higher than that of the battery itself, the battery discharging process is reversed. Charging the battery gradually changes the sulfated lead plates back into sponge lead and lead dioxide, and the water back into sulfuric acid. This action restores the difference in the electron charges deposited on the plates, and the voltage potential of the battery cells. For a battery to remain useful, it must be able to produce high-amperage current over an extended period. A battery must also be able to accept a charge, so that its voltage potential may be restored.

The battery is vented to release excess hydrogen gas that is created when the battery is being charged or discharged. However, even with these vents, hydrogen gas can collect in or around the battery. If hydrogen gas is exposed to flame or sparks, it may ignite. If the electrolyte level is low, the battery may arc internally and explode. If the battery is equipped with removable cell caps, add distilled water whenever the electrolyte level is below the top of the plates. If the battery cell caps cannot be removed, the battery must be replaced if the electrolyte level becomes low.

DIAGNOSIS AND TESTING - BATTERY

The battery must be completely charged and the terminals should be properly cleaned and inspected before diagnostic procedures are performed. Refer to Battery System Cleaning for the proper cleaning procedures **Refer to Page 8F-5**, and Battery System Inspection **Refer to Page 8F-6** for the proper battery inspection procedures. Refer to Standard Procedure for the proper battery charging procedures. **Refer to Page 8F-10**.

MICRO 420 BATTERY TESTER

The Micro 420 automotive battery tester is designed to help dealership technicians diagnose the cause of a defective battery. Follow the instruction manual supplied with the tester to properly diagnose a vehicle. If the instruction manual is not available refer to the standard procedure in this section, which includes the directions for using the Micro 420 battery tester.

WARNING: IF THE BATTERY SHOWS SIGNS OF FREEZING, LEAKING OR LOOSE POSTS, DO NOT TEST, ASSIST-BOOST, OR CHARGE. THE BATTERY MAY ARC INTERNALLY AND EXPLODE. PERSONAL INJURY AND/OR VEHICLE DAMAGE MAY RESULT.

WARNING: EXPLOSIVE HYDROGEN GAS FORMS IN AND AROUND THE BATTERY. DO NOT SMOKE, USE FLAME, OR CREATE SPARKS NEAR THE BATTERY. PERSONAL INJURY AND/OR VEHICLE DAMAGE MAY RESULT.

WARNING: THE BATTERY CONTAINS SULFURIC ACID, WHICH IS POISONOUS AND CAUSTIC. AVOID CONTACT WITH THE SKIN, EYES, OR CLOTHING. IN THE EVENT OF CONTACT, FLUSH WITH WATER AND CALL A PHYSICIAN IMMEDIATELY. KEEP OUT OF THE REACH OF CHILDREN.

A battery that will not accept a charge is faulty, and must be replaced. Further testing is not required. A fully-charged battery must be load tested to determine its cranking capacity. A battery that is fully-charged, but does not pass the load test, is faulty and must be replaced.

Note: Completely discharged batteries may take several hours to accept a charge. Refer to Standard Procedure for the proper battery charging procedures. Refer to Page 8F-10.

STANDARD PROCEDURE

CHARGING BATTERY

Battery charging is the means by which the battery can be restored to its full voltage potential. A battery is fully-charged when:

- Micro 420 electrical system tester indicates battery is OK.
- All of the battery cells are gassing freely during battery charging.
- Three hydrometer tests, taken at one-hour intervals, indicate no increase in the temperature-corrected specific gravity of the battery electrolyte.
- Open-circuit voltage of the battery is 12.4 volts or above.

WARNING: NEVER EXCEED TWENTY AMPERES WHEN CHARGING A COLD (-1° C [30° F] OR LOWER) BATTERY. THE BATTERY MAY ARC INTERNALLY AND EXPLODE. PERSONAL INJURY AND/OR VEHICLE DAMAGE MAY RESULT.

WARNING: IF THE BATTERY SHOWS SIGNS OF FREEZING, LEAKING, LOOSE POSTS, DO NOT TEST, ASSIST-BOOST, OR CHARGE. THE BATTERY MAY ARC INTERNALLY AND EXPLODE. PERSONAL INJURY AND/OR VEHICLE DAMAGE MAY RESULT.

WARNING: EXPLOSIVE HYDROGEN GAS FORMS IN AND AROUND THE BATTERY. DO NOT SMOKE, USE FLAME, OR CREATE SPARKS NEAR THE BATTERY. PERSONAL INJURY AND/OR VEHICLE DAMAGE MAY RESULT.

WARNING: THE BATTERY CONTAINS SULFURIC ACID, WHICH IS POISONOUS AND CAUSTIC. AVOID CONTACT WITH THE SKIN, EYES, OR CLOTHING. IN THE EVENT OF CONTACT, FLUSH WITH WATER AND CALL A PHYSICIAN IMMEDIATELY. KEEP OUT OF THE REACH OF CHILDREN.

WARNING: IF THE BATTERY IS EQUIPPED WITH REMOVABLE CELL CAPS, BE CERTAIN THAT EACH OF THE CELL CAPS IS IN PLACE AND TIGHT BEFORE THE BATTERY IS RETURNED TO SERVICE. PERSONAL INJURY AND/OR VEHICLE DAMAGE MAY RESULT FROM LOOSE OR MISSING CELL CAPS.

CAUTION: Always disconnect and isolate the battery negative cable before charging a battery. Do not exceed sixteen volts while charging a battery. Damage to the vehicle electrical system components may result.

CAUTION: Battery electrolyte will bubble inside the battery case during normal battery charging. Electrolyte boiling or being discharged from the battery vents indicates a battery overcharging condition. Immediately reduce the charging rate or turn off the charger to evaluate the battery condition. Damage to the battery may result from overcharging.

CAUTION: The battery should not be hot to the touch. If the battery feels hot to the touch, turn off the charger and let the battery cool before continuing the charging operation. Damage to the battery may result.

After the battery has been charged to 12.4 volts or greater, perform a load test to determine the battery cranking capacity. Refer to Standard Procedure for the proper battery load test procedures **Refer to Page 8F-10**. If the battery will endure a load test, return the battery to service. If the battery will not endure a load test, it is faulty and must be replaced.

Clean and inspect the battery hold downs, tray, terminals, posts, and top before completing battery service. Refer to Battery System Cleaning for the proper battery system cleaning procedures **Refer to Page 8F-5**, and Battery System Inspection for the proper battery system inspection procedures **Refer to Page 8F-6**.

CHARGING A COMPLETELY DISCHARGED BATTERY

The following procedure should be used to recharge a completely discharged battery. Unless this procedure is properly followed, a good battery may be needlessly replaced.

1. Measure the voltage at the battery posts with a voltmeter, accurate to 1/10 (0.10) volt. If the reading is below ten volts, the battery charging current will be low. It could take some time before the battery accepts a current greater than a few milliamperes. Such low current may not be detectable on the ammeters built into many battery chargers.
2. Disconnect and isolate the battery negative cable. Connect the battery charger leads. Some battery chargers are equipped with polarity-sensing circuitry. This circuitry protects the battery charger and the battery from being damaged if they are improperly connected. If the battery state-of-charge is too low for the polarity-sensing circuitry to detect, the battery charger will not operate. This makes it appear that the battery will not accept charging current. See the instructions provided by the manufacturer of the battery charger for details on how to bypass the polarity-sensing circuitry.

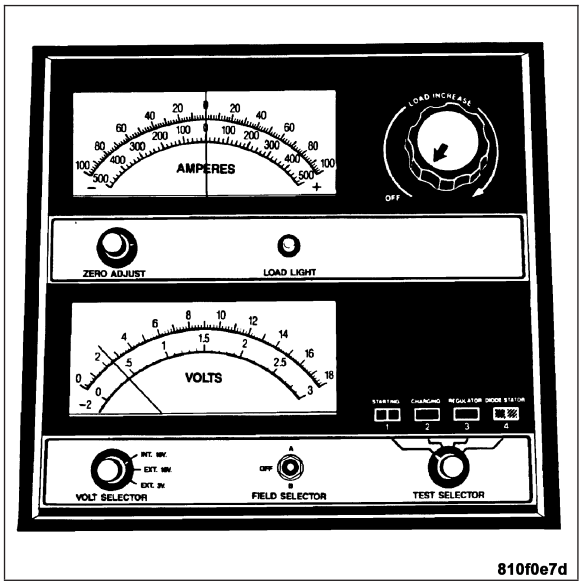

3. Battery chargers vary in the amount of voltage and current they provide. The amount of time required for a battery to accept measurable charging current at various voltages is shown in the Charge Rate Table. If the charging current is still not measurable at the end of the charging time, the battery is faulty and must be replaced. If the charging current is measurable during the charging time, the battery may be good and the charging should be completed in the normal manner.

CHARGE RATE

Voltage	Hours
16.0 volts maximum	up to 4 hours
14.0 to 15.9 volts	up to 8 hours
13.9 volts or less	up to 16 hours

CHARGING TIME REQUIRED

The time required to charge a battery will vary, depending upon the following factors:

- **Battery Capacity** - A completely discharged heavy-duty battery requires twice the charging time of a small capacity battery.
- **Temperature** - A longer time will be needed to charge a battery at -18° C (0° F) than at 27° C (80° F). When a fast battery charger is connected to a cold battery, the current accepted by the battery will be very low at first. As the battery warms, it will accept a higher charging current rate (amperage).
- **Charger Capacity** - A battery charger that supplies only five amperes will require a longer charging time. A battery charger that supplies twenty amperes or more will require a shorter charging time.

- **State-Of-Charge** - A completely discharged battery requires more charging time than a partially discharged battery. Electrolyte is nearly pure water in a completely discharged battery. At first, the charging current (amperage) will be low. As the battery charges, the specific gravity of the electrolyte will gradually rise.

The Battery Charging Time Table gives an indication of the time required to charge a typical battery at room temperature based upon the battery state-of-charge and the charger capacity.

BATTERY CHARGING TIME

Charging Amperage	5 Amps	10 Amps	20 Amps
Open Circuit Voltage	**Hours Charging @ 21° C (70° F)**		
12.25 to 12.49	6 hours	3 hours	1.5 hours
12.00 to 12.24	10 hours	5 hours	2.5 hours
10.00 to 11.99	14 hours	7 hours	3.5 hours
Below 10.00	18 hours	9 hours	4.5 hours

STANDARD PROCEDURE - USING MICRO 420 BATTERY TESTER

Always use the Micro 420 Instruction Manual that was supplied with the tester as a reference. If the Instruction Manual is not available the following procedure can be used:

WARNING: ALWAYS WEAR APPROPRIATE EYE PROTECTION AND USE EXTREME CAUTION WHEN WORKING WITH BATTERIES.

BATTERY TESTING

1. If testing the battery OUT-OF-VEHICLE, clean the battery terminals with a wire brush before testing. If the battery is equipped with side post terminals, install and tighten the supplied lead terminal stud adapters. Do not use steel bolts. Failure to properly install the stud adapters, or using stud adapters that are dirty or worn-out may result in false test readings.
2. If testing the battery IN-THE-VEHICLE, make certain all of the vehicle accessory loads are OFF, including the ignition. **The preferred test position is at the battery terminal**. If the battery is not accessible, you may test using both the positive and negative jumper posts. Select TESTING AT JUMPER POST when connecting to that location.

3. Connect the tester to the battery or jumper posts, the red clamp to positive (+) and the black clamp to negative (–).

Note: Multiple batteries connected in parallel must have the ground cable disconnected to perform a battery test. Failure to disconnect may result in false battery test readings.

4. Using the ARROW key select **in** or **out** of vehicle testing and press ENTER to make a selection.
5. If not selected, choose the Cold Cranking Amp (CCA) battery rating. Or select the appropriate battery rating for your area (see menu). The tester will then run its self programmed test of the battery and display the results. Refer to the test result table noted below.

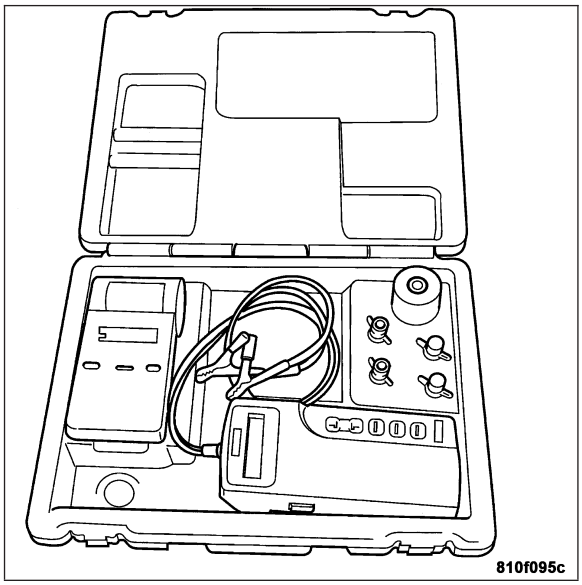

CAUTION: If REPLACE BATTERY is the result of the test, this may mean a poor connection between the vehicle's cables and battery exists. After disconnecting the vehicle's battery cables from the battery, retest the battery using the OUT-OF-VEHICLE test before replacing.

6. While viewing the battery test result, press the CODE button and the tester will prompt you for the last 4 digits of the VIN. Use the UP/DOWN arrow buttons to scroll to the correct character; then press ENTER to select and move to the next digit. Then press the ENTER button to view the SERVICE CODE. Pressing the CODE button a second time will return you to the test results.

BATTERY TEST RESULTS

GOOD BATTERY	Return to service
GOOD - RECHARGE	Fully charge battery and return to service
CHARGE & RETEST	Fully charge battery and retest battery
REPLACE BATTERY	Replace the battery and retest complete system
BAD-CELL REPLACE	Replace the battery and retest complete system

Note: The SERVICE CODE is required on every warranty claim submitted for battery replacement.

STANDARD PROCEDURE - OPEN-CIRCUIT VOLTAGE TEST

A battery open-circuit voltage (no load) test will show the approximate state-of-charge of a battery. This test can be used in place of the hydrometer test when a hydrometer is not available, or for maintenance-free batteries with non-removable cell caps.

Before proceeding with this test, completely charge the battery. **Refer to Page 8F-10**.

1. Before measuring the open-circuit voltage, the surface charge must be removed from the battery. Turn on the headlamps for fifteen seconds, then allow up to five minutes for the battery voltage to stabilize.
2. Disconnect and isolate both battery cables, negative cable first.
3. Using a voltmeter connected to the battery posts (see the instructions provided by the manufacturer of the voltmeter), measure the open-circuit voltage.

See the Open-Circuit Voltage Table. This voltage reading will indicate the battery state-of-charge, but will not reveal its cranking capacity. If a battery has an open-circuit voltage reading of 12.4 volts or greater, it may be load tested to reveal its cranking capacity. **Refer to Page 8F-10**.

OPEN CIRCUIT VOLTAGE TABLE

Open Circuit Voltage	Charge Percentage
11.7 volts or less	0%
12.0 volts	25%
12.2 volts	50%
12.4 volts	75%
12.6 volts or more	100%

STANDARD PROCEDURE - IGNITION-OFF DRAW TEST

The term Ignition-Off Draw (IOD) identifies a normal condition where power is being drained from the battery with the ignition switch in the Off position. A normal vehicle electrical system will draw from five to thirty-five milliamperes (0.005 to 0.035 ampere) with the ignition switch in the Off position, and all non-ignition controlled circuits in proper working order. Up to thirty-five milliamperes are needed to enable the memory functions for the Powertrain Control Module (PCM), and other modules which may vary with the vehicle equipment.

A vehicle that has not been operated for approximately twenty days, may discharge the battery to an inadequate level. When a vehicle will not be used for twenty days or more (stored), remove the negative battery cable from the battery. This will reduce battery discharging.

Excessive IOD can be caused by:

- Electrical items left on.
- Faulty or improperly adjusted switches.
- Faulty or shorted electronic modules and components.
- An internally shorted generator.
- Intermittent shorts in the wiring.

If the IOD is over thirty-five milliamperes, the problem must be found and corrected before replacing a battery. In most cases, the battery can be charged and returned to service after the excessive IOD condition has been corrected.

1. Verify that all electrical accessories are off. Turn off all lamps, remove the ignition key, and close all doors. If the vehicle is equipped with an illuminated entry system or an electronically tuned radio, allow the electronic timer function of these systems to automatically shut off (time out). This may take up to three minutes. See the Electronic Module Ignition-Off Draw Table for more information.

ELECTRONIC MODULE IGNITION-OFF DRAW (IOD)

Module	Time Out? (If Yes, Interval And Wake-Up Input)	IOD	IOD After Time Out
Controller Antilock Brake (CAB)	No		N/A
Body Control Module (BCM)	No		N/A
Powertrain Control Module (PCM)	No		N/A
Transmission Control Module (TCM)	No		N/A
Instrument Cluster	No		N/A
Shift Lever Assembly	No		N/A
Garage Door Opener / Tire Pressure Monitor	No		N/A
A/C Heater Control Module	No		N/A
Occupant Restraint Control Module	No		N/A
Pneumatic System Equipment (PSE) Control Module	No		N/A
RKE Module	No		N/A

2. Disconnect the negative battery cable.
3. Set an electronic digital multi-meter to its highest amperage scale. Connect the multi-meter between the disconnected battery negative cable terminal clamp and the battery negative terminal post. Make sure that the doors remain closed so that the illuminated entry system is not activated. The multi-meter amperage reading may remain high for up to three minutes, or may not give any reading at all while set in the highest amperage scale, depending upon the electrical equipment in the vehicle. The multi-meter leads must be securely clamped to the battery negative cable terminal clamp and the battery negative terminal post. If continuity between the battery negative terminal post and the negative cable terminal clamp is lost during any part of the IOD test, the electronic timer function will be activated and all of the tests will have to be repeated.
4. After about three minutes, the high-amperage IOD reading on the multi-meter should become very low or nonexistent, depending upon the electrical equipment in the vehicle. If the amperage reading remains high, remove each fuse in the Underhood Accessory Fuse Block, one at a time until the amperage reading becomes very low, or nonexistent. If the amperage reading is still high, remove each fuse one at a time in the Illumination Control Module until the amperage reading becomes very low or nonexistent. If the amperage reading is still high, remove each fuse one at a time in the Relay Control Module until the amperage reading becomes very low or nonexistent. Refer to the appropriate wiring information in this service manual for complete Underhood Accessory Fuse, Illumination Control Module Fuse, Relay Control Module Fuse and circuit identification. This will isolate each circuit and identify the circuit that is the source of the high-amperage IOD. If the amperage reading remains high after removing and replacing each fuse, disconnect the wire harness from the generator. If the amperage reading now becomes very low or nonexistent, refer to Charging System for the proper charging system diagnosis and testing procedures **Refer to Page 8F-24**. After the high-amperage IOD has been corrected, switch the multi-meter to progressively lower amperage scales and, if necessary, repeat the fuse and circuit breaker remove-and-replace process to identify and correct all sources of excessive IOD. It is now safe to select the lowest milliampere scale of the multi-meter to check the low-amperage IOD.

CAUTION: Do not open any doors, or turn on any electrical accessories with the lowest milliampere scale selected, or the multi-meter may be damaged.

5. Observe the multi-meter reading. The low-amperage IOD should not exceed thirty-five milliamperes (0.035 amperes). If the current draw exceeds thirty-five milliamperes, isolate each circuit using the fuse remove-and-replace process in Step 4. The multi-meter reading will drop to within the acceptable limit when the source of the excessive current draw is disconnected. Repair this circuit as required; whether a wiring short, incorrect switch adjustment, or a component failure is at fault.

STANDARD PROCEDURE - CHECKING BATTERY ELECTROLYTE LEVEL

The following procedure can be used to check the battery electrolyte level.

1. Remove the battery (2) cell cap (1).

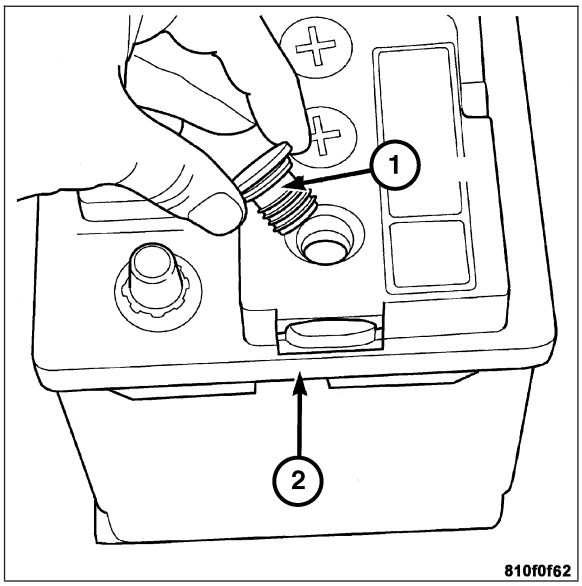

2. Look through the battery cap holes (1) to determine the level of the electrolyte in the battery. The electrolyte should be approximately 1 centimeter above the battery plates or until the lip (2) inside the battery cap holes is covered.
3. Add only distilled water until the electrolyte level is approximately one centimeter above the plates.

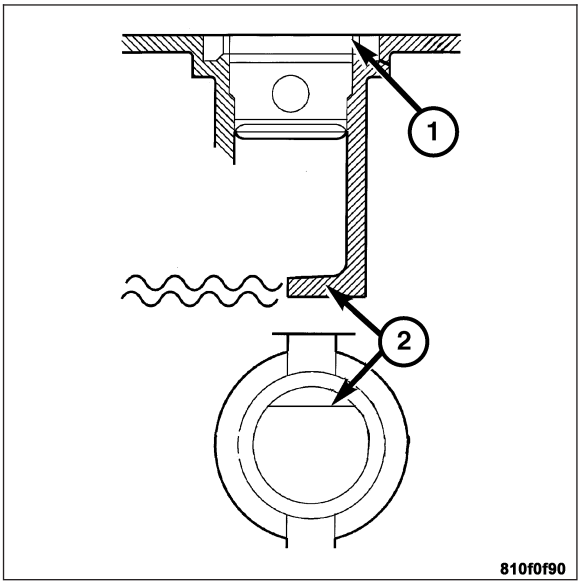

REMOVAL - BATTERY

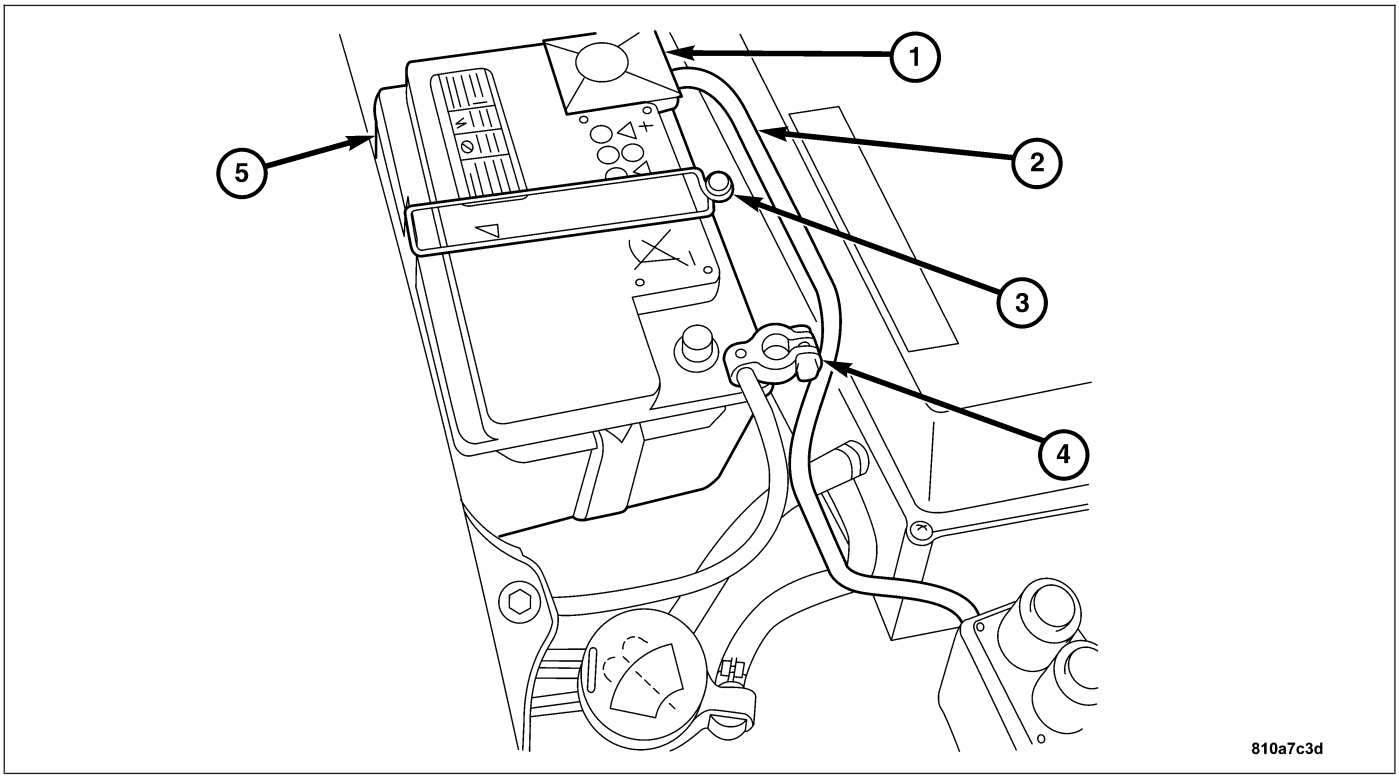

1 - PLASTIC CAP
2 - POSITIVE BATTERY CABLE
3 - BATTERY HOLD DOWN NUT
4 - NEGATIVE BATTERY CABLE
5 - BATTERY

WARNING: WEAR A SUITABLE PAIR OF RUBBER GLOVES (NOT THE HOUSEHOLD TYPE) WHEN REMOVING A BATTERY BY HAND. SAFETY GLASSES SHOULD ALSO BE WORN. IF THE BATTERY IS CRACKED OR LEAKING, THE ELECTROLYTE CAN BURN THE SKIN AND EYES.

1. Disconnect the negative battery cable (4). If necessary, use a battery terminal puller to remove the terminal clamp from the battery post.
2. Remove the protective plastic cap (1).
3. Disconnect the positive battery cable (2). If necessary, use a battery terminal puller to remove the terminal clamp from the battery post.
4. Remove the battery hold down nut (3) and strap from the battery.
5. Remove the battery (5) from the battery tray.

INSTALLATION - BATTERY

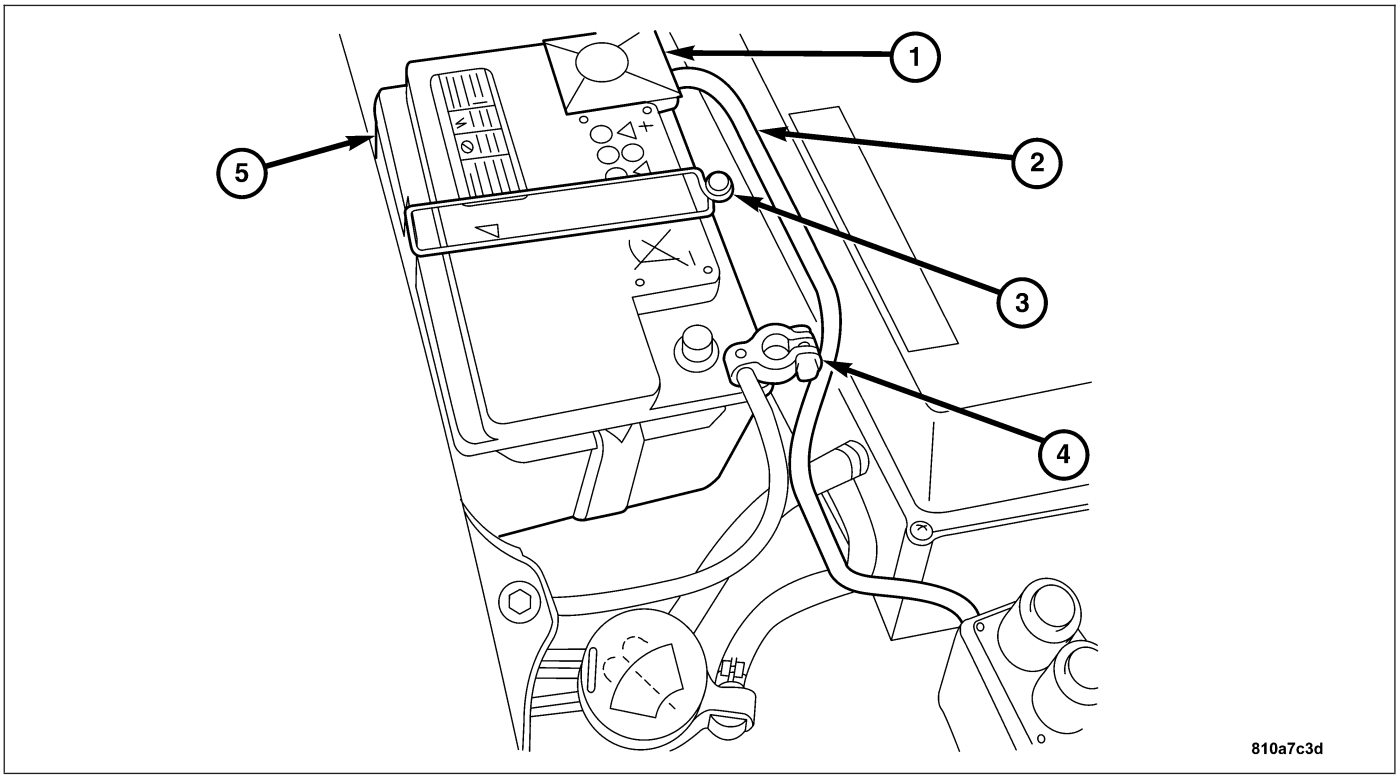

1 - PLASTIC CAP
2 - POSITIVE BATTERY CABLE
3 - BATTERY HOLD DOWN NUT
4 - NEGATIVE BATTERY CABLE
5 - BATTERY

1. Clean and inspect the battery. Refer to the procedures in this section.

CAUTION: The battery cable terminal clamps must reach the correct battery terminal post without stretching the cables.

2. Position the battery (5) onto the battery tray. Ensure that the battery positive and negative terminal posts are correctly positioned.
3. Install the battery hold down onto the battery with the hold down nut (3). Tighten the battery hold down nut to 8 N·m (71 in. lbs.).

CAUTION: Be certain that the battery cable terminal clamps are connected to the correct battery terminal posts. Reverse battery polarity may damage electrical components of the vehicle.

4. Clean the battery cable terminal clamps and the battery terminal posts.
5. Connect the positive battery cable (2). Tighten the terminal clamp pinch-bolt hex nut to 7 N·m (60 in. lbs.).
6. Install the positive battery terminal plastic cap (1).
7. Connect the negative battery cable (4). Tighten the terminal clamp pinch-bolt hex nut to 7 N·m (60 in. lbs.).

CABLES

DESCRIPTION

The battery cables are large gauge, stranded copper wires sheathed within a heavy plastic or synthetic rubber insulating jacket. The wire used in the battery cables combines excellent flexibility and reliability with high electrical current carrying capacity. Refer to **Wiring Diagrams** for battery cable wire gauge information.

A clamping type female battery terminal made of soft lead is die cast onto one end of the battery cable wire. A square headed pinch-bolt and hex nut are installed at the open end of the female battery terminal clamp. Large eyelet type terminals are crimped onto the opposite end of the battery cable wire and then solder-dipped. The battery positive cable has a larger female battery terminal clamp to allow connection to the larger battery positive terminal post. The battery negative cable has a smaller female battery terminal clamp.

The battery cables cannot be repaired and, if damaged or faulty they must be replaced. Both the battery positive and negative cables are available for service replacement only as a unit with the battery wire harness, which may include portions of the wiring circuits for the generator and other components. Refer to **Wiring Diagrams** for more information on the various wiring circuits included in the battery wire harness for the vehicle being serviced.

OPERATION

The battery cables connect the battery terminal posts to the vehicle electrical system. These cables also provide a path back to the battery for electrical current generated by the charging system for restoring the voltage potential of the battery. The female battery terminal clamps on the ends of the battery cable wires provide a strong and reliable connection of the battery cable to the battery terminal posts. The terminal pinch bolts allow the female terminal clamps to be tightened around the male terminal posts on the top of the battery. The eyelet terminals secured to the opposite ends of the battery cable wires from the female battery terminal clamps provide secure and reliable connection of the battery cables to the vehicle electrical system.

The battery positive cable terminal clamp is die cast onto the ends of two wires. One wire has an eyelet terminal that connects the battery positive cable to the B(+) terminal stud of the Engine Fuse Block, and the other wire has an eyelet terminal that connects the battery positive cable to the B(+) terminal stud of the engine starter motor solenoid. The battery negative cable terminal clamp is die cast onto the end of one wire. The wire has an eyelet terminal that connects the battery negative cable to the vehicle body through a ground bolt on the right front fender inner shield, near the battery.

DIAGNOSIS AND TESTING - BATTERY CABLES

A voltage drop test will determine if there is excessive resistance in the battery cable terminal connections or the battery cable. If excessive resistance is found in the battery cable connections, the connection point should be disassembled, cleaned of all corrosion or foreign material, then reassembled. Following reassembly, check the voltage drop for the battery cable connection and the battery cable again to confirm repair.

When performing the voltage drop test, it is important to remember that the voltage drop is giving an indication of the resistance between the two points at which the voltmeter probes are attached. **EXAMPLE:** When testing the resistance of the battery positive cable, touch the voltmeter leads to the battery positive cable terminal clamp and to the battery positive cable eyelet terminal at the starter solenoid B(+) terminal stud. If you probe the battery positive terminal post and the battery positive cable eyelet terminal at the starter solenoid B(+) terminal stud, you are reading the combined voltage drop in the battery positive cable terminal clamp-to-terminal post connection and the battery positive cable.

VOLTAGE DROP TEST

The following operation will require a voltmeter accurate to 1/10 (0.10) volt. Before performing this test, be certain that the following procedures are accomplished:

- The battery is fully-charged and load tested. Refer to Standard Procedures for the proper battery charging **Refer to Page 8F-10** and load test procedures **Refer to Page 8F-10**.
- Fully engage the parking brake.
- If the vehicle is equipped with an automatic transmission, place the gearshift selector lever in the Park position. If the vehicle is equipped with a manual transmission, place the gearshift selector lever in the Neutral position and block the clutch pedal in the fully depressed position.
- Verify that all lamps and accessories are turned off.
- To prevent the engine from starting, remove the ignition coil fuse. The ignition coil fuse is located in the Underhood Accessory Fuse Block, in the engine compartment. See the fuse layout label affixed to the underside of the fuse block cover for ignition coil fuse identification and location.

1. Connect the positive lead of the voltmeter (1) to the battery (2) negative terminal post. Connect the negative lead of the voltmeter (1) to the battery (2) negative cable terminal clamp. Rotate and hold the ignition switch in the Start position. Observe the voltmeter. If voltage is detected, correct the poor connection between the battery negative cable terminal clamp and the battery negative terminal post.

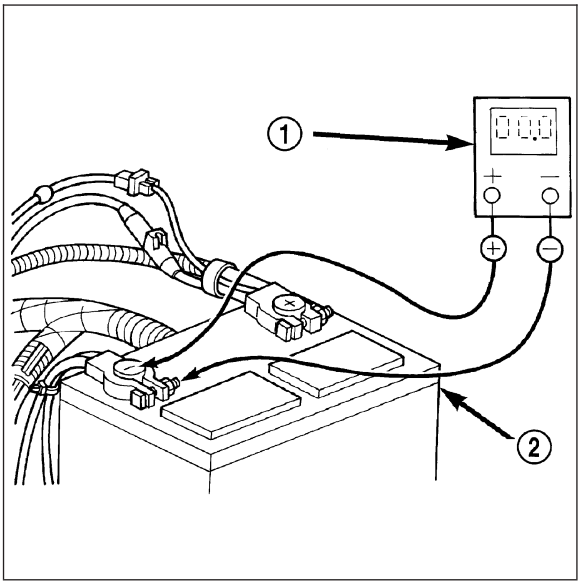

2. Connect the positive lead of the voltmeter (1) to the battery (2) positive terminal post. Connect the negative lead of the voltmeter (1) to the battery (2) positive cable terminal clamp. Rotate and hold the ignition switch in the Start position. Observe the voltmeter. If voltage is detected, correct the poor connection between the battery positive cable terminal clamp and the battery positive terminal post.

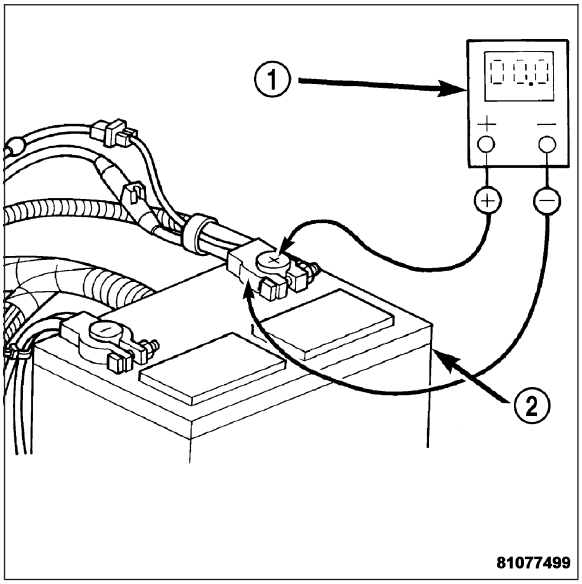

3. Connect the voltmeter (2) to measure between the battery (1) positive cable terminal clamp and the starter solenoid (3) B(+) terminal stud. Rotate and hold the ignition switch in the Start position. Observe the voltmeter (2). If the reading is above 0.2 volt, clean and tighten the battery (1) positive cable eyelet terminal connection at the starter solenoid B(+) terminal stud. Repeat the test. If the reading is still above 0.2 volt, replace the faulty battery positive cable.

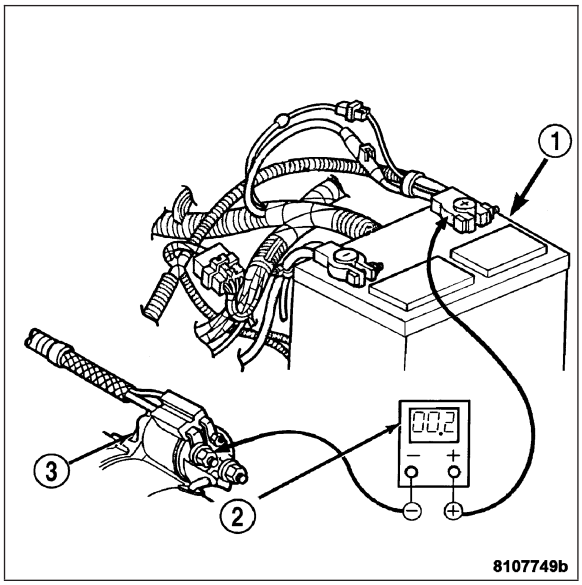

4. Connect the voltmeter (1) to measure between the battery (2) negative cable terminal clamp and a good clean ground on the engine block (3). Rotate and hold the ignition switch in the Start position. Observe the voltmeter (1). If the reading is above 0.2 volt, clean and tighten the battery (2) negative cable eyelet terminal connection to the engine block. Repeat the test. If the reading is still above 0.2 volt, replace the faulty battery negative cable.

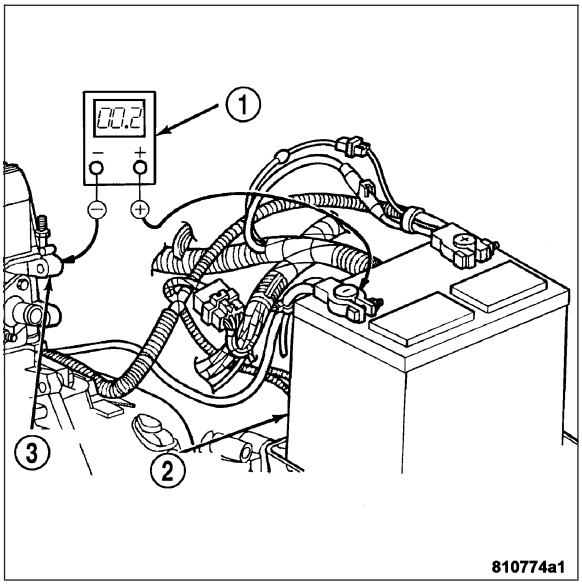

TRAY

DESCRIPTION

The battery is mounted in a battery tray (1) located in the right rear corner of the engine compartment. The battery tray and support unit is secured at the front with a bolt (2) on the front wheelhouse inner panel, and at the rear with a bolt (2) on a bracket from the bulkhead.

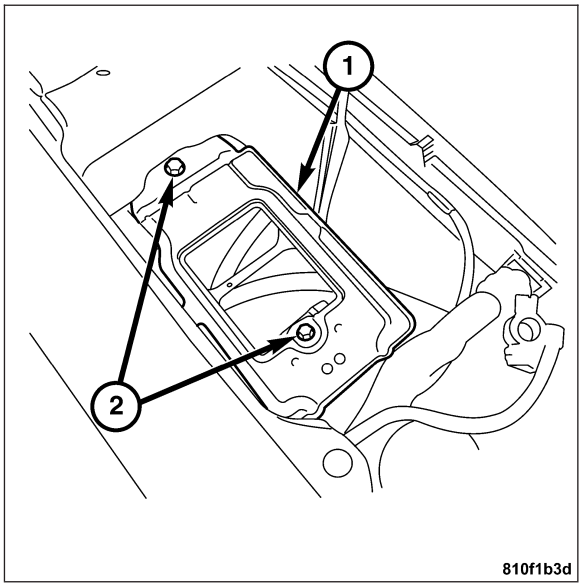

OPERATION

The battery tray provides a secure mounting location and supports the battery. The battery tray also provides the anchor points for the battery hold-down hardware. The battery tray and the battery hold-down hardware combine to secure and stabilize the battery in the engine compartment, which prevents battery movement during vehicle operation. Unrestrained battery movement during vehicle operation could result in damage to the vehicle, the battery, or both.

REMOVAL

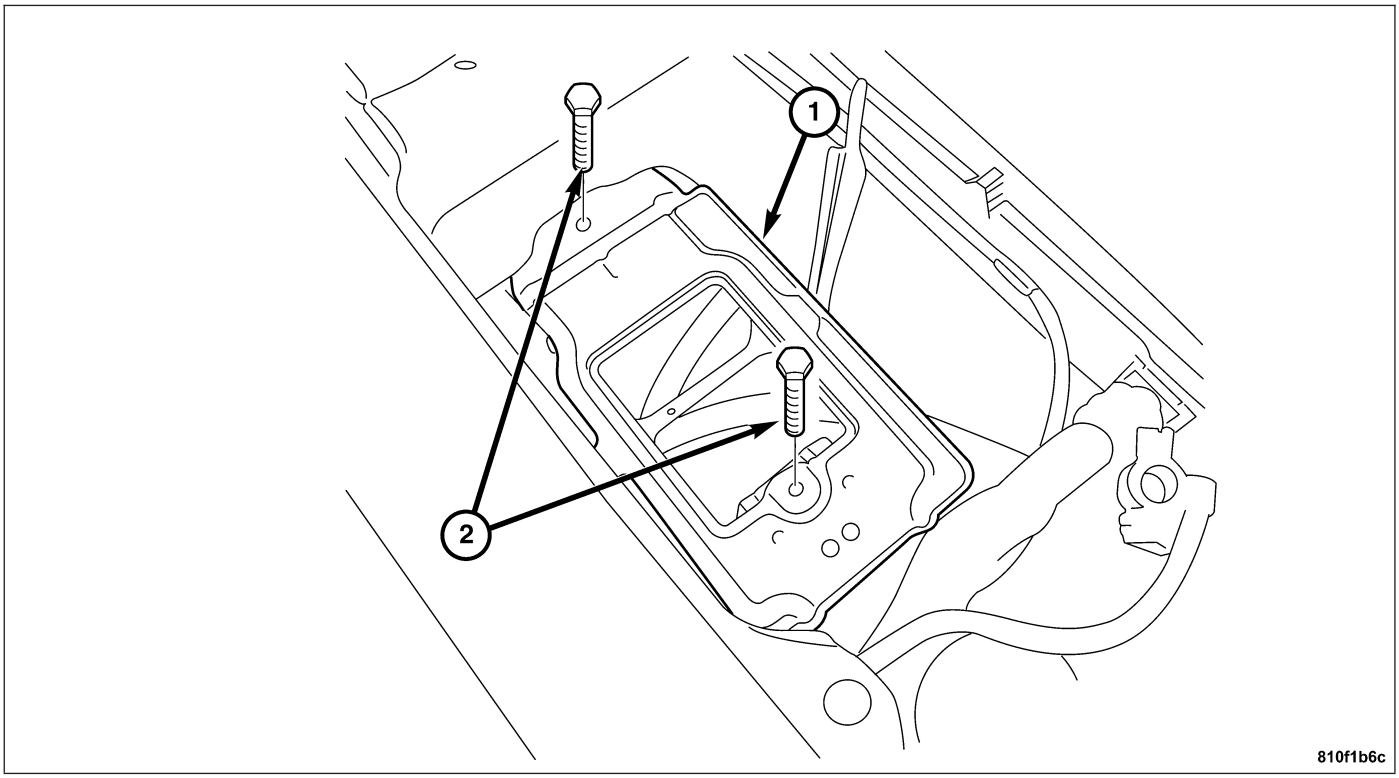

1 - BATTERY TRAY
2 - BOLTS

1. Remove the battery. **Refer to Page 8F-17**.
2. Remove the battery tray (1) retaining bolts (2).
3. Remove the battery tray (1).

INSTALLATION

1. Install the battery tray (1).
2. Install the battery tray (1) retaining bolts (2). Tighten the bolts to 15 N·m (11 ft. lbs.).
3. Install the battery. **Refer to Page 8F-18**.

CHARGING SYSTEM

TABLE OF CONTENTS

page

CHARGING SYSTEM
DESCRIPTION 24
OPERATION 24
DIAGNOSIS AND TESTING - CHARGING SYSTEM 24
SCHEMATICS AND DIAGRAMS 26
SPECIFICATIONS
SPECIFICATIONS - GENERATOR 27
SPECIFICATIONS - TORQUE 27
GENERATOR
DESCRIPTION 27
OPERATION 27
REMOVAL 28
INSTALLATION 29
VOLTAGE REGULATOR
DESCRIPTION 30
OPERATION
OPERATION 30
REMOVAL 31
INSTALLATION 31

CHARGING SYSTEM

DESCRIPTION

The charging system consists of:

- Generator
- Electronic Voltage Regulator
- Ignition Switch
- Battery
- Generator Lamp
- Check Gauges Lamp
- Wiring harness and connections

OPERATION

The charging system is turned on and off with the ignition switch. The system is on when the engine is running. The Check Gauges Lamp monitors: charging system voltage, engine coolant temperature and engine oil pressure. If an extreme condition is indicated, the lamp will be illuminated. This is done as reminder to check the three gauges. The lamp is located on the instrument panel. Refer to Instrument Cluster for additional information. **Refer to Page 8J-56**.

DIAGNOSIS AND TESTING - CHARGING SYSTEM

The following procedures may be used to diagnose the charging system if:

- the check gauges lamp is illuminated with the engine running.
- an undercharged or overcharged battery condition occurs.

Remember that an undercharged battery is often caused by:

- accessories being left on with the engine not running.
- a faulty or improperly adjusted switch that allows a lamp to stay on.

INSPECTION

The Powertrain Control Module (PCM) monitors critical input and output circuits of the charging system, making sure they are operational. A Diagnostic Trouble Code (DTC) is assigned to each input and output circuit monitored by the On-Board Diagnostic (OBD) system. Some charging system circuits are checked continuously, and some are checked only under certain conditions.

To perform a complete test of the charging system, perform the following inspections.

1. Inspect the battery condition.
2. Inspect condition of battery cable terminals, battery posts, connections at engine block, and starter solenoid. They should be clean and tight. Repair as required.
3. Inspect all fuses in the Underhood Accessory Fuse Block for tightness in receptacles. They should be properly installed and tight. Repair or replace as required.
4. Inspect generator mounting bolts for tightness. Replace or tighten bolts if required.
5. Inspect accessory drive belt condition and tension. Tighten or replace belt as required.
6. Inspect the automatic belt tensioner.
7. Inspect generator electrical connections at generator field, battery output, and ground terminal. Also check generator ground wire connection at engine. They should all be clean and tight. Repair as required or replace generator if necessary.

SCHEMATICS AND DIAGRAMS

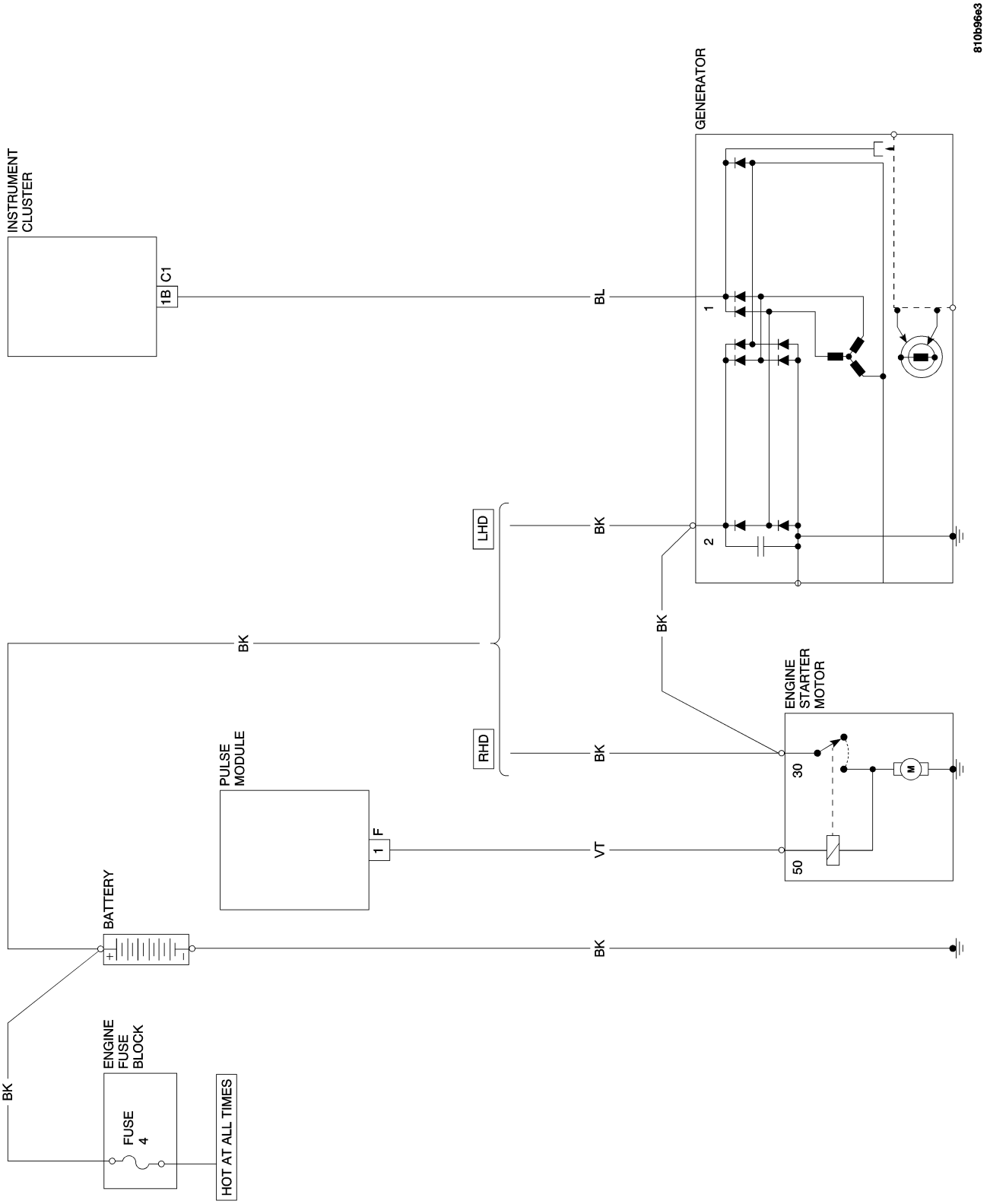

CHARGING SYSTEM CIRCUIT DIAGRAM

SPECIFICATIONS

SPECIFICATIONS - GENERATOR

TYPE	PART NUMBER	RATED SAE AMPS	ENGINE	MINIMUM TEST AMPS
BOSCH	05097756AA	120	3.2L V-6	120@2200RPM

SPECIFICATIONS - TORQUE

DESCRIPTION	N-m	Ft. Lbs.	In. Lbs.
Generator Mounting Bolts	42	31	—
Generator B+ Terminal Nut	15	11	—

GENERATOR

DESCRIPTION

The generator (1) is belt-driven by the engine using a serpentine type accessory drive belt (2). It is serviced only as a complete assembly. If the generator fails for any reason, the entire assembly must be replaced. The only component that is replaceable is the voltage regulator.

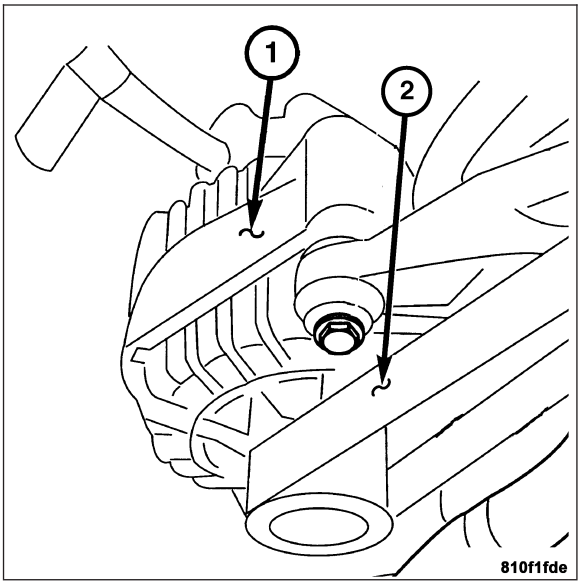

OPERATION

As the energized rotor begins to rotate within the generator, the spinning magnetic field induces a current into the windings of the stator coil. Once the generator begins producing sufficient current, it also provides the current needed to energize the rotor.

The Y type stator winding connections deliver the induced AC current to 3 positive and 3 negative diodes for rectification. From the diodes, rectified DC current is delivered to the vehicle electrical system through the generator battery terminal.

Noise emitting from the generator may be caused by: worn, loose or defective bearings; a loose or defective drive pulley; incorrect, worn, damaged or misadjusted drive belt; loose mounting bolts; a misaligned drive pulley or a defective stator or diode.

REMOVAL

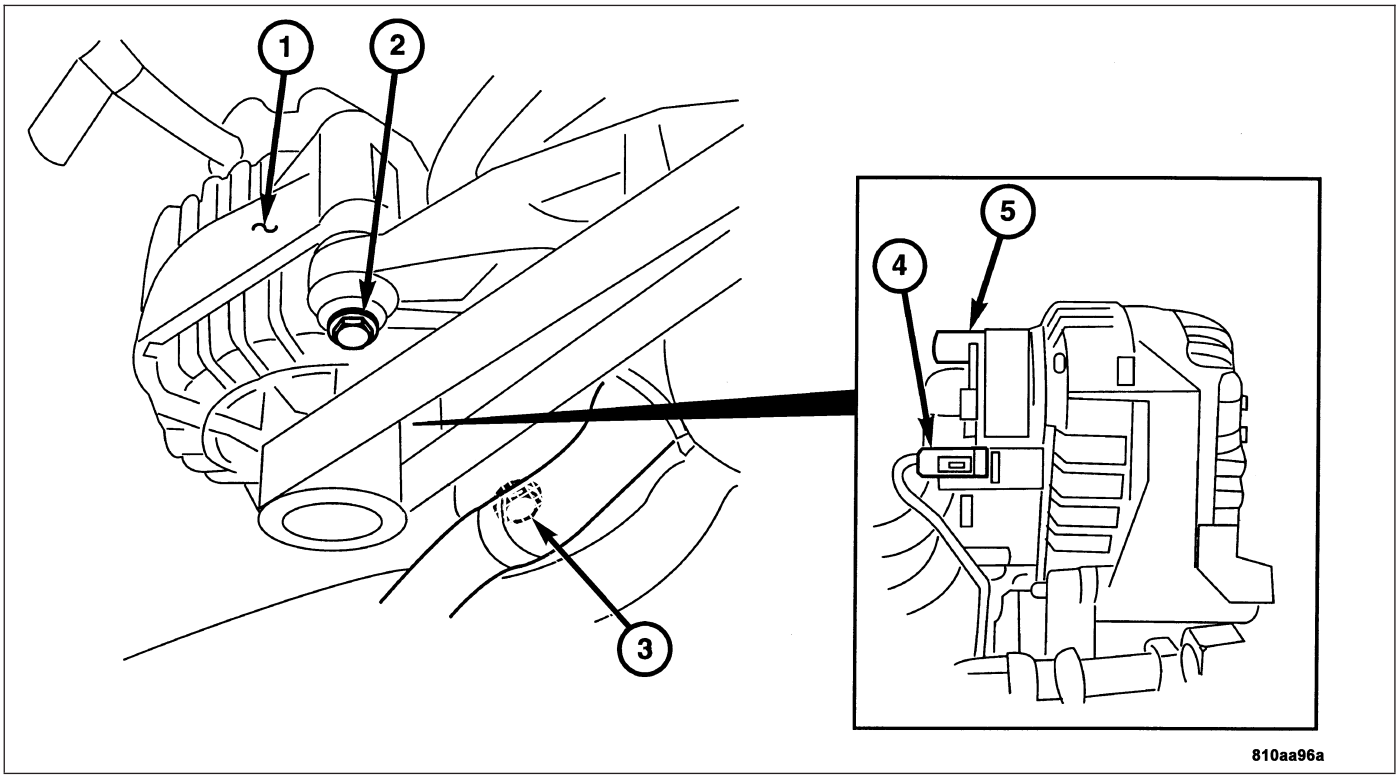

1 - GENERATOR
2 - UPPER GENERATOR BOLT
3 - LOWER GENERATOR BOLT
4 - ELECTRICAL CONNECTOR
5 - GENERATOR B+ PROTECTIVE PLASTIC CAP

1. Disconnect the negative battery cable.
2. Remove the right side air inlet tube.

CAUTION: The accessory drive belt tensioner pulley is spring loaded and can cause damage to hands and fingers if allowed to spring back.

3. Remove the accessory drive belt from the generator pulley. **Refer to Page 7-45**.
   - Pull the tensioning pulley in a counter clockwise direction.
   - Lock the tensioning pulley with a pin or slowly release the pulley after the belt is free from the area.
4. Remove the upper generator bolt (2).
5. Remove the lower generator bolt (3) and reposition the generator to access the generator harness connectors.
6. Remove the protective plastic cap from the generator B+ cable retaining nut (5).
7. Disconnect the generator B+ cable and the generator harness connectors (4) from the rear of the generator.
8. Remove the generator (1).

INSTALLATION

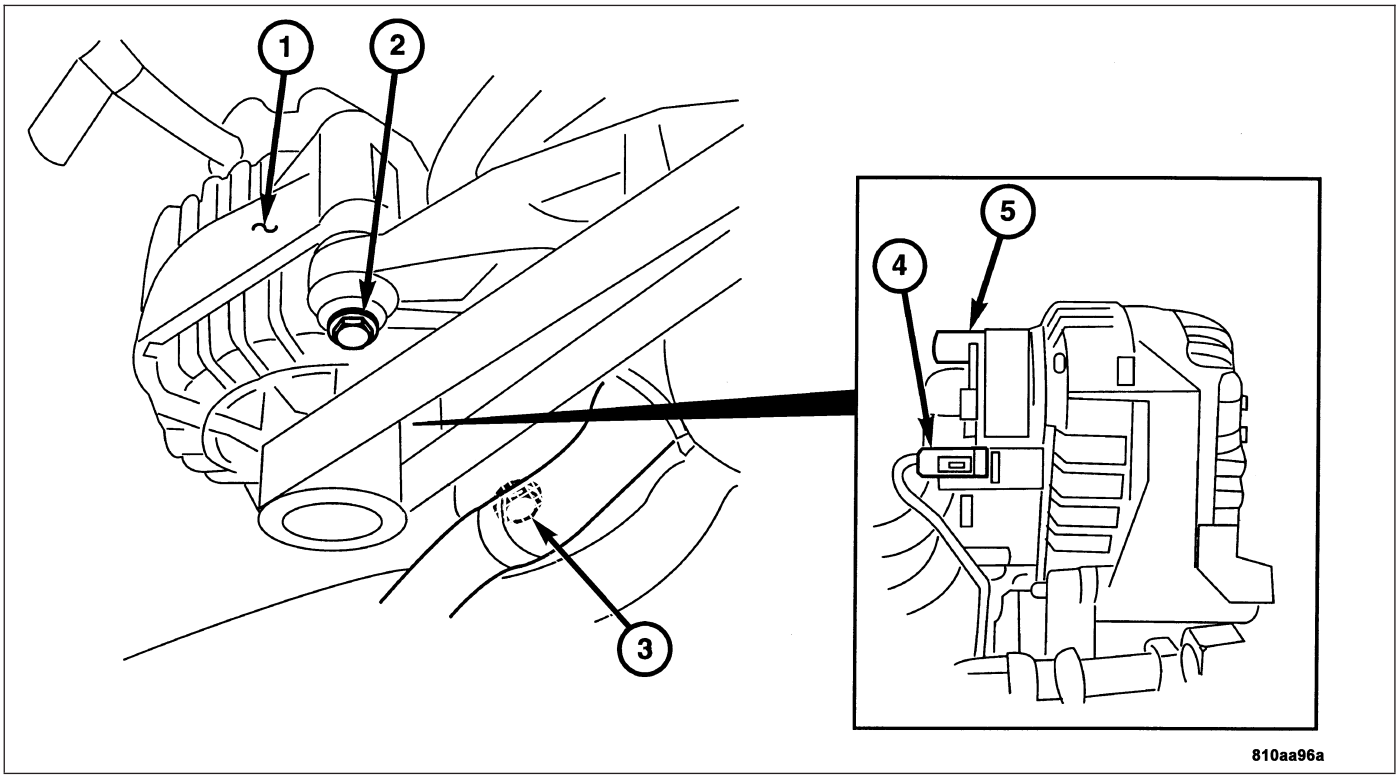

1 - GENERATOR
2 - UPPER GENERATOR BOLT
3 - LOWER GENERATOR BOLT
4 - ELECTRICAL CONNECTOR
5 - GENERATOR B+ PROTECTIVE PLASTIC CAP

1. Connect the generator B+ cable with the retaining nut and connect the generator harness connector (4). Tighten the generator B+ cable retaining nut to 15 N·m (11 ft. lbs.).
2. Install the protective plastic cap on the generator B+ cable nut (5).
3. Install the generator (1) into the mounting bracket.
4. Install the upper and lower generator mounting bolts. Tighten the generator mounting bolts to 42 N·m (31 ft. lbs.).

CAUTION: Be sure to check proper installation on all pulleys.

5. Install the accessory drive belt. **Refer to Page 7-46**.
6. Install the right side air inlet tube.
7. Connect the negative battery cable.

VOLTAGE REGULATOR

DESCRIPTION

The voltage regulator (2) is a separate component attached to the rear of the generator assembly (1). If replacement is necessary, the voltage regulator can be replaced separately from the generator.

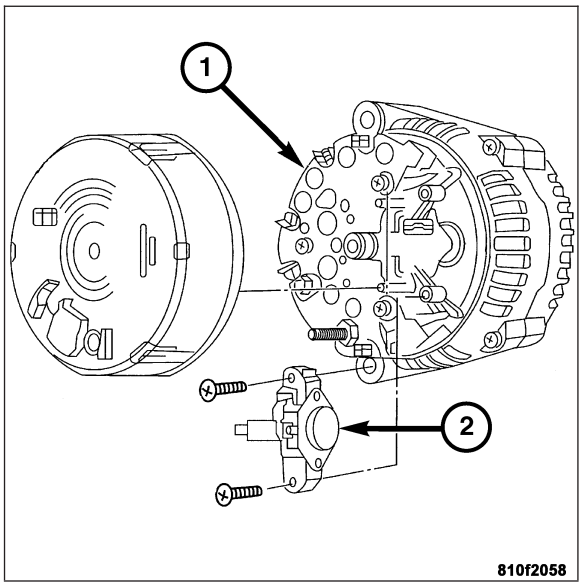

OPERATION

OPERATION

The amount of DC current produced by the generator is controlled by the voltage regulator circuitry. This circuitry is connected in series with the generators second rotor field terminal and its ground.

REMOVAL

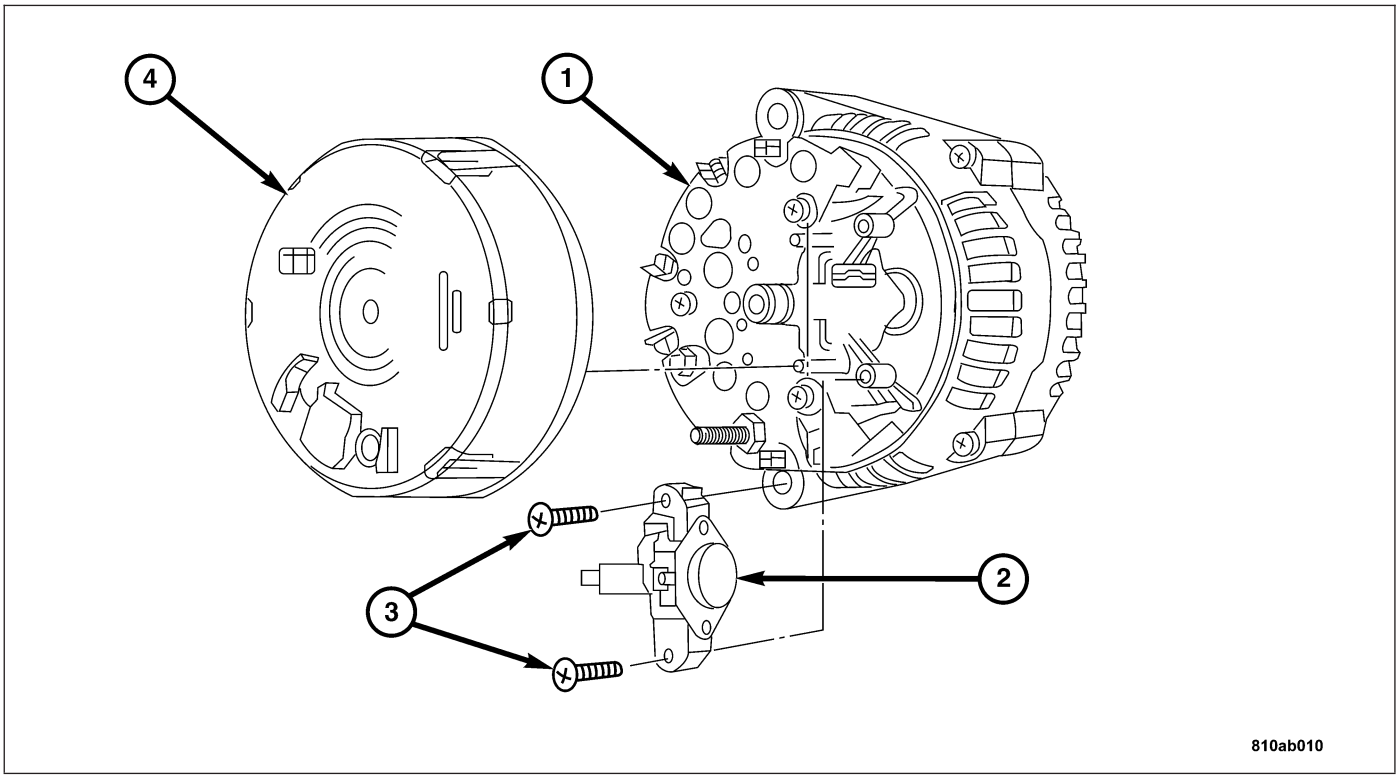

1 - GENERATOR
2 - VOLTAGE REGULATOR
3 - SCREWS
4 - VOLTAGE REGULATOR COVER

1. Remove the generator (1). **Refer to Page 8F-28**.
2. Unclip the plastic voltage regulator cover (4) and remove.
3. Remove the screws (3) attaching the voltage regulator to the generator.
4. Remove the voltage regulator (2).

INSTALLATION

1. Insert the voltage regulator (2), ensure that the ground lug is making contact to the voltage regulator.
2. Install the screws (3) attaching the voltage regulator to the generator.
3. Install the plastic voltage regulator cover (4) with the clips.
4. Install the generator (1). **Refer to Page 8F-29**

STARTING SYSTEM

TABLE OF CONTENTS

	page
STARTING SYSTEM	
DESCRIPTION	32
OPERATION	33
DIAGNOSIS AND TESTING - STARTING SYSTEM	33
SCHEMATICS AND DIAGRAMS	39
SPECIFICATIONS	
STARTER MOTOR	40
TORQUE SPECIFICATIONS	40
STARTER MOTOR	
DESCRIPTION	41
OPERATION	41
DIAGNOSIS AND TESTING - STARTER MOTOR	41
REMOVAL	43
INSTALLATION	44

STARTING SYSTEM

DESCRIPTION

An electrically operated engine starting system is standard factory-installed equipment on this model. The starting system is designed to provide the vehicle operator with a convenient, efficient and reliable means of cranking and starting the internal combustion engine used to power the vehicle and all of its accessory systems from within the safe and secure confines of the passenger compartment. See the owner's manual in the vehicle glove box for more information and instructions on the recommended use and operation of the factory-installed starting system.

The starting system consists of the following components:

- Battery
- Starter Motor
- Starter Solenoid
- Ignition Switch
- Wire harnesses and connections (including the battery cables).

This section provides complete service information for the starter motor. Complete service information for the other starting system components can be located as follows:

- **Refer to Page 8F-2**.
- **Refer to Page 8I-3**.
- **Refer to Page 8F-41** for complete service information and circuit diagrams for the starting system wiring components.

Group 8F - Engine Systems covers the Battery, Starting Systems, and Charging System. We have combined these systems to make it easier to locate the information you are seeking within this Service Manual. However, when attempting to diagnose any of these systems, it is important that you keep their interdependency in mind.

The battery, starting, and charging systems in the vehicle operate with one another, and must be tested as a complete system. In order for the vehicle to start and charge properly, all of the components that are used in these systems must perform within specifications.

The diagnostic procedures used in each of these groups include the most basic conventional diagnostic methods, to the more sophisticated On-Board Diagnostics (OBD) built into the Powertrain Control Module (PCM). Use of an induction-type milliampere ammeter, volt/ohmmeter, battery charger, carbon pile rheostat (load tester), and 12-volt test lamp may be required.

All OBD-sensed systems are monitored by the PCM. Each monitored circuit is assigned a Diagnostic Trouble Code (DTC). The PCM will store a DTC in electronic memory for any failure it detects. Refer to **On-Board Diagnostic Test For Charging System** in the Diagnosis and Testing section of Charging System for more information. **Refer to Page 8F-33**.

OPERATION

The starting system components form two separate circuits. A high-amperage feed circuit that feeds the starter motor between 150 and 350 amperes, and a low-amperage control circuit that operates on less than 20 amperes. The high-amperage feed circuit components include the battery, the battery cables, the contact disc portion of the starter solenoid, and the starter motor. The low-amperage control circuit components include the ignition switch, the pulse module, the electromagnetic windings of the starter solenoid, and the connecting wire harness components.

Battery voltage is supplied through the low-amperage control circuit to the pulse module when the ignition switch is turned to the momentary Start position. When the starter solenoid coil windings are energized, the solenoid pull-in coil pulls in the solenoid plunger. The solenoid plunger pulls the shift lever in the starter motor. This engages the starter overrunning clutch and pinion gear with the starter ring gear on the flywheel.

As the solenoid plunger reaches the end of its travel, the solenoid contact disc completes the high-amperage starter feed circuit and energizes the solenoid plunger hold-in coil. Current now flows between the solenoid battery terminal and the starter motor, energizing the starter.

When the solenoid plunger hold-in coil is de-energized, the solenoid plunger return spring returns the plunger to its relaxed position. This causes the contact disc to open the starter feed circuit, and the shift lever to disengage the overrunning clutch and pinion gear from the starter ring gear.

Once the engine starts, the pulse module prevents starter motor damage by only allowing the starter to be engaged until the engine is running. Once the engine fires and achieves an rpm threshold that the Powertrain Control Module (PCM) defines as “engine running”, the starter motor is automatically disengaged by the PCM through the pulse module. The pulse module further prevents starter motor damage by not allowing the starter motor to be engaged if the engine is already running.

DIAGNOSIS AND TESTING - STARTING SYSTEM

The battery, starting, and charging systems operate with one another, and must be tested as a complete system. In order for the vehicle to start and charge properly, all of the components involved in these systems must perform within specifications.

Group 8F - Engine Systems covers the Battery, Starting System, and Charging System. We have combined these systems to make it easier to locate the information you are seeking within this Service Manual. However, when attempting to diagnose any of these systems, it is important that you keep their interdependency in mind.

The diagnostic procedures used in this group includes most conventional diagnostic methods. The use of an induction-type milliampere ammeter, volt/ohmmeter, battery charger, carbon pile rheostat (load tester), and 12-volt test lamp may be required.

STARTING SYSTEM DIAGNOSIS

CONDITION	POSSIBLE CAUSE	CORRECTION
STARTER FAILS TO OPERATE.	1. Battery discharged or faulty.	1. Refer to Battery in the Diagnosis and Testing section of Group 8F - Engine Systems. Charge or replace the battery, if required.
	2. Starting circuit wiring faulty.	2. Refer to Starting System in Group 8W - Wiring Diagrams. Test and repair the starter feed and/or control circuits, if required.
	3. Ignition switch faulty.	3. Refer to Ignition Switch and Key Lock Cylinder in the Diagnosis and Testing section of Group 8D - Ignition System. Replace the ignition switch, if required.
	4. Park/Neutral position switch faulty or misadjusted.	4. Refer to Park/Neutral Position Switch in the Diagnosis and Testing section of Group 21 - Transmission. Replace the park/neutral position switch, if required.
	5. Starter solenoid faulty.	5. Refer to Starter Motor in the Diagnosis and Testing section of Group 8F - Engine Systems. Replace the starter motor assembly, if required.
	6. Starter motor faulty.	6. If all other starting system components and circuits test OK, replace the starter motor assembly.
STARTER ENGAGES, FAILS TO TURN ENGINE.	1. Battery discharged or faulty.	1. Refer to Battery in the Diagnosis and Testing section of Group 8F - Engine Systems. Charge or replace the battery, if required.
	2. Starting circuit wiring faulty.	2. Refer to Starting System in Group 8W - Wiring Diagrams. Test and repair the starter feed and/or control circuits, if required.
	3. Starter motor faulty.	3. If all other starting system components and circuits test OK, replace the starter motor assembly.
	4. Engine seized.	4. Refer to Engine Diagnosis in the Diagnosis and Testing section of Group 9 - Engine.
STARTER ENGAGES, SPINS OUT BEFORE ENGINE STARTS.	1. Starter ring gear faulty.	1. Refer to Starter Motor in the Removal and Installation section of Group 8F - Engine Systems. Remove the starter motor to inspect the starter ring gear. Replace the starter ring gear, if required.
	2. Starter motor faulty.	2. If all other starting system components and circuits test OK, replace the starter motor assembly.
STARTER DOES NOT DISENGAGE.	1. Starter motor improperly installed.	1. Refer to Starter Motor in the Removal and Installation section of Group 8F - Engine Systems. Tighten the starter mounting hardware to the correct tightness specifications.
	2. Ignition switch faulty.	2. Refer to Ignition Switch and Key Lock Cylinder in the Diagnosis and Testing section of Group 8D - Ignition System. Replace the ignition switch, if required.
	3. Starter motor faulty.	3. If all other starting system components and circuits test OK, replace the starter motor assembly.

INSPECTION

For complete wiring diagrams, refer to **Starting System** in the Contents of Group 8W - Wiring Diagrams. Before removing any unit from the starting system for repair or diagnosis, perform the following inspections:

WARNING: ON VEHICLES EQUIPPED WITH AIRBAGS, REFER TO GROUP 8M - PASSIVE RESTRAINT SYSTEMS BEFORE ATTEMPTING ANY STEERING WHEEL, STEERING COLUMN, OR INSTRUMENT PANEL COMPONENT DIAGNOSIS OR SERVICE. FAILURE TO TAKE THE PROPER PRECAUTIONS COULD RESULT IN ACCIDENTAL AIRBAG DEPLOYMENT AND POSSIBLE PERSONAL INJURY.

- Visually inspect the battery for indications of physical damage and loose or corroded cable connections. Determine the state-of-charge and cranking capacity of the battery. Charge or replace the battery, if required. in the proper section of Group 8F - Engine Systems for complete service information for the battery. **Refer to Page 8F-7**.
- - Visually inspect the ignition switch for indications of physical damage and loose or corroded wire harness connections. in the proper section of Group 8D - Ignition System for complete service information for the ignition switch. **Refer to Page 8I-5**.
- Visually inspect the starter motor for indications of physical damage and loose or corroded wire harness connections.
- Visually inspect the starter solenoid for indications of physical damage and loose or corroded wire harness connections.
- Visually inspect the wire harnesses for damage. Repair or replace any faulty wiring, as required. Refer to the proper section of **Group 8W - Wiring Diagrams** for complete service information and circuit diagrams for the starting system wiring components. **Refer to Page 8W-01-1**.

TESTING

COLD CRANKING TEST

For complete wiring diagrams, refer to **Starting System** in the Contents of Group 8W - Wiring Diagrams. The battery must be fully-charged and load-tested before proceeding. Refer to **Battery** in the Diagnosis and Testing section of Group 8F - Engine Systems for the procedures. **Refer to Page 8F-9**.

1. Connect a suitable volt-ampere tester (3) to the battery terminals (1,2). See the instructions provided by the manufacturer of the volt-ampere tester being used.
2. Fully engage the parking brake.
3. Place the automatic transmission gearshift selector lever in the Park position or place the manual transmission gearshift selector in the Neutral position.
4. Verify that all lamps and accessories are turned off.
5. Prevent the engine from starting.
6. Rotate and hold the ignition switch in the Start position. Note the cranking voltage and current (amperage) draw readings shown on the volt-ampere tester.
   a. If the voltage reads below 9.6 volts, refer to **Starter Motor** in the Diagnosis and Testing section of this group **Refer to Page 8F-41**. If the starter motor is OK, refer to **Engine Diagnosis** in the Diagnosis and Testing section of Group 9 - Engine for further testing of the engine **Refer to Page 9-4**. If the starter motor is not OK, replace the faulty starter motor.

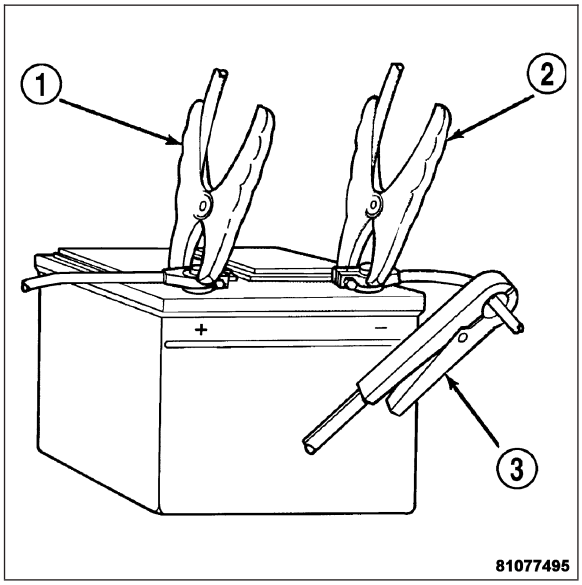

   b. If the voltage reads above 9.6 volts and the current (amperage) draw reads below specifications, refer to **Feed Circuit Test** in this section.
   c. If the voltage reads 12.5 volts or greater and the starter motor does not turn, refer to **Control Circuit Testing** in this section.
   d. If the voltage reads 12.5 volts or greater and the starter motor turns very slowly, refer to **Feed Circuit Test** in this section.

Note: A cold engine will increase the starter current (amperage) draw reading, and reduce the battery voltage reading.

FEED CIRCUIT TEST

The starter feed circuit test (voltage drop method) will determine if there is excessive resistance in the high-amperage feed circuit. For complete wiring diagrams, refer to **Starting System** in the Contents of Group 8W - Wiring Diagrams. **Refer to Page 8W-01-1**.

When performing these tests, it is important to remember that the voltage drop is giving an indication of the resistance between the two points at which the voltmeter probes are attached.

Example: When testing the resistance of the battery positive cable, touch the voltmeter leads to the battery positive cable clamp and the cable connector at the starter solenoid. If you probe the battery positive terminal post and the cable connector at the starter solenoid, you are reading the combined voltage drop in the battery positive cable clamp-to-terminal post connection and the battery positive cable.

The following operation will require a voltmeter accurate to 1/10 (0.10) volt. Before performing the tests, be certain that the following procedures are accomplished:

- Battery is fully-charged and load-tested. Refer to **Battery** in the Diagnosis and Testing section of Group 8F - Engine Systems for the procedures. **Refer to Page 8F-9**.
- Fully engage the parking brake.
- Place the automatic transmission gearshift selector lever in the Park position or place the manual transmission gearshift selector in the Neutral position.
- Verify that all lamps and accessories are turned off.
- Prevent the engine from starting.

1. Connect the positive lead of the voltmeter (1) to the battery (2) negative terminal post. Connect the negative lead of the voltmeter (1) to the battery (2) negative cable clamp. Rotate and hold the ignition switch in the Start position. Observe the voltmeter. If voltage is detected, correct the poor contact between the cable clamp and the terminal post.

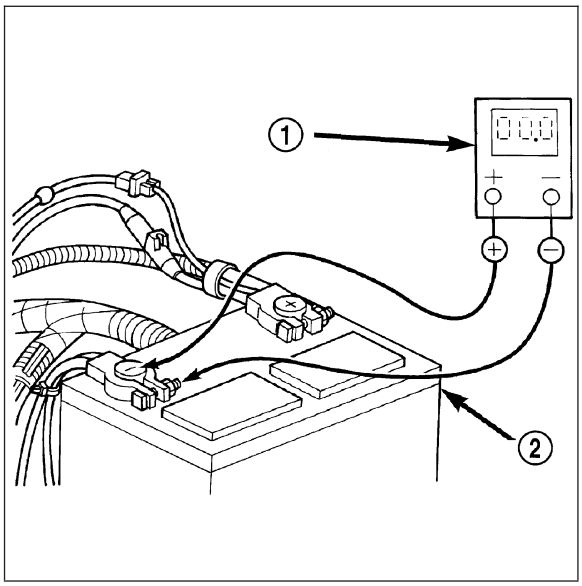

2. Connect the positive lead of the voltmeter (1) to the battery (2) positive terminal post. Connect the negative lead of the voltmeter (1) to the battery (2) positive cable clamp. Rotate and hold the ignition switch in the Start position. Observe the voltmeter. If voltage is detected, correct the poor contact between the cable clamp and the terminal post.

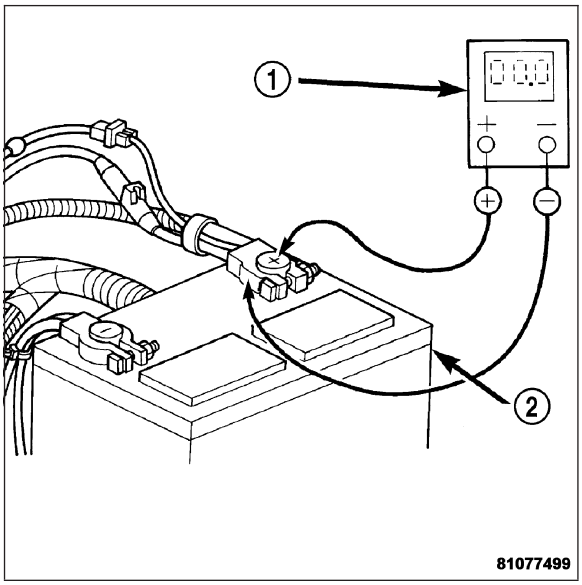

3. Connect the voltmeter (2) to measure between the battery (1) positive terminal post and the starter (3) solenoid battery terminal stud. Rotate and hold the ignition switch in the Start position. Observe the voltmeter. If the reading is above 0.2 volt, clean and tighten the battery cable connection at the solenoid. Repeat the test. If the reading is still above 0.2 volt, replace the faulty battery positive cable.

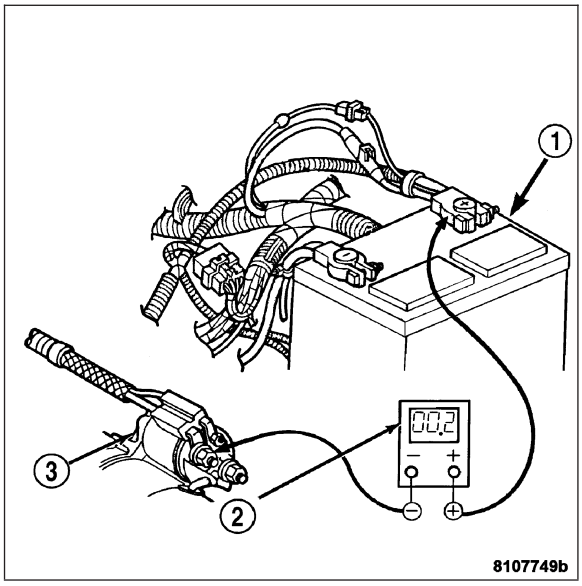

4. Connect the voltmeter (1) to measure between the battery (2) negative terminal post and a good clean ground on the engine block (3). Rotate and hold the ignition switch in the Start position. Observe the voltmeter. If the reading is above 0.2 volt, clean and tighten the battery negative cable attachment on the engine block. Repeat the test. If the reading is still above 0.2 volt, replace the faulty battery negative cable.

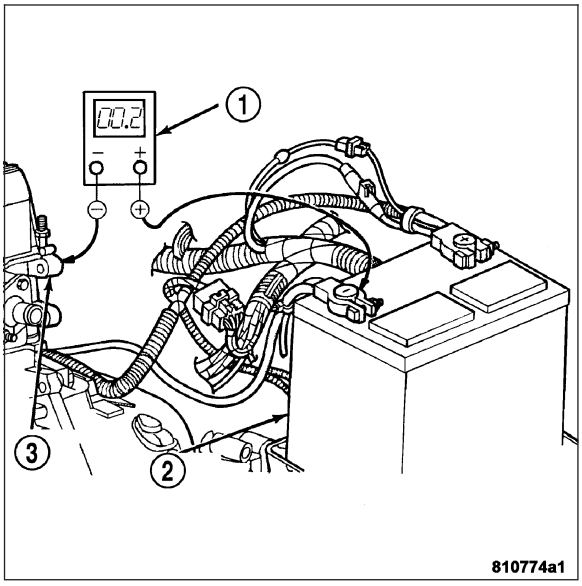

5. Connect the positive lead of the voltmeter (3) to the starter (1) housing. Connect the negative lead of the voltmeter to the battery (2) negative terminal post. Rotate and hold the ignition switch in the Start position. Observe the voltmeter. If the reading is above 0.2 volt, correct the poor starter to engine block ground contact.

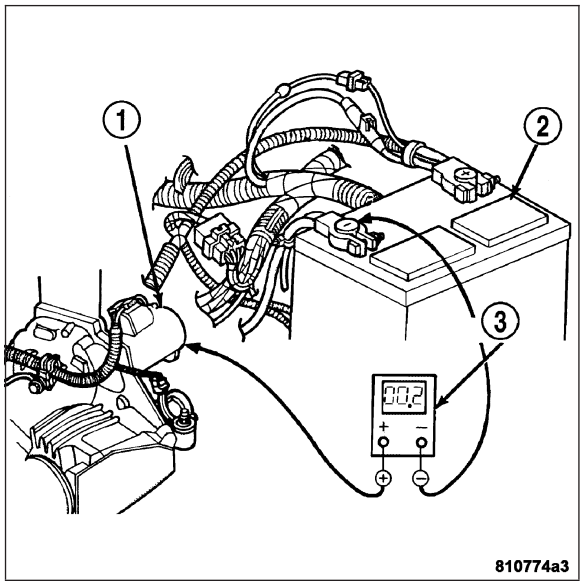

If the resistance tests detect no feed circuit problems, refer to **Starter Motor** in the Diagnosis and Testing section of this Group 8F - Engine Systems. **Refer to Page 8F-41**.

CONTROL CIRCUIT TESTING

The starter control circuit components should be tested in the order in which they are listed, as follows:

- **Starter Solenoid** - Refer to **Starter Motor** in the Diagnosis and Testing section of Group 8F - Engine Systems for the procedures. **Refer to Page 8F-41**.
- **Ignition Switch** - Refer to **Ignition Switch and Key Lock Cylinder** in the Diagnosis and Testing section of Group 8D - Ignition System for the procedures. **Refer to Page 8I-3**.
- **Wire harnesses and connections** - Refer to **Starting System** in the Contents of Group 8W - Wiring Diagrams for complete circuit diagrams. **Refer to Page 8W-01-1**.

SCHEMATICS AND DIAGRAMS

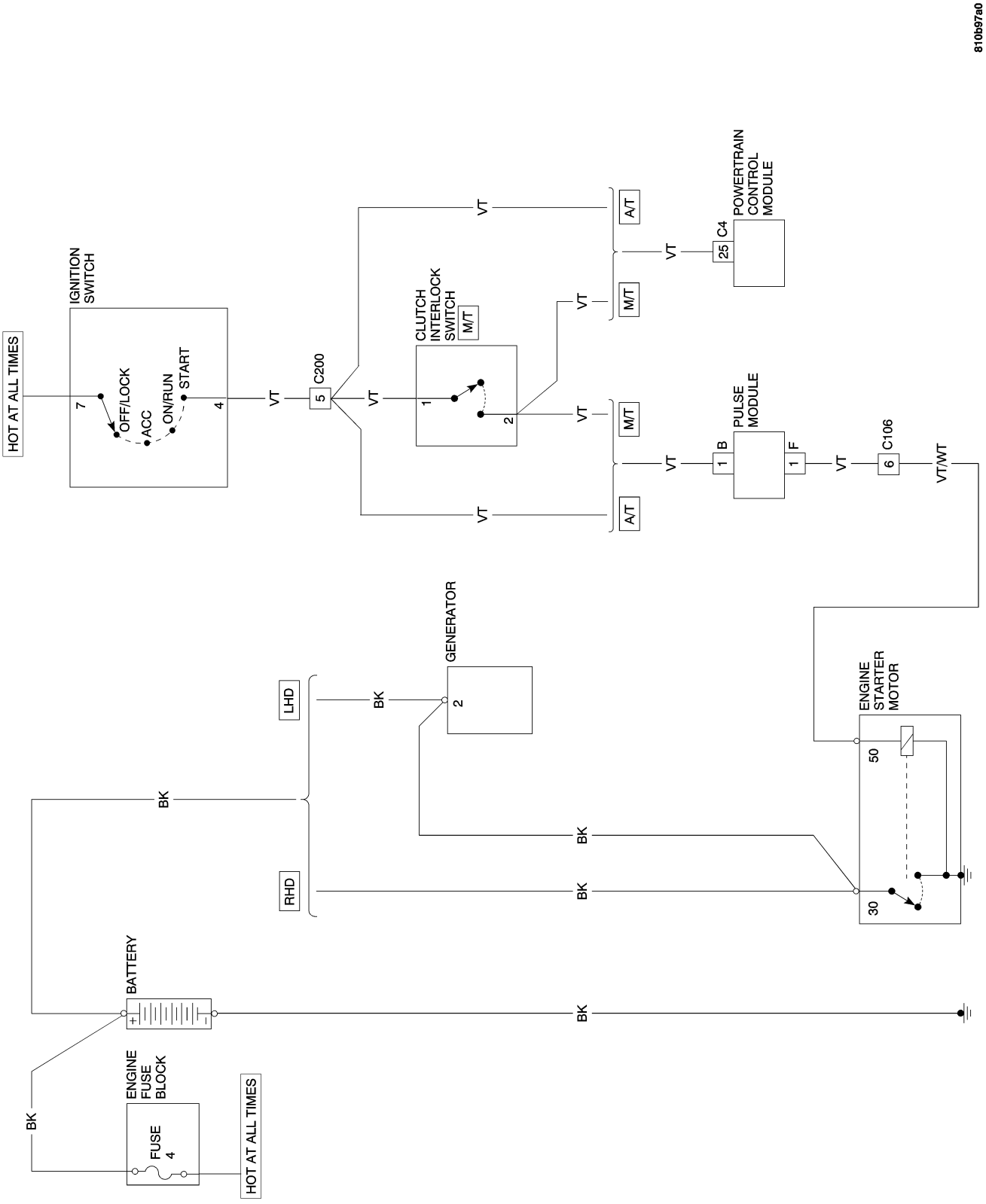

STARTING SYSTEM CIRCUIT DIAGRAM

SPECIFICATIONS

STARTER MOTOR

Starter Motor and Solenoid	
Manufacturer	
Engine Application	3.2L
Power Rating	
Voltage	12 Volts
Number of Fields	
Number of Poles	
Number of Brushes	
Drive Type	
Free Running Test Voltage	
Free Running Test Maximum Amperage Draw	
Free Running Test Minimum Speed	
Solenoid Closing Maximum Voltage Required	
*Cranking Amperage Draw Test	
*Test at operating temperature. Cold engine, tight (new) engine, or heavy oil will increase starter amperage draw.	

TORQUE SPECIFICATIONS

DESCRIPTION	N·m	Ft. Lbs.	In. Lbs.
Starter Motor (B+) Terminal	14	10	—
Starter Motor Ground Terminal	6	—	52
Starter Motor Retaining Bolts	42	31	—

STARTER MOTOR

DESCRIPTION

The starter motor (2) is mounted with two bolts to the transmission housing and is located on the right side of the engine. The starter motor incorporates several features to create a reliable, efficient, compact, lightweight and powerful unit. The electric motor of the starter features electromagnetic field coils wound around pole shoes, and brushes contact the motor commutator. The starter motor is serviced only as a unit and cannot be repaired. The entire starter motor (2) and starter solenoid unit (1) must be replaced if either component is faulty or damaged.

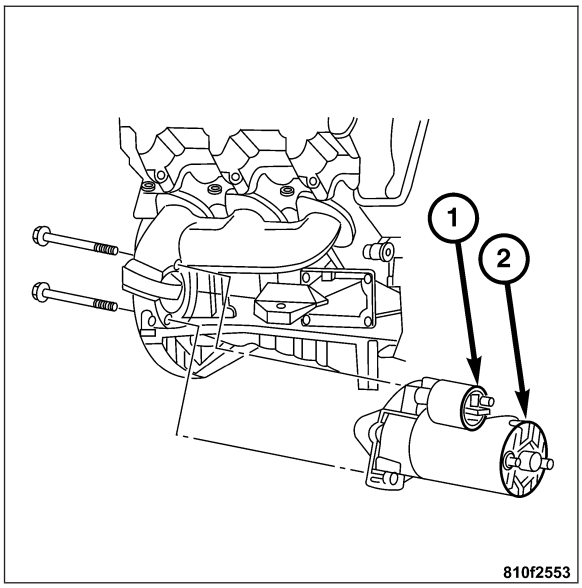

OPERATION

The starter motor is equipped with a planetary gear reduction system. The planetary gear reduction system consists of a gear that is integral to the output end of the electric motor armature shaft that is in continual engagement with a larger gear that is splined to the input end of the starter pinion gear shaft. This feature makes it possible to reduce the dimensions of the starter. At the same time, it allows higher armature rotational speed and delivers increased torque through the starter pinion gear to the starter ring gear.

The starter motor is activated by an integral heavy duty starter solenoid switch mounted to the overrunning clutch housing. This electromechanical switch connects and disconnects the feed of battery voltage to the starter motor and actuates a shift fork that engages and disengages the starter pinion gear with the starter ring gear.

DIAGNOSIS AND TESTING - STARTER MOTOR

Correct starter motor operation can be confirmed by performing the following free running bench test. This test can only be performed with the starter motor removed from the vehicle. Refer to **Starting System** in the Specifications section of this group for the starter motor specifications. **Refer to Page 8F-39**.

1. Remove the starter motor from the vehicle. Refer to **Starter Motor** in the Removal and Installation section of this group for the procedures. **Refer to Page 8F-43** and **Refer to Page 8F-44**.
2. Mount the starter motor securely in a soft-jawed bench vise. The vise jaws should be clamped on the mounting flange of the starter motor. Never clamp on the starter motor by the field frame.
3. Connect a suitable volt-ampere tester and a 12-volt battery to the starter motor in series, and set the ammeter to the 100 ampere scale. See the instructions provided by the manufacturer of the volt-ampere tester being used.
4. Install a jumper wire from the solenoid terminal to the solenoid battery terminal. The starter motor should operate. If the starter motor fails to operate, replace the faulty starter motor assembly.
5. Adjust the carbon pile load of the tester to obtain the free running test voltage. Refer to **Starting System** in the Specifications section of this group for the starter motor free running test voltage specifications. **Refer to Page 8F-39**.
6. Note the reading on the ammeter and compare this reading to the free running test maximum amperage draw. Refer to **Starting System** in the Specifications section of this group for the starter motor free running test maximum amperage draw specifications. **Refer to Page 8F-39**.

7. If the ammeter reading exceeds the maximum amperage draw specification, replace the faulty starter motor assembly.

STARTER SOLENOID

This test can only be performed with the starter motor removed from the vehicle.

1. Remove the starter motor from the vehicle. **Refer to Page 8F-43**.
2. Disconnect the wire from the solenoid field coil terminal.
3. Check the solenoid (1) for continuity between the solenoid terminal (2) and the solenoid field coil terminal (4) with a continuity tester (3). There should be continuity. If OK, go to Step 4. If not OK, replace the faulty starter motor assembly.

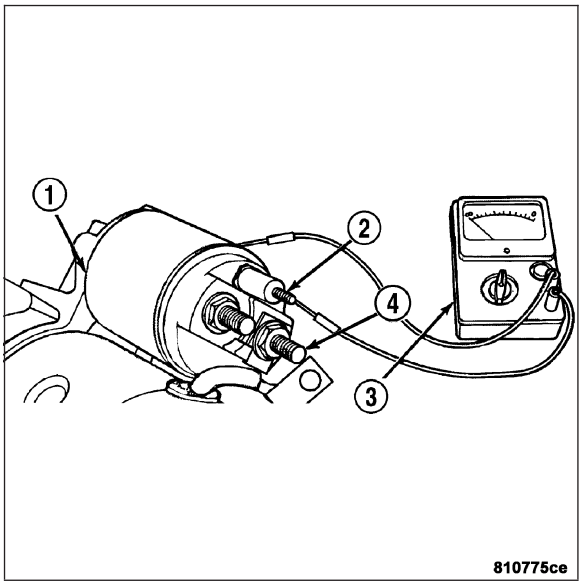

4. Using a continuity tester (3), check for continuity between the solenoid terminal (2) and the solenoid case (1). There should be continuity. If not OK, replace the faulty starter motor assembly.

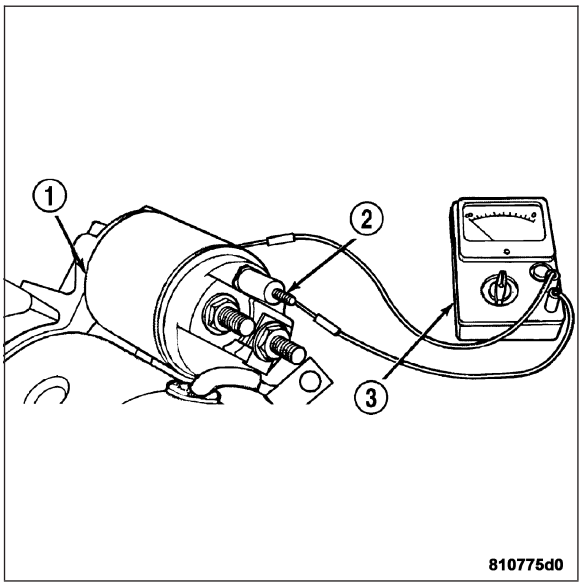

REMOVAL

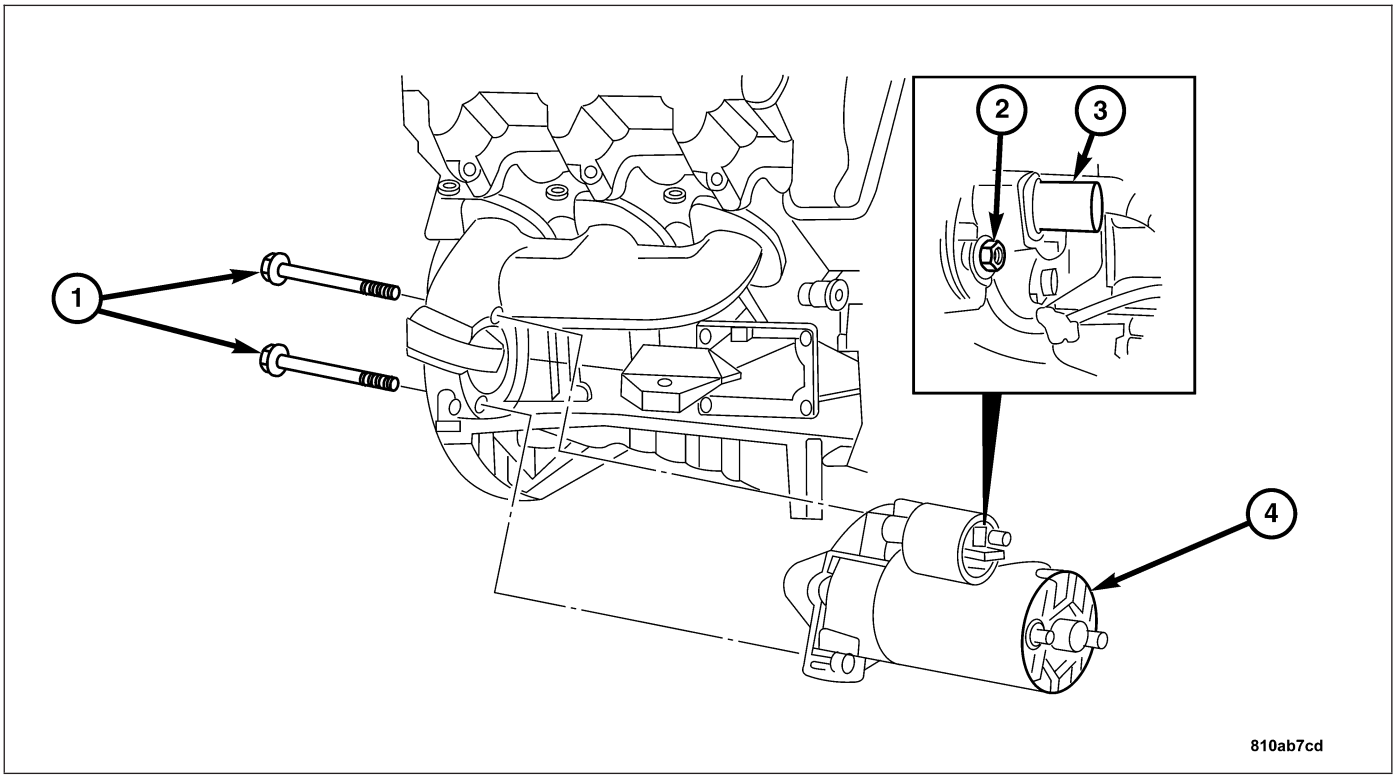

1 - STARTER BOLTS
2 - STARTER GROUND CABLE NUT
3 - STARTER POSITIVE CABLE PROTECTIVE PLASTIC CAP
4 - STARTER

1. Disconnect the negative battery cable.
2. Raise and support the vehicle.
3. Remove the lower engine panel.
4. Disconnect the right O2 sensor electrical connector.
5. Remove the right side exhaust pipe from the exhaust manifold to the rear exhaust system. **Refer to Page 11-5**
6. Remove the starter bolts (1) and reposition the starter to access the starter electrical cables.
7. Remove the starter positive cable protective plastic cap (3).
8. Disconnect the starter cables by removing the ground cable nut (2) and the positive cable nut.
9. Remove the starter (4) from the vehicle.

INSTALLATION

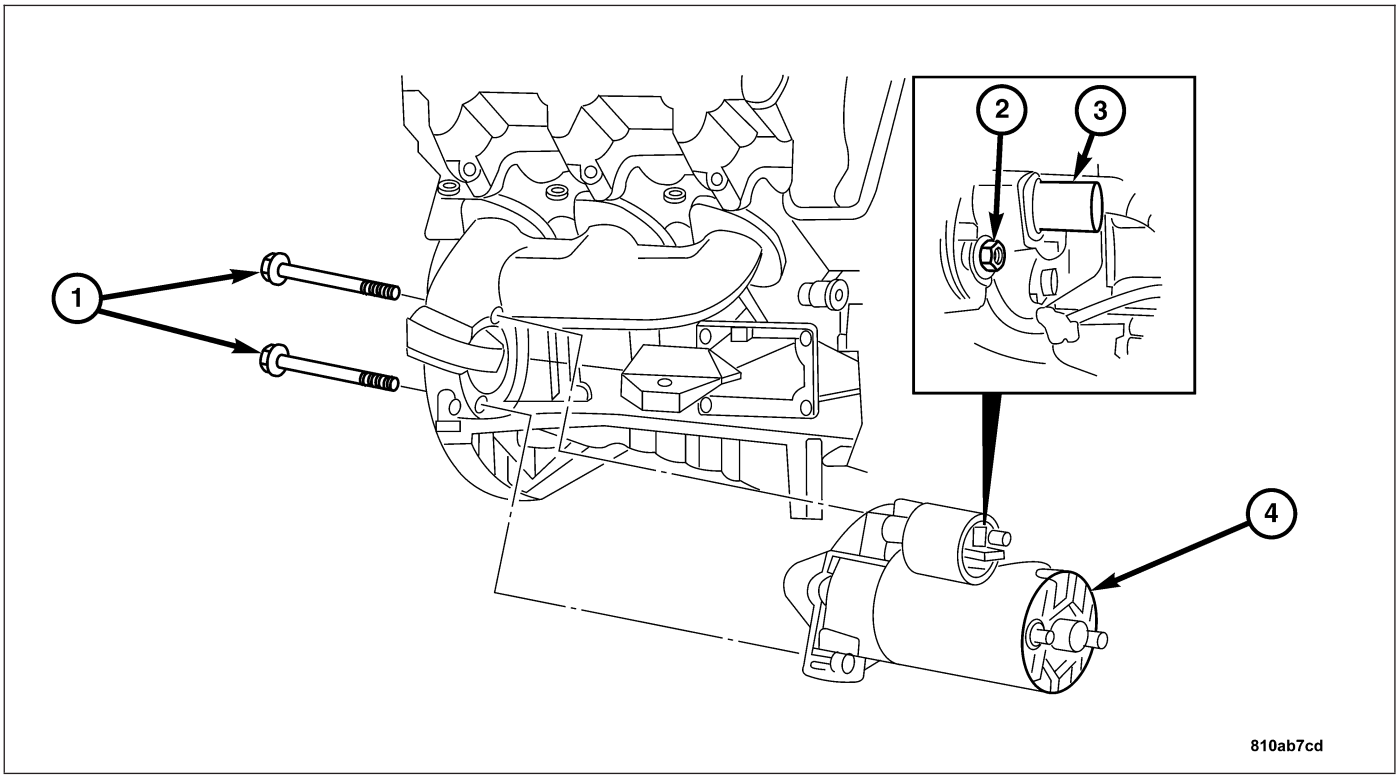

1 - STARTER BOLTS
2 - STARTER GROUND CABLE NUT
3 - STARTER POSITIVE CABLE PROTECTIVE PLASTIC CAP
4 - STARTER

1. Install the starter (4).
2. Connect the starter cable and the ground cable with the nuts. Tighten the starter positive cable nut to 14 N·m (10 ft. lbs.). Tighten the starter ground cable nut (2) to 6 N·m (52 in. lbs.)
3. Install the starter positive cable protective plastic cap (3).
4. Install the starter bolts (1). Tighten to 42 N·m (31 ft. lbs.).
5. Install the right side exhaust pipe. **Refer to Page 11-7**.
6. Connect the right side O2 sensor.
7. Install the lower engine panel.
8. Lower the vehicle.
9. Connect the negative battery cable.

HEATED SYSTEMS

TABLE OF CONTENTS

	page		page
HEATED GLASS - ELECTRICAL DIAGNOSTICS	**1**	**HEATED MIRRORS - SERVICE INFORMATION**	**22**
HEATED GLASS - SERVICE INFORMATION	**10**	**HEATED SEATS - ELECTRICAL DIAGNOSTICS**	**25**
HEATED MIRRORS - ELECTRICAL DIAGNOSTICS	**15**	**HEATED SEATS - SERVICE INFORMATION**	**36**

HEATED GLASS - ELECTRICAL DIAGNOSTICS

TABLE OF CONTENTS

	page		page
HEATED GLASS - ELECTRICAL DIAGNOSTICS		*REAR WINDOW DEFOGGER INOPERATIVE	5
DIAGNOSIS AND TESTING		BODY VERIFICATION TEST	8
REAR DEFOGGER SWITCH SENSE CIRCUIT	2	SCHEMATICS AND DIAGRAMS	9

HEATED GLASS - ELECTRICAL DIAGNOSTICS

DIAGNOSIS AND TESTING

REAR DEFOGGER SWITCH SENSE CIRCUIT

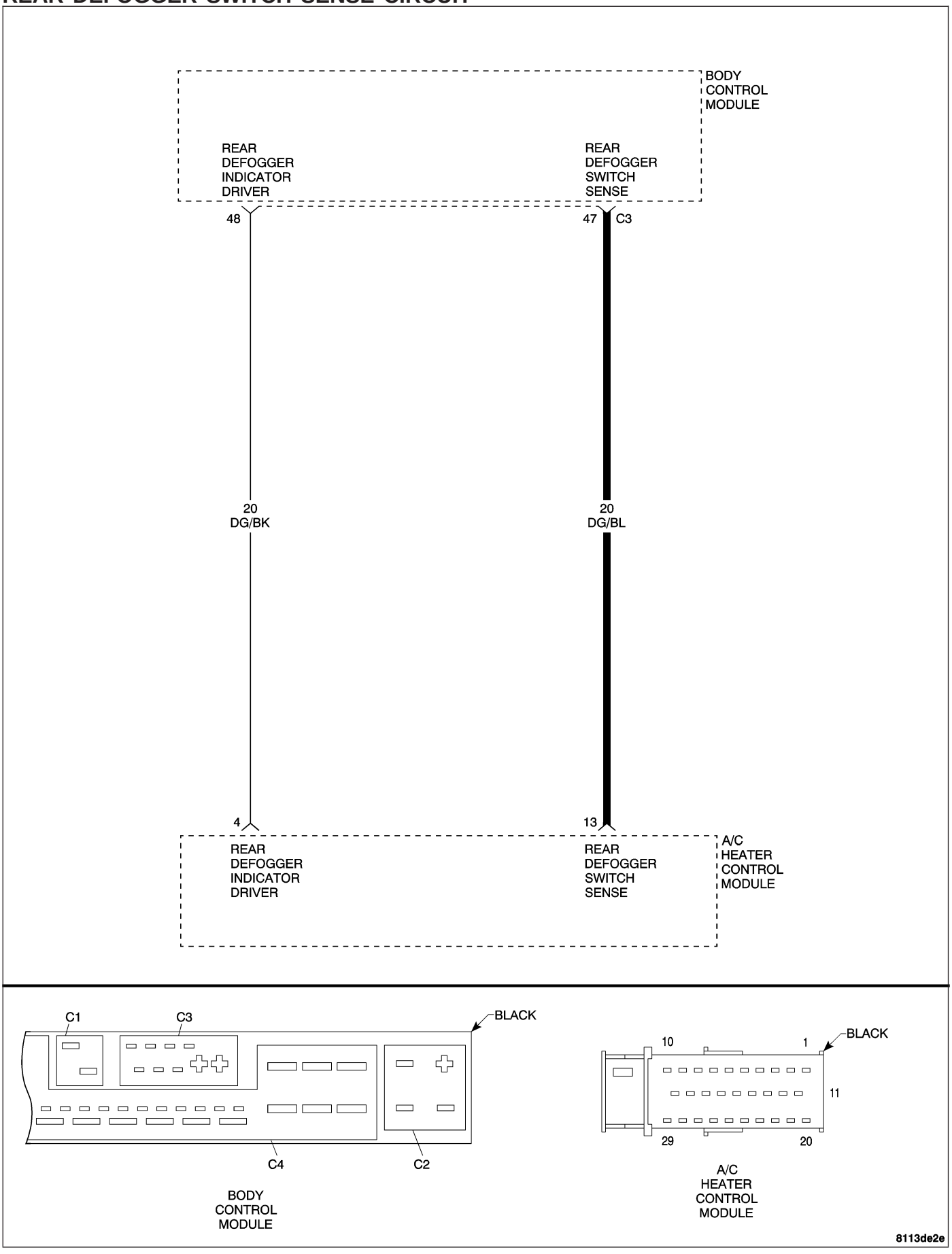

REAR DEFOGGER SWITCH SENSE CIRCUIT — CONTINUED

When Monitored and Set Condition

- When Monitored: With the ignition on.
- Set Condition: The Body Control Module (BCM) detects a short to power, ground, or an open on the Rear Defogger Switch Sense circuit.

POSSIBLE CAUSES
REAR DEFOGGER SWITCH SENSE CIRCUIT SHORT TO VOLTAGE
REAR DEFOGGER SWITCH SENSE CIRCUIT SHORT TO GROUND
REAR DEFOGGER SWITCH SENSE CIRCUIT OPEN
BODY CONTROL MODULE

For a complete Heated Glass Circuit Diagram **Refer to Page 8G-9**.

Diagnostic Test

1. MEASURE THE RESISTANCE OF THE REAR DEFOGGER SWITCH SENSE CIRCUIT

Turn the ignition off.

Disconnect the BCM harness connector.

Disconnect the A/C Heater Control Module harness connector.

Note: Check connector - Clean/repair as necessary.

Measure the resistance of the Rear Defogger Switch Sense circuit from the BCM harness connector to the A/C Heater Control Module harness connector.

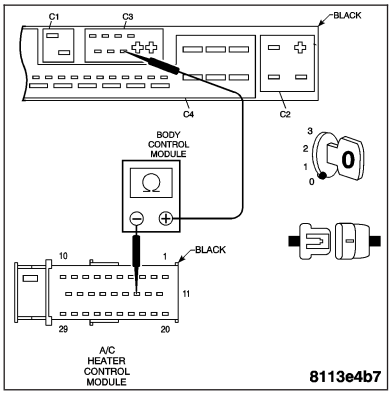

Is the resistance below 5.0 ohms?

Yes >> Go to 2

No >> Repair the Rear Defogger Switch Sense circuit for an open.
Perform BODY VERIFICATION TEST.

2. MEASURE THE VOLTAGE OF THE REAR DEFOGGER SWITCH SENSE CIRCUIT

Turn the ignition on.

Measure the voltage of the Rear Defogger Switch Sense circuit at the A/C Heater Control Module harness connector.

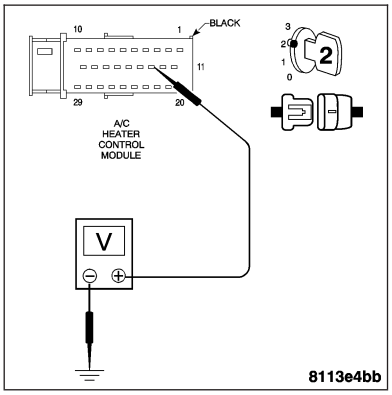

Is voltage present?

Yes >> Repair the Rear Defogger Switch Sense circuit for a short to voltage.
Perform BODY VERIFICATION TEST.

No >> Go to 3

REAR DEFOGGER SWITCH SENSE CIRCUIT — CONTINUED

3. MEASURE THE RESISTANCE OF THE REAR DEFOGGER SWITCH SENSE CIRCUIT

Turn the ignition off.

Measure the resistance between ground and the Rear Defogger Switch Sense circuit.

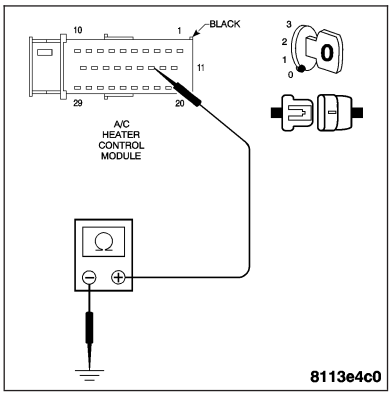

Is the resistance below 10 kohms?

Yes >> Repair the Rear Defogger Switch Sense circuit for a short to ground.
Perform BODY VERIFICATION TEST.

No >> Replace the Body Control Module. **Refer to Page 8E-72**.
Perform BODY VERIFICATION TEST.

*REAR WINDOW DEFOGGER INOPERATIVE

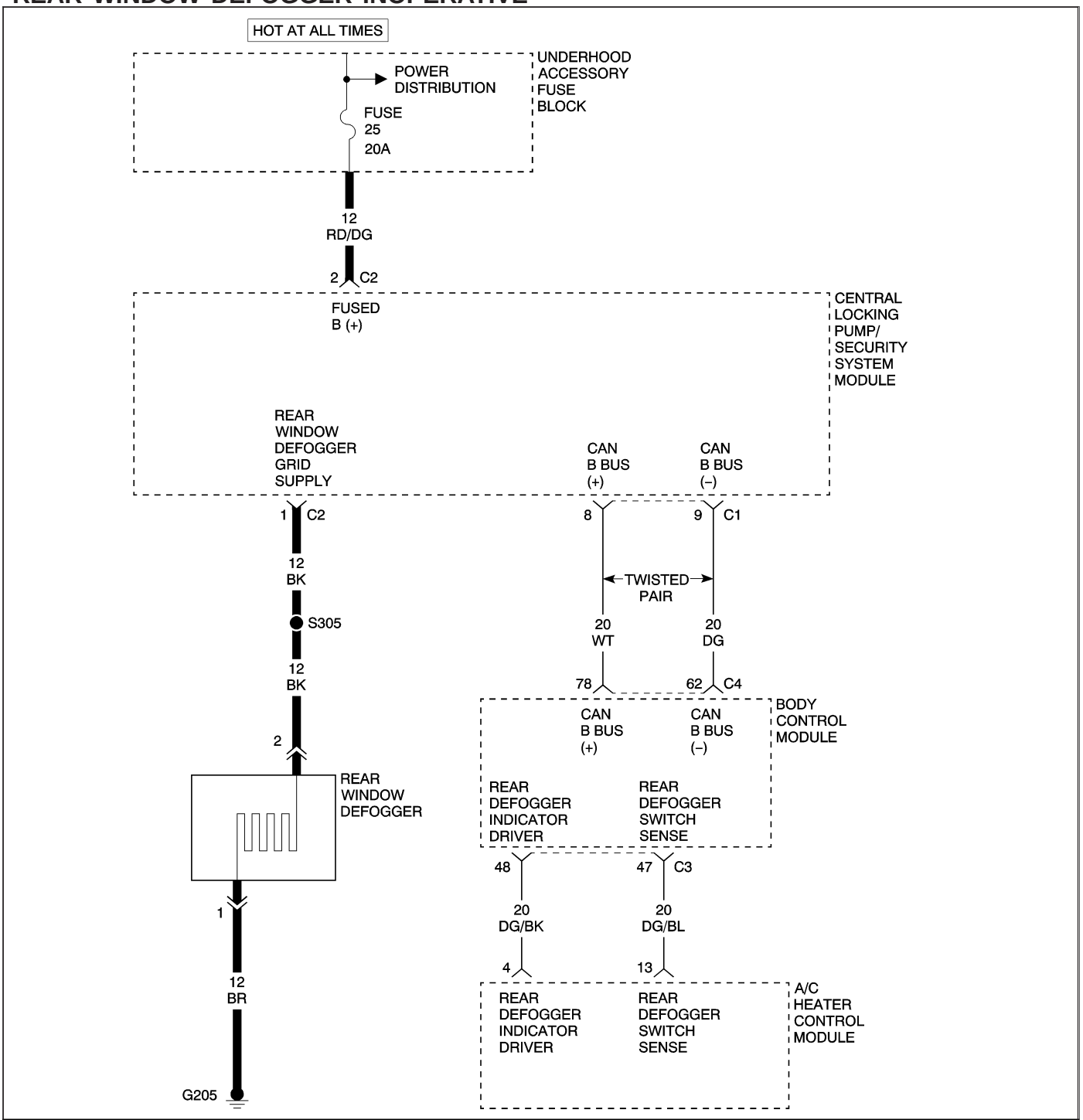

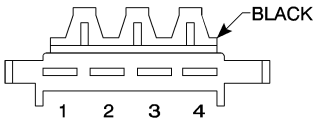

CENTRAL LOCKING PUMP/ SECURITY SYSTEM MODULE C2

8113dcc4

*REAR WINDOW DEFOGGER INOPERATIVE — CONTINUED

POSSIBLE CAUSES
REAR WINDOW DEFOGGER FUSED B(+) CIRCUIT OPEN
REAR WINDOW DEFOGGER GRID OPEN
REAR WINDOW DEFOGGER GRID GROUND CIRCUIT OPEN
CENTRAL LOCKING PUMP/SECURITY SYSTEM MODULE

For a complete Heated Glass Circuit Diagram **Refer to Page 8G-9**.

Diagnostic Test

1. INSPECT THE REAR WINDOW DEFOGGER INDICATOR ON THE A/C HEATER CONTROL MODULE

Turn the ignition on.

Activate the Rear Window Defogger.

Is the rear window defogger indicator blinking?

Yes >> Lower the electrical load on the vehicle until the light stops blinking. Once the rear window defogger indicator stops blinking, the system will resume normal operation.
Perform BODY VERIFICATION TEST.

No >> Go to 2

2. MEASURE REAR WINDOW DEFOGGER FUSED B(+) CIRCUIT VOLTAGE

Note: Inspect Fuse 25 located in the Underhood Accessory Fuse Block. If the fuse is open, repair the cause of the open fuse before continuing.

Turn the ignition off.

Disconnect the Central Locking Pump/Security System Module (CLP/SSM) harness connector.

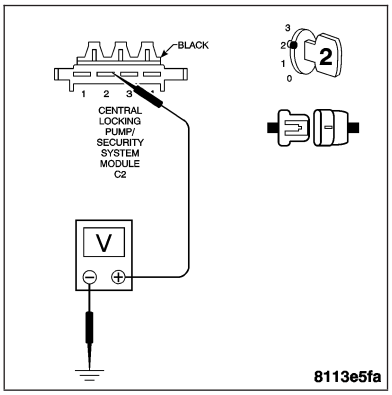

Note: Check connector - Clean/repair as necessary.

Turn the ignition on.

Measure the voltage of the Fused B(+) circuit at the CLP/SSM harness connector.

Is the voltage above 10 volts?

Yes >> Go to 3

No >> Repair the CLP/SSM Fused B(+) circuit for an open.
Perform BODY VERIFICATION TEST.

*REAR WINDOW DEFOGGER INOPERATIVE — CONTINUED

3. MEASURE REAR WINDOW DEFOGGER GRID VOLTAGE

Turn the ignition off.

Disconnect the Rear Window Defogger Grid harness connector terminal 1.

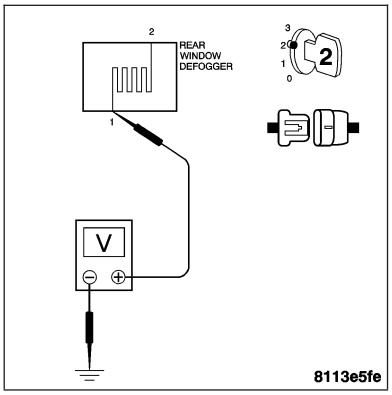

Note: Check connector - Clean/repair as necessary.
Reconnect the CLP/SSM harness connector.

Turn the ignition on.

Activate the Rear Window Defogger.

Measure the voltage at the Rear Window Defogger Grid harness connector terminal 1.

Is the voltage above 10 volts?

Yes >> Repair the Rear Window Defogger Ground circuit for an open.
Perform BODY VERIFICATION TEST.

No >> Go to 4

4. MEASURE REAR WINDOW DEFOGGER SUPPLY CIRCUIT VOLTAGE

Turn the ignition off.

Disconnect the Rear Window Defogger Grid harness connector terminal 2.

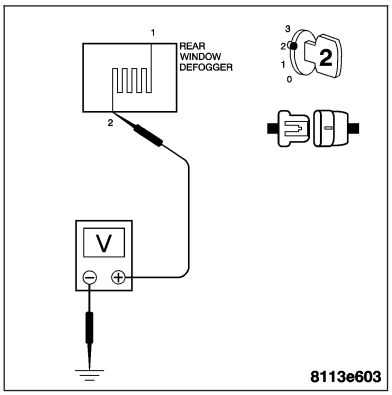

Note: Check connector - Clean/repair as necessary.
Turn the ignition on.

Activate the Rear Window Defogger.

Measure the voltage at the Rear Window Defogger Grid harness connector terminal 2.

Is the voltage above 10 volts?

Yes >> Repair or replace the Rear Window Defogger Grid. **Refer to Page 8G-13**.
Perform BODY VERIFICATION TEST.

No >> Go to 5

5. MEASURE REAR WINDOW DEFOGGER SUPPLY CIRCUIT RESISTANCE

Turn the ignition off.

Disconnect the CLP/SSM harness connector.

Measure the resistance of the Rear Window Defogger Grid Supply circuit from the CLP/SSM harness connector to the Rear Window Defogger Grid harness connector terminal 2.

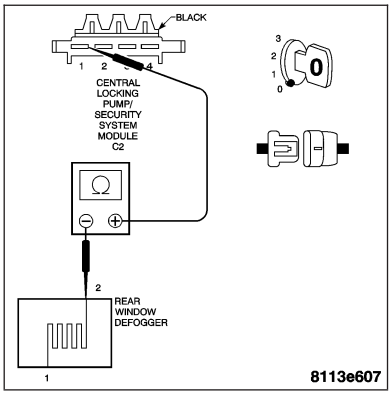

Is the resistance below 5.0 ohms?

Yes >> Replace the Central Locking Pump/Security System Module. **Refer to Page 8Q-48**.
Perform BODY VERIFICATION TEST.

No >> Repair the Rear Window Defogger Grid Supply circuit for an open.
Perform BODY VERIFICATION TEST.

BODY VERIFICATION TEST

1.

Turn the ignition off.

Disconnect all jumper wires and reconnect all previously disconnected components and connectors.

Note: If the SKREEM or the PCM was replaced, refer to the service information for proper programming procedures.

If the Body Control Module was replaced, turn the ignition on for 15 seconds (to allow the new BCM to learn VIN) or engine may not start.

Program all RKE transmitters and other options as necessary.

With the DRB III®, erase all Diagnostic Trouble Codes (DTCs) from ALL modules. Start the engine and allow it to run for 2 minutes. Operate all functions of the system that caused the original complaint.

Ensure that all accessories are turned off and the battery is fully charged.

Turn the ignition off and wait 5 seconds. Turn the ignition on and using the DRB III®, read DTCs from ALL modules.

Are any DTCs present or is the original complaint still present?

Are any DTCs present?

YES >> Repair is not complete, refer to appropriate symptom.

NO >> Repair is complete.

SCHEMATICS AND DIAGRAMS

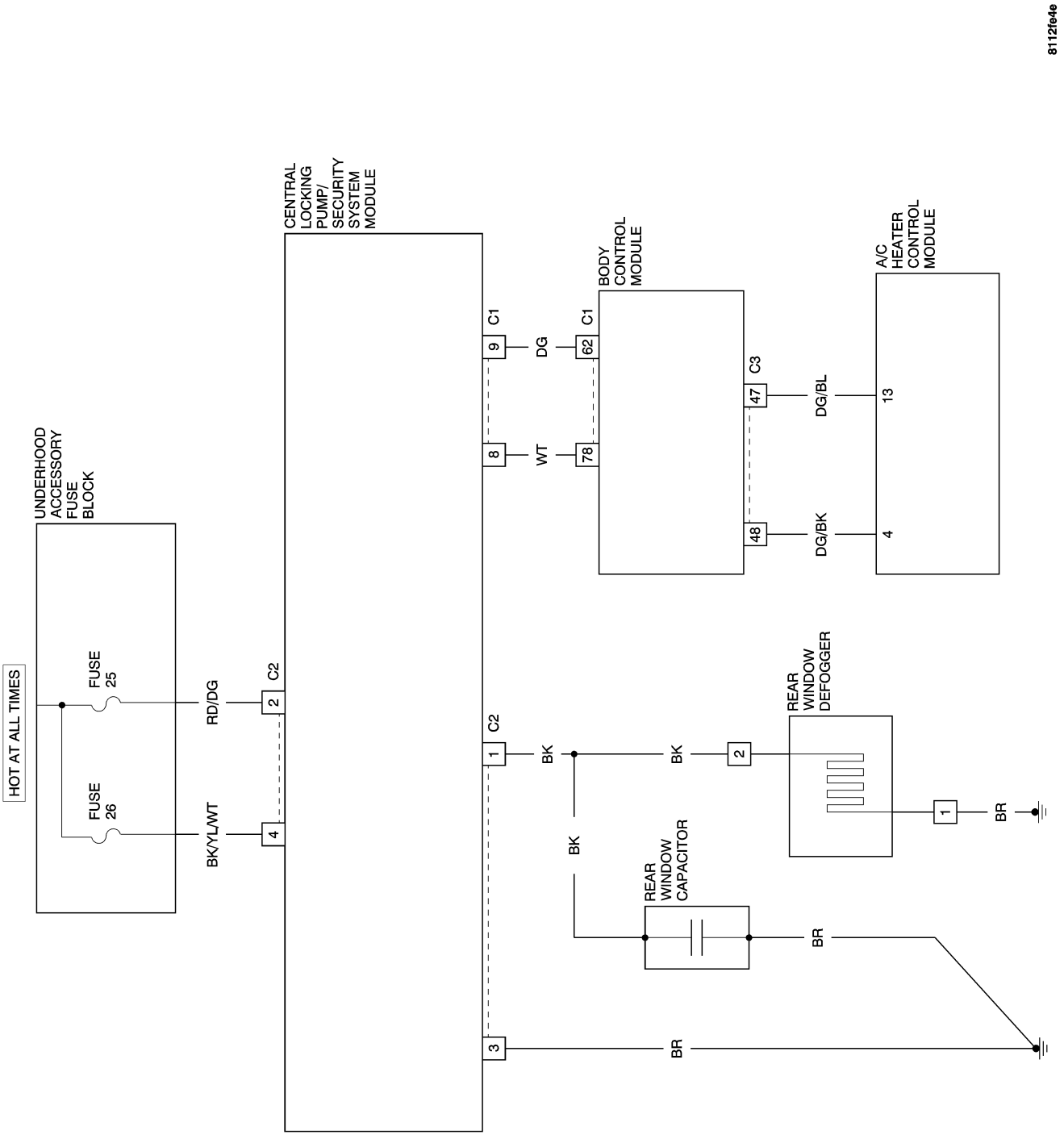

REAR WINDOW DEFOGGER CIRCUIT DIAGRAM

HEATED GLASS - SERVICE INFORMATION

TABLE OF CONTENTS

page

HEATED GLASS - SERVICE INFORMATION
DESCRIPTION 10
OPERATION 11
DIAGNOSIS AND TESTING - REAR WINDOW DEFOGGER SYSTEM 11
REAR WINDOW DEFOGGER SWITCH
REMOVAL 12
INSTALLATION 12
REAR WINDOW DEFOGGER GRID
DIAGNOSIS AND TESTING - REAR WINDOW DEFOGGER GRID 12
STANDARD PROCEDURE - REAR GLASS HEATING GRID REPAIR 13

HEATED GLASS - SERVICE INFORMATION

DESCRIPTION

Electric rear window defogger is standard equipment. A push button rear window defogger switch (2) located in the center console turns the system ON and is illuminated with instrumentation lighting for easy night time use. An LED (1) in the push button switch illuminates when the rear window defogger is working. When energized, a grid on the inside of the liftgate window heats up to help clear the outside surface of ice, snow or fog.

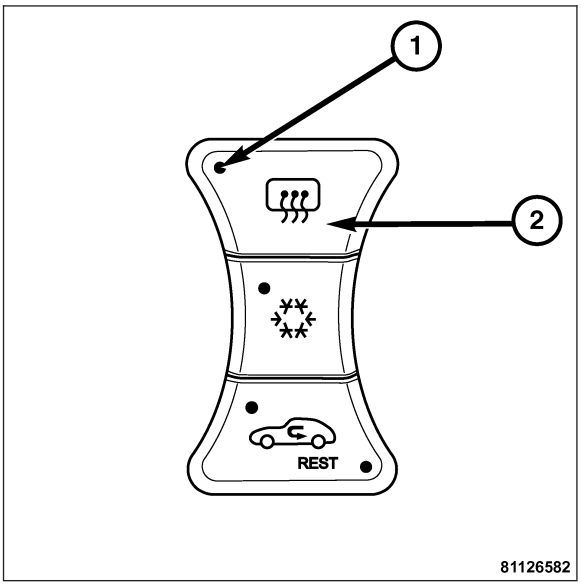

OPERATION

When the rear window defogger switch is pressed with the ignition switch turned to the ON/RUN position, electrical current from fuses 25 and 26 in the Underhood Accessory Fuse Block is applied to a series of horizontal silver-ceramic grid lines (1) through the two vertical bus bars (2) on the glass inside surface. When the circuit is operating, the grid lines provide heat in the form of resistance. The heat is transferred to the outside surface to clear fog or snow. The grid lines comprise a parallel electrical circuit and are bonded to the glass permanently. Both the horizontal grid lines (1) and the vertical bus bars (2) are highly resistant to abrasion. However, it is possible for an open circuit to occur in an individual grid line resulting in no current flow. Care should be taken when cleaning the glass or removing foreign materials, decals or stickers. Normal glass cleaning solvents or hot water is recommended for cleaning. The grid lines and bus bars are repairable if they become damaged. For complete heated grid line and bus bar repair instructions see rear window defogger grid standard procedure in this section. **Refer to Page 8G-13**.

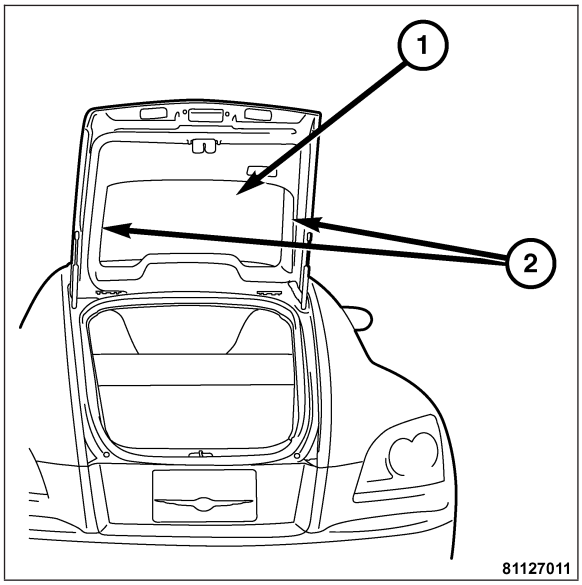

DIAGNOSIS AND TESTING - REAR WINDOW DEFOGGER SYSTEM

For complete heated glass electrical diagnosis with schematics and diagrams, see the appropriate heated glass electrical diagnostics in this section.

The operation of the electrically heated rear window defogger system can be confirmed in the following manner:

1. Turn the ignition switch to the ON/RUN position.
2. Press the defogger switch to the ON position. The rear window defogger operation can be checked by feeling the rear window glass. A distinct difference in temperature between the grid lines and the adjacent clear glass can be detected within three to four minutes of operation.
3. Using a 12-volt DC voltmeter, contact the rear glass heating grid terminal (right side) with the negative lead and the opposite terminal (left side) with the positive lead. The voltmeter should read battery voltage.

The above checks will confirm system operation. Illumination of the defogger switch indicator lamp means that there is electrical current available at the A/C - Heater Control Module but does not confirm that the electrical current is reaching the rear glass heating grid lines.

If the defogger system does not operate, the problem should be isolated in the following manner:

1. Confirm that the ignition switch is in the ON/RUN position.
2. Ensure that the rear glass heating grid feed and ground wires are connected to the glass. Confirm that the ground wire has continuity to ground.
3. Check fuses 25 and 26 in the Underhood Accessory Fuse Block. The fuses must be tight in their receptacles and all electrical connections must be clean and secure.

When the above steps have been completed and the rear glass heating grid is still inoperative, one or more of the following is faulty:

- Defogger switch
- A/C - Heater Control Module circuitry
- Rear window grid lines (all grid lines would have to be broken or one of the feed wires disconnected for the entire system to be inoperative)

REAR WINDOW DEFOGGER SWITCH

REMOVAL

WARNING: REFER TO RESTRAINTS BEFORE ATTEMPTING ANY DOOR, SEAT, STEERING WHEEL, STEERING COLUMN, OR INSTRUMENT PANEL COMPONENT DIAGNOSIS OR SERVICE. FAILURE TO TAKE THE PROPER PRECAUTIONS COULD RESULT IN ACCIDENTAL AIRBAG DEPLOYMENT AND POSSIBLE PERSONAL INJURY.

The rear window defogger switch (2) is an integrated part of the A/C Heater Control Module (3). For complete rear window defogger switch removal procedures, see heater control removal in the HVAC section. **Refer to Page 24-79**.

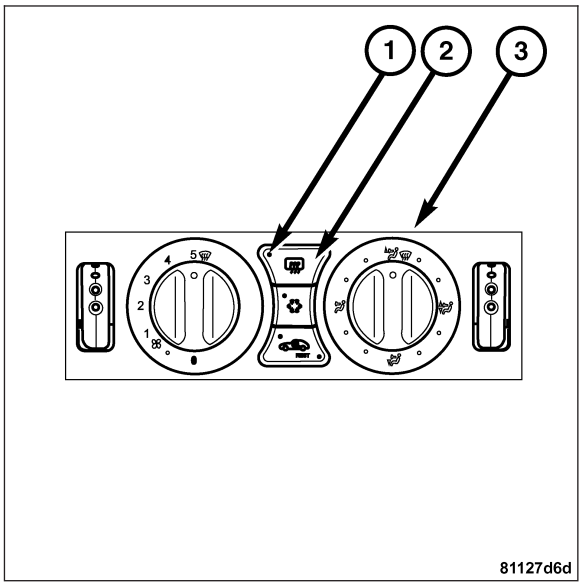

INSTALLATION

The rear window defogger switch is an integrated part of the A/C Heater Control Module. For complete rear window defogger switch installation procedures, heater control installation in the Heating and Air Conditioning section of this manual **Refer to Page 24-81**.

REAR WINDOW DEFOGGER GRID

DIAGNOSIS AND TESTING - REAR WINDOW DEFOGGER GRID

For complete rear window defogger grid electrical diagnosis with schematics and diagrams, see heated glass electrical diagnostics in this section. **Refer to Page 8G-9**.

To detect breaks in the grid lines, the following procedure is required:

1. Turn the ignition switch to the ON/RUN position. Press the defogger switch to the ON position. The indicator lamp in the defogger switch should light. If OK, go to step 2. If not OK, see heated glass electrical diagnostics in this section.

2. Using a 12-volt DC voltmeter, contact a good body ground point with the negative lead. With the positive lead, contact the vertical bus bar (1) on the left side of the vehicle. The voltmeter should read battery voltage. If OK, go to step 2. If not OK, repair the open circuit to the A/C - Heater Control Module as required.
3. With the negative lead of the voltmeter, contact the vertical bus bar (2) on the right side of the vehicle. The voltage reading should not change. If OK, go to step 3. If not OK, repair the circuit to ground as required.
4. Connect the negative lead of the voltmeter to the right side bus bar (2) and touch each grid line (5) at its midpoint (4) with the positive lead. A reading of approximately six volts indicates a line is good. A reading of zero volts indicates a break in the grid line (5) between the midpoint (4) of the grid line and the left side bus bar (1). A reading of ten to fourteen volts indicates a break between the midpoint (4) of the grid line and the right side bus bar (2). Move the positive lead on the grid line (5) towards the break and the voltage reading will change as soon as the break is crossed.

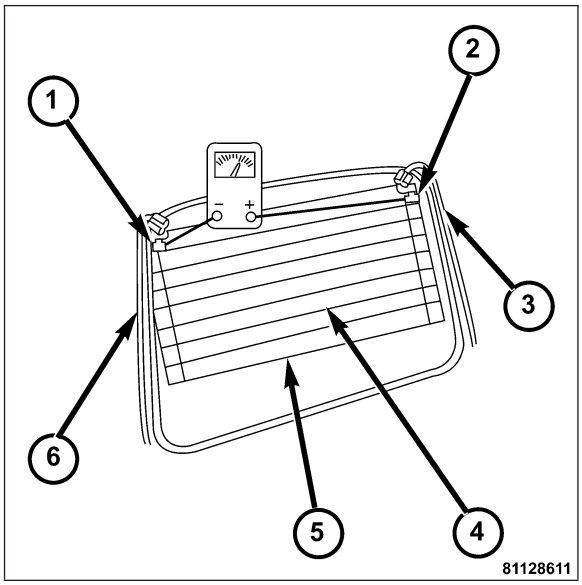

STANDARD PROCEDURE - REAR GLASS HEATING GRID REPAIR

Repair of the rear glass heating grid lines, bus bars, terminals or pigtail wires can be accomplished using a Mopar® Rear Window Defogger Repair Kit (Part Number 4267922) or equivalent.

WARNING: MATERIALS CONTAINED IN THE REPAIR KIT MAY CAUSE SKIN OR EYE IRRITATION. THE KIT CONTAINS EPOXY RESIN AND AMINE TYPE HARDENER, WHICH ARE HARMFUL IF SWALLOWED. AVOID CONTACT WITH THE SKIN AND EYES. FOR SKIN CONTACT, WASH THE AFFECTED AREAS WITH SOAP AND WATER. FOR CONTACT WITH THE EYES, FLUSH WITH PLENTY OF WATER. DO NOT TAKE INTERNALLY. IF TAKEN INTERNALLY, INDUCE VOMITING AND CALL A PHYSICIAN IMMEDIATELY. USE WITH ADEQUATE VENTILATION. DO NOT USE NEAR FIRE OR FLAME. CONTAINS FLAMMABLE SOLVENTS. KEEP OUT OF THE REACH OF CHILDREN.

1. Mask the repair area (3) so that the conductive epoxy can be applied neatly. Extend the epoxy application onto the grid line (2) or the bus bar on each side of the break (1).

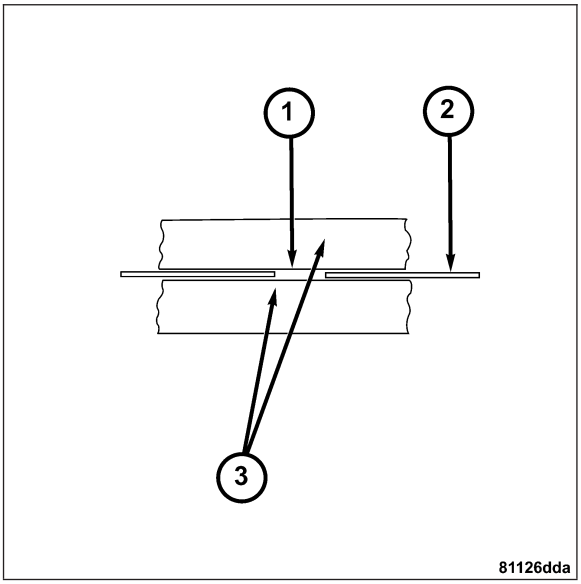

2. Follow the instructions in the repair kit for preparing the damaged area.
3. Remove the package separator clamp and mix the two conductive epoxy components thoroughly within the packaging. Fold the package in half and cut the center corner to dispense the epoxy.

4. For grid line repairs, mask the area to be repaired with masking tape or a template.
5. Apply the epoxy through the slit in the masking tape or template. Overlap both ends of the break by at least 19 millimeters (0.75 inch).
6. For a terminal or pigtail wire replacement, mask the adjacent areas so the epoxy can be extended onto the adjacent grid line as well as the bus bar. Apply a thin layer of epoxy to the area where the terminal or pigtail wire was fastened and onto the adjacent grid line.
7. Apply a thin layer of conductive epoxy to the terminal or bare wire end of the pigtail and place it in the proper location on the bus bar. To prevent the terminal or pigtail wire from moving while the epoxy is curing, it must be wedged or clamped.
8. Carefully remove the masking tape or template.

CAUTION: Do not allow the glass surface to exceed 204° C (400° F) or the glass may fracture.

9. Allow the epoxy to cure 24 hours at room temperature or use a heat gun that will not over heat the glass. Hold the heat gun approximately 25.4 centimeters (10 inches) from the repair.
10. After the conductive epoxy is properly cured, remove the wedge or clamp from the terminal or pigtail wire. Do not attach the wire harness connectors until the curing process is complete.
11. Check the operation of the rear window defogger glass heating grid.

HEATED MIRRORS - ELECTRICAL DIAGNOSTICS

TABLE OF CONTENTS

page

HEATED MIRRORS - ELECTRICAL DIAGNOSTICS
DIAGNOSIS AND TESTING
*LEFT HEATED MIRROR INOPERATIVE 16
*RIGHT HEATED MIRROR INOPERATIVE . . . 18
BODY VERIFICATION TEST 20
SCHEMATICS AND DIAGRAMS 21

HEATED MIRRORS - ELECTRICAL DIAGNOSTICS

DIAGNOSIS AND TESTING

*LEFT HEATED MIRROR INOPERATIVE

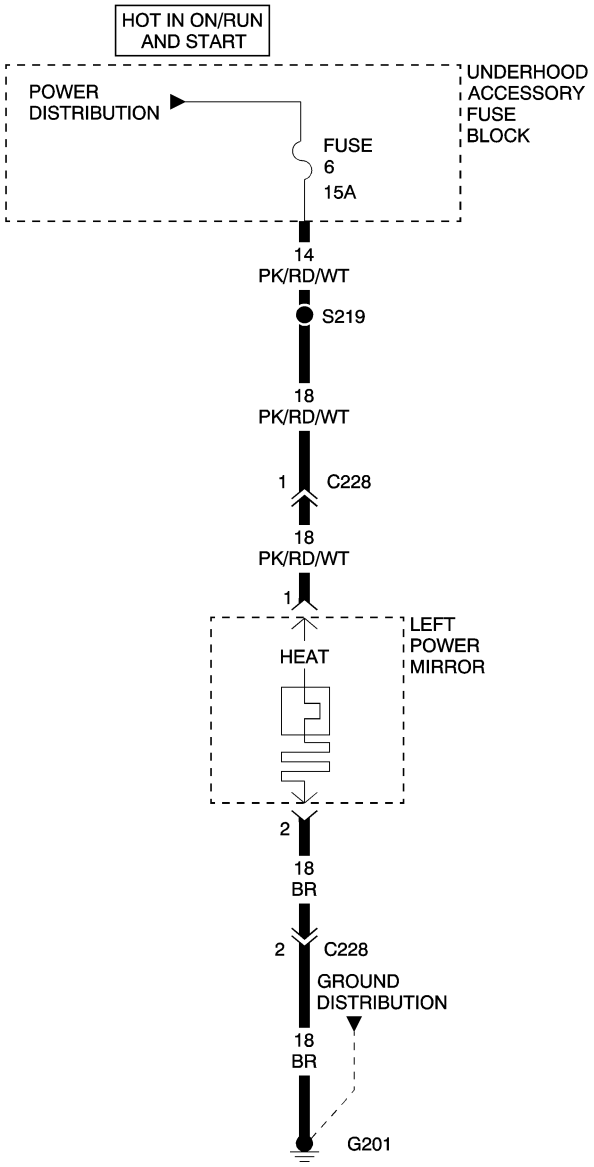

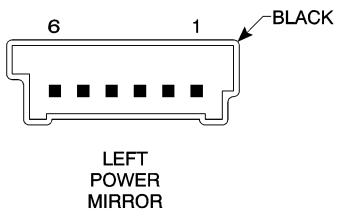

8113ded8

*LEFT HEATED MIRROR INOPERATIVE — CONTINUED

POSSIBLE CAUSES
LEFT MIRROR HEATER ELEMENT FUSED B(+) CIRCUIT OPEN
LEFT MIRROR HEATER ELEMENT GROUND CIRCUIT OPEN
LEFT MIRROR HEATER ELEMENT

For a complete Heated Mirrors Circuit Diagram **Refer to Page 8G-21**.

Diagnostic Test

1. MEASURE LEFT MIRROR HEATER ELEMENT FUSED B(+) CIRCUIT VOLTAGE

Turn the ignition off.

Disconnect the Left Power Mirror harness connector.

Note: Check connector - Clean/repair as necessary.

Turn the ignition on.

Measure the voltage of the Fused B(+) circuit at the Left Power Mirror harness connector.

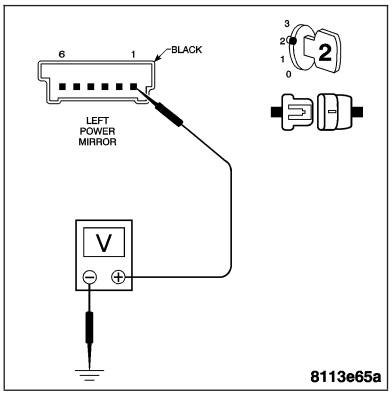

Is the voltage above 10 volts?

Yes >> Go to 2

No >> Repair the Left Mirror Heater Element Fused B(+) circuit for an open.
Perform BODY VERIFICATION TEST.

2. MEASURE LEFT MIRROR HEATER ELEMENT GROUND CIRCUIT RESISTANCE

Turn the ignition off.

Measure the resistance between ground and the Left Mirror Heater Element Ground circuit.

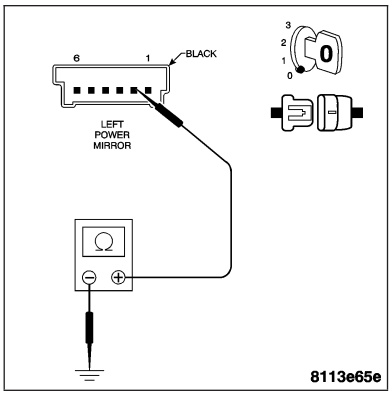

Is the resistance below 5.0 ohms?

Yes >> Replace the Left Power Mirror. **Refer to Page 8N-72**.
Perform BODY VERIFICATION TEST.

No >> Repair the Left Mirror Heater Element Ground circuit for an open.
Perform BODY VERIFICATION TEST.

*RIGHT HEATED MIRROR INOPERATIVE

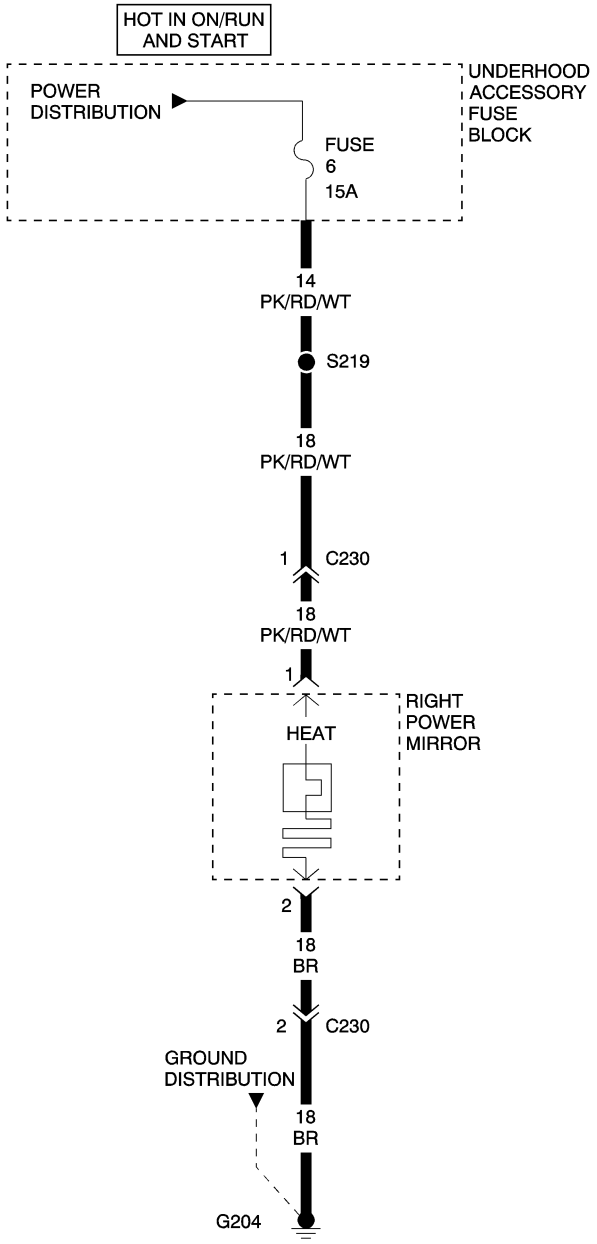

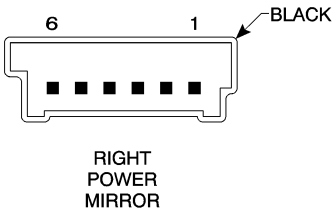

8113df19

*RIGHT HEATED MIRROR INOPERATIVE — CONTINUED

POSSIBLE CAUSES
RIGHT MIRROR HEATER ELEMENT FUSED B(+) CIRCUIT OPEN
RIGHT MIRROR HEATER ELEMENT GROUND CIRCUIT OPEN
RIGHT MIRROR HEATER ELEMENT

For a complete Heated Mirrors Circuit Diagram **Refer to Page 8G-21**.

Diagnostic Test

1. MEASURE RIGHT MIRROR HEATER ELEMENT FUSED B(+) CIRCUIT VOLTAGE

Turn the ignition off.

Disconnect the Right Power Mirror harness connector.

Note: Check connector - Clean/repair as necessary.

Turn the ignition on.

Measure the voltage of the Fused B(+) circuit at the Right Power Mirror harness connector.

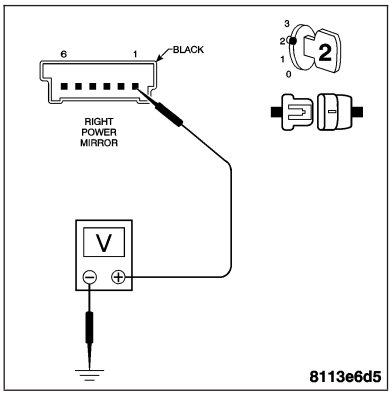

Is the voltage above 10 volts?

Yes >> Go to 2

No >> Repair the Right Mirror Heater Element Fused B(+) circuit for an open.
Perform BODY VERIFICATION TEST.

2. MEASURE RIGHT MIRROR HEATER ELEMENT GROUND CIRCUIT RESISTANCE

Turn the ignition off.

Measure the resistance between ground and the Right Mirror Heater Element Ground circuit.

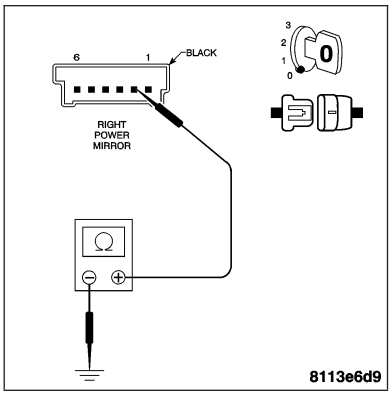

Is the resistance below 5.0 ohms?

Yes >> Replace the Right Power Mirror. **Refer to Page 8N-72**.
Perform BODY VERIFICATION TEST.

No >> Repair the Right Mirror Heater Element Ground circuit for an open.
Perform BODY VERIFICATION TEST.

BODY VERIFICATION TEST

1.

Turn the ignition off.

Disconnect all jumper wires and reconnect all previously disconnected components and connectors.

Note: If the SKREEM or the PCM was replaced, refer to the service information for proper programming procedures.

If the Body Control Module was replaced, turn the ignition on for 15 seconds (to allow the new BCM to learn VIN) or engine may not start.

Program all RKE transmitters and other options as necessary.

With the DRB III®, erase all Diagnostic Trouble Codes (DTCs) from ALL modules. Start the engine and allow it to run for 2 minutes. Operate all functions of the system that caused the original complaint.

Ensure that all accessories are turned off and the battery is fully charged.

Turn the ignition off and wait 5 seconds. Turn the ignition on and using the DRB III®, read DTCs from ALL modules.

Are any DTCs present or is the original complaint still present?

Are any DTCs present?

YES >> Repair is not complete, refer to appropriate symptom.

NO >> Repair is complete.

SCHEMATICS AND DIAGRAMS

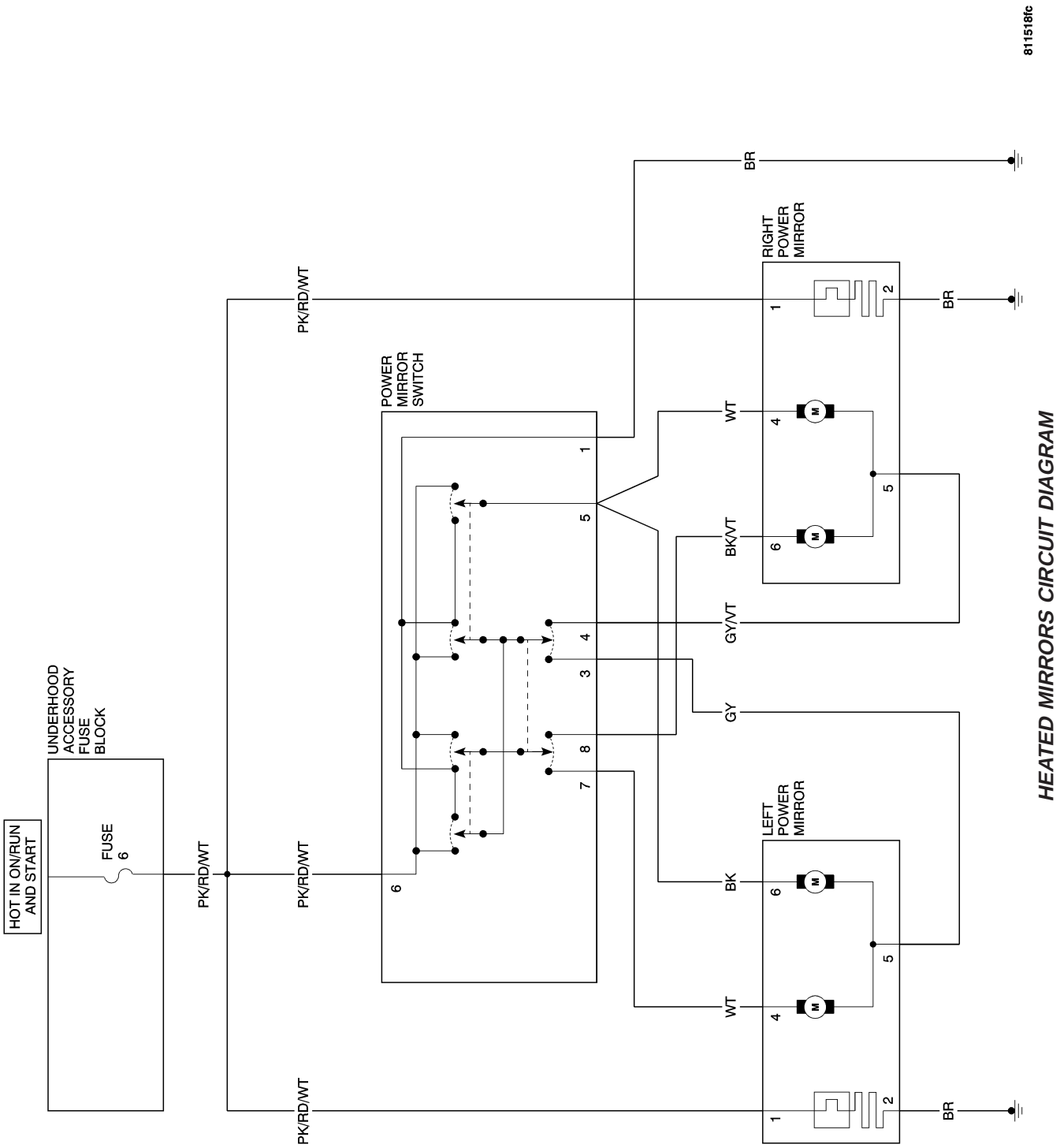

HEATED MIRRORS - SERVICE INFORMATION

TABLE OF CONTENTS

page

HEATED MIRRORS - SERVICE INFORMATION
DESCRIPTION 22
OPERATION 22
DIAGNOSIS AND TESTING 22
HEATED MIRROR GRID
DESCRIPTION 23

HEATED MIRRORS - SERVICE INFORMATION

DESCRIPTION

The exterior mirrors are equipped with heater elements located behind the mirror glass (1) on each sideview mirror. With the ignition switch turned to the ON/RUN or START positions, the sideview mirror heater elements are powered. The heater elements behind each sideview mirror cannot be repaired. If faulty or damaged, the entire sideview mirror assembly must be replaced. For complete sideview mirror removal procedures, see sideview mirror removal in this section. **Refer to Page 8N-72**.

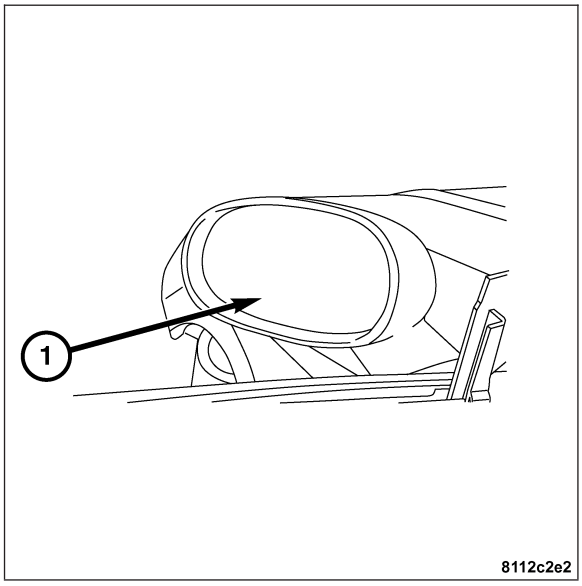

OPERATION

The exterior mirror heater elements receive power through fuse 6 in the Underhood Accessory Fuse Block any time the ignition switch is turned to the ON/RUN or START position.

DIAGNOSIS AND TESTING

The operation of the heated mirror system can be confirmed in the following manner:

- Turn the ignition switch to the ON/RUN position. The heated mirror operation can be checked by feeling the outside rear view mirror glass. A distinct difference in temperature between the unheated and heated mirror glass can be detected within three to four minutes of system activation.

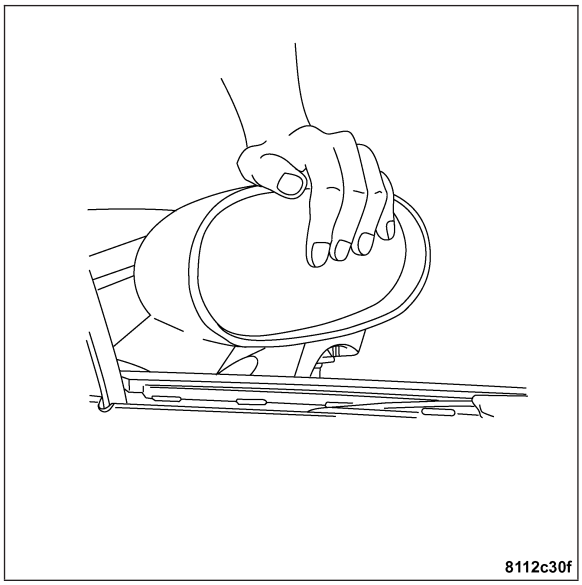

If no difference in temperature can be detected on the side-view mirror glass surface, refer to heated mirror electrical diagnostics in this section.

Note: If the interior dome lamp dims or flickers while a door is opened and the ignition switch is in the ON/RUN position, inspect the door wire harness section that flexes near the door hinge. It is possible to have an intermittent open or short circuit in the mirror heating grid B+ or ground circuits when the door is not in a stationary position.

HEATED MIRROR GRID

DESCRIPTION

WARNING: REFER TO RESTRAINTS BEFORE ATTEMPTING ANY DOOR, SEAT, STEERING WHEEL, STEERING COLUMN, OR INSTRUMENT PANEL COMPONENT DIAGNOSIS OR SERVICE. FAILURE TO TAKE THE PROPER PRECAUTIONS COULD RESULT IN ACCIDENTAL AIRBAG DEPLOYMENT AND POSSIBLE PERSONAL INJURY.

The heated mirror grid is attached to the back of the sideview mirror glass and cannot be adjusted or repaired. If faulty or damaged, the entire sideview mirror assembly must be replaced as a unit. For complete sideview mirror removal procedures, see sideview mirror removal. **Refer to Page 8N-72**.

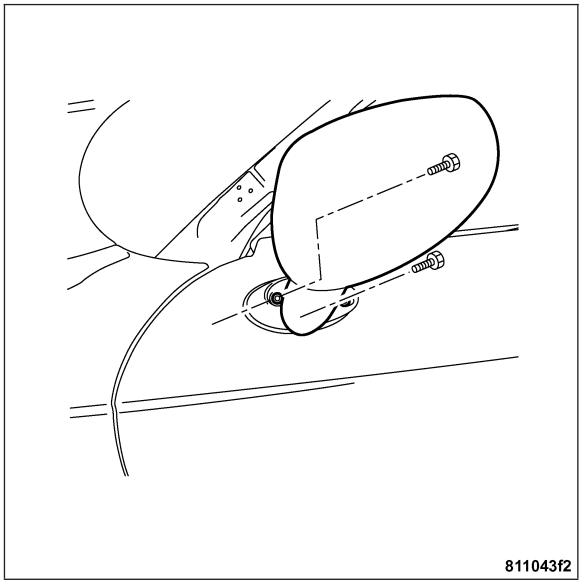

HEATED SEATS - ELECTRICAL DIAGNOSTICS

TABLE OF CONTENTS

page

HEATED SEATS - ELECTRICAL DIAGNOSTICS
DIAGNOSIS AND TESTING
*LEFT HEATED SEAT INOPERATIVE 26
*RIGHT HEATED SEAT INOPERATIVE 29
*BOTH HEATED SEATS INOPERATIVE 32
BODY VERIFICATION TEST 34
SCHEMATICS AND DIAGRAMS 35

HEATED SEATS - ELECTRICAL DIAGNOSTICS

DIAGNOSIS AND TESTING

*LEFT HEATED SEAT INOPERATIVE

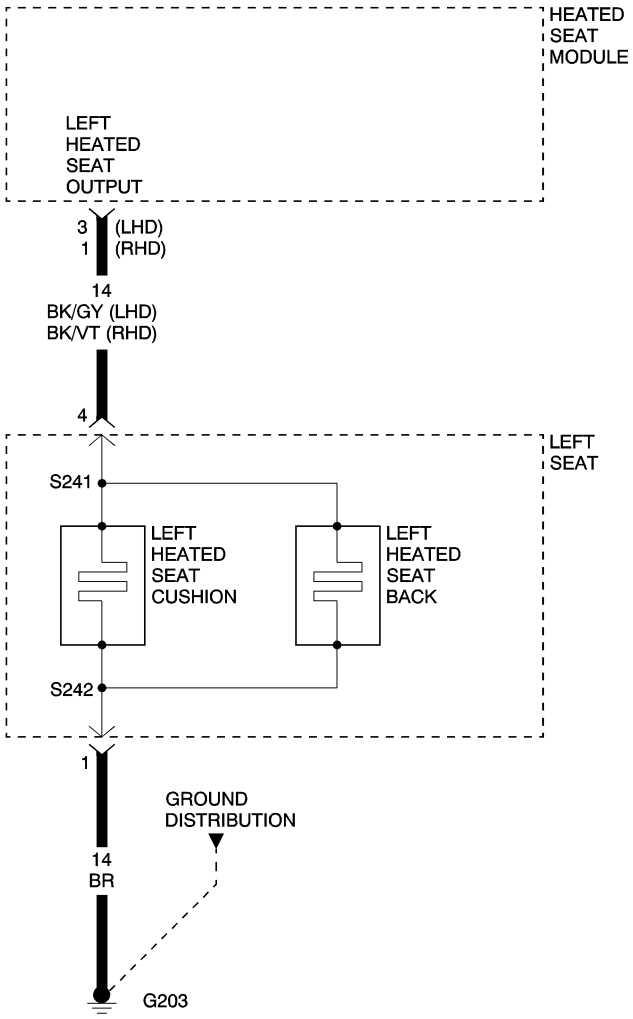

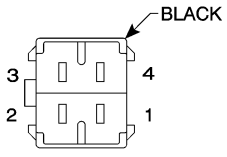

LEFT HEATED SEAT BACK/ HEATED SEAT CUSHION

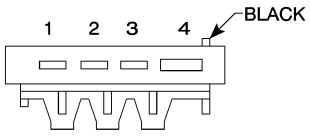

HEATED SEAT MODULE

8113e020

*LEFT HEATED SEAT INOPERATIVE — CONTINUED

POSSIBLE CAUSES
LEFT SEAT BACK/CUSHION HEATER ELEMENT
LEFT HEATED SEAT OUTPUT CIRCUIT OPEN
LEFT HEATED SEAT GROUND CIRCUIT OPEN
HEATED SEAT MODULE

For a complete Heated Seats Circuit Diagram **Refer to Page 8G-35**.

Diagnostic Test

1. TEST THE LEFT HEATED SEAT

Turn the ignition off.
Disconnect the Heated Seat Module harness connector.

Note: Check connector - Clean/repair as necessary.
Connect a fused jumper wire from B(+) to cavity 3 (LHD) of the Heated Seat Module harness connector.

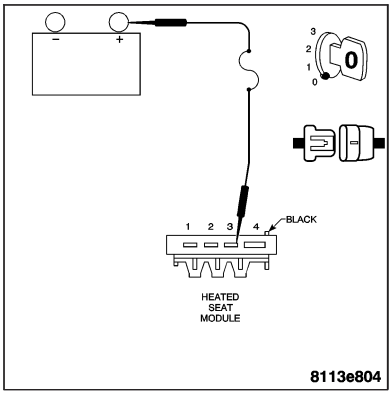

With the jumper wire connected, does the Left Heated Seat warm up?

Yes >> Replace the Heated Seat Module. **Refer to Page 8G-41**.
Perform BODY VERIFICATION TEST.

No >> Go to 2

2. MEASURE LEFT HEATED SEAT OUTPUT CIRCUIT RESISTANCE

Disconnect the Left Heated Seat Back/Heated Seat Cushion harness connector.

Note: Check connector - Clean/repair as necessary.
Measure the resistance of the Left Heated Seat Output circuit from the Heated Seat Module harness connector to the Left Heated Seat Back/ Heated Seat Cushion harness connector.

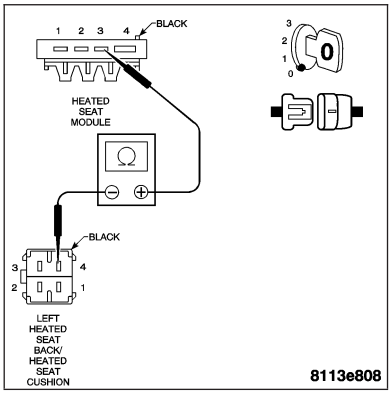

Is the resistance below 5.0 ohms?

Yes >> Go to 3

No >> Repair the Left Heated Seat Output circuit for an open.
Perform BODY VERIFICATION TEST.

*LEFT HEATED SEAT INOPERATIVE — CONTINUED

3. MEASURE LEFT HEATED SEAT GROUND CIRCUIT RESISTANCE

Measure the resistance between ground and the Left Heated Seat Ground circuit.

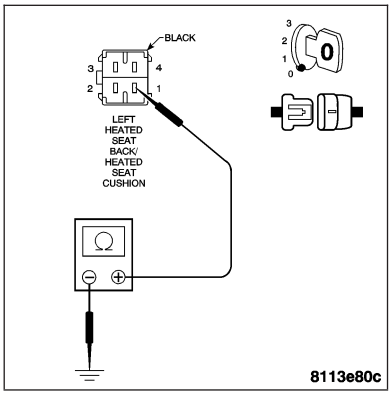

Is the resistance below 5.0 ohms?

Yes >> Replace the Left Heated Seat Back/Heated Seat Cushion Element. **Refer to Page 8G-40**.
Perform BODY VERIFICATION TEST.

No >> Repair the Left Heated Seat Ground circuit for an open.
Perform BODY VERIFICATION TEST.

*RIGHT HEATED SEAT INOPERATIVE

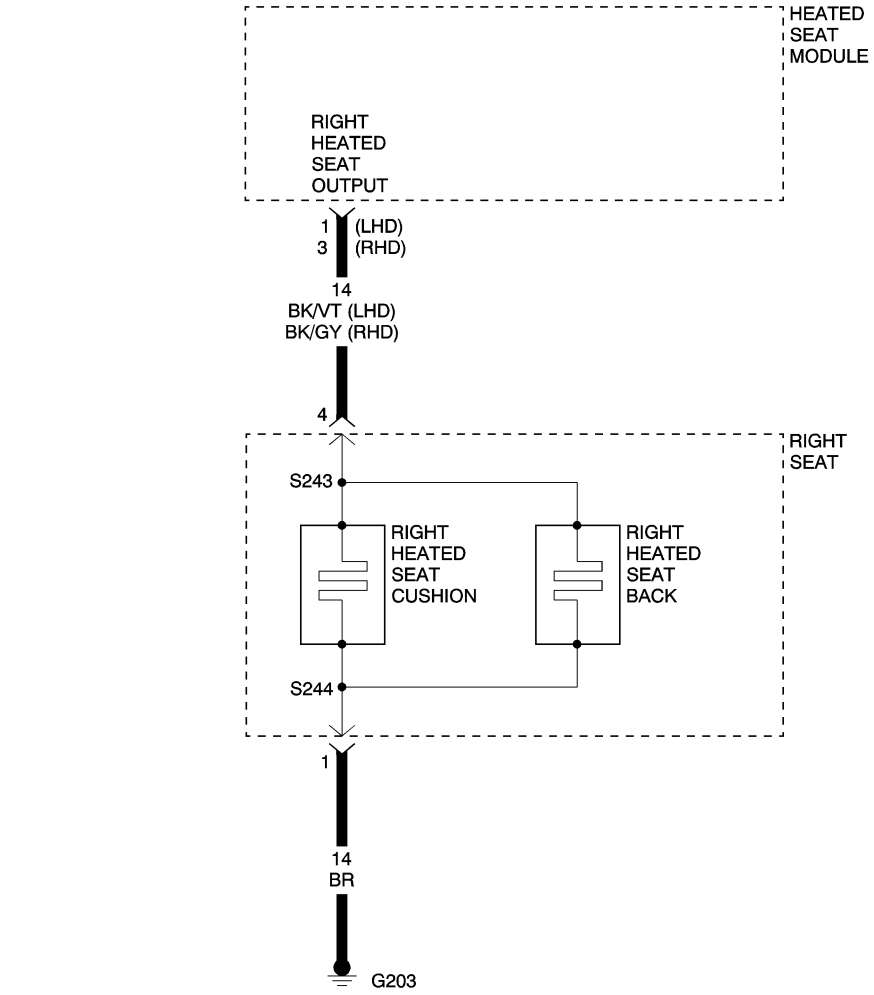

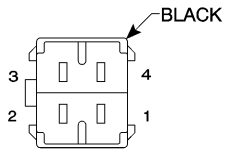

RIGHT HEATED SEAT BACK/ HEATED SEAT CUSHION

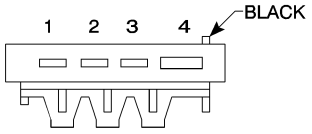

HEATED SEAT MODULE

8113e065

*RIGHT HEATED SEAT INOPERATIVE — CONTINUED

POSSIBLE CAUSES
RIGHT SEAT BACK/CUSHION HEATER ELEMENT
RIGHT HEATED SEAT OUTPUT CIRCUIT OPEN
RIGHT HEATED SEAT GROUND CIRCUIT OPEN
HEATED SEAT MODULE

For a complete Heated Seats Circuit Diagram **Refer to Page 8G-35**.

Diagnostic Test

1. TEST THE RIGHT HEATED SEAT

Turn the ignition off.
Disconnect the Heated Seat Module harness connector.

Note: Check connector - Clean/repair as necessary.
Connect a fused jumper wire from B(+) to cavity 1 (LHD) of the Heated Seat Module harness connector.

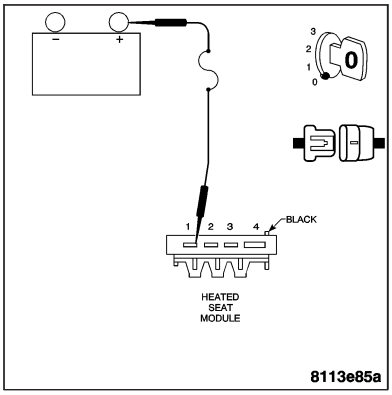

With the jumper wire connected, does the Right Heated Seat warm up?

Yes >> Replace the Heated Seat Module. **Refer to Page 8G-41**. Perform BODY VERIFICATION TEST.

No >> Go to 2

2. MEASURE RIGHT HEATED SEAT OUTPUT CIRCUIT RESISTANCE

Disconnect the Right Heated Seat Back/Heated Seat Cushion harness connector.

Note: Check connector - Clean/repair as necessary.
Measure the resistance of the Right Heated Seat Output circuit between the Heated Seat Module harness connector and the Right Heated Seat Back/Heated Seat Cushion harness connector.

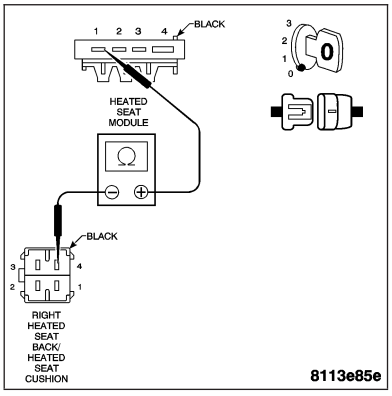

Is the resistance below 5.0 ohms?

Yes >> Go to 3

No >> Repair the Right Heated Seat Output circuit for an open. Perform BODY VERIFICATION TEST.

*RIGHT HEATED SEAT INOPERATIVE — CONTINUED

3. MEASURE RIGHT HEATED SEAT GROUND CIRCUIT RESISTANCE

Measure the resistance between ground and the Right Heated Seat Ground circuit.

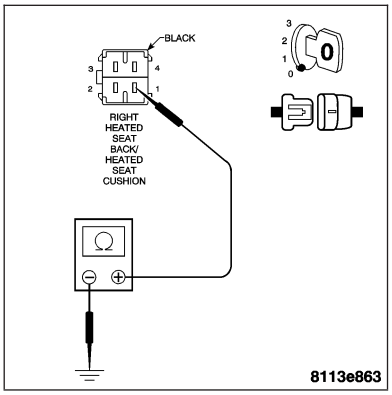

Is the resistance below 5.0 ohms?

Yes >> Replace the Right Heated Seat Back/Heated Seat Cushion Element. **Refer to Page 8G-40**.
Perform BODY VERIFICATION TEST.

No >> Repair the Right Heated Seat Ground circuit for an open.
Perform BODY VERIFICATION TEST.

*BOTH HEATED SEATS INOPERATIVE

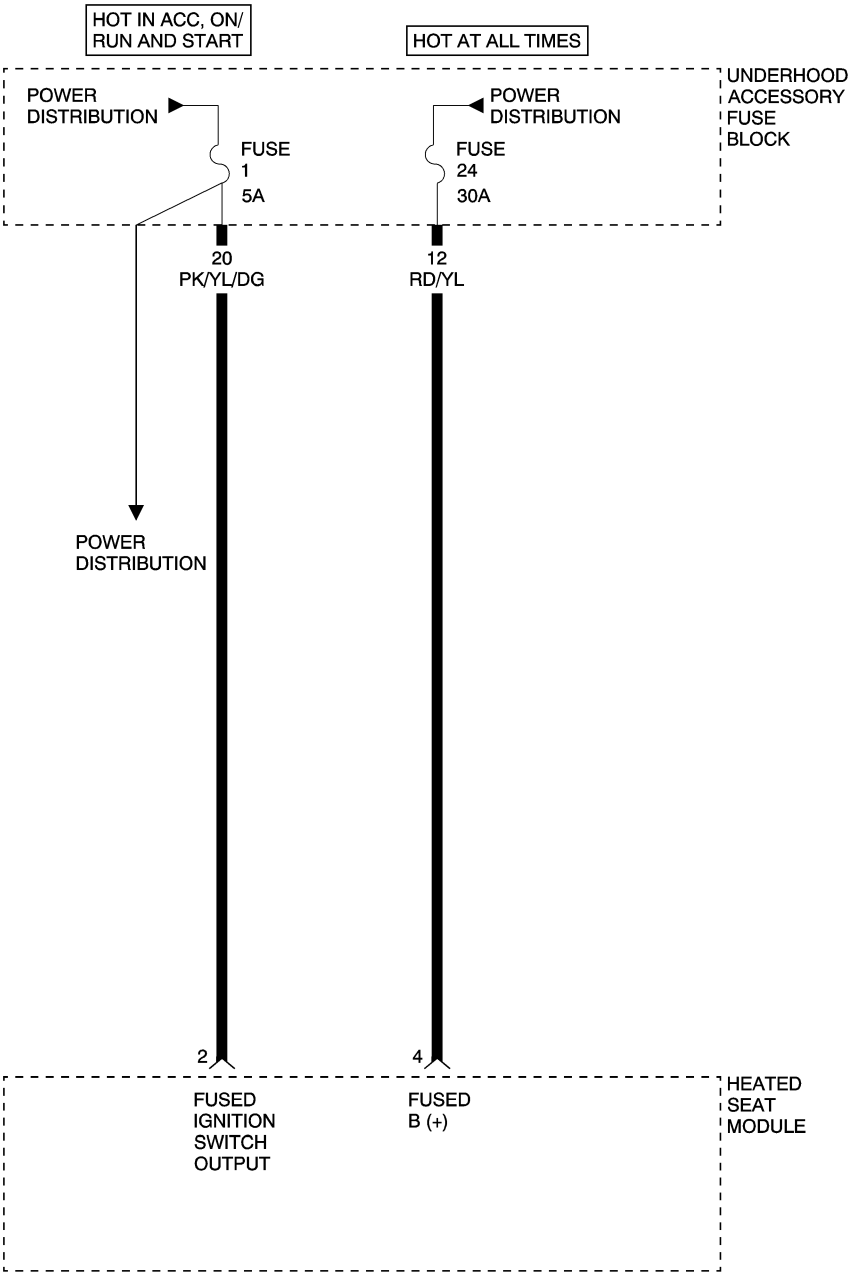

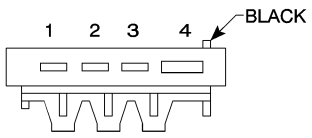

HEATED SEAT MODULE

8113e088

*BOTH HEATED SEATS INOPERATIVE — CONTINUED

POSSIBLE CAUSES
FUSED B(+) CIRCUIT OPEN
FUSED IGNITION SWITCH OUTPUT CIRCUIT OPEN
HEATED SEAT MODULE

For a complete Heated Seats Circuit Diagram **Refer to Page 8G-35**.

Diagnostic Test

1. MEASURE HEATED SEAT MODULE FUSED B(+) CIRCUIT VOLTAGE

Note: Inspect Fuse 1 and Fuse 24 located in the Underhood Accessory Fuse Block. If either fuse is open, repair the cause of the open fuse before continuing.

Turn the ignition off.

Disconnect the Heated Seat Module harness connector.

Note: Check connector - Clean/repair as necessary.
Measure the voltage of the Fused B(+) circuit at the Heated Seat Module harness connector.

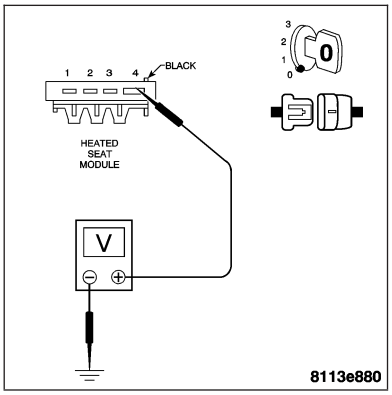

Is the voltage above 10 volts?

Yes >> Go to 2

No >> Repair the Heated Seat Module Fused B(+) circuit for an open.
Perform BODY VERIFICATION TEST.

2. MEASURE HEATED SEAT MODULE FUSED IGNITION SWITCH OUTPUT CIRCUIT VOLTAGE

Turn the ignition on.

Measure the voltage of the Fused Ignition Switch Output circuit at the Heated Seat Module harness connector.

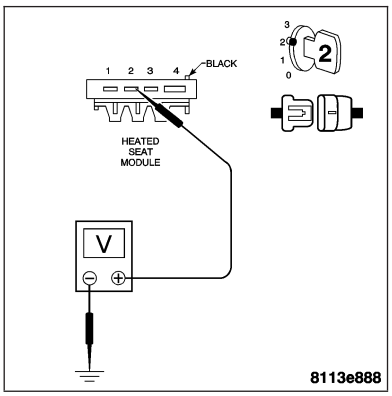

Is the voltage above 10 volts?

Yes >> Replace the Heated Seat Module. **Refer to Page 8G-41**.
Perform BODY VERIFICATION TEST.

No >> Repair the Heated Seat Module Fused Ignition Switch Output circuit for an open.
Perform BODY VERIFICATION TEST.

BODY VERIFICATION TEST

1.

Turn the ignition off.

Disconnect all jumper wires and reconnect all previously disconnected components and connectors.

Note: If the SKREEM or the PCM was replaced, refer to the service information for proper programming procedures.

If the Body Control Module was replaced, turn the ignition on for 15 seconds (to allow the new BCM to learn VIN) or engine may not start.

Program all RKE transmitters and other options as necessary.

With the DRB III®, erase all Diagnostic Trouble Codes (DTCs) from ALL modules. Start the engine and allow it to run for 2 minutes. Operate all functions of the system that caused the original complaint.

Ensure that all accessories are turned off and the battery is fully charged.

Turn the ignition off and wait 5 seconds. Turn the ignition on and using the DRB III®, read DTCs from ALL modules.

Are any DTCs present or is the original complaint still present?

Are any DTCs present?

YES >> Repair is not complete, refer to appropriate symptom.

NO >> Repair is complete.

SCHEMATICS AND DIAGRAMS

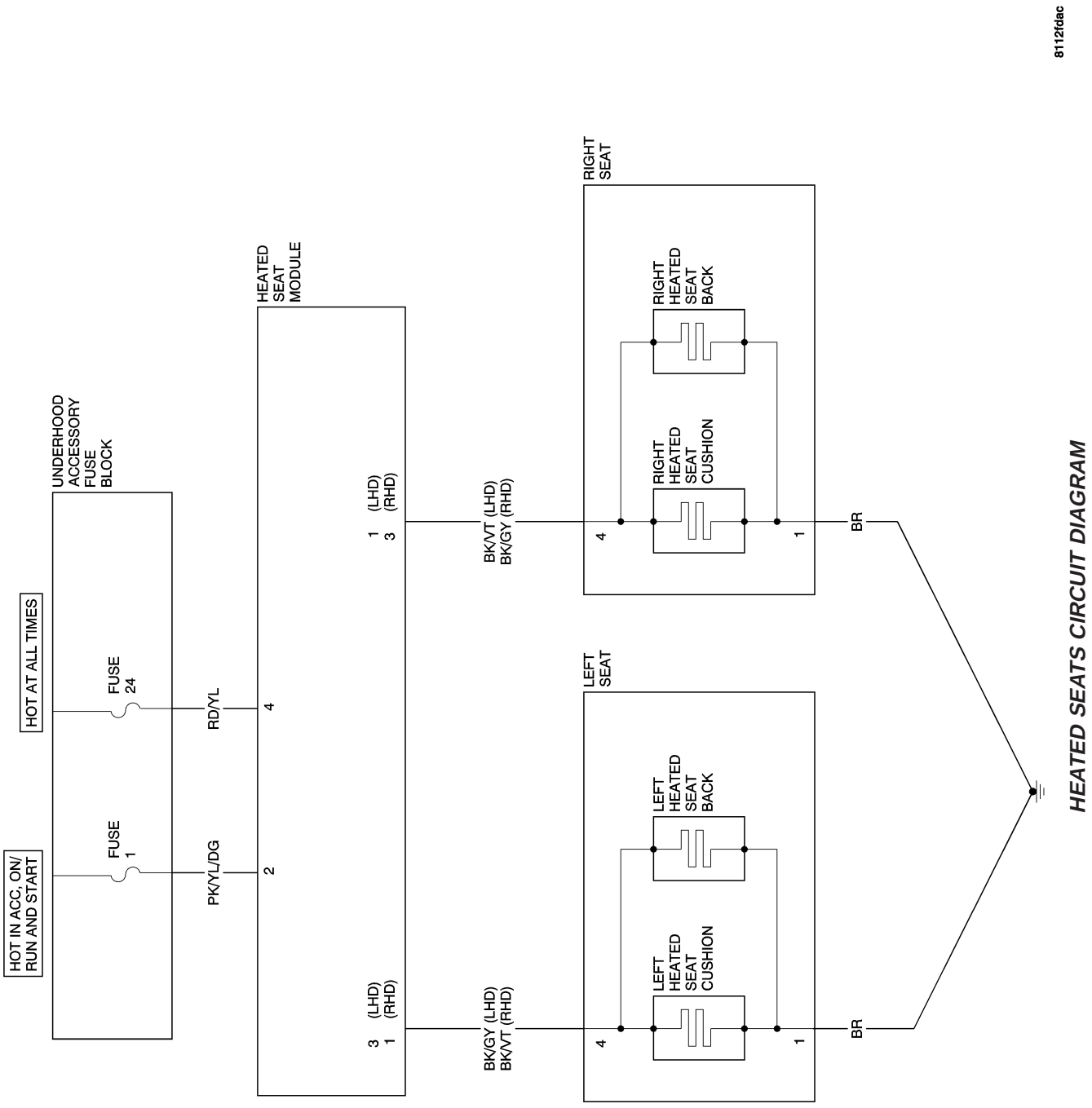

HEATED SEATS - SERVICE INFORMATION

TABLE OF CONTENTS

page

HEATED SEATS - SERVICE INFORMATION
DESCRIPTION 36
OPERATION 36
DIAGNOSIS AND TESTING 37
HEATED SEAT SWITCH
REMOVAL 37
INSTALLATION 38
HEATED SEAT ELEMENT
DESCRIPTION 39
REMOVAL
HEATED SEAT CUSHION ELEMENT 40
REMOVAL - HEATED SEAT BACK ELEMENT . 40
INSTALLATION
HEATED SEAT CUSHION ELEMENT 41
INSTALLATION - HEATED SEAT BACK ELEMENT 41
HEATED SEAT MODULE
REMOVAL 41
INSTALLATION 42

HEATED SEATS - SERVICE INFORMATION

DESCRIPTION

Electrically heated seats are standard equipment on this model. Each seat has a separate control switch (1 and 2) located in the center console and individual heating elements, one set within the seat cushion, and the other within the seat back. The heated seat system features two heating stages. Stage one is for normal heating operation and stage two is for quick heat-up. Each control switch (1 and 2) contains LED lights that indicate the heating stage the switch is in.

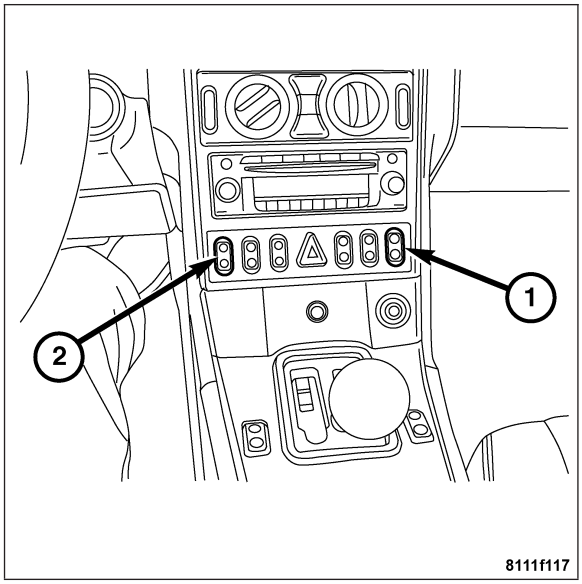

OPERATION

The heated seat system will operate only when the ignition switch is in the ACC or ON/RUN position. The heated seat module receives switched power through fuse 1 and non-switched power through fuse 24 in the Underhood Accessory Fuse Block. Individual illuminated heated seat switches control each seat and are designed as toggle switches that return automatically to their original position after being pressed. The switches and control module for the heated seats are consolidated into a block with other switches to form a switch group. Switch illumination is provided through instrumentation lighting. The heated seat control module controls the differing electrical power consumption requirements of the heated seats in each heating stage and heating time.

The heated seats are switched from heating stage two to heating stage one automatically after 5 minutes and completely switched off after approximately 30 minutes of continuous operation. Heating stage one (1) is indicated by a single LED being illuminated within the switch and heating stage two (2) is indicated by two LEDs being illuminated. If the battery voltage drops below 11 volts, the heated seats are deactivated automatically and are prevented from being activated again until sufficient battery voltage is available. This state is indicated by a flashing LED in the heated seat switch. The heated seat elements are bonded to either the seat cushions or seat covers and are serviced only with their respective assemblies.

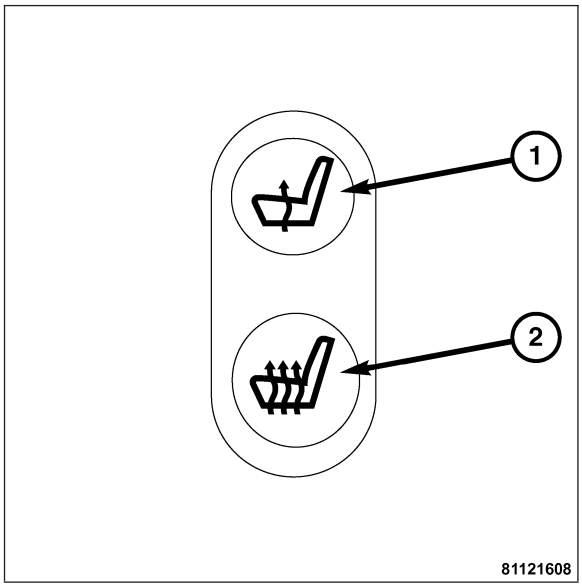

DIAGNOSIS AND TESTING

Before testing the individual components of the heated seat system, ensure the battery is fully charged, then check the following:

- If the heated seat switch LED indicators do not illuminate with the ignition switch in the ACC or ON/RUN position and the switch pressed, check fuse 1 and fuse 24 in the Underhood Accessory Fuse Block. If OK, see heated seat electrical diagnostics in this section. **Refer to Page 8G-35**. If not OK, repair the shorted circuit or component as required and replace the fuse.
- If the heated seat switch LED indicators illuminate but the heating elements do not heat, inspect the heated seat system harness connections for looseness or corrosion. Clean and tighten all the connections to ensure proper circuit continuity and ground paths as necessary, then retest the system. For complete heated seat diagnosis, see heated seat diagnostics in this section. **Refer to Page 8G-35**.

Note: The heated seat system utilizes a unique low voltage cut-off feature. This feature deactivates the power seat system anytime the available system voltage is below 11 volts. Be certain to check the vehicle electrical system for proper operation anytime the heated seat system appears inoperable.

HEATED SEAT SWITCH

REMOVAL

WARNING: REFER TO RESTRAINTS BEFORE ATTEMPTING ANY DOOR, SEAT, STEERING WHEEL, STEERING COLUMN, OR INSTRUMENT PANEL COMPONENT DIAGNOSIS OR SERVICE. FAILURE TO TAKE THE PROPER PRECAUTIONS COULD RESULT IN ACCIDENTAL AIRBAG DEPLOYMENT AND POSSIBLE PERSONAL INJURY.

Note: The heated seat switches and heated seat control module are integral and serviced together.

1. Disconnect the negative battery cable.

2. Remove the center console interior trim panel. **Refer to Page 23-173**.
3. Disconnect the heated seat switch harness connectors (1).
4. Press the locking tabs inward and remove the heated seat switches from the interior trim panel.

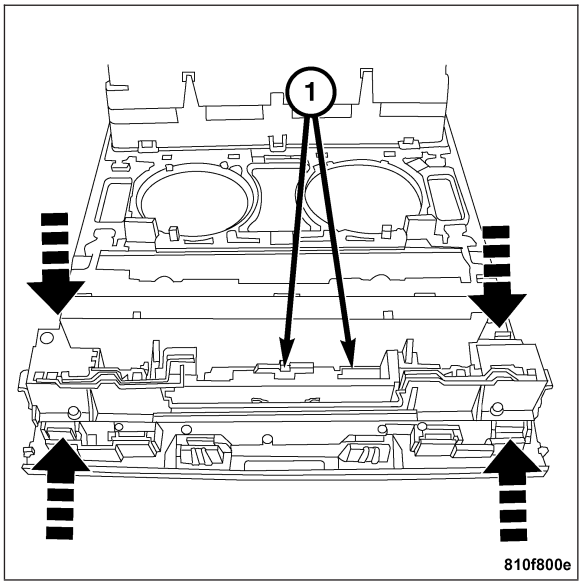

INSTALLATION

1. Align the heated seat switch with the center console interior trim panel and press together until the locking tabs engage fully.
2. Connect the heated seat switch harness connectors.
3. Install the center console interior trim panel. **Refer to Page 23-183**.
4. Connect the negative battery cable.

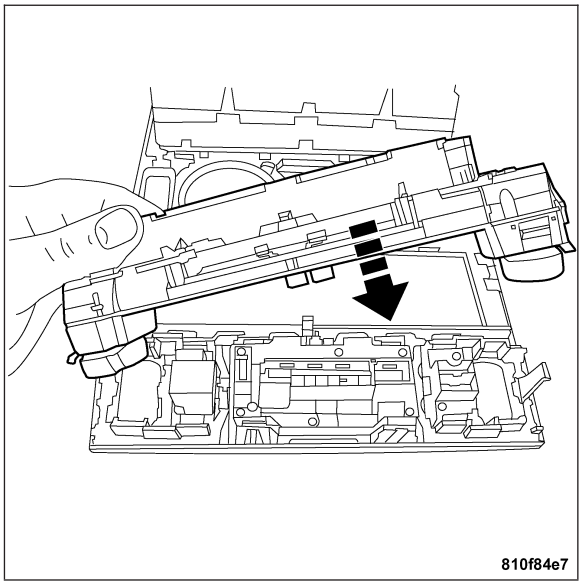

HEATED SEAT ELEMENT

DESCRIPTION

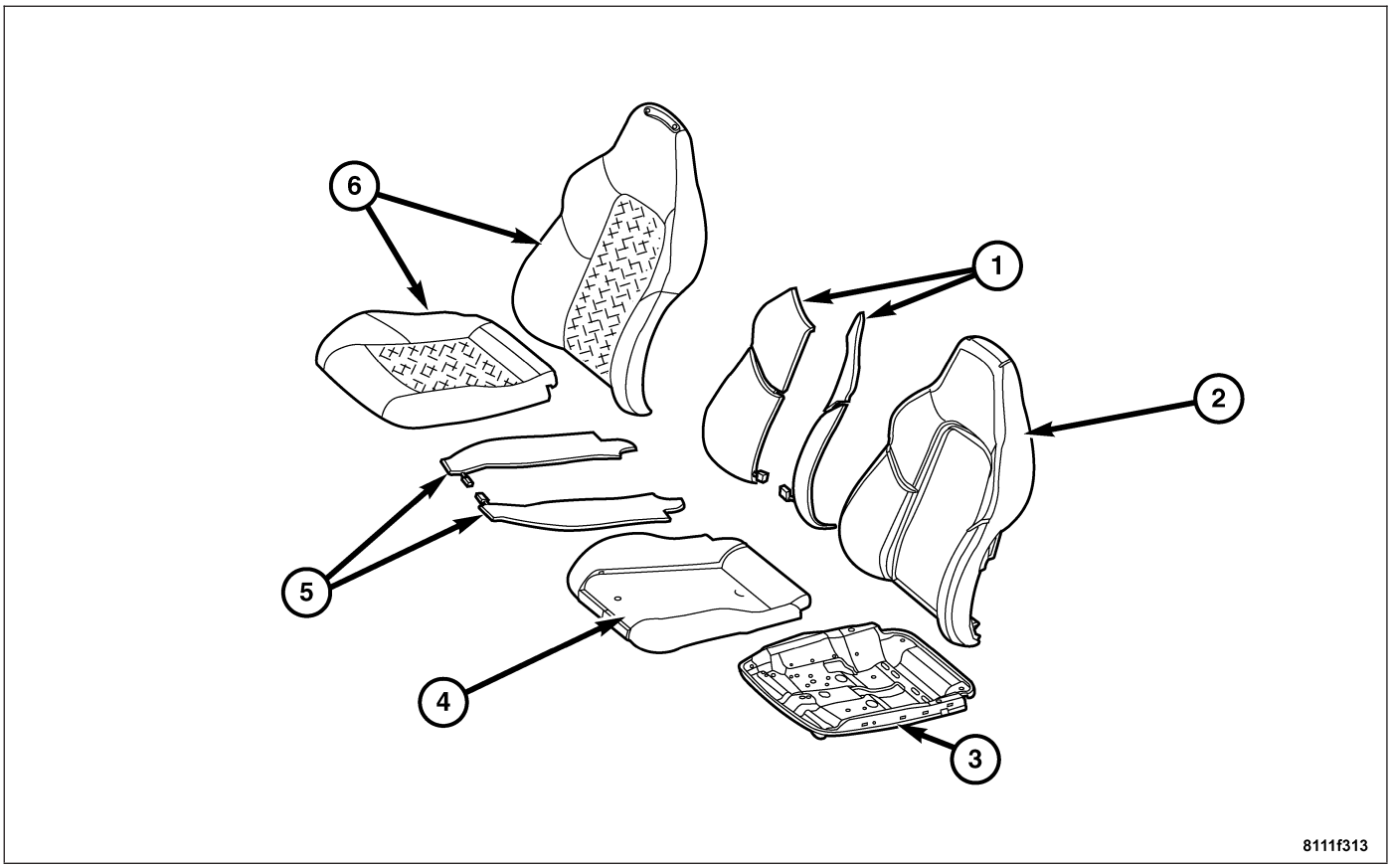

The heated seat elements (1 and 5) are an integrated part of the seat cushion (4) or seat back cushion (2). The heated seat elements are only serviced with the cushion assemblies. The seat covers (6) are serviced separately and are attached to the seat frame (3).

REMOVAL

HEATED SEAT CUSHION ELEMENT

Note: Disconnect the negative battery cable before removing the seat or attempting seat electrical repair.

The heated seat cushion element (2) is part of the seat cushion assembly (3). To access the element, the seat must be removed and the seat cover (1) disassembled. For complete seat cushion removal procedures, see seat cushion removal in the body section. **Refer to Page 23-211**.

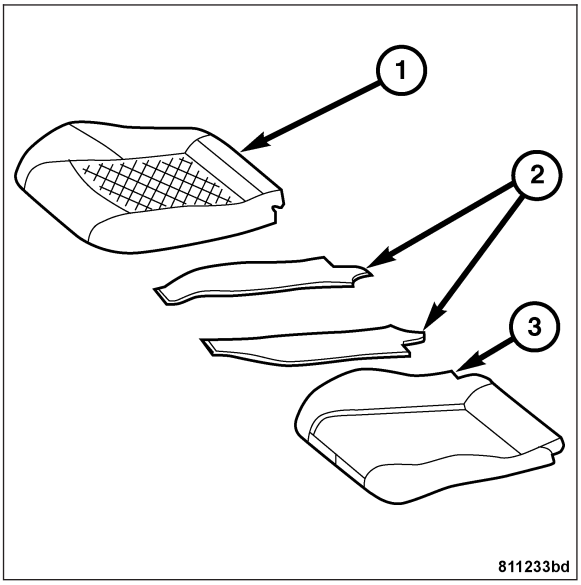

REMOVAL - HEATED SEAT BACK ELEMENT

Note: Disconnect the negative battery cable before removing the seat or attempting seat electrical repair.

The heated seat back element (2) is part of the seat back assembly (3). To access the element the seat must be removed and the seat cover (1) disassembled. For complete seat back removal procedures, see seat back removal in the body section. **Refer to Page 23-204**.

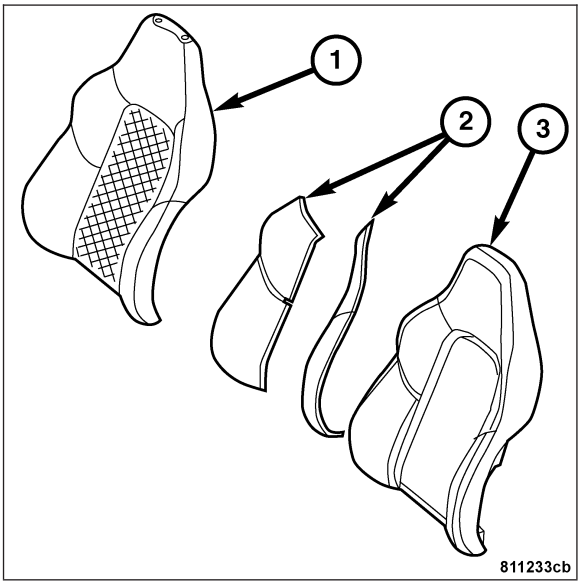

INSTALLATION

HEATED SEAT CUSHION ELEMENT

The heated seat cushion element (2) is an integral part of the seat cushion (3). For complete seat cushion installation procedures, see seat cushion installation in the body section. **Refer to Page 23-213**.

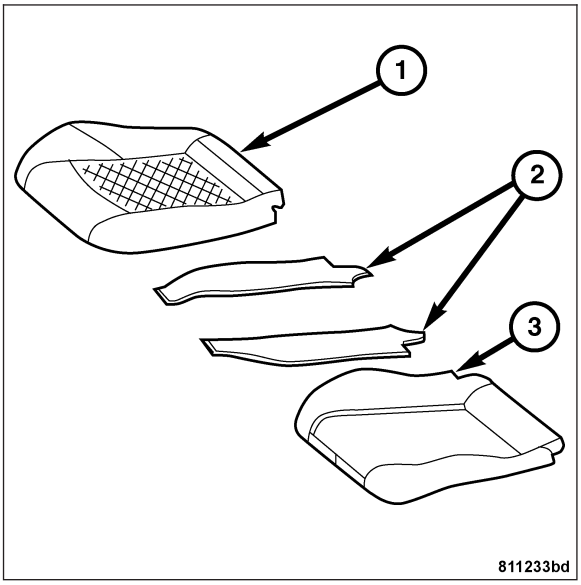

INSTALLATION - HEATED SEAT BACK ELEMENT

The heated seat back element (2) is an integral part of the seat back cushion (3). For complete seat back installation procedures, see seat back installation in the body section. **Refer to Page 23-205**.

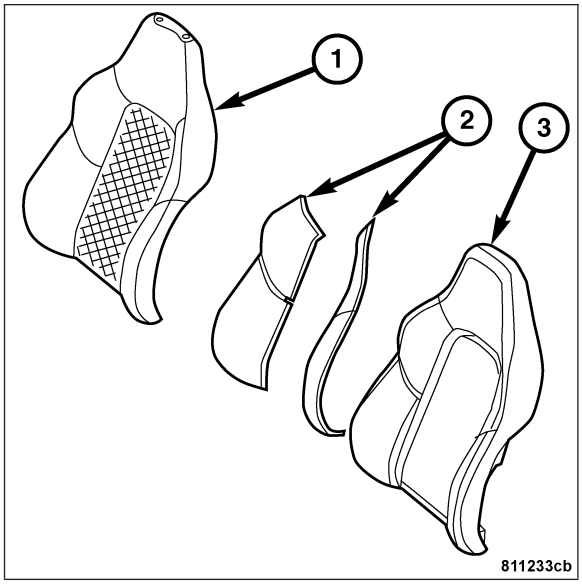

HEATED SEAT MODULE

REMOVAL

WARNING: REFER TO RESTRAINTS BEFORE ATTEMPTING ANY DOOR, SEAT, STEERING WHEEL, STEERING COLUMN, OR INSTRUMENT PANEL COMPONENT DIAGNOSIS OR SERVICE. FAILURE TO TAKE THE PROPER PRECAUTIONS COULD RESULT IN ACCIDENTAL AIRBAG DEPLOYMENT AND POSSIBLE PERSONAL INJURY.

The heated seat control module (1) is integrated within the heated seat switch (2) assembly. For complete heated seat control module removal procedures, see heated seat switch removal in this section. **Refer to Page 8G-37**.

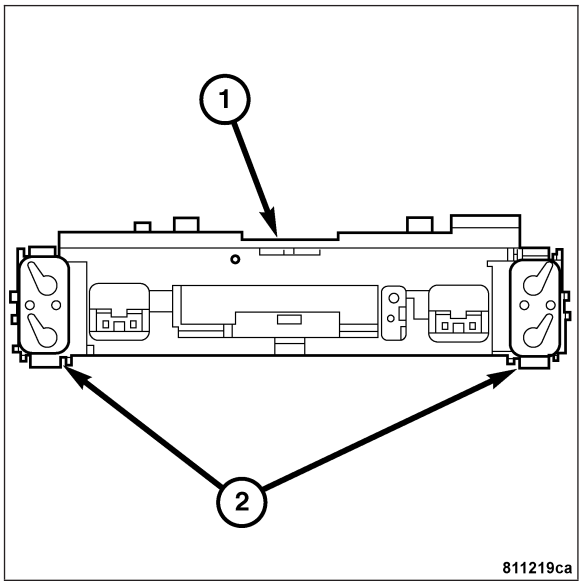

INSTALLATION

The heated seat control module is integrated within the heated seat switch assembly. For complete heated seat control module installation procedures, see heated seat switch installation in this section. **Refer to Page 8G-38**.

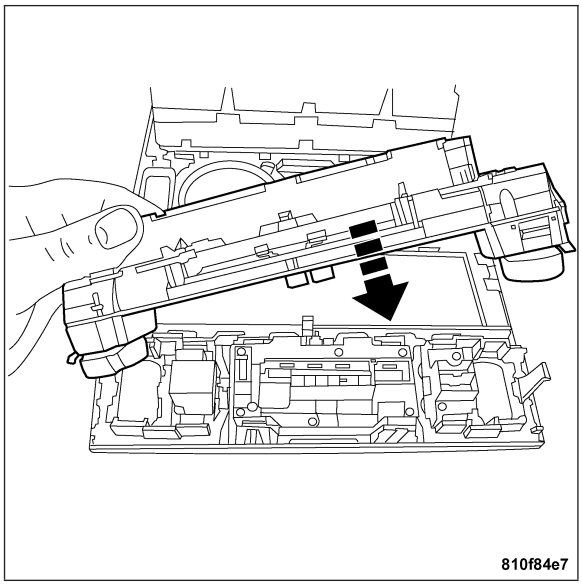

HORN

TABLE OF CONTENTS

	page		page
HORN - ELECTRICAL DIAGNOSTICS	1	**HORN - SERVICE INFORMATION**	9

HORN - ELECTRICAL DIAGNOSTICS

TABLE OF CONTENTS

	page		page
HORN - ELECTRICAL DIAGNOSTICS		*HORNS ALWAYS ON	5
DIAGNOSIS AND TESTING		BODY VERIFICATION TEST	7
*HORNS INOPERATIVE	2	SCHEMATICS AND DIAGRAMS	8

HORN - ELECTRICAL DIAGNOSTICS

DIAGNOSIS AND TESTING

*HORNS INOPERATIVE

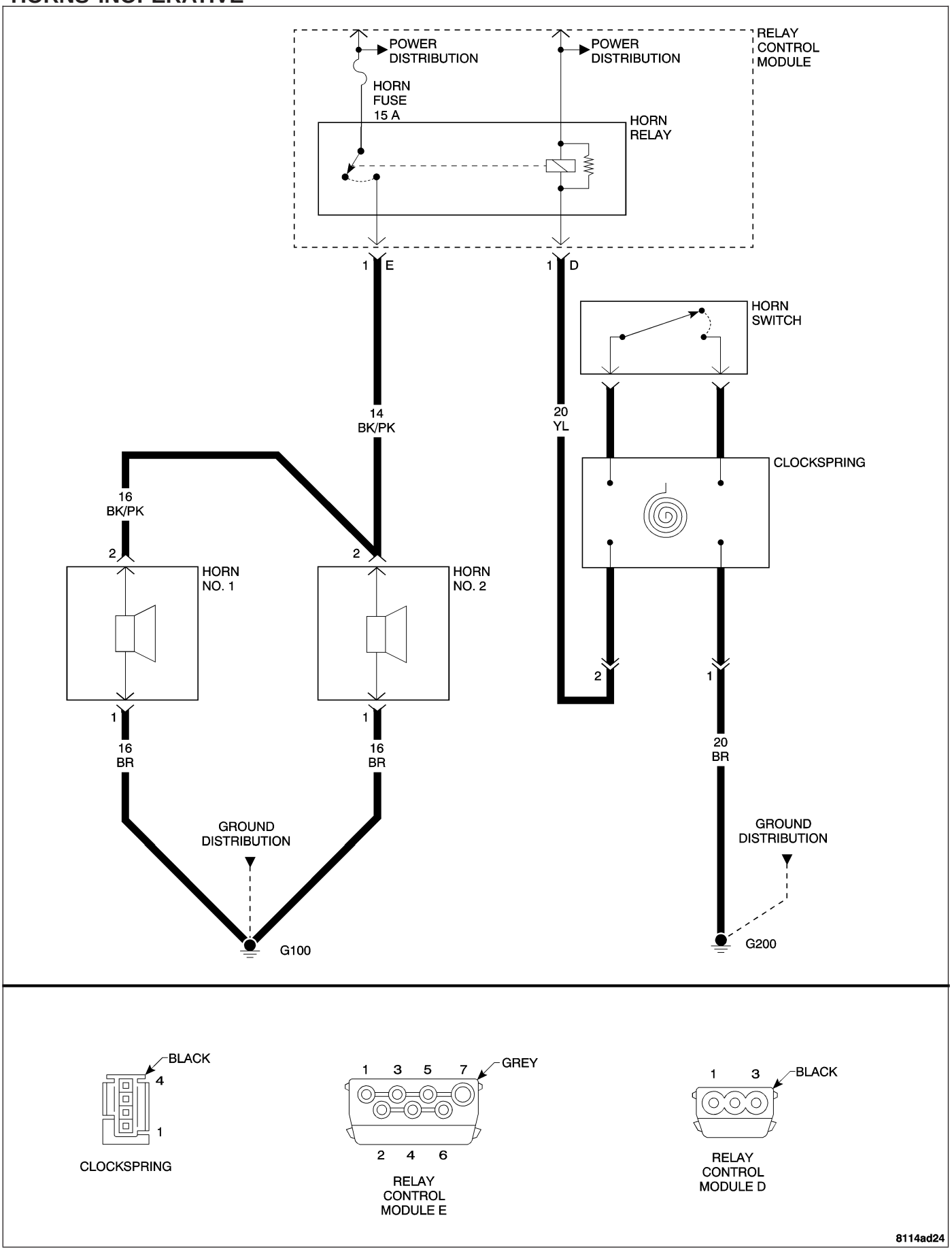

*HORNS INOPERATIVE — CONTINUED

POSSIBLE CAUSES
FUSED B(+) CIRCUIT OPEN
HORNS SWITCH CIRCUIT OPEN
RELAY CONTROL MODULE
CLOCKSPRING
GROUND CIRCUIT OPEN
HORNS

For a complete Horns Circuit Diagram, **Refer to Page 8H-8**.

Diagnostic Test

1. TEST THE HORNS

Note: Inspect the Horn Fuse located in the Relay Control Module. If the fuse is open, repair the cause of the open fuse before continuing.

Turn the ignition off.

Disconnect the Relay Control Module connector “E”.

Note: Check connectors - Clean/repair as necessary.

Connect a fused jumper wire from cavity 1 of the Relay Control Module connector “E” to B(+).

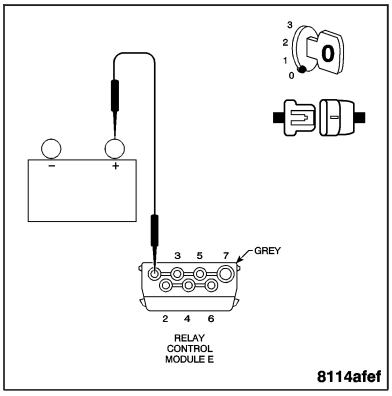

Did the Horns sound?

Yes >> Go to 3

No >> Go to 2

2. MEASURE HORNS CIRCUIT RESISTANCE

Disconnect the Horns harness connectors.

Note: Check connectors - Clean/repair as necessary.

Install jumper wires into the Horns harness connectors between cavity 1 and cavity 2.

Measure the resistance between cavity 1 of the Relay Control Module harness connector “E” and ground.

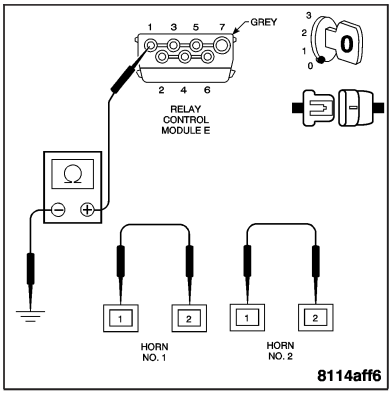

Is the resistance below 5.0 ohms?

Yes >> Replace the Horns. **Refer to Page 8H-11**.
Perform BODY VERIFICATION TEST.

No >> Repair the Horns circuit for an open.
Perform BODY VERIFICATION TEST.

*HORNS INOPERATIVE — CONTINUED

3. MEASURE HORNS SWITCH CIRCUIT RESISTANCE

WARNING: TURN THE IGNITION OFF, DISCONNECT THE BATTERY AND WAIT TWO MINUTES BEFORE PROCEEDING.

WARNING: DO NOT PLACE AN INTACT UNDEPLOYED AIRBAG FACE DOWN ON A HARD SURFACE, THE AIRBAG WILL PROPEL INTO THE AIR IF ACCIDENTALLY DEPLOYED, AND COULD RESULT IN SERIOUS OR FATAL INJURY.

Disconnect the Driver airbag.

Note: Check connector - Clean/repair as necessary.

Disconnect the Relay Control Module harness connector “D”.

Note: Check connectors - Clean/repair as necessary.

Connect a jumper wire between the Horn Switch connector cavities.

Measure the resistance of the Horns Switch circuit between cavity 1 of the Relay Control Module connector “D” and ground.

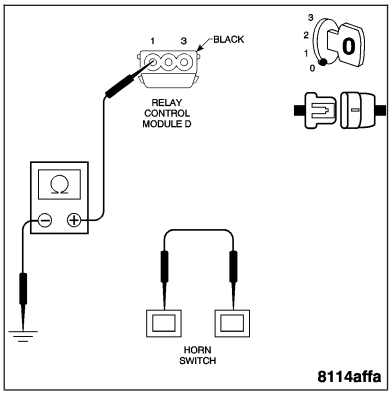

Is the resistance below 5.0 ohms?

Yes >> Replace the Relay Control Module. **Refer to Page 8W-97-4**.
Perform BODY VERIFICATION TEST.

No >> Go to 4

4. MEASURE HORNS SWITCH CIRCUIT RESISTANCE

WARNING: TURN THE IGNITION OFF, DISCONNECT THE BATTERY AND WAIT TWO MINUTES BEFORE PROCEEDING.

WARNING: DO NOT PLACE AN INTACT UNDEPLOYED AIRBAG FACE DOWN ON A HARD SURFACE, THE AIRBAG WILL PROPEL INTO THE AIR IF ACCIDENTALLY DEPLOYED, AND COULD RESULT IN SERIOUS OR FATAL INJURY.

Disconnect the Clockspring harness connector.

Note: Check connector - Clean/repair as necessary.

Connect a jumper wire between cavities 1 and 2 of the Clockspring harness connector.

Measure the resistance of the Horns Switch circuit between cavity 1 of the Relay Control Module connector “D” and ground.

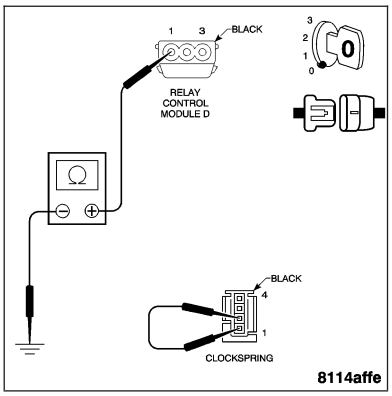

Is the resistance below 5.0 ohms?

Yes >> Replace the Clockspring. **Refer to Page 8O-94**.
Perform BODY VERIFICATION TEST.

No >> Repair the Horns Switch circuit for an open.
Perform BODY VERIFICATION TEST.

*HORNS ALWAYS ON

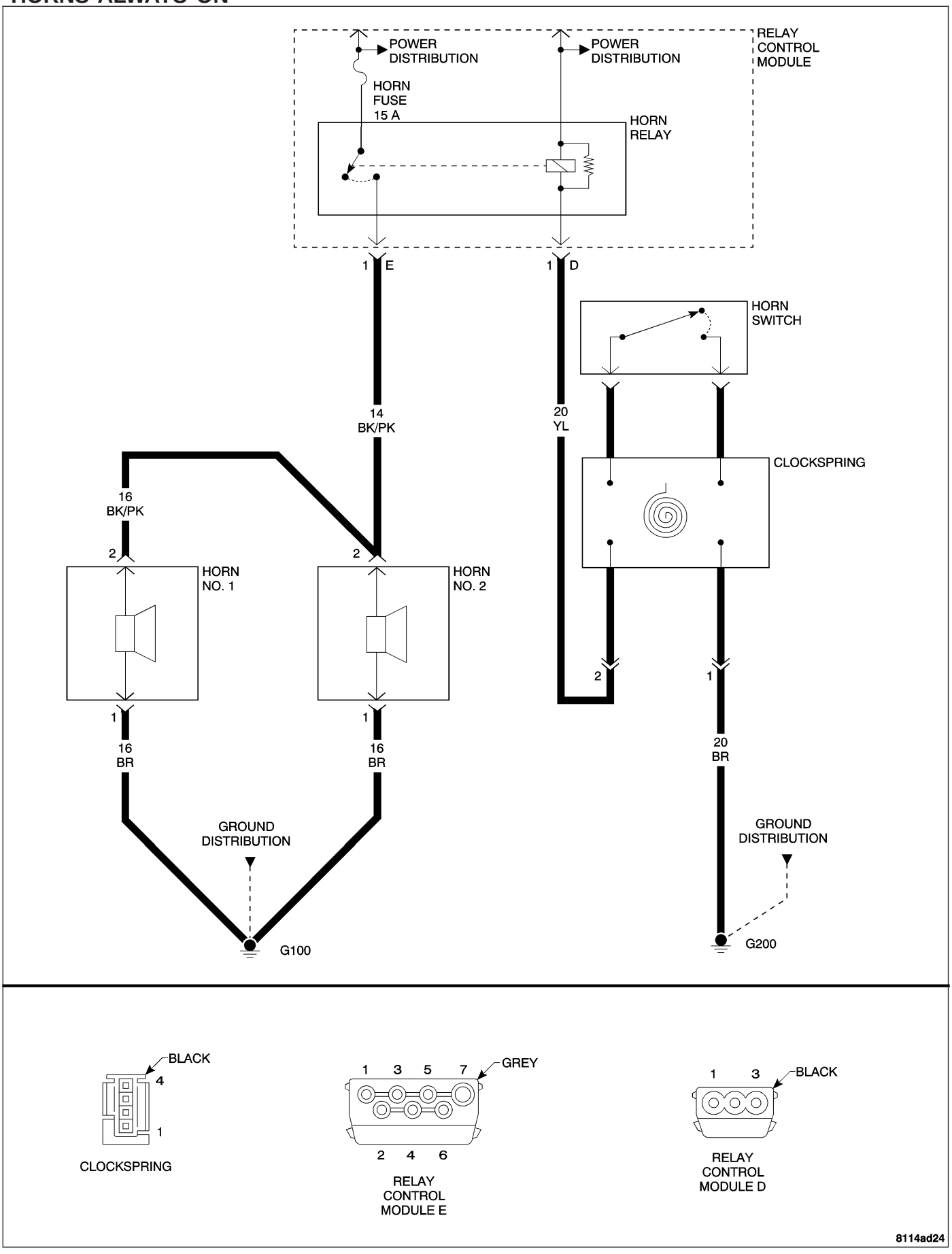

*HORNS ALWAYS ON — CONTINUED

POSSIBLE CAUSES
HORNS CIRCUIT SHORT TO BATTERY
HORNS SWITCH CIRCUIT SHORT TO BATTERY
RELAY CONTROL MODULE
CLOCKSPRING

For a complete Horns Circuit Diagram, **Refer to Page 8H-8**.

Diagnostic Test

1. TEST THE HORNS CIRCUIT

Turn the ignition off.
Disconnect the Relay Control Module connector “E”.

Note: Check connector - Clean/repair as necessary.
Turn the ignition on.

Did the Horns sound?

Yes >> Repair the Horns circuit for a short to voltage.
Perform BODY VERIFICATION TEST.

No >> Go to 2

2. MEASURE HORNS SWITCH CIRCUIT VOLTAGE

WARNING: TURN THE IGNITION OFF, DISCONNECT THE BATTERY AND WAIT TWO MINUTES BEFORE PROCEEDING.

WARNING: DO NOT PLACE AN INTACT UNDEPLOYED AIRBAG FACE DOWN ON A HARD SURFACE, THE AIRBAG WILL PROPEL INTO THE AIR IF ACCIDENTALLY DEPLOYED, AND COULD RESULT IN SERIOUS OR FATAL INJURY.
Remove the Driver Airbag. **Refer to Page 8O-100**.

Note: Check connector - Clean/repair as necessary.
Disconnect the Relay Control Module harness connector “D”.

WARNING: TURN THE IGNITION ON, THEN RECONNECT THE BATTERY.
Measure the voltage of the Horns Switch circuit between the Horns Switch connector terminals.

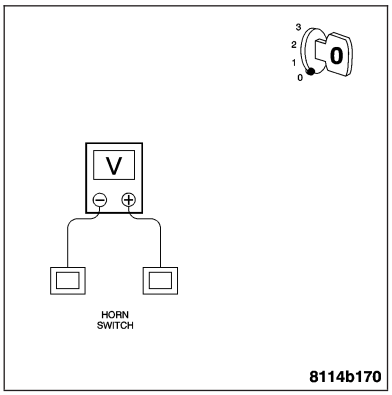

Is voltage present?

Yes >> Repair the Horns Switch circuit for a short to voltage.
Perform BODY VERIFICATION TEST.

No >> Replace the Relay Control Module. **Refer to Page 8W-97-4**.
Perform BODY VERIFICATION TEST.

BODY VERIFICATION TEST

1.

Turn the ignition off.

Disconnect all jumper wires and reconnect all previously disconnected components and connectors.

Note: If the SKREEM or the PCM was replaced, refer to the service information for proper programming procedures.

If the Body Control Module was replaced, turn the ignition on for 15 seconds (to allow the new BCM to learn VIN) or engine may not start.

Program all RKE transmitters and other options as necessary.

With the DRB III®, erase all Diagnostic Trouble Codes (DTCs) from ALL modules. Start the engine and allow it to run for 2 minutes. Operate all functions of the system that caused the original complaint.

Ensure that all accessories are turned off and the battery is fully charged.

Turn the ignition off and wait 5 seconds. Turn the ignition on and using the DRB III®, read DTCs from ALL modules.

Are any DTCs present or is the original complaint still present?

Are any DTCs present?

YES >> Repair is not complete, refer to appropriate symptom.

NO >> Repair is complete.

SCHEMATICS AND DIAGRAMS

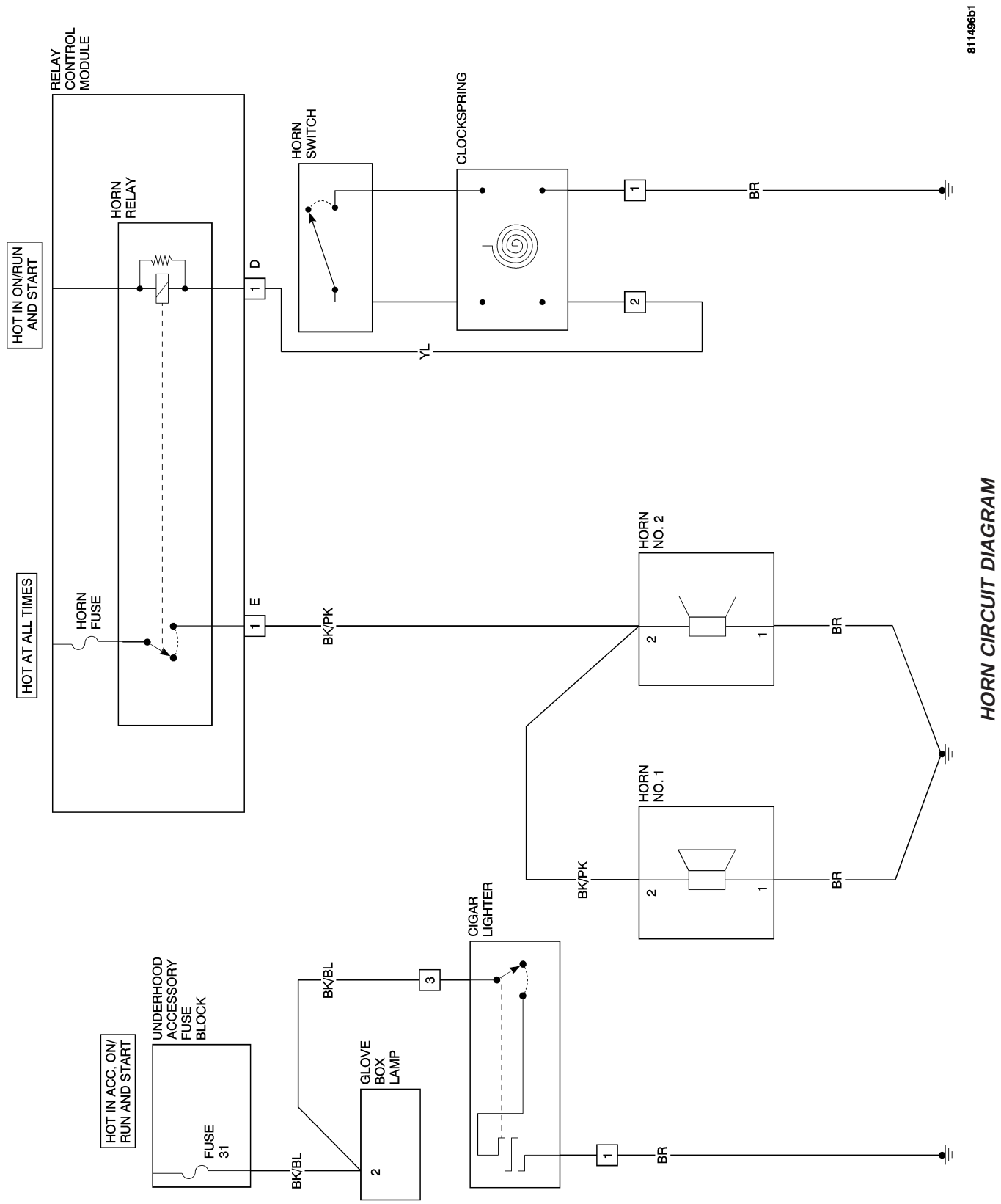

HORN CIRCUIT DIAGRAM

HORN - SERVICE INFORMATION

TABLE OF CONTENTS

page

HORN - SERVICE INFORMATION
DESCRIPTION 9
OPERATION 9
DIAGNOSIS AND TESTING - HORN SYSTEM . . 10
SPECIFICATIONS - HORN 10
HORN
REMOVAL 11
INSTALLATION 12
HORN SWITCH
DIAGNOSIS AND TESTING 12
REMOVAL 13
INSTALLATION 13
HORN RELAY
DESCRIPTION 14

HORN - SERVICE INFORMATION

DESCRIPTION

A dual-note electro-magnetic horn system is standard factory installed equipment on this model. The horn circuit consists of a horn switch, fuse, horn relay, and horns. Both high and low note horn units are located behind the front grille, below and in the center of the radiator core support crossmember.

OPERATION

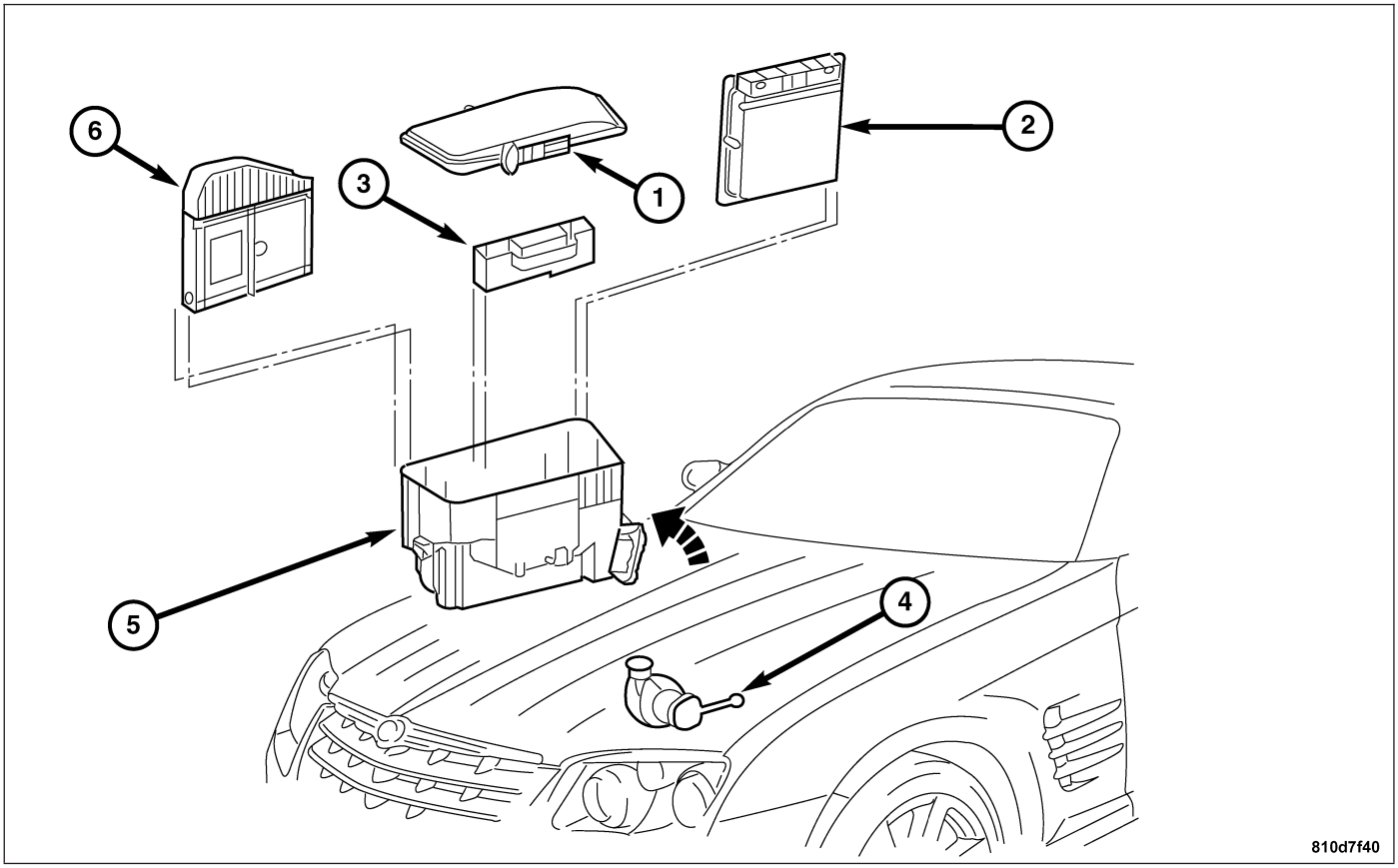

1 - CONTROL MODULE BOX COVER
2 - POWERTRAIN CONTROL MODULE
3 - RELAY CONTROL MODULE
4 - CONTROL MODULE BOX COOLING FAN
5 - CONTROL MODULE BOX
6 - BODY CONTROL MODULE

The horn circuit feed is from the fuse to the horn relay within the relay control module (3), both of which are located inside the control module box (5). When the horn switch is depressed, it completes the ground circuit to the horn relay. The horn relay coil closes a set of contacts which allows current to flow to the horns.

DIAGNOSIS AND TESTING - HORN SYSTEM

WARNING: REFER TO RESTRAINTS BEFORE ATTEMPTING ANY DOOR, SEAT, STEERING WHEEL, STEERING COLUMN, OR INSTRUMENT PANEL COMPONENT DIAGNOSIS OR SERVICE. FAILURE TO TAKE THE PROPER PRECAUTIONS COULD RESULT IN ACCIDENTAL AIRBAG DEPLOYMENT AND POSSIBLE PERSONAL INJURY.

CAUTION: Continuous sounding of horns will cause horn to fail.

For complete horn system diagnosis, see horn electrical diagnostics in this section.

CONDITION	POSSIBLE CAUSES	CORRECTION
HORN SOUNDS CONTINUOUSLY. NOTE: IMMEDIATELY REMOVE FUSE IN CONTROL MODULE BOX AND DISCONNECT HORN	1. Faulty horn relay.	1. Refer to horn electrical diagnostics in this section.
	2. Horn control circuit to relay shorted to ground.	2. Check horn relay circuit for short to ground.
	3. Pinched horn switch wire under driver airbag module.	3. Check horn switch harness and repair as necessary.
	4. Faulty horn switch.	4. Replace horn switch.
HORN SOUNDS INTERMITTENTLY AS THE STEERING WHEEL IS TURNED	1. Pinched horn switch wire under driver airbag module.	1. Check horn switch harness and repair as necessary.
	2. Faulty or damaged clockspring.	2. Replace clockspring.
	3. Faulty horn switch.	3. Replace horn switch.
HORN DOES NOT SOUND	1. Faulty or damaged horn.	1. Voltage present at horn when horn switch is pressed, replace horn.
	2. Faulty horn switch.	2. Replace horn switch.

SPECIFICATIONS - HORN

TORQUE SPECIFICATIONS

DESCRIPTION	N·m	Ft. Lbs.	In. Lbs.
HORN MOUNTING BRACKET BOLT	11.3	8.3	100

HORN

REMOVAL

1. Disconnect the negative battery cable.
2. Remove the grille. **Refer to Page 23-110**.
3. Disconnect the horn harness connector (1).

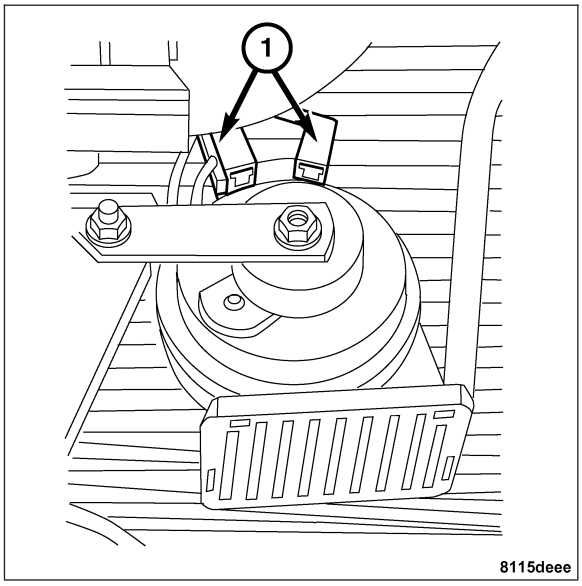

Note: Do not disconnect the horn from the horn mounting bracket.

4. Remove the horn bracket mounting bolt (2) from the core support brace (1), and remove the horn.

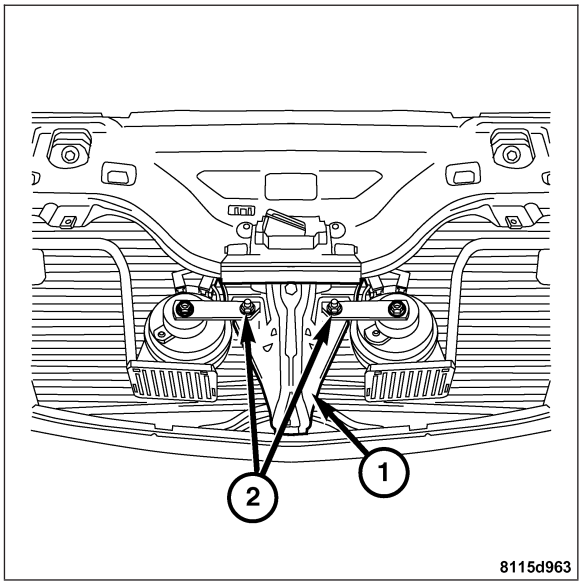

INSTALLATION

1. Position the horn(s) (1) onto the vehicle core support and install the horn bracket mounting bolt. Tighten the bolt to 11.3 N·m (100 in. lbs.).
2. Connect the horn harness connector.
3. Install the grille. **Refer to Page 23-111**.
4. Connect the negative battery cable.

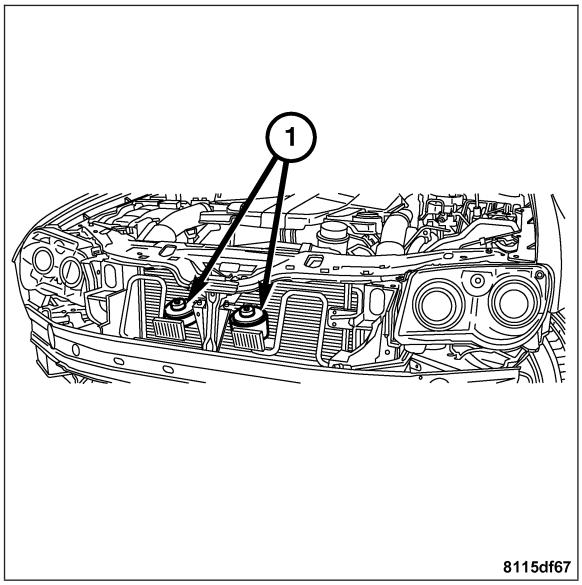

HORN SWITCH

DIAGNOSIS AND TESTING

WARNING: DISABLE THE AIRBAG SYSTEM BEFORE ATTEMPTING ANY STEERING WHEEL, STEERING COLUMN, SEAT BELT TENSIONER, SIDE AIRBAG, OR INSTRUMENT PANEL COMPONENT DIAGNOSIS OR SERVICE. DISCONNECT AND ISOLATE THE BATTERY NEGATIVE (GROUND) CABLE, THEN WAIT TWO MINUTES FOR THE AIR BAG SYSTEM CAPACITOR TO DISCHARGE BEFORE PERFORMING FURTHER DIAGNOSIS OR SERVICE. THIS IS THE ONLY SURE WAY TO DISABLE THE AIRBAG SYSTEM. FAILURE TO TAKE THE PROPER PRECAUTIONS COULD RESULT IN ACCIDENTAL AIRBAG DEPLOYMENT AND POSSIBLE PERSONAL INJURY.

The horn switch is comprised of two separate contact plates suspended by pre-loaded springs. It may be tested in the following manner:

1. Disconnect the negative battery cable.
2. Remove the driver airbag. **Refer to Page 8O-100**.
3. Disconnect the horn switch harness connectors (1) and (2).
4. Using an ohmmeter, connect one lead to the ground wire terminal (1) and the other lead to the positive wire terminal (2). No continuity should be present.
5. Depress the horn switch outer plate and check for continuity. If no continuity is present between the terminals, replace the switch contact plates.

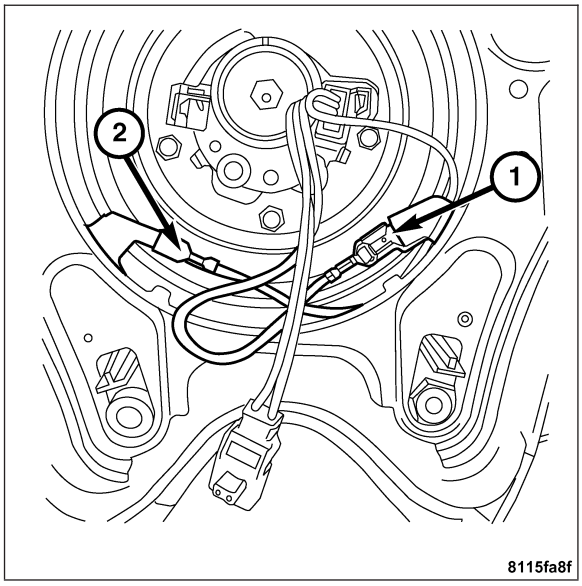

For complete horn system diagnosis, see horn electrical diagnostics in this section.

REMOVAL

WARNING: REFER TO RESTRAINTS BEFORE ATTEMPTING ANY DOOR, SEAT, STEERING WHEEL, STEERING COLUMN, OR INSTRUMENT PANEL COMPONENT DIAGNOSIS OR SERVICE. FAILURE TO TAKE THE PROPER PRECAUTIONS COULD RESULT IN ACCIDENTAL AIRBAG DEPLOYMENT AND POSSIBLE PERSONAL INJURY.

1. Disconnect the negative battery cable.
2. Remove the driver airbag. **Refer to Page 8O-100**.
3. Disconnect the horn switch harness connector (1).
4. Remove the horn switch retaining nuts (2), and remove the horn switch from the steering wheel.

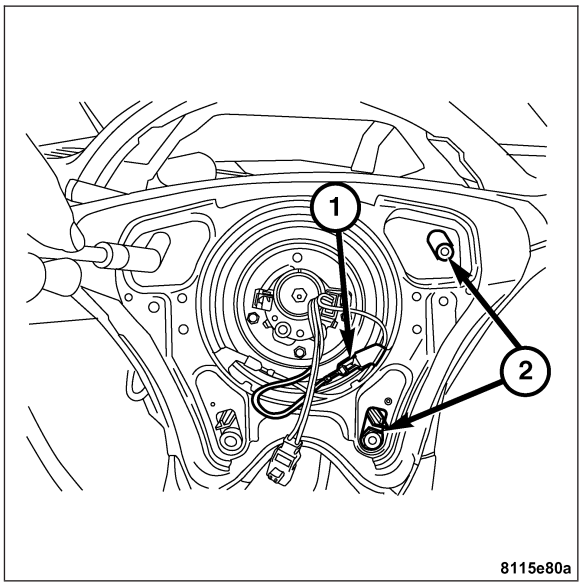

INSTALLATION

WARNING: REFER TO RESTRAINTS BEFORE ATTEMPTING ANY DOOR, SEAT, STEERING WHEEL, STEERING COLUMN, OR INSTRUMENT PANEL COMPONENT DIAGNOSIS OR SERVICE. FAILURE TO TAKE THE PROPER PRECAUTIONS COULD RESULT IN ACCIDENTAL AIRBAG DEPLOYMENT AND POSSIBLE PERSONAL INJURY.

1. Install the horn switch into the steering wheel, then route the driver airbag harness and connector (3) through the opening in the horn switch.

Note: Be sure the horn switch preload springs are centered over the mounting studs (2).

2. Press downward evenly on the horn switch and install the horn switch retaining nuts. Tighten the nuts to 5 N·m (44 in. lbs.).
3. Connect the horn switch harness connector (1).
4. Install the airbag. **Refer to Page 8O-100**.
5. Connect the negative battery cable.

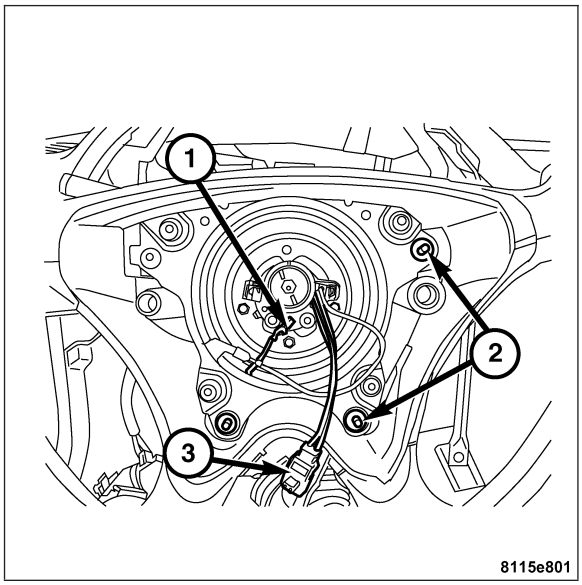

HORN RELAY

DESCRIPTION

The horn relay is housed within the relay control module (1) located inside the control module box (3) in the passenger side of the engine compartment. The relay control module also contains the fuse (2) for the horn relay circuitry. The relay control module cannot be adjusted or repaired. If faulty or damaged, the entire module must be replaced as an assembly. For complete relay control module removal procedures, see relay control module removal in the power distribution section.

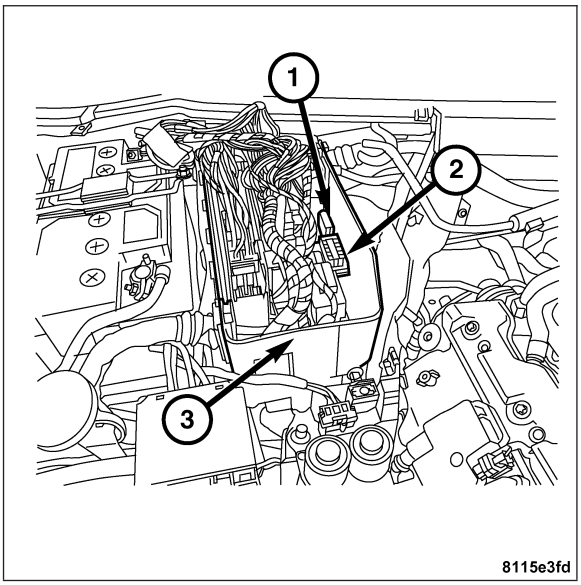

IGNITION CONTROL

TABLE OF CONTENTS

page

IGNITION SYSTEM - ELECTRICAL DIAGNOSTICS 1

page

IGNITION SYSTEM - SERVICE INFORMATION. . . . 3

IGNITION SYSTEM - ELECTRICAL DIAGNOSTICS

TABLE OF CONTENTS

page

IGNITION SYSTEM - ELECTRICAL DIAGNOSTICS
SCHEMATICS AND DIAGRAMS 2

IGNITION SYSTEM - ELECTRICAL DIAGNOSTICS

SCHEMATICS AND DIAGRAMS

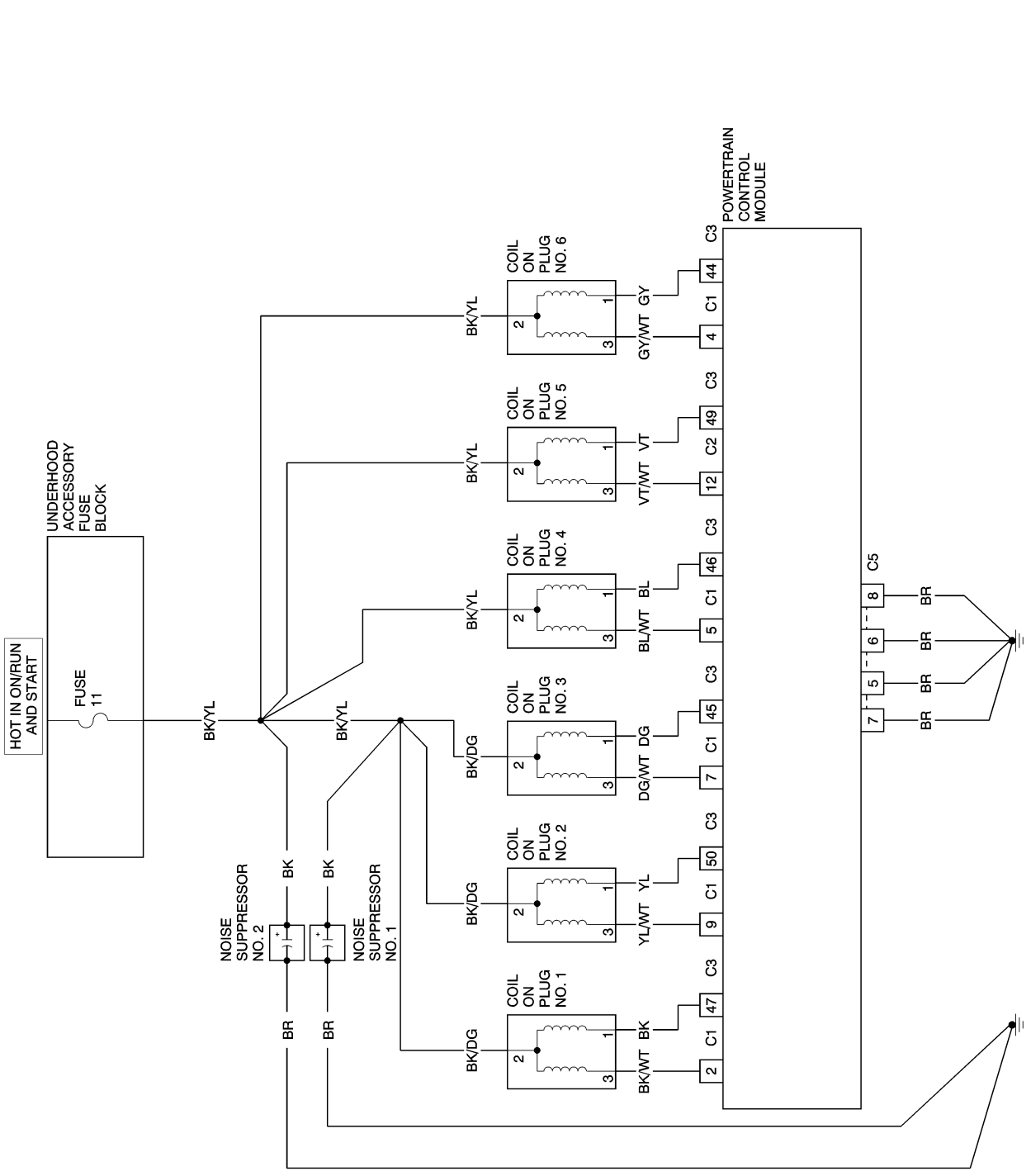

IGNITION SYSTEM CIRCUIT DIAGRAM

IGNITION SYSTEM - SERVICE INFORMATION

TABLE OF CONTENTS

page

IGNITION SYSTEM - SERVICE INFORMATION
DESCRIPTION . . . 3
OPERATION . . . 3
SPECIFICATIONS
SPECIFICATIONS - SPARK PLUGS . . . 4
SPECIFICATIONS - TORQUE . . . 4
CAMSHAFT POSITION SENSOR
OPERATION . . . 4
REMOVAL . . . 4
INSTALLATION . . . 5
IGNITION COIL
DESCRIPTION . . . 5
REMOVAL . . . 5
INSTALLATION . . . 5
KNOCK SENSOR
DESCRIPTION . . . 6
OPERATION . . . 6
REMOVAL . . . 6
INSTALLATION . . . 6
SPARK PLUG
DESCRIPTION - PLATINUM PLUGS . . . 7
OPERATION . . . 7
DIAGNOSIS AND TESTING - SPARK PLUG CONDITIONS . . . 8
REMOVAL . . . 11
INSTALLATION . . . 12
SPARK PLUG CABLE
DESCRIPTION . . . 13
REMOVAL . . . 13
INSTALLATION . . . 13

IGNITION SYSTEM - SERVICE INFORMATION

DESCRIPTION

The High Energy Ignition (HEI) system uses one coil and two spark plugs per cylinder. Individual coils for each cylinder ensure consistent performance at high rpms and allow individual cylinder spark control. Dual spark plugs provide more complete combustion, particularly near the cylinder walls, thus decreasing emissions. Also, HEI enhances combustion efficiency when firing mixtures diluted by EGR (Exhaust Gas Recirculation), which in turn improves overall efficiency and lowers emissions.

OPERATION

The crankshaft position sensor and camshaft position sensor are hall effect devices. The camshaft position sensor and crankshaft position sensor generate pulses that are inputs to the PCM. The PCM determines engine position from these sensors. The PCM calculates injector sequence and ignition timing from crankshaft & camshaft position. For a description of both sensors Camshaft Position Sensor, **Refer to Page 8I-4**, and Crankshaft Position Sensor, **Refer to Page 14-30**.

The two spark plugs per cylinder are fired slightly out of phase to prevent the cylinder pressures from rising too quickly, which could cause knocking. To prevent one spark plug from eroding more quickly than the other, they alternately lead each other. Under normal conditions, the timing is the same for all cylinders, but the timing can be delayed in individual cylinders if knocking is present in one or more. Highly sensitive anti-knock sensors, **Refer to Page 8I-6**, can distinguish knocking conditions in individual cylinders and retard the ignition timing on the cylinders that are knocking. This anti-knock control prevents damage to the engine and allows operation on lower grade fuel, but only in emergencies. Premium grade fuel is required under normal operating conditions to ensure full power and economy, and because the anti-knock control system may not be able to prevent knocking on low grade fuels under all operating conditions.

SPECIFICATIONS

SPECIFICATIONS - SPARK PLUGS

DESCRIPTION	SPECIFICATION	
Bosch	F 8 DPER	
Champion	KC 11 PYP	
NGK	IFR5D 10	
Spark Plug Gap	.80 mm	0.040 in
Firing Order	1-4-3-6-2-5	

SPECIFICATIONS - TORQUE

DESCRIPTION	N·m	Ft. Lbs.	In. Lbs.
Camshaft Sensor Bolt	8	6	71
Coil Retaining Bolt	8	6	71
Knock Sensor Bolt	20	15	177
Spark Plugs	28	21	248

CAMSHAFT POSITION SENSOR

OPERATION

The camshaft position sensor provides cylinder identification to the Powertrain Control Module (PCM). The sensor generates pulses. The PCM determines engine position from the camshaft position sensor and crankshaft position sensor inputs. The PCM uses the input to determine fuel injection synchronization and to determine which ignition coil to energize.

REMOVAL

1. Disconnect the negative battery cable.
2. Disconnect the camshaft position sensor harness connector (1).
3. Remove the retaining bolt (2) and the camshaft position sensor.

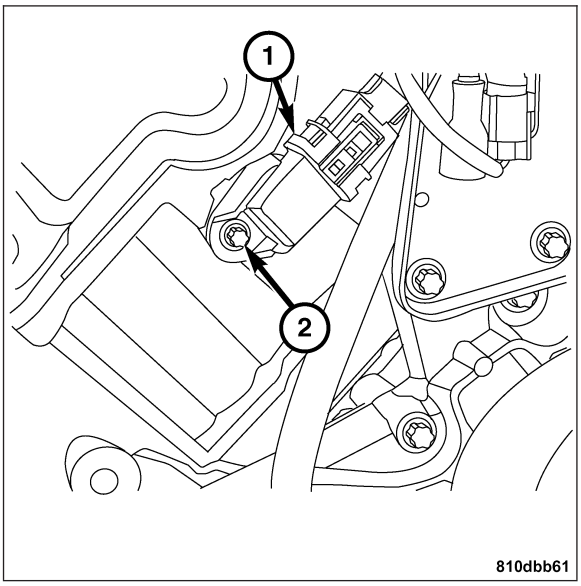

INSTALLATION

Note: Lubricate the camshaft position sensor o-ring with engine oil.

1. Position the camshaft position sensor on the cylinder head.
2. Install the retaining bolt (2) and tighten to 8 N·m (71 in. lbs.).
3. Connect the camshaft position sensor harness connector.
4. Connect the negative battery cable.

IGNITION COIL

DESCRIPTION

Coils are mounted on the cylinder head cover and are connected to the spark plugs via short cables. Platinum-tip spark plugs allow 100,000-mile (161,000-km) replacement intervals in normal service.

REMOVAL

1. Disconnect the negative battery.
2. Remove the air cleaner housing.
3. Disconnect the ignition coil wire harness connector (1).
4. Disconnect the spark plug cables (4) from the spark plug.
5. Remove the retaining bolt (2) and the ignition coil (3) from the cylinder head cover.

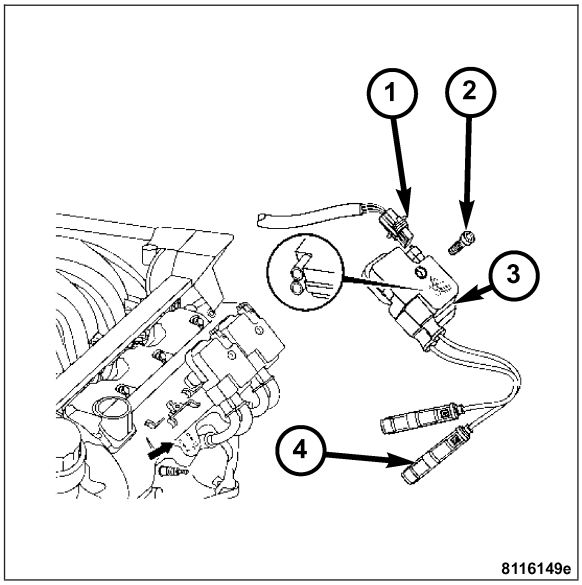

INSTALLATION

1. Position the ignition coil (3) on the cylinder head cover.
2. Install and tighten the retaining bolt (2) to 8 N·m (71 in. lbs.).

Note: When replacing the spark plug and coil cables, route the cables correctly and secure in the proper retainers. Failure to route the cables properly can cause the radio to reproduce ignition noise. It could also cause cross ignition of the plugs or short circuit the cables to ground.

Note: When installing new cables, make sure a positive connection is made. A snap should be felt when a good connection is made between the plug cable and the spark plug.

3. Connect the spark plug cables (4) to the spark plug.
4. Connect the ignition coil wire harness connector (1).
5. Install the air cleaner housing.
6. Connect the negative battery cable.

KNOCK SENSOR

DESCRIPTION

The knock sensors bolt onto the cylinder block below the intake manifold. They are designed to detect engine vibration that is caused by detonation.

OPERATION

Highly sensitive anti-knock sensors can distinguish knocking conditions in individual cylinders and retard the ignition timing on the cylinders that are knocking. This anti-knock control prevents damage to the engine and allows operation on lower grade fuel, but only in emergencies. Premium grade fuel is required under normal operating conditions to ensure full power and economy, and because the anti-knock control system may not be able to prevent knocking on low grade fuels under all operating conditions.

REMOVAL

1. Remove the intake manifold. **Refer to Page 9-678**.
2. Disconnect the wire harness connectors at the knock sensors (1) and remove the retaining bolts. Remove the knock sensors from the engine block.

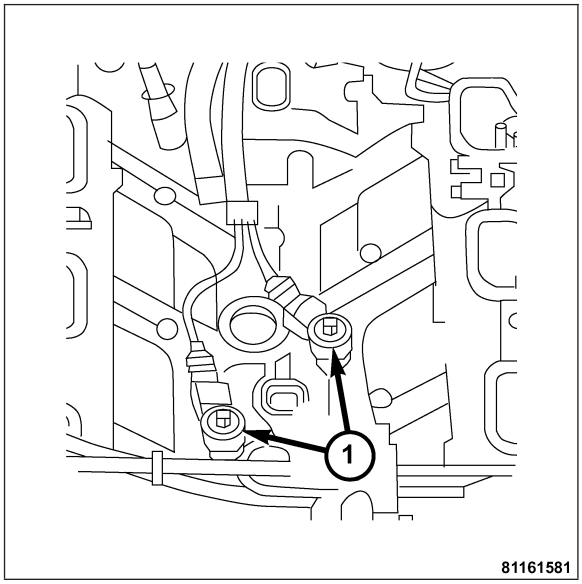

INSTALLATION

1. Position the knock sensors (1) on the engine block.

Note: The knock sensor bolt torque is higher than other sensors. If the proper torque is not applied to the knock sensor, driveability can be affected.

2. Install the retaining bolts. Tighten the bolts to 20 N·m (15 ft. lbs.).
3. Connect the wire harness connectors.
4. Install the intake manifold. **Refer to Page 9-680**.

SPARK PLUG

DESCRIPTION - PLATINUM PLUGS

The engine uses platinum tip resistor spark plugs. They have resistance values of 6,000 to 20,000 ohms when checked with at least a 1000 volt tester. For spark plug identification and specifications, **Refer to Page 8I-4**.

Do not use an ohm meter to check the resistance of the spark plugs. This will give an inaccurate reading.

Spark plugs using either a single or double platinum tips have a recommended service life of 100,000 miles for normal driving conditions per schedule A in this manual. The spark plugs have a recommended service life of 75,000 miles for severe driving conditions. A thin platinum pad is welded to both or just the center electrode (2) end(s). Extreme care must be used to prevent spark plug cross threading, mis-gapping and ceramic insulator damage during plug removal and installation.

CAUTION: Cleaning of the platinum plug may damage the platinum tip.

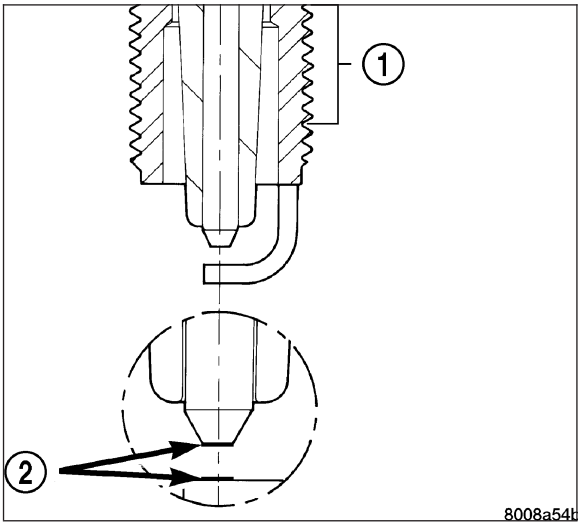

OPERATION

Remove the spark plugs and examine them for burned electrodes and fouled, cracked or broken porcelain insulators. Keep the spark plugs arranged in the order in which they were removed from the engine. An isolated spark plug displaying an abnormal condition indicates that a problem exists in the corresponding cylinder.

Spark plugs that have low mileage may be cleaned and reused if not otherwise defective. Adjust the gap between the electrodes to 1.00 mm (.039 in.).

Always tighten spark plugs to the specified torque. Over tightening can cause distortion resulting in a change in the spark plug gap or damage to the cylinder head. Tighten the spark plugs to 28 N·m (21 ft. lbs.).

DIAGNOSIS AND TESTING - SPARK PLUG CONDITIONS

NORMAL OPERATING

The few deposits present on the spark plug will probably be light tan or slightly gray in color. This is evident with most grades of commercial gasoline. There will not be evidence of electrode burning. Gap growth will not average more than approximately 0.025 mm (.001 in) per 3200 km (2000 miles) of operation. Spark plugs that have normal wear (1) can usually be cleaned, have the gap set and then be installed.

Some fuel refiners in several areas of the United States have introduced a manganese additive (MMT) for unleaded fuel. During combustion, fuel with MMT causes the entire tip of the spark plug to be coated with a rust colored deposit (2). This rust color can be misdiagnosed as being caused by coolant in the combustion chamber. Spark plug performance may be affected by MMT deposits.

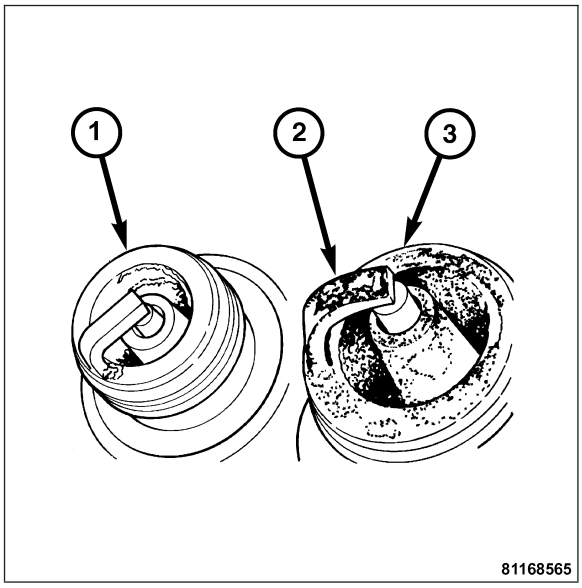

COLD FOULING/CARBON FOULING

Cold fouling is sometimes referred to as carbon fouling. The deposits that cause cold fouling are basically carbon. A dry, black deposit on one or two plugs in a set may be caused by sticking valves or defective spark plug cables. Cold (carbon) fouling of the entire set of spark plugs may be caused by a clogged air cleaner element or repeated short operating times (short trips).

WET FOULING OR GAS FOULING

A spark plug coated with excessive wet fuel or oil is wet fouled. In older engines, worn piston rings, leaking valve guide seals or excessive cylinder wear can cause wet fouling. In new or recently overhauled engines, wet fouling may occur before break-in (normal oil control) is achieved. This condition can usually be resolved by cleaning with solvent and reinstalling the plugs.

OIL OR ASH ENCRUSTED

If one or more spark plugs are oil or oil ash encrusted, evaluate engine condition for the cause of oil entry into that particular combustion chamber.



ELECTRODE GAP BRIDGING

Electrode gap bridging may be traced to loose deposits in the combustion chamber. These deposits (2) accumulate on the spark plugs during continuous stop-and-go driving. When the engine is suddenly subjected to a high torque load, deposits partially liquefy and bridge the gap between electrodes (3). This short circuits the electrodes. Spark plugs with electrode gap bridging (1) should be replaced.

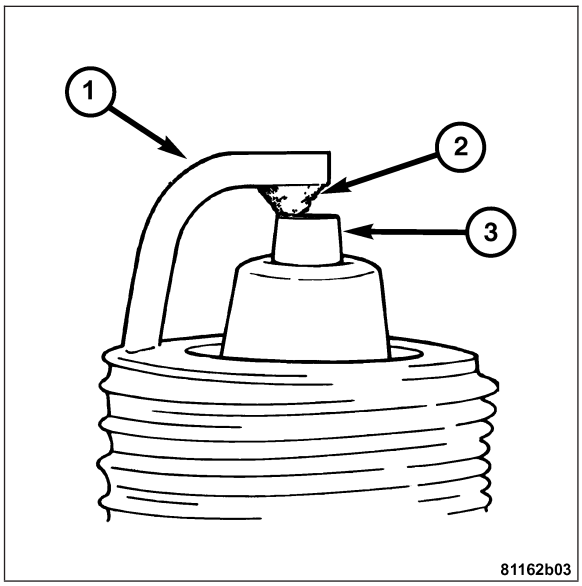

SCAVENGER DEPOSITS

Fuel scavenger deposits may be either white or yellow. They may appear to be harmful, but this is a normal condition caused by chemical additives in certain fuels. These additives are designed to change the chemical nature of deposits and decrease spark plug misfire tendencies. Notice that accumulation on the ground electrode (1) and shell area may be heavy, but the deposits are easily removed. Spark plugs with scavenger deposits can be considered normal in condition and can be cleaned using solvent.

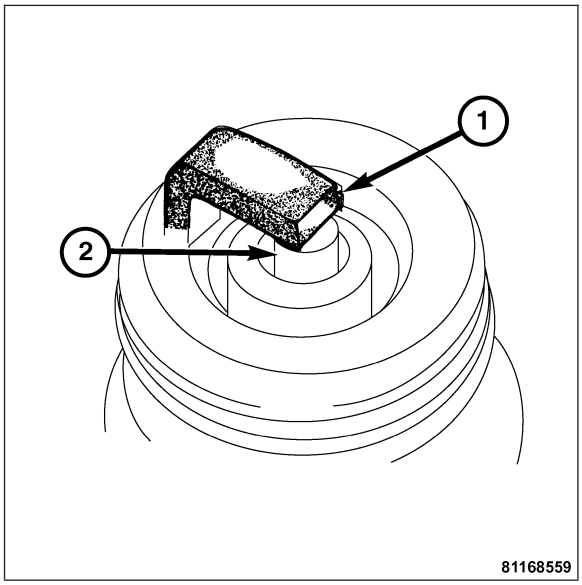

CHIPPED ELECTRODE INSULATOR

A chipped electrode insulator (3) usually results from bending the center electrode (2) while adjusting the spark plug electrode gap. Under certain conditions, severe detonation can also separate the insulator from the center electrode. Spark plugs with this condition must be replaced.

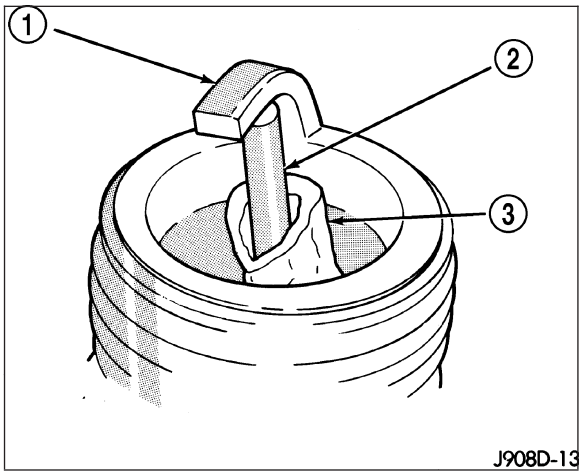

PREIGNITION DAMAGE

Preignition damage is usually caused by excessive combustion chamber temperature. The center electrode (2) dissolves first and the ground electrode (1) dissolves somewhat later. Insulators appear relatively deposit free. Determine if the spark plug has the correct heat range rating for the engine. Determine if ignition timing is over advanced or if other operating conditions are causing engine overheating. (The heat range rating refers to the operating temperature of a particular type spark plug. Spark plugs are designed to operate within specific temperature ranges. This depends upon the thickness and length of the center electrode's porcelain insulator.)

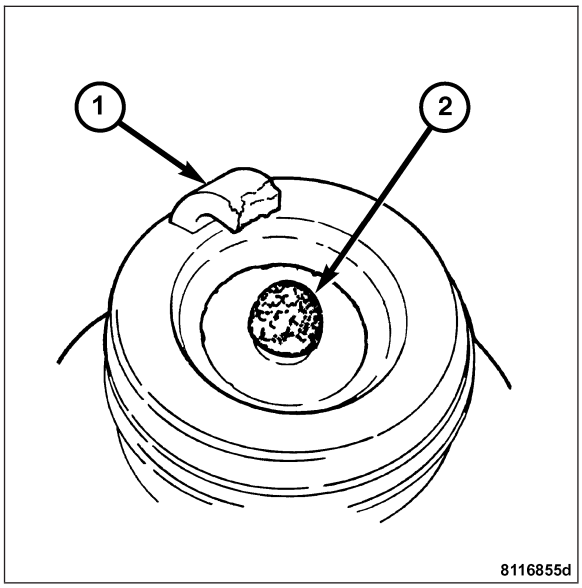

SPARK PLUG OVERHEATING

Overheating is indicated by a white or gray center electrode insulator that also appears blistered. The increase in electrode gap will be considerably in excess of the normal 0.025 mm (.001 in.) per 3200 km (2000 miles) of operation. This suggests that a plug with a cooler heat range rating should be used. Over advanced ignition timing, detonation and cooling system malfunctions can also cause spark plug overheating (1).

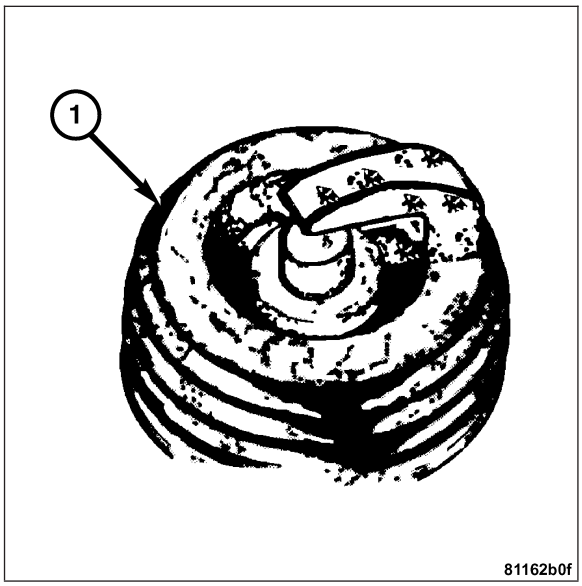

REMOVAL

1. Pull and turn the metal clad spark plug cable boots (2) to remove them from the spark plugs.

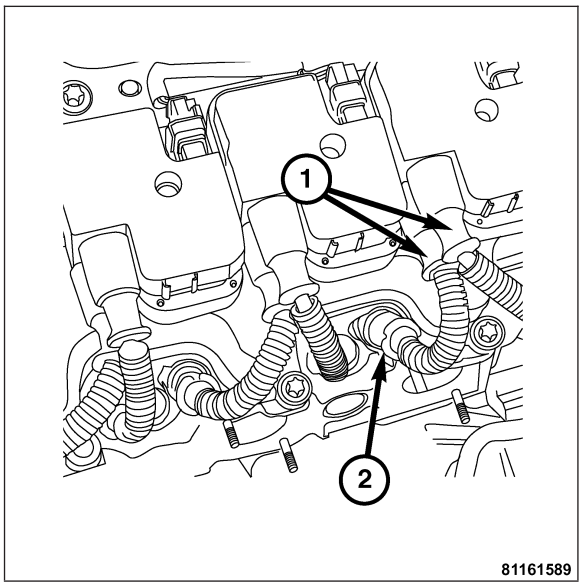

Note: Avoid allowing debris to fall into the spark holes during replacement.

2. Clean the cylinder head spark plug recesses (2) using low pressure compressed air.

CAUTION: Do not use power tools to replace spark plugs. Damage to the cylinder head can result.

3. Use a rubber insulated spark plug socket and a hand ratchet to remove the spark plugs (1).

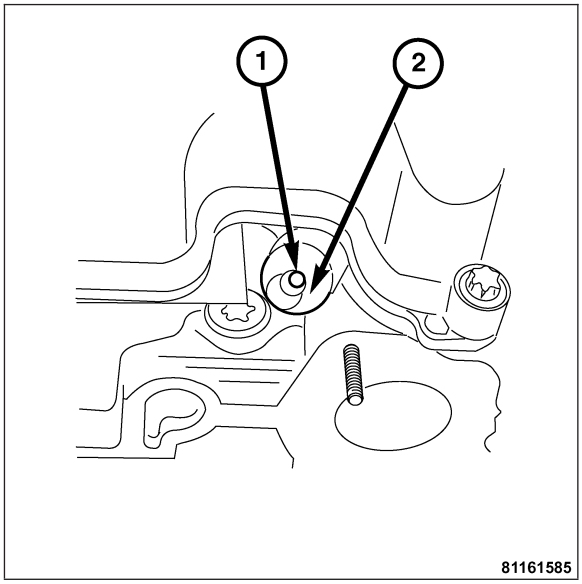

INSTALLATION

1. Using a gap gauge (1), gap the spark plugs to 1.00 mm (.039 in.) before installing them.
2. Tighten the spark plugs to 28 N·m (21 ft. lbs.).

Note: A snap should be felt when a good connection is made between the cable and the spark plug.

3. Install the spark plug cables.

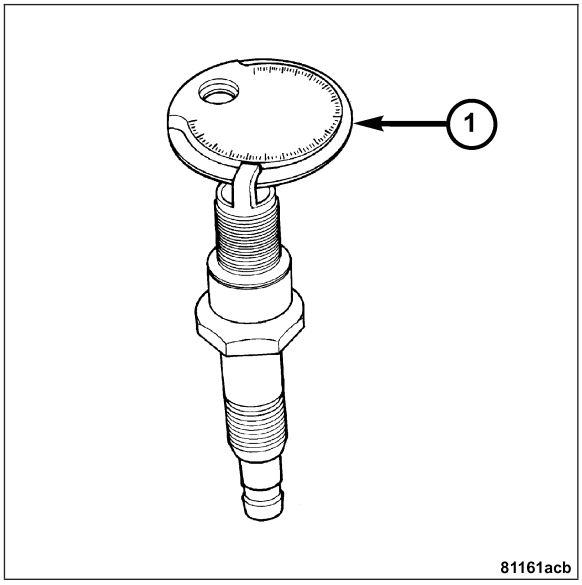

SPARK PLUG CABLE

DESCRIPTION

Spark Plug cables are sometimes referred to as secondary ignition wires. The wires transfer electrical current from the electronic ignition coils to the individual spark plugs at each cylinder. The nonmetallic spark plug cables have built in resistance. The cables provide suppression of radio frequency emissions from the ignition system.

Check the spark plug cable connections for good contact at the coil and at the spark plugs. Terminals should be fully seated with audible click. The nipples and spark plug covers should be in good condition. Nipples should fit tightly on the coil and spark plug cover should fit tight around spark plug insulators. Loose cable connections can cause ignition malfunctions by permitting water to enter the towers, corroding, and increasing resistance. **To maintain proper sealing at the terminal connections, the connections should not be broken unless testing indicates high resistance, an open circuit or other damage.**

Clean high tension cables with a cloth moistened with a non-flammable solvent and wipe dry. Check for brittle or cracked insulation.

REMOVAL

CAUTION: When disconnecting a high tension cable from a spark plug or from the ignition coil, twist the rubber boot slightly (1/2 turn) to break it loose. Grasp the boot (not the cable) and pull it off with a steady, even force.

1. Remove the spark plug cable boot from the ignition coil (1).
2. Turn and pull the spark plug cable metal clad boot (2) from the spark plug.

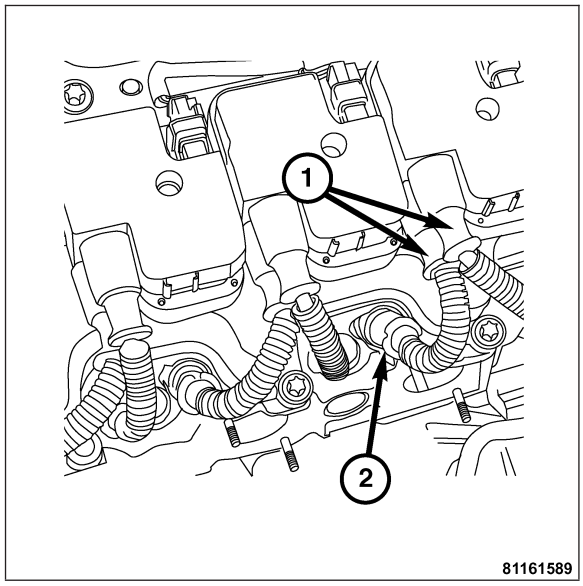

INSTALLATION

Note: When replacing the spark plug cables, route the cables correctly and secure in the proper retainers. Failure to route the cables properly can cause the radio to reproduce ignition noise. It could also cause cross ignition of the plugs or short circuit the cables to ground.

Note: When installing new cables, make sure a positive connection is made. A snap should be felt when a good connection is made between the cable and the spark plug.

Install the spark plug cables in the proper engine cylinder firing order, **Refer to Page 8I-4**.

INSTRUMENT CLUSTER

TABLE OF CONTENTS

page

INSTRUMENT CLUSTER - ELECTRICAL DIAGNOSTICS 1

page

INSTRUMENT CLUSTER - SERVICE INFORMATION 56

INSTRUMENT CLUSTER - ELECTRICAL DIAGNOSTICS

TABLE OF CONTENTS

page

INSTRUMENT CLUSTER - ELECTRICAL DIAGNOSTICS
DIAGNOSIS AND TESTING
COOLANT LEVEL SENSOR/WASHER FLUID LEVEL SWITCH CIRCUIT 2
LAMP OUTAGE INDICATOR CIRCUIT 5
FUEL LEVEL SENSOR CIRCUIT 7
AMBIENT TEMPERATURE SENSOR CIRCUIT 9
NO COMMUNICATION FROM INSTRUMENT CLUSTER 14
NO COMMUNICATION TO INSTRUMENT CLUSTER 16
NO CAN COMMUNICATIONS WITH PCM . . . 18
NO CAN COMMUNICATIONS WITH CAB 24
NO CAN COMMUNICATIONS WITH TCM . . . 30

page

CAN BUS COMMUNICATION GENERAL MALFUNCTION 36
*LEFT TURN SIGNAL INDICATOR INOPERATIVE 38
*RIGHT TURN SIGNAL INDICATOR INOPERATIVE 40
*HIGH BEAM INDICATOR INOPERATIVE 42
*BRAKE WARNING INDICATOR INOPERATIVE 44
*BATTERY VOLTAGE INDICATOR INOPERATIVE 46
*SEAT BELT INDICATOR INOPERATIVE 48
*TELESCOPING WHEEL INDICATOR INOPERATIVE 50
BODY VERIFICATION TEST 52
SCHEMATICS AND DIAGRAMS 53

INSTRUMENT CLUSTER - ELECTRICAL DIAGNOSTICS

DIAGNOSIS AND TESTING

COOLANT LEVEL SENSOR/WASHER FLUID LEVEL SWITCH CIRCUIT

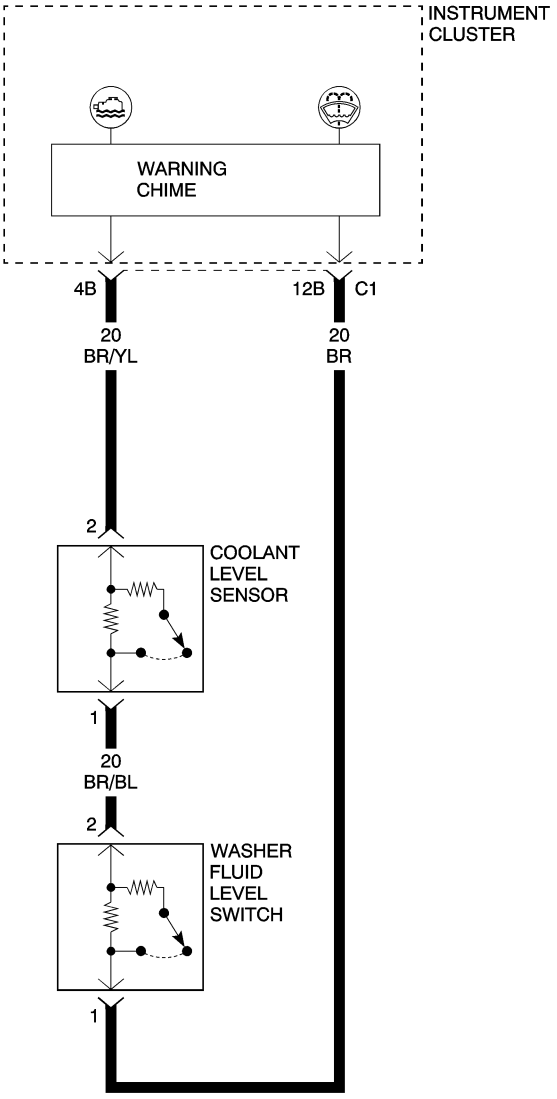

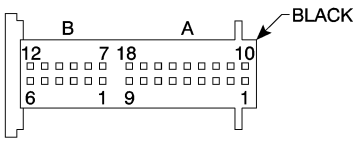

INSTRUMENT CLUSTER C1

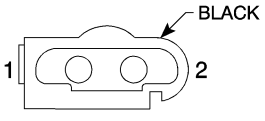

COOLANT LEVEL SENSOR

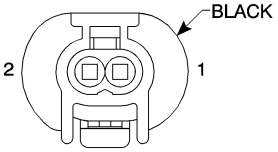

WASHER FLUID LEVEL SWITCH

8113e8b0

COOLANT LEVEL SENSOR/WASHER FLUID LEVEL SWITCH CIRCUIT — CONTINUED

When Monitored and Set Condition

- When Monitored: With the ignition on.
- Set Condition: Coolant Level Sensor/Washer Fluid Level Switch circuit failure.

POSSIBLE CAUSES
INDICATOR CIRCUIT OPEN
COOLANT LEVEL SENSOR MALFUNCTION
WASHER FLUID LEVEL SWITCH MALFUNCTION
INDICATOR LAMP
INSTRUMENT CLUSTER

For a complete Instrument Cluster Circuit Diagram, **Refer to Page 8J-53**.

Diagnostic Test

1. INSPECT THE LOW COOLANT INDICATOR LAMP

Turn the ignition off.

Remove the Low Coolant Indicator Lamp from the Instrument Cluster and inspect the lamp for an open filament.

Is the lamp filament open?

Yes >> Replace the Low Coolant Indicator Lamp. **Refer to Page 8J-75**.
Perform BODY VERIFICATION TEST.

No >> Go to 2

2. INSPECT THE LOW WASHER FLUID INDICATOR LAMP

With the ignition off.

Remove the Low Washer Fluid Indicator Lamp from the Instrument Cluster and inspect the lamp for an open filament.

Is the lamp filament open?

Yes >> Replace the Low Washer Fluid Indicator Lamp. **Refer to Page 8J-75**.
Perform BODY VERIFICATION TEST.

No >> Go to 3

COOLANT LEVEL SENSOR/WASHER FLUID LEVEL SWITCH CIRCUIT — CONTINUED

3. MEASURE COOLANT LEVEL SENSOR RESISTANCE

With the ignition off.

Disconnect the Coolant Level Sensor harness connector.

Note: Check connectors - Clean/repair as necessary.
Measure the resistance between cavity 1 and cavity 2 of the Coolant Level Sensor connector.

Is the resistance between 102 and 120 ohms?

Yes >> Go to 4

No >> Replace the Coolant Level Sensor. **Refer to Page 7-20**.
Perform BODY VERIFICATION TEST.

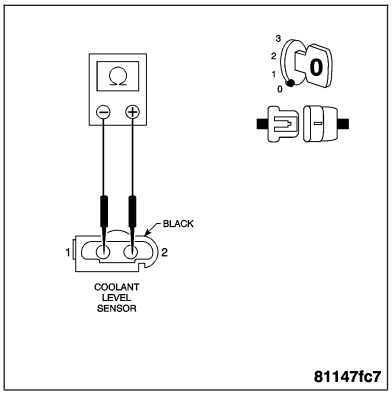

4. MEASURE WASHER FLUID LEVEL SWITCH RESISTANCE

With the ignition off.

Disconnect the Washer Fluid Level Switch harness connector.

Note: Check connectors - Clean/repair as necessary.
Measure the resistance between cavity 1 and cavity 2 of the Washer Fluid Level Switch connector.

Is the resistance between 145 and 185 ohms?

Yes >> Go to 5

No >> Replace the Washer Fluid Level Switch. **Refer to Page 8R-26**.
Perform BODY VERIFICATION TEST.

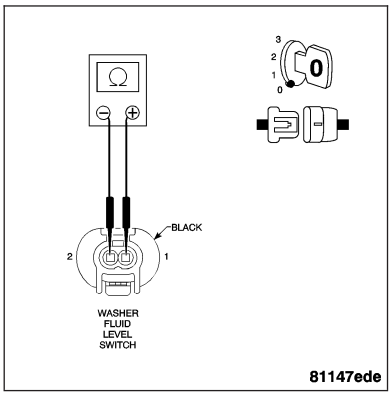

5. MEASURE COOLANT LEVEL SENSOR/WASHER FLUID LEVEL SWITCH CIRCUIT RESISTANCE

With the ignition off.

Disconnect the Instrument Cluster C1 harness connector.

Note: Check connectors - Clean/repair as necessary.
Connect a jumper wire between cavity 1 and cavity 2 of the Coolant Level Sensor harness connector.

Connect a jumper wire between cavity 1 and cavity 2 of the Washer Fluid Level Switch harness connector.

Measure the resistance between cavity 4B and 12B of the Instrument Cluster C1 harness connector.

Is the resistance below 5.0 ohms?

Yes >> Replace the Instrument Cluster. **Refer to Page 8J-83**.
Perform BODY VERIFICATION TEST.

No >> Repair the Coolant Level Sensor/Washer Fluid Level Switch circuit for an open.
Perform BODY VERIFICATION TEST.

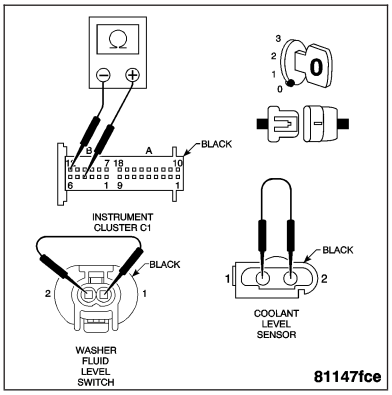

LAMP OUTAGE INDICATOR CIRCUIT

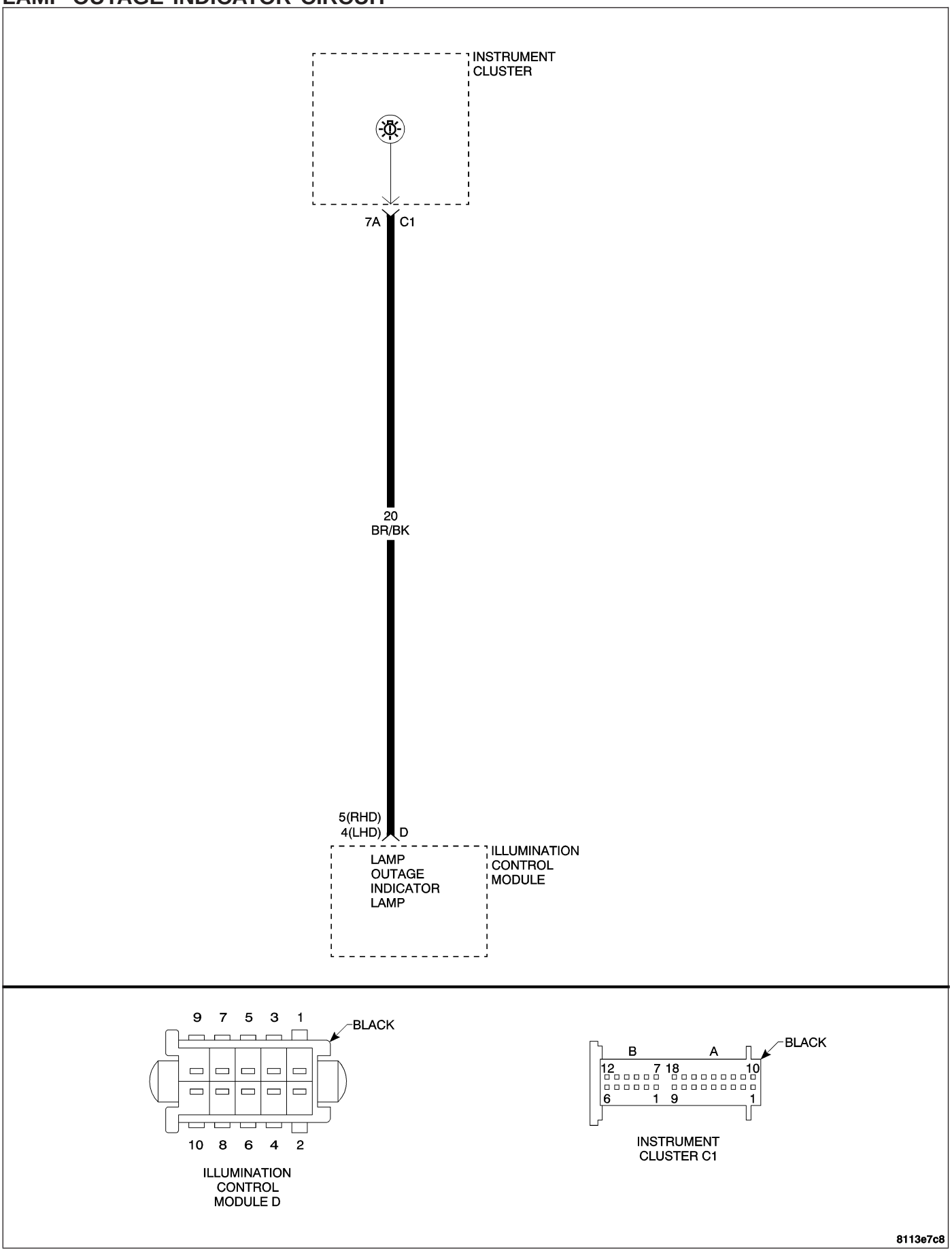

LAMP OUTAGE INDICATOR CIRCUIT — CONTINUED

When Monitored and Set Condition

- When Monitored: With the ignition on.
- Set Condition: Lamp Outage Indicator circuit failure between the Illumination Control Module and the Instrument Cluster.

POSSIBLE CAUSES
INDICATOR CIRCUIT OPEN
INDICATOR LAMP
ILLUMINATION CONTROL MODULE
INSTRUMENT CLUSTER

For a complete Instrument Cluster Circuit Diagram, **Refer to Page 8J-53**.

Diagnostic Test

1. THE LAMP OUTAGE INDICATOR LAMP/INSTRUMENT CLUSTER

Turn the ignition off.

Disconnect the Instrument Cluster C1 harness connector.

Note: Check connectors — Clean/repair as necessary.

Turn the ignition on.

Measure the voltage of the Lamp Outage Indicator circuit at the Instrument Cluster C1 harness connector.

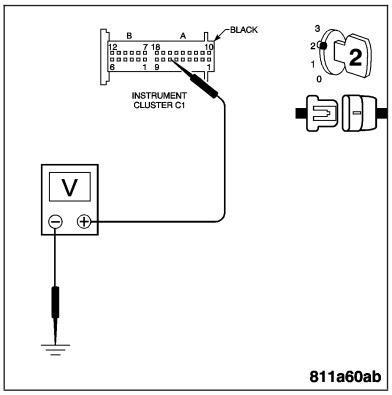

Is the voltage above 10 volts?

Yes >> Inspect the Lamp Outage Indicator Lamp. If OK, replace the Instrument Cluster. **Refer to Page 8J-83**.
Perform BODY VERIFICATION TEST.

No >> Go to 2

2. MEASURE LAMP OUTAGE INDICATOR CIRCUIT RESISTANCE

Turn the ignition off.

Disconnect the Illumination Control Module harness connector.

Note: Check connectors — Clean/repair as necessary.

Measure the resistance of the Lamp Outage Indicator circuit from the Illumination Control Module D harness connector to the Instrument Cluster C1 harness connector.

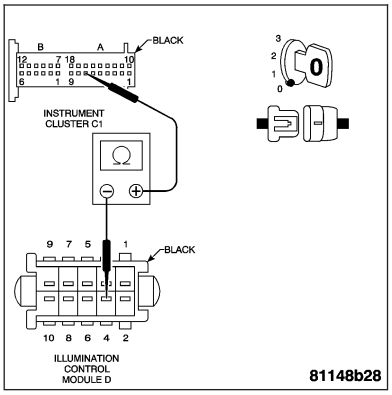

Is the resistance below 5.0 ohms?

Yes >> Replace the Illumination Control Module. **Refer to Page 8L-105**.
Perform BODY VERIFICATION TEST.

No >> Repair the Lamp Outage Indicator circuit for an open.
Perform BODY VERIFICATION TEST.

FUEL LEVEL SENSOR CIRCUIT

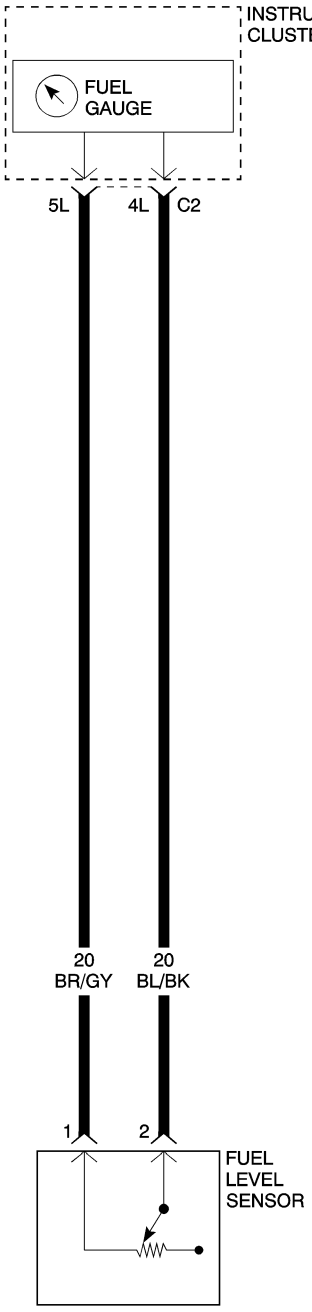

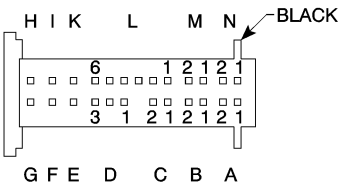

INSTRUMENT CLUSTER C2

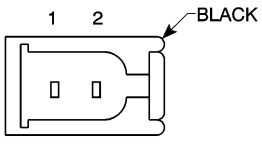

FUEL LEVEL SENSOR

8113e617

FUEL LEVEL SENSOR CIRCUIT — CONTINUED

When Monitored and Set Condition

- When Monitored: With the ignition on.
- Set Condition: Fuel Level Sensor circuit failure between the Fuel Level Sensor and the Instrument Cluster.

POSSIBLE CAUSES
FUEL LEVEL SENSOR CIRCUIT(S) OPEN
FUEL LEVEL SENSOR
INSTRUMENT CLUSTER

For a complete Instrument Cluster Circuit Diagram, **Refer to Page 8J-53**.

Diagnostic Test

1. MEASURE FUEL LEVEL SENSOR CIRCUIT VOLTAGE

Turn the ignition off.

Disconnect the Fuel Level Sensor harness connector.

Note: Check connectors - Clean/repair as necessary.

Turn the ignition on.

Measure the voltage between cavity 1 and cavity 2 of the Fuel Level Sensor harness connector.

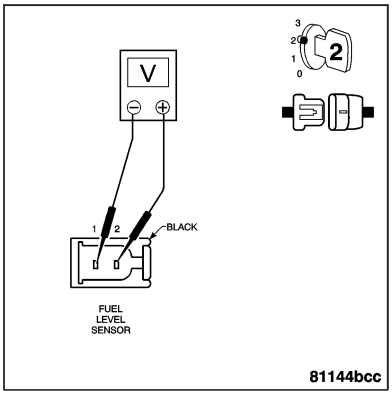

Is the voltage approximately .7 of a volt?

Yes >> Replace the Fuel Level Sensor. **Refer to Page 14-13**.
Perform BODY VERIFICATION TEST.

No >> Go to 2

2. MEASURE FUEL LEVEL SENSOR CIRCUIT RESISTANCE

Turn the ignition off.

Disconnect the Instrument Cluster C2 harness connector.

Note: Check connectors - Clean/repair as necessary.

Connect a jumper wire between cavity 1 and cavity 2 of the Fuel Level Sensor harness connector.

Measure the resistance of the Fuel Level Sensor circuit from cavity D4 to cavity D5 at the Instrument Cluster C2 harness connector.

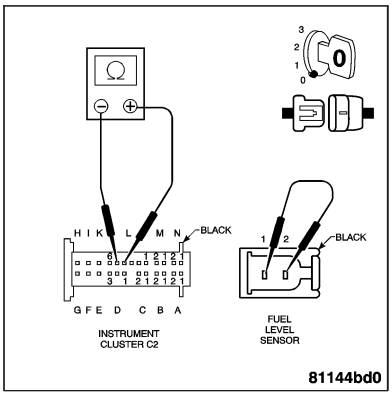

Is the resistance below 5.0 ohms?

Yes >> Replace the Instrument Cluster. **Refer to Page 8J-1**.
Perform BODY VERIFICATION TEST.

No >> Repair the appropriate Fuel Level Sensor circuit for an open.
Perform BODY VERIFICATION TEST.

AMBIENT TEMPERATURE SENSOR CIRCUIT

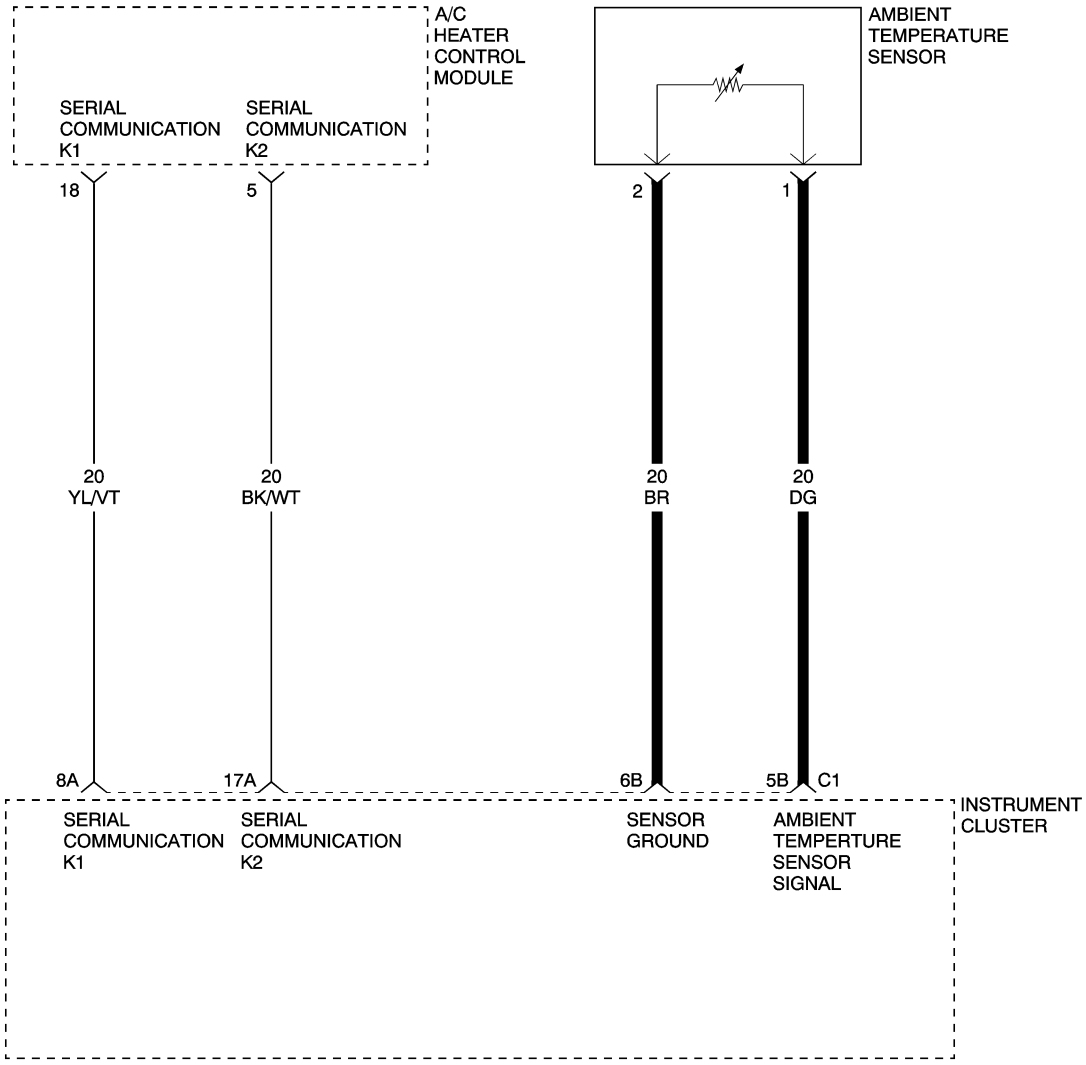

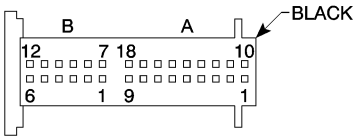

INSTRUMENT
CLUSTER C1

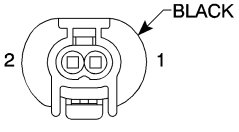

AMBIENT
TEMPERATURE
SENSOR

810e7193

AMBIENT TEMPERATURE SENSOR CIRCUIT — CONTINUED

When Monitored and Set Condition

- When Monitored: With the ignition on.
- Set Condition: The Instrument Cluster reports an abnormally high or low voltage that is detected on the Ambient Temperature Sensor Signal circuit.

POSSIBLE CAUSES
AMBIENT TEMPERATURE SENSOR SIGNAL CIRCUIT SHORT TO VOLTAGE
AMBIENT TEMPERATURE SENSOR OPEN
AMBIENT TEMPERATURE SENSOR SIGNAL CIRCUIT OPEN
AMBIENT TEMPERATURE SENSOR GROUND OPEN
AMBIENT TEMPERATURE SENSOR SIGNAL CIRCUIT SHORT TO GROUND
INSTRUMENT CLUSTER

For a complete Instrument Cluster Circuit Diagram, **Refer to Page 8J-53**.

Diagnostic Test

1. READ AMBIENT TEMPERATURE SENSOR VOLTAGE WITH DRB III®

Turn the ignition on.

With the DRB III®, read the Ambient Temperature Sensor voltage.

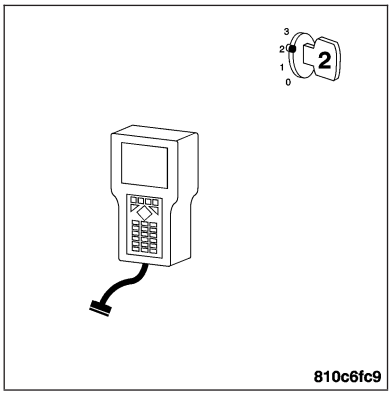

Does the DRB III® display AMBIENT TEMP: 5.0 VOLTS or greater?

Yes >> Go to 2

No >> Go to 6

2. MEASURE THE VOLTAGE OF THE AMBIENT TEMPERATURE SENSOR SIGNAL CIRCUIT

Turn the ignition off.

Disconnect the Ambient Temperature Sensor harness connector.

Note: Check connectors - Clean/repair as necessary.

Turn the ignition on.

Measure the voltage of the Ambient Temperature Sensor Signal circuit at the Ambient Temperature Sensor harness connector.

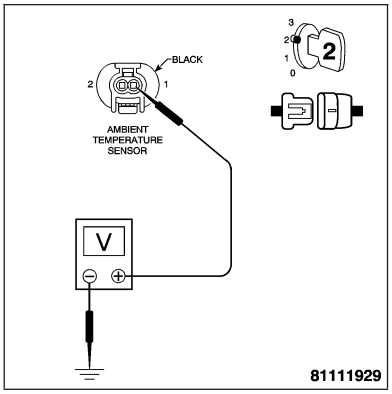

Is the voltage above 5.5 volts?

Yes >> Repair the Ambient Temperature Sensor Signal circuit for a short to voltage.
Perform BODY VERIFICATION TEST.

No >> Go to 3

AMBIENT TEMPERATURE SENSOR CIRCUIT — CONTINUED

3. READ AMBIENT TEMPERATURE SENSOR VOLTAGE WITH DRB III®

Turn the ignition off.

Connect a jumper wire between the Ambient Temperature Sensor Signal circuit and the Sensor Ground circuit.

Turn the ignition on.

With the DRB III®, read the Ambient Temperature Sensor voltage.

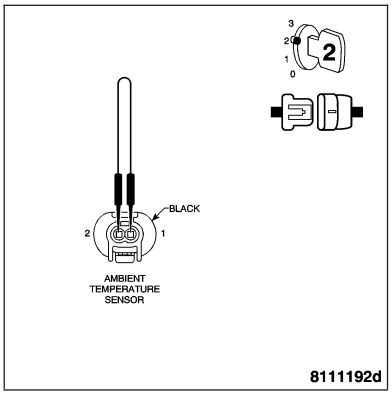

Does the DRB III® display AMBIENT TEMP: 4.5 VOLTS or greater?

Yes >> Go to 4

No >> Replace the Ambient Temperature Sensor. **Refer to Page 24-82**.
Perform BODY VERIFICATION TEST.

4. MEASURE THE RESISTANCE OF THE AMBIENT TEMPERATURE SENSOR SIGNAL CIRCUIT

Turn the ignition off.

Disconnect the Instrument Cluster harness connector.

Note: Check connectors - Clean/repair as necessary.

Measure the resistance of the Ambient Temperature Sensor Signal circuit from the Instrument Cluster harness connector to the Ambient Temperature Sensor harness connector.

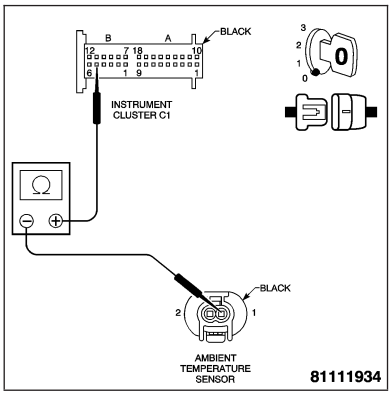

Is the resistance below 5.0 ohms?

Yes >> Go to 5

No >> Repair the Ambient Temperature Sensor Signal circuit for an open.
Perform BODY VERIFICATION TEST.

5. MEASURE THE RESISTANCE OF THE SENSOR GROUND CIRCUIT

With the ignition off.

Measure the resistance of the Sensor Ground circuit from the Instrument Cluster harness connector to the Ambient Temperature Sensor harness connector.

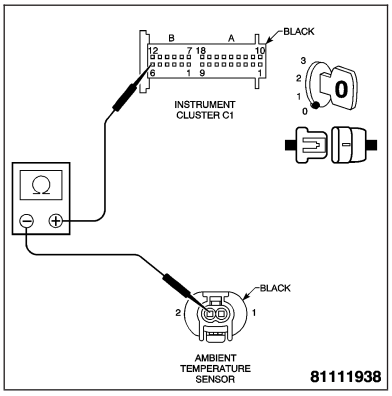

Is the resistance below 5.0 ohms?

Yes >> Replace the Instrument Cluster. **Refer to Page 8J-83**.
Perform BODY VERIFICATION TEST.

No >> Repair the Sensor Ground circuit for an open.
Perform BODY VERIFICATION TEST.

AMBIENT TEMPERATURE SENSOR CIRCUIT — CONTINUED

6. READ AMBIENT TEMPERATURE SENSOR VOLTAGE WITH DRB III®

Turn the ignition off.
Disconnect the Ambient Temperature Sensor harness connector.

Note: Check connectors - Clean/repair as necessary.
Turn the ignition on.
With the DRB III®, read the Ambient Temperature Sensor voltage.

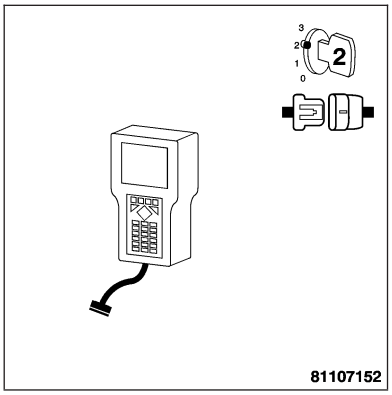

Does the DRB III® display AMBIENT TEMP: 4.5 VOLTS or greater?

Yes >> Go to 7

No >> Go to 9

7. READ A/C HEATER CONTROL MODULE DTC'S WITH DRB III®

Turn the ignition off.
Reconnect the Ambient Temperature Sensor connector.
Turn the ignition on.
With the DRB III®, read A/C Heater Control Module DTC's.
Wait two minutes.
With the DRB III®, read A/C Heater Control Module DTC's.

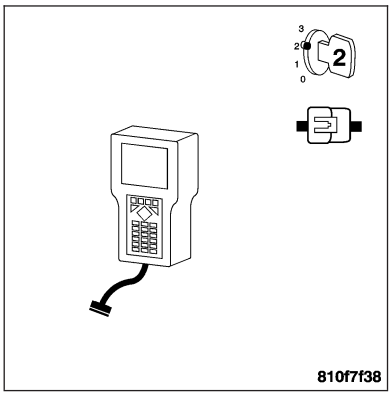

Does the DRB III® display Ambient Temperature Sensor Failure DTC?

Yes >> Replace the Ambient Temperature Sensor. **Refer to Page 24-82**.
Perform BODY VERIFICATION TEST.

No >> Go to 8

8. READ A/C HEATER CONTROL MODULE DTC'S WITH DRB III®

Ensure the Ambient Temperature Sensor is connected at this time.
Start the engine.
Turn the A/C system on and run for at least five minutes.
With the DRB III®, read A/C Heater Control Module DTC's.

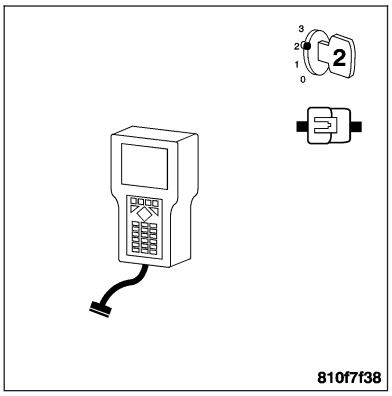

Does the DRB III® display Ambient Temperature Sensor Failure DTC?

Yes >> Replace the Ambient Temperature Sensor. **Refer to Page 24-82**.
Perform BODY VERIFICATION TEST.

No >> The condition that caused this DTC to set is currently not present. Inspect the related wiring harness for a possible intermittent condition.
Perform BODY VERIFICATION TEST.

AMBIENT TEMPERATURE SENSOR CIRCUIT — CONTINUED

9. MEASURE THE RESISTANCE BETWEEN GROUND AND THE AMBIENT TEMPERATURE SENSOR SIGNAL CIRCUIT

Turn the ignition off.

Disconnect the Instrument Cluster harness connector.

Note: Check connectors - Clean/repair as necessary.
Measure the resistance between ground and the Ambient Temperature Signal circuit.

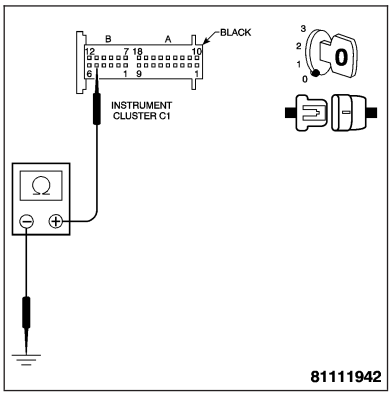

Is the resistance below 1000.0 ohms?

Yes >> Repair the Ambient Temperature Sensor Signal circuit for a short to ground.
Perform BODY VERIFICATION TEST.

No >> Go to 10

10. MEASURE THE RESISTANCE FROM THE AMBIENT TEMPERATURE SENSOR SIGNAL CIRCUIT TO THE SENSOR GROUND CIRCUIT

With the ignition off.

Measure the resistance from the Ambient Temperature Sensor Signal circuit to the Sensor Ground circuit at the Ambient Temperature Sensor connector.

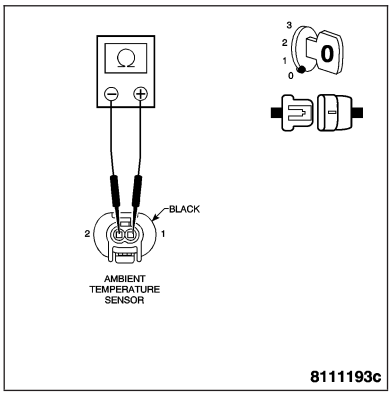

Is the resistance below 1000.0 ohms?

Yes >> Repair the Ambient Temperature Sensor Signal circuit for a short to the Sensor Ground circuit.
Perform BODY VERIFICATION TEST.

No >> Replace the Instrument Cluster. **Refer to Page 8J-83**.
Perform BODY VERIFICATION TEST.

NO COMMUNICATION FROM INSTRUMENT CLUSTER

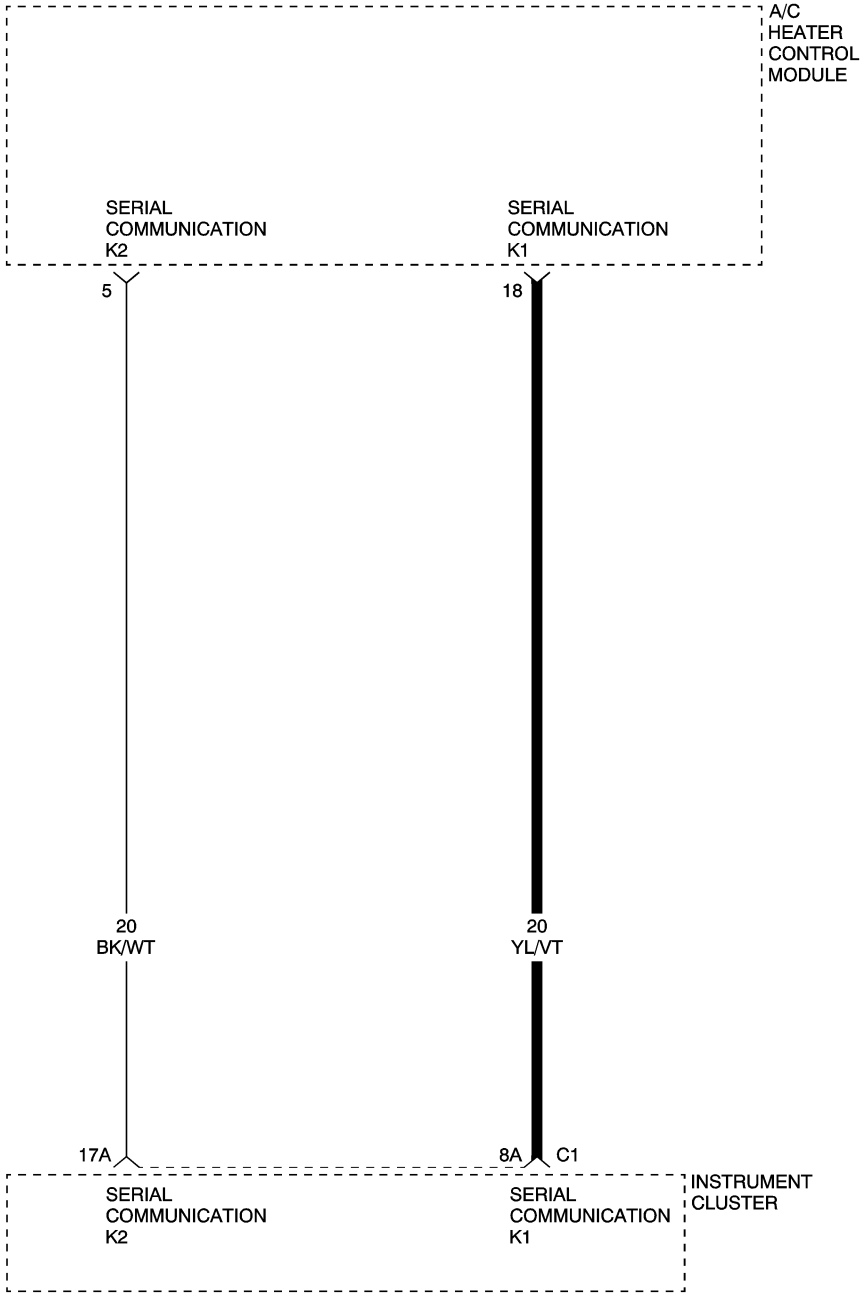

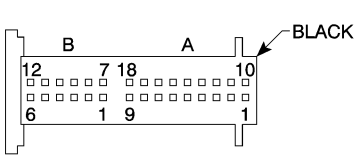

INSTRUMENT
CLUSTER C1

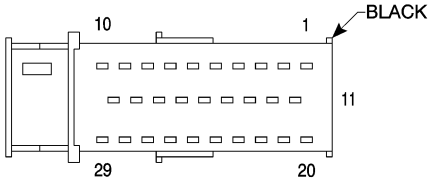

A/C
HEATER
CONTROL
MODULE

810e73a7

NO COMMUNICATION FROM INSTRUMENT CLUSTER — CONTINUED

When Monitored and Set Condition

- When Monitored: With the ignition on.
- Set Condition: Serial Communication K1 failure between the A/C Heater Control Module and the Instrument Cluster.

POSSIBLE CAUSES
SERIAL COMMUNICATION K1 CIRCUIT OPEN
INSTRUMENT CLUSTER

For a complete Instrument Cluster Circuit Diagram, **Refer to Page 8J-53**.

Diagnostic Test

1. MEASURE THE RESISTANCE OF THE SERIAL COMMUNICATION K1 CIRCUIT

Turn the ignition off.

Disconnect the Instrument Cluster harness connector.

Disconnect the A/C Heater Control Module harness connector.

Note: Check connectors - Clean/repair as necessary.

Measure the resistance of the Serial Communication K1 circuit from the Instrument Cluster harness connector to the A/C Heater Control Module harness connector.

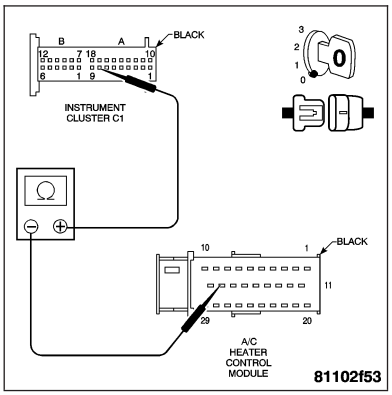

Is the resistance below 5.0 ohms?

Yes >> Replace the Instrument Cluster. **Refer to Page 8J-83**.
Perform BODY VERIFICATION TEST.

No >> Repair the Serial Communication K1 circuit for an open.
Perform BODY VERIFICATION TEST.

NO COMMUNICATION TO INSTRUMENT CLUSTER

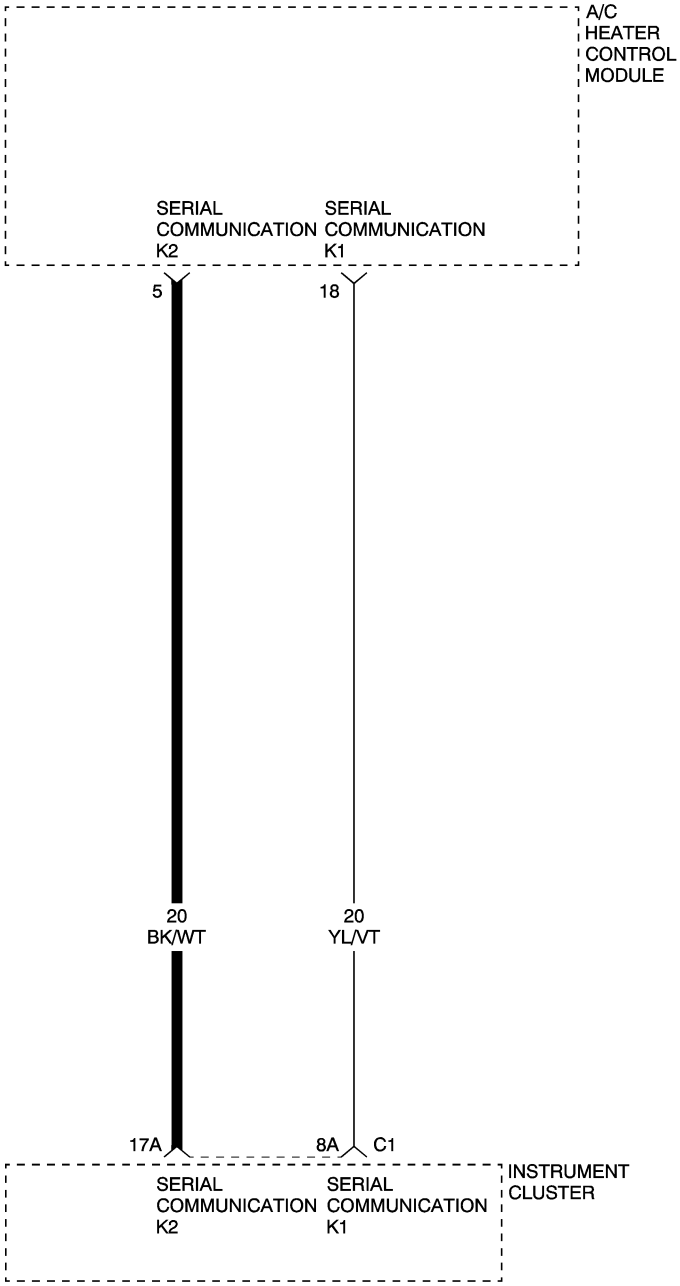

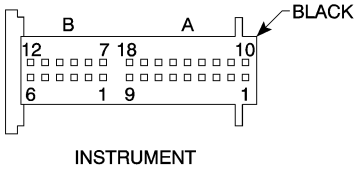

INSTRUMENT
CLUSTER C1

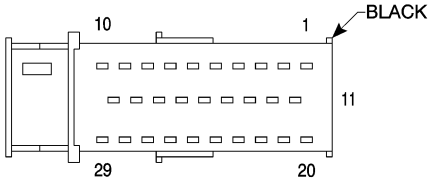

A/C
HEATER
CONTROL
MODULE

810e7453

NO COMMUNICATION TO INSTRUMENT CLUSTER — CONTINUED

When Monitored and Set Condition

- When Monitored: With the ignition on.
- Set Condition: Serial Communication K2 failure between the A/C Heater Control Module and the Instrument Cluster.

POSSIBLE CAUSES
SERIAL COMMUNICATION K2 CIRCUIT OPEN
INSTRUMENT CLUSTER

For a complete Instrument Cluster Circuit Diagram, **Refer to Page 8J-53**.

Diagnostic Test

1. MEASURE THE RESISTANCE OF THE SERIAL COMMUNICATION K2 CIRCUIT

Turn the ignition off.

Disconnect the Instrument Cluster harness connector.

Disconnect the A/C Heater Control Module harness connector.

Note: Check connectors - Clean/repair as necessary.

Measure the resistance of the Serial Communication K2 circuit from the Instrument Cluster harness connector to the A/C Heater Control Module harness connector.

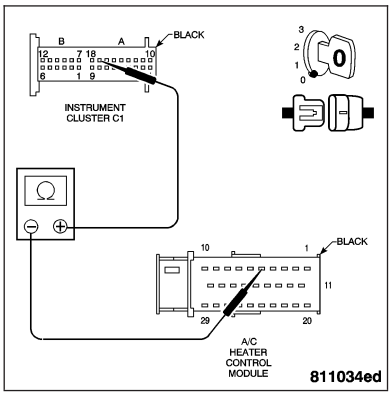

Is the resistance below 5.0 ohms?

Yes >> Replace the Instrument Cluster. **Refer to Page 8J-83**.
Perform BODY VERIFICATION TEST.

No >> Repair the Serial Communication K2 circuit for an open.
Perform BODY VERIFICATION TEST.

NO CAN COMMUNICATIONS WITH PCM

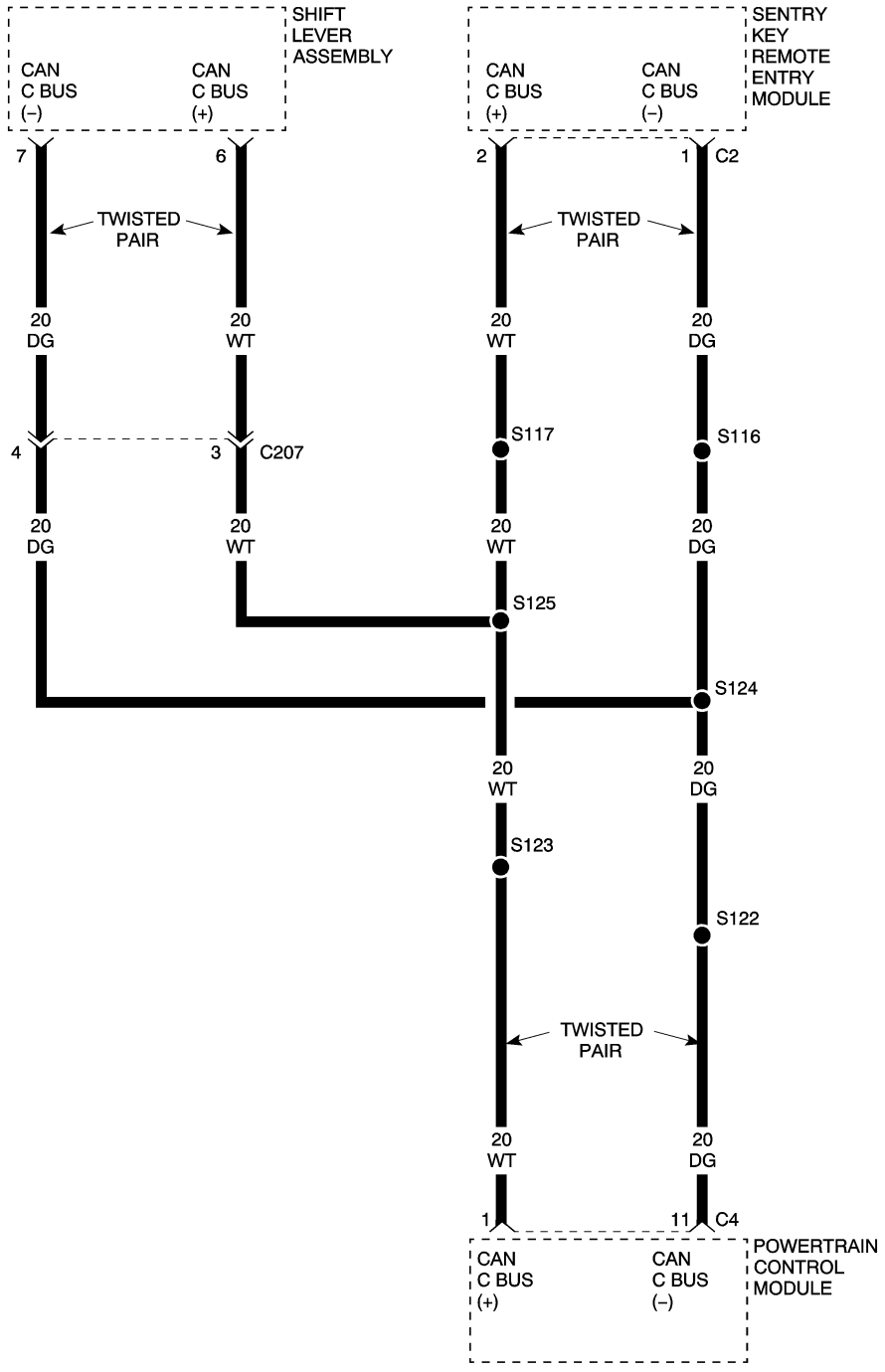

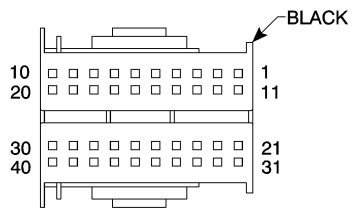

POWERTRAIN CONTROL MODULE – C4

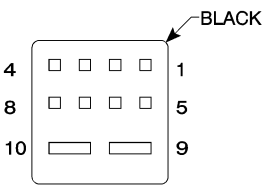

SHIFT LEVER ASSEMBLY

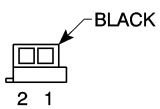

SENTRY KEY REMOTE ENTRY MODULE C2

NO CAN COMMUNICATIONS WITH PCM — CONTINUED

When Monitored and Set Condition

- When Monitored: With the ignition on.
- Set Condition: This DTC is set when a CAN ID was not received in the required time from the Powertrain Control Module (PCM).

POSSIBLE CAUSES
OPEN CAN C BUS (+)/(-) CIRCUIT
CAN C BUS (+)/(-) CIRCUIT SHORTED TO GROUND
CAN C BUS (+)/(-) CIRCUIT SHORTED TO VOLTAGE
INSTRUMENT CLUSTER
SENTRY KEY REMOTE ENTRY MODULE
POWERTRAIN CONTROL MODULE

For a complete Instrument Cluster Circuit Diagram, **Refer to Page 8J-53**.

Diagnostic Test

1. CHECK TO SEE IF PCM DTCS ARE PRESENT

Turn ignition on.
With the DRB III®, read PCM DTCs.

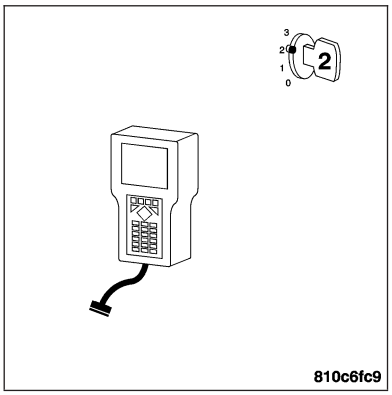

Are any performance or Bus related DTCs present?

Yes >> Repair all PCM DTCs before proceeding. Perform BODY VERIFICATION TEST.

No >> Go To 2

2. VERIFY DTCS

With the ignition on.
With the DRB III®, erase DTCs.
Turn the ignition off, then back on.
Monitor the DRB III® for this DTC.

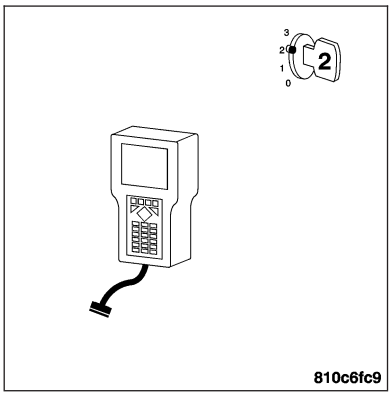

Did this DTC set again?

Yes >> Go To 3

No >> Go To 12

NO CAN COMMUNICATIONS WITH PCM — CONTINUED

3. PCM AND SKREEM CAN C BUS TERMINATION

Turn the ignition off.

Measure the resistance of the PCM CAN C Bus termination by back probing the CAN C Bus (+) circuit to the CAN C Bus (-) circuit at the PCM C4 harness connector.

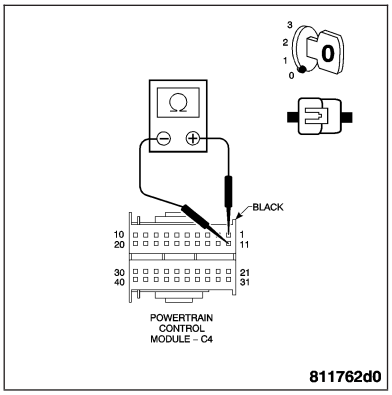

Is the resistance between 50 and 70 ohms?

Yes >> Go To 11

No >> Go To 4

4. PCM CAN C BUS TERMINATION

With the ignition off.

Disconnect the PCM C4 harness connector.

Note: Check connectors — Clean/repair as necessary.

Measure the resistance of the SKREEM CAN C Bus termination by back probing the CAN C Bus (+) circuit to the CAN C Bus (-) circuit at the PCM C4 harness connector.

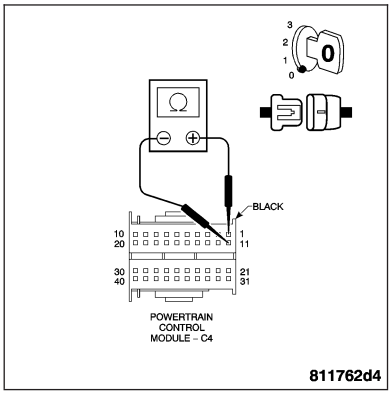

Is the SKREEM CAN C Bus termination resistance between 110 and 130 ohms?

Yes >> Replace and program the Powertrain Control Module. **Refer to Page 8E-56**.
Perform BODY VERIFICATION TEST.

No >> Go To 5

5. SKREEM TERMINATION

With the ignition off.

Measure the resistance of the SKREEM CAN C Bus termination by back probing the CAN C Bus (+) circuit to the CAN C Bus (-) circuit at the SKREEM C2 harness connector.

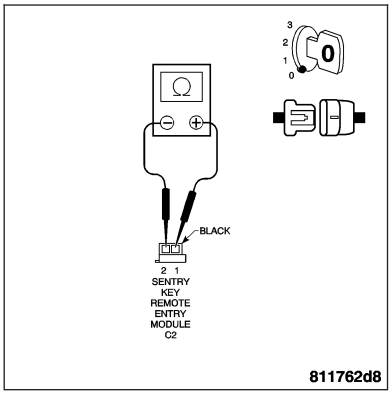

Is the resistance between 110 and 130 ohms?

Yes >> Go To 6

No >> Replace the SKREEM. **Refer to Page 8E-70**.
Perform BODY VERIFICATION TEST.

NO CAN COMMUNICATIONS WITH PCM — CONTINUED

6. CAN C BUS (-) CIRCUIT OPEN

With the ignition off.

Measure the resistance of the CAN C Bus (-) circuit from the SKREEM C2 harness connector to the PCM C4 harness connector.

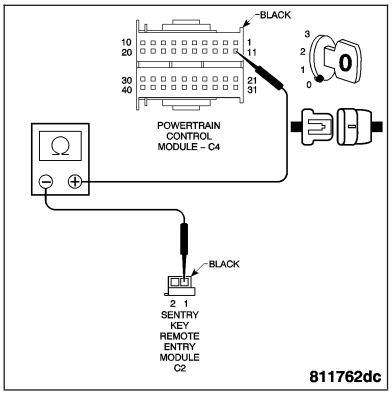

Is the resistance below 5.0 ohms?

Yes >> Go To 7

No >> Repair the CAN C Bus (-) circuit for an open. Perform BODY VERIFICATION TEST.

7. CAN C BUS (+) CIRCUIT OPEN

With the ignition off.

Measure the resistance of the CAN C Bus (+) circuit from the PCM C4 harness connector to the SKREEM C2 harness connector.

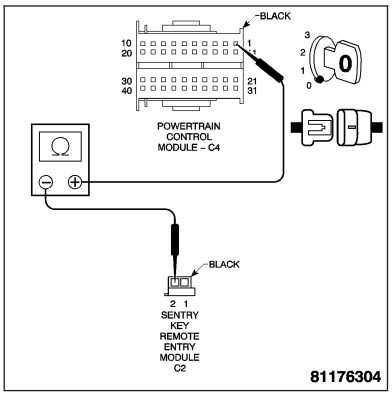

Is the resistance below 5.0 ohms?

Yes >> Go To 8

No >> Repair the CAN C Bus (+) circuit for an open. Perform BODY VERIFICATION TEST.

8. CAN C BUS (+) CIRCUIT SHORTED TO VOLTAGE

Turn the ignition on.

Measure the voltage of the CAN C Bus (+) circuit at the PCM C4 harness connector.

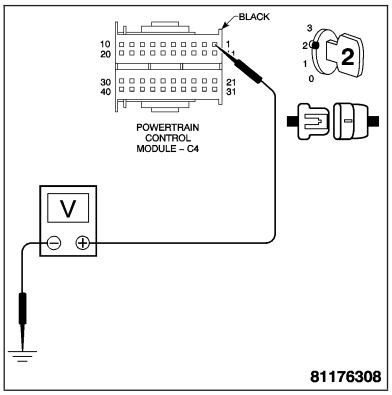

Is the voltage above 1.0 volt?

Yes >> Repair the CAN C Bus (+) circuit for a short to voltage. Perform BODY VERIFICATION TEST.

No >> Go To 9

NO CAN COMMUNICATIONS WITH PCM — CONTINUED

9. CAN C BUS (-) CIRCUIT SHORTED TO VOLTAGE

With the ignition on.
Measure the voltage of the CAN C Bus (-) circuit at the PCM C4 harness connector.

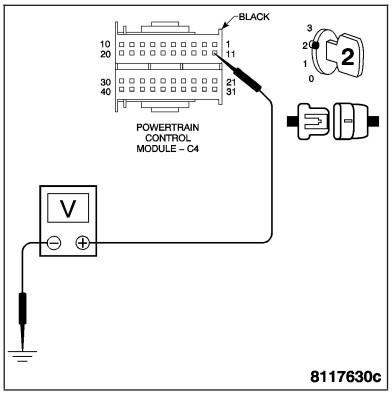

Is the voltage above 1.0 volt?

Yes >> Repair the CAN C Bus (-) circuit for a short to voltage.
Perform BODY VERIFICATION TEST.

No >> Go To 10

10. CAN C BUS (-) CIRCUIT SHORT TO GROUND

Turn the ignition off.
Measure the resistance between ground and the CAN C Bus (-) circuit.

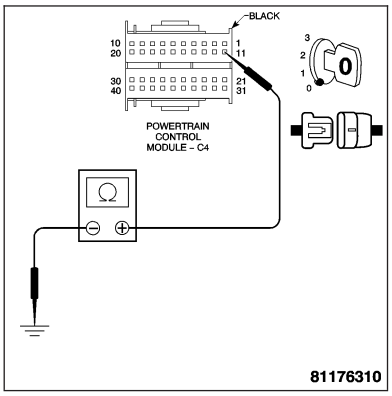

Is the resistance below 100 ohms?

Yes >> Repair the CAN C Bus (-) circuit for a short to ground.
Perform BODY VERIFICATION TEST.

No >> Repair the CAN C Bus (+) circuit for a short to ground.
Perform BODY VERIFICATION TEST.

11. CAN C BUS (-) CIRCUIT OPEN FROM INSTRUMENT CLUSTER TO PCM

With the ignition off.
Disconnect the Instrument Cluster C1 harness connector.

Note: Check connectors — Clean/repair as necessary.
Measure the resistance of the CAN C Bus (-) circuit from the Instrument Cluster C1 harness connector to the PCM C4 harness connector.

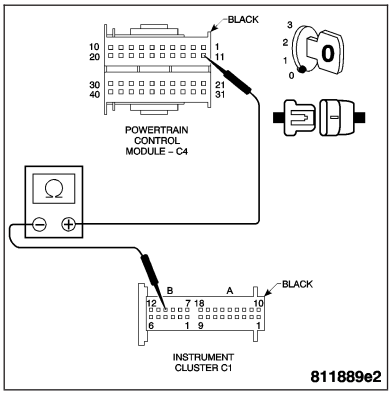

Is the resistance below 5.0 ohms?

Yes >> Repair the CAN C Bus (+) circuit for an open between the PCM C4 harness and the Instrument Cluster C1 harness connector.
Perform BODY VERIFICATION TEST.

No >> Repair the CAN C Bus (-) circuit for an open between the PCM C4 harness and the Instrument Cluster C1 harness connector.
Perform BODY VERIFICATION TEST.

NO CAN COMMUNICATIONS WITH PCM — CONTINUED

12. INTERMITTENT WIRING AND CONNECTORS

The conditions necessary to set this DTC are not present at this time.

Note: Check connectors — Clean/repair as necessary. Poor pin to terminal connections can set DTCs.

Note: Check for any Technical Service Bulletins that may apply.
Using the wiring diagram/schematic as a guide, inspect the wiring and connectors specific to this DTC. Wiggle the wires while checking for shorts and/or open circuits.

Were there any problems found?

Yes >> Repair as necessary.
Perform POWERTRAIN VERIFICATION TEST VER.

No >> The condition that caused this DTC to set is currently not present. Inspect the related wiring harness for a possible intermittent condition.

NO CAN COMMUNICATIONS WITH CAB

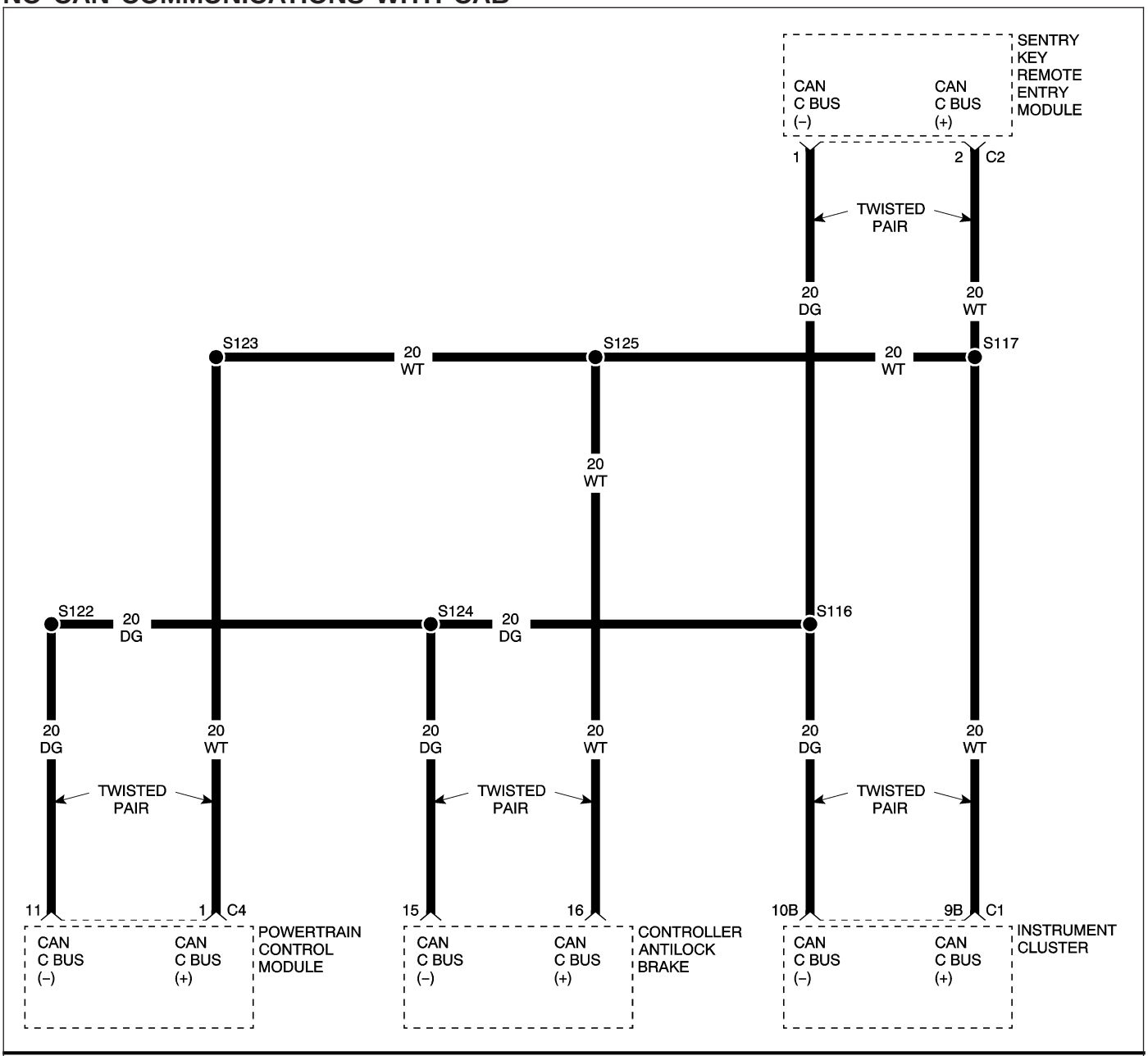

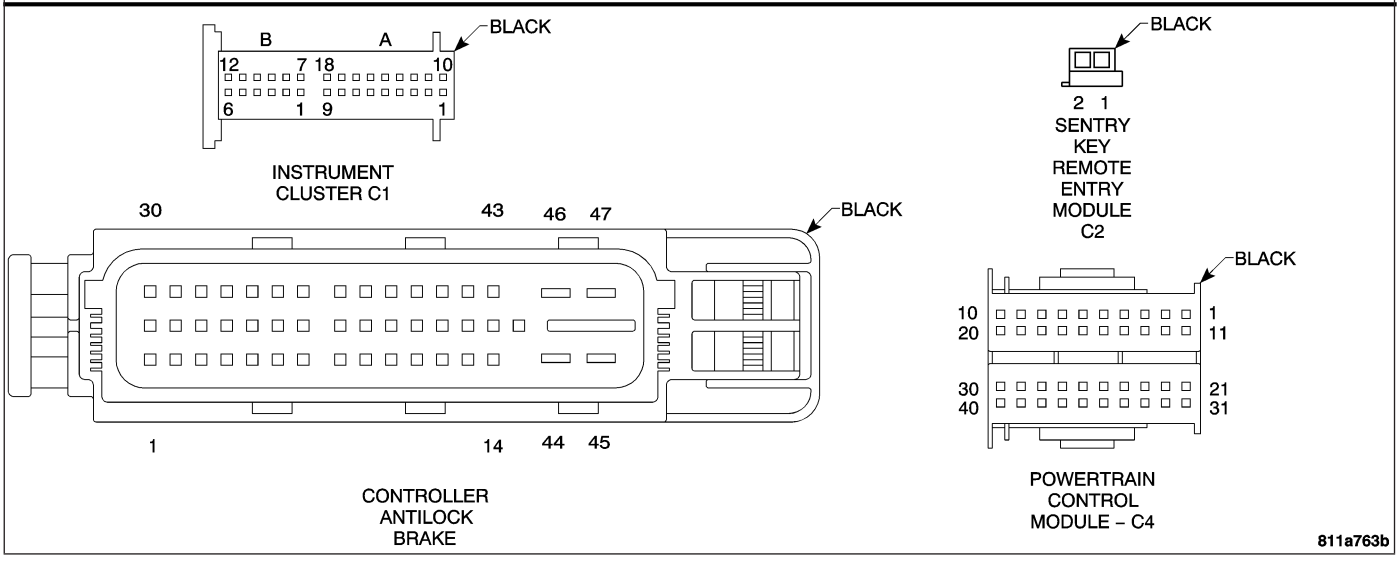

NO CAN COMMUNICATIONS WITH CAB — CONTINUED

When Monitored and Set Condition

- When Monitored: With the ignition on.
- Set Condition: This DTC is set when a CAN ID was not received in the required time from the Controller Antilock Brake (CAB).

POSSIBLE CAUSES
OPEN CAN C BUS (+)/(-) CIRCUIT
CAN C BUS (+)/(-) CIRCUIT SHORTED TO GROUND
CAN C BUS (+)/(-) CIRCUIT SHORTED TO VOLTAGE
TRANSMISSION CONTROL MODULE
SENTRY KEY REMOTE ENTRY MODULE
POWERTRAIN CONTROL MODULE

For a complete Instrument Cluster Circuit Diagram. **Refer to Page 8J-53**.

Diagnostic Test

1. CHECK TO SEE IF CAB DTCS ARE PRESENT

Turn ignition on.
With the DRB III®, read CAB DTCs.

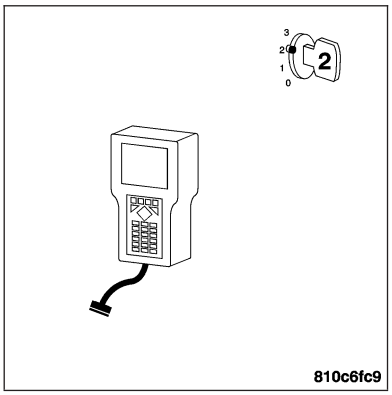

Are any performance or Bus related DTCs present?

Yes >> Repair all CAB DTCs before proceeding. Perform BODY VERIFICATION TEST.

No >> Go To 2

2. VERIFY DTCS

With the ignition on.
With the DRB III®, erase DTCs.
Turn the ignition off, then back on.
Monitor the DRB III® for this DTC.

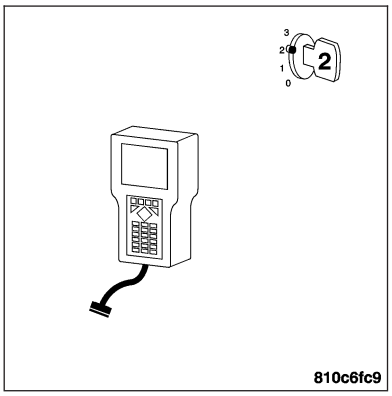

Did this DTC set again?

Yes >> Go To 3

No >> Go To 12

NO CAN COMMUNICATIONS WITH CAB — CONTINUED

3. PCM AND SKREEM CAN C BUS TERMINATION

Turn the ignition off.

Measure the resistance of the PCM CAN C Bus termination by back probing the CAN C Bus (+) circuit to the CAN C Bus (-) circuit at the PCM C4 harness connector.

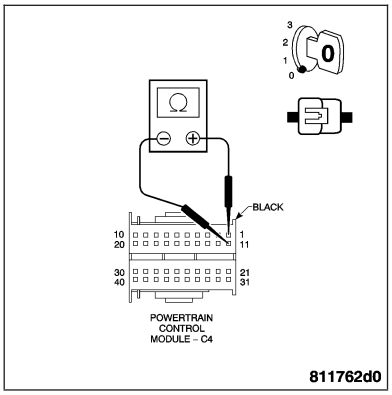

Is the resistance between 50 and 70 ohms?

Yes >> Go To 11

No >> Go To 4

4. PCM CAN C BUS TERMINATION

With the ignition off.

Disconnect the PCM C4 harness connector.

Note: Check connectors — Clean/repair as necessary.

Measure the resistance of the SKREEM CAN C Bus termination by back probing the CAN C Bus (+) circuit to the CAN C Bus (-) circuit at the PCM C4 harness connector.

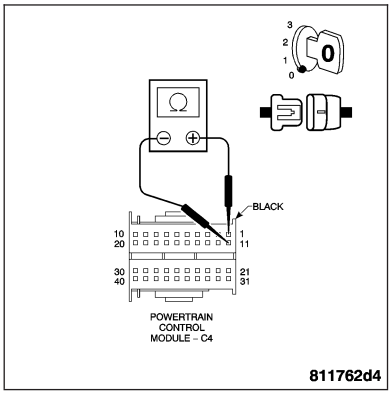

Is the SKREEM CAN C Bus termination resistance between 110 and 130 ohms?

Yes >> Replace and program the Powertrain Control Module. **Refer to Page 8E-56**.
Perform BODY VERIFICATION TEST.

No >> Go To 5

5. SKREEM TERMINATION

With the ignition off.

Measure the resistance of the SKREEM CAN C Bus termination by back probing the CAN C Bus (+) circuit to the CAN C Bus (-) circuit at the SKREEM C2 harness connector.

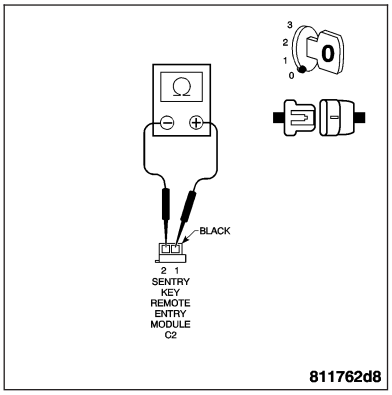

Is the resistance between 110 and 130 ohms?

Yes >> Go To 6

No >> Replace the SKREEM. **Refer to Page 8E-70**.
Perform BODY VERIFICATION TEST.

NO CAN COMMUNICATIONS WITH CAB — CONTINUED

6. CAN C BUS (-) CIRCUIT OPEN

With the ignition off.

Measure the resistance of the CAN C Bus (-) circuit from the SKREEM C2 harness connector to the PCM C4 harness connector.

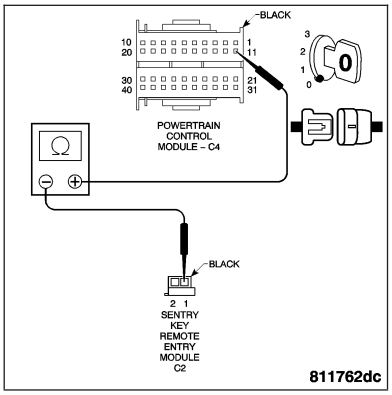

Is the resistance below 5.0 ohms?

Yes >> Go To 7

No >> Repair the CAN C Bus (-) circuit for an open. Perform BODY VERIFICATION TEST.

7. CAN C BUS (+) CIRCUIT OPEN

With the ignition off.

Measure the resistance of the CAN C Bus (+) circuit from the PCM C4 harness connector to the SKREEM C2 harness connector.

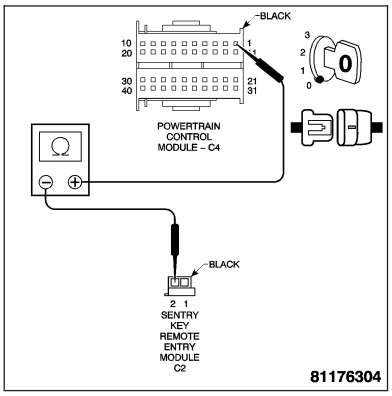

Is the resistance below 5.0 ohms?

Yes >> Go To 8

No >> Repair the CAN C Bus (+) circuit for an open. Perform BODY VERIFICATION TEST.

8. CAN C BUS (+) CIRCUIT SHORTED TO VOLTAGE

Turn the ignition on.

Measure the voltage of the CAN C Bus (+) circuit at the PCM C4 harness connector.

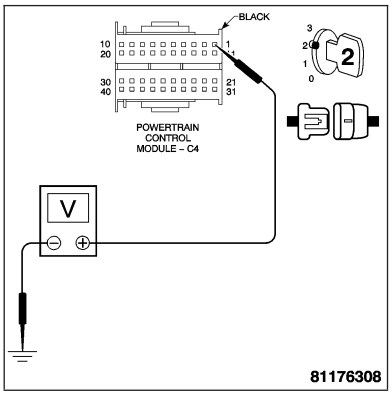

Is the voltage above 1.0 volt?

Yes >> Repair the CAN C Bus (+) circuit for a short to voltage. Perform BODY VERIFICATION TEST.

No >> Go To 9

NO CAN COMMUNICATIONS WITH CAB — CONTINUED

9. CAN C BUS (-) CIRCUIT SHORTED TO VOLTAGE

With the ignition on.
Measure the voltage of the CAN C Bus (-) circuit at the PCM C4 harness connector.

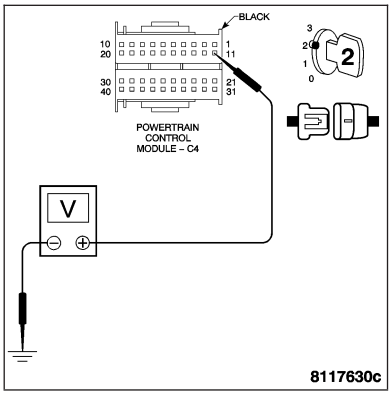

Is the voltage above 1.0 volt?

Yes >> Repair the CAN C Bus (-) circuit for a short to voltage.
Perform BODY VERIFICATION TEST.

No >> Go To 10

10. CAN C BUS (-) CIRCUIT SHORT TO GROUND

Turn the ignition off.
Measure the resistance between ground and the CAN C Bus (-) circuit.

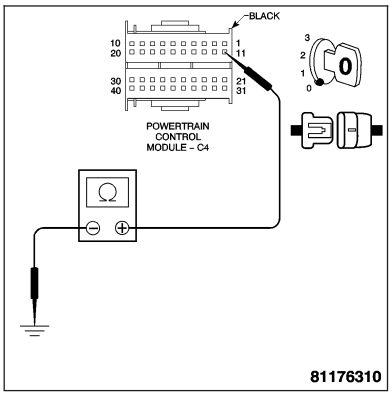

Is the resistance below 100 ohms?

Yes >> Repair the CAN C Bus (-) circuit for a short to ground.
Perform BODY VERIFICATION TEST.

No >> Repair the CAN C Bus (+) circuit for a short to ground.
Perform BODY VERIFICATION TEST.

11. CAN C BUS (-) CIRCUIT OPEN FROM CAB TO INSTRUMENT CLUSTER

With the ignition off.
Disconnect the CAB harness connector.

Note: Check connectors — Clean/repair as necessary.
Measure the resistance of the CAN C Bus (-) circuit from the CAB harness connector to the Instrument Cluster C1 harness connector.

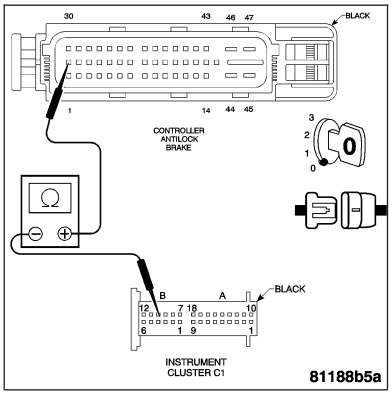

Is the resistance below 5.0 ohms?

Yes >> Repair the CAN C Bus (+) circuit for an open between the Instrument Cluster C1 harness and the CAB harness connector.
Perform BODY VERIFICATION TEST.

No >> Repair the CAN C Bus (-) circuit for an open between the Instrument Cluster C1 harness and the CAB harness connector.
Perform BODY VERIFICATION TEST.

NO CAN COMMUNICATIONS WITH CAB — CONTINUED

12. INTERMITTENT WIRING AND CONNECTORS

The conditions necessary to set this DTC are not present at this time.

Note: Check connectors — Clean/repair as necessary. Poor pin to terminal connections can set DTCs.

Note: Check for any Technical Service Bulletins that may apply.
Using the wiring diagram/schematic as a guide, inspect the wiring and connectors specific to this DTC. Wiggle the wires while checking for shorts and/or open circuits.

Were there any problems found?

Yes >> Repair as necessary.
Perform POWERTRAIN VERIFICATION TEST VER.

No >> The condition that caused this DTC to set is currently not present. Inspect the related wiring harness for a possible intermittent condition.

NO CAN COMMUNICATIONS WITH TCM

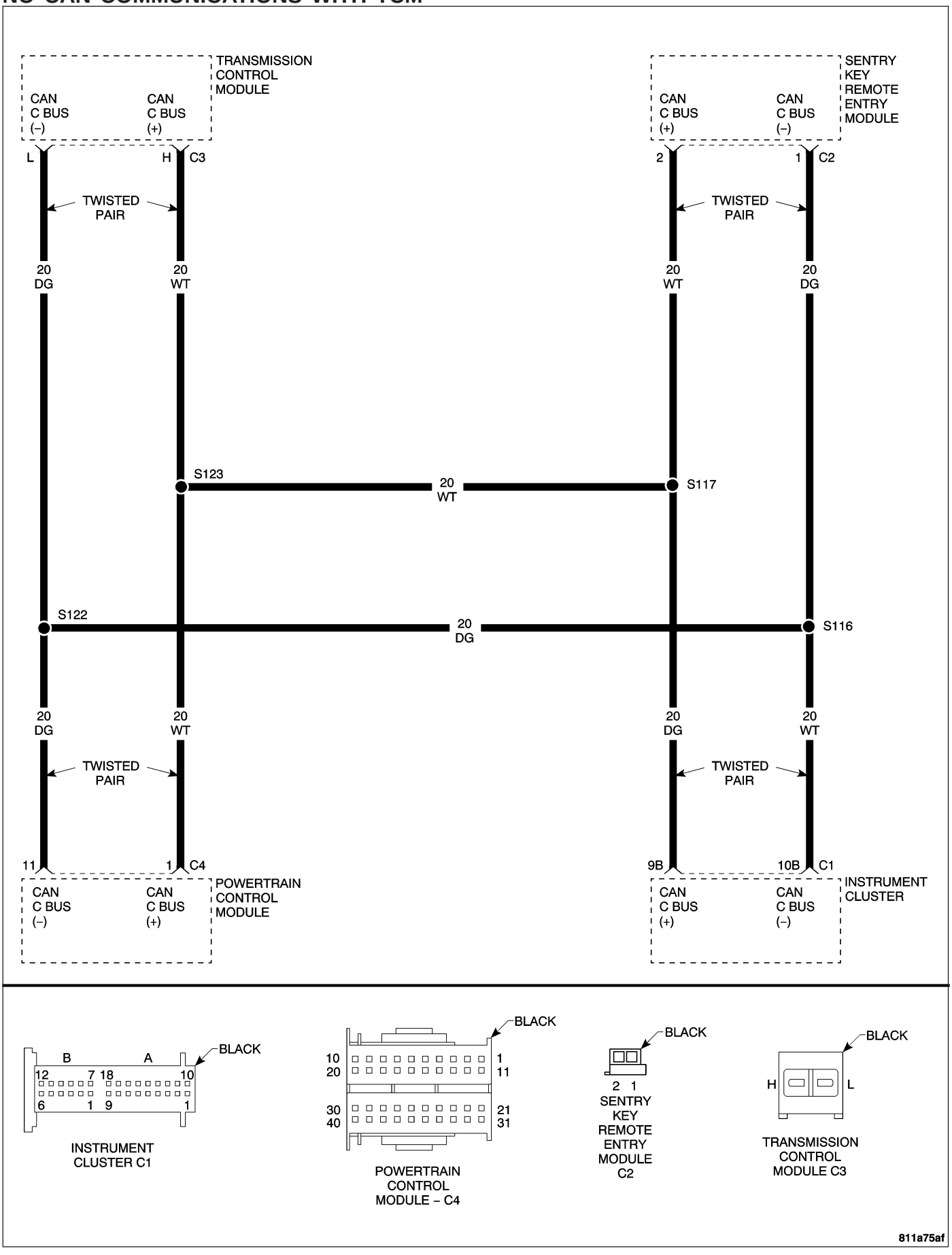

NO CAN COMMUNICATIONS WITH TCM — CONTINUED

When Monitored and Set Condition

- When Monitored: With the ignition on.
- Set Condition: This DTC is set when a CAN ID was not received in the required time from the Transmission Control Module (TCM).

POSSIBLE CAUSES
OPEN CAN C BUS (+)/(-) CIRCUIT
CAN C BUS (+)/(-) CIRCUIT SHORTED TO GROUND
CAN C BUS (+)/(-) CIRCUIT SHORTED TO VOLTAGE
TRANSMISSION CONTROL MODULE
SENTRY KEY REMOTE ENTRY MODULE
POWERTRAIN CONTROL MODULE

For a complete Instrument Cluster Circuit Diagram, **Refer to Page 8J-53**.

Diagnostic Test

1. CHECK TO SEE IF TCM DTCS ARE PRESENT

Turn ignition on.
With the DRB III®, read TCM DTCs.

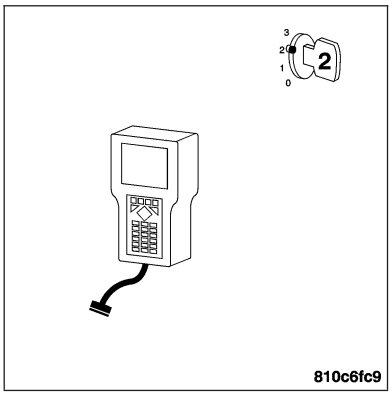

Are any performance or Bus related DTCs present?

Yes >> Repair all TCM DTCs before proceeding. Perform BODY VERIFICATION TEST.

No >> Go To 2

2. VERIFY DTCS

With the ignition on.
With the DRB III®, erase DTCs.
Turn the ignition off, then back on.
Monitor the DRB III® for this DTC.

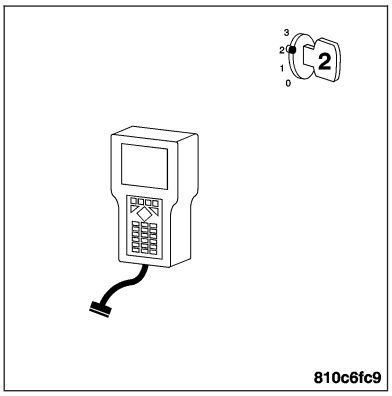

Did this DTC set again?

Yes >> Go To 3

No >> Go To 12

NO CAN COMMUNICATIONS WITH TCM — CONTINUED

3. PCM AND SKREEM CAN C BUS TERMINATION

Turn the ignition off.

Measure the resistance of the PCM CAN C Bus termination by back probing the CAN C Bus (+) circuit to the CAN C Bus (-) circuit at the PCM C4 harness connector.

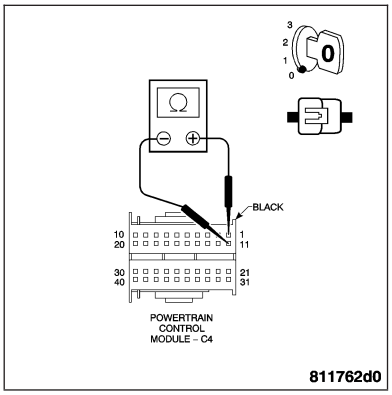

Is the resistance between 50 and 70 ohms?

Yes >> Go To 11

No >> Go To 4

4. PCM CAN C BUS TERMINATION

With the ignition off.

Disconnect the PCM C4 harness connector.

Note: Check connectors — Clean/repair as necessary.

Measure the resistance of the SKREEM CAN C Bus termination by back probing the CAN C Bus (+) circuit to the CAN C Bus (-) circuit at the PCM C4 harness connector.

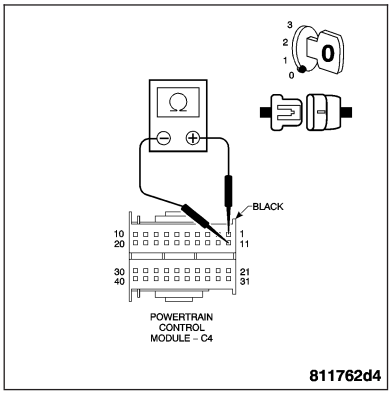

Is the SKREEM CAN C Bus termination resistance between 110 and 130 ohms?

Yes >> Replace and program the Powertrain Control Module. **Refer to Page 8E-56**.
Perform BODY VERIFICATION TEST.

No >> Go To 5

5. SKREEM TERMINATION

With the ignition off.

Measure the resistance of the SKREEM CAN C Bus termination by back probing the CAN C Bus (+) circuit to the CAN C Bus (-) circuit at the SKREEM C2 harness connector.

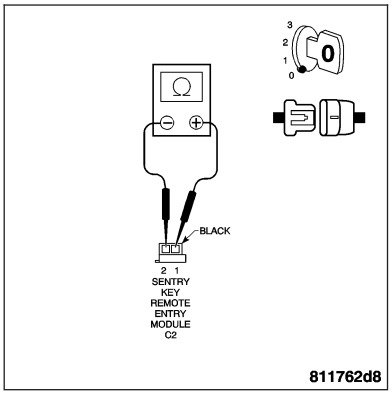

Is the resistance between 110 and 130 ohms?

Yes >> Go To 6

No >> Replace the SKREEM. **Refer to Page 8E-70**.
Perform BODY VERIFICATION TEST.

NO CAN COMMUNICATIONS WITH TCM — CONTINUED

6. CAN C BUS (-) CIRCUIT OPEN

With the ignition off.

Measure the resistance of the CAN C Bus (-) circuit from the SKREEM C2 harness connector to the PCM C4 harness connector.

Is the resistance below 5.0 ohms?

Yes >> Go To 7

No >> Repair the CAN C Bus (-) circuit for an open.
Perform BODY VERIFICATION TEST.

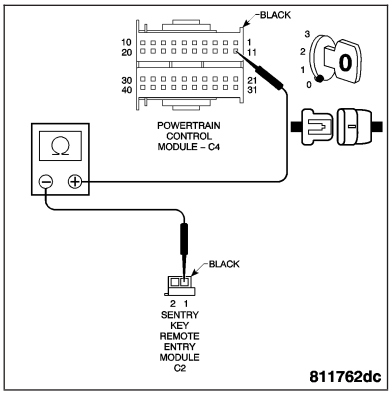

7. CAN C BUS (+) CIRCUIT OPEN

With the ignition off.

Measure the resistance of the CAN C Bus (+) circuit from the PCM C4 harness connector to the SKREEM C2 harness connector.

Is the resistance below 5.0 ohms?

Yes >> Go To 8

No >> Repair the CAN C Bus (+) circuit for an open.
Perform BODY VERIFICATION TEST.

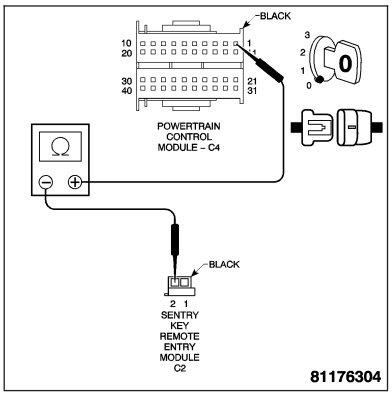

8. CAN C BUS (+) CIRCUIT SHORTED TO VOLTAGE

Turn the ignition on.

Measure the voltage of the CAN C Bus (+) circuit at the PCM C4 harness connector.

Is the voltage above 1.0 volt?

Yes >> Repair the CAN C Bus (+) circuit for a short to voltage.
Perform BODY VERIFICATION TEST.

No >> Go To 9

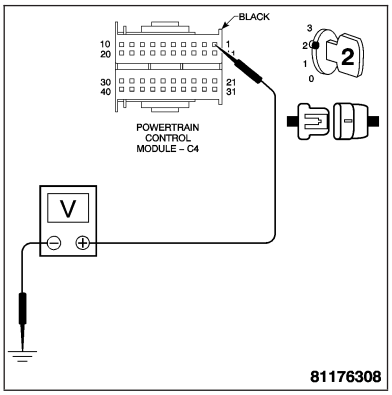

NO CAN COMMUNICATIONS WITH TCM — CONTINUED

9. CAN C BUS (-) CIRCUIT SHORTED TO VOLTAGE

With the ignition on.
Measure the voltage of the CAN C Bus (-) circuit at the PCM C4 harness connector.

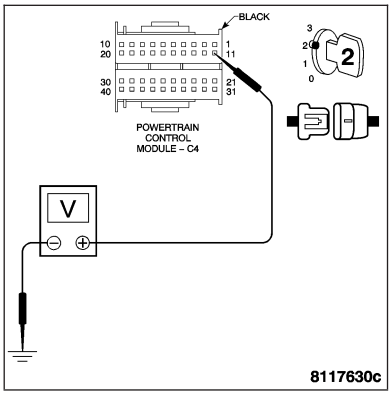

Is the voltage above 1.0 volt?

Yes >> Repair the CAN C Bus (-) circuit for a short to voltage.
Perform BODY VERIFICATION TEST.

No >> Go To 10

10. CAN C BUS (-) CIRCUIT SHORT TO GROUND

Turn the ignition off.
Measure the resistance between ground and the CAN C Bus (-) circuit.

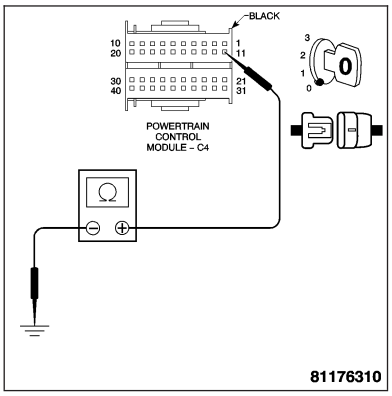

Is the resistance below 100 ohms?

Yes >> Repair the CAN C Bus (-) circuit for a short to ground.
Perform BODY VERIFICATION TEST.

No >> Repair the CAN C Bus (+) circuit for a short to ground.
Perform BODY VERIFICATION TEST.

11. CAN C BUS (-) CIRCUIT OPEN FROM TCM TO INSTRUMENT CLUSTER

With the ignition off.
Disconnect the TCM C3 harness connector.

Note: Check connectors — Clean/repair as necessary.
Measure the resistance of the CAN C Bus (-) circuit from the TCM C3 harness connector to the Instrument Cluster C1 harness connector.

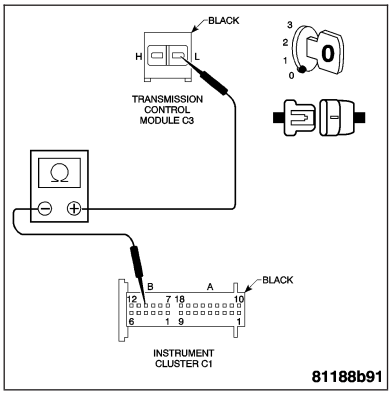

Is the resistance below 5.0 ohms?

Yes >> Repair the CAN C Bus (+) circuit for an open between the Instrument Cluster C1 harness and the TCM C3 harness connector.
Perform BODY VERIFICATION TEST.

No >> Repair the CAN C Bus (-) circuit for an open between the Instrument Cluster C1 harness and the TCM C3 harness connector.
Perform BODY VERIFICATION TEST.

NO CAN COMMUNICATIONS WITH TCM — CONTINUED

12. INTERMITTENT WIRING AND CONNECTORS

The conditions necessary to set this DTC are not present at this time.

Note: Check connectors — Clean/repair as necessary. Poor pin to terminal connections can set DTCs.

Note: Check for any Technical Service Bulletins that may apply.
Using the wiring diagram/schematic as a guide, inspect the wiring and connectors specific to this DTC. Wiggle the wires while checking for shorts and/or open circuits.

Were there any problems found?

Yes >> Repair as necessary.
Perform POWERTRAIN VERIFICATION TEST VER.

No >> The condition that caused this DTC to set is currently not present. Inspect the related wiring harness for a possible intermittent condition.

CAN BUS COMMUNICATION GENERAL MALFUNCTION

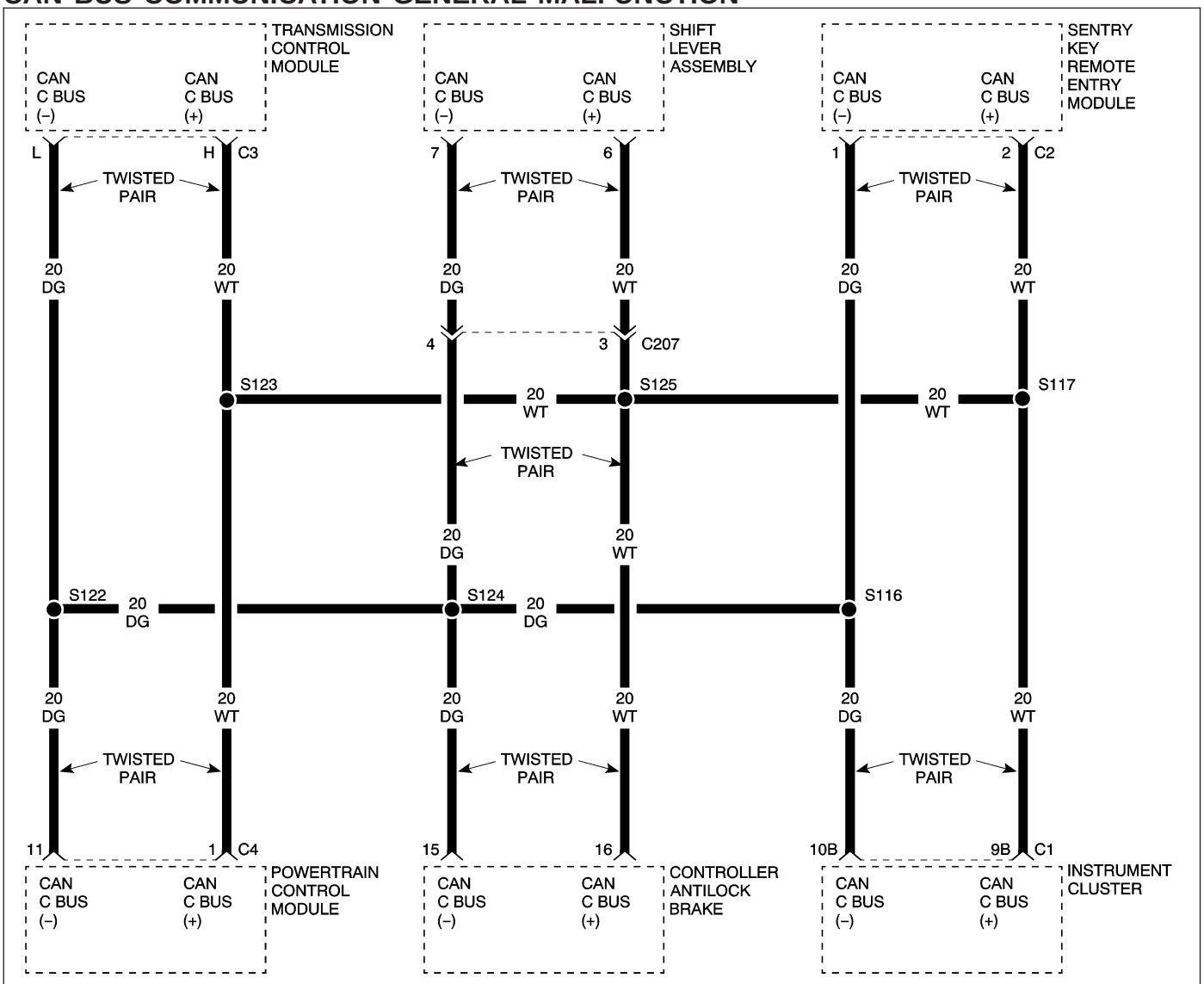

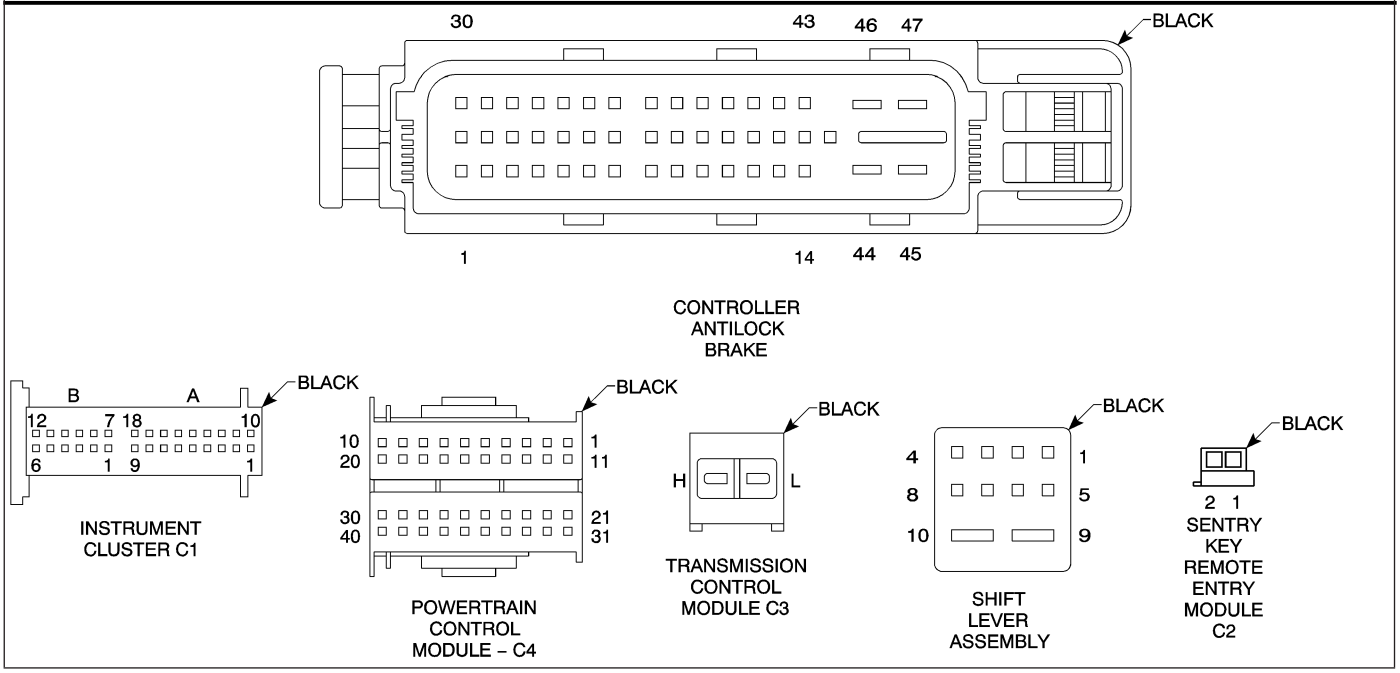

CAN BUS COMMUNICATION GENERAL MALFUNCTION — CONTINUED

When Monitored and Set Condition

- When Monitored: With the ignition on.
- Set Condition: CAN Bus communication failure between the Instrument Cluster and the CAN Bus network.

POSSIBLE CAUSES
CAN BUS CIRCUIT(S) OPEN
INSTRUMENT CLUSTER

For a complete Instrument Cluster Circuit Diagram, **Refer to Page 8J-53**.

Diagnostic Test

1. MEASURE THE RESISTANCE OF THE CAN C BUS (+) CIRCUIT

Turn the ignition off.

Disconnect the Instrument Cluster harness connector.

Disconnect the harness connectors of the other modules on the CAN Bus network.

Note: Check connectors - Clean/repair as necessary.

Measure the resistance of the CAN C Bus (+) circuit from the Instrument Cluster harness connector to the harness connectors of the other modules on the CAN Bus network.

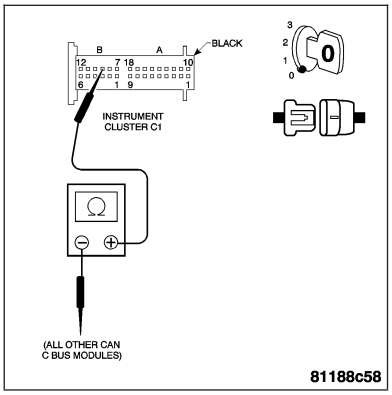

Is the resistance below 1.0 ohm?

Yes >> Go to 2

No >> Repair the CAN C Bus (+) circuit for an open.
Perform ABS VERIFICATION TEST.

2. MEASURE THE RESISTANCE OF THE CAN C BUS (-) CIRCUIT

With the ignition off.

Measure the resistance of the CAN C Bus (-) circuit from the Instrument Cluster harness connector to the harness connectors of the other modules on the CAN Bus network.

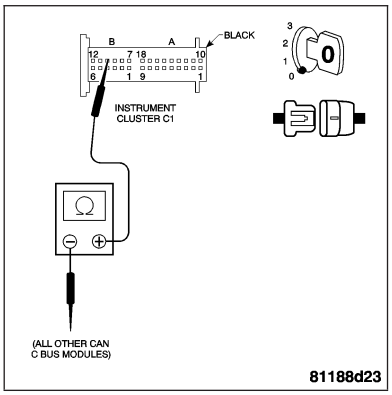

Is the resistance below 1.0 ohm?

Yes >> Replace the Instrument Cluster. **Refer to Page 8J-83**.
Perform ABS VERIFICATION TEST.

No >> Repair the CAN C Bus (-) circuit for an open.
Perform ABS VERIFICATION TEST.

*LEFT TURN SIGNAL INDICATOR INOPERATIVE

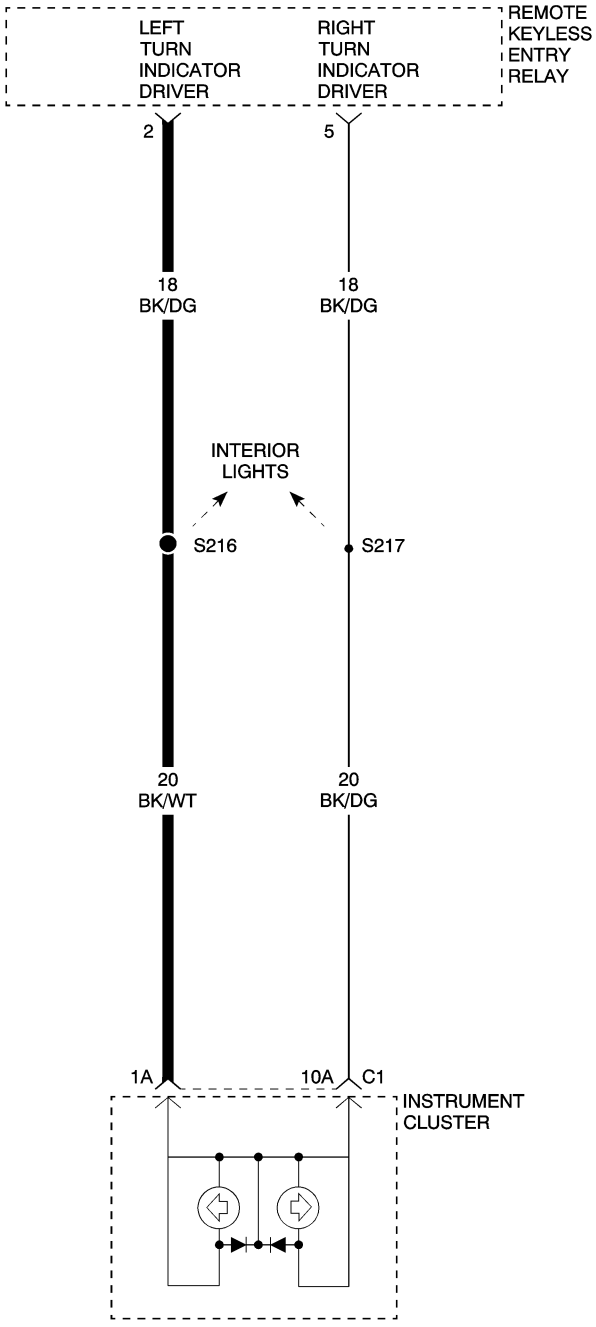

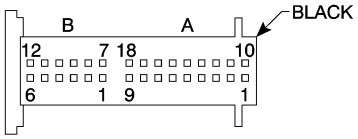

INSTRUMENT CLUSTER C1

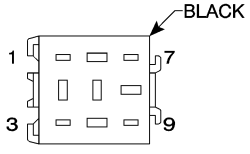

REMOTE KEYLESS ENTRY RELAY

8113e6dd

*LEFT TURN SIGNAL INDICATOR INOPERATIVE — CONTINUED

POSSIBLE CAUSES
INDICATOR CIRCUIT OPEN
INDICATOR LAMP
INSTRUMENT CLUSTER

For a complete Instrument Cluster Circuit Diagram, **Refer to Page 8J-53**.

Diagnostic Test

1. INSPECT THE LEFT TURN SIGNAL INDICATOR LAMP

Turn the ignition off.

Remove the Left Turn Signal Indicator Lamp from the Instrument Cluster and inspect the lamp for an open filament.

Is the lamp filament open?

Yes >> Replace the Left Turn Signal Indicator Lamp. **Refer to Page 8J-75**.
Perform BODY VERIFICATION TEST.

No >> Go to 2

2. MEASURE LEFT TURN SIGNAL INDICATOR DRIVER CIRCUIT RESISTANCE

With the ignition off.

Disconnect the Remote Keyless Entry Relay.

Disconnect the Instrument Cluster C1 harness connector.

Note: Check connectors - Clean/repair as necessary.

Measure the resistance of the Left Turn Signal Indicator Driver circuit from the RKE Relay harness connector cavity 2 to the Instrument Cluster C1 harness connector cavity 1A.

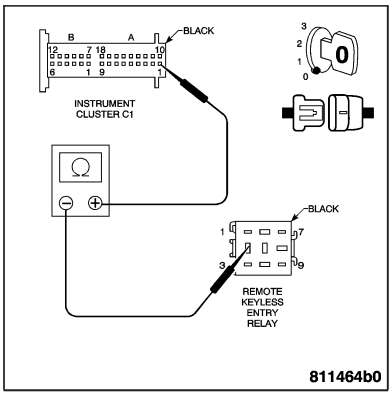

Is the resistance below 5.0 ohms?

Yes >> Replace the Instrument Cluster. **Refer to Page 8J-83**.
Perform BODY VERIFICATION TEST.

No >> Repair the Left Turn Signal Indicator Driver circuit for an open.
Perform BODY VERIFICATION TEST.

*RIGHT TURN SIGNAL INDICATOR INOPERATIVE

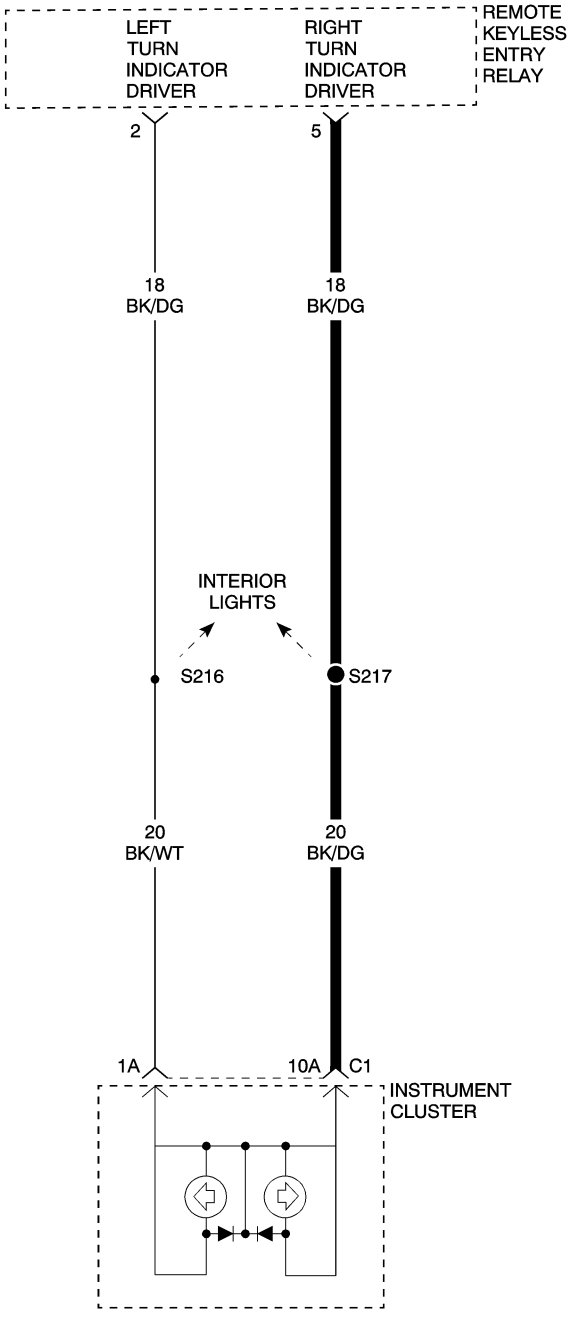

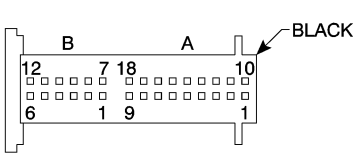

INSTRUMENT CLUSTER C1

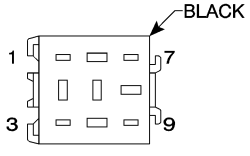

REMOTE KEYLESS ENTRY RELAY

8113e792

*RIGHT TURN SIGNAL INDICATOR INOPERATIVE — CONTINUED

POSSIBLE CAUSES
INDICATOR CIRCUIT OPEN
INDICATOR LAMP
INSTRUMENT CLUSTER

For a complete Instrument Cluster Circuit Diagram, **Refer to Page 8J-53**.

Diagnostic Test

1. INSPECT THE RIGHT TURN SIGNAL INDICATOR LAMP

Turn the ignition off.

Remove the Right Turn Signal Indicator Lamp from the Instrument Cluster and inspect the lamp for an open filament.

Is the lamp filament open?

Yes >> Replace the Right Turn Signal Indicator Lamp. **Refer to Page 8J-75**.
Perform BODY VERIFICATION TEST.

No >> Go to 2

2. MEASURE RIGHT TURN SIGNAL INDICATOR CIRCUIT RESISTANCE

With the ignition off.

Disconnect the Remote Keyless Entry Relay.

Disconnect the Instrument Cluster C1 harness connector.

Note: Check connectors - Clean/repair as necessary.

Measure the resistance of the Right Turn Signal Indicator circuit from the RKE Relay harness connector cavity 5 to the Instrument Cluster C1 harness connector cavity A10.

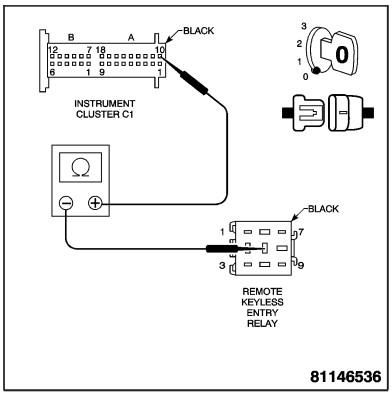

Is the resistance below 5.0 ohms?

Yes >> Replace the Instrument Cluster. **Refer to Page 8J-83**.
Perform BODY VERIFICATION TEST.

No >> Repair the Right Turn Signal Indicator Driver circuit for an open.
Perform BODY VERIFICATION TEST.

*HIGH BEAM INDICATOR INOPERATIVE

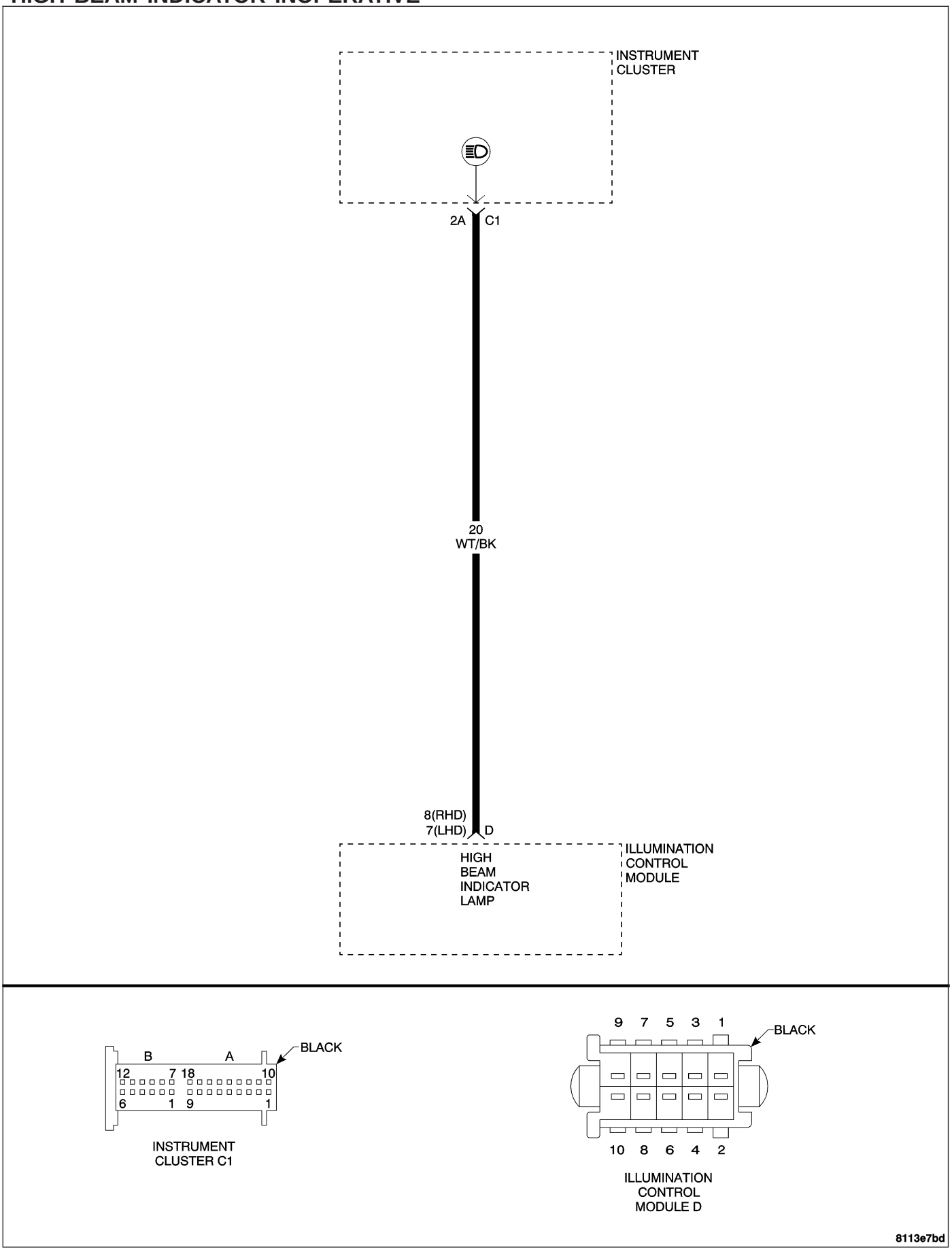

*HIGH BEAM INDICATOR INOPERATIVE — CONTINUED

POSSIBLE CAUSES
INDICATOR CIRCUIT OPEN
INDICATOR LAMP
INSTRUMENT CLUSTER

For a complete Instrument Cluster Circuit Diagram, **Refer to Page 8J-53**.

Diagnostic Test

1. HIGH BEAM INDICATOR LAMP

Turn the ignition off.

Disconnect the Instrument Cluster C1 harness connector.

Note: Check connectors — Clean/repair as necessary.

Turn the ignition on.

Turn the High Beams on.

Measure the voltage of the High Beam Indicator Lamp circuit at the Instrument Cluster C1 harness connector.

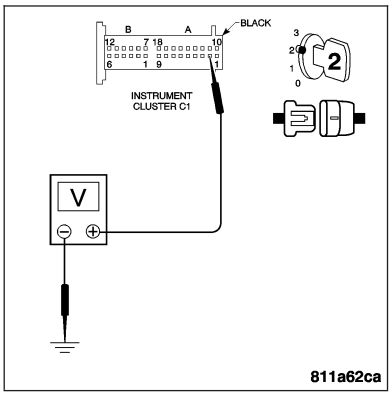

Is the voltage above 10 volts?

Yes >> Check the High Beam Indicator Lamp. If the lamp is OK, Replace the Instrument Cluster. **Refer to Page 8J-83**.
Perform BODY VERIFICATION TEST.

No >> Go to 2

2. MEASURE HIGH BEAM INDICATOR CIRCUIT RESISTANCE

Turn the ignition off.

Disconnect the Illumination Control Module harness connector.

Measure the resistance of the High Beam Indicator circuit from the Illumination Control Module harness connector cavity 7 to the Instrument Cluster C1 harness connector cavity A2.

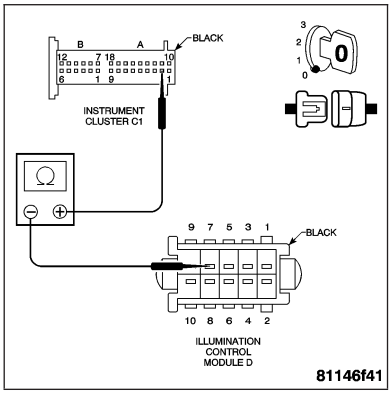

Is the resistance below 5.0 ohms?

Yes >> Replace the Illumination Control Module. **Refer to Page 8J-83**.
Perform BODY VERIFICATION TEST.

No >> Repair the High Beam Indicator circuit for an open.
Perform BODY VERIFICATION TEST.

*BRAKE WARNING INDICATOR INOPERATIVE

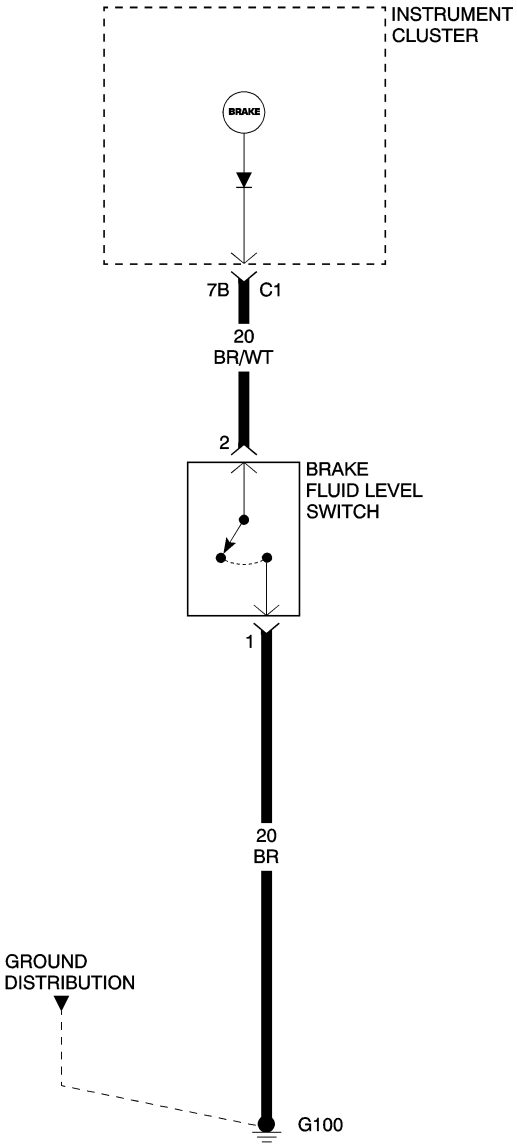

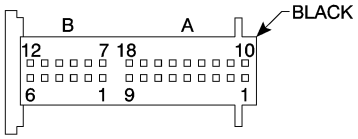

INSTRUMENT CLUSTER C1

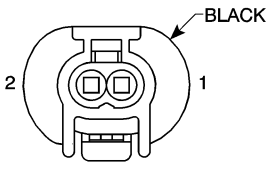

BRAKE FLUID LEVEL SWITCH

8113e9ab

*BRAKE WARNING INDICATOR INOPERATIVE — CONTINUED

POSSIBLE CAUSES
INDICATOR CIRCUIT OPEN
BRAKE FLUID LEVEL SWITCH
INDICATOR LAMP
INSTRUMENT CLUSTER

For a complete Instrument Cluster Circuit Diagram, **Refer to Page 8J-53**.

Diagnostic Test

1. BRAKE WARNING INDICATOR SWITCH

Turn the ignition off.

Disconnect the Brake Fluid Level Switch harness connector.

Note: Check connectors - Clean/repair as necessary.

Connect a jumper wire between cavity 1 and cavity 2 of the Brake Fluid Level Switch harness connector.

Turn the ignition on.

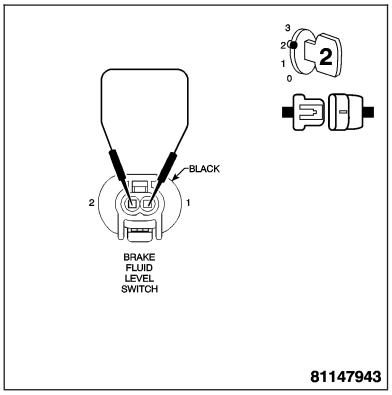

Is the Brake Warning Indicator lamp on?

Yes >> Replace the Brake Fluid Level Switch. **Refer to Page 5-75**.
Perform BODY VERIFICATION TEST.

No >> Go to 2

2. MEASURE BRAKE WARNING INDICATOR CIRCUIT RESISTANCE

Turn the ignition off.

Disconnect the Instrument Cluster C1 harness connector.

Note: Check connectors - Clean/repair as necessary.

Connect a jumper wire between cavity 1 and cavity 2 of the Brake Fluid Level Switch harness connector.

Measure the resistance between ground and the Brake Warning Indicator circuit.

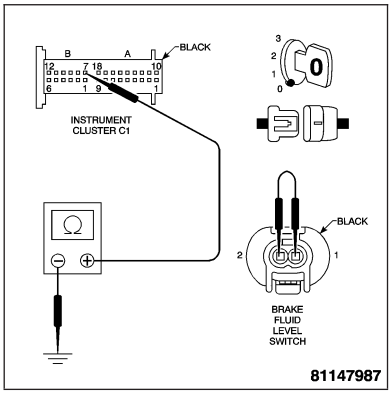

Is the resistance below 5.0 ohms?

Yes >> Check the Brake Warning Indicator lamp. If the lamp is OK, replace the Instrument Cluster. **Refer to Page 8J-83**.
Perform BODY VERIFICATION TEST.

No >> Repair the Brake Warning Indicator circuit for an open.
Perform BODY VERIFICATION TEST.

*BATTERY VOLTAGE INDICATOR INOPERATIVE

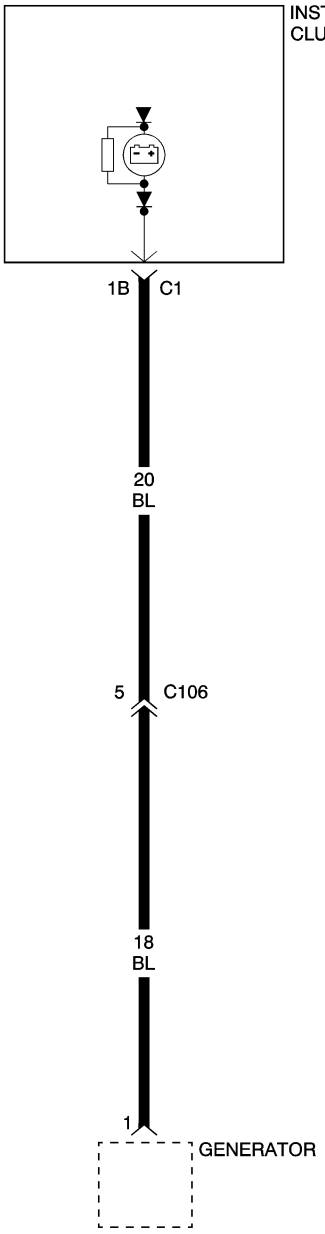

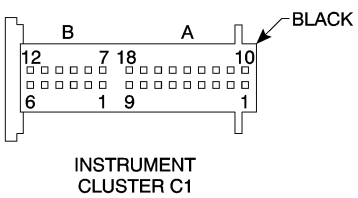

INSTRUMENT
CLUSTER C1

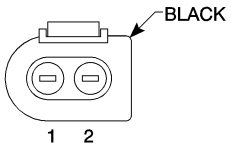

GENERATOR

8113e960

*BATTERY VOLTAGE INDICATOR INOPERATIVE — CONTINUED

POSSIBLE CAUSES
INDICATOR CIRCUIT OPEN
INDICATOR LAMP
GENERATOR
INSTRUMENT CLUSTER

For a complete Instrument Cluster Circuit Diagram, **Refer to Page 8J-53**.

Diagnostic Test

1. GENERATOR OUTPUT

Turn the ignition off.

Disconnect the Instrument Cluster C1 harness connector.

Note: Check connectors — Clean/repair as necessary.

Start the engine.

Measure the voltage of the Battery Voltage Indicator circuit at the Instrument Cluster harness connector.

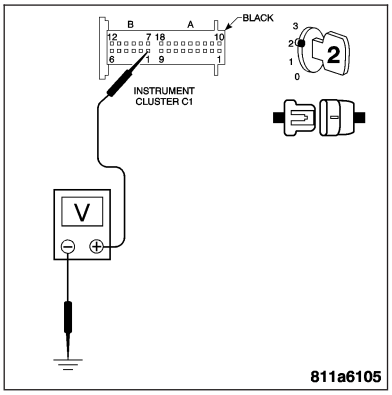

Is the voltage above 10 volts?

Yes >> Check the Battery Voltage Indicator Lamp. If the lamp is OK, replace the Instrument Cluster. **Refer to Page 8J-75**.
Perform BODY VERIFICATION TEST.

No >> Go to 2

2. MEASURE BATTERY VOLTAGE INDICATOR CIRCUIT RESISTANCE

Turn the ignition off.

Disconnect the Generator harness connector.

Measure the resistance of the Battery Voltage Indicator circuit from the Generator harness connector to the Instrument Cluster C1 harness connector.

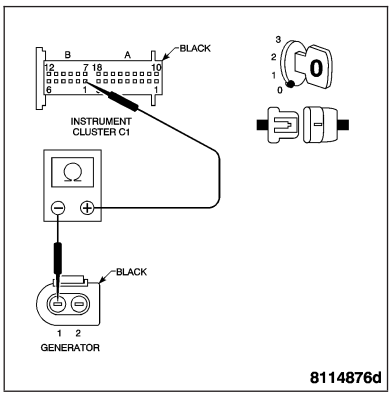

Is the resistance below 5.0 ohms?

Yes >> Replace the Generator. **Refer to Page 8F-28**.
Perform BODY VERIFICATION TEST.

No >> Repair the Battery Voltage Indicator circuit for an open.
Perform BODY VERIFICATION TEST.

*SEAT BELT INDICATOR INOPERATIVE

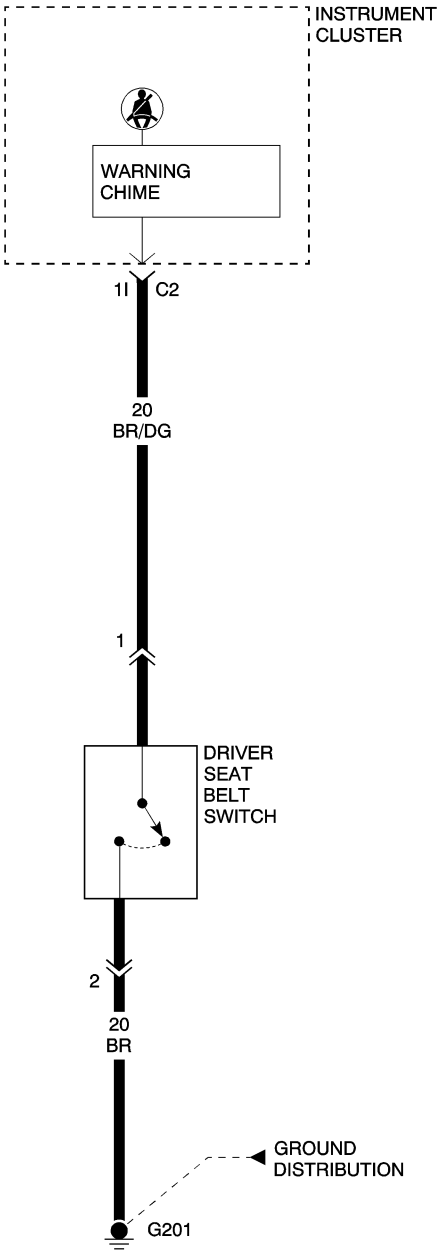

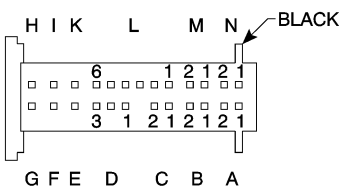

INSTRUMENT CLUSTER C2

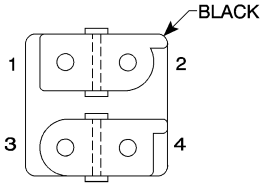

DRIVER POWER SEAT/ SEAT BELT

8113e86a

*SEAT BELT INDICATOR INOPERATIVE — CONTINUED

POSSIBLE CAUSES
INDICATOR CIRCUIT OPEN
INDICATOR LAMP
INSTRUMENT CLUSTER

For a complete Instrument Cluster Circuit Diagram, **Refer to Page 8J-53**.

Diagnostic Test

1. SEAT BELT INDICATOR SWITCH

Turn the ignition off.

Disconnect the Seat Belt Indicator Switch harness connector.

Note: Check connectors — Clean/repair as necessary.

Connect a jumper wire between cavity 1 and cavity 2 of the Driver Seat Belt Switch harness connector.

Turn the ignition on.

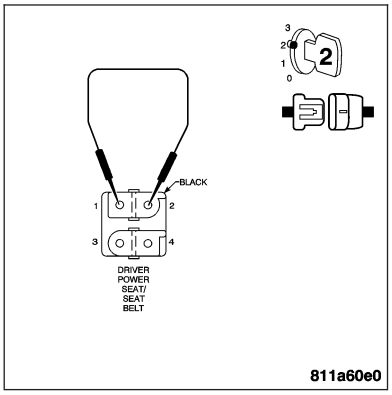

Is the Seat Belt Indicator Lamp on?

Yes >> Replace the Seat Belt Indicator Switch. **Refer to Page 8O-116**
Perform BODY VERIFICATION TEST.

No >> Go to 2

2. SEAT BELT INDICATOR CIRCUIT

Turn the ignition off.

Disconnect the Instrument Cluster C2 harness connector.

Note: Check connectors — Clean/repair as necessary.

Measure the resistance between ground and the Seat Belt Indicator circuit.

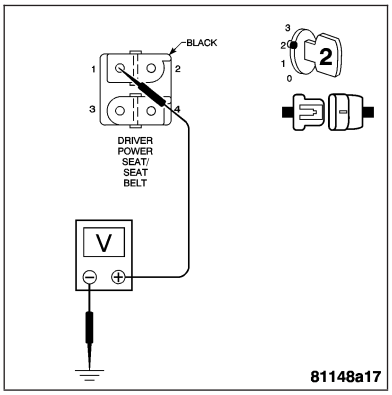

Is the resistance below 5.0 ohms?

Yes >> Check the Seat Belt Indicator lamp. If the lamp is OK, replace the Instrument Cluster. **Refer to Page 8J-83**.
Perform BODY VERIFICATION TEST.

No >> Repair the Seat Belt Indicator circuit for an open.
Perform BODY VERIFICATION TEST.

*TELESCOPING WHEEL INDICATOR INOPERATIVE

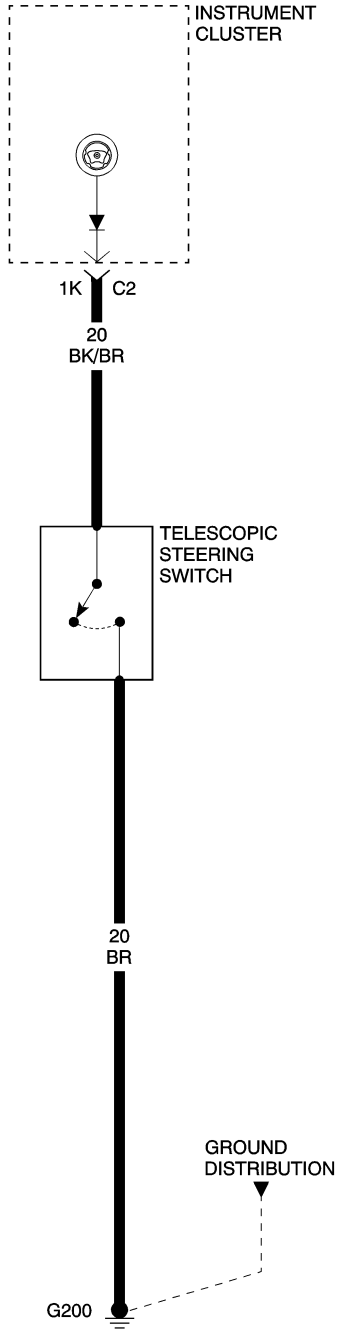

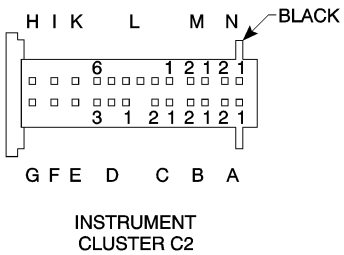

8113e813

*TELESCOPING WHEEL INDICATOR INOPERATIVE — CONTINUED

POSSIBLE CAUSES
INDICATOR CIRCUIT OPEN
SWITCH MALFUNCTION
INDICATOR LAMP
INSTRUMENT CLUSTER

For a complete Instrument Cluster Circuit Diagram, **Refer to Page 8J-53**.

Diagnostic Test

1. INSPECT THE TELESCOPING WHEEL INDICATOR LAMP

Note: The Telescoping Wheel Indicator circuit is hardwired to the Telescopic Steering Switch. If replacement is necessary, the Switch and harness are replaced together.
Turn the ignition off.

Remove the Telescoping Wheel Indicator Lamp from the Instrument Cluster and inspect the lamp for an open filament.

Is the lamp filament open?

Yes >> Replace the Telescoping Wheel Indicator Lamp. **Refer to Page 8J-75**.
Perform BODY VERIFICATION TEST.

No >> Go to 2

2. MEASURE TELESCOPING WHEEL INDICATOR CIRCUIT RESISTANCE

With the ignition off.

Disconnect the Instrument Cluster C2 harness connector.

Note: Check connectors - Clean/repair as necessary.
With the Telescopic Steering Switch depressed, measure the resistance between ground and the Telescoping Wheel Indicator circuit.

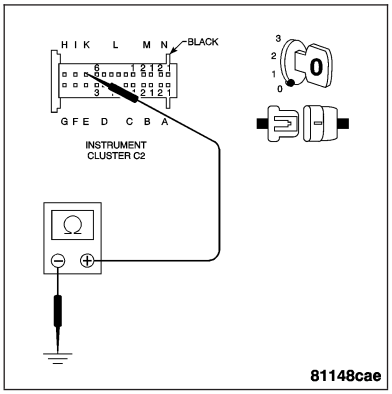

Is the resistance below 5.0 ohms?

Yes >> Replace the Instrument Cluster. **Refer to Page 8J-83**.
Perform BODY VERIFICATION TEST.

No >> Replace the Telescopic Steering Switch.
Perform BODY VERIFICATION TEST.

BODY VERIFICATION TEST

1.

Turn the ignition off.

Disconnect all jumper wires and reconnect all previously disconnected components and connectors.

Note: If the SKREEM or the PCM was replaced, refer to the service information for proper programming procedures.

If the Body Control Module was replaced, turn the ignition on for 15 seconds (to allow the new BCM to learn VIN) or engine may not start.

Program all RKE transmitters and other options as necessary.

With the DRB III®, erase all Diagnostic Trouble Codes (DTCs) from ALL modules. Start the engine and allow it to run for 2 minutes. Operate all functions of the system that caused the original complaint.

Ensure that all accessories are turned off and the battery is fully charged.

Turn the ignition off and wait 5 seconds. Turn the ignition on and using the DRB III®, read DTCs from ALL modules.

Are any DTCs present or is the original complaint still present?

Are any DTCs present?

YES >> Repair is not complete, refer to appropriate symptom.

NO >> Repair is complete.

SCHEMATICS AND DIAGRAMS

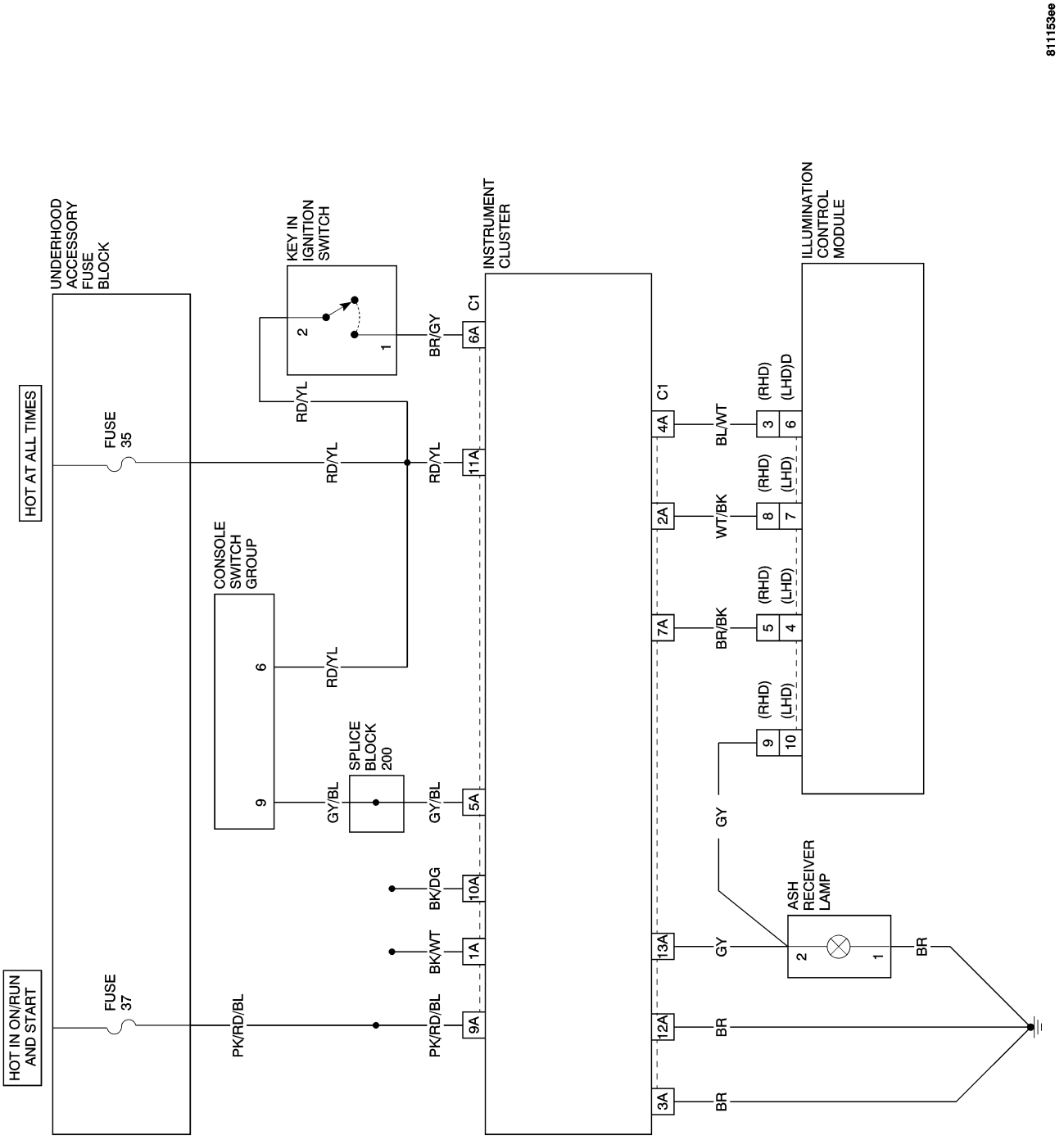

INSTRUMENT CLUSTER CIRCUIT DIAGRAM (1 OF 2)

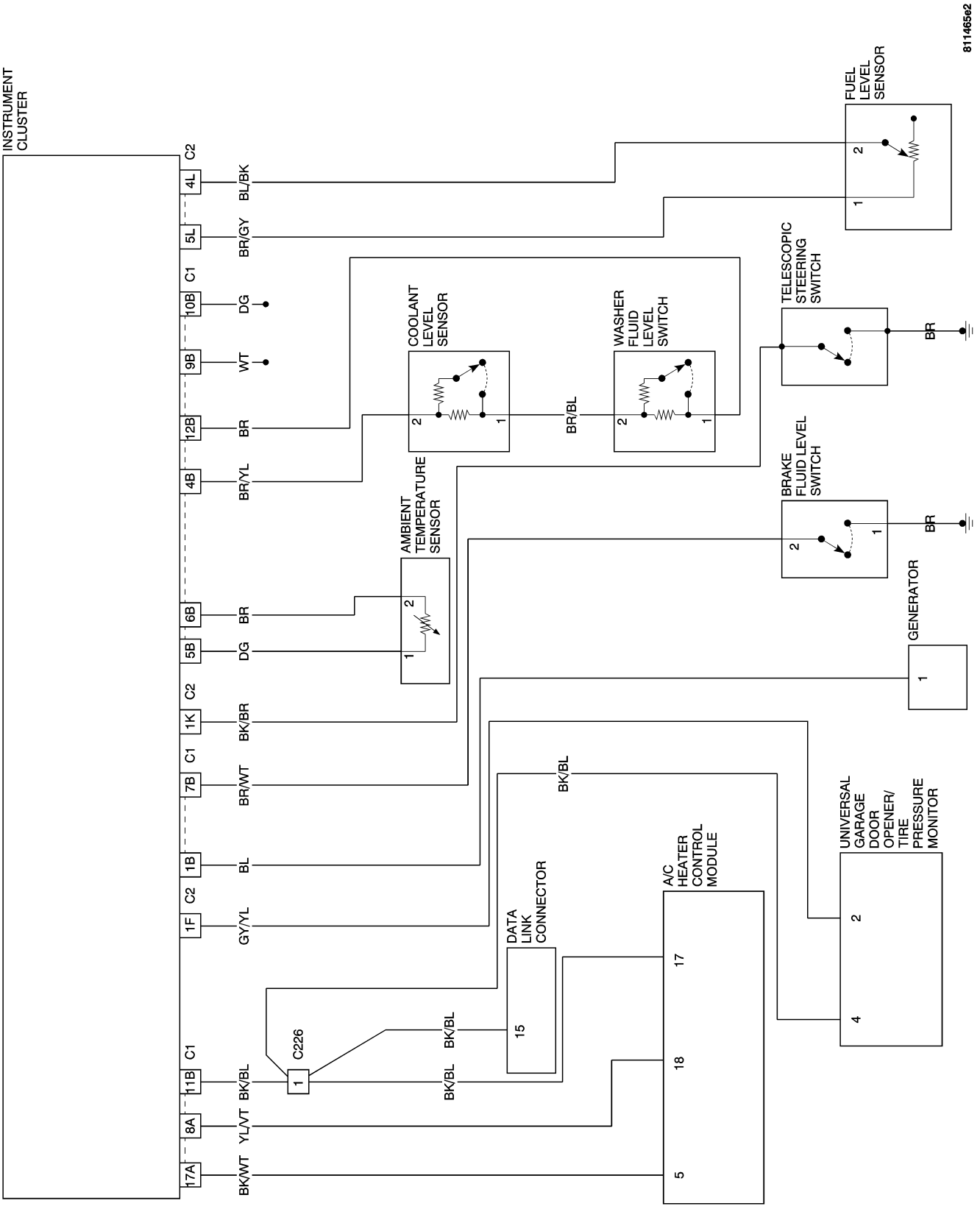

INSTRUMENT CLUSTER CIRCUIT DIAGRAM (2 OF 3)

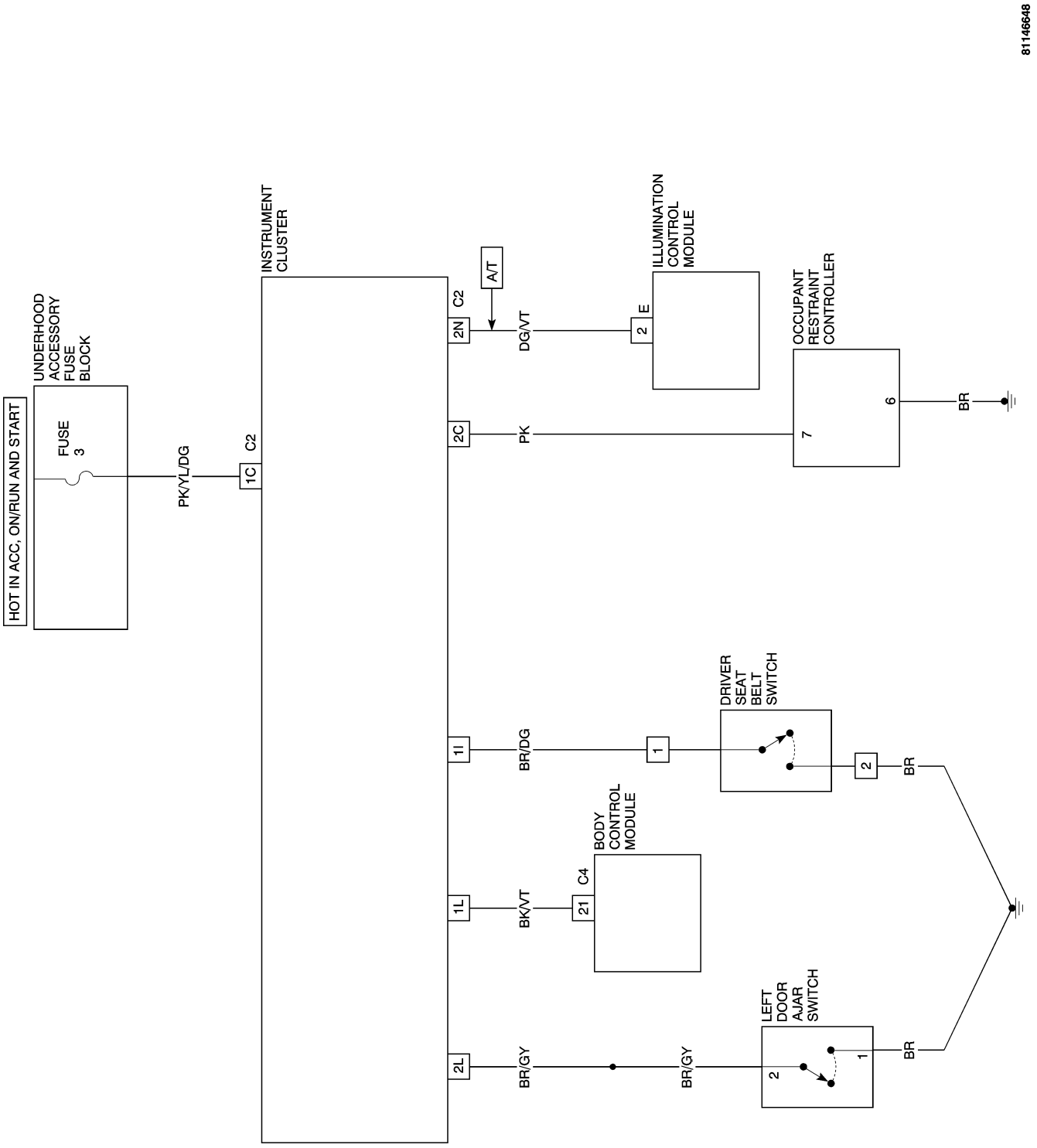

INSTRUMENT CLUSTER CIRCUIT DIAGRAM (3 OF 3)

INSTRUMENT CLUSTER - SERVICE INFORMATION

TABLE OF CONTENTS

page

INSTRUMENT CLUSTER - SERVICE INFORMATION
DESCRIPTION 56
OPERATION 59
DIAGNOSIS AND TESTING - FUNCTION CHECK 73
STANDARD PROCEDURE
DISPLAY OF REMAINING FSS MILEAGE AT DRIVER'S REQUEST 75
RESETTING THE FSS MAINTENANCE INDICATOR 76
RESETTING THE FSS MAINTENANCE INDICATOR AFTER AN OIL CHANGE 78
STANDARD PROCEDURE - INSTRUMENT CLUSTER BULBS 81
REMOVAL - INSTRUMENT CLUSTER 83
INSTALLATION - INSTRUMENT CLUSTER 84

INSTRUMENT CLUSTER - SERVICE INFORMATION

DESCRIPTION

The Instrument Cluster (IC) is used to inform the driver about important vehicle operating conditions and to warn the driver about potentially critical operating conditions. For this, the IC has indicator lamps, display gauges and audible tones. The IC's indicator lamps are displayed by text overlays that show the lamp's function. The information required for the indicator lamps and audible tones is transmitted from their sensors to the IC via direct lines or from their control modules to the IC via the Controller Area Network (CAN) data bus.

The IC has a microprocessor for analyzing the incoming data for the indicator lamps and audible tones. The program and the data required are stored in an electronic memory chip called the erasable electronic programable read only memory (EEPROM).

The indicator lamps are listed below according to their type and actuation method (direct lines / CAN Bus).

INDICATOR LAMPS ACTUATED OVER DIRECT LINES

- Low tire pressure indicator lamp
- Left turn signal indicator lamp
- Right turn signal indicator lamp
- High beam indicator lamp
- Low fuel level indicator lamp
- Low washer fluid indicator lamp
- Low coolant level indicator lamp
- Battery voltage indicator lamp
- Seat belt indicator lamp
- Lamp outage indicator lamp
- Malfunction indicator lamp (MIL)
- Brake Assist System (BAS) MIL
- Electronic Stability Program (ESP) warning lamp
- Supplemental Restraint System (SRS) MIL

INDICATOR LAMPS ACTUATED OVER THE CAN DATA BUS

- Brake warning indicator lamp
- Brake wear indicator lamp
- Antilock Brake System (ABS) warning indicator lamp

AUDIBLE TONE AND INDICATOR LAMPS ACTUATED OVER DIRECT LINES

- Turn signal ticker (audible tone / indicator lamp)
- Seat belt reminder (audible tone / indicator lamp)
- Switched - on headlamps reminder (audible tone)
- Key warning (audible tone)

AUDIBLE TONE ACTUATED OVER THE CAN DATA BUS

- Parking brake warning

FLEXIBLE SERVICE SYSTEM (FSS) INDICATOR

The Flexible Service System (FSS) indicator (2) draws the attention of the driver to a particular service that is due. The FSS indicator (2) is a mileage/time-activated engine service system for recommended oil change intervals. In addition to time (in days) and distance criteria, other factors, such as extreme speeds or cold starts that are in combination with short distances, are taken into account for adjusting the programmed service intervals. If the oil level drops below a warning threshold, the remaining distance (1) or the remaining time (1) and the tool symbol (2) are displayed. The FSS indicator (2) has its own microprocessor in the IC. The FSS indicator (2) obtains time information from the digital clock integrated into the IC. The other data required is obtained via the CAN data bus from the Controller Antilock Brake (CAB) and the Powertrain Control Module (PCM).

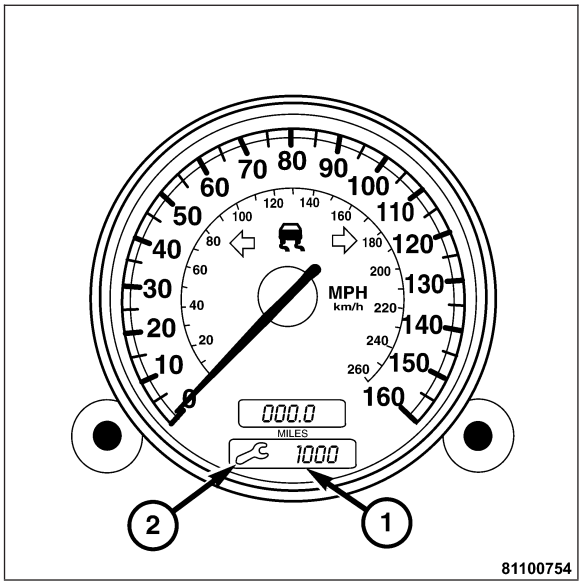

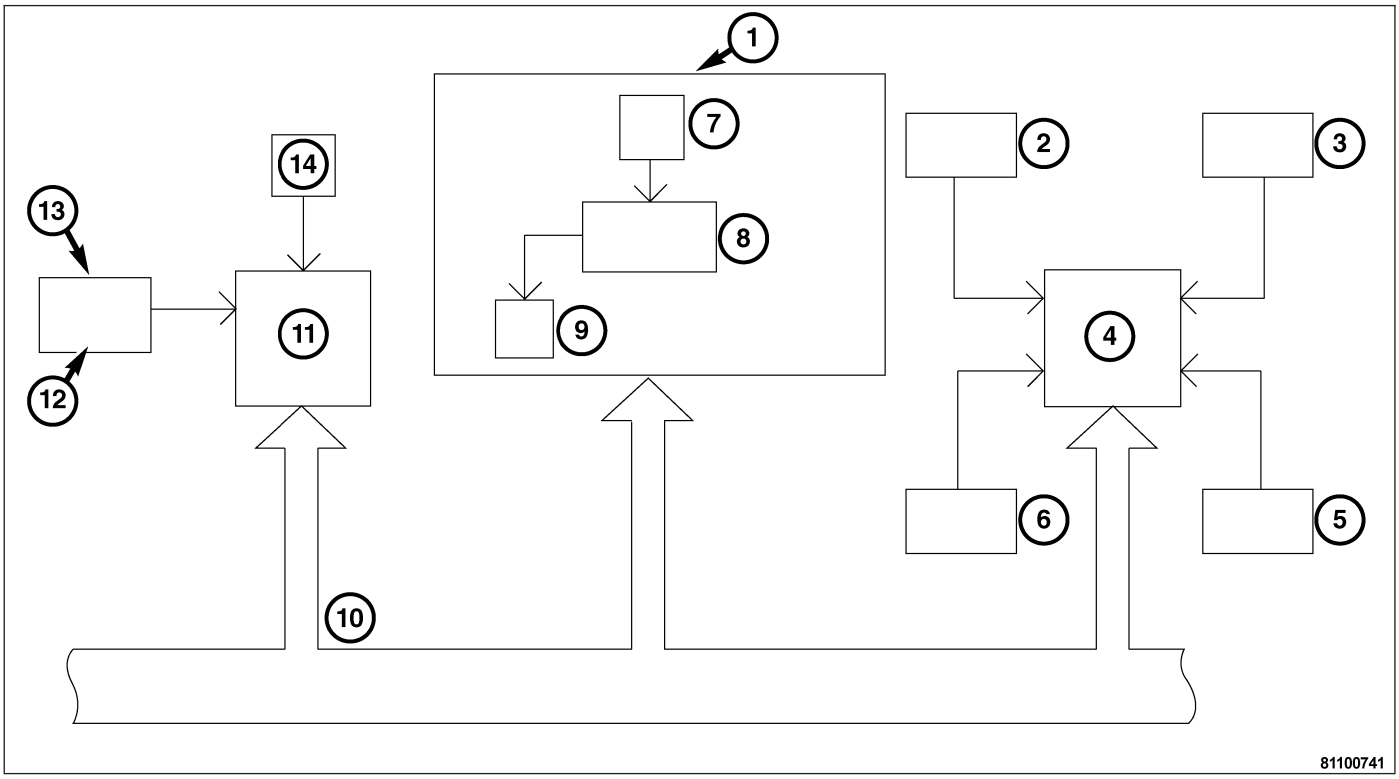

1 - INSTRUMENT CLUSTER (IC)
2 - LEFT FRONT WHEEL SPEED SENSOR (LFWSS)
3 - RIGHT FRONT WHEEL SPEED SENSOR (RFWSS)
4 - CONTROLLER ANTILOCK BRAKE (CAB)
5 - RIGHT REAR SPEED SENSOR (RRWSS)
6 - LEFT REAR WHEEL SPEED SENSOR (LRWSS)
7 - DIGITAL CLOCK
8 - FLEXIBLE SERVICE SYSTEM (FSS) MICROPROCESSOR
9 - DISPLAY
10 - CONTROLLER AREA NETWORK (CAN) DATABUS LINE
11 - POWERTRAIN CONTROL MODULE (PCM)
12 - OIL LEVEL INDICATOR SWITCH
13 - OIL SENSOR (OIL LEVEL/TEMPERATURE)
14 - COOLANT TEMPERATURE SENSOR

CAN data required for the FSS indicator:

- 4 WSS signals for calculating vehicle speed and distance from the CAB
- Coolant temperature from the PCM
- Engine speed from the PCM
- Load torque from the PCM

OPERATION

INSTRUMENT CLUSTER GAUGES

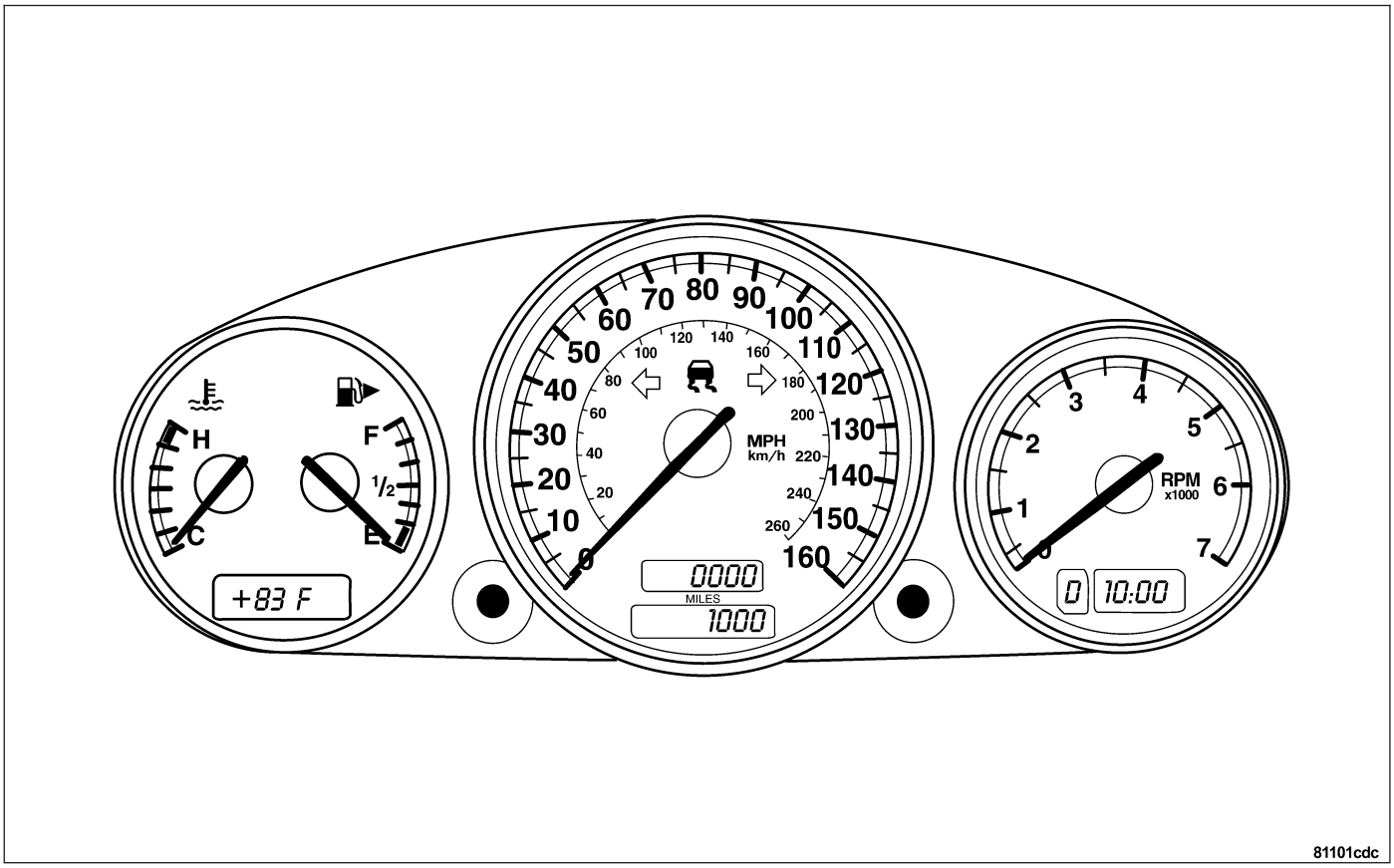

The instrument cluster includes four analog gauges.

1. **Speedometer** The speedometer has a 0–160 Miles Per Hour (MPH) primary scale with Kilometers Per Hour (km/h) on the secondary scale. The speedometer receives wheel speed data from the CAB via the CAN data bus and can be verified by comparing the speed signal viewed by the DRBIII® from the wheel speed sensors (WSS) and the output seen on the IC. The Electronic Stability Program (ESP) indicator lamp located between the left and right turn signals in the speedometer face illuminates when it is activated by the Controller Antilock Brake (CAB), indicating the need to adjust driving behavior to the prevailing road conditions. Also located in the speedometers face are the trip odometer and the Flexible Service System (FSS) indicator/ odometer (1). To the right and left of the speedometer face, mounted in the IC, are the rotary dials (2-3) for the FSS and the digital clock.

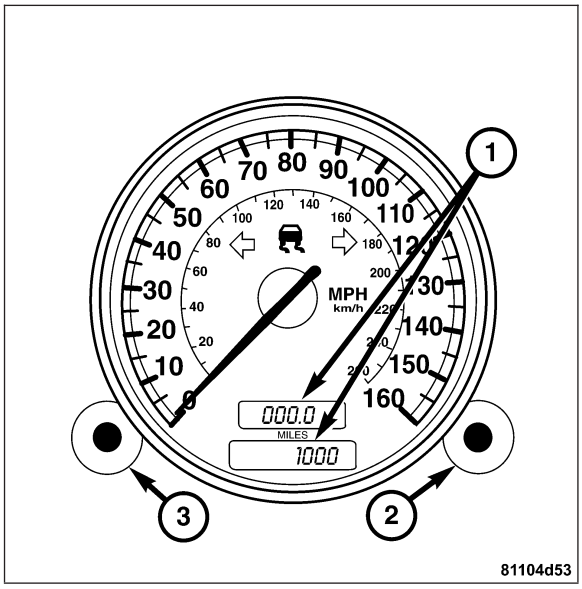

2. **Tachometer** The 7000 rpm tachometer is red-lined at 6200 rpm The tachometer also contains the digital clock and the transmission range indicator.

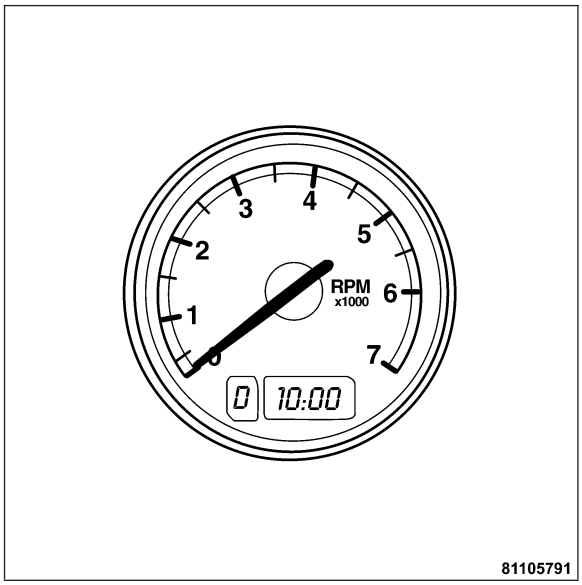

81105791

3. **Fuel level and Coolant temperature**

The fuel level gauge is displayed in increments of one-quarter marks displaying F (Full), 1/2 (one half tank) and E (Empty). The temperature gauge is displayed as H (High) and L (Low).

The outside ambient air temperature digital display is located in the lower center portion of the coolant temperature / fuel gauge and is calibrated in degrees Fahrenheit (°F).



81105787

INSTRUMENT CLUSTER DIGITAL DISPLAYS

Five electronic digital displays show cumulative odometer, trip odometer, time, outside ambient air temperature, and, if equipped, automatic transmission range or gear. The transmission display shows P, R, N or D under normal driving conditions. The clock is also located in the base of the tachometer. A knob between the tachometer and the speedometer resets the digital clock.

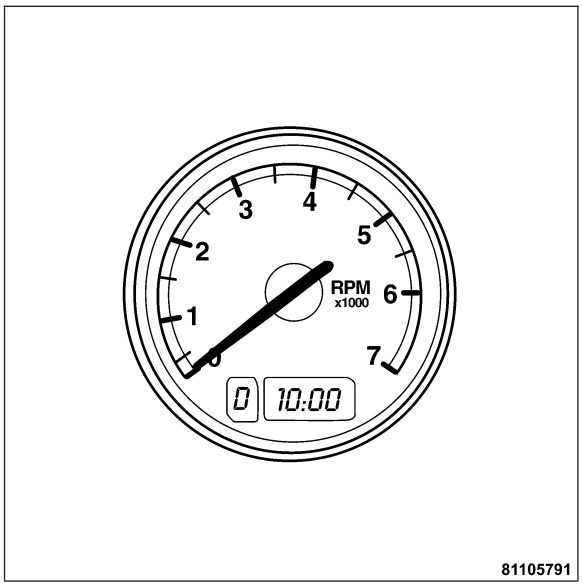

The trip odometer (1) can be reset at anytime. The odometer (1) display also shows the distance remaining to the next regular maintenance service as calculated by the FSS. Pressing the dial to the left (3) of the speedometer resets the trip odometer. One press is used if the ignition switch is in the “RUN” position, two presses with the ignition switch in other positions or with the key removed. The trip and cumulative odometer displays are also used to show engine oil level.

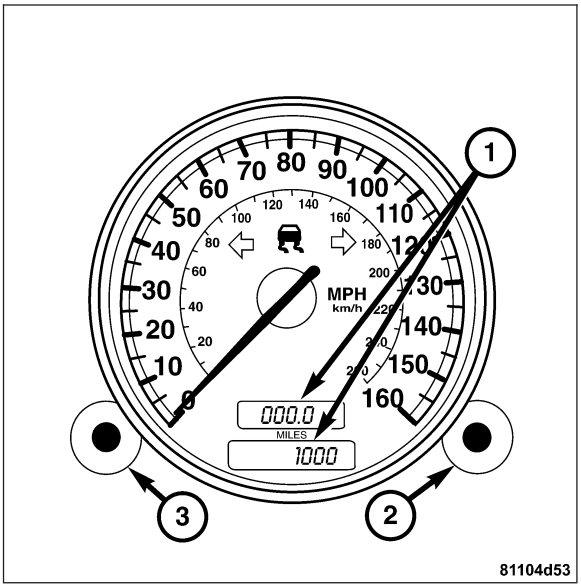

The outside ambient air temperature digital display adapts to outside ambient air temperature in steps depending on the following driving conditions; stop and go traffic, constant speed driving, and the level of temperature change. During idling or slow driving, the temperature reading may be affected by road or engine heat because the sensor is located in the lower portion of the front fascia. The outside ambient air temperature sensor is not a scientific weather tool for calculating the exact outside temperature. The outside ambient air temperature sensor does not take into account the relative humidity or the current wind chill. Therefore, there may be a difference in temperature readings and actual current outside temperatures.



WARNING INDICATORS

There are eighteen indicator lamps that warn of malfunctions or vehicle components and operating conditions that need attention. The indicator lamps are grouped together in two windows, one to the left of the Fuel/Temperature gauge and the other to the right of the Tachometer. All of the indicator lamps illuminate each time the engine is started to verify system operation and to perform an IC bulb check. The following eighteen indicators are present:

WARNING: ON VEHICLES EQUIPPED WITH AIRBAGS, DISABLE THE SUPPLEMENTAL RESTRAINT SYSTEM BEFORE ATTEMPTING ANY STEERING WHEEL, STEERING COLUMN, DRIVER AIRBAG, PASSENGER AIRBAG, SEAT BELT TENSIONER, FRONT IMPACT SENSORS, SIDE CURTAIN AIRBAG, OR INSTRUMENT PANEL COMPONENT DIAGNOSIS OR SERVICE. DISCONNECT AND ISOLATE THE BATTERY NEGATIVE (GROUND) CABLE, THEN WAIT TWO MINUTES FOR THE SYSTEM CAPACITOR TO DISCHARGE BEFORE PERFORMING FURTHER DIAGNOSIS OR SERVICE. THIS IS THE ONLY SURE WAY TO DISABLE THE SUPPLEMENTAL RESTRAINT SYSTEM. FAILURE TO TAKE THE PROPER PRECAUTIONS COULD RESULT IN ACCIDENTAL AIRBAG DEPLOYMENT AND POSSIBLE PERSONAL INJURY.



1. **Airbag warning indicator lamp (SRS)** The Airbag warning indicator lamp illuminates if there is a malfunction in the Supplemental Restrain System (SRS). During its bulb check, the Airbag warning indicator lamp stays illuminated for approximately six seconds, then goes out. If the Airbag warning indicator lamp fails to perform a bulb check or stays illuminated, there may be a malfunction in the SRS and should be checked using the DRBIII® for any DTCs that may be present.

2. **Antilock warning indicator lamp (ABS)** The Antilock warning indicator lamp illuminates if there is a malfunction in the ABS. If the Antilock warning indicator lamp stays illuminated after the bulb check or any service performed, it should be checked using the DRBIII® for any DTCs that may be present. If the Antilock warning indicator lamp is illuminated, the brake system will operate as if it did not have ABS.

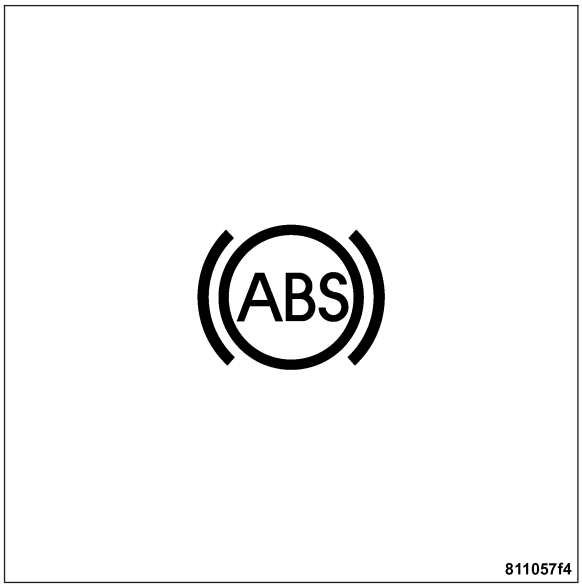

3. **Battery voltage indicator lamp** The Battery voltage indicator lamp illuminates when the charging system falls below current demand causing the battery to not receive a full charge during operation.

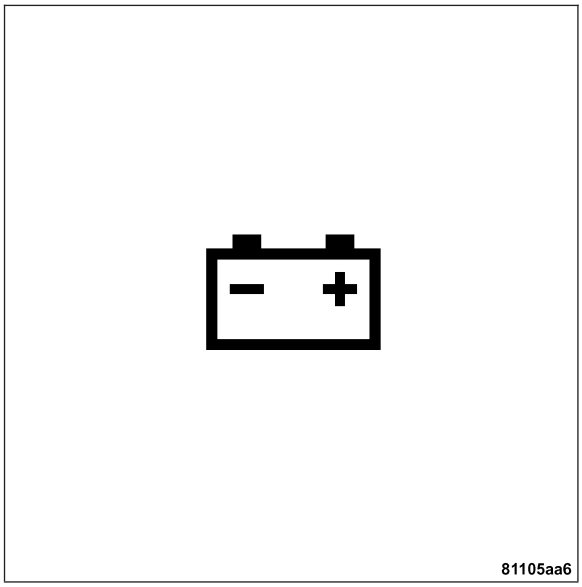

4. **Brake assist indicator lamp (BAS), Electronic Stability Program (ESP)** The BAS/ESP indicator lamp illuminates if there is a malfunction in the BAS/ESP. If the BAS/ESP indicator lamp illuminates at any time during or after any service is performed it should be checked using the DRBIII® to verify any DTCs that may be present.



5. **Brake warning indicator lamp** The Brake warning indicator lamp illuminates when the brake fluid in the brake fluid reservoir drops below the minimum level indicated on the side of the brake fluid Reservoir.



6. **Brake wear indicator lamp** The Brake wear indicator lamp illuminates when the front brake pads reach their replacement threshold.

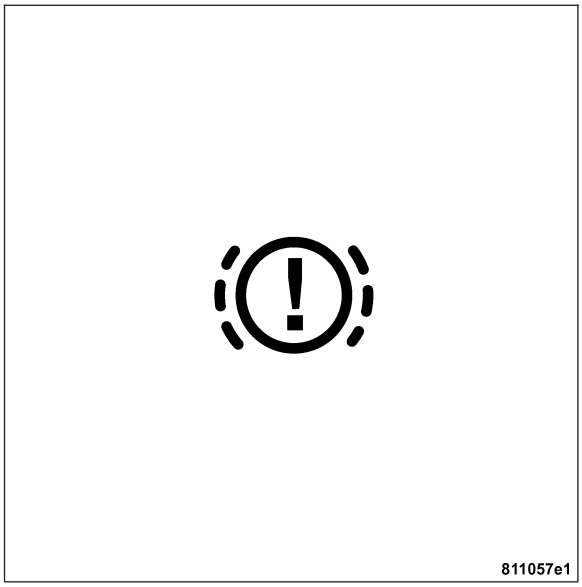

7. **Electronic Stability Program indicator lamp (ESP)** The Electronic Stability Program indicator lamp located between the left and right turn signal indicators illuminates when the ESP button, located on the center console, is pushed, activating the ESP system. The Electronic Stability Program indicator lamp will go out if the ESP button is pressed again, deactivating the system. When the Electronic Stability Program is activated, the ESP indicator lamp will illuminate to warn the driver of compensations being made by the ESP system.

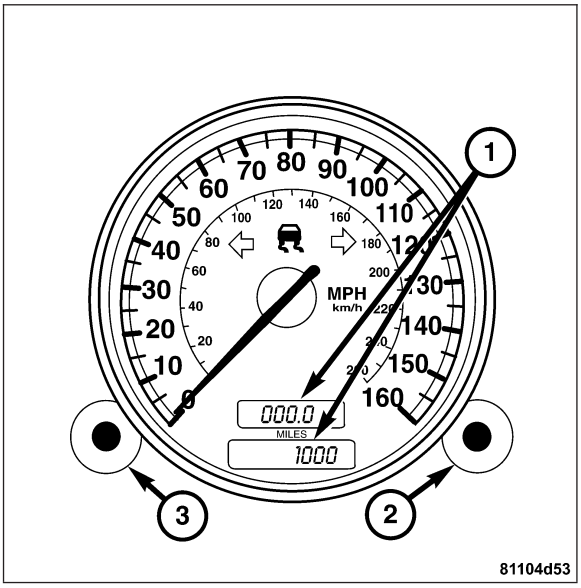

8. **High beam indicator lamp** The High beam indicator lamp illuminates when the high beam lamps are activated by the multifunction switch located in the steering column.

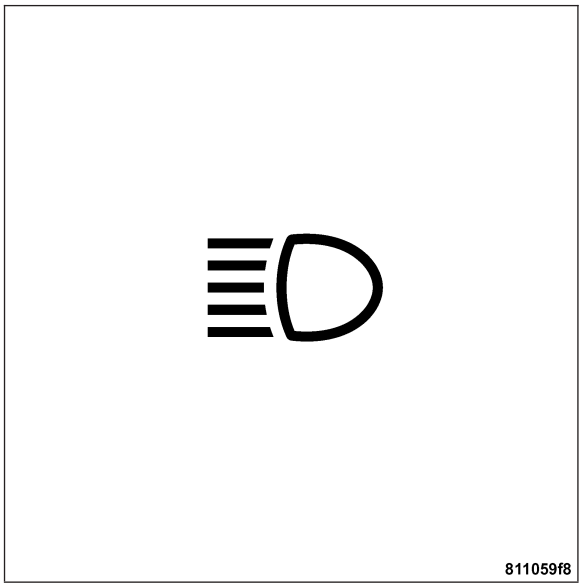

9. **Lamp outage indicator lamp** The Lamp outage indicator lamp illuminates if there is an exterior lamp failure such as a headlamp or taillamp failure.

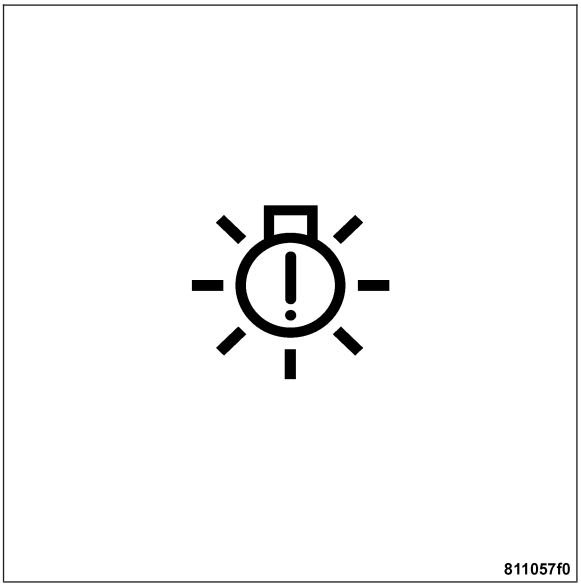

10. **Low coolant indicator lamp** The Low coolant indicator lamp illuminates if the engine coolant drops below its threshold indicating a low engine coolant level.

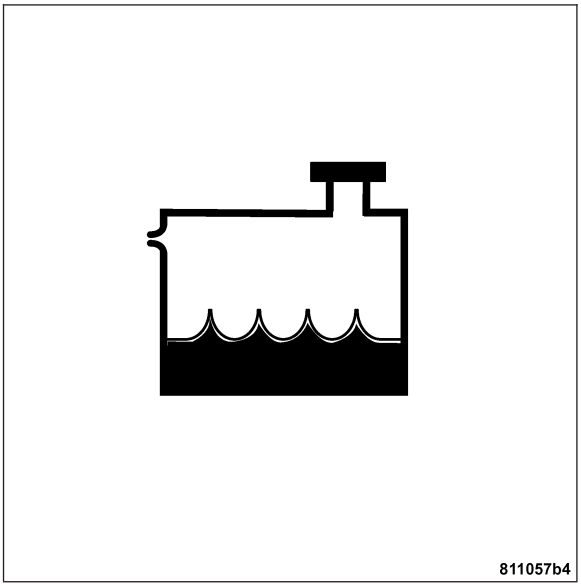

11. **Low fuel warning lamp** The Low fuel warning lamp, located on the left side of the cluster, illuminates when the fuel level in the fuel tank reaches approximately 8 liters (2.1 gallons) to indicate a low fuel level.

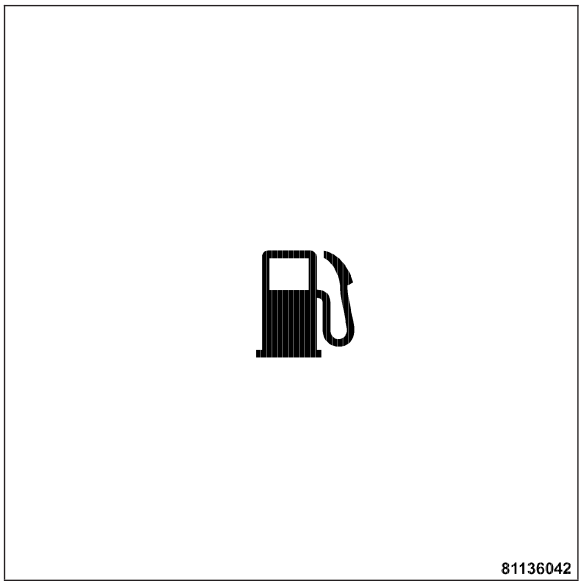

12. **Low tire pressure indicator lamp** The Low tire pressure indicator lamp illuminates if any of the tires loses pressure or is inflated above the recommended pressure.

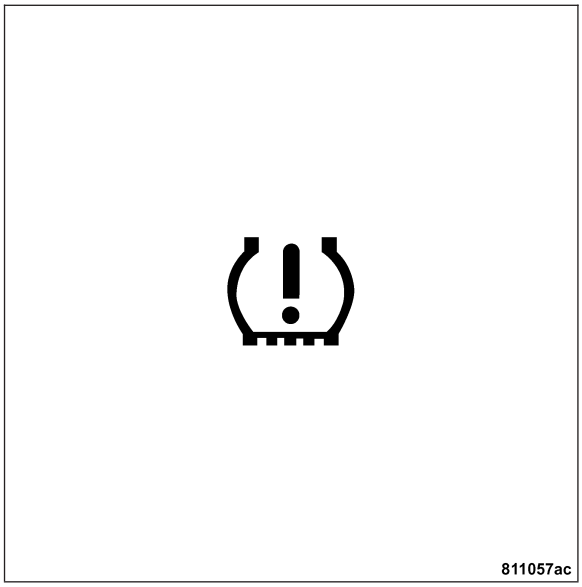

13. **Low washer fluid indicator lamp** The Low washer fluid indicator lamp illuminates to indicate a low windshield washer fluid level.

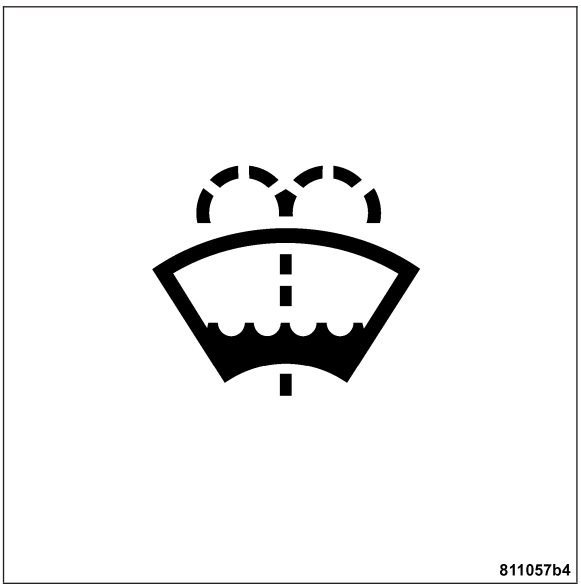

14. **Malfunction Indicator Lamp (MIL)** The Malfunction Indicator Lamp illuminates when there is a malfunction or DTC present in the Powertrain Control Module (PCM) or Transmission Control Module (TCM).

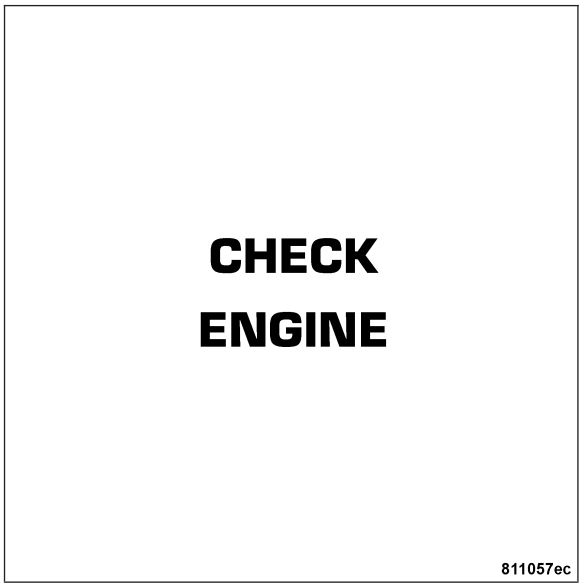

15. **Oil level indicator lamp** The Oil level indicator lamp illuminates if the engine oil drops below 4.25 liters (4.5 quarts), indicating that the engine oil has dropped by 1.9 liters (2 quarts).

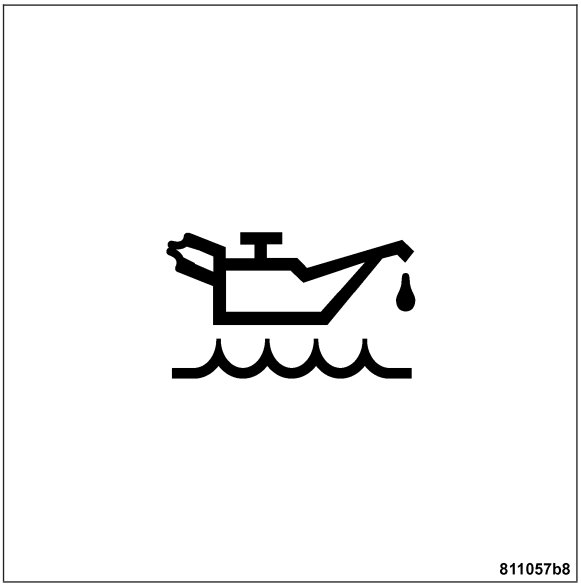

16. **Seat belt indicator lamp** The Seat belt indicator lamp illuminates if the driver's seat belt is not buckled.



17. **Telescoping wheel indicator lamp** The Telescoping wheel indicator lamp illuminates if the manually telescoping wheel is not locked into position.

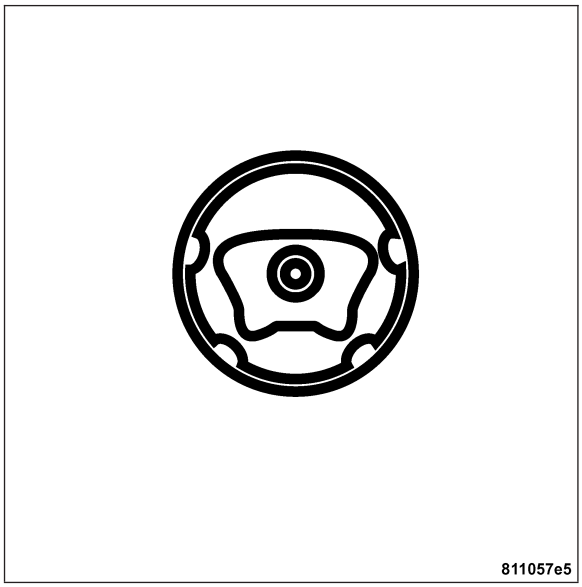
811057e5

18. **Turn signal indicator lamp** The Turn signal indicator lamps, located in the upper portion of the speedometer on the right and left of the ESP indicator, illuminate when either the right or left turn signal is activated by the multifunction switch on the steering column. Both lamps will illuminate when the Emergency Flasher switch has been activated.

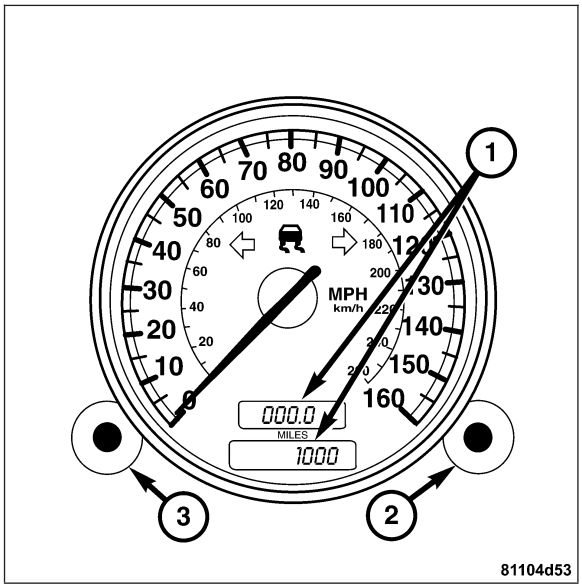

81104d53

The cluster gives audible tone signals to notify the driver to take the following actions:

Note: With the key removed and the door open, the audible tone sounds if the headlamps or parking lamps are on. Operation of the standing lamps, which are intended for use when the vehicle is unoccupied, will not trigger this warning.

- Release the parking brake
- Switch off headlamps.
- Remove the key from the ignition.

Turn signal indicator ticking, activating the turn signal switch is indicated audibly by the turn signal indicator ticking. The driver's attention is brought to a problem in the turn signal system by the turn signal indicator ticking at a higher frequency. The turn signal indicator ticking is generated electromagnetically. The frequency corresponds to that of the turn signal indicator lamp.

Parking Brake-on reminder, an audible sound is emitted via a small speaker whenever the cluster detects the parking brake switch is in the ON position at a speed of 5 km/h (3 MPH) or more.

Headlamps-on reminder, the Headlamps-on reminder sounds when the headlamp switch is in the ON position, the ignition key is removed from the ignition, and the driver's door is open.

Key-in-ignition reminder, the Key-in-ignition reminder sounds when the driver's door is open with the key in the ignition.

INDICATOR LAMPS AND AUDIBLE TONES TRIGGERED OVER DIRECT LINES

- Left and Right turn signals — from the illumination control module.
- Brake warning indicator lamp — from the brake fluid level switch.
- Low washer fluid indicator lamp — from a single line to the instrument cluster and is voltage-encoded.
- Low coolant indicator lamp — from a single line to the instrument cluster and is voltage-encoded.
- Low fuel warning lamp — from the Instrument Cluster. The lamp illuminates whenever the fuel level drops to 8 liters (2.1 gallons) The lamp extinguishes after refueling is detected. If fuel is added with the ignition key in the ON position, refueling is detected only after 7.9 liters (2 gallons) or more of fuel is added.
- Lamp outage indicator lamp — from the illumination control module.
- Airbag warning lamp — from the Occupant Restraint Controller (ORC).

INDICATOR LAMPS AND AUDIBLE TONES TRIGGERED BY THE CAN DATA BUS

- Brake wear indicator lamp — from the CAB.
- Oil level indicator lamp — from the PCM.
- Antilock warning indicator lamp (ABS) — from the CAB.
- Malfunction Indicator Lamp (MIL) — from the PCM.
- Electronic Stability Program (ESP) indicator lamp — from the CAB. The lamp is illuminated if there is a fault in the ESP system or whenever the system is making compensations for driving conditions.

INSTRUMENTS ACTUATED BY THE CAN DATA BUS

- **Odometer** (1), the input is transmitted by the Controller Antilock Brake (CAB) and is determined using input from the four wheel speed sensors.
- **Speedometer**, the input is transmitted by the Controller Antilock Brake (CAB) and is determined using input from the four wheel speed sensors. The individual wheel speeds are compared and checked for logic. If significant differences in individual speed signals are recognized, the speed is determined from the speed of one of the front wheels. If the speed signals differ significantly, it may be due to wheel spin, cornering, or a defective speed sensor. If the computer identifies by means of sensor comparisons (comparison of each side) that the vehicle is cornering, the speed is determined from the value of the front wheel speeds. If the comparisons indicate one or more different wheel speeds, the vehicle speed is determined from the highest wheel speed. This also applies if a fault indication is received instead of a wheel speed signal. In this case, an error bit is also set. If any fault indications are received for all wheel speeds, the speed displayed is ″0″.

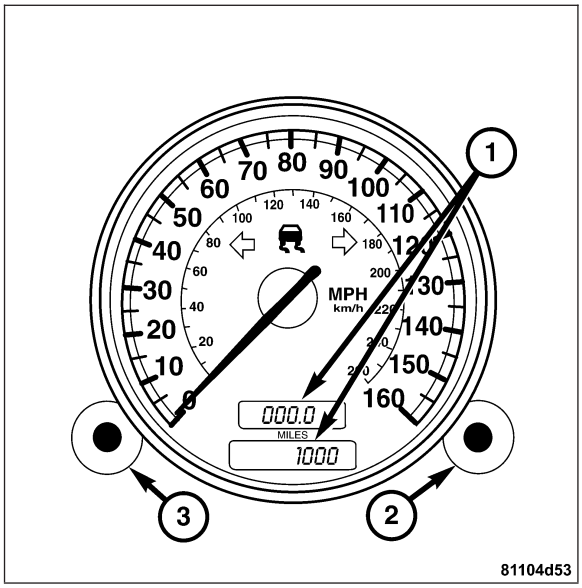

Tachometer, the engine speed signal is transmitted by the PCM and determined from the crankshaft position sensor signal.

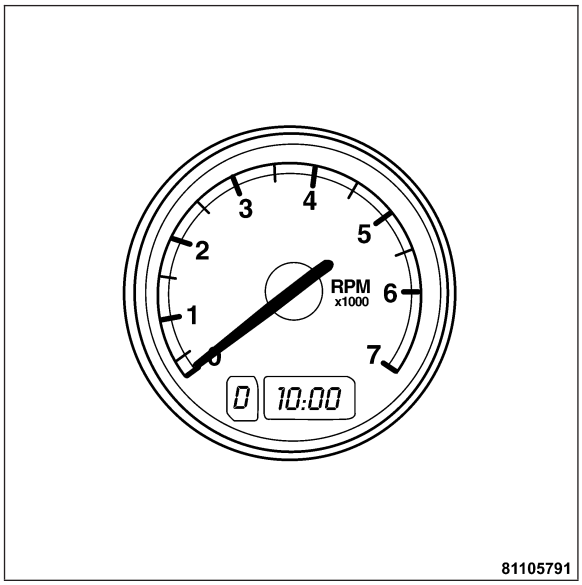

APPEARANCE AND LIGHTING

Black instrument faces have a blue-green backlighting when the exterior lamps are on. Digital displays also have a blue-green backlighting. A rotary dial to the left of the speedometer adjusts the lamp intensity. Digital displays activate when a door is opened, when the ignition switch is in the ON/RUN position, or by pressing the lamp intensity adjustment knob when the ignition is off.

CONTROL BUTTONS

The instrument cluster has two control dials which are to the left and right of the speedometer face.

- The right control dial (2) is used to adjust the time. Refer to the Owner's Manual.
- The left control button (3) is used to regulate the instrument illumination, activate the display illumination, reset the trip odometer display, and operate the FSS maintenance display.

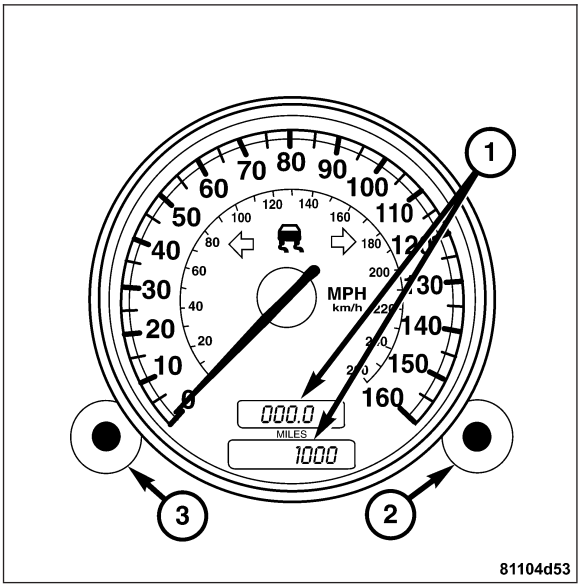

OUTSIDE AMBIENT AIR TEMPERATURE

To display the outside ambient air temperature requires the following:

- outside air temperature
- wheel speed signal
- engine run time
- engine coolant temperature



The outside ambient air temperature is determined by the outside ambient air temperature sensor. The temperature sensor is installed at the front left of the vehicle under the bumper fascia and is connected to the IC. The wheel speed signal, engine run time, and engine coolant temperature are determined internally by the IC. Since the outside ambient air temperature display depends on the wheel speed, engine run time, and engine coolant temperature, temperatures (influenced by the heat generated by the engine, for example) are not updated when the vehicle is stationary or moving slowly.

- When the ignition is in the ON position and the engine coolant temperature < 60°C (140°F), the current air temperature is always stored and displayed.
- When the ignition is in the OFF position and the engine coolant temperature < 60°C (140°F), the air temperature last measured is stored and displayed.
- When the ignition is in the ON position and the engine coolant temperature < 60°C (140°F), the stored air temperature is displayed.
- At vehicle speeds of 19–60 km/h (12-37 MPH), outside air temperatures are displayed after a delay of approximately 5 minutes.
- At vehicle speeds over 60 km/h (37 MPH), outside air temperatures are displayed after a delay of approximately 2 minutes.

FLEXIBLE SERVICE SYSTEM (FSS) MAINTENANCE INDICATOR

The FSS maintenance indicator informs the driver when maintenance is due. The FSS maintenance indicator operates based on distance traveled and time between service criteria. After exceeding a total distance or total time set at the factory, the FSS maintenance indicator activates: The tool symbol (2) comes on and the FSS maintenance information (1) is displayed instead of the total mileage. The FSS maintenance indicator obtains its time information from the digital clock integrated into the IC. The odometer signal calculated in the IC is used for the mileage information. For this purpose, the IC receives four wheel speed signals from the CAB via the CAN data bus. (Speedometer, Odometer and the FSS maintenance indicator are therefore, closely interrelated).

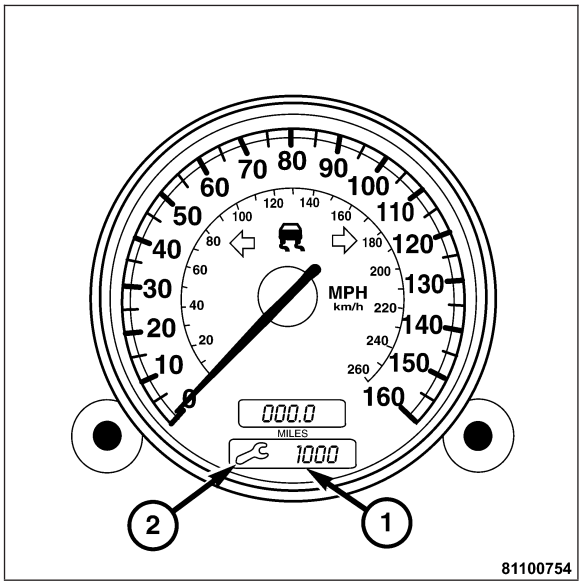

The remaining mileage is compared with the remaining time at key-on. When the time criterion has reached the priority level, the display (1) switches to the remaining time. The remaining mileage display (1) will be displayed automatically with the ignition switch in the “RUN” position after 5 seconds or while driving after reaching the warning threshold. The tool symbol (2) and the current remaining mileage (1) appear for 10 seconds, then automatically with the ignition switch in the “RUN” position after 5 seconds or while driving when the remaining mileage (1) has been exceeded. In this case, the display (1-2) flashes and the ″remaining mileage″ (1) is indicated with a negative sign (minus sign). After reaching the display overrun at -99,000 km (or -99,000 miles), the display (1) will remain at this value.

The remaining mileage (1) is displayed to a resolution of 100 km (or 100 miles). Normally, the remaining mileage is always displayed. However, to ensure that ″occasional drivers″ are also made aware when FSS maintenance service is due, the mileage (1) and time information are always processed in the background. The data remains stored even in the event of a system voltage failure.

The time remaining until the next FSS maintenance service is calculated starting with the total time set at the factory. The total time means the time specified between two FSS maintenance intervals. The remaining time means the time remaining until the next FSS maintenance service is due. The remaining time is strictly a time criterion. The remaining time is reduced by one day each day regardless of the mileage. The tool symbol (2), the current remaining time (1), and ″D″ for days will appear for 10 seconds and automatically with the ignition switch in the “RUN” position after 5 seconds or while driving when the remaining time (1) has exceeded the time threshold. In this case, the display flashes and the ″remaining time″ is indicated with a negative sign (minus sign). After reaching the display overrun at -730 days, the display remains at this value. The display has a resolution of 1 day.

ACKNOWLEDGING THE FSS MAINTENANCE INDICATOR

The display of the remaining mileage (1) as well as the remaining time (1) can be acknowledged and canceled by pressing the left rotary dial (3) on the IC for at least one second. It makes no difference what caused the information to be displayed.

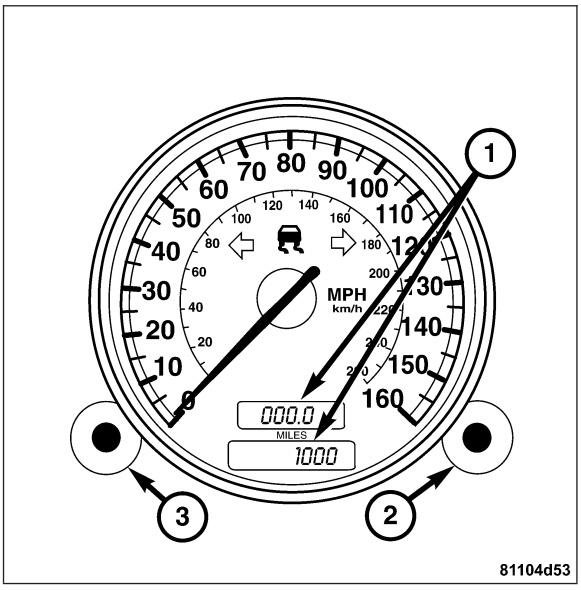

DIAGNOSIS AND TESTING - FUNCTION CHECK

INSTRUMENT CLUSTER BULBS

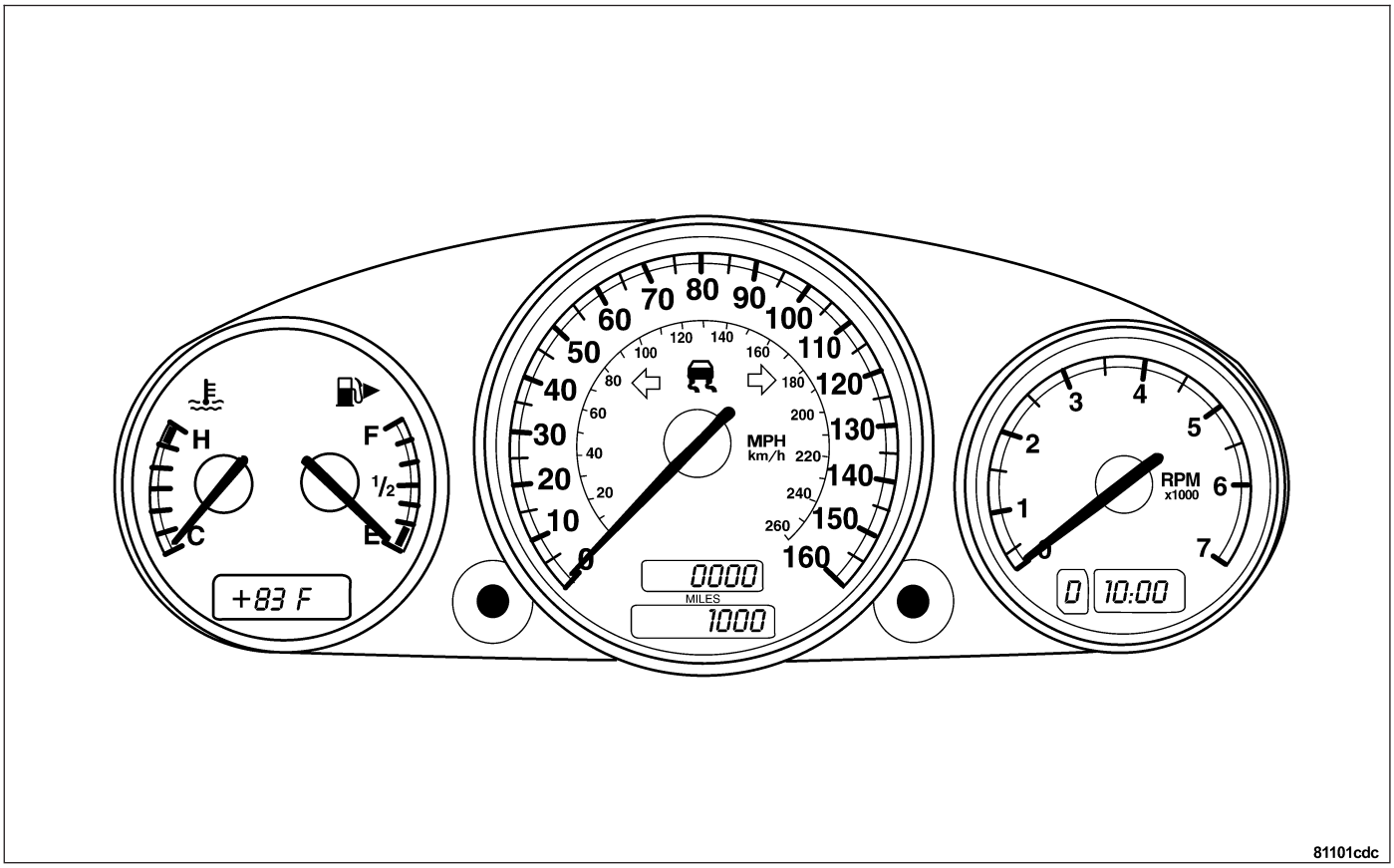

If the individual indicator lamps/malfunction indicator lamps do not illuminate or extinguish during operation, the systems concerned are to be checked or the fluid levels corrected.

1. Move the ignition switch to the ″RUN″ position, all of the indicator lamps and malfunction indicator lamps illuminate.
2. Start the engine, all of the indicator lamps and malfunction indicator lamps extinguish at an engine speed of > 480 rpm if the systems are functioning correctly.
3. The following indicator lamps and malfunction indicator lamps extinguish independently of the engine running: SRS malfunction indicator lamp after approximately 4 seconds and the seat belt indicator lamp after approximately 6 seconds.

DISPLAY INSTRUMENTS

The display instruments must indicate according to operating conditions seen with the DRBIII®.

The speedometer display must coincide with the DRBIII® readout.

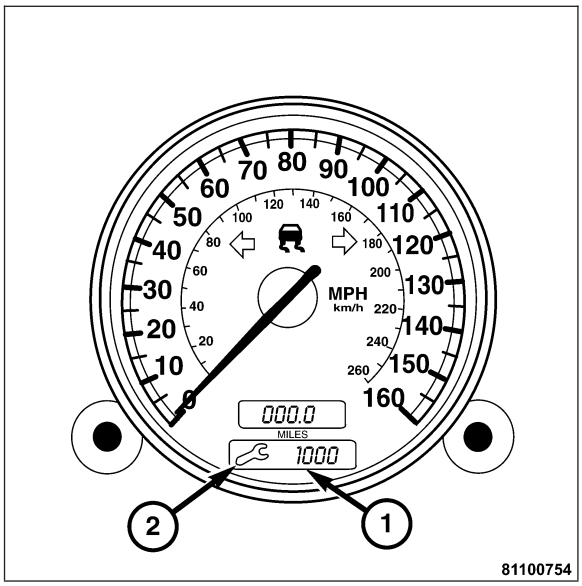

The coolant temperature gauge and the fuel level gauge must indicate according to operating conditions seen with the DRBIII®.



WARNING BUZZER OPERATIONAL CHECK

The light outage indicator lamp, parking brake warning, key-in-ignition warning and the seat belt reminder warning buzzer stays on for approximately 6 seconds. The warning tone seat belt warning buzzer will be interrupted as soon as the driver's seat belt is inserted into the seat belt buckle.

MAINTENANCE DISPLAY

Move the ignition switch to the ″RUN″ position and press the left instrument cluster button twice within 1 second. The tool symbol (2) will appear and the current remaining distance appear for 10 seconds.

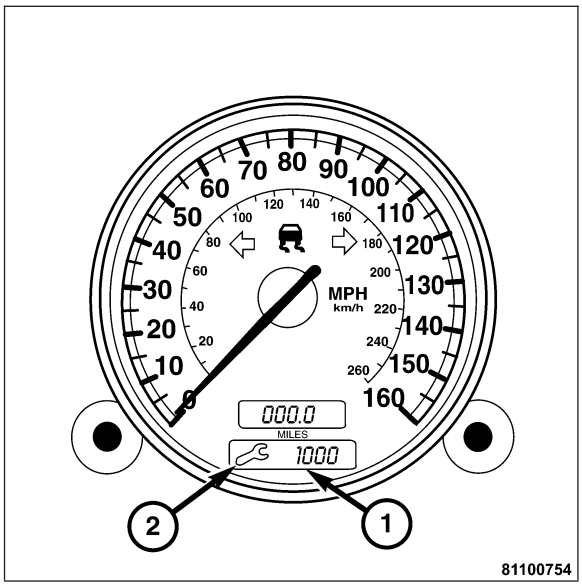

STANDARD PROCEDURE

DISPLAY OF REMAINING FSS MILEAGE AT DRIVER'S REQUEST

The remaining FSS mileage (1) can be displayed at the request of the driver.

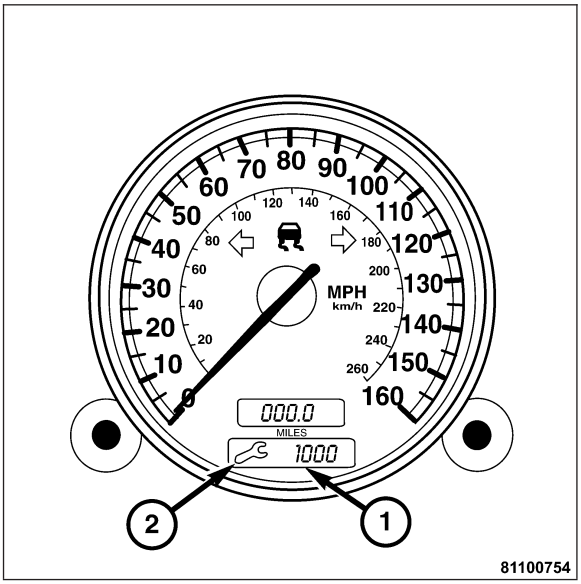

Note: The tool symbol appears for 10 seconds together with the current remaining mileage.

1. Press the left rotary dial (3) on the Instrument Cluster (IC) twice within one second.

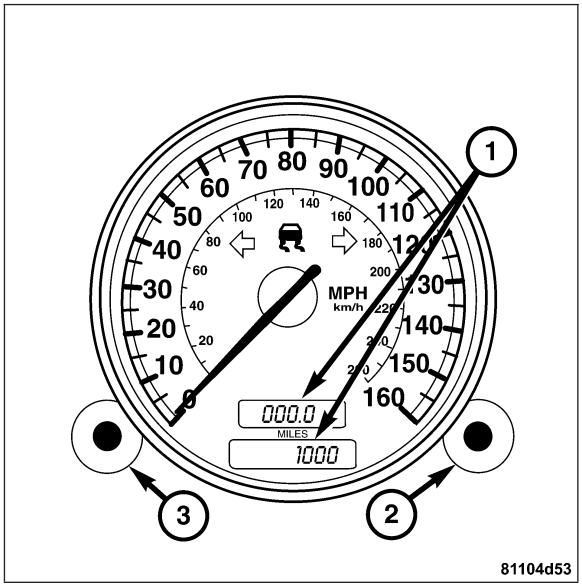

RESETTING THE FSS MAINTENANCE INDICATOR

The FSS maintenance indicator can be reset to the total mileage (1) or total time in two ways:

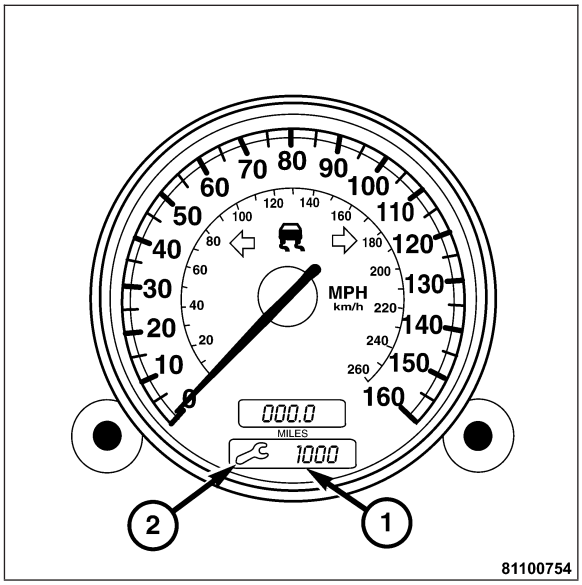

Automatically when the odometer (1) is reset to 0 within the first 155 miles. (The FSS maintenance indicator is reset to the values set at the factory).

Manually by driver by:

1. Hold the left rotary dial (3) depressed.

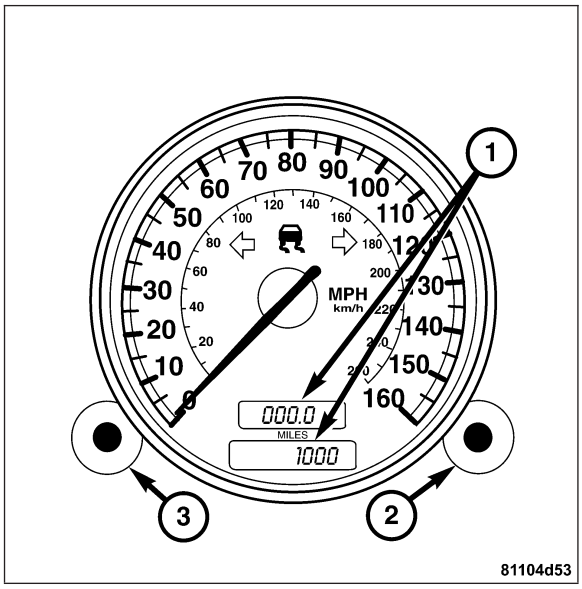

2. Simultaneously move the ignition switch to the “RUN” position (3).

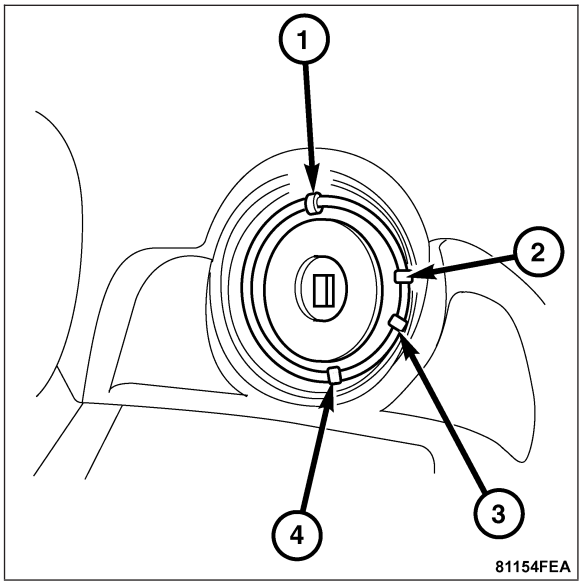

3. Continue to hold the rotary dial (3) down for 10 seconds. After the audible tone 15,000 km (7,500 miles) appears on the display. The remaining mileage (1) is displayed again.

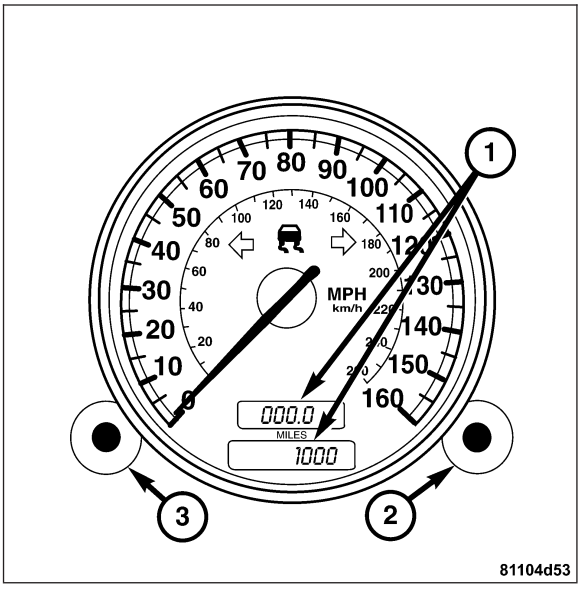

RESETTING THE FSS MAINTENANCE INDICATOR AFTER AN OIL CHANGE

1. Move the ignition switch to the “RUN” position (3).

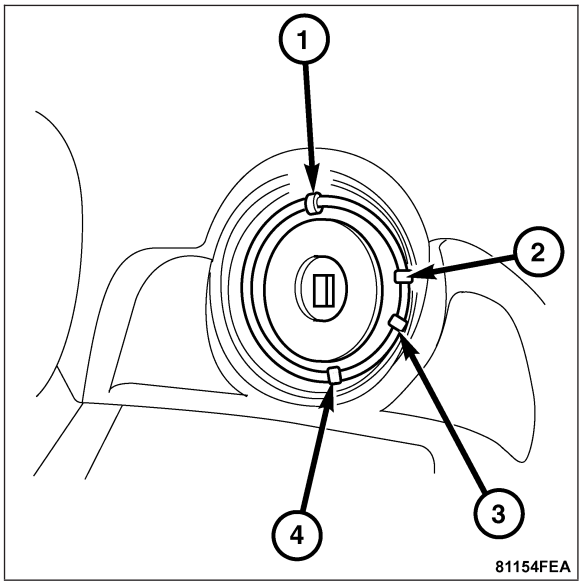

2. Within 4 seconds of moving the ignition switch into the “RUN” position, press the reset button for the trip odometer (3) twice within one second. The display for the FSS service request (1) is activated for 10 seconds.

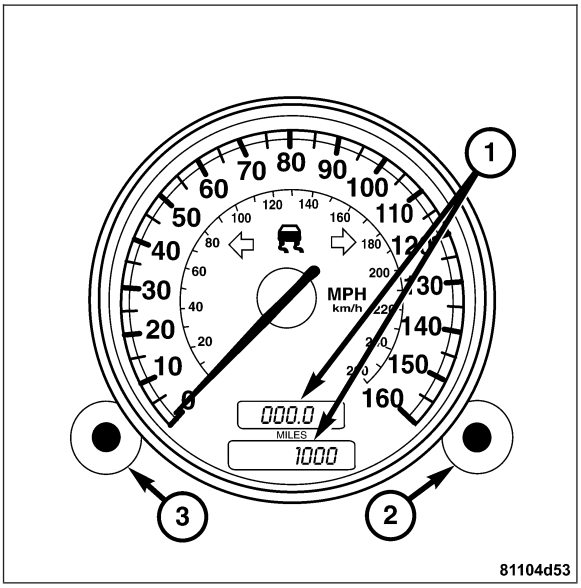

3. During the 10 seconds the FSS service request is displayed, move the ignition switch to the “OFF” position (1). The FSS service request will continue to be displayed.

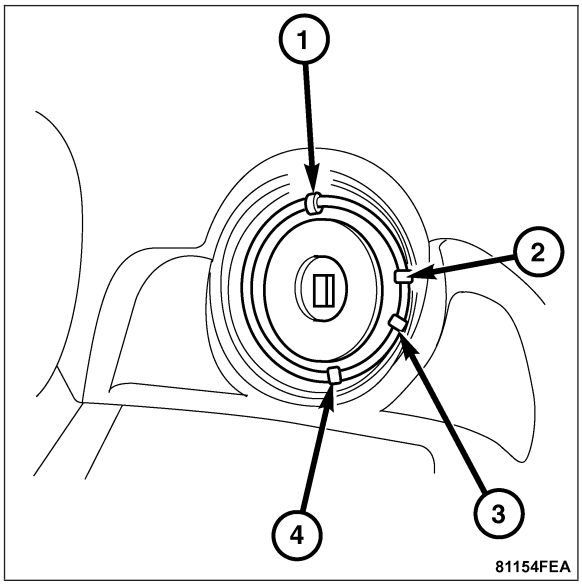

4. Press the reset button (3) for the trip odometer (1) and hold.

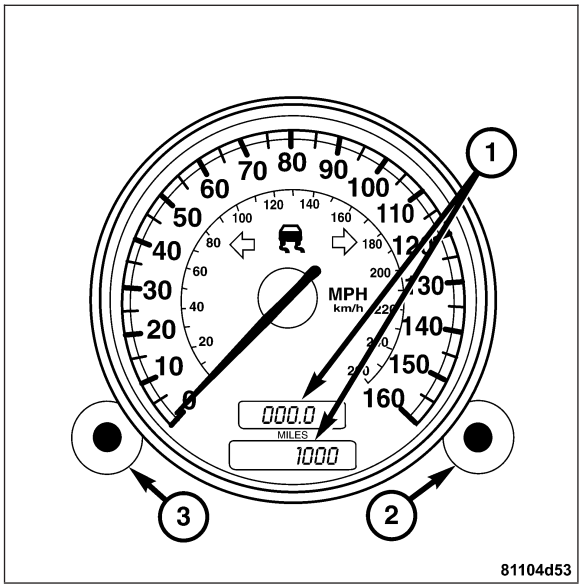

5. Move the ignition switch to the “RUN” position (3).

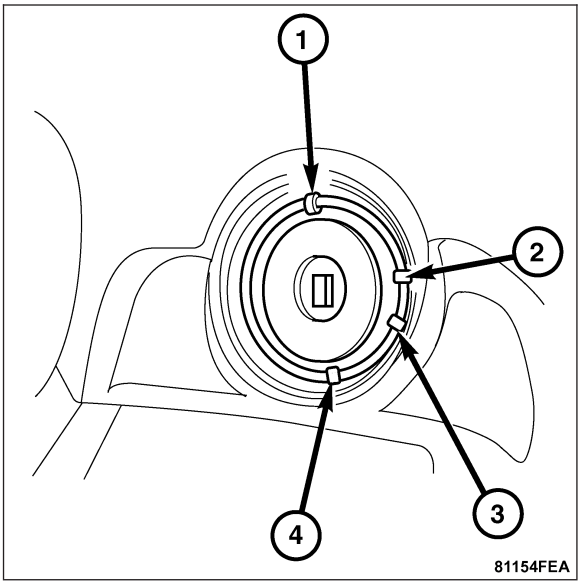

6. Continue to press and hold the reset button for the trip odometer (about 10 seconds) until the audible signal sounds and the new start distance appears (1) in the display. The tool symbol (2) should disappear at this time.

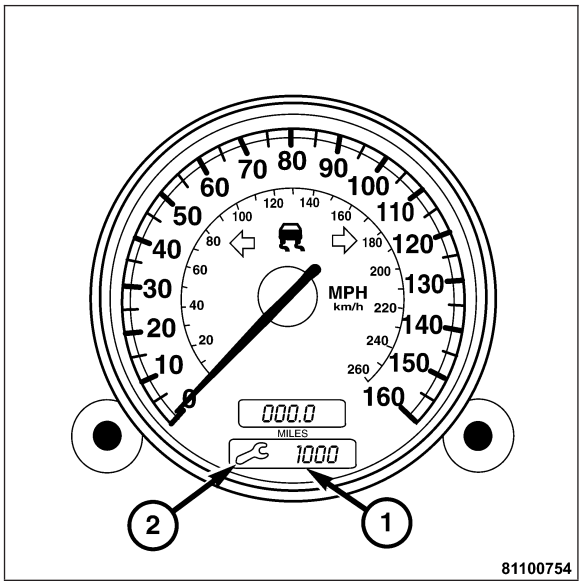

STANDARD PROCEDURE - INSTRUMENT CLUSTER BULBS

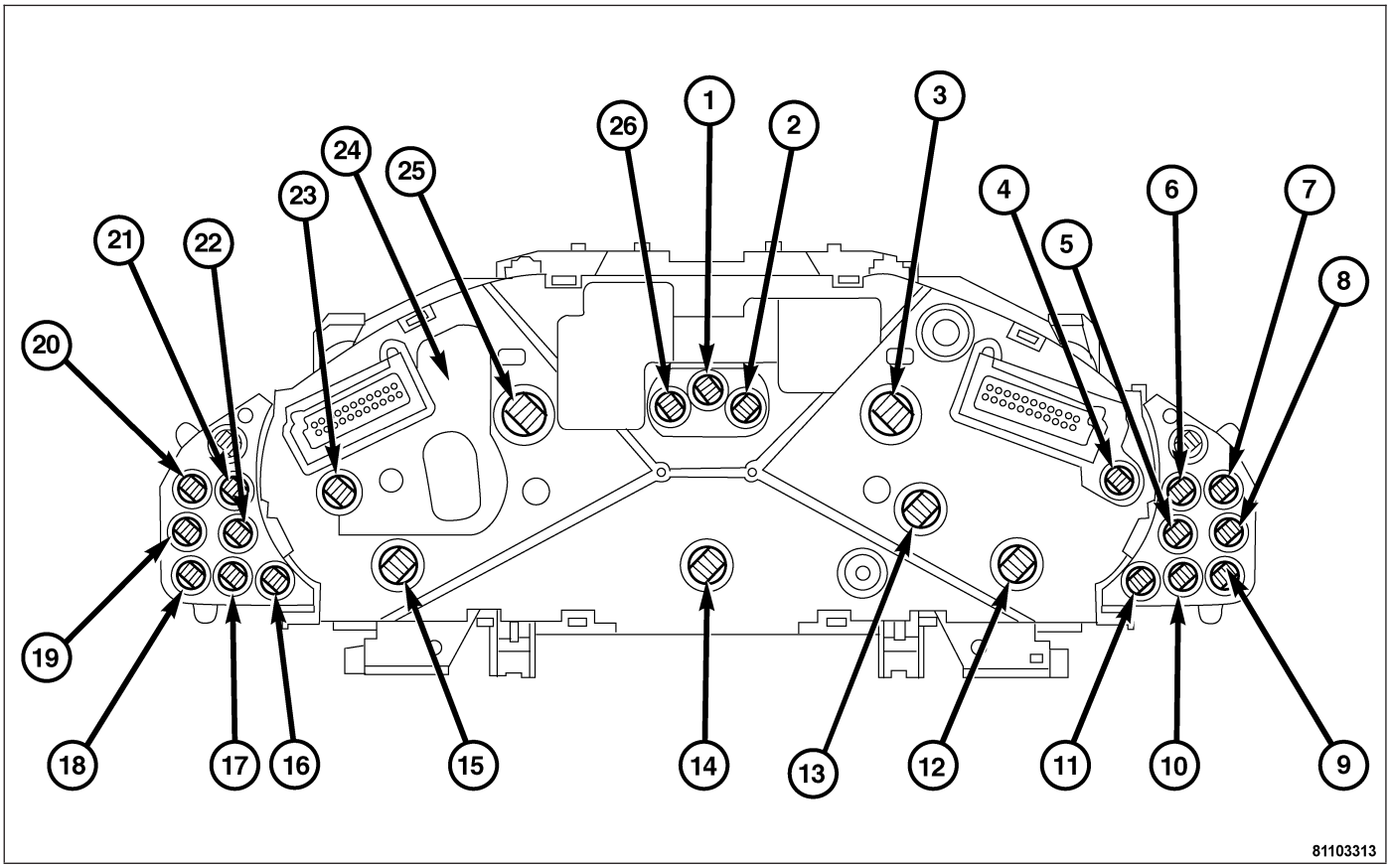

1 - ELECTRONIC STABILITY PROGRAM (ESP) WARNING LAMP
2 - LEFT TURN SIGNAL INDICATOR LAMP
3 - INSTRUMENT CLUSTER ILLUMINATION
4 - INSTRUMENT CLUSTER ILLUMINATION
5 - OIL LEVEL INDICATOR LAMP
6 - LOW COOLANT INDICATOR LAMP
7 - LOW WASHER FLUID INDICATOR LAMP
8 - AIRBAG WARNING INDICATOR LAMP (SRS)
9 - BRAKE WEAR INDICATOR LAMP
10 - MALFUNCTION INDICATOR LAMP (MIL)
11 - TELESCOPING WHEEL INDICATOR LAMP
12 - INSTRUMENT CLUSTER ILLUMINATION
13 - LOW FUEL WARNING LAMP
14 - INSTRUMENT CLUSTER ILLUMINATION
15 - INSTRUMENT CLUSTER ILLUMINATION
16 - HIGH BEAM INDICATOR LAMP
17 - BATTERY VOLTAGE INDICATOR LAMP
18 - SEAT BELT INDICATOR LAMP
19 - BRAKE ASSIST INDICATOR LAMP (BAS)
20 - ANTILOCK WARNING INDICATOR LAMP (ABS)
21 - LAMP OUTAGE INDICATOR LAMP
22 - BRAKE WARNING INDICATOR LAMP
23 - INSTRUMENT CLUSTER ILLUMINATION
24 - INSTRUMENT CLUSTER (IC)
25 - INSTRUMENT CLUSTER ILLUMINATION
26 - RIGHT TURN SIGNAL INDICATOR LAMP

INSTRUMENT CLUSTER BULB REMOVAL

1. To remove the instrument cluster bulbs, turn the bulb counter clockwise and remove it from the back of the instrument cluster housing.

INSTRUMENT CLUSTER BULB INSTALLATION

1. To install the instrument cluster bulbs, place the bulb into the instrument cluster housing back and then turn the bulb clockwise until it locks.

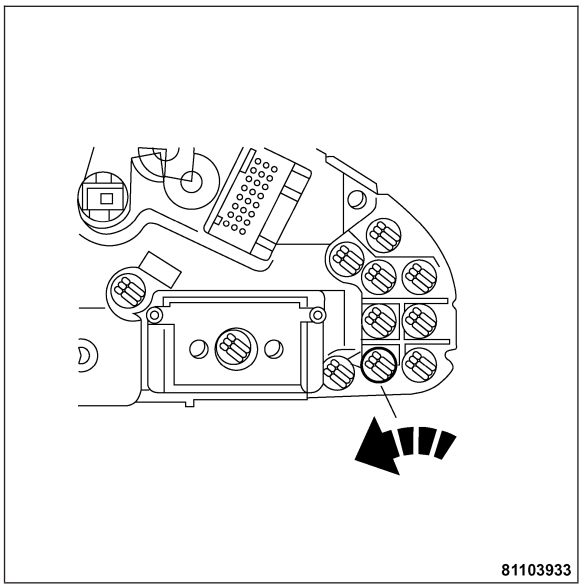



REMOVAL - INSTRUMENT CLUSTER

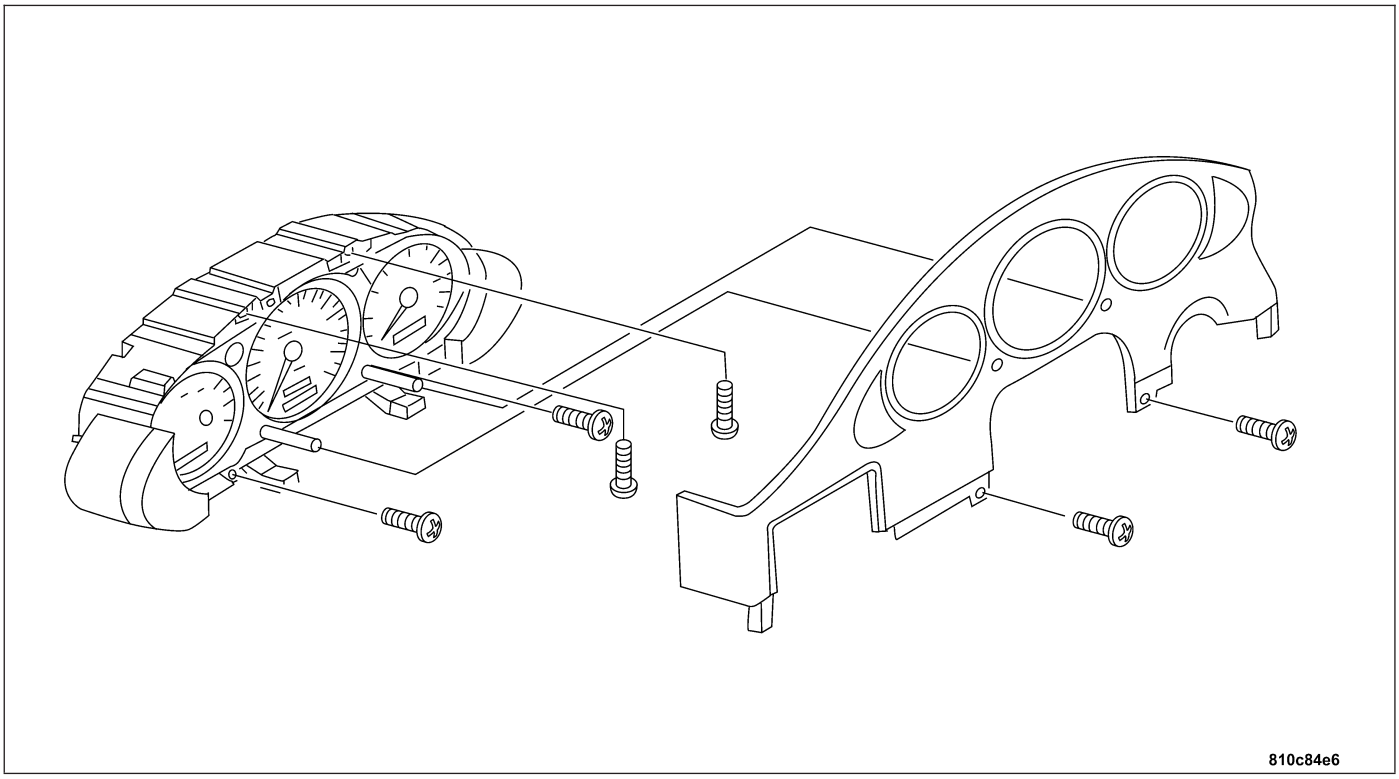

1. Disconnect the negative battery cable.
2. Remove the steering wheel. **Refer to Page 19-25**.
3. Remove the lower instrument panel cover (2).

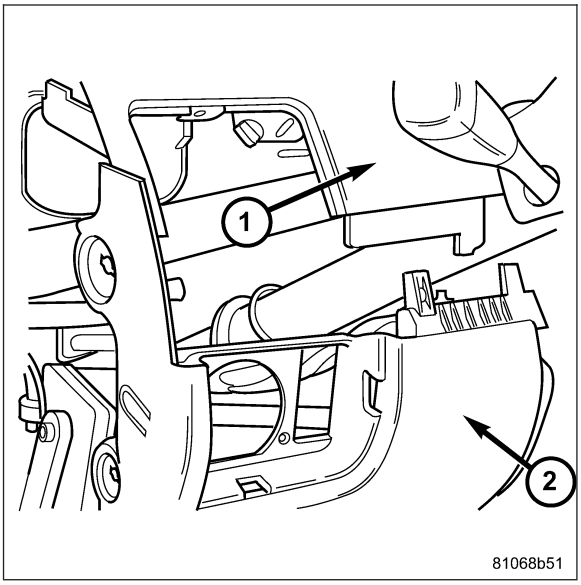

4. Remove the instrument cluster bezel (1).
5. Remove the retaining screws from instrument cluster.
6. Move the instrument cluster toward the rear of the vehicle.
7. Unlock and disconnect the Instrument Cluster harness connectors from the back of the instrument cluster.
8. Remove the instrument cluster from the vehicle.

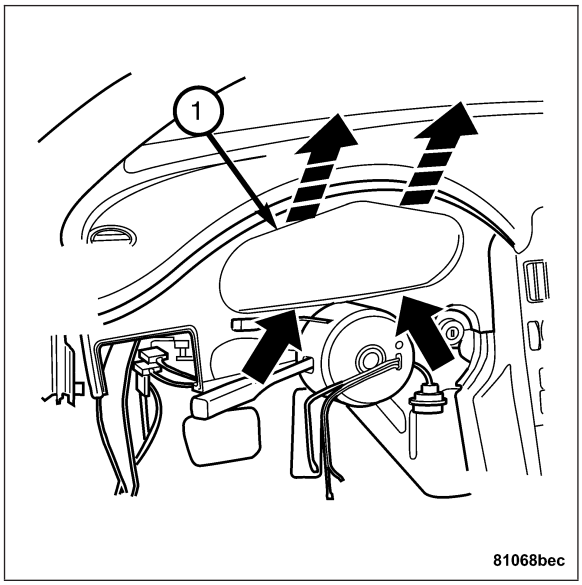

INSTALLATION - INSTRUMENT CLUSTER

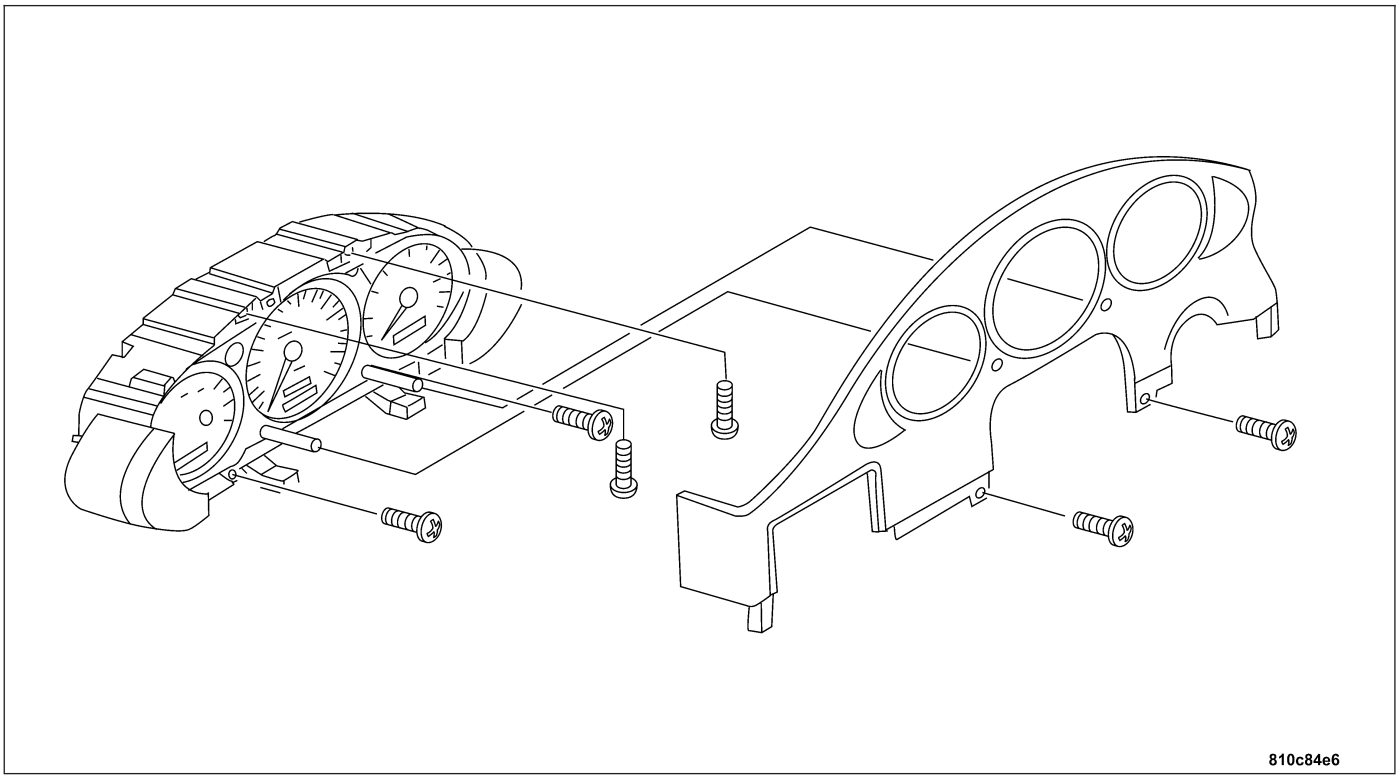

1. Install the instrument cluster.
2. Connect and lock the Instrument Cluster harness connectors.
3. Install the retaining screws to the instrument cluster.

4. Install the instrument cluster bezel (1). **Refer to Page 23-155**.

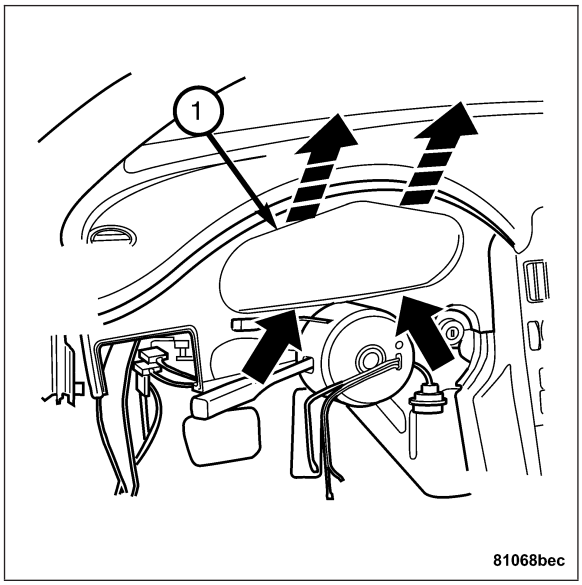

5. Install the lower instrument panel cover (2). **Refer to Page 23-155**.
6. Install the steering wheel. **Refer to Page 19-26**.
7. Connect the negative battery cable.

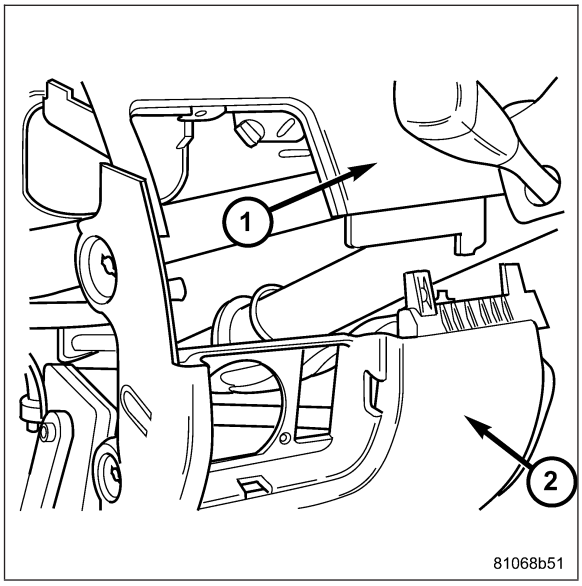

LAMPS

TABLE OF CONTENTS

page

LAMPS/LIGHTING - EXTERIOR - ELECTRICAL DIAGNOSTICS 1
LAMPS/LIGHTING - EXTERIOR - SERVICE INFORMATION 84

page

LAMPS/LIGHTING - INTERIOR - ELECTRICAL DIAGNOSTICS 117
LAMPS/LIGHTING - INTERIOR - SERVICE INFORMATION 136

LAMPS/LIGHTING - EXTERIOR - ELECTRICAL DIAGNOSTICS

TABLE OF CONTENTS

page

LAMPS/LIGHTING - EXTERIOR - ELECTRICAL DIAGNOSTICS
DIAGNOSIS AND TESTING
*LEFT FOG LAMP INOPERATIVE 2
*RIGHT FOG LAMP INOPERATIVE 5
*LEFT PARK LAMP INOPERATIVE 8
*LEFT FRONT TURN LAMP INOPERATIVE . . 11
*RIGHT PARK LAMP INOPERATIVE 14
*RIGHT FRONT TURN LAMP INOPERATIVE . 17
*LEFT LOW BEAM HEADLAMP INOPERATIVE 20
*LEFT HIGH BEAM HEADLAMP INOPERATIVE 23
*RIGHT LOW BEAM HEADLAMP INOPERATIVE 26
*RIGHT HIGH BEAM HEADLAMP INOPERATIVE 29
*LEFT FRONT SIDE MARKER LAMP INOPERATIVE 32
*RIGHT FRONT SIDE MARKER LAMP INOPERATIVE 35

page

*LEFT REAR SIDE MARKER LAMP INOPERATIVE 38
*RIGHT REAR SIDE MARKER LAMP INOPERATIVE 41
*LEFT TAIL LAMP INOPERATIVE 44
*LEFT STOP LAMP INOPERATIVE 47
*LEFT BACK UP LAMP INOPERATIVE 50
*LEFT REAR TURN LAMP INOPERATIVE . . . 53
*RIGHT TAIL LAMP INOPERATIVE 56
*RIGHT STOP LAMP INOPERATIVE 59
*RIGHT BACK UP LAMP INOPERATIVE 62
*RIGHT REAR TURN LAMP INOPERATIVE . . 65
*CENTER HIGH MOUNTED STOP LAMP INOPERATIVE 68
*LICENSE LAMP NO.1 INOPERATIVE 71
*LICENSE LAMP NO.2 INOPERATIVE 74
BODY VERIFICATION TEST 77
SCHEMATICS AND DIAGRAMS 78

LAMPS/LIGHTING - EXTERIOR - ELECTRICAL DIAGNOSTICS

DIAGNOSIS AND TESTING

*LEFT FOG LAMP INOPERATIVE

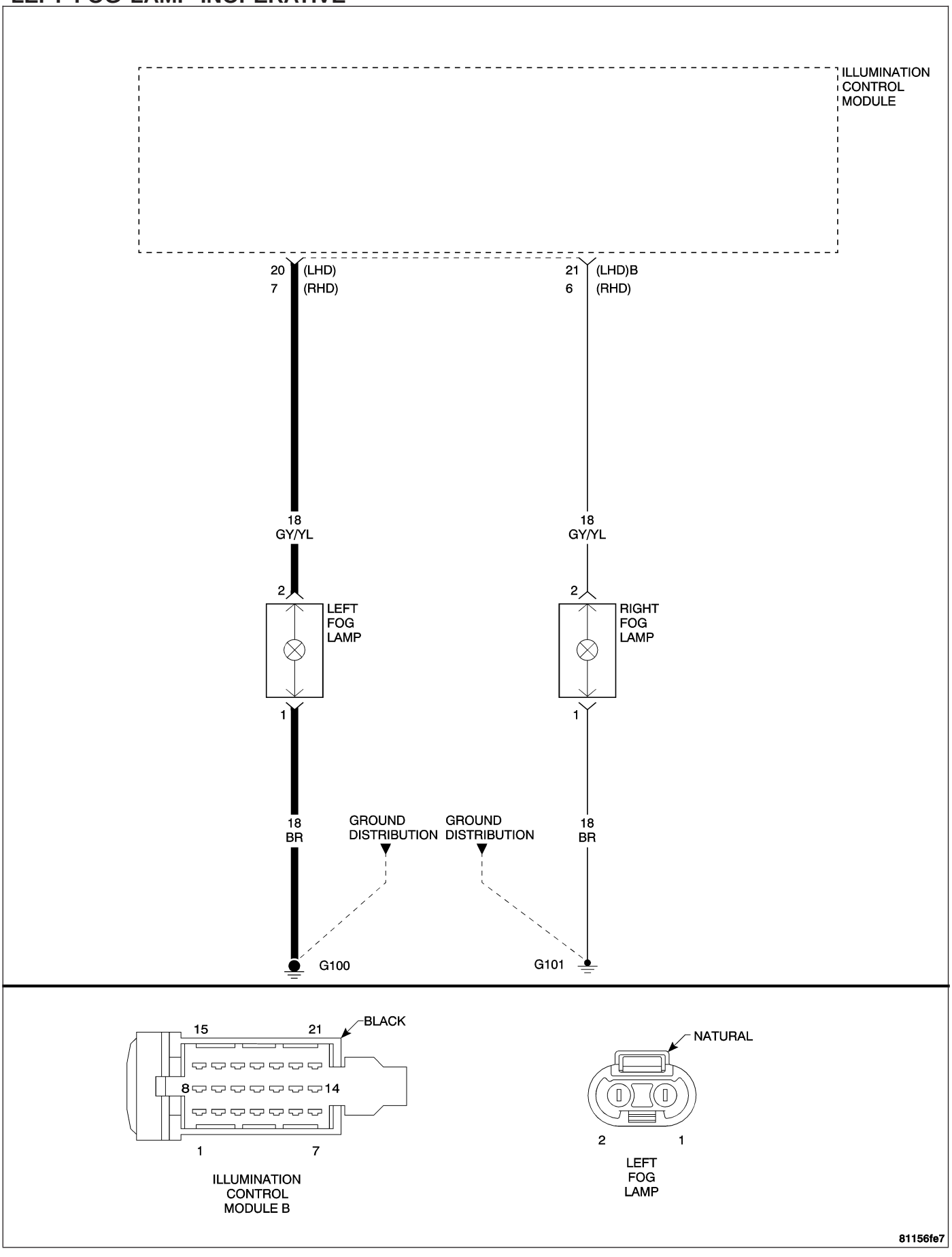

*LEFT FOG LAMP INOPERATIVE — CONTINUED

POSSIBLE CAUSES
FUSED B(+) CIRCUIT OPEN
GROUND CIRCUIT OPEN
LEFT FOG LAMP BULB

For a complete Exterior Lamps Circuit Diagram, **Refer to Page 8L-78**.

Diagnostic Test

1. INSPECT THE LEFT FOG LAMP BULB

Note: If both of the fog lamps are inoperative, inspect Fuse 9 located in the Illumination Control Module/IP Fuse Block. If the fuse is open, repair the cause of the open fuse before continuing.

Turn the ignition off.

Remove the Left Fog Lamp bulb and inspect for an open filament.

Is the Bulb filament open?

Yes >> Replace the Left Fog Lamp bulb. **Refer to Page 8L-93**.
Perform BODY VERIFICATION TEST.

No >> Go to 2

2. MEASURE FUSED B(+) CIRCUIT RESISTANCE

Disconnect the Left Fog Lamp harness connector.

Disconnect the Illumination Control Module harness connector.

Note: Check connectors - Clean/repair as necessary.

Measure the resistance of the Fused B(+) circuit from the Left Fog Lamp harness connector to the Illumination Control Module harness connector.

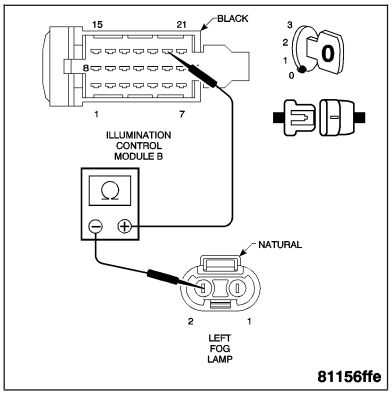

Is the resistance below 5.0 ohms?

Yes >> Go to 3

No >> Repair the Fused B(+) circuit for an open between the Left Fog Lamp and the Illumination Control Module.
Perform BODY VERIFICATION TEST.

*LEFT FOG LAMP INOPERATIVE — CONTINUED

3. MEASURE LEFT FOG LAMP VOLTAGE

Connect the Illumination Control Module harness connector.

Turn the ignition on.

Turn the fog lamps on.

Measure the voltage of the Fused B(+) circuit at the Left Fog Lamp harness connector cavity 2.

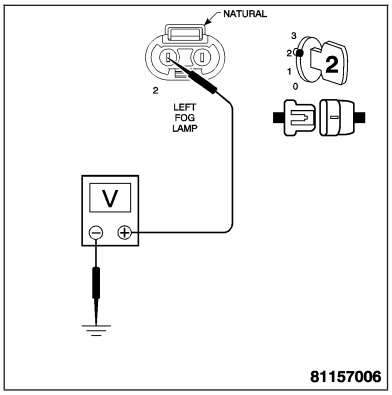

Is the voltage above 10 volts?

Yes >> Go to 4

No >> Replace the Illumination Control Module. **Refer to Page 8L-105**.
Perform BODY VERIFICATION TEST.

4. MEASURE LEFT FOG LAMP GROUND CIRCUIT RESISTANCE

Turn the ignition off.

Turn the fog lamps off.

Measure the resistance between ground and the Left Fog Lamp harness connector cavity 1.

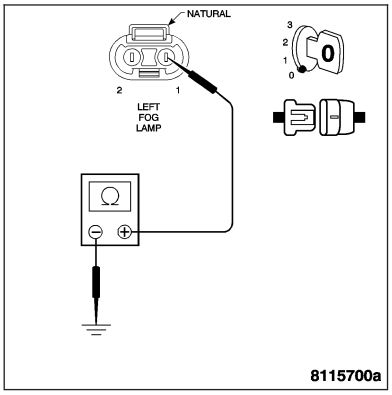

Is the resistance below 5.0 ohms?

Yes >> Ensure that the Left Fog Lamp bulb is installed properly and replace the bulb socket if necessary.
Perform BODY VERIFICATION TEST.

No >> Repair the Left Fog Lamp ground circuit for an open.
Perform BODY VERIFICATION TEST.

*RIGHT FOG LAMP INOPERATIVE

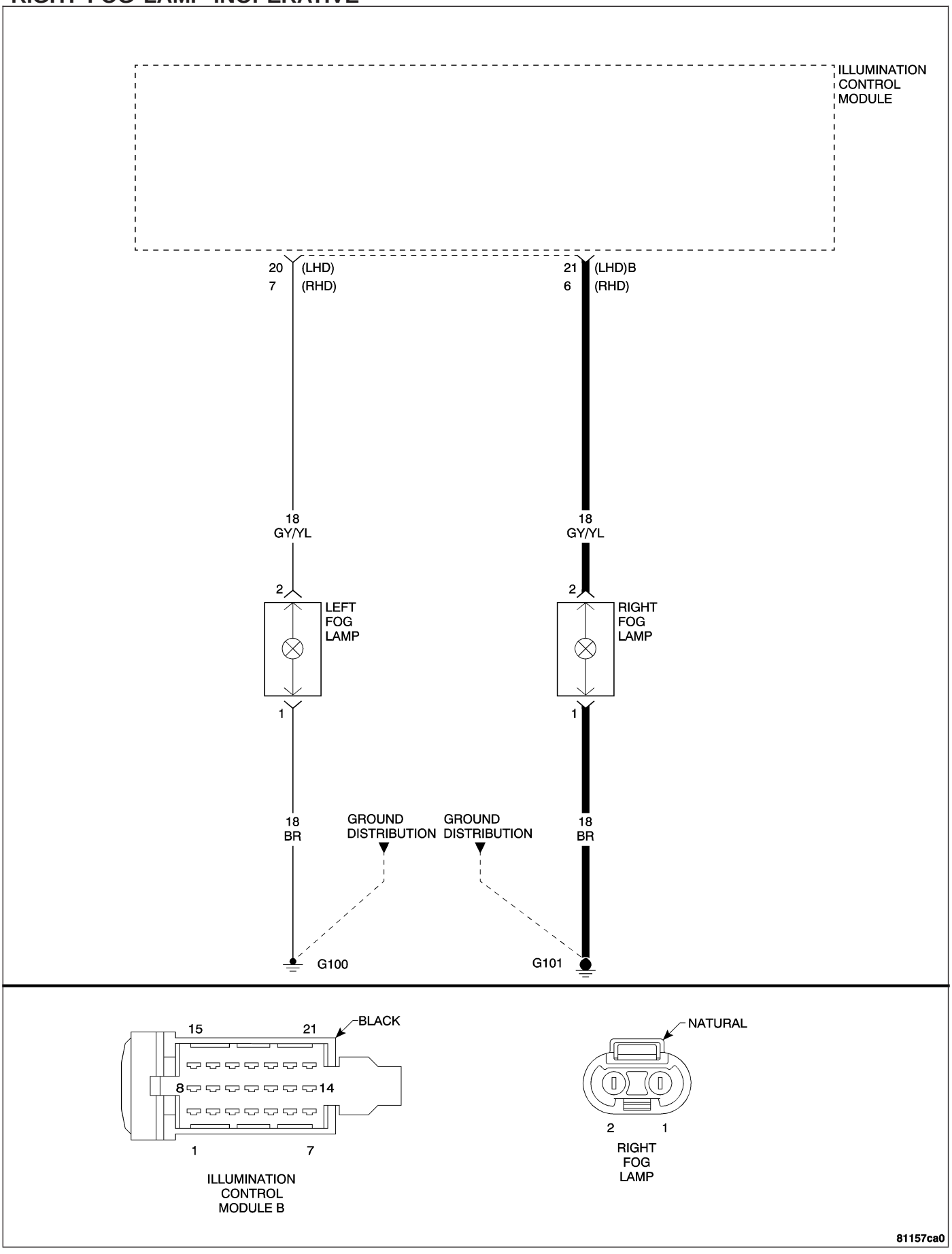

*RIGHT FOG LAMP INOPERATIVE — CONTINUED

POSSIBLE CAUSES
FUSED B(+) CIRCUIT OPEN
GROUND CIRCUIT OPEN
RIGHT FOG LAMP BULB

For a complete Exterior Lamps Circuit Diagram, **Refer to Page 8L-78**.

Diagnostic Test

1. INSPECT THE RIGHT FOG LAMP BULB

Note: If both of the fog lamps are inoperative, inspect Fuse 9 located in the Illumination Control Module/IP Fuse Block. If the fuse is open, repair the cause of the open fuse before continuing.
Turn the ignition off.
Remove the Right Fog Lamp bulb and inspect for an open filament.

Is the Bulb filament open?

Yes >> Replace the Right Fog Lamp bulb. **Refer to Page 8L-93**.
Perform BODY VERIFICATION TEST.

No >> Go to 2

2. MEASURE FUSED B(+) CIRCUIT RESISTANCE

Disconnect the Right Fog Lamp harness connector.
Disconnect the Illumination Control Module harness connector.

Note: Check connectors - Clean/repair as necessary.
Measure the resistance between the Right Fog Lamp harness connector and the Illumination Control Module harness connector.

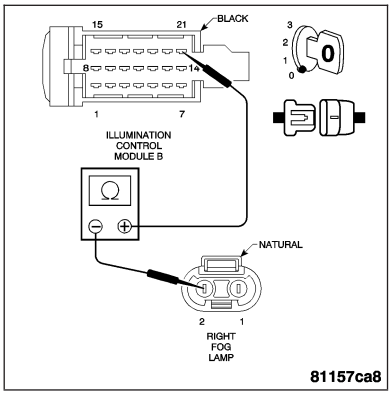

Is the resistance below 5.0 ohms?

Yes >> Go to 3

No >> Repair the Fused B(+) circuit for an open between the Right Fog Lamp and the Illumination Control Module.
Perform BODY VERIFICATION TEST.

*RIGHT FOG LAMP INOPERATIVE — CONTINUED

3. MEASURE RIGHT FOG LAMP VOLTAGE

Connect the Illumination Control Module harness connector.

Turn the ignition on.

Turn the fog lamps on.

Measure the voltage between the Right Fog Lamp harness connector cavity 2 and ground.

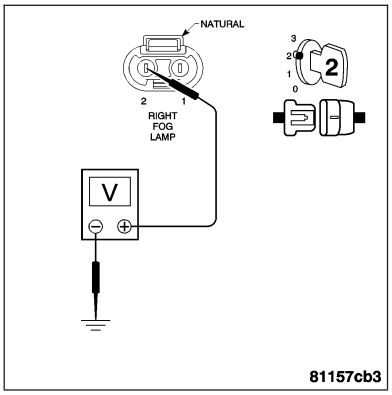

Is the voltage above 10 volts?

Yes >> Go to 4

No >> Replace the Illumination Control Module. **Refer to Page 8L-105**.
Perform BODY VERIFICATION TEST.

4. MEASURE RIGHT FOG LAMP GROUND CIRCUIT RESISTANCE

Turn the ignition off.

Turn the fog lamps off.

Measure the resistance between the Right Fog Lamp harness connector cavity 1 and ground.

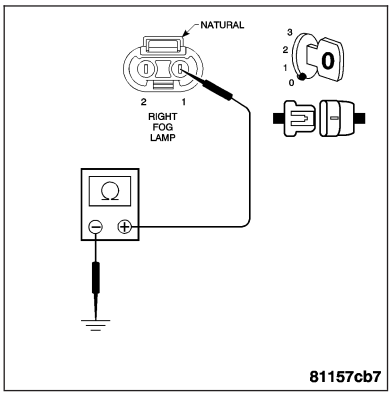

Is the resistance below 5.0 ohms?

Yes >> Ensure that the Right Fog Lamp bulb is installed properly and replace the bulb socket if necessary.
Perform BODY VERIFICATION TEST.

No >> Repair the Right Fog Lamp ground circuit for an open.
Perform BODY VERIFICATION TEST.

*LEFT PARK LAMP INOPERATIVE

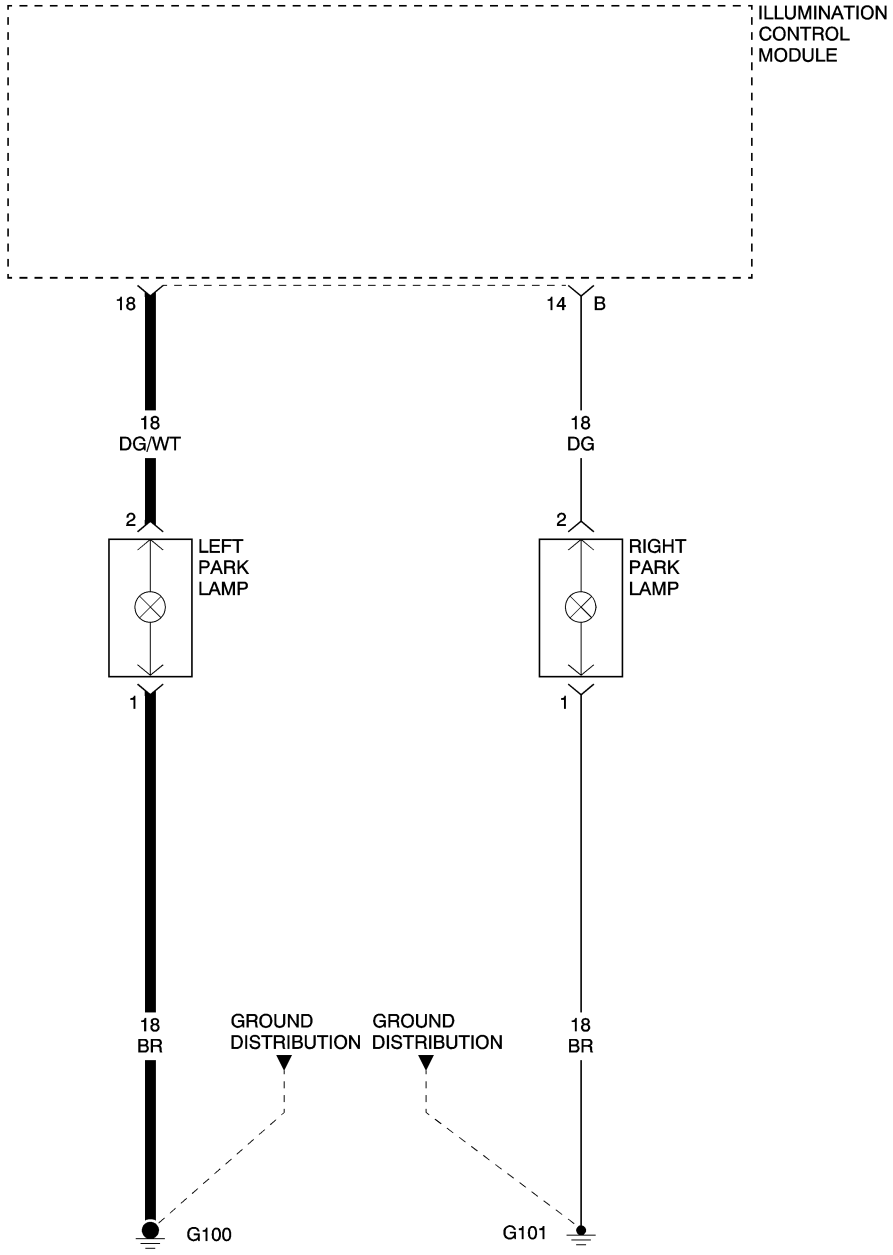

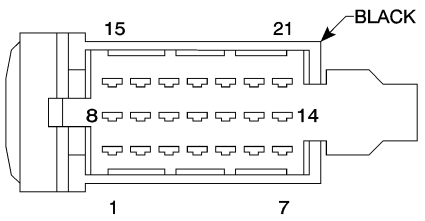

ILLUMINATION
CONTROL
MODULE B

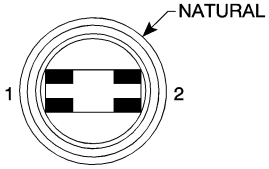

LEFT
PARK
LAMP

81157137

*LEFT PARK LAMP INOPERATIVE — CONTINUED

POSSIBLE CAUSES
FUSED B(+) CIRCUIT OPEN
GROUND CIRCUIT OPEN
LEFT PARK LAMP BULB

For a complete Exterior Lamps Circuit Diagram, **Refer to Page 8L-78**.

Diagnostic Test

1. INSPECT THE LEFT PARK LAMP BULB

Note: If the left front side marker lamp, the left park lamp, the left rear side marker lamp, and the left tail lamp are inoperative, inspect Fuse 10 located in the Illumination Control Module/IP Fuse Block. If the fuse is open, repair the cause of the open fuse before continuing.
Turn the ignition off.
Remove the Left Park Lamp bulb and inspect for an open filament.

Is the Bulb filament open?

Yes >> Replace the Left Park Lamp bulb. **Refer to Page 8L-97**.
Perform BODY VERIFICATION TEST.

No >> Go to 2

2. MEASURE FUSED B(+) CIRCUIT RESISTANCE

Disconnect the Left Park Lamp harness connector.
Disconnect the Illumination Control Module harness connector.

Note: Check connectors - Clean/repair as necessary.
Measure the resistance between the Left Park Lamp harness connector and the Illumination Control Module harness connector.

Is the resistance below 5.0 ohms?

Yes >> Go to 3

No >> Repair the Fused B(+) circuit for an open between the Left Park Lamp and the Illumination Control Module.
Perform BODY VERIFICATION TEST.

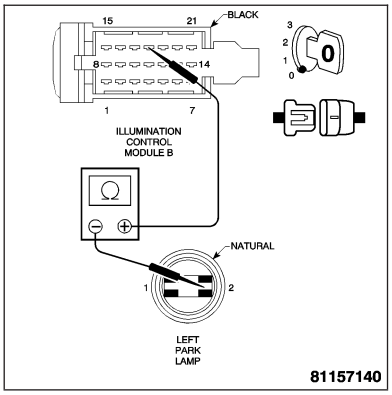

*LEFT PARK LAMP INOPERATIVE — CONTINUED

3. MEASURE LEFT PARK LAMP VOLTAGE

Connect the Illumination Control Module harness connector.

Turn the ignition on.

Turn the park lamps on.

Measure the voltage between the Left Park Lamp harness connector cavity 2 and ground.

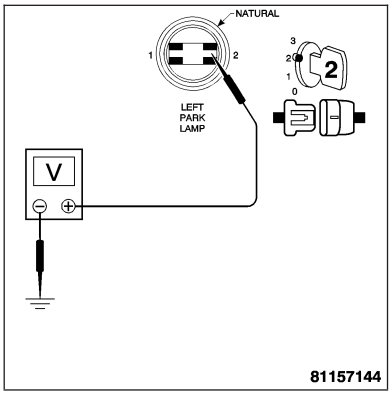

Is voltage present?

Yes >> Go to 4

No >> Replace the Illumination Control Module. **Refer to Page 8L-105**.
Perform BODY VERIFICATION TEST.

4. MEASURE LEFT PARK LAMP GROUND CIRCUIT RESISTANCE

Turn the ignition off.

Turn the park lamps off.

Measure the resistance between the Left Park Lamp harness connector cavity 1 and ground.

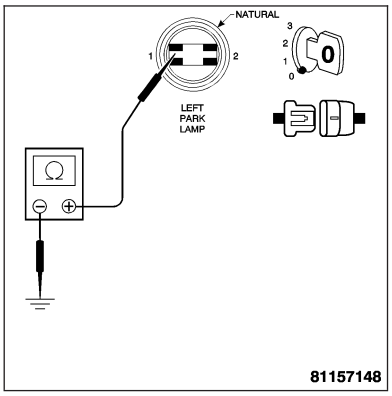

Is the resistance below 5.0 ohms?

Yes >> Ensure that the Left Park Lamp bulb is installed properly and replace the bulb socket if necessary.
Perform BODY VERIFICATION TEST.

No >> Repair the Left Park Lamp ground circuit for an open.
Perform BODY VERIFICATION TEST.

*LEFT FRONT TURN LAMP INOPERATIVE

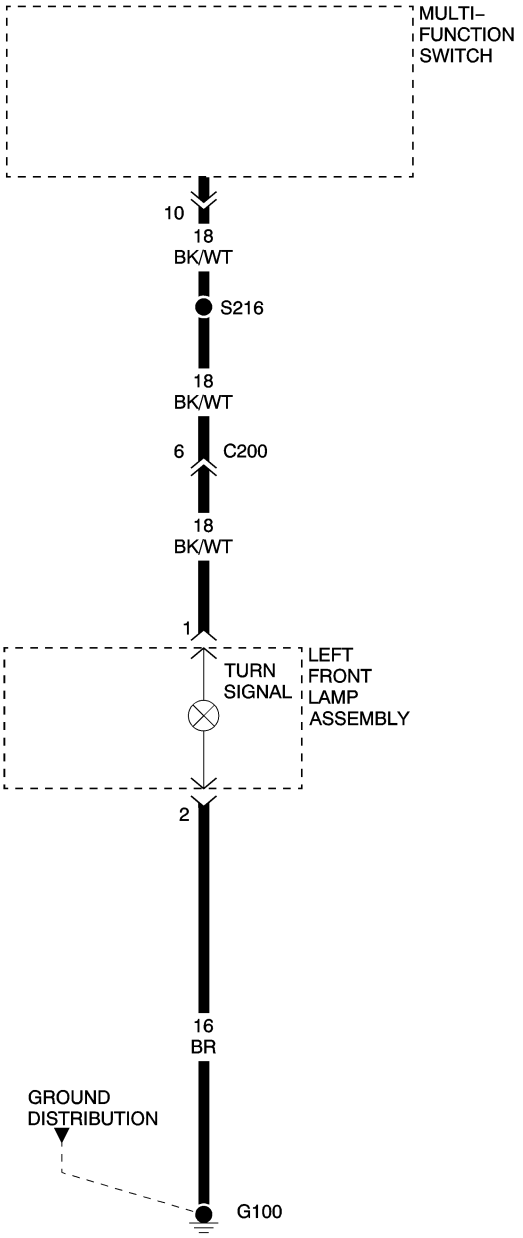

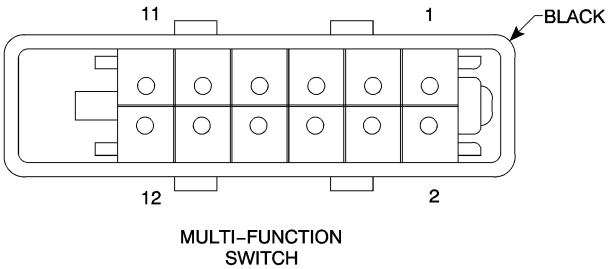

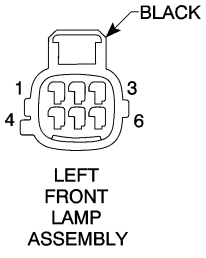

81169a73

*LEFT FRONT TURN LAMP INOPERATIVE — CONTINUED

POSSIBLE CAUSES
FUSED B(+) CIRCUIT OPEN
GROUND CIRCUIT OPEN
LEFT FRONT TURN LAMP BULB

For a complete Exterior Lamps Circuit Diagram, **Refer to Page 8L-78**.

Diagnostic Test

1. INSPECT THE LEFT FRONT TURN LAMP BULB

Note: If all of the turn signal lamps and both of the back up lamps are inoperative, inspect Fuse 4 located in the Illumination Control Module/IP Fuse Block. If the fuse is open, repair the cause of the open fuse before continuing.

Turn the ignition off.

Remove the Left Front Turn Lamp bulb and inspect for an open filament.

Is the Bulb filament open?

Yes >> Replace the Left Front Turn Lamp bulb. **Refer to Page 8L-98**.
Perform BODY VERIFICATION TEST.

No >> Go to 2

2. MEASURE FUSED B(+) CIRCUIT RESISTANCE

Disconnect the Left Front Lamp Assembly harness connector.

Disconnect the Multi-Function Switch harness connector.

Note: Check connectors - Clean/repair as necessary.

Measure the resistance between the Left Front Lamp Assembly harness connector and the Multi-Function Switch harness connector.

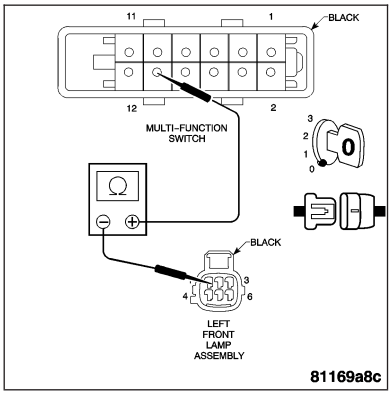

Is the resistance below 5.0 ohms?

Yes >> Go to 3

No >> Repair the Fused B(+) circuit for an open between the Left Front Turn Lamp and the Multi-Function Switch.
Perform BODY VERIFICATION TEST.

*LEFT FRONT TURN LAMP INOPERATIVE — CONTINUED

3. MEASURE LEFT FRONT TURN LAMP VOLTAGE

Connect the Multi-Function Switch harness connector.

Turn the ignition on.

Turn the left turn signal on.

Measure the voltage between the Left Front Lamp Assembly harness connector cavity 1 and ground.

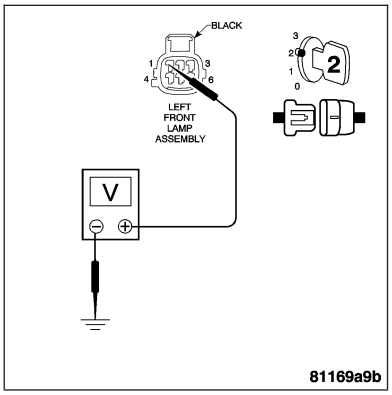

Is voltage present?

Yes >> Go to 4

No >> Replace the Multi-Function Switch. **Refer to Page 8L-112**.
Perform BODY VERIFICATION TEST.

4. MEASURE LEFT FRONT TURN LAMP GROUND CIRCUIT RESISTANCE

Turn the ignition off.

Turn the left turn signal off.

Measure the resistance between the Left Front Lamp Assembly harness connector cavity 2 and ground.

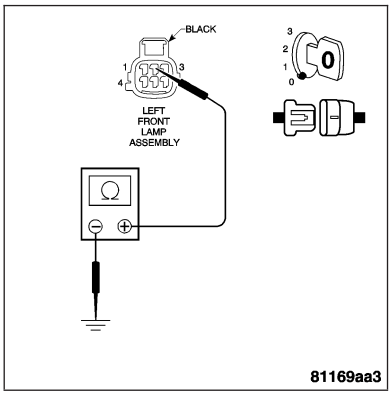

Is the resistance below 5.0 ohms?

Yes >> Ensure that the Left Front Turn Lamp bulb is installed properly and replace the bulb socket if necessary.
Perform BODY VERIFICATION TEST.

No >> Repair the Left Front Lamp Assembly ground circuit for an open.
Perform BODY VERIFICATION TEST.

*RIGHT PARK LAMP INOPERATIVE

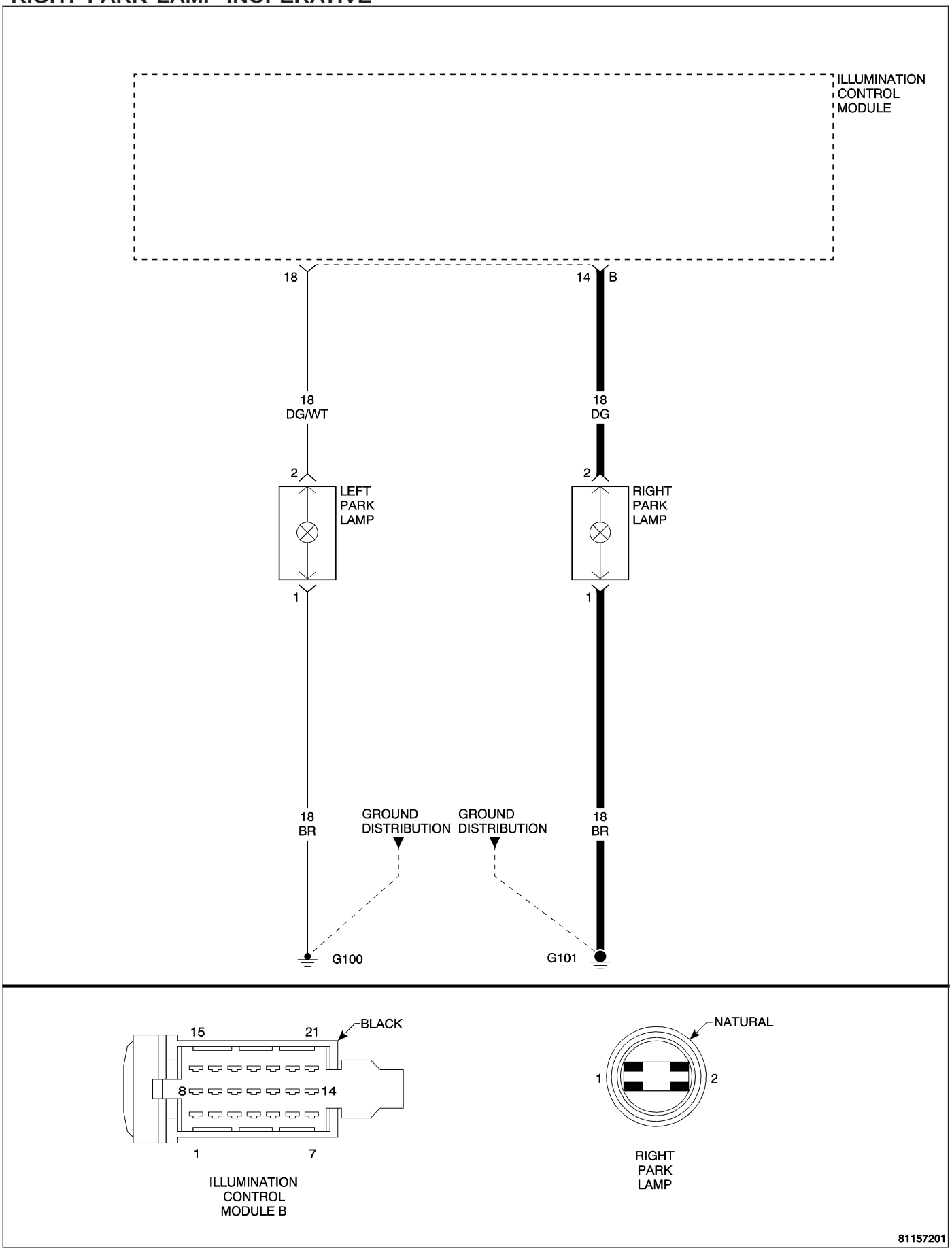

*RIGHT PARK LAMP INOPERATIVE — CONTINUED

POSSIBLE CAUSES
FUSED B(+) CIRCUIT OPEN
GROUND CIRCUIT OPEN
RIGHT PARK LAMP BULB

For a complete Exterior Lamps Circuit Diagram, **Refer to Page 8L-78**.

Diagnostic Test

1. INSPECT THE RIGHT PARK LAMP BULB

Note: If the right front side marker lamp, the right park lamp, the right rear side marker lamp, and the right tail lamp are inoperative, inspect Fuse 7 located in the Illumination Control Module/IP Fuse Block. If the fuse is open, repair the cause of the open fuse before continuing.

Turn the ignition off.

Remove the Right Park Lamp bulb and inspect for an open filament.

Is the Bulb filament open?

Yes >> Replace the Right Park Lamp bulb. **Refer to Page 8L-98**. Perform BODY VERIFICATION TEST.

No >> Go to 2

2. MEASURE FUSED B(+) CIRCUIT RESISTANCE

Disconnect the Right Park Lamp harness connector.

Disconnect the Illumination Control Module harness connector.

Note: Check connectors - Clean/repair as necessary.

Measure the resistance between the Right Park Lamp harness connector and the Illumination Control Module harness connector.

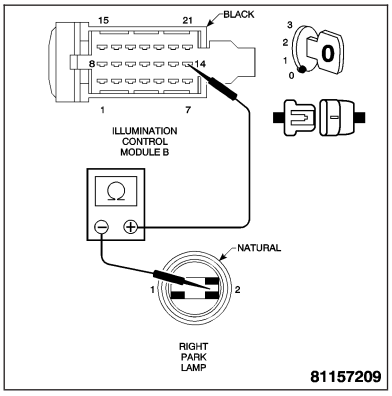

Is the resistance below 5.0 ohms?

Yes >> Go to 3

No >> Repair the Fused B(+) circuit for an open between the Right Park Lamp and the Illumination Control Module. Perform BODY VERIFICATION TEST.

*RIGHT PARK LAMP INOPERATIVE — CONTINUED

3. MEASURE RIGHT PARK LAMP VOLTAGE

Connect the Illumination Control Module harness connector.

Turn the ignition on.

Turn the park lamps on.

Measure the voltage between the Right Park Lamp harness connector cavity 2 and ground.

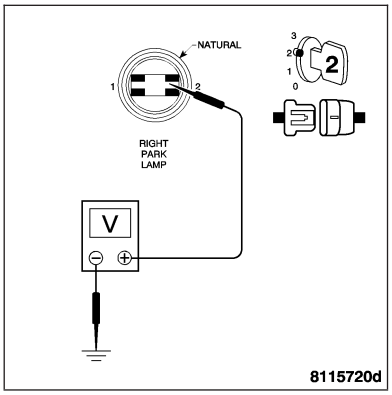

Is voltage present?

Yes >> Go to 4

No >> Replace the Illumination Control Module. **Refer to Page 8L-105**.
Perform BODY VERIFICATION TEST.

4. MEASURE RIGHT PARK LAMP GROUND CIRCUIT RESISTANCE

Turn the ignition off.

Turn the park lamps off.

Measure the resistance between the Right Park Lamp harness connector cavity 1 and ground.

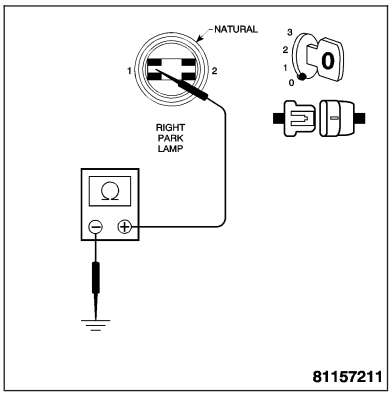

Is the resistance below 5.0 ohms?

Yes >> Ensure that the Right Park Lamp bulb is installed properly and replace the bulb socket if necessary.
Perform BODY VERIFICATION TEST.

No >> Repair the Right Park Lamp ground circuit for an open.
Perform BODY VERIFICATION TEST.

*RIGHT FRONT TURN LAMP INOPERATIVE

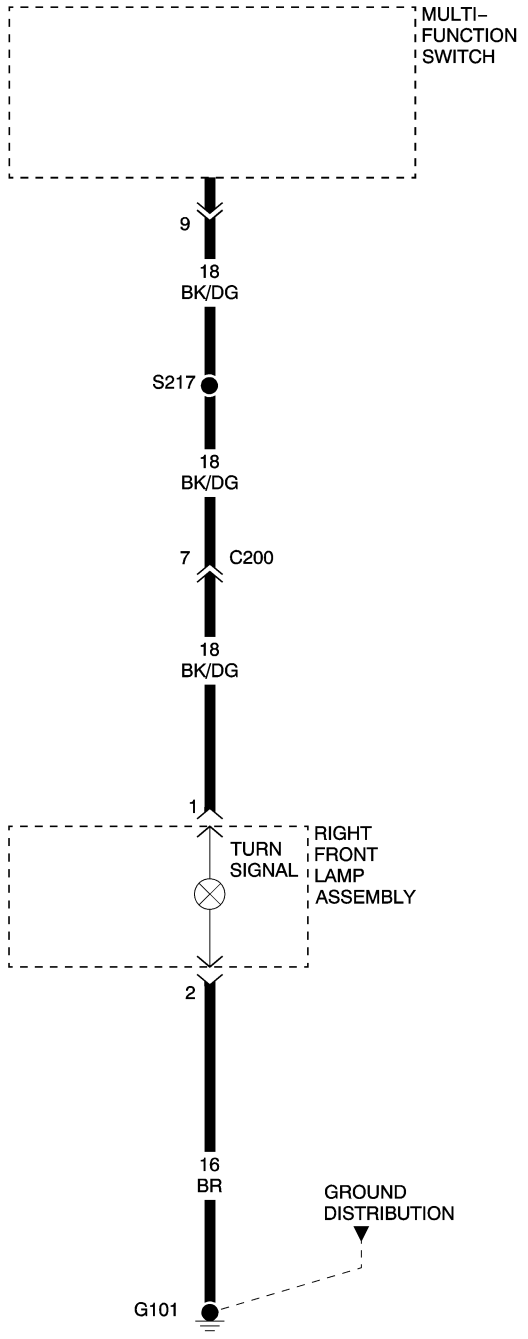

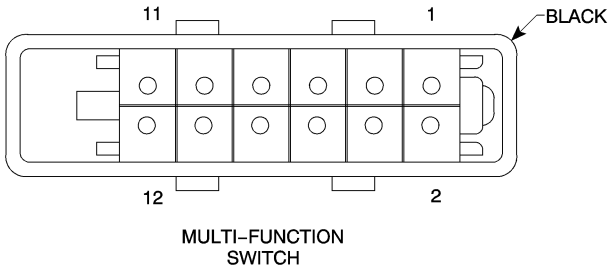

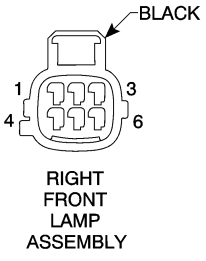

81169aca

*RIGHT FRONT TURN LAMP INOPERATIVE — CONTINUED

POSSIBLE CAUSES
FUSED B(+) CIRCUIT OPEN
GROUND CIRCUIT OPEN
RIGHT FRONT TURN LAMP BULB

For a complete Exterior Lamps Circuit Diagram, **Refer to Page 8L-78**.

Diagnostic Test

1. INSPECT THE RIGHT FRONT TURN LAMP BULB

Note: If all of the turn signal lamps and both of the back up lamps are inoperative, inspect Fuse 4 located in the Illumination Control Module/IP Fuse Block. If the fuse is open, repair the cause of the open fuse before continuing.

Turn the ignition off.

Remove the Right Front Turn Lamp bulb and inspect for an open filament.

Is the Bulb filament open?

Yes >> Replace the Right Front Turn Lamp bulb. **Refer to Page 8L-98**.
Perform BODY VERIFICATION TEST.

No >> Go to 2

2. MEASURE FUSED B(+) CIRCUIT RESISTANCE

Disconnect the Right Front Lamp Assembly harness connector.

Disconnect the Multi-Function Switch harness connector.

Note: Check connectors - Clean/repair as necessary.

Measure the resistance between the Right Front Lamp Assembly harness connector and the Multi-Function Switch harness connector.

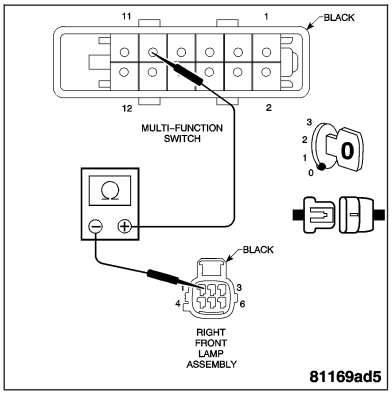

Is the resistance below 5.0 ohms?

Yes >> Go to 3

No >> Repair the Fused B(+) circuit for an open between the Right Front Turn Lamp and the Multi-Function Switch.
Perform BODY VERIFICATION TEST.

*RIGHT FRONT TURN LAMP INOPERATIVE — CONTINUED

3. MEASURE RIGHT FRONT TURN LAMP VOLTAGE

Connect the Multi-Function Switch harness connector.

Turn the ignition on.

Turn the right turn signal on.

Measure the voltage between the Right Front Lamp Assembly harness connector cavity 1 and ground.

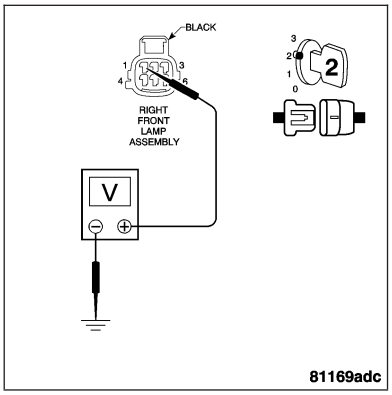

Is voltage present?

Yes >> Go to 4

No >> Replace the Multi-Function Switch. **Refer to Page 8L-112**.
Perform BODY VERIFICATION TEST.

4. MEASURE RIGHT FRONT TURN LAMP GROUND CIRCUIT RESISTANCE

Turn the ignition off.

Turn the right turn signal off.

Measure the resistance between the Right Front Lamp Assembly harness connector cavity 2 and ground.

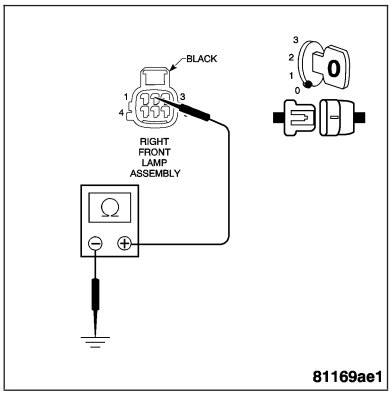

Is the resistance below 5.0 ohms?

Yes >> Ensure that the Right Front Turn Lamp bulb is installed properly and replace the bulb socket if necessary.
Perform BODY VERIFICATION TEST.

No >> Repair the Right Front Lamp Assembly ground circuit for an open.
Perform BODY VERIFICATION TEST.

*LEFT LOW BEAM HEADLAMP INOPERATIVE

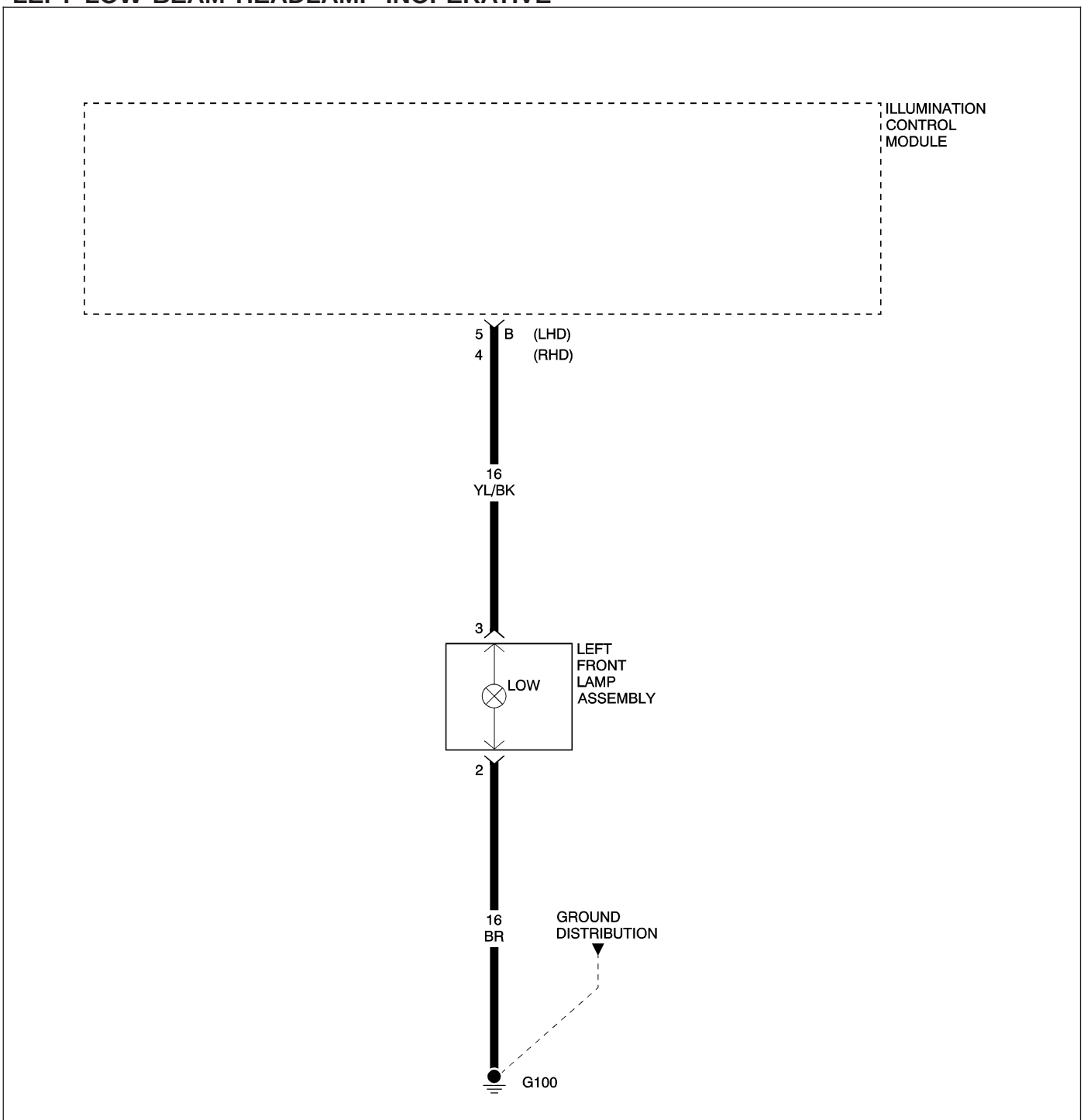

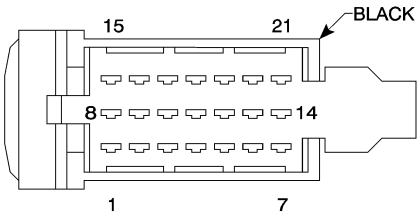

ILLUMINATION CONTROL MODULE B

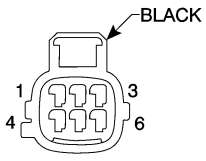

LEFT FRONT LAMP ASSEMBLY

81157769

*LEFT LOW BEAM HEADLAMP INOPERATIVE — CONTINUED

POSSIBLE CAUSES
FUSED B(+) CIRCUIT OPEN
GROUND CIRCUIT OPEN
LEFT LOW BEAM HEADLAMP BULB

For a complete Exterior Lamps Circuit Diagram, **Refer to Page 8L-78**.

Diagnostic Test

1. INSPECT THE LEFT LOW BEAM HEADLAMP BULB

Note: Inspect Fuse 8 located in the Illumination Control Module/IP Fuse Block. If the fuse is open, repair the cause of the open fuse before continuing.

Turn the ignition off.

Remove the Left Low Beam Headlamp bulb and inspect for an open filament.

Is the Bulb filament open?

Yes >> Replace the Left Low Beam Headlamp bulb. **Refer to Page 8L-103**.
Perform BODY VERIFICATION TEST.

No >> Go to 2

2. MEASURE FUSED B(+) CIRCUIT RESISTANCE

Disconnect the Left Front Lamp Assembly harness connector.

Disconnect the Illumination Control Module harness connector.

Note: Check connectors - Clean/repair as necessary.

Measure the resistance between the Left Front Lamp Assembly harness connector cavity 3 and the Illumination Control Module harness connector.

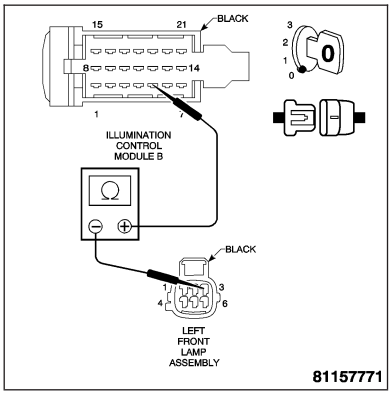

Is the resistance below 5.0 ohms?

Yes >> Go to 3

No >> Repair the Fused B(+) circuit for an open between the Left Front Lamp Assembly and the Illumination Control Module.
Perform BODY VERIFICATION TEST.

*LEFT LOW BEAM HEADLAMP INOPERATIVE — CONTINUED

3. MEASURE LEFT LOW BEAM HEADLAMP VOLTAGE

Connect the Illumination Control Module harness connector.

Turn the ignition on.

Turn the low beam headlamps on.

Measure the voltage between the Left Front Lamp Assembly harness connector cavity 3 and ground.

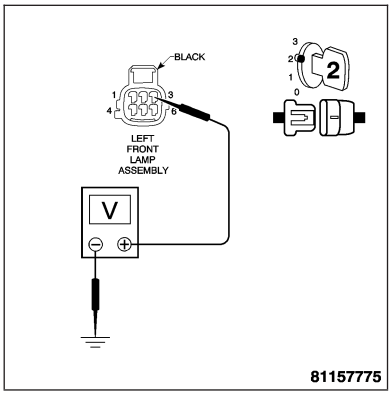

Is the voltage above 10 volts?

Yes >> Go to 4

No >> Replace the Illumination Control Module. **Refer to Page 8L-105**.
Perform BODY VERIFICATION TEST.

4. MEASURE LEFT LOW BEAM HEADLAMP GROUND CIRCUIT RESISTANCE

Turn the ignition off.

Turn the low beam headlamps off.

Measure the resistance between the Left Front Lamp Assembly harness connector cavity 2 and ground.

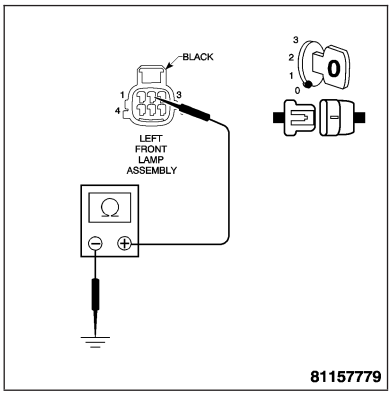

Is the resistance below 5.0 ohms?

Yes >> Ensure that the Left Low Beam Headlamp bulb is installed properly and replace the bulb socket if necessary.
Perform BODY VERIFICATION TEST.

No >> Repair the Left Front Lamp Assembly ground circuit for an open.
Perform BODY VERIFICATION TEST.

*LEFT HIGH BEAM HEADLAMP INOPERATIVE

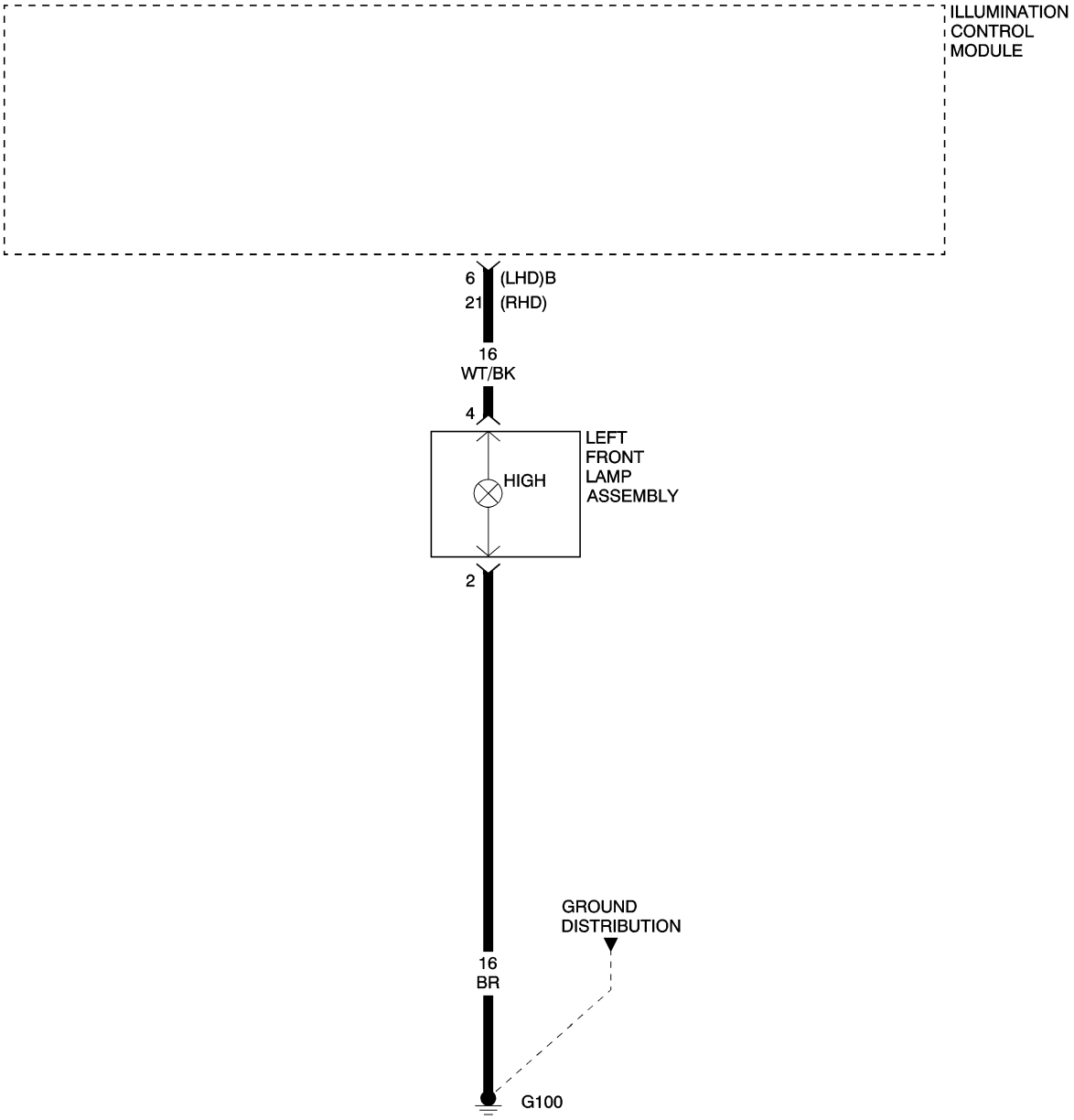

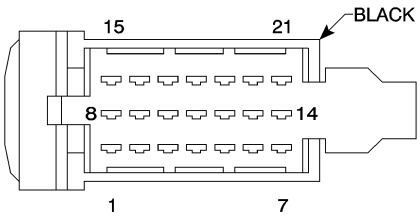

ILLUMINATION
CONTROL
MODULE B

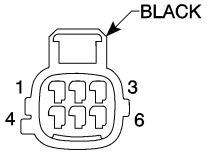

LEFT
FRONT
LAMP
ASSEMBLY

811577fc

*LEFT HIGH BEAM HEADLAMP INOPERATIVE — CONTINUED

POSSIBLE CAUSES
FUSED B(+) CIRCUIT OPEN
GROUND CIRCUIT OPEN
LEFT HIGH BEAM HEADLAMP BULB

For a complete Exterior Lamps Circuit Diagram, **Refer to Page 8L-78**.

Diagnostic Test

1. INSPECT THE LEFT HIGH BEAM HEADLAMP BULB

Note: Inspect Fuse 5 located in the Illumination Control Module/IP Fuse Block. If the fuse is open, repair the cause of the open fuse before continuing.
Turn the ignition off.
Remove the Left High Beam Headlamp bulb and inspect for an open filament.

Is the Bulb filament open?

Yes >> Replace the Left High Beam Headlamp bulb. **Refer to Page 8L-103**.
Perform BODY VERIFICATION TEST.

No >> Go to 2

2. MEASURE FUSED B(+) CIRCUIT RESISTANCE

Disconnect the Left Front Lamp Assembly harness connector.
Disconnect the Illumination Control Module harness connector.

Note: Check connectors - Clean/repair as necessary.
Measure the resistance between the Left Front Lamp Assembly harness connector cavity 4 and the Illumination Control Module harness connector.

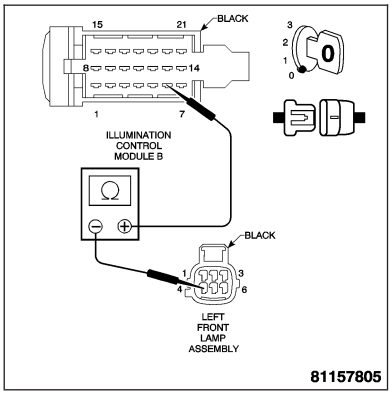

Is the resistance below 5.0 ohms?

Yes >> Go to 3

No >> Repair the Fused B(+) circuit for an open between the Left Front Lamp Assembly and the Illumination Control Module.
Perform BODY VERIFICATION TEST.

*LEFT HIGH BEAM HEADLAMP INOPERATIVE — CONTINUED

3. MEASURE LEFT HIGH BEAM HEADLAMP VOLTAGE

Connect the Illumination Control Module harness connector.

Turn the ignition on.

Turn the high beam headlamps on.

Measure the voltage between the Left Front Lamp Assembly harness connector cavity 4 and ground.

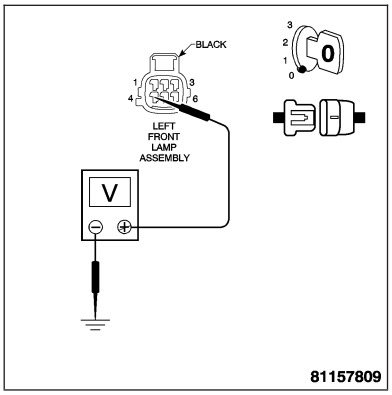

Is the voltage above 10 volts?

Yes >> Go to 4

No >> Replace the Illumination Control Module. **Refer to Page 8L-105**.
Perform BODY VERIFICATION TEST.

4. MEASURE LEFT HIGH BEAM HEADLAMP GROUND CIRCUIT RESISTANCE

Turn the ignition off.

Turn the high beam headlamps off.

Measure the resistance between the Left Front Lamp Assembly harness connector cavity 2 and ground.

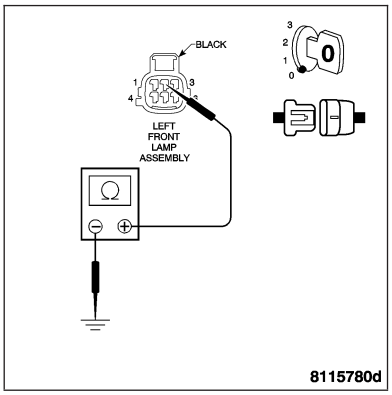

Is the resistance below 5.0 ohms?

Yes >> Ensure that the Left High Beam Headlamp bulb is installed properly and replace the bulb socket if necessary.
Perform BODY VERIFICATION TEST.

No >> Repair the Left Front Lamp Assembly ground circuit for an open.
Perform BODY VERIFICATION TEST.

*RIGHT LOW BEAM HEADLAMP INOPERATIVE

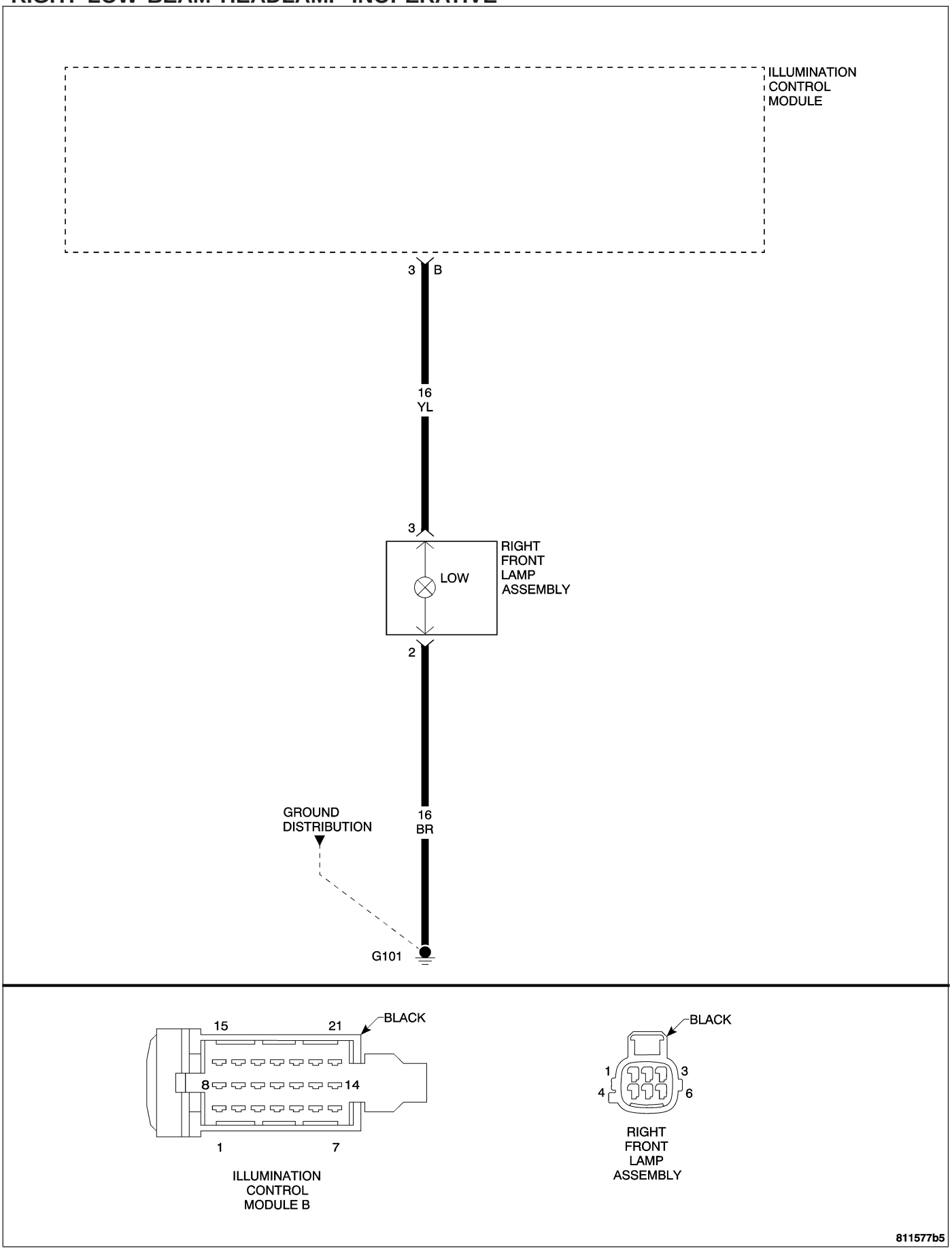

*RIGHT LOW BEAM HEADLAMP INOPERATIVE — CONTINUED

POSSIBLE CAUSES
FUSED B(+) CIRCUIT OPEN
GROUND CIRCUIT OPEN
RIGHT LOW BEAM HEADLAMP BULB

For a complete Exterior Lamps Circuit Diagram, **Refer to Page 8L-78**.

Diagnostic Test

1. INSPECT THE RIGHT LOW BEAM HEADLAMP BULB

Note: Inspect Fuse 6 located in the Illumination Control Module/IP Fuse Block. If the fuse is open, repair the cause of the open fuse before continuing. INSPECT THE RIGHT LOW BEAM HEADLAMP BULB

Turn the ignition off.

Remove the Right Low Beam Headlamp bulb and inspect for an open filament.

Is the Bulb filament open?

Yes >> Replace the Right Low Beam Headlamp bulb. **Refer to Page 8L-103**.
Perform BODY VERIFICATION TEST.

No >> Go to 2

2. MEASURE FUSED B(+) CIRCUIT RESISTANCE

Disconnect the Right Front Lamp Assembly harness connector.

Disconnect the Illumination Control Module harness connector.

Note: Check connectors - Clean/repair as necessary.

Measure the resistance between the Right Front Lamp Assembly harness connector cavity 3 and the Illumination Control Module harness connector.

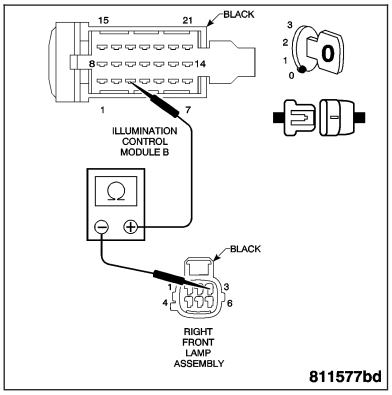

Is the resistance below 5.0 ohms?

Yes >> Go to 3

No >> Repair the Fused B(+) circuit for an open between the Right Front Lamp Assembly and the Illumination Control Module.
Perform BODY VERIFICATION TEST.

*RIGHT LOW BEAM HEADLAMP INOPERATIVE — CONTINUED

3. MEASURE RIGHT LOW BEAM HEADLAMP VOLTAGE

Connect the Illumination Control Module harness connector.

Turn the ignition on.

Turn the low beam headlamps on.

Measure the voltage between the Right Front Lamp Assembly harness connector cavity 3 and ground.

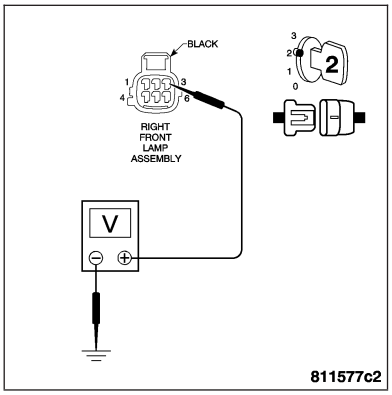

Is the voltage above 10 volts?

Yes >> Go to 4

No >> Replace the Illumination Control Module. **Refer to Page 8L-105**.
Perform BODY VERIFICATION TEST.

4. MEASURE RIGHT LOW BEAM HEADLAMP GROUND CIRCUIT RESISTANCE

Turn the ignition off.

Turn the low beam headlamps off.

Measure the resistance between the Right Front Lamp Assembly harness connector cavity 2 and ground.

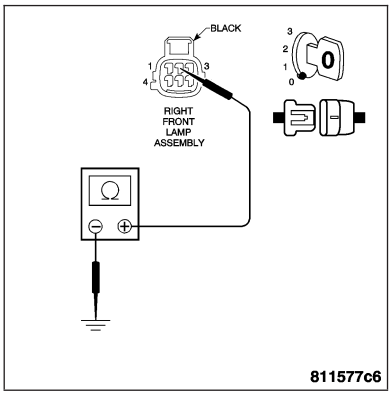

Is the resistance below 5.0 ohms?

Yes >> Ensure that the Right Low Beam Headlamp bulb is installed properly and replace the bulb socket if necessary.
Perform BODY VERIFICATION TEST.

No >> Repair the Right Front Lamp Assembly ground circuit for an open.
Perform BODY VERIFICATION TEST.

*RIGHT HIGH BEAM HEADLAMP INOPERATIVE

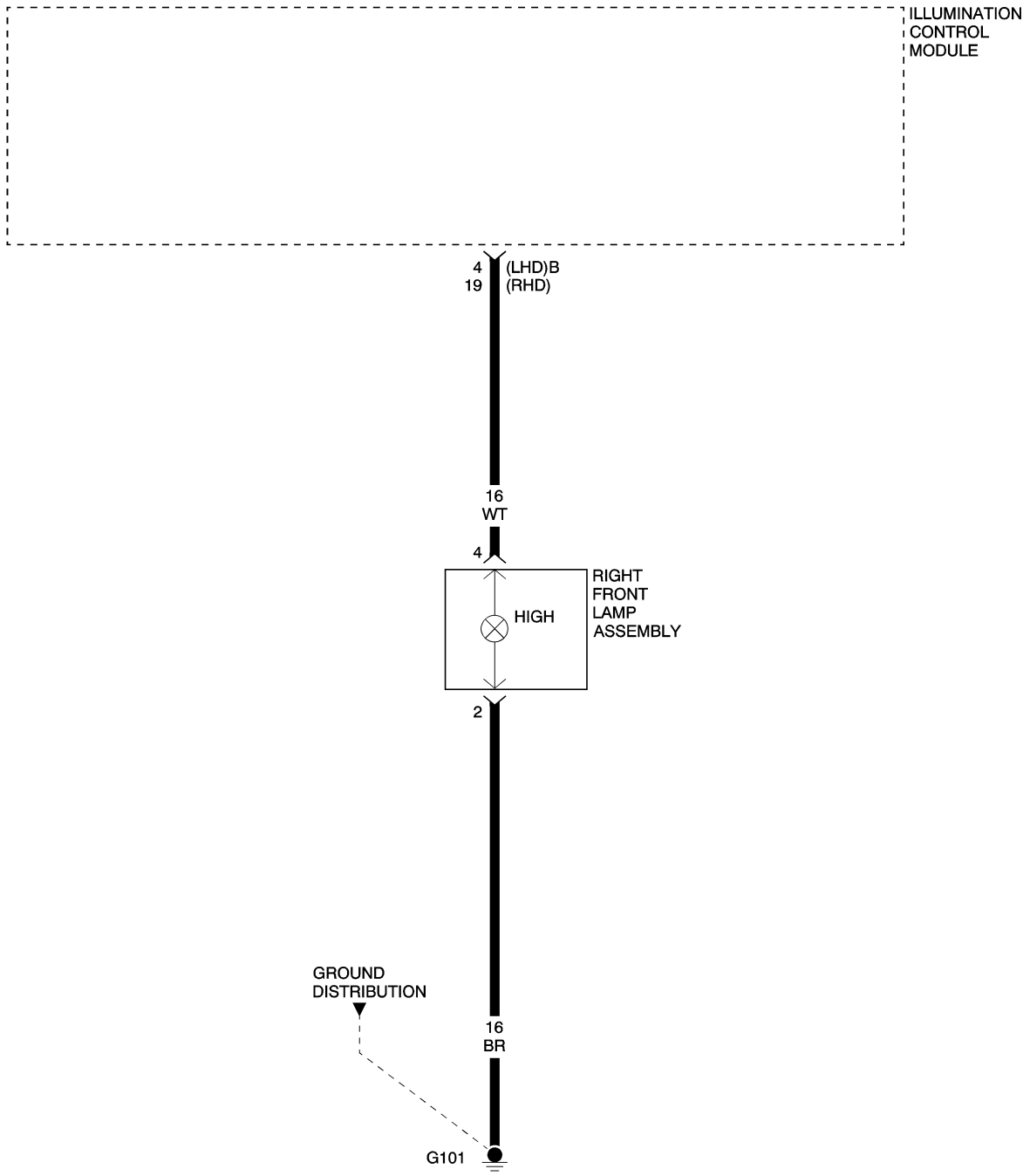

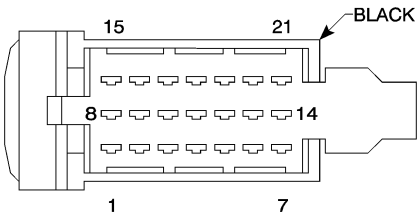

ILLUMINATION
CONTROL
MODULE B

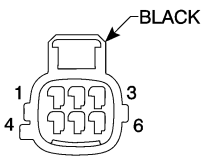

RIGHT
FRONT
LAMP
ASSEMBLY

8115785b

*RIGHT HIGH BEAM HEADLAMP INOPERATIVE — CONTINUED

POSSIBLE CAUSES
FUSED B(+) CIRCUIT OPEN
GROUND CIRCUIT OPEN
RIGHT HIGH BEAM HEADLAMP BULB

For a complete Exterior Lamps Circuit Diagram, **Refer to Page 8L-78**.

Diagnostic Test

1. INSPECT THE RIGHT HIGH BEAM HEADLAMP BULB

Note: If both the right high beam headlamp and the high beam indicator are inoperative, inspect Fuse 3 located in the Illumination Control Module/IP Fuse Block. If the fuse is open, repair the cause of the open fuse before continuing.

Turn the ignition off.

Remove the Right High Beam Headlamp bulb and inspect for an open filament.

Is the Bulb filament open?

Yes >> Replace the Right High Beam Headlamp bulb. **Refer to Page 8L-103**.
Perform BODY VERIFICATION TEST.

No >> Go to 2

2. MEASURE FUSED B(+) CIRCUIT RESISTANCE

Disconnect the Right Front Lamp Assembly harness connector.

Disconnect the Illumination Control Module harness connector.

Note: Check connectors - Clean/repair as necessary.

Measure the resistance between the Right Front Lamp Assembly harness connector cavity 4 and the Illumination Control Module harness connector.

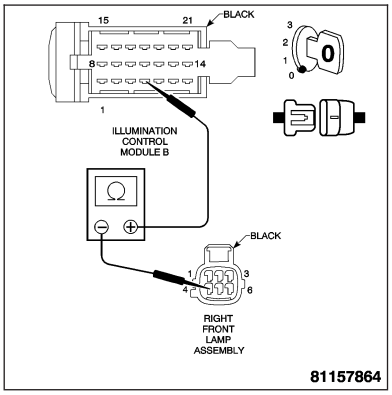

Is the resistance below 5.0 ohms?

Yes >> Go to 3

No >> Repair the Fused B(+) circuit for an open between the Right Front Lamp Assembly and the Illumination Control Module.
Perform BODY VERIFICATION TEST.

*RIGHT HIGH BEAM HEADLAMP INOPERATIVE — CONTINUED

3. MEASURE RIGHT HIGH BEAM HEADLAMP VOLTAGE

Connect the Illumination Control Module harness connector.

Turn the ignition on.

Turn the high beam headlamps on.

Measure the voltage between the Right Front Lamp Assembly harness connector cavity 4 and ground.

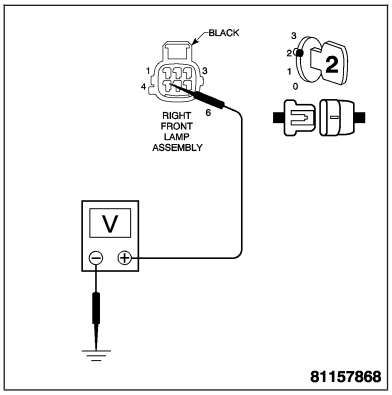

Is the voltage above 10 volts?

Yes >> Go to 4

No >> Replace the Illumination Control Module. **Refer to Page 8L-105**.
Perform BODY VERIFICATION TEST.

4. MEASURE RIGHT HIGH BEAM HEADLAMP GROUND CIRCUIT RESISTANCE

Turn the ignition off.

Turn the high beam headlamps off.

Measure the resistance between the Right Front Lamp Assembly harness connector cavity 2 and ground.

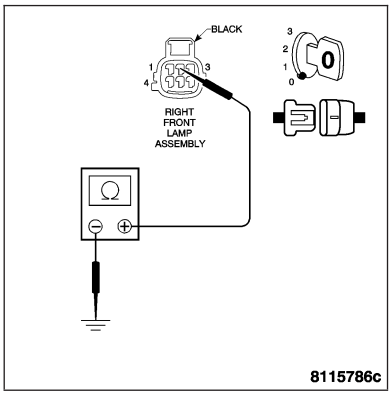

Is the resistance below 5.0 ohms?

Yes >> Ensure that the Right High Beam Headlamp bulb is installed properly and replace the bulb socket if necessary.
Perform BODY VERIFICATION TEST.

No >> Repair the Right Front Lamp Assembly ground circuit for an open.
Perform BODY VERIFICATION TEST.

*LEFT FRONT SIDE MARKER LAMP INOPERATIVE

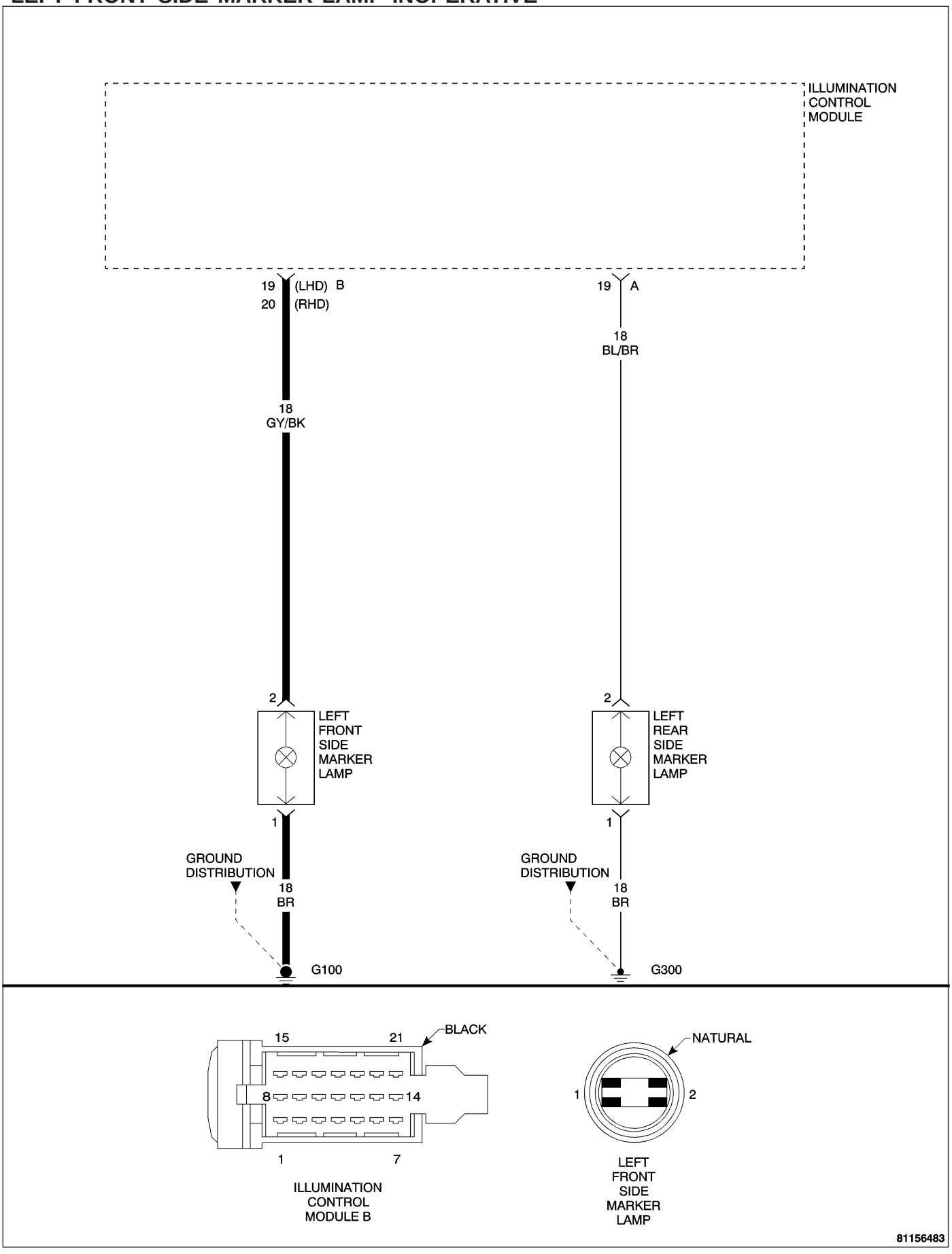

*LEFT FRONT SIDE MARKER LAMP INOPERATIVE — CONTINUED

POSSIBLE CAUSES
FUSED B(+) CIRCUIT OPEN
GROUND CIRCUIT OPEN
LEFT FRONT SIDE MARKER LAMP BULB

For a complete Exterior Lamps Circuit Diagram, **Refer to Page 8L-78**.

Diagnostic Test

1. INSPECT THE LEFT FRONT SIDE MARKER LAMP BULB

Note: If the left front side marker lamp, the left park lamp, the left rear side marker lamp, and the left tail lamp are inoperative, inspect Fuse 10 located in the Illumination Control Module/IP Fuse Block. If the fuse is open, repair the cause of the open fuse before continuing.
Turn the ignition off.
Remove the Left Front Side Marker Lamp bulb and inspect for an open filament.

Is the Bulb filament open?

Yes >> Replace the Left Front Side Marker Lamp bulb. **Refer to Page 8L-98**.
Perform BODY VERIFICATION TEST.

No >> Go to 2

2. MEASURE FUSED B(+) CIRCUIT RESISTANCE

Disconnect the Left Front Side Marker Lamp harness connector.
Disconnect the Illumination Control Module harness connector.

Note: Check connectors - Clean/repair as necessary.
Measure the resistance between the Left Front Side Marker Lamp harness connector and the Illumination Control Module harness connector.

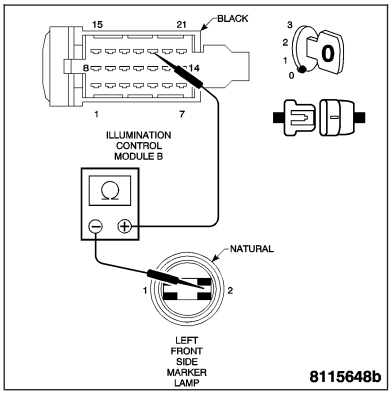

Is the resistance below 5.0 ohms?

Yes >> Go to 3

No >> Repair the Fused B(+) circuit for an open between the Left Front Side Marker Lamp and the Illumination Control Module.
Perform BODY VERIFICATION TEST.

*LEFT FRONT SIDE MARKER LAMP INOPERATIVE — CONTINUED

3. MEASURE LEFT FRONT SIDE MARKER LAMP VOLTAGE

Connect the Illumination Control Module harness connector.

Turn the ignition on.

Turn the side marker lamps on.

Measure the voltage between the Left Front Side Marker Lamp harness connector cavity 2 and ground.

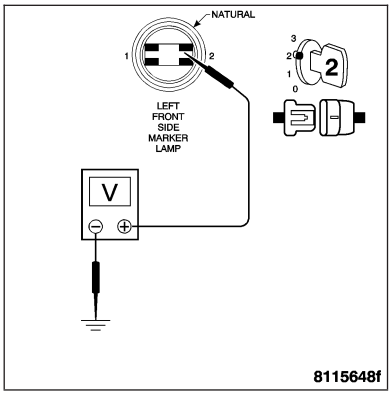

Is the voltage above 10 volts?

Yes >> Go to 4

No >> Replace the Illumination Control Module. **Refer to Page 8L-105**.
Perform BODY VERIFICATION TEST.

4. MEASURE LEFT FRONT SIDE MARKER LAMP GROUND CIRCUIT RESISTANCE

Turn the ignition off.

Turn the side marker lamps off.

Measure the resistance between the Left Front Side Marker Lamp harness connector cavity 1 and ground.

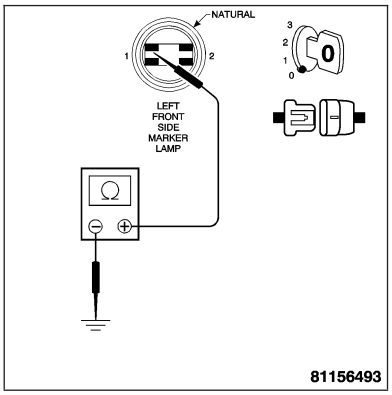

Is the resistance below 5.0 ohms?

Yes >> Ensure that the Left Front Side Marker Lamp bulb is installed properly and replace the bulb socket if necessary.
Perform BODY VERIFICATION TEST.

No >> Repair the Left Front Side Marker Lamp ground circuit for an open.
Perform BODY VERIFICATION TEST.

*RIGHT FRONT SIDE MARKER LAMP INOPERATIVE

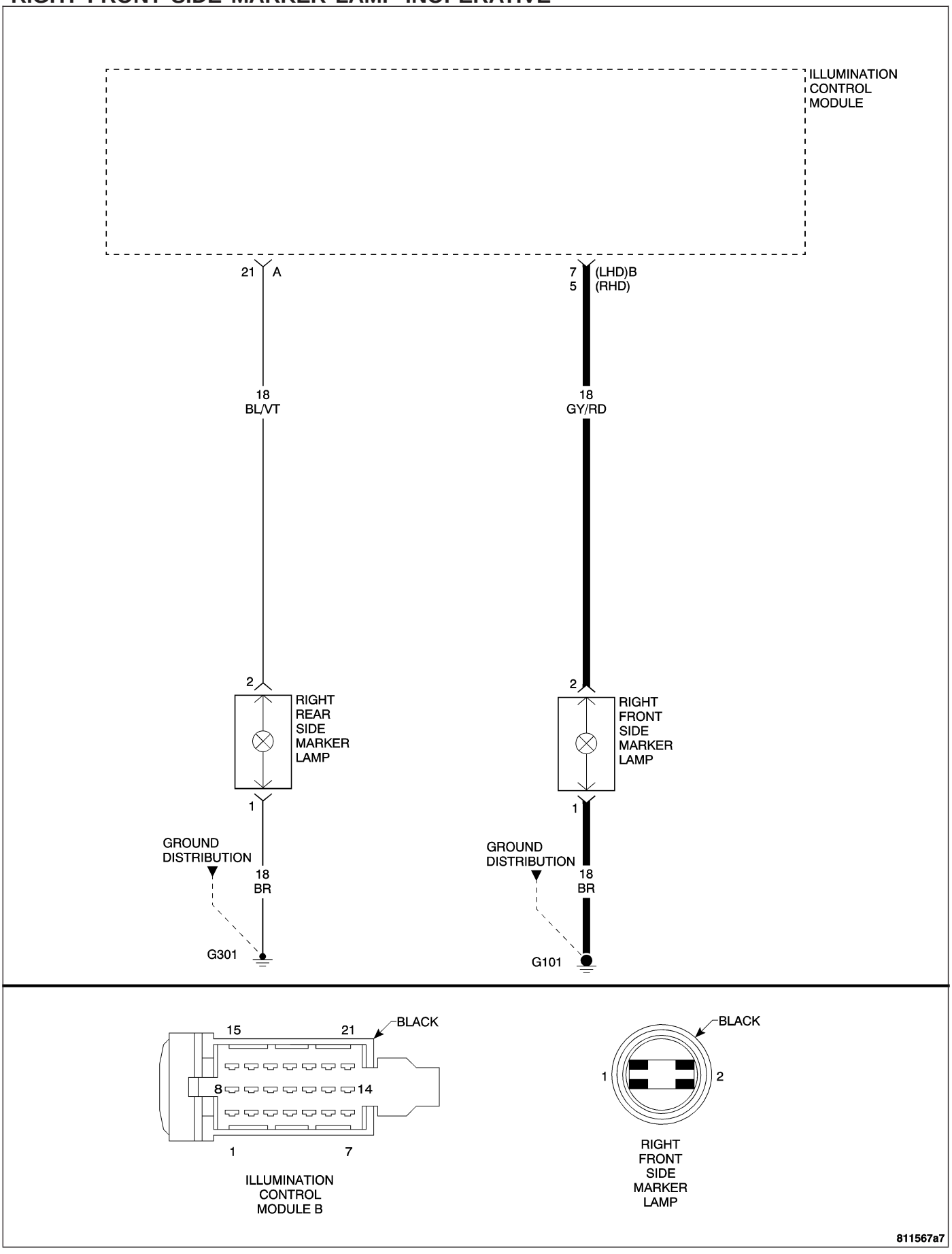

*RIGHT FRONT SIDE MARKER LAMP INOPERATIVE — CONTINUED

POSSIBLE CAUSES
FUSED B(+) CIRCUIT OPEN
GROUND CIRCUIT OPEN
RIGHT FRONT SIDE MARKER LAMP BULB

For a complete Exterior Lamps Circuit Diagram, **Refer to Page 8L-78**.

Diagnostic Test

1. INSPECT THE RIGHT FRONT SIDE MARKER LAMP BULB

Note: If the right front side marker lamp, the right park lamp, the right rear side marker lamp, and the right tail lamp are inoperative, inspect Fuse 7 located in the Illumination Control Module/IP Fuse Block. If the fuse is open, repair the cause of the open fuse before continuing.

Turn the ignition off.

Remove the Right Front Side Marker Lamp bulb and inspect for an open filament.

Is the Bulb filament open?

Yes >> Replace the Right Front Side Marker Lamp bulb. **Refer to Page 8L-98**.
Perform BODY VERIFICATION TEST.

No >> Go to 2

2. MEASURE FUSED B(+) CIRCUIT RESISTANCE

Disconnect the Right Front Side Marker Lamp harness connector.

Disconnect the Illumination Control Module harness connector.

Note: Check connectors - Clean/repair as necessary.

Measure the resistance between the Right Front Side Marker Lamp harness connector and the Illumination Control Module harness connector.

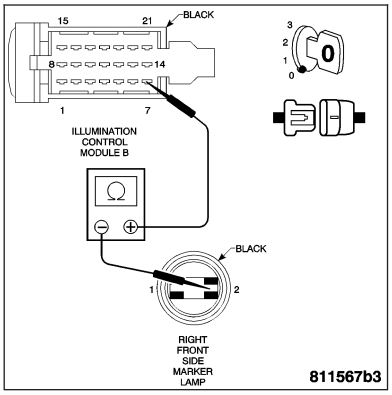

Is the resistance below 5.0 ohms?

Yes >> Go to 3

No >> Repair the Fused B(+) circuit for an open between the Right Front Side Marker Lamp and the Illumination Control Module.
Perform BODY VERIFICATION TEST.

*RIGHT FRONT SIDE MARKER LAMP INOPERATIVE — CONTINUED

3. MEASURE RIGHT FRONT SIDE MARKER LAMP VOLTAGE

Connect the Illumination Control Module harness connector.

Turn the ignition on.

Turn the side marker lamps on.

Measure the voltage between the Right Front Side Marker Lamp harness connector cavity 2 and ground.

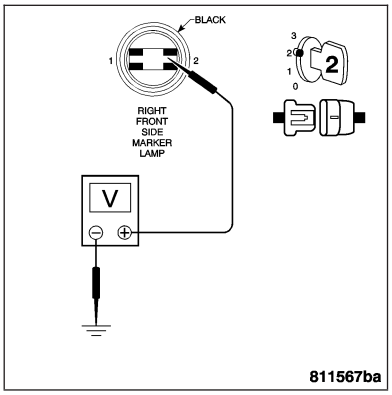

Is the voltage above 10 volts?

Yes >> Go to 4

No >> Replace the Illumination Control Module. **Refer to Page 8L-105**.
Perform BODY VERIFICATION TEST.

4. MEASURE RIGHT FRONT SIDE MARKER LAMP GROUND CIRCUIT RESISTANCE

Turn the ignition off.

Turn the side marker lamps off.

Measure the resistance between the Right Front Side Marker Lamp harness connector cavity 1 and ground.

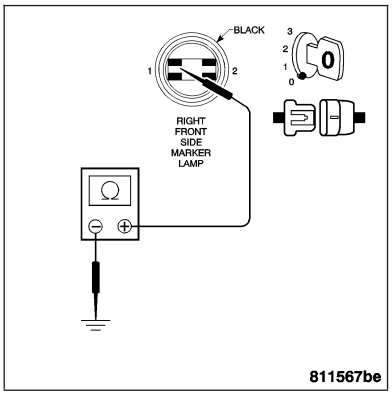

Is the resistance below 5.0 ohms?

Yes >> Ensure that the Right Front Side Marker Lamp bulb is installed properly and replace the bulb socket if necessary.
Perform BODY VERIFICATION TEST.

No >> Repair the Right Front Side Marker Lamp ground circuit for an open.
Perform BODY VERIFICATION TEST.

*LEFT REAR SIDE MARKER LAMP INOPERATIVE

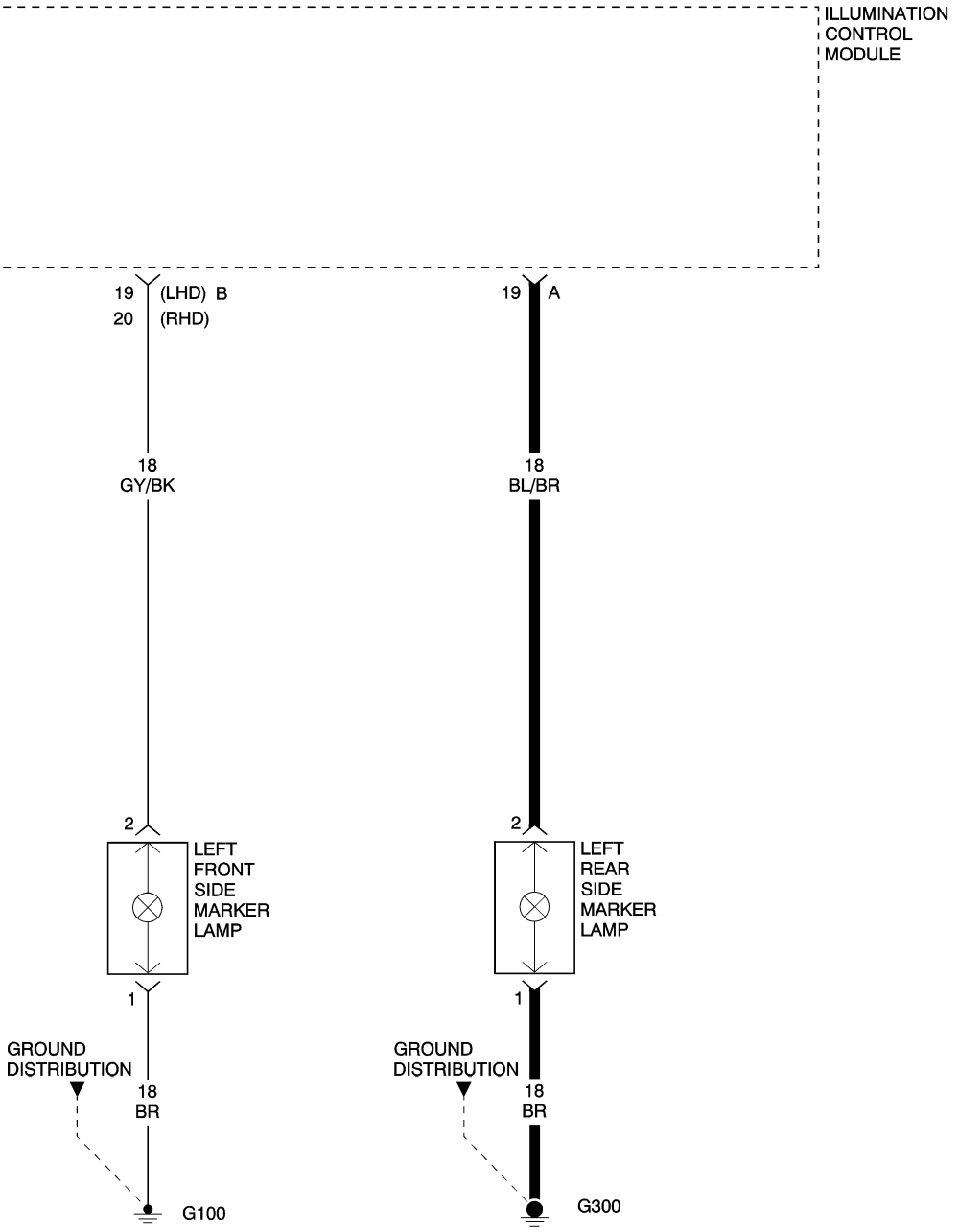

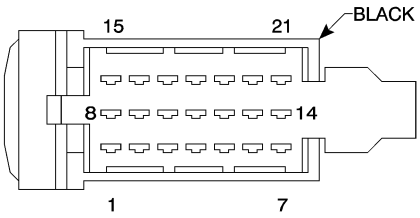

ILLUMINATION CONTROL MODULE A

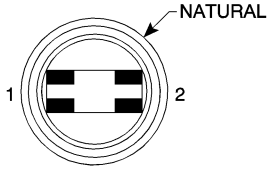

LEFT REAR SIDE MARKER LAMP

81156726

*LEFT REAR SIDE MARKER LAMP INOPERATIVE — CONTINUED

POSSIBLE CAUSES
FUSED B(+) CIRCUIT OPEN
GROUND CIRCUIT OPEN
LEFT REAR SIDE MARKER LAMP BULB

For a complete Exterior Lamps Circuit Diagram, **Refer to Page 8L-78**.

Diagnostic Test

1. INSPECT THE LEFT REAR SIDE MARKER LAMP BULB

Note: If the left front side marker lamp, the left park lamp, the left rear side marker lamp, and the left tail lamp are inoperative, inspect Fuse 10 located in the Illumination Control Module/IP Fuse Block. If the fuse is open, repair the cause of the open fuse before continuing.
Turn the ignition off.
Remove the Left Rear Side Marker Lamp bulb and inspect for an open filament.

Is the Bulb filament open?

Yes >> Replace the Left Rear Side Marker Lamp bulb. **Refer to Page 8L-98**.
Perform BODY VERIFICATION TEST.

No >> Go to 2

2. MEASURE FUSED B(+) CIRCUIT RESISTANCE

Disconnect the Left Rear Side Marker Lamp harness connector.
Disconnect the Illumination Control Module harness connector.

Note: Check connectors - Clean/repair as necessary.
Measure the resistance between the Left Rear Side Marker Lamp harness connector and the Illumination Control Module harness connector.

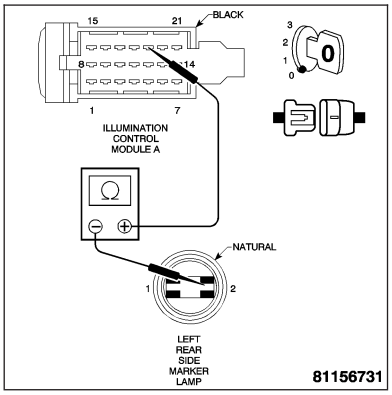

Is the resistance below 5.0 ohms?

Yes >> Go to 3

No >> Repair the Fused B(+) circuit for an open between the Left Rear Side Marker Lamp and the Illumination Control Module.
Perform BODY VERIFICATION TEST.

*LEFT REAR SIDE MARKER LAMP INOPERATIVE — CONTINUED

3. MEASURE LEFT REAR SIDE MARKER LAMP VOLTAGE

Connect the Illumination Control Module harness connector.

Turn the ignition on.

Turn the side marker lamps on.

Measure the voltage between the Left Rear Side Marker Lamp harness connector cavity 2 and ground.

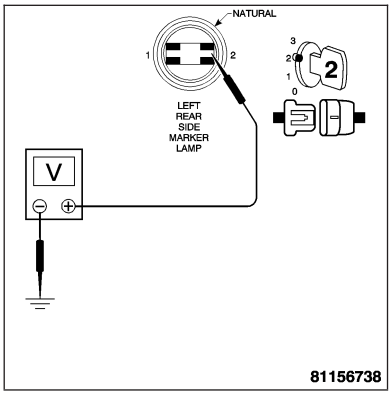

Is the voltage above 10 volts?

Yes >> Go to 4

No >> Replace the Illumination Control Module. **Refer to Page 8L-105**.
Perform BODY VERIFICATION TEST.

4. MEASURE LEFT REAR SIDE MARKER LAMP GROUND CIRCUIT RESISTANCE

Turn the ignition off.

Turn the side marker lamps off.

Measure the resistance between the Left Rear Side Marker Lamp harness connector cavity 1 and ground.

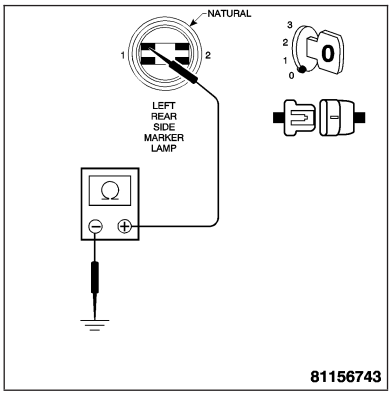

Is the resistance below 5.0 ohms?

Yes >> Ensure that the Left Rear Side Marker Lamp bulb is installed properly and replace the bulb socket if necessary.
Perform BODY VERIFICATION TEST.

No >> Repair the Left Rear Side Marker Lamp ground circuit for an open.
Perform BODY VERIFICATION TEST.

*RIGHT REAR SIDE MARKER LAMP INOPERATIVE

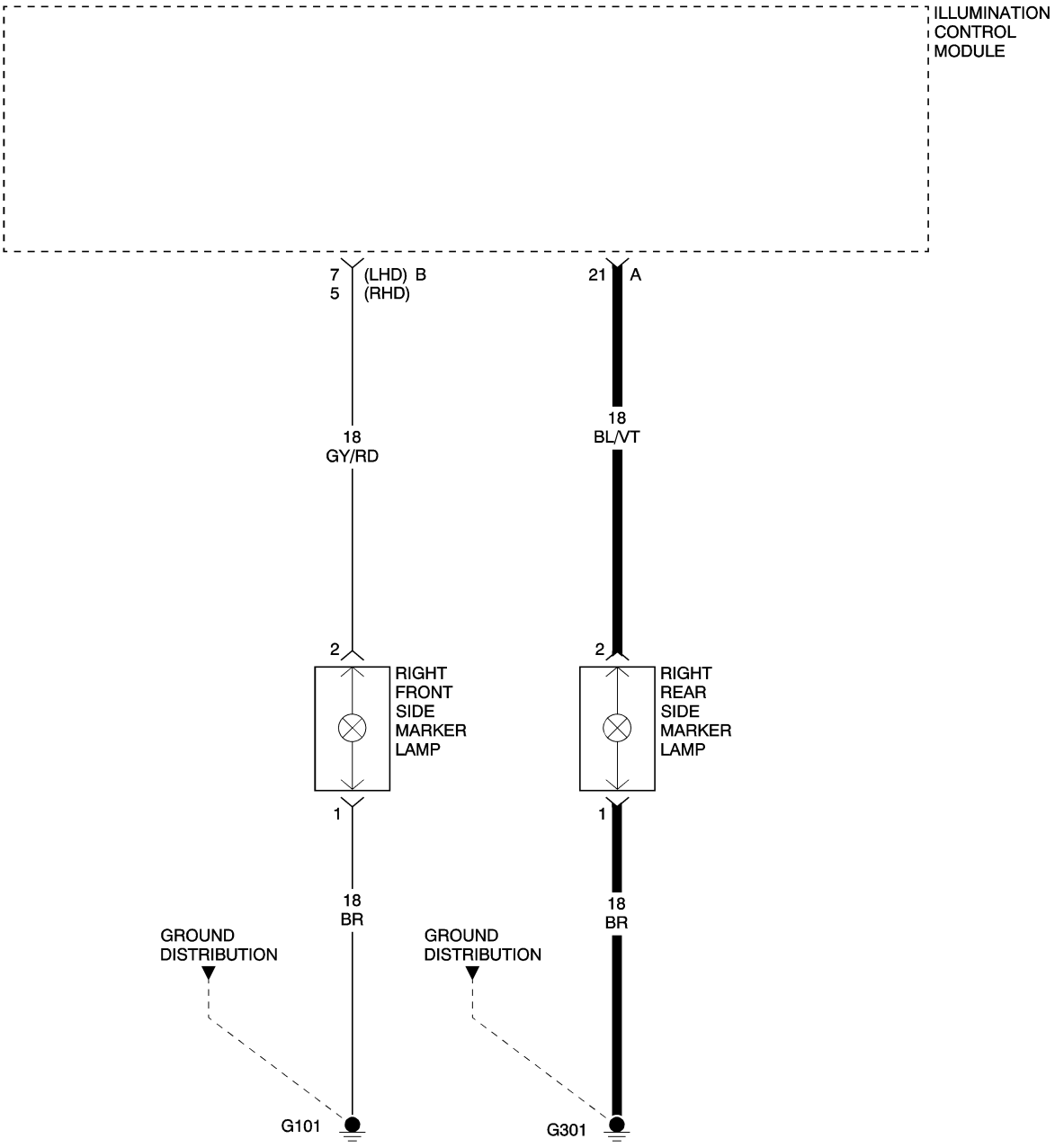

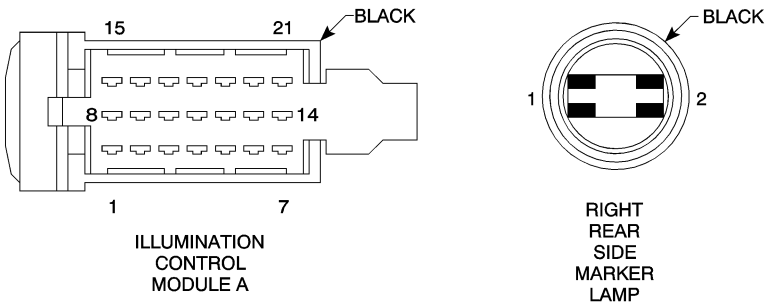

81156d23

*RIGHT REAR SIDE MARKER LAMP INOPERATIVE — CONTINUED

POSSIBLE CAUSES
FUSED B(+) CIRCUIT OPEN
GROUND CIRCUIT OPEN
RIGHT REAR SIDE MARKER LAMP BULB

For a complete Exterior Lamps Circuit Diagram, **Refer to Page 8L-78**.

Diagnostic Test

1. INSPECT THE RIGHT REAR SIDE MARKER LAMP BULB

Note: If the right front side marker lamp, the right park lamp, the right rear side marker lamp, and the right tail lamp are inoperative, inspect Fuse 7 located in the Illumination Control Module/IP Fuse Block. If the fuse is open, repair the cause of the open fuse before continuing.

Turn the ignition off.

Remove the Right Rear Side Marker Lamp bulb and inspect for an open filament.

Is the Bulb filament open?

Yes >> Replace the Right Rear Side Marker Lamp bulb. **Refer to Page 8L-98**.
Perform BODY VERIFICATION TEST.

No >> Go to 2

2. MEASURE FUSED B(+) CIRCUIT RESISTANCE

Disconnect the Right Rear Side Marker Lamp harness connector.

Disconnect the Illumination Control Module harness connector.

Note: Check connectors - Clean/repair as necessary.

Measure the resistance between the Right Rear Side Marker Lamp harness connector and the Illumination Control Module harness connector.

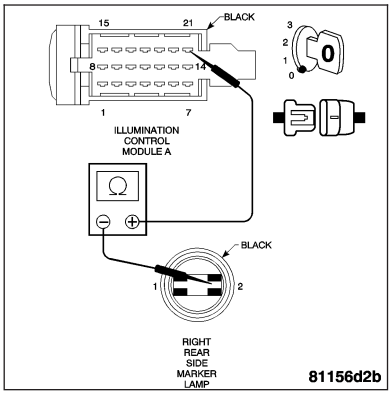

Is the resistance below 5.0 ohms?

Yes >> Go to 3

No >> Repair the Fused B(+) circuit for an open between the Right Rear Side Marker Lamp and the Illumination Control Module.
Perform BODY VERIFICATION TEST.

*RIGHT REAR SIDE MARKER LAMP INOPERATIVE — CONTINUED

3. MEASURE RIGHT REAR SIDE MARKER LAMP VOLTAGE

Connect the Illumination Control Module harness connector.

Turn the ignition on.

Turn the side marker lamps on.

Measure the voltage between the Right Rear Side Marker Lamp harness connector cavity 2 and ground.

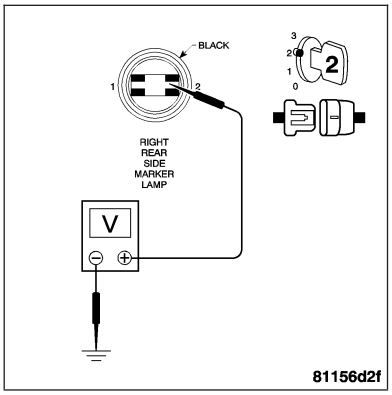

Is the voltage above 10 volts?

Yes >> Go to 4

No >> Replace the Illumination Control Module. **Refer to Page 8L-105**.
Perform BODY VERIFICATION TEST.

4. MEASURE RIGHT REAR SIDE MARKER LAMP GROUND CIRCUIT RESISTANCE

Turn the ignition off.

Turn the side marker lamps off.

Measure the resistance between the Right Rear Side Marker Lamp harness connector cavity 1 and ground.

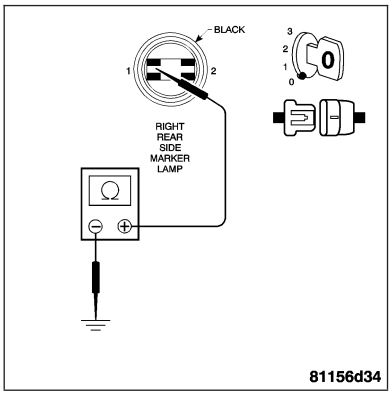

Is the resistance below 5.0 ohms?

Yes >> Ensure that the Right Rear Side Marker Lamp bulb is installed properly and replace the bulb socket if necessary.
Perform BODY VERIFICATION TEST.

No >> Repair the Right Rear Side Marker Lamp ground circuit for an open.
Perform BODY VERIFICATION TEST.

*LEFT TAIL LAMP INOPERATIVE

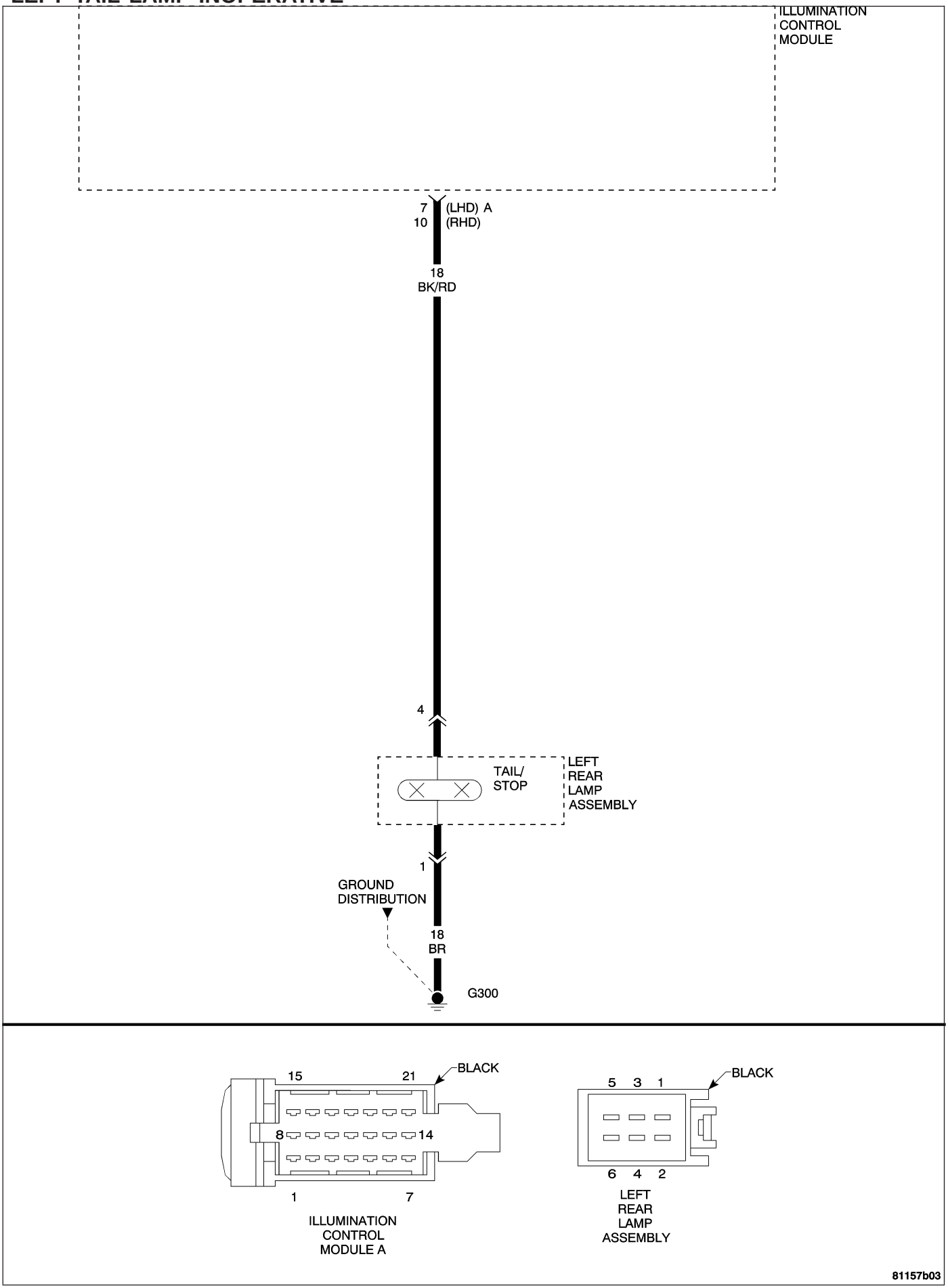

*LEFT TAIL LAMP INOPERATIVE — CONTINUED

POSSIBLE CAUSES
FUSED B(+) CIRCUIT OPEN
GROUND CIRCUIT OPEN
LEFT TAIL/STOP LAMP BULB

For a complete Exterior Lamps Circuit Diagram, **Refer to Page 8L-78**.

Diagnostic Test

1. INSPECT THE LEFT TAIL/STOP LAMP BULB

Note: If the left front side marker lamp, the left park lamp, the left rear side marker lamp, and the left tail lamp are inoperative, inspect Fuse 10 located in the Illumination Control Module/IP Fuse Block. If the fuse is open, repair the cause of the open fuse before continuing.
Turn the ignition off.
Remove the Left Tail/Stop Lamp bulb and inspect for an open filament.

Is the Bulb filament open?

Yes >> Replace the Left Tail/Stop Lamp bulb. **Refer to Page 8L-113**.
Perform BODY VERIFICATION TEST.

No >> Go to 2

2. MEASURE FUSED B(+) CIRCUIT RESISTANCE

Disconnect the Left Rear Lamp Assembly harness connector.
Disconnect the Illumination Control Module harness connector.

Note: Check connectors - Clean/repair as necessary.
Measure the resistance between the Left Rear Lamp Assembly harness connector and the Illumination Control Module harness connector.

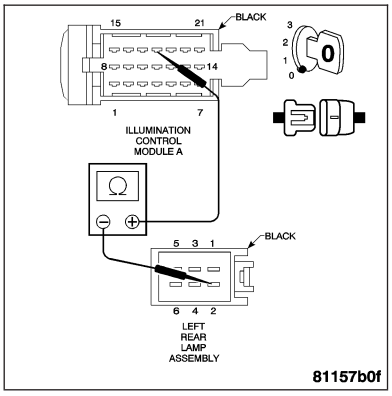

Is the resistance below 5.0 ohms?

Yes >> Go to 3

No >> Repair the Fused B(+) circuit for an open between the Left Rear Lamp Assembly and the Illumination Control Module.
Perform BODY VERIFICATION TEST.

*LEFT TAIL LAMP INOPERATIVE — CONTINUED

3. MEASURE LEFT TAIL/STOP LAMP VOLTAGE

Connect the Illumination Control Module harness connector.

Turn the tail lamps on.

Measure the voltage between the Left Rear Lamp Assembly harness connector cavity 2 and ground.

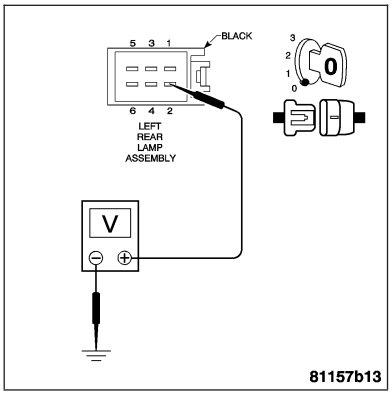

Is the voltage above 10 volts?

Yes >> Go to 4

No >> Replace the Illumination Control Module.
Perform BODY VERIFICATION TEST.

4. MEASURE LEFT TAIL/STOP LAMP GROUND CIRCUIT RESISTANCE

Turn the tail lamps off.

Measure the resistance between the Left Rear Lamp Assembly harness connector and ground.

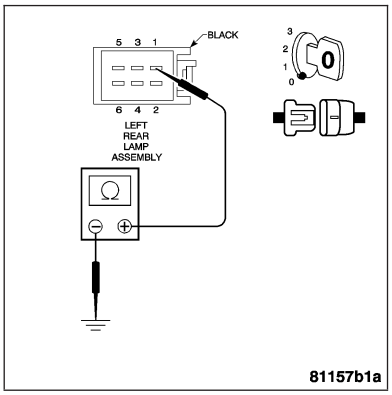

Is the resistance below 5.0 ohms?

Yes >> Ensure that the Left Tail/Stop Lamp bulb is installed properly and replace the bulb socket if necessary.
Perform BODY VERIFICATION TEST.

No >> Repair the Left Rear Lamp Assembly ground circuit for an open.
Perform BODY VERIFICATION TEST.

*LEFT STOP LAMP INOPERATIVE

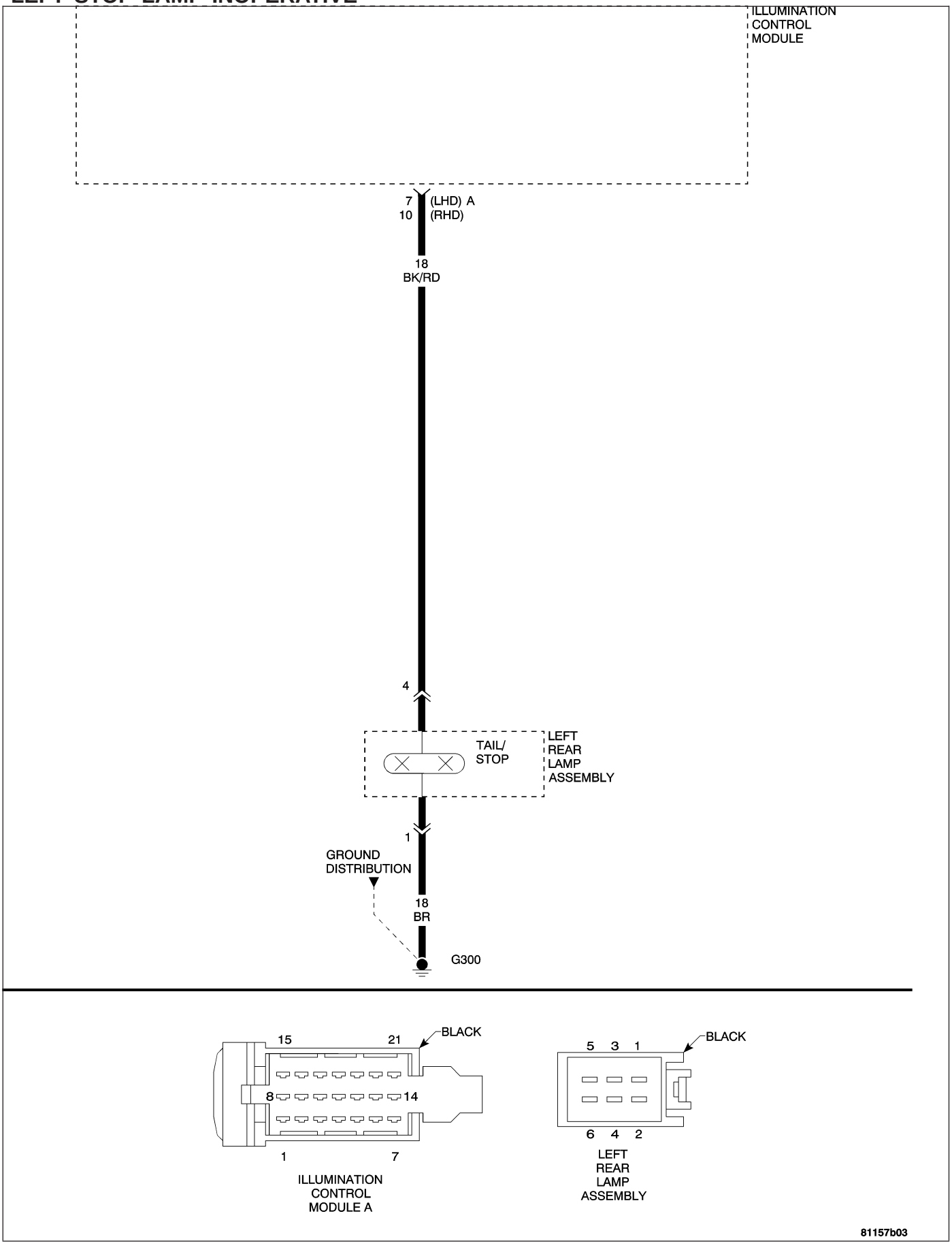

*LEFT STOP LAMP INOPERATIVE — CONTINUED

POSSIBLE CAUSES
FUSED B(+) CIRCUIT OPEN
GROUND CIRCUIT OPEN
LEFT TAIL/STOP LAMP BULB

For a complete Exterior Lamps Circuit Diagram, **Refer to Page 8L-78**.

Diagnostic Test

1. INSPECT THE LEFT TAIL/STOP LAMP BULB

Note: If all stop lamps are inoperative, inspect Fuse 2 located in the Illumination Control Module/IP Fuse Block. If the fuse is open, repair the cause of the open fuse before continuing.
Turn the ignition off.
Remove the Left Tail/Stop Lamp bulb and inspect for an open filament.

Is the Bulb filament open?

Yes >> Replace the Left Tail/Stop Lamp bulb. **Refer to Page 8L-113**.
Perform BODY VERIFICATION TEST.

No >> Go to 2

2. MEASURE FUSED B(+) CIRCUIT RESISTANCE

Disconnect the Left Rear Lamp Assembly harness connector.
Disconnect the Illumination Control Module harness connector.

Note: Check connectors - Clean/repair as necessary.
Measure the resistance between the Left Rear Lamp Assembly harness connector and the Illumination Control Module harness connector.

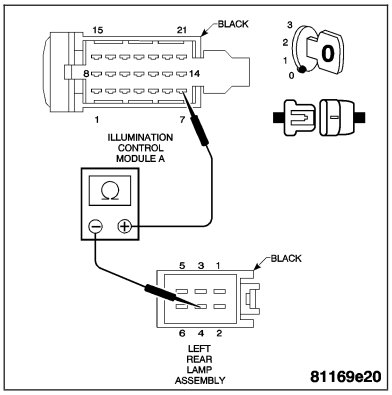

Is the resistance below 5.0 ohms?

Yes >> Go to 3

No >> Repair the Fused B(+) circuit for an open between the Left Rear Lamp Assembly and the Illumination Control Module.
Perform BODY VERIFICATION TEST.

*LEFT STOP LAMP INOPERATIVE — CONTINUED

3. MEASURE LEFT TAIL/STOP LAMP VOLTAGE

Connect the Illumination Control Module harness connector.

Depress the brake pedal.

Measure the voltage between the Left Rear Lamp Assembly harness connector cavity 4 and ground.

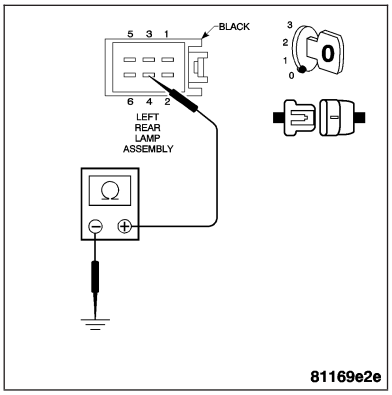

Is the voltage above 10 volts?

Yes >> Go to 4

No >> Replace the Illumination Control Module.
Perform BODY VERIFICATION TEST.

4. MEASURE LEFT TAIL/STOP LAMP GROUND CIRCUIT RESISTANCE

Release the brake pedal.

Measure the resistance between the Left Rear Lamp Assembly harness connector and ground.

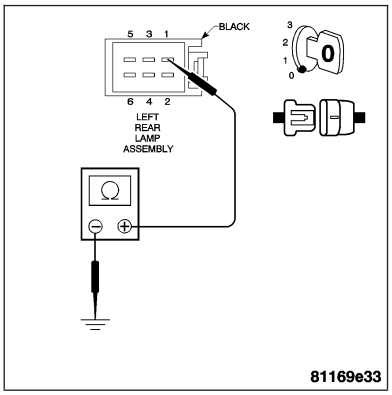

Is the resistance below 5.0 ohms?

Yes >> Ensure that the Left Tail/Stop Lamp bulb is installed properly and replace the bulb socket if necessary.
Perform BODY VERIFICATION TEST.

No >> Repair the Left Rear Lamp Assembly ground circuit fro an open.
Perform BODY VERIFICATION TEST.

*LEFT BACK UP LAMP INOPERATIVE

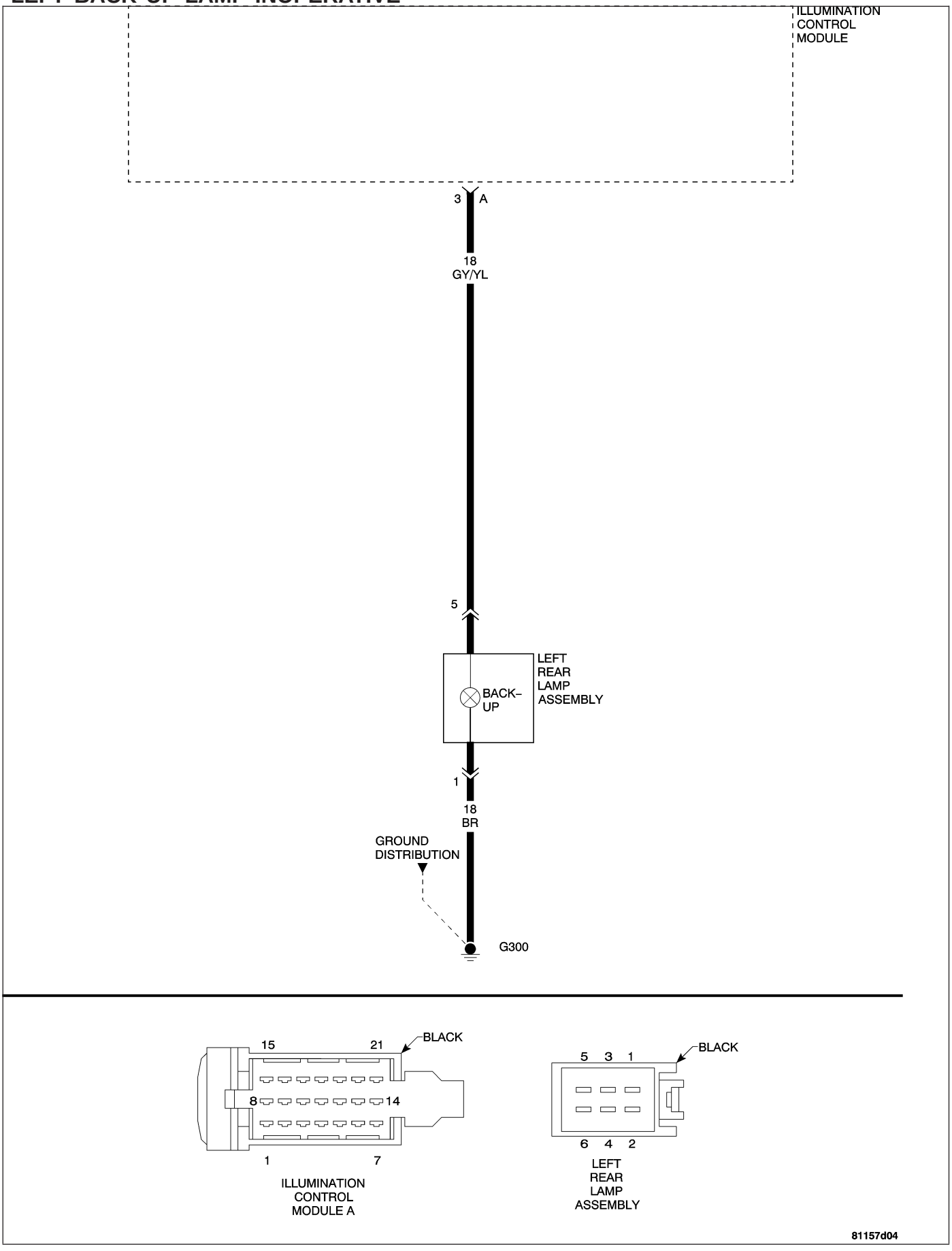

*LEFT BACK UP LAMP INOPERATIVE — CONTINUED

POSSIBLE CAUSES
FUSED B(+) CIRCUIT OPEN
GROUND CIRCUIT OPEN
LEFT BACK UP LAMP BULB

For a complete Exterior Lamps Circuit Diagram, **Refer to Page 8L-78**.

Diagnostic Test

1. INSPECT THE LEFT BACK UP LAMP BULB

Note: If all of the turn signal lamps and both of the back up lamps are inoperative, inspect Fuse 4 located in the Illumination Control Module/IP Fuse Block. If the fuse is open, repair the cause of the open fuse before continuing.

Turn the ignition off.

Remove the Left Back Up Lamp bulb and inspect for an open filament.

Is the Bulb filament open?

Yes >> Replace the Left Back Up Lamp bulb. **Refer to Page 8L-88**.
Perform BODY VERIFICATION TEST.

No >> Go to 2

2. MEASURE FUSED B(+) CIRCUIT RESISTANCE

Disconnect the Left Rear Lamp Assembly harness connector.

Disconnect the Illumination Control Module harness connector.

Note: Check connectors - Clean/repair as necessary.

Measure the resistance between the Left Rear Lamp Assembly harness connector and the Illumination Control Module harness connector.

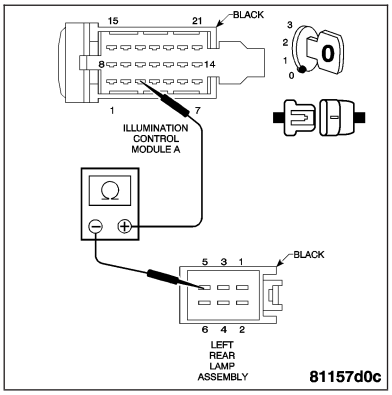

Is the resistance below 5.0 ohms?

Yes >> Go to 3

No >> Repair the Fused B(+) circuit for an open between the Left Rear Lamp Assembly and the Illumination Control Module.
Perform BODY VERIFICATION TEST.

*LEFT BACK UP LAMP INOPERATIVE — CONTINUED

3. MEASURE LEFT BACK UP LAMP VOLTAGE

Connect the Illumination Control Module harness connector.

Turn the ignition on.

Move the transmission shift lever into reverse.

Measure the voltage between the Left Rear Lamp Assembly harness connector cavity 5 and ground.

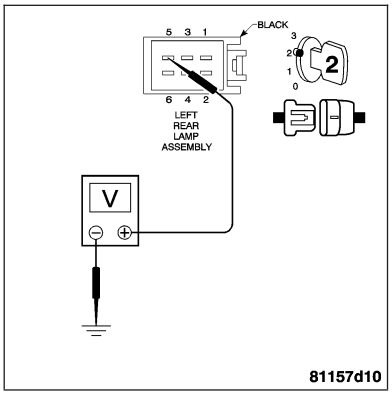

Is voltage present?

Yes >> Go to 4

No >> Replace the Illumination Control Module.
Perform BODY VERIFICATION TEST.

4. MEASURE LEFT BACK UP LAMP GROUND CIRCUIT RESISTANCE

Move the transmission shift lever into park.

Turn the ignition off.

Measure the resistance between the Left Rear Lamp Assembly harness connector and ground.

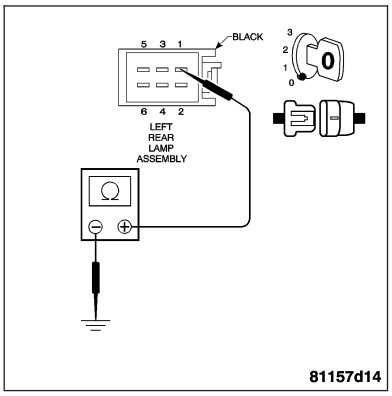

Is the resistance below 5.0 ohms?

Yes >> Ensure that the Left Back Up Lamp bulb is installed properly and replace the bulb socket if necessary.
Perform BODY VERIFICATION TEST.

No >> Repair the Left Rear Lamp Assembly ground circuit for an open.
Perform BODY VERIFICATION TEST.

*LEFT REAR TURN LAMP INOPERATIVE

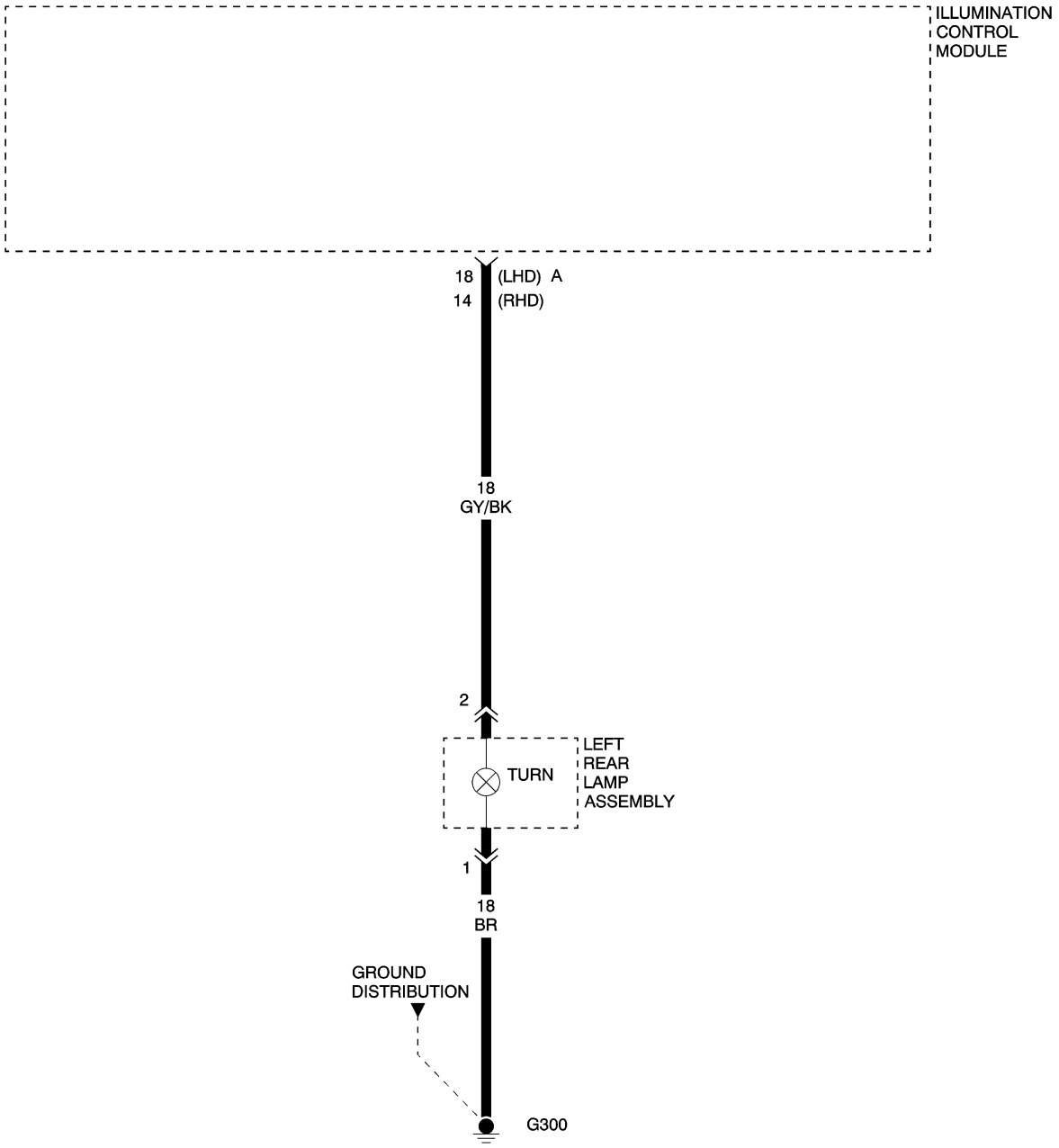

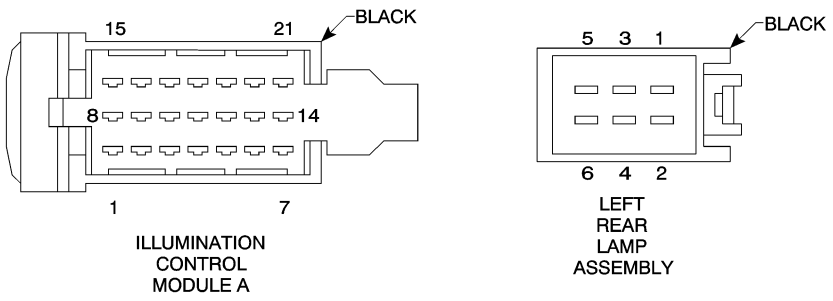

81157f22

*LEFT REAR TURN LAMP INOPERATIVE — CONTINUED

POSSIBLE CAUSES
FUSED B(+) CIRCUIT OPEN
GROUND CIRCUIT OPEN
LEFT REAR TURN LAMP BULB

For a complete Exterior Lamps Circuit Diagram, **Refer to Page 8L-78**.

Diagnostic Test

1. INSPECT THE LEFT REAR TURN LAMP BULB

Note: If all of the turn signal lamps and both of the back up lamps are inoperative, inspect Fuse 4 located in the Illumination Control Module/IP Fuse Block. If the fuse is open, repair the cause of the open fuse before continuing.
Turn the ignition off.
Remove the Left Rear Turn Lamp bulb and inspect for an open filament.

Is the Bulb filament open?

Yes >> Replace the Left Rear Turn Lamp bulb. **Refer to Page 8L-113**.
Perform BODY VERIFICATION TEST.

No >> Go to 2

2. MEASURE FUSED B(+) CIRCUIT RESISTANCE

Disconnect the Left Rear Lamp Assembly harness connector.
Disconnect the Multi-Function Switch harness connector.

Note: Check connectors - Clean/repair as necessary.
Measure the resistance between the Left Rear Lamp Assembly harness connector and the Multi-Function Switch harness connector.

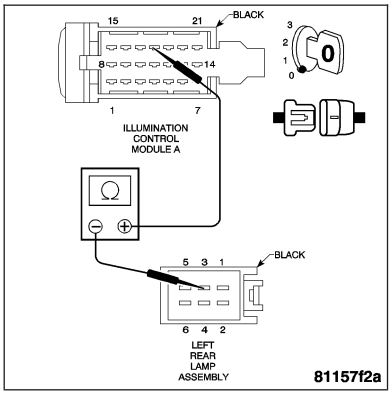

Is the resistance below 5.0 ohms?

Yes >> Go to 3

No >> Repair the Fused B(+) circuit for an open between the Left Rear Turn Lamp and the Multi-Function Switch.
Perform BODY VERIFICATION TEST.

*LEFT REAR TURN LAMP INOPERATIVE — CONTINUED

3. MEASURE LEFT REAR TURN LAMP VOLTAGE

Connect the Multi-Function Switch harness connector.

Turn the ignition on.

Turn the left turn signal on.

Measure the voltage between the Left Rear Lamp Assembly harness connector cavity 3 and ground.

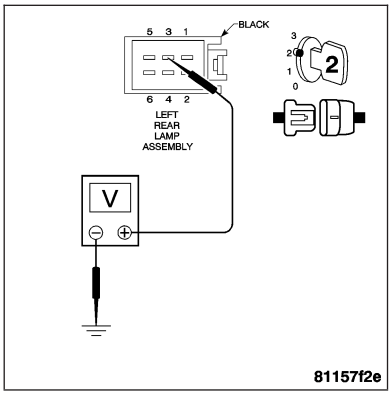

Is voltage present?

Yes >> Go to 4

No >> Replace the Multi-Function Switch. **Refer to Page 8L-112**.
Perform BODY VERIFICATION TEST.

4. MEASURE LEFT REAR TURN LAMP GROUND CIRCUIT RESISTANCE

Turn the ignition off.

Turn the left turn signal off.

Measure the resistance between the Left Rear Lamp Assembly harness connector cavity 1 and ground.

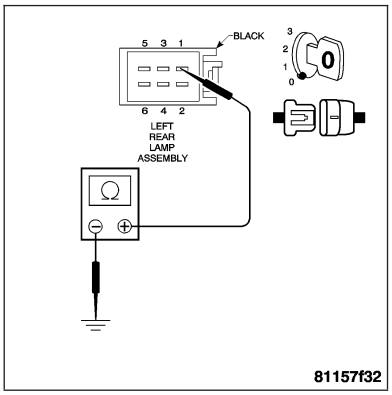

Is the resistance below 5.0 ohms?

Yes >> Ensure that the Left Rear Turn Lamp bulb is installed properly and replace the bulb socket if necessary.
Perform BODY VERIFICATION TEST.

No >> Repair the Left Rear Lamp Assembly ground circuit for an open.
Perform BODY VERIFICATION TEST.

*RIGHT TAIL LAMP INOPERATIVE

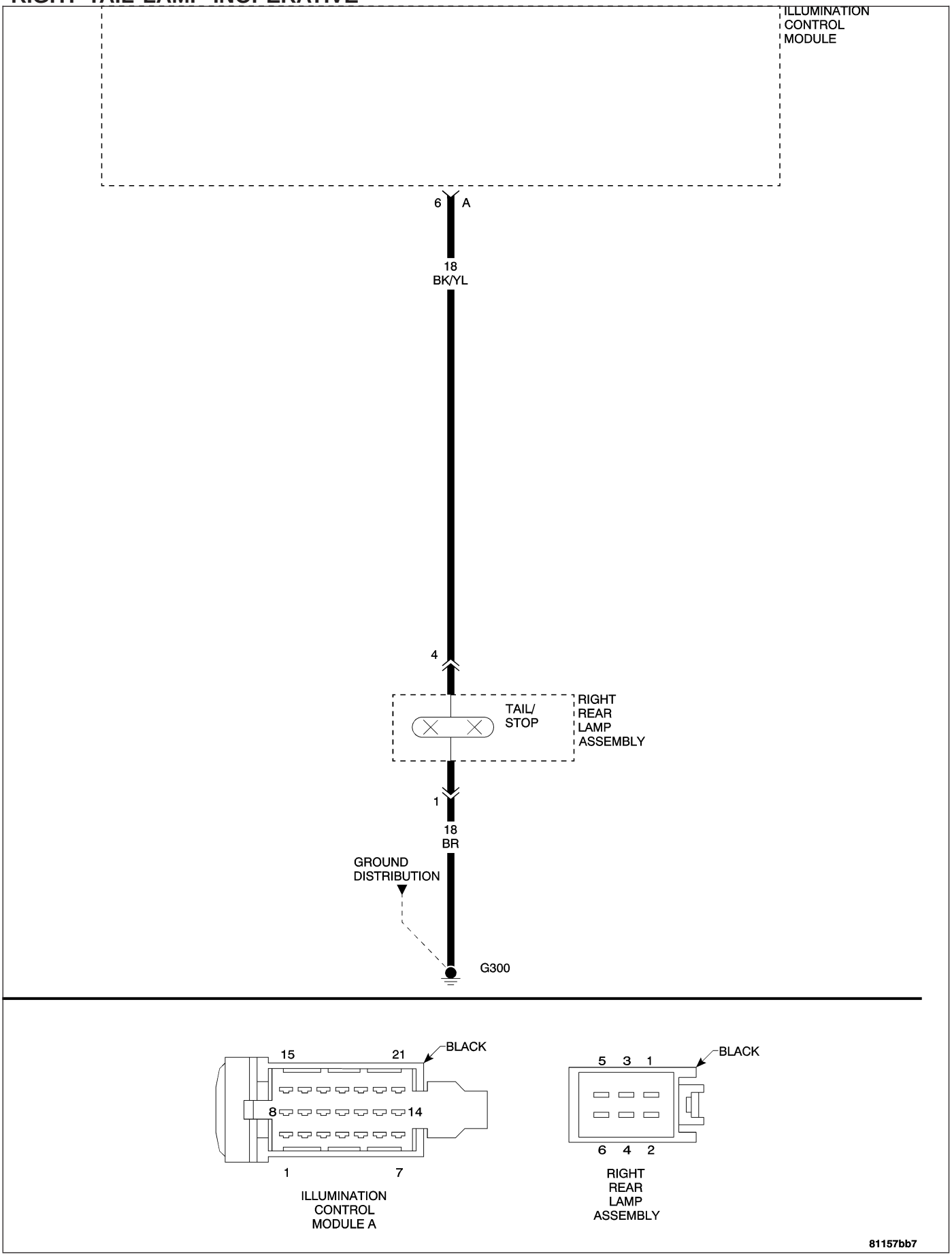

*RIGHT TAIL LAMP INOPERATIVE — CONTINUED

POSSIBLE CAUSES
FUSED B(+) CIRCUIT OPEN
GROUND CIRCUIT OPEN
RIGHT TAIL/STOP LAMP BULB

For a complete Exterior Lamps Circuit Diagram, **Refer to Page 8L-78**.

Diagnostic Test

1. INSPECT THE RIGHT TAIL/STOP LAMP BULB

Note: If the right front side marker lamp, the right park lamp, the right rear side marker lamp, and the right tail lamp are inoperative, inspect Fuse 7 located in the Illumination Control Module/IP Fuse Block. If the fuse is open, repair the cause of the open fuse before continuing.

Turn the ignition off.

Remove the Right Tail/Stop Lamp bulb and inspect for an open filament.

Is the Bulb filament open?

Yes >> Replace the Right Tail/Stop Lamp bulb. **Refer to Page 8L-113**.
Perform BODY VERIFICATION TEST.

No >> Go to 2

2. MEASURE FUSED B(+) CIRCUIT RESISTANCE

Disconnect the Right Rear Lamp Assembly harness connector.

Disconnect the Illumination Control Module harness connector.

Note: Check connectors - Clean/repair as necessary.

Measure the resistance between the Right Rear Lamp Assembly harness connector and the Illumination Control Module harness connector.

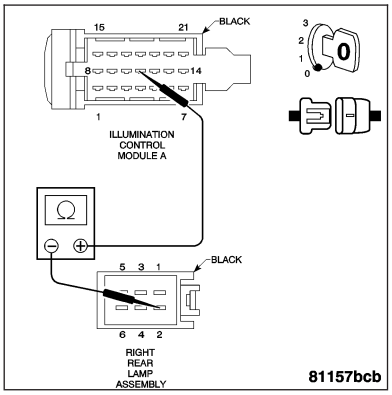

Is the resistance below 5.0 ohms?

Yes >> Go to 3

No >> Repair the Fused B(+) circuit for an open between the Right Rear Lamp Assembly and the Illumination Control Module.
Perform BODY VERIFICATION TEST.

*RIGHT TAIL LAMP INOPERATIVE — CONTINUED

3. MEASURE RIGHT TAIL/STOP LAMP VOLTAGE

Connect the Illumination Control Module harness connector.

Turn the tail lamps on.

Measure the voltage between the Right Rear Lamp Assembly harness connector cavity 2 and ground.

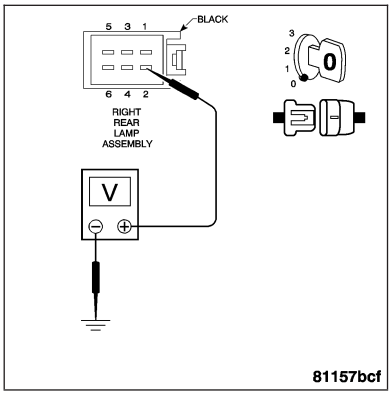

Is the voltage above 10 volts?

Yes >> Go to 4

No >> Replace the Illumination Control Module.
Perform BODY VERIFICATION TEST.

4. MEASURE RIGHT TAIL/STOP LAMP GROUND CIRCUIT RESISTANCE

Turn the tail lamps off.

Measure the resistance between the Right Rear Lamp Assembly harness connector and ground.

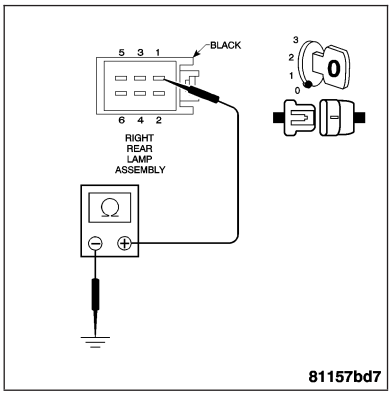

Is the resistance below 5.0 ohms?

Yes >> Ensure that the Right Tail/Stop Lamp bulb is installed properly and replace the bulb socket if necessary.
Perform BODY VERIFICATION TEST.

No >> Repair the Right Rear Lamp Assembly ground circuit for an open.
Perform BODY VERIFICATION TEST.

*RIGHT STOP LAMP INOPERATIVE

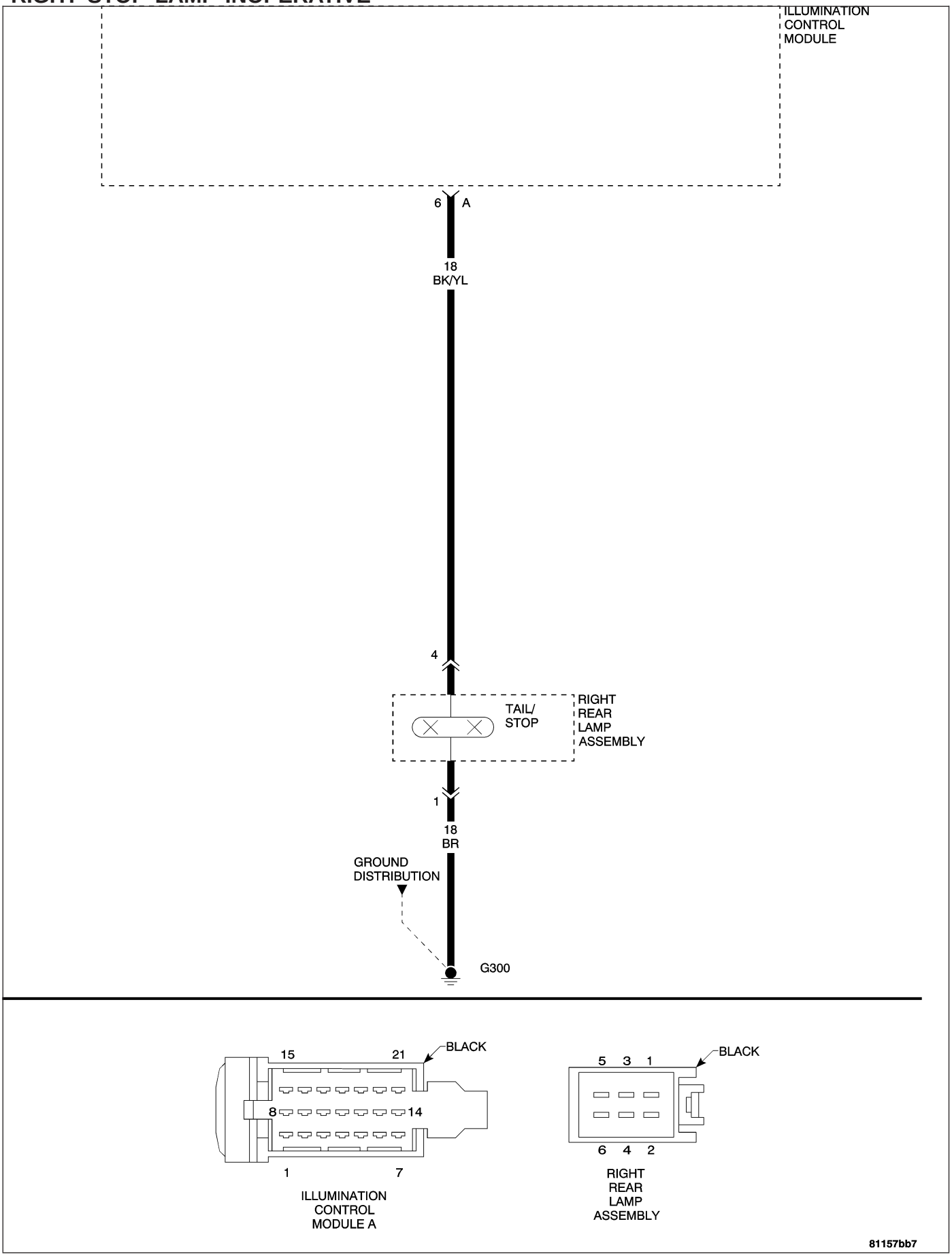

*RIGHT STOP LAMP INOPERATIVE — CONTINUED

POSSIBLE CAUSES
FUSED B(+) CIRCUIT OPEN
GROUND CIRCUIT OPEN
RIGHT TAIL/STOP LAMP BULB

For a complete Exterior Lamps Circuit Diagram, **Refer to Page 8L-78**.

Diagnostic Test

1. INSPECT THE RIGHT TAIL/STOP LAMP BULB

Note: If all stop lamps are inoperative, inspect Fuse 2 located in the Illumination Control Module/IP Fuse Block. If the fuse is open, repair the cause of the open fuse before continuing.
Turn the ignition off.
Remove the Right Tail/Stop Lamp bulb and inspect for an open filament.

Is the Bulb filament open?

Yes >> Replace the Right Tail/Stop Lamp bulb. **Refer to Page 8L-113**.
Perform BODY VERIFICATION TEST.

No >> Go to 2

2. MEASURE FUSED B(+) CIRCUIT RESISTANCE

Disconnect the Right Rear Lamp Assembly harness connector.
Disconnect the Illumination Control Module harness connector.

Note: Check connectors - Clean/repair as necessary.
Measure the resistance between the Right Rear Lamp Assembly harness connector and the Illumination Control Module harness connector.

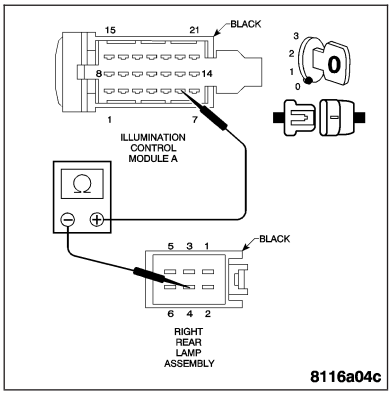

Is the resistance below 5.0 ohms?

Yes >> Go to 3

No >> Repair the Fused B(+) circuit for an open between the Right Rear Lamp Assembly and the Illumination Control Module.
Perform BODY VERIFICATION TEST.

*RIGHT STOP LAMP INOPERATIVE — CONTINUED

3. MEASURE RIGHT TAIL/STOP LAMP VOLTAGE

Connect the Illumination Control Module harness connector.

Depress the brake pedal.

Measure the voltage between the Right Rear Lamp Assembly harness connector cavity 4 and ground.

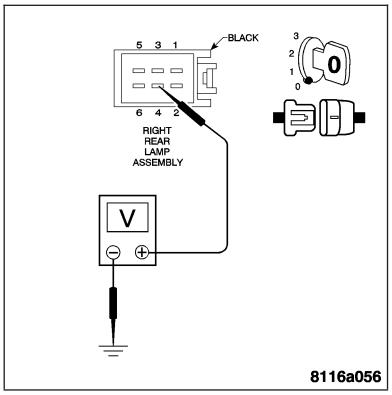

Is the voltage above 10 volts?

Yes >> Go to 4

No >> Replace the Illumination Control Module.
Perform BODY VERIFICATION TEST.

4. MEASURE RIGHT TAIL/STOP LAMP GROUND CIRCUIT RESISTANCE

Release the brake pedal.

Measure the resistance between the Right Rear Lamp Assembly harness connector and ground.

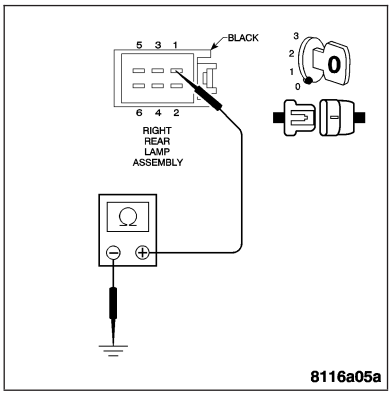

Is the resistance below 5.0 ohms?

Yes >> Ensure that the Right Tail/Stop Lamp bulb is installed properly and replace the bulb socket if necessary.
Perform BODY VERIFICATION TEST.

No >> Repair the Right Rear Lamp Assembly ground circuit for an open.
Perform BODY VERIFICATION TEST.

*RIGHT BACK UP LAMP INOPERATIVE

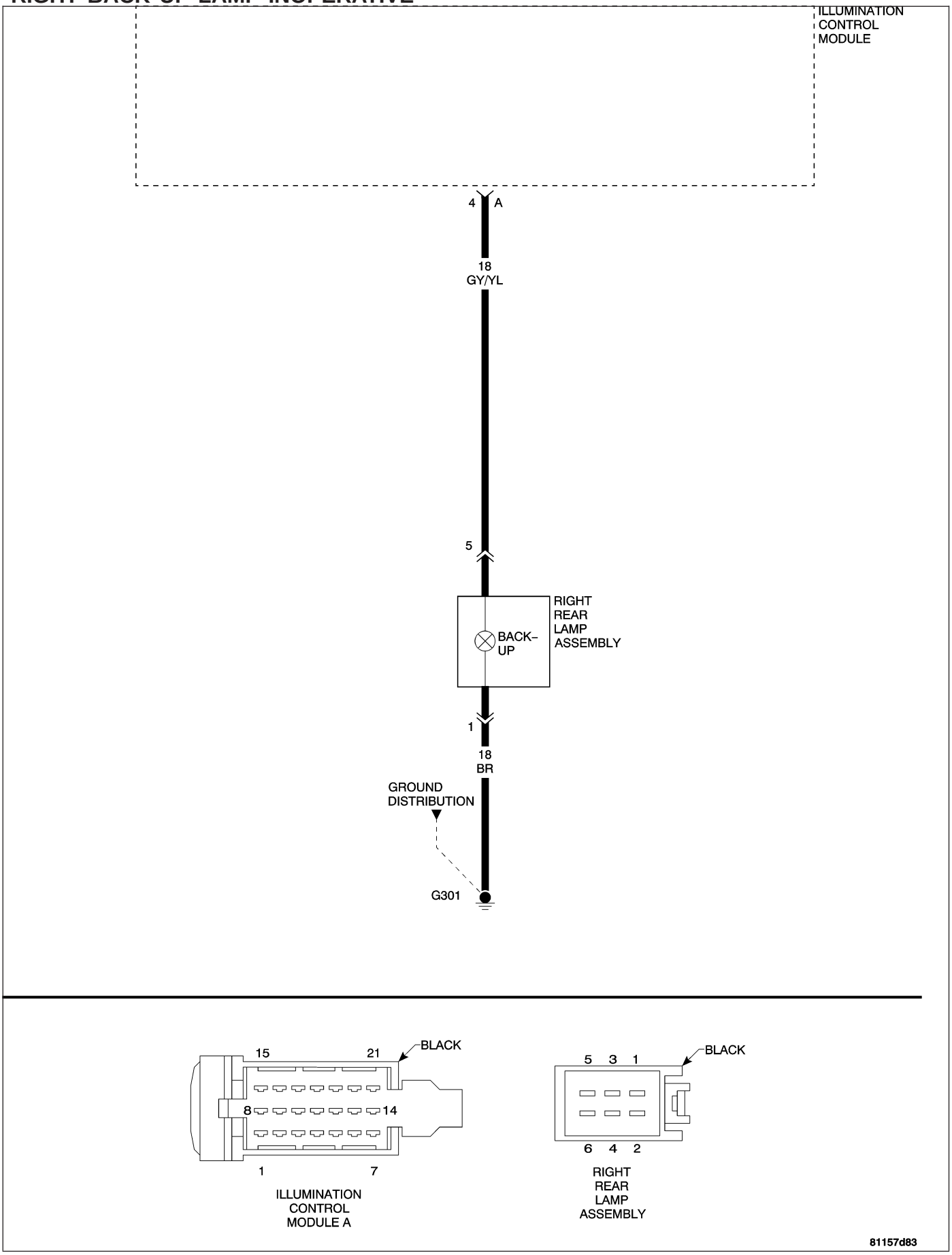

*RIGHT BACK UP LAMP INOPERATIVE — CONTINUED

POSSIBLE CAUSES
FUSED B(+) CIRCUIT OPEN
GROUND CIRCUIT OPEN
RIGHT BACK UP LAMP BULB

For a complete Exterior Lamps Circuit Diagram, **Refer to Page 8L-78**.

Diagnostic Test

1. INSPECT THE RIGHT BACK UP LAMP BULB

Note: If all of the turn signal lamps and both of the back up lamps are inoperative, inspect Fuse 4 located in the Illumination Control Module/IP Fuse Block. If the fuse is open, repair the cause of the open fuse before continuing.
Turn the ignition off.
Remove the Right Back Up Lamp bulb and inspect for an open filament.

Is the Bulb filament open?

Yes >> Replace the Right Back Up Lamp bulb. **Refer to Page 8L-88**.
Perform BODY VERIFICATION TEST.

No >> Go to 2

2. MEASURE FUSED B(+) CIRCUIT RESISTANCE

Disconnect the Right Rear Lamp Assembly harness connector.
Disconnect the Illumination Control Module harness connector.

Note: Check connectors - Clean/repair as necessary.
Measure the resistance between the Right Rear Lamp Assembly harness connector and the Illumination Control Module harness connector.

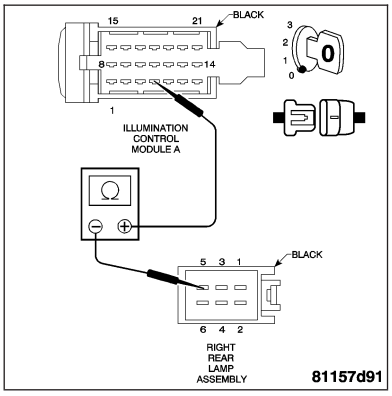

Is the resistance below 5.0 ohms?

Yes >> Go to 3

No >> Repair the Fused B(+) circuit for an open between the Right Rear Lamp Assembly and the Illumination Control Module.
Perform BODY VERIFICATION TEST.

*RIGHT BACK UP LAMP INOPERATIVE — CONTINUED

3. MEASURE RIGHT BACK UP LAMP VOLTAGE

Connect the Illumination Control Module harness connector.

Turn the ignition on.

Move the transmission shift lever into reverse.

Measure the voltage between the Right Rear Lamp Assembly harness connector cavity 5 and ground.

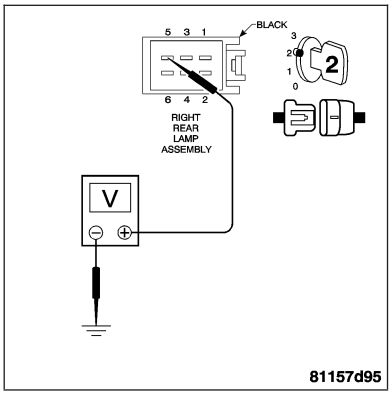

Is voltage present?

Yes >> Go to 4

No >> Replace the Illumination Control Module.
Perform BODY VERIFICATION TEST.

4. MEASURE RIGHT BACK UP LAMP GROUND CIRCUIT RESISTANCE

Move the transmission shift lever into park.

Turn the ignition off.

Measure the resistance between the Right Rear Lamp Assembly harness connector and ground.

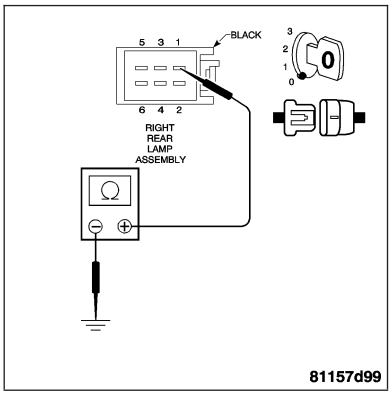

Is the resistance below 5.0 ohms?

Yes >> Ensure that the Right Back Up Lamp bulb is installed properly and replace the bulb socket if necessary.
Perform BODY VERIFICATION TEST.

No >> Repair the Right Rear Lamp Assembly ground circuit for an open.
Perform BODY VERIFICATION TEST.

*RIGHT REAR TURN LAMP INOPERATIVE

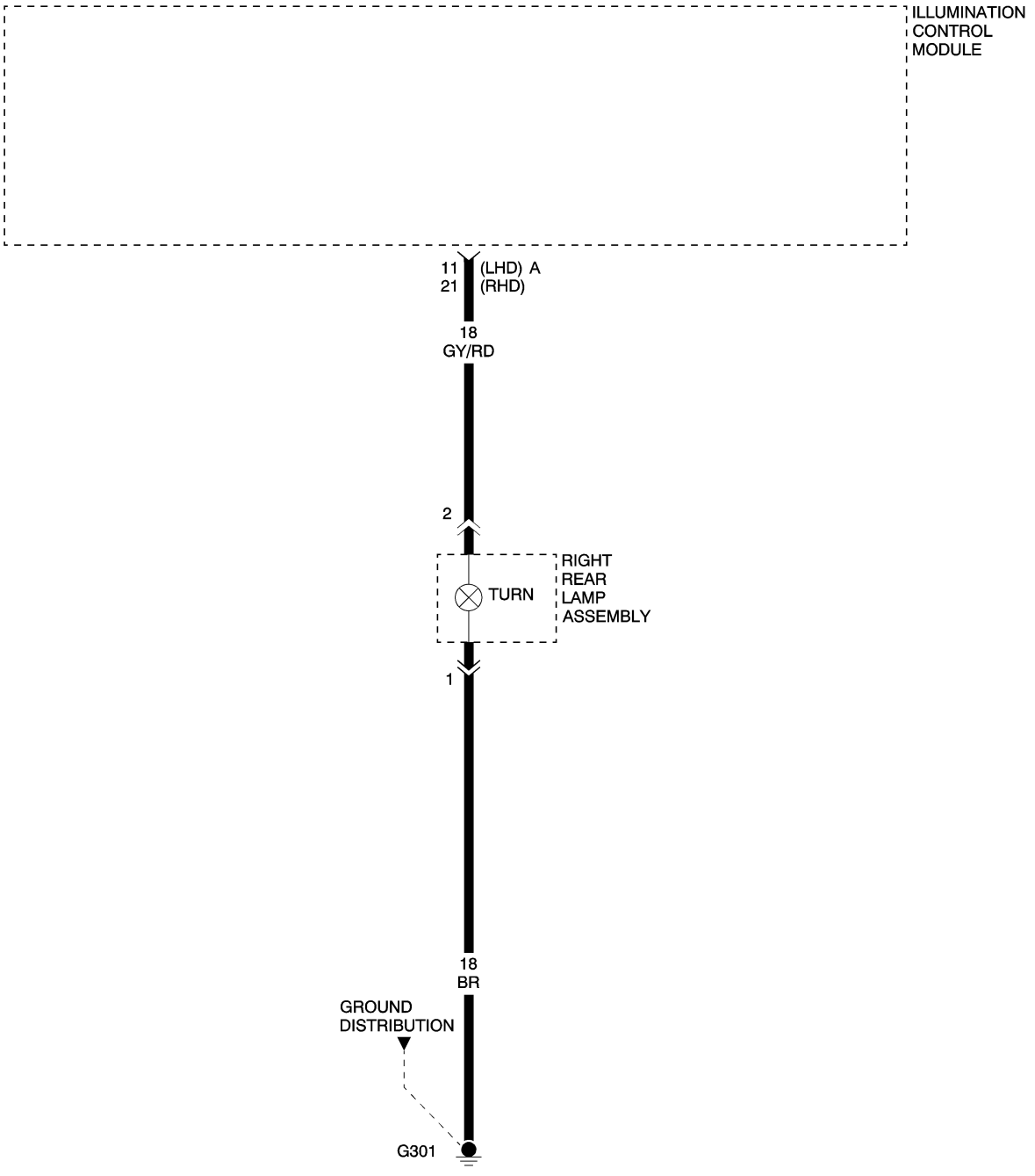

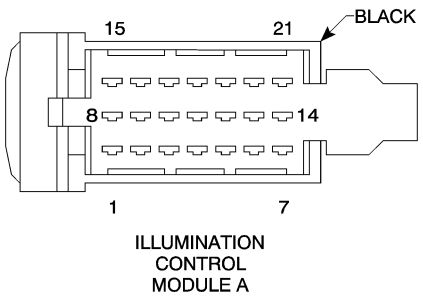

ILLUMINATION CONTROL MODULE A

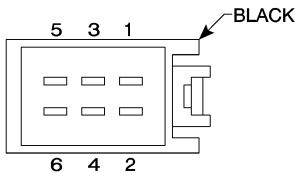

RIGHT REAR LAMP ASSEMBLY

81157f86

*RIGHT REAR TURN LAMP INOPERATIVE — CONTINUED

POSSIBLE CAUSES
FUSED B(+) CIRCUIT OPEN
GROUND CIRCUIT OPEN
RIGHT REAR TURN LAMP BULB

For a complete Exterior Lamps Circuit Diagram, **Refer to Page 8L-78**.

Diagnostic Test

1. INSPECT THE RIGHT REAR TURN LAMP BULB

Note: If all of the turn signal lamps and both of the back up lamps are inoperative, inspect Fuse 4 located in the Illumination Control Module/IP Fuse Block. If the fuse is open, repair the cause of the open fuse before continuing.

Turn the ignition off.

Remove the Right Rear Turn Lamp bulb and inspect for an open filament.

Is the Bulb filament open?

Yes >> Replace the Right Rear Turn Lamp bulb. **Refer to Page 8L-113**.
Perform BODY VERIFICATION TEST.

No >> Go to 2

2. MEASURE FUSED B(+) CIRCUIT RESISTANCE

Disconnect the Right Rear Lamp Assembly harness connector.

Disconnect the Multi-Function Switch harness connector.

Note: Check connectors - Clean/repair as necessary.

Measure the resistance between the Right Rear Lamp Assembly harness connector and the Multi-Function Switch harness connector.

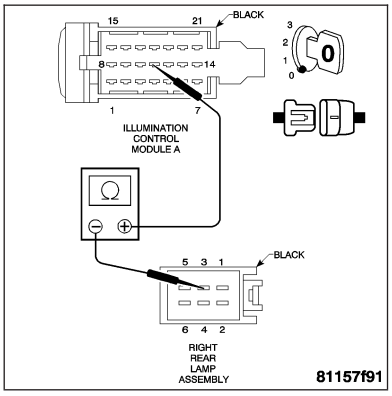

Is the resistance below 5.0 ohms?

Yes >> Go to 3

No >> Repair the Fused B(+) circuit for an open between the Right Rear Turn Lamp and the Multi-Function Switch.
Perform BODY VERIFICATION TEST.

*RIGHT REAR TURN LAMP INOPERATIVE — CONTINUED

3. MEASURE RIGHT REAR TURN LAMP VOLTAGE

Connect the Multi-Function Switch harness connector.

Turn the ignition on.

Turn the right turn signal on.

Measure the voltage between the Right Rear Lamp Assembly harness connector cavity 3 and ground.

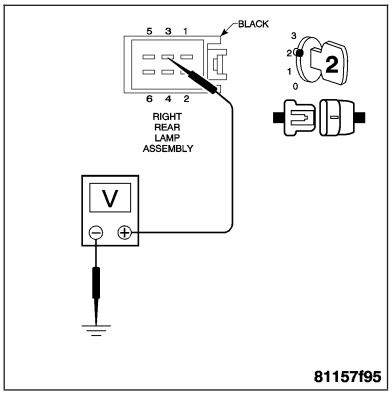

Is voltage present?

Yes >> Go to 4

No >> Replace the Multi-Function Switch. **Refer to Page 8L-112**.
Perform BODY VERIFICATION TEST.

4. MEASURE RIGHT REAR TURN LAMP GROUND CIRCUIT RESISTANCE

Turn the ignition off.

Turn the right turn signal off.

Measure the resistance between the Right Rear Lamp Assembly harness connector cavity 1 and ground.

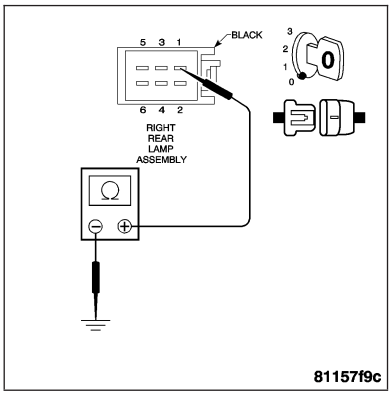

Is the resistance below 5.0 ohms?

Yes >> Ensure that the Right Rear Turn Lamp bulb is installed properly and replace the bulb socket if necessary.
Perform BODY VERIFICATION TEST.

No >> Repair the Right Rear Lamp Assembly ground circuit for an open.
Perform BODY VERIFICATION TEST.

*CENTER HIGH MOUNTED STOP LAMP INOPERATIVE

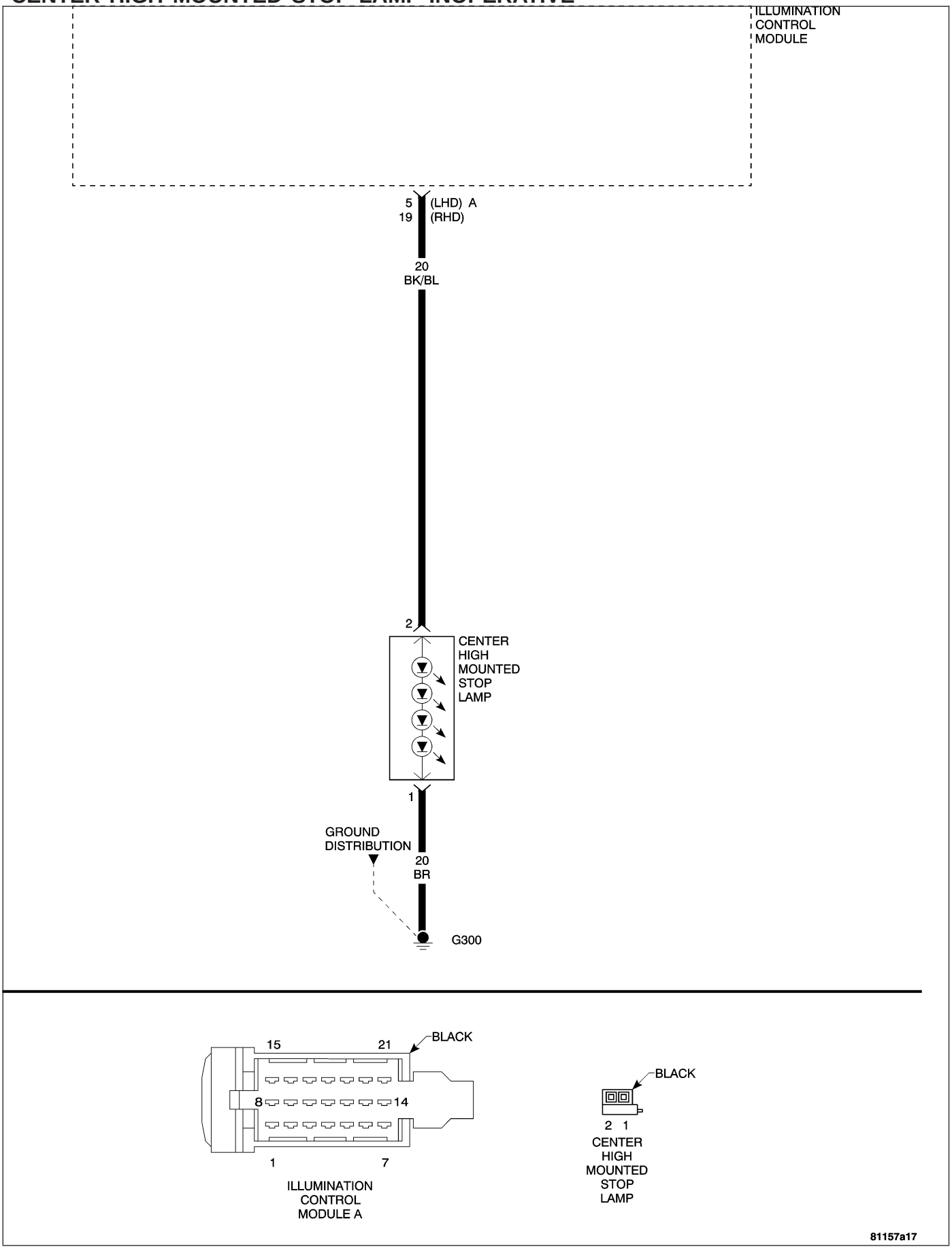

*CENTER HIGH MOUNTED STOP LAMP INOPERATIVE — CONTINUED

POSSIBLE CAUSES
FUSED B(+) CIRCUIT OPEN
GROUND CIRCUIT OPEN
CENTER HIGH MOUNTED STOP LAMP

For a complete Exterior Lamps Circuit Diagram, **Refer to Page 8L-78**.

Diagnostic Test

1. MEASURE FUSED B(+) CIRCUIT RESISTANCE

Note: If all stop lamps are inoperative, inspect Fuse 2 located in the Illumination Control Module/IP Fuse Block. If the fuse is open, repair the cause of the open fuse before continuing.
Disconnect the Center High Mounted Stop Lamp harness connector.
Disconnect the Illumination Control Module harness connector.

Note: Check connectors - Clean/repair as necessary.
Measure the resistance between the Center High Mounted Stop Lamp harness connector and the Illumination Control Module harness connector.

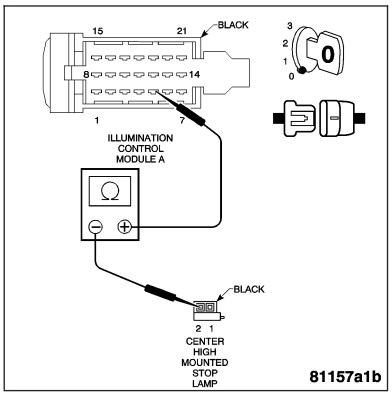

Is the resistance below 5.0 ohms?

Yes >> Go to 2

No >> Repair the Fused B(+) circuit for an open between the Center High Mounted Stop Lamp and the Illumination Control Module.
Perform BODY VERIFICATION TEST.

2. MEASURE CENTER HIGH MOUNTED STOP LAMP VOLTAGE

Connect the Illumination Control Module harness connector.
Depress the brake pedal.
Measure the voltage between the Center High Mounted Stop Lamp harness connector cavity 2 and ground.

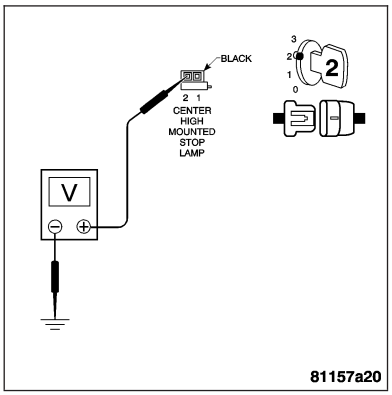

Is the voltage present?

Yes >> Go to 3

No >> Replace the Illumination Control Module. **Refer to Page 8L-105**.
Perform BODY VERIFICATION TEST.

*CENTER HIGH MOUNTED STOP LAMP INOPERATIVE — CONTINUED

3. MEASURE CENTER HIGH MOUNTED STOP LAMP GROUND CIRCUIT RESISTANCE

Release the brake pedal.

Measure the resistance between the Center High Mounted Stop Lamp harness connector cavity 1 and ground.

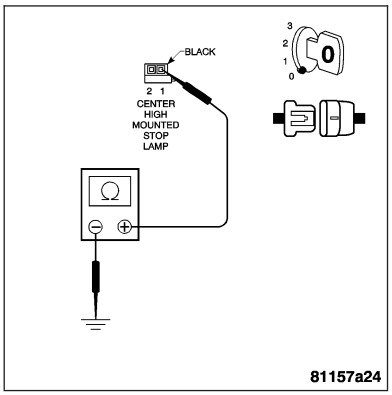

Is the resistance below 5.0 ohms?

Yes >> Replace the Center High Mounted Stop Lamp. **Refer to Page 8L-92**.
Perform BODY VERIFICATION TEST.

No >> Repair the Center High Mounted Stop Lamp ground circuit for an open.
Perform BODY VERIFICATION TEST.

*LICENSE LAMP NO.1 INOPERATIVE

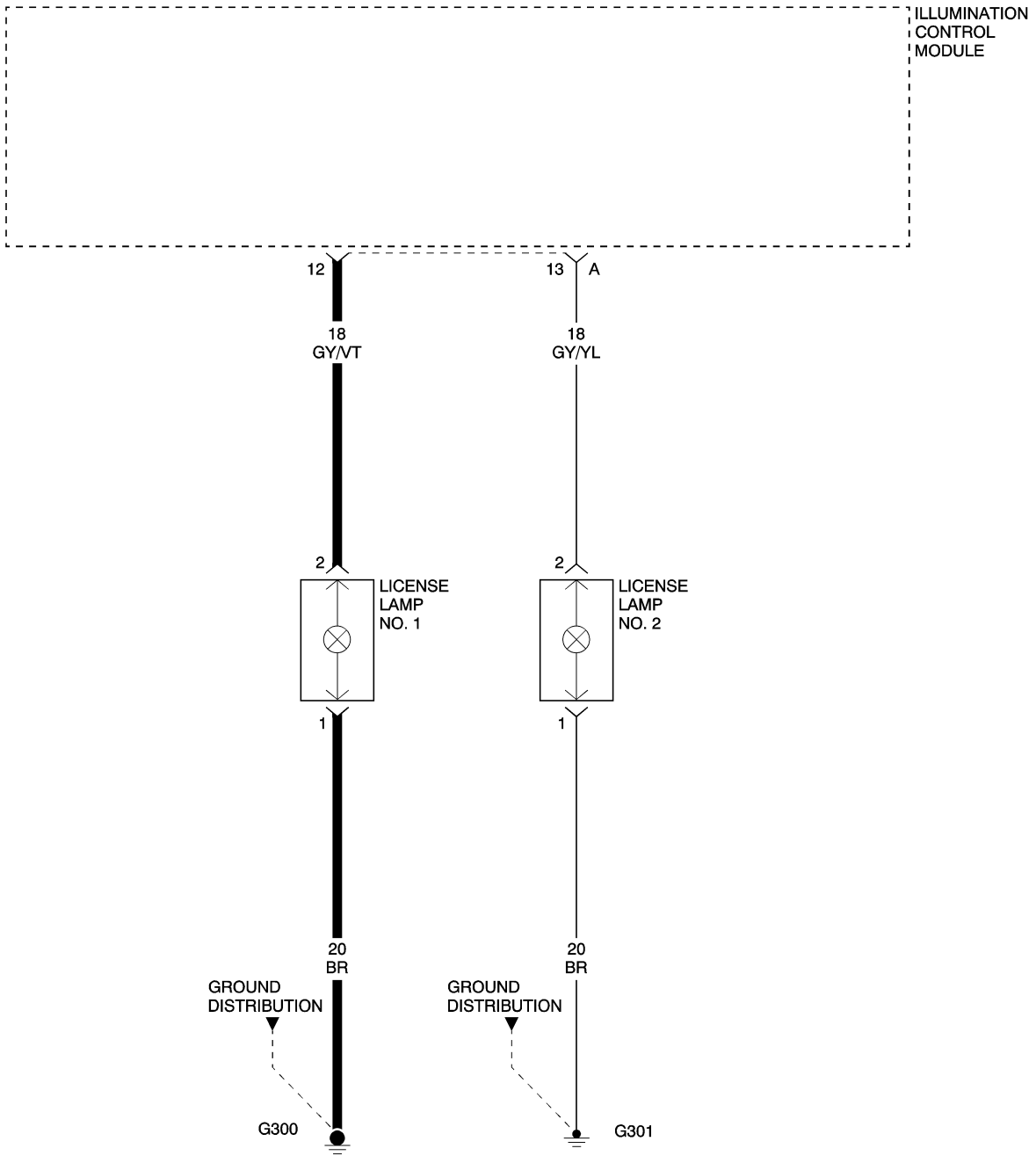

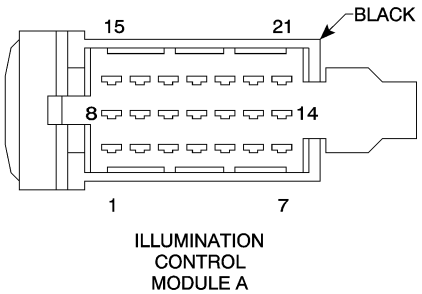

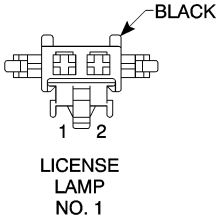

81156df7

*LICENSE LAMP NO.1 INOPERATIVE — CONTINUED

POSSIBLE CAUSES
FUSED B(+) CIRCUIT OPEN
GROUND CIRCUIT OPEN
LICENSE LAMP BULB

For a complete Exterior Lamps Circuit Diagram, **Refer to Page 8L-78**.

Diagnostic Test

1. INSPECT THE LICENSE LAMP BULB

Note: If both license lamps are inoperative, inspect Fuse 11 located in the Illumination Control Module/IP Fuse Block. If the fuse is open, repair the cause of the open fuse before continuing.
Turn the ignition off.
Remove the License Lamp bulb and inspect for an open filament.

Is the Bulb filament open?

Yes >> Replace the License Lamp bulb. **Refer to Page 8L-109**.
Perform BODY VERIFICATION TEST.

No >> Go to 2

2. MEASURE FUSED B(+) CIRCUIT RESISTANCE

Disconnect the License Lamp No.1 harness connector.
Disconnect the Illumination Control Module harness connector.

Note: Check connectors - Clean/repair as necessary.
Measure the resistance between the License Lamp No.1 harness connector and the Illumination Control Module harness connector.

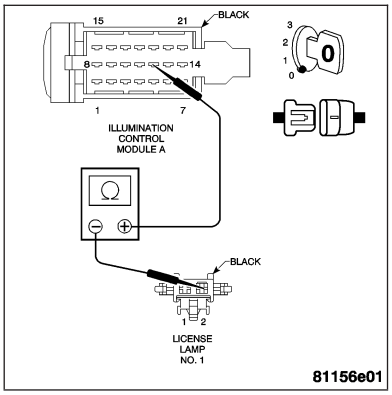

Is the resistance below 5.0 ohms?

Yes >> Go to 3

No >> Repair the Fused B(+) circuit for an open between the License Lamp No.1 and the Illumination Control Module.
Perform BODY VERIFICATION TEST.

*LICENSE LAMP NO.1 INOPERATIVE — CONTINUED

3. MEASURE LICENSE LAMP VOLTAGE

Connect the Illumination Control Module harness connector.

Turn the ignition on.

Turn the license lamps on.

Measure the voltage between the License Lamp No.1 harness connector cavity 2 and ground.

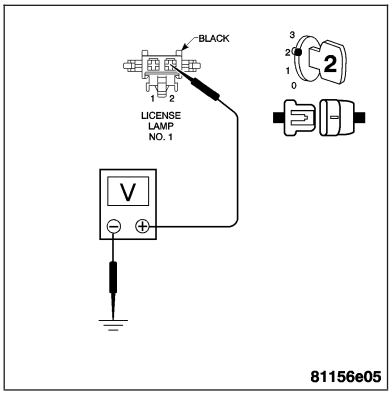

Is the voltage above 10 volts?

Yes >> Go to 4

No >> Replace the Illumination Control Module. **Refer to Page 8L-105**.
Perform BODY VERIFICATION TEST.

4. MEASURE LICENSE LAMP GROUND CIRCUIT RESISTANCE

Turn the ignition off.

Turn the license lamps off.

Measure the resistance between the License Lamp No. 1 harness connector cavity 1 and ground.

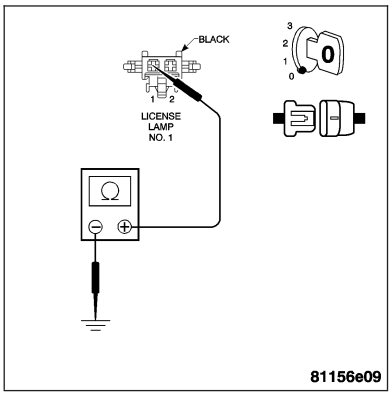

Is the resistance below 5.0 ohms?

Yes >> Ensure that the License Lamp bulb is installed properly and replace the bulb socket if necessary.
Perform BODY VERIFICATION TEST.

No >> Repair the License Lamp No.1 ground circuit for an open.
Perform BODY VERIFICATION TEST.

*LICENSE LAMP NO.2 INOPERATIVE

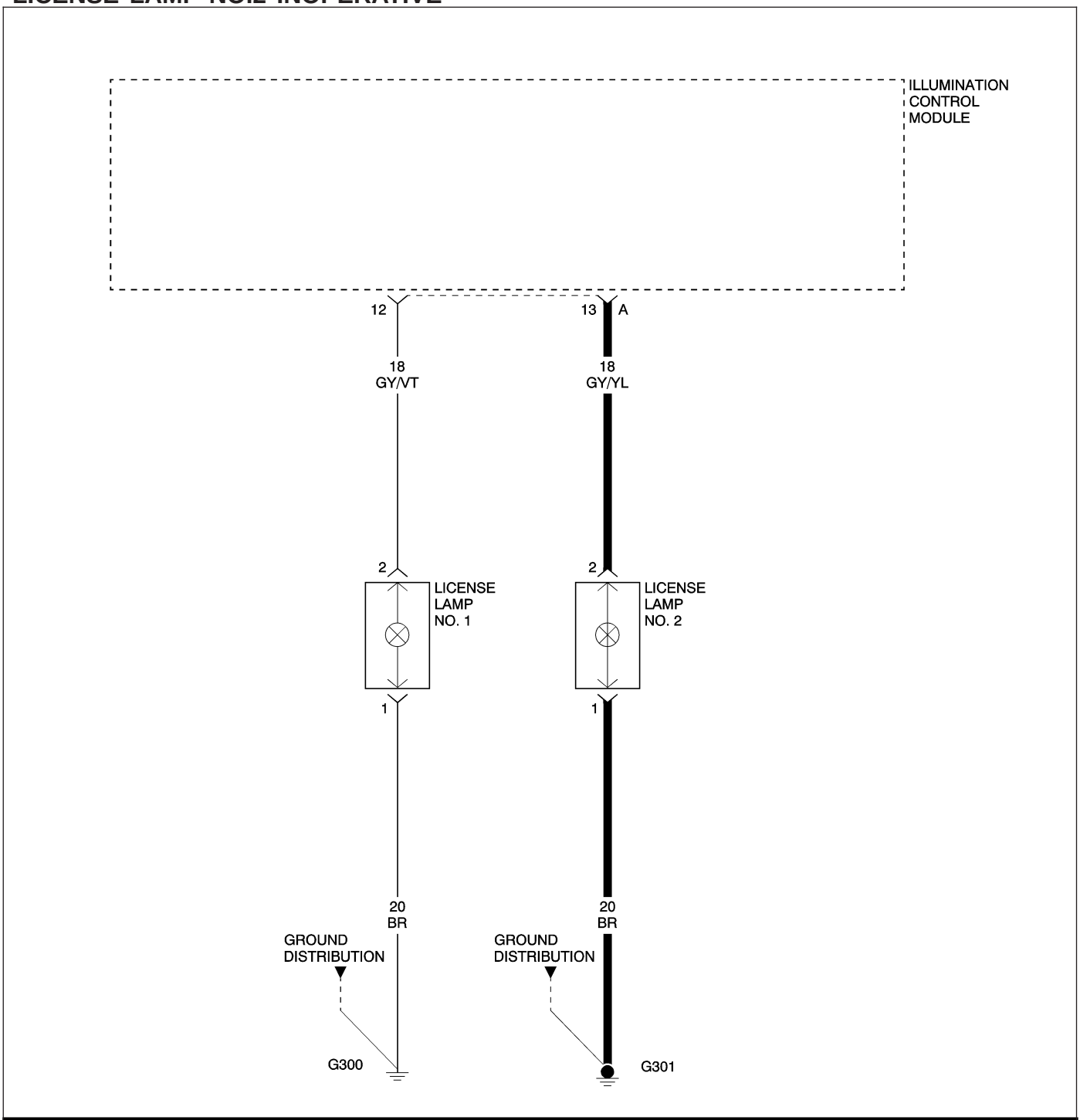

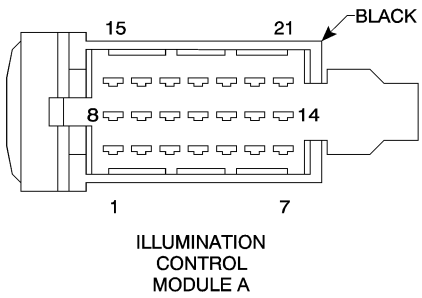

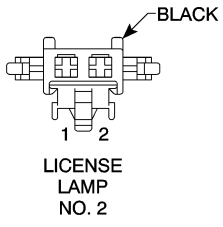

81156ea0

*LICENSE LAMP NO.2 INOPERATIVE — CONTINUED

POSSIBLE CAUSES
FUSED B(+) CIRCUIT OPEN
GROUND CIRCUIT OPEN
LICENSE LAMP BULB

For a complete Exterior Lamps Circuit Diagram, **Refer to Page 8L-78**.

Diagnostic Test

1. INSPECT THE LICENSE LAMP BULB

Note: If both license lamps are inoperative, inspect Fuse 11 located in the Illumination Control Module/IP Fuse Block. If the fuse is open, repair the cause of the open fuse before continuing.
Turn the ignition off.
Remove the License Lamp bulb and inspect for an open filament.

Is the Bulb filament open?

Yes >> Replace the License Lamp bulb. **Refer to Page 8L-109**. Perform BODY VERIFICATION TEST.

No >> Go to 2

2. MEASURE FUSED B(+) CIRCUIT RESISTANCE

Disconnect the License Lamp No.2 harness connector.
Disconnect the Illumination Control Module harness connector.

Note: Check connectors - Clean/repair as necessary.
Measure the resistance between the License Lamp No.2 harness connector and the Illumination Control Module harness connector.

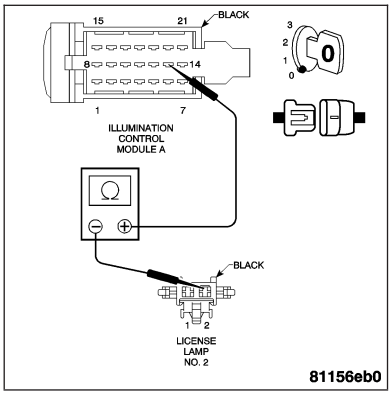

Is the resistance below 5.0 ohms?

Yes >> Go to 3

No >> Repair the Fused B(+) circuit for an open between the License Lamp No.2 and the Illumination Control Module. Perform BODY VERIFICATION TEST.

*LICENSE LAMP NO.2 INOPERATIVE — CONTINUED

3. MEASURE LICENSE LAMP VOLTAGE

Connect the Illumination Control Module harness connector.

Turn the ignition on.

Turn the license lamps on.

Measure the voltage between the License Lamp No.2 harness connector cavity 2 and ground.

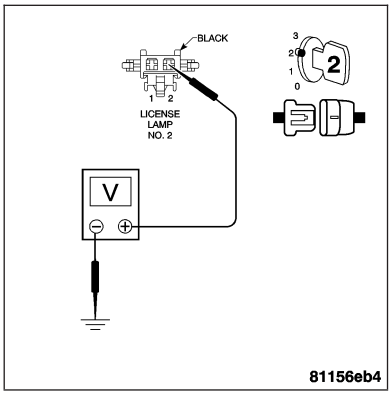

Is the voltage above 10 volts?

Yes >> Go to 4

No >> Replace the Illumination Control Module. **Refer to Page 8L-105**.
Perform BODY VERIFICATION TEST.

4. MEASURE LICENSE LAMP GROUND CIRCUIT RESISTANCE

Turn the ignition off.

Turn the license lamps off.

Measure the resistance between the License Lamp No. 2 harness connector cavity 1 and ground.

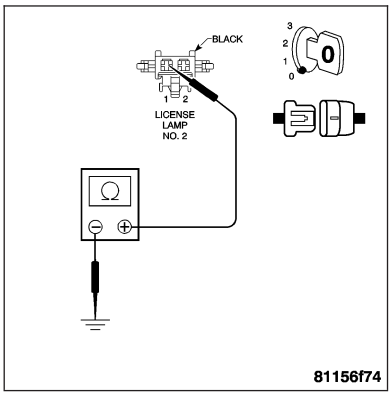

Is the resistance below 5.0 ohms?

Yes >> Ensure that the License Lamp bulb is installed properly and replace the bulb socket if necessary.
Perform BODY VERIFICATION TEST.

No >> Repair the License Lamp No.2 ground circuit for an open.
Perform BODY VERIFICATION TEST.

BODY VERIFICATION TEST

1.

Turn the ignition off.

Disconnect all jumper wires and reconnect all previously disconnected components and connectors.

Note: If the SKREEM or the PCM was replaced, refer to the service information for proper programming procedures.

If the Body Control Module was replaced, turn the ignition on for 15 seconds (to allow the new BCM to learn VIN) or engine may not start.

Program all RKE transmitters and other options as necessary.

With the DRB III®, erase all Diagnostic Trouble Codes (DTCs) from ALL modules. Start the engine and allow it to run for 2 minutes. Operate all functions of the system that caused the original complaint.

Ensure that all accessories are turned off and the battery is fully charged.

Turn the ignition off and wait 5 seconds. Turn the ignition on and using the DRB III®, read DTCs from ALL modules.

Are any DTCs present or is the original complaint still present?

Are any DTCs present?

YES >> Repair is not complete, refer to appropriate symptom.

NO >> Repair is complete.

SCHEMATICS AND DIAGRAMS

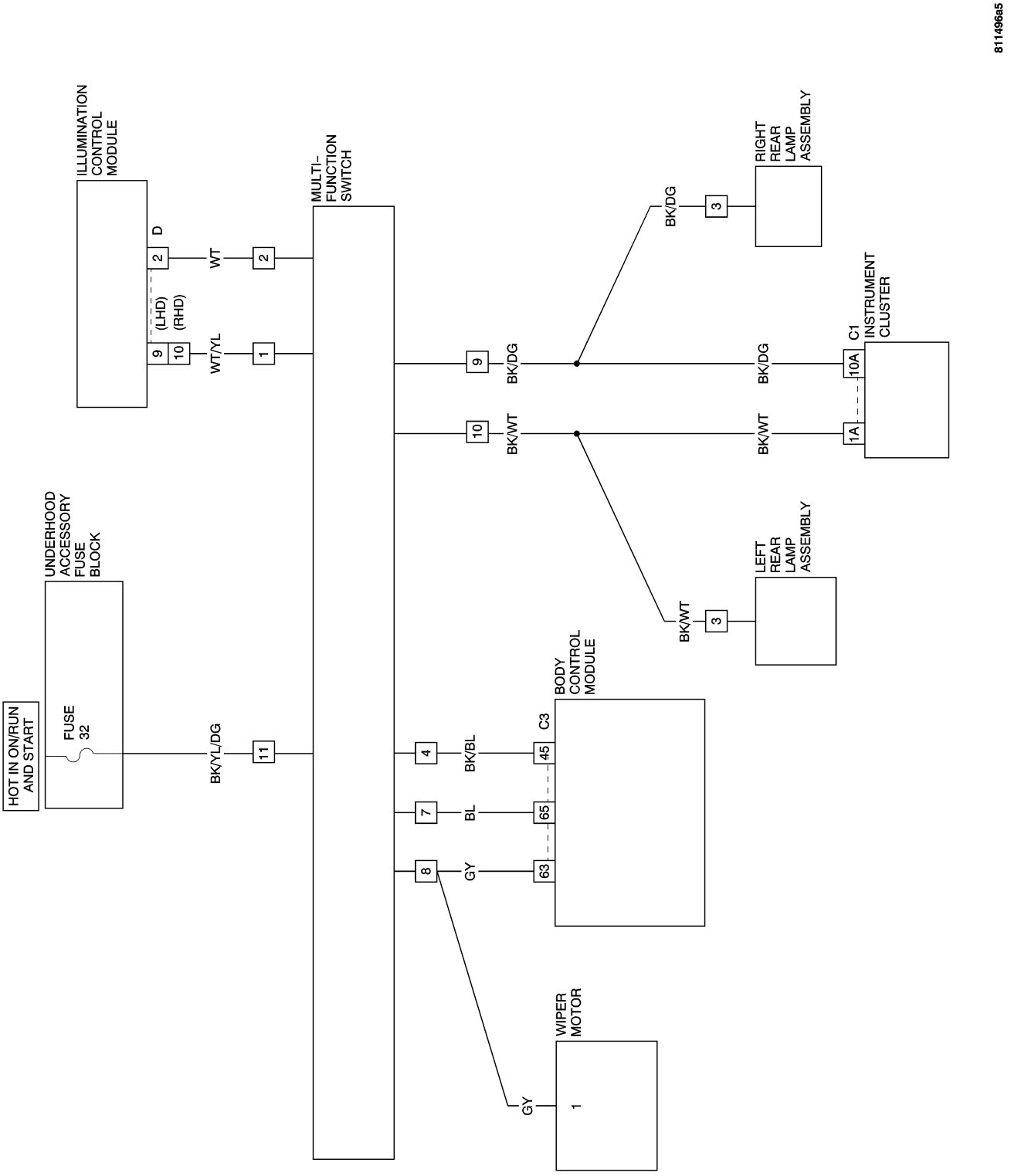

EXTERIOR LIGHTING CIRCUIT DIAGRAM (1 OF 6)

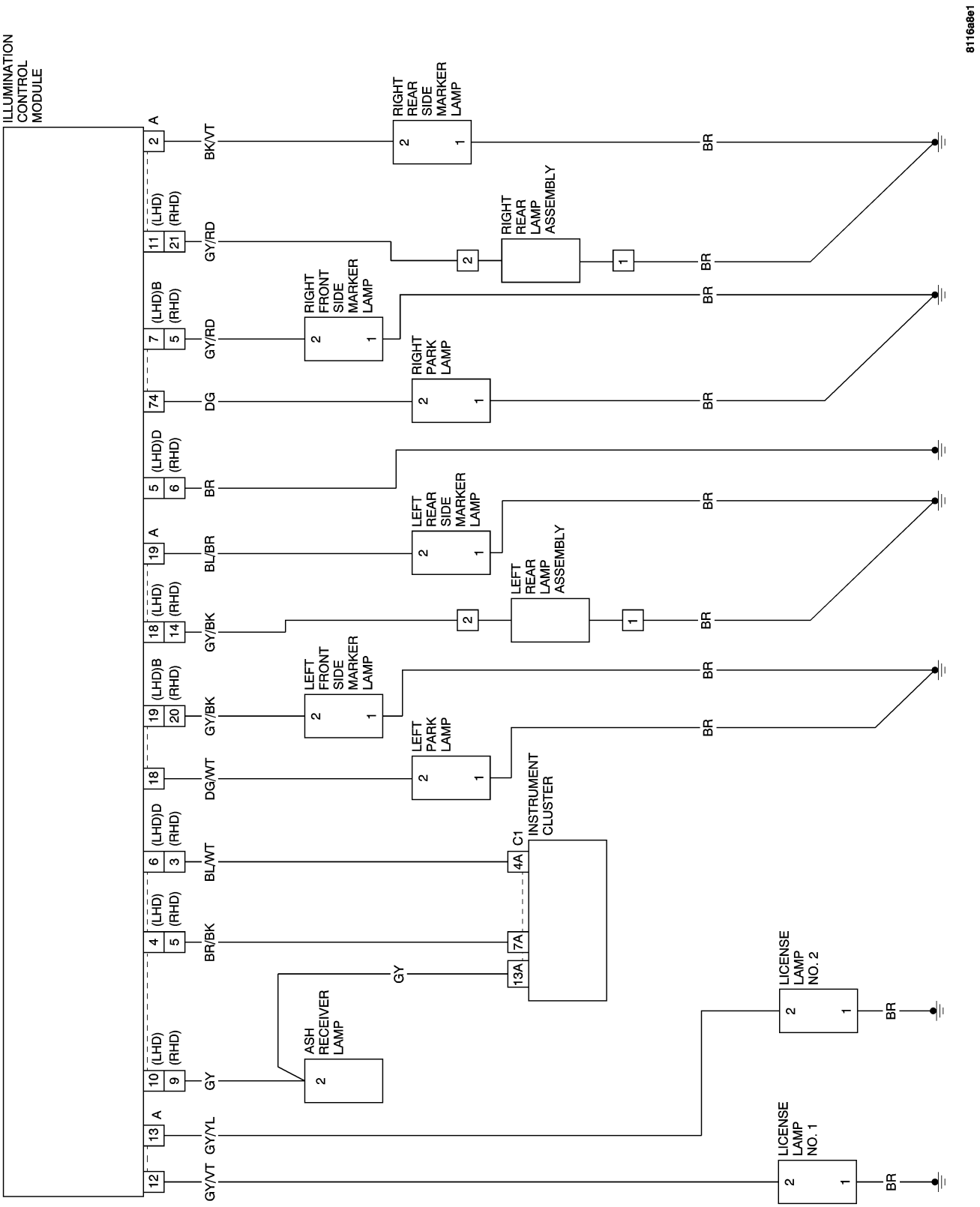

EXTERIOR LIGHTING CIRCUIT DIAGRAM (2 OF 6)

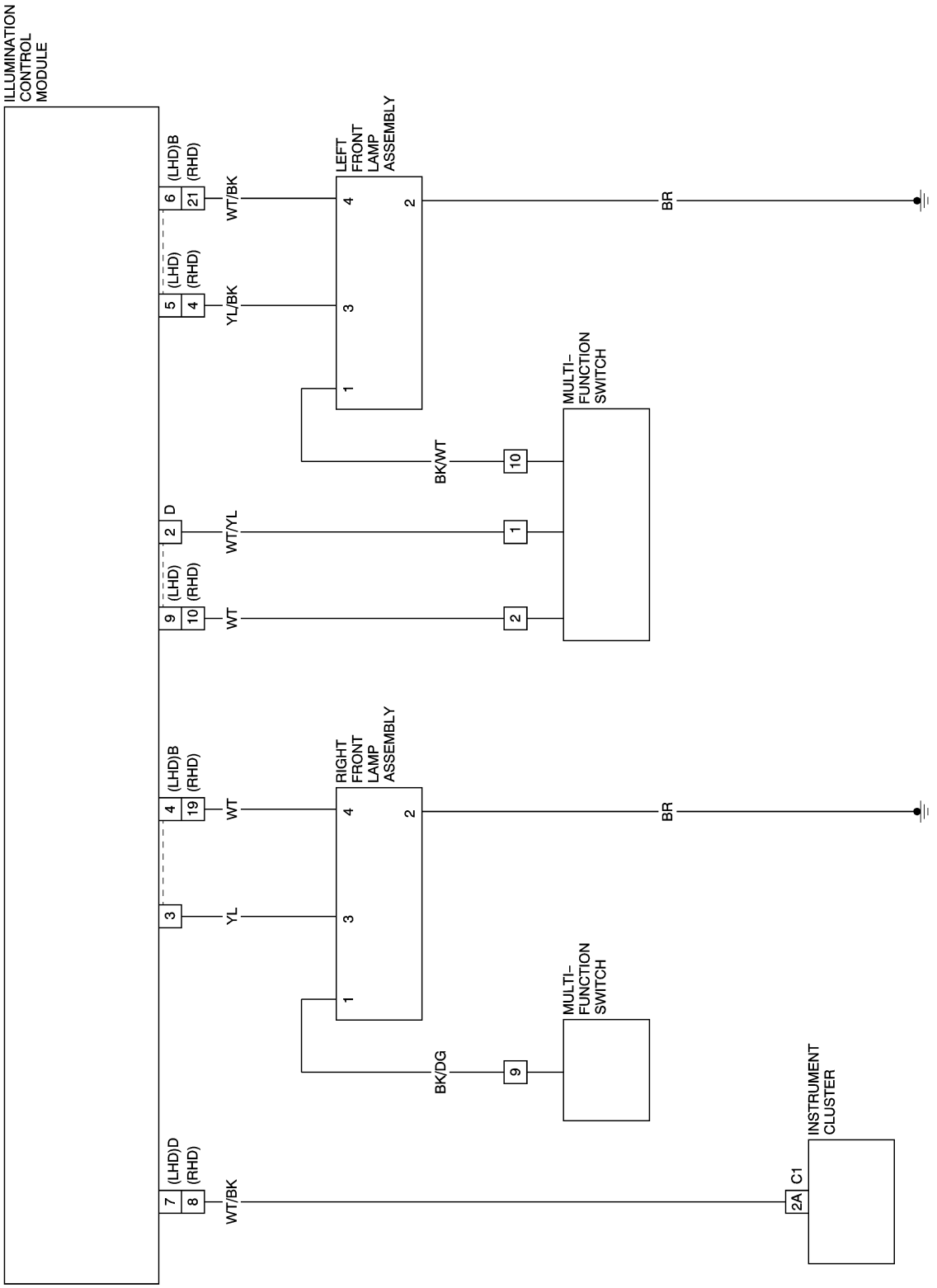

EXTERIOR LIGHTING CIRCUIT DIAGRAM (3 OF 6)

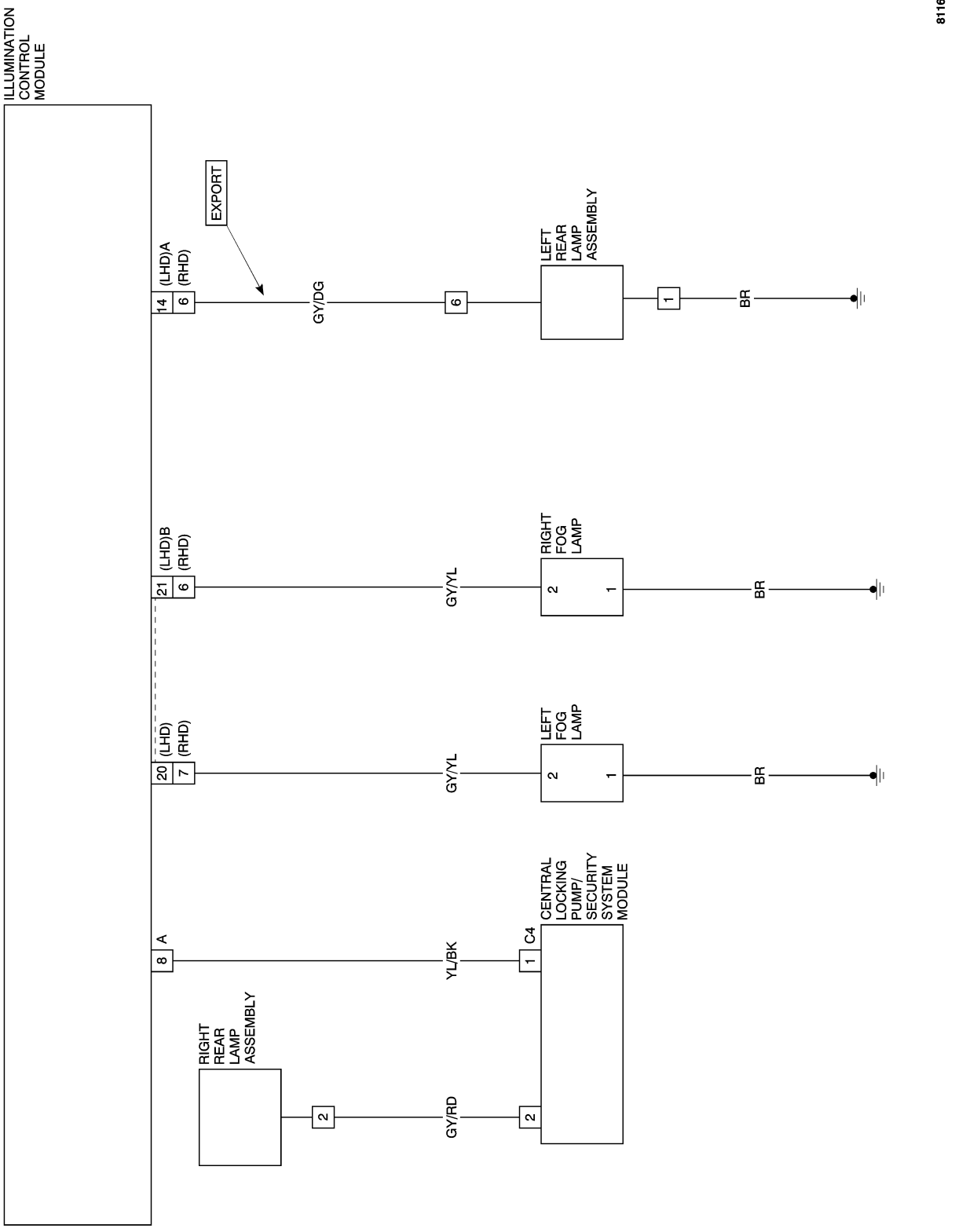

EXTERIOR LIGHTING CIRCUIT DIAGRAM (4 OF 6)

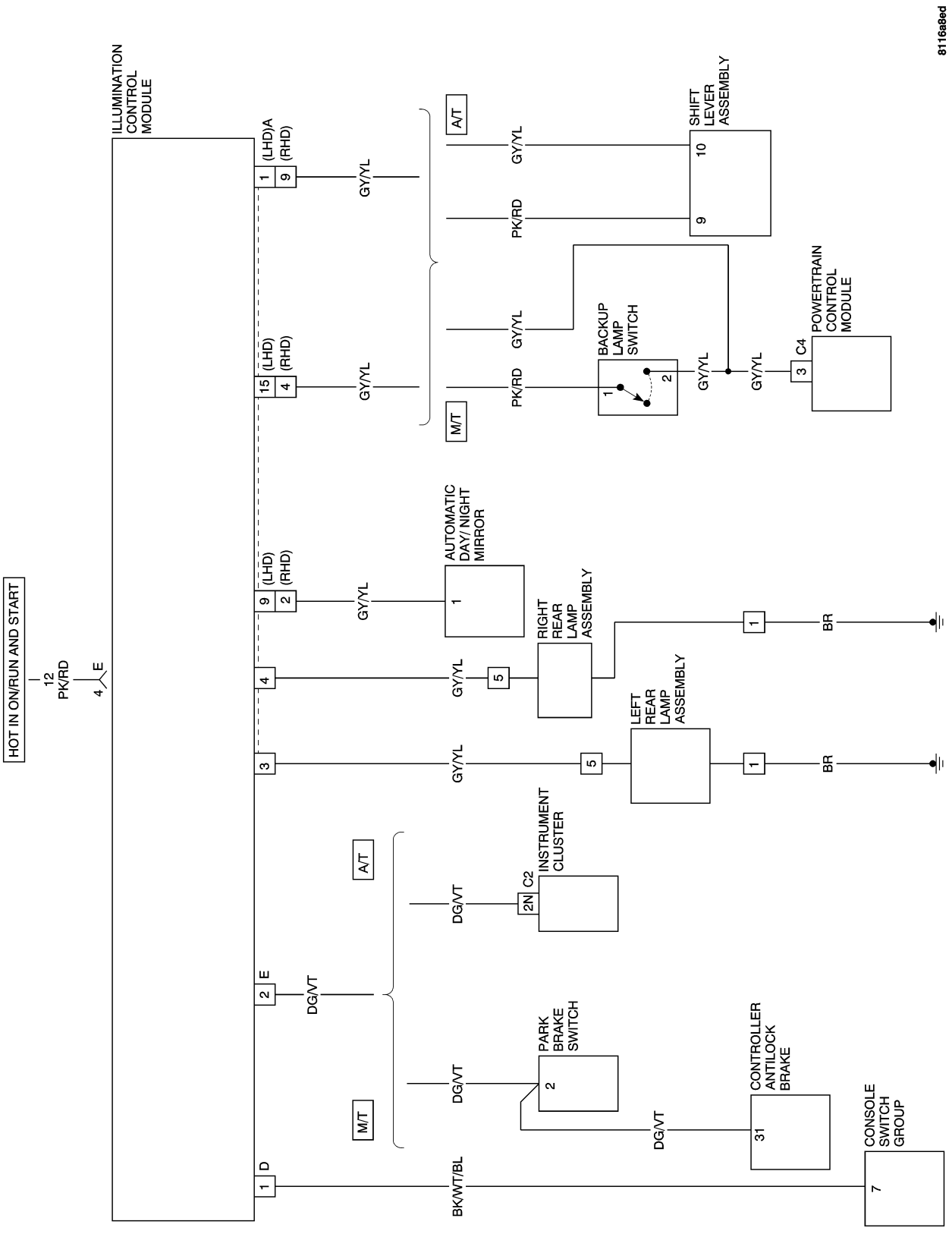

EXTERIOR LIGHTING CIRCUIT DIAGRAM (5 OF 6)

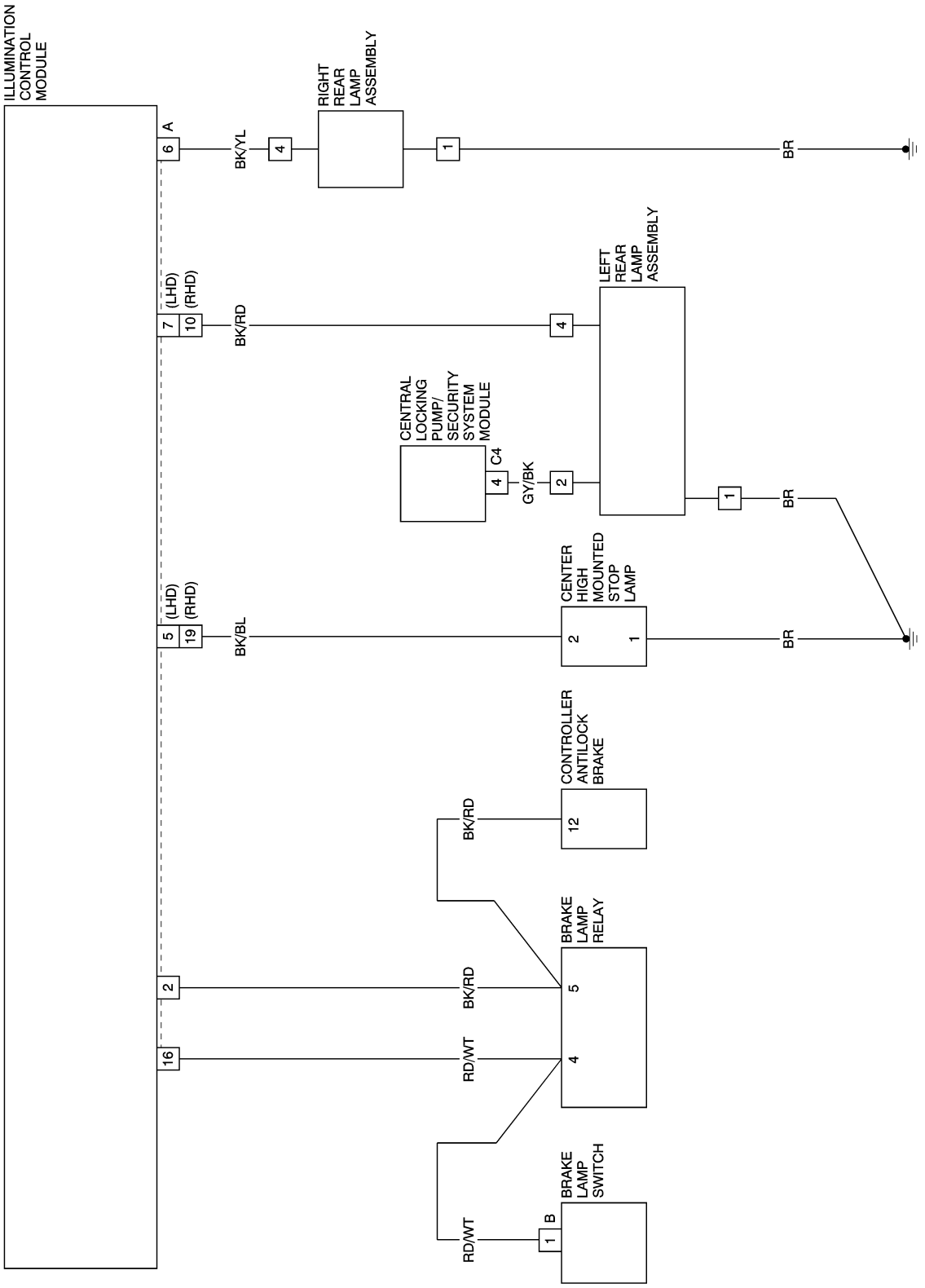

EXTERIOR LIGHTING CIRCUIT DIAGRAM (6 OF 6)

LAMPS/LIGHTING - EXTERIOR - SERVICE INFORMATION

TABLE OF CONTENTS

page

LAMPS/LIGHTING - EXTERIOR - SERVICE INFORMATION
DESCRIPTION . . . 85
OPERATION . . . 85
DIAGNOSIS AND TESTING LAMPS/LIGHTING - EXTERIOR . . . 86
SPECIFICATIONS - EXTERIOR LAMPS . . . 87
BACKUP LAMP
REMOVAL . . . 88
INSTALLATION . . . 88
BACKUP LAMP SWITCH
DESCRIPTION . . . 89
BRAKE LAMP RELAY
DESCRIPTION . . . 90
OPERATION . . . 90
REMOVAL . . . 90
INSTALLATION . . . 90
BRAKE LAMP SWITCH
DESCRIPTION . . . 91
OPERATION . . . 91
REMOVAL . . . 91
INSTALLATION . . . 92
CENTER HIGH MOUNTED STOP LAMP
DESCRIPTION . . . 92
REMOVAL . . . 92
INSTALLATION . . . 93
FOG LAMP
REMOVAL . . . 93
INSTALLATION . . . 94
FOG LAMP UNIT
REMOVAL . . . 95
INSTALLATION . . . 96
FRONT POSITION LAMP
DESCRIPTION . . . 97
OPERATION . . . 97
REMOVAL . . . 97
INSTALLATION . . . 98
FRONT TURN SIGNAL LAMP
REMOVAL . . . 98
INSTALLATION . . . 99
HAZARD FLASHER
DESCRIPTION . . . 99
HAZARD SWITCH
DESCRIPTION . . . 100

page

OPERATION . . . 100
REMOVAL . . . 100
INSTALLATION . . . 102
HEADLAMP
DESCRIPTION . . . 103
OPERATION . . . 103
REMOVAL
LOW BEAM BULB . . . 103
REMOVAL - HIGH BEAM BULB . . . 103
INSTALLATION
LOW BEAM BULB . . . 104
INSTALLATION - HIGH BEAM BULB . . . 105
HEADLAMP SWITCH
DESCRIPTION . . . 105
OPERATION . . . 105
REMOVAL . . . 105
INSTALLATION . . . 106
HEADLAMP UNIT
DESCRIPTION . . . 107
REMOVAL . . . 108
INSTALLATION . . . 108
LICENSE PLATE LAMP
REMOVAL . . . 109
INSTALLATION . . . 109
MARKER LAMP
REMOVAL
REAR MARKER LAMP . . . 110
REMOVAL - FRONT MARKER LAMP . . . 110
INSTALLATION
REAR MARKER LAMP . . . 111
INSTALLATION - FRONT MARKER LAMP . . . 111
MULTI-FUNCTION SWITCH
REMOVAL . . . 112
INSTALLATION . . . 113
TAIL LAMP UNIT
REMOVAL
TAIL LAMP UNIT . . . 113
REMOVAL - TAIL/STOP . . . 114
REMOVAL - TURN SIGNAL . . . 114
INSTALLATION
TAIL LAMP UNIT . . . 115
INSTALLATION - TAIL/STOP . . . 115
INSTALLATION - TURN SIGNAL . . . 116

LAMPS/LIGHTING - EXTERIOR - SERVICE INFORMATION

DESCRIPTION

The exterior lighting system includes the following components:

- Backup Lamps
- Brake Lamps
- Center High Mounted Stop Lamp
- Daytime Running Lamps
- Front Fog Lamps
- Front Position Lamps
- Hazard Warning Lamps
- Headlamps
- License Plate Lamps
- Marker Lamps
- Park Lamps
- Tail/Stop Lamps
- Turn Signal Lamps

Other components of the exterior lighting system for this model include:

- Backup Lamp Switch
- Brake Lamp Switch
- Brake Lamp Relay
- Hazard Flasher
- Hazard Switch
- Headlamp Switch
- Illumination Control Module
- Multifunction Switch

Vehicles use lighting on both the interior and exterior for illuminating and indicating purposes. Lighting circuits are protected by fuses or circuit breakers. Lighting circuits require an overload protected power source, on/off device, lamps and body ground to operate properly. Plastic lamp sockets require a wire in the harness to supply body ground to the lamp socket. Lamp sockets that are exposed to moisture should be coated with Mopar® Multi-purpose Grease or equivalent to avoid corrosion. If a socket has become corroded, clean the socket and bulb base with an abrasive fiber sanding pad or metallic bristle brush. Replace sockets and bulbs that are deformed from corrosion that could prevent a continuous body ground.

Wire connectors can make intermittent contact or become corroded. Before coupling wire connectors, inspect the terminals inside the connector. Male terminals should not be bent or disengaged from the insulator. Female terminals should not be sprung open or disengaged from the insulator. Bent and sprung terminals can be repaired using needle nose pliers and pick tools. Corroded terminals appear chalky or green. Corroded terminals should be replaced to avoid recurrence of intermittent connections or other problem symptoms. Wire connector terminals should be coated with Mopar® Multi-purpose grease or equivalent to avoid corrosion.

Begin electrical system failure diagnosis by testing related fuses and circuit breakers in the fuse block and engine compartment. Verify that bulbs are in good condition and test continuity of the circuit ground.

OPERATION

The exterior lighting system lamps are actuated through a series of controls, switches, relays and circuitry. Fuse 32 in the Underhood Accessory Fuse Block powers the system. All brake lamps, both high and low beam headlamps, turn signal lamps, fog lamps, backup lamps, marker lamps and license plate lamps are individually protected by fuses within the illumination control module. The headlamp switch is part of the illumination control module and is located behind a cover at the end of the instrument panel on the driver side.

DIAGNOSIS AND TESTING

LAMPS/LIGHTING - EXTERIOR

EXTERIOR LAMPS

WARNING: EYE PROTECTION SHOULD BE USED WHEN SERVICING GLASS COMPONENTS. PERSONAL INJURY CAN RESULT.

CAUTION: Do not touch the glass of halogen bulbs with fingers or other possibly oily surface, reduced bulb life will result. Do not use bulbs other than those indicated in the Bulb Application table. Damage to lamp and/or Illumination Control Module can result. Do not use fuses, circuit breakers or relays having greater amperage value than indicated on the fuse panel or in the Owner's Manual.

When a vehicle experiences problems with the exterior lamp system, verify the condition of the battery connections, fuses, charging system, wire connectors, multifunction switch and headlamp switch.

Each vehicle is equipped with various lamp assemblies. A good ground is necessary for proper lighting operation. Grounding is provided by the lamp socket when it comes in contact with the metal body, or through a separate ground wire.

When changing bulbs, check the socket for loose pin connections and/or evidence of corrosion. Repair as necessary.

When it is necessary to remove a component to service another, it should not be necessary to apply excessive force to bend a component to remove it. Before damaging a trim component, verify hidden fasteners or captured edges are not holding the component in place.

HEADLAMPS

If a vehicle experiences problems with the headlamp system, verify the following are in operational condition:

- Battery connections
- Charging system
- Headlamp bulbs
- High beam dimmer switch
- Headlamp switch
- Wiring harness connectors

For complete headlamp and exterior lighting diagnosis, see exterior lighting electrical diagnostics section.

HEADLAMP DIAGNOSIS

CONDITION	POSSIBLE CAUSES	CORRECTION
HEADLAMPS ARE DIM WITH ENGINE IDLING OR IGNITION TURNED OFF	1. Loose or corroded battery cables.	1. Clean and secure battery cable clamps and posts.
	2. Loose or worn generator drive belt.	2. Adjust or replace generator drive belt.
	3. Charging system output too low.	3. Test and repair charging system.
	4. Battery has insufficient charge.	4. Test battery state-of-charge.
	5. Battery is sulfated or shorted.	5. Load test battery.
	6. Both headlamp bulbs are defective.	6. Replace both headlamp bulbs.

CONDITION	POSSIBLE CAUSES	CORRECTION
HEADLAMP BULBS BURN OUT FREQUENTLY	1. Charging system output too high.	1. Test and repair charging system.
	2. Loose or corroded terminals or splices in circuit.	2. Inspect and repair all connectors and splices.
HEADLAMPS ARE DIM WITH ENGINE RUNNING ABOVE IDLE	1. Charging system output too low.	1. Test and repair charging system.
	2. Both headlamp bulbs defective.	2. Replace both headlamp bulbs.
HEADLAMPS FLASH RANDOMLY	1. Faulty headlamp switch.	1. Replace headlamp switch.
	2. Loose or corroded terminals or splices in circuit.	2. Inspect and repair all connectors and splices.
HEADLAMPS DO NOT ILLUMINATE	1. No voltage to headlamps.	1. Check fuse. If good, repair open headlamp circuit.
	2. No ground at headlamps.	2. Repair circuit ground.
	3. Faulty headlamp switch.	3. Replace headlamp switch.

SPECIFICATIONS - EXTERIOR LAMPS

CAUTION: Do not use bulbs other than those listed in the Bulb Application Table. Damage to lamp can result. Do not touch halogen bulbs with fingers or other oily surfaces. Bulb life will be reduced.

BULB APPLICATION TABLE

LAMP	BULB
Backup Lamp	21W
Front Fog Lamp	HB4 55W
Front Marker Lamp	W5W
Front Position Lamp	W5W
Front Turn Signal	Y21W
Headlamp-High Beam	12V55W H7U
Headlamp-Low Beam	12V55W H7U
Rear Marker Lamp	W5W
Turn Signal Lamp	Y21W
Tail/Stop Lamp	21/5W

BACKUP LAMP

REMOVAL

1. Disconnect the negative battery cable.
2. Remove the access panel in the interior trim panel.
3. Rotate the backup lamp socket (1) counterclockwise and pull it from the rear lamp unit.
4. Remove the bulb from backup lamp socket.

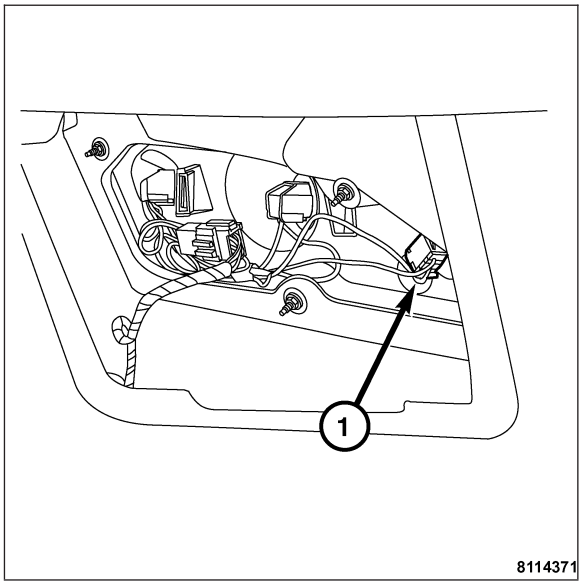

INSTALLATION

1. Install the bulb (2) into the backup lamp socket (1).
2. Insert the backup lamp socket (1) into the rear lamp unit (4) and rotate clockwise to lock.
3. Install the access panel into the interior trim panel.
4. Connect the negative battery cable.

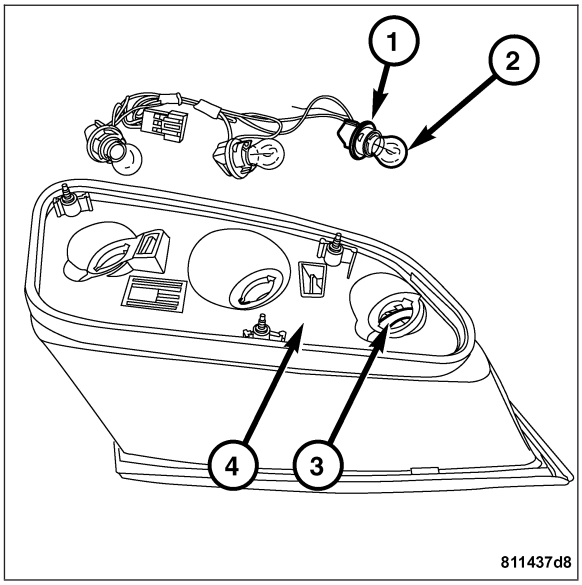

BACKUP LAMP SWITCH

DESCRIPTION

BACKUP LAMP SWITCH (Manual Transmission)

The backup lamp switch (2) for manual transmission models is mounted directly on the outside housing of the transmission. For complete backup lamp switch removal procedures, see back up lamp switch removal in the manual transmission section. **Refer to Page 21-353**.

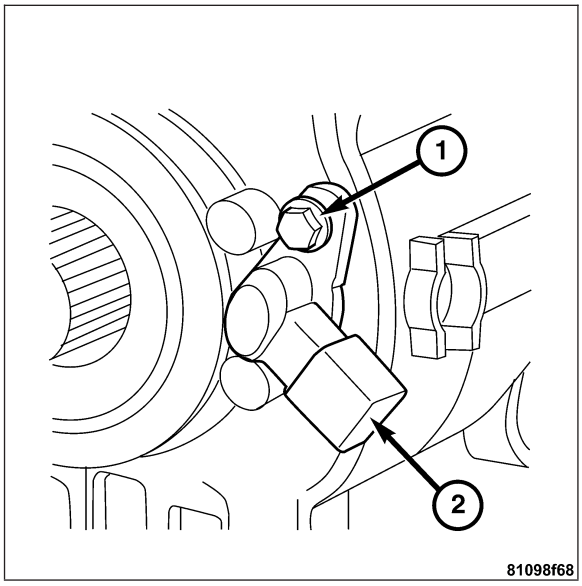

BACKUP LAMP SWITCH (Automatic Transmission)

The backup lamp switch for automatic transmission models is an integrated component and function of the shifter mechanism (4) and cannot be adjusted, or repaired. If faulty, worn or damaged, the entire shifter mechanism assembly must be replaced. For complete backup lamp switch removal procedures, see shifter mechanism removal in the automatic transmission section. **Refer to Page 21-340**.

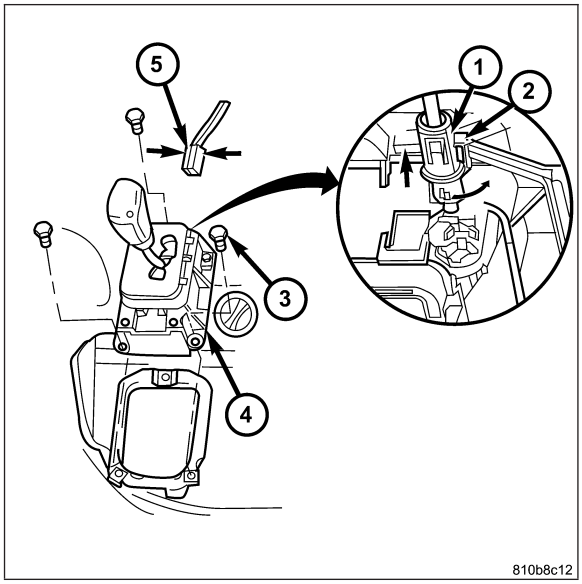

BRAKE LAMP RELAY

DESCRIPTION

The brake lamp relay is located in the underhood accessory fuse block in the engine compartment. The brake lamp relay is a micro relay and is contained within a small, rectangular, molded plastic housing. All of the required inputs and outputs are connected to 9 blades that extend from the bottom of the relay base.

OPERATION

The brake lamp relay uses a low current input from the illumination control module to control a high current output to the brake lamps. When the relay coil is energized, an electromagnetic field is produced by the coil windings. The field draws the moveable relay contact point away from the fixed normally open contact point and holds it against the fixed normally closed contact point.

The brake lamp relay terminals are connected to the vehicle electrical system through a connector receptacle in the underhood accessory fuse block.

REMOVAL

1. Disconnect the negative battery cable.
2. Remove the underhood accessory fuse block cover and relay cover panel.
3. Pull upward on the brake lamp relay (1) and remove it from the underhood accessory fuse block.

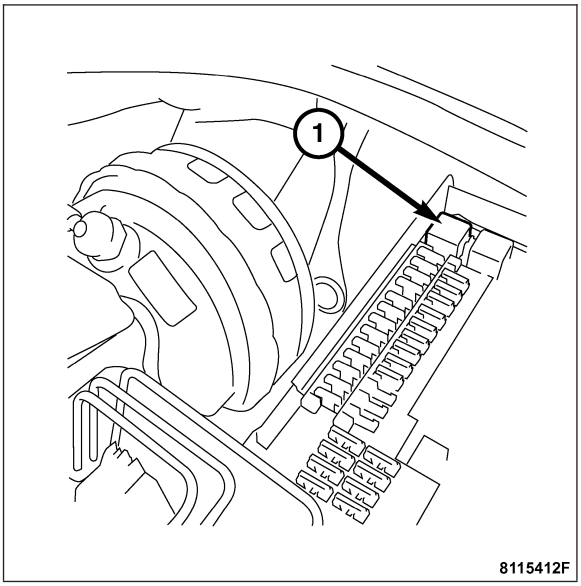

INSTALLATION

1. Insert the brake lamp relay into the underhood accessory fuse block.
2. Install the relay cover panel and the underhood accessory fuse block cover.
3. Connect the negative battery cable.

BRAKE LAMP SWITCH

DESCRIPTION

The plunger type brake lamp switch is mounted to a bracket attached to the brake pedal assembly under the instrument panel. The brake lamp switch cannot be adjusted or repaired. If faulty, worn, or damaged, the entire unit must be replaced.

OPERATION

The brake lamp switch has three internal switches with a single, six blade harness connection at one end. When the brake pedal is in the released position, the plunger on the outside of the brake lamp switch is forced inward, which opens the circuit. When the brake pedal is pressed the plunger is released, and the circuit is closed. This action completes the brake lamp circuit, and allows the brake lamps and center high mounted brake lamp to illuminate.

REMOVAL

1. Disconnect the negative battery cable.
2. Remove the lower instrument panel cover (5). **Refer to Page 23-149**.

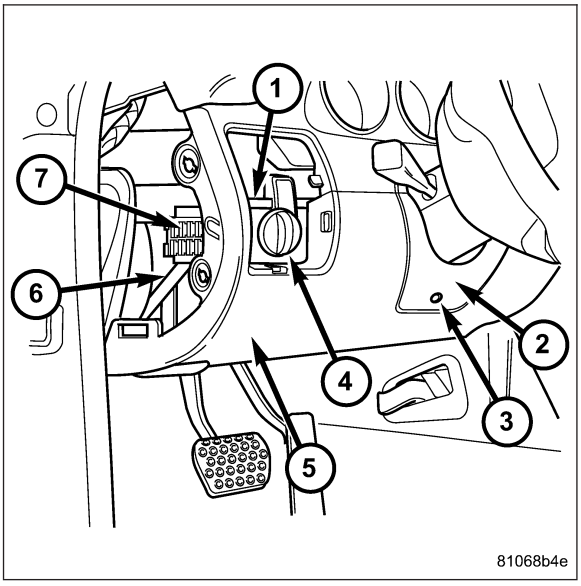

3. Disconnect the brake lamp switch harness connectors (1).
4. Press the locking tab (2) and rotate the brake lamp switch (4) clockwise.
5. Remove the brake lamp switch (4) from the brake pedal brace (3).

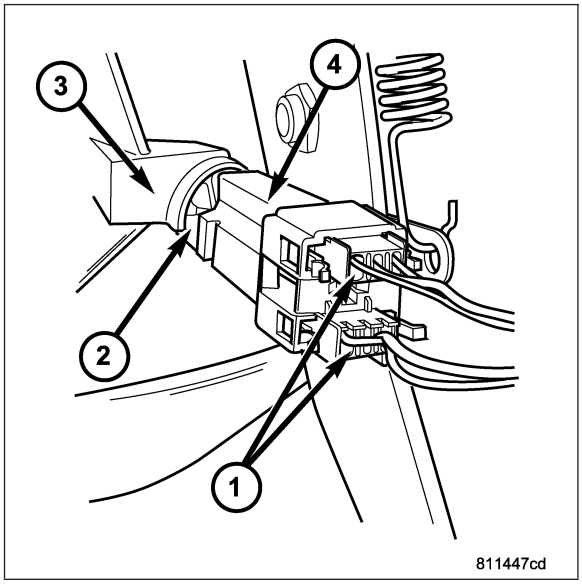

INSTALLATION

1. Install the brake lamp switch into the brake pedal brace (2) and rotate counterclockwise to stop.
2. Connect the brake lamp switch harness connector (1).
3. Install the lower instrument panel cover. **Refer to Page 23-155**.
4. Connect the negative battery cable.

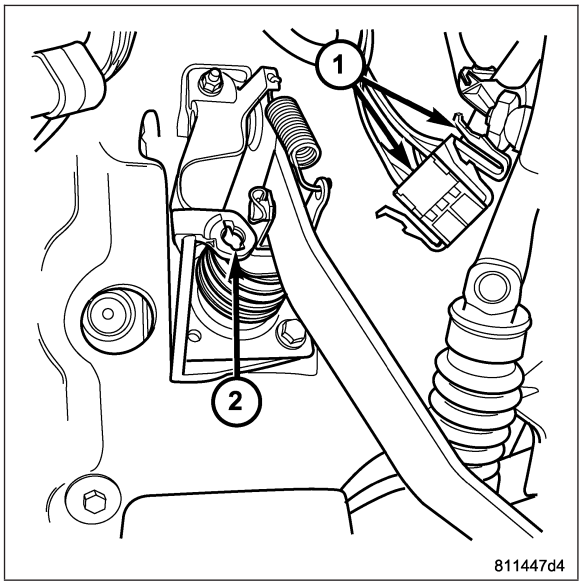

CENTER HIGH MOUNTED STOP LAMP

DESCRIPTION

The center high mounted stop lamp (CHMSL) uses LED's for illumination, they cannot be adjusted or repaired. If faulty or damaged, the entire CHMSL assembly must be replaced. For complete CHMSL removal procedures, see center high mounted stop lamp removal in this section. For complete CHMSL system wiring information and diagnosis, see exterior lamps/lighting electrical diagnostics also in this section.

REMOVAL

1. Disconnect the negative battery cable.
2. Remove the liftgate interior trim panel. **Refer to Page 23-48**.
3. Remove the retaining screws (2) from the liftgate.
4. Disconnect the center high mounted stop lamp (CHMSL) harness connector (3).
5. Slide the CHMSL assembly (1) outward and remove from the liftgate.

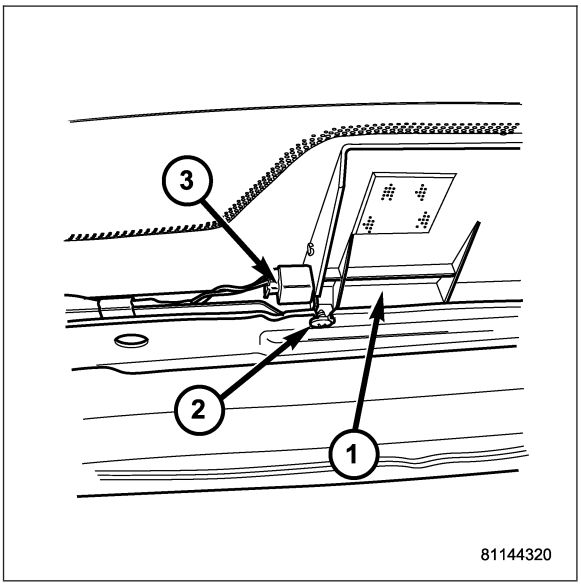

INSTALLATION

1. Insert the center high mount stop lamp (CHMSL) assembly into the liftgate, install the retaining screws and tighten.
2. Connect the CHMSL harness connector.
3. Install the liftgate interior trim panel. **Refer to Page 23-49**.
4. Connect the negative battery cable.

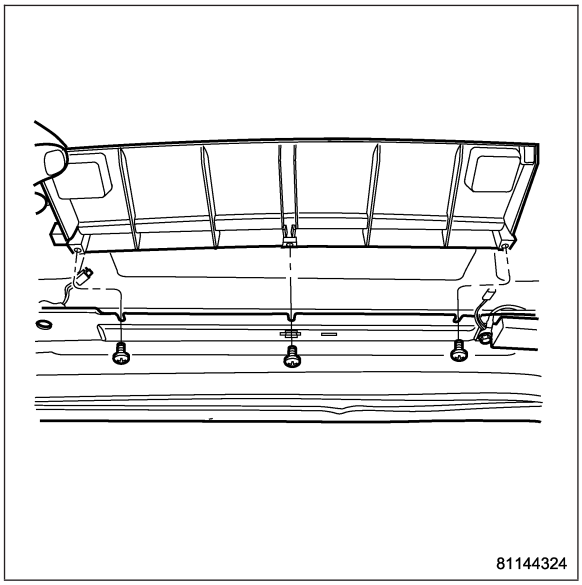

FOG LAMP

REMOVAL

1. Disconnect the negative battery cable.
2. Raise and support the vehicle.
3. Rotate the steering wheel fully in one direction and open the access panel (1) in the front inner fender liner.

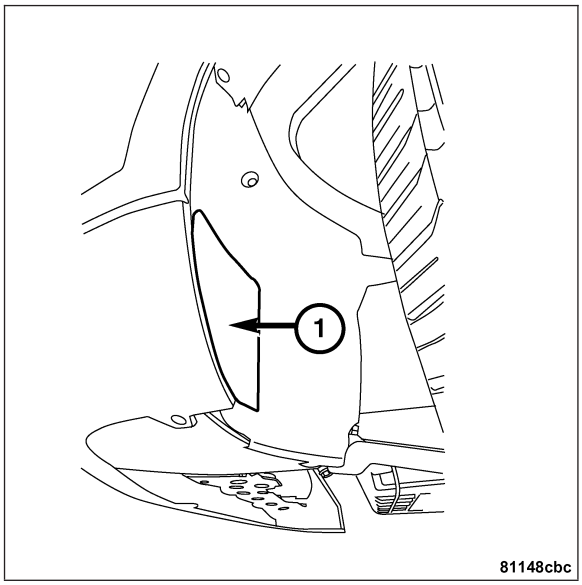

4. Remove the fog lamp harness connector (1) from the fog lamp bulb (2).
5. Rotate the fog lamp bulb (2) counterclockwise and remove from the fog lamp unit (3).

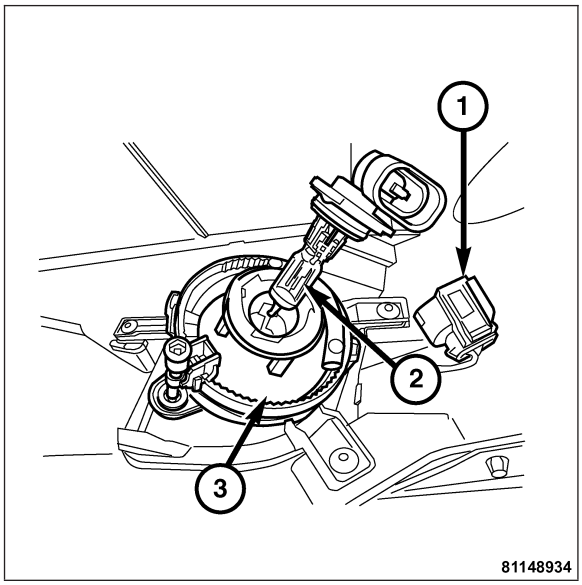

INSTALLATION

1. Insert and rotate the fog lamp bulb (2) clockwise into the fog lamp unit (3).
2. Connect the fog lamp harness connector (1) to the fog lamp bulb (2).

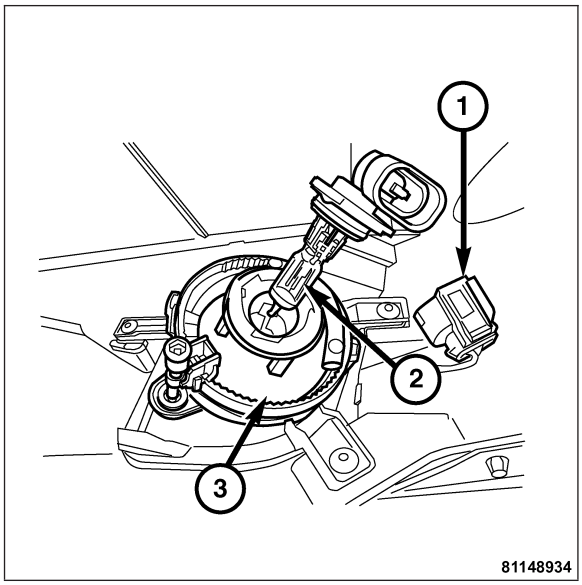

3. Close the access panel (1) in the front inner fender liner.
4. Lower the vehicle.
5. Connect the negative battery cable.

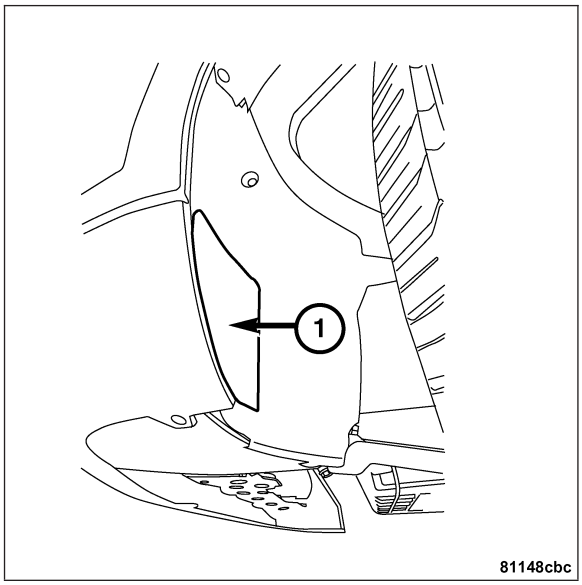

FOG LAMP UNIT

REMOVAL

1. Disconnect the negative battery cable.
2. Raise and support the vehicle.
3. Remove the lower engine splash shield retaining nuts (1), and remove the splash shield.

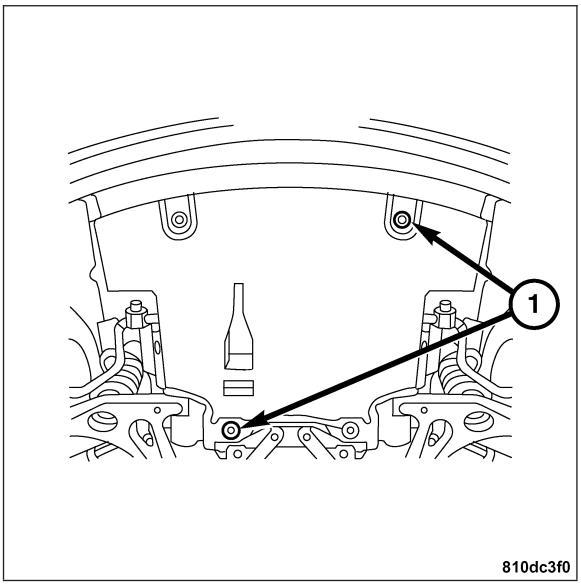

4. Disconnect the fog lamp harness connector (2) from the fog lamp bulb (1).
5. Remove the fog lamp unit attachment bolts (3) and remove the fog lamp unit from the fascia panel.

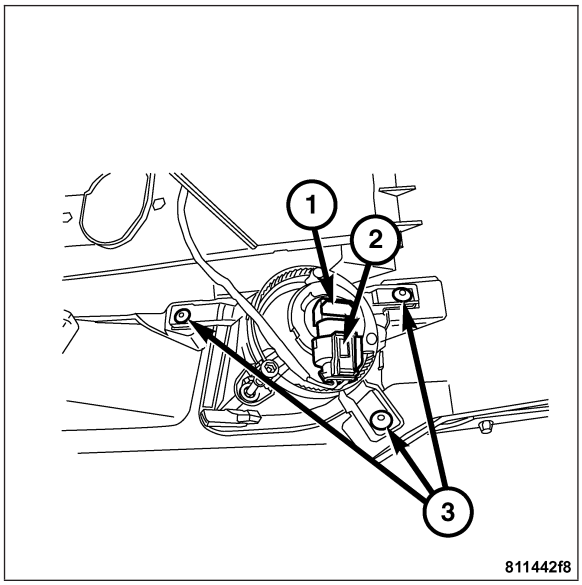

INSTALLATION

1. Position the fog lamp unit into the fascia panel.
2. Insert the fog lamp unit attachment bolts (1) and secure.
3. Connect the fog lamp harness connector to the fog lamp bulb (2).
4. Install the lower engine splash shield.
5. Connect the negative battery cable.

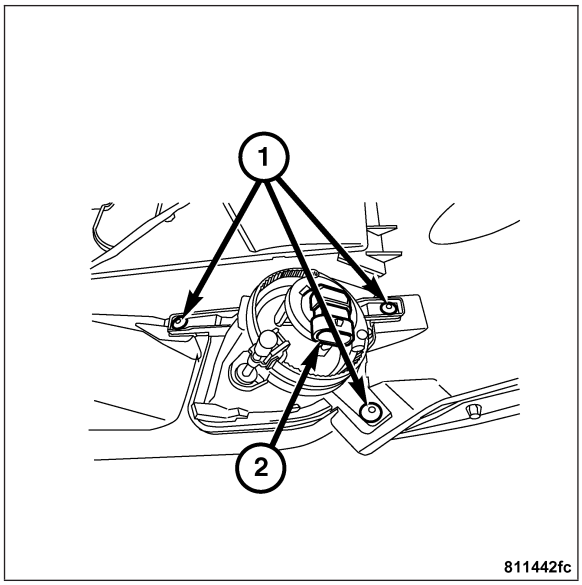

FRONT POSITION LAMP

DESCRIPTION

All vehicles are equipped with front position lamps (1). One front position lamp is incorporated into each of the headlamp units. These lamps utilize a clear lens and clear bulb, and function in the same way as parking lamps. The front position lamp is built into the headlamp, and therefore does not require its own lamp housing.

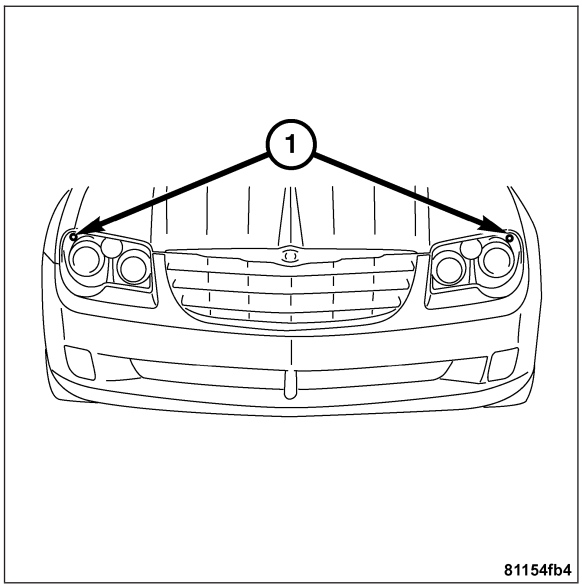

OPERATION

The front position lamps are turned on or off with the headlamp switch. These lamps function in the same way that parking lamps do. The bulbs for the front position lamps are serviceable when the headlamp unit is removed, however they cannot be adjusted. If the housing is faulty, worn, or damaged, the entire headlamp unit must be replaced.

REMOVAL

1. Disconnect the negative battery cable.
2. Remove the headlamp unit. **Refer to Page 8L-103**.
3. Rotate the front position lamp socket (1) counterclockwise and pull the bulb from the socket.

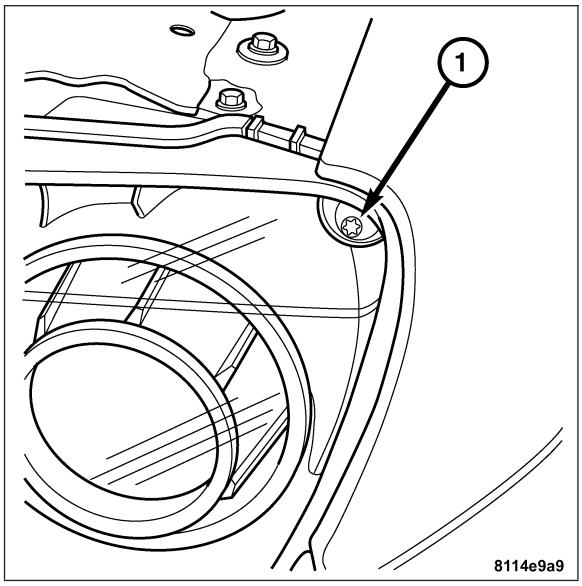

INSTALLATION

1. Press the front position lamp bulb into the socket and insert it into the headlamp unit (1), rotating clockwise to lock.
2. Install the headlamp unit. **Refer to Page 8L-104**.
3. Connect the negative battery cable.

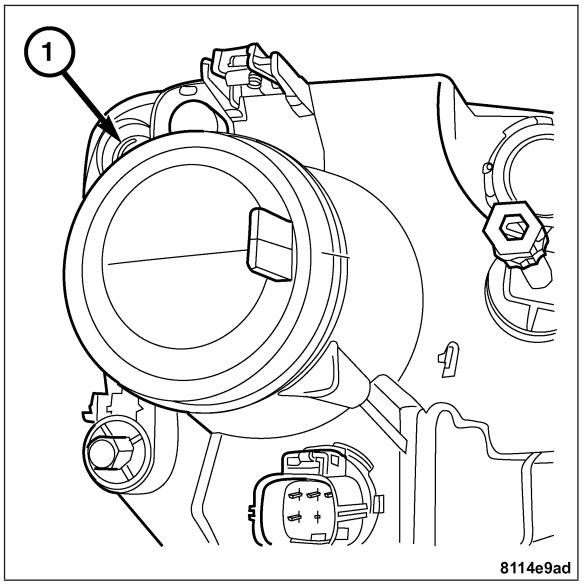

FRONT TURN SIGNAL LAMP

REMOVAL

1. Disconnect the negative battery cable.
2. Remove the headlamp unit. **Refer to Page 8L-103**.
3. Rotate the turn signal bulb housing (1) counterclockwise and remove from the headlamp unit (2). Remove the bulb from the bulb housing.

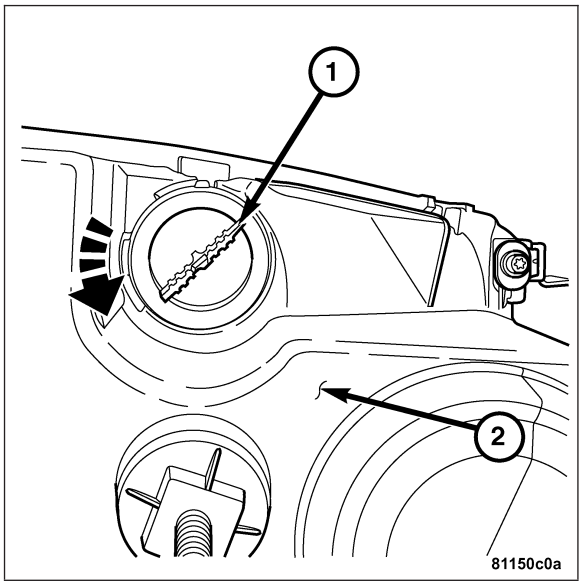

INSTALLATION

1. Insert the turn signal bulb (2) into the bulb housing (1) and install into the headlamp unit (3) by rotating clockwise.
2. Install the headlamp unit. **Refer to Page 8L-104**.
3. Connect the negative battery cable.

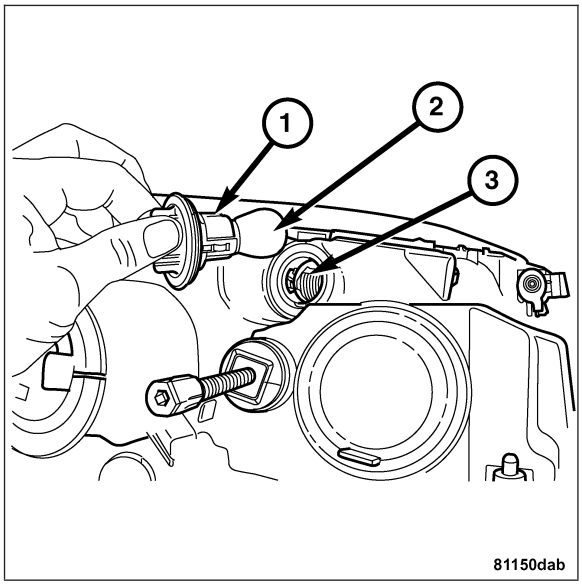

HAZARD FLASHER

DESCRIPTION

The hazard flasher (1) is integrated within the hazard switch assembly (2) and cannot be adjusted or repaired. If faulty, worn, or damaged, the entire hazard switch assembly must be replaced. For complete hazard switch removal procedures, see hazard switch removal in this section. **Refer to Page 8L-100**.

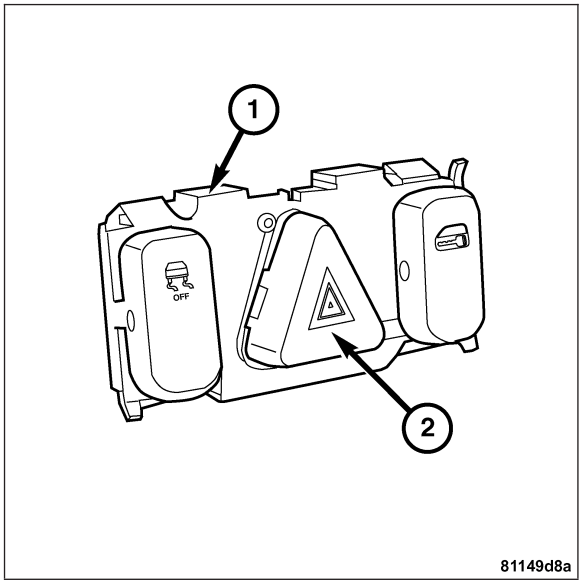

HAZARD SWITCH

DESCRIPTION

The hazard switch (1) is actuated by a push button located in the center of the instrument panel directly below the radio. The hazard switch is identified with a triangular shape and is red in color. Push and release the button (1) to turn the hazard function ON or OFF. When pushed, the button will move out from the panel in the ON position and remain in toward the panel in the OFF position.

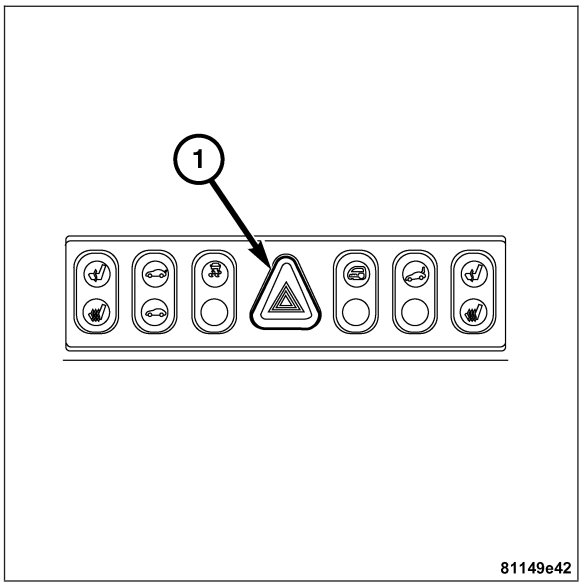

OPERATION

Push and release the hazard switch to turn the hazard function ON or OFF. The button will move out from the center console panel when in the ON position, and will remain in toward the center console panel when in the OFF position.

REMOVAL

WARNING: ON VEHICLES EQUIPPED WITH AIRBAGS, DISABLE THE AIRBAG SYSTEM BEFORE ATTEMPTING ANY STEERING WHEEL, STEERING COLUMN, OR INSTRUMENT PANEL COMPONENT DIAGNOSIS OR SERVICE. DISCONNECT AND ISOLATE THE BATTERY NEGATIVE (GROUND) CABLE, THEN WAIT TWO MINUTES FOR THE AIRBAG SYSTEM CAPACITOR TO DISCHARGE BEFORE PERFORMING FURTHER DIAGNOSIS OR SERVICE. THIS IS THE ONLY SURE WAY TO DISABLE THE AIRBAG SYSTEM. FAILURE TO TAKE THE PROPER PRECAUTIONS COULD RESULT IN ACCIDENTAL AIRBAG DEPLOYMENT AND POSSIBLE PERSONAL INJURY.

1. Disconnect the negative battery cable.
2. Remove the center console cover. **Refer to Page 23-173**.
3. Disconnect the center console switch harness connectors (1) and press the locking tabs to remove the outer gang of switches.

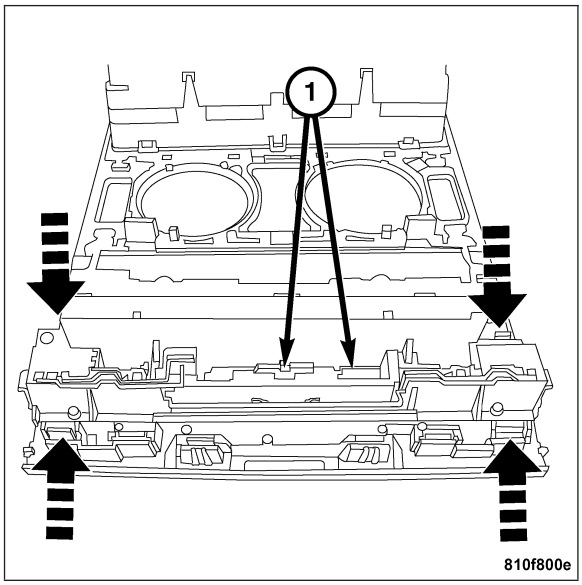

4. Press the hazard switch locking tabs and remove the hazard switch (2) from the center console cover (1).

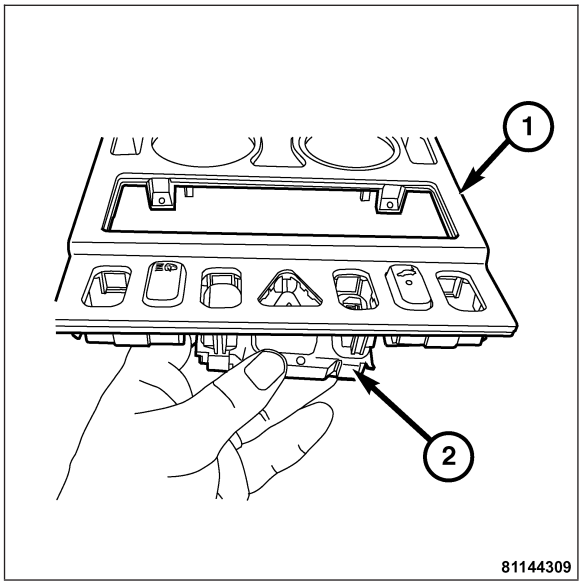

INSTALLATION

1. Insert the hazard switch (1) into the center console cover (2) and press to engage the locking tabs.
2. Install the outer gang of switches into the center console cover and press to engage the locking tabs.
3. Connect the center console switch harness connectors.

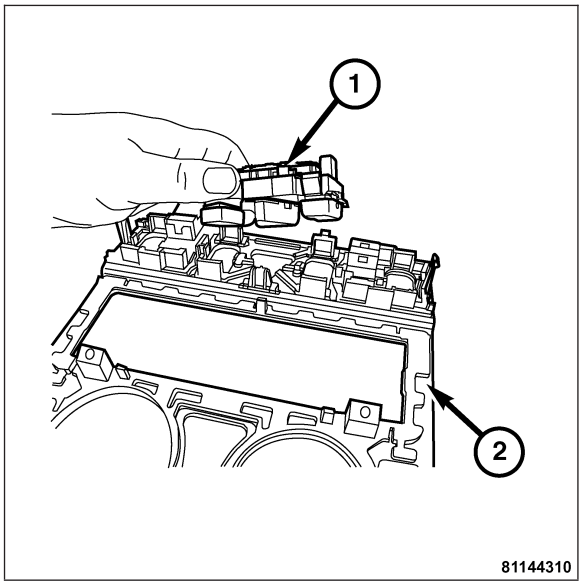

4. Install the center console cover. **Refer to Page 23-183**.
5. Connect the negative battery cable.

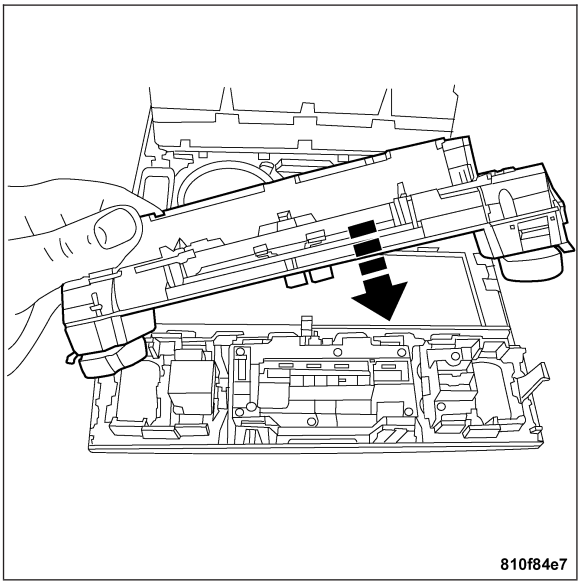

HEADLAMP

DESCRIPTION

The headlamp units are unique and modular in design. The headlamp unit contains four separate bulbs:

- Low Beam Lamp
- High Beam Lamp
- Front Position Lamp
- Front Turn Signal Lamp

OPERATION

The headlamps and front position lamps are controlled by the illumination control module, which contains a dedicated headlamp switch. The turn signal lamps are controlled by the multifunction switch. The headlamps are serviceable separately. For complete exterior lamp replacement procedures, see exterior lamps/lighting removal procedures in this section.

REMOVAL

LOW BEAM BULB

1. Disconnect the negative battery cable.
2. Remove the headlamp unit. **Refer to Page 8L-103**.
3. Remove the headlamp bulb access plug.
4. Disconnect the headlamp bulb harness connector (2).
5. Disengage the bulb retaining clip (1) and remove the bulb from the headlamp unit.

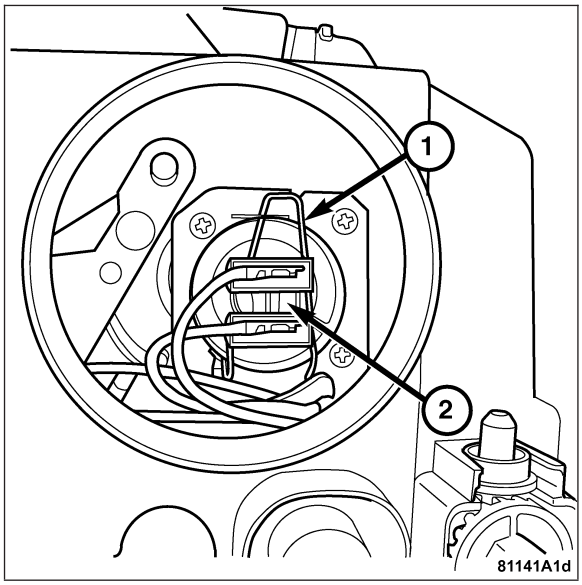

REMOVAL - HIGH BEAM BULB

1. Disconnect the negative battery cable.
2. Remove the headlamp unit. **Refer to Page 8L-103**.

3. Remove the headlamp bulb access plug.
4. Disconnect the headlamp bulb harness connector (1).
5. Disengage the bulb retaining clip (2) and remove the bulb (3) from the headlamp unit.

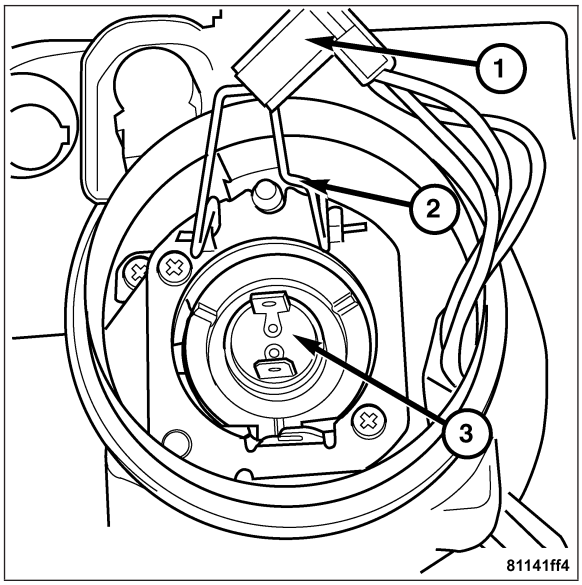

INSTALLATION

LOW BEAM BULB

1. Install the headlamp bulb (1) into the headlamp unit (2) and engage the retaining clip (3).
2. Connect the headlamp bulb harness connector.
3. Install the headlamp bulb access plug.
4. Install the headlamp unit. **Refer to Page 8L-104**.
5. Connect the negative battery cable.

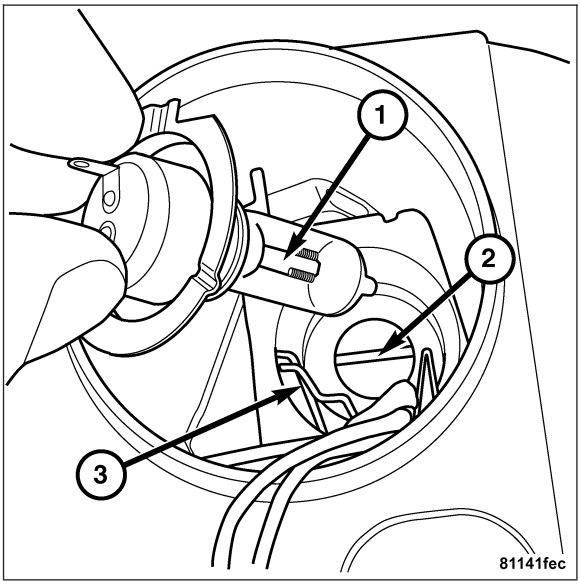

INSTALLATION - HIGH BEAM BULB

1. Install the headlamp bulb (3) into the headlamp unit and engage the retaining clip (2).
2. Connect the headlamp bulb harness connector (1).
3. Install the headlamp bulb access plug.
4. Install the headlamp unit. **Refer to Page 8L-104**.
5. Connect the negative battery cable.

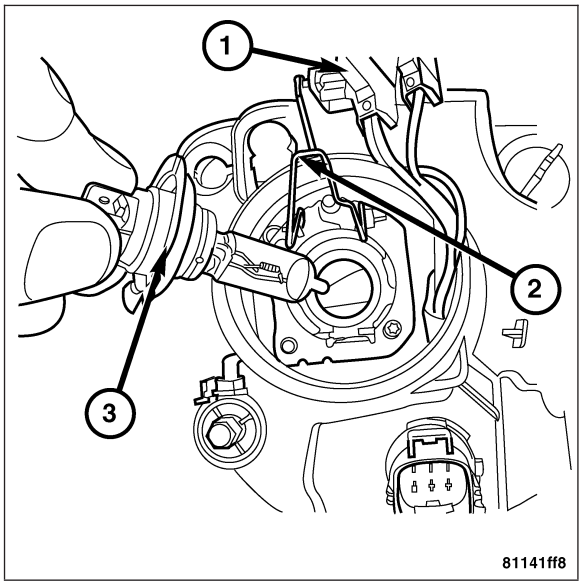

HEADLAMP SWITCH

DESCRIPTION

The headlamp switch is part of the illumination control module. A knob on the face of the module controls exterior lighting functions. The exterior lighting and headlamp switch portions of the illumination control module cannot be adjusted or repaired. If faulty or damaged, the entire module assembly must be replaced as a unit.

OPERATION

The headlamp switch has an off, parking lamp, fog lamp, and headlamp on position. High beam headlamps are controlled by the fore/aft movement of the multi function switch stalk. The fog lamps are activated by pulling rearward on the headlamp switch knob.

REMOVAL

WARNING: ON VEHICLES EQUIPPED WITH AIRBAGS, DISABLE THE AIRBAG SYSTEM BEFORE ATTEMPTING ANY STEERING WHEEL, STEERING COLUMN, OR INSTRUMENT PANEL COMPONENT DIAGNOSIS OR SERVICE. DISCONNECT AND ISOLATE THE BATTERY NEGATIVE (GROUND) CABLE, THEN WAIT TWO MINUTES FOR THE AIRBAG SYSTEM CAPACITOR TO DISCHARGE BEFORE PERFORMING FURTHER DIAGNOSIS OR SERVICE. THIS IS THE ONLY SURE WAY TO DISABLE THE AIRBAG SYSTEM. FAILURE TO TAKE THE PROPER PRECAUTIONS COULD RESULT IN ACCIDENTAL AIRBAG DEPLOYMENT AND POSSIBLE PERSONAL INJURY.

1. Disconnect the negative battery cable.
2. Remove the lower instrument panel. **Refer to Page 23-149**.

3. Unlock and disconnect the harness connectors (4) on the rear of the headlamp switch.
4. Remove the headlamp switch interior trim panel (2).
5. Remove the headlamp switch attachment screws (3) and (5).
6. Remove the headlamp switch from the lower instrument panel.

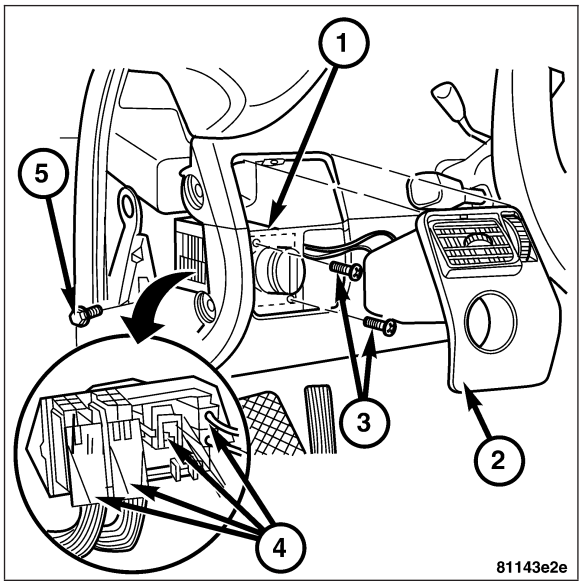

INSTALLATION

WARNING: ON VEHICLES EQUIPPED WITH AIRBAGS, DISABLE THE AIRBAG SYSTEM BEFORE ATTEMPTING ANY STEERING WHEEL, STEERING COLUMN, OR INSTRUMENT PANEL COMPONENT DIAGNOSIS OR SERVICE. DISCONNECT AND ISOLATE THE BATTERY NEGATIVE (GROUND) CABLE, THEN WAIT TWO MINUTES FOR THE AIRBAG SYSTEM CAPACITOR TO DISCHARGE BEFORE PERFORMING FURTHER DIAGNOSIS OR SERVICE. THIS IS THE ONLY SURE WAY TO DISABLE THE AIRBAG SYSTEM. FAILURE TO TAKE THE PROPER PRECAUTIONS COULD RESULT IN ACCIDENTAL AIRBAG DEPLOYMENT AND POSSIBLE PERSONAL INJURY.

1. Position the headlamp switch into the lower instrument panel (1).

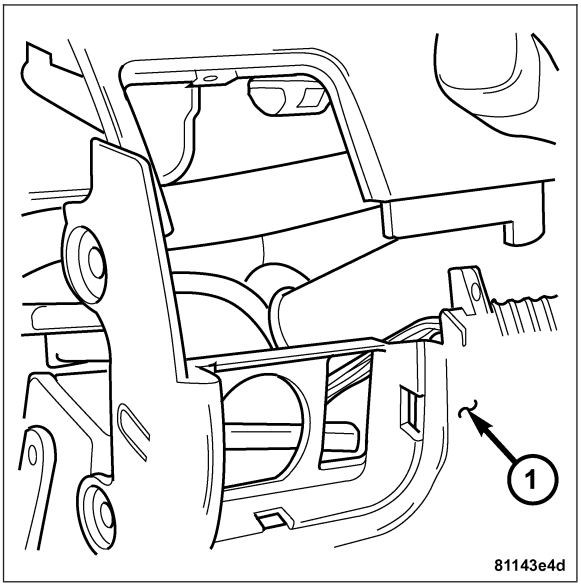

2. Install the headlamp switch attachment screws (1) and (2), and secure.
3. Install the headlamp switch interior tram panel.
4. Connect the harness connectors at the rear of the headlamp switch and lock to secure.
5. Install the lower instrument panel. **Refer to Page 23-155**.
6. Connect the negative battery cable.

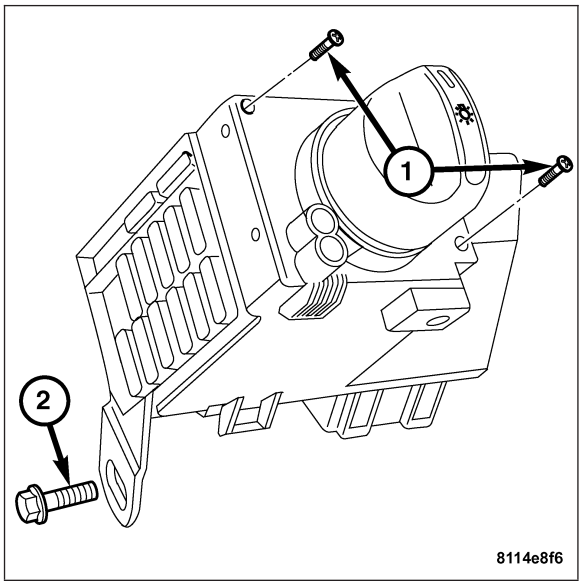

HEADLAMP UNIT

DESCRIPTION

The headlamp unit is a housing that integrates separate bulbs for low beam (3) and high beam (1) headlamps. It also includes the turn signal (2) and front position (6) bulbs as well. The low beam, high beam and turn signal bulbs are enclosed with access covers for protection. One single harness connector (5) supplies ground and power from fuses within the illumination control module/IP fuse block.

The entire headlamp unit is mounted onto the front of the core support structure and aimed with built in adjustment screws (4).

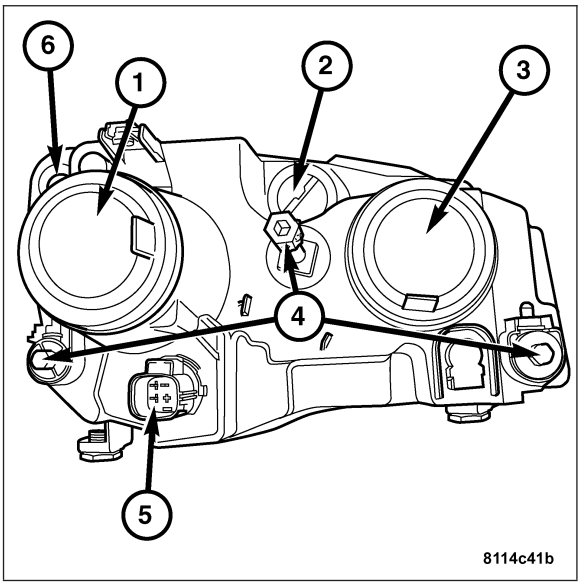

REMOVAL

1. Disconnect the negative battery cable.
2. Remove the headlamp unit upper retaining bolts (1).
3. Open the access panel in the inner fender well.
4. Remove the lower headlamp unit retaining bolts (2).
5. Lift the headlamp unit from the front fascia and disconnect the harness connector and the front position lamp socket.

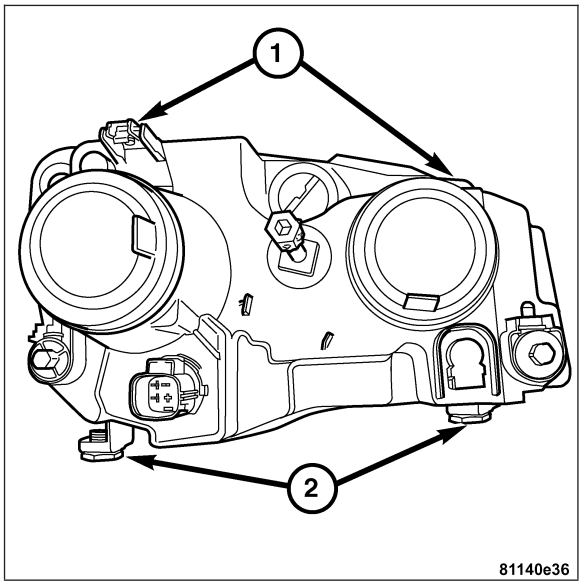

INSTALLATION

1. Install the front position lamp socket and the headlamp unit harness connector.
2. Position the headlamp unit into the fascia area.
3. Install the upper retaining bolts (1) finger tight.
4. Install the lower retaining bolts finger tight.
5. Tighten all retaining bolts to torque specification.
6. Close the access panel in the inner fender well.
7. Connect the negative battery cable.

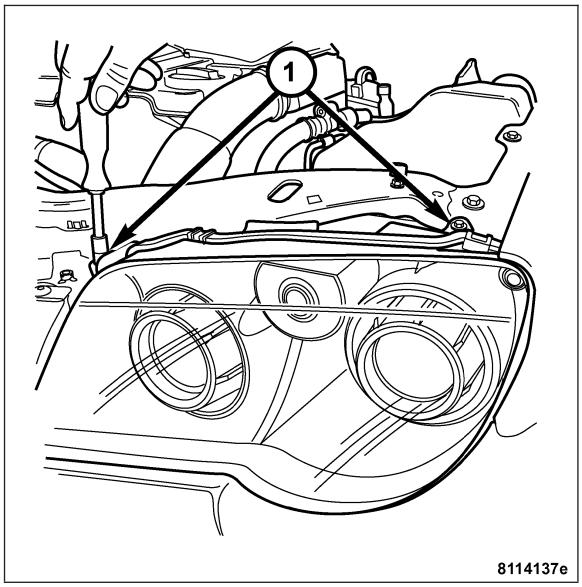

LICENSE PLATE LAMP

REMOVAL

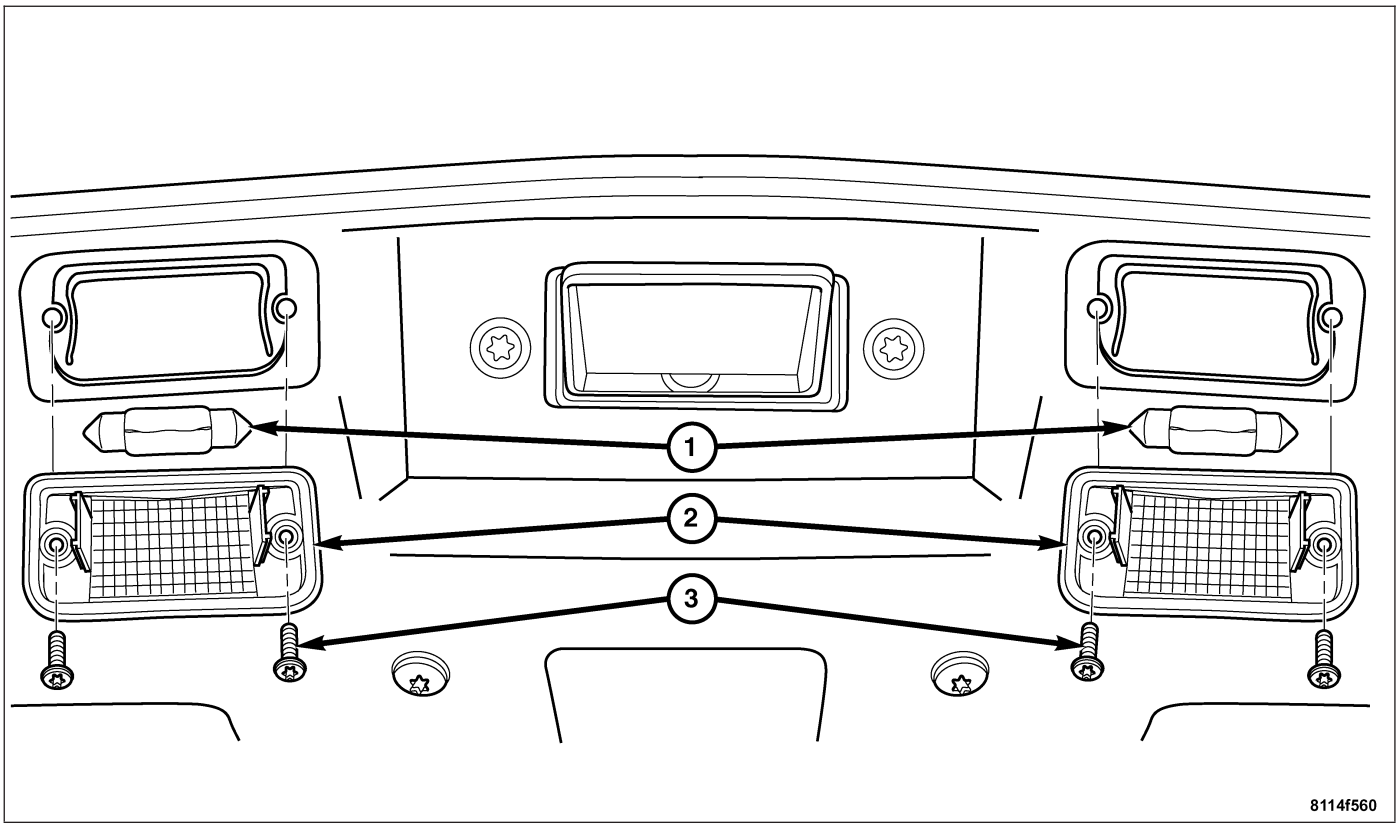

1. Disconnect the negative battery cable.
2. Open the liftgate and remove the license plate lamp lens attachment screws (3).
3. Remove the license plate lamp lens (2) and pull the bulb (1) outward from the lamp socket.

INSTALLATION

1. Insert the bulb into the lamp socket and place the license plate lamp lens (2) into position.
2. Install the attachment screws and secure. Close the liftgate.
3. Connect the negative battery cable.

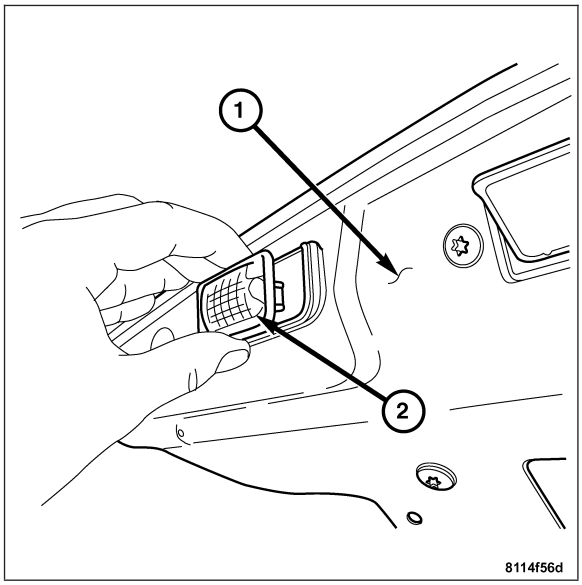

MARKER LAMP

REMOVAL

REAR MARKER LAMP

1. Disconnect the negative battery cable.
2. Insert a trim stick (2) at the front edge of the rear marker lamp lens (1), gently depress rearward and lift out from the fascia.
3. Rotate the socket counterclockwise and remove the rear marker lamp bulb from the socket.

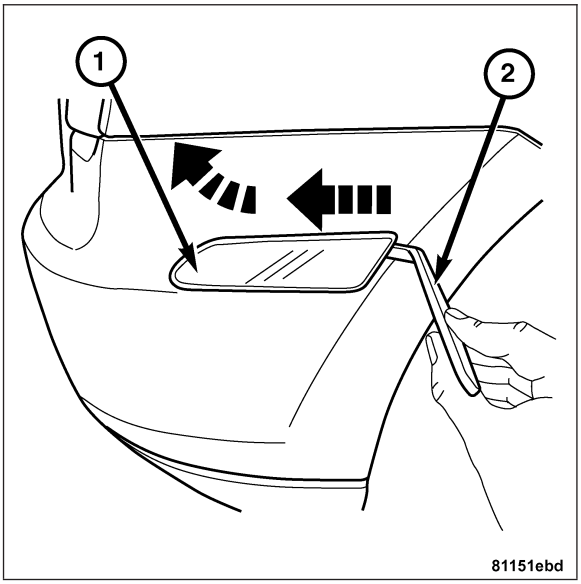

REMOVAL - FRONT MARKER LAMP

1. Disconnect the negative battery cable.
2. Insert a trim stick (2) at the rear edge of the front marker lamp lens (1), gently depress forward and lift out from the fascia.
3. Rotate the socket counterclockwise and remove the front marker lamp bulb from the socket.

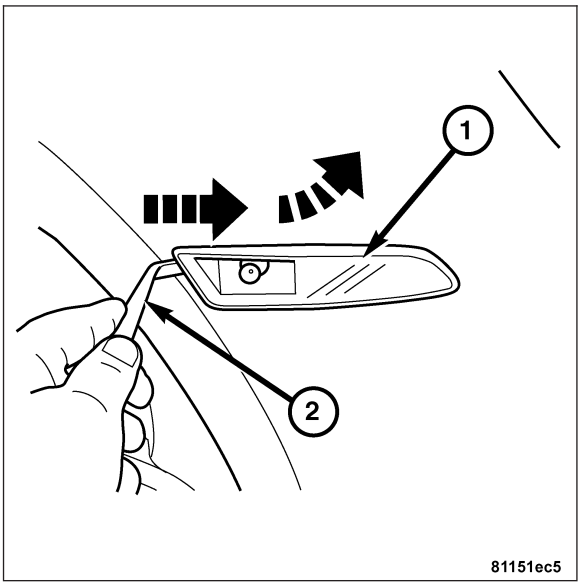

INSTALLATION

REAR MARKER LAMP

1. Insert the rear marker bulb into the socket (1) and rotate clockwise into the rear marker lamp lens (2).
2. Install the back edge of the rear marker lamp lens first into the fascia (3), then press the forward edge in at the front.
3. Connect the negative battery cable.

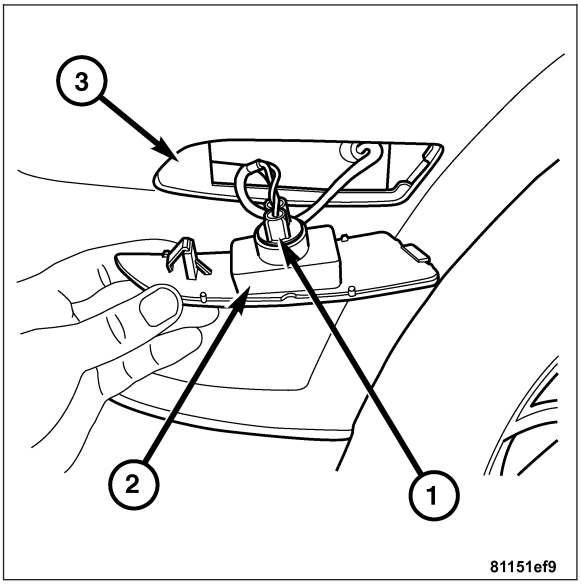

INSTALLATION - FRONT MARKER LAMP

1. Insert the front marker bulb into the socket (1) and rotate clockwise into the front marker lamp lens (3).
2. Install the forward edge of the front marker lamp lens first into the fascia (2), then press the rear edge in at the back.
3. Connect the negative battery cable.

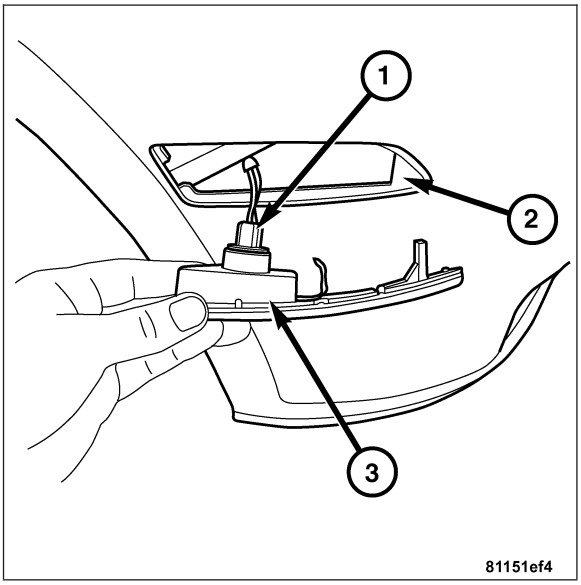

MULTI-FUNCTION SWITCH

REMOVAL

WARNING: ON VEHICLES EQUIPPED WITH AIRBAGS, DISABLE THE SUPPLEMENTAL RESTRAINT SYSTEM BEFORE ATTEMPTING ANY STEERING WHEEL, STEERING COLUMN, DRIVER AIRBAG, PASSENGER AIRBAG, FRONT IMPACT SENSOR, SIDE IMPACT SENSOR, SIDE CURTAIN AIRBAG, OR INSTRUMENT PANEL COMPONENT DIAGNOSIS OR SERVICE. DISCONNECT AND ISOLATE THE BATTERY NEGATIVE (GROUND) CABLE, THEN WAIT TWO MINUTES FOR THE SYSTEM CAPACITOR TO DISCHARGE BEFORE PERFORMING FURTHER DIAGNOSIS OR SERVICE. THIS IS THE ONLY SURE WAY TO DISABLE THE SUPPLEMENTAL RESTRAINT SYSTEM. FAILURE TO TAKE THE PROPER PRECAUTIONS COULD RESULT IN ACCIDENTAL AIRBAG DEPLOYMENT AND POSSIBLE PERSONAL INJURY.

1. Disconnect the negative battery cable.
2. Remove the steering wheel. **Refer to Page 19-25**.
3. Remove the clockspring. **Refer to Page 8O-94**.
4. Remove the lower instrument panel. **Refer to Page 23-149**.
5. Remove the screw (1) attaching the speed control switch to the multifunction switch.
6. Remove the bracket below the speed control switch.
7. Remove the screws (2) attaching the multifunction switch to the steering column.

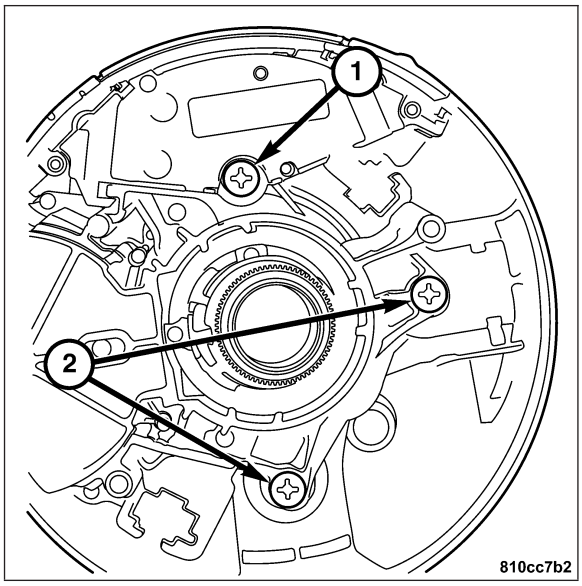

8. Disconnect the multifunction switch harness connectors.
9. Remove the wire harness from the steering column.
10. Remove the multifunction switch from the steering column.

INSTALLATION

WARNING: ON VEHICLES EQUIPPED WITH AIRBAGS, DISABLE THE AIRBAG SYSTEM BEFORE ATTEMPTING ANY STEERING WHEEL, STEERING COLUMN, OR INSTRUMENT PANEL COMPONENT DIAGNOSIS OR SERVICE. DISCONNECT AND ISOLATE THE BATTERY NEGATIVE (GROUND) CABLE, THEN WAIT TWO MINUTES FOR THE AIRBAG SYSTEM CAPACITOR TO DISCHARGE BEFORE PERFORMING FURTHER DIAGNOSIS OR SERVICE. THIS IS THE ONLY SURE WAY TO DISABLE THE AIRBAG SYSTEM. FAILURE TO TAKE THE PROPER PRECAUTIONS COULD RESULT IN ACCIDENTAL AIRBAG DEPLOYMENT AND POSSIBLE PERSONAL INJURY.

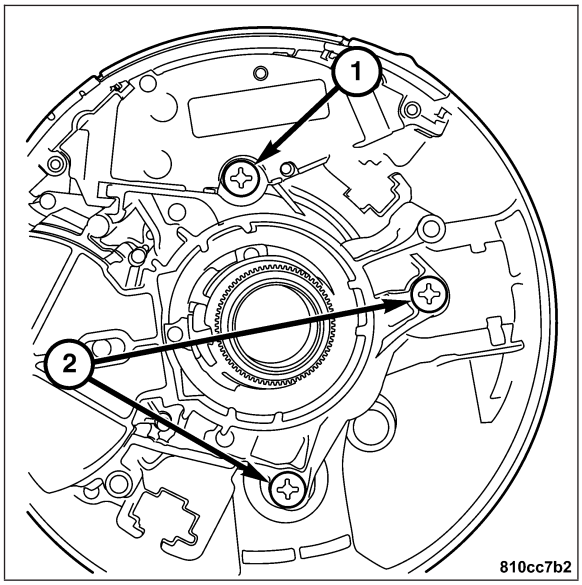

1. Install the multifunction switch to the steering column.
2. Install the wire harness to the steering column.
3. Connect the multifunction switch harness connectors.
4. Install the screws (2) attaching the multifunction switch to the steering column.
5. Install the bracket on the top of the multifunction switch.
6. Install the screw (1) attaching the speed control switch to the multifunction switch.
7. Install the lower instrument panel. **Refer to Page 23-155**.
8. Install the clockspring. **Refer to Page 8O-96**.
9. Install the steering wheel. **Refer to Page 19-26**.
10. Connect the negative battery cable.

TAIL LAMP UNIT

REMOVAL

TAIL LAMP UNIT

1. Disconnect the negative battery cable.
2. Remove the access panel from the cargo area interior trim panel.
3. Disconnect the tail lamp unit harness connector (2), and remove the retaining nuts (1).

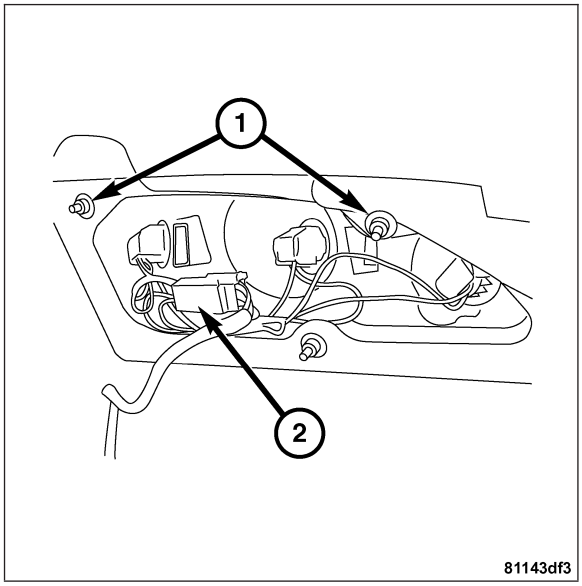

REMOVAL - TAIL/STOP

1. Disconnect the negative battery cable.
2. Remove the access panel from the cargo area interior trim panel.
3. Rotate the tail/stop lamp socket (2) counterclockwise and pull it from the tail lamp unit (1).
4. Remove the bulb from tail/stop lamp socket (2).

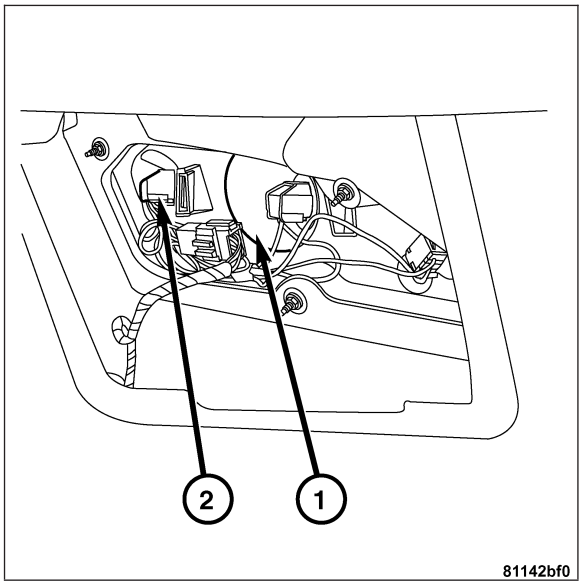

REMOVAL - TURN SIGNAL

1. Disconnect the negative battery cable.
2. Remove the access panel from the cargo area interior trim panel.
3. Rotate the turn signal lamp socket (2) counterclockwise and pull it from the tail lamp unit (1).
4. Remove the bulb from turn signal lamp socket (2).

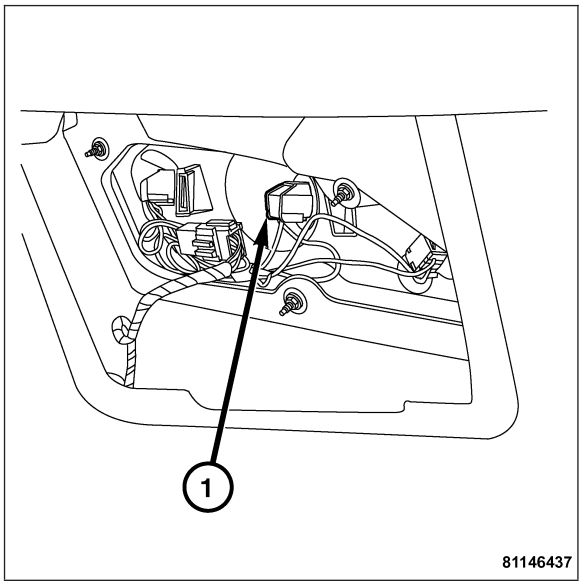

INSTALLATION

TAIL LAMP UNIT

1. Insert the tail lamp unit into the rear body panel (1) and install the retaining nuts.
2. Connect the harness connector and install the access panel into the rear cargo area interior trim panel.
3. Connect the negative battery cable.

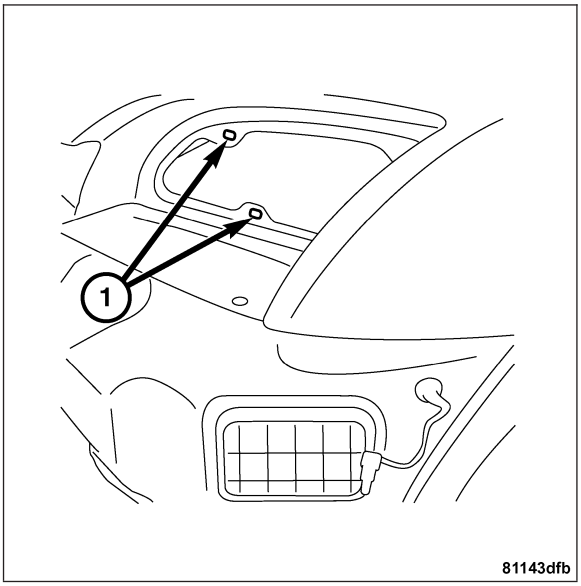

INSTALLATION - TAIL/STOP

1. Install the bulb (2) into the tail/stop lamp socket (1).
2. Insert the tail/stop lamp socket (1) into the tail lamp unit (3) and rotate clockwise to lock.
3. Install the access panel into the cargo area interior trim panel.
4. Connect the negative battery cable.

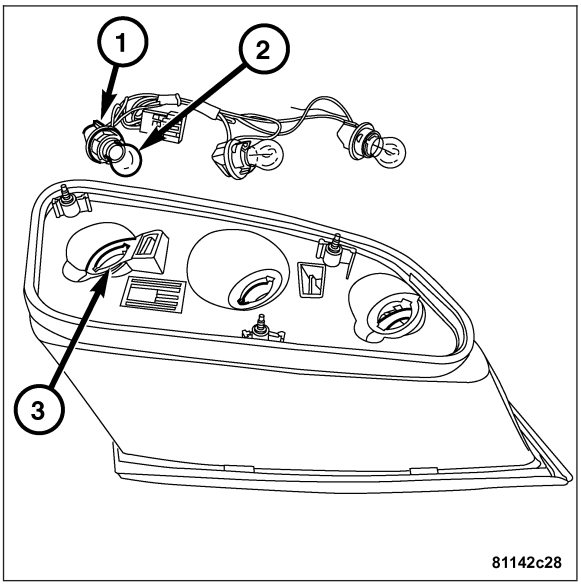

INSTALLATION - TURN SIGNAL

1. Install the bulb (2) into the turn signal lamp socket (1).
2. Insert the turn signal lamp socket (1) into the tail lamp unit (3) and rotate clockwise to lock.
3. Install the access panel into the cargo area interior trim panel.
4. Connect the negative battery cable.

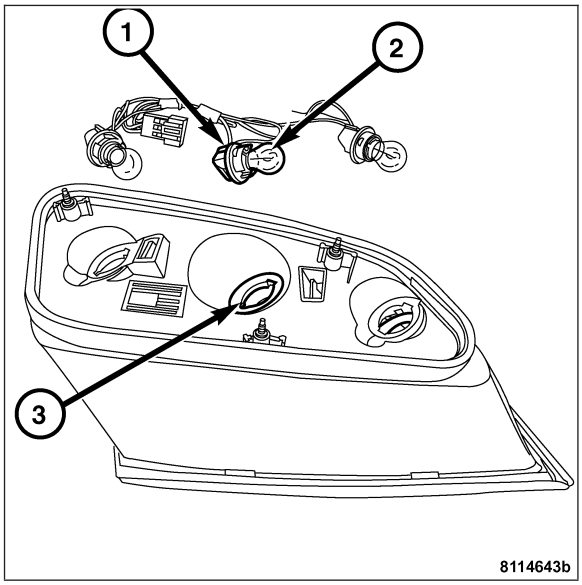

LAMPS/LIGHTING - INTERIOR - ELECTRICAL DIAGNOSTICS

TABLE OF CONTENTS

page

LAMPS/LIGHTING - INTERIOR - ELECTRICAL DIAGNOSTICS
DIAGNOSIS AND TESTING
HAZARD SWITCH CIRCUIT 118
DOME LAMP CIRCUIT 121
*CARGO LAMP INOPERATIVE 124
*GLOVE BOX LAMP INOPERATIVE 127
*ASH RECEIVER LAMP INOPERATIVE 130
BODY VERIFICATION TEST 133
SCHEMATICS AND DIAGRAMS 134

LAMPS/LIGHTING - INTERIOR - ELECTRICAL DIAGNOSTICS

DIAGNOSIS AND TESTING

HAZARD SWITCH CIRCUIT

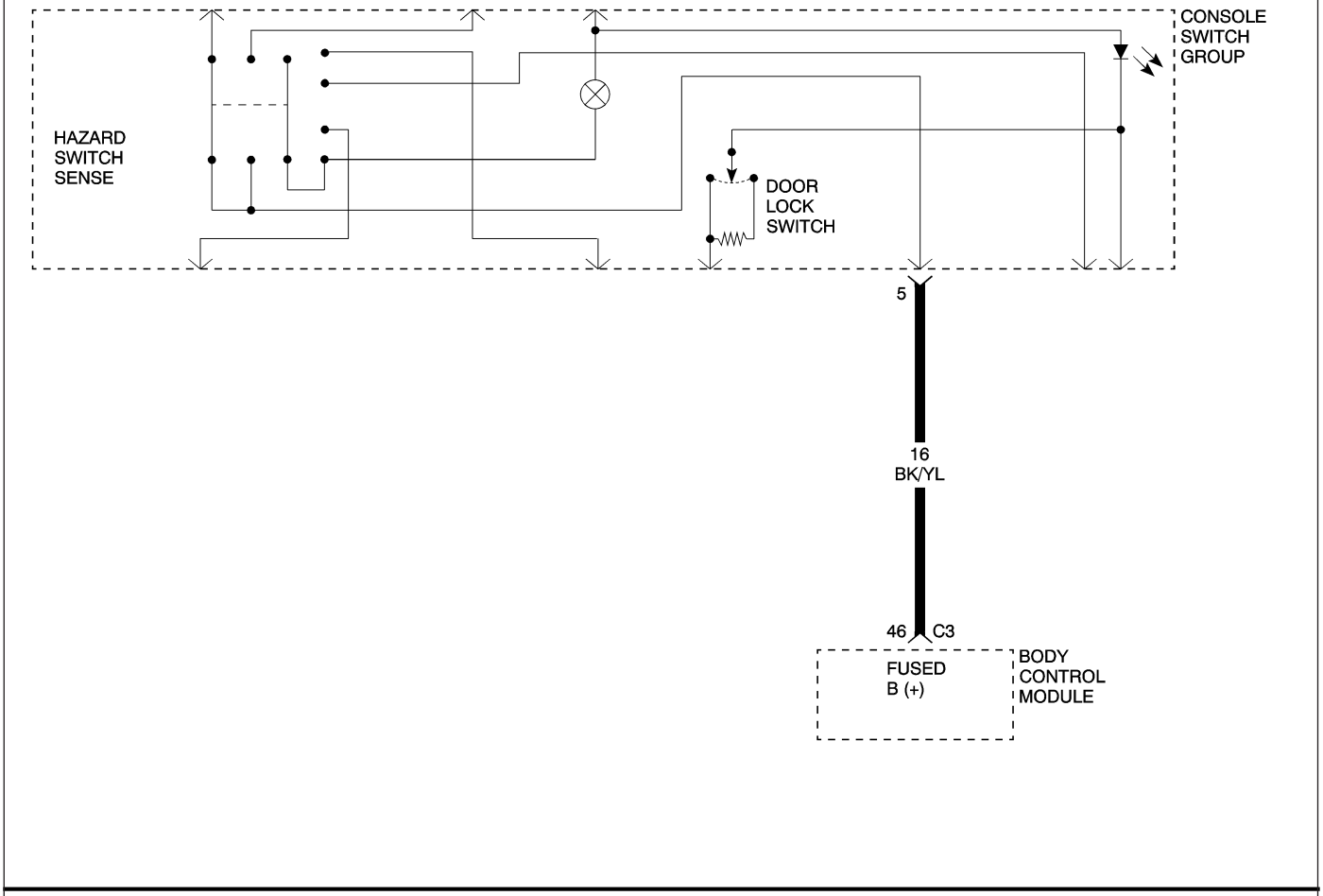

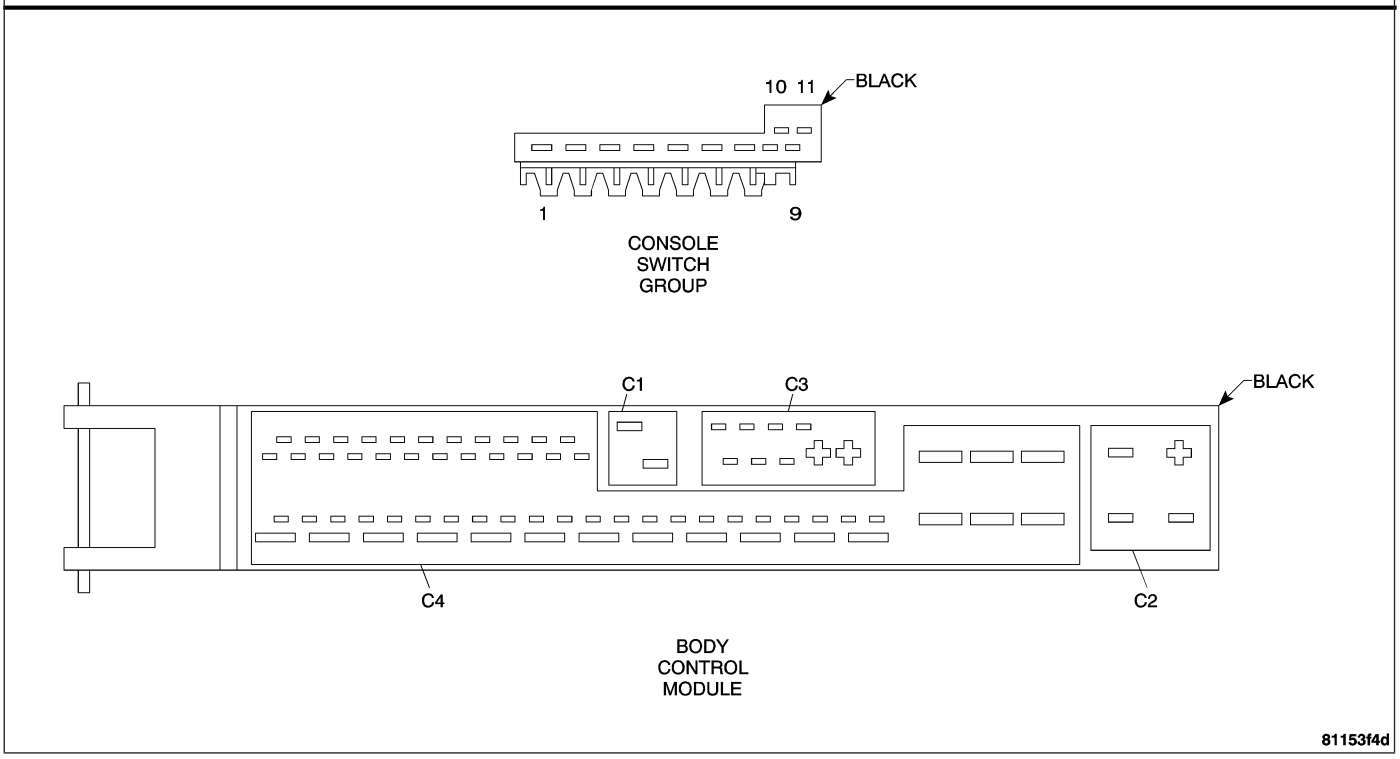

HAZARD SWITCH CIRCUIT — CONTINUED

When Monitored and Set Condition

- When Monitored: With the ignition on.
- Set Condition: The Body Control Module (BCM) reports a short to power, ground, or an open on the Hazard Switch circuit.

POSSIBLE CAUSES
HAZARD SWITCH CIRCUIT SHORT TO VOLTAGE
HAZARD SWITCH CIRCUIT SHORT TO GROUND
HAZARD SWITCH CIRCUIT OPEN
BODY CONTROL MODULE INTERNAL FAILURE

For a complete Interior Lamps Circuit Diagram, **Refer to Page 8L-134**.

Diagnostic Test

1. MEASURE THE RESISTANCE OF THE HAZARD SWITCH CIRCUIT

Turn the ignition off.

Disconnect the BCM harness connector.

Disconnect the Console Switch Group harness connector.

Note: Check connector - Clean/repair as necessary.

Measure the resistance of the Hazard Switch circuit between the BCM harness connector and the Console Switch Group harness connector.

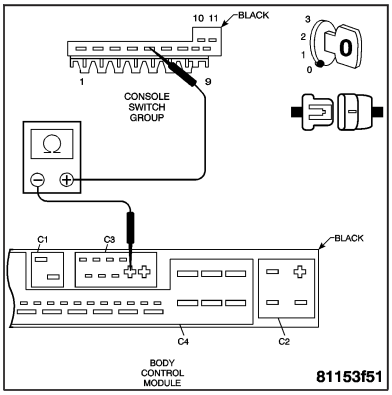

Is the resistance below 5.0 ohms?

Yes >> Go to 2

No >> Repair the Hazard Switch circuit for an open.
Perform BODY VERIFICATION TEST.

2. MEASURE THE VOLTAGE OF THE HAZARD SWITCH CIRCUIT

Turn the ignition on.

Measure the voltage of the Hazard Switch circuit between the Console Switch Group harness connector and Ground.

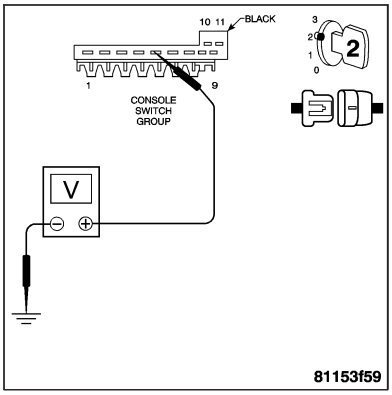

Is voltage present?

Yes >> Repair the Hazard Switch circuit for a short to battery.
Perform BODY VERIFICATION TEST.

No >> Go to 3

HAZARD SWITCH CIRCUIT — CONTINUED

3. MEASURE THE RESISTANCE OF THE HAZARD SWITCH CIRCUIT

Turn the ignition off.

Measure the resistance of the Hazard Switch circuit between the Console Switch Group harness connector and ground.

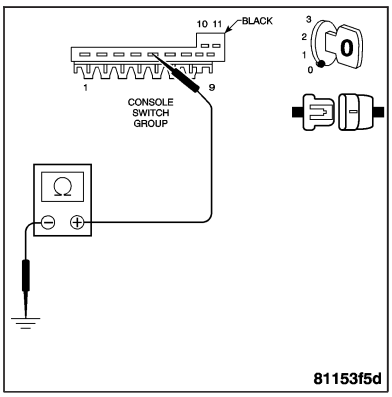

Is the resistance below 10K ohms?

Yes >> Repair the Hazard Switch circuit for a short to ground. Perform BODY VERIFICATION TEST.

No >> Replace the Body Control Module. **Refer to Page 8E-72**. Perform BODY VERIFICATION TEST.

DOME LAMP CIRCUIT

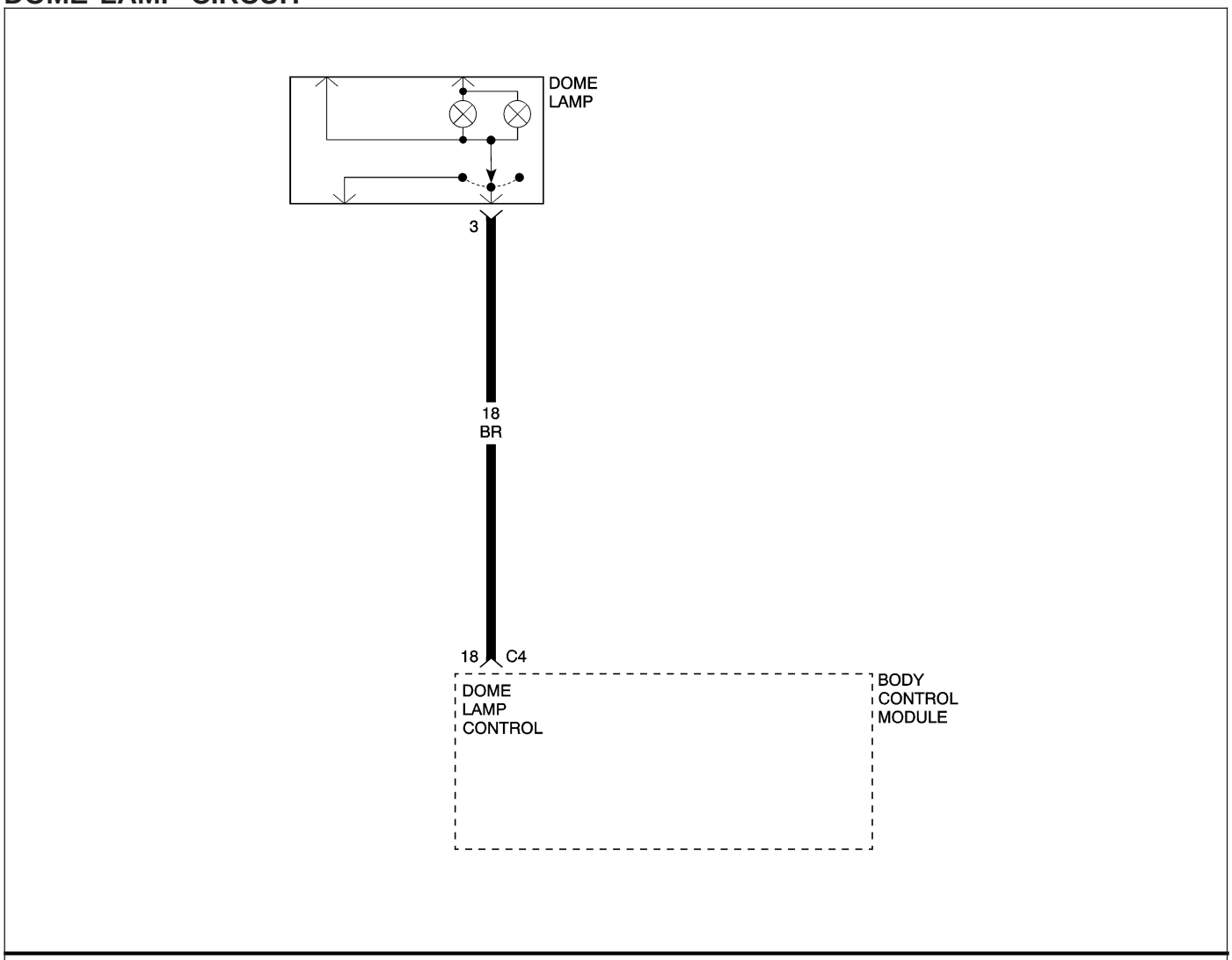

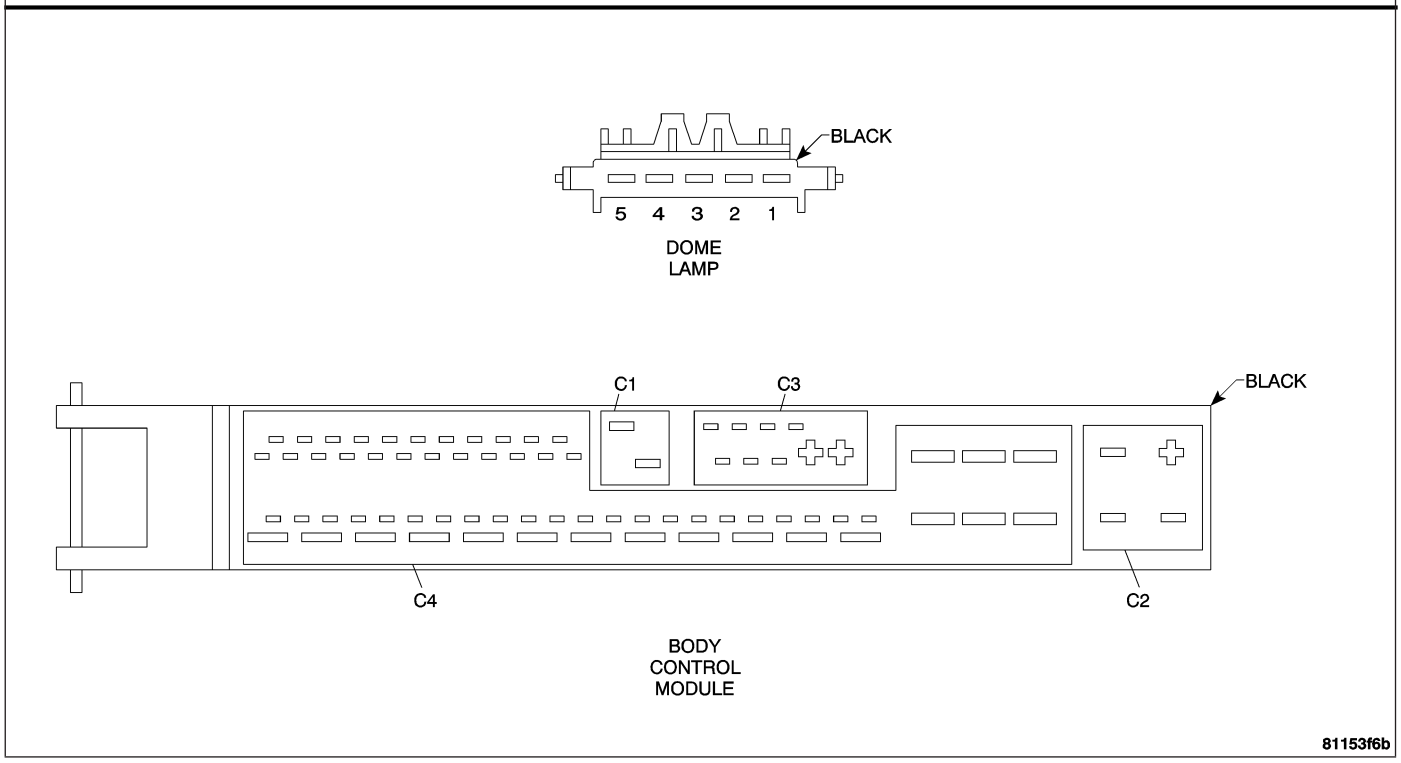

DOME LAMP CIRCUIT — CONTINUED

When Monitored and Set Condition

- When Monitored: With the ignition on.
- Set Condition: The Body Control Module (BCM) reports a short to power, ground, or an open on the Dome Lamp circuit.

POSSIBLE CAUSES
DOME LAMP CIRCUIT SHORT TO VOLTAGE
DOME LAMP CIRCUIT SHORT TO GROUND
DOME LAMP CIRCUIT OPEN
BODY CONTROL MODULE INTERNAL FAILURE

For a complete Interior Lamps Circuit Diagram, **Refer to Page 8L-134**.

Diagnostic Test

1. MEASURE THE RESISTANCE OF THE DOME LAMP CIRCUIT

Turn the ignition off.

Disconnect the BCM harness connector.

Disconnect the Dome Lamp harness connector.

Note: Check connector - Clean/repair as necessary.
Measure the resistance of the Dome Lamp circuit between the BCM harness connector and the Dome Lamp harness connector.

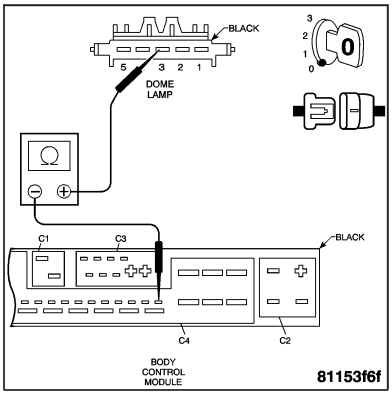

Is the resistance below 5.0 ohms?

Yes >> Go to 2

No >> Repair the Dome Lamp circuit for an open.
Perform BODY VERIFICATION TEST.

2. MEASURE THE VOLTAGE OF THE DOME LAMP CIRCUIT

Turn the ignition on.

Measure the voltage of the Dome Lamp circuit between the Dome Lamp harness connector and Ground.

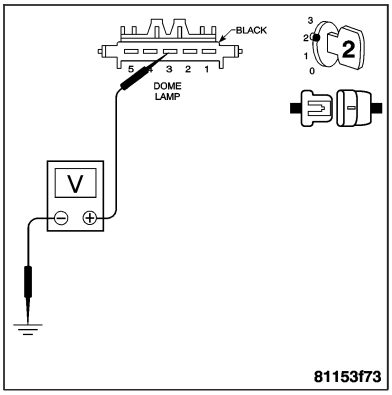

Is voltage present?

Yes >> Repair the Dome Lamp circuit for a short to battery.
Perform BODY VERIFICATION TEST.

No >> Go to 3

DOME LAMP CIRCUIT — CONTINUED

3. MEASURE THE RESISTANCE OF THE DOME LAMP CIRCUIT

Turn the ignition off.

Measure the resistance of the Dome Lamp circuit between the Dome Lamp harness connector and ground.

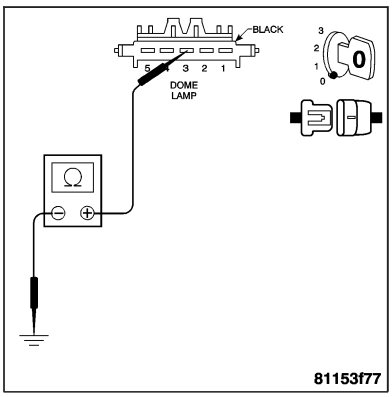

Is the resistance below 10K ohms?

Yes >> Repair the Dome Lamp circuit for a short to ground.
Perform BODY VERIFICATION TEST.

No >> Replace the Body Control Module. **Refer to Page 8E-72**.
Perform BODY VERIFICATION TEST.

*CARGO LAMP INOPERATIVE

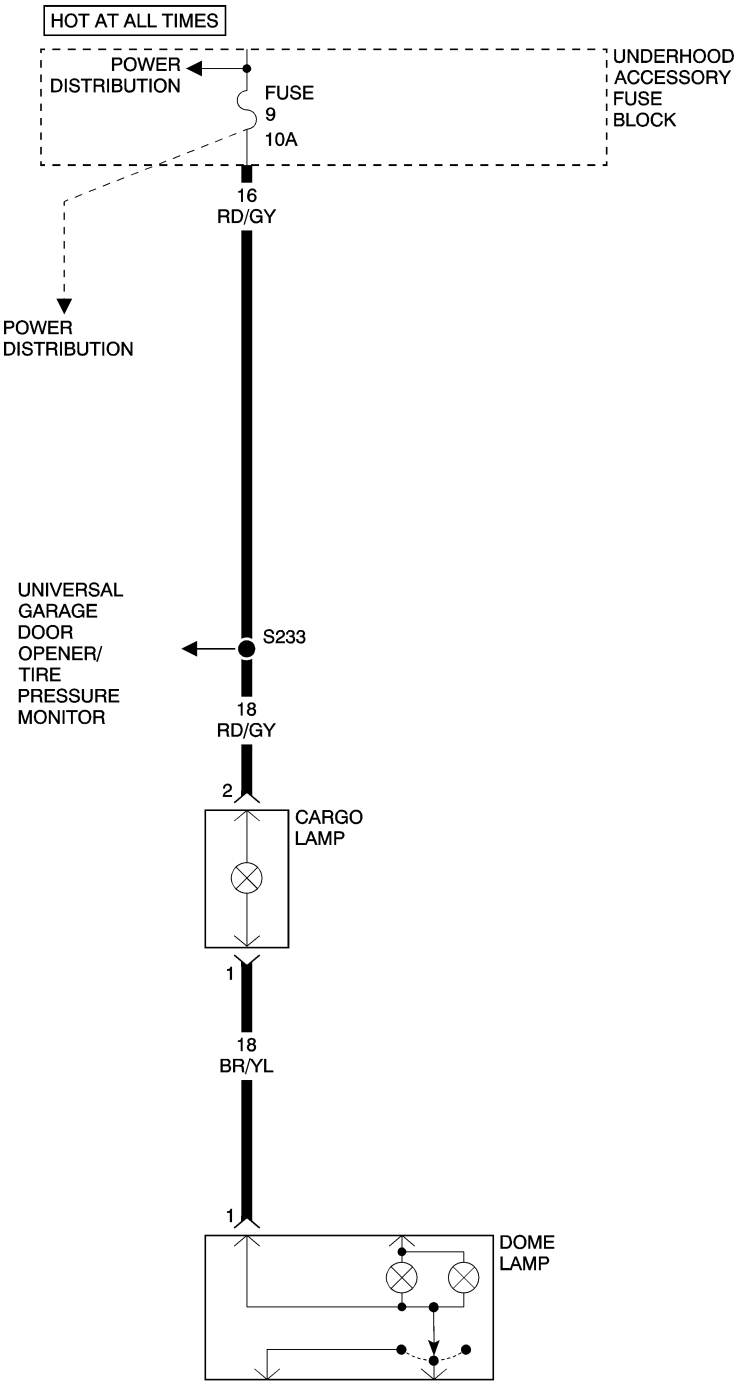

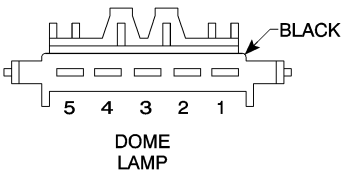

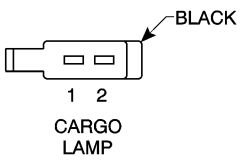

8115447b

*CARGO LAMP INOPERATIVE — CONTINUED

POSSIBLE CAUSES
FUSED B(+) CIRCUIT OPEN
GROUND CIRCUIT OPEN
CARGO LAMP BULB

For a complete Interior Lamps Circuit Diagram, **Refer to Page 8L-134**.

Diagnostic Test

1. INSPECT THE CARGO LAMP BULB

Note: If any BCM DTCs are set, diagnose them first before continuing.
Turn the ignition off.
Remove the Cargo Lamp Bulb and inspect for an open filament.

Is the Bulb filament open?

Yes >> Replace the Cargo Lamp bulb. **Refer to Page 8L-137**.
Perform BODY VERIFICATION TEST.

No >> Go to 2

2. MEASURE CARGO LAMP VOLTAGE

Disconnect the Cargo Lamp harness connector.

Note: Check connector - Clean/repair as necessary.
Turn the ignition on.
Measure the voltage between ground and the Cargo Lamp harness connector cavity 2.

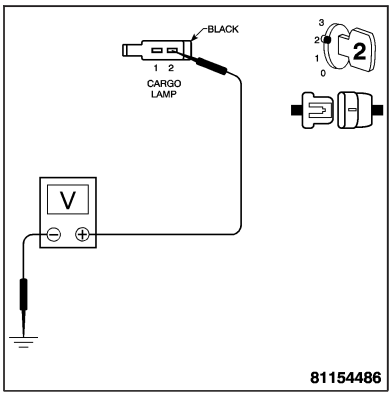

Is the voltage above 10 volts?

Yes >> Go to 3

No >> Repair the Fused B(+) circuit for an open.
Perform BODY VERIFICATION TEST.

*CARGO LAMP INOPERATIVE — CONTINUED

3. MEASURE CARGO LAMP GROUND CIRCUIT RESISTANCE

Turn the ignition off.

Disconnect the Dome Lamp harness connector.

Note: Check connector - Clean/repair as necessary.

Measure the resistance from the Cargo Lamp harness connector cavity 1 to the Dome Lamp harness connector cavity 1.

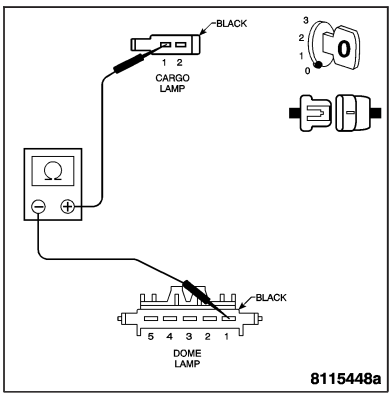

Is the resistance below 5.0 ohms?

Yes >> Replace the Dome Lamp. **Refer to Page 8L-140**.
Perform BODY VERIFICATION TEST.

No >> Repair the open circuit between the Cargo Lamp and the Dome Lamp.
Perform BODY VERIFICATION TEST.

*GLOVE BOX LAMP INOPERATIVE

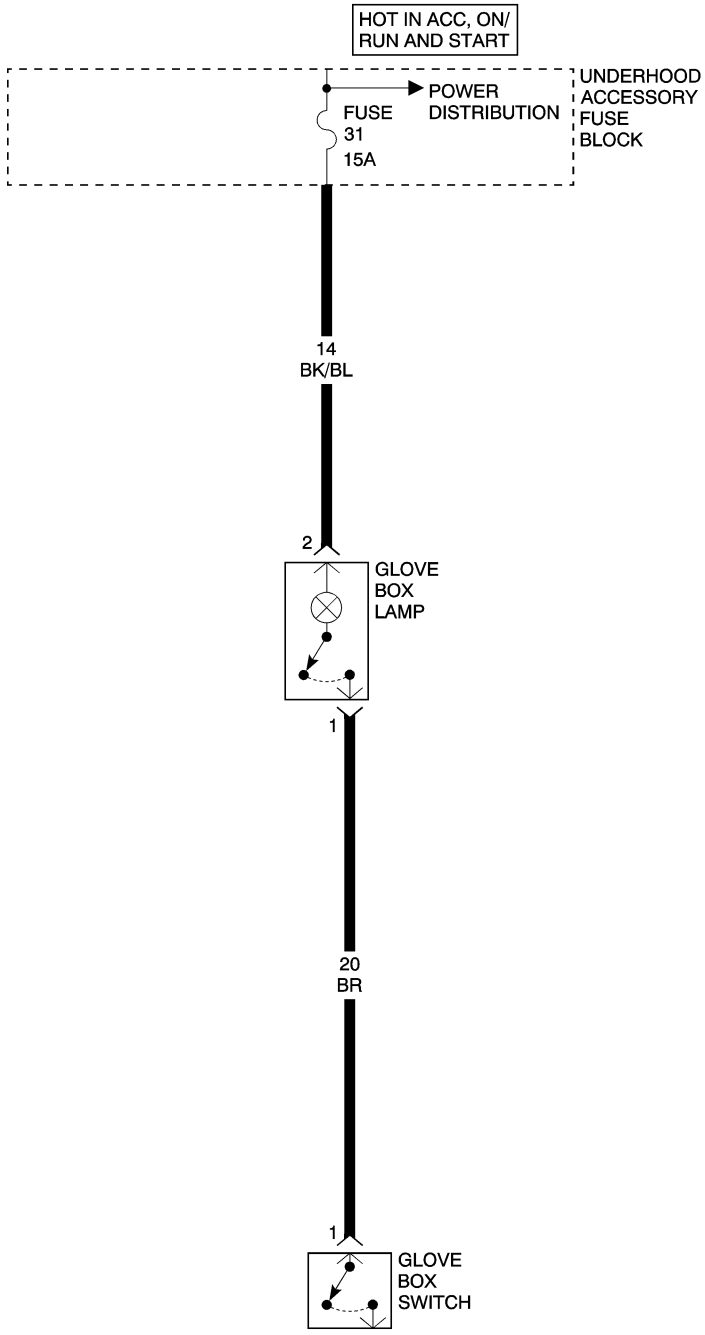



81154f80

*GLOVE BOX LAMP INOPERATIVE — CONTINUED

POSSIBLE CAUSES
FUSED B(+) CIRCUIT OPEN
GROUND CIRCUIT OPEN
GLOVE BOX LAMP BULB

For a complete Interior Lamps Circuit Diagram, **Refer to Page 8L-134**.

Diagnostic Test

1. INSPECT THE GLOVE BOX LAMP BULB

Note: If any BCM DTCs are set, diagnose them first before continuing.

Note: Inspect Fuse 31 located in the Underhood Accessory Fuse Block. If the fuse is open, repair the cause of the open fuse before continuing.

Turn the ignition off.

Remove the Glove Box Lamp Bulb and inspect for an open filament.

Is the Bulb filament open?

Yes >> Replace the Glove Box Lamp bulb. **Refer to Page 8L-146**. Perform BODY VERIFICATION TEST.

No >> Go to 2

2. MEASURE GLOVE BOX LAMP VOLTAGE

Disconnect the Glove Box Lamp harness connector.

Note: Check connector - Clean/repair as necessary.

Turn the ignition on.

Measure the voltage between ground and the Glove Box Lamp harness connector cavity 2.

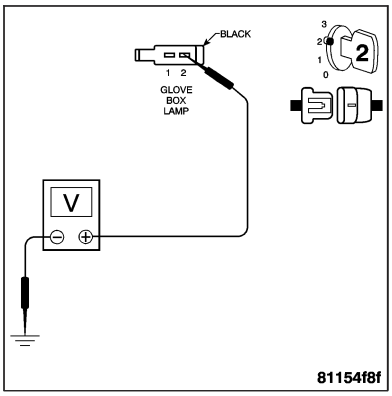

Is the voltage above 10 volts?

Yes >> Go to 3

No >> Repair the Fused B(+) circuit for an open. Perform BODY VERIFICATION TEST.

*GLOVE BOX LAMP INOPERATIVE — CONTINUED

3. MEASURE GLOVE BOX LAMP GROUND CIRCUIT RESISTANCE

Turn the ignition off.

Measure the resistance between ground and the Glove Box Lamp harness connector cavity 1.

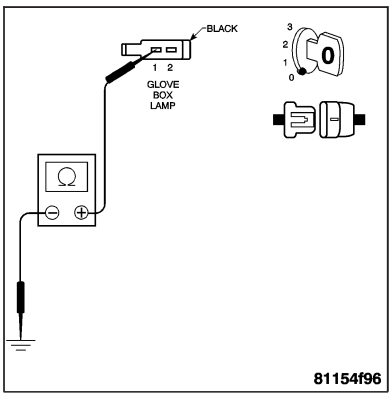

Is the resistance below 5.0 ohms?

Yes >> Replace the Glove Box Lamp. **Refer to Page 8L-146**.
Perform BODY VERIFICATION TEST.

No >> Repair the Glove Box Lamp ground circuit for an open.
Perform BODY VERIFICATION TEST.

*ASH RECEIVER LAMP INOPERATIVE

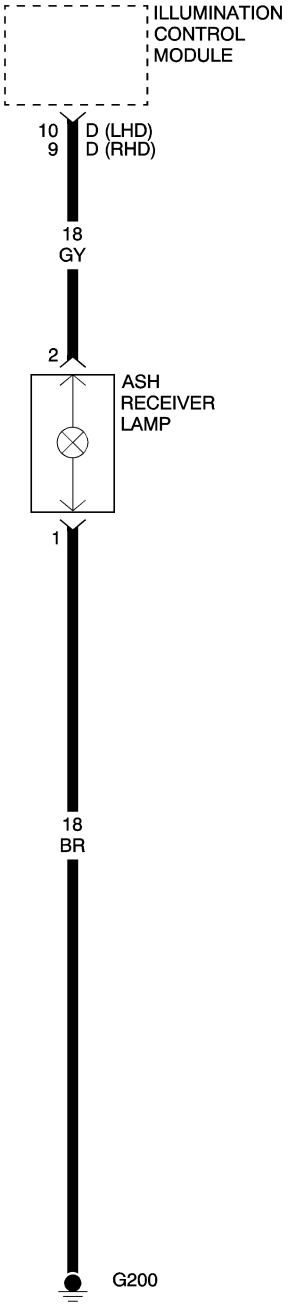

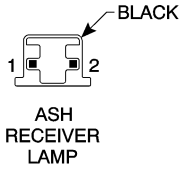

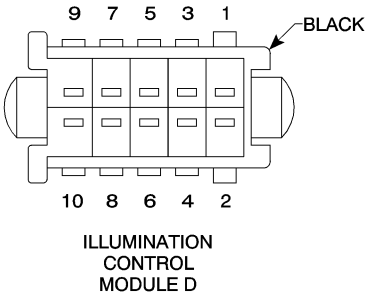

81155375

*ASH RECEIVER LAMP INOPERATIVE — CONTINUED

POSSIBLE CAUSES
FUSED B(+) CIRCUIT OPEN
GROUND CIRCUIT OPEN
ASH RECEIVER LAMP BULB

For a complete Interior Lamps Circuit Diagram, **Refer to Page 8L-134**.

Diagnostic Test

1. INSPECT THE ASH RECEIVER LAMP BULB

Note: If any BCM DTCs are set, diagnose them first before continuing.

Note: Inspect Fuse 11 located in the Illumination Control Module/IP Fuse Block. If the fuse is open, repair the cause of the open fuse before continuing.

Turn the ignition off.

Remove the Ash Receiver Lamp Bulb and inspect for an open filament.

Is the Bulb filament open?

Yes >> Replace the Ash Receiver Lamp bulb. **Refer to Page 23-173**.
Perform BODY VERIFICATION TEST.

No >> Go to 2

2. MEASURE FUSED B(+) CIRCUIT RESISTANCE

Disconnect the Ash Receiver Lamp harness connector.

Disconnect the Illumination Control Module harness connector.

Note: Check connector - Clean/repair as necessary.

Measure the resistance of the Fused B(+) circuit from the Ash Receiver Lamp harness connector to the Illumination Control Module harness connector.

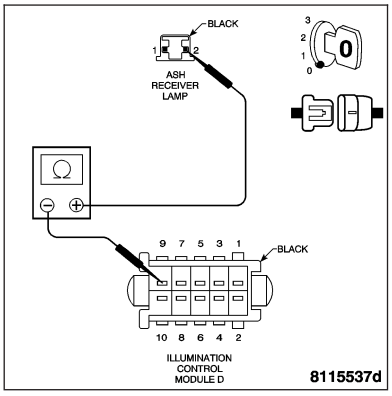

Is the resistance below 5.0 ohms?

Yes >> Go to 3

No >> Repair the Fused B(+) circuit for an open between the Ash Receiver Lamp and the Illumination Control Module.
Perform BODY VERIFICATION TEST.

*ASH RECEIVER LAMP INOPERATIVE — CONTINUED

3. MEASURE ASH RECEIVER LAMP VOLTAGE

Connect the Illumination Control Module harness connector.

Turn the ignition on.

Turn the parking lamps on.

Measure the voltage between the Ash Receiver Lamp harness connector cavity 2 and ground.

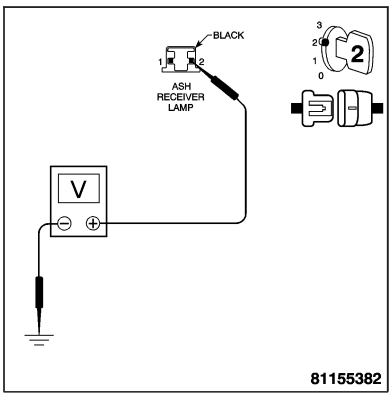

Is the voltage above 10 volts?

Yes >> Go to 4

No >> Replace the Illumination Control Module. **Refer to Page 8L-105**.
Perform BODY VERIFICATION TEST.

4. MEASURE ASH RECEIVER LAMP GROUND CIRCUIT RESISTANCE

Turn the ignition off.

Turn the parking lamps off.

Measure the resistance between the Ash Receiver Lamp harness connector cavity 1 and ground.

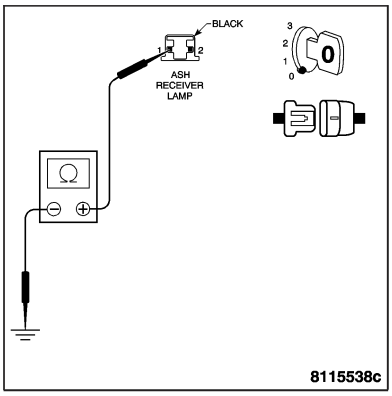

Is the resistance below 5.0 ohms?

Yes >> Ensure that the Ash Receiver Lamp bulb is installed properly and replace the bulb socket if necessary.
Perform BODY VERIFICATION TEST.

No >> Repair the Ash Receiver Lamp ground circuit for an open.
Perform BODY VERIFICATION TEST.

BODY VERIFICATION TEST

1.

Turn the ignition off.

Disconnect all jumper wires and reconnect all previously disconnected components and connectors.

Note: If the SKREEM or the PCM was replaced, refer to the service information for proper programming procedures.

If the Body Control Module was replaced, turn the ignition on for 15 seconds (to allow the new BCM to learn VIN) or engine may not start.

Program all RKE transmitters and other options as necessary.

With the DRB III®, erase all Diagnostic Trouble Codes (DTCs) from ALL modules. Start the engine and allow it to run for 2 minutes. Operate all functions of the system that caused the original complaint.

Ensure that all accessories are turned off and the battery is fully charged.

Turn the ignition off and wait 5 seconds. Turn the ignition on and using the DRB III®, read DTCs from ALL modules.

Are any DTCs present or is the original complaint still present?

Are any DTCs present?

YES >> Repair is not complete, refer to appropriate symptom.

NO >> Repair is complete.

SCHEMATICS AND DIAGRAMS

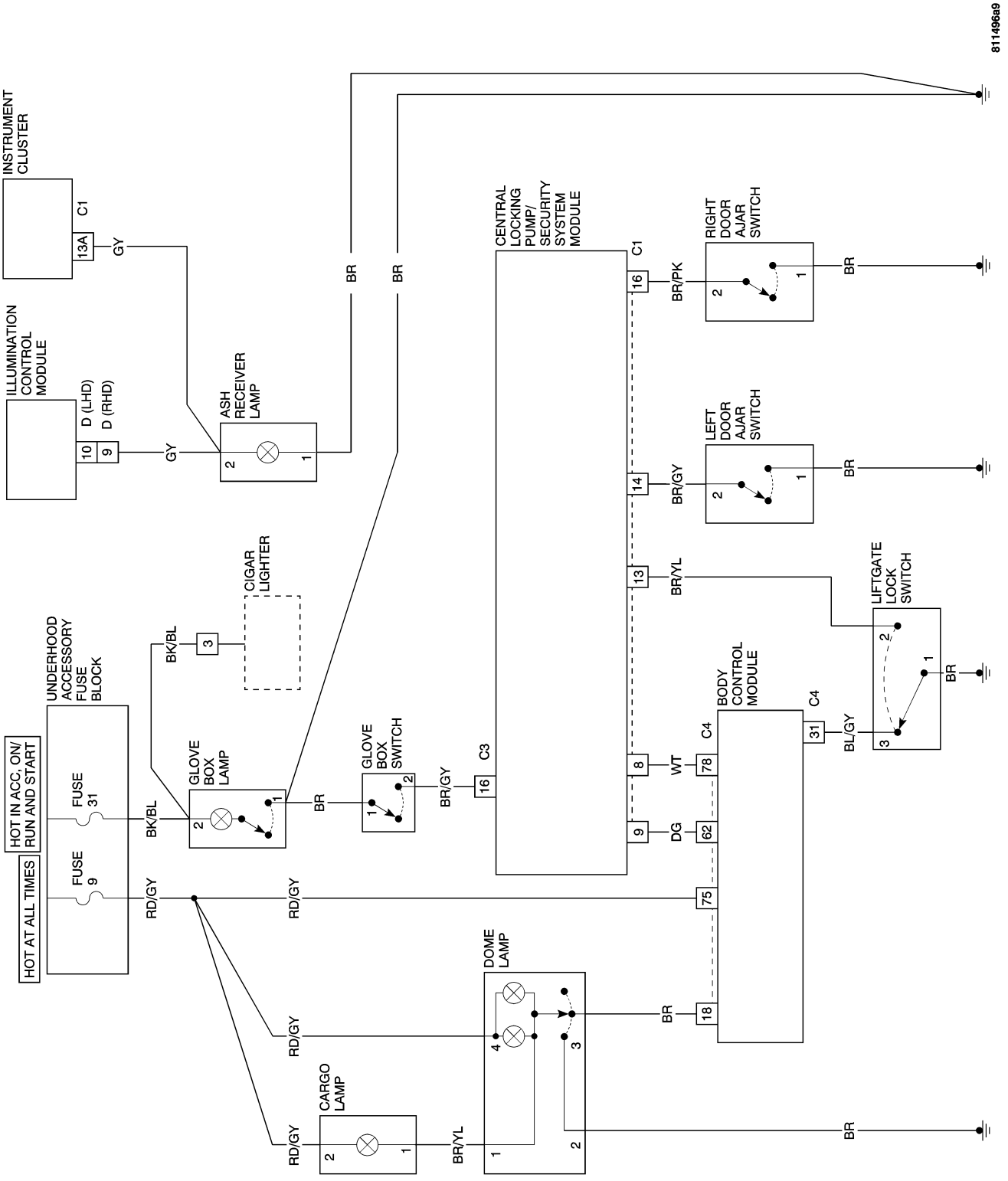

INTERIOR LIGHTING CIRCUIT DIAGRAM (1 OF 2)

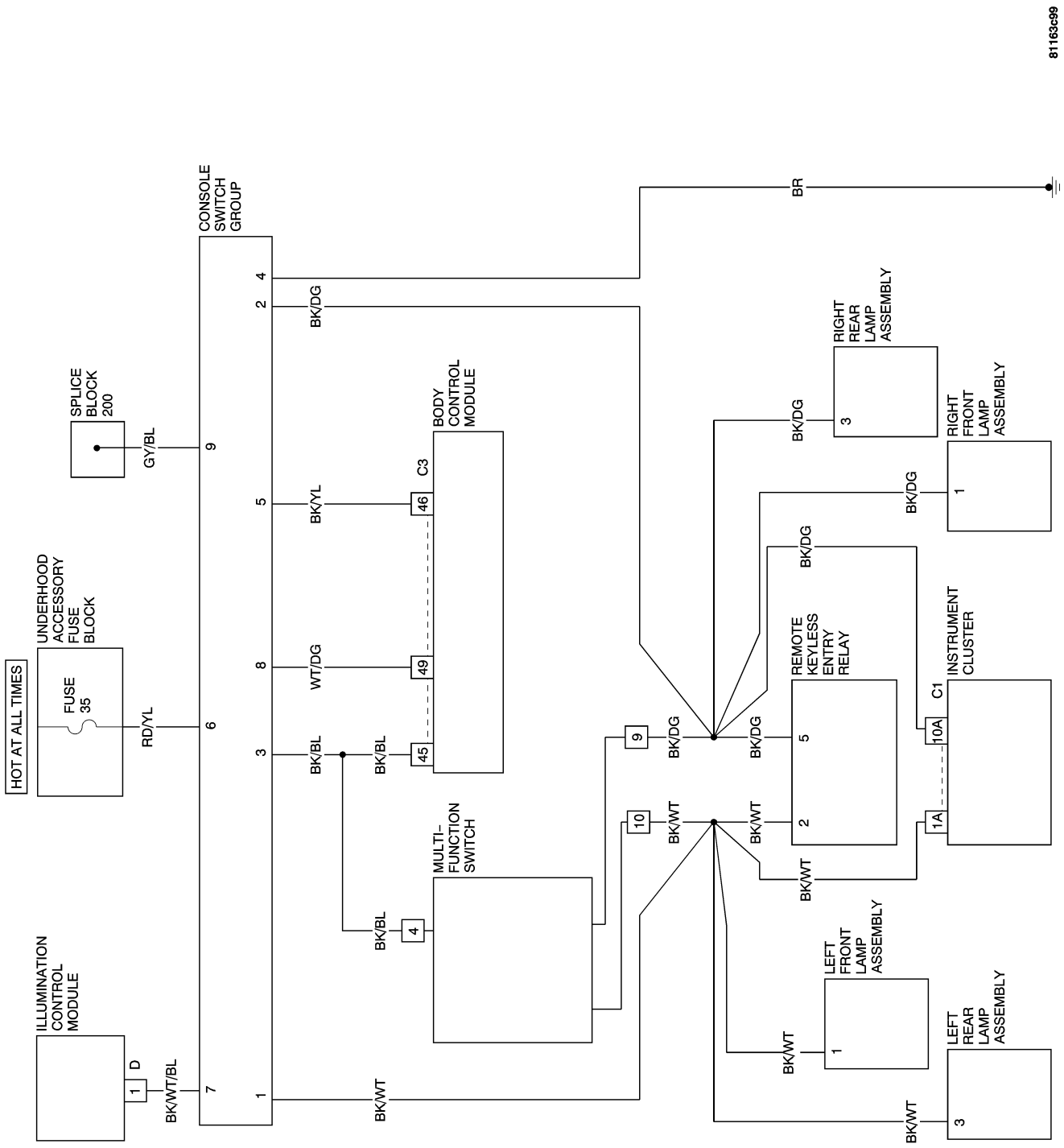

INTERIOR LIGHTING CIRCUIT DIAGRAM (2 OF 2)

LAMPS/LIGHTING - INTERIOR - SERVICE INFORMATION

TABLE OF CONTENTS

page

LAMPS/LIGHTING - INTERIOR - SERVICE INFORMATION
DIAGNOSIS AND TESTING - LAMPS/LIGHTING-INTERIOR . . . 136
SPECIFICATIONS - INTERIOR LAMPS . . . 137
CARGO LAMP
REMOVAL . . . 137
INSTALLATION . . . 138
CARGO LAMP UNIT
REMOVAL . . . 139
INSTALLATION . . . 140
COURTESY LAMP
REMOVAL . . . 140
INSTALLATION . . . 141
COURTESY LAMP DEFEAT SWITCH
DESCRIPTION . . . 141
COURTESY LAMP SWITCH/UNIT
DESCRIPTION . . . 142
OPERATION . . . 142
REMOVAL . . . 142
INSTALLATION . . . 143
DIMMER SWITCH
DESCRIPTION . . . 144
DOOR AJAR SWITCH
DESCRIPTION . . . 144

page

OPERATION . . . 144
REMOVAL
DOOR AJAR SWITCH . . . 145
REMOVAL - LIFTGATE AJAR SWITCH . . . 145
INSTALLATION
DOOR AJAR SWITCH . . . 146
INSTALLATION - LIFTGATE AJAR SWITCH . 146
GLOVE BOX LAMP
REMOVAL . . . 146
INSTALLATION . . . 147
GLOVE BOX LAMP/SWITCH
DESCRIPTION . . . 148
OPERATION . . . 148
REMOVAL . . . 148
INSTALLATION . . . 149
HEATER SWITCH ILLUMINATION
DESCRIPTION . . . 150
T/C RANGE INDICATOR ILLUMINATION
DESCRIPTION . . . 150
ASH RECEIVER LAMP
REMOVAL . . . 151
INSTALLATION . . . 153

LAMPS/LIGHTING - INTERIOR - SERVICE INFORMATION

DIAGNOSIS AND TESTING - LAMPS/LIGHTING-INTERIOR

WARNING: EYE PROTECTION SHOULD BE USED WHEN SERVICING GLASS COMPONENTS. PERSONAL INJURY CAN RESULT.

CAUTION: Do not use bulbs other than those indicated in the Bulb Application table. Damage to lamp and/or Illumination Control Module can result. Do not use fuses, circuit breakers or relays having greater amperage value than indicated on the fuse panel or in the Owner's Manual.

If a vehicle experiences problems with the interior lighting system, verify the following are in operational condition:

- Battery connections
- Charging system
- Interior lamp bulbs
- Illumination Control Module/Headlamp switch
- Wiring harness connectors

For complete interior lamp system schematics and diagrams, see interior lamps/lighting schematics and diagrams in this section. **Refer to Page 8L-134**.

Each vehicle is equipped with various lamp assemblies. A good ground is necessary for proper lighting operation. Grounding is provided by the lamp socket when it comes in contact with the metal body, or through a separate ground wire.

When diagnosing the interior lighting circuits, remember that high generator output can burn out bulbs rapidly and repeatedly; and that dim or flickering bulbs can be caused by low generator output or poor battery condition.

When changing lamp bulbs, check the socket for loose pin connections and/or evidence of corrosion. Repair as necessary.

When it is necessary to remove a component to service another, it should not be necessary to apply excessive force to bend a component to remove it. Before damaging a trim component, verify hidden fasteners or captured edges are not holding the component in place.

For additional interior lamp diagnosis, see interior lamp diagnostics in this section.

SPECIFICATIONS - INTERIOR LAMPS

CAUTION: Do not use bulbs other than those listed in the Bulb Application Table. Damage to lamp can result.

BULB APPLICATION TABLE

LAMP	BULB
Cargo Lamp	C5W
Cluster Illumination	12/2W 1K
	12/1.5W
Courtesy Lamp	C5W
Glove Box Lamp	C5W
Heater Switch Illumination	LED
T/C Range Indicator Illumination	LED

CARGO LAMP

REMOVAL

1. Disconnect the negative battery cable.
2. Remove the cargo lamp unit (1). **Refer to Page 8L-139**.

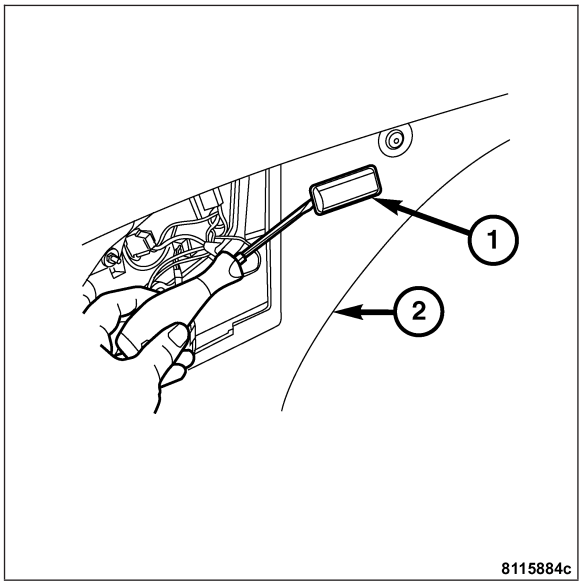

3. Remove the bulb (1) from the cargo lamp unit (2).

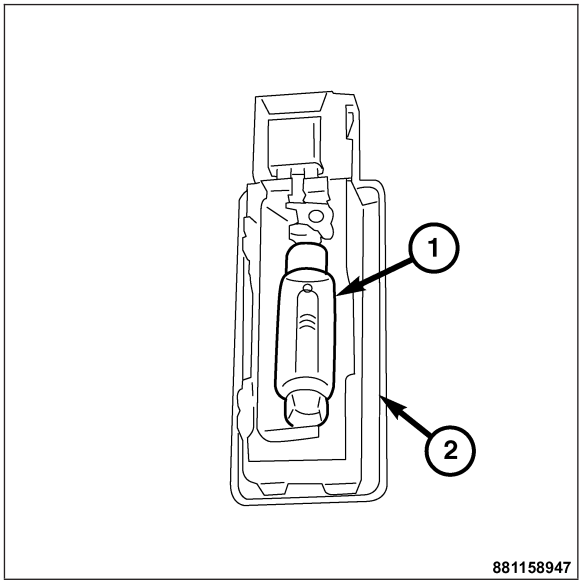

INSTALLATION

1. Insert the bulb (1) into the cargo lamp unit (2).
2. Install the cargo lamp unit (2) into the liftgate trim (3). **Refer to Page 8L-140**.
3. Connect the negative battery cable.

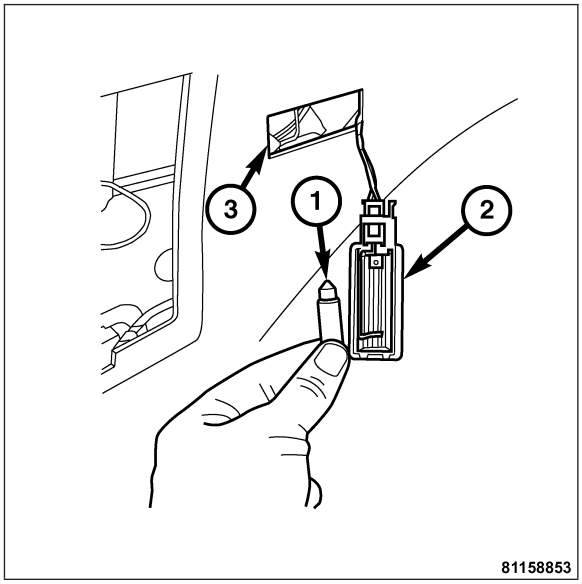

CARGO LAMP UNIT

REMOVAL

1. Disconnect the negative battery cable.
2. Gently pry the cargo lamp unit (1) away from the cargo area interior trim panel (2).

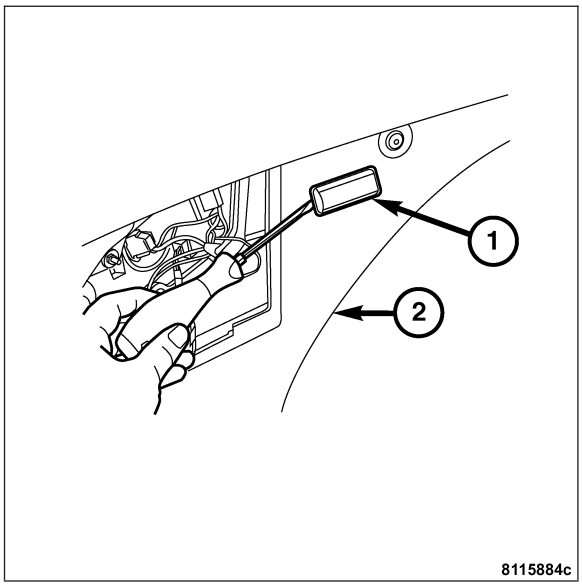

3. Disconnect the cargo lamp unit harness connector (1) and remove from the vehicle.

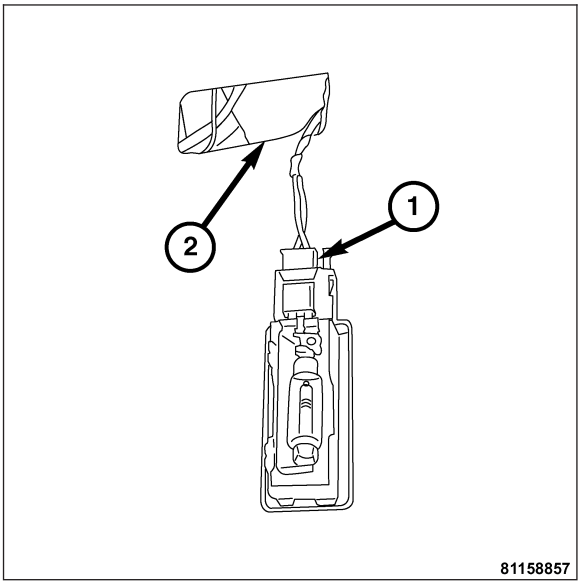

INSTALLATION

1. Connect the harness connector (1) into cargo lamp unit and insert into the cargo area interior trim panel (2).
2. Connect the negative battery cable.

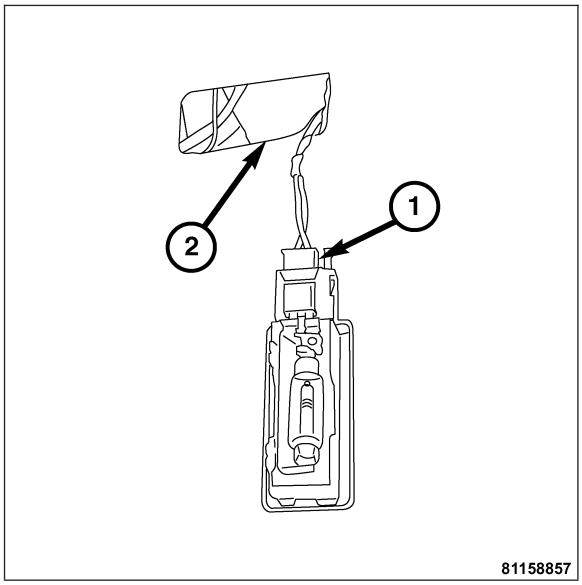

COURTESY LAMP

REMOVAL

1. Remove the courtesy lamp switch/unit from the roof frame. **Refer to Page 8L-142**.
2. Rotate the lamp socket (1) counterclockwise in the courtesy lamp switch/unit and remove.
3. Remove the bulb from the lamp socket.

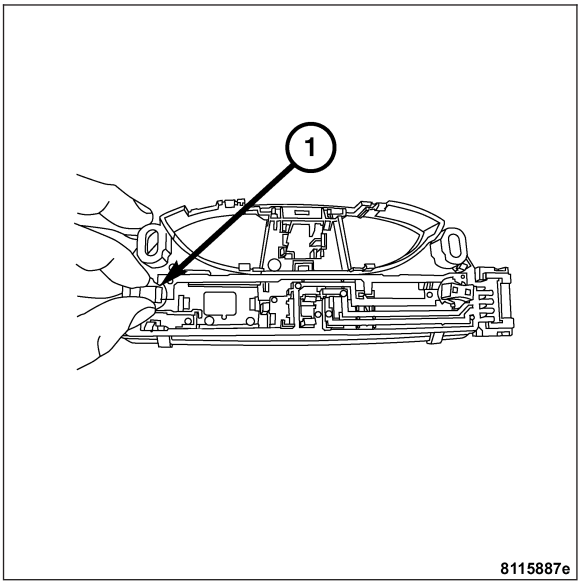

INSTALLATION

1. Insert the bulb into the lamp socket.
2. Install the lamp socket into the courtesy lamp switch/unit by rotating clockwise.

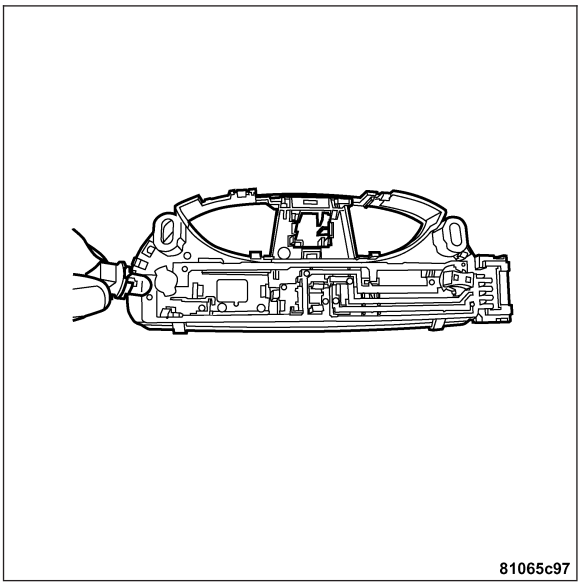

3. Install the courtesy lamp switch/unit to the roof frame. **Refer to Page 8L-143**.

COURTESY LAMP DEFEAT SWITCH

DESCRIPTION

With the courtesy lamp defeat switch in the “O” position (1), the courtesy lamps are prevented from illuminating when the doors are opened. With the courtesy lamp defeat switch in the “—” position, the courtesy lamps illluminate when the doors are opened, then fade to off after approximately 8 seconds.The courtesy lamp defeat switch is an integrated part of the courtesy lamp unit assembly and cannot be adjusted or repaired. If faulty, worn, or damaged, the entire assembly must be replaced. For complete courtesy lamp unit removal procedures, see courtesy lamp unit removal in this section. **Refer to Page 8L-142**.

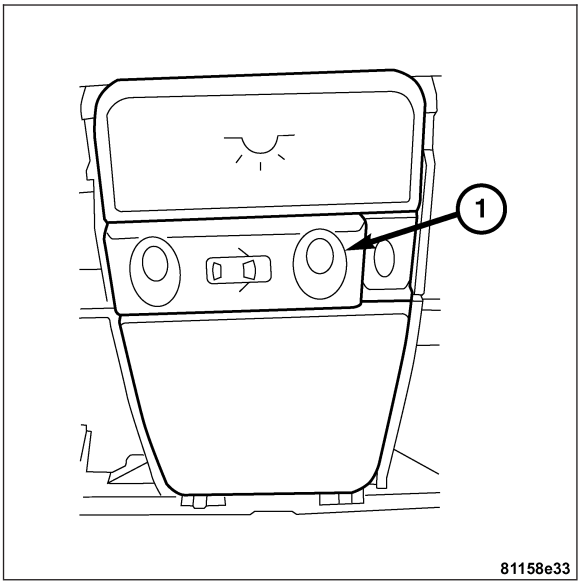

COURTESY LAMP SWITCH/UNIT

DESCRIPTION

The courtesy lamps (1) provide overhead interior illumination when the doors are opened and the courtesy lamp defeat switch (3) in the "—" position, or when the courtesy lamp switch (2) is pressed. The courtesy lamp defeat switch (3) can prevent the courtesy lamps operation when the doors are opened if the "O" position is selected. The courtesy lamp switch/unit cannot be adjusted or repaired. If faulty, worn, or damaged, the entire assembly must be replaced. For complete courtesy lamp switch/unit removal procedures, see courtesy lamp switch/unit removal in this section.

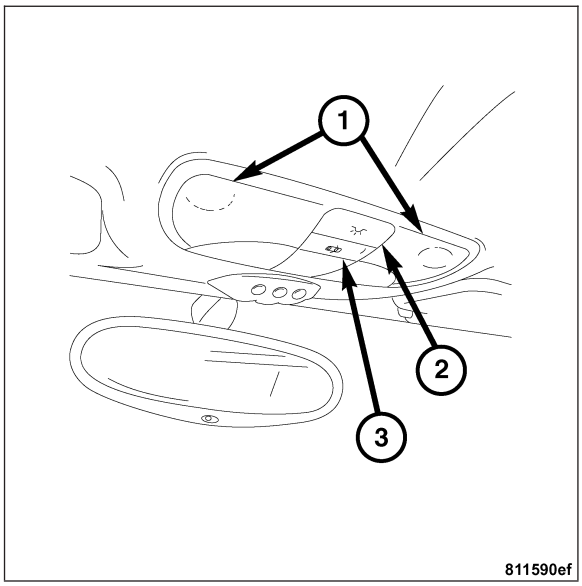

OPERATION

Regardless of the ignition switch position, the courtesy lamps illuminate when either door is opened if the courtesy lamp defeat switch is in the "—" position, or the courtesy lamp switch is pressed. Non-switched power is supplied through Fuse 9 in the Underhood Accessory Fuse Block, and ground is provided by the Body Control Module.

REMOVAL

1. Disconnect the negative battery cable.
2. Using a trim stick (1) press the clips located on the edge of the courtesy lamp switch/unit body (2) and release the lens cover.

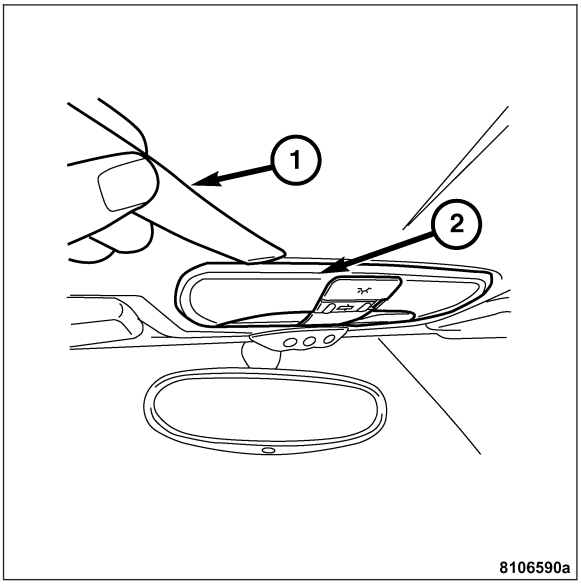

3. Remove the retaining screws and lower the courtesy lamp switch/unit from the headliner opening.
4. Disconnect the courtesy lamp switch/unit harness connector and remove from the vehicle.

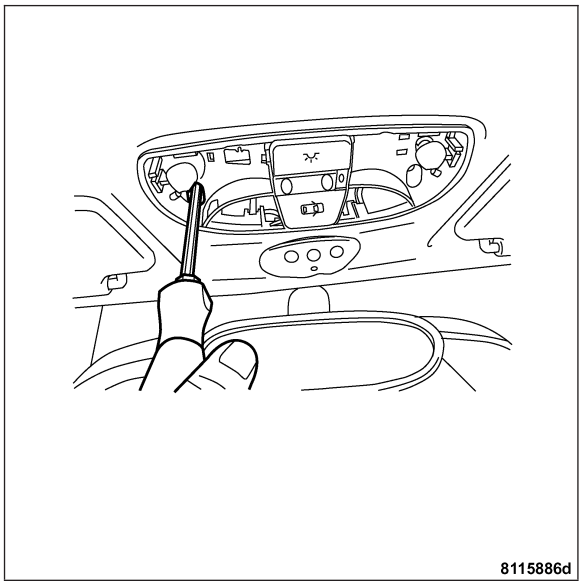

INSTALLATION

1. Connect the courtesy lamp switch/unit harness connector (1) and align into the headliner opening.
2. Install the retaining screws and secure.
3. Install the lens cover into the courtesy lamp switch/unit body.
4. Connect the negative battery cable.

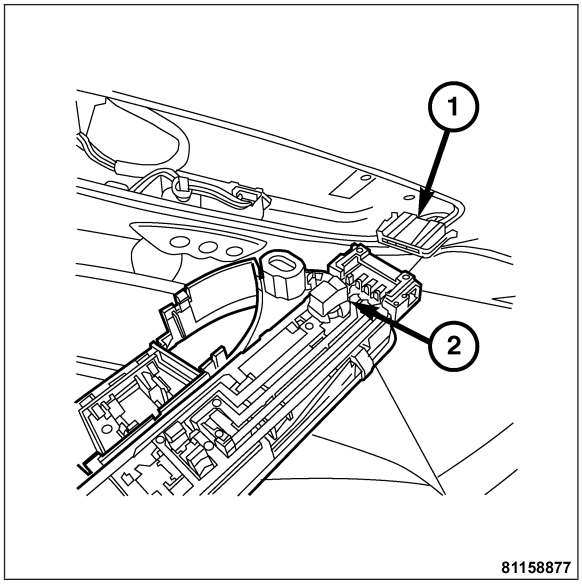

DIMMER SWITCH

DESCRIPTION

The dimmer switch (3) is an integrated part of the instrument cluster and is located at the left side of the speedometer. It controls the brightness of the adjustable interior illumination when rotated to the left or right. The dimmer switch cannot be repaired. If it is found faulty or damaged, the entire instrument cluster must be replaced. For complete instrument cluster removal procedures, see instrument cluster removal in the electrical section. **Refer to Page 8J-83**.

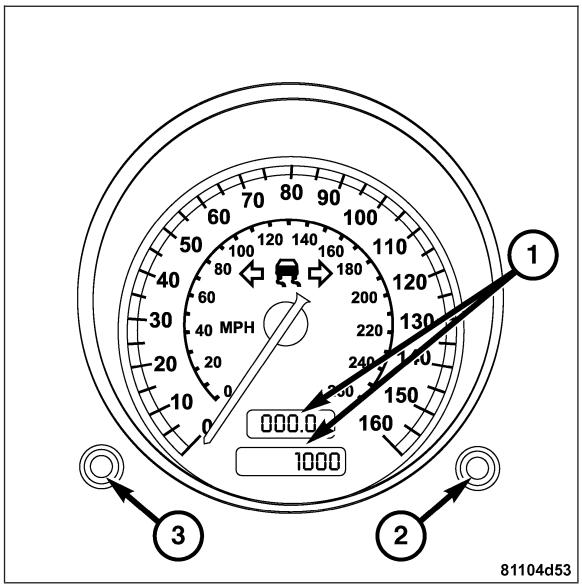

DOOR AJAR SWITCH

DESCRIPTION

There are three door ajar switches, one at each door and one in the liftgate latch. The door switches are located in the B-pillar directly below the latch striker plate, and the liftgate switch is integral to the liftgate latch assembly. A door or body harness connector with a service loop connects each switch to the vehicle electrical system. The door ajar switches cannot be adjusted or repaired, and if faulty or damaged, the switch itself or the liftgate latch must be replaced as an assembly. For complete door ajar switch removal procedures, see the appropriate removal procedure in this section.

OPERATION

The door ajar switches are actuated by either the door closing against the jamb, or the liftgate latch mechanism striker plate. When a door or the liftgate is closed and properly latched, its ajar switch is an open circuit. When a door or the liftgate is only partially latched, its ajar switch is a closed circuit. The ajar switches are connected via a harness connector to a body ground and the central locking pump/security system module.

REMOVAL

DOOR AJAR SWITCH

1. Disconnect the negative battery cable.
2. Using a trim stick, press and release the retaining tab (1) at the top of the door ajar switch.
3. Pull the top of the door ajar switch out and downward away from the B-pillar (2), then disconnect the door ajar switch harness connector.

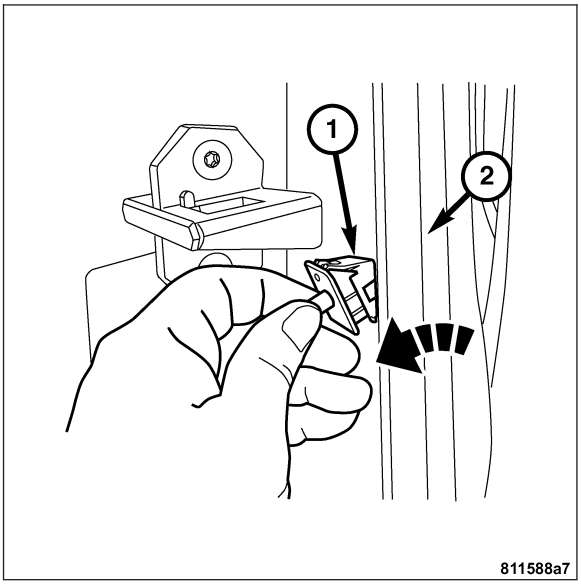

REMOVAL - LIFTGATE AJAR SWITCH

The liftgate ajar switch (1) is an integral part of the liftgate handle assembly and cannot be adjusted or repaired. If faulty, worn, or damaged, the entire liftgate handle assembly must be replaced. For complete liftgate handle removal procedures, see liftgate handle removal in the body section. **Refer to Page 23-34**.

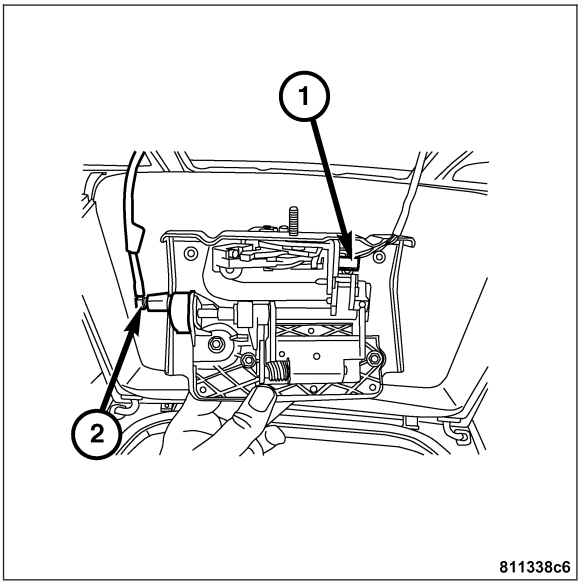

INSTALLATION

DOOR AJAR SWITCH

1. Connect the door ajar switch harness connector (1).
2. Install the lower edge of the door ajar switch into the B-pillar opening (2) first, then rotate upward until fully seated.
3. Connect the negative battery cable.

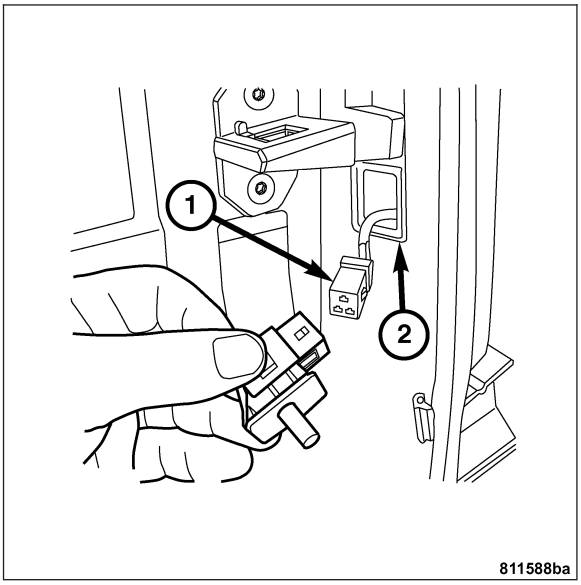

INSTALLATION - LIFTGATE AJAR SWITCH

The liftgate ajar switch is an integral part of the liftgate handle assembly. For complete liftgate handle installation procedures, see liftgate handle installation in the body section of this manual. **Refer to Page 23-37**.

GLOVE BOX LAMP

REMOVAL

WARNING: REFER TO RESTRAINTS BEFORE ATTEMPTING ANY DOOR, SEAT, STEERING WHEEL, STEERING COLUMN, OR INSTRUMENT PANEL COMPONENT DIAGNOSIS OR SERVICE. FAILURE TO TAKE THE PROPER PRECAUTIONS COULD RESULT IN ACCIDENTAL AIRBAG DEPLOYMENT AND POSSIBLE PERSONAL INJURY.

1. Remove the glove box lamp/switch assembly. **Refer to Page 8L-148**.

2. Press the bulb retaining arm aside and remove the bulb (1) from the glove box lamp/switch (2).

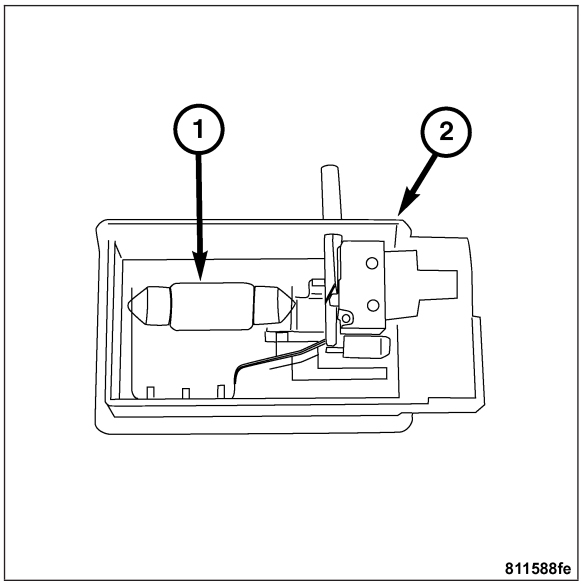

INSTALLATION

WARNING: REFER TO RESTRAINTS BEFORE ATTEMPTING ANY DOOR, SEAT, STEERING WHEEL, STEERING COLUMN, OR INSTRUMENT PANEL COMPONENT DIAGNOSIS OR SERVICE. FAILURE TO TAKE THE PROPER PRECAUTIONS COULD RESULT IN ACCIDENTAL AIRBAG DEPLOYMENT AND POSSIBLE PERSONAL INJURY.

1. Press the bulb retaining arm (2) aside and install the bulb (1) into the glove box lamp/switch assembly.
2. Install the glove box lamp/switch assembly. **Refer to Page 8L-149**.

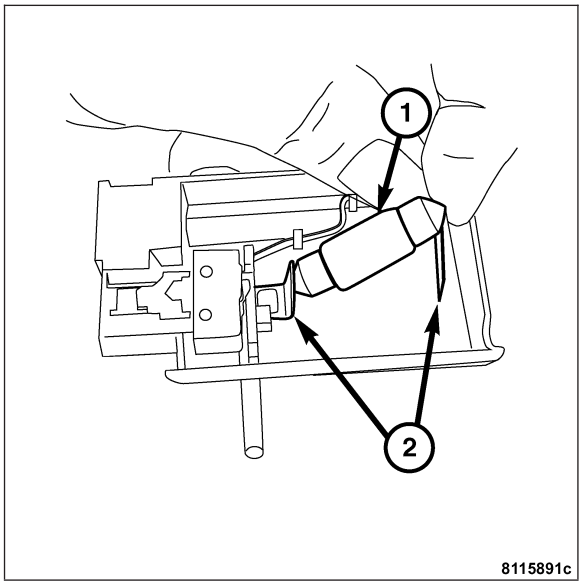

GLOVE BOX LAMP/SWITCH

DESCRIPTION

The glove box lamp/switch (1) is a self-contained set of switches, lamp, and housing assembly that provides illumination into the glove box compartment whenever the glove box door is opened. It is located behind the glove box door at the top of the liner, just to the left of the latch striker.

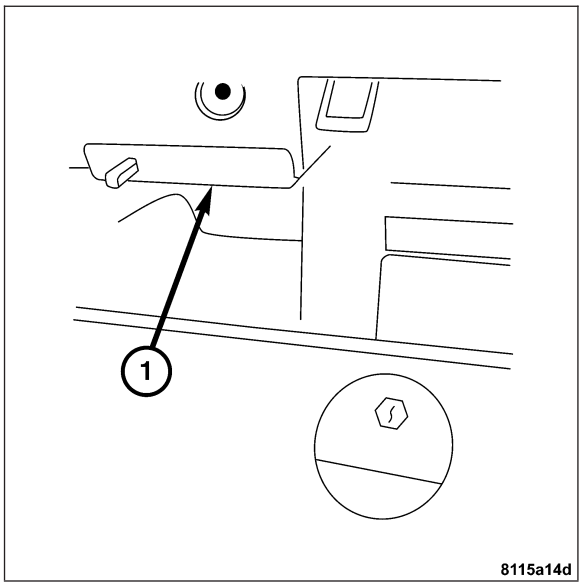

OPERATION

The glove box lamp/switch contains two separate switches; one for control of the illumination, and the other to sense the glove box door position. Power is supplied through fuse 31 in the Underhood Accessory Fuse Block for the lamp illumination switch. The central locking pump/security system module receives a ground signal from the second switch when the glove box is opened. Neither of these switches can be adjusted or repaired. If faulty, worn, or damaged, the entire glove box lamp/switch assembly must be replaced. For complete glove box lamp/switch removal procedures, see glove box lamp/switch removal in this section.

REMOVAL

WARNING: REFER TO RESTRAINTS BEFORE ATTEMPTING ANY DOOR, SEAT, STEERING WHEEL, STEERING COLUMN, OR INSTRUMENT PANEL COMPONENT DIAGNOSIS OR SERVICE. FAILURE TO TAKE THE PROPER PRECAUTIONS COULD RESULT IN ACCIDENTAL AIRBAG DEPLOYMENT AND POSSIBLE PERSONAL INJURY.

1. Disconnect the negative battery cable.
2. Open the glove box door and depress the lens retaining clips with a trim stick (1). Gently pry the glove box lamp/switch (2) from the glove box liner (3).
3. Disconnect the glove box lamp/switch harness connector and remove the glove box lamp/switch (2) from the vehicle.

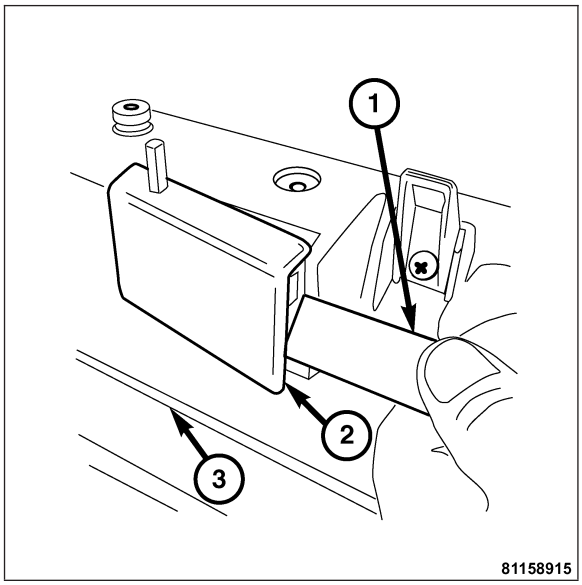

INSTALLATION

WARNING: REFER TO RESTRAINTS BEFORE ATTEMPTING ANY DOOR, SEAT, STEERING WHEEL, STEERING COLUMN, OR INSTRUMENT PANEL COMPONENT DIAGNOSIS OR SERVICE. FAILURE TO TAKE THE PROPER PRECAUTIONS COULD RESULT IN ACCIDENTAL AIRBAG DEPLOYMENT AND POSSIBLE PERSONAL INJURY.

1. Connect the glove box lamp/switch harness connector (1).
2. Insert the glove box lamp/switch (2) into the opening in the glove box liner and close the glove box door.
3. Connect the negative battery cable.

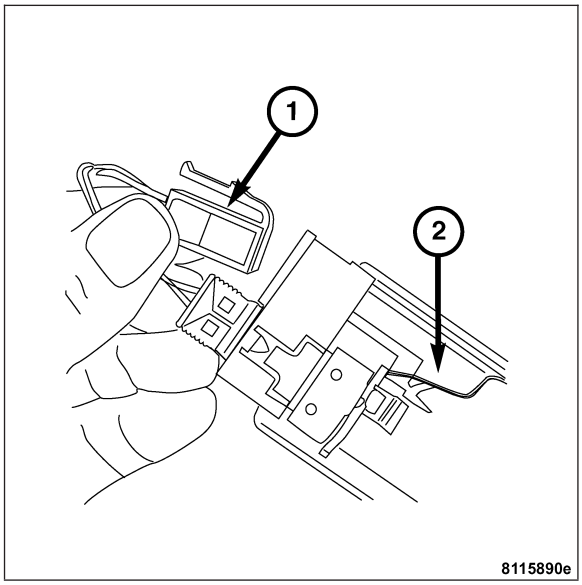

HEATER SWITCH ILLUMINATION

DESCRIPTION

The heater switch (3) is illuminated with LEDs whenever the headlamps or marker lamps are on. The lamp brightness is adjustable with the dimmer switch located in the instrument cluster. The heater switch LEDs cannot be adjusted or repaired. If faulty or damaged, the entire heater switch assembly must be replaced as a unit. For complete heater switch removal procedures, see heater control removal in the heating and air conditioning section. **Refer to Page 24-79**.

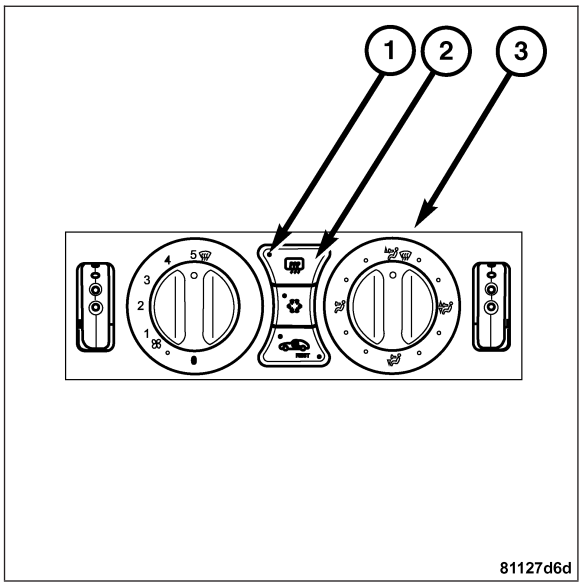

T/C RANGE INDICATOR ILLUMINATION

DESCRIPTION

The T/C range indicator is illuminated with LEDs whenever the headlamps or marker lamps are on. The lamp brightness is adjustable with the dimmer switch located in the instrument cluster. The T/C range indicator LEDs cannot be adjusted or repaired. If faulty or damaged, the entire T/C range indicator assembly must be replaced as a unit. For complete T/C range indicator removal procedures, see shift mechanism removal in the automatic transmission section. **Refer to Page 21-340**.

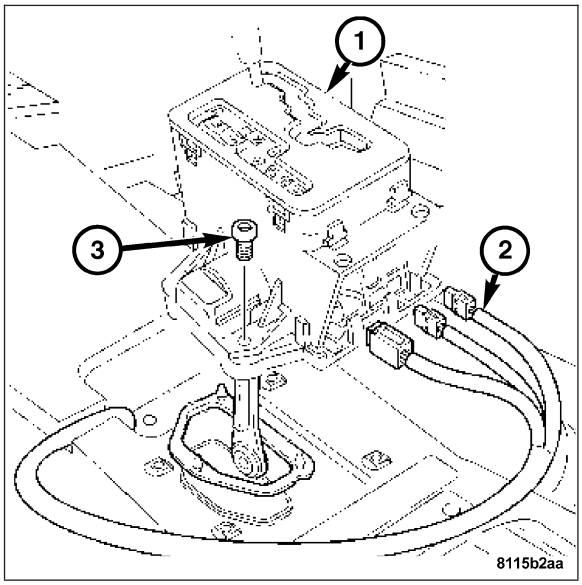

ASH RECEIVER LAMP

REMOVAL

1. Remove the cover on the center console. **Refer to Page 23-173**.

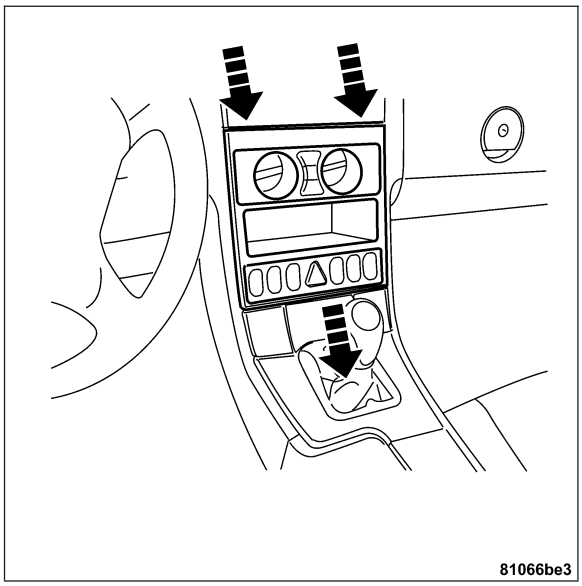

2. Remove the screws (1-3) attaching the ashtray (2) to the center console.

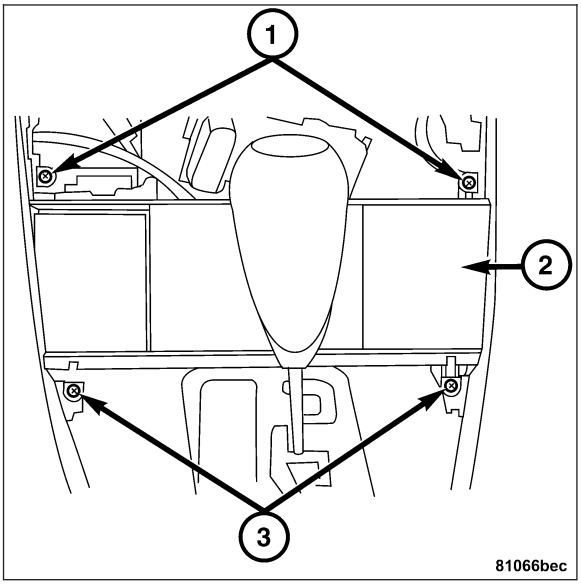

3. Press the ashtray housing (1) to the left and remove it toward the right (arrows).

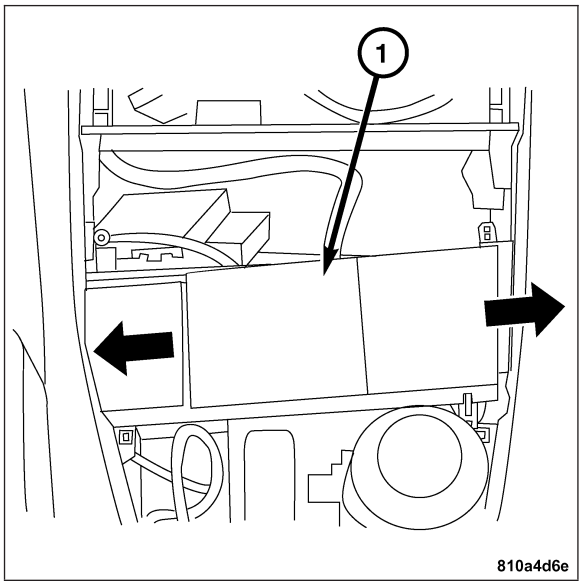

4. Disconnect the ashtray harness connector for the courtesy lamp on the back of the ashtray (1).
5. Remove the ashtray lamp from the ashtray harness connector.

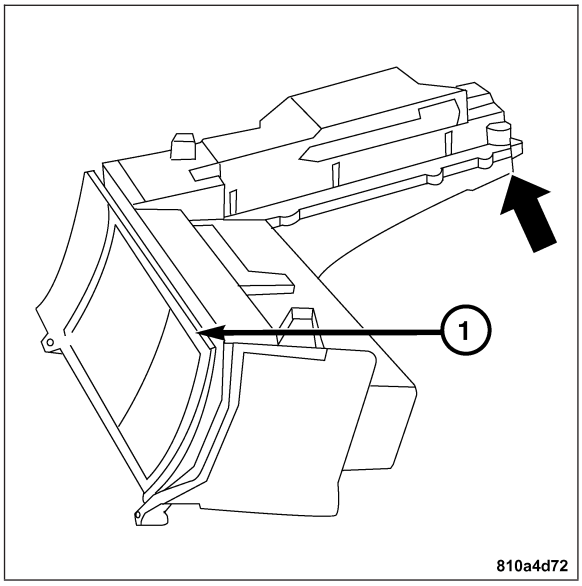

INSTALLATION

1. Install the ashtray lamp into the ashtray lamp harness connector.
2. Connect the ashtray lamp harness connector to the ashtray (1).

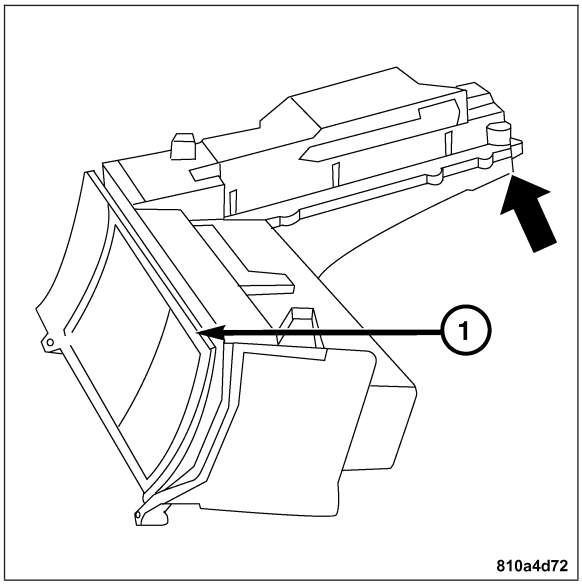

3. Install the ashtray housing (1) to the right and push it toward the left.

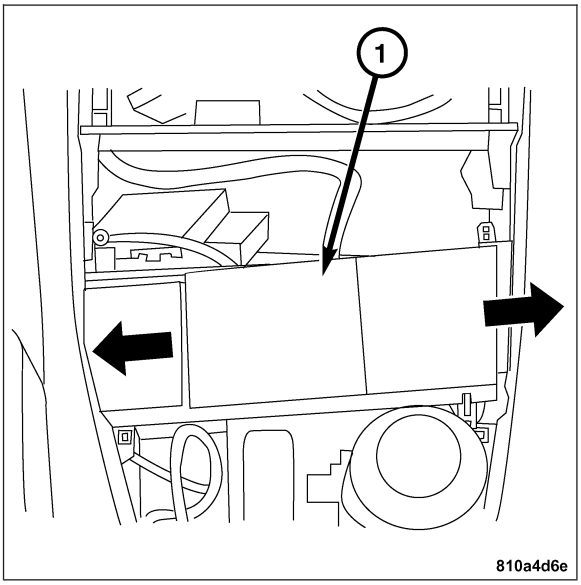

4. Install the screws (1-3) attaching the ashtray (2) to the center console.

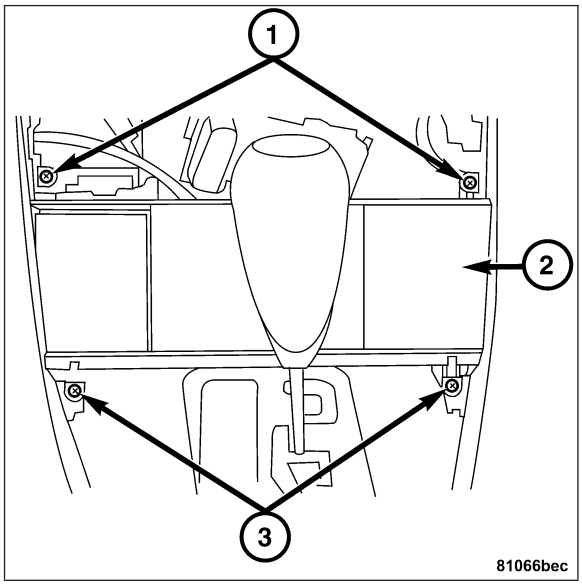

5. Install the cover (1) on the center console. **Refer to Page 23-183**.

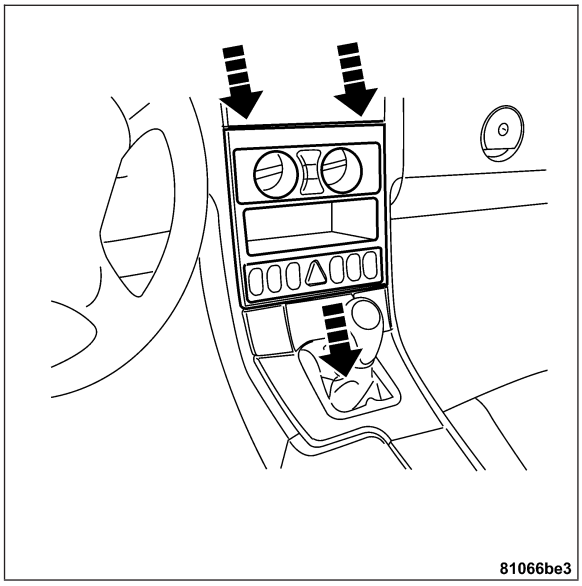

MESSAGE SYSTEMS

TABLE OF CONTENTS

page

UNIVERSAL TRANSMITTER
DESCRIPTION 1
OPERATION 2
DIAGNOSIS AND TESTING - UNIVERSAL TRANSMITTER 2

page

STANDARD PROCEDURE - UNIVERSAL TRANSMITTER PROGRAMMING 3
REMOVAL 3
INSTALLATION 4

UNIVERSAL TRANSMITTER

DESCRIPTION

The Universal Garage Door Opener/Tire Pressure Monitor Module (1) is located in the headliner near the inside rear view mirror (2). The Tire Pressure Monitoring (TPM) system utilizes a control module to monitor and operate the system. The control module also has a universal garage door opener integrated along with it.

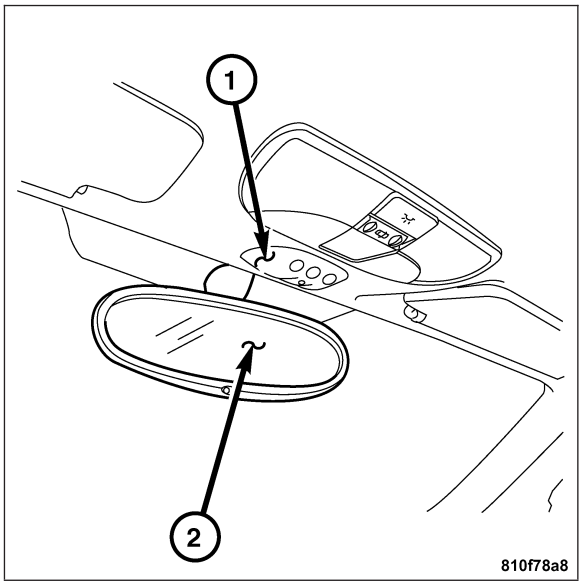

The tire pressure monitoring system utilizes transmitters that are located in the valve stem (1) of each tire (2) to communicate the tire pressure condition to the module. If a tire has low air pressure, an indicator light on the Instrument Cluster is illuminated. The vehicle operator must check the tire pressure of each tire in order to determine which tire has a low pressure condition.

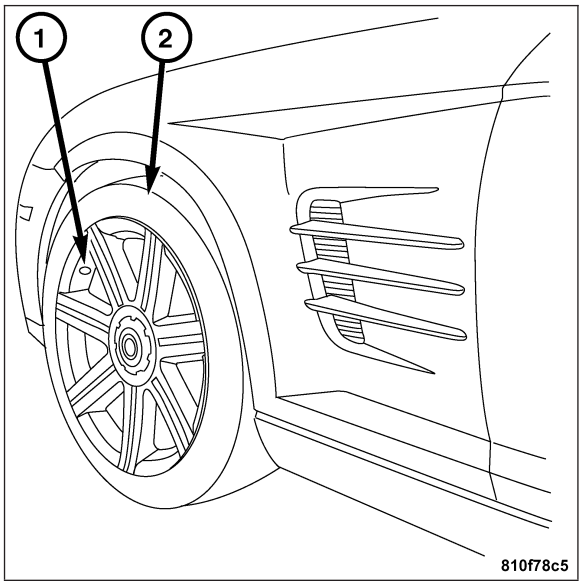

OPERATION

The Universal Garage Door Opener/Tire Pressure Monitoring (TPM) module has a microprocessor controller that can monitor the transmissions from the sensor/transmitters anytime the ignition is on. It can store the last 32 transmissions. There are two important values included in these transmissions. They are:

- Why the transmission was sent
- Low tire pressure

The module compares the transmitted tire pressure to the pressure threshold. If the module determines that the tire pressure transmitted is below the low pressure thresholds, it will signal for the “Low Tire” pressure warning lamp to come on.

The TPM module performs diagnostic routines, stores diagnostic trouble codes and provides the appropriate lamp status to the Body Control Module (BCM). When the module determines there is a fault, the low tire pressure indicator lamp circuit is grounded and the BCM turns on the “Low Tire Pressure” indicator lamp.

The UGDO/TPM module also stores its own identification number, module version and the date of manufacture.

DIAGNOSIS AND TESTING - UNIVERSAL TRANSMITTER

If the universal transmitter is inoperative, see the owner’s manual in the vehicle glove box for instructions on training the universal transmitter. Retrain the transmitter using a known good remote as instructed in the owner’s manual and test the transmitter operation again. If the transmitter is still inoperative, test the universal transmitter with a Radio Frequency Detector special tool.

1. Turn the Radio Frequency (RF) Detector “ON”. A “chirp” will sound and the green power LED will light. If the green LED does not light, replace the battery.
2. Hold the RF detector within one inch of the TRAINED universal transmitter and press any one of the transmitter buttons.
3. The red signal detection LEDs will light and the tool will beep if a radio signal is detected. Repeat this test three times.
4. If a RF signal is not detected, replace the universal transmitter and reprogram as instructed in the owner’s manual.

STANDARD PROCEDURE - UNIVERSAL TRANSMITTER PROGRAMMING

ERASING CODES

To erase previously programmed Garage Door Opener codes, simply hold down the two outside buttons until the red LED begins to flash.

PROGRAMMING CODES

1. Turn off the engine.
2. Erase the factory test codes by pressing the two outside buttons. Release the buttons when the red light begins to flash.
3. Choose one of the three buttons to program. Place the manufacturer's hand-held transmitter within one inch of the vehicle Universal Garage Door Opener and push the buttons on both transmitters. The red light on the Universal Garage Door Opener will begin to flash slowly.
4. When the red light on the Universal Garage Door Opener begins to flash rapidly (this may take as long as 60 seconds), release both buttons. The Universal Garage Door Opener is now programmed. Advise the vehicle owner to be sure to keep the manufacturer's hand-held transmitter in case it is needed to reprogram the Universal Garage Door Opener.

REMOVAL

1. Disconnect the negative battery cable.
2. Using a plastic wedge, slide the wedge under the Universal Garage Door Opener/Tire Pressure Monitor module and the headliner and pry the Universal Garage Door Opener/Tire Pressure Monitor module away from the headliner.
3. Disconnect the Universal Garage Door Opener/Tire Pressure Monitor module harness connector.

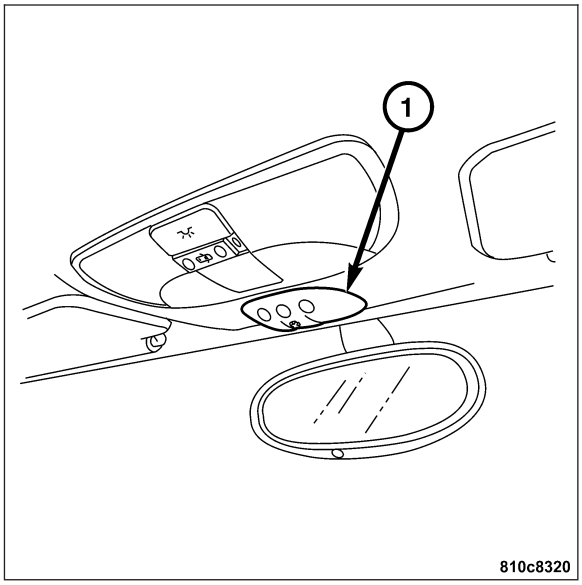

INSTALLATION

1. Connect the harness connector to the Universal Garage Door Opener/Tire Pressure Monitor module.
2. Install the Universal Garage Door Opener/Tire Pressure Monitor module by snapping it into the headliner.
3. Connect the negative battery cable.

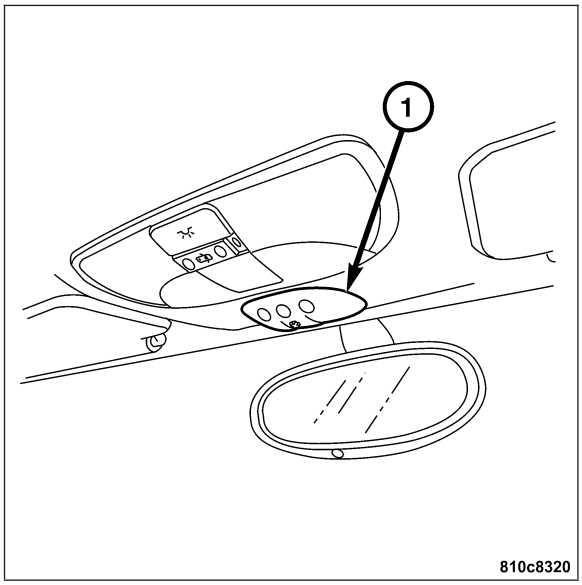

POWER SYSTEMS

TABLE OF CONTENTS

page

POWER LOCKS - ELECTRICAL DIAGNOSTICS 1
POWER LOCKS - SERVICE INFORMATION 30
POWER MIRRORS - ELECTRICAL DIAGNOSTICS 52
POWER MIRRORS - SERVICE INFORMATION . . . 66
POWER SEATS - ELECTRICAL DIAGNOSTICS . . . 73
POWER SEATS - SERVICE INFORMATION 95
POWER WINDOWS - ELECTRICAL DIAGNOSTICS 109
POWER WINDOWS - SERVICE INFORMATION 121

POWER LOCKS - ELECTRICAL DIAGNOSTICS

TABLE OF CONTENTS

page

POWER LOCKS - ELECTRICAL DIAGNOSTICS
DIAGNOSIS AND TESTING
DRIVER DOOR LOCK ACTUATOR SLOW RESPONSE 2
FUEL DOOR LOCK ACTUATOR SLOW RESPONSE 5
PASSENGER DOOR/LIFTGATE LOCK ACTUATOR SLOW RESPONSE 8
BODY CONTROL MODULE INTERNAL FAILURE 11
CLP/SSM SYSTEM UNDERVOLTAGE 14
CLP/SSM SYSTEM OVERVOLTAGE 17
NO COMMUNICATION WITH BODY CONTROL MODULE AND CENTRAL LOCKING PUMP/SECURITY SYSTEM MODULE 20
DOOR LOCK/DOOR UNLOCK SWITCH SENSE CIRCUIT 22
CENTRAL LOCKING PUMP/SECURITY SYSTEM MODULE INTERNAL FAILURE 26
BODY VERIFICATION TEST 28
SCHEMATICS AND DIAGRAMS 29

POWER LOCKS - ELECTRICAL DIAGNOSTICS

DIAGNOSIS AND TESTING

DRIVER DOOR LOCK ACTUATOR SLOW RESPONSE

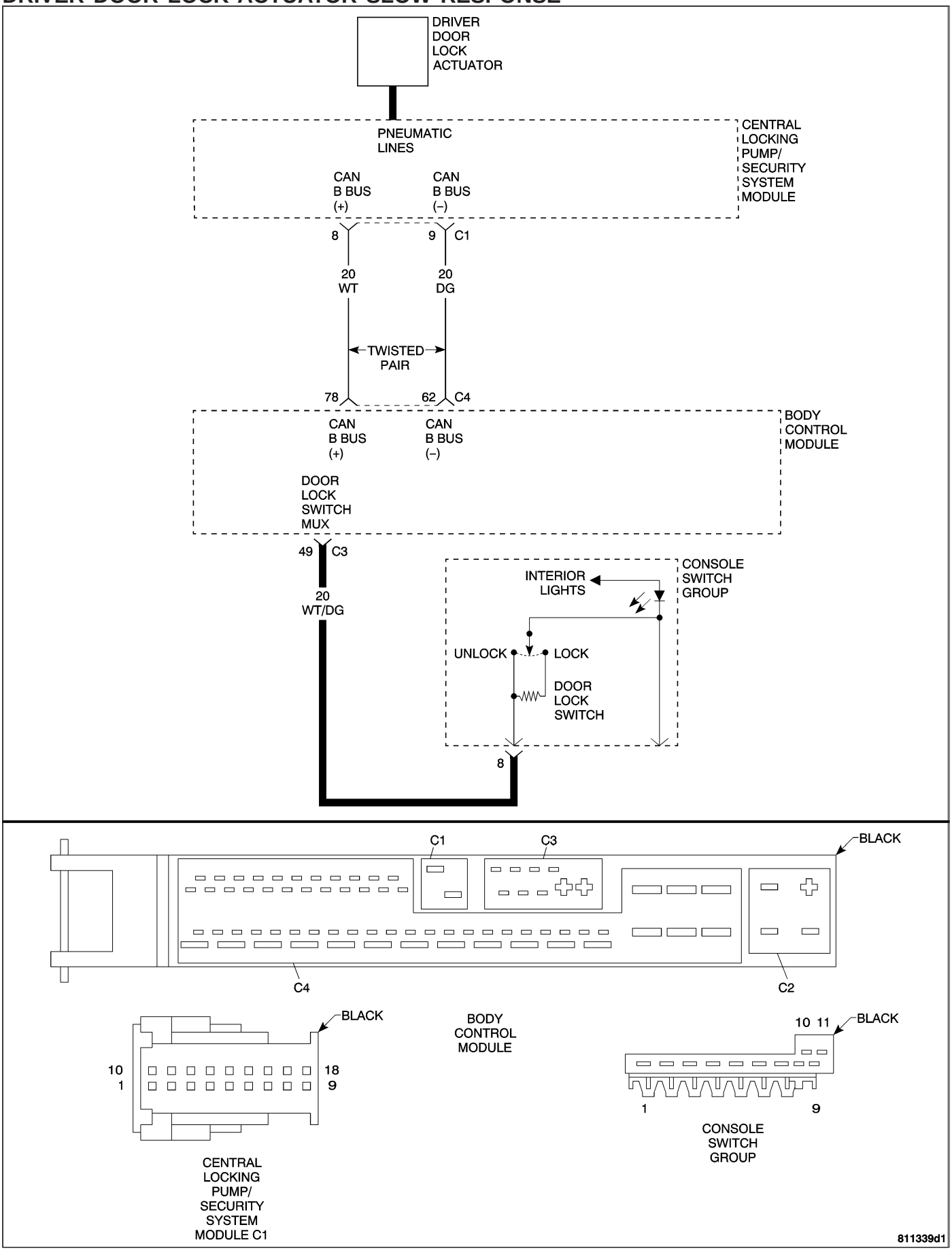

DRIVER DOOR LOCK ACTUATOR SLOW RESPONSE — CONTINUED

When Monitored and Set Condition

- When Monitored: Continuous.
- Set Condition: The Central Locking Pump/Security System Module (CLP/SSM) reports a short to power, ground, or an open that is detected by the Body Control Module (BCM) on the Door Lock Switch Mux circuit. A pressure/vacuum leak in the Driver Door Lock Actuator/Pneumatic Line can also set this DTC.

POSSIBLE CAUSES
DOOR LOCK SWITCH MUX CIRCUIT SHORT TO VOLTAGE
DOOR LOCK SWITCH MUX CIRCUIT SHORT TO GROUND
DOOR LOCK SWITCH MUX CIRCUIT OPEN
DRIVER DOOR LOCK ACTUATOR/PNEUMATIC LINE LEAK
CENTRAL LOCKING PUMP/SECURITY SYSTEM MODULE INTERNAL FAILURE

For a complete Power Locks Circuit Diagram, **Refer to Page 8N-29**.

Diagnostic Test

1. MEASURE THE RESISTANCE OF THE DOOR LOCK SWITCH MUX CIRCUIT

Turn the ignition off.

Disconnect the BCM harness connector.

Disconnect the Console Switch Group harness connector.

Note: Check connectors - Clean/repair as necessary.

Measure the resistance of the Door Lock Switch Mux circuit from the BCM harness connector to the Console Switch Group harness connector.

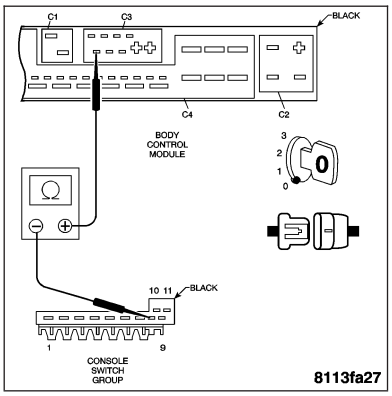

Is the resistance below 5.0 ohms?

Yes >> Go to 2

No >> Repair the Door Lock Switch Mux circuit for an open.
Perform BODY VERIFICATION TEST.

2. MEASURE THE VOLTAGE OF THE DOOR LOCK SWITCH MUX CIRCUIT

Turn the ignition on.

Measure the voltage of the Door Lock Switch Mux circuit at the Console Switch Group harness connector.

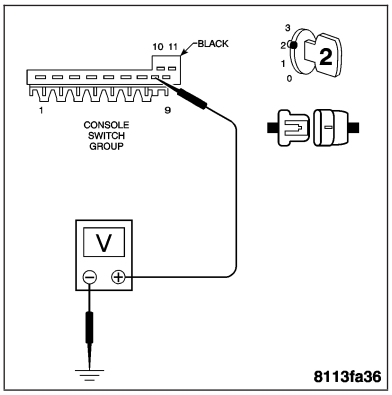

Is voltage present?

Yes >> Repair the Door Lock Switch Mux circuit for a short to voltage.
Perform BODY VERIFICATION TEST.

No >> Go to 3

DRIVER DOOR LOCK ACTUATOR SLOW RESPONSE — CONTINUED

3. MEASURE THE RESISTANCE OF THE DOOR LOCK SWITCH MUX CIRCUIT

Turn the ignition off.

Measure the resistance between ground and the Door Lock Switch Mux circuit at the BCM harness connector.

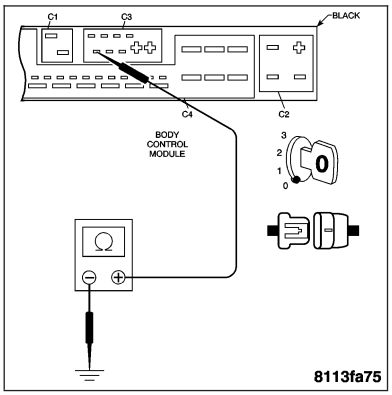

Is the resistance below 10K ohms?

Yes >> Repair the Door Lock Switch Mux circuit for a short to ground.
Perform BODY VERIFICATION TEST.

No >> Go to 4

4. INSPECT THE DRIVER DOOR LOCK ACTUATOR/PNEUMATIC LINE FOR A PRESSURE/VACUUM LEAK

Connect the BCM harness connector.

Connect the Console Switch Group harness connector.

Turn the ignition on.

Actuate the Door Lock Switch and listen for an air leak from the Driver Door Lock Actuator while locking and unlocking the doors. Also, visually inspect the door and body routed pneumatic lines for damage.

Is the Driver Door Lock Actuator/Pneumatic line damaged or leaking?

Yes >> Replace the Driver Door Lock Actuator or the leaking Pneumatic line.
Perform BODY VERIFICATION TEST.

No >> Replace the Central Locking Pump/Security System Module. **Refer to Page 8Q-48**.
Perform BODY VERIFICATION TEST.

FUEL DOOR LOCK ACTUATOR SLOW RESPONSE

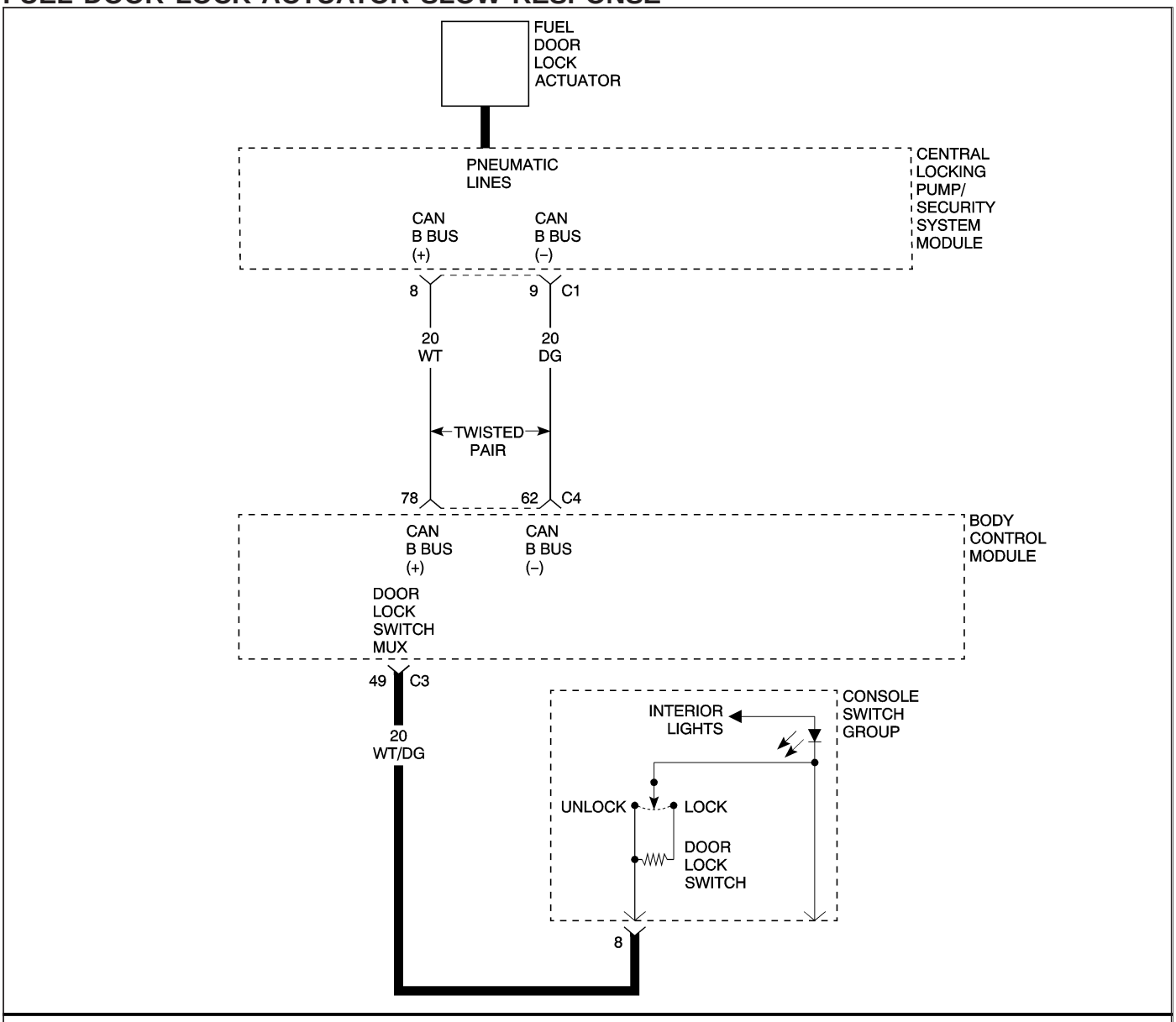

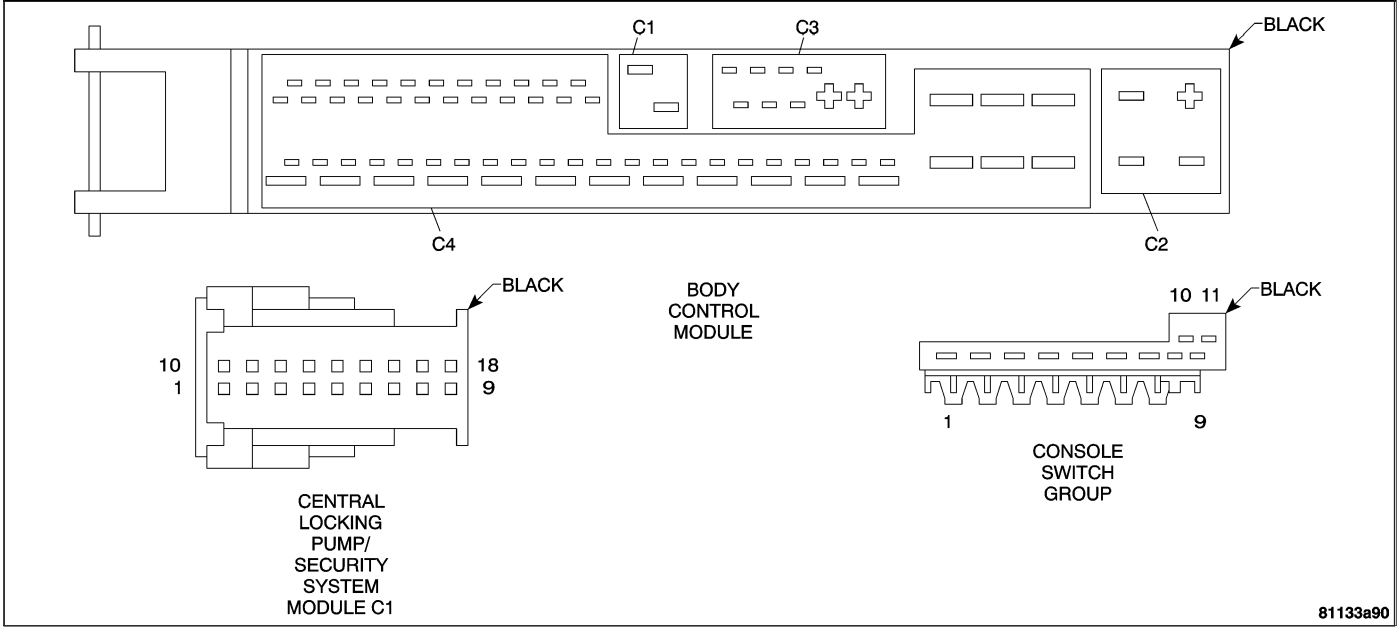

FUEL DOOR LOCK ACTUATOR SLOW RESPONSE — CONTINUED

When Monitored and Set Condition

- When Monitored: Continuous.
- Set Condition: The Central Locking Pump/Security System Module (CLP/SSM) reports a short to power, ground, or an open that is detected by the Body Control Module (BCM) on the Door Lock Switch Mux circuit. A pressure/vacuum leak in the Fuel Door Lock Actuator/Pneumatic Line can also set this DTC.

POSSIBLE CAUSES
DOOR LOCK SWITCH MUX CIRCUIT SHORT TO VOLTAGE
DOOR LOCK SWITCH MUX CIRCUIT SHORT TO GROUND
DOOR LOCK SWITCH MUX CIRCUIT OPEN
FUEL DOOR LOCK ACTUATOR/PNEUMATIC LINE LEAK
CENTRAL LOCKING PUMP/SECURITY SYSTEM MODULE INTERNAL FAILURE

For a complete Power Locks Circuit Diagram, **Refer to Page 8N-29**.

Diagnostic Test

1. MEASURE THE RESISTANCE OF THE DOOR LOCK SWITCH MUX CIRCUIT

Turn the ignition off.

Disconnect the BCM harness connector.

Disconnect the Console Switch Group harness connector.

Note: Check connectors - Clean/repair as necessary.

Measure the resistance of the Door Lock Switch Mux circuit from the BCM harness connector to the Console Switch Group harness connector.

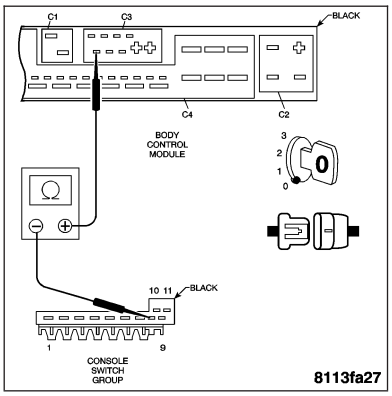

Is the resistance below 5.0 ohms?

Yes >> Go to 2

No >> Repair the Door Lock Switch Mux circuit for an open.
Perform BODY VERIFICATION TEST.

2. MEASURE THE VOLTAGE OF THE DOOR LOCK SWITCH MUX CIRCUIT

Turn the ignition on.

Measure the voltage of the Door Lock Switch Mux circuit at the Console Switch Group harness connector.

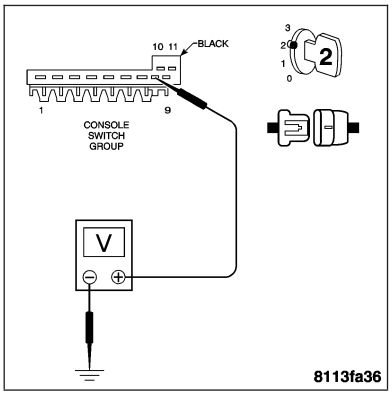

Is voltage present?

Yes >> Repair the Door Lock Switch Mux circuit for a short to voltage.
Perform BODY VERIFICATION TEST.

No >> Go to 3

FUEL DOOR LOCK ACTUATOR SLOW RESPONSE — CONTINUED

3. MEASURE THE RESISTANCE OF THE DOOR LOCK SWITCH MUX CIRCUIT

Turn the ignition off.

Measure the resistance between ground and the Door Lock Switch Mux circuit at the BCM harness connector.

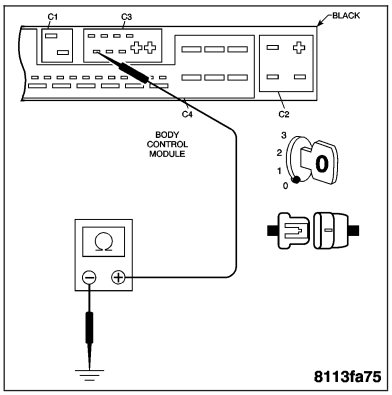

Is the resistance below 10K ohms?

Yes >> Repair the Door Lock Switch Mux circuit for a short to ground.
Perform BODY VERIFICATION TEST.

No >> Go to 4

4. INSPECT THE FUEL DOOR LOCK ACTUATOR/PNEUMATIC LINE FOR A PRESSURE/VACUUM LEAK

Connect the BCM harness connector.

Connect the Console Switch Group harness connector.

Turn the ignition on.

Actuate the Door Lock Switch and have an assistant listen for an air leak from the Fuel Door Lock Actuator while locking and unlocking the doors. Also, visually inspect the body routed pneumatic lines for damage.

Is the Fuel Door Lock Actuator/Pneumatic line damaged or leaking?

Yes >> Replace the Fuel Door Lock Actuator. **Refer to Page 8N-44** or the leaking Pneumatic line.
Perform BODY VERIFICATION TEST.

No >> Replace the Central Locking Pump/Security System Module. **Refer to Page 8Q-48**.
Perform BODY VERIFICATION TEST.

PASSENGER DOOR/LIFTGATE LOCK ACTUATOR SLOW RESPONSE

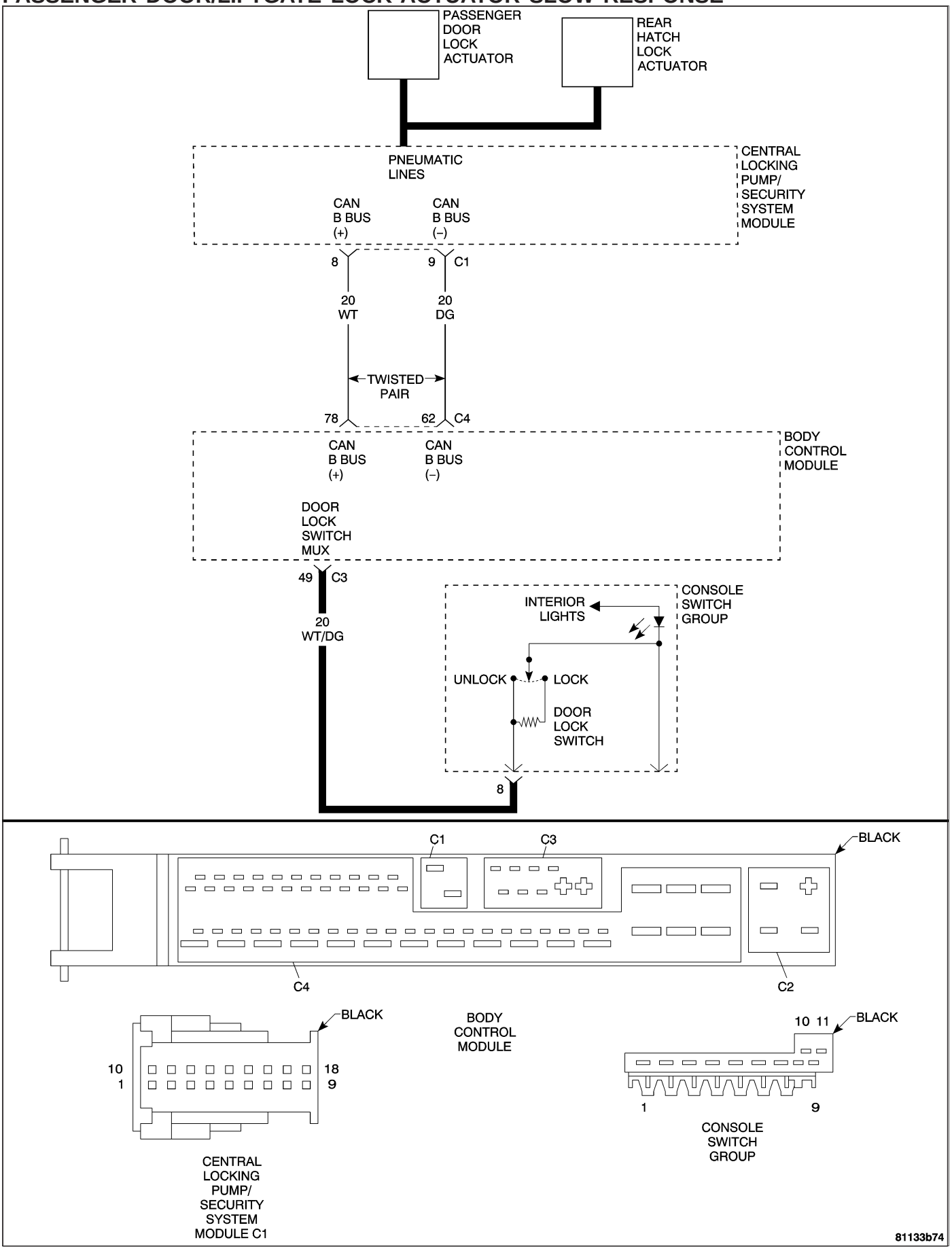

PASSENGER DOOR/LIFTGATE LOCK ACTUATOR SLOW RESPONSE — CONTINUED

When Monitored and Set Condition

- When Monitored: Continuous.
- Set Condition: The Central Locking Pump/Security System Module (CLP/SSM) reports a short to power, ground, or an open that is detected by the Body Control Module (BCM) on the Door Lock Switch Mux circuit. A pressure/vacuum leak in the Passenger Door/Liftgate Lock Actuator/Pneumatic Line can also set this DTC.

POSSIBLE CAUSES
DOOR LOCK SWITCH MUX CIRCUIT SHORT TO VOLTAGE
DOOR LOCK SWITCH MUX CIRCUIT SHORT TO GROUND
DOOR LOCK SWITCH MUX CIRCUIT OPEN
PASSENGER DOOR/LIFTGATE LOCK ACTUATOR/PNEUMATIC LINE LEAK
CENTRAL LOCKING PUMP/SECURITY SYSTEM MODULE INTERNAL FAILURE

For a complete Power Locks Circuit Diagram, **Refer to Page 8N-29**.

Diagnostic Test

1. MEASURE THE RESISTANCE OF THE DOOR LOCK SWITCH MUX CIRCUIT

Turn the ignition off.

Disconnect the BCM harness connector.

Disconnect the Console Switch Group harness connector.

Note: Check connectors - Clean/repair as necessary.

Measure the resistance of the Door Lock Switch Mux circuit from the BCM harness connector to the Console Switch Group harness connector.

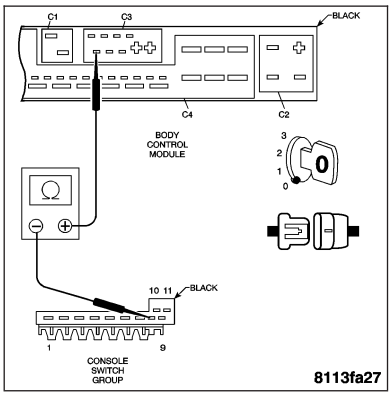

Is the resistance below 5.0 ohms?

Yes >> Go to 2

No >> Repair the Door Lock Switch Mux circuit for an open.
Perform BODY VERIFICATION TEST.

2. MEASURE THE VOLTAGE OF THE DOOR LOCK SWITCH MUX CIRCUIT

Turn the ignition on.

Measure the voltage of the Door Lock Switch Mux circuit at the Console Switch Group harness connector.

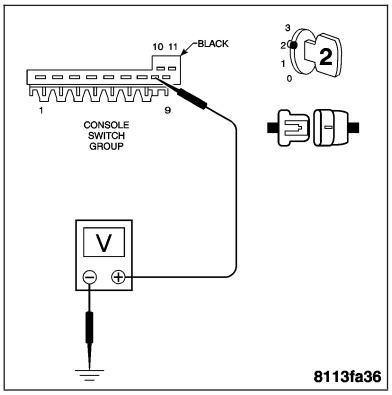

Is voltage present?

Yes >> Repair the Door Lock Switch Mux circuit for a short to voltage.
Perform BODY VERIFICATION TEST.

No >> Go to 3

PASSENGER DOOR/LIFTGATE LOCK ACTUATOR SLOW RESPONSE — CONTINUED

3. MEASURE THE RESISTANCE OF THE DOOR LOCK SWITCH MUX CIRCUIT

Turn the ignition off.

Measure the resistance between ground and the Door Lock Switch Mux circuit at the BCM harness connector.

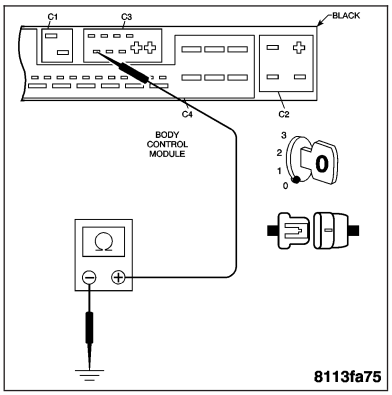

Is the resistance below 10K ohms?

Yes >> Repair the Door Lock Switch Mux circuit for a short to ground.
Perform BODY VERIFICATION TEST.

No >> Go to 4

4. INSPECT THE PASSENGER DOOR/LIFTGATE LOCK ACTUATOR/ PNEUMATIC LINE FOR A PRESSURE/VACUUM LEAK

Connect the BCM harness connector.

Connect the Console Switch Group harness connector.

Turn the ignition on.

Actuate the Door Lock Switch and listen for an air leak from the Passenger Door Lock Actuator or have an assistant listen for an air leak from the Liftgate Lock Actuator while locking and unlocking the doors. Also, visually inspect the door, body, and hatch routed pneumatic lines for damage.

Is the Passenger Door/Liftgate Lock Actuator/Pneumatic line damaged or leaking?

Yes >> Replace the Passenger Door/Liftgate Lock Actuator or the leaking Pneumatic line. **Refer to Page 8N-46**.
Perform BODY VERIFICATION TEST.

No >> Replace the Central Locking Pump/Security System Module. **Refer to Page 8Q-48**.
Perform BODY VERIFICATION TEST.

BODY CONTROL MODULE INTERNAL FAILURE

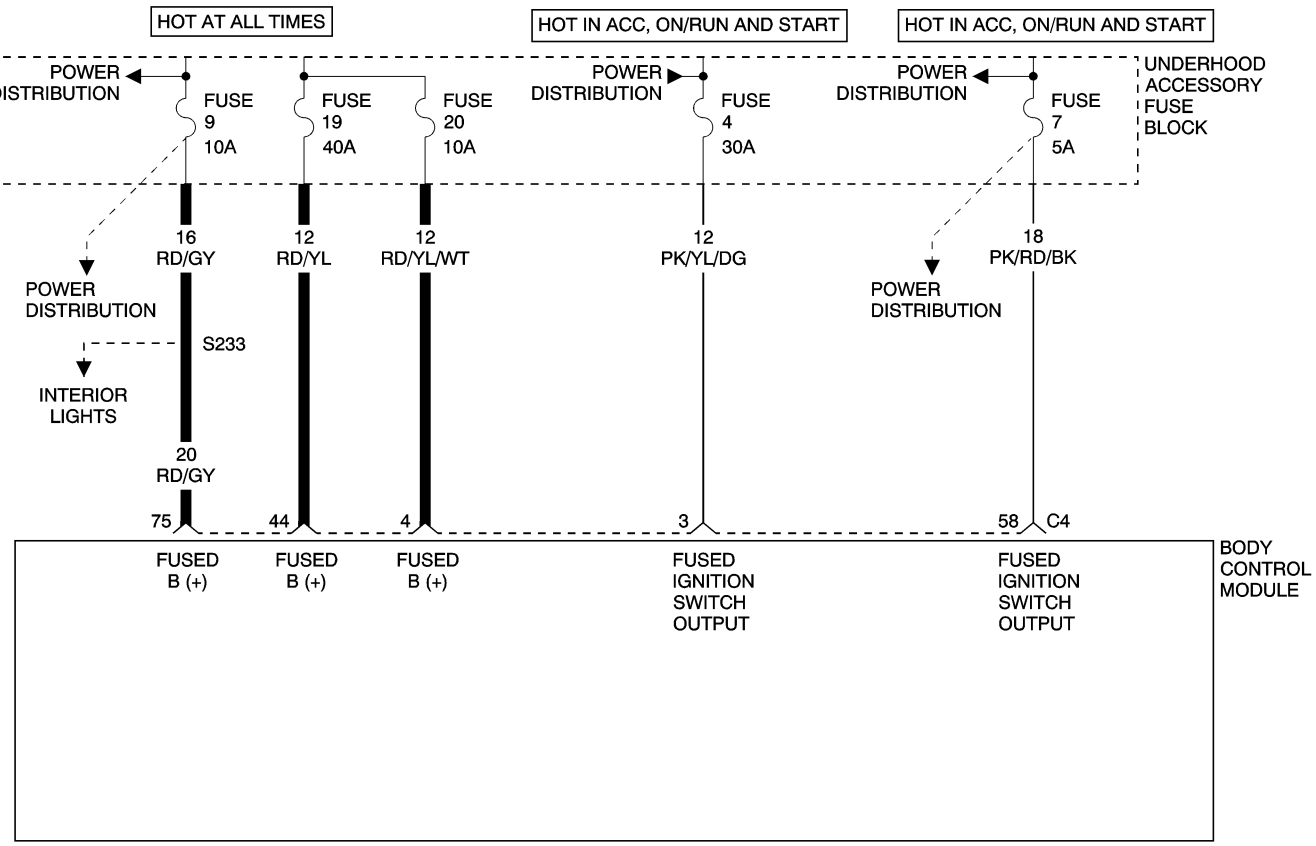

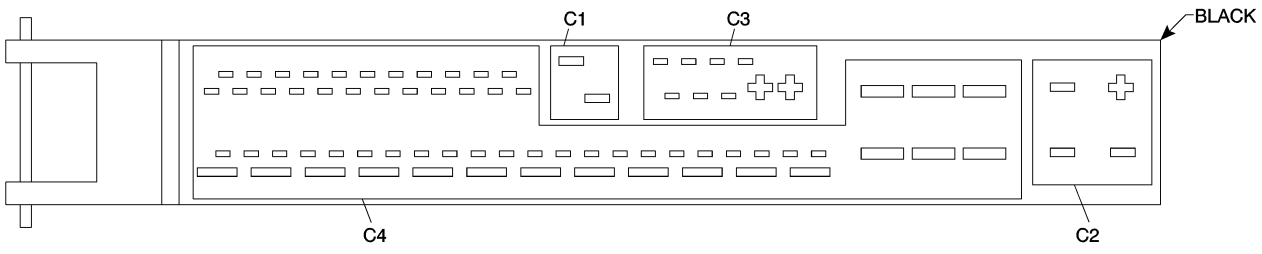

BODY CONTROL MODULE

8112fab7

BODY CONTROL MODULE INTERNAL FAILURE — CONTINUED

When Monitored and Set Condition

- When Monitored: Continuous.
- Set Condition: If the Body Control Module (BCM) detects an internal malfunction, the DTC is set.

POSSIBLE CAUSES
NO POWER TO BODY CONTROL MODULE
BODY CONTROL MODULE

For a complete Body Control Module (BCM) Circuit Diagram, **Refer to Page 8N-29**.

Diagnostic Test

1. MEASURE THE VOLTAGE OF THE BCM POWER CIRCUIT

Turn the ignition off.

Disconnect the BCM harness connector.

Note: Check connectors - Clean/repair as necessary.
Measure the voltage of the Fused B(+) circuit (cavity 75) at the BCM C4 harness connector.

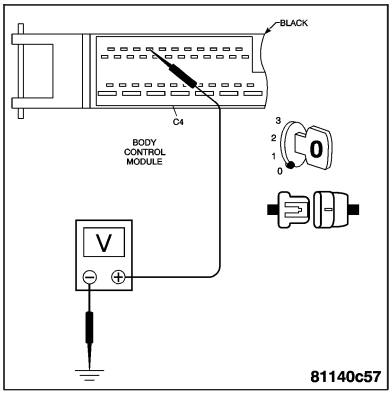

Is the voltage between 12 and 16 volts?

Yes >> Go to 2

No >> System voltage must be between 12 and 16 volts. Repair the voltage concern as necessary.
Perform BODY VERIFICATION TEST.

2. MEASURE THE VOLTAGE OF THE BCM POWER CIRCUIT

Measure the voltage of the Fused B(+) circuit (cavity 44) at the BCM C4 harness connector.

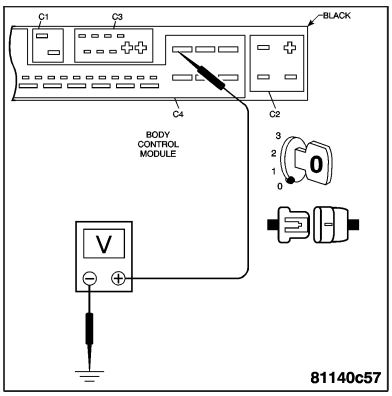

Is the voltage between 12 and 16 volts?

Yes >> Go to 3

No >> System voltage must be between 12 and 16 volts. Repair the voltage concern as necessary.
Perform BODY VERIFICATION TEST.

BODY CONTROL MODULE INTERNAL FAILURE — CONTINUED

3. MEASURE THE VOLTAGE OF THE BCM POWER CIRCUIT

Measure the voltage of the Fused B(+) circuit (cavity 4) at the BCM C4 harness connector.

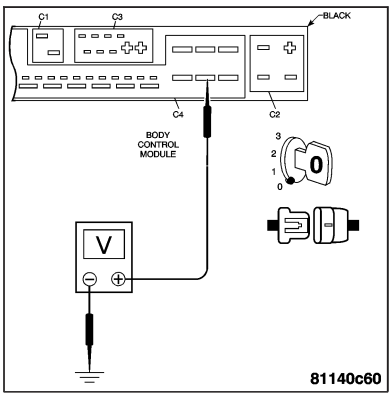

Is the voltage between 12 and 16 volts?

Yes >> Replace the Body Control Module. **Refer to Page 8E-72**.
Perform BODY VERIFICATION TEST.

No >> System voltage must be between 12 and 16 volts. Repair the voltage concern as necessary.
Perform BODY VERIFICATION TEST.

CLP/SSM SYSTEM UNDERVOLTAGE

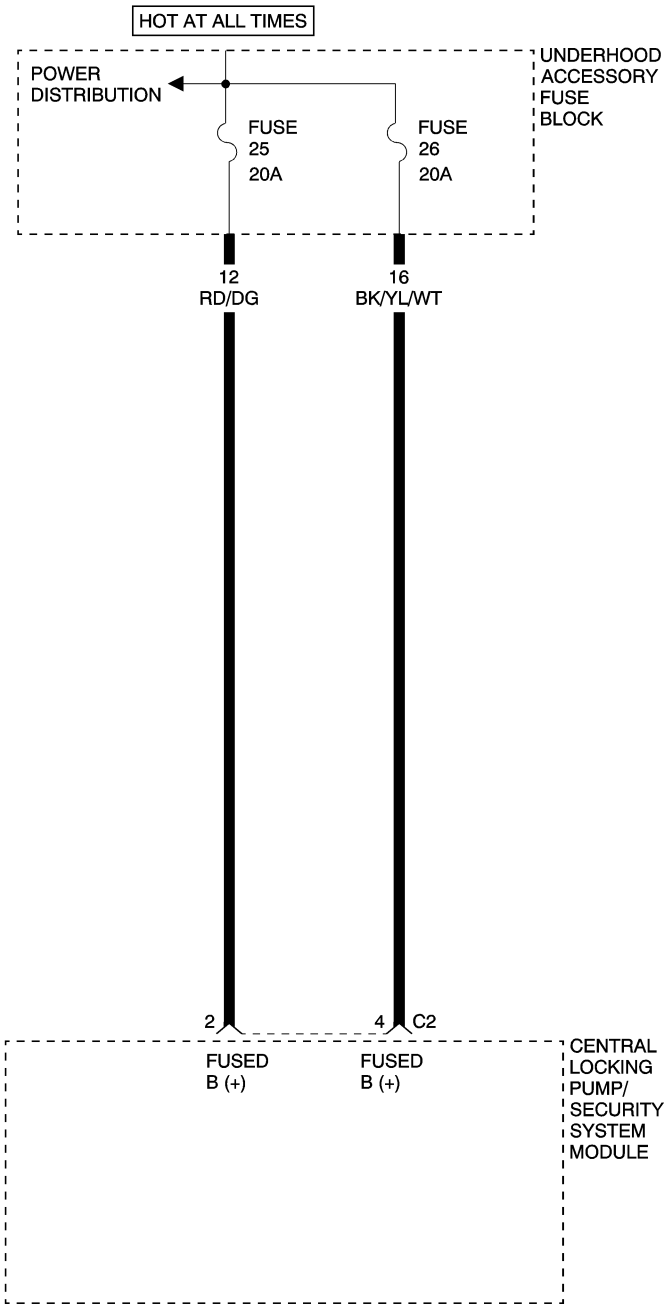

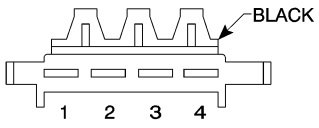

CENTRAL LOCKING PUMP/ SECURITY SYSTEM MODULE C2

8112fc23

CLP/SSM SYSTEM UNDERVOLTAGE — CONTINUED

When Monitored and Set Condition

- When Monitored: Ignition on. The Central Locking Pump/Security System Module (CLP/SSM) monitors the Fused B(+) circuit voltage for proper system voltage.
- Set Condition: If the voltage is below 11 volts, the Diagnostic Trouble Code (DTC) is set.

POSSIBLE CAUSES
BATTERY VOLTAGE LOW
FUSED B(+) CIRCUIT HIGH RESISTANCE
CENTRAL LOCKING PUMP/SECURITY SYSTEM MODULE INTERNAL FAILURE

For a complete Power Locks Circuit Diagram, **Refer to Page 8N-29**.

Diagnostic Test

1. WITH THE DRB III®, READ DTCs

Turn the ignition on.
With the DRB III®, erase DTCs.
Turn the ignition off.
Turn the ignition on.
Start the engine.
With the DRB III®, read DTCs.

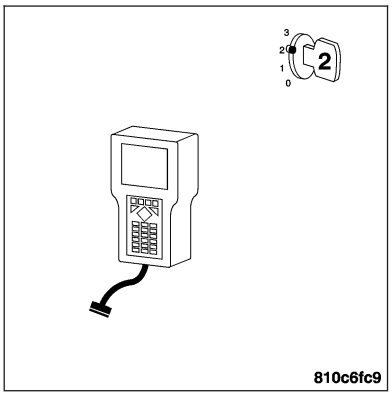

Does the DRB III® display a System Undervoltage DTC?

Yes >> Go to 2

No >> The condition that caused this DTC to set is currently not present. Inspect the related wiring harness for a possible intermittent condition.

2. MEASURE THE BATTERY VOLTAGE

Measure the battery voltage with the engine running.

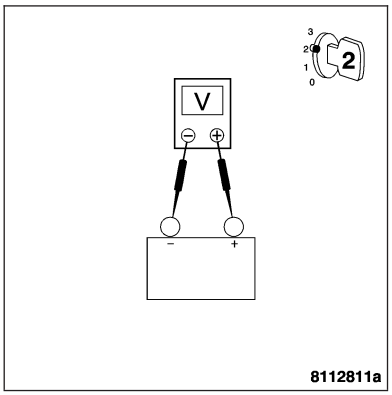

Is the battery voltage below 10 volts?

Yes >> Refer to the appropriate service information for charging system testing and repair.
Perform BODY VERIFICATION TEST.

No >> Go to 3

CLP/SSM SYSTEM UNDERVOLTAGE — CONTINUED

3. MEASURE THE VOLTAGE OF THE FUSED B(+) CIRCUIT

Turn the ignition off.

Disconnect the CLP/SSM harness connector.

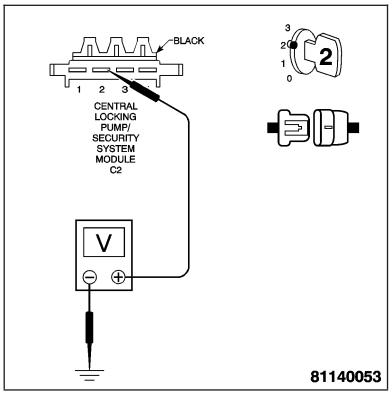

Note: Check connectors - Clean/repair as necessary.

Turn the ignition on.

Measure the voltage of the Fused B(+) circuit (cavity 2) at the CLP/SSM C2 harness connector.

Is the voltage above 11 volts?

Yes >> Go to 4

No >> Repair the Fused B(+) circuit for high resistance.
Perform BODY VERIFICATION TEST.

4. MEASURE THE VOLTAGE OF THE FUSED B(+) CIRCUIT

Measure the voltage of the Fused B(+) circuit (cavity 4) at the CLP/SSM C2 harness connector.

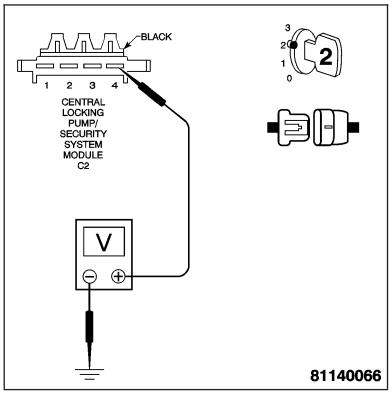

Is the voltage above 11 volts?

Yes >> Replace the Central Locking Pump/Security System Module. **Refer to Page 8Q-48**.
Perform BODY VERIFICATION TEST.

No >> Repair the Fused B(+) circuit for high resistance.
Perform BODY VERIFICATION TEST.

CLP/SSM SYSTEM OVERVOLTAGE

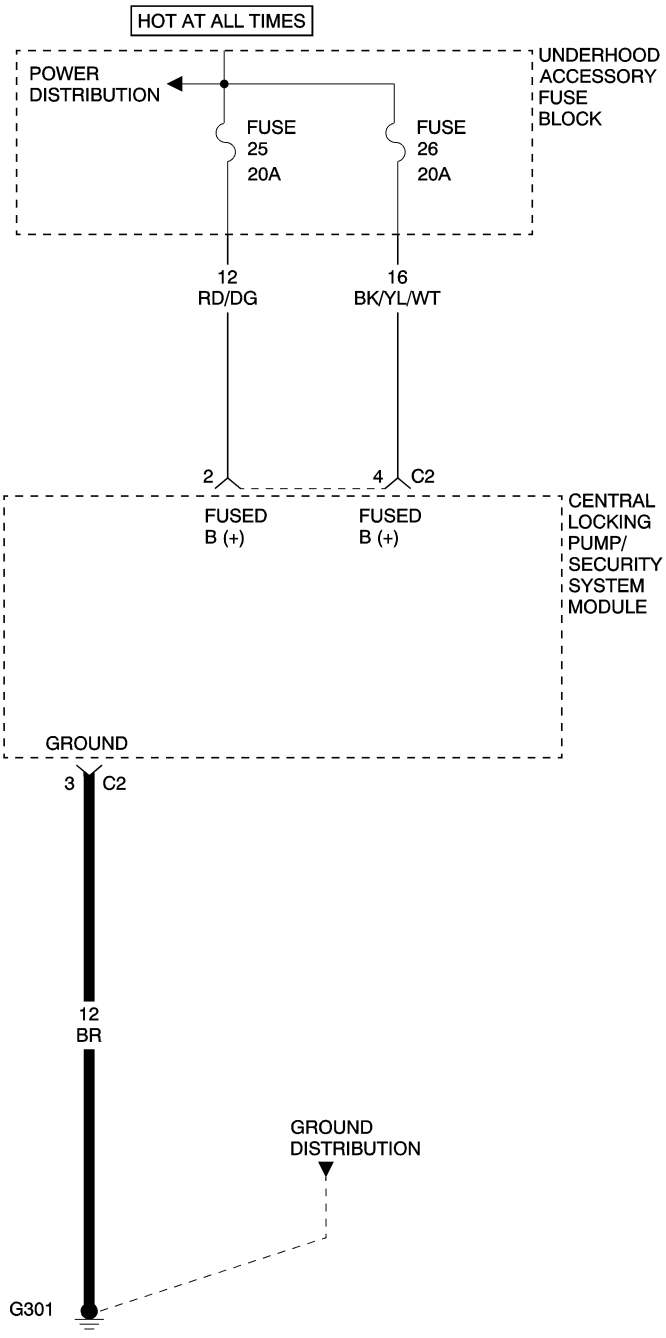

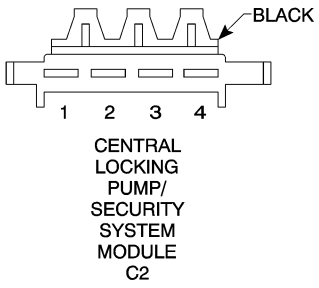

8112fd79

CLP/SSM SYSTEM OVERVOLTAGE — CONTINUED

When Monitored and Set Condition

- When Monitored: Ignition on. The Central Locking Pump/Security System Module (CLP/SSM) monitors the Fused B(+) circuit at all times for proper system voltage.
- Set Condition: If the voltage is above 16 volts, the Diagnostic Trouble Code (DTC) is set.

POSSIBLE CAUSES
SYSTEM VOLTAGE HIGH
GROUND CIRCUIT OPEN
CENTRAL LOCKING PUMP/SECURITY SYSTEM MODULE INTERNAL FAILURE

For a complete Power Locks Circuit Diagram, **Refer to Page 8N-29**.

Diagnostic Test

1. WITH THE DRB III®, READ DTCs

Turn the ignition on.
With the DRB III®, erase DTCs.
Turn the ignition off.
Turn the ignition on.
Start the engine.
With the DRB III®, read DTCs.

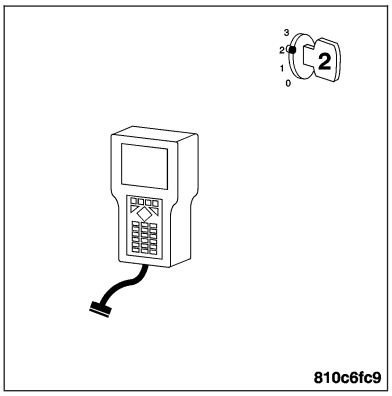

Does the DRB III® display a System Overvoltage DTC?

Yes >> Go to 2

No >> The condition that caused this DTC to set is currently not present. Inspect the related wiring harness for a possible intermittent condition.

2. MEASURE THE BATTERY VOLTAGE

Turn the ignition off.
Disconnect the CLP/SSM harness connector.

Note: Check connectors - Clean/repair as necessary.
Start the engine.
Raise the engine speed above 1800 RPM.
Measure the battery voltage.

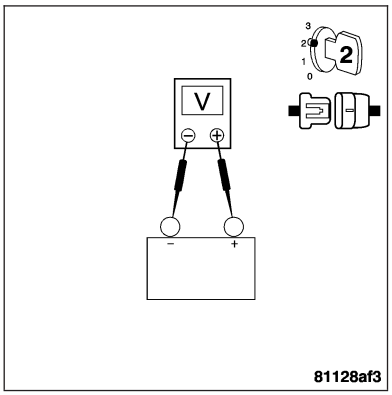

Is the voltage above 16 volts?

Yes >> Refer to the appropriate service information for charging system testing and repair.
Perform BODY VERIFICATION TEST.

No >> Go to 3

CLP/SSM SYSTEM OVERVOLTAGE — CONTINUED

3. MEASURE THE RESISTANCE OF THE GROUND CIRCUIT

Turn the ignition off.
Measure the resistance between ground and the Ground circuit.

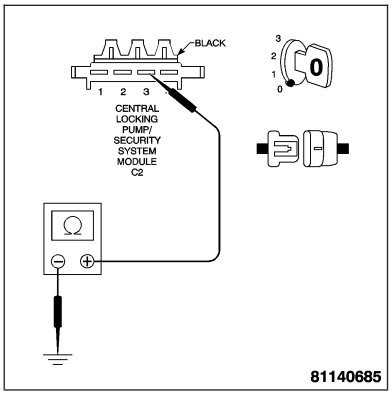

Is the resistance below 1.0 ohm?

Yes >> Replace the Central Locking Pump/Security System Module. **Refer to Page 8Q-48**.
Perform BODY VERIFICATION TEST.

No >> Repair the Ground circuit for an open.
Perform BODY VERIFICATION TEST.

NO COMMUNICATION WITH BODY CONTROL MODULE AND CENTRAL LOCKING PUMP/SECURITY SYSTEM MODULE

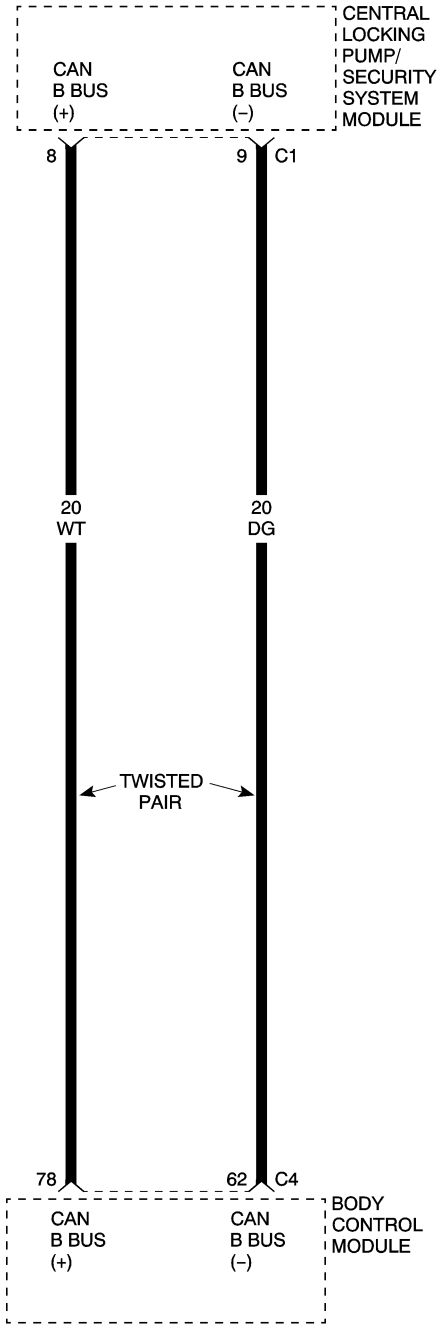

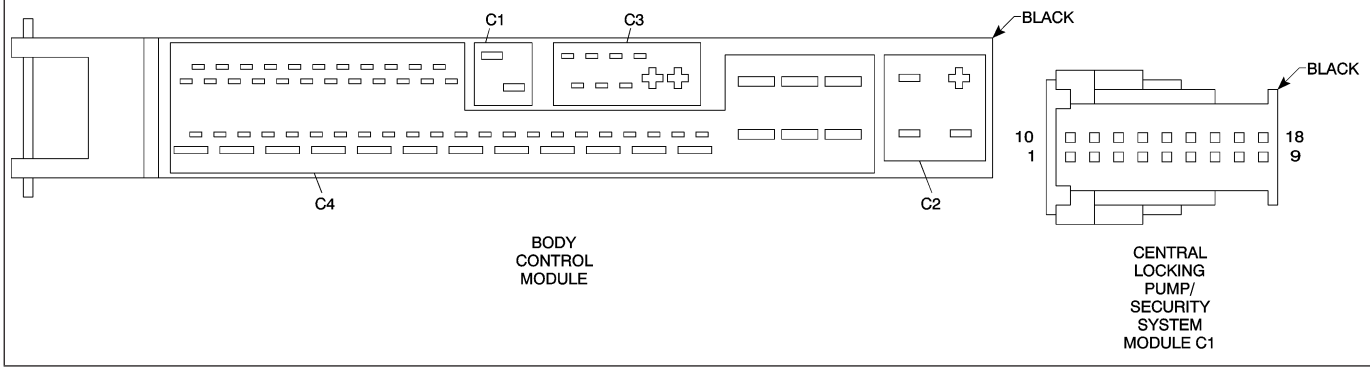

NO COMMUNICATION WITH BODY CONTROL MODULE AND CENTRAL LOCKING PUMP/SECURITY SYSTEM MODULE — CONTINUED

When Monitored and Set Condition

- When Monitored: Continuous.
- Set Condition: CAN Bus communication failure between the Body Control Module (BCM) and the Central Locking Pump/Security System Module (CLP/SSM).

POSSIBLE CAUSES
CAN B BUS (+) CIRCUIT OPEN
CAN B BUS (-) CIRCUIT OPEN
CENTRAL LOCKING PUMP/SECURITY SYSTEM MODULE INTERNAL FAILURE

For a complete Power Locks Circuit Diagram, **Refer to Page 8N-29**.

Diagnostic Test

1. MEASURE THE RESISTANCE OF THE CAN B BUS (+) CIRCUIT

Turn the ignition off.

Disconnect the CLP/SSM harness connector.

Disconnect the BCM harness connector.

Note: Check connectors - Clean/repair as necessary.

Measure the resistance of the CAN B Bus (+) circuit from the CLP/SSM harness connector to the BCM harness connector.

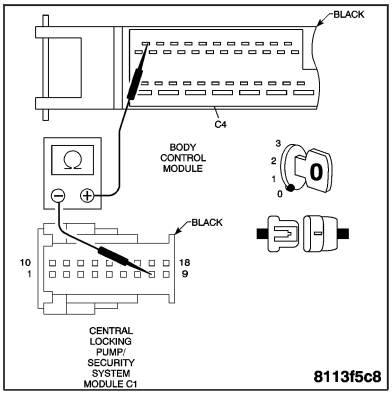

Is the resistance below 1.0 ohm?

Yes >> Go to 2

No >> Repair the CAN B Bus (+) circuit for an open.
Perform BODY VERIFICATION TEST.

2. MEASURE THE RESISTANCE OF THE CAN B BUS (-) CIRCUIT

Measure the resistance of the CAN B Bus (-) circuit from the CLP/SSM harness connector to the BCM harness connector.

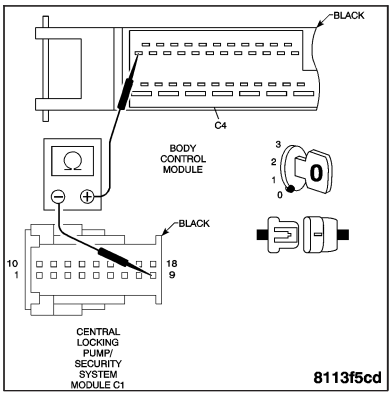

Is the resistance below 1.0 ohm?

Yes >> Replace the Central Locking Pump/Security System Module. **Refer to Page 8Q-48**.
Perform BODY VERIFICATION TEST.

No >> Repair the CAN B Bus (-) circuit for an open.
Perform BODY VERIFICATION TEST.

DOOR LOCK/DOOR UNLOCK SWITCH SENSE CIRCUIT

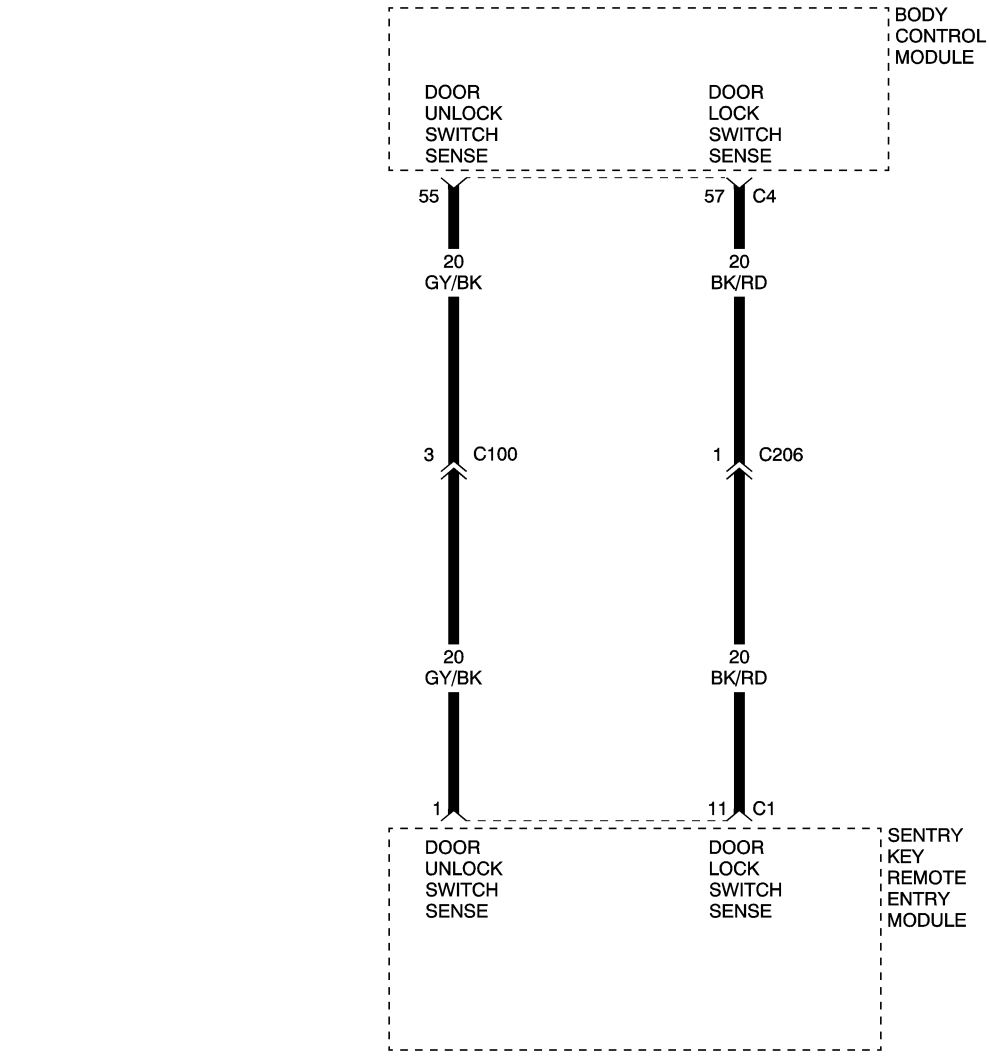

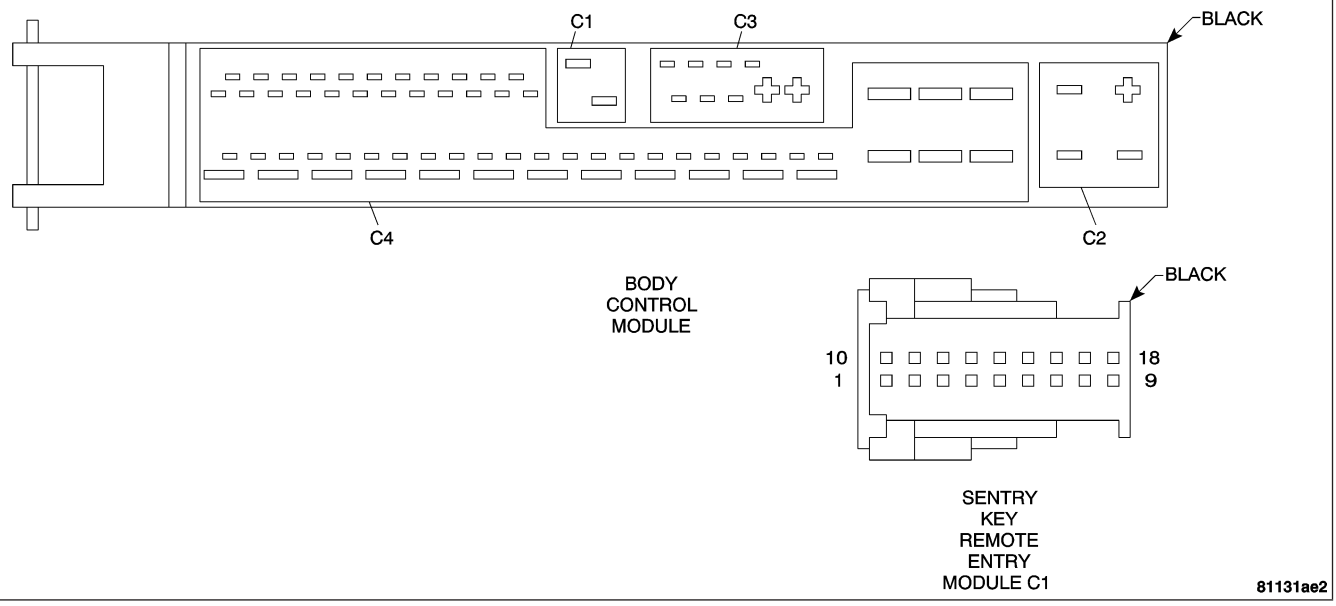

DOOR LOCK/DOOR UNLOCK SWITCH SENSE CIRCUIT — CONTINUED

When Monitored and Set Condition

- When Monitored: Continuous.
- Set Condition: The Central Locking Pump/Security System Module (CLP/SSM) reports a short to power, ground, or an open circuit failure that is detected between the Body Control Module (BCM) and the Sentry Key Remote Entry Module (SKREEM) on the Door Lock/Unlock Switch Sense circuit.

POSSIBLE CAUSES
DOOR LOCK/UNLOCK SWITCH SENSE CIRCUIT SHORTED TO VOLTAGE
DOOR LOCK/UNLOCK SWITCH SENSE CIRCUITS SHORTED TOGETHER
DOOR LOCK/UNLOCK SWITCH SENSE CIRCUIT SHORTED TO GROUND
DOOR LOCK/UNLOCK SWITCH SENSE CIRCUIT OPEN
BODY CONTROL MODULE INTERNAL FAILURE

For a complete Power Locks Circuit Diagram, **Refer to Page 8N-29**.

Diagnostic Test

1. MEASURE THE RESISTANCE OF THE DOOR LOCK SWITCH SENSE CIRCUIT

Turn the ignition off.

Disconnect the BCM harness connector.

Disconnect the SKREEM harness connector.

Note: Check connectors - Clean/repair as necessary.

Measure the resistance of the Door Lock Switch Sense circuit from the BCM harness connector to the SKREEM harness connector.

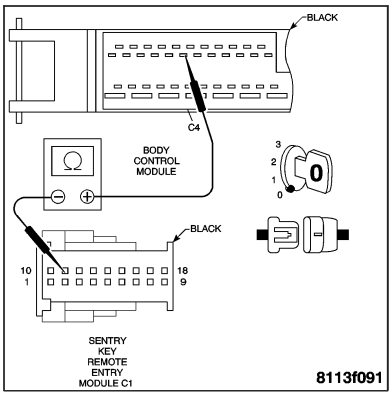

Is the resistance below 5.0 ohms?

Yes >> Go to 2

No >> Repair the Door Lock Switch Sense circuit for an open. Perform BODY VERIFICATION TEST.

2. MEASURE THE RESISTANCE OF THE DOOR UNLOCK SWITCH SENSE CIRCUIT

Measure the resistance of the Door Unlock Switch Sense circuit from the BCM harness connector to the SKREEM harness connector.

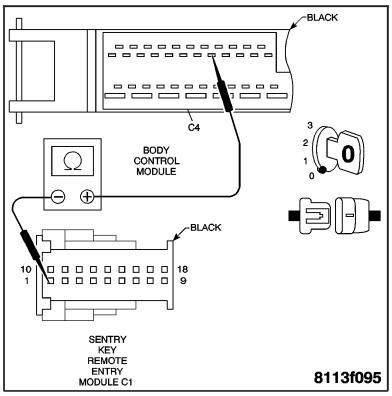

Is the resistance below 5.0 ohms?

Yes >> Go to 3

No >> Repair the Door Unlock Switch Sense circuit for an open. Perform BODY VERIFICATION TEST.

DOOR LOCK/DOOR UNLOCK SWITCH SENSE CIRCUIT — CONTINUED

3. MEASURE THE RESISTANCE OF THE DOOR LOCK/UNLOCK SWITCH SENSE CIRCUITS

Measure the resistance between the Door Lock/Unlock Switch Sense circuits at the SKREEM harness connector.

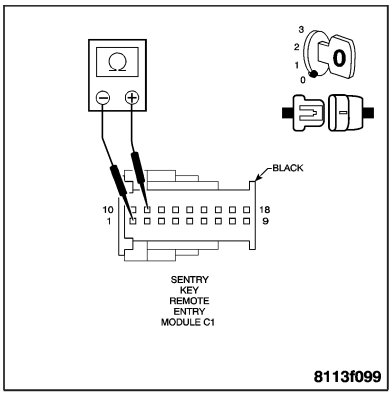

Is the resistance below 10K ohms?

Yes >> Repair the Door Lock/Unlock Switch Sense circuits for a short together.
Perform BODY VERIFICATION TEST.

No >> Go to 4

4. MEASURE THE VOLTAGE OF THE DOOR LOCK SWITCH SENSE CIRCUIT

Turn the ignition on.

Measure the voltage of the Door Lock Switch Sense circuit at the SKREEM harness connector.

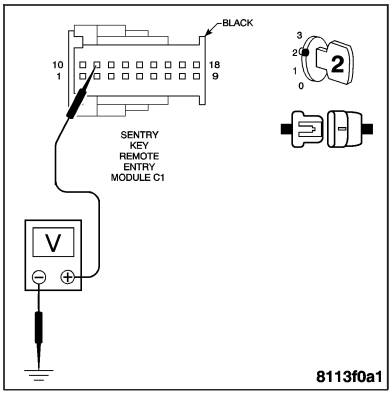

Is voltage present?

Yes >> Repair the Door Lock Switch Sense circuit for a short to voltage.
Perform BODY VERIFICATION TEST.

No >> Go to 5

5. MEASURE THE VOLTAGE OF THE DOOR UNLOCK SWITCH SENSE CIRCUIT

Measure the voltage of the Door Unlock Switch Sense circuit at the SKREEM harness connector.

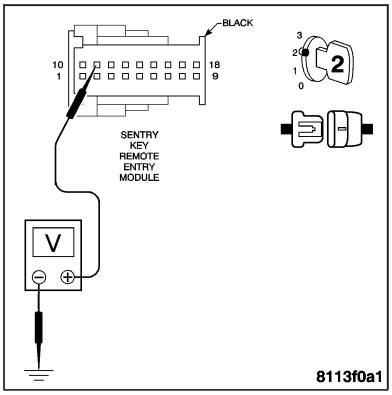

Is voltage present?

Yes >> Repair the Door Unlock Switch Sense circuit for a short to voltage.
Perform BODY VERIFICATION TEST.

No >> Go to 6

DOOR LOCK/DOOR UNLOCK SWITCH SENSE CIRCUIT — CONTINUED

6. MEASURE THE RESISTANCE OF THE DOOR LOCK SWITCH SENSE CIRCUIT

Turn the ignition off.

Measure the resistance between ground and the Door Lock Switch Sense circuit at the SKREEM harness connector.

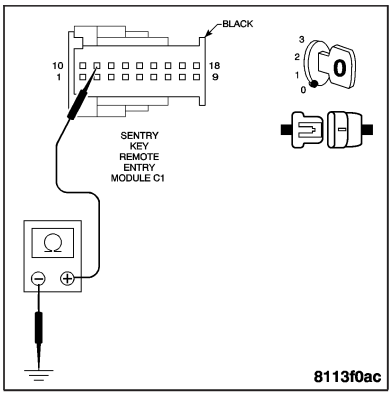

Is the resistance below 10K ohms?

Yes >> Repair the Door Lock Switch Sense circuit for a short to ground.
Perform BODY VERIFICATION TEST.

No >> Go to 7

7. MEASURE THE RESISTANCE OF THE DOOR UNLOCK SWITCH SENSE CIRCUIT

Measure the resistance between ground and the Door Unlock Switch Sense circuit at the SKREEM harness connector.

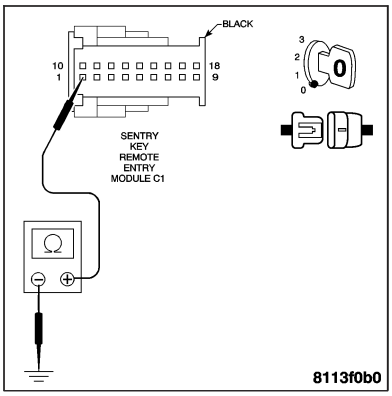

Is the resistance below 10K ohms?

Yes >> Repair the Door Unlock Switch Sense circuit for a short to ground.
Perform BODY VERIFICATION TEST.

No >> Replace the Body Control Module. **Refer to Page 8E-72**.
Perform BODY VERIFICATION TEST.

CENTRAL LOCKING PUMP/SECURITY SYSTEM MODULE INTERNAL FAILURE

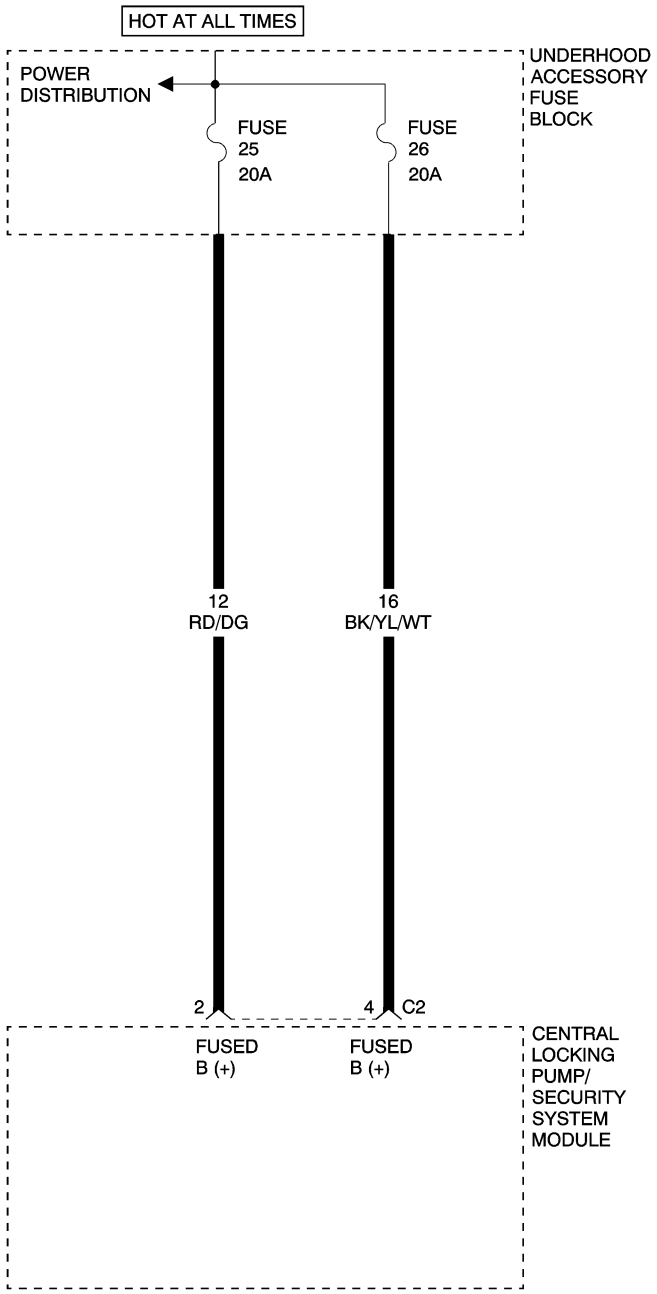

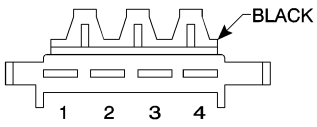

CENTRAL LOCKING PUMP/ SECURITY SYSTEM MODULE C2

8112fbac

CENTRAL LOCKING PUMP/SECURITY SYSTEM MODULE INTERNAL FAILURE — CONTINUED

When Monitored and Set Condition

- When Monitored: Continuous.
- Set Condition: If the Central Locking Pump/Security System Module (CLP/SSM) detects an internal malfunction, the DTC is set.

POSSIBLE CAUSES
NO POWER TO CENTRAL LOCKING PUMP/SECURITY SYSTEM MODULE
CENTRAL LOCKING PUMP/SECURITY SYSTEM MODULE INTERNAL FAILURE

For a complete Power Locks Circuit Diagram, **Refer to Page 8N-29**.

Diagnostic Test

1. MEASURE THE VOLTAGE OF THE CLP/SSM POWER CIRCUIT

Turn the ignition off.

Disconnect the CLP/SSM harness connector.

Measure the voltage of the Fused B(+) circuit (cavity 2) at the CLP/SSM C2 harness connector.

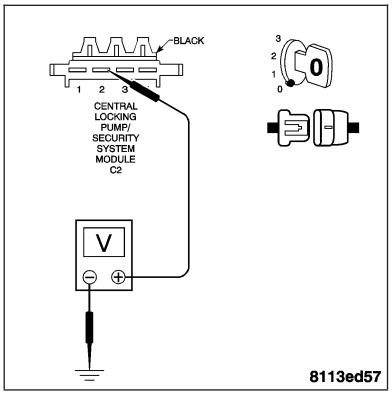

Is the voltage between 12 and 16 volts?

Yes >> Go to 2

No >> System voltage must be between 12 and 16 volts. Repair the voltage concern as necessary.
Perform BODY VERIFICATION TEST.

2. MEASURE THE VOLTAGE OF THE CLP/SSM POWER CIRCUIT

Measure the voltage of the Fused B(+) circuit (cavity 4) at the CLP/SSM C2 harness connector.

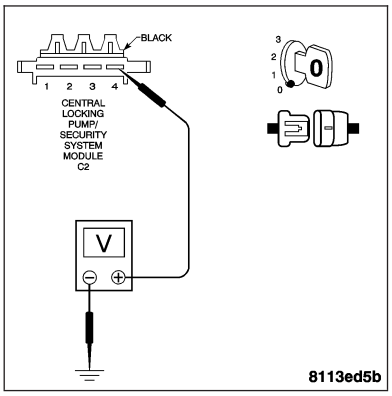

Is the voltage between 12 and 16 volts?

Yes >> Replace the Central Locking Pump/Security System Module. **Refer to Page 8Q-48**.
Perform BODY VERIFICATION TEST.

No >> System voltage must be between 12 and 16 volts. Repair the voltage concern as necessary.
Perform BODY VERIFICATION TEST.

BODY VERIFICATION TEST

1.

Turn the ignition off.

Disconnect all jumper wires and reconnect all previously disconnected components and connectors.

Note: If the SKREEM or the PCM was replaced, refer to the service information for proper programming procedures.

If the Body Control Module was replaced, turn the ignition on for 15 seconds (to allow the new BCM to learn VIN) or engine may not start.

Program all RKE transmitters and other options as necessary.

With the DRB III®, erase all Diagnostic Trouble Codes (DTCs) from ALL modules. Start the engine and allow it to run for 2 minutes. Operate all functions of the system that caused the original complaint.

Ensure that all accessories are turned off and the battery is fully charged.

Turn the ignition off and wait 5 seconds. Turn the ignition on and using the DRB III®, read DTCs from ALL modules.

Are any DTCs present or is the original complaint still present?

Are any DTCs present?

YES >> Repair is not complete, refer to appropriate symptom.

NO >> Repair is complete.

SCHEMATICS AND DIAGRAMS

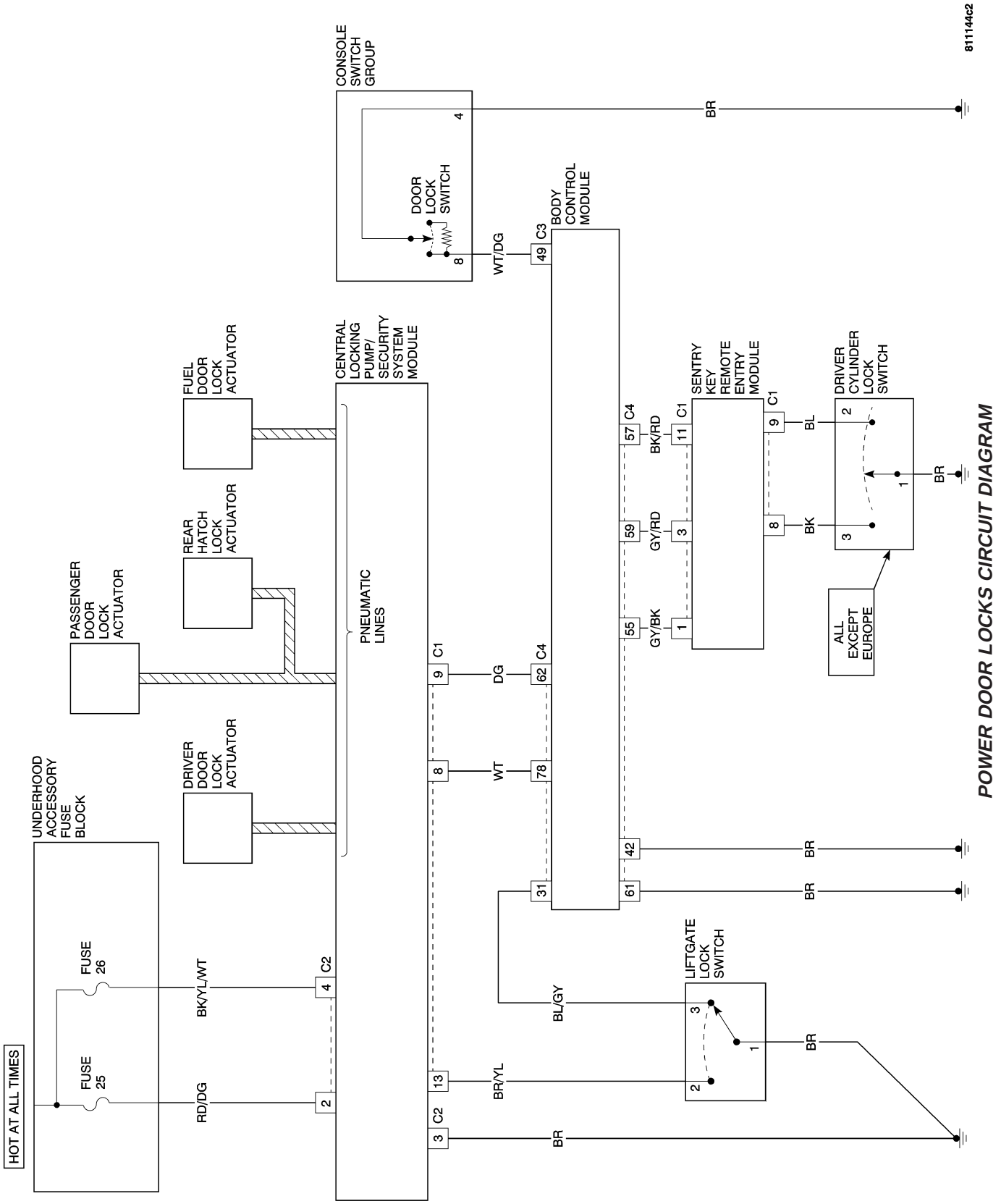

POWER LOCKS - SERVICE INFORMATION

TABLE OF CONTENTS

page

POWER LOCKS - SERVICE INFORMATION
DESCRIPTION 30
OPERATION 31
DIAGNOSIS AND TESTING - POWER LOCKS . . 32
STANDARD PROCEDURE - TOGGLING CUSTOMER PREFERENCES 35
SPECIFICATIONS - POWER LOCKS 35
CENTRAL LOCKING PUMP
DESCRIPTION 36
DIAGNOSIS AND TESTING 36
KEYLESS ENTRY TRANSMITTER
DIAGNOSIS AND TESTING 37
STANDARD PROCEDURE - TRANSMITTER PROGRAMMING 37
SPECIFICATIONS TRANSMITTER 37
POWER LOCK SWITCH
DESCRIPTION 38
REMOVAL 39
INSTALLATION 39
DOOR LATCH ASSEMBLY
REMOVAL 40

page

INSTALLATION 42
DRIVER DOOR LOCK SWITCH
REMOVAL 43
INSTALLATION 43
FUEL DOOR LOCK ACTUATOR
REMOVAL 44
INSTALLATION 45
LIFTGATE LOCK SWITCH
REMOVAL 45
INSTALLATION 45
LIFTGATE LOCK ACTUATOR
REMOVAL 46
INSTALLATION 46
SENTRY KEY REMOTE ENTRY MODULE
DESCRIPTION 46
DIAGNOSIS AND TESTING 47
REMOVAL
SKREEM 47
REMOVAL - RELAY 48
INSTALLATION
SKREEM 49
INSTALLATION - RELAY 50

POWER LOCKS - SERVICE INFORMATION

DESCRIPTION

Power locks are standard equipment. Two ignition keys with integral Remote Keyless Entry (RKE) transmitters are supplied with the vehicle. They operate the ignition and the locks in the driver's door and glove box. The driver's door lock cylinder is the only external key cylinder on the vehicle. The power lock system enables the doors, liftgate and fuel door to be locked and unlocked in the following ways:

- with the driver's door lock cylinder.
- with the RKE transmitter.
- with the power lock switch located on the center console (except fuel door).

Each door can be locked or unlocked mechanically and independently with either its inside lock knob, inside remote release handle, or the outside key cylinder lock (driver door only). All power locks, including the rear liftgate and fuel door, can be remotely locked or unlocked with the Remote Keyless Entry (RKE) transmitter.

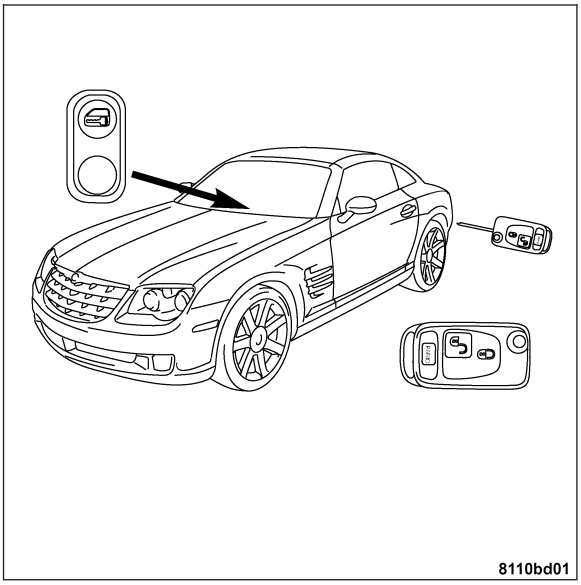

Central Locking

Central Locking is a part of the power locking system and the vehicle theft security system. Central Locking operates both door locks, rear liftgate lock, and the fuel door lock from a single point depending on the Customer Preferences setting. It uses the Body Control Module (BCM), Central Locking Pump/Security System Module and SKREEM Module for collective logic.

Door Lock Inhibit

The Door Lock Inhibit feature is part of central locking and prevents locking with a door lock button or the Remote Keyless Entry transmitter when the ignition switch is in the ON/RUN position. It also prevents locking if either door is not closed.

Sentry Key Remote Entry

The Sentry Key Remote Entry system allows unlocking (1) and locking (2) of the vehicle doors, the rear liftgate, and the fuel door by remote control using a hand held radio frequency keyless entry transmitter. It also has a red panic button (6), and incorporates a flip out (3) ignition key (4) with an LED (5) battery check indicator lamp.

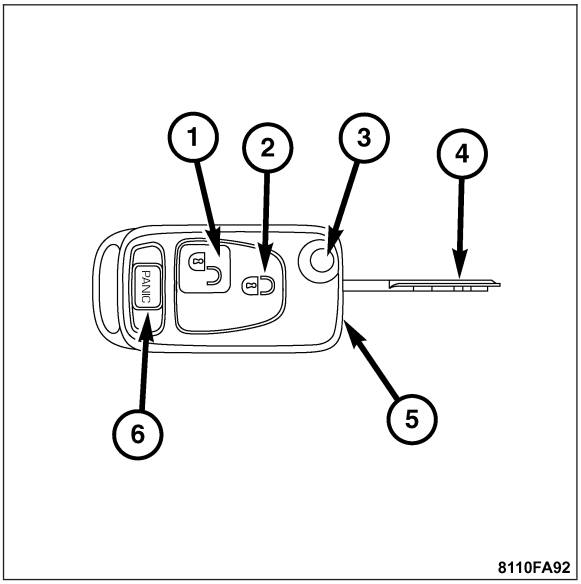

OPERATION

The power lock system is operated with pneumatic supply lines connected to actuators at each power lock. Locking and unlocking is accomplished when the Body Control Module (BCM) is actuated by the Sentry Key Remote Entry Module (SKREEM). The BCM in turn transmits a signal to the Central Locking Pump/Security System Module via the Controller Area Network (CAN) bus. The Central Locking Pump/Security System Module incorporates a pump to supply pressure or vacuum and valves which direct the supply via pneumatic supply lines to the power lock system component.

For additional information about the BCM, SKREEM or Central Locking Pump/Security System Module functions as they relate to the power locks system, refer to electronic control modules in this section.

Note: The power door locks and rear liftgate lock actuators are not serviced separately. They are part of the door lock or rear liftgate lock assemblies. Refer to door latch assembly or liftgate lock actuator in this section for removal and installation information.

Central Locking

To operate central locking using the ignition key, turn the driver's door lock cylinder counterclockwise to lock and clockwise to unlock both doors, rear liftgate, and fuel door. Using the keyless entry transmitter, press the lock button to lock the doors, rear liftgate, and fuel door and the unlock button to unlock the doors (driver's door an fuel door only in selective mode), rear liftgate and fuel door. Using the power lock switch, press the upper portion to unlock and the lower portion to lock both doors, and the rear liftgate. Unlocking the vehicle with the ignition key or the keyless entry transmitter operates the central locking system and disarms the anti-theft alarm.

Remote Keyless Entry

The Remote Keyless entry transmitter has four buttons for operation. They are UNLOCK, LOCK, PANIC, and IGNITION KEY RELEASE. Both the Lock and Unlock buttons have embossed ISO symbols. The Remote Keyless Entry transmitter has the ability to toggle the system between a Global mode or a Selective mode. **Refer to Page 8N-35**. The Unlock button when pressed will unlock the doors, rear liftgate and fuel door, and flash the turn signal lamps one time to indicate the vehicle is unlocked. The Lock button when pressed will lock the doors, rear liftgate and fuel door, and flash the turn signal lamps three times to indicate the vehicle is locked. If the lamps do not flash during locking, a door or rear liftgate is not closed properly. The Panic button when pressed for at least one second will cause the exterior lamps to flash and a panic alarm to sound for three minutes. To deactivate, press the Panic button a second time or turn the ignition switch to the ON/RUN position. The Ignition Key Release button allows the key blade in the Remote Keyless Entry transmitter to flip open from the stored position.

The Sentry Key Remote Entry Module (SKREEM) transceiver is capable of retaining an access code even when power is removed. The module retains in memory the ID numbers of any Ignition Key transponder that is programmed into it. For added system security, each SKREEM is programmed with a unique secret key code. Additional and/or replacement keys can be obtained only from a Chrysler dealer.

Automatic Relocking Function

To avoid unlocking the vehicle unintentionally, the vehicle is automatically relocked by the Central Locking Pump/Security System Module via the SKREEM. Automatic Relocking takes place after the vehicle has been unlocked with the remote control whenever:

- a door is not opened within 40 seconds.
- the key is not inserted into the ignition.
- the power lock switch is not actuated.
- only the rear liftgate is opened when global unlocking is active.

Automatic Locking

The power lock switch in the center console operates the automatic locking feature. With the ignition switch in the ON/RUN position, pressing and holding the upper portion of the power lock switch for at least five seconds activates automatic locking. With the automatic locking feature activated, the doors and rear liftgate will lock upon reaching a speed of approximately 15 km/h (9 MPH). If after automatic locking is active, the vehicle is unlocked with the interior power lock switch, this state is maintained until a door is opened, or until the ignition is turned off. Automatic locking is accomplished again only upon reaching the specified speed. The logic circuitry for automatic locking is integrated into the Central Locking Pump/Security System Module. The automatic locking feature can also be toggled or inhibited with the DRB III®, for additional information see Toggling Customer Preferences in this section.

Emergency Unlocking

In the event of a vehicle collision, the doors are unlocked automatically by a crash sensor integrated into the Central Locking Pump/Security System Module. The doors are unlocked after a delay time of 8 to 11 seconds. The emergency unlocking function interrupts all functions performed by the Central Locking Pump/Security System Module, which are reactivated only after interrupting the ignition. The emergency unlocking function is only active when the vehicle is unlocked from the outside.

DIAGNOSIS AND TESTING - POWER LOCKS

The most reliable, efficient, and accurate means to diagnose the power lock system requires the use of a DRB III® scan tool and the proper Diagnostic Procedures. Refer to power locks electrical diagnostics in this section.

WARNING: REFER TO RESTRAINTS **Refer to Page 8O-82** BEFORE ATTEMPTING ANY DOOR, SEAT, STEERING WHEEL, STEERING COLUMN, OR INSTRUMENT PANEL COMPONENT DIAGNOSIS OR SERVICE. FAILURE TO TAKE THE PROPER PRECAUTIONS COULD RESULT IN ACCIDENTAL AIRBAG DEPLOYMENT AND POSSIBLE PERSONAL INJURY.

When trouble shooting problems with the power locks system, always verify that the power lock switch is functional. If the doors, rear liftgate, or fuel door do not lock/unlock with the power lock switch, the following system components should be analyzed:

- Power door lock switch
- Body Control Module (BCM)
- Remote Keyless Entry Relay
- Power Lock/Actuator assemblies
- Sentry Key Remote Entry Module (SKREEM)
- Central Locking Pump/Security System Module
- Pneumatic supply lines

There are three main electronic control modules which are interdependent on each other to complete lock/unlock commands, they are the BCM, SKREEM, and Central Locking Pump/Security System Module. These modules cannot be adjusted or repaired. For complete power locks diagnosis procedures, see power locks electrical diagnostics in this section.

PNEUMATIC SUPPLY LINES

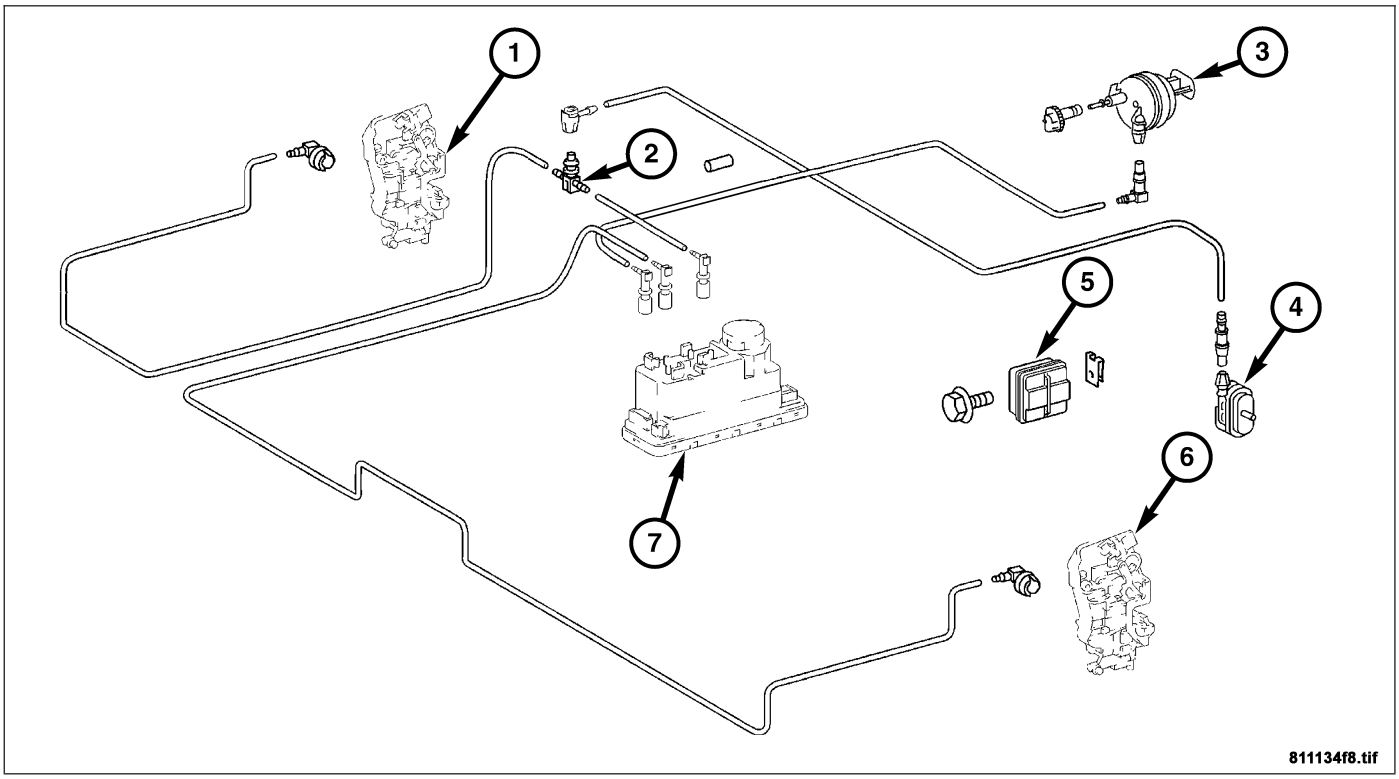

1 - PASSENGER DOOR LOCK
2 - DISTRIBUTOR
3 - FUEL DOOR ACTUATOR
4 - REAR HATCH LOCK ACTUATOR
5 - PNEUMATIC DASH POT
6 - DRIVER DOOR LOCK
7 - PSE CONTROL MODULE

The power lock actuators are controlled by pneumatic supply lines that transfer either vacuum or pressure from the Central Locking Pump/Security System Module to the component through distributors. When trouble shooting problems related to the pneumatic portion of the power lock system, a preliminary inspection should be performed to determine that the pneumatic supply lines and harness connectors are free from kink or blockage damage. If necessary, repairs to the pneumatic supply lines or harness connectors must be performed first before proceeding with additional power lock system diagnosis.

SUPPLY LINE/ACTUATOR TESTING

When trouble shooting a pneumatic supply line or actuator for the power lock system, perform the following steps:

Entire System

1. Disconnect the pneumatic supply line connected to the Central Locking Pump/Security System Module.
2. Using a hand held vacuum pump, connect an appropriate rubber hose 2 in. (50 mm) long to the disconnected pneumatic supply line.
3. Apply 600 mbar (17.7 in. Hg) pressure to the pneumatic supply line for 1 minute.

If after 1 minute the vacuum loss is less than 30 mbar (.9 in. Hg), the pneumatic supply lines and actuators are not the cause of the fault. If after 1 minute the vacuum loss is greater than 30 mbar (.9 in. Hg), perform the Pneumatic line with actuator test.

Pneumatic Line with Actuator

1. Disconnect the pneumatic supply line (1) connected to the pneumatic distributor.
2. Using a hand held vacuum pump, connect an appropriate rubber hose 2 in. (50 mm) long to the disconnected pneumatic supply line (1).
3. Apply 600 mbar (17.7 in. Hg) pressure to the pneumatic supply line for 1 minute.

If after 1 minute the vacuum loss is less than 30 mbar (.9 in. Hg), the pneumatic supply lines and actuator are not the cause of the fault. If after 1 minute the pressure loss is greater than 30 mbar (.9 in. Hg), perform the Pneumatic line test.

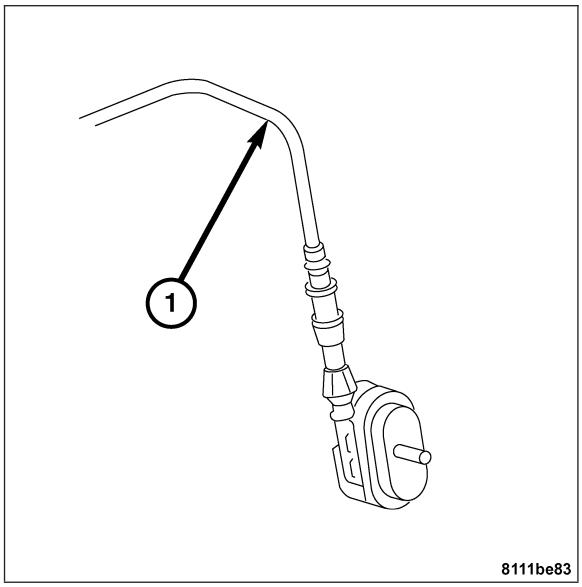

Pneumatic Line

1. Disconnect the pneumatic supply line connected to the pneumatic distributor and block off.
2. Disconnect the pneumatic supply line connected to the actuator and connect a hand held vacuum pump.
3. Apply 300 mbar (8.9 in. Hg) vacuum to the pneumatic supply line for 1 minute.

If after 1 minute the vacuum loss is 0 mbar (0 in. Hg), then replace the actuator. If after 1 minute the vacuum loss is greater than 0 mbar (0 in. Hg), repair the pneumatic supply line.

STANDARD PROCEDURE - TOGGLING CUSTOMER PREFERENCES

Automatic Locking

The automatic locking function can be activated or deactivated with the DRB III®. The interior power door lock switch may also be used with the ignition switched on by pressing and holding the power door lock switch for more than 5 seconds in either the lock (auto locking switched on) or unlock (auto locking switched off) position. The interior power door lock switch can be inhibited with the DRB III®.

Global/Selective Central Locking

The keyless entry system has a Global or Selective mode function for central locking that can be programed by the customer. The factory setting is Global, which will lock and unlock both doors, rear liftgate and fuel door centrally when the respective button is pressed once. The Selective mode will only change which power locks unlock. To activate the Selective mode, press both the Unlock and Lock buttons simultaneously for approximately five seconds until the battery check lamp in the transmitter flashes twice. The Unlock button will then only unlock the driver door and the fuel door when it is pressed once. Pressing the Unlock button a second time, unlocks the passenger's door and the rear liftgate. The factory setting can be restored by pressing both the Unlock and Lock buttons simultaneously again for approximately five seconds until the battery check lamp in the transmitter flashes twice. If the vehicle was locked using the power lock switch in the center console while in the Selective mode, opening a door from inside unlocks that door only. If the vehicle was locked using the power lock switch in the center console while in the Global mode, opening a door from the inside unlocks both doors and the rear liftgate. If the vehicle was locked using the RKE transmitter, the doors and rear liftgate cannot be unlocked using the power lock switch in the center console. If the vehicle was locked from the outside, opening a door from the inside will not unlock other openings but it will trigger the alarm.

SPECIFICATIONS - POWER LOCKS

PNEUMATIC SPECIFICATIONS

DESCRIPTION	SPECIFICATION
Allowable system leakage of 300 mbar (8.9 in Hg) vacuum in 1 minute.	30 mbar (.9 in Hg)
Allowable leakage of actuators with line at 300 mbar (8.9 in Hg) vacuum in 1 minute.	≤ 25 mbar (.74 in Hg)

TORQUE SPECIFICATIONS

DESCRIPTION	N·m	Ft. Lbs.	In. Lbs.
DOOR LOCK ATTACHMENT SCREWS	8	—	70

CENTRAL LOCKING PUMP

DESCRIPTION

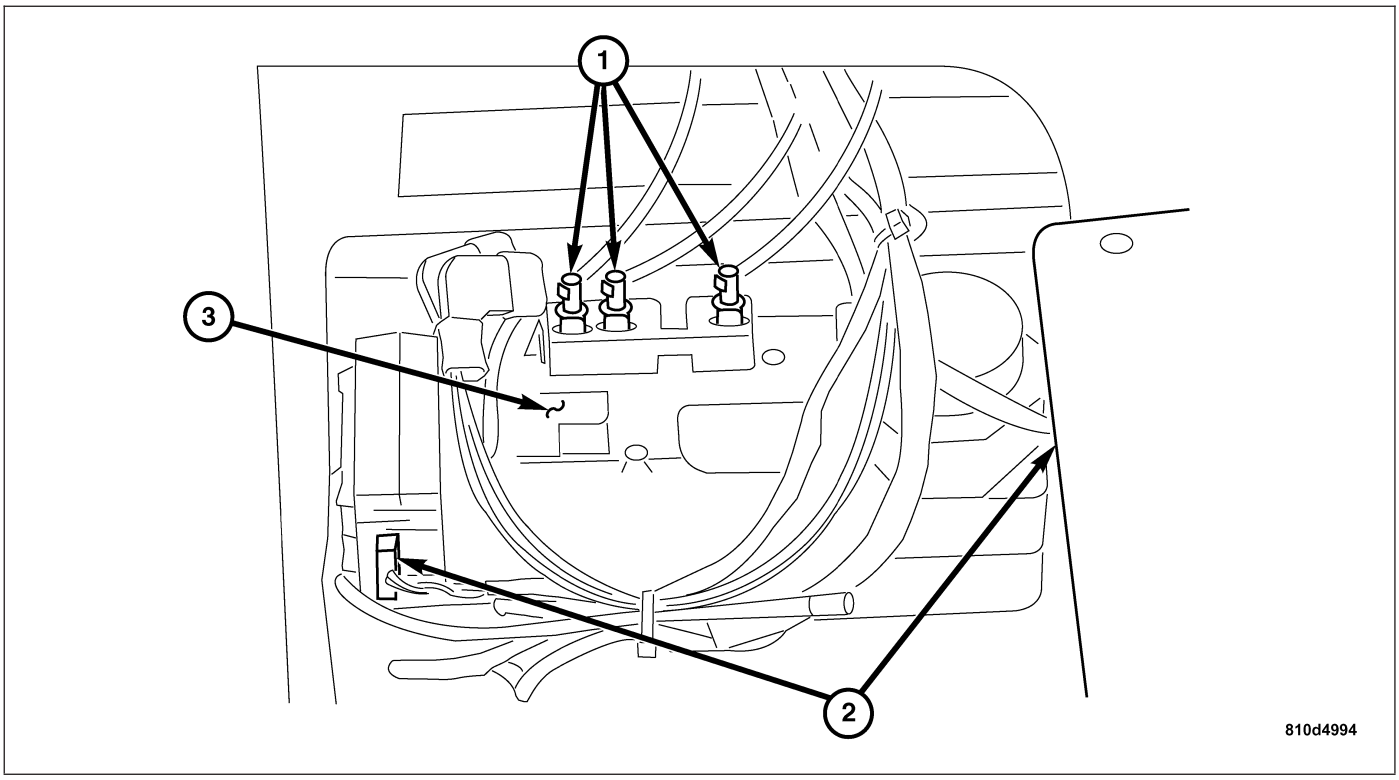

1 - AIR LINES
2 - ELECTRICAL CONNECTORS
3 - CENTRAL LOCKING PUMP/SECURITY SYSTEM MODULE

The Central Locking Pump/Security System Module (3) is the pressure/vacuum supply pump for the power lock system. It is located in the right rear quarter panel area beneath the floor covering. For complete Central Locking Pump/Security System Module removal procedures, see Central Locking Pump/Security System Module removal in the electronic control modules section.

DIAGNOSIS AND TESTING

WARNING: REFER TO RESTRAINTS Refer to Page 8O-82 BEFORE ATTEMPTING ANY DOOR, SEAT, STEERING WHEEL, STEERING COLUMN, OR INSTRUMENT PANEL COMPONENT DIAGNOSIS OR SERVICE. FAILURE TO TAKE THE PROPER PRECAUTIONS COULD RESULT IN ACCIDENTAL AIRBAG DEPLOYMENT AND POSSIBLE PERSONAL INJURY.

When trouble shooting problems related to the pneumatic portion of the power lock system, a preliminary inspection should be performed to determine that the supply lines, actuators, and harness connectors are free from damage. If necessary, repairs to the pneumatic supply system must be performed before proceeding with additional power lock system diagnosis. For wiring diagrams and diagnostic information, see Electronic Control Modules in this section. **Refer to Page 8E-45**.

KEYLESS ENTRY TRANSMITTER

DIAGNOSIS AND TESTING

Note: If the transmitter unlock button has been pressed repeatedly while out of range of the receiver, synchronization may have to be restored. To do so, perform the transmitter programming procedure in this section.

Using Special Tool 9001, first test to ensure that the transmitter is functioning. Typical testing distance is 1 in. (2.5 cm) for Asian transmitters and 12 in. (30.5 cm) for all others. To test, position the transmitter as shown. Press any transmitter button, then test each button individually. The tool will beep if a radio signal strength that lights five or more LEDs is detected. Repeat this test three times. If transmitter fails any of the tests, refer to the Electrical Diagnostic portion of this section.

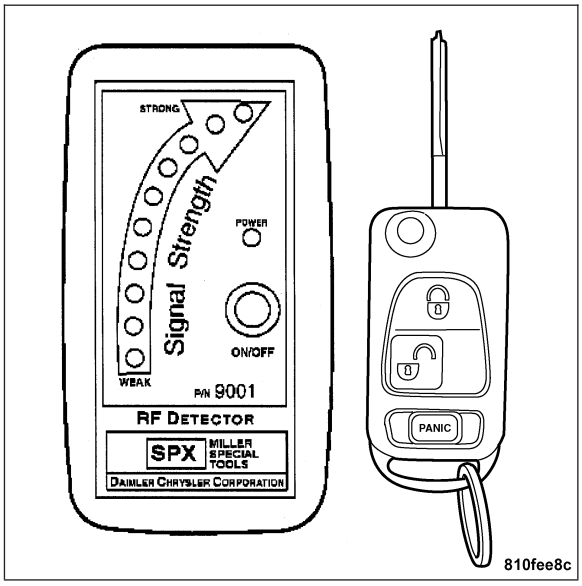

STANDARD PROCEDURE - TRANSMITTER PROGRAMMING

The Remote Keyless Entry (RKE) Transmitter(s) can be programmed by the customer without special tools.

PROGRAMMING PROCEDURE

Transmitter programming by the customer is done by performing the following steps:

1. Press either the lock or unlock button momentarily twice.
2. Turn the key in the ignition switch to the ON/RUN position within 30 seconds.

SPECIFICATIONS

TRANSMITTER

BATTERY TESTING

The batteries in the Remote Keyless Entry transmitter can be tested by pressing and holding both the lock and unlock buttons simultaneously for more than one second. The batteries are charged sufficiently if the LED next to the ignition key blade lights up briefly.

BATTERY REPLACEMENT

The transmitter has two 3 volt batteries, which can be removed and replaced without special tools. First, release the key from the closed position; then insert a coin in the side slot of the transmitter and twist. The cover should separate from the body of the transmitter where the batteries are stacked on top of each other. The batteries are available at local retail stores. Recommended replacement batteries are Panasonic® CR 2025 lithium or equivalent. Battery life for normal use is about two years.

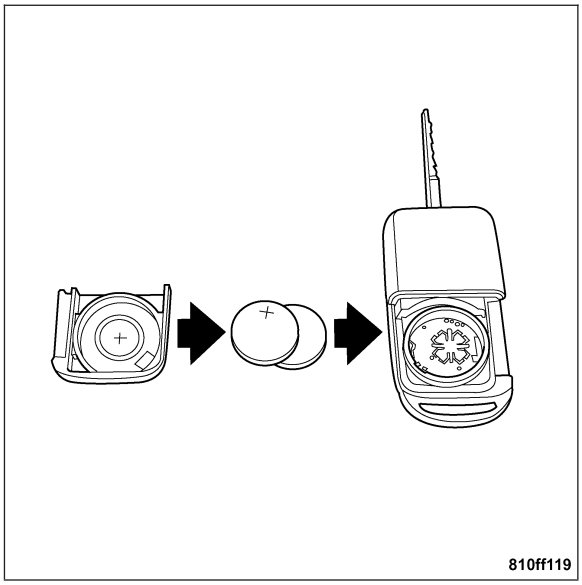

Note: The transmitter MUST be reprogrammed after the batteries are replaced.

RANGE

Operation range is within 20 meters (66 feet) of the module/receiver.

POWER LOCK SWITCH

DESCRIPTION

The mounting arrangement of the power lock switch is unique and integrated with additional switches within the trim panel on the center console. The power lock switch is not serviceable separately. When replacement is necessary, the service part includes additional switches.

REMOVAL

WARNING: REFER TO RESTRAINTS Refer to Page 8O-82 BEFORE ATTEMPTING ANY DOOR, SEAT, STEERING WHEEL, STEERING COLUMN, OR INSTRUMENT PANEL COMPONENT DIAGNOSIS OR SERVICE. FAILURE TO TAKE THE PROPER PRECAUTIONS COULD RESULT IN ACCIDENTAL AIRBAG DEPLOYMENT AND POSSIBLE PERSONAL INJURY.

1. Disconnect the negative battery cable.
2. Remove the center console interior trim panel. **Refer to Page 23-173**.
3. Disconnect the power lock switch harness connectors (1).
4. Press the locking tabs inward and remove the outer gang of switches.
5. Press the locking tabs inward and remove the power lock switch from the trim panel.

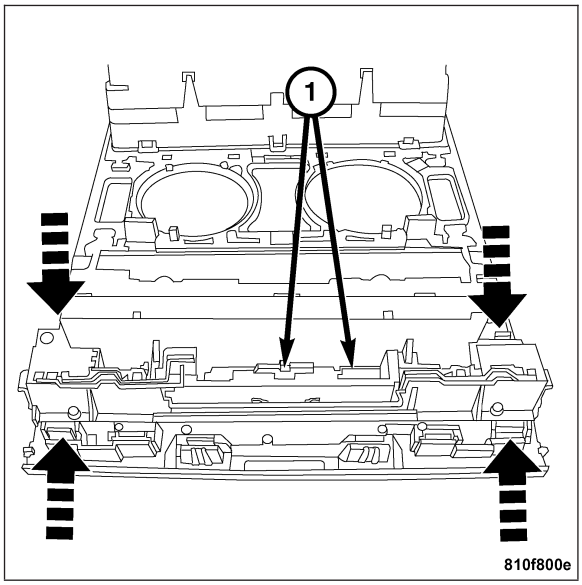

INSTALLATION

1. Align the power lock switch with the center console interior trim panel and press together until the locking tabs engage fully.

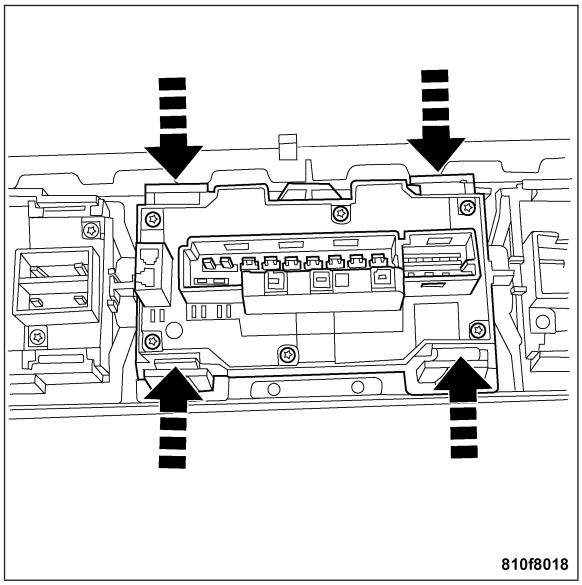

2. Align the outer gang of switches over the power lock switch and press together until the locking tabs engage fully.
3. Connect the power lock switch harness connectors.
4. Install the trim panel on the center console. **Refer to Page 23-183**.
5. Connect the negative battery cable.

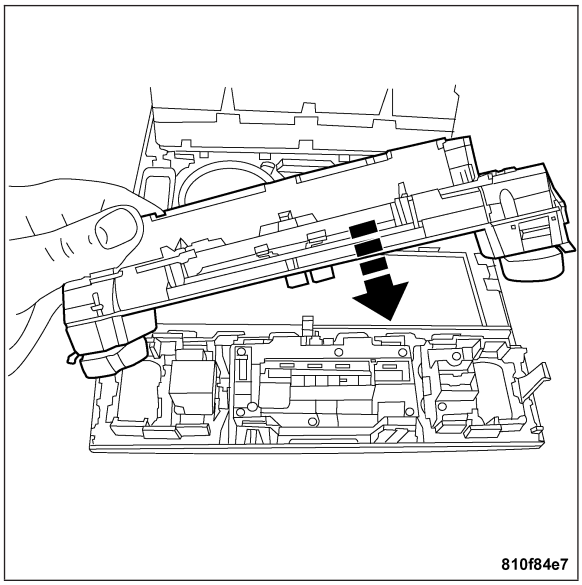

DOOR LATCH ASSEMBLY

REMOVAL

WARNING: REFER TO RESTRAINTS Refer to Page 8O-82 BEFORE ATTEMPTING ANY DOOR, SEAT, STEERING WHEEL, STEERING COLUMN, OR INSTRUMENT PANEL COMPONENT DIAGNOSIS OR SERVICE. FAILURE TO TAKE THE PROPER PRECAUTIONS COULD RESULT IN ACCIDENTAL AIRBAG DEPLOYMENT AND POSSIBLE PERSONAL INJURY.

1. Remove the door interior trim panel. **Refer to Page 23-108**.
2. Remove the door lock cylinder. **Refer to Page 23-105**.
3. Gently peel back the door watershield (1) enough to expose the door latch assembly installation opening.

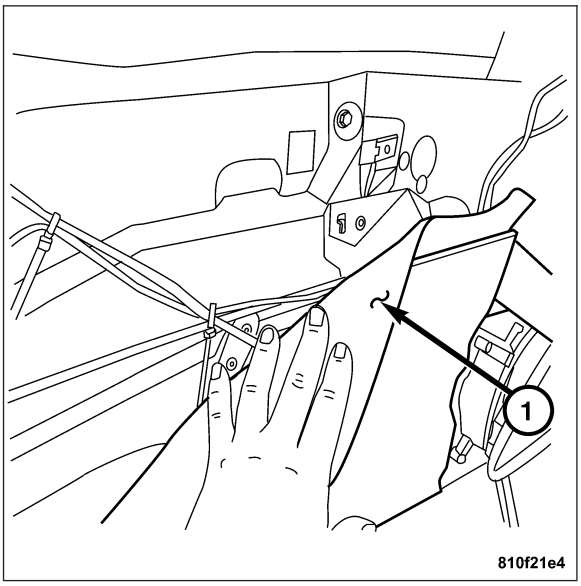

Note: Before removal, be sure to mark the installed position of the guide rail for realignment during installation.

4. Remove the lower cover plug (3) and remove the guide rail attachment bolts (2). Remove the guide rail through the installation opening.
5. Remove the inside handle release cable (8) and the driver door latch assembly harness connector.

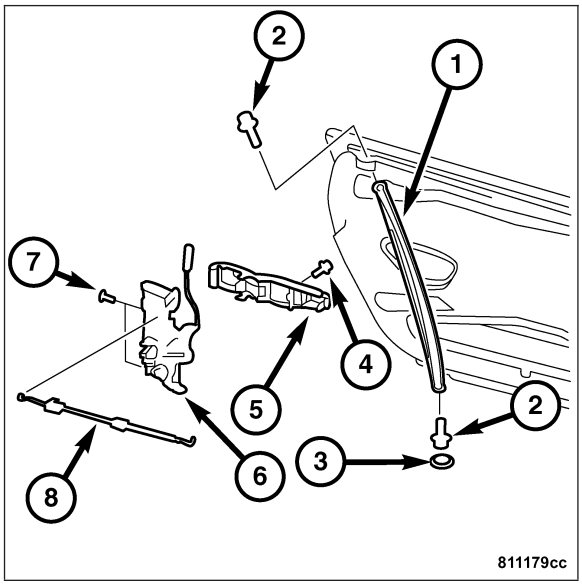

6. Disconnect the pneumatic supply line (2) from the lock actuator on the door latch assembly.
7. Remove the door latch assembly attachment screws (1) and remove the door latch assembly (3) from the door through the installation opening.

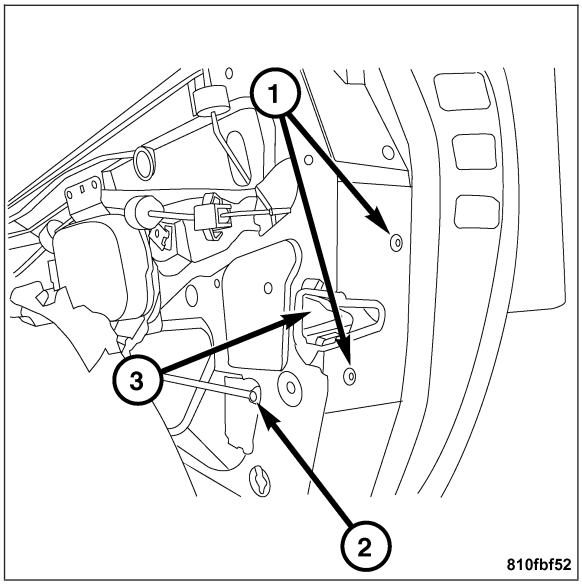

INSTALLATION

1. Align the door latch assembly (6) into the door through the installation opening. Install the door latch assembly attachment screws (7) and torque to 8 N·m.
2. Install the pneumatic supply line to the lock actuator on the door latch assembly.
3. Install the inside handle release cable (8) and the driver door harness connector (driver door only).

Note: The guide rail must be aligned with the installed position mark before securing proper glass adjustment.

4. Align the guide rail into the door through the installation opening and install the attachment bolts (2). Install the lower cover plug (3).

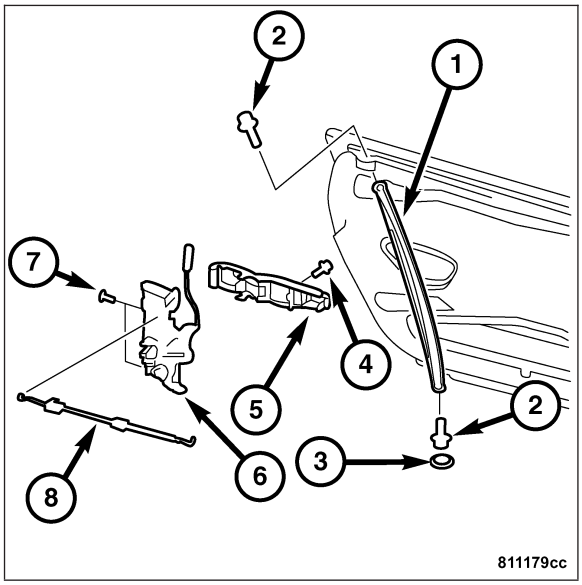

Note: Inspect the door watershield for damage and replace if necessary.

5. Install the door watershield.
6. Install the door lock cylinder. **Refer to Page 23-106**.
7. Install the door interior trim panel. **Refer to Page 23-109**.

DRIVER DOOR LOCK SWITCH

REMOVAL

WARNING: REFER TO RESTRAINTS Refer to Page 8O-82 BEFORE ATTEMPTING ANY DOOR, SEAT, STEERING WHEEL, STEERING COLUMN, OR INSTRUMENT PANEL COMPONENT DIAGNOSIS OR SERVICE. FAILURE TO TAKE THE PROPER PRECAUTIONS COULD RESULT IN ACCIDENTAL AIRBAG DEPLOYMENT AND POSSIBLE PERSONAL INJURY.

1. Disconnect the negative battery cable.
2. Remove the door interior trim panel. **Refer to Page 23-108**.
3. Gently peel back the door watershield enough to expose the driver door lock switch.
4. Release the locking tab (1) attaching the driver door lock switch to the door latch assembly.
5. Disconnect the pneumatic supply line (2) from the door lock actuator.
6. Disconnect the remaining door harness connectors, and remove the driver door lock switch.

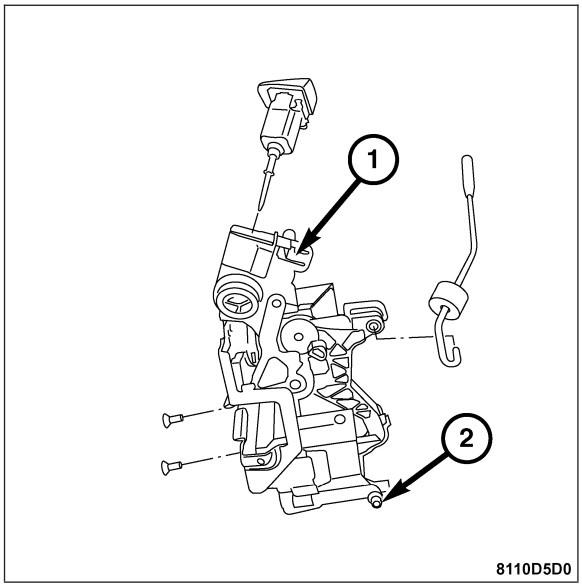

INSTALLATION

Note: Ensure the harness is routed and secured in its original position to avoid potential interference with moving parts.

1. Install the door harness assembly into the door.
2. Install the driver door lock switch into the door latch assembly.
3. Install the door watershield.
4. Install the door interior trim panel. **Refer to Page 23-109**.
5. Connect the negative battery cable.

FUEL DOOR LOCK ACTUATOR

REMOVAL

1. Open the access panel in the right rear interior quarter trim panel.
2. Remove the pneumatic supply line (2) from the fuel door lock actuator.

Note: Use caution when removing fragile pneumatic supply line fitting.

3. Release the lock pin from the lock actuator by pulling the handle (1) fully rearward.

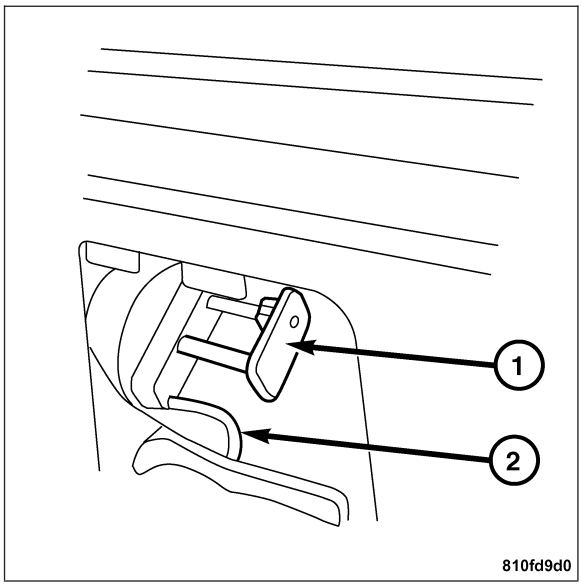

4. Press the locking tab on the fuel door lock actuator and rotate the fuel door latch (1) 90°. Remove the fuel door lock actuator from the vehicle.

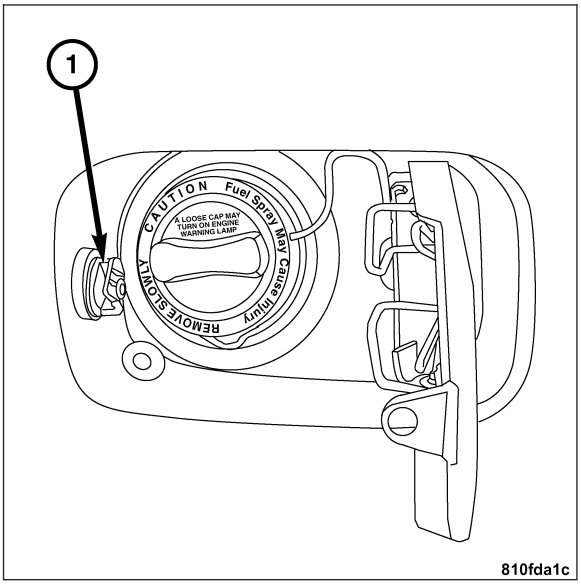

INSTALLATION

1. Install the fuel door lock actuator through the access panel in the right rear interior quarter trim panel and align it with the mounting hole.
2. Install the fuel door latch into the access hole and rotate 90°. Press the handle (1) in fully to guide the fuel door latch.
3. Insert the fuel door lock actuator into the fuel door latch and press together firmly until locking tab is seated fully.
4. Install the pneumatic supply line (2) to the fuel door lock actuator.
5. Close the right rear interior quarter trim panel access panel.

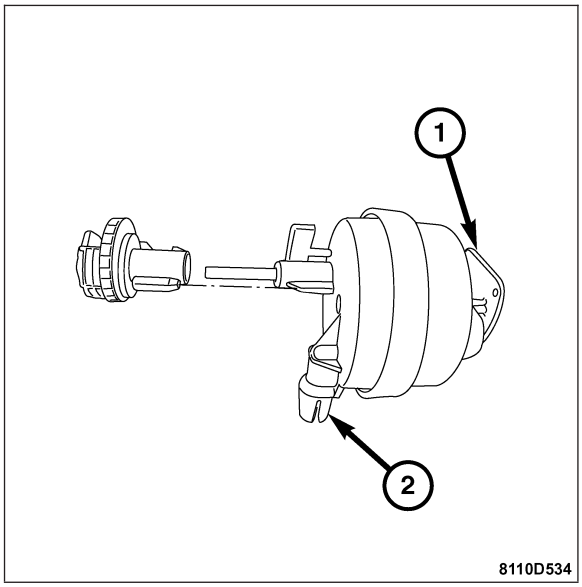

LIFTGATE LOCK SWITCH

REMOVAL

The liftgate lock switch (1) is serviced with the liftgate latch assembly. For complete liftgate latch removal procedures, see liftgate latch removal in the body section. **Refer to Page 23-43**.

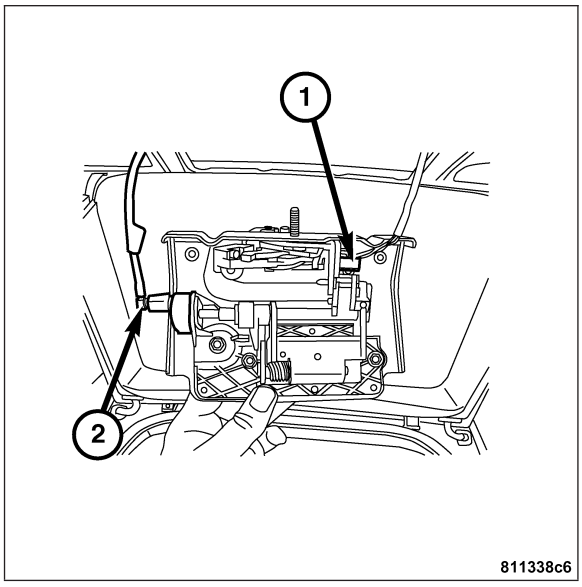

INSTALLATION

The liftgate lock switch is serviced with the liftgate latch assembly. For complete liftgate latch installation procedures, see liftgate latch installation in the body section. **Refer to Page 23-43**.

LIFTGATE LOCK ACTUATOR

REMOVAL

The liftgate lock actuator (2) is serviced with the liftgate exterior handle assembly. For complete liftgate exterior handle removal procedures, see liftgate exterior handle removal in the body section. **Refer to Page 23-34**.

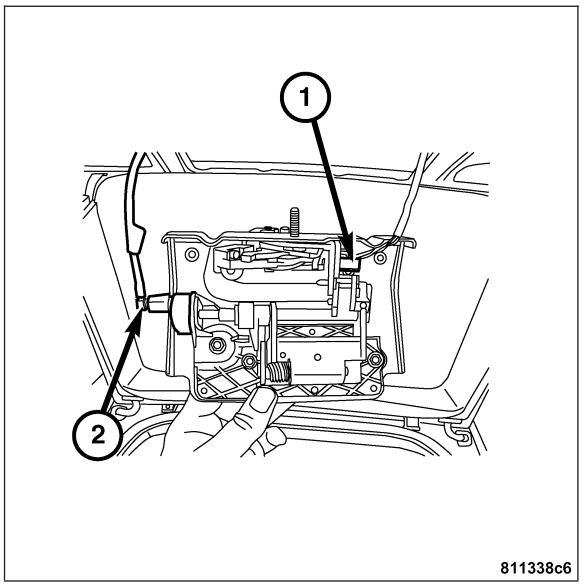

INSTALLATION

The liftgate lock actuator is serviced with the liftgate exterior handle assembly. For complete liftgate exterior handle installation procedures, see liftgate exterior handle installation in the body section. **Refer to Page 23-37**.

SENTRY KEY REMOTE ENTRY MODULE

DESCRIPTION

The Sentry Key Remote Entry Module (SKREEM) (1) is an integral component of the power lock system. It is responsible for processing operator inputs for the power lock system in addition to other systems and is located behind the instrument cluster within the instrument panel (2).

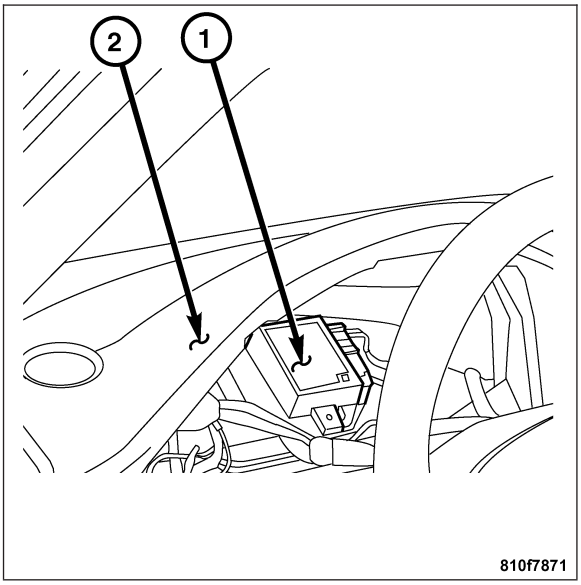

DIAGNOSIS AND TESTING

WARNING: REFER TO RESTRAINTS Refer to Page 8O-82 BEFORE ATTEMPTING ANY DOOR, SEAT, STEERING WHEEL, STEERING COLUMN, OR INSTRUMENT PANEL COMPONENT DIAGNOSIS OR SERVICE. FAILURE TO TAKE THE PROPER PRECAUTIONS COULD RESULT IN ACCIDENTAL AIRBAG DEPLOYMENT AND POSSIBLE PERSONAL INJURY.

When troubleshooting problems related to the pneumatic portion of the power lock system, a preliminary inspection should be performed to determine that the supply lines, actuators, and harness connectors are free from damage. If necessary, repairs to the pneumatic supply system must be performed before proceeding with additional power lock system diagnosis. For complete power lock system diagnosis, see power locks electrical diagnostics in this section.

REMOVAL

SKREEM

1. Disconnect the negative battery cable.
2. Remove the instrument cluster. **Refer to Page 8J-83**.
3. Disconnect the 2-pin CAN bus harness connector (1) from the SKREEM.
4. Disconnect the 2-pin harness connector for the sentry key antenna ring.
5. Disconnect the 18-pin harness connector (1) from the SKREEM.
6. Press the retaining tabs apart.
7. Remove the SKREEM from the base plate.

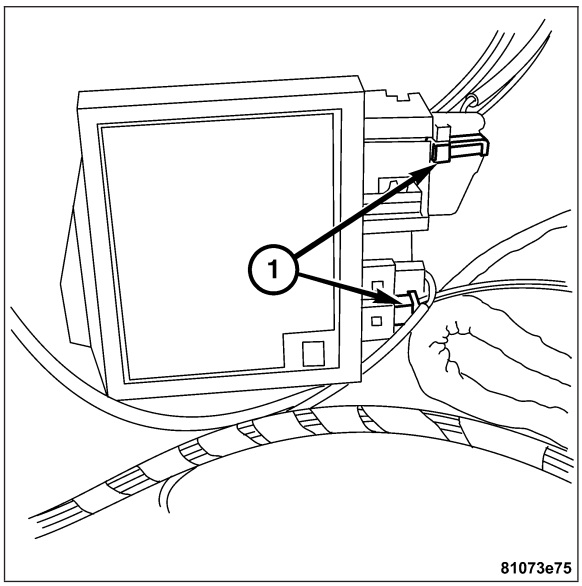

REMOVAL - RELAY

1. Remove the underhood accessory fuse block lid (1).

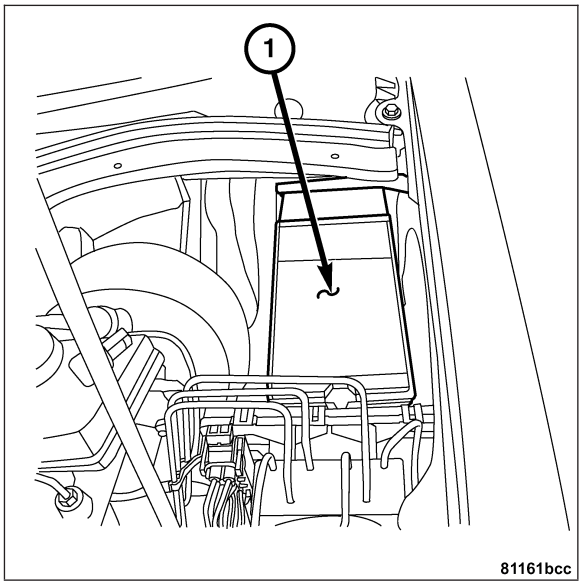

2. Carefully release the four tabs (1) to remove the underhood accessory fuse block cover panel (2).

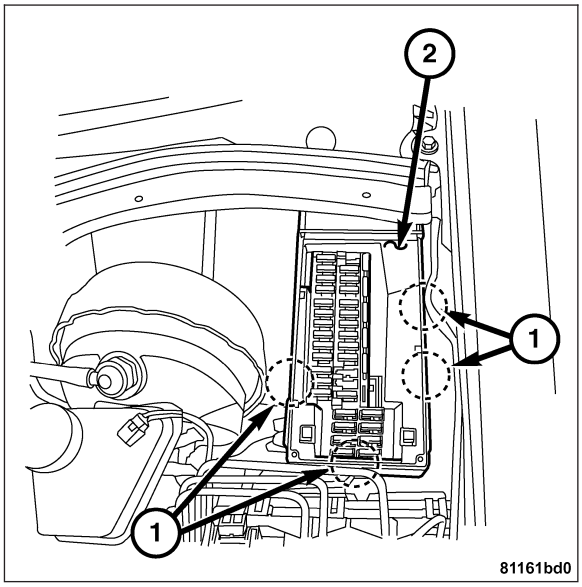

3. Remove the remote keyless entry relay (1).

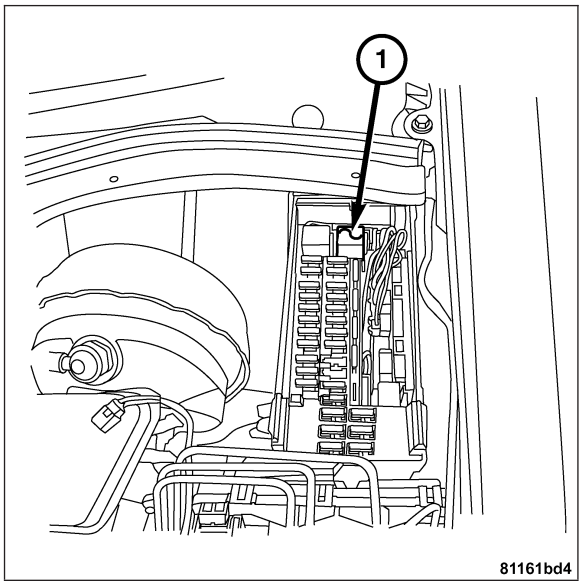

INSTALLATION

SKREEM

1. Install the SKREEM to the base plate.
2. Connect the 18-pin harness connector and the 2-pin CAN bus harness connector (1) to the SKREEM.
3. Connect the 2-pin harness connector for the sentry key antenna ring.
4. Install the instrument cluster. **Refer to Page 8J-84**.
5. Connect the negative battery cable.

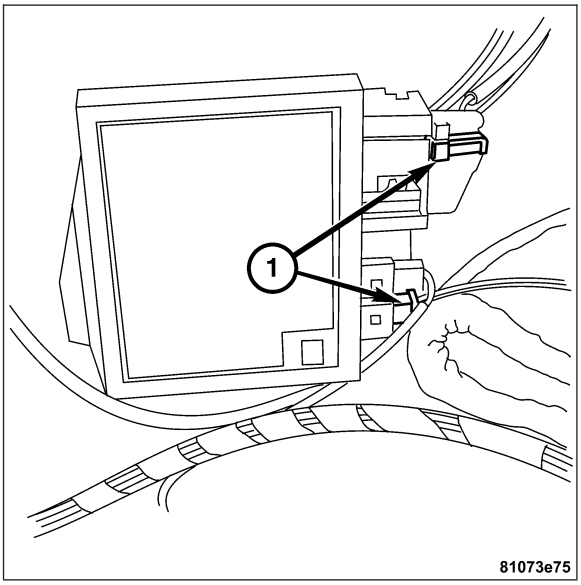

INSTALLATION - RELAY

1. Install the remote keyless entry relay (1).

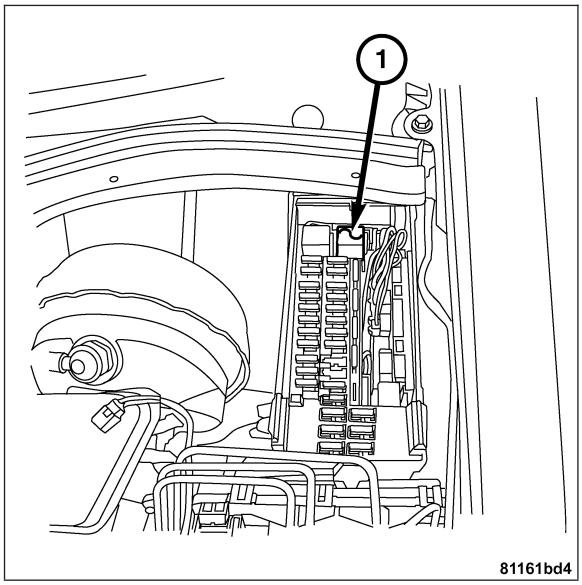

2. Install the underhood accessory fuse block cover panel (2) and secure it by snapping the retention tabs (1) into place.

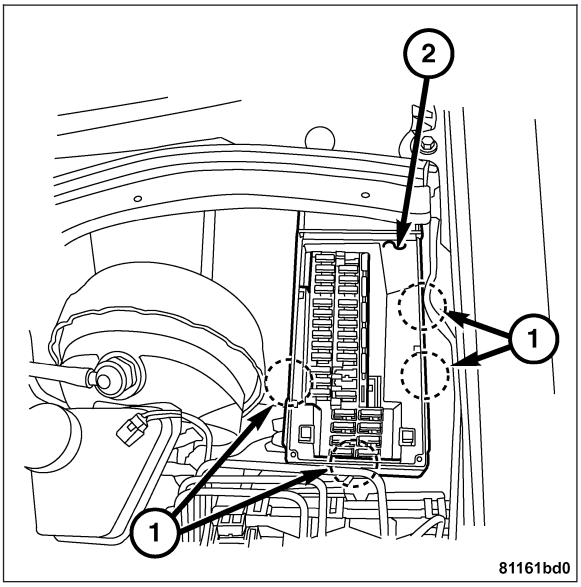

3. Install the underhood accessory fuse block lid (1).

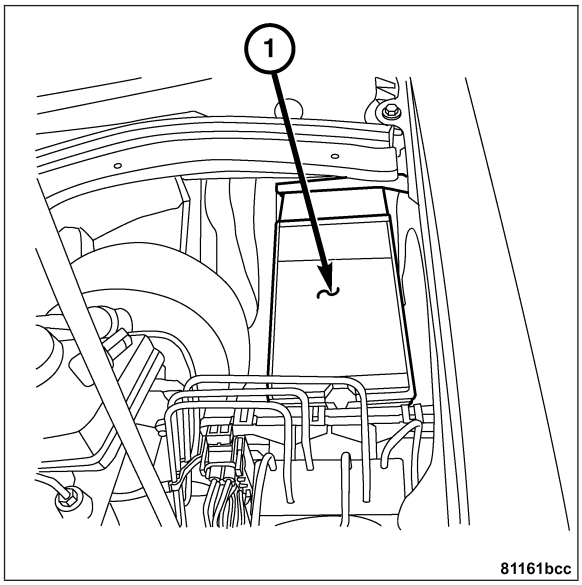

POWER MIRRORS - ELECTRICAL DIAGNOSTICS

TABLE OF CONTENTS

	page		page
POWER MIRRORS - ELECTRICAL DIAGNOSTICS		*BOTH POWER MIRRORS INOPERATIVE	57
DIAGNOSIS AND TESTING		*AUTOMATIC DAY/NIGHT MIRROR INOPERATIVE	59
*LEFT POWER MIRROR INOPERATIVE	53	BODY VERIFICATION TEST	62
*RIGHT POWER MIRROR INOPERATIVE	55	SCHEMATICS AND DIAGRAMS	63

POWER MIRRORS - ELECTRICAL DIAGNOSTICS

DIAGNOSIS AND TESTING

*LEFT POWER MIRROR INOPERATIVE

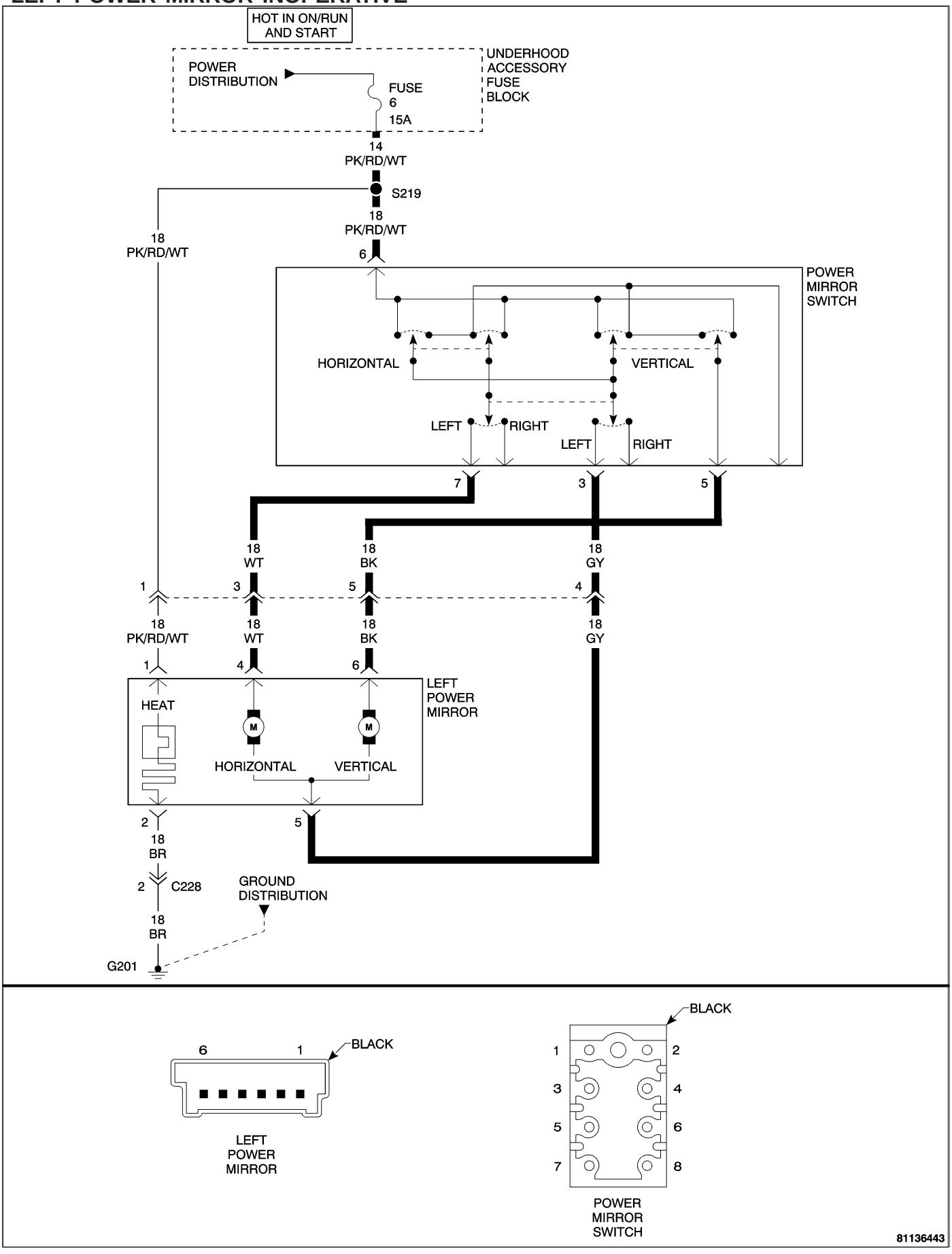

*LEFT POWER MIRROR INOPERATIVE — CONTINUED

POSSIBLE CAUSES
LEFT POWER MIRROR
LEFT POWER MIRROR CIRCUIT
POWER MIRROR SWITCH

For a complete Power Mirrors Circuit Diagram, **Refer to Page 8N-63**.

Diagnostic Test

1. MEASURE LEFT POWER MIRROR CIRCUIT RESISTANCE

Turn the ignition off.

Disconnect the Power Mirror Switch harness connector.

Disconnect the Left Power Mirror harness connector.

Note: Check connectors - Clean/repair as necessary.

Connect a jumper wire between cavity 4 and cavity 5 of the Left Power Mirror harness connector.

Measure the resistance between cavity 3 and cavity 7 of the Power Mirror Switch harness connector.

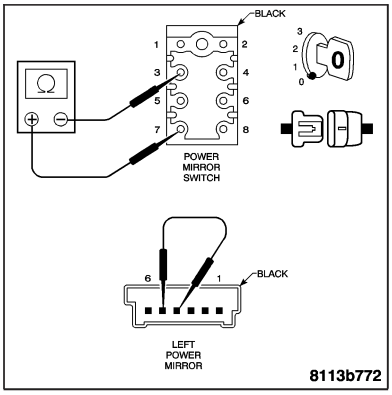

Is the resistance below 5.0 ohms?

Yes >> Go to 2

No >> Repair the Left Power Mirror circuit for an open.
Perform BODY VERIFICATION TEST.

2. TEST THE LEFT POWER MIRROR

Remove the jumper wire from the Left Power Mirror harness connector.

Reconnect the Left Power Mirror harness connector.

Connect a jumper wire between cavity 3 and ground of the Power Mirror Switch harness connector.

Turn the ignition on.

Connect a jumper wire between cavity 6 and cavity 7 of the Power Mirror Switch harness connector.

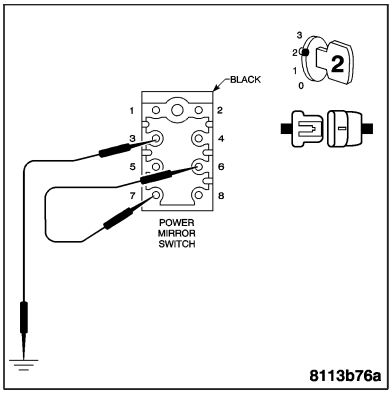

With the jumper wires connected, does the Left Power Mirror move?

Yes >> Replace the Power Mirror Switch. **Refer to Page 8N-71**.
Perform BODY VERIFICATION TEST.

No >> Replace the Left Power Mirror. **Refer to Page 8N-72**.
Perform BODY VERIFICATION TEST.

*RIGHT POWER MIRROR INOPERATIVE

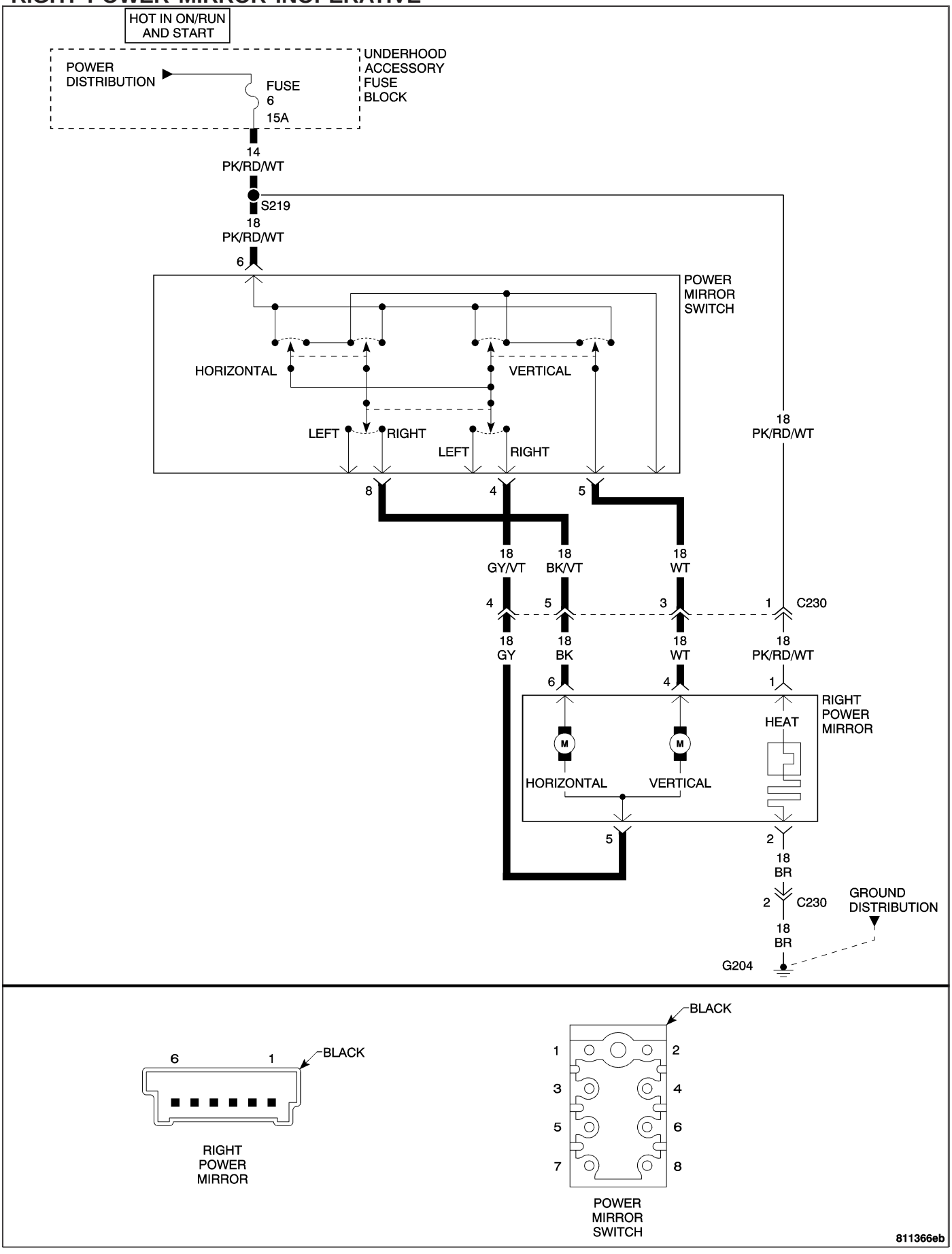

*RIGHT POWER MIRROR INOPERATIVE — CONTINUED

POSSIBLE CAUSES
RIGHT POWER MIRROR
RIGHT POWER MIRROR CIRCUIT
POWER MIRROR SWITCH

For a complete Power Mirrors Circuit Diagram, **Refer to Page 8N-63**.

Diagnostic Test

1. MEASURE RIGHT POWER MIRROR CIRCUIT RESISTANCE

Turn the ignition off.

Disconnect the Power Mirror Switch harness connector.

Disconnect the Right Power Mirror harness connector.

Note: Check connectors - Clean/repair as necessary.

Connect a jumper wire between cavity 5 and cavity 6 of the Right Power Mirror harness connector.

Measure the resistance between cavity 4 and cavity 8 of the Power Mirror Switch harness connector.

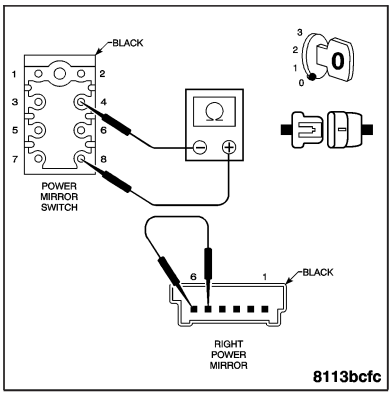

Is the resistance below 5.0 ohms?

Yes >> Go to 2

No >> Repair the Right Power Mirror circuit for an open.
Perform BODY VERIFICATION TEST.

2. TEST THE RIGHT POWER MIRROR

Remove the jumper wire from the Right Power Mirror harness connector.

Reconnect the Right Power Mirror harness connector.

Connect a jumper wire between cavity 4 and ground of the Power Mirror Switch harness connector.

Turn the ignition on.

Connect a jumper wire between cavity 6 and cavity 8 of the Power Mirror Switch harness connector.

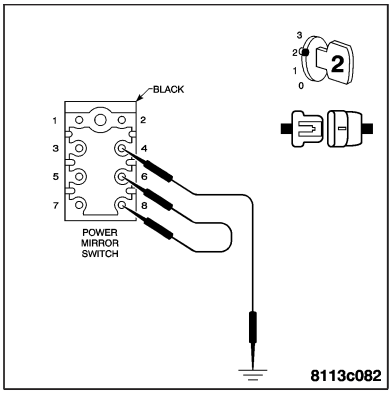

With the jumper wires connected, does the Right Power Mirror move?

Yes >> Replace the Power Mirror Switch. **Refer to Page 8N-71**.
Perform BODY VERIFICATION TEST.

No >> Replace the Right Power Mirror. **Refer to Page 8N-72**.
Perform BODY VERIFICATION TEST.

*BOTH POWER MIRRORS INOPERATIVE

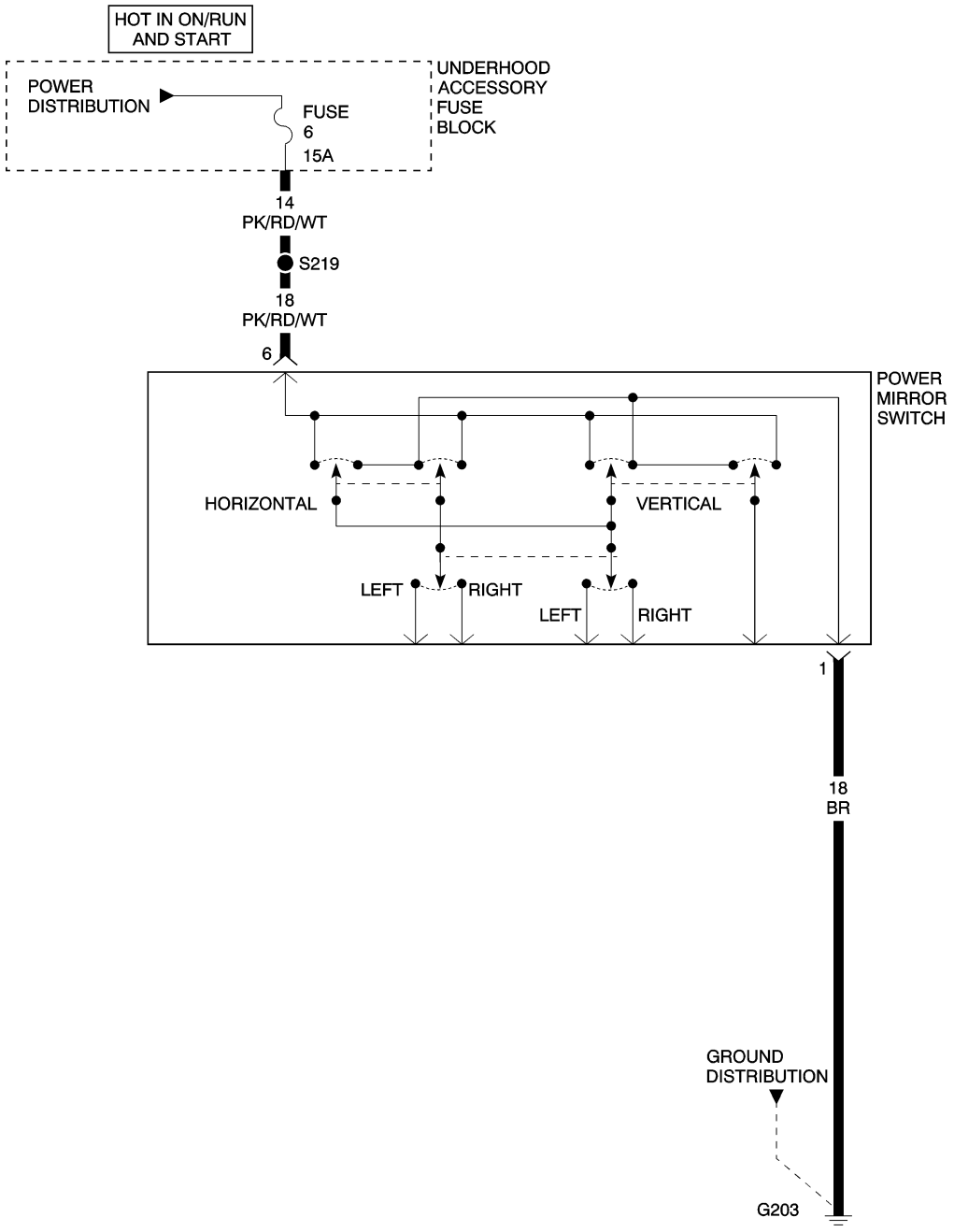

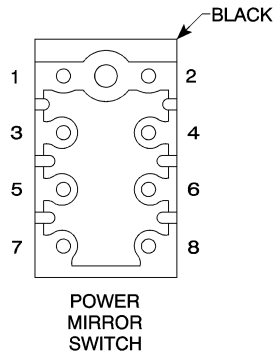

8113577e

*BOTH POWER MIRRORS INOPERATIVE — CONTINUED

POSSIBLE CAUSES
FUSED B(+) CIRCUIT
POWER MIRROR SWITCH GROUND CIRCUIT OPEN
POWER MIRROR SWITCH

For a complete Power Mirrors Circuit Diagram, **Refer to Page 8N-63**.

Diagnostic Test

1. MEASURE POWER MIRROR SWITCH FUSED B(+) CIRCUIT VOLTAGE

Note: Inspect Fuse 6 located in the Underhood Accessory Fuse Block. If the fuse is open, repair the cause of the open fuse before continuing.

Turn the ignition off.

Disconnect the Power Mirror Switch harness connector.

Note: Check connectors - Clean/repair as necessary.
Turn the ignition on.

Measure the voltage of the Fused B(+) circuit at the Power Mirror Switch harness connector.

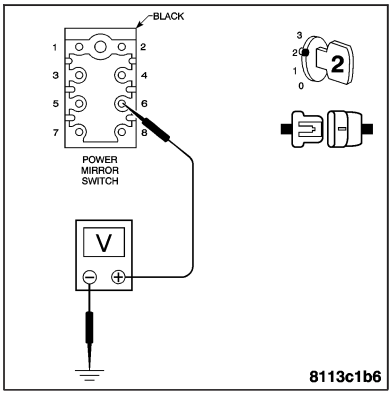

Is the voltage above 10 volts?

Yes >> Go to 2

No >> Repair the Power Mirror Switch Fused B(+) circuit for an open.
Perform BODY VERIFICATION TEST.

2. MEASURE POWER MIRROR SWITCH GROUND CIRCUIT RESISTANCE

Turn the ignition off.

Measure the resistance between ground and the Power Mirror Switch harness connector.

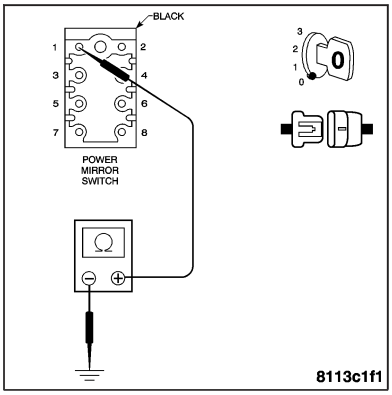

Is the resistance below 5.0 ohms?

Yes >> Replace the Power Mirror Switch. **Refer to Page 8N-71**.
Perform BODY VERIFICATION TEST.

No >> Repair the Ground circuit between the Power Mirror Switch harness connector and ground for an open.
Perform BODY VERIFICATION TEST.

*AUTOMATIC DAY/NIGHT MIRROR INOPERATIVE

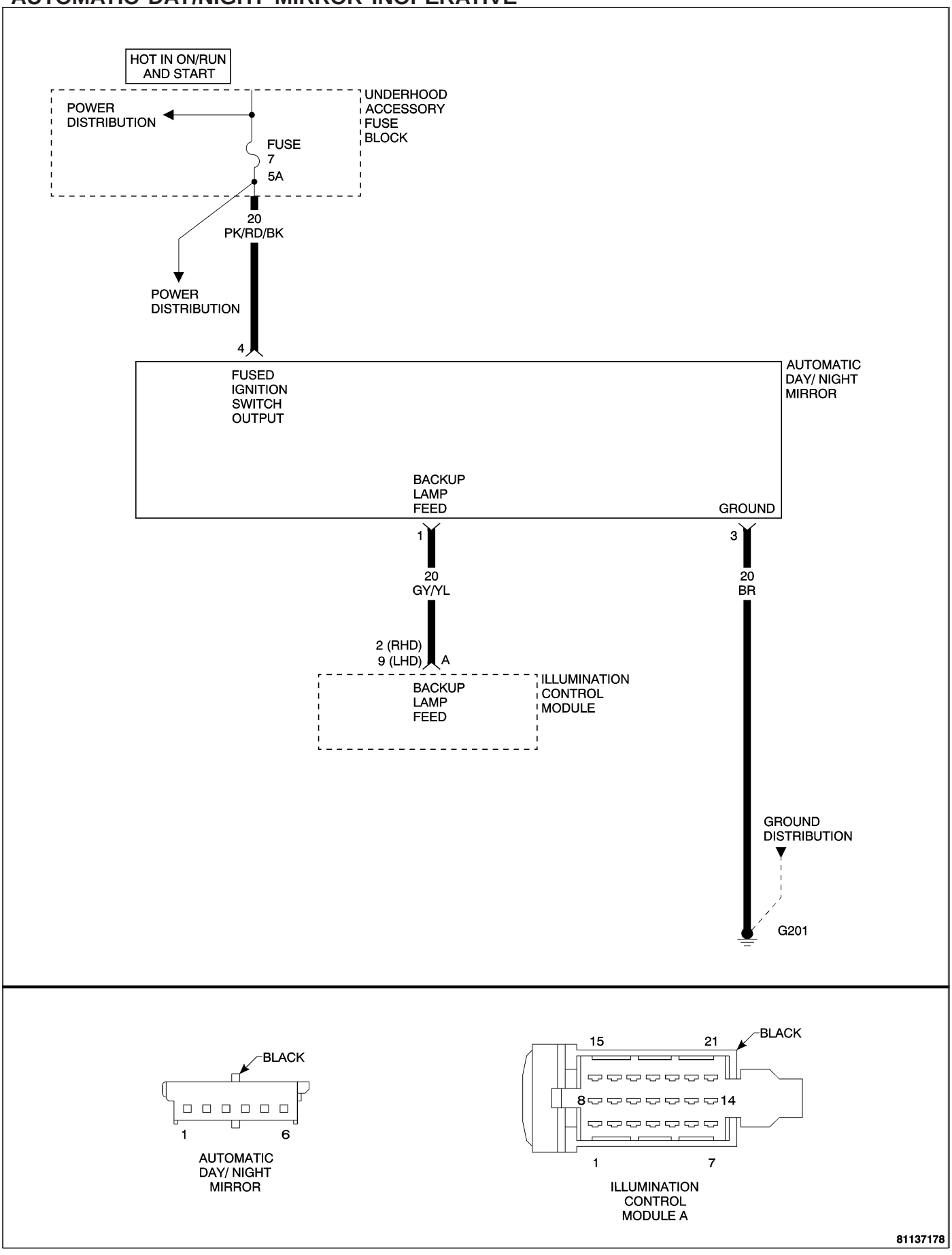

*AUTOMATIC DAY/NIGHT MIRROR INOPERATIVE — CONTINUED

POSSIBLE CAUSES
FUSED B(+) CIRCUIT OPEN
AUTOMATIC DAY/NIGHT MIRROR GROUND CIRCUIT OPEN
AUTOMATIC DAY/NIGHT MIRROR

For a complete Power Mirrors Circuit Diagram, **Refer to Page 8N-63**.

Diagnostic Test

1. MEASURE AUTOMATIC DAY/NIGHT MIRROR FUSED B(+) CIRCUIT VOLTAGE

Note: Inspect Fuse 7 located in the Underhood Accessory Fuse Block. If the fuse is open, repair the cause of the open fuse before continuing.

Turn the ignition off.

Disconnect the Automatic Day/Night Mirror harness connector.

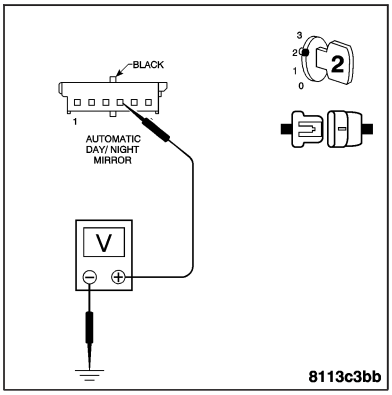

Note: Check connectors - Clean/repair as necessary.
Turn the ignition on.

Measure the voltage of the Fused B(+) circuit at the Automatic Day/Night Mirror harness connector.

Is the voltage above 10 volts?

Yes >> Go to 2

No >> Repair the Automatic Day/Night Mirror Fused B(+) circuit for an open.
Perform BODY VERIFICATION TEST.

2. MEASURE AUTOMATIC DAY/NIGHT MIRROR GROUND CIRCUIT RESISTANCE

Turn the ignition off.

Measure the resistance between ground and the Automatic Day/Night Mirror Ground circuit.

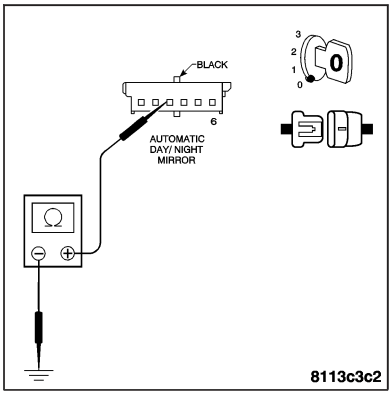

Is the resistance below 5.0 ohms?

Yes >> Go to 3

No >> Repair the Ground circuit for an open.
Perform BODY VERIFICATION TEST.

*AUTOMATIC DAY/NIGHT MIRROR INOPERATIVE — CONTINUED

3. MEASURE THE VOLTAGE OF THE BACKUP LAMP FEED CIRCUIT

Disconnect the Illumination Control Module harness connector.

Note: Check connectors - Clean/repair as necessary.
Turn the ignition on.

Put the automatic transmission shift lever assembly or the manual transmission gear shift lever into Reverse.

Measure the voltage of the Backup Lamp Feed circuit at the Automatic Day/Night Mirror harness connector.

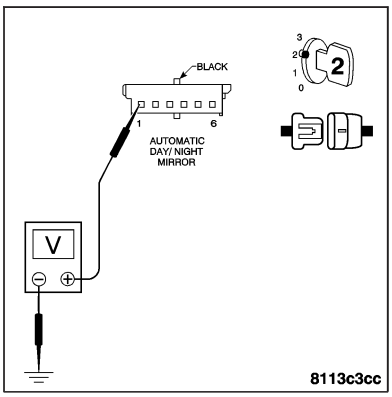

Is battery voltage present?

Yes >> Repair the Automatic Day/Night Mirror Backup Lamp Feed circuit for a short to voltage.
Perform BODY VERIFICATION TEST.

No >> Replace the Automatic Day/Night Mirror. **Refer to Page 8N-68**.
Perform BODY VERIFICATION TEST.

BODY VERIFICATION TEST

1.

Turn the ignition off.

Disconnect all jumper wires and reconnect all previously disconnected components and connectors.

Note: If the SKREEM or the PCM was replaced, refer to the service information for proper programming procedures.

If the Body Control Module was replaced, turn the ignition on for 15 seconds (to allow the new BCM to learn VIN) or engine may not start.

Program all RKE transmitters and other options as necessary.

With the DRB III®, erase all Diagnostic Trouble Codes (DTCs) from ALL modules. Start the engine and allow it to run for 2 minutes. Operate all functions of the system that caused the original complaint.

Ensure that all accessories are turned off and the battery is fully charged.

Turn the ignition off and wait 5 seconds. Turn the ignition on and using the DRB III®, read DTCs from ALL modules.

Are any DTCs present or is the original complaint still present?

Are any DTCs present?

YES >> Repair is not complete, refer to appropriate symptom.

NO >> Repair is complete.

SCHEMATICS AND DIAGRAMS

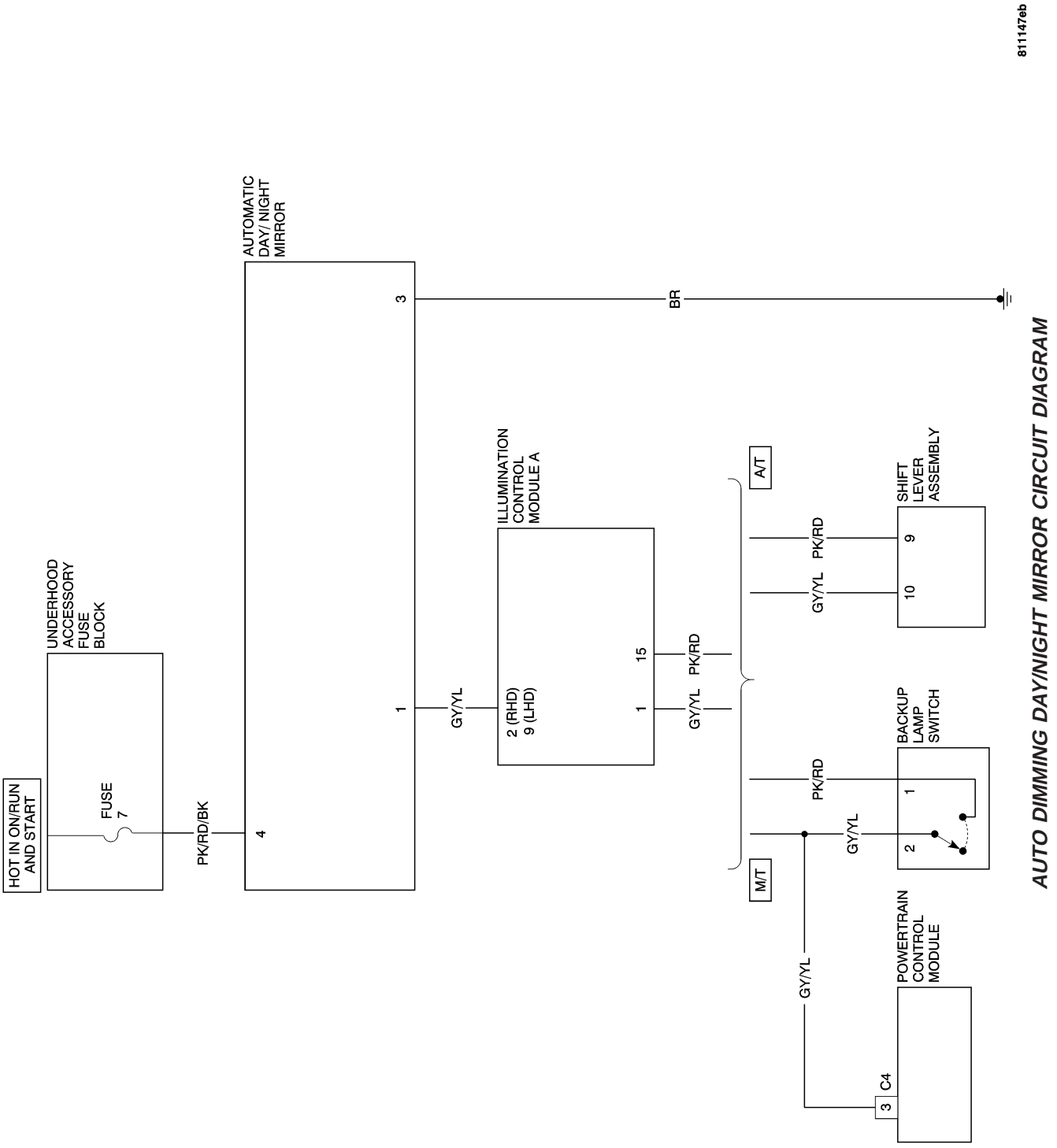

AUTO DIMMING DAY/NIGHT MIRROR CIRCUIT DIAGRAM

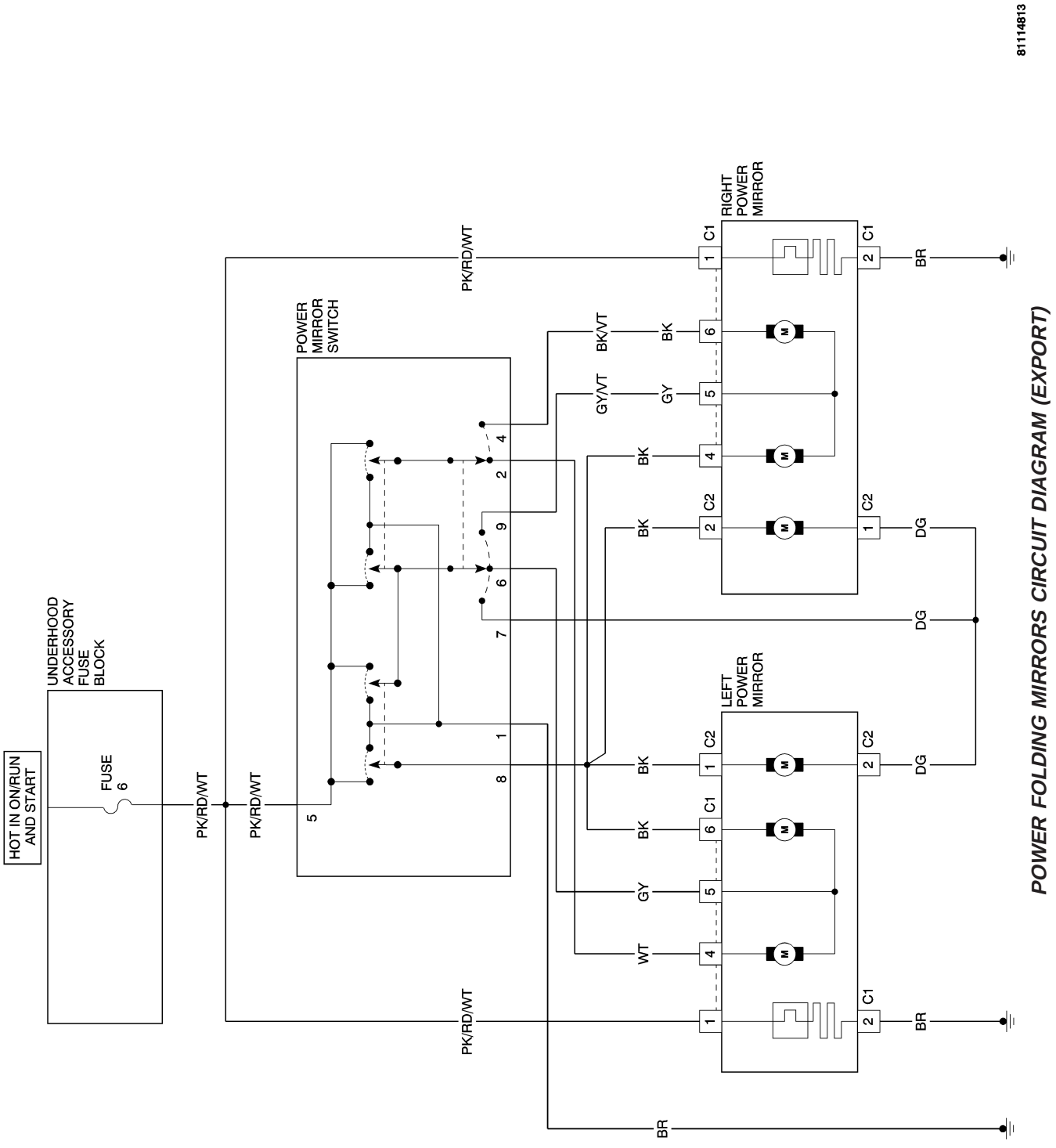

POWER FOLDING MIRRORS CIRCUIT DIAGRAM (EXPORT)

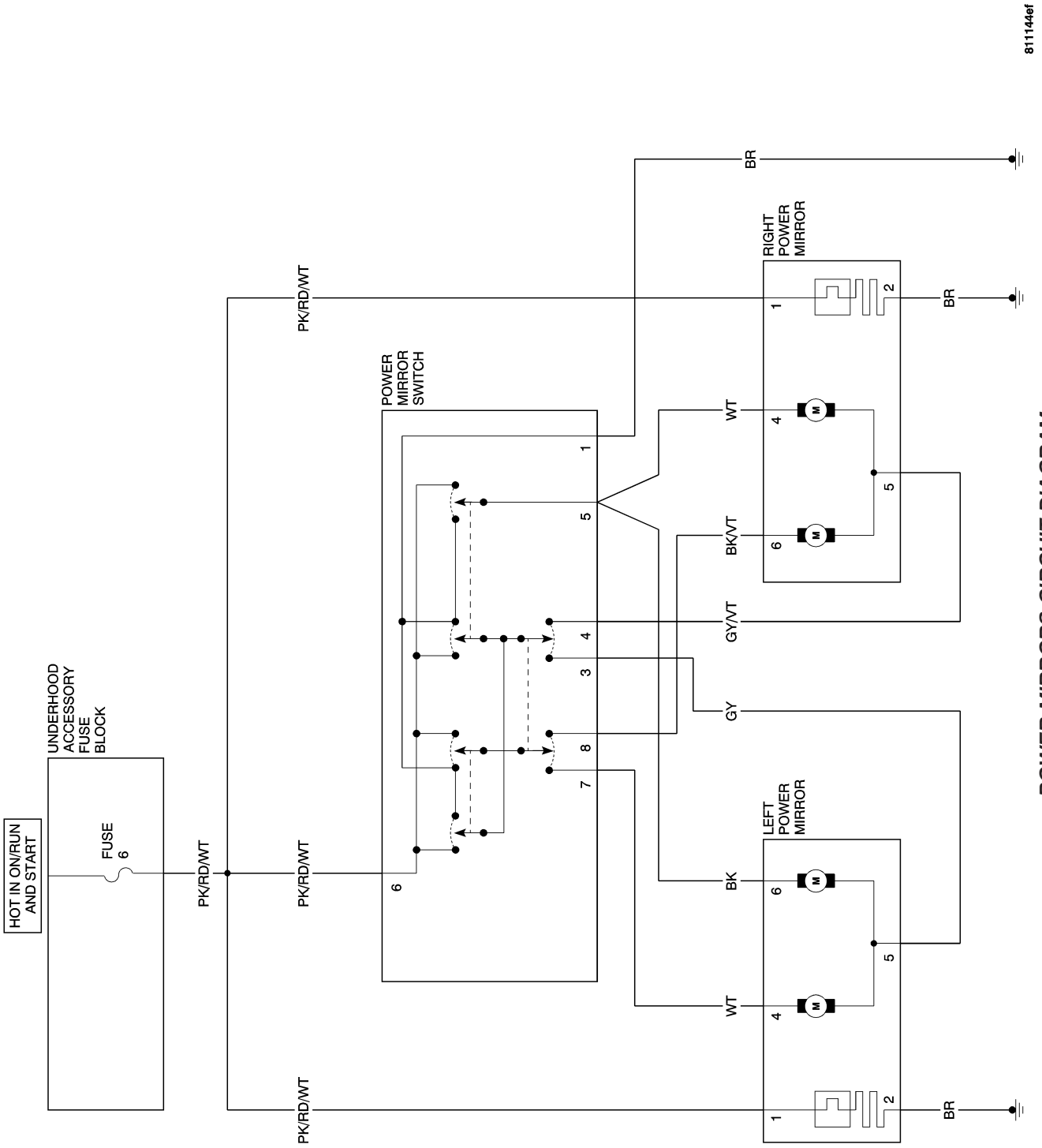

POWER MIRRORS CIRCUIT DIAGRAM

POWER MIRRORS - SERVICE INFORMATION

TABLE OF CONTENTS

page

POWER MIRRORS - SERVICE INFORMATION
DESCRIPTION 66
OPERATION 66
DIAGNOSIS AND TESTING 66
AUTOMATIC DAY / NIGHT MIRROR
DESCRIPTION 68
OPERATION 68
REMOVAL 68
INSTALLATION
REARVIEW MIRROR 69

page

INSTALLATION - REARVIEW MIRROR
SUPPORT BRACKET 69
POWER MIRROR SWITCH
REMOVAL 71
INSTALLATION 71
SIDEVIEW MIRROR
REMOVAL 72
INSTALLATION 72

POWER MIRRORS - SERVICE INFORMATION

DESCRIPTION

This group covers the following components of the power mirror system:

- Power sideview mirrors.
- Automatic day/night inside rearview mirror.
- Power mirror switch.

Driver and passenger power operated sideview mirrors are standard equipment. The power mirror system allows the driver to adjust both sideview mirrors electrically from the driver seat by operating a four position switch located in the center console.

An inside automatic day/night rear view mirror is also standard equipment. It is located in the traditional location at the top and center of the windshield. The automatic day/night mirror position is manually adjustable, however the automatic dimming feature of the mirror is not.

OPERATION

Both sideview mirrors are automatically heated and each housing can manually fold in for protection. Mirror selection and movement direction is controlled by a 4-way double-pole switch. Two electric motors inside each sideview mirror housing actuate the glass surface in the corresponding direction that the switch is moved. The inside rear view mirror is fully automatic and darkens to prevent glare during night driving. It operates when the following conditions are simultaneously met:

- The ignition switch is in the ON position
- Reverse gear is not selected
- The interior lights are switched off
- Headlamp glare from behind falls on the sensor

DIAGNOSIS AND TESTING

WARNING: REFER TO RESTRAINTS BEFORE ATTEMPTING ANY DOOR, SEAT, STEERING WHEEL, STEERING COLUMN, OR INSTRUMENT PANEL COMPONENT DIAGNOSIS OR SERVICE. FAILURE TO TAKE THE PROPER PRECAUTIONS COULD RESULT IN ACCIDENTAL AIRBAG DEPLOYMENT AND POSSIBLE PERSONAL INJURY.

CONDITION	POSSIBLE CAUSES	CORRECTION
BOTH SIDEVIEW MIRRORS INOPERATIVE	1. Faulty fuse.	1. Replace fuse.
	2. Poor connection at switch harness connector.	2. Secure harness connector.
	3. No voltage to adjustment motors.	3. Refer to power mirrors electrical diagnostics in this section.
	4. Mirror ground circuit fault.	4. Repair ground circuit.
ONE SIDEVIEW MIRROR INOPERATIVE	1. Faulty switch assembly	1. Refer to power mirrors electrical diagnostics in this section.
	2. Poor connection at mirror harness connector.	2. Secure connector
	3. No voltage to adjustment motor.	3. Refer to power mirrors electrical diagnostics in this section.
	4. Mirror ground circuit fault.	4. Repair ground circuit.
SIDEVIEW MIRROR(S) VERTICAL OR HORIZONTAL MOVEMENT SLUGGISH OR INOPERATIVE	1. Faulty or worn motor	1. Replace mirror assembly.
	2. Poor connection at mirror harness connector.	2. Secure connector.
	3. Faulty switch assembly.	3. Refer to power mirrors electrical diagnostics in this section.
	4. Mirror ground circuit fault.	4. Repair ground circuit.
SIDEVIEW MIRROR(S) DO NOT CLEAR IN COLD WEATHER	1. Faulty fuse.	1. Replace fuse.
	2. Poor connection at mirror harness connector.	2. Secure connector.
	3. No voltage to heater grid.	3. Refer to heated mirrors electrical diagnostics.
AUTOMATIC DAY/NIGHT MIRROR DOES NOT DARKEN	1. Faulty fuse.	1. Replace fuse.
	2. Interior lighting system faulty.	2. Refer to lamps /lighting-interior electrical diagnositics.
	3. Reverse lamp circuit fault. (manual trans)	3. Repair circuit.
	4. Shifter assembly fault. (automatic trans)	4. Refer to transmission electrical diagnostics.
AUTOMATIC DAY/NIGHT MIRROR CONTINUALLY DARKENED	1. Short to voltage.	1. Refer to power mirrors electrical diagnostics in this section.

AUTOMATIC DAY / NIGHT MIRROR

DESCRIPTION

An automatic day/night rear view mirror system is standard on this model. It is a completely self-contained unit (2) which is located at the top and center of the windshield. The mirror sensitivity cannot be repaired or adjusted; if any components of the mirror unit itself are faulty or damaged, the entire automatic day/night inside rear view mirror assembly must be replaced.

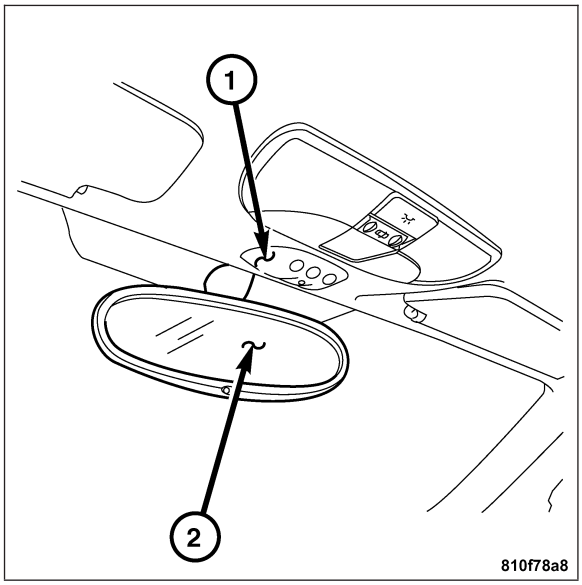

OPERATION

A thin layer of electrochromatic material between two pieces of conductive glass make up the face of the mirror. The system will automatically change the reflectance of the inside rear view mirror to protect the driver from the unwanted headlight glare of trailing vehicles while driving at night. The self-dimming feature is defeated if the interior lights are switched on, or the system senses the backup light circuit is energized whenever the transmission is shifted into reverse.

REMOVAL

1. Disconnect the negative battery cable.
2. Insert a 5 mm metal dowel into the hole on the windshield side of the mirror base.
3. Rotate the mirror base approximately 90 degrees to the left or right.
4. Remove the courtesy lamp. **Refer to Page 8L-142**.
5. Disconnect the mirror harness connector.
6. Feed the harness connector and harness past the opening in the headliner and remove the mirror assembly.

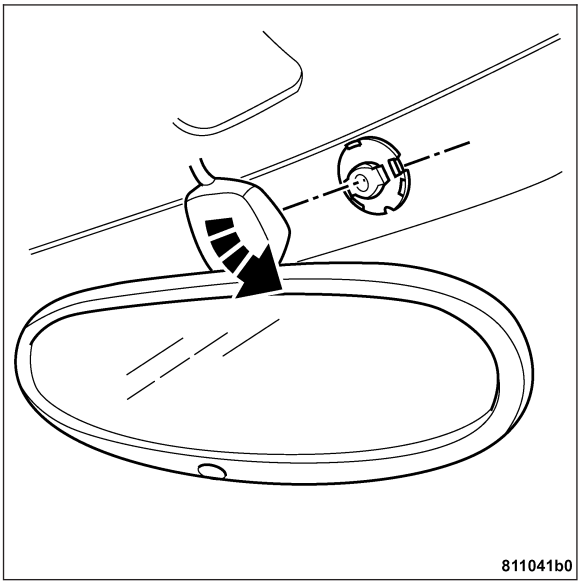

INSTALLATION

REARVIEW MIRROR

1. Feed the mirror harness connector into the headliner and connect.
2. Install the courtesy lamp. **Refer to Page 8L-143**.
3. Position the mirror base over the mounting plate so that it is flush with the windshield surface.

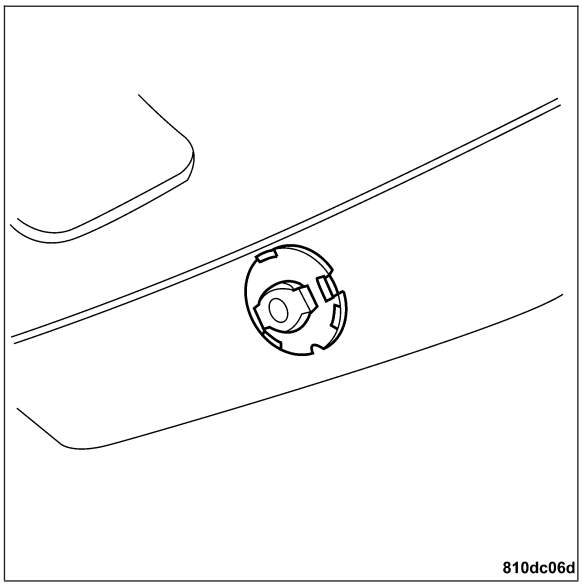

4. Rotate the mirror base approximately 90 degrees until the hole is positioned downward.
5. Connect the negative battery cable.

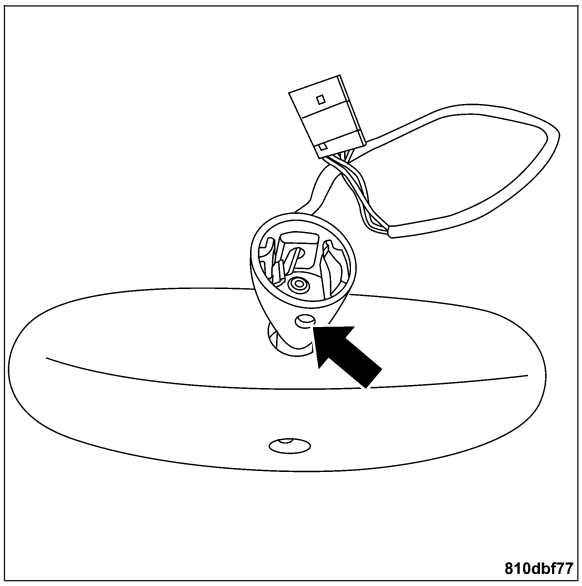

INSTALLATION - REARVIEW MIRROR SUPPORT BRACKET

1. Mark the position for the mirror bracket on the outside of the windshield glass with a wax pencil.
2. Clean the bracket contact area on the glass. Use a mild powdered cleanser on a cloth saturated with isopropyl (rubbing) alcohol. Finally, clean the glass with a paper towel dampened with alcohol.
3. Sand the surface on the support bracket with fine grit-sandpaper. Wipe the bracket surface clean with a paper towel.

4. Apply adhesive accelerator to the surface on the bracket according to the following instructions:
   a. Crush the vial to saturate the felt applicator.
   b. Remove the paper sleeve.
   c. Apply adhesive accelerator to the contact surface on the bracket.
   d. Allow the adhesive accelerator to dry for five minutes.
   e. Do not touch the bracket contact surface after the adhesive accelerator has been applied.

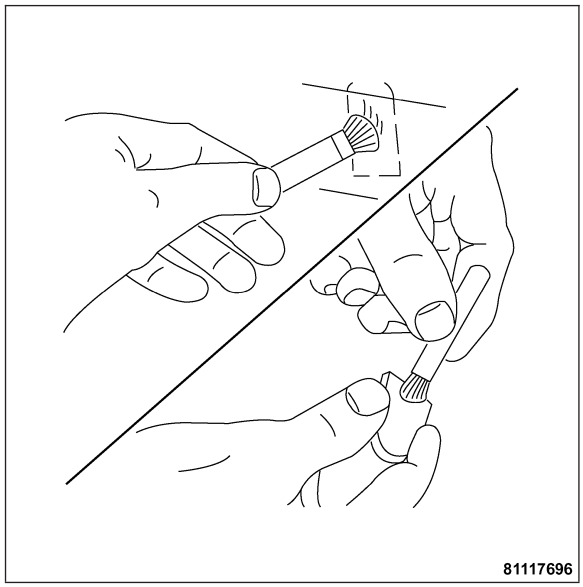

5. Apply adhesive accelerator to the bracket contact surface on the windshield glass. Allow the adhesive accelerator to dry for one minute. Do not touch the glass contact surface after the adhesive accelerator has been applied.
6. Install the bracket according to the following instructions:
   a. Apply one drop of adhesive at the center of the bracket contact-surface on the windshield glass.
   b. Apply an even coat of adhesive to the contact surface on the bracket.
   c. Align the bracket with the marked position on the windshield glass.
   d. Press and hold the bracket in place for at least one minute.

Note: Verify that the mirror support bracket is correctly aligned because the adhesive will cure rapidly.

7. Allow the adhesive to cure for 8-10 minutes. Remove any excess adhesive with an alcohol-dampened cloth.
8. Allow the adhesive to cure for an additional 8-10 minutes before installing the mirror.

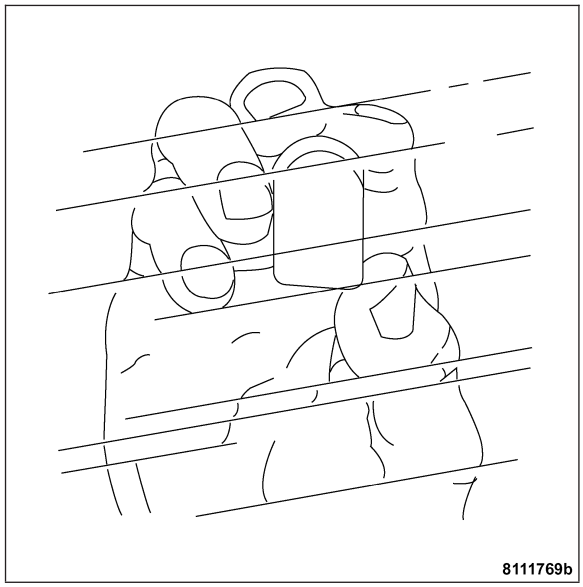

POWER MIRROR SWITCH

REMOVAL

WARNING: REFER TO RESTRAINTS BEFORE ATTEMPTING ANY DOOR, SEAT, STEERING WHEEL, STEERING COLUMN, OR INSTRUMENT PANEL COMPONENT DIAGNOSIS OR SERVICE. FAILURE TO TAKE THE PROPER PRECAUTIONS COULD RESULT IN ACCIDENTAL AIRBAG DEPLOYMENT AND POSSIBLE PERSONAL INJURY.

1. Disconnect the negative battery cable.
2. Remove the center console. **Refer to Page 23-173**.
3. Release the retaining clip using a suitable tool (1) and remove the power mirror switch from the center console.

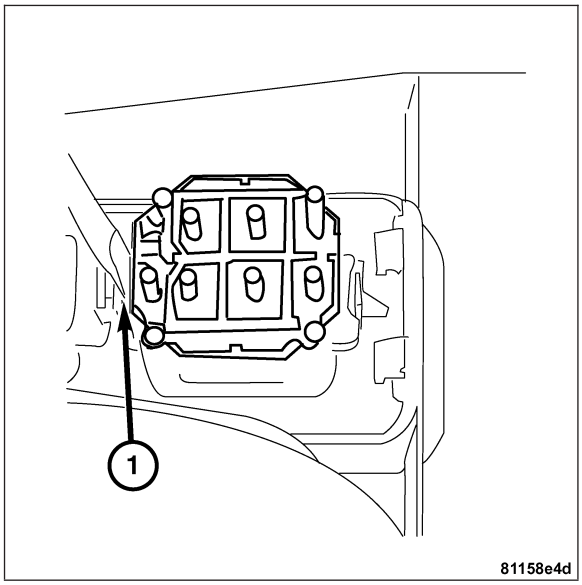

INSTALLATION

1. Install the power mirror switch into the center console.
2. Install the center console. **Refer to Page 23-183**.
3. Connect the negative battery cable.

SIDEVIEW MIRROR

REMOVAL

WARNING: REFER TO RESTRAINTS BEFORE ATTEMPTING ANY DOOR, SEAT, STEERING WHEEL, STEERING COLUMN, OR INSTRUMENT PANEL COMPONENT DIAGNOSIS OR SERVICE. FAILURE TO TAKE THE PROPER PRECAUTIONS COULD RESULT IN ACCIDENTAL AIRBAG DEPLOYMENT AND POSSIBLE PERSONAL INJURY.

1. Disconnect the negative battery cable.
2. Remove the door interior trim panel. **Refer to Page 23-108**.
3. Disconnect the mirror harness connector.
4. Rotate the sideview mirror upward so the screws are exposed.
5. Remove the two screws attaching the mirror to the door and remove the mirror.

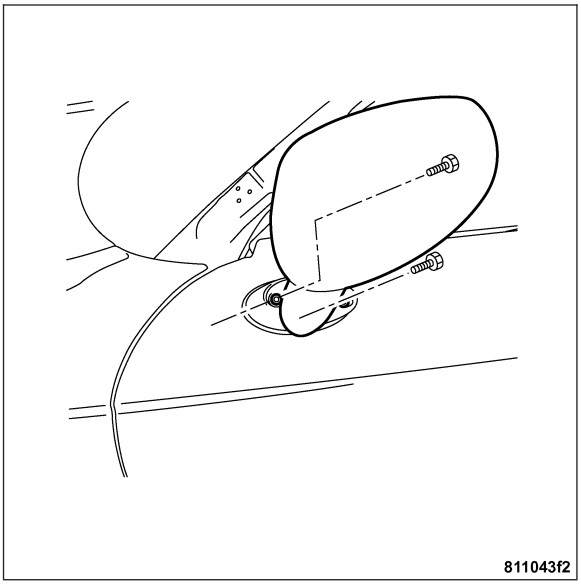

INSTALLATION

1. Install the screws (1) attaching the mirror to the door.
2. Connect the sideview mirror harness connector.
3. Install the door interior trim panel. **Refer to Page 23-109**.
4. Rotate the mirror back to its rest position.
5. Connect the negative battery cable.

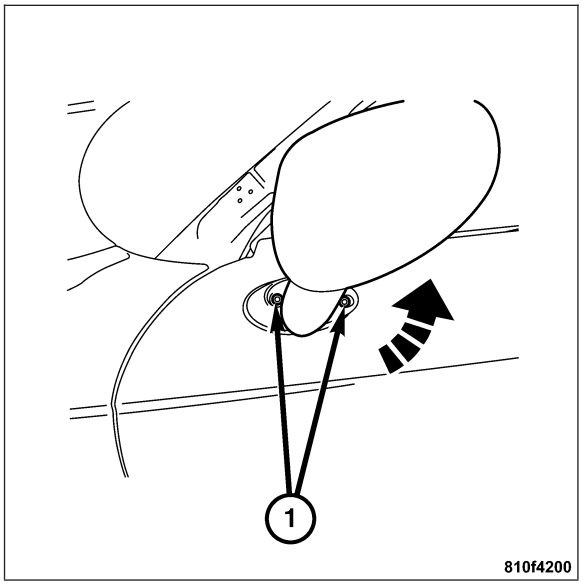

POWER SEATS - ELECTRICAL DIAGNOSTICS

TABLE OF CONTENTS

page

POWER SEATS - ELECTRICAL DIAGNOSTICS
DIAGNOSIS AND TESTING
*DRIVER POWER SEAT INOPERATIVE 74
*PASSENGER POWER SEAT INOPERATIVE 76
*BOTH POWER SEATS INOPERATIVE 78
*DRIVER POWER SEAT RECLINER MOTOR INOPERATIVE 81
*DRIVER POWER SEAT HORIZONTAL MOTOR INOPERATIVE 83
*DRIVER POWER SEAT FRONT RISER MOTOR INOPERATIVE 85
*DRIVER POWER SEAT REAR RISER MOTOR INOPERATIVE 87
*PASSENGER POWER SEAT RECLINER MOTOR INOPERATIVE 89
*PASSENGER POWER SEAT HORIZONTAL MOTOR INOPERATIVE 91
BODY VERIFICATION TEST 93
SCHEMATICS AND DIAGRAMS 94

POWER SEATS - ELECTRICAL DIAGNOSTICS

DIAGNOSIS AND TESTING

*DRIVER POWER SEAT INOPERATIVE

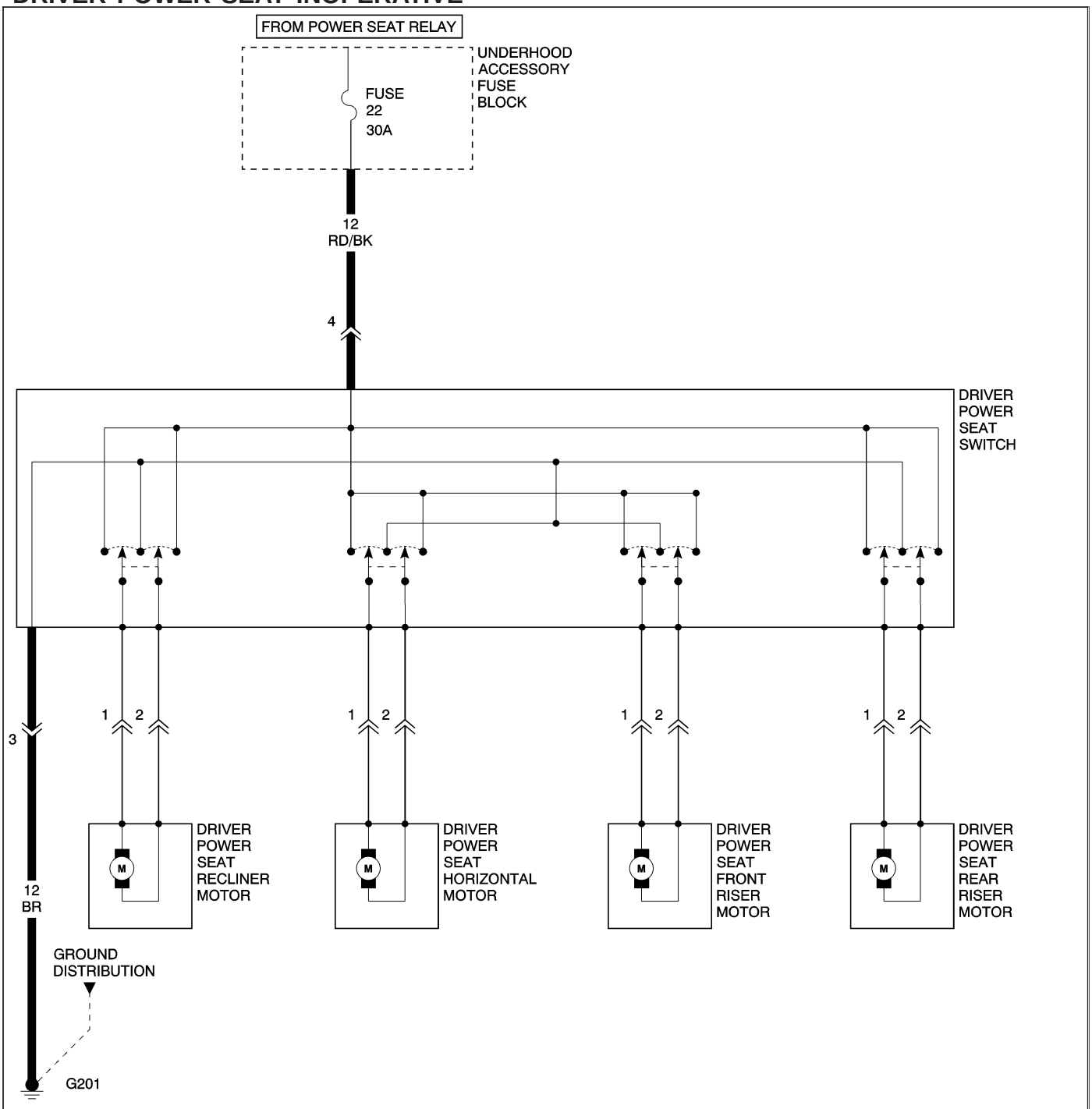

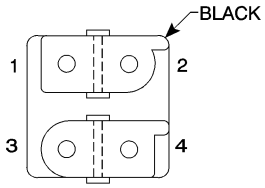

LEFT FRONT POWER SEAT/ SEAT BELT

81137c14

*DRIVER POWER SEAT INOPERATIVE — CONTINUED

POSSIBLE CAUSES
FUSED B(+) CIRCUIT OPEN
DRIVER POWER SEAT SWITCH GROUND CIRCUIT OPEN
DRIVER POWER SEAT SWITCH

For a complete Power Seats Circuit Diagram, **Refer to Page 8N-94**.

Diagnostic Test

1. MEASURE DRIVER POWER SEAT SWITCH FUSED B(+) CIRCUIT VOLTAGE

Note: Inspect Fuse 22 located in the Underhood Accessory Fuse Block. If the fuse is open, repair the cause of the open fuse before continuing.

Turn the ignition off.

Disconnect the Driver Power Seat Switch harness connector.

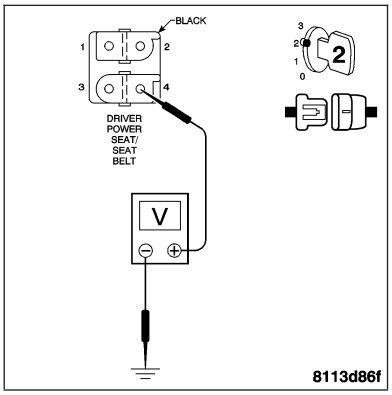

Note: Check connectors - Clean/repair as necessary.
Turn the ignition on.

Measure the voltage of the Fused B(+) circuit at the Driver Power Seat Switch harness connector.

Is the voltage above 10 volts?

Yes >> Go to 2

No >> Repair the Fused B(+) circuit for an open.
Perform BODY VERIFICATION TEST.

2. MEASURE DRIVER POWER SEAT SWITCH GROUND CIRCUIT RESISTANCE

Turn the ignition off.

Measure the resistance between ground and the Driver Power Seat Switch Ground circuit.

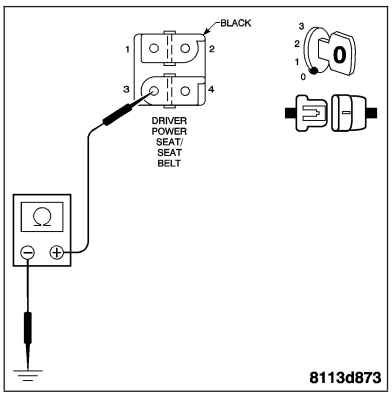

Is the resistance below 5.0 ohms?

Yes >> Replace the Driver Power Seat Switch. **Refer to Page 8N-96**.
Perform BODY VERIFICATION TEST.

No >> Repair the Ground circuit for an open.
Perform BODY VERIFICATION TEST.

*PASSENGER POWER SEAT INOPERATIVE

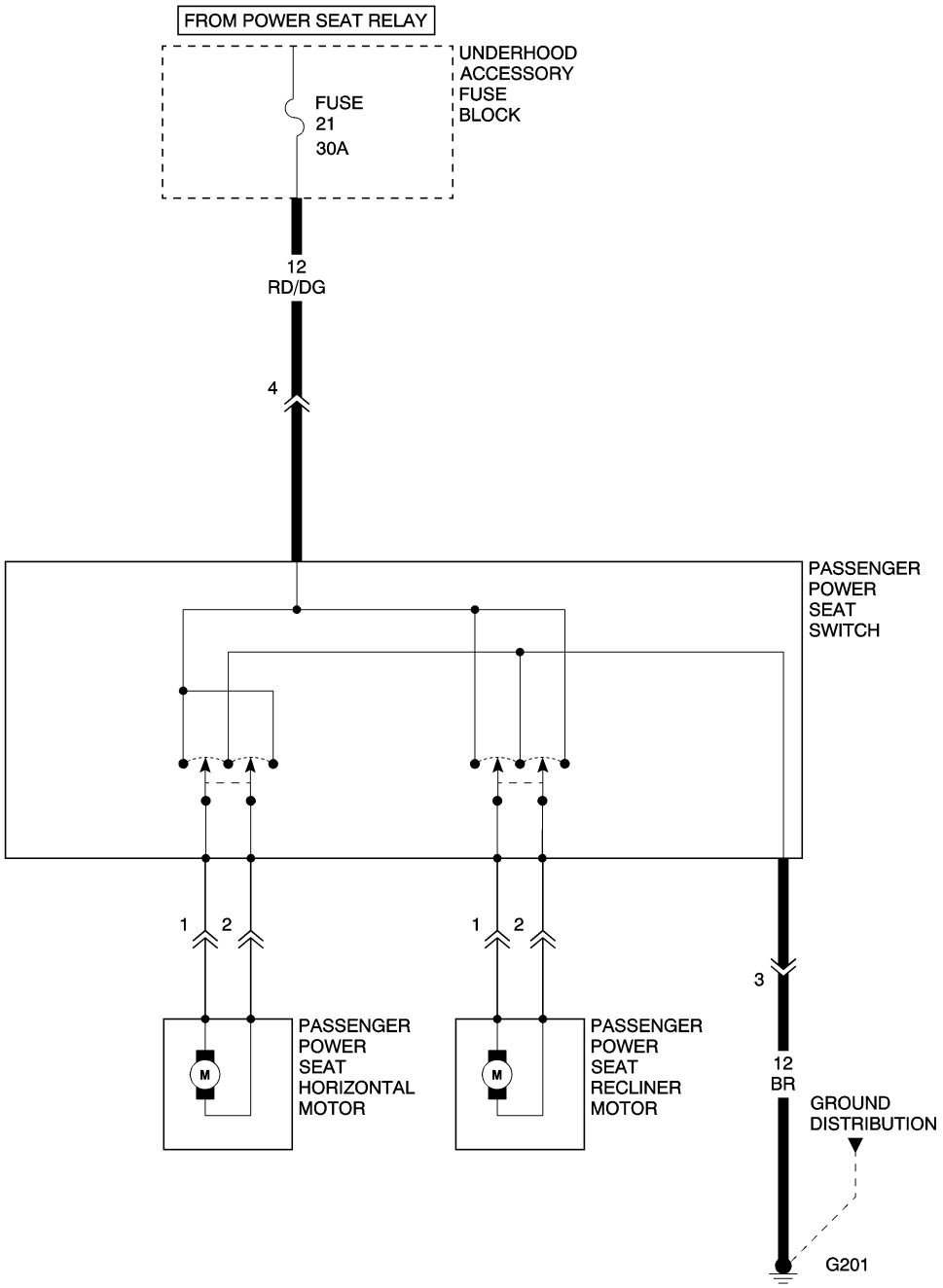

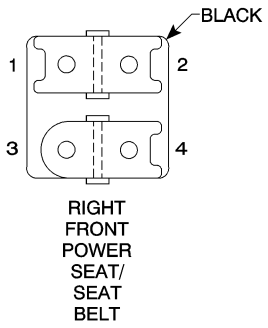

RIGHT FRONT POWER SEAT/ SEAT BELT

81137c57

*PASSENGER POWER SEAT INOPERATIVE — CONTINUED

POSSIBLE CAUSES
FUSED B(+) CIRCUIT OPEN
PASSENGER POWER SEAT SWITCH GROUND CIRCUIT OPEN
PASSENGER POWER SEAT SWITCH

For a complete Power Seats Circuit Diagram, **Refer to Page 8N-94**.

Diagnostic Test

1. MEASURE PASSENGER POWER SEAT SWITCH FUSED B(+) CIRCUIT VOLTAGE

Note: Inspect Fuse 21 located in the Underhood Accessory Fuse Block. If the fuse is open, repair the cause of the open fuse before continuing.

Turn the ignition off.

Disconnect the Passenger Power Seat Switch harness connector.

Note: Check connectors - Clean/repair as necessary.
Turn the ignition on.

Measure the voltage of the Fused B(+) circuit at the Passenger Power Seat Switch harness connector.

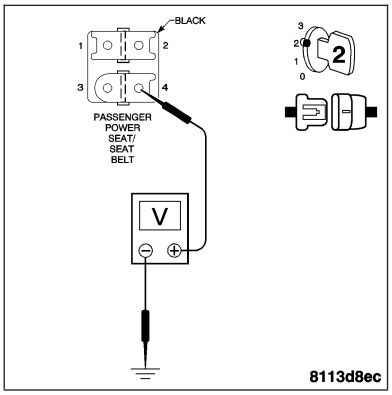

Is the voltage above 10 volts?

Yes >> Go to 2

No >> Repair the Fused B(+) circuit for an open.
Perform BODY VERIFICATION TEST.

2. MEASURE PASSENGER POWER SEAT SWITCH GROUND CIRCUIT RESISTANCE

Turn the ignition off.

Measure the resistance between ground and the Passenger Power Seat Switch Ground circuit.

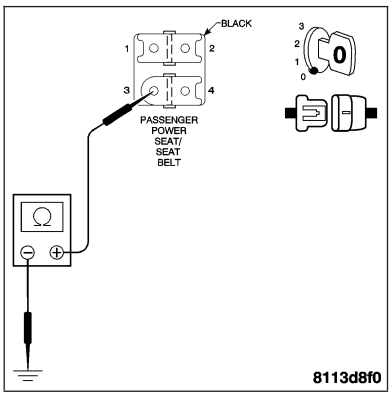

Is the resistance below 5.0 ohms?

Yes >> Replace the Passenger Power Seat Switch. **Refer to Page 8N-96**.
Perform BODY VERIFICATION TEST.

No >> Repair the Ground circuit for an open.
Perform BODY VERIFICATION TEST.

*BOTH POWER SEATS INOPERATIVE

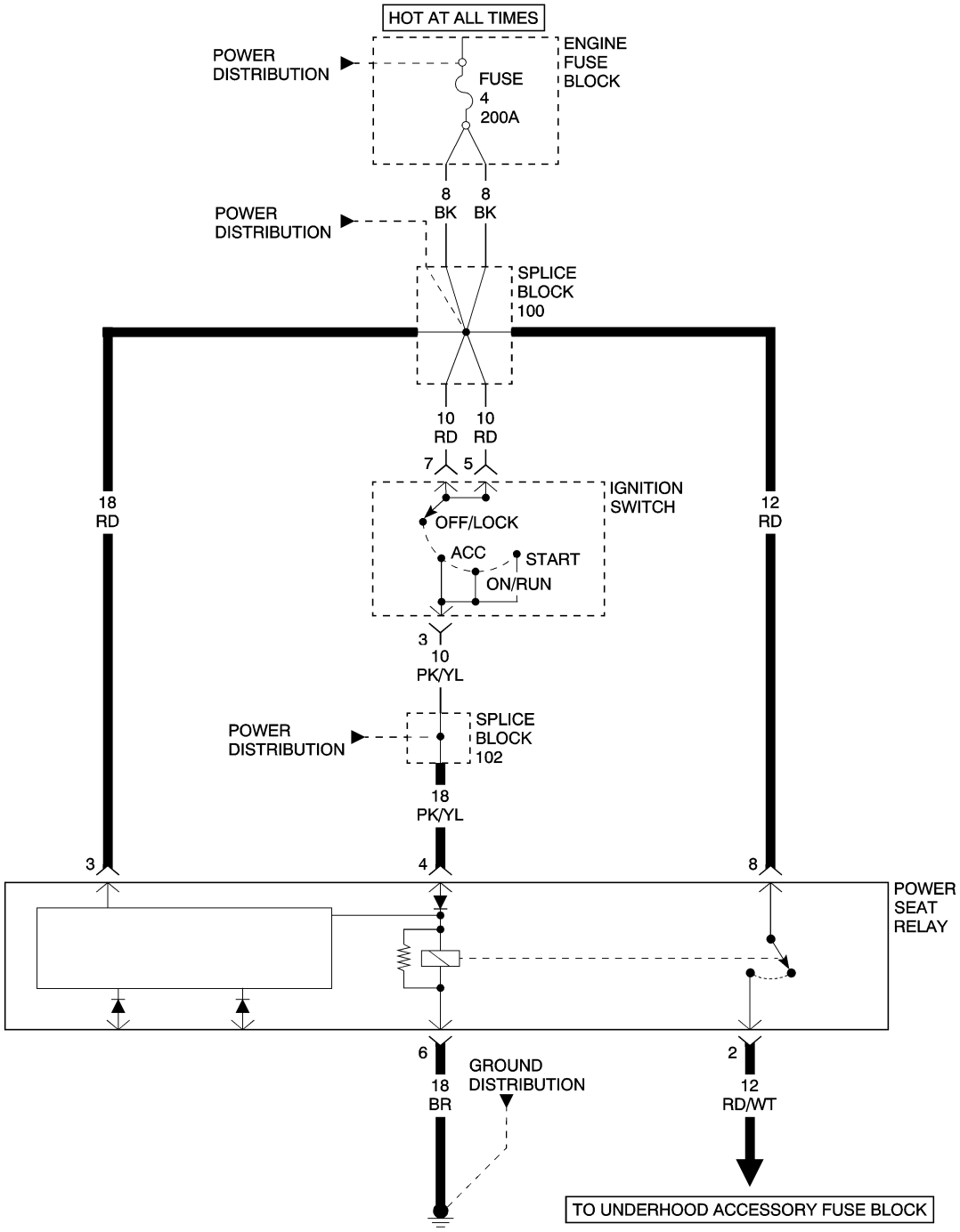

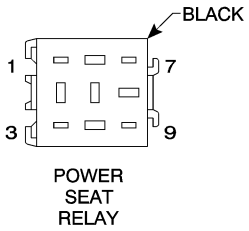

81139dc2

*BOTH POWER SEATS INOPERATIVE — CONTINUED

POSSIBLE CAUSES
POWER SEAT RELAY FUSED B(+) CIRCUIT OPEN
POWER SEAT RELAY GROUND CIRCUIT OPEN
POWER SEAT RELAY

For a complete Power Seats Circuit Diagram, **Refer to Page 8N-94**.

Diagnostic Test

1. TEST THE POWER SEAT RELAY CIRCUIT

Note: Inspect Fuses 21 and 22 located in the Underhood Accessory Fuse Block. If the fuses are open, repair the cause of the open fuse before continuing.

Turn the ignition off.

Disconnect the Power Seat Relay.

Note: Check connectors - Clean/repair as necessary.
Connect a jumper wire between cavity 8 and cavity 2 of the Power Seat Relay harness connector.

Actuate the Driver and Passenger Power Seat Switches.

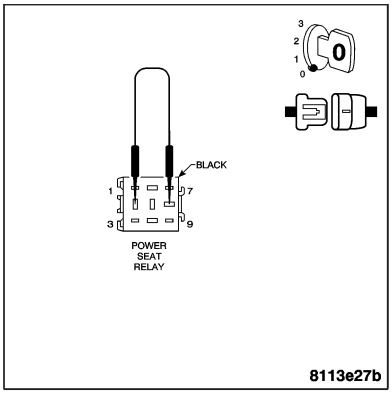

Did the Driver and Passenger Power Seats move?

Yes >> Replace the Power Seat Relay.
Perform BODY VERIFICATION TEST.

No >> Go to 2

2. MEASURE POWER SEAT RELAY FUSED B(+) CIRCUIT VOLTAGE

Disconnect the jumper wire.

Measure the voltage of the Fused B(+) circuit at the Power Seat Relay harness connector.

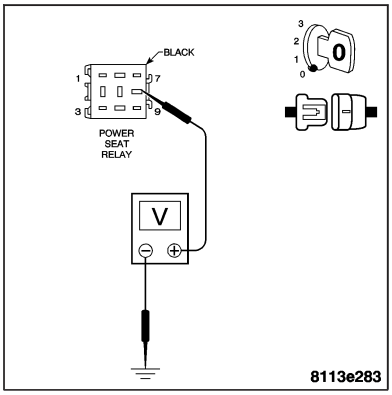

Is the voltage above 10 volts?

Yes >> Go to 3

No >> Repair the Fused B(+) circuit for an open.
Perform BODY VERIFICATION TEST.

*BOTH POWER SEATS INOPERATIVE — CONTINUED

3. MEASURE POWER SEAT RELAY GROUND CIRCUIT RESISTANCE

Measure the resistance between ground and the Ground circuit.

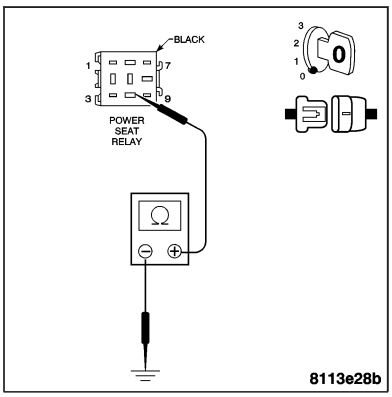

Is the resistance below 5.0 ohms?

Yes >> Repair the open circuit between the Power Seat Relay harness connector and the Underhood Accessory Fuse Block.
Perform BODY VERIFICATION TEST.

No >> Repair the open Ground circuit between the Power Seat Relay harness connector and ground.
Perform BODY VERIFICATION TEST.

*DRIVER POWER SEAT RECLINER MOTOR INOPERATIVE

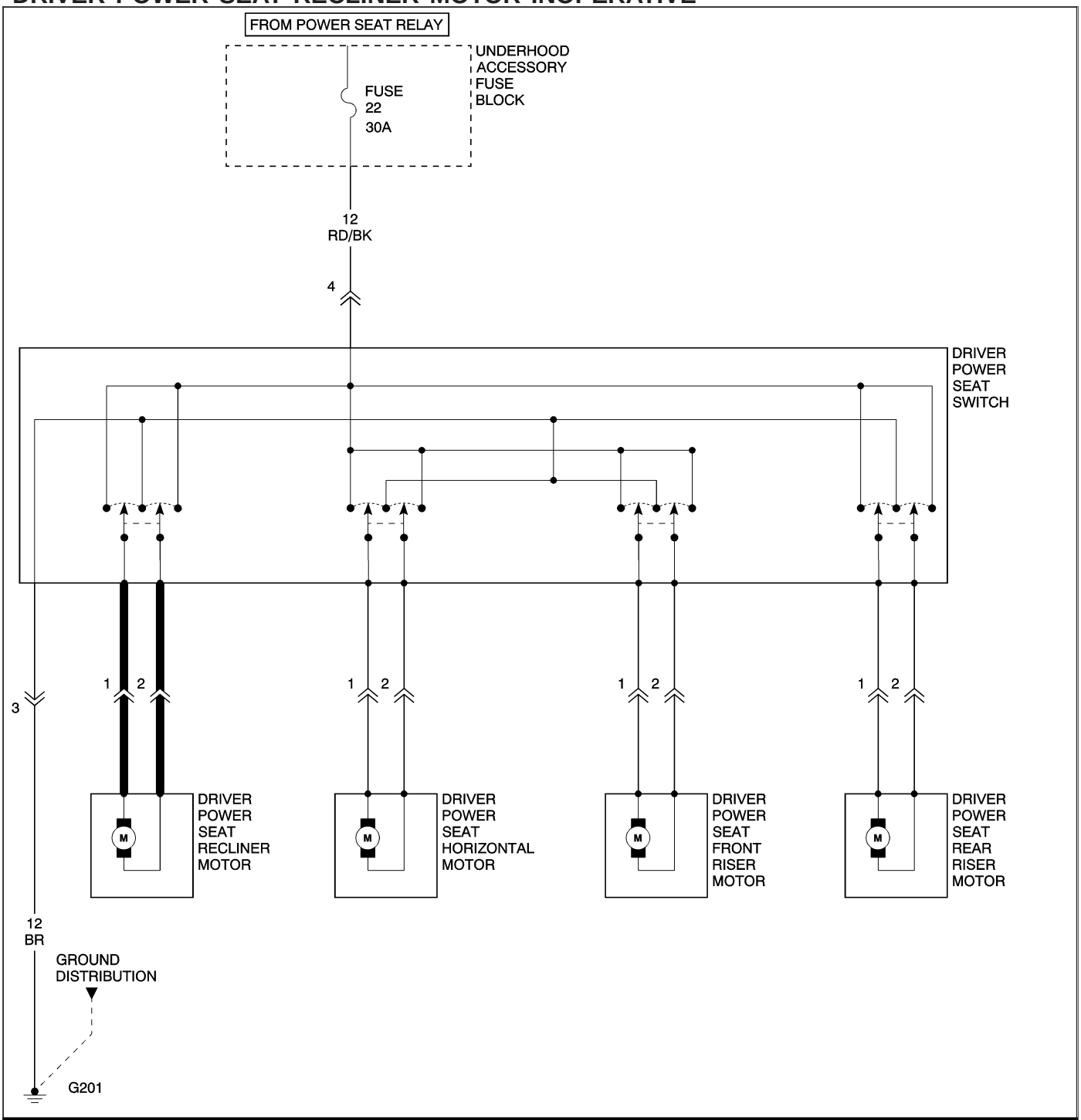

*DRIVER POWER SEAT RECLINER MOTOR INOPERATIVE — CONTINUED

POSSIBLE CAUSES
DRIVER POWER SEAT RECLINER MOTOR
DRIVER POWER SEAT RECLINER MOTOR CIRCUIT
DRIVER POWER SEAT SWITCH

For a complete Power Seats Circuit Diagram, **Refer to Page 8N-94**.

Diagnostic Test

1. TEST THE DRIVER POWER SEAT RECLINER MOTOR

Turn the ignition off.

Disconnect the Driver Power Seat Recliner Motor harness connector.

Note: Check connectors - Clean/repair as necessary.

Connect a jumper wire from B(+) to one cavity of the Driver Power Seat Recliner Motor connector (motor side).

Connect a second jumper wire from ground to the other cavity of the Driver Power Seat Recliner Motor connector (motor side).

Note recliner movement, if no recliner movement is noted, reverse the jumper wires at the Recliner Motor connector.

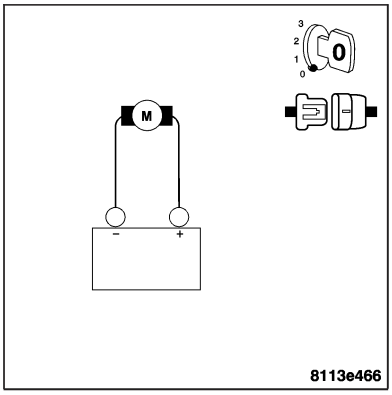

Did the Driver Power Seat Recliner move backward or forward?

Yes >> Replace the Driver Power Seat Switch.
Perform BODY VERIFICATION TEST.

No >> Replace the Driver Power Seat Recliner Motor. **Refer to Page 8N-103**.
Perform BODY VERIFICATION TEST.

*DRIVER POWER SEAT HORIZONTAL MOTOR INOPERATIVE

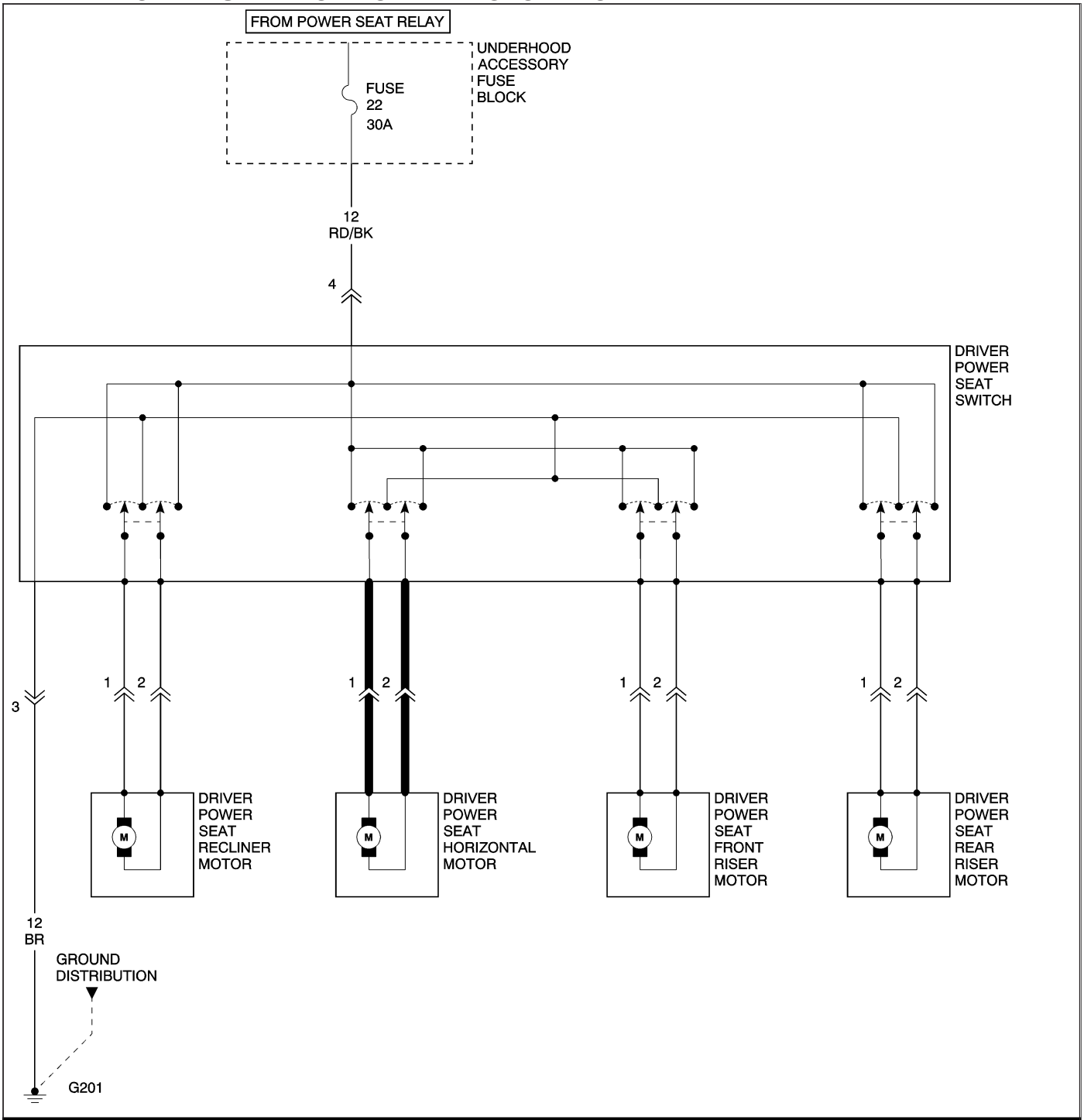

*DRIVER POWER SEAT HORIZONTAL MOTOR INOPERATIVE — CONTINUED

POSSIBLE CAUSES
DRIVER POWER SEAT HORIZONTAL MOTOR
DRIVER POWER SEAT HORIZONTAL MOTOR CIRCUIT
DRIVER POWER SEAT SWITCH

For a complete Power Seats Circuit Diagram, **Refer to Page 8N-94**.

Diagnostic Test

1. TEST THE DRIVER POWER SEAT HORIZONTAL MOTOR

Turn the ignition off.

Disconnect the Driver Power Seat Horizontal Motor harness connector.

Note: Check connectors - Clean/repair as necessary.

Connect a jumper wire from B(+) to one cavity of the Driver Power Seat Horizontal Motor connector (motor side).

Connect a second jumper wire from ground to the other cavity of the Driver Power Seat Horizontal Motor connector (motor side).

Note seat movement, if no seat movement is noted, reverse the jumper wires at the Horizontal Motor connector.

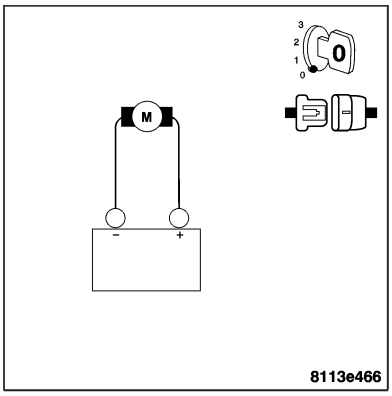

Did the Driver Power Seat move backward or forward?

Yes >> Replace the Driver Power Seat Switch. **Refer to Page 8N-96**.
Perform BODY VERIFICATION TEST.

No >> Replace the Driver Power Seat Horizontal Motor. **Refer to Page 8N-101**.
Perform BODY VERIFICATION TEST.

*DRIVER POWER SEAT FRONT RISER MOTOR INOPERATIVE

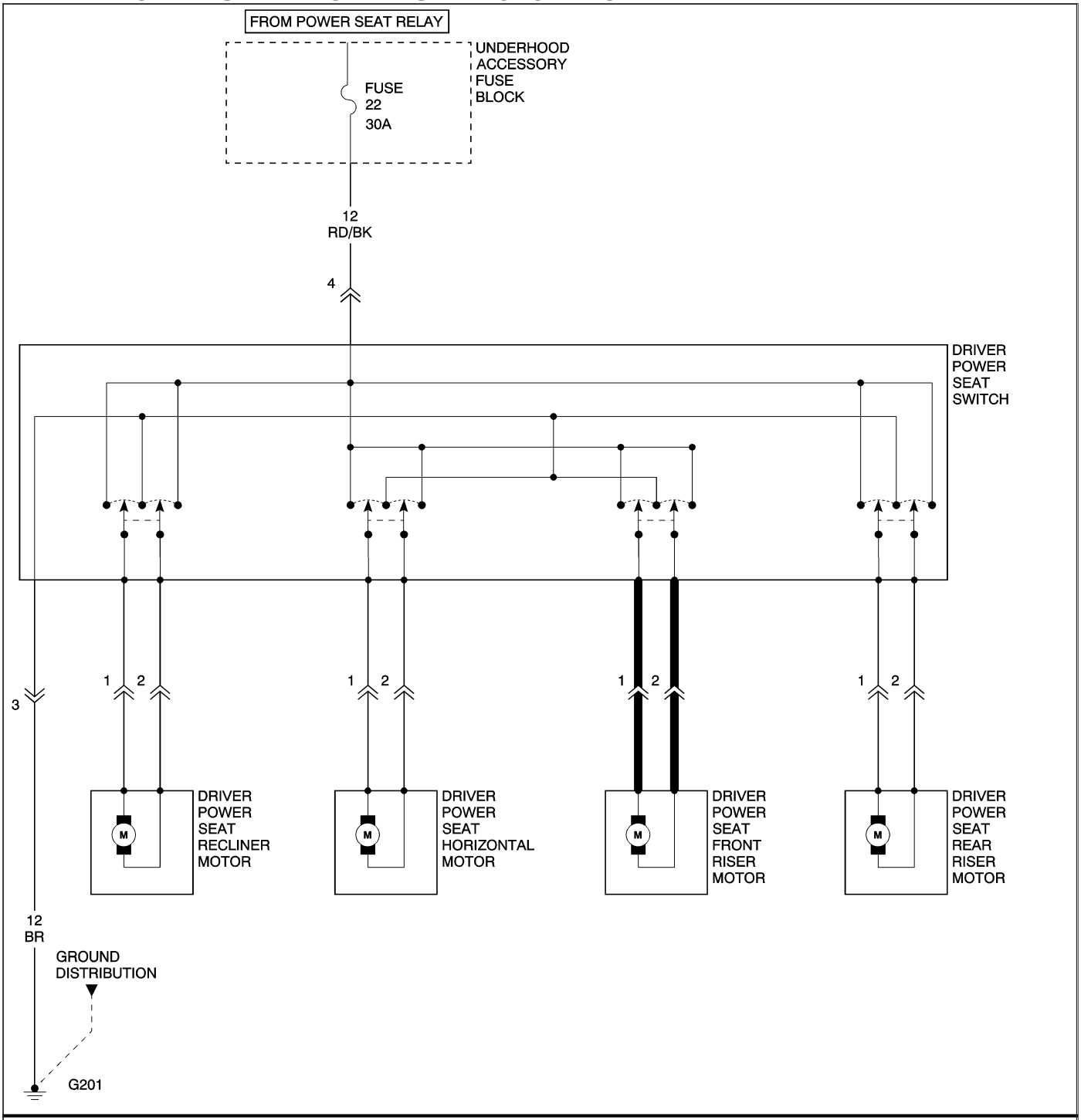

*DRIVER POWER SEAT FRONT RISER MOTOR INOPERATIVE — CONTINUED

POSSIBLE CAUSES
DRIVER POWER SEAT FRONT RISER MOTOR
DRIVER POWER SEAT SWITCH

For a complete Power Seats Circuit Diagram, **Refer to Page 8N-94**.

Diagnostic Test

1. TEST THE DRIVER POWER SEAT FRONT RISER MOTOR

Turn the ignition off.

Disconnect the Driver Power Seat Front Riser Motor harness connector.

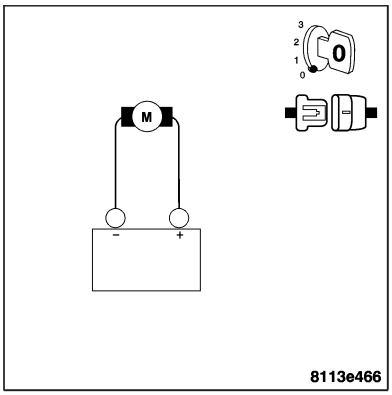

Note: Check connectors - Clean/repair as necessary.

Connect a jumper wire from B(+) to one cavity of the Driver Power Seat Front Riser Motor connector (motor side).

Connect a second jumper wire from ground to the other cavity of the Driver Power Seat Front Riser Motor connector (motor side).

Note seat movement, if no seat front riser movement is noted, reverse the jumper wires at the Front Riser Motor connector.

Did the Driver Seat Front Riser move up or down?

Yes >> Replace the Driver Power Seat Switch. **Refer to Page 8N-96**.
Perform BODY VERIFICATION TEST.

No >> Replace the Driver Power Seat Front Riser Motor. **Refer to Page 8N-101**.
Perform BODY VERIFICATION TEST.

*DRIVER POWER SEAT REAR RISER MOTOR INOPERATIVE

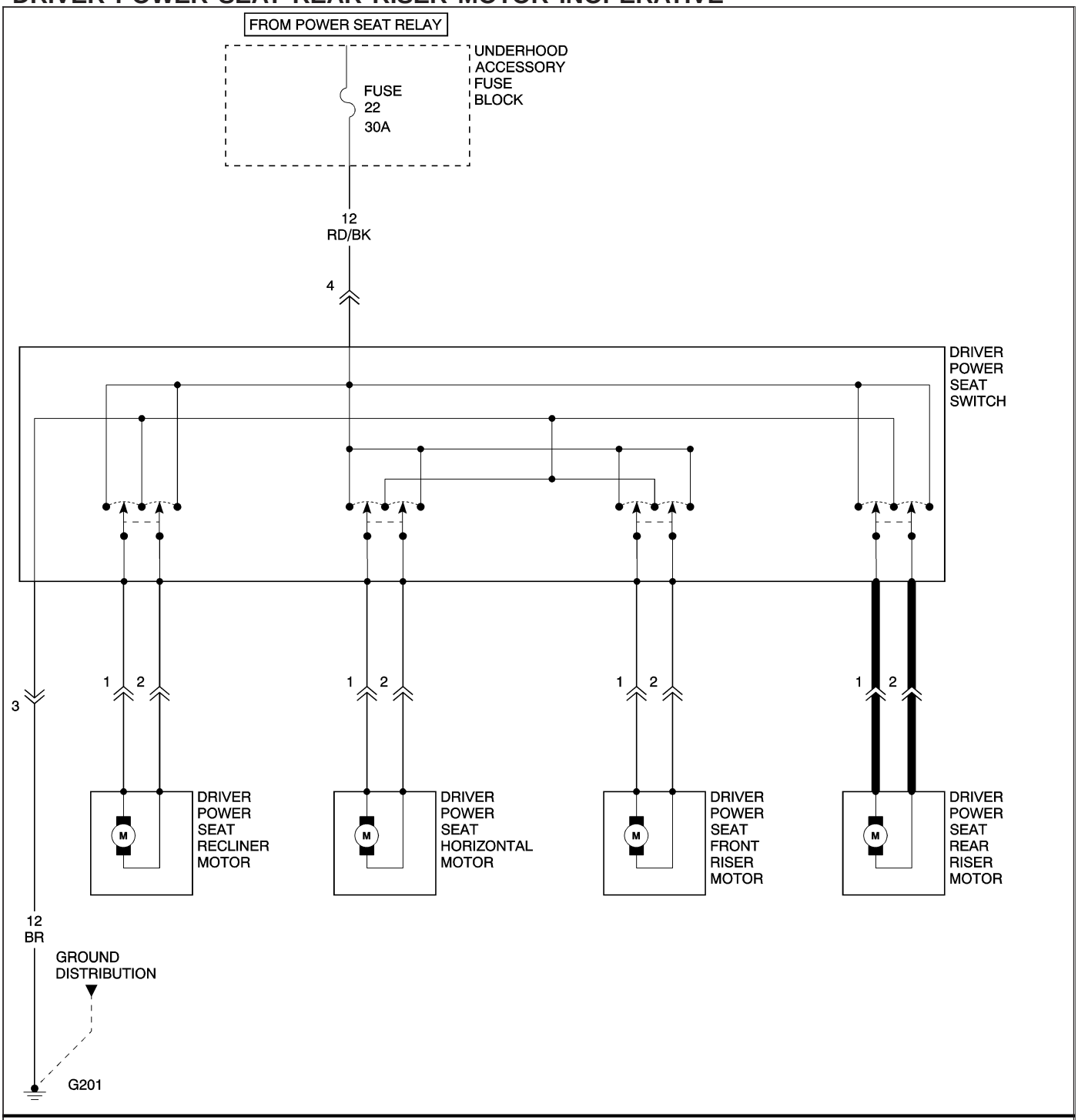

81138acd

*DRIVER POWER SEAT REAR RISER MOTOR INOPERATIVE — CONTINUED

POSSIBLE CAUSES
DRIVER POWER SEAT FRONT RISER MOTOR
DRIVER POWER SEAT SWITCH

For a complete Power Seats circuit diagram, **Refer to Page 8N-94**.

Diagnostic Test

1. TEST THE DRIVER POWER SEAT REAR RISER MOTOR

Turn the ignition off.

Disconnect the Driver Power Seat Rear Riser Motor harness connector.

Note: Check connectors - Clean/repair as necessary.

Connect a jumper wire from B(+) to one cavity of the Driver Power Seat Rear Riser Motor connector motor side).

Connect a second jumper wire from ground to the other cavity of the Driver Power Seat Rear Riser Motor connector (motor side).

Note seat movement, if no seat rear riser movement is noted, reverse the jumper wires at the Rear Riser Motor connector.

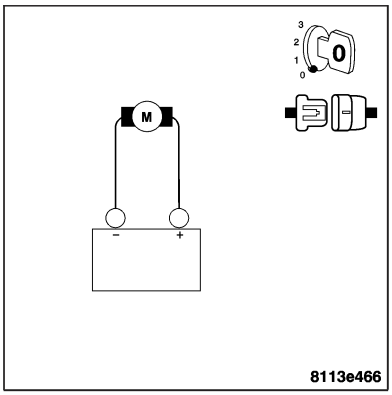

Did the Driver Seat Rear Riser move up or down?

Yes >> Replace the Driver Power Seat Switch. **Refer to Page 8N-96**.
Perform BODY VERIFICATION TEST.

No >> Replace the Driver Power Seat Rear Riser Motor. **Refer to Page 8N-99**.
Perform BODY VERIFICATION TEST.

*PASSENGER POWER SEAT RECLINER MOTOR INOPERATIVE

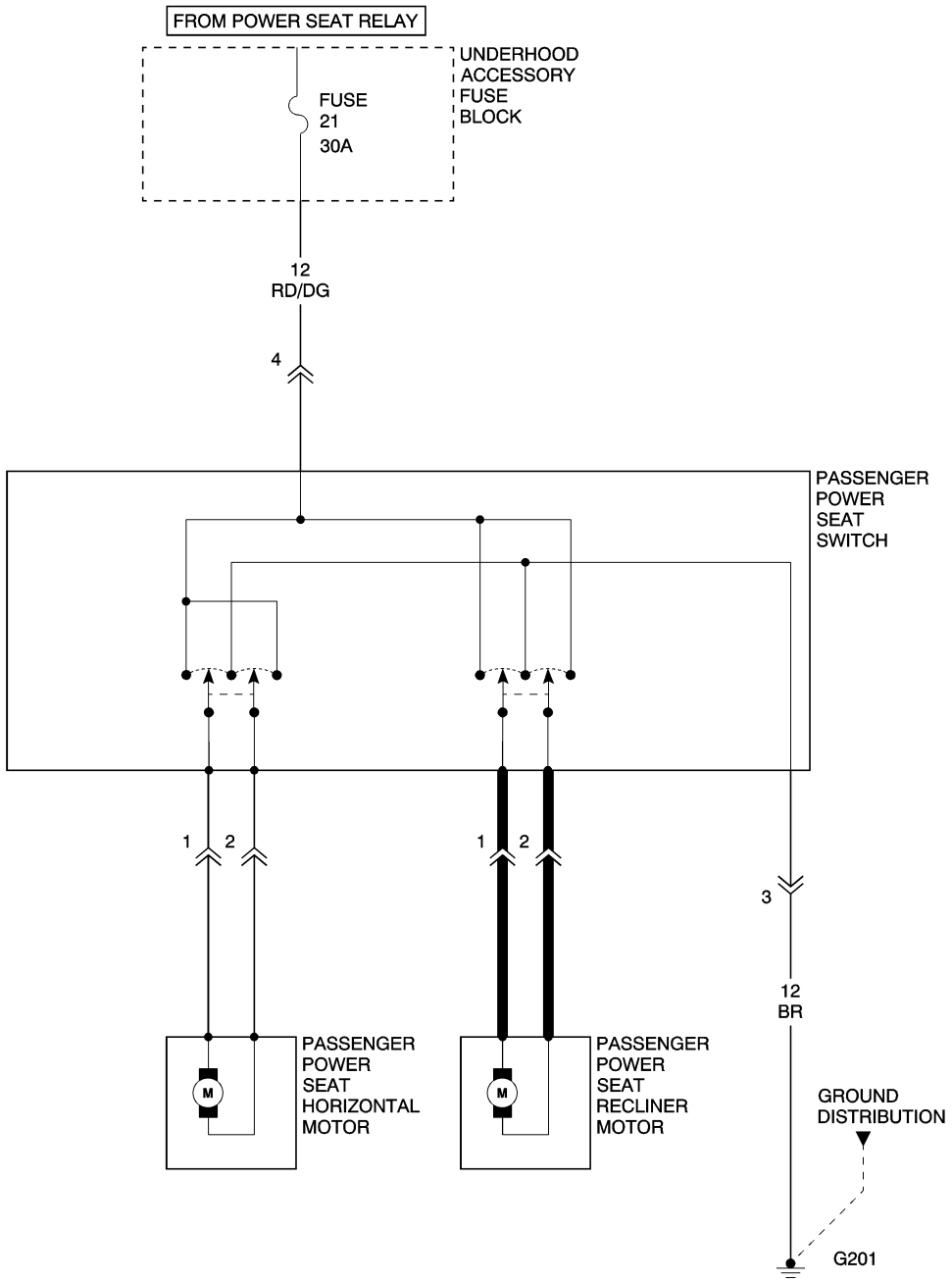

81138b3d

*PASSENGER POWER SEAT RECLINER MOTOR INOPERATIVE — CONTINUED

POSSIBLE CAUSES
PASSENGER POWER SEAT RECLINER MOTOR
PASSENGER POWER SEAT RECLINER MOTOR CIRCUIT
PASSENGER POWER SEAT SWITCH

For a complete Power Seats Circuit Diagram, **Refer to Page 8N-94**.

Diagnostic Test

1. TEST THE PASSENGER POWER SEAT RECLINER MOTOR

Turn the ignition off.

Disconnect the Passenger Power Seat Recliner Motor connector.

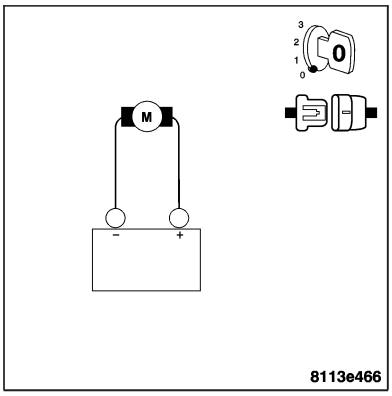

Note: Check connectors - Clean/repair as necessary.

Connect a jumper wire from B(+) to one cavity of the Passenger Power Seat Recliner Motor connector (motor side).

Connect a second jumper wire from ground to the other cavity of the Passenger Power Seat Recliner Motor connector (motor side).

Note seat movement, if no recliner movement is noted, reverse the jumper wires at the Recliner Motor connector.

Did the Passenger Power Seat Recliner move backward or forward?

Yes >> Replace the Passenger Power Seat Switch. **Refer to Page 8N-96**.
Perform BODY VERIFICATION TEST.

No >> Replace the Passenger Power Seat Recliner Motor. **Refer to Page 8N-103**.
Perform BODY VERIFICATION TEST.

*PASSENGER POWER SEAT HORIZONTAL MOTOR INOPERATIVE

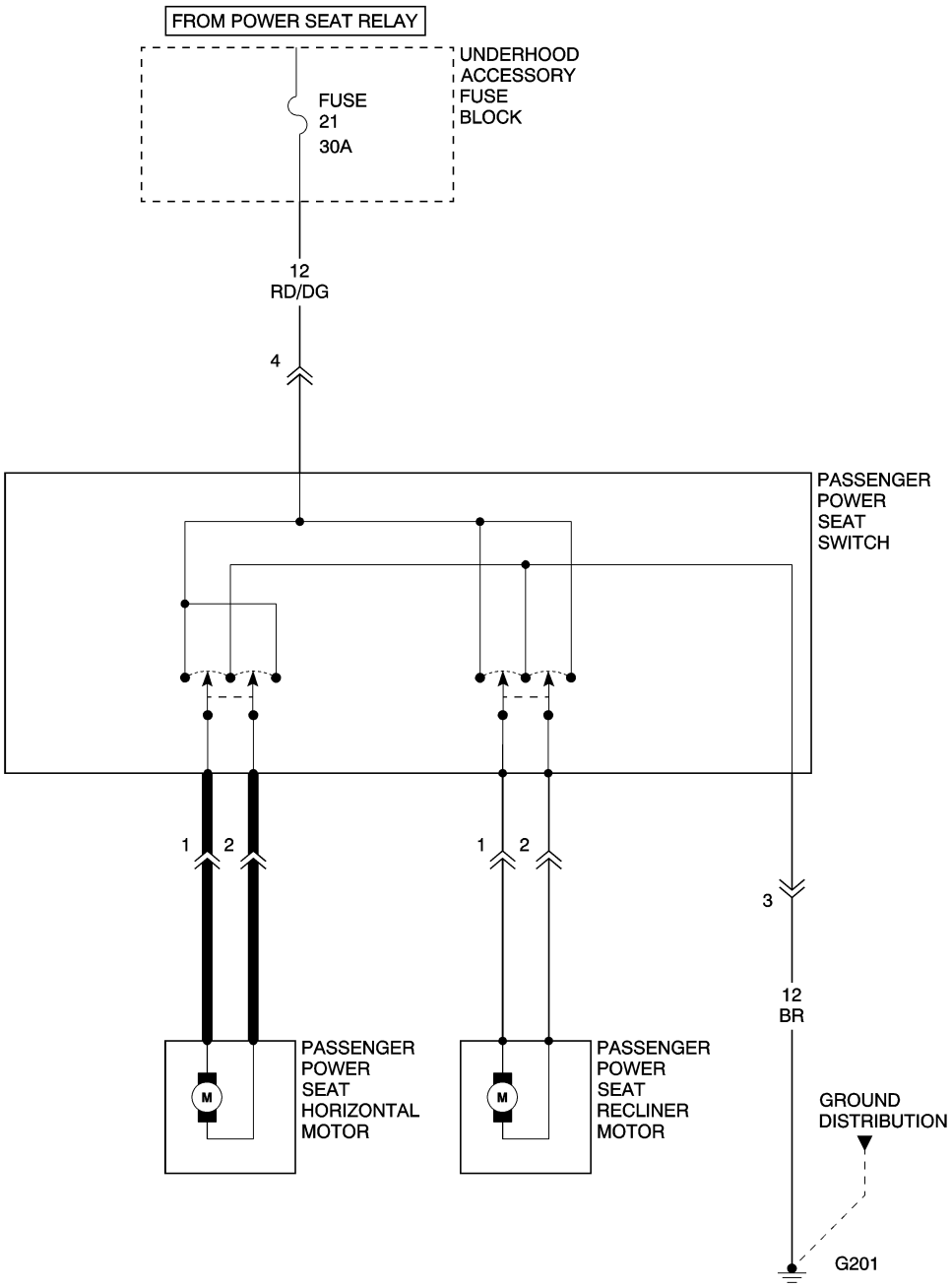

81139117

*PASSENGER POWER SEAT HORIZONTAL MOTOR INOPERATIVE — CONTINUED

POSSIBLE CAUSES
PASSENGER POWER SEAT HORIZONTAL MOTOR
PASSENGER POWER SEAT HORIZONTAL MOTOR CIRCUIT
PASSENGER POWER SEAT SWITCH

For a complete Power Seats Circuit Diagram, **Refer to Page 8N-94**.

Diagnostic Test

1. TEST THE PASSENGER POWER SEAT HORIZONTAL MOTOR

Turn the ignition off.

Disconnect the Passenger Power Seat Horizontal Motor connector.

Note: Check connectors - Clean/repair as necessary.

Connect a jumper wire from B(+) to one cavity of the Passenger Power Seat Horizontal Motor connector (motor side).

Connect a second jumper wire from ground to the other cavity of the Passenger Power Seat Horizontal Motor connector (motor side).

Note seat movement, if no seat movement is noted, reverse the jumper wires at the Horizontal Motor connector.

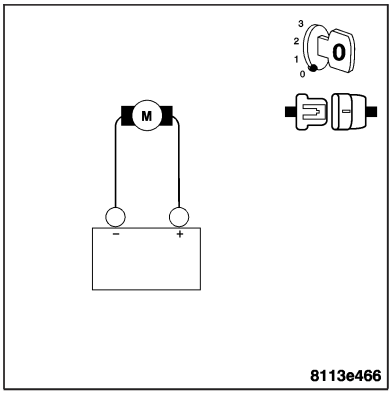

Did the Passenger Power Seat move backward or forward?

Yes >> Replace the Passenger Power Seat Switch. **Refer to Page 8N-96**.
Perform BODY VERIFICATION TEST.

No >> Replace the Passenger Power Seat Horizontal Motor. **Refer to Page 8N-101**.
Perform BODY VERIFICATION TEST.

BODY VERIFICATION TEST

1.

Turn the ignition off.

Disconnect all jumper wires and reconnect all previously disconnected components and connectors.

Note: If the SKREEM or the PCM was replaced, refer to the service information for proper programming procedures.

If the Body Control Module was replaced, turn the ignition on for 15 seconds (to allow the new BCM to learn VIN) or engine may not start.

Program all RKE transmitters and other options as necessary.

With the DRB III®, erase all Diagnostic Trouble Codes (DTCs) from ALL modules. Start the engine and allow it to run for 2 minutes. Operate all functions of the system that caused the original complaint.

Ensure that all accessories are turned off and the battery is fully charged.

Turn the ignition off and wait 5 seconds. Turn the ignition on and using the DRB III®, read DTCs from ALL modules.

Are any DTCs present or is the original complaint still present?

Are any DTCs present?

YES >> Repair is not complete, refer to appropriate symptom.

NO >> Repair is complete.

SCHEMATICS AND DIAGRAMS

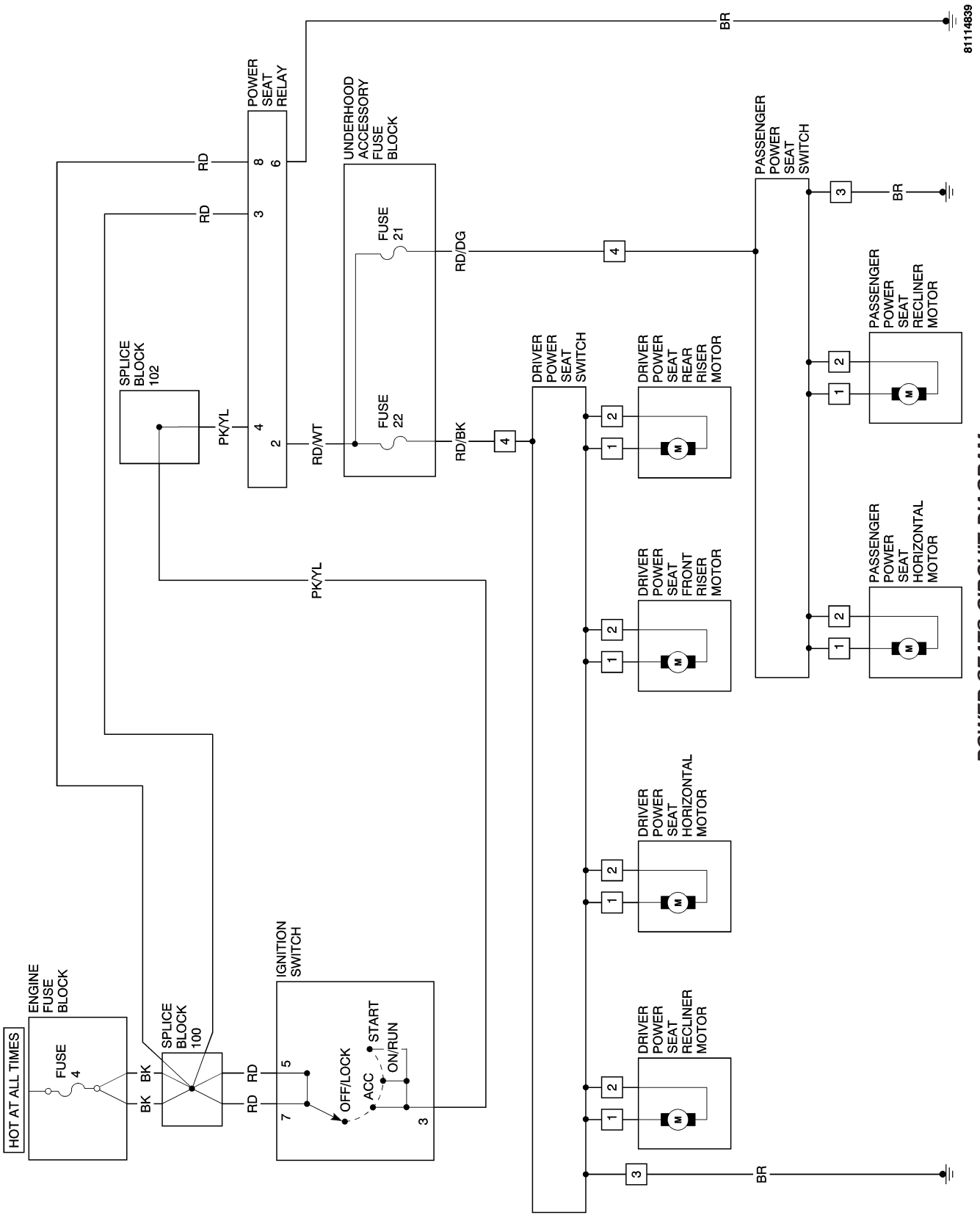

POWER SEATS - SERVICE INFORMATION

TABLE OF CONTENTS

page

POWER SEATS - SERVICE INFORMATION
DESCRIPTION 95
OPERATION 95
DIAGNOSIS AND TESTING 96
SPECIFICATIONS 96
POWER SEAT SWITCH
DIAGNOSIS AND TESTING 96
REMOVAL 96
INSTALLATION 98
REAR RISER MOTOR
REMOVAL 99
INSTALLATION 100
HORIZONTAL AND FRONT RISER MOTORS
REMOVAL
HORIZONTAL MOTOR 101
REMOVAL - FRONT RISER MOTOR 102
INSTALLATION
HORIZONTAL MOTOR 102
INSTALLATION - FRONT RISER MOTOR . . . 102
RECLINER MOTOR
REMOVAL 103
INSTALLATION 104
POWER SEAT TRACK
REMOVAL 105
INSTALLATION 107

POWER SEATS - SERVICE INFORMATION

DESCRIPTION

Both seats feature power adjustable positioning and power reclining as standard equipment. Each seat contains a lower (1) and a rear (2) power adjustment switch located on the lower outboard seat trim panel between the seat base and the door. The driver's seat features 8-way adjustment while the passenger's seat is 4-way adjustable.

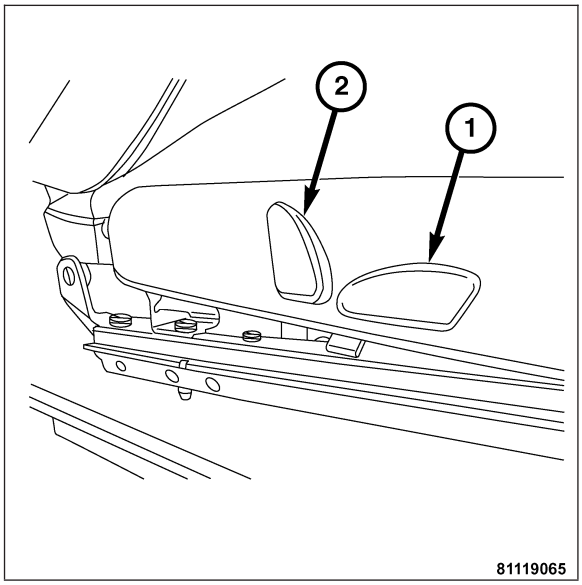

OPERATION

The power seat lower switch adjusts the bottom portion of the seat forward and backward as well as tilting upward and downward both in the front and rear when the switch is pressed in that direction. The back portion of the seat reclines when the power seat rear switch is tilted forward or rearward. The driver side power seat switches are operational with the driver door open, regardless of the ignition switch key position. If the driver door is closed, the ignition switch key must be turned to the ON/RUN position. See the owner's manual in the glove box for more information.

DIAGNOSIS AND TESTING

Before any testing of the power seat system is performed, the battery should be fully charged. All the wiring harness connectors should be inspected and cleaned, if necessary, to ensure good connections.

1. If all of the power seat functions are inoperative, check fuse 22 for the driver seat and fuse 21 for the passenger seat in the underhood accessory fuse block.
2. With the dome lamp on, apply the power seat switch in the direction of the failure.
3. If the dome lamp dims, the seat or the power seat track may be jammed. Check under and behind the seat for binding or obstructions.
4. If the dome lamp does not dim, proceed with testing of the individual power seat system components and circuits.

For complete power seat system diagnosis, see power seats electrical diagnostics in this section.

SPECIFICATIONS

TORQUE SPECIFICATIONS

DESCRIPTION	N·m	Ft. Lbs.	In. Lbs.
Front Riser Motor Attachment Screw	4	—	35
Horizontal Motor Attachment Screw	4	—	35
Rear Riser Motor Attachment Nut	4	—	35

POWER SEAT SWITCH

DIAGNOSIS AND TESTING

For complete power seat system diagnosis, see power seats electrical diagnostics in this section.

REMOVAL

1. Disconnect the negative battery cable.
2. Remove the front seat. **Refer to Page 23-202**.

3. Remove the bolt (1) attaching the side panel to the seat base.

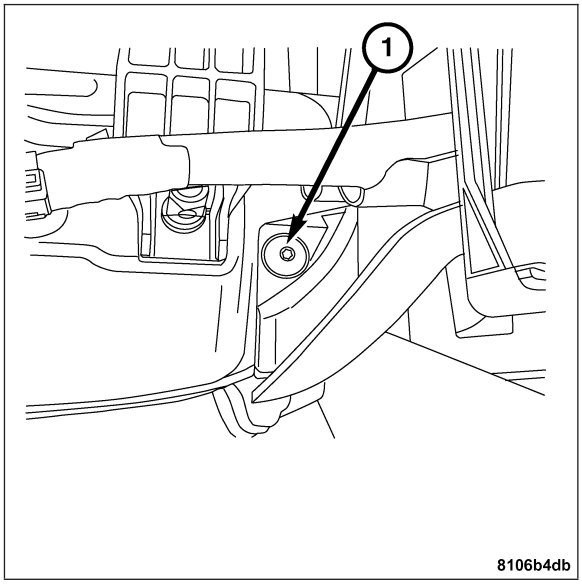

4. Push the side panel with the switches forward and downward to remove.

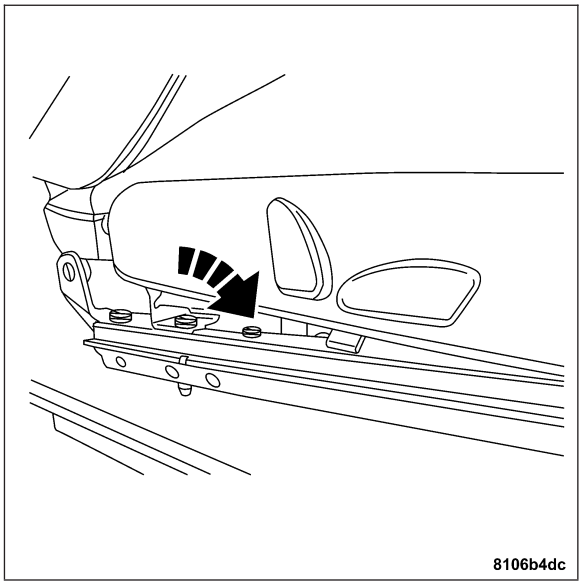

5. Disconnect the power seat switch harness connectors (1) and (2).
6. Separate the cable straps and expose the wiring harness.
7. Remove the side panel with switches from the seat base.

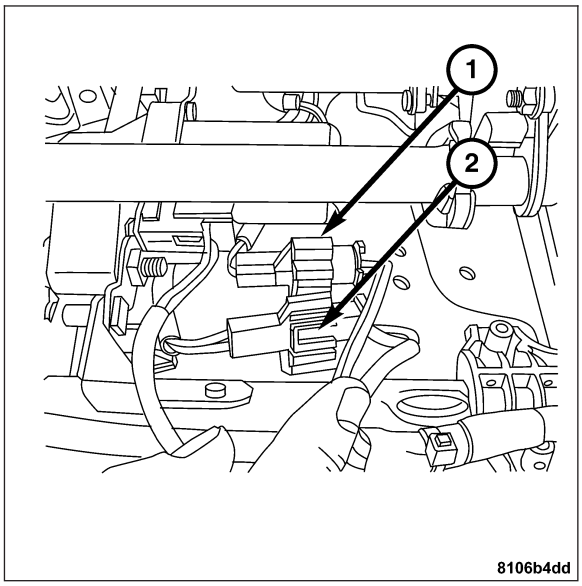

INSTALLATION

Note: Ensure the harness is routed and secured in its original position to avoid potential interference with moving parts.

1. Install the power seat switch wiring harness in its original location.
2. Connect the power seat switch harness connectors (1) and (2).

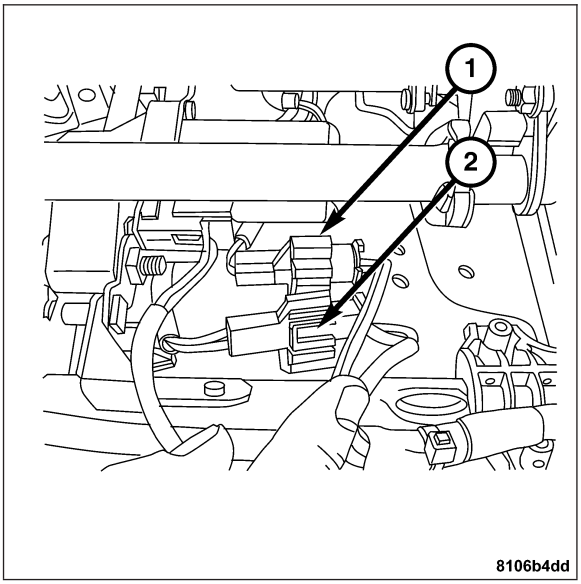

3. Position the side panel with the switches as one part on the seat base, then install the side panel attaching screw (1).

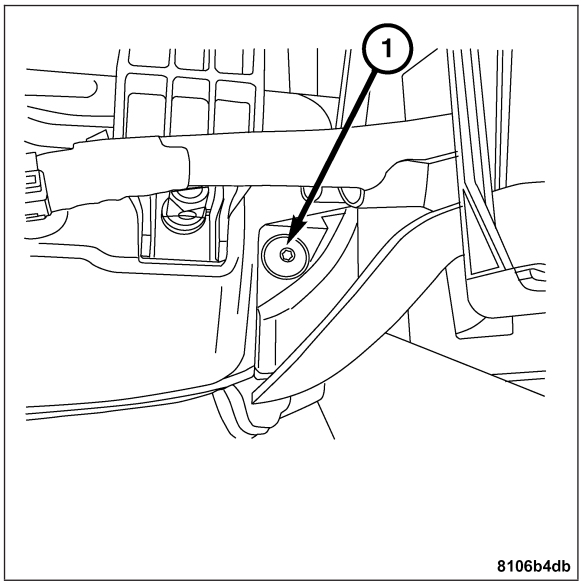

4. Install the front seat. **Refer to Page 23-203**.
5. Connect the negative battery cable.

REAR RISER MOTOR

REMOVAL

1. Disconnect the negative battery cable.
2. Remove the front seat. **Refer to Page 23-202**.

Note: Only disconnect the harness connector for the defective motor.

3. Disconnect the rear riser motor harness connector (7).

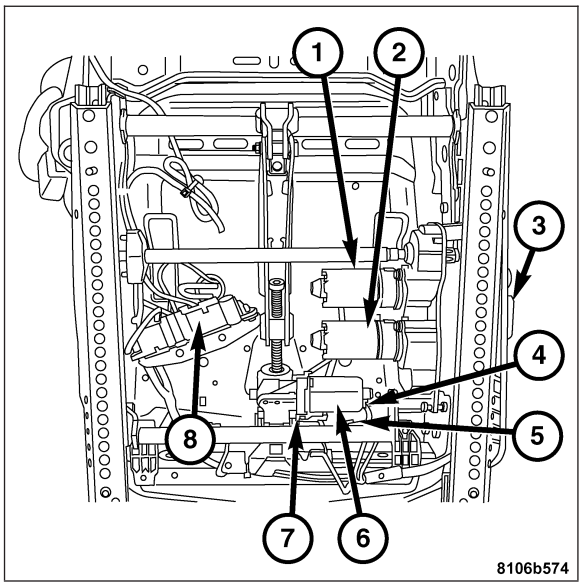

4. Remove the rear riser motor rear attachment bolt (1).

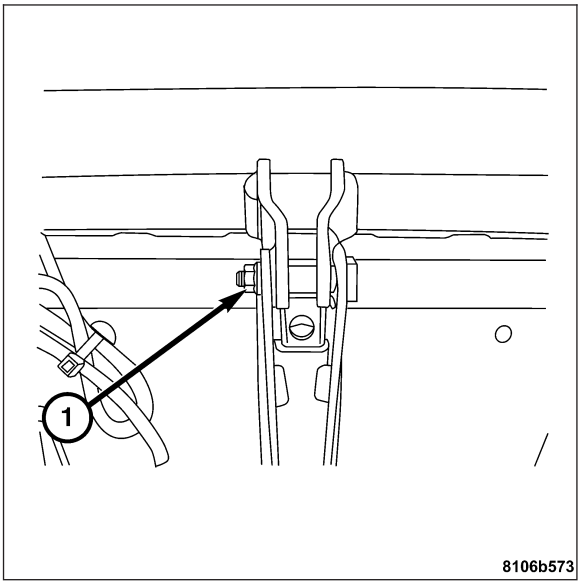

5. Remove rear riser motor front attachment bolt (1).
6. Remove the rear riser motor.

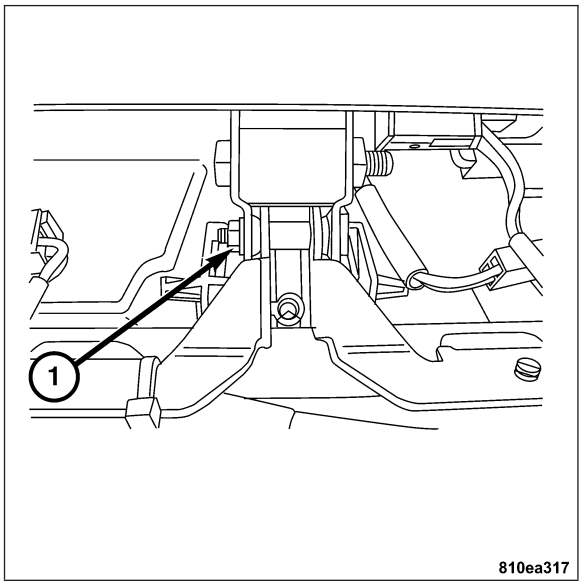

INSTALLATION

1. Position the rear riser motor between the front and rear attachment brackets.
2. Install the rear riser motor rear attachment bolt (1) and torque nut to 4 N·m (35 in. lbs.).

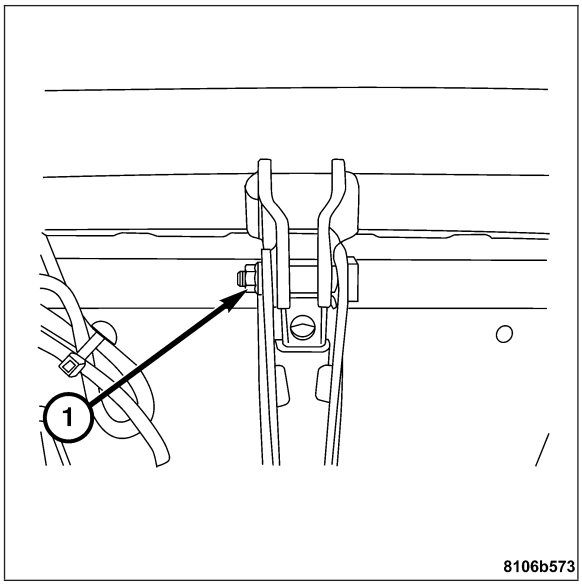

3. Install the rear riser motor front attachment bolt (1) and torque nut to 4 N·m (35 in. lbs.).
4. Connect the rear riser motor harness connector.

Note: Ensure the harness is routed and secured in its original position to avoid potential interference with moving parts.

5. Install the front seat. **Refer to Page 23-203**.
6. Connect the negative battery cable.

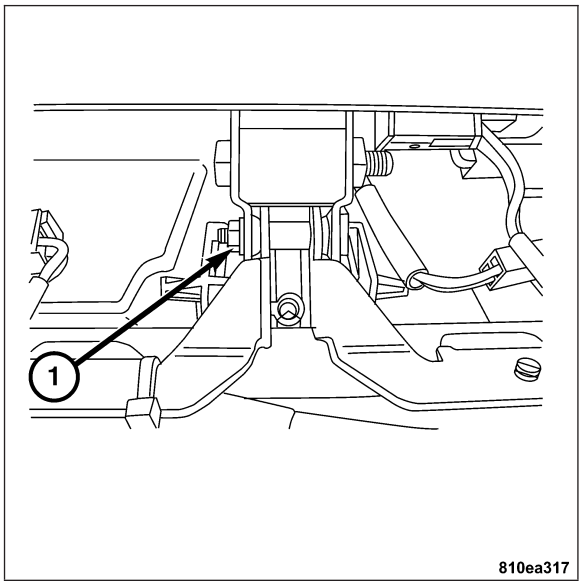

HORIZONTAL AND FRONT RISER MOTORS

REMOVAL

HORIZONTAL MOTOR

1. Disconnect the negative battery cable.
2. Remove the front seat. **Refer to Page 23-202**.
3. Disconnect the horizontal motor harness connector (1) or the front riser motor harness connector (2).

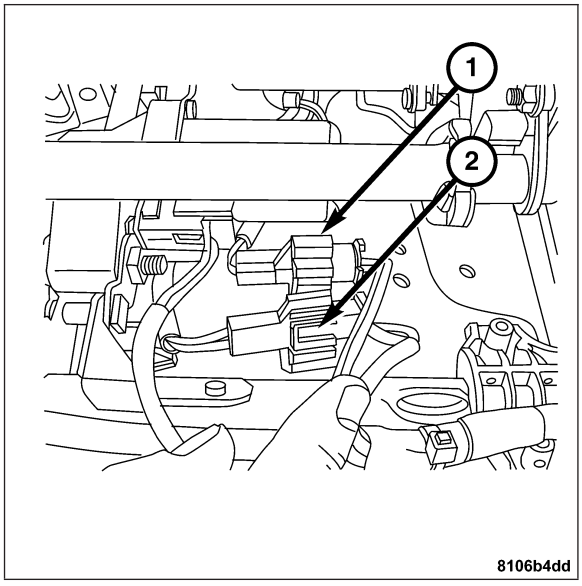

4. Remove the horizontal motor attachment screws (1) or the front riser motor attachment screws (2).
5. Remove the horizontal motor or the front riser motor.

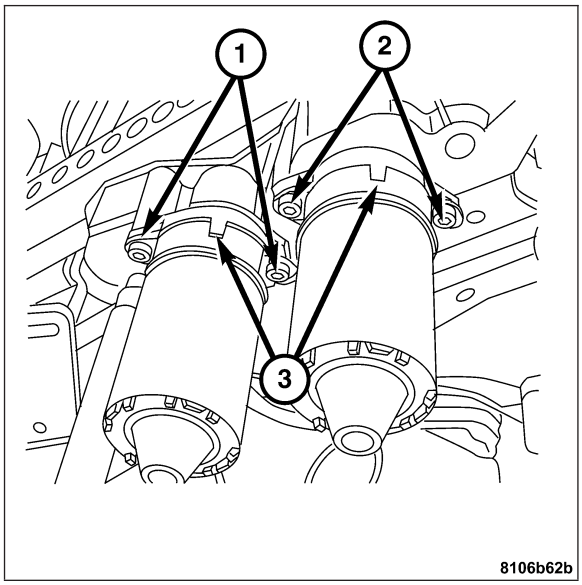

REMOVAL - FRONT RISER MOTOR

For complete front riser motor removal procedures, see horizontal motor removal in this section.

INSTALLATION

HORIZONTAL MOTOR

1. Position the horizontal motor or front riser motor so the notch (3) is aligned as shown.
2. Install the horizontal motor attachment screws (1) or front riser motor attachment screws (2) and torque to 4 N·m (35 in. lbs.).
3. Connect the horizontal motor or front riser motor harness connector.
4. Install the front seat. **Refer to Page 23-203**.
5. Connect the negative battery cable.

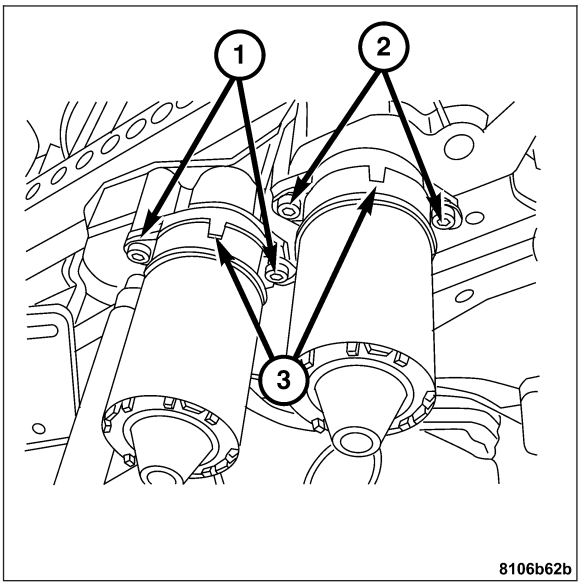

INSTALLATION - FRONT RISER MOTOR

For complete front riser motor installation procedures, see horizontal motor installation in this section.

RECLINER MOTOR

REMOVAL

1. Disconnect the negative battery cable.
2. Remove the seat back cover enough to expose the recliner motor. **Refer to Page 23-206**.
3. Remove the bolt (1) attaching the recliner motor to the seat back frame and disconnect the recliner motor harness connector (2).

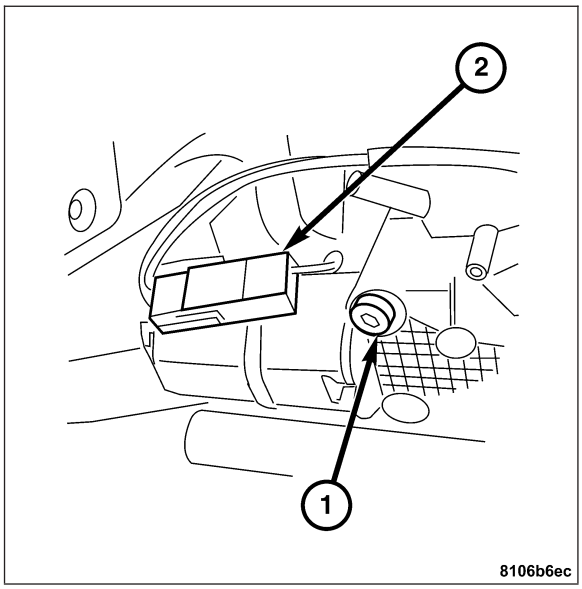

4. Remove the snap ring on the shaft then remove the shaft (2) from the seat back frame (1).
5. Remove the recliner motor.

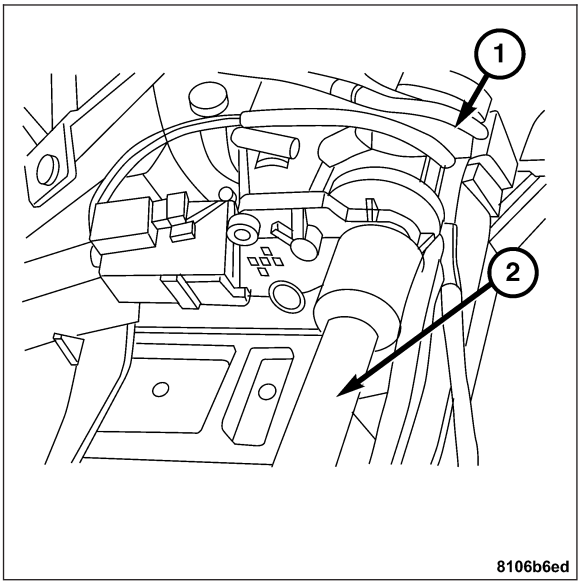

INSTALLATION

Note: Ensure the rubber mount for the attachment bolt is seated properly.

1. Install the shaft (2) to the seat back frame (1) and install the snap ring.

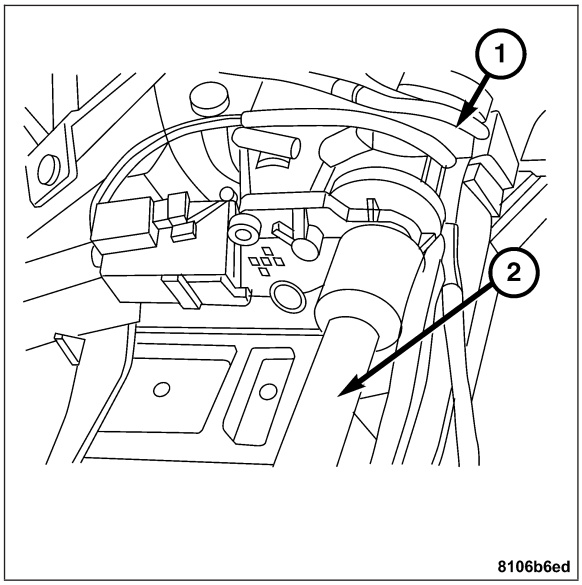

Note: Ensure the harness is routed and secured in its original position to avoid potential interference with moving parts.

2. Position the recliner motor to the seat back frame and install the attachment bolt (1). Connect the recliner motor harness connector (2).
3. Install the seat back cover. **Refer to Page 23-208**.
4. Connect the negative battery cable.

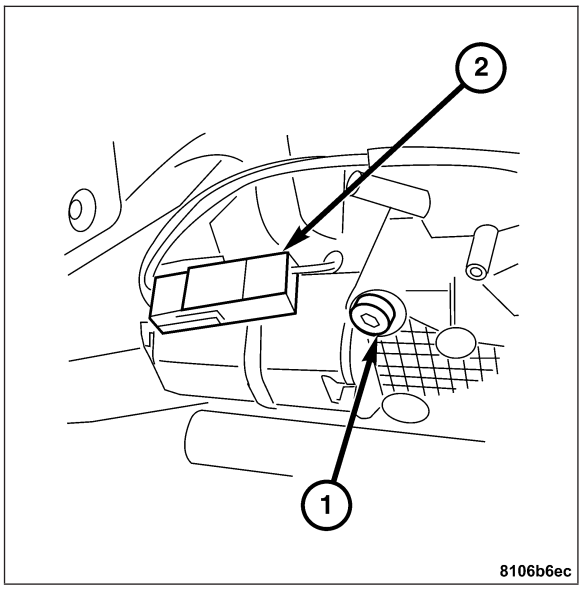

POWER SEAT TRACK

REMOVAL

1. Disconnect the negative battery cable.
2. Remove the front seat. **Refer to Page 23-202**.
3. Remove the power seat track front inboard attachment bolt (1).

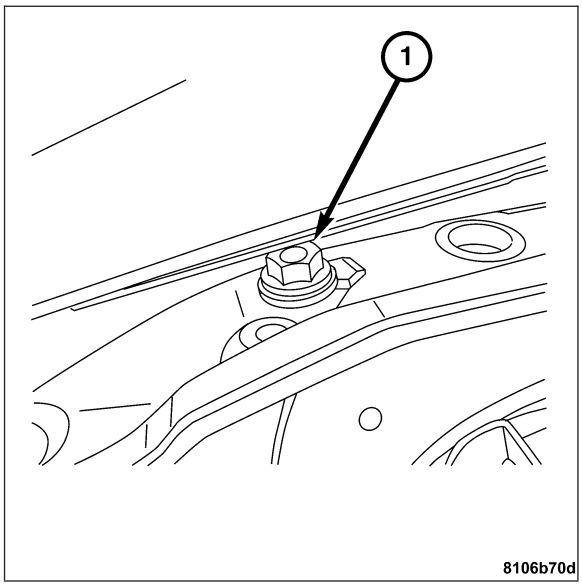

4. Remove the power seat track rear inboard attachment bolt (1).

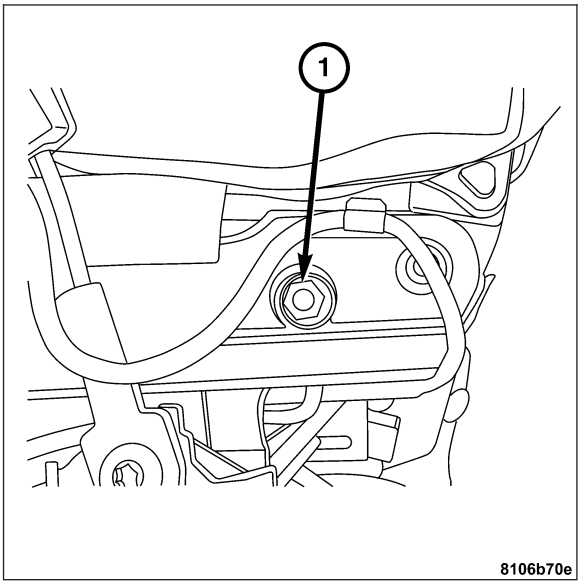

5. Remove the power seat switch assembly. **Refer to Page 8N-96**.

6. Remove the power seat track rear outboard bolt (1).
7. Tilt the rear track mechanism outward then remove the power seat track front outboard attachment bolt (2).

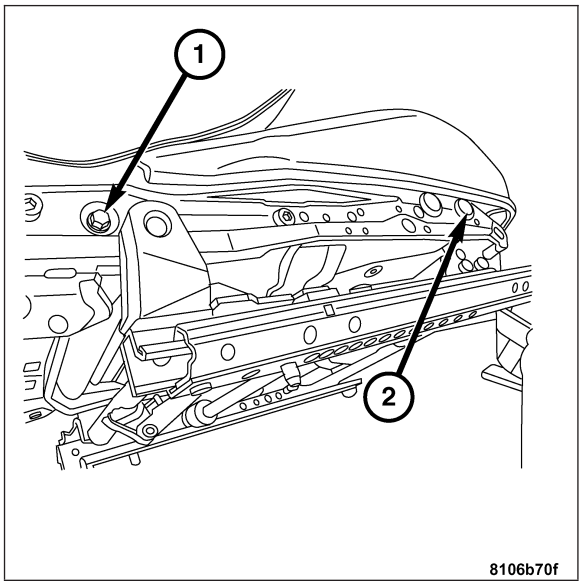

8. Remove the power seat track power harness connector (8).
9. Remove the power seat track from the seat cushion.

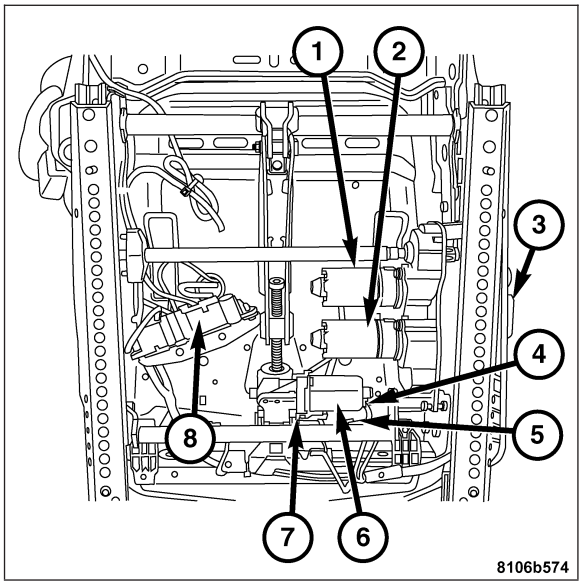

INSTALLATION

Note: Ensure wire harnesses are routed and secured in their original position to avoid potential interference with moving parts.

1. Position the power seat track assembly over the seat cushion and align the mounting points.
2. Install the power seat track power harness connector (8).

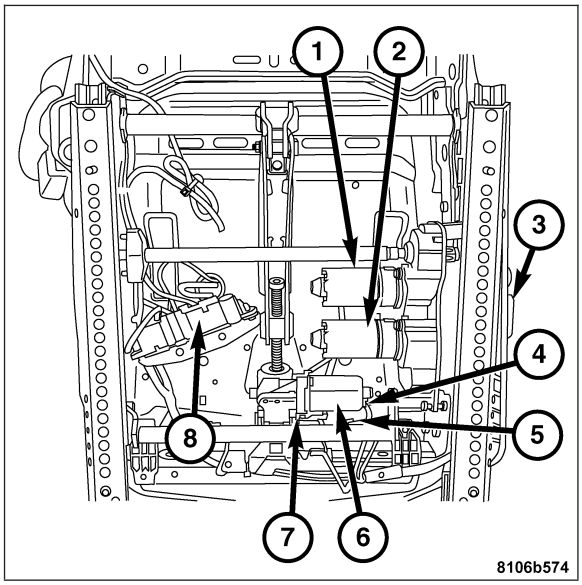

3. Install the power seat track front outboard attachment bolt (2).
4. Tilt the rear of the track mechanism inward and install the power seat track rear outboard attachment bolt (1).

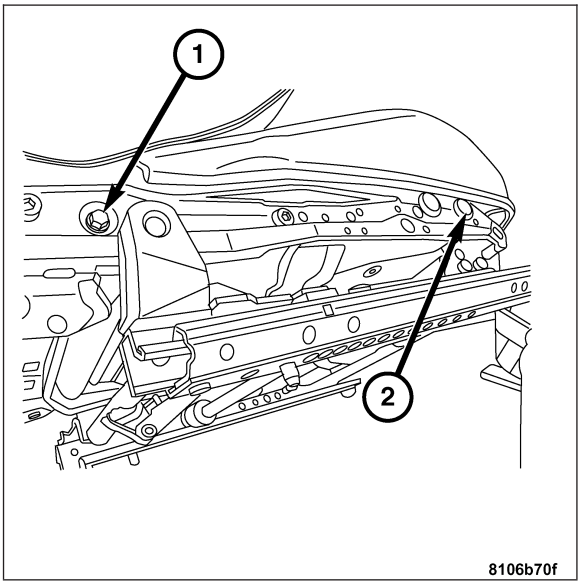

5. Install the power seat switch assembly. **Refer to Page 8N-98**.

6. Install the power seat track rear inboard attachment bolt (1).

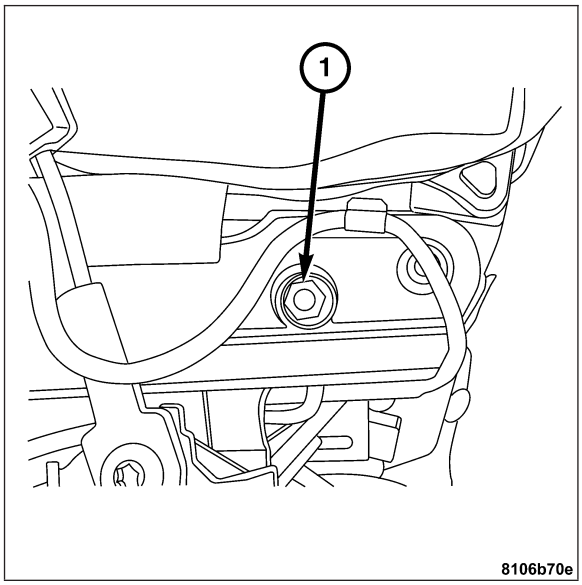

7. Install the power seat track front inboard attachment bolt (1).
8. Install the front seat. **Refer to Page 23-203**.
9. Connect the negative battery cable.

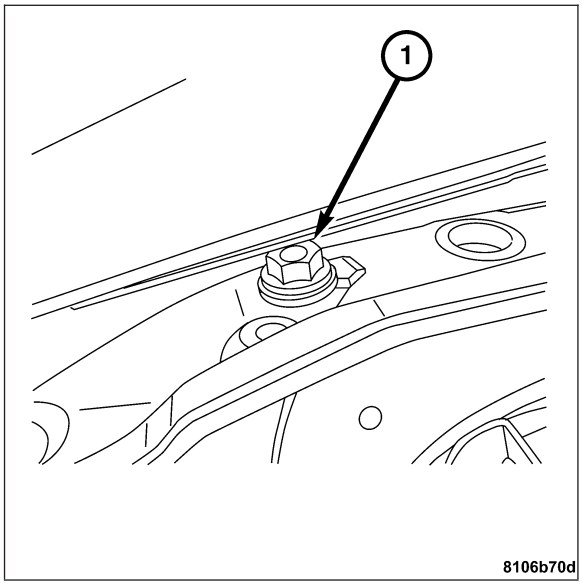

POWER WINDOWS - ELECTRICAL DIAGNOSTICS

TABLE OF CONTENTS

page

POWER WINDOWS - ELECTRICAL DIAGNOSTICS
DIAGNOSIS AND TESTING
*LEFT FRONT POWER WINDOW INOPERATIVE 110
*RIGHT FRONT POWER WINDOW INOPERATIVE 113
*BOTH POWER WINDOWS INOPERATIVE 116
BODY VERIFICATION TEST 119
SCHEMATICS AND DIAGRAMS 120

POWER WINDOWS - ELECTRICAL DIAGNOSTICS

DIAGNOSIS AND TESTING

*LEFT FRONT POWER WINDOW INOPERATIVE

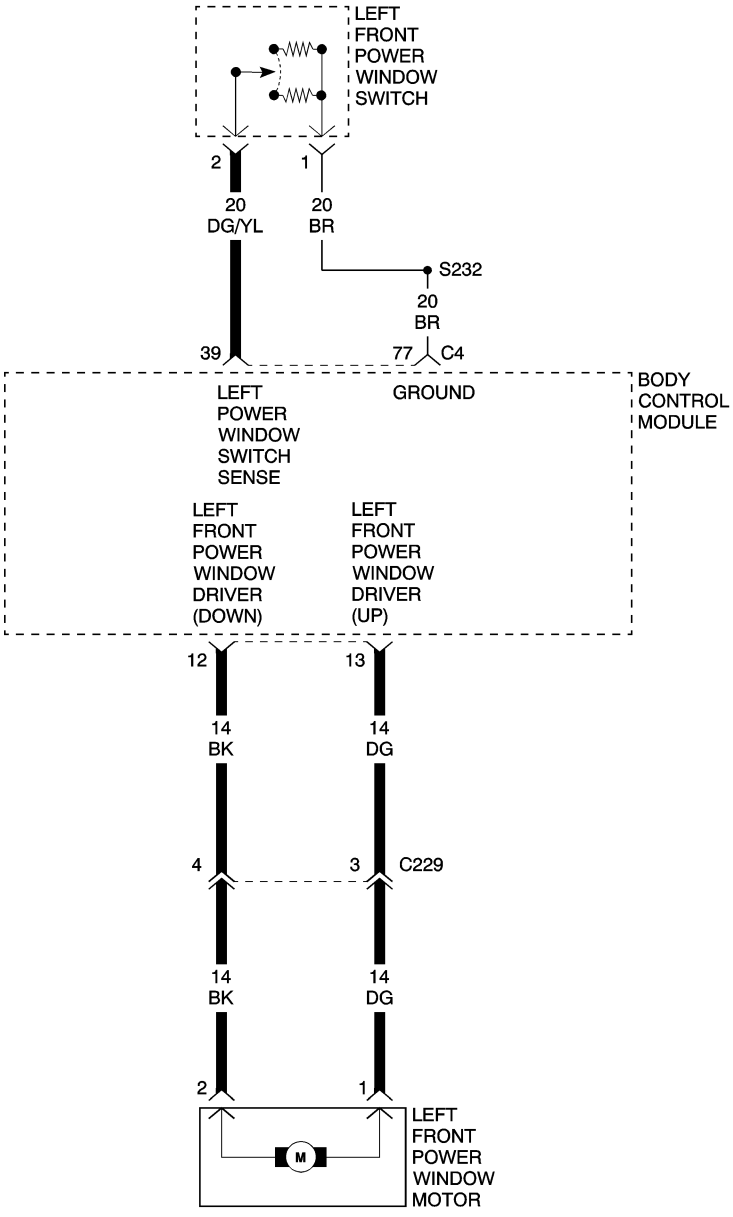

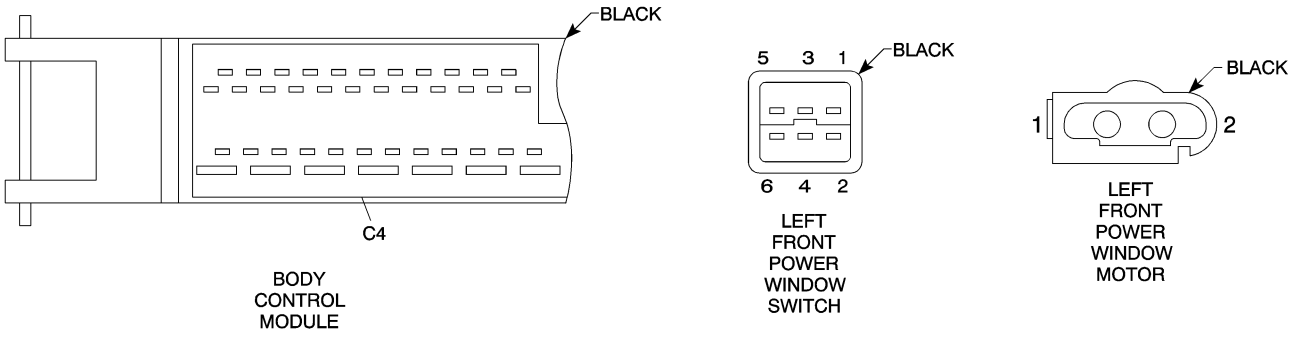

8113d2f5

*LEFT FRONT POWER WINDOW INOPERATIVE — CONTINUED

POSSIBLE CAUSES
LEFT FRONT POWER WINDOW SWITCH
LEFT POWER WINDOW SWITCH SENSE CIRCUIT
LEFT FRONT POWER WINDOW MOTOR
LEFT FRONT POWER WINDOW MOTOR CIRCUIT
BODY CONTROL MODULE INTERNAL FAILURE

For a complete Power Windows Circuit Diagram, **Refer to Page 8N-120**.

Diagnostic Test

1. TEST THE LEFT FRONT POWER WINDOW MOTOR

Turn the ignition off.

Disconnect the Body Control Module (BCM) harness connector.

Note: Check connectors - Clean/repair as necessary.

Connect a fused jumper wire from cavity 12 of the BCM harness connector to B(+).

Connect a second fused jumper wire to cavity 13 of the BCM harness connector and momentarily connect the jumper to ground.

Note window movement; if no left front window movement is noted, reverse the jumper wires at the B(+) and ground connections.

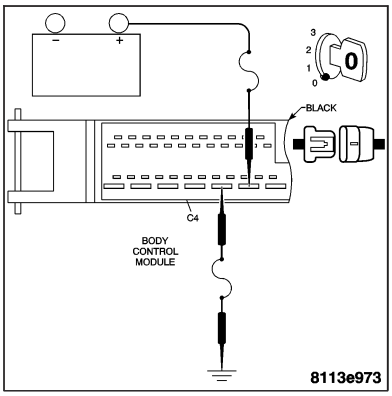

Did the left front window move upward or downward?

Yes >> Go to 3

No >> Go to 2

2. MEASURE LEFT FRONT POWER WINDOW MOTOR CIRCUIT RESISTANCE

With the ignition off.

Disconnect the Left Front Power Window Motor harness connector.

Note: Check connectors - Clean/repair as necessary.

Connect a jumper wire between cavity 1 and cavity 2 of the Left Front Power Window Motor harness connector.

Measure the resistance between cavity 12 and cavity 13 of the BCM harness connector.

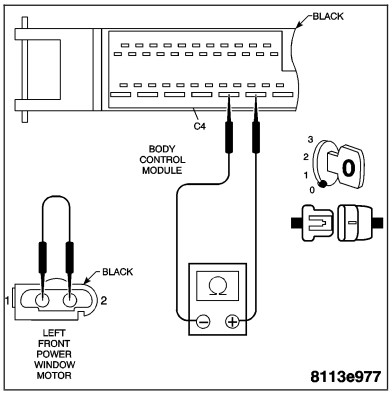

Is the resistance below 5.0 ohms?

Yes >> Replace the Left Front Power Window Motor. **Refer to Page 8N-122**.
Perform BODY VERIFICATION TEST.

No >> Repair the Left Front Power Window Motor circuit for an open.
Perform BODY VERIFICATION TEST.

*LEFT FRONT POWER WINDOW INOPERATIVE — CONTINUED

3. MEASURE THE VOLTAGE OF THE LEFT POWER WINDOW SWITCH SENSE CIRCUIT

With the ignition off.

Disconnect the Left Front Power Window Switch harness connector.

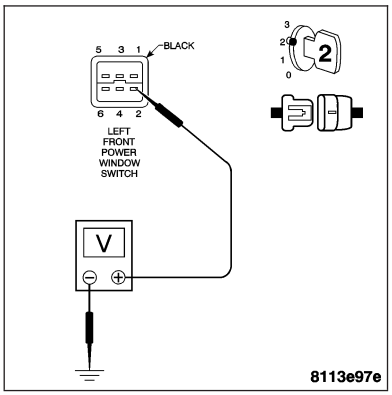

Note: Check connectors - Clean/repair as necessary.

Turn the ignition on.

Measure the voltage of the Left Power Window Switch Sense circuit at the Left Front Power Window Switch connector.

Is the voltage above 10 volts?

Yes >> Replace the Left Front Power Window Switch. **Refer to Page 8N-124**.
Perform BODY VERIFICATION TEST.

No >> Go to 4

4. MEASURE LEFT POWER WINDOW SWITCH SENSE CIRCUIT RESISTANCE

Turn the ignition off.

Measure the resistance of the Left Power Window Switch Sense circuit from the Left Front Power Window Switch harness connector to the BCM harness connector.

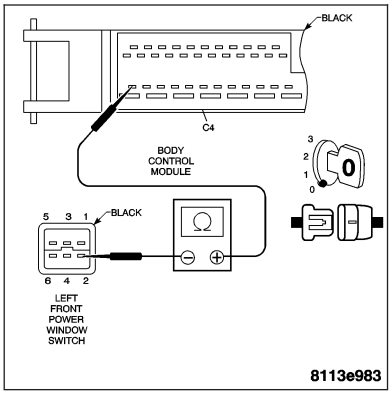

Is the resistance below 5.0 ohms?

Yes >> Replace the Body Control Module. **Refer to Page 8E-72**.
Perform BODY VERIFICATION TEST.

No >> Repair the Left Power Window Switch Sense circuit for an open.
Perform BODY VERIFICATION TEST.

*RIGHT FRONT POWER WINDOW INOPERATIVE

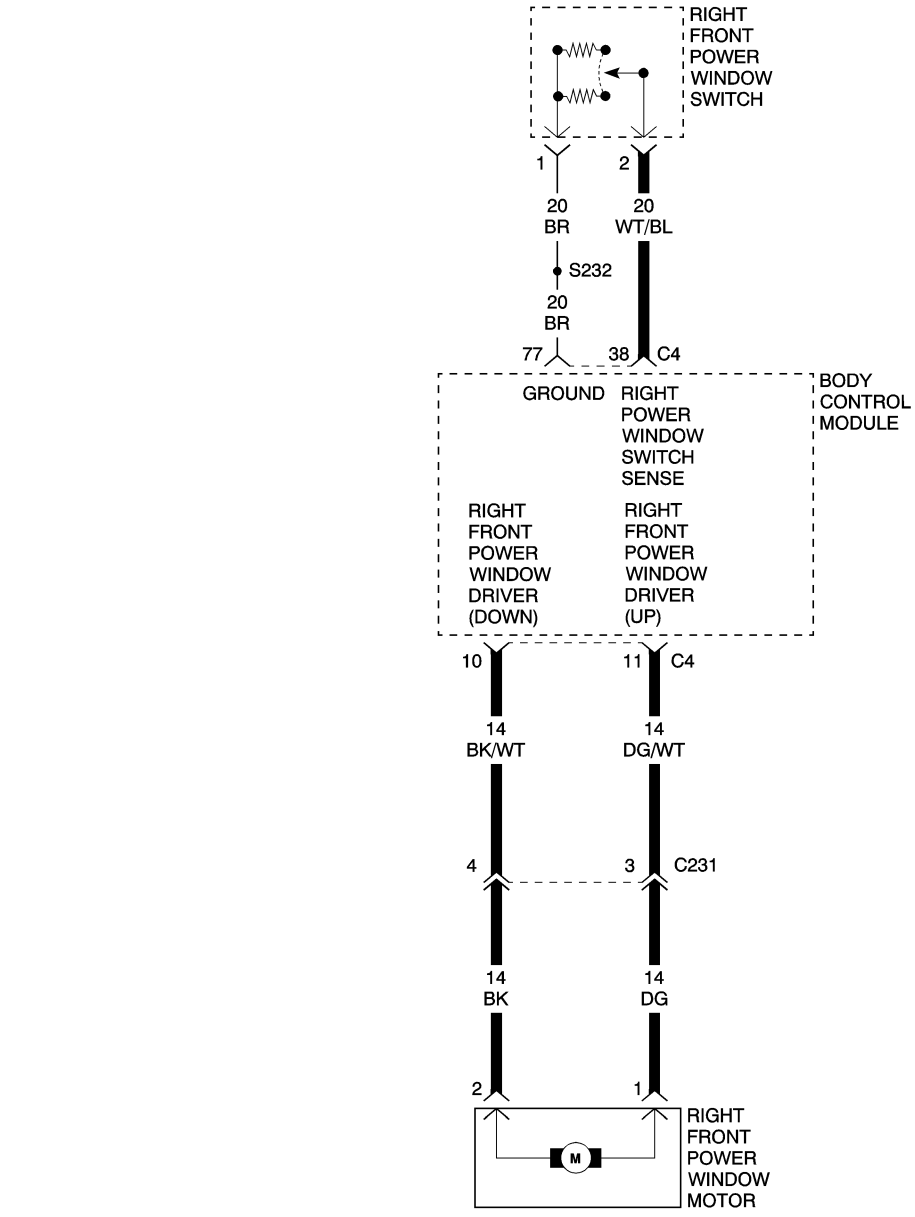

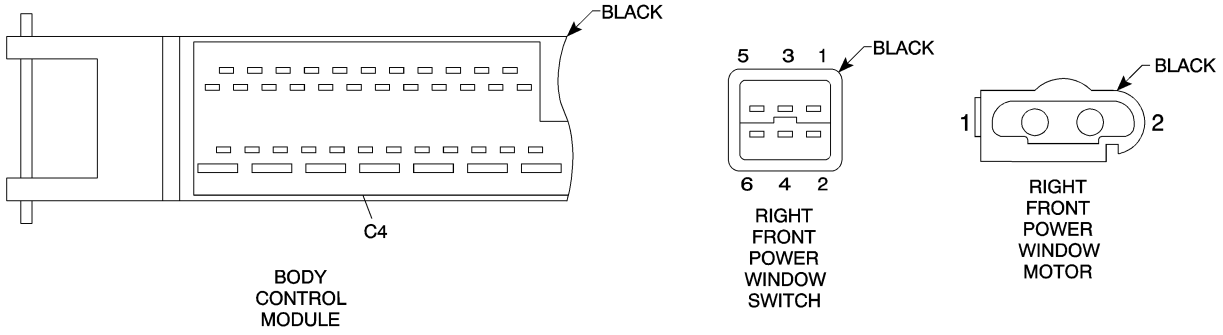

8113d514

*RIGHT FRONT POWER WINDOW INOPERATIVE — CONTINUED

POSSIBLE CAUSES
RIGHT FRONT POWER WINDOW SWITCH
RIGHT POWER WINDOW SWITCH SENSE CIRCUIT
RIGHT FRONT POWER WINDOW MOTOR
RIGHT FRONT POWER WINDOW MOTOR CIRCUIT
BODY CONTROL MODULE INTERNAL FAILURE

For a complete Power Windows Circuit Diagram, **Refer to Page 8N-120**.

Diagnostic Test

1. TEST THE RIGHT FRONT POWER WINDOW MOTOR

Turn the ignition off.

Disconnect the Body Control Module (BCM) harness connector.

Note: Check connectors - Clean/repair as necessary.

Connect a fused jumper wire from cavity 10 of the BCM harness connector to B(+).

Connect a second fused jumper wire to cavity 11 of the BCM harness connector and momentarily connect the jumper to ground.

Note window movement; if no right front window movement is noted, reverse the jumper wires at the B(+) and ground connections.

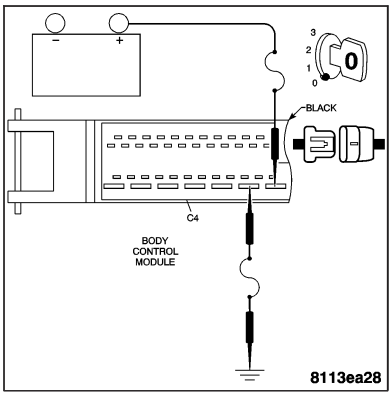

Did the right front window move upward or downward?

Yes >> Go to 3

No >> Go to 2

2. MEASURE RIGHT FRONT POWER WINDOW MOTOR CIRCUIT RESISTANCE

With the ignition off.

Disconnect the Right Front Power Window Motor harness connector.

Note: Check connectors - Clean/repair as necessary.

Connect a jumper wire between cavity 1 and cavity 2 of the Right Front Power Window Motor harness connector.

Measure the resistance between cavity 10 and cavity 11 of the BCM harness connector.

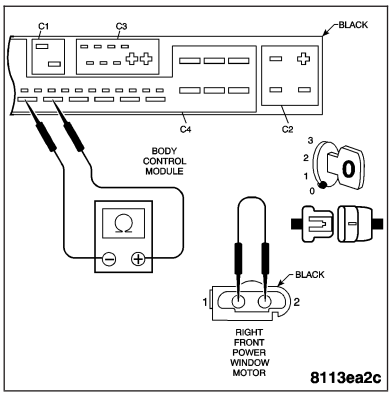

Is the resistance below 5.0 ohms?

Yes >> Replace the Right Front Power Window Motor. **Refer to Page 8N-122**.
Perform BODY VERIFICATION TEST.

No >> Repair the Right Front Power Window Motor circuit for an open.
Perform BODY VERIFICATION TEST.

*RIGHT FRONT POWER WINDOW INOPERATIVE — CONTINUED

3. MEASURE THE VOLTAGE OF THE RIGHT POWER WINDOW SWITCH SENSE CIRCUIT

With the ignition off.

Disconnect the Right Front Power Window Switch harness connector.

Note: Check connector - Clean/repair as necessary.

Turn the ignition on.

Measure the voltage of the Right Power Window Switch Sense circuit at the Right Front Power Window Switch harness connector.

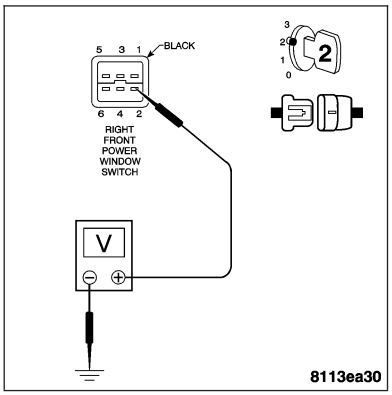

Is the voltage above 10 volts?

Yes >> Replace the Right Front Power Window Switch. **Refer to Page 8N-124**.
Perform BODY VERIFICATION TEST.

No >> Go to 4

4. MEASURE RIGHT POWER WINDOW SWITCH SENSE CIRCUIT RESISTANCE

Turn the ignition off.

Measure the resistance of the Right Power Window Switch Sense circuit from the Right Front Power Window Switch harness connector to the BCM harness connector.

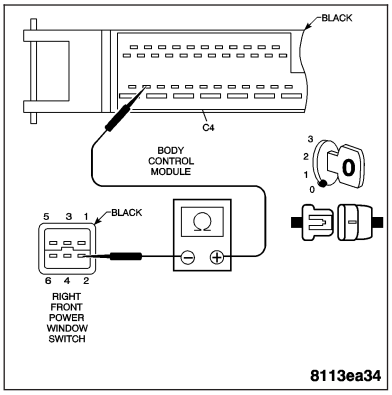

Is the resistance below 5.0 ohms?

Yes >> Replace the Body Control Module. **Refer to Page 8E-72**.
Perform BODY VERIFICATION TEST.

No >> Repair the Right Power Window Switch Sense circuit for an open.
Perform BODY VERIFICATION TEST.

*BOTH POWER WINDOWS INOPERATIVE

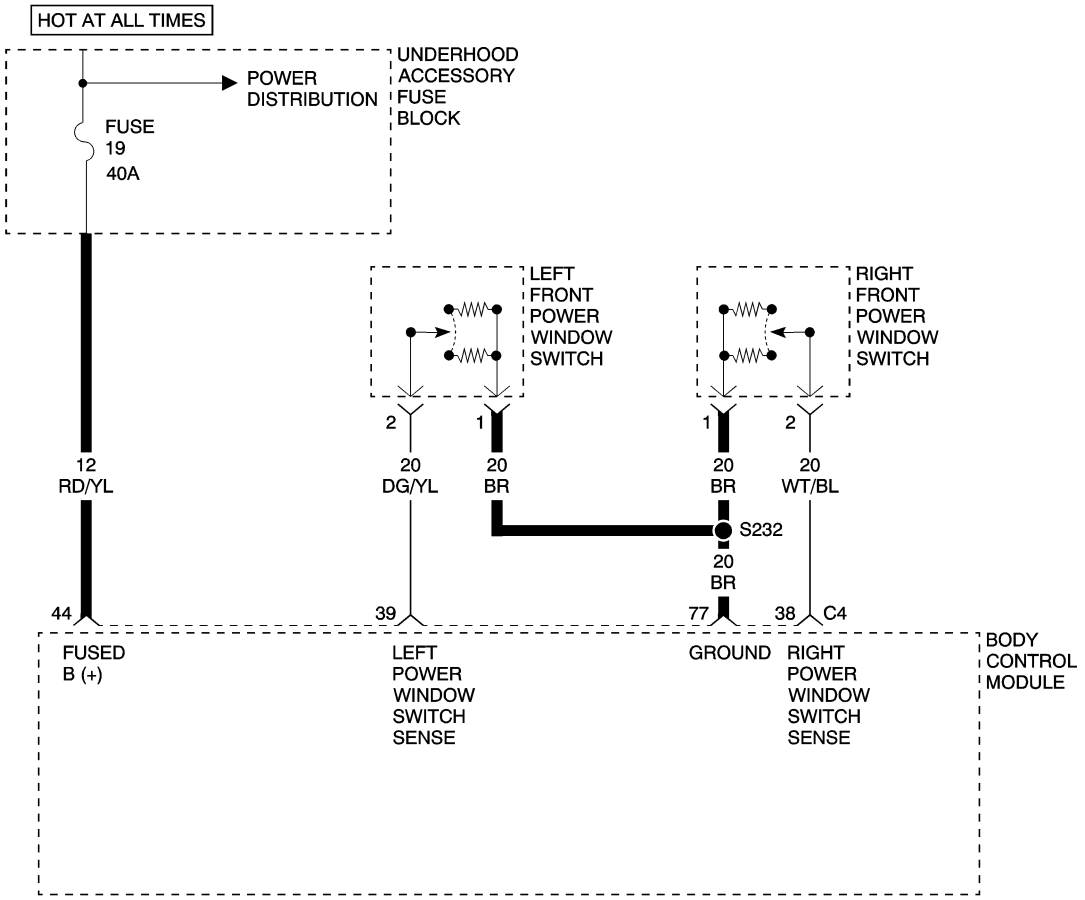

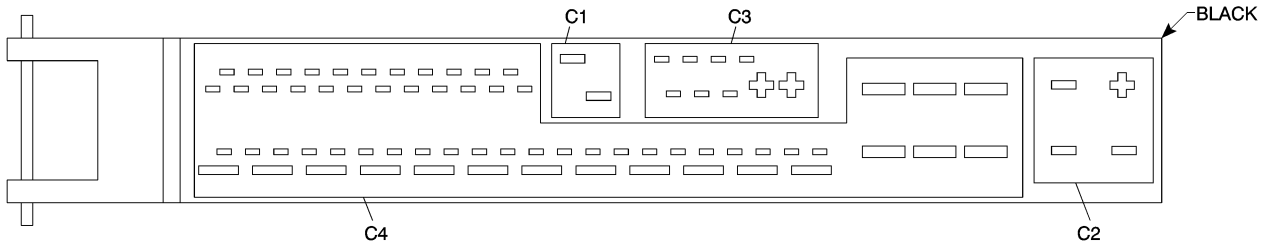

BODY CONTROL MODULE

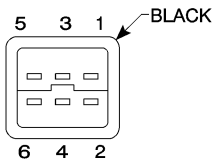

RIGHT FRONT POWER WINDOW SWITCH

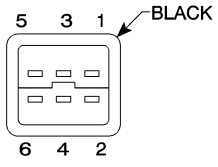

LEFT FRONT POWER WINDOW SWITCH

8113d74c

*BOTH POWER WINDOWS INOPERATIVE — CONTINUED

POSSIBLE CAUSES
FUSED B(+) CIRCUIT OPEN
POWER WINDOW SWITCH GROUND CIRCUIT OPEN
BODY CONTROL MODULE INTERNAL FAILURE

For a complete Power Windows Circuit Diagram, **Refer to Page 8N-120**.

Diagnostic Test

1. MEASURE POWER WINDOWS FUSED B(+) CIRCUIT VOLTAGE

Note: Inspect Fuse 19 located in the Underhood Accessory Fuse Block. If the fuse is open, repair the cause of the open fuse before continuing.

Turn the ignition off.

Disconnect the Body Control Module (BCM) harness connector.

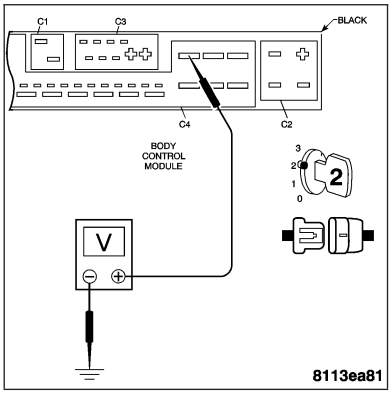

Note: Check connectors - Clean/repair as necessary.
Turn the ignition on.

Measure the voltage at the BCM harness connector Fused B(+) circuit.

Is the voltage above 10 volts?

Yes >> Go to 2

No >> Repair the BCM Fused B(+) circuit for an open.
Perform BODY VERIFICATION TEST.

2. MEASURE LEFT FRONT POWER WINDOW SWITCH GROUND CIRCUIT RESISTANCE

Turn the ignition off.

Disconnect the Left Front Power Window Switch harness connector.

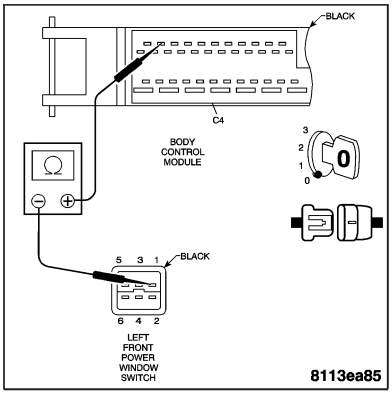

Note: Check connectors - Clean/repair as necessary.
Measure the resistance of the Left Front Power Window Switch Ground circuit from the Left Front Power Window Switch harness connector to the BCM harness connector.

Is the resistance below 5.0 ohms?

Yes >> Go to 3

No >> Repair the Left Front Power Window Switch ground circuit for an open.
Perform BODY VERIFICATION TEST.

*BOTH POWER WINDOWS INOPERATIVE — CONTINUED

3. MEASURE RIGHT FRONT POWER WINDOW SWITCH GROUND CIRCUIT RESISTANCE

With the ignition off.

Disconnect the Right Front Power Window Switch harness connector.

Note: Check connectors - Clean/repair as necessary.

Measure the resistance of the Right Front Power Window Switch Ground circuit from the Right Front Power Window Switch harness connector to the BCM harness connector.

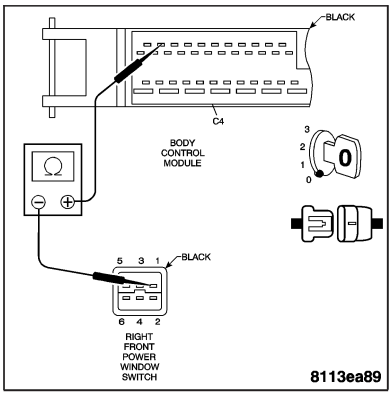

Is the resistance below 5.0 ohms?

Yes >> Replace the Body Control Module. **Refer to Page 8E-72**.
Perform BODY VERIFICATION TEST.

No >> Repair the Right Front Power Window Switch ground circuit for an open.
Perform BODY VERIFICATION TEST.

BODY VERIFICATION TEST

1.

Turn the ignition off.

Disconnect all jumper wires and reconnect all previously disconnected components and connectors.

Note: If the SKREEM or the PCM was replaced, refer to the service information for proper programming procedures.

If the Body Control Module was replaced, turn the ignition on for 15 seconds (to allow the new BCM to learn VIN) or engine may not start.

Program all RKE transmitters and other options as necessary.

With the DRB III®, erase all Diagnostic Trouble Codes (DTCs) from ALL modules. Start the engine and allow it to run for 2 minutes. Operate all functions of the system that caused the original complaint.

Ensure that all accessories are turned off and the battery is fully charged.

Turn the ignition off and wait 5 seconds. Turn the ignition on and using the DRB III®, read DTCs from ALL modules.

Are any DTCs present or is the original complaint still present?

Are any DTCs present?

YES >> Repair is not complete, refer to appropriate symptom.

NO >> Repair is complete.

SCHEMATICS AND DIAGRAMS

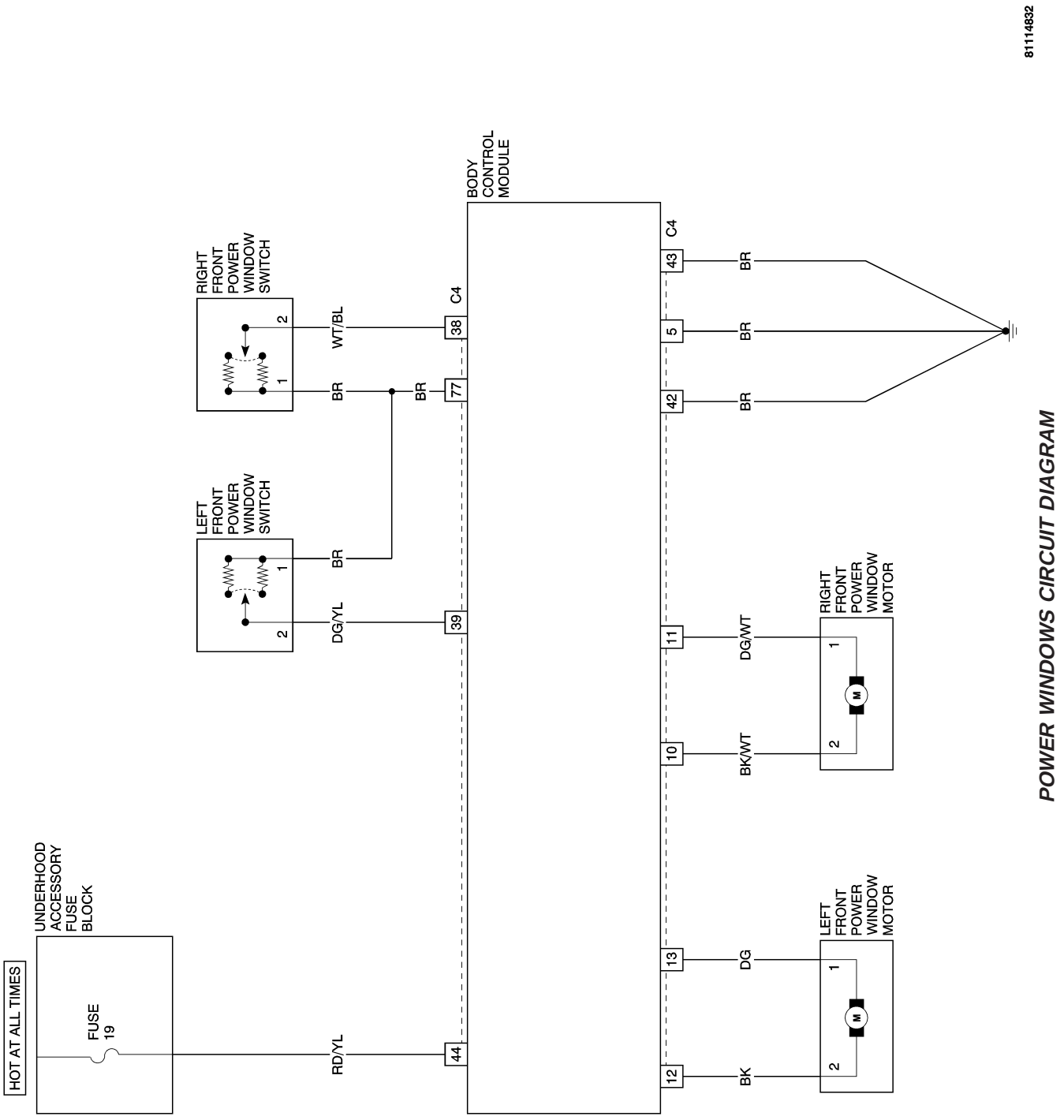

POWER WINDOWS - SERVICE INFORMATION

TABLE OF CONTENTS

page

POWER WINDOWS - SERVICE INFORMATION
DESCRIPTION 121
OPERATION 121
DIAGNOSIS AND TESTING 121
WINDOW MOTOR
REMOVAL 122
INSTALLATION 123
POWER WINDOW SWITCH
REMOVAL 124
INSTALLATION 124

POWER WINDOWS - SERVICE INFORMATION

DESCRIPTION

The power window system allows each of the door windows to be raised and lowered with an individual switch located on the center console.

OPERATION

Each door window motor receives power and ground individually through separate window switches. Reversing the current to the motor within the switch will cause the motor to rotate in the opposite direction which forces the window either up or down. The switches in the center console provide one-touch opening.

DIAGNOSIS AND TESTING

WARNING: REFER TO RESTRAINTS Refer to Page 8O-82 BEFORE ATTEMPTING ANY DOOR, SEAT, STEERING WHEEL, STEERING COLUMN, OR INSTRUMENT PANEL COMPONENT DIAGNOSIS OR SERVICE. FAILURE TO TAKE THE PROPER PRECAUTIONS COULD RESULT IN ACCIDENTAL AIRBAG DEPLOYMENT AND POSSIBLE PERSONAL INJURY.

Before any testing of the power window system is performed, the battery should be fully charged. All the wiring harness connectors should be inspected and cleaned, if necessary, to ensure good connections.

1. If both of the power windows are inoperative, check fuse 19 in the underhood accessory fuse block.
2. With the dome lamp on, apply the power window switch in the direction of the failure.
3. If the dome lamp dims, the window track may be jammed. Check for obstructions in the guide tracks or worn weatherstrips causing a binding.
4. If the dome lamp does not dim, proceed with testing of the individual power window system components and circuits. For complete power windows system diagnosis, see power windows electrical diagnostics in this section.

WINDOW MOTOR

REMOVAL

WARNING: REFER TO RESTRAINTS Refer to Page 8O-82 BEFORE ATTEMPTING ANY DOOR, SEAT, STEERING WHEEL, STEERING COLUMN, OR INSTRUMENT PANEL COMPONENT DIAGNOSIS OR SERVICE. FAILURE TO TAKE THE PROPER PRECAUTIONS COULD RESULT IN ACCIDENTAL AIRBAG DEPLOYMENT AND POSSIBLE PERSONAL INJURY.

1. Disconnect the negative battery cable.
2. Remove the door interior trim panel. **Refer to Page 23-108**.
3. Gently peel back the door watershield (1) enough to expose the power window motor attachment rivets and harness connector.

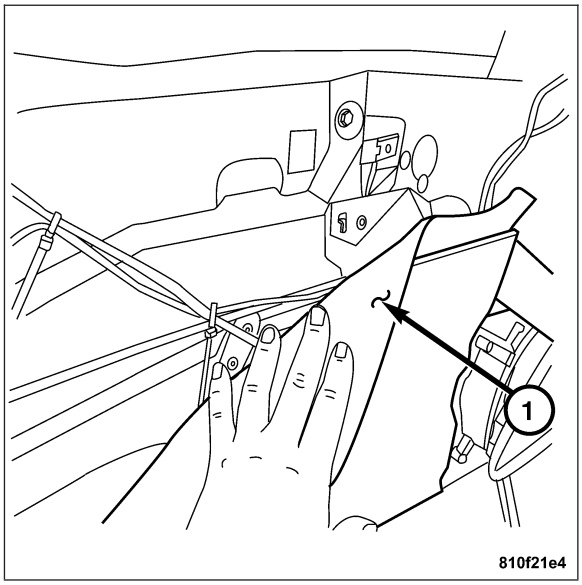

Note: Prevent the power window motor from falling while the attachment rivets are being removed.

4. Disconnect the power window motor harness connector (1), and drill out the power window motor attachment rivets (2).
5. Remove the power window motor from the door.

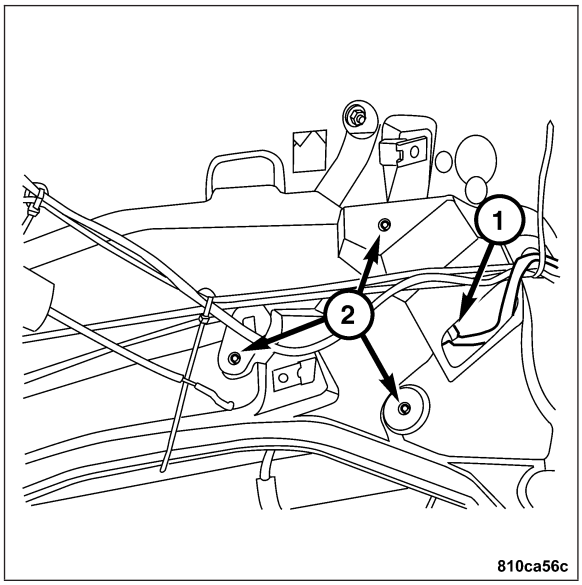

INSTALLATION

Note: Ensure the original mounting hole pattern is used when installing the power window motor.

Note: Before installing, lightly grease the gear on the power window motor.

1. Position the power window motor into the door.
2. Install the power window motor attachment rivets (2).
3. Connect the power window motor harness connector (1).
4. Install the door watershield.
5. Install the door interior trim panel. **Refer to Page 23-109**.
6. Connect the negative battery cable.

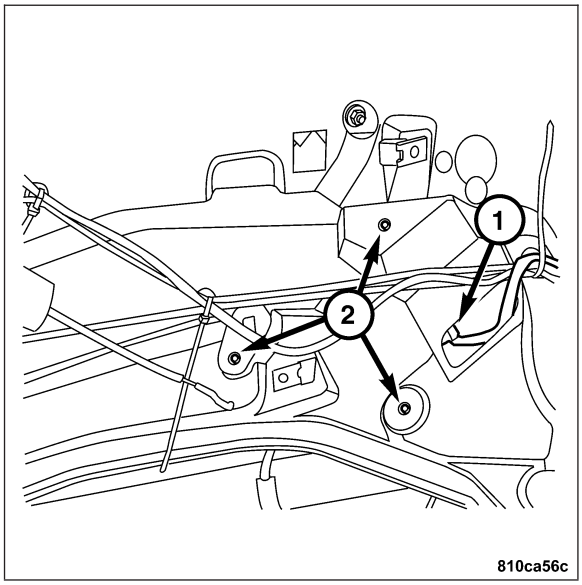

POWER WINDOW SWITCH

REMOVAL

WARNING: REFER TO RESTRAINTS Refer to Page 8O-82 BEFORE ATTEMPTING ANY DOOR, SEAT, STEERING WHEEL, STEERING COLUMN, OR INSTRUMENT PANEL COMPONENT DIAGNOSIS OR SERVICE. FAILURE TO TAKE THE PROPER PRECAUTIONS COULD RESULT IN ACCIDENTAL AIRBAG DEPLOYMENT AND POSSIBLE PERSONAL INJURY.

1. Disconnect the negative battery cable.
2. Remove the shifter cover trim panel. **Refer to Page 23-173**.
3. Disconnect the power window switch harness connector (1).
4. Squeeze the clips together and remove the power window switch from the shifter cover trim panel.

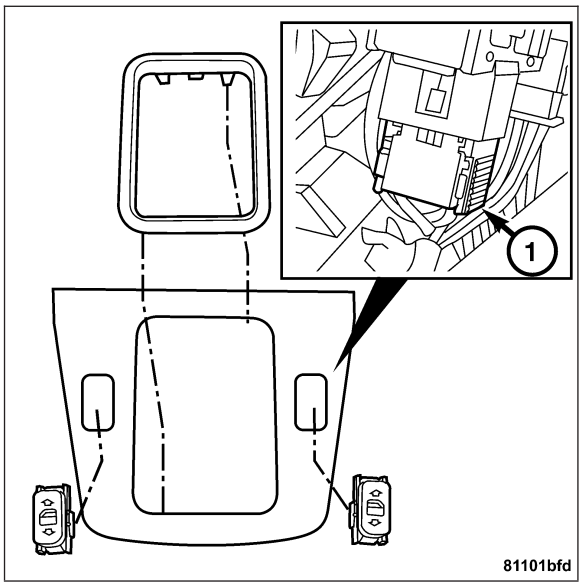

INSTALLATION

1. Install the power window switch to the shifter cover trim panel.
2. Connect the power window switch harness connector.
3. Install the shifter cover trim panel. **Refer to Page 23-183**.
4. Connect the negative battery cable.

RESTRAINTS

TABLE OF CONTENTS

	page		page
RESTRAINTS - ELECTRICAL DIAGNOSTICS	**1**	**RESTRAINTS - SERVICE INFORMATION**	**70**

RESTRAINTS - ELECTRICAL DIAGNOSTICS

TABLE OF CONTENTS

page

RESTRAINTS - ELECTRICAL DIAGNOSTICS
DIAGNOSIS AND TESTING
ORC INTERNAL FAILURE 2
DRIVER AIRBAG SQUIB CIRCUIT 4
DRIVER SEAT BELT TENSIONER SQUIB CIRCUIT 10
PASSENGER SEAT BELT TENSIONER SQUIB CIRCUIT 17
PASSENGER AIRBAG SQUIB CIRCUIT 23
LEFT SIDE AIRBAG SQUIB CIRCUIT 29
RIGHT SIDE AIRBAG SQUIB CIRCUIT 35
PROGRAMMING DOES NOT CORRESPOND TO THE VEHICLE EQUIPMENT 41

page

ORC SYSTEM UNDERVOLTAGE 43
AIRBAG WARNING INDICATOR CIRCUIT . . . 46
PASSENGER AIRBAG ON/OFF SWITCH SIGNAL CIRCUIT 49
DRIVER SEAT BELT TENSIONER CIRCUIT . . 53
PASSENGER SEAT BELT TENSIONER CIRCUIT 56
LEFT SIDE IMPACT SENSOR SIGNAL CIRCUIT 59
RIGHT SIDE IMPACT SENSOR SIGNAL CIRCUIT 63
AIRBAG VERIFICATION TEST 67
SCHEMATICS AND DIAGRAMS 68

RESTRAINTS - ELECTRICAL DIAGNOSTICS

DIAGNOSIS AND TESTING

ORC INTERNAL FAILURE

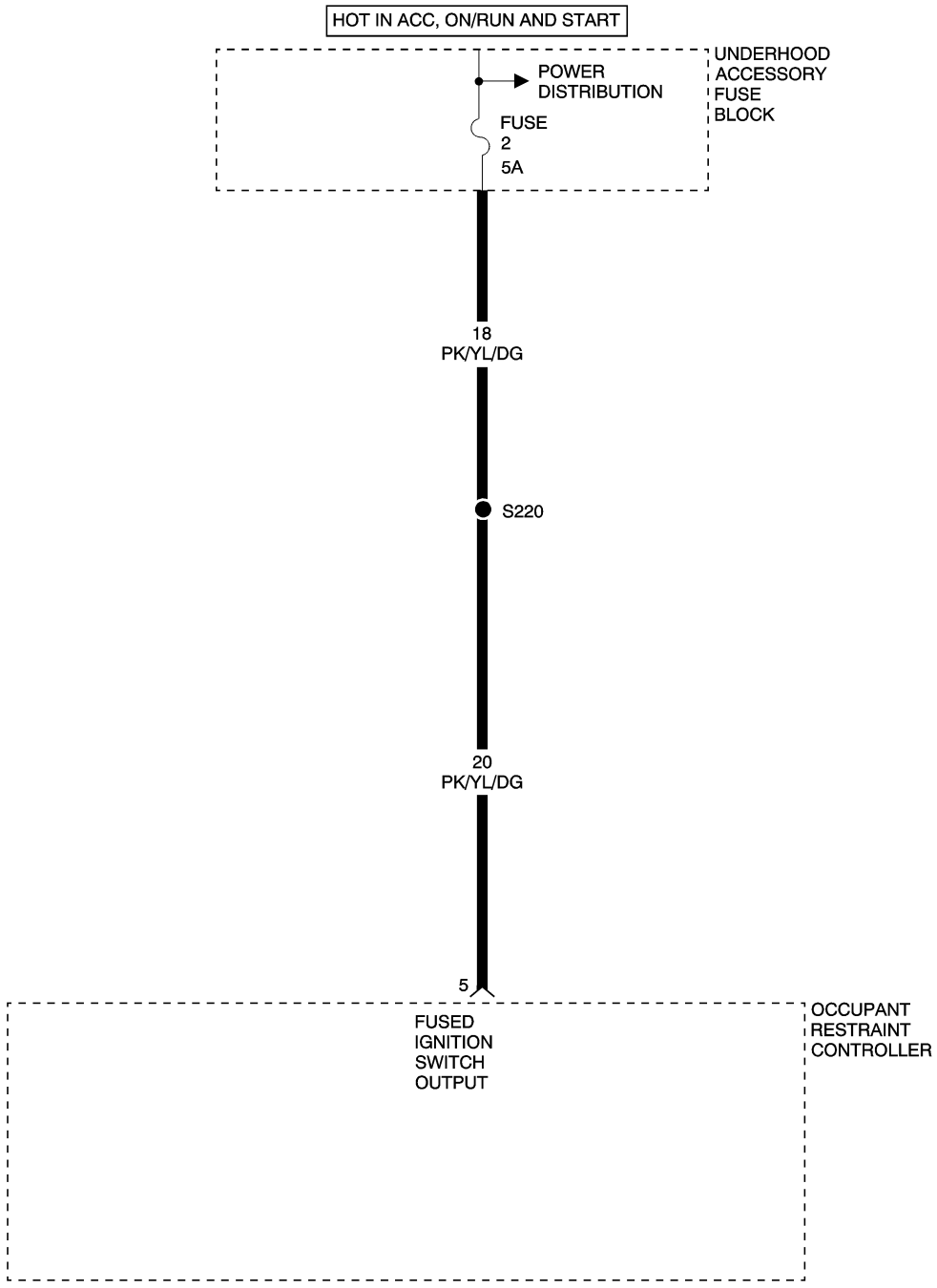

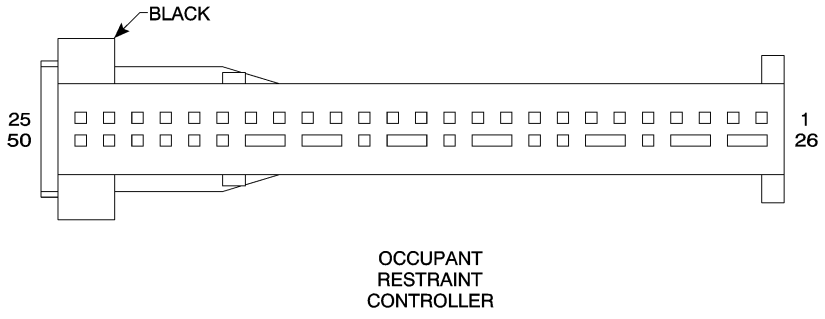

81148b8e

ORC INTERNAL FAILURE — CONTINUED

When Monitored and Set Condition

- When Monitored: Ignition on.
- Set Condition: If the Occupant Restraint Controller (ORC) detects an internal malfunction, the DTC is set.

POSSIBLE CAUSES
FUSED IGNITION SWITCH OUTPUT CIRCUIT
OCCUPANT RESTRAINT CONTROLLER

For a complete Restraints System Circuit Diagram, **Refer to Page 8O-68**.

Diagnostic Test

1. MEASURE THE VOLTAGE OF THE ORC FUSED IGNITION SWITCH OUTPUT CIRCUIT

Note: When reconnecting the Airbag System components, the ignition must be turned off and the battery must be disconnected.

WARNING: TURN THE IGNITION OFF, DISCONNECT THE BATTERY AND WAIT TWO MINUTES BEFORE PROCEEDING.

Disconnect the ORC harness connector.

Note: Check connectors - Clean/repair as necessary.

Turn the ignition on.

Measure the voltage of the Fused Ignition Switch Output circuit at the ORC harness connector.

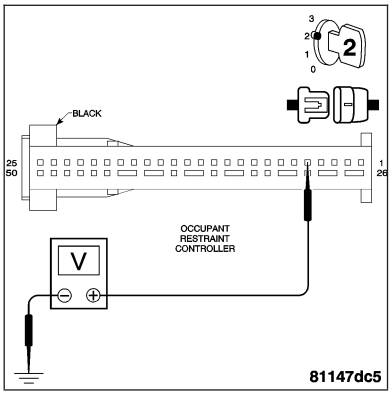

Is the voltage above 10 volts?

Yes >> Replace the Occupant Restraint Controller. **Refer to Page 8O-89**.

WARNING: IF THE OCCUPANT RESTRAINT CONTROLLER IS DROPPED AT ANY TIME, IT MUST BE REPLACED.

Perform AIRBAG VERIFICATION TEST.

No >> System voltage must be between 12 and 16 volts. Repair the voltage concern as necessary.

Perform AIRBAG VERIFICATION TEST.

DRIVER AIRBAG SQUIB CIRCUIT

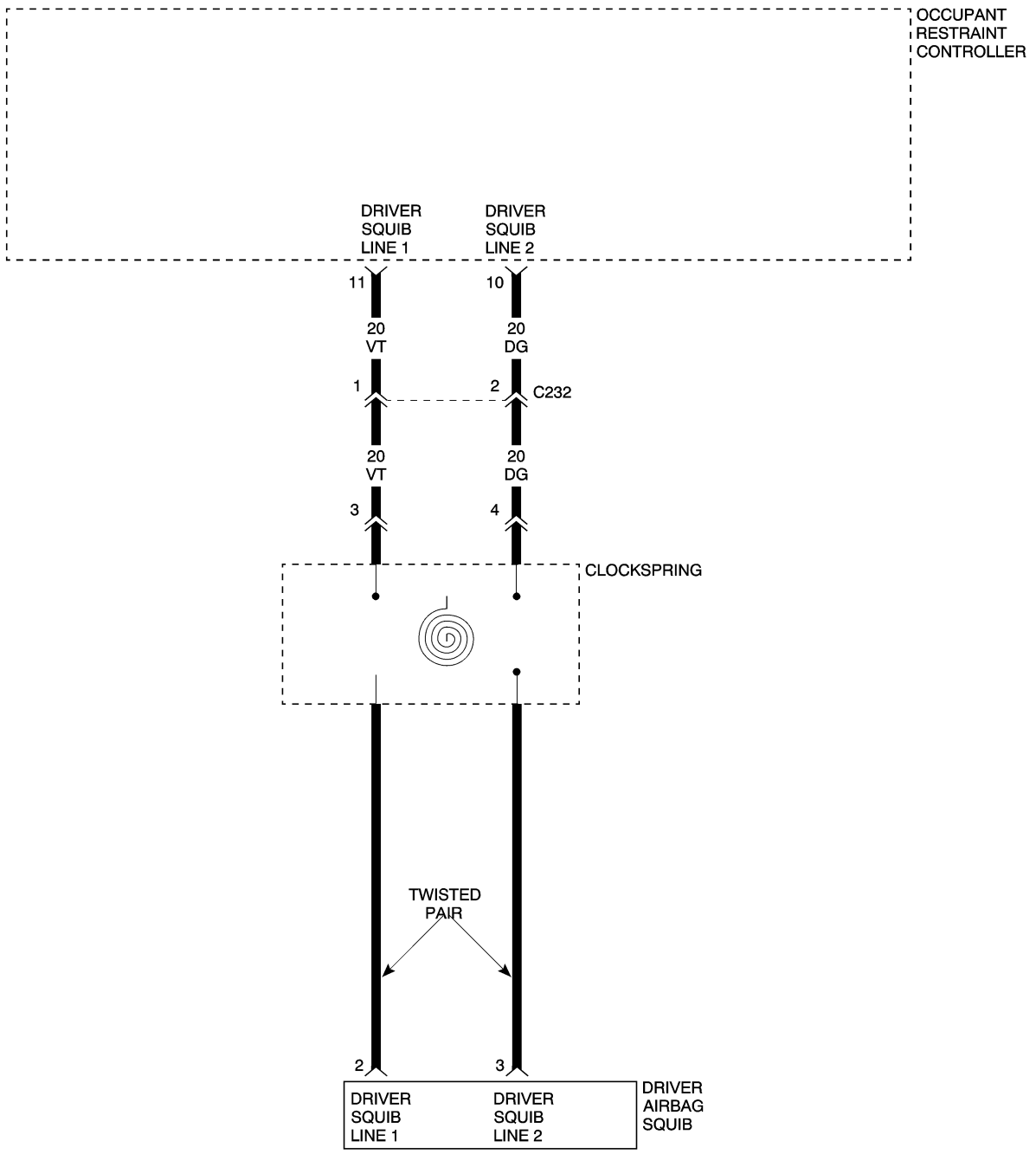

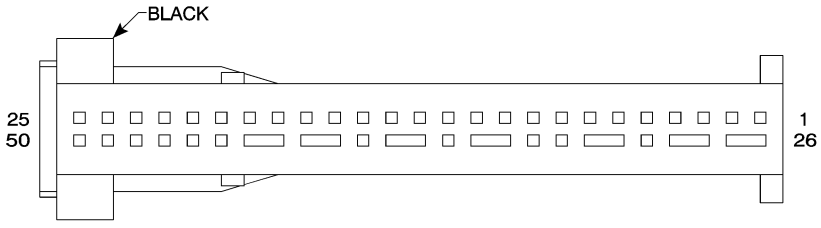

OCCUPANT
RESTRAINT
CONTROLLER

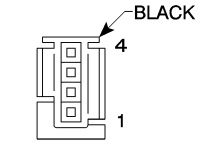

CLOCKSPRING

8114800c

DRIVER AIRBAG SQUIB CIRCUIT — CONTINUED

When Monitored and Set Condition

- When Monitored: Ignition on. The Occupant Restraint Controller (ORC) monitors the resistance of the Driver Squib circuits.
- Set Condition: The Occupant Restraint Controller (ORC) has detected abnormally high voltage, low resistance, high resistance or an open circuit on one or both of the Driver Squib circuits.

POSSIBLE CAUSES
DRIVER SQUIB CIRCUIT(S) OPEN
DRIVER SQUIB CIRCUIT(S) SHORT TO VOLTAGE
DRIVER SQUIB CIRCUIT(S) SHORT TO GROUND
DRIVER SQUIB CIRCUITS SHORT TO EACH OTHER
DRIVER AIRBAG SQUIB
OCCUPANT RESTRAINT CONTROLLER

For a complete Restraints System Circuit Diagram, **Refer to Page 8O-68**.

Diagnostic Test

1. WITH THE DRB III®, READ DTCs

Note: When reconnecting the Airbag System components, the ignition must be turned off and the battery must be disconnected.

Note: Ensure the battery is fully charged.

Turn the ignition on.

With the DRB III®, select ACTIVE or STORED DTCs.

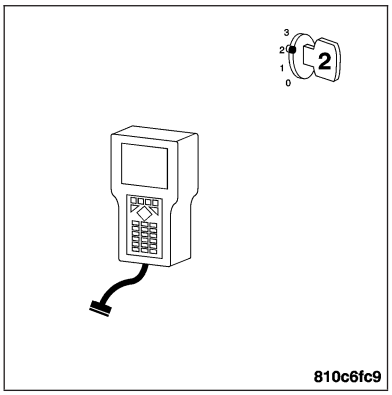

Is the DTC ACTIVE?

Yes >> Go to 2

No >> Go to 11

DRIVER AIRBAG SQUIB CIRCUIT — CONTINUED

2. WITH THE DRB III®, READ ACTIVE DTCs

WARNING: TURN THE IGNITION OFF, DISCONNECT THE BATTERY AND WAIT TWO MINUTES BEFORE PROCEEDING.

WARNING: DO NOT PLACE AN INTACT UNDEPLOYED AIRBAG FACE DOWN ON A HARD SURFACE; THE AIRBAG WILL PROPEL INTO THE AIR IF ACCIDENTALLY DEPLOYED, AND COULD RESULT IN SERIOUS OR FATAL INJURY.

Disconnect the Driver airbag.

Note: Check connectors - Clean/repair as necessary.

Connect the appropriate Load Tool to the Driver Airbag Squib connector.

WARNING: TURN THE IGNITION ON, THEN RECONNECT THE BATTERY.

With the DRB III®, read the active Airbag DTCs.

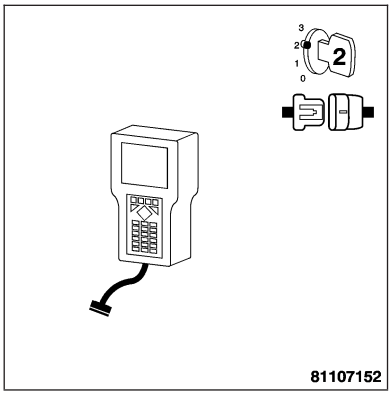

Does the DRB III® display an active Driver Airbag Squib DTC?

Yes >> Go to 3

No >> Replace the Driver Airbag. **Refer to Page 8O-100**. Perform AIRBAG VERIFICATION TEST.

3. WITH THE DRB III®, READ ACTIVE DTCs

WARNING: TURN THE IGNITION OFF, DISCONNECT THE BATTERY AND WAIT TWO MINUTES BEFORE PROCEEDING.

Disconnect the Load Tool from the Driver Airbag connector.

Disconnect the Clockspring connector.

Note: Check connectors - Clean/repair as necessary.

Connect the appropriate Load Tool to the Clockspring connector.

WARNING: TURN THE IGNITION ON, THEN RECONNECT THE BATTERY.

With the DRB III®, read the active Airbag DTCs.

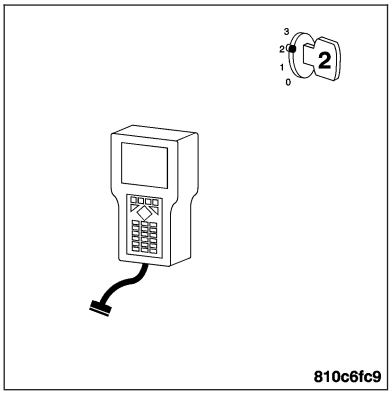

Does the DRB III® display an active Driver Airbag Squib DTC?

Yes >> Go to 4

No >> Replace the Clockspring. **Refer to Page 8O-94**. Perform AIRBAG VERIFICATION TEST.

DRIVER AIRBAG SQUIB CIRCUIT — CONTINUED

4. MEASURE THE RESISTANCE OF THE DRIVER SQUIB LINE 1 CIRCUIT

WARNING: TURN THE IGNITION OFF, DISCONNECT THE BATTERY AND WAIT TWO MINUTES BEFORE PROCEEDING.
Disconnect the ORC harness connector.

Note: Check connectors - Clean/repair as necessary.
Connect the appropriate harness adapter to the ORC connector.
Disconnect the Load Tool from the Clockspring connector.
Measure the resistance of the Driver Squib Line 1 circuit from the ORC adapter to the Clockspring connector.

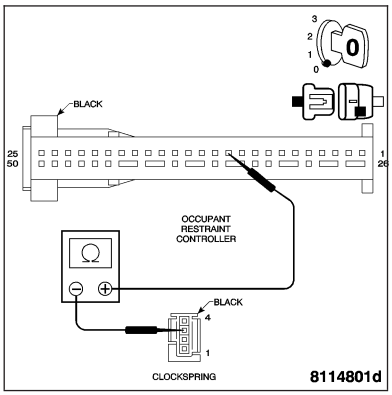

Is the resistance below 1.0 ohm?

Yes >> Go to 5

No >> Repair the Driver Squib Line 1 circuit for an open.
Perform AIRBAG VERIFICATION TEST.

Note: When reconnecting the Airbag System components, the ignition must be turned off and the battery must be disconnected.

5. MEASURE THE RESISTANCE OF THE DRIVER SQUIB LINE 2 CIRCUIT

WARNING: TURN THE IGNITION OFF, DISCONNECT THE BATTERY AND WAIT TWO MINUTES BEFORE PROCEEDING.
Measure the resistance of the Driver Squib Line 2 circuit from the ORC adapter to the Clockspring connector.

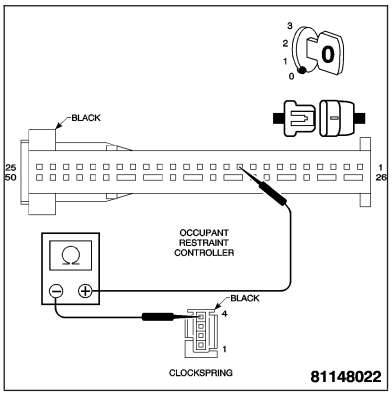

Is the resistance below 1.0 ohm?

Yes >> Go to 6

No >> Repair the Driver Squib Line 2 circuit for an open.
Perform AIRBAG VERIFICATION TEST.

Note: When reconnecting the Airbag System components, the ignition must be turned off and the battery must be disconnected.

6. MEASURE THE RESISTANCE OF THE DRIVER SQUIB CIRCUITS

WARNING: TURN THE IGNITION OFF, DISCONNECT THE BATTERY AND WAIT TWO MINUTES BEFORE PROCEEDING.
Measure the resistance between the Driver Squib Line 1 circuit and the Driver Squib Line 2 circuit at the Clockspring connector.

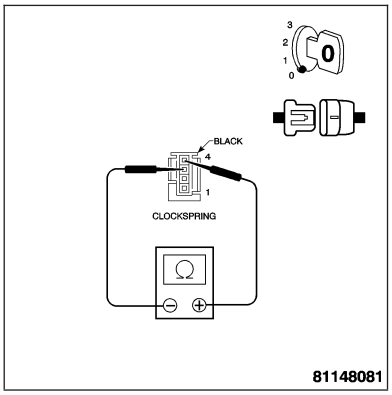

Is the resistance below 10K ohms?

Yes >> Repair the Driver Squib circuits for a short to each other.
Perform AIRBAG VERIFICATION TEST.

Note: When reconnecting the Airbag System components, the ignition must be turned off and the battery must be disconnected.

No >> Go to 7

DRIVER AIRBAG SQUIB CIRCUIT — CONTINUED

7. MEASURE THE VOLTAGE OF THE DRIVER SQUIB LINE 1 CIRCUIT

WARNING: TURN THE IGNITION OFF, DISCONNECT THE BATTERY AND WAIT TWO MINUTES BEFORE PROCEEDING.

WARNING: TURN THE IGNITION ON, THEN RECONNECT THE BATTERY.

Measure the voltage of the Driver Squib Line 1 circuit at the Clockspring connector.

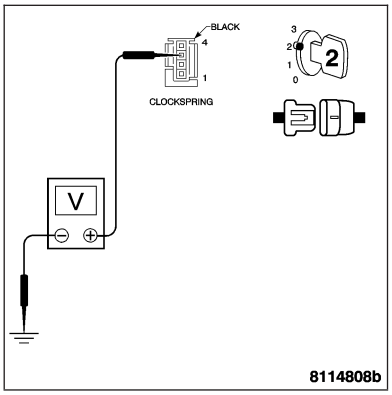

Is voltage present?

Yes >> Repair the Driver Squib Line 1 circuit for a short to voltage. Perform AIRBAG VERIFICATION TEST.

Note: When reconnecting the Airbag System components, the ignition must be turned off and the battery must be disconnected.

No >> Go to 8

8. MEASURE THE VOLTAGE OF THE DRIVER SQUIB LINE 2 CIRCUIT

With the ignition on.

Measure the voltage of the Driver Squib Line 2 circuit at the Clockspring connector.

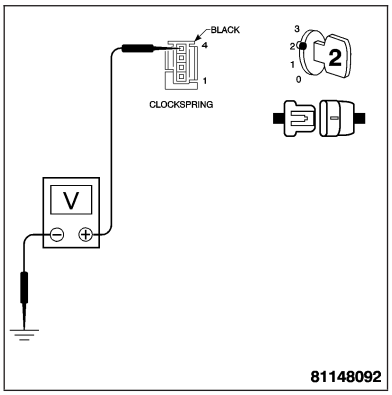

Is voltage present?

Yes >> Repair the Driver Squib Line 2 circuit for a short to voltage. Perform AIRBAG VERIFICATION TEST.

Note: When reconnecting the Airbag System components, the ignition must be turned off and the battery must be disconnected.

No >> Go to 9

9. MEASURE THE RESISTANCE OF THE DRIVER SQUIB LINE 1 CIRCUIT

With the ignition on.

Measure the resistance between ground and the Driver Squib Line 1 circuit.

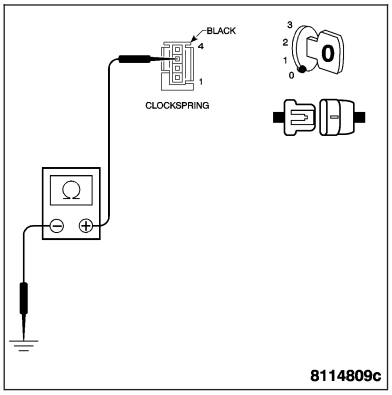

Is the resistance below 10K ohms?

Yes >> Repair the Driver Squib Line 1 circuit for a short to ground. Perform AIRBAG VERIFICATION TEST.

Note: When reconnecting the Airbag System components, the ignition must be turned off and the battery must be disconnected.

No >> Go to 10

DRIVER AIRBAG SQUIB CIRCUIT — CONTINUED

10. MEASURE THE RESISTANCE OF THE DRIVER SQUIB LINE 2 CIRCUIT

With the ignition on.

Measure the resistance between ground and the Driver Squib Line 2 circuit.

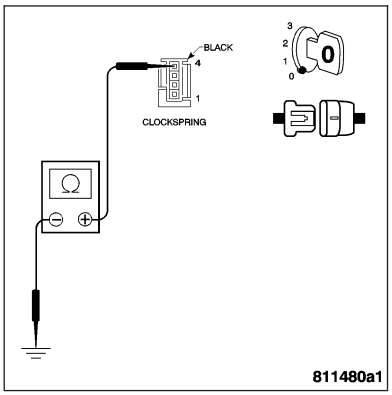

Is the resistance below 10K ohms?

Yes >> Repair the Driver Squib Line 2 circuit for a short to ground.
Perform AIRBAG VERIFICATION TEST.

Note: When reconnecting the Airbag System components, the ignition must be turned off and the battery must be disconnected.

No >> Replace the Occupant Restraint Controller. **Refer to Page 8O-89**.

WARNING: IF THE OCCUPANT RESTRAINT CONTROLLER IS DROPPED AT ANY TIME, IT MUST BE REPLACED.
Perform AIRBAG VERIFICATION TEST.

11. WITH THE DRB III®, READ DTCs

Note: Ensure the battery is fully charged.
With the DRB III®, record and erase all Restraint System DTCs.

All active codes must be resolved before diagnosing any stored codes.

Maintain a safe distance from all airbags while performing the following steps.

With the DRB III®, monitor active codes as you work through the system.

Note: Read the DTCs with the Passenger Airbag On/Off Switch in both switch positions.
Wiggle the wiring harness and connectors of the appropriate airbag system and rotate the steering wheel from stop to stop.

Note: Check connectors - Clean/repair as necessary.
You have just attempted to simulate the condition that initially set the trouble code message.

The following additional checks may assist you in identifying a possible intermittent problem:

- Visually inspect related wire harness connectors. Look for broken, bent, pushed out, spread, corroded, or contaminated terminals.
- Visually inspect the related harnesses. Look for chafed, pierced, pinched or partially broken wire.
- Refer to any Wiring Diagrams that may apply.

Did the DTC become ACTIVE?

Yes >> Go to 2

No >> The condition that caused this DTC to set is currently not present.
Perform AIRBAG VERIFICATION TEST.

DRIVER SEAT BELT TENSIONER SQUIB CIRCUIT

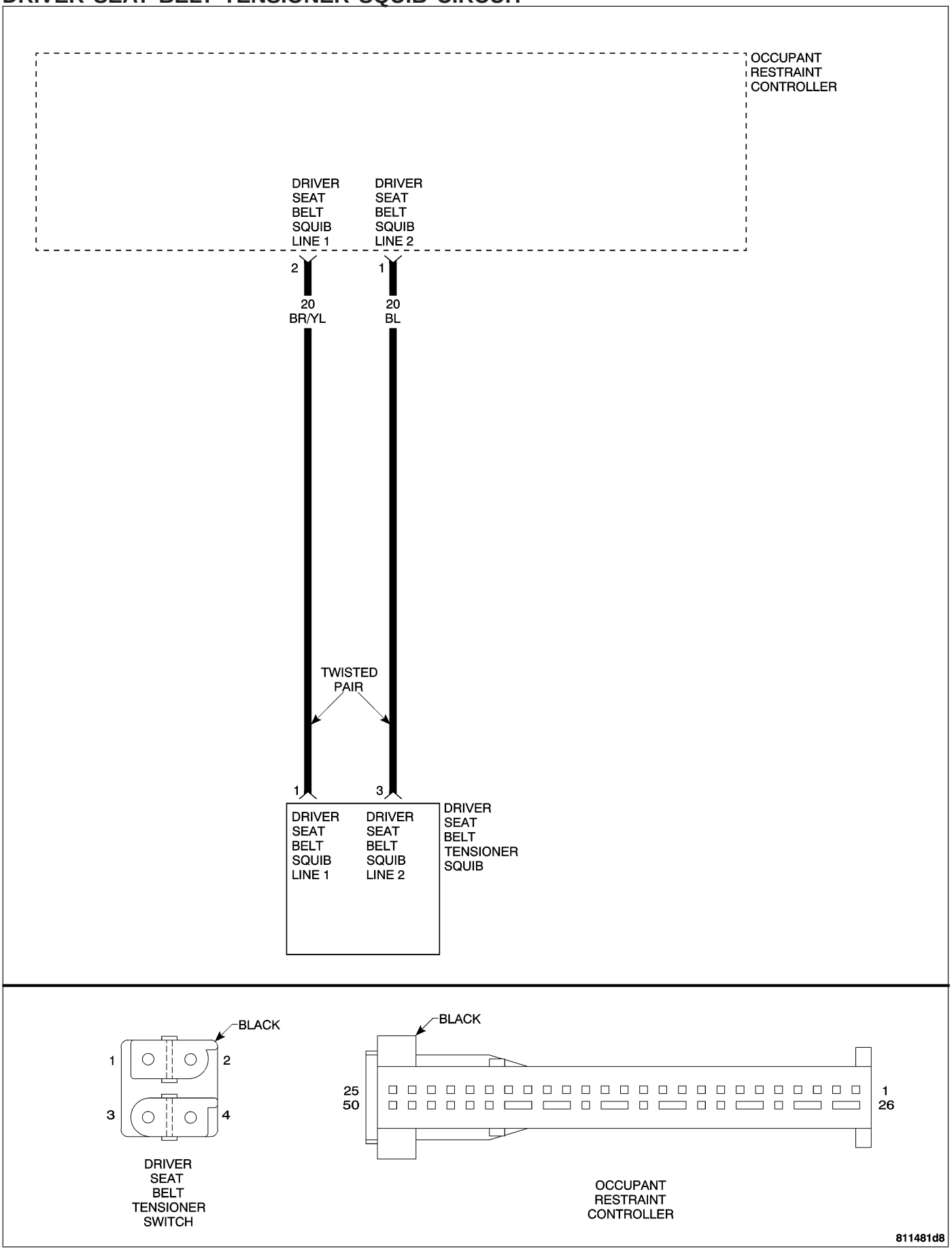

DRIVER SEAT BELT TENSIONER SQUIB CIRCUIT — CONTINUED

When Monitored and Set Condition

- When Monitored: Ignition on. The Occupant Restraint Controller (ORC) monitors the resistance of the Driver Seat Belt Squib circuits.
- Set Condition: The Occupant Restraint Controller (ORC) has detected abnormally high voltage, low resistance, high resistance or an open circuit on one or both of the Driver Seat Belt Squib circuits.

POSSIBLE CAUSES
DRIVER SEAT BELT SQUIB CIRCUIT(S) OPEN
DRIVER SEAT BELT SQUIB CIRCUIT(S) SHORT TO VOLTAGE
DRIVER SEAT BELT SQUIB CIRCUIT(S) SHORT TO GROUND
DRIVER SEAT BELT SQUIB CIRCUITS SHORT TO EACH OTHER
DRIVER SEAT BELT TENSIONER SQUIB
OCCUPANT RESTRAINT CONTROLLER

For a complete Restraints System Circuit Diagram, **Refer to Page 8O-68**.

Diagnostic Test

1. WITH THE DRB III®, READ DTCs

Note: When reconnecting the Airbag System components, the ignition must be turned off and the battery must be disconnected.

Note: Ensure the battery is fully charged.

Turn the ignition on.

With the DRB III®, select ACTIVE or STORED DTCs.

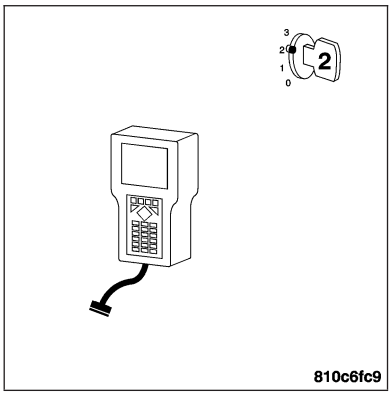

Is the DTC ACTIVE?

Yes >> Go to 2

No >> Go to 10

DRIVER SEAT BELT TENSIONER SQUIB CIRCUIT — CONTINUED

2. WITH THE DRB III®, READ ACTIVE DTCs

WARNING: TURN THE IGNITION OFF, DISCONNECT THE BATTERY AND WAIT TWO MINUTES BEFORE PROCEEDING.
Disconnect the Driver Seat Belt Tensioner connector.

Note: Check connectors - Clean/repair as necessary.
Connect the appropriate Load Tool to the Driver Seat Belt Tensioner Squib connector.

WARNING: TURN THE IGNITION ON, THEN RECONNECT THE BATTERY.
With the DRB III®, read the active DTCs.

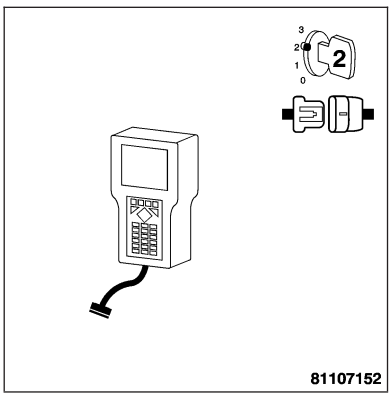

Does the DRB III® display an active Driver Seat Belt Tensioner Squib DTC?

Yes >> Go to 3

No >> Replace the Driver Seat Belt Tensioner. **Refer to Page 8O-122**.
Perform AIRBAG VERIFICATION TEST. **Refer to Page 8O-1**.

3. MEASURE THE RESISTANCE OF THE DRIVER SEAT BELT SQUIB LINE 1 CIRCUIT

WARNING: TURN THE IGNITION OFF, DISCONNECT THE BATTERY AND WAIT TWO MINUTES BEFORE PROCEEDING.
Disconnect the ORC harness connector.

Note: Check connectors - Clean/repair as necessary.
Connect the appropriate harness adapter to the ORC connector.

Disconnect the Load Tool from the Driver Seat Belt Tensioner Squib connector.

Measure the resistance of the Driver Seat Belt Squib Line 1 circuit from the ORC connector to the Driver Seat Belt Tensioner Squib connector.

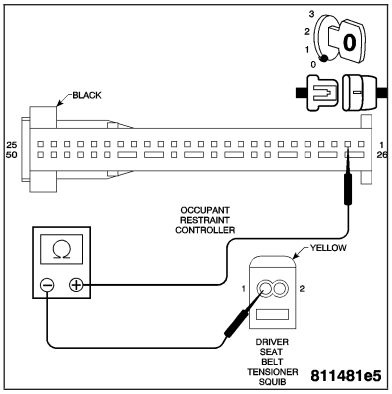

Is the resistance below 1.0 ohm?

Yes >> Go to 4

No >> Repair the Driver Seat Belt Squib Line 1 circuit for an open.
Perform AIRBAG VERIFICATION TEST. **Refer to Page 8O-1**.

Note: When reconnecting the Airbag System components, the ignition must be turned off and the battery must be disconnected.

DRIVER SEAT BELT TENSIONER SQUIB CIRCUIT — CONTINUED

4. MEASURE THE RESISTANCE OF THE DRIVER SEAT BELT SQUIB LINE 2 CIRCUIT

With the ignition off.

Measure the resistance of the Driver Seat Belt Squib Line 2 circuit from the ORC connector to the Driver Seat Belt Tensioner Squib connector.

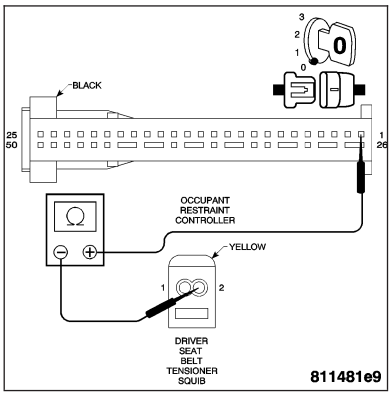

Is the resistance below 1.0 ohm?

Yes >> Go to 5

No >> Repair the Driver Seat Belt Squib Line 2 circuit for an open.

Perform AIRBAG VERIFICATION TEST. **Refer to Page 8O-1**.

Note: When reconnecting the Airbag System components, the ignition must be turned off and the battery must be disconnected.

5. MEASURE THE RESISTANCE OF THE DRIVER SEAT BELT SQUIB CIRCUITS

With the ignition off.

Measure the resistance between the Driver Seat Belt Squib Line 1 circuit and the Driver Seat Belt Squib Line 2 circuit at the Driver Seat Belt Tensioner Squib connector.

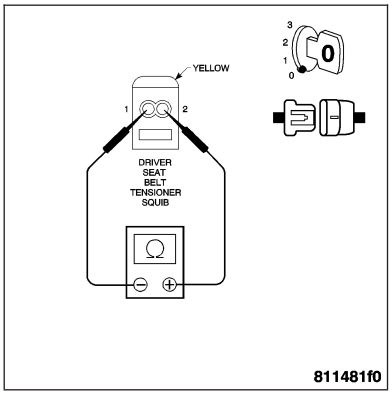

Is the resistance below 10K ohms?

Yes >> Repair the Driver Seat Belt Squib circuits for a short to each other.

Perform AIRBAG VERIFICATION TEST. **Refer to Page 8O-1**.

Note: When reconnecting the Airbag System components, the ignition must be turned off and the battery must be disconnected.

No >> Go to 6

6. MEASURE THE VOLTAGE OF THE DRIVER SEAT BELT SQUIB LINE 1 CIRCUIT

WARNING: TURN THE IGNITION ON, THEN RECONNECT THE BATTERY.

Measure the voltage of the Driver Seat Belt Squib Line 1 circuit at the Squib connector.

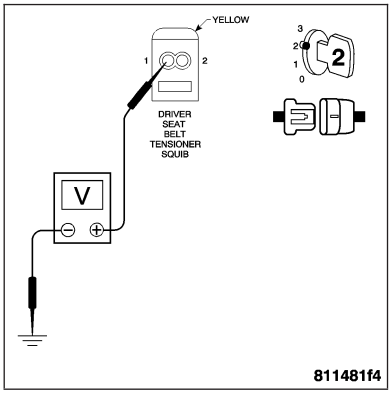

Is voltage present?

Yes >> Repair the Driver Seat Belt Squib Line 1 circuit for a short to voltage.

Perform AIRBAG VERIFICATION TEST. **Refer to Page 8O-1**.

Note: When reconnecting the Airbag System components, the ignition must be turned off and the battery must be disconnected.

No >> Go to 7

DRIVER SEAT BELT TENSIONER SQUIB CIRCUIT — CONTINUED

7. MEASURE THE VOLTAGE OF THE DRIVER SEAT BELT SQUIB LINE 2 CIRCUIT

With the ignition on.

Measure the voltage of the Driver Seat Belt Squib Line 2 circuit at the Squib connector.

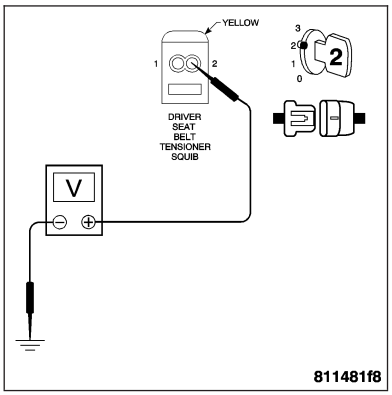

Is voltage present?

Yes >> Repair the Driver Seat Belt Squib Line 2 circuit for a short to voltage.

Perform AIRBAG VERIFICATION TEST. **Refer to Page 8O-1**.

Note: When reconnecting the Airbag System components, the ignition must be turned off and the battery must be disconnected.

No >> Go to 8

8. MEASURE THE RESISTANCE OF THE DRIVER SEAT BELT SQUIB LINE 1 CIRCUIT

WARNING: TURN THE IGNITION OFF, DISCONNECT THE BATTERY AND WAIT TWO MINUTES BEFORE PROCEEDING.

Measure the resistance between ground and the Driver Seat Belt Squib Line 1 circuit.

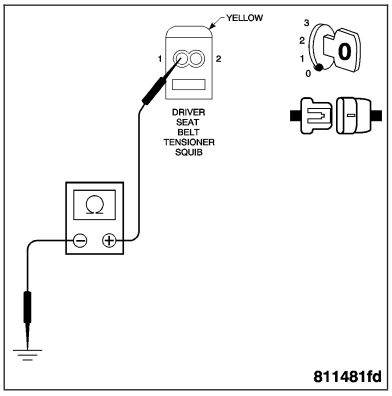

Is the resistance below 10K ohms?

Yes >> Repair the Driver Seat Belt Squib Line 1 circuit for a short to ground.

Perform AIRBAG VERIFICATION TEST. **Refer to Page 8O-1**.

Note: When reconnecting Airbag system components, the ignition must be turned off and the battery must be disconnected.

No >> Go to 9

DRIVER SEAT BELT TENSIONER SQUIB CIRCUIT — CONTINUED

9. MEASURE THE RESISTANCE OF THE DRIVER SEAT BELT SQUIB LINE 2 CIRCUIT

With the ignition off.

Measure the resistance between ground and the Driver Seat Belt Squib Line 2 circuit.

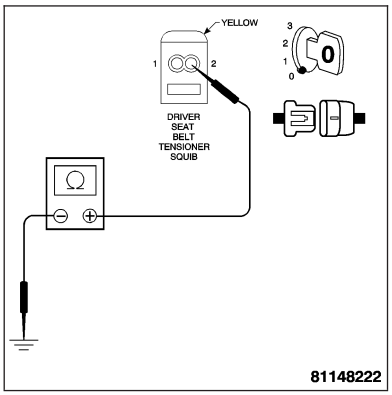

Is the resistance below 10K ohms?

Yes >> Repair the Driver Seat Belt Squib Line 2 circuit for a short to ground.

Perform AIRBAG VERIFICATION TEST. **Refer to Page 8O-1**.

Note: When reconnecting the Airbag System components, the ignition must be turned off and the battery must be disconnected.

No >> Replace the Occupant Restraint Controller. **Refer to Page 8O-89**.

WARNING: IF THE OCCUPANT RESTRAINT CONTROLLER IS DROPPED AT ANY TIME, IT MUST BE REPLACED.

Perform AIRBAG VERIFICATION TEST. **Refer to Page 8O-1**.

DRIVER SEAT BELT TENSIONER SQUIB CIRCUIT — CONTINUED

10. WITH THE DRB III®, READ DTCs

Note: Ensure the battery is fully charged.
Remove any special tools or jumper wires and reconnect all previously disconnected components - except the battery

WARNING: TURN THE IGNITION ON, THEN RECONNECT THE BATTERY.
With the DRB III®, record and erase all Restraint System DTCs.

All active codes must be resolved before diagnosing any stored codes.

Maintain a safe distance from all airbags while performing the following steps.

With the DRB III®, monitor active codes as you work through the system.

Note: Read the DTCs with the Passenger Airbag On/Off Switch in both switch positions.
Wiggle the wiring harness and connectors of the appropriate airbag system and rotate the steering wheel from stop to stop.

Note: Check connectors - Clean/repair as necessary.
You have just attempted to simulate the condition that initially set the trouble code message.

The following additional checks may assist you in identifying a possible intermittent problem:

- Visually inspect related wire harness connectors. Look for broken, bent, pushed out, spread, corroded or contaminated terminals.
- Visually inspect the related harnesses. Look for chafed, pierced, pinched or partially broken wire.
- Refer to any Wiring Diagrams that may apply.

Did the DTC become ACTIVE?

Yes >> Go to 2

No >> The condition that caused this DTC to set is currently not present.
Perform AIRBAG VERIFICATION TEST. **Refer to Page 8O-1**.

PASSENGER SEAT BELT TENSIONER SQUIB CIRCUIT

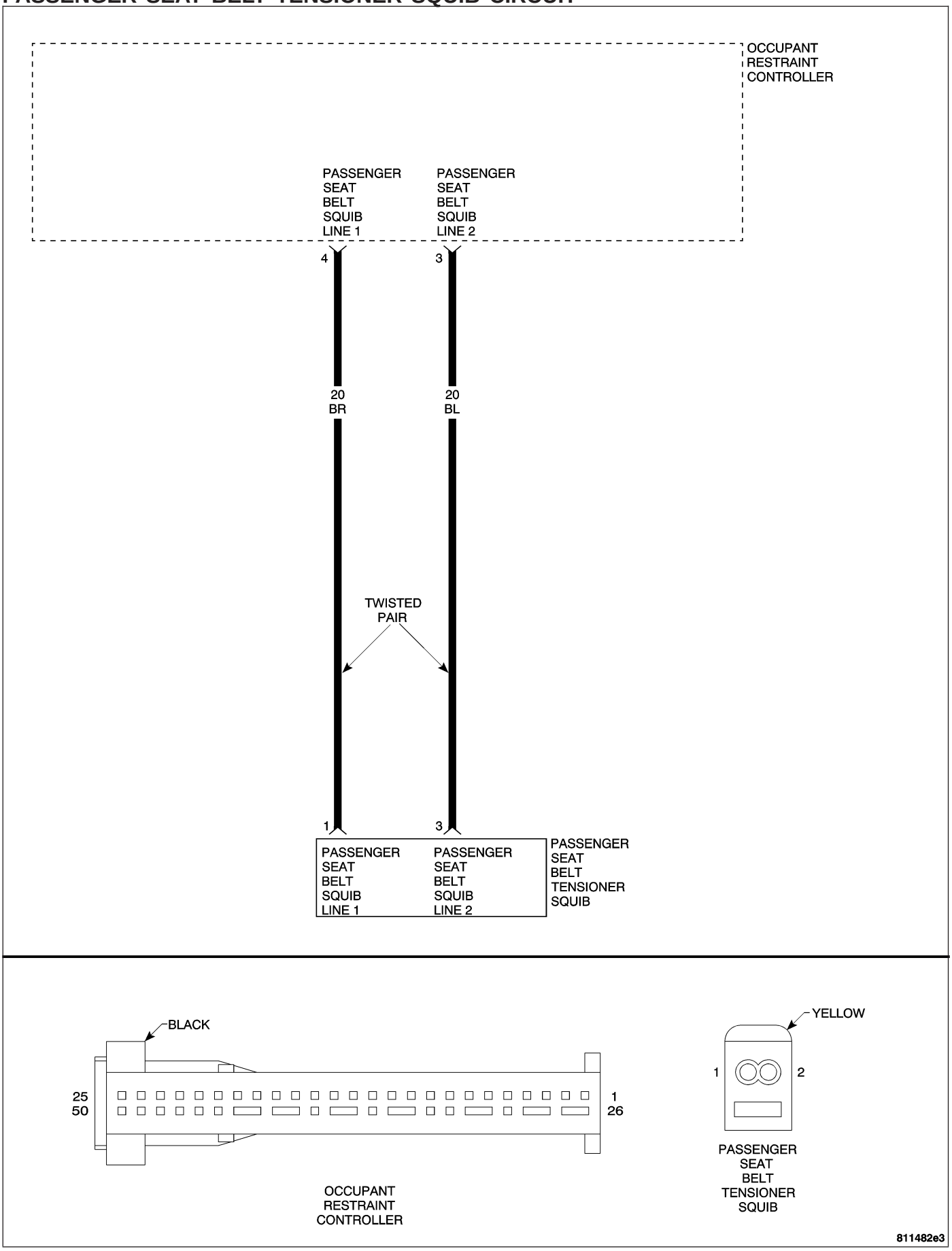

PASSENGER SEAT BELT TENSIONER SQUIB CIRCUIT — CONTINUED

When Monitored and Set Condition

- When Monitored: Ignition on. The Occupant Restraint Controller (ORC) monitors the resistance of the Passenger Seat Belt Squib circuits.
- Set Condition: The Occupant Restraint Controller (ORC) has detected abnormally high voltage, low resistance, high resistance or an open circuit on one or both of the Passenger Seat Belt Squib circuits.

POSSIBLE CAUSES
PASSENGER SEAT BELT SQUIB CIRCUIT(S) OPEN
PASSENGER SEAT BELT SQUIB CIRCUIT(S) SHORT TO VOLTAGE
PASSENGER SEAT BELT SQUIB CIRCUIT(S) SHORT TO GROUND
PASSENGER SEAT BELT SQUIB CIRCUITS SHORT TO EACH OTHER
PASSENGER SEAT BELT TENSIONER SQUIB
OCCUPANT RESTRAINT CONTROLLER

For a complete Restraints System Circuit Diagram, **Refer to Page 8O-68**.

Diagnostic Test

1. WITH THE DRB III®, READ DTCs

Note: When reconnecting the Airbag System components, the ignition must be turned off and the battery must be disconnected.

Note: Ensure the battery is fully charged.

Turn the ignition on.

With the DRB III®, select ACTIVE or STORED DTCs.

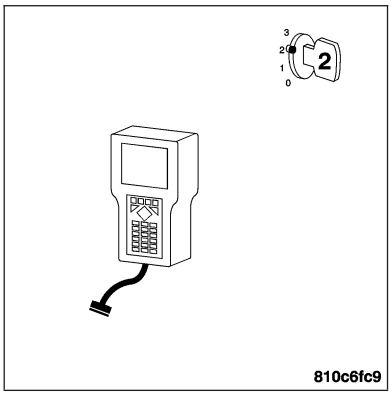

Is the DTC ACTIVE?

Yes >> Go to 2

No >> Go to 10

2. WITH THE DRB III®, READ ACTIVE DTCs

WARNING: TURN THE IGNITION OFF, DISCONNECT THE BATTERY AND WAIT TWO MINUTES BEFORE PROCEEDING.

Disconnect the Passenger Seat Belt Tensioner connector.

Note: Check connectors - Clean/repair as necessary.

Connect the appropriate Load Tool to the Passenger Seat Belt Tensioner Squib connector.

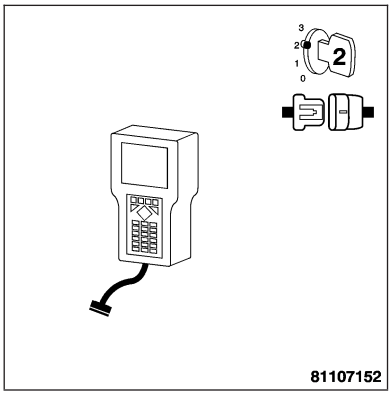

WARNING: TURN THE IGNITION ON, THEN RECONNECT THE BATTERY.

With the DRB III®, read the active DTCs.

Does the DRB III® display an active Passenger Seat Belt Tensioner Squib DTC?

Yes >> Go to 3

No >> Replace the Passenger Seat Belt Tensioner. **Refer to Page 8O-122**.

PASSENGER SEAT BELT TENSIONER SQUIB CIRCUIT — CONTINUED

Perform AIRBAG VERIFICATION TEST.

3. MEASURE THE RESISTANCE OF THE PASSENGER SEAT BELT SQUIB LINE 1 CIRCUIT

WARNING: TURN THE IGNITION OFF, DISCONNECT THE BATTERY AND WAIT TWO MINUTES BEFORE PROCEEDING.

Disconnect the ORC harness connector.

Note: Check connectors - Clean/repair as necessary.

Connect the appropriate harness adapter to the ORC connector.

Disconnect the Load Tool from the Passenger Seat Belt Tensioner Squib connector.

Measure the resistance of the Passenger Seat Belt Squib Line 1 circuit from the ORC connector to the Passenger Seat Belt Tensioner Squib connector.

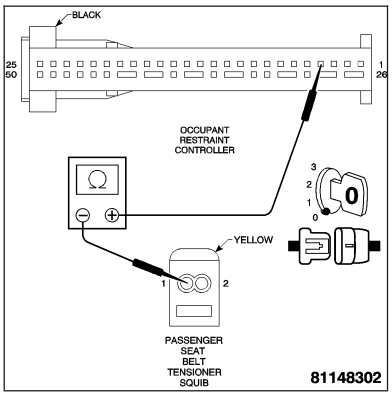

Is the resistance below 1.0 ohm?

Yes >> Go to 4

No >> Repair the Passenger Seat Belt Squib Line 1 circuit for an open.

Perform AIRBAG VERIFICATION TEST.

Note: When reconnecting the Airbag System components, the ignition must be turned off and the battery must be disconnected.

4. MEASURE THE RESISTANCE OF THE PASSENGER SEAT BELT SQUIB LINE 2 CIRCUIT

With the ignition off.

Measure the resistance of the Passenger Seat Belt Squib Line 2 circuit from the ORC connector to the Passenger Seat Belt Tensioner Squib connector.

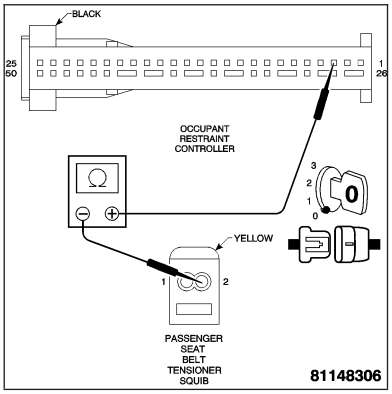

Is the resistance below 1.0 ohm?

Yes >> Go to 5

No >> Repair the Passenger Seat Belt Squib Line 2 circuit for an open.

Perform AIRBAG VERIFICATION TEST.

Note: When reconnecting the Airbag System components, the ignition must be turned off and the battery must be disconnected.

PASSENGER SEAT BELT TENSIONER SQUIB CIRCUIT — CONTINUED

5. MEASURE THE RESISTANCE OF THE PASSENGER SEAT BELT SQUIB CIRCUITS

With the ignition off.

Measure the resistance between the Passenger Seat Belt Squib Line 1 circuit and the Passenger Seat Belt Squib Line 2 circuit at the Passenger Seat Belt Tensioner Squib connector.

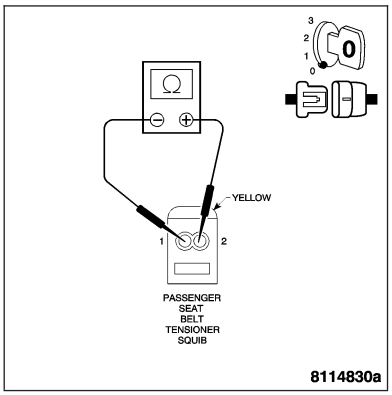

Is the resistance below 10K ohms?

Yes >> Repair the Passenger Seat Belt Squib circuits for a short to each other.

Perform AIRBAG VERIFICATION TEST.

Note: When reconnecting the Airbag System components, the ignition must be turned off and the battery must be disconnected.

No >> Go to 6

6. MEASURE THE VOLTAGE OF THE PASSENGER SEAT BELT SQUIB LINE 1 CIRCUIT

WARNING: TURN THE IGNITION ON, THEN RECONNECT THE BATTERY.

Measure the voltage of the Passenger Seat Belt Squib Line 1 circuit at the Squib connector.

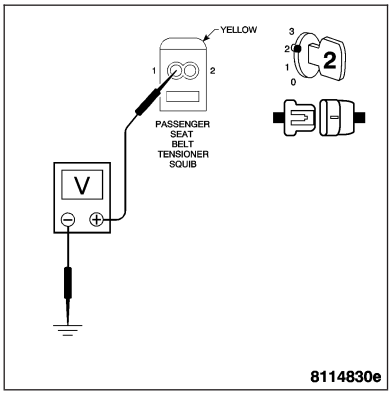

Is voltage present?

Yes >> Repair the Passenger Seat Belt Squib Line 1 circuit for a short to voltage.

Perform AIRBAG VERIFICATION TEST.

Note: When reconnecting the Airbag System components, the ignition must be turned off and the battery must be disconnected.

No >> Go to 7

7. MEASURE THE VOLTAGE OF THE PASSENGER SEAT BELT SQUIB LINE 2 CIRCUIT

With the ignition on.

Measure the voltage of the Passenger Seat Belt Squib Line 2 circuit at the Squib connector.

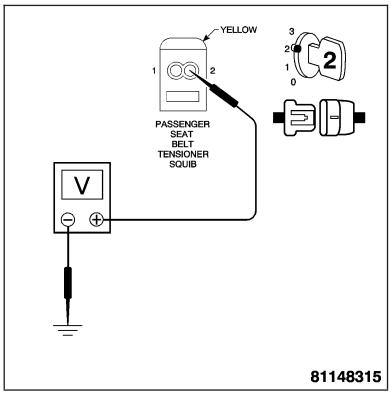

Is voltage present?

Yes >> Repair the Passenger Seat Belt Squib Line 2 circuit for a short to voltage.

Perform AIRBAG VERIFICATION TEST.

Note: When reconnecting the Airbag System components, the ignition must be turned off and the battery must be disconnected.

No >> Go to 8

PASSENGER SEAT BELT TENSIONER SQUIB CIRCUIT — CONTINUED

8. MEASURE THE RESISTANCE OF THE PASSENGER SEAT BELT SQUIB LINE 1 CIRCUIT

WARNING: TURN THE IGNITION OFF, DISCONNECT THE BATTERY AND WAIT TWO MINUTES BEFORE PROCEEDING.

Measure the resistance between ground and the Passenger Seat Belt Squib Line 1 circuit.

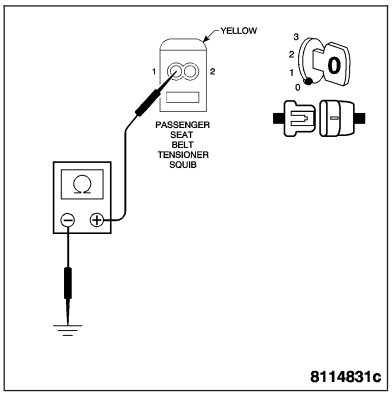

Is the resistance below 10K ohms?

Yes >> Repair the Passenger Seat Belt Squib Line 1 circuit for a short to ground.
Perform AIRBAG VERIFICATION TEST.

Note: When reconnecting the Airbag System components, the ignition must be turned off and the battery must be disconnected.

No >> Go to 9

9. MEASURE THE RESISTANCE OF THE PASSENGER SEAT BELT SQUIB LINE 2 CIRCUIT

With the ignition off.

Measure the resistance between ground and the Passenger Seat Belt Squib Line 2 circuit.

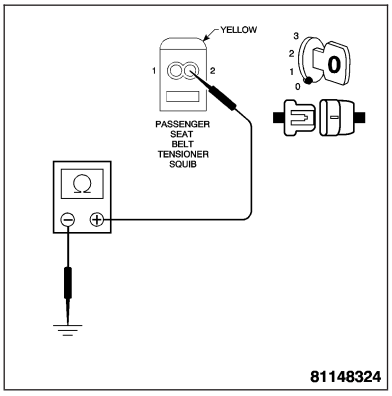

Is the resistance below 10K ohms?

Yes >> Repair the Passenger Seat Belt Squib Line 2 circuit for a short to ground.
Perform AIRBAG VERIFICATION TEST.

Note: When reconnecting the Airbag System components, the ignition must be turned off and the battery must be disconnected.

No >> Replace the Occupant Restraint Controller. **Refer to Page 8O-89**.

WARNING: IF THE OCCUPANT RESTRAINT CONTROLLER IS DROPPED AT ANY TIME, IT MUST BE REPLACED.

Perform AIRBAG VERIFICATION TEST.

PASSENGER SEAT BELT TENSIONER SQUIB CIRCUIT — CONTINUED

10. WITH THE DRB III®, READ DTCs

Note: Ensure the battery is fully charged.
Remove any special tools or jumper wires and reconnect all previously disconnected components - except the battery

WARNING: TURN THE IGNITION ON, THEN RECONNECT THE BATTERY.
With the DRB III®, record and erase all Restraint System DTCs.

All active codes must be resolved before diagnosing any stored codes.

Maintain a safe distance from all airbags while performing the following steps.

With the DRB III®, monitor active codes as you work through the system.

Note: Read the DTCs with the Passenger Airbag On/Off Switch in both switch positions.
Wiggle the wiring harness and connectors of the appropriate airbag system and rotate the steering wheel from stop to stop.

Note: Check connectors - Clean/repair as necessary.
You have just attempted to simulate the condition that initially set the trouble code message.

The following additional checks may assist you in identifying a possible intermittent problem:

- Visually inspect related wire harness connectors. Look for broken, bent, pushed out, spread, corroded, or contaminated terminals.
- Visually inspect the related harnesses. Look for chafed, pierced, pinched or partially broken wire.
- Refer to any Wiring Diagrams that may apply.

Did the DTC become ACTIVE?

Yes >> Go to 2

No >> The condition that caused this DTC to set is currently not present.
Perform AIRBAG VERIFICATION TEST.

PASSENGER AIRBAG SQUIB CIRCUIT

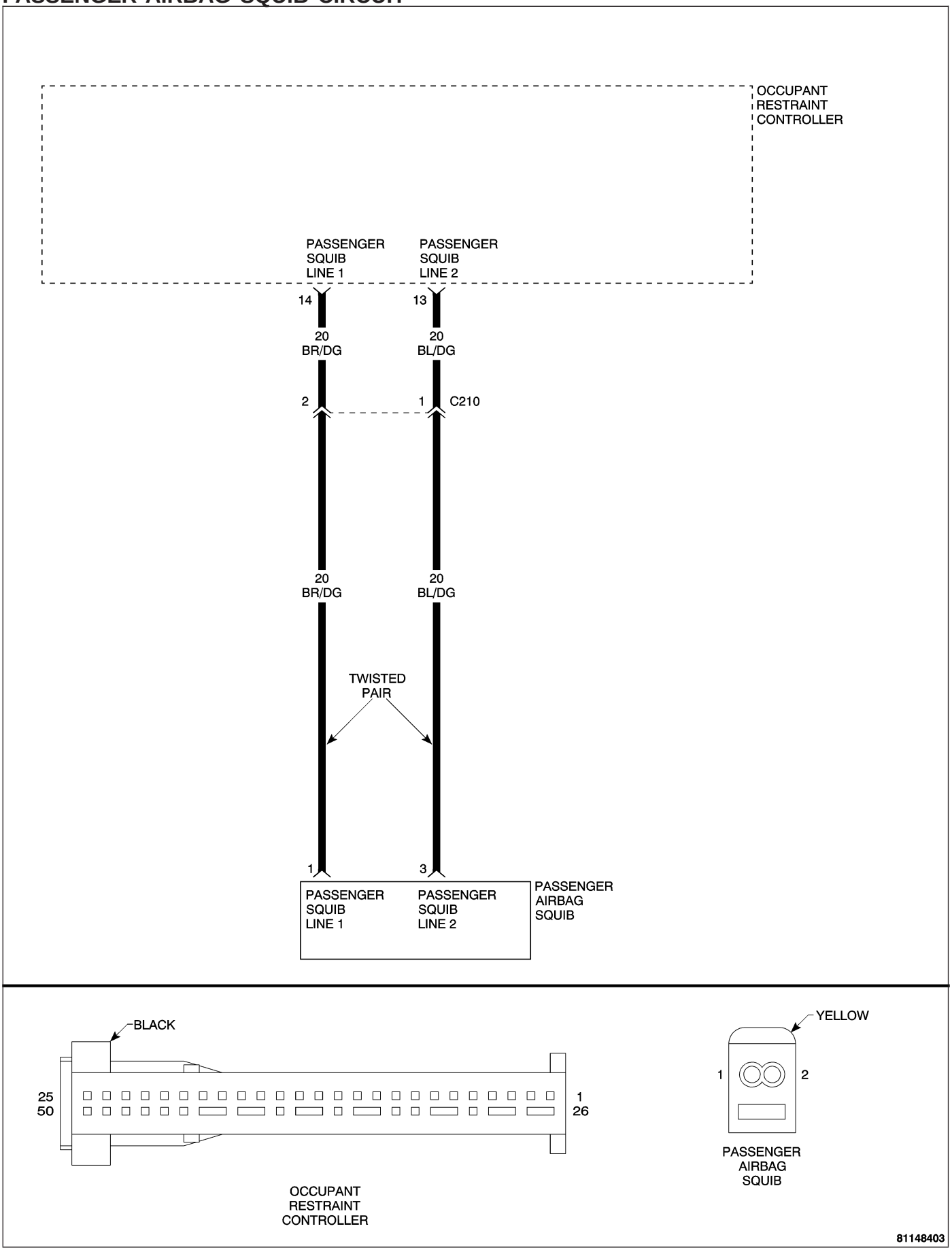

PASSENGER AIRBAG SQUIB CIRCUIT — CONTINUED

When Monitored and Set Condition

- When Monitored: Ignition on. The Occupant Restraint Controller (ORC) monitors the resistance of the Passenger Squib circuits.
- Set Condition: The Occupant Restraint Controller (ORC) has detected abnormally high voltage, low resistance, high resistance or an open circuit on one or both of the Passenger Squib circuits.

POSSIBLE CAUSES
PASSENGER SQUIB CIRCUIT(S) OPEN
PASSENGER SQUIB CIRCUIT(S) SHORT TO VOLTAGE
PASSENGER SQUIB CIRCUIT(S) SHORT TO GROUND
PASSENGER SQUIB CIRCUITS SHORT TO EACH OTHER
PASSENGER AIRBAG SQUIB
OCCUPANT RESTRAINT CONTROLLER

For a complete Restraints System Circuit Diagram, **Refer to Page 8O-68**.

Diagnostic Test

1. WITH THE DRB III®, READ DTCs

Note: When reconnecting the Airbag System components, the ignition must be turned off and the battery must be disconnected.

Note: Ensure the battery is fully charged.

Turn the ignition on.

With the DRB III®, select ACTIVE or STORED DTCs.

Is the DTC ACTIVE?

Yes >> Go to 2

No >> Go to 10

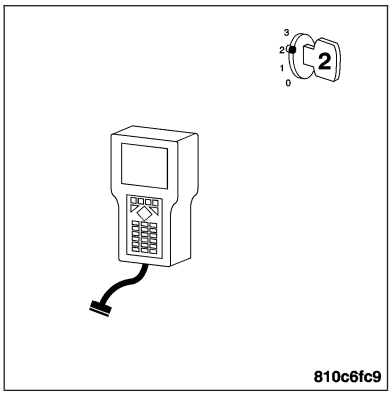

PASSENGER AIRBAG SQUIB CIRCUIT — CONTINUED

2. WITH THE DRB III®, READ ACTIVE DTCs

WARNING: TURN THE IGNITION OFF, DISCONNECT THE BATTERY AND WAIT TWO MINUTES BEFORE PROCEEDING.

WARNING: DO NOT PLACE AN INTACT UNDEPLOYED AIRBAG FACE DOWN ON A HARD SURFACE, THE AIRBAG WILL PROPEL INTO THE AIR IF ACCIDENTALLY DEPLOYED, AND COULD RESULT IN SERIOUS OR FATAL INJURY.

Disconnect the Passenger airbag.

Note: Check connectors - Clean/repair as necessary.

Connect the appropriate Load Tool to the Passenger Airbag Squib connector.

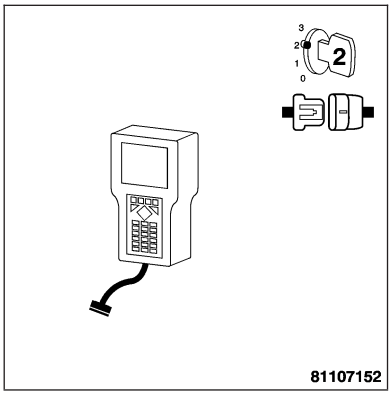

WARNING: TURN THE IGNITION ON, THEN RECONNECT THE BATTERY.

With the DRB III®, read the active Airbag DTCs.

Does the DRB III® display an active Passenger Airbag Squib DTC?

Yes >> Go to 3

No >> Replace the Passenger Airbag. **Refer to Page 8O-102**. Perform AIRBAG VERIFICATION TEST.

3. MEASURE THE RESISTANCE OF THE PASSENGER SQUIB LINE 1 CIRCUIT

WARNING: TURN THE IGNITION OFF, DISCONNECT THE BATTERY AND WAIT TWO MINUTES BEFORE PROCEEDING.

Disconnect the ORC harness connector.

Note: Check connectors - Clean/repair as necessary.

Connect the appropriate harness adapter to the ORC connector.

Disconnect the Load Tool from the Passenger Airbag Squib connector.

Measure the resistance of the Passenger Squib Line 1 circuit from the ORC adapter to the Passenger Airbag Squib connector.

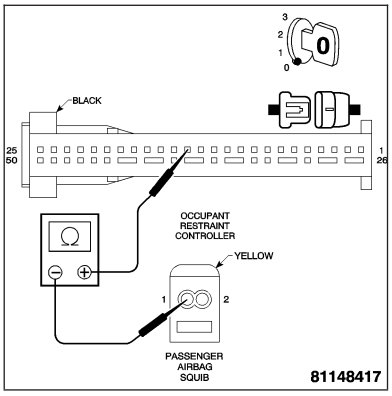

Is the resistance below 1.0 ohm?

Yes >> Go to 4

No >> Repair the Passenger Squib Line 1 circuit for an open. Perform AIRBAG VERIFICATION TEST.

Note: When reconnecting the Airbag System components, the ignition must be turned off and the battery must be disconnected.

PASSENGER AIRBAG SQUIB CIRCUIT — CONTINUED

4. MEASURE THE RESISTANCE OF THE PASSENGER SQUIB LINE 2 CIRCUIT

With the ignitin off.

Measure the resistance of the Passenger Squib Line 2 circuit from the ORC adapter to the Passenger Airbag Squib connector.

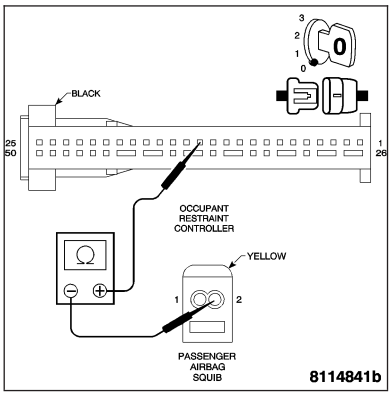

Is the resistance below 1.0 ohm?

Yes >> Go to 5

No >> Repair the Passenger Squib Line 2 circuit for an open.
Perform AIRBAG VERIFICATION TEST.

Note: When reconnecting the Airbag System components, the ignition must be turned off and the battery must be disconnected.

5. MEASURE THE RESISTANCE OF THE PASSENGER SQUIB CIRCUITS

With the ignitin off.

Measure the resistance between the Passenger Squib Line 1 circuit and the Passenger Squib Line 2 circuit at the Passenger Airbag Squib connector.

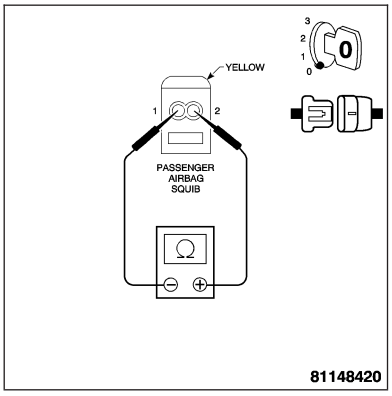

Is the resistance below 10K ohms?

Yes >> Repair the Passenger Squib circuits for a short to each other.
Perform AIRBAG VERIFICATION TEST.

Note: When reconnecting the Airbag System components, the ignition must be turned off and the battery must be disconnected.

No >> Go to 6

6. MEASURE THE VOLTAGE OF THE PASSENGER SQUIB LINE 1 CIRCUIT

WARNING: TURN THE IGNITION ON, THEN RECONNECT THE BATTERY.

Measure the voltage of the Passenger Squib Line 1 circuit at the Squib connector.

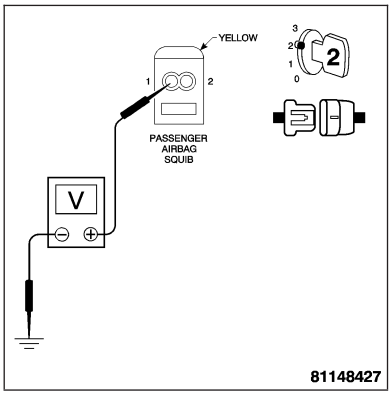

Is voltage present?

Yes >> Repair the Passenger Squib Line 1 circuit for a short to voltage.
Perform AIRBAG VERIFICATION TEST.

Note: When reconnecting the Airbag System components, the ignition must be turned off and the battery must be disconnected.

No >> Go to 7

PASSENGER AIRBAG SQUIB CIRCUIT — CONTINUED

7. MEASURE THE VOLTAGE OF THE PASSENGER SQUIB LINE 2 CIRCUIT

With the ignition on.

Measure the voltage of the Passenger Squib Line 2 circuit between at the Squib connector.

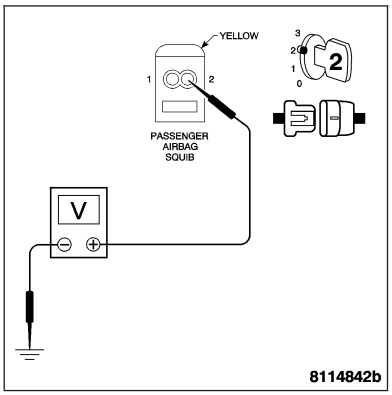

Is voltage present?

Yes >> Repair the Passenger Squib Line 2 circuit for a short to voltage.

Perform AIRBAG VERIFICATION TEST.

Note: When reconnecting the Airbag System components, the ignition must be turned off and the battery must be disconnected.

No >> Go to 8

8. MEASURE THE RESISTANCE OF THE PASSENGER SQUIB LINE 1 CIRCUIT

WARNING: TURN THE IGNITION OFF, DISCONNECT THE BATTERY AND WAIT TWO MINUTES BEFORE PROCEEDING.

Measure the resistance between ground and the Passenger Squib Line 1 circuit.

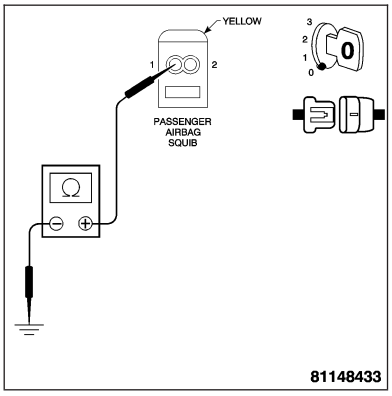

Is the resistance below 10K ohms?

Yes >> Repair the Passenger Squib Line 1 circuit for a short to ground.

Perform AIRBAG VERIFICATION TEST.

Note: When reconnecting the Airbag System components, the ignition must be turned off and the battery must be disconnected.

No >> Go to 9

9. MEASURE THE RESISTANCE OF THE PASSENGER SQUIB LINE 2 CIRCUIT

With the igntion off.

Measure the resistance between ground and the Passenger Squib Line 2 circuit.

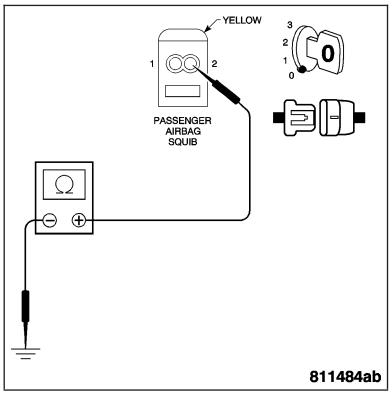

Is the resistance below 10K ohms?

Yes >> Repair the Passenger Squib Line 2 circuit for a short to ground.

Perform AIRBAG VERIFICATION TEST.

Note: When reconnecting the Airbag System components, the ignition must be turned off and the battery must be disconnected.

No >> Replace the Occupant Restraint Controller. **Refer to Page 8O-89**.

WARNING: IF THE OCCUPANT RESTRAINT CONTROLLER IS DROPPED AT ANY TIME, IT MUST BE REPLACED.

Perform AIRBAG VERIFICATION TEST.

PASSENGER AIRBAG SQUIB CIRCUIT — CONTINUED

10. WITH THE DRB III®, READ DTCs

Note: Ensure the battery is fully charged.
With the DRB III®, record and erase all Restraint System DTCs.

All active codes must be resolved before diagnosing any stored codes.

Maintain a safe distance from all airbags while performing the following steps.

With the DRB III®, monitor active codes as you work through the system.

Note: Read the DTCs with the Passenger Airbag On/Off Switch in both switch positions.
Wiggle the wiring harness and connectors of the appropriate airbag system and rotate the steering wheel from stop to stop.

Note: Check connectors - Clean/repair as necessary.
You have just attempted to simulate the condition that initially set the trouble code message.

The following additional checks may assist you in identifying a possible intermittent problem:

- Visually inspect related wire harness connectors. Look for broken, bent, pushed out, spread, corroded or contaminated terminals.
- Visually inspect the related harnesses. Look for chafed, pierced, pinched or partially broken wire.
- Refer to any Wiring Diagrams that may apply.

Did the DTC become ACTIVE?

Yes >> Go to 2

No >> The condition that caused this DTC to set is currently not present.
Perform AIRBAG VERIFICATION TEST.

LEFT SIDE AIRBAG SQUIB CIRCUIT

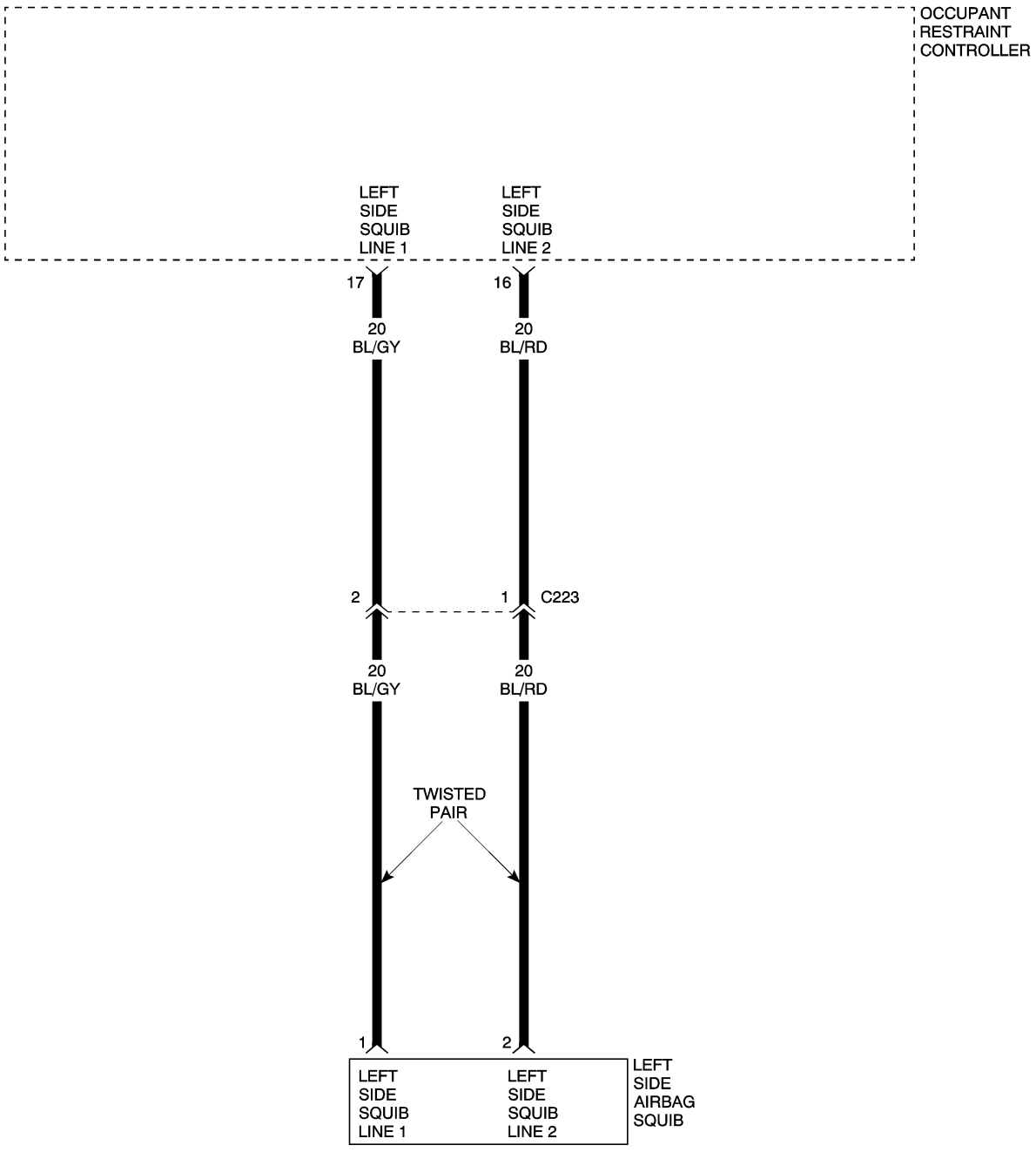

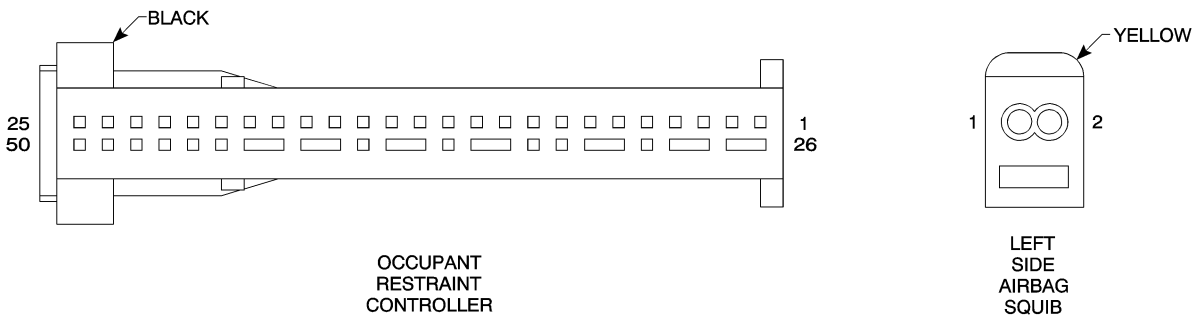

811486c8

LEFT SIDE AIRBAG SQUIB CIRCUIT — CONTINUED

When Monitored and Set Condition

- When Monitored: Ignition on. The Occupant Restraint Controller (ORC) monitors the resistance of the Left Side Squib circuits.
- Set Condition: The ORC has detected abnormally high voltage, low resistance, high resistance or an open circuit on one or both of the Left Side Squib circuits.

POSSIBLE CAUSES
LEFT SIDE SQUIB CIRCUIT(S) OPEN
LEFT SIDE SQUIB CIRCUIT(S) SHORT TO VOLTAGE
LEFT SIDE SQUIB CIRCUIT(S) SHORT TO GROUND
LEFT SIDE SQUIB CIRCUITS SHORT TO EACH OTHER
LEFT SIDE AIRBAG SQUIB
OCCUPANT RESTRAINT CONTROLLER

For a complete Restraints System Circuit Diagram, **Refer to Page 8O-68**.

Diagnostic Test

1. WITH THE DRB III®, READ DTCs

Note: When reconnecting the Airbag System components, the ignition must be turned off and the battery must be disconnected.

Note: Ensure the battery is fully charged.

Turn the ignition on.

With the DRB III®, select ACTIVE or STORED DTCs.

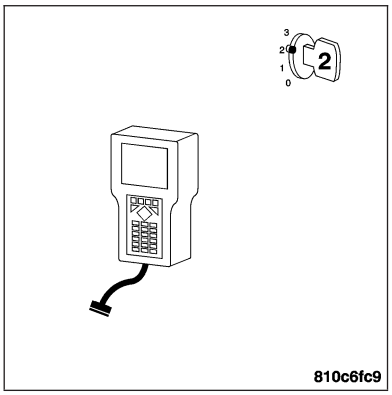

Is the DTC ACTIVE?

Yes >> Go to 2

No >> Go to 10

LEFT SIDE AIRBAG SQUIB CIRCUIT — CONTINUED

2. WITH THE DRB III®, READ ACTIVE DTCs

WARNING: TURN THE IGNITION OFF, DISCONNECT THE BATTERY AND WAIT TWO MINUTES BEFORE PROCEEDING.

WARNING: DO NOT PLACE AN INTACT UNDEPLOYED AIRBAG FACE DOWN ON A HARD SURFACE, THE AIRBAG WILL PROPEL INTO THE AIR IF ACCIDENTALLY DEPLOYED, AND COULD RESULT IN SERIOUS OR FATAL INJURY.

Disconnect the Left Side airbag.

Note: Check connectors - Clean/repair as necessary.

Connect the appropriate Load Tool to the Left Side Airbag Squib connector.

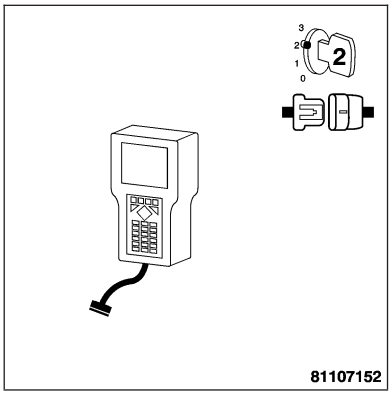

WARNING: TURN THE IGNITION ON, THEN RECONNECT THE BATTERY.

With the DRB III®, read the active Airbag DTCs.

Does the DRB III® display an active Left Side Airbag Squib DTC?

Yes >> Go to 3

No >> Replace the Left Side Airbag. **Refer to Page 8O-114**. Perform AIRBAG VERIFICATION TEST.

3. MEASURE THE RESISTANCE OF THE LEFT SIDE SQUIB LINE 1 CIRCUIT

WARNING: TURN THE IGNITION OFF, DISCONNECT THE BATTERY AND WAIT TWO MINUTES BEFORE PROCEEDING.

Disconnect the ORC harness connector.

Note: Check connectors - Clean/repair as necessary.

Connect the appropriate harness adapter to the ORC connector.

Disconnect the Load Tool from the Left Side Airbag Squib connector.

Measure the resistance of the Left Side Squib Line 1 circuit from the ORC connector to the Left Side Airbag Squib connector.

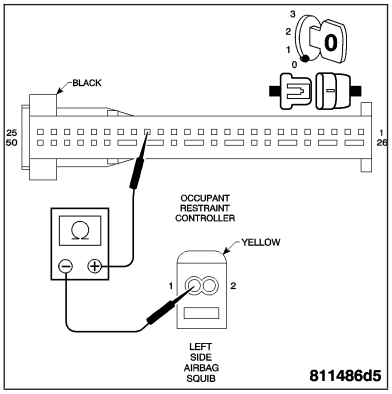

Is the resistance below 1.0 ohm?

Yes >> Go to 4

No >> Repair the Left Side Squib Line 1 circuit for an open. Perform AIRBAG VERIFICATION TEST.

Note: When reconnecting the Airbag System components, the ignition must be turned off and the battery must be disconnected.

LEFT SIDE AIRBAG SQUIB CIRCUIT — CONTINUED

4. MEASURE THE RESISTANCE OF THE LEFT SIDE SQUIB LINE 2 CIRCUIT

With the ignition off.

Measure the resistance of the Left Side Squib Line 2 circuit from the ORC adapter to the Left Side Airbag Squib connector.

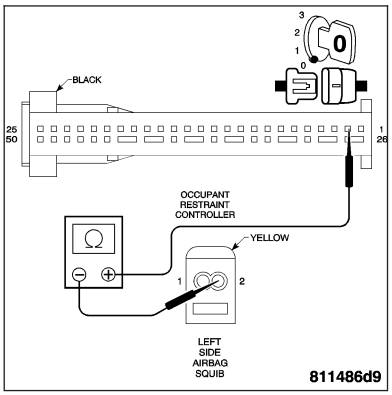

Is the resistance below 1.0 ohm?

Yes >> Go to 5

No >> Repair the Left Side Squib Line 2 circuit for an open.
Perform AIRBAG VERIFICATION TEST.

Note: When reconnecting the Airbag System components, the ignition must be turned off and the battery must be disconnected.

5. MEASURE THE RESISTANCE OF THE LEFT SIDE SQUIB CIRCUITS

With the ignition off.

Measure the resistance between the Left Side Squib Line 1 circuit and the Left Side Squib Line 2 circuit at the Left Side Airbag Squib connector.

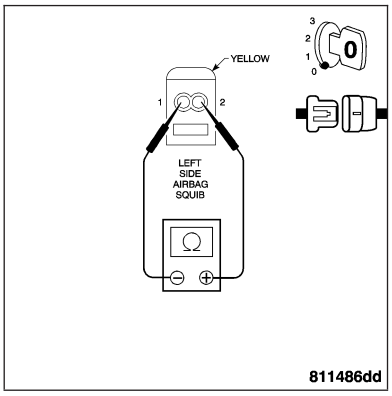

Is the resistance below 10K ohms?

Yes >> Repair the Left Side Squib circuits for a short to each other.
Perform AIRBAG VERIFICATION TEST.

Note: When reconnecting the Airbag System components, the ignition must be turned off and the battery must be disconnected.

No >> Go to 6

6. MEASURE THE VOLTAGE OF THE LEFT SIDE SQUIB LINE 1 CIRCUIT

WARNING: TURN THE IGNITION ON, THEN RECONNECT THE BATTERY.

Measure the voltage of the Left Side Squib Line 1 circuit at the Squib connector.

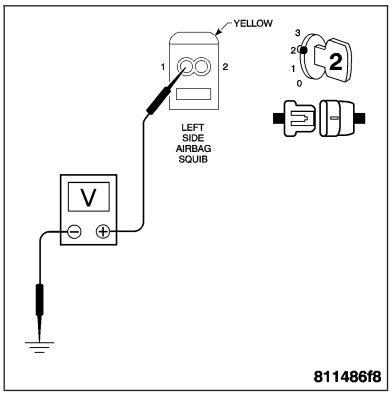

Is voltage present?

Yes >> Repair the Left Side Squib Line 1 circuit for a short to voltage.
Perform AIRBAG VERIFICATION TEST.

Note: When reconnecting the Airbag System components, the ignition must be turned off and the battery must be disconnected.

No >> Go to 7

LEFT SIDE AIRBAG SQUIB CIRCUIT — CONTINUED

7. MEASURE THE VOLTAGE OF THE LEFT SIDE SQUIB LINE 2 CIRCUIT

With the ignition on.

Measure the voltage of the Left Side Squib Line 2 circuit at the Squib connector.

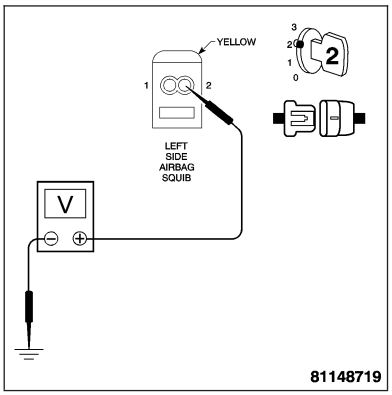

Is voltage present?

Yes >> Repair the Left Side Squib Line 2 circuit for a short to voltage.

Perform AIRBAG VERIFICATION TEST.

Note: When reconnecting the Airbag System components, the ignition must be turned off and the battery must be disconnected.

No >> Go to 8

8. MEASURE THE RESISTANCE OF THE LEFT SIDE SQUIB LINE 1 CIRCUIT

WARNING: TURN THE IGNITION OFF, DISCONNECT THE BATTERY AND WAIT TWO MINUTES BEFORE PROCEEDING.

Measure the resistance between ground and the Left Side Squib Line 1 circuit.

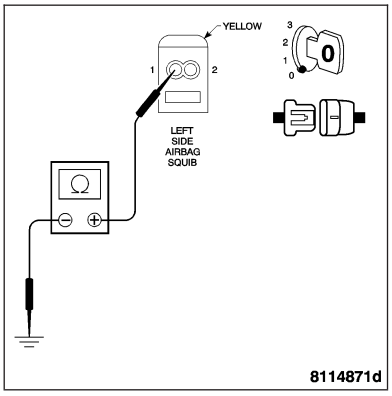

Is the resistance below 10K ohms?

Yes >> Repair the Left Side Squib Line 1 circuit for a short to ground.

Perform AIRBAG VERIFICATION TEST.

Note: When reconnecting the Airbag System components, the ignition must be turned off and the battery must be disconnected.

No >> Go to 9

9. MEASURE THE RESISTANCE OF THE LEFT SIDE SQUIB LINE 2 CIRCUIT

With the ignition off.

Measure the resistance between ground and the Left Side Squib Line 2 circuit.

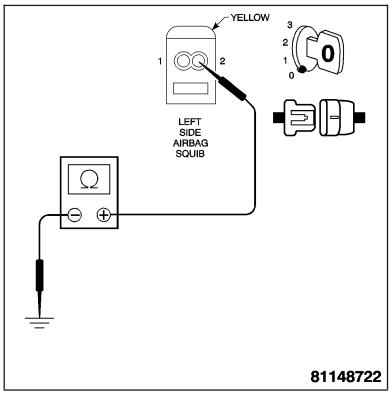

Is the resistance below 10K ohms?

Yes >> Repair the Left Side Squib Line 2 circuit for a short to ground.

Perform AIRBAG VERIFICATION TEST.

Note: When reconnecting the Airbag System components, the ignition must be turned off and the battery must be disconnected.

No >> Replace the Occupant Restraint Controller. **Refer to Page 8O-89**.

WARNING: IF THE OCCUPANT RESTRAINT CONTROLLER IS DROPPED AT ANY TIME, IT MUST BE REPLACED.

Perform AIRBAG VERIFICATION TEST.

LEFT SIDE AIRBAG SQUIB CIRCUIT — CONTINUED

10. WITH THE DRB III®, READ DTCs

Note: Ensure the battery is fully charged.
With the DRB III®, record and erase all Restraint System DTCs.

All active codes must be resolved before diagnosing any stored codes.

Maintain a safe distance from all airbags while performing the following steps.

With the DRB III®, monitor active codes as you work through the system.

Note: Read the DTCs with the Passenger Airbag On/Off Switch in both switch positions.
Wiggle the wiring harness and connectors of the appropriate airbag system and rotate the steering wheel from stop to stop.

Note: Check connectors - Clean/repair as necessary.
You have just attempted to simulate the condition that initially set the trouble code message.

The following additional checks may assist you in identifying a possible intermittent problem:

- Visually inspect related wire harness connectors. Look for broken, bent, pushed out, spread, corroded or contaminated terminals.
- Visually inspect the related harnesses. Look for chafed, pierced, pinched or partially broken wire.
- Refer to any Wiring Diagrams that may apply.

Did the DTC become ACTIVE?

Yes >> Go to 2

No >> The condition that caused this DTC to set is currently not present.
Perform AIRBAG VERIFICATION TEST.

RIGHT SIDE AIRBAG SQUIB CIRCUIT

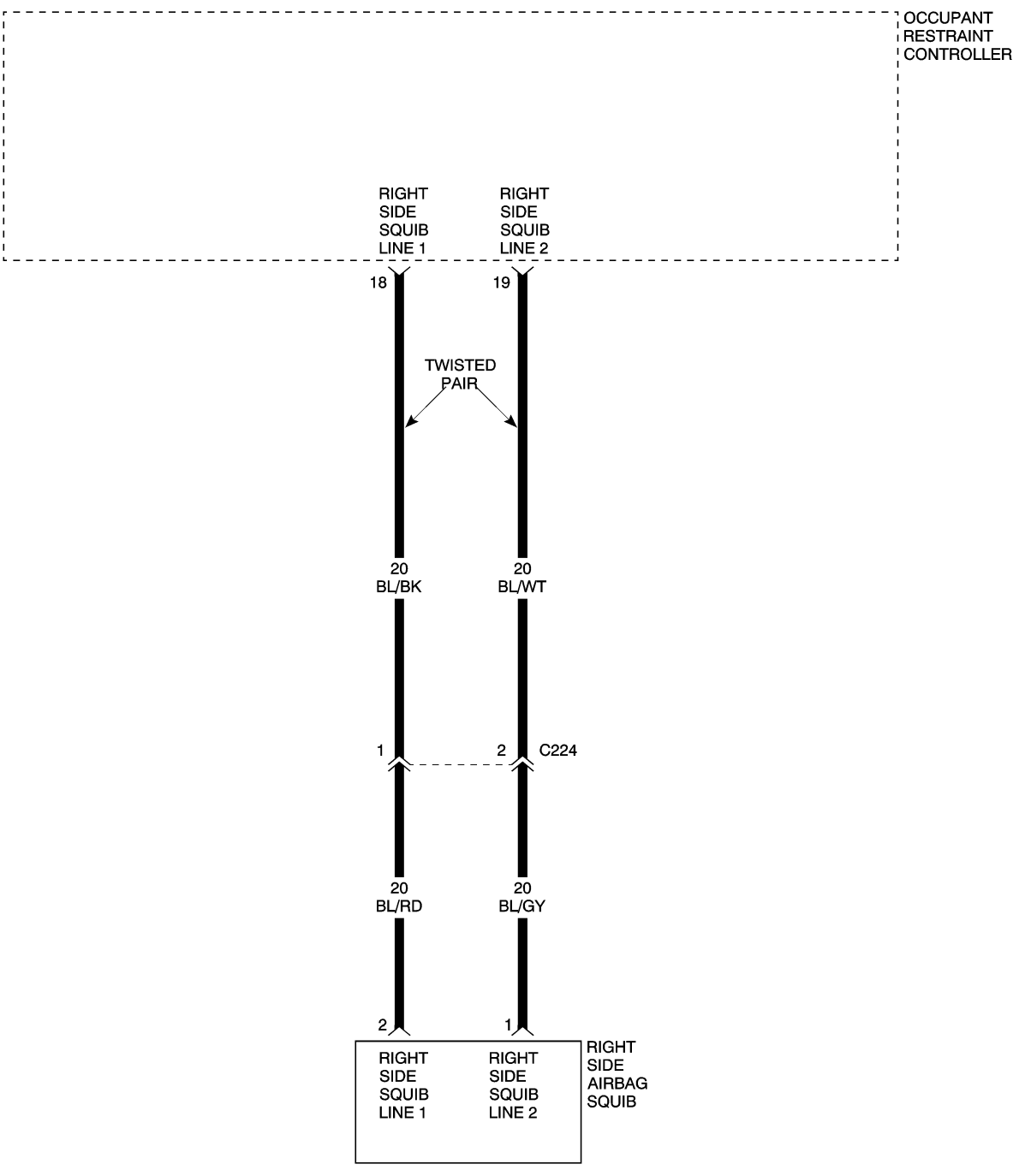

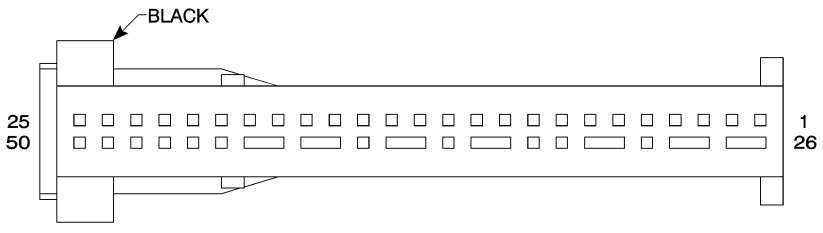

OCCUPANT
RESTRAINT
CONTROLLER

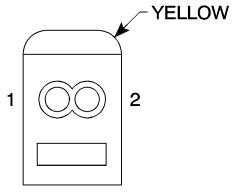

RIGHT
SIDE
AIRBAG
SQUIB

811487fc

RIGHT SIDE AIRBAG SQUIB CIRCUIT — CONTINUED

When Monitored and Set Condition

- When Monitored: Ignition on. The Occupant Restraint Controller (ORC) monitors the resistance of the Right Side Squib circuits.
- Set Condition: The ORC has detected abnormally high voltage, low resistance, high resistance or an open circuit on one or both of the Right Side Squib circuits.

POSSIBLE CAUSES
RIGHT SIDE SQUIB CIRCUIT(S) OPEN
RIGHT SIDE SQUIB CIRCUIT(S) SHORT TO VOLTAGE
RIGHT SIDE SQUIB CIRCUIT(S) SHORT TO GROUND
RIGHT SIDE SQUIB CIRCUITS SHORT TO EACH OTHER
RIGHT SIDE AIRBAG SQUIB
OCCUPANT RESTRAINT CONTROLLER

For a complete Restraints System Circuit Diagram, **Refer to Page 8O-68**.

Diagnostic Test

1. WITH THE DRB III®, READ DTCs

Note: When reconnecting the Airbag System components, the ignition must be turned off and the battery must be disconnected.

Note: Ensure the battery is fully charged.

Turn the ignition on.

With the DRB III®, select ACTIVE or STORED DTCs.

Is the DTC ACTIVE?

Yes >> Go to 2

No >> Go to 10

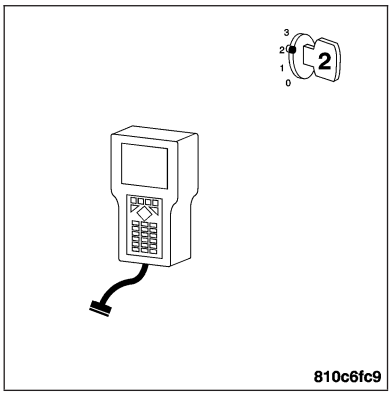

RIGHT SIDE AIRBAG SQUIB CIRCUIT — CONTINUED

2. WITH THE DRB III®, READ ACTIVE DTCs

WARNING: TURN THE IGNITION OFF, DISCONNECT THE BATTERY AND WAIT TWO MINUTES BEFORE PROCEEDING.

WARNING: DO NOT PLACE AN INTACT UNDEPLOYED AIRBAG FACE DOWN ON A HARD SURFACE; THE AIRBAG WILL PROPEL INTO THE AIR IF ACCIDENTALLY DEPLOYED, AND COULD RESULT IN SERIOUS OR FATAL INJURY.

Disconnect the Right Side airbag.

Note: Check connectors - Clean/repair as necessary.

Connect the appropriate Load Tool to the Right Side Airbag Squib connector.

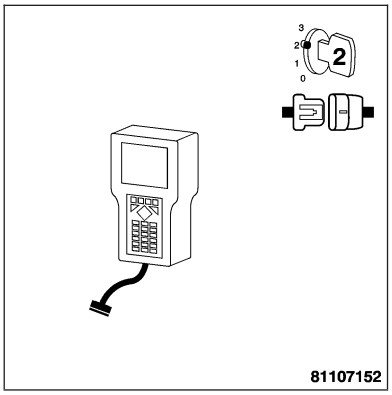

WARNING: TURN THE IGNITION ON, THEN RECONNECT THE BATTERY.

With the DRB III®, read the active Airbag DTCs.

Does the DRB III® display an active Right Side Airbag Squib DTC?

Yes >> Go to 3

No >> Replace the Right Side Airbag. **Refer to Page 8O-114**. Perform AIRBAG VERIFICATION TEST.

3. MEASURE THE RESISTANCE OF THE RIGHT SIDE SQUIB LINE 1 CIRCUIT

WARNING: TURN THE IGNITION OFF, DISCONNECT THE BATTERY AND WAIT TWO MINUTES BEFORE PROCEEDING.

Disconnect the ORC harness connector.

Note: Check connectors - Clean/repair as necessary.

Connect the appropriate harness adapter to the ORC connector.

Disconnect the Load Tool from the Right Side Airbag Squib connector.

Measure the resistance of the Right Side Squib Line 1 circuit from the ORC adapter to the Right Side Airbag Squib connector.

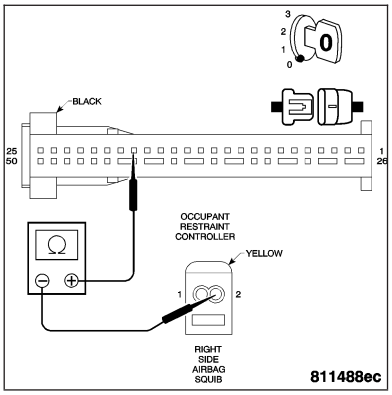

Is the resistance below 1.0 ohm?

Yes >> Go to 4

No >> Repair the Right Side Squib Line 1 circuit for an open. Perform AIRBAG VERIFICATION TEST.

Note: When reconnecting the Airbag System components, the ignition must be turned off and the battery must be disconnected.

RIGHT SIDE AIRBAG SQUIB CIRCUIT — CONTINUED

4. MEASURE THE RESISTANCE OF THE RIGHT SIDE SQUIB LINE 2 CIRCUIT

With the ignition off.

Measure the resistance of the Right Side Squib Line 2 circuit from the ORC adapter to the Right Side Airbag Squib connector.

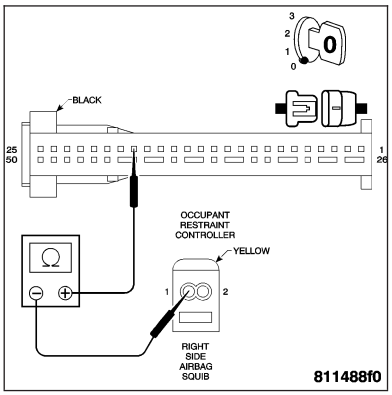

Is the resistance below 1.0 ohm?

Yes >> Go to 5

No >> Repair the Right Side Squib Line 2 circuit for an open.
Perform AIRBAG VERIFICATION TEST.

Note: When reconnecting the Airbag System components, the ignition must be turned off and the battery must be disconnected.

5. MEASURE THE RESISTANCE OF THE RIGHT SIDE SQUIB CIRCUITS

With the ignition off.

Measure the resistance between the Right Side Squib Line 1 circuit and the Right Side Squib Line 2 circuit at the Right Side Airbag Squib connector.

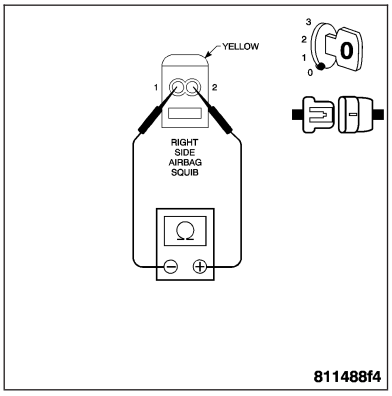

Is the resistance below 10K ohms?

Yes >> Repair the Right Side Squib circuits for a short to each other.
Perform AIRBAG VERIFICATION TEST.

Note: When reconnecting the Airbag System components, the ignition must be turned off and the battery must be disconnected.

No >> Go to 6

6. MEASURE THE VOLTAGE OF THE RIGHT SIDE SQUIB LINE 1 CIRCUIT

WARNING: TURN THE IGNITION ON, THEN RECONNECT THE BATTERY.

Measure the voltage of the Right Side Squib Line 1 circuit at the Squib connector.

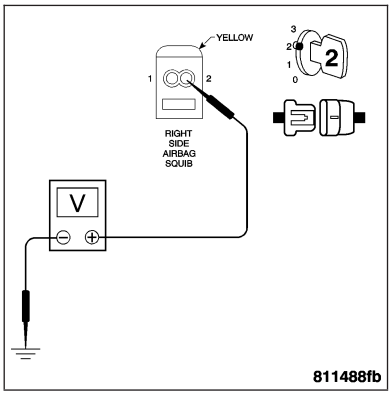

Is voltage present?

Yes >> Repair the Right Side Squib Line 1 circuit for a short to voltage.
Perform AIRBAG VERIFICATION TEST.

Note: When reconnecting the Airbag System components, the ignition must be turned off and the battery must be disconnected.

No >> Go to 7

RIGHT SIDE AIRBAG SQUIB CIRCUIT — CONTINUED

7. MEASURE THE VOLTAGE OF THE RIGHT SIDE SQUIB LINE 2 CIRCUIT

With the ignition on.

Measure the voltage of the Right Side Squib Line 2 circuit at the Squib connector.

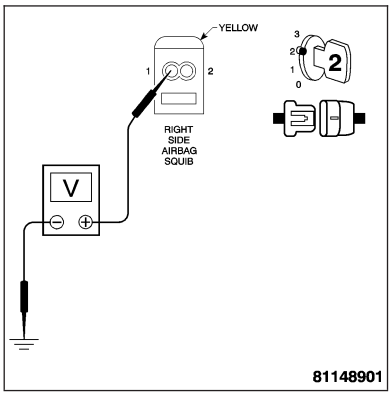

Is voltage present?

Yes >> Repair the Right Side Squib Line 2 circuit for a short to voltage.

Perform AIRBAG VERIFICATION TEST.

Note: When reconnecting the Airbag System components, the ignition must be turned off and the battery must be disconnected.

No >> Go to 8

8. MEASURE THE RESISTANCE OF THE RIGHT SIDE SQUIB LINE 1 CIRCUIT

WARNING: TURN THE IGNITION OFF, DISCONNECT THE BATTERY AND WAIT TWO MINUTES BEFORE PROCEEDING.

Measure the resistance between ground and the Right Side Squib Line 1 circuit.

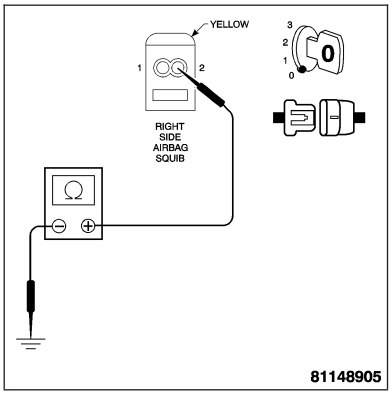

Is the resistance below 10K ohms?

Yes >> Repair the Right Side Squib Line 1 circuit for a short to ground.

Perform AIRBAG VERIFICATION TEST.

Note: When reconnecting the Airbag System components, the ignition must be turned off and the battery must be disconnected.

No >> Go to 9

9. MEASURE THE RESISTANCE OF THE RIGHT SIDE SQUIB LINE 2 CIRCUIT

With the ignition off.

Measure the resistance between ground and the Right Side Squib Line 2 circuit.

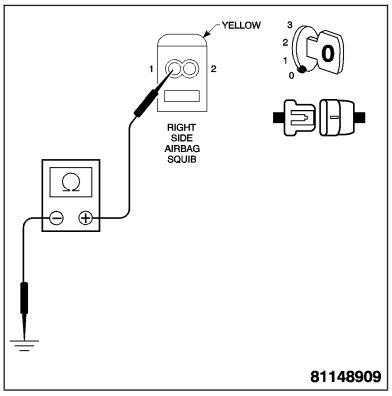

Is the resistance below 10K ohms?

Yes >> Repair the Right Side Squib Line 2 circuit for a short to ground.

Perform AIRBAG VERIFICATION TEST.

Note: When reconnecting the Airbag System components, the ignition must be turned off and the battery must be disconnected.

No >> Replace the Occupant Restraint Controller. **Refer to Page 8O-89**.

WARNING: IF THE OCCUPANT RESTRAINT CONTROLLER IS DROPPED AT ANY TIME, IT MUST BE REPLACED.

Perform AIRBAG VERIFICATION TEST.

RIGHT SIDE AIRBAG SQUIB CIRCUIT — CONTINUED

10. WITH THE DRB III®, READ DTCs

Note: Ensure the battery is fully charged.
With the DRB III®, record and erase all Restraint System DTCs.

All active codes must be resolved before diagnosing any stored codes.

Maintain a safe distance from all airbags while performing the following steps.

With the DRB III®, monitor active codes as you work through the system.

Note: Read the DTCs with the Passenger Airbag On/Off Switch in both switch positions.
Wiggle the wiring harness and connectors of the appropriate airbag system and rotate the steering wheel from stop to stop.

Note: Check connectors - Clean/repair as necessary.
You have just attempted to simulate the condition that initially set the trouble code message.

The following additional checks may assist you in identifying a possible intermittent problem:

- Visually inspect related wire harness connectors. Look for broken, bent, pushed out, spread, corroded or contaminated terminals.
- Visually inspect the related harnesses. Look for chafed, pierced, pinched or partially broken wire.
- Refer to any Wiring Diagrams that may apply.

Did the DTC become ACTIVE?

Yes >> Go to 2

No >> The condition that caused this DTC to set is currently not present.
Perform AIRBAG VERIFICATION TEST.

PROGRAMMING DOES NOT CORRESPOND TO THE VEHICLE EQUIPMENT

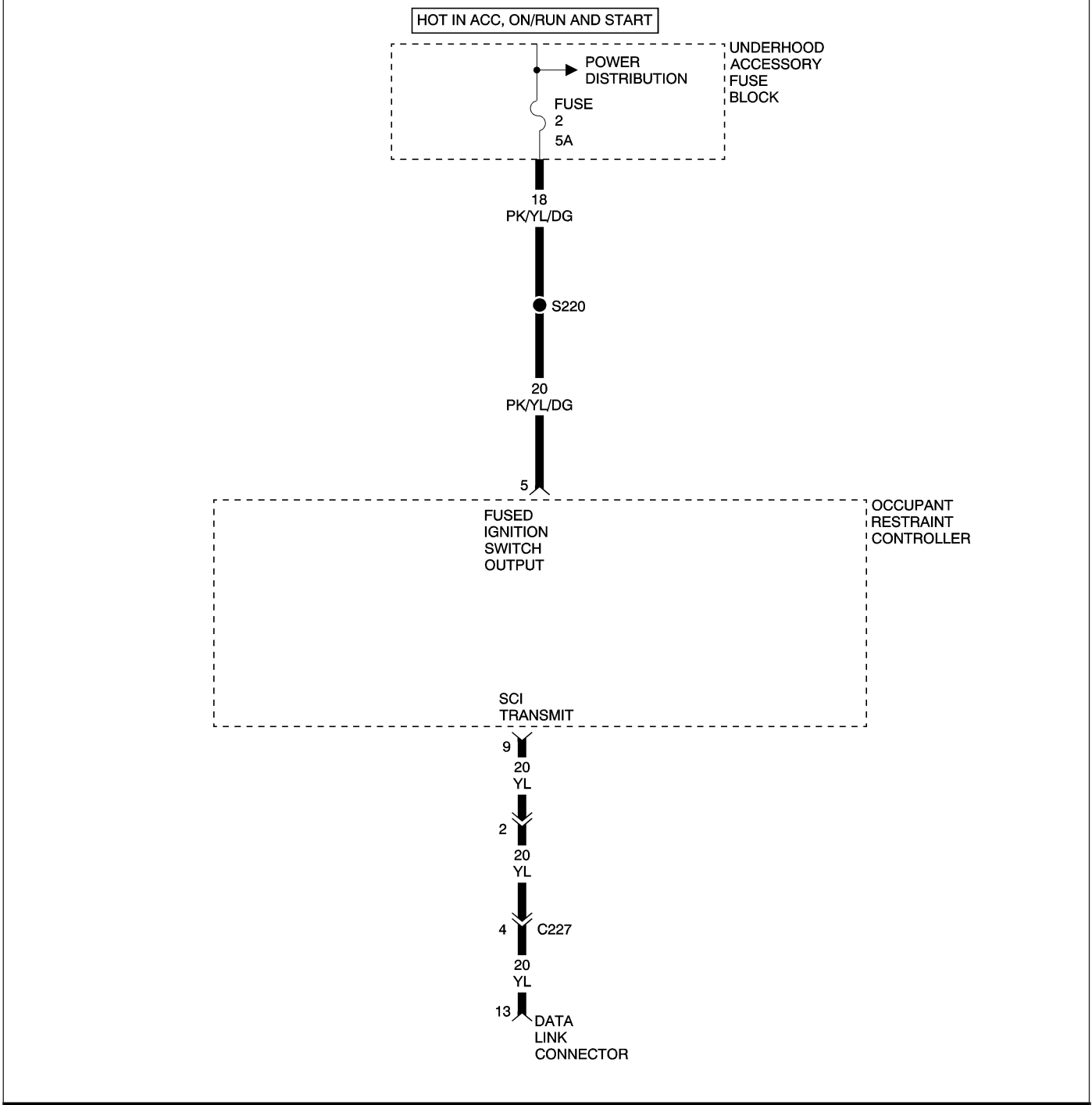

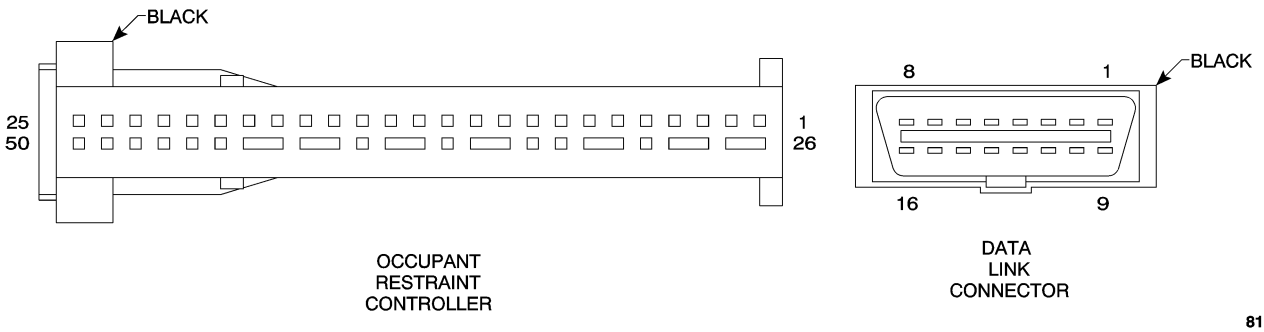

81148b2f

PROGRAMMING DOES NOT CORRESPOND TO THE VEHICLE EQUIPMENT — CONTINUED

When Monitored and Set Condition

- When Monitored: Ignition on.
- Set Condition: After the Occupant Restraint Controller (ORC) has been replaced, the Airbag Warning Indicator Light flashes to indicate that the ORC has not been programmed. A DTC is also set at this time.

POSSIBLE CAUSES
OCCUPANT RESTRAINT CONTROLLER NOT PROGRAMMED
OCCUPANT RESTRAINT CONTROLLER PROGRAMMING ERROR
OCCUPANT RESTRAINT CONTROLLER

For a complete Restraints System Circuit Diagram, **Refer to Page 8O-68**.

Diagnostic Test

1. PROGRAM THE ORC WITH THE DRB III®

Turn the ignition on.

With the DRB III®, program the ORC.

- On the parts control modules menu, program the side airbag equipment to YES.
- On the parts control modules menu, program the seat belt buckle equipment to YES.
- On the parts control modules menu, program the seat occupied recognition equipment to YES.
- Set the front passenger airbag to YES.

Turn the ignition off.

Turn the ignition on.

Erase DTCs, the Airbag Warning Indicator Light should flash to indicate that the programming procedure was successful.

With the DRB III®, read DTCs.

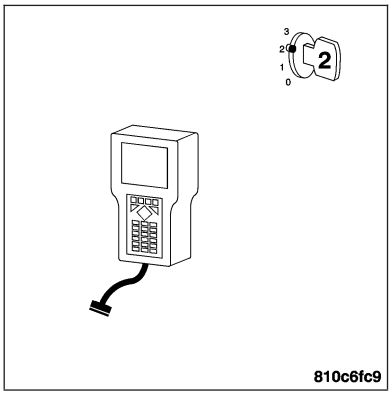

Does the DRB III® display a Programming Does Not Correspond To The Vehicle Equipment DTC?

Yes >> Attempt the programming procedure again or replace the Occupant Restraint Controller. **Refer to Page 8O-89**.

WARNING: IF THE OCCUPANT RESTRAINT CONTROLLER IS DROPPED AT ANY TIME, IT MUST BE REPLACED.

Perform AIRBAG VERIFICATION TEST.

No >> The condition that caused this DTC to set is currently not present.

ORC SYSTEM UNDERVOLTAGE

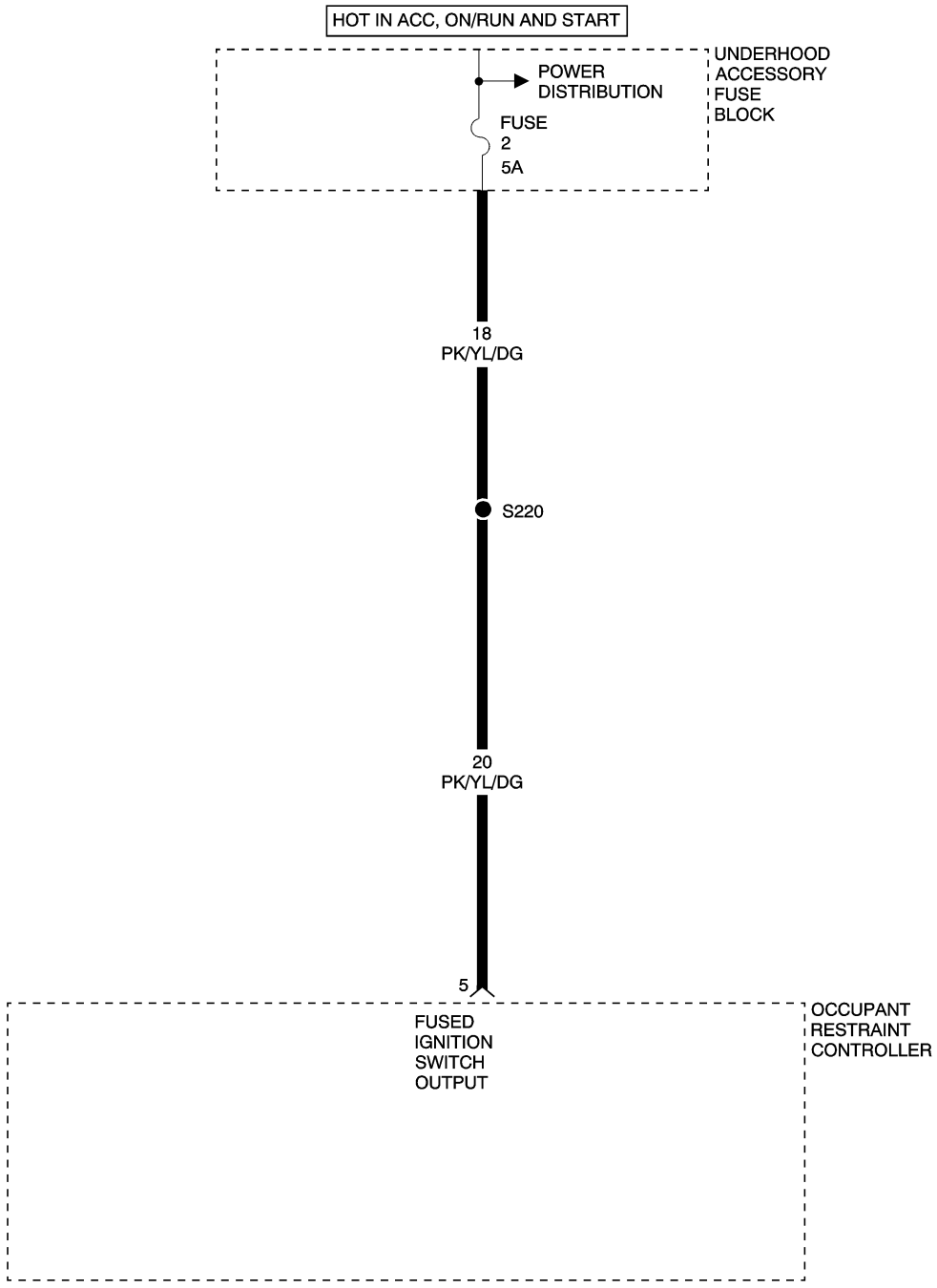

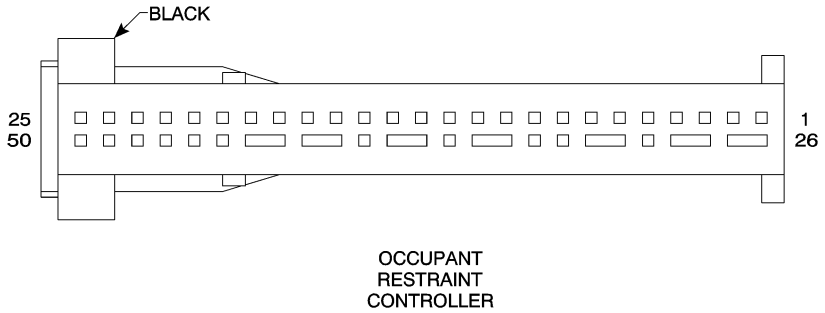

OCCUPANT RESTRAINT CONTROLLER

81148b8e

ORC SYSTEM UNDERVOLTAGE — CONTINUED

When Monitored and Set Condition

- When Monitored: Ignition on. The Occupant Restraint Controller (ORC) monitors the Fused Ignition Switch Output circuit for proper system voltage.
- Set Condition: If the voltage is below 9.5 volts, the Diagnostic Trouble Code (DTC) is set.

POSSIBLE CAUSES
BATTERY VOLTAGE LOW
FUSED IGNITION SWITCH OUTPUT CIRCUIT HIGH RESISTANCE
OCCUPANT RESTRAINT CONTROLLER

For a complete Restraints System Circuit Diagram, **Refer to Page 8O-68**.

Diagnostic Test

1. WITH THE DRB III®, READ DTCs

Note: When reconnecting the Airbag System components, the ignition must be turned off and the battery must be disconnected.

Turn the ignition on.

With the DRB III®, erase DTCs.

Turn the ignition off.

Turn the ignition on.

Start the engine.

Leave the vehicle running for at least 20 seconds.

With the DRB III®, read DTCs.

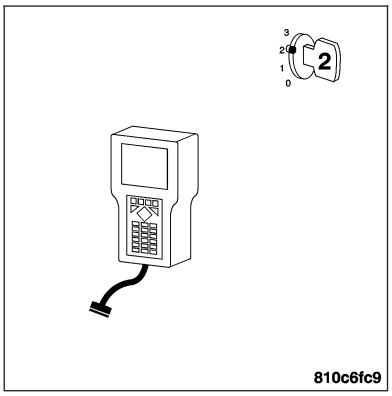

Does the DRB III® display a System Undervoltage DTC?

Yes >> Go to 2

No >> The condition that caused this DTC to set is currently not present. Inspect the related wiring harness for a possible intermittent condition.

2. MEASURE THE BATTERY VOLTAGE

Start the engine.

Measure the battery voltage with the engine running.

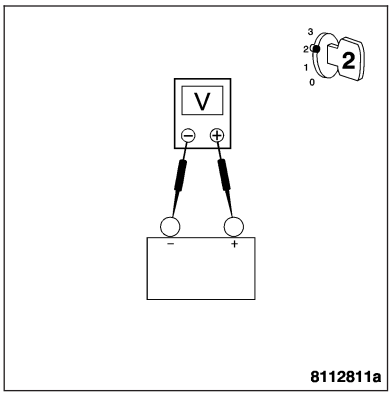

Is the battery voltage below 10 volts?

Yes >> Refer to the appropriate service information for charging system testing and repair.
Perform AIRBAG VERIFICATION TEST.

No >> Go to 3

ORC SYSTEM UNDERVOLTAGE — CONTINUED

3. MEASURE THE VOLTAGE OF THE FUSED IGNITION SWITCH OUTPUT CIRCUIT

WARNING: TURN THE IGNITION OFF, DISCONNECT THE BATTERY AND WAIT TWO MINUTES BEFORE PROCEEDING.

Disconnect the ORC harness connector.

Note: Check connectors - Clean/repair as necessary.

Turn the ignition on.

Measure the voltage of the Fused Ignition Switch Output circuit at the ORC harness connector.

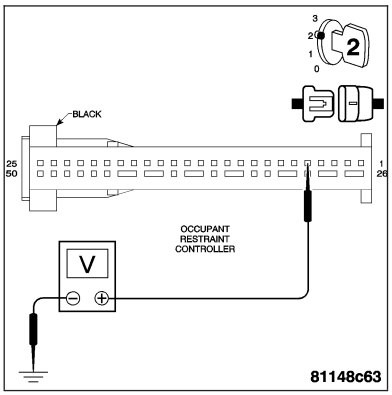

Is the voltage above 10 volts?

Yes >> Replace the Occupant Restraint Controller. **Refer to Page 8O-89**.

WARNING: IF THE OCCUPANT RESTRAINT CONTROLLER IS DROPPED AT ANY TIME, IT MUST BE REPLACED.

Perform AIRBAG VERIFICATION TEST.

No >> Repair the Fused Ignition Switch Output circuit for high resistance.

Perform AIRBAG VERIFICATION TEST.

AIRBAG WARNING INDICATOR CIRCUIT

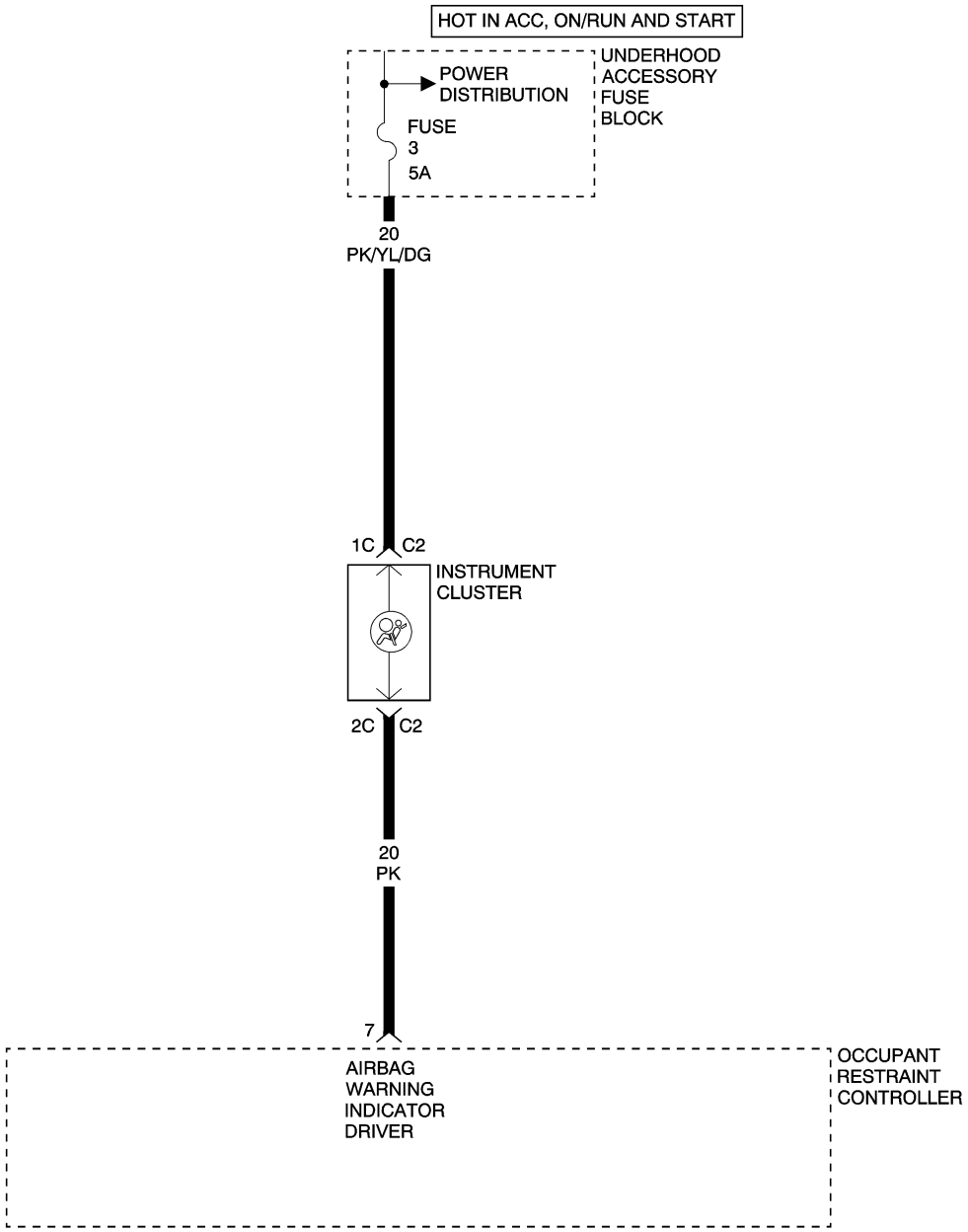

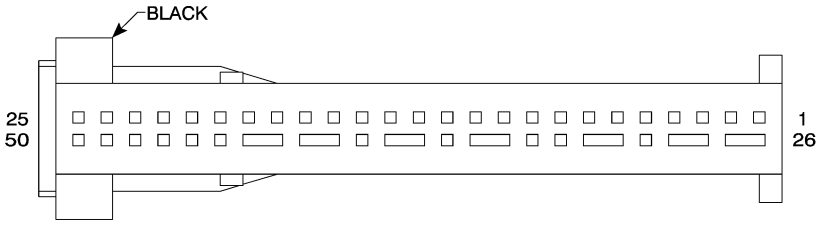

OCCUPANT RESTRAINT CONTROLLER

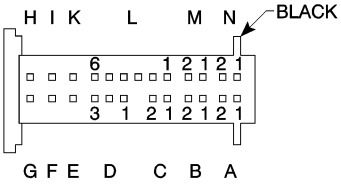

INSTRUMENT CLUSTER C2

81148c97

AIRBAG WARNING INDICATOR CIRCUIT — CONTINUED

When Monitored and Set Condition

- When Monitored: With the ignition on. The Occupant Restraint Controller (ORC) monitors the status of the Airbag Warning Indicator Driver circuit.
- Set Condition: The DTC will set if the Airbag Warning Indicator Driver circuit is open or short.

POSSIBLE CAUSES
FUSED B(+) CIRCUIT OPEN
AIRBAG WARNING INDICATOR DRIVER CIRCUIT OPEN
AIRBAG WARNING INDICATOR DRIVER CIRCUIT SHORT
INDICATOR LIGHT
OCCUPANT RESTRAINT CONTROLLER

For a complete Restraints System Circuit Diagram, **Refer to Page 8O-68**.

Diagnostic Test

1. INSPECT THE AIRBAG WARNING INDICATOR LAMP BULB

Note: Inspect Fuse 3 located in the Underhood Accessory Fuse Block. If the fuse is open, repair the cause of the open first before continuing.

Note: When reconnecting the Airbag System components, the ignition must be turned off and the battery must be disconnected.

Turn the ignition off.

Remove the Airbag Warning Indicator Lamp Bulb from the Instrument Cluster and inspect for an open filament.

Is the Bulb filament open?

Yes >> Replace the Airbag Warning Indicator Lamp bulb. **Refer to Page 8J-75**.
Perform AIRBAG VERIFICATION TEST.

No >> Go to 2

2. MEASURE INSTRUMENT CLUSTER VOLTAGE

With the ignition off.

Disconnect the Instrument Cluster harness connector.

Note: Check connectors - Clean/repair as necessary.

Turn the ignition on.

Measure the voltage of the Fused B(+) circuit at the Instrument Cluster harness connector.

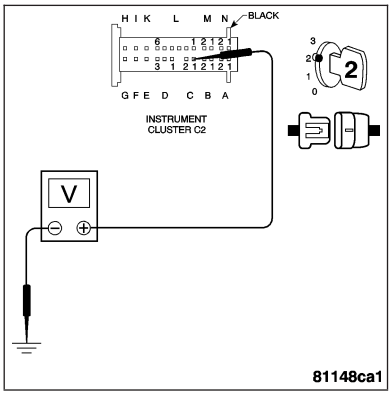

Is the voltage above 11 volts?

Yes >> Go to 3

No >> Repair the Fused B(+) circuit for an open.
Perform AIRBAG VERIFICATION TEST.

AIRBAG WARNING INDICATOR CIRCUIT — CONTINUED

3. MEASURE THE VOLTAGE AT THE ORC

WARNING: TURN THE IGNITION OFF, DISCONNECT THE BATTERY AND WAIT TWO MINUTES BEFORE PROCEEDING.
Disconnect the ORC harness connector.

Note: Check connectors - Clean/repair as necessary.
Connect a jumper wire between the terminals in the Instrument Cluster harness connector.

WARNING: TURN THE IGNITION ON, THEN RECONNECT THE BATTERY.
Measure the voltage of the Airbag Warning Indicator Driver circuit at the ORC harness connector.

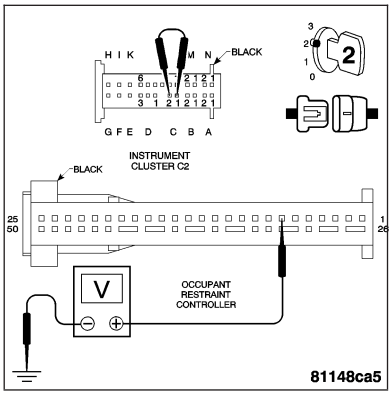

Is the voltage above 10 volts?

Yes >> Go to 4

No >> Repair the Airbag Warning Indicator Driver circuit for an open.
Perform AIRBAG VERIFICATION TEST.

Note: When reconnecting the Airbag System components, the ignition must be turned off and the battery must be disconnected.

4. MEASURE THE VOLTAGE AT THE ORC

WARNING: TURN THE IGNITION OFF, DISCONNECT THE BATTERY AND WAIT TWO MINUTES BEFORE PROCEEDING.
Reconnect the Instrument Cluster harness connector.

WARNING: TURN THE IGNITION ON, THEN RECONNECT THE BATTERY.
Connect a jumper wire to ground at the ORC harness connector.

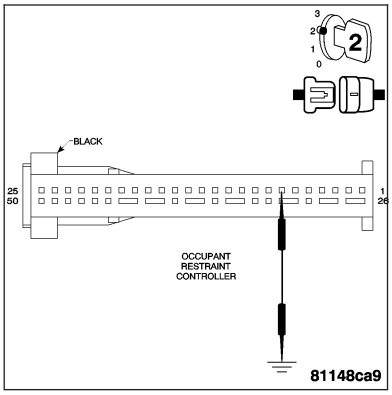

Did the Airbag Warning Indicator Light illuminate?

Yes >> Replace the Occupant Restraint Controller. **Refer to Page 8O-89**.

WARNING: IF THE OCCUPANT RESTRAINT CONTROLLER IS DROPPED AT ANY TIME, IT MUST BE REPLACED.
Perform AIRBAG VERIFICATION TEST.

No >> Replace the Instrument Cluster. **Refer to Page 8J-83**.
Perform AIRBAG VERIFICATION TEST.

Note: When reconnecting the Airbag System components, the ignition must be turned off and the battery must be disconnected.

PASSENGER AIRBAG ON/OFF SWITCH SIGNAL CIRCUIT

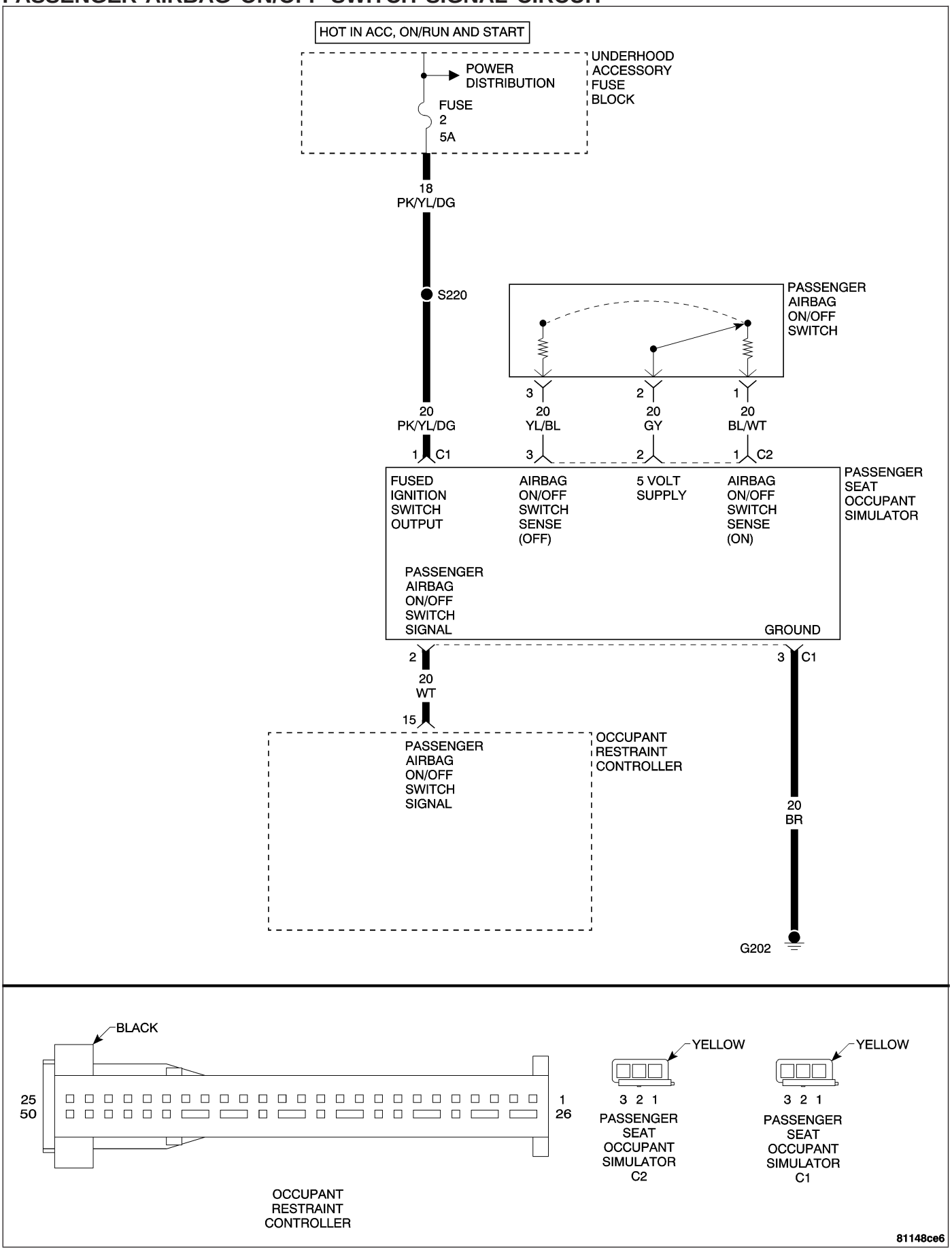

PASSENGER AIRBAG ON/OFF SWITCH SIGNAL CIRCUIT — CONTINUED

When Monitored and Set Condition

- When Monitored: With the ignition on. The Occupant Restraint Controller (ORC) monitors the status of the Passenger Airbag On/Off Switch Signal circuit.
- Set Condition: The DTC will set if a communication fault is detected between the ORC and the Passenger Seat Occupant Simulator.

POSSIBLE CAUSES
FUSED B(+) CIRCUIT OPEN
PASSENGER AIRBAG ON/OFF SWITCH SIGNAL CIRCUIT OPEN
PASSENGER AIRBAG ON/OFF SWITCH SIGNAL CIRCUIT SHORT TO VOLTAGE
PASSENGER AIRBAG ON/OFF SWITCH SIGNAL CIRCUIT SHORT TO GROUND
PASSENGER SEAT OCCUPANT SIMULATOR
OCCUPANT RESTRAINT CONTROLLER

For a complete Restraints System Circuit Diagram, **Refer to Page 8O-68**.

Diagnostic Test

1. MEASURE FUSED B(+) CIRCUIT VOLTAGE

Note: Inspect Fuse 2 located in the Underhood Accessory Fuse Block. If the fuse is open, repair the cause of the open first before continuing.

Note: The Passenger Seat Occupant Simulator is located behind the passenger footwell near the Power Amplifier.

Note: When reconnecting the Airbag System components, the ignition must be turned off and the battery must be disconnected.

WARNING: TURN THE IGNITION OFF, DISCONNECT THE BATTERY AND WAIT TWO MINUTES BEFORE PROCEEDING.

Disconnect the Passenger Seat Occupant Simulator harness connector.

Note: Check connector - Clean/repair as necessary.

WARNING: TURN THE IGNITION ON, THEN RECONNECT THE BATTERY.

Measure the voltage of the Fused B(+) circuit at the Passenger Seat Occupant Simulator harness connector.

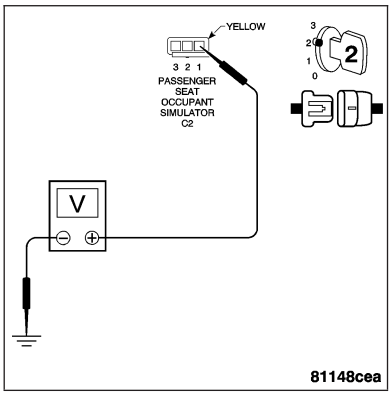

Is the voltage above 10 volts?

Yes >> Go to 2

No >> Repair the Passenger Seat Occupant Simulator Fused B(+) circuit.
Perform AIRBAG VERIFICATION TEST.

PASSENGER AIRBAG ON/OFF SWITCH SIGNAL CIRCUIT — CONTINUED

2. MEASURE THE PASSENGER AIRBAG ON/OFF SWITCH SIGNAL CIRCUIT RESISTANCE

WARNING: TURN THE IGNITION OFF, DISCONNECT THE BATTERY AND WAIT TWO MINUTES BEFORE PROCEEDING.
Disconnect the ORC harness connector.

Note: Check connector - Clean/repair as necessary.
Measure the resistance of the Passenger Airbag ON/OFF Switch Signal circuit from the ORC harness connector to the Passenger Seat Occupant Simulator harness connector.

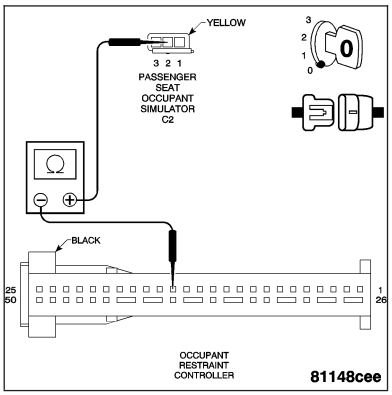

Is the resistance below 5.0 ohms?

Yes >> Go to 3

No >> Repair the Passenger Airbag On/Off Switch Signal circuit for an open.
Perform AIRBAG VERIFICATION TEST.

Note: When reconnecting the Airbag System components, the ignition must be turned off and the battery must be disconnected.

3. MEASURE THE PASSENGER AIRBAG ON/OFF SWITCH SIGNAL CIRCUIT RESISTANCE

With the ignition off.
Measure the resistance between ground and the Passenger Airbag On/Off Switch Signal circuit.

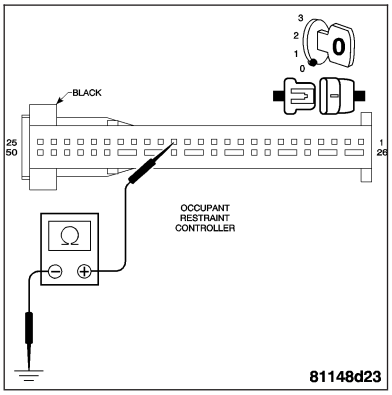

Is the resistance below 10K ohms?

Yes >> Repair the Passenger Airbag On/Off Switch Signal circuit for a short to ground.
Perform AIRBAG VERIFICATION TEST.

Note: When reconnecting the Airbag System components, the ignition must be turned off and the battery must be disconnected.

No >> Go to 4

4. MEASURE THE VOLTAGE OF THE PASSENGER AIRBAG ON/OFF SWITCH SIGNAL CIRCUIT

WARNING: TURN THE IGNITION ON, THEN RECONNECT THE BATTERY.
Measure the voltage of the Passenger Airbag On/Off Switch Signal circuit at the Passenger Seat Occupant Simulator harness connector.

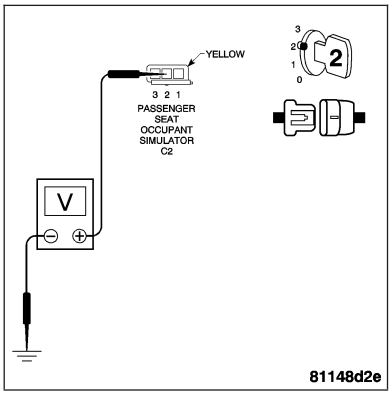

Is voltage present?

Yes >> Repair the Passenger Airbag On/Off Switch Signal circuit for a short to voltage.
Perform AIRBAG VERIFICATION TEST.

Note: When reconnecting the Airbag System components, the ignition must be turned off and the battery must be disconnected.

No >> Go to 5

PASSENGER AIRBAG ON/OFF SWITCH SIGNAL CIRCUIT — CONTINUED

5. MEASURE THE PASSENGER SEAT OCCUPANT SIMULATOR GROUND CIRCUIT RESISTANCE

WARNING: TURN THE IGNITION OFF, DISCONNECT THE BATTERY AND WAIT TWO MINUTES BEFORE PROCEEDING.

Measure the resistance between ground and the Passenger Seat Occupant Simulator Ground circuit.

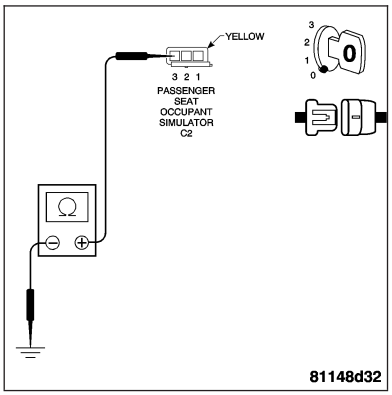

Is the resistance below 5.0 ohms?

Yes >> Replace the Passenger Seat Occupant Simulator. **Refer to Page 8O-105**.
Perform AIRBAG VERIFICATION TEST.

No >> Repair the Passenger Seat Occupant Simulator Ground circuit for an open.
Perform AIRBAG VERIFICATION TEST.

Note: When reconnecting the Airbag System components, the ignition must be turned off and the battery must be disconnected.

DRIVER SEAT BELT TENSIONER CIRCUIT

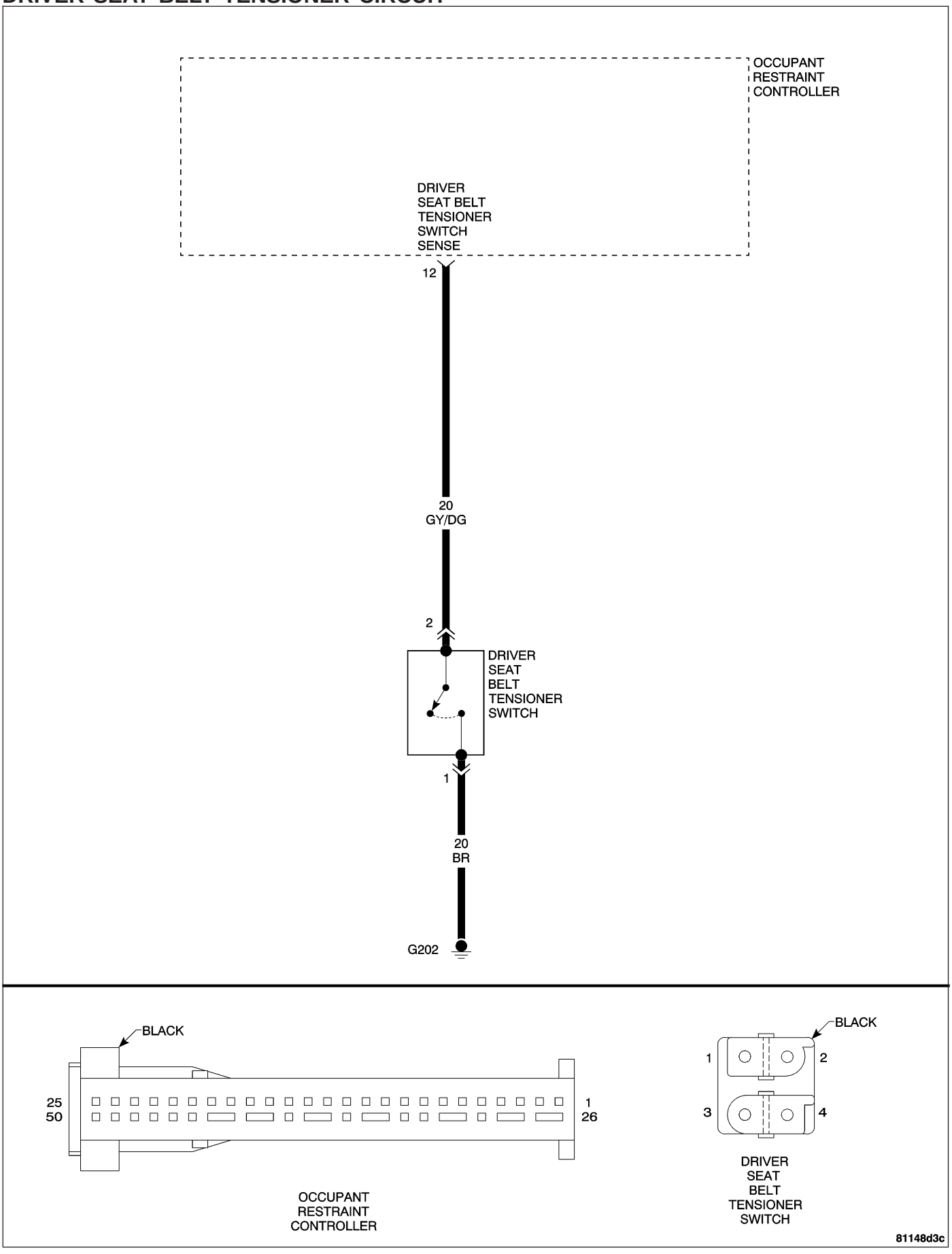

DRIVER SEAT BELT TENSIONER CIRCUIT — CONTINUED

When Monitored and Set Condition

- When Monitored: The Occupant Restraint Controller (ORC) monitors the Driver Seat Belt Tensioner Switch Sense circuit.
- Set Condition: The DTC will set if the ORC detects high voltage.

POSSIBLE CAUSES
DRIVER SEAT BELT TENSIONER SWITCH SENSE CIRCUIT SHORT
DRIVER SEAT BELT TENSIONER SWITCH
OCCUPANT RESTRAINT CONTROLLER

For a complete Restraints System Circuit Diagram, **Refer to Page 8O-68**.

Diagnostic Test

1. READ DTCs WITH THE DRB III®

Note: When reconnecting the Airbag System components, the ignition must be turned off and the battery must be disconnected.

Note: Ensure the battery is fully charged.

WARNING: TURN THE IGNITION OFF, DISCONNECT THE BATTERY AND WAIT TWO MINUTES BEFORE PROCEEDING.
Disconnect the Driver Seat Belt Tensioner Switch harness connector.

Note: Check connectors - Clean/repair as necessary.
Connect a jumper wire at the Driver Seat Belt Tensioner Switch harness connector.

WARNING: TURN THE IGNITION ON, THEN RECONNECT THE BATTERY.
With the DRB III®, read the DTCs.

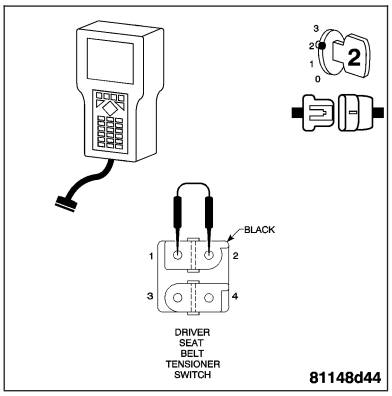

Does the DRB III® display a Driver Seat Belt Tensioner Switch DTC?

Yes >> Go to 2

No >> Replace the Driver Seat Belt Tensioner Switch. **Refer to Page 8O-122**.
Perform AIRBAG VERIFICATION TEST.

DRIVER SEAT BELT TENSIONER CIRCUIT — CONTINUED

2. MEASURE THE VOLTAGE OF THE DRIVER SEAT BELT TENSIONER SWITCH SENSE CIRCUIT

Note: When reconnecting the Airbag System components, the ignition must be turned off and the battery must be disconnected.

WARNING: TURN THE IGNITION OFF, DISCONNECT THE BATTERY AND WAIT TWO MINUTES BEFORE PROCEEDING.

Disconnect the ORC connector.

Disconnect the Driver Seat Belt Tensioner Switch connector.

Note: Check connectors - Clean/repair as necessary.

WARNING: TURN THE IGNITION ON, THEN RECONNECT THE BATTERY.

Measure the voltage of the Driver Seat Belt Tensioner Switch Sense circuit at the Driver Seat Belt Tensioner Switch harness connector.

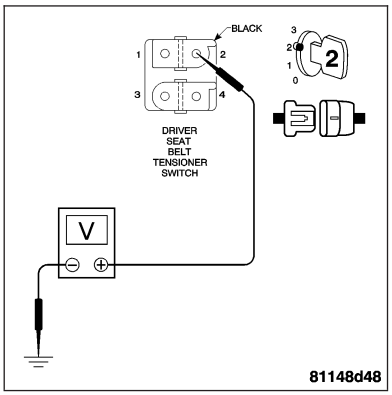

Is voltage present?

Yes >> Repair the Driver Seat Belt Tensioner Switch Sense circuit for a short to voltage.
Perform AIRBAG VERIFICATION TEST.

No >> Replace the Occupant Restraint Controller. **Refer to Page 8O-89**.

WARNING: IF THE OCCUPANT RESTRAINT CONTROLLER IS DROPPED AT ANY TIME, IT MUST BE REPLACED.

Perform AIRBAG VERIFICATION TEST.

PASSENGER SEAT BELT TENSIONER CIRCUIT

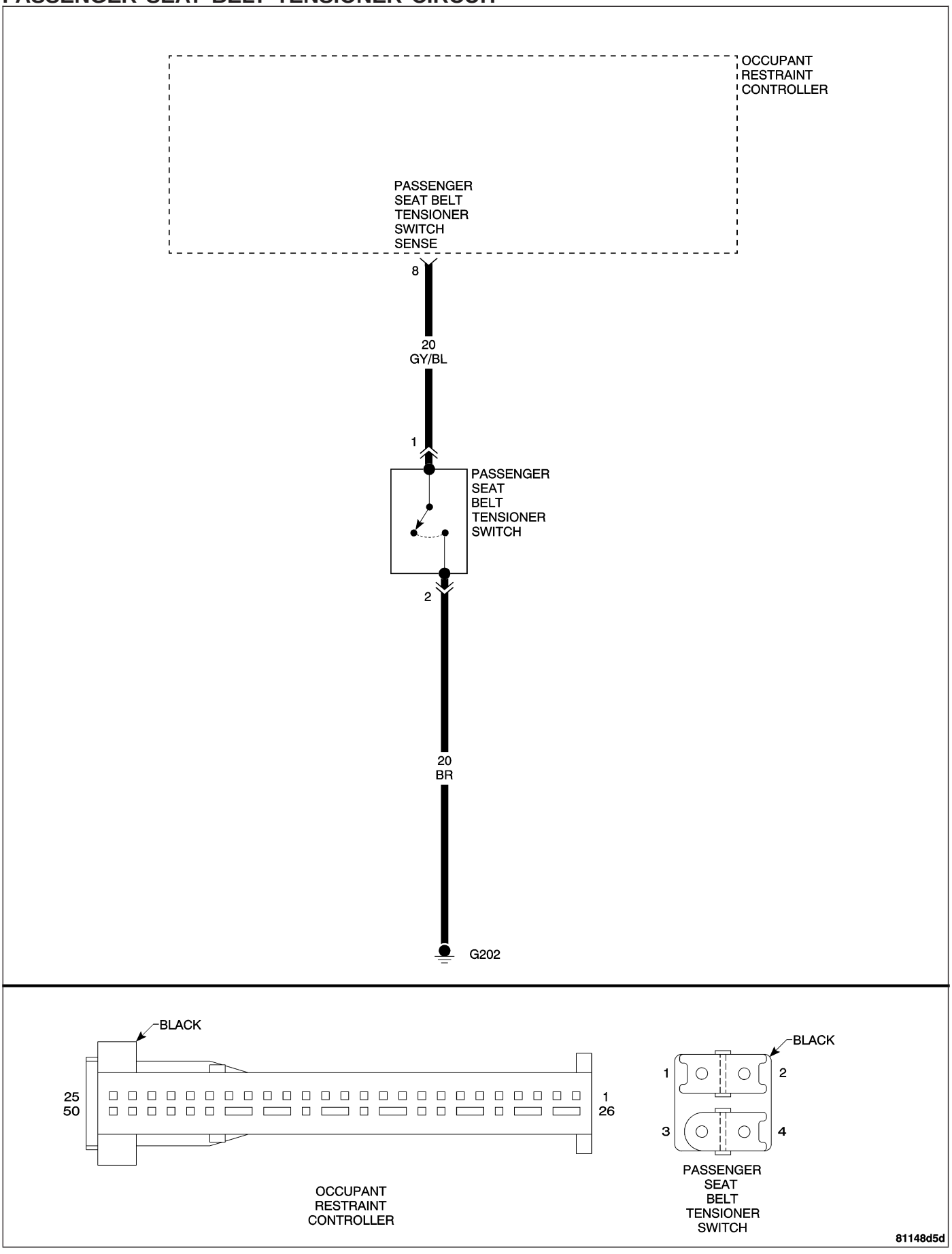

PASSENGER SEAT BELT TENSIONER CIRCUIT — CONTINUED

When Monitored and Set Condition

- When Monitored: The Occupant Restraint Controller (ORC) monitors the Passenger Seat Belt Tensioner Switch Sense circuit.
- Set Condition: The DTC will set if the ORC detects high voltage.

POSSIBLE CAUSES
PASSENGER SEAT BELT TENSIONER SWITCH SENSE CIRCUIT SHORT
PASSENGER SEAT BELT TENSIONER SWITCH
OCCUPANT RESTRAINT CONTROLLER

For a complete Restraints System Circuit Diagram, **Refer to Page 8O-68**.

Diagnostic Test

1. READ DTCs WITH THE DRB III®

Note: When reconnecting the Airbag System components, the ignition must be turned off and the battery must be disconnected.

Note: Ensure the battery is fully charged.

WARNING: TURN THE IGNITION OFF, DISCONNECT THE BATTERY AND WAIT TWO MINUTES BEFORE PROCEEDING.
Disconnect the Passenger Seat Belt Tensioner Switch connector.

Note: Check connectors - Clean/repair as necessary.
Connect a jumper wire at the Passenger Seat Belt Tensioner Switch connector.

WARNING: TURN THE IGNITION ON, THEN RECONNECT THE BATTERY.
With the DRB III®, read the DTCs.

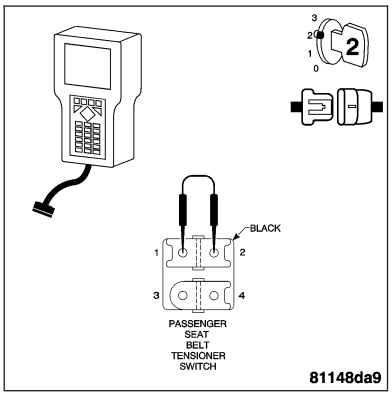

Does the DRB III® display a Passenger Seat Belt Tensioner Switch DTC?

Yes >> Go to 2

No >> Replace the Passenger Seat Belt Tensioner Switch. **Refer to Page 8O-122**.
Perform AIRBAG VERIFICATION TEST.

PASSENGER SEAT BELT TENSIONER CIRCUIT — CONTINUED

2. MEASURE THE VOLTAGE OF THE PASSENGER SEAT BELT TENSIONER SWITCH SENSE CIRCUIT

Note: When reconnecting the Airbag System components, the ignition must be turned off and the battery must be disconnected.

WARNING: TURN THE IGNITION OFF, DISCONNECT THE BATTERY AND WAIT TWO MINUTES BEFORE PROCEEDING.

Disconnect the ORC connector.

Disconnect the Passenger Seat Belt Tensioner Switch connector.

Note: Check connectors - Clean/repair as necessary.

WARNING: TURN THE IGNITION ON, THEN RECONNECT THE BATTERY.

Measure the voltage of the Passenger Seat Belt Tensioner Switch Sense circuit at the Passenger Seat Belt Tensioner Switch harness connector.

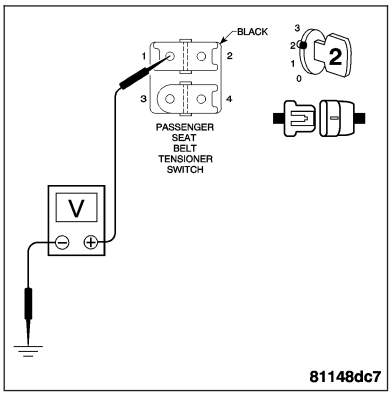

Is voltage present?

Yes >> Repair the Passenger Seat Belt Tensioner Switch Sense circuit for a short to voltage.
Perform AIRBAG VERIFICATION TEST.

No >> Replace the Occupant Restraint Controller. **Refer to Page 8O-89**.

WARNING: IF THE OCCUPANT RESTRAINT CONTROLLER IS DROPPED AT ANY TIME, IT MUST BE REPLACED.

Perform AIRBAG VERIFICATION TEST.

LEFT SIDE IMPACT SENSOR SIGNAL CIRCUIT

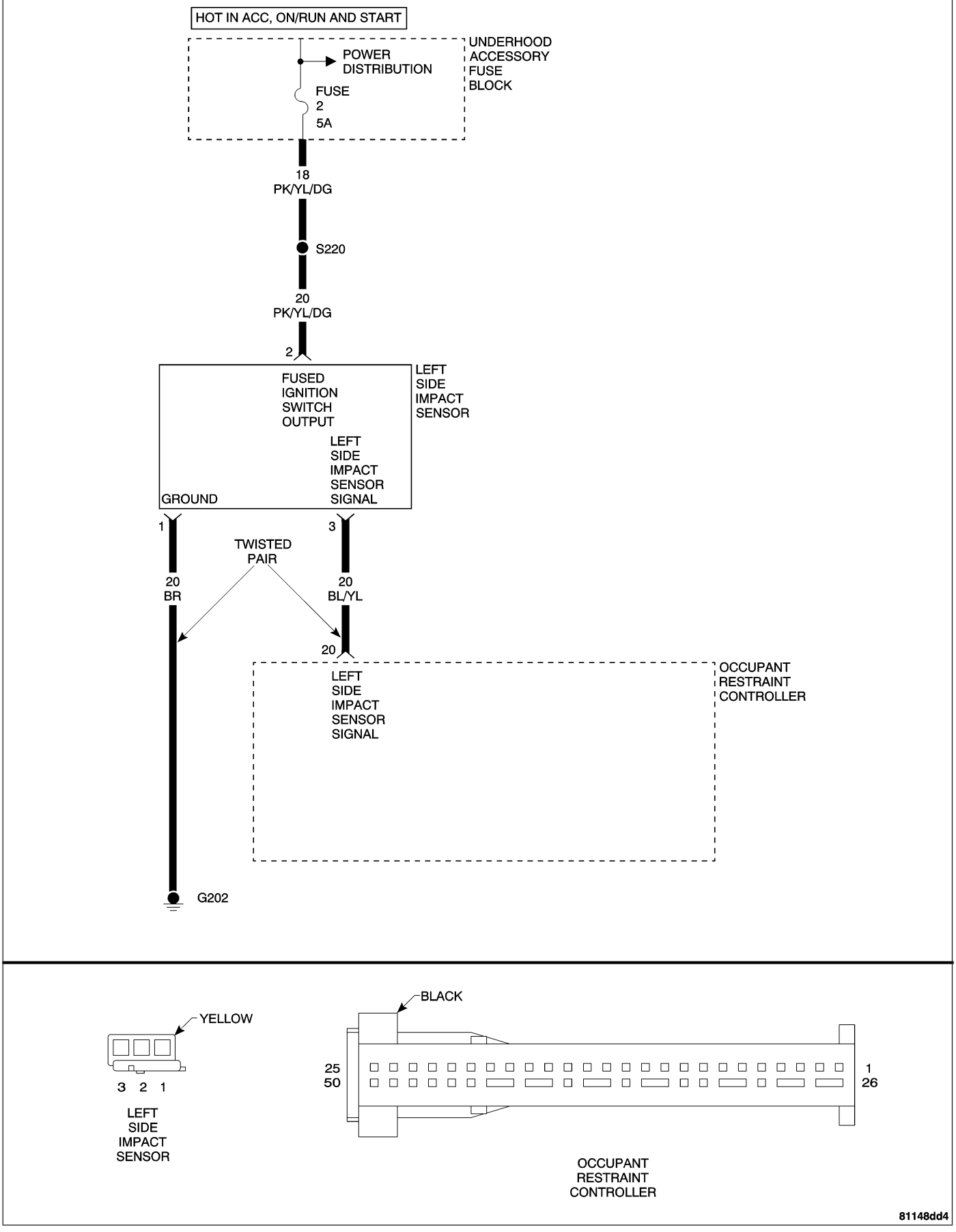

LEFT SIDE IMPACT SENSOR SIGNAL CIRCUIT — CONTINUED

When Monitored and Set Condition

- When Monitored: With the ignition on. The Occupant Restraint Controller (ORC) monitors the status of the Left Side Impact Sensor Signal circuit.
- Set Condition: The DTC will set if a circuit failure is detected between the ORC and the Left Side Impact Sensor.

POSSIBLE CAUSES
FUSED IGNITION SWITCH OUTPUT CIRCUIT OPEN
LEFT SIDE IMPACT SENSOR SIGNAL CIRCUIT OPEN
LEFT SIDE IMPACT SENSOR SIGNAL CIRCUIT SHORT
LEFT SIDE IMPACT SENSOR
OCCUPANT RESTRAINT CONTROLLER

For a complete Restraints System Circuit Diagram, **Refer to Page 8O-68**.

Diagnostic Test

1. MEASURE LEFT SIDE IMPACT SENSOR FUSED IGNITION SWITCH OUTPUT VOLTAGE

Note: Inspect Fuse 2 located in the Underhood Accessory Fuse Block. If the fuse is open, repair the cause of the open first before continuing.

Note: When reconnecting the Airbag System components, the ignition must be turned off and the battery must be disconnected.

WARNING: TURN THE IGNITION OFF, DISCONNECT THE BATTERY AND WAIT TWO MINUTES BEFORE PROCEEDING.
Disconnect the Left Side Impact Sensor harness connector.

Note: Check connectors - Clean/repair as necessary.

WARNING: TURN THE IGNITION ON, THEN RECONNECT THE BATTERY.
Measure the voltage of the Fused Ignition Switch Output circuit at the Left Side Impact Sensor harness connector.

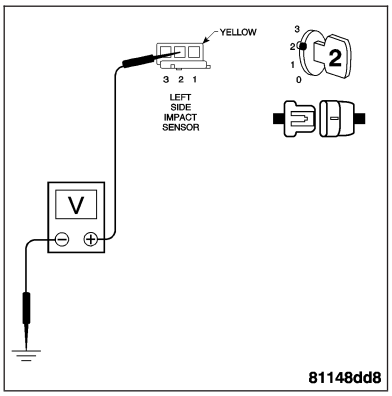

Is the voltage above 10 volts?

Yes >> Go to 2

No >> Repair the Left Side Impact Sensor Fused Ignition Switch Output circuit.
Perform AIRBAG VERIFICATION TEST.

LEFT SIDE IMPACT SENSOR SIGNAL CIRCUIT — CONTINUED

2. MEASURE THE LEFT SIDE IMPACT SENSOR SIGNAL CIRCUIT RESISTANCE

WARNING: TURN THE IGNITION OFF, DISCONNECT THE BATTERY AND WAIT TWO MINUTES BEFORE PROCEEDING.
Disconnect the ORC harness connector.

Note: Check connectors - Clean/repair as necessary.
Measure the resistance of the Left Side Impact Sensor Signal circuit from the Left Side Impact Sensor harness connector to the ORC harness connector.

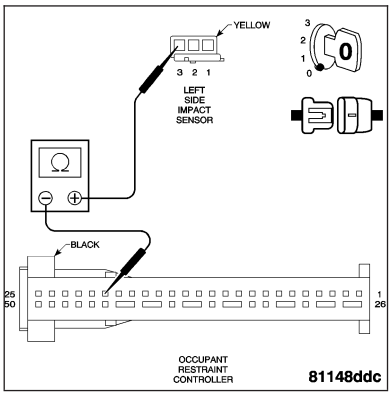

Is the resistance below 1.0 ohm?

Yes >> Go to 3

No >> Repair the Left Side Impact Sensor Signal circuit for an open.
Perform AIRBAG VERIFICATION TEST.

Note: When reconnecting the Airbag System components, the ignition must be turned off and the battery must be disconnected.

3. MEASURE THE LEFT SIDE IMPACT SENSOR SIGNAL CIRCUIT RESISTANCE

With the ignition off.
Measure the resistance between ground and the Left Side Impact Sensor Signal circuit.

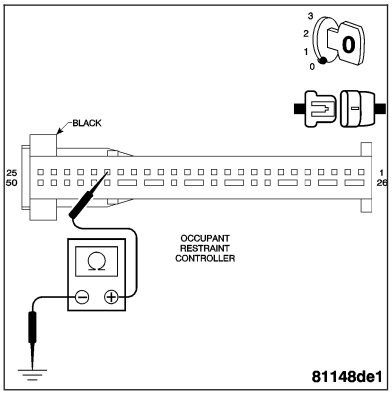

Is the resistance below 10K ohms?

Yes >> Repair the Left Side Impact Sensor Signal circuit for a short to ground.
Perform AIRBAG VERIFICATION TEST.

Note: When reconnecting the Airbag System components, the ignition must be turned off and the battery must be disconnected.

No >> Go to 4

4. MEASURE THE VOLTAGE OF THE LEFT SIDE IMPACT SENSOR SIGNAL CIRCUIT

WARNING: TURN THE IGNITION ON, THEN RECONNECT THE BATTERY.
Measure the voltage of the Left Side Impact Sensor Signal circuit at the Left Side Impact Sensor harness connector.

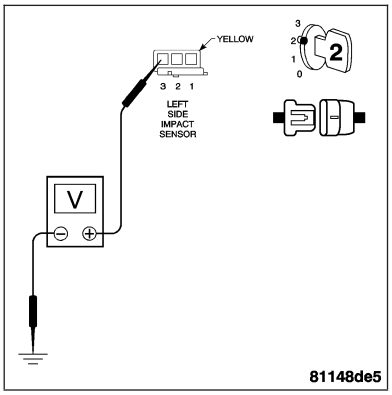

Is voltage present?

Yes >> Repair the Left Side Impact Sensor Signal circuit for a short to voltage.
Perform AIRBAG VERIFICATION TEST.

Note: When reconnecting the Airbag System components, the ignition must be turned off and the battery must be disconnected.

No >> Go to 5

LEFT SIDE IMPACT SENSOR SIGNAL CIRCUIT — CONTINUED

5. MEASURE THE LEFT SIDE IMPACT SENSOR GROUND CIRCUIT RESISTANCE

WARNING: TURN THE IGNITION OFF, DISCONNECT THE BATTERY AND WAIT TWO MINUTES BEFORE PROCEEDING.

Measure the resistance between ground and the Left Side Impact Sensor Ground circuit.

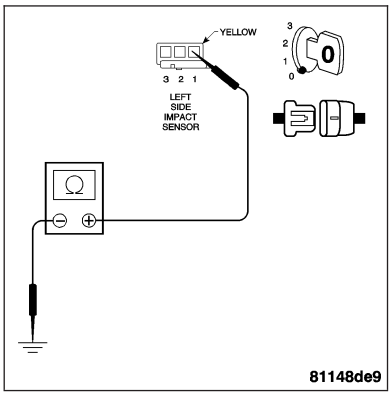

Is the resistance below 1.0 ohm?

Yes >> Replace the Left Side Impact Sensor. **Refer to Page 8O-108**.
Perform AIRBAG VERIFICATION TEST.

No >> Repair the open Left Side Impact Sensor Ground circuit.
Perform AIRBAG VERIFICATION TEST.

Note: When reconnecting the Airbag System components, the ignition must be turned off and the battery must be disconnected.

RIGHT SIDE IMPACT SENSOR SIGNAL CIRCUIT

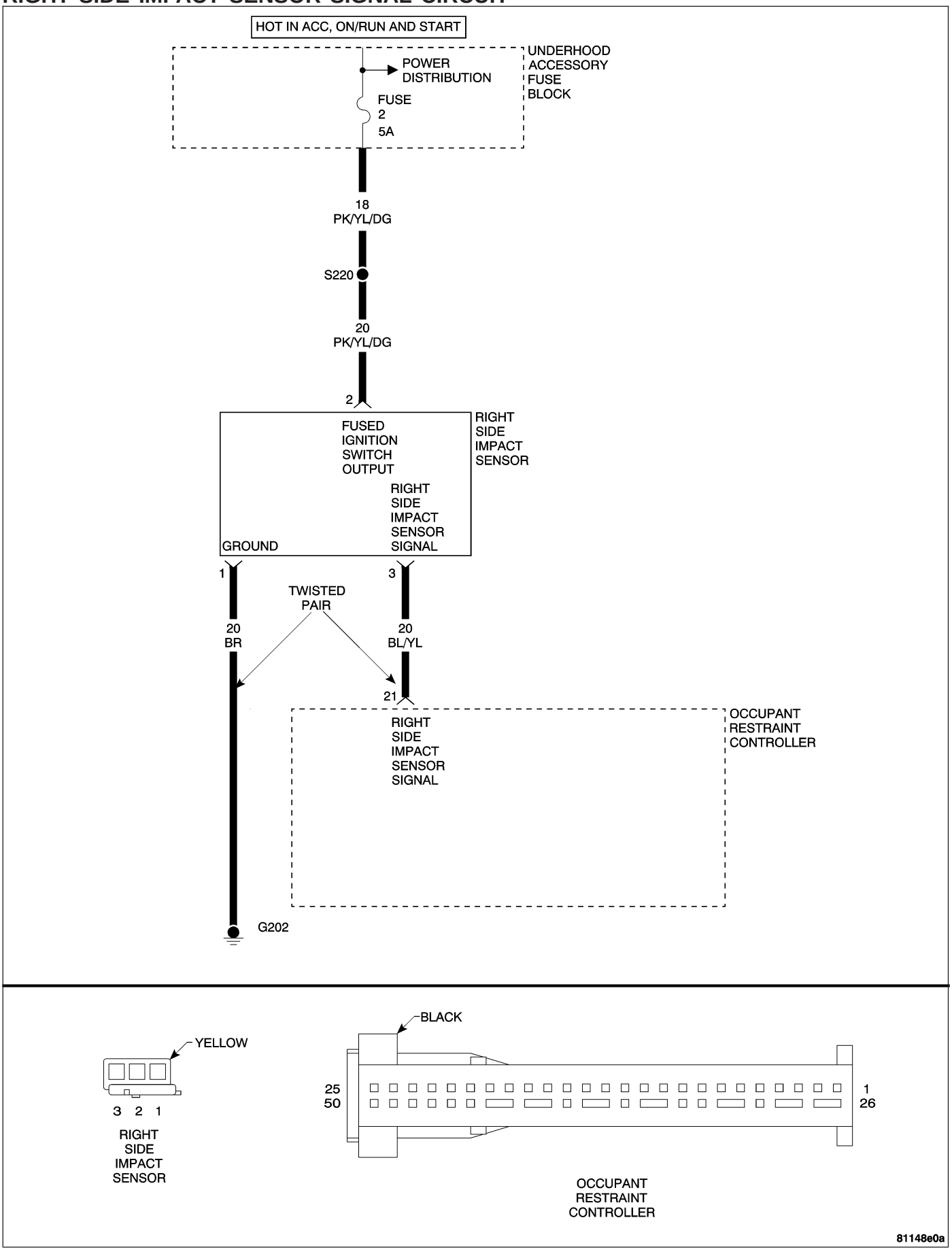

RIGHT SIDE IMPACT SENSOR SIGNAL CIRCUIT — CONTINUED

When Monitored and Set Condition

- When Monitored: With the ignition on. The Occupant Restraint Controller (ORC) monitors the status of the Right Side Impact Sensor Signal Circuit.
- Set Condition: The DTC will set if a circuit failure is detected between the ORC and the Right Side Impact Sensor.

POSSIBLE CAUSES
FUSED IGNITION SWITCH OUTPUT CIRCUIT OPEN
RIGHT SIDE IMPACT SENSOR SIGNAL CIRCUIT OPEN
RIGHT SIDE IMPACT SENSOR SIGNAL CIRCUIT SHORT
RIGHT SIDE IMPACT SENSOR
OCCUPANT RESTRAINT CONTROLLER

For a complete Restraints System Circuit Diagram, **Refer to Page 8O-68**.

Diagnostic Test

1. MEASURE THE RIGHT SIDE IMPACT SENSOR FUSED IGNITION SWITCH OUTPUT VOLTAGE

Note: Inspect Fuse 2 located in the Underhood Accessory Fuse Block. If the fuse is open, repair the cause of the open first before continuing.

Note: When reconnecting the Airbag System components, the ignition must be turned off and the battery must be disconnected.

WARNING: TURN THE IGNITION OFF, DISCONNECT THE BATTERY AND WAIT TWO MINUTES BEFORE PROCEEDING.
Disconnect the Right Side Impact Sensor harness connector.

Note: Check connectors - Clean/repair as necessary.

WARNING: TURN THE IGNITION ON, THEN RECONNECT THE BATTERY.
Measure the voltage of the Fused Ignition Switch Output circuit at the Right Side Impact Sensor harness connector.

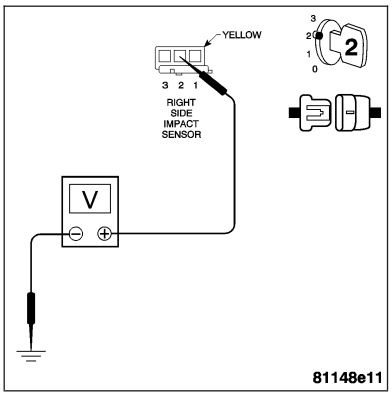

Is the voltage above 10 volts?

Yes >> Go to 2

No >> Repair the Right Side Impact Sensor Fused Ignition Switch Output circuit.
Perform AIRBAG VERIFICATION TEST.

RIGHT SIDE IMPACT SENSOR SIGNAL CIRCUIT — CONTINUED

2. MEASURE THE RIGHT SIDE IMPACT SENSOR SIGNAL CIRCUIT RESISTANCE

WARNING: TURN THE IGNITION OFF, DISCONNECT THE BATTERY AND WAIT TWO MINUTES BEFORE PROCEEDING.
Disconnect the ORC harness connector.

Note: Check connectors - Clean/repair as necessary.
Measure the resistance of the Right Side Impact Sensor Signal circuit from the Right Side Impact Sensor harness connector to the ORC harness connector.

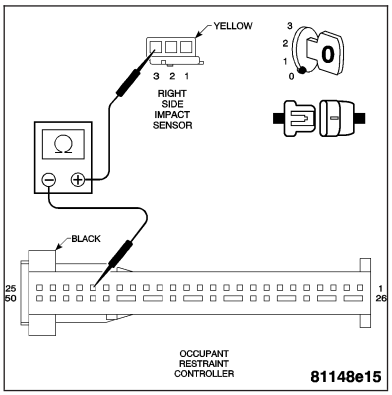

Is the resistance below 1.0 ohm?

Yes >> Go to 3

No >> Repair the Right Side Impact Sensor Signal circuit for an open.
Perform AIRBAG VERIFICATION TEST.

Note: When reconnecting the Airbag System components, the ignition must be turned off and the battery must be disconnected.

3. MEASURE THE RIGHT SIDE IMPACT SENSOR SIGNAL CIRCUIT RESISTANCE

With the ignition off.
Measure the resistance between ground and the Right Side Impact Sensor Signal circuit.

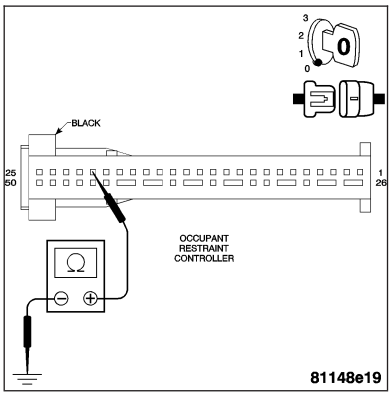

Is the resistance below 10K ohms?

Yes >> Repair the Right Side Impact Sensor Signal circuit for a short to ground.
Perform AIRBAG VERIFICATION TEST.

Note: When reconnecting the Airbag System components, the ignition must be turned off and the battery must be disconnected.

No >> Go to 4

4. MEASURE THE VOLTAGE OF THE RIGHT SIDE IMPACT SENSOR SIGNAL CIRCUIT

WARNING: TURN THE IGNITION ON, THEN RECONNECT THE BATTERY.
Measure the voltage of the Right Side Impact Sensor Signal circuit at the Right Side Impact Sensor harness connector.

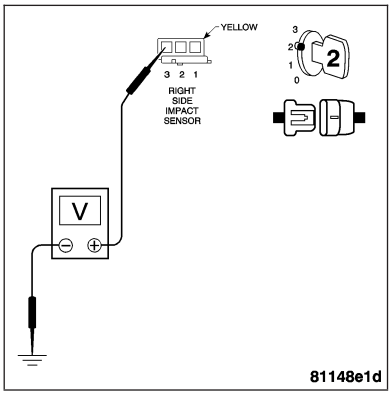

Is voltage present?

Yes >> Repair the Right Side Impact Sensor Signal circuit for a short to voltage.
Perform AIRBAG VERIFICATION TEST.

Note: When reconnecting the Airbag System components, the ignition must be turned off and the battery must be disconnected.

No >> Go to 5

RIGHT SIDE IMPACT SENSOR SIGNAL CIRCUIT — CONTINUED

5. MEASURE THE RIGHT SIDE IMPACT SENSOR GROUND CIRCUIT RESISTANCE

WARNING: TURN THE IGNITION OFF, DISCONNECT THE BATTERY AND WAIT TWO MINUTES BEFORE PROCEEDING.

Measure the resistance between ground and the Right Side Impact Sensor Ground circuit.

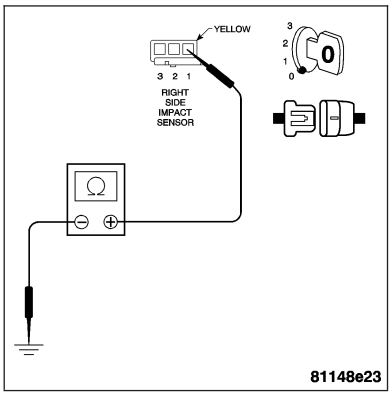

Is the resistance below 1.0 ohm?

Yes >> Replace the Right Side Impact Sensor. **Refer to Page 8O-108**.
Perform AIRBAG VERIFICATION TEST.

No >> Repair the open Right Side Impact Sensor Ground circuit.
Perform AIRBAG VERIFICATION TEST.

Note: When reconnecting the Airbag System components, the ignition must be turned off and the battery must be disconnected.

AIRBAG VERIFICATION TEST

1.

Turn the ignition off.

Remove any special tools, disconnect all jumper wires and reconnect all previously disconnected components and connectors.

WARNING: TURN THE IGNITION ON, THEN RECONNECT THE BATTERY.

With the DRB III®, erase all Diagnostic Trouble Codes (DTCs) from the airbag system module.

Turn the ignition off, and wait 15 seconds.

Turn the ignition on, and with the DRB III®, confirm that no DTCs are present and that all components are functioning properly.

If there are no DTCs present and all components are functioning properly, the repair is complete.

Are any DTCs present?

YES >> Repair is not complete, refer to appropriate symptom.

NO >> Repair is complete.

SCHEMATICS AND DIAGRAMS

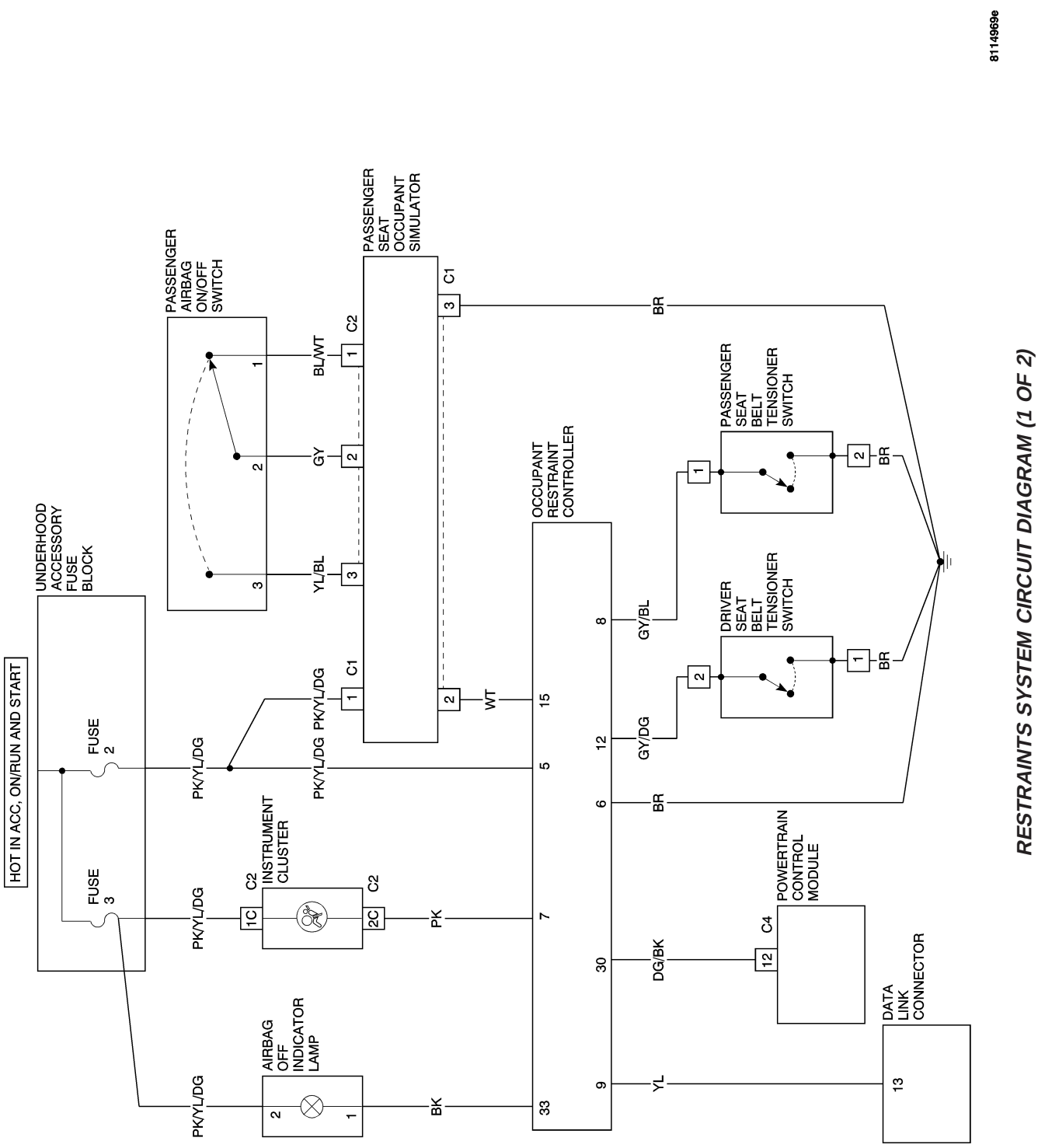

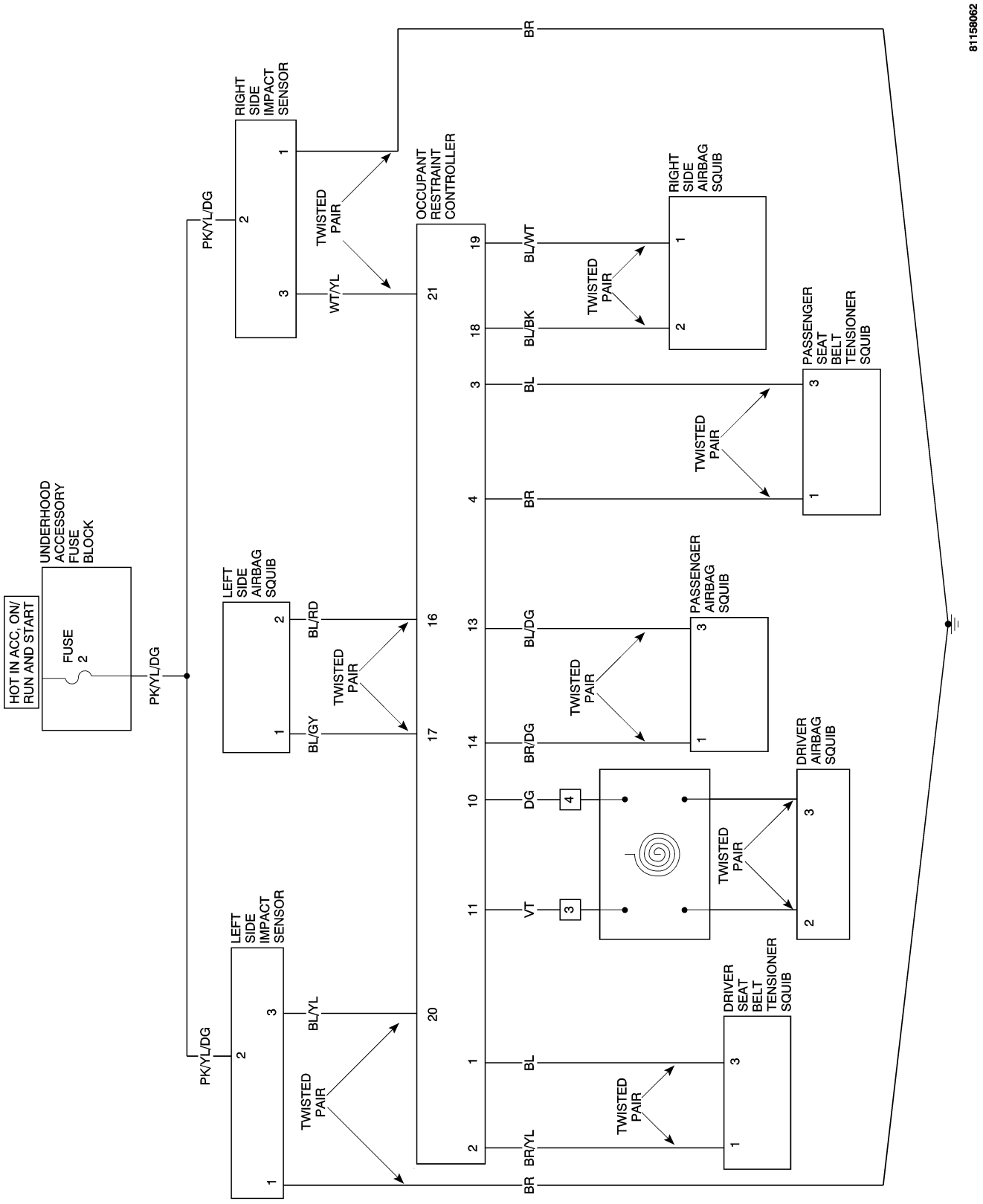

RESTRAINTS SYSTEM CIRCUIT DIAGRAM (2 OF 2)

RESTRAINTS - SERVICE INFORMATION

TABLE OF CONTENTS

page

RESTRAINTS - SERVICE INFORMATION
DESCRIPTION 70
OPERATION 76
WARNING 82
DIAGNOSIS AND TESTING - SUPPLEMENTAL RESTRAINT SYSTEM 83
STANDARD PROCEDURE
STANDARD PROCEDURE - HANDLING NON-DEPLOYED SUPPLEMENTAL RESTRAINTS 83
STANDARD PROCEDURE - SERVICE AFTER A SUPPLEMENTAL RESTRAINT DEPLOYMENT 84
STANDARD PROCEDURE - SUPPLEMENTAL RESTRAINT SYSTEM (SRS) - VERIFICATION TEST 86
SPECIFICATIONS
TORQUE CHART - RESTRAINTS 87
OCCUPANT RESTRAINT CONTROLLER
DESCRIPTION 87
OPERATION 88
STANDARD PROCEDURE - ORC PROGRAMMING 89
REMOVAL 89
INSTALLATION 91
CLOCKSPRING
DESCRIPTION 92
OPERATION 92
STANDARD PROCEDURE - CLOCKSPRING CENTERING 93
REMOVAL 94
INSTALLATION 96
DRIVER AIRBAG
DESCRIPTION 97

page

OPERATION 98
REMOVAL 100
INSTALLATION 100
PASSENGER AIRBAG
DESCRIPTION 101
OPERATION 101
REMOVAL 102
INSTALLATION 103
ON / OFF SWITCH INDICATOR MODULE
REMOVAL 105
INSTALLATION 106
SIDE IMPACT SENSOR
DESCRIPTION 107
OPERATION 107
REMOVAL 108
INSTALLATION 110
SIDE IMPACT AIRBAG
DESCRIPTION 112
OPERATION 113
REMOVAL 114
INSTALLATION 114
SEAT BELT BUCKLE
DESCRIPTION 115
REMOVAL 116
INSTALLATION 117
SEAT BELT & SEAT BELT TENSIONER
DESCRIPTION 119
OPERATION 120
REMOVAL 122
INSPECTION 125
INSTALLATION 125

RESTRAINTS - SERVICE INFORMATION

DESCRIPTION

Occupant restraints for this vehicle include both Active and Passive types. Active restraints are those which require the occupants to take some action to employ, such as fastening the seat belt; while Passive restraints require no action by the occupants to be employed.

ACTIVE RESTRAINTS

The Active restraints include:

Front Driver and Passenger Seat Belts - Both seating positions are equipped with a three-point restraint. Seat Belt Tensioners (SBT) that actuate to remove slack in the seat belts and to snug the occupant into the seat at the onset of an impact event. This controls the occupant's forward movement to reduce the likelihood of injury as a result of contacting any interior components. Especially during the primary impact event phase, the tensioning power of the SBTs guarantees optimum transmission of the passenger compartment deceleration to the passenger. The vehicle's SBTs employ load-limiting retractors that "give" with higher seat belt loads. If a given seat belt force is exceeded, the seat belt force limiter permits a controlled forward inclination of the occupant's upper body. This protective function reduces the risk of chest and shoulder injuries and permits the passenger to plunge deeper into the airbag for a smooth dissipation of the occupant's kinetic energy. The drivers SBT is mounted in the B pillar below the belt line which locks only as a result of a sudden vehicle stop or a rapid extension of the webbing. This is called "Emergency Locking", it will allow free movement under normal driving conditions. To allow the retention of a child seat, a dual-mode passenger SBT is mounted in the B pillar below the belt line and can be switched between "Emergency Locking" and "Automatic Locking". Seat-mounted, inboard buckles allow seat adjustment while maintaining a consistent relationship between the buckle and the seat belt. For easy and consistent access and adjustment, a free-running latch plate on each belt slides along the webbing and stops against a button near the occupant's shoulder when unfastened. A seat belt warning lamp in the Instrument Cluster (IC) comes on and a warning chime sounds for a short time if the driver's seat belt is not fastened when the ignition switch is turned to the "RUN" position. After starting the engine, the seat belt warning indicator flashes briefly as an added precaution.

Child Restraint Anchors - The front passenger seat includes a LATCH (Lower Anchors and Tether for Children) child seat anchorage system. LATCH-compatible child seats are those engineered for retention by direct attachment to the vehicle's seat structure rather than with the vehicle's seat belts. The child seat's lower anchors attach to the seat structure via heavy-gauge wire loops at the intersection of the seat cushion and seat back. The child seat's upper tether strap attaches to a child seat tether anchor. Child seats can also be securely fastened in the passenger seat using the seat belts. For this purpose, the passenger seat belt includes a dual-mode SBT. After the child seat is positioned and the belt routed according to instructions for the child seat, the seat belt is pulled all the way out of the SBT to the end of its travel. This switches the SBT to the "Automatic Locking" mode. As the seat belt retracts, the SBT locks to prevent the belt from being pulled out again. Pulling the belt snugly over the child seat secures the seat in place. When the belt retracts fully after child seat removal, normal "Emergency Locking" action is restored to the SBT.

PASSIVE RESTRAINTS

The passive restraints include:

Driver and Passenger Front Airbags - This airbag system is a passive, inflatable, Supplemental Restraint System (SRS). Vehicles with this equipment can be readily identified by the "SRS AIRBAG" logo molded into the driver airbag trim cover in the steering wheel (1) and also into the passenger airbag area (2) of the instrument panel top pad above the glove box.

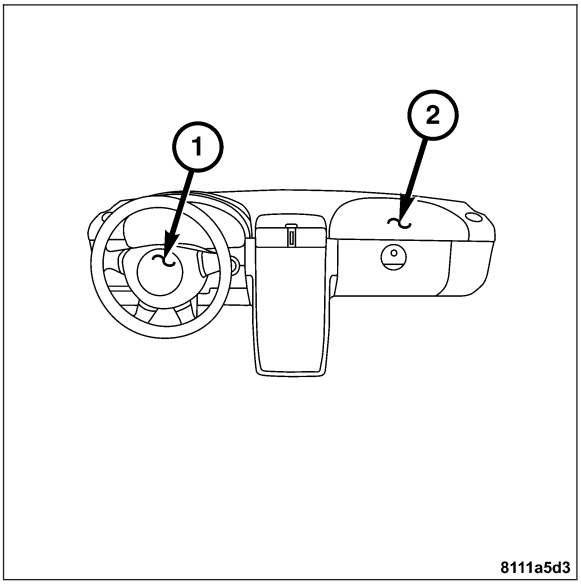

Vehicles with the SRS can also be identified by the Airbag Warning Indicator, which will illuminate in the Instrument Cluster (IC) for about six seconds as a bulb test each time the ignition switch is turned to the “RUN” position.



The Supplemental Restraint System (SRS) also includes the following major components.

Occupant Restraint Controller (ORC) - The Occupant Restraint Controller (ORC) is located on a mount on the floor panel transmission tunnel (2) in front of the shifter, under the front center console.

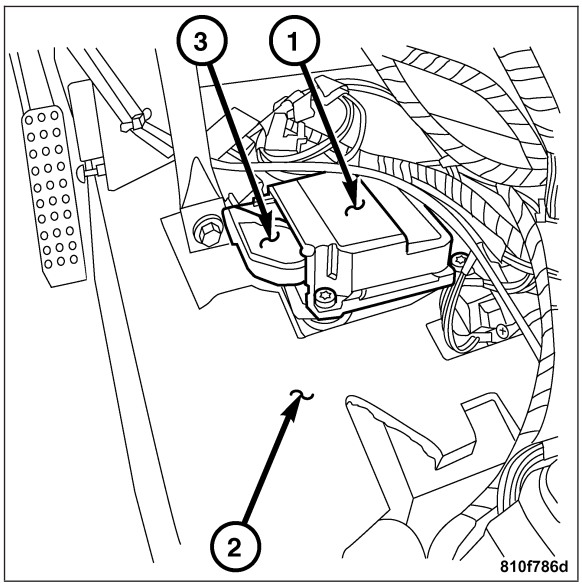

ORC System Logic - The Supplemental Restraint System (SRS) uses an impact severity level (threshold) to determine the appropriate response from the ORC. Impacts that exceed the initial threshold in frontal, front-angled and rear impacts trigger only the SBTs, only if the seat belts are fastened, but trigger the airbags if the seat belts are not fastened. Impacts that exceed the higher threshold always trigger the airbags. The driver and passenger SRS systems operate independently of one another based on seat belt use. SBT actuation occurs only if the seat belts are buckled. After an impact that activates an SBT, the SBT assembly must be replaced. The ORC monitors operational readiness of SRS and illuminates the airbag warning indicator lamp in the Instrument Cluster (IC) if a malfunction should occur. The following system components are monitored or undergo a self-check at startup. The side-impact sensor, airbag ignition circuits (squibs), seat belt buckle switches and the SBT. The airbag warning indicator lamp also illuminates briefly each time the engine is started, allowing the driver to verify its operation.

Airbag Warning Indicator Lamp - The airbag warning indicator lamp is integral to the Instrument Cluster (IC), which is located on the Instrument Panel (IP) in front of the driver.


811057bc

Clockspring - The clockspring is located at the top of the steering column, directly beneath the steering wheel where it is attached to the column by two screws (1).

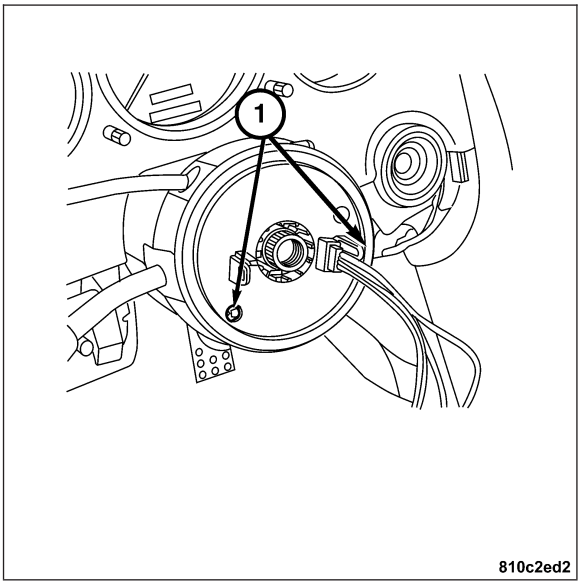

810c2ed2

Driver Front Airbag - The driver front airbag (1) is located in the center of the steering wheel, as part of the steering wheel trim cover.

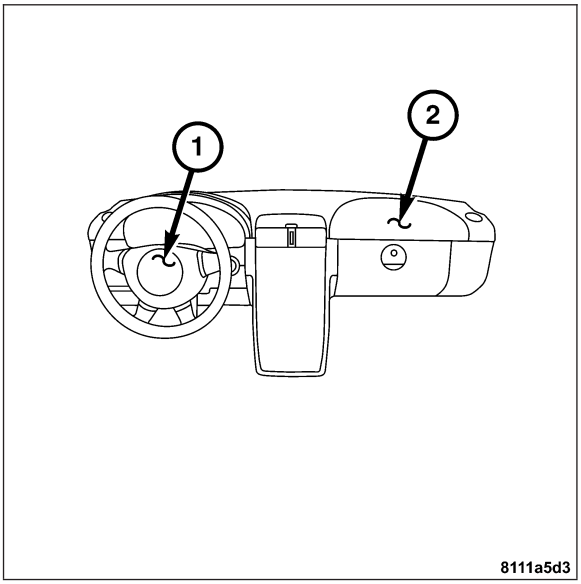

8111a5d3

Passenger Front Airbag - The passenger front airbag (1) is located on the instrument panel structural duct, beneath the instrument panel top pad and above the glove box.

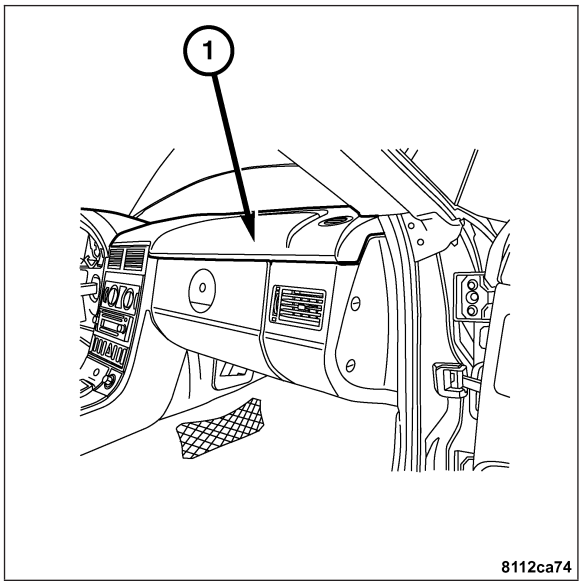

The passenger front air bag can be deactivated when a child seat or small child occupies that seat by using the ignition key to turn the switch (1) to the OFF position. This will illuminate the passenger airbag OFF warning lamp on the center console. This indicates that the passenger front airbag is deactivated. The passenger front airbag will not be activated until the switch is turned to ON position and the passenger airbag OFF warning lamp goes out.

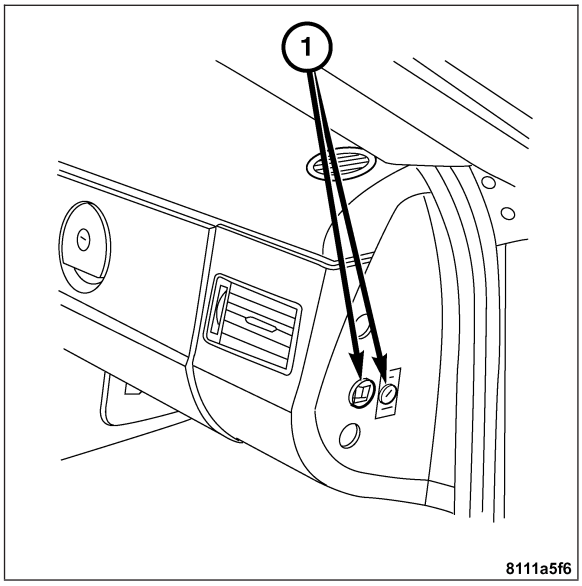

The passenger airbag off warning lamp (1) in the center console illuminates when the air bag is deactivated.

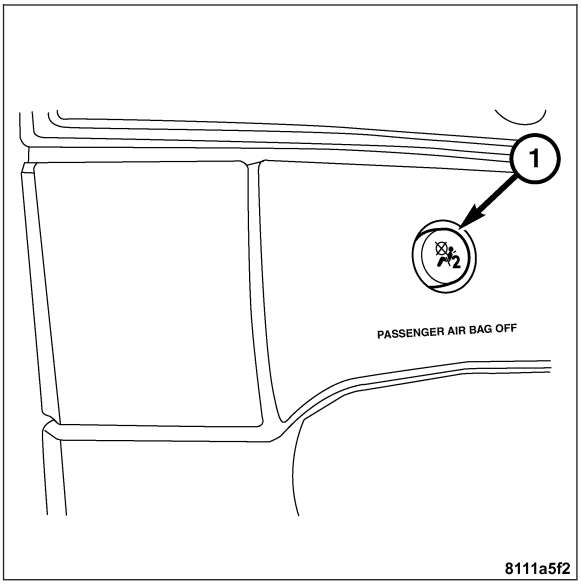

Side Impact Sensor - Two side impact sensors (2) are installed, one left side and one right side. One sensor is located under the carpet directly below each of the front seats.

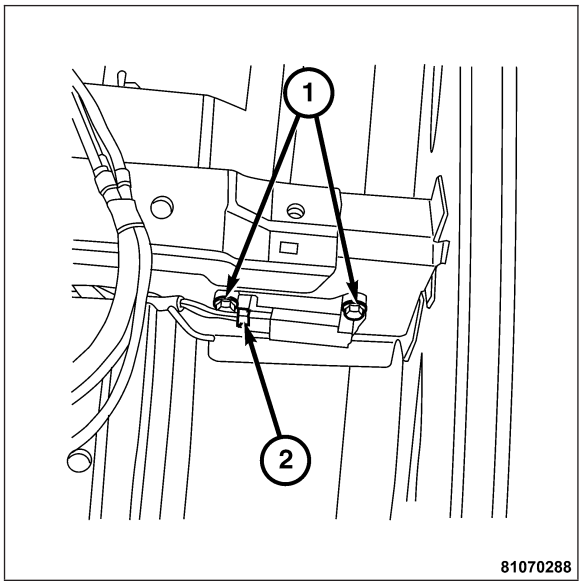

Side Impact Airbag - The side impact airbags are concealed behind the door trim panels above the armrest. The side impact airbag is riveted (1) to the door's interior structure and activated by a squib (2). SRS logos on the trim panels denote the presence of the airbags. If the airbag is triggered during a lateral collision, the airbag tears open a seam on the inner door trim and inflates within 0.007 seconds to form a protective cushion between the passenger and the door. Thus the impact on the passenger's thorax and the ejecting motion of the head, which might otherwise cause serious injuries, are reduced.

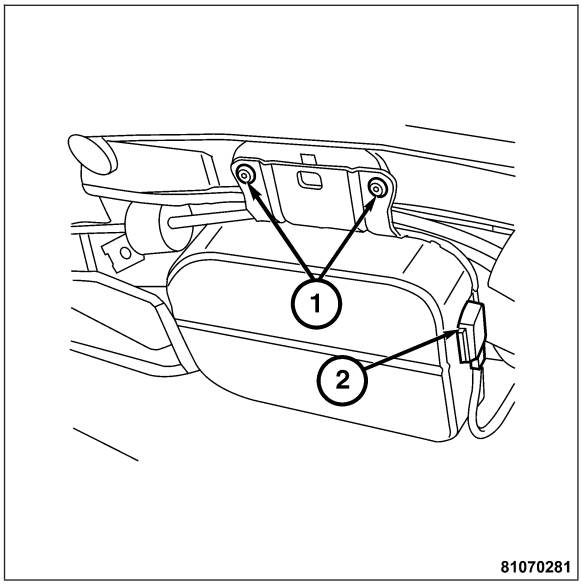

The ORC and the Instrument Cluster (IC) each contain a central processing unit and programming that allow them to communicate with each other using the Controller Area Network (CAN). This method of communication is used by the ORC for control of the airbag indicator lamp.

Hard wired circuitry connects the SRS components to each other through the electrical system of the vehicle. These hard wired circuits are integral to several wire harnesses, which are routed throughout the vehicle and retained by many different methods. These circuits may be connected to each other, to the vehicle electrical system, and to the SRS components through the use of a combination of soldered splices, splice block connectors, and many different types of wire harness terminal connectors and insulators. Refer to the appropriate wiring information. The wiring information includes wiring diagrams, proper wire and connector repair procedures, further details on wire harness routing and retention, as well as pinout and location views for the various wire harness connectors, splices and grounds.

OPERATION

ACTIVE RESTRAINTS

The primary passenger restraints in this or any other vehicle are the standard equipment factory-installed seat belts and child restraint anchors. Seat belts and child restraint anchors are referred to as an active restraint because the occupants are required to physically fasten and properly adjust these restraints in order to benefit from them. See the Owner's Manual in the vehicle glove box for more information on the features, use, and operation of all of the factory-installed active restraints.

PASSIVE RESTRAINTS

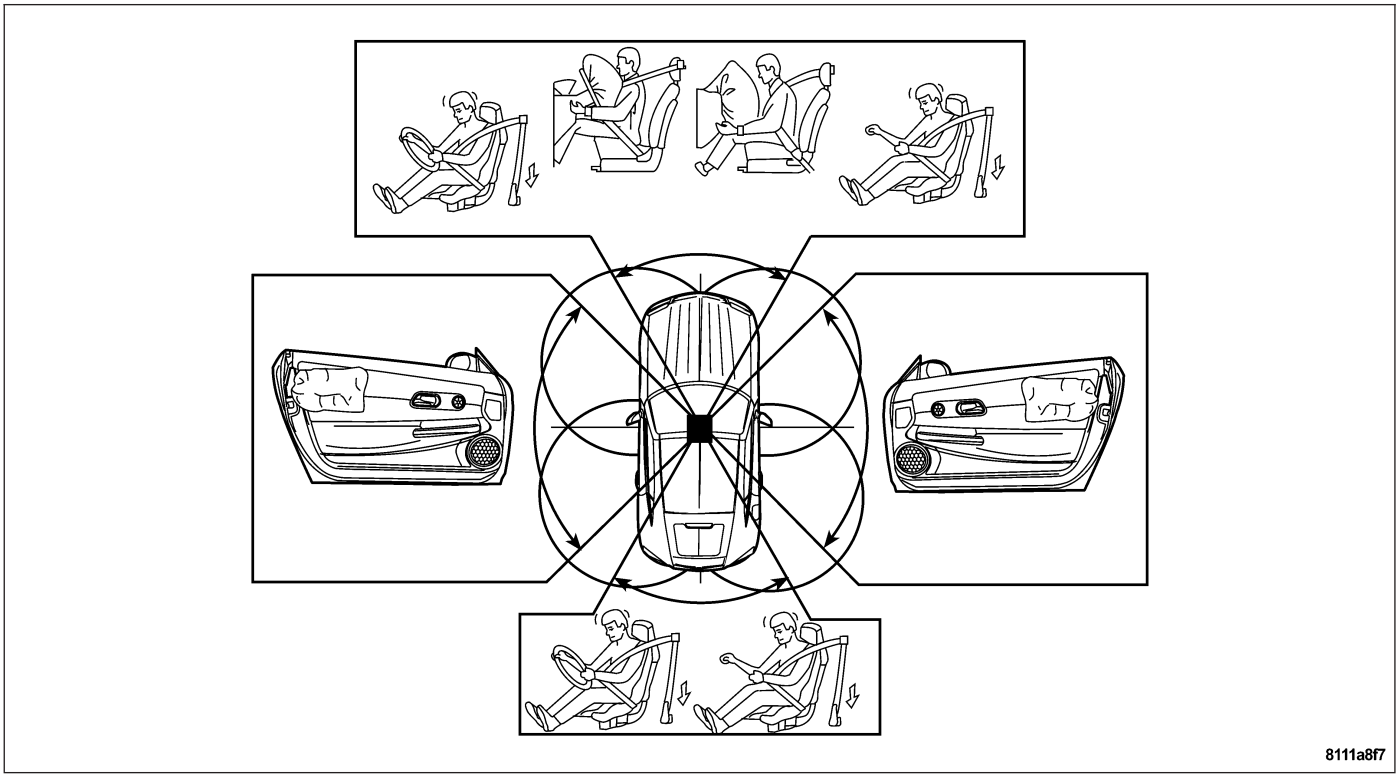

The driver/passenger airbags and the driver/passenger Seat Belt Tensioners (SBT) were designed to reduce the risk of an injury to the chest and head in the event of a head-on collision.

The side airbags were designed to protect primarily the upper body and also to help protect the head in the event of a side collision.

Malfunctions in the SRS system are indicated on the Instrument Cluster (IC) by the airbag warning indicator lamp.

SRS - AIRBAG WARNING INDICATOR

The SRS airbag warning indicator lamp indicates that the SRS is ready for operation. When no faults are present in the system, the airbag warning indicator illuminates when the ignition switch is turned to the ON or RUN position and then goes out after approximately six seconds.

An error or malfunction is indicated in the SRS by the airbag warning indicator not illuminating when the ignition switch is turned to the ON or RUN position or not going out after six seconds.

Errors and malfunctions not endangering occupant protection are indicated by the airbag warning indicator illuminating for approximately two minutes when the ignition switch is turned to the ON or RUN position.

Errors and malfunctions which may endanger the occupant are indicated by the airbag warning indicator illuminating continuously.

In the case of an error or a malfunction the entire system should be checked according to the diagnosis instructions. The active restraints **ARE NOT** affected by an error or a malfunction in the SRS and remain operational.



PASSENGER AIRBAG OFF INDICATOR LAMP

The passenger Airbag Off Indicator Lamp operates in conjunction with the Passenger Airbag On/Off Switch. When the switch is turned to either the On or the Off position, the switch position is communicated to the Passenger Seat Occupant Simulator. The Passenger Seat Occupant Simulator then translates the switch position into a signal that the Occupant Restraint Controller is capable of reading in order to switch the Passenger Airbag on or off depending upon the Switch position. The Passenger Airbag Off Indicator Lamp will stay illuminated as long as the Passenger Airbag On/Off Switch is in the Off position.

FRONT END MEDIUM-SEVERE HEAD ON COLLISION SRS OPERATION

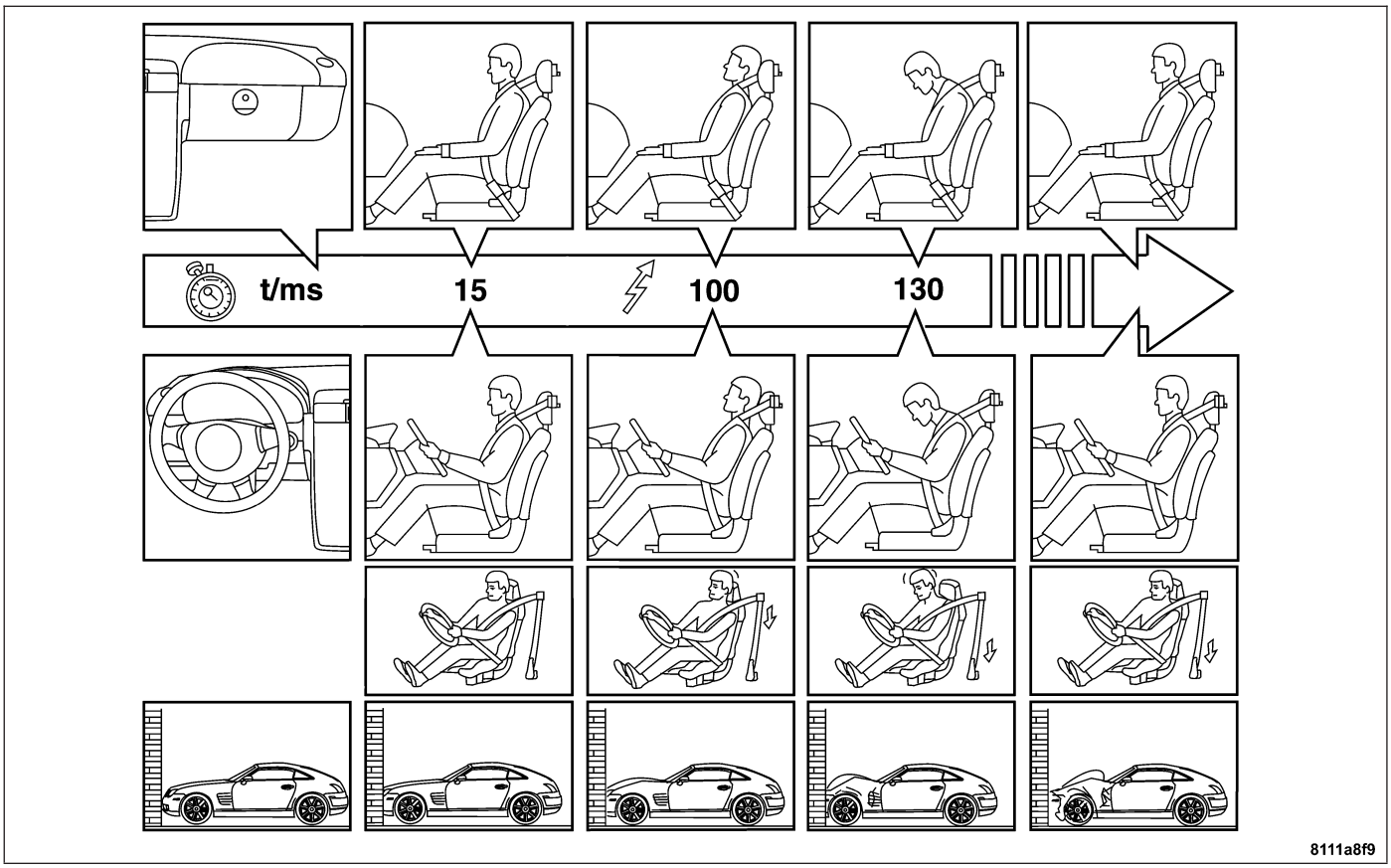

Only the seat belt tensioners (SBT) are triggered.

The ORC registers medium-deceleration (stage-one threshold) due to a collision.

The triggering pulse is transferred only to the SBT squibs, because the restraint function of the seat belts in combination with the SBT is sufficient enough to effectively protect the vehicles passengers for this type of collision.

A check is made whether the seat belts are fastened. If a seat belt is not fastened and the stage one threshold is exceeded the driver and passenger airbags are triggered to provide protection for the front passengers.

FRONT END SEVERE HEAD-ON COLLISION SRS OPERATION

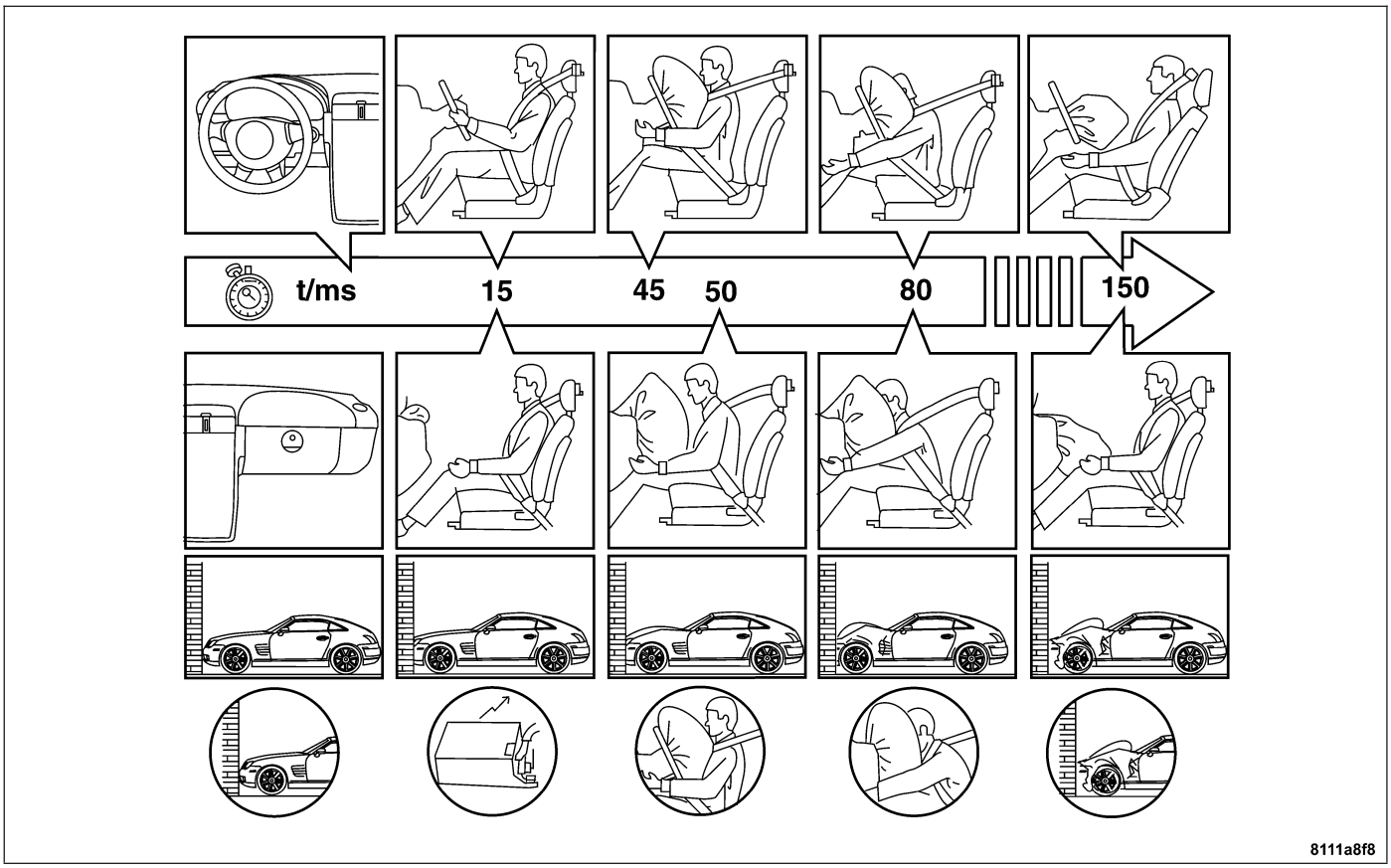

“Stage two threshold” The ORC recognizes the vehicles rapid deceleration due to a collision. The ORC routes the triggering pulse to the driver and passenger airbag squibs. At the same time the driver and passenger SBTs are also triggered.

REAR-END COLLISION SRS OPERATION

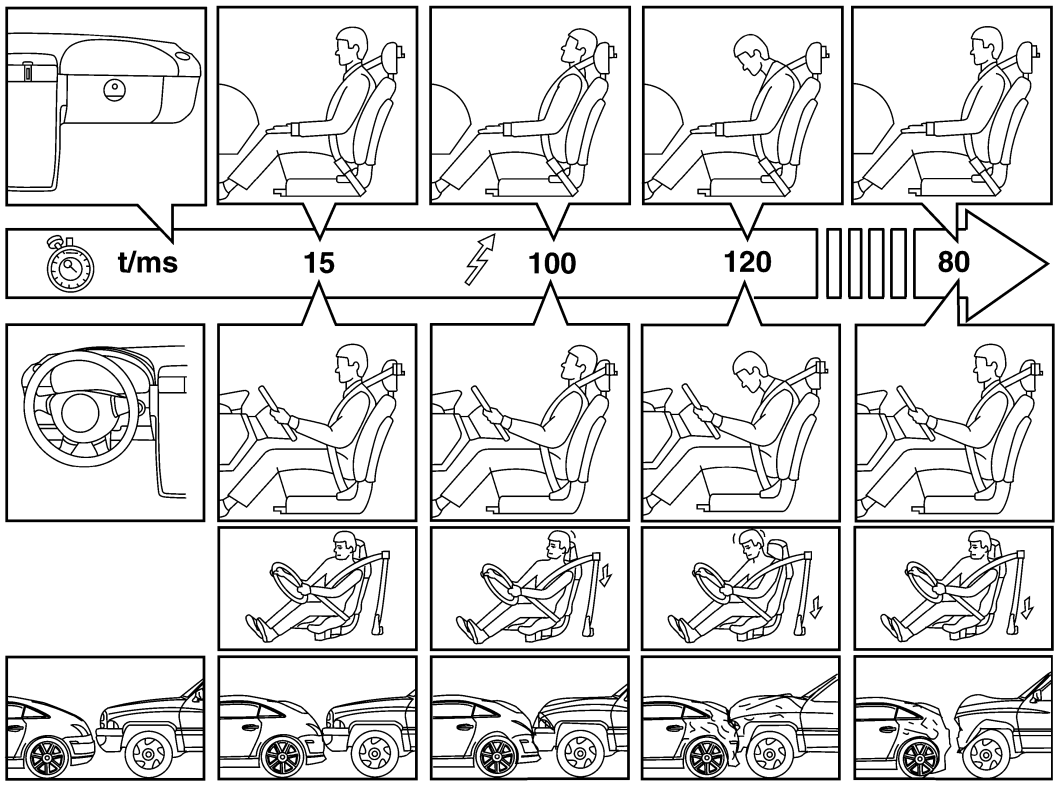

When the ORC registers sudden acceleration which exceeds the forward threshold value a check is made to determine which front seat belts are fastened. The ORC then activates only the SBTs which have fastened seat belts. The driver/passenger airbags are not activated unless a frontal collision which exceeds the stage two threshold is detected.

SIDE IMPACT COLLISION SRS OPERATION

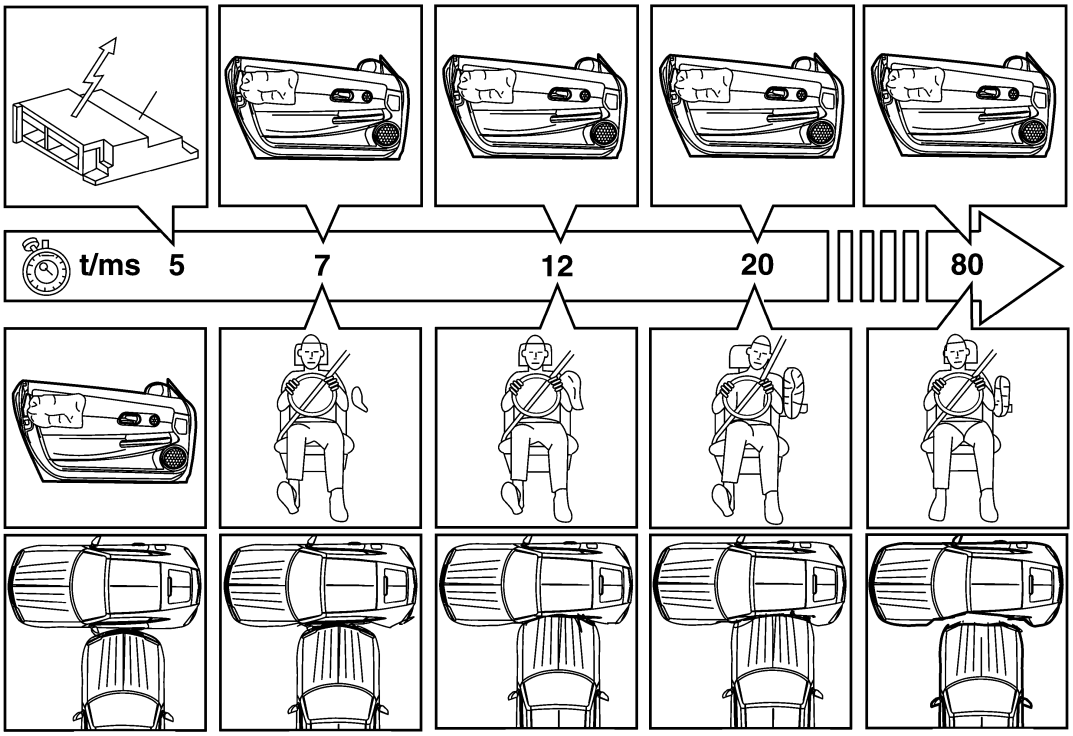

When either the driver or passenger side impact side airbag sensor detects a sudden lateral acceleration which exceeds the lateral threshold value a signal is sent to the ORC. The ORC then deploys the appropriate side airbag.

The SRS electrical circuits are continuously monitored and controlled by a microprocessor and software contained within the Occupant Restraint Controller (ORC) (1). An airbag warning indicator lamp in the Instrument Cluster (IC) illuminates for about six seconds as a bulb test each time the ignition switch is turned to the On or Start positions. Following the bulb test, the airbag warning indicator lamp is turned On or Off by the ORC to indicate the status of the SRS. If the airbag warning indicator lamp comes on at any time other than during the bulb test, it indicates that there is a concern in the SRS electrical circuits. Such a problem may cause airbags to not deploy when required, or to deploy when not required.

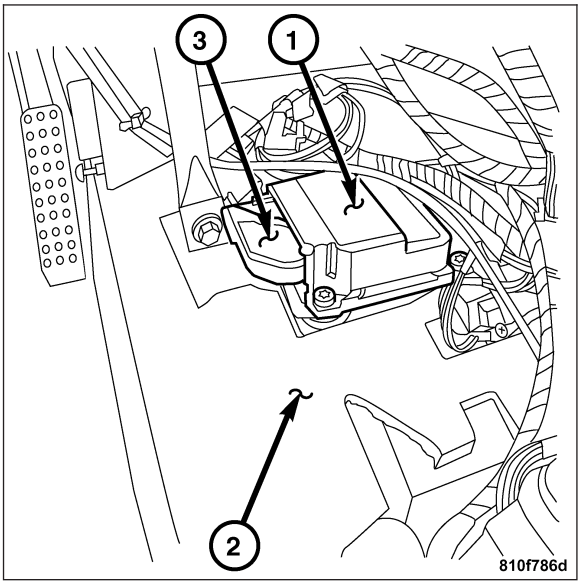

Deployment of the driver and passenger airbags depends upon the angle and severity of an impact. Deployment is not based upon vehicle speed; rather, deployment is based upon the rate of deceleration as measured by the forces of gravity (G force). When an impact is severe enough, the microprocessor in the ORC signals the inflator of the appropriate airbag units to deploy their airbag cushions. The SBT is provided with a deployment signal by the ORC in conjunction with the driver and passenger airbags. During a frontal vehicle impact, the seat belts are used to restrain both the driver and the passenger in the proper position for an airbag deployment. The SBT removes the slack from the seat belts to provide further assurance that the driver and passenger are properly positioned and restrained for an airbag deployment.

Typically, the vehicle occupants recall more about the events preceding and following a collision than they do of an airbag deployment itself. This is because the airbag deployment and deflation occur so rapidly. In a typical 30 mile-per-hour (48 kilometer-per-hour) barrier impact, from the moment of impact until the airbags are fully inflated takes about 40 milliseconds. Within one to two seconds from the moment of impact, the airbags are almost entirely deflated. The times cited for these events are approximations, which apply only to a barrier impact at the given speed. Actual times will vary somewhat, depending upon the vehicle speed, impact angle, severity of the impact, and the type of collision.

When the ORC monitors a concern in any of the SRS circuits or components, including the SBT, it stores a fault code or Diagnostic Trouble Code (DTC) in its memory circuit and sends an electronic message to the IC via the CAN to illuminate the airbag warning indicator. Proper testing of the SRS components, CAN data bus, ORC signals, and DTC information requires the use of a DRBIII® scan tool. Refer to the appropriate diagnostic information.

See the Owners Manual in the vehicle glove box for more information regarding features, use, and operation of all of the factory-installed active restraints.

WARNING

WARNING: DURING AND FOLLOWING ANY SEAT BELT OR CHILD RESTRAINT ANCHOR SERVICE, CAREFULLY INSPECT ALL SEAT BELTS, BUCKLES, MOUNTING HARDWARE, RETRACTORS, TETHER STRAPS, AND ANCHORS FOR PROPER INSTALLATION, OPERATION, OR DAMAGE. REPLACE ANY BELT THAT IS CUT, FRAYED, OR TORN. STRAIGHTEN ANY BELT THAT IS TWISTED. TIGHTEN ANY LOOSE FASTENERS. REPLACE ANY BELT THAT HAS A DAMAGED OR INOPERATIVE BUCKLE OR RETRACTOR. REPLACE ANY BELT THAT HAS A BENT OR DAMAGED LATCH PLATE OR ANCHOR PLATE. REPLACE ANY CHILD RESTRAINT ANCHOR OR THE UNIT TO WHICH THE ANCHOR IS INTEGRAL THAT HAS BEEN BENT OR DAMAGED. NEVER ATTEMPT TO REPAIR A SEAT BELT OR CHILD RESTRAINT COMPONENT. ALWAYS REPLACE DAMAGED OR FAULTY SEAT BELT AND CHILD RESTRAINT COMPONENTS WITH THE CORRECT, NEW AND UNUSED REPLACEMENT PARTS LISTED IN THE DAIMLERCHRYSLER MOPAR PARTS CATALOG.

WARNING: ON VEHICLES EQUIPPED WITH AIRBAGS, DISABLE THE SUPPLEMENTAL RESTRAINT SYSTEM BEFORE ATTEMPTING ANY STEERING WHEEL, STEERING COLUMN, DRIVER AIRBAG, PASSENGER AIRBAG, SEAT BELT TENSIONER OR INSTRUMENT PANEL COMPONENT DIAGNOSIS OR SERVICE. DISCONNECT AND ISOLATE THE BATTERY NEGATIVE (GROUND) CABLE, THEN WAIT TWO MINUTES FOR THE SYSTEM CAPACITOR TO DISCHARGE BEFORE PERFORMING FURTHER DIAGNOSIS OR SERVICE. THIS IS THE ONLY SURE WAY TO DISABLE THE SUPPLEMENTAL RESTRAINT SYSTEM. FAILURE TO TAKE THE PROPER PRECAUTIONS COULD RESULT IN ACCIDENTAL AIRBAG DEPLOYMENT AND POSSIBLE PERSONAL INJURY.

WARNING: AN AIRBAG INFLATOR UNIT MAY CONTAIN SODIUM AZIDE AND POTASSIUM NITRATE. THESE MATERIALS ARE POISONOUS AND EXTREMELY FLAMMABLE. CONTACT WITH ACID, WATER, OR HEAVY METALS MAY PRODUCE HARMFUL AND IRRITATING GASES (SODIUM HYDROXIDE IS FORMED IN THE PRESENCE OF MOISTURE) OR COMBUSTIBLE COMPOUNDS. AN AIRBAG INFLATOR UNIT MAY ALSO CONTAIN A GAS CANISTER PRESSURIZED TO OVER 2500 PSI. DO NOT ATTEMPT TO DISMANTLE AN AIRBAG UNIT OR TAMPER WITH ITS INFLATOR. DO NOT PUNCTURE, INCINERATE, OR BRING INTO CONTACT WITH ELECTRICITY. DO NOT STORE AT TEMPERATURES EXCEEDING 93° C (200° F).

WARNING: WHEN HANDLING A SEAT BELT TENSIONER , PROPER CARE SHOULD BE EXERCISED TO KEEP FINGERS OUT FROM UNDER THE TENSIONER COVER AND AWAY FROM THE SEAT BELT WEBBING WHERE IT EXITS FROM THE TENSIONER COVER.

WARNING: REPLACE ALL RESTRAINT SYSTEM COMPONENTS ONLY WITH PARTS SPECIFIED IN THE DAIMLERCHRYSLER MOPAR® PARTS CATALOG. SUBSTITUTE PARTS MAY APPEAR INTERCHANGEABLE, BUT INTERNAL DIFFERENCES MAY RESULT IN INFERIOR OCCUPANT PROTECTION.

WARNING: THE FASTENERS, SCREWS, AND BOLTS ORIGINALLY USED FOR THE RESTRAINT SYSTEM COMPONENTS HAVE SPECIAL COATINGS AND ARE SPECIFICALLY DESIGNED FOR THE RESTRAINT SYSTEM. THEY MUST NEVER BE REPLACED WITH ANY SUBSTITUTES. ANY TIME A NEW FASTENER IS NEEDED, REPLACE IT WITH THE CORRECT FASTENERS PROVIDED IN THE SERVICE PACKAGE OR SPECIFIED IN THE DAIMLERCHRYSLER MOPAR® PARTS CATALOG.

WARNING: WHEN A STEERING COLUMN HAS AN AIRBAG UNIT ATTACHED, NEVER PLACE THE COLUMN ON THE FLOOR OR ANY OTHER SURFACE WITH THE STEERING WHEEL OR AIRBAG UNIT FACE DOWN.

DIAGNOSIS AND TESTING - SUPPLEMENTAL RESTRAINT SYSTEM

WARNING: ON VEHICLES EQUIPPED WITH AIRBAGS, DISABLE THE SUPPLEMENTAL RESTRAINT SYSTEM BEFORE ATTEMPTING ANY STEERING WHEEL, STEERING COLUMN, DRIVER AIRBAG, PASSENGER AIRBAG, SIDE IMPACT SENSOR, OR INSTRUMENT PANEL COMPONENT DIAGNOSIS OR SERVICE. DISCONNECT AND ISOLATE THE BATTERY NEGATIVE (GROUND) CABLE, THEN WAIT TWO MINUTES FOR THE SYSTEM CAPACITOR TO DISCHARGE BEFORE PERFORMING FURTHER DIAGNOSIS OR SERVICE. THIS IS THE ONLY SURE WAY TO DISABLE THE SUPPLEMENTAL RESTRAINT SYSTEM. FAILURE TO TAKE THE PROPER PRECAUTIONS COULD RESULT IN ACCIDENTAL AIRBAG DEPLOYMENT AND POSSIBLE PERSONAL INJURY.

Proper diagnosis and testing of the supplemental restraint system (SRS) components, the Controller Area Network (CAN), electronic message inputs to and outputs from the Instrument Cluster (IC) or the Occupant Restraint Controller (ORC), as well as the retrieval or erasure of a Diagnostic Trouble Code (DTC) from the ORC requires the use of a DRBIII® scan tool. Refer to the appropriate diagnostic information.

STANDARD PROCEDURE

STANDARD PROCEDURE - HANDLING NON-DEPLOYED SUPPLEMENTAL RESTRAINTS

WARNING: AT NO TIME SHOULD ANY SOURCE OF ELECTRICITY BE PERMITTED NEAR THE INFLATOR ON THE BACK OF A NON-DEPLOYED AIRBAG. WHEN CARRYING A NON-DEPLOYED AIRBAG, THE TRIM COVER OR AIRBAG CUSHION SIDE OF THE UNIT SHOULD BE POINTED AWAY FROM THE BODY TO MINIMIZE INJURY IN THE EVENT OF AN ACCIDENTAL DEPLOYMENT. IF THE AIRBAG UNIT IS PLACED ON A BENCH OR ANY OTHER SURFACE, THE TRIM COVER OR AIRBAG CUSHION SIDE OF THE UNIT SHOULD BE FACE UP TO MINIMIZE MOVEMENT IN THE EVENT OF AN ACCIDENTAL DEPLOYMENT. IN ADDITION, THE SUPPLEMENTAL RESTRAINT SYSTEM SHOULD BE DISARMED WHENEVER ANY STEERING WHEEL, STEERING COLUMN, DRIVER AIRBAG, PASSENGER AIRBAG, SIDE IMPACT SENSOR OR INSTRUMENT PANEL COMPONENTS REQUIRE DIAGNOSIS OR SERVICE. FAILURE TO OBSERVE THIS WARNING COULD RESULT IN ACCIDENTAL AIRBAG DEPLOYMENT AND POSSIBLE PERSONAL INJURY.

CAUTION: All damaged, faulty or non-deployed airbags which are replaced on vehicles are to be handled and disposed of properly. If an airbag unit is faulty or damaged and non-deployed, refer to the Hazardous Substance Control System for proper disposal. Dispose of all non-deployed and deployed airbags in a manner consistent with state, provincial, local and federal regulations.

STANDARD PROCEDURE - SERVICE AFTER A SUPPLEMENTAL RESTRAINT DEPLOYMENT

Any vehicle which is to be returned to use following a supplemental restraint deployment, must have the deployed restraint replaced. In addition, if the driver airbag has been deployed, the clockspring must also be replaced. If the passenger airbag is deployed, the instrument panel top pad must be replaced. If a side airbag has been deployed, the complete airbag unit and the door trim panel must be replaced. These components are not intended for reuse and will be damaged or weakened as a result of a supplemental restraint deployment, which may or may not be obvious during a visual inspection.

The passenger airbag mounting points on the instrument panel structural duct must be closely inspected for damage, and the instrument panel assembly must be replaced if structural duct damage is evident. It is also critical that the mounting surfaces and/or mounting brackets for the Occupant Restraint Controller (ORC) and the side impact sensors must be closely inspected and restored to their original conditions following any vehicle impact damage. Because the ORC and each impact sensor are used by the SRS to monitor or confirm the direction and severity of a vehicle impact, improper orientation or insecure fastening of these components may cause airbags not to deploy when required, or to deploy when not required.

All other vehicle components should be closely inspected following any SRS deployment, but are to be replaced only as required by the extent of the visible damage incurred.

AIRBAG SQUIB STATUS

CAUTION: Deployed front airbags having two initiators (squibs) in the airbag inflator may or may not have live pyrotechnic material within the inflator. Do not dispose of these airbags unless you are sure of complete deployment. Refer to the Hazardous Substance Control System for proper disposal procedures. Dispose of all non-deployed and deployed airbags in a manner consistent with state, provincial, local, and federal regulations.

Multistage airbags with multiple initiators (squibs) must be checked to determine that all squibs were used during the deployment event. The driver and passenger airbags in this model are deployed by electrical signals generated by the Occupant Restraint Controller (ORC) through the driver or passenger squib 1 and squib 2 circuits to the two initiators in the airbag inflators. Typically, both initiators are used and all potentially hazardous chemicals are burned during an airbag deployment event. However, it is possible for only one initiator to be used due to an airbag system fault; therefore, it is always necessary to confirm that both initiators have been used in order to avoid the improper handling or disposal of potentially live pyrotechnic or hazardous materials. The following procedure should be performed using a DRBIII® scan tool to verify the status of both airbag squibs before either deployed airbag is removed from the vehicle for disposal.

1. Be certain that the DRBIII® scan tool contains the latest version of the proper DRBIII® software. Connect the DRBIII® to the Data Link Connector (DLC). The DLC is located on the driver side lower edge of the instrument panel, outboard of the steering column.
2. Turn the ignition switch to the On position.
3. Using the DRBIII®, read and record the active (current) Diagnostic Trouble Code (DTC) data.

Using the active DTC information, refer to the **Airbag Squib Status** table to determine the status of both driver and/or passenger airbag squibs.

AIRBAG SQUIB STATUS

IF the Active DTC is:	Conditions	Squib Status
Driver or Passenger Squib 1 open Driver or Passenger Squib 2 open	AND the stored DTC minutes for both Driver or Passenger squibs are within 15 minutes of each other	Both Squib 1 and 2 were used.
Driver or Passenger Squib 1 open Driver or Passenger Squib 2 open	AND the stored DTC minutes for Driver or Passenger Squib 2 open is GREATER than the stored DTC minutes for Driver or Passenger Squib 1 by 15 minutes or more	Squib 1 was used; Squib 2 is live.
Driver or Passenger Squib 1 open Driver or Passenger Squib 2 open	AND the stored DTC minutes for Driver or Passenger Squib 1 open is GREATER than the stored DTC minutes for Driver or Passenger Squib 2 by 15 minutes or more	Squib 1 is live; Squib 2 was used.
Driver or Passenger Squib 1 open	AND Driver or Passenger Squib 2 open is NOT an active code	Squib 1 was used; Squib 2 is live.
Driver or Passenger Squib 2 open	AND Driver or Passenger Squib 1 open is NOT an active code	Squib 1 is live; Squib 2 was used.

If no squib open codes are active the status of the airbag squibs is unknown. In this case the airbag should be handled and disposed of assuming that both squibs were live.

CLEANUP PROCEDURE

Following a supplemental restraint deployment, the vehicle interior will contain a powdery residue. This residue consists primarily of harmless by-products used to deploy a supplemental restraint. However, this residue may also contain traces of sodium hydroxide powder, a chemical by-product of the propellant material that is used to generate the inert gas which inflates the airbag. Since sodium hydroxide powder can irritate the skin, eyes, nose, or throat, be sure to wear safety glasses (1), rubber gloves (2), and a long-sleeved shirt during cleanup.

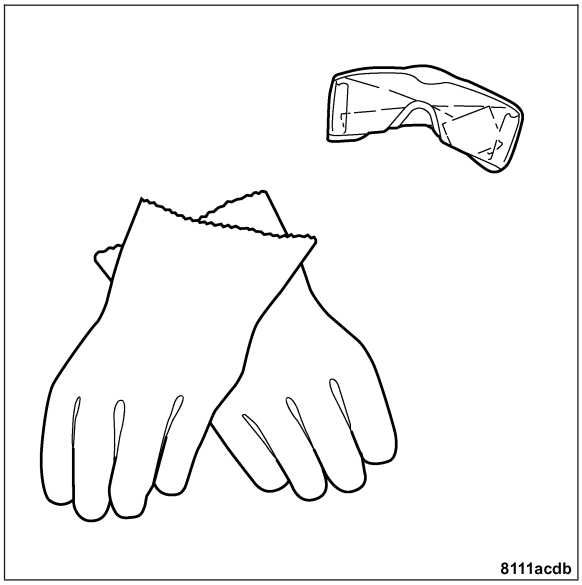

WARNING: IF YOU EXPERIENCE SKIN IRRITATION DURING CLEANUP, RUN COOL WATER OVER THE AFFECTED AREA. ALSO, IF YOU EXPERIENCE IRRITATION OF THE NOSE OR THROAT, EXIT THE VEHICLE FOR FRESH AIR UNTIL THE IRRITATION CEASES. IF IRRITATION CONTINUES, SEE A PHYSICIAN.

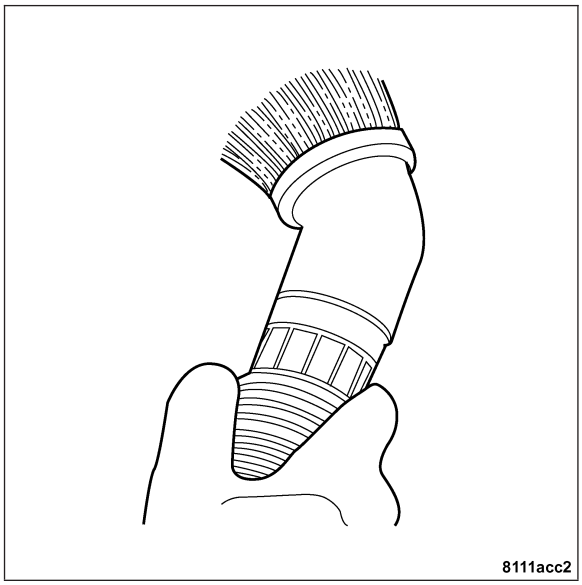

1. Begin the cleanup by using a vacuum cleaner to remove any residual powder from the vehicle interior. Clean from outside the vehicle and work your way inside, so that you avoid kneeling or sitting on a non-cleaned area.
2. Be certain to vacuum the heater and air conditioning outlets as well. Run the heater and air conditioner blower on the lowest speed setting and vacuum any powder expelled from the outlets.
3. Next, remove the deployed supplemental restraints from the vehicle.
   1. Driver side airbag. **Refer to Page 8O-100**.
   2. Passenger side airbag. **Refer to Page 8O-102**.
   3. Side impact airbag. **Refer to Page 8O-114**.
   4. Seat belt tentioners. **Refer to Page 8O-122**.
4. You may need to vacuum the interior of the vehicle a second time to recover all of the powder.

STANDARD PROCEDURE - SUPPLEMENTAL RESTRAINT SYSTEM (SRS) - VERIFICATION TEST

The following procedure should be performed using a DRBIII® scan tool to verify proper supplemental restraint system (SRS) operation following the service or replacement of any SRS component.

WARNING: ON VEHICLES EQUIPPED WITH AIRBAGS, DISABLE THE SUPPLEMENTAL RESTRAINT SYSTEM BEFORE ATTEMPTING ANY STEERING WHEEL, STEERING COLUMN, DRIVER AIRBAG, PASSENGER AIRBAG, SIDE IMPACT SENSOR OR INSTRUMENT PANEL COMPONENT DIAGNOSIS OR SERVICE. DISCONNECT AND ISOLATE THE BATTERY NEGATIVE (GROUND) CABLE, THEN WAIT TWO MINUTES FOR THE SYSTEM CAPACITOR TO DISCHARGE BEFORE PERFORMING FURTHER DIAGNOSIS OR SERVICE. THIS IS THE ONLY SURE WAY TO DISABLE THE SUPPLEMENTAL RESTRAINT SYSTEM. FAILURE TO TAKE THE PROPER PRECAUTIONS COULD RESULT IN ACCIDENTAL AIRBAG DEPLOYMENT AND POSSIBLE PERSONAL INJURY.

1. During the following test, the battery negative cable remains disconnected and isolated, as it was during the SRS component removal and installation procedures.
2. Connect the DRBIII® to the Data Link Connector (DLC).
3. Exit the vehicle but maintain contact with the DRBIII®.
4. Turn the ignition switch to the On position.
5. Check to be certain that there are no occupants in the vehicle, then reconnect the battery negative cable.
6. Using the DRBIII®, read and record any active (current) Diagnostic Trouble Code (DTC) data.
7. Next, use the DRBIII® to read and record any stored (historical) DTC data.
8. If any DTCs are found, refer to the appropriate diagnostic information.
9. Use the DRBIII® to erase any stored DTC data.
10. Turn the ignition switch to the Off position for about fifteen seconds, and then back to the On position. Observe the airbag warning indicator in the instrument cluster for proper operation. If a fault is detected, refer to the appropriate diagnostic information.

SPECIFICATIONS

TORQUE CHART - RESTRAINTS

TORQUE SPECIFICATIONS

DESCRIPTION	N·m	Ft. Lbs.	In. Lbs.
Seat Belt Buckle Bolt	35	26	310
Seat Belt Guide Fitting Bolt	35	26	310
Occupant Restraint Controller Bolt to Vehicle Floor	35	26	310
Passenger Airbag to Instrument Panel Structural Duct Bolt	35	26	310
Airbag to Steering Wheel Screw	8	6	71
Seat Belt End Fitting Bolt	8	6	71
Seat Belt Tensioner (SBT) to B Pillar Bolt	10	8	88

OCCUPANT RESTRAINT CONTROLLER

DESCRIPTION

The Occupant Restraint Controller (ORC) is located on the floor beneath the center console. It is secured by four screws to a stamped steel mounting bracket.

The arrow which is printed on the label located on the top of the ORC housing (1) provides a visual verification of the proper orientation and should always face the front of the vehicle.

The ORC cannot be repaired or adjusted and, if damaged or faulty, it must be replaced.

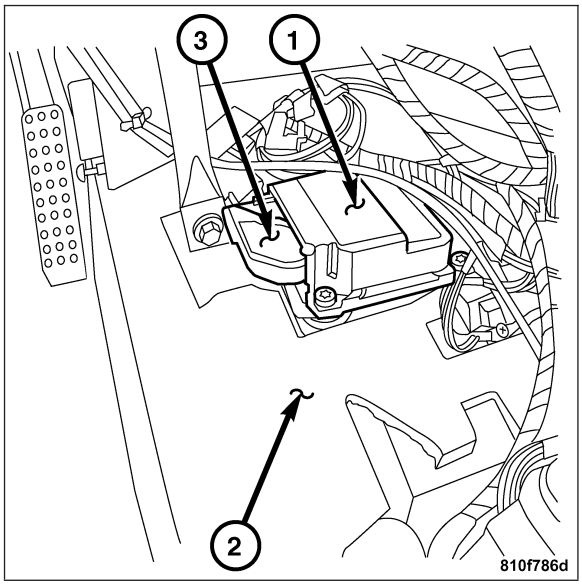

OPERATION

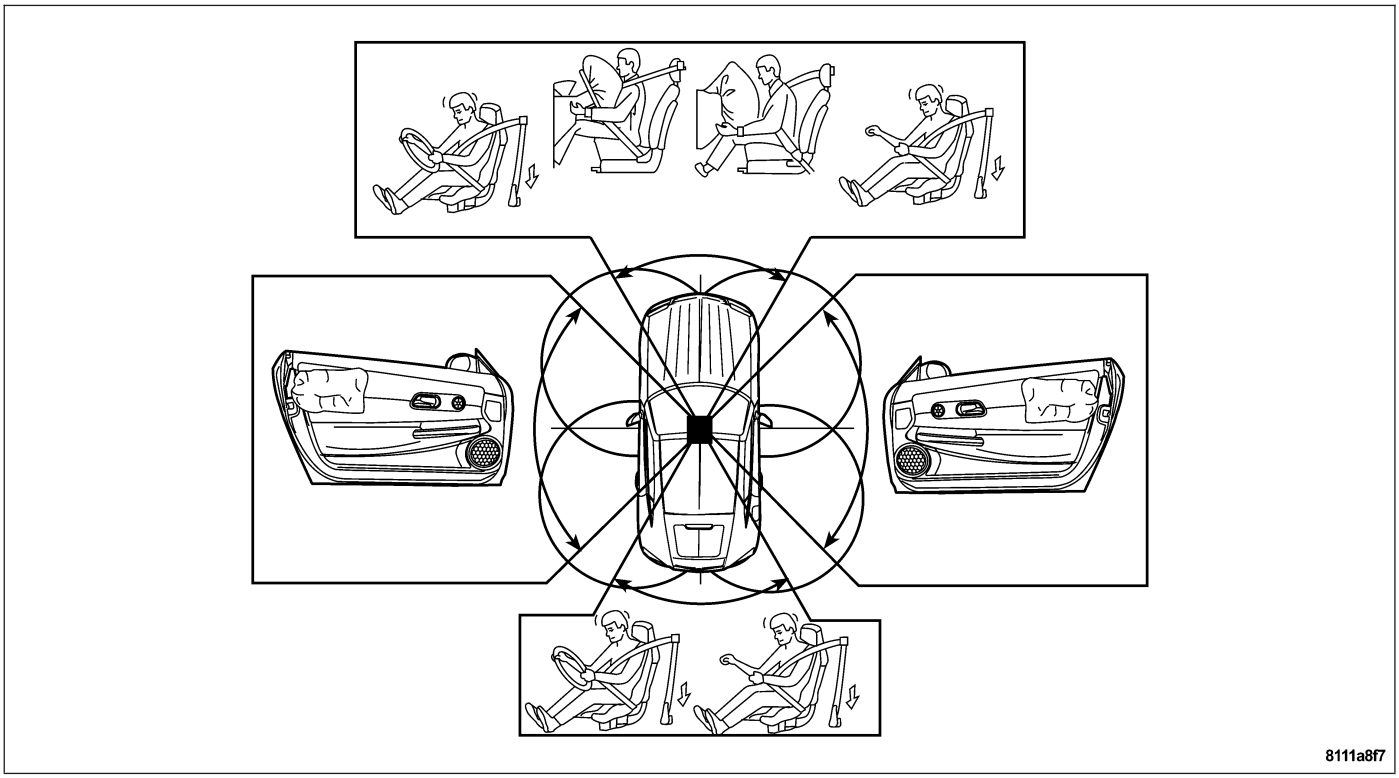

The microprocessor in the Occupant Restraint Controller (ORC) contains the Supplemental Restraint System (SRS) logic circuits and controls all of the SRS components. The Occupant Restraint Controller (ORC) uses On-Board Diagnostics (OBD) and Controller Area Network (CAN) to communicate with other electronic modules in the vehicle as well as with the DRBIII® scan tool.

The Occupant Restraint Controller (ORC) microprocessor continuously monitors all of the Supplemental Restraint System (SRS) electrical circuits to determine the system status. If the Occupant Restraint Controller (ORC) detects a monitored system fault, it sets an active and a stored Diagnostic Trouble Code (DTC). A message is sent to the Instrument Cluster (IC) over the Controller Area Network (CAN) data bus to illuminate the airbag warning indicator lamp.

The Occupant Restraint Controller (ORC) also monitors the seat belt switch which is located internal to each of the front seat belt buckles to determine whether the seat belts are fastened properly. If the seat belt is not fastened a signal is sent to the Instrument Cluster (IC) over the Controller Area Network (CAN) data bus to illuminate the seat-belt indicator lamp.

The Occupant Restraint Controller (ORC) receives battery current through two circuits; a fused ignition switch output (RUN) circuit through a fuse in the underhood accessory fuse block, and a fused ignition switch output (START-RUN) circuit through a second fuse in the underhood accessory fuse block. The Occupant Restraint Controller (ORC) is grounded through a ground circuit of the instrument panel floor wire harness. This has a single eyelet terminal connector secured by the bolt to the Occupant Restraint Controller (ORC) mount on the floor panel transmission tunnel. These connections allow the Occupant Restraint Controller (ORC) to be operational whenever the ignition switch is in the Start or On positions.

The Occupant Restraint Controller (ORC) also contains a capacitor. When the ignition switch is in the Start or On positions, this capacitor is continually being charged with enough voltage to deploy the airbags for up to one second following a battery disconnect or failure. The purpose of the capacitor is to provide backup SRS protection in case there is a loss of battery current supply to the Occupant Restraint Controller (ORC) during an impact.

Two sensors are contained within the Occupant Restraint Controller (ORC), an electronic impact sensor and a safing sensor. The Occupant Restraint Controller (ORC) also monitors inputs from two remote side impact sensors located under the carpet directly below the front seats, to control the deployment of the side impact airbag units.

The safing sensor is an electronic accelerometer sensor within the Occupant Restraint Controller (ORC) that provides an additional logic input to the Occupant Restraint Controller (ORC) microprocessor. The safing sensor is used to verify the need for a Supplemental Restraint System (SRS) deployment by detecting the impact energy of a collision. The impact energy must exceed the safing threshold in order for the airbags to deploy.

Pre-programmed decision algorithms in the Occupant Restraint Controller (ORC) microprocessor determine when the deceleration rate indicates an impact that is severe enough to require supplemental restraint system protection. Based upon the status of the seat belt switch inputs and the severity of the monitored impact, determines the level of front airbag deployment force required for each front seating position. When the programmed conditions are met, the Occupant Restraint Controller (ORC) sends the proper electrical signals to deploy the front airbags and the Seat Belt Tensioner's (SBT) at the programmed force levels.

The Occupant Restraint Controller (ORC) determines the level of front air bag deployment force for each seating position based on the seat belts switch input status and the severity of the impact. When the predetermined impact conditions are met the Occupant Restraint Controller (ORC) deploys the front airbags and activates the Seat Belt Tensioner's (SBT).

STANDARD PROCEDURE - ORC PROGRAMMING

This procedure requires the use of the DRBIII® scan tool.

After the Occupant Restraint Controller (ORC) has been replaced, the Airbag Warning Indicator Light in the Instrument Cluster flashes. This indicates that the ORC has not yet been programmed. Follow this procedure using the DRBIII® scan tool:

- The side airbag equipment is programmed to YES on the parts control modules.
- The seatbelt buckle equipment is programmed to YES.
- The passenger seat occupant simulator is programmed to YES.
- The front passenger airbag is programmed to YES.
- Turn the ignition to off and then on.
- Read out and erase any DTCs.

At this time the Airbag Warning Indicator Light will flash on and off to conclude the programming. When a front passenger airbag is retrofitted, the ORC only needs to be reprogrammed, not replaced. After finishing this procedure, any programming failure is due to a defective ORC.

REMOVAL

WARNING: ON VEHICLES EQUIPPED WITH AIRBAGS, DISABLE THE SUPPLEMENTAL RESTRAINT SYSTEM BEFORE ATTEMPTING ANY STEERING WHEEL, STEERING COLUMN, DRIVER AIRBAG, PASSENGER AIRBAG, FRONT IMPACT SENSOR, SIDE IMPACT SENSOR, SIDE IMPACT AIRBAG, OR INSTRUMENT PANEL COMPONENT DIAGNOSIS OR SERVICE. DISCONNECT AND ISOLATE THE BATTERY NEGATIVE (GROUND) CABLE, THEN WAIT TWO MINUTES FOR THE SYSTEM CAPACITOR TO DISCHARGE BEFORE PERFORMING FURTHER DIAGNOSIS OR SERVICE. THIS IS THE ONLY SURE WAY TO DISABLE THE SUPPLEMENTAL RESTRAINT SYSTEM. FAILURE TO TAKE THE PROPER PRECAUTIONS COULD RESULT IN ACCIDENTAL AIRBAG DEPLOYMENT AND POSSIBLE PERSONAL INJURY.

WARNING: THE OCCUPANT RESTRAINT CONTROLLER CONTAINS THE IMPACT SENSOR, WHICH ENABLES THE SYSTEM TO DEPLOY THE SUPPLEMENTAL RESTRAINTS. NEVER STRIKE OR DROP THE OCCUPANT RESTRAINT CONTROLLER, AS IT CAN DAMAGE THE IMPACT SENSOR OR AFFECT ITS CALIBRATION. IF AN OCCUPANT RESTRAINT CONTROLLER IS ACCIDENTALLY DROPPED DURING SERVICE, THE MODULE MUST BE SCRAPPED AND REPLACED WITH A NEW UNIT. FAILURE TO OBSERVE THIS WARNING COULD RESULT IN ACCIDENTAL, INCOMPLETE, OR IMPROPER SUPPLEMENTAL RESTRAINT DEPLOYMENT AND POSSIBLE OCCUPANT INJURIES.

1. Disconnect and isolate the battery negative cable. Wait two minutes for the system capacitor to discharge before further service.
2. Remove the center console. **Refer to Page 23-173**.
3. Disconnect the occupant restraint controller connector (2).
4. Remove the bolts (1) attaching the occupant restraint controller to the transmission tunnel.
5. Remove the occupant restraint controller from the vehicle.

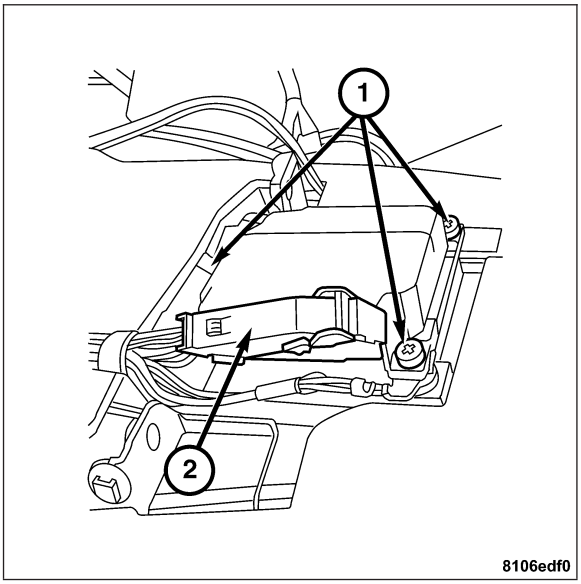

INSTALLATION

WARNING: ON VEHICLES EQUIPPED WITH AIRBAGS, DISABLE THE SUPPLEMENTAL RESTRAINT SYSTEM BEFORE ATTEMPTING ANY STEERING WHEEL, STEERING COLUMN, DRIVER AIRBAG, PASSENGER AIRBAG, FRONT IMPACT SENSOR, SIDE IMPACT SENSOR, SIDE CURTAIN AIRBAG, OR INSTRUMENT PANEL COMPONENT DIAGNOSIS OR SERVICE. DISCONNECT AND ISOLATE THE BATTERY NEGATIVE (GROUND) CABLE, THEN WAIT TWO MINUTES FOR THE SYSTEM CAPACITOR TO DISCHARGE BEFORE PERFORMING FURTHER DIAGNOSIS OR SERVICE. THIS IS THE ONLY SURE WAY TO DISABLE THE SUPPLEMENTAL RESTRAINT SYSTEM. FAILURE TO TAKE THE PROPER PRECAUTIONS COULD RESULT IN ACCIDENTAL AIRBAG DEPLOYMENT AND POSSIBLE PERSONAL INJURY.

WARNING: THE OCCUPANT RESTRAINT CONTROLLER CONTAINS THE IMPACT SENSOR, WHICH ENABLES THE SYSTEM TO DEPLOY THE SUPPLEMENTAL RESTRAINTS. NEVER STRIKE OR DROP THE OCCUPANT RESTRAINT CONTROLLER, AS IT CAN DAMAGE THE IMPACT SENSOR OR AFFECT ITS CALIBRATION. IF AN OCCUPANT RESTRAINT CONTROLLER IS ACCIDENTALLY DROPPED DURING SERVICE, THE MODULE MUST BE SCRAPPED AND REPLACED WITH A NEW UNIT. FAILURE TO OBSERVE THIS WARNING COULD RESULT IN ACCIDENTAL, INCOMPLETE, OR IMPROPER SUPPLEMENTAL RESTRAINT DEPLOYMENT AND POSSIBLE OCCUPANT INJURIES.

1. Carefully position the occupant restraint controller on the mount that is welded onto the top of the floor panel transmission tunnel. The arrow on the housing must point toward the front of the vehicle.
2. Install and tighten the screws (1) that secure the occupant restraint controller to the mount that is welded onto the top of the floor panel transmission tunnel. Observe ground lead mount on the left rear screw - controller module ground. Tighten the screws to 11 N·m (95 in. lbs.).
3. Connect the occupant restraint controller electrical connector (2).

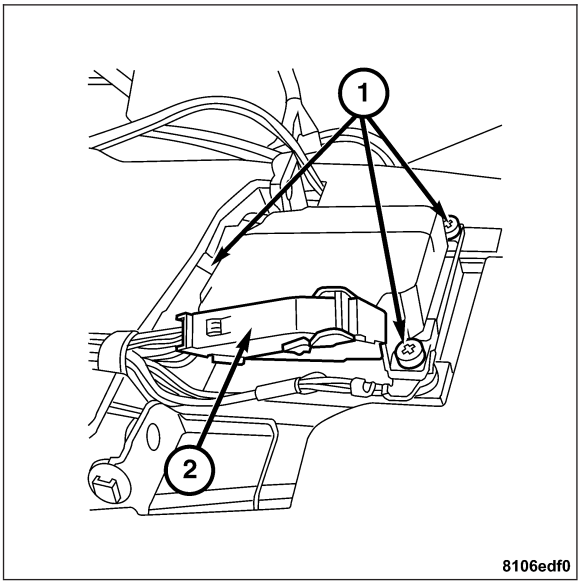

4. Install the center console. **Refer to Page 23-183**.
5. Do not reconnect the battery negative cable at this time. The Supplemental Restraint System verification test procedure should be performed following service of any Supplemental Restraint System component. **Refer to Page 8O-83**. Also, the ORC Programming procedure should be performed as well. **Refer to Page 8O-89**.

CLOCKSPRING

DESCRIPTION

The clockspring assembly is secured to the multi-function switch mounting housing near the top of the steering column behind the steering wheel.

Within the plastic case and wound around the rotor spool is a long ribbon-like tape. The outer end of the tape terminates at the connector receptacles that face the instrument panel, while the inner end of the tape terminates at the pigtail wires and connector receptacles on the hub of the clockspring rotor that face the steering wheel.

Service replacement clocksprings are shipped pre-centered and with a molded plastic locking pin installed. The locking pin secures the centered clockspring rotor to the clockspring case during shipment and handling, but must be removed from the clockspring after it and the multi-function switch mounting housing are installed on the steering column.

The clockspring cannot be repaired. If the clockspring is faulty, damaged, or if the driver airbag has been deployed, the clockspring must be replaced.

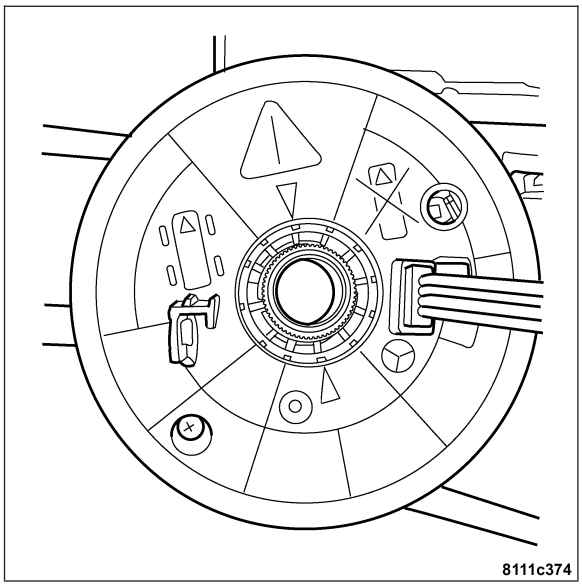

OPERATION

The clockspring is used to provide continuous electrical continuity between the instrument panel and the electrical components mounted on or in the steering wheel. The clockspring case is secured to the multi-function switch mounting housing near the top of the steering column. The connector receptacles on the tail of the fixed clockspring case connect the clockspring to the vehicle electrical system through two take outs with connectors from the instrument panel wire harness.

The clockspring rotor is movable and is keyed to the hub of the steering wheel by two large flats that are molded into the rotor hub. The three pins (two round and one oblong) on the lower surface of the clockspring rotor hub engage and index the clockspring rotor to the turn signal cancel cam. The turn signal cancel cam is integral to the multi-function switch mounting housing and is keyed to the upper steering column shaft. The short, black-sleeved yellow pigtail wire on the upper surface of the clockspring rotor connect the clockspring to the driver airbag, while a steering wheel wire harness connects the two connector receptacles on the upper surface of the clockspring rotor to the horn switch.

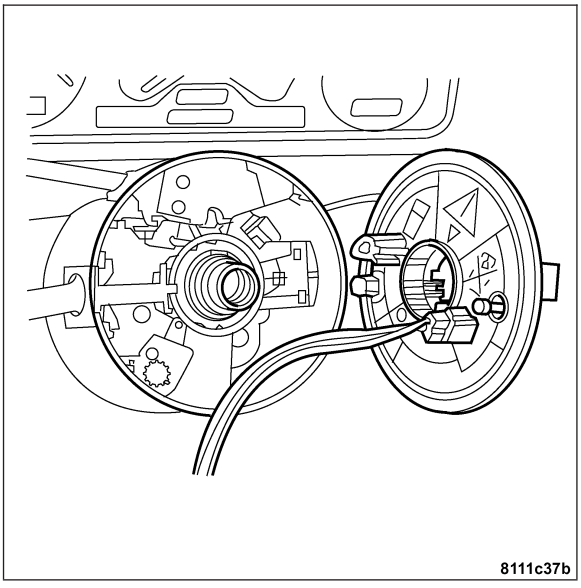

Like the clockspring in a timepiece, the clockspring tape has travel limits and can be damaged by being wound too tightly during full stop-to-stop steering wheel rotation. To prevent this from occurring, the clockspring is centered when it is installed on the steering column. Centering the clockspring indexes the clockspring tape to the movable steering components so that the tape can operate within its designed travel limits. However, if the clockspring is removed from the steering column or if the steering shaft is disconnected from the steering gear, the clockspring spool can change position relative to the movable steering components and must be re-centered following completion of the service or the tape may be damaged.

Service replacement clocksprings are shipped pre-centered and with a locking pin installed. This locking pin should not be removed until the clockspring has been installed on the steering column. If the locking pin is removed before the clockspring is installed on a steering column, the clockspring centering procedure must be performed.

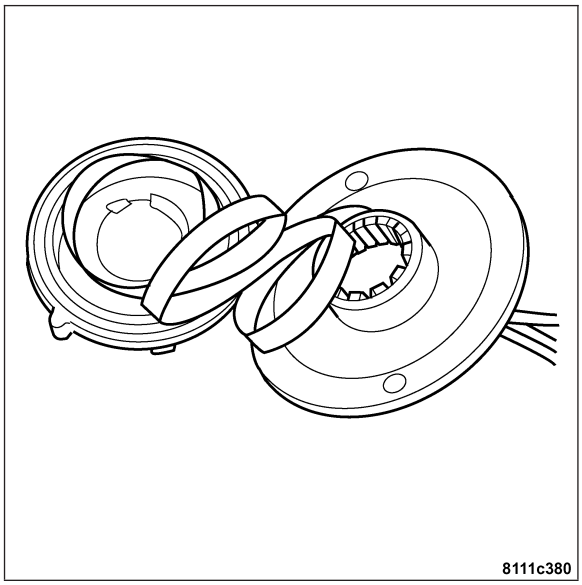

STANDARD PROCEDURE - CLOCKSPRING CENTERING

The clockspring is designed to wind and unwind when the steering wheel is rotated, but is only designed to rotate the same number of turns (about five complete rotations) as the steering wheel can be turned from stop to stop. Centering the clockspring indexes the clockspring tape to other steering components so that it can operate within its designed travel limits. The rotor of a centered clockspring can be rotated two and one-half turns in either direction from the centered position, without damaging the clockspring tape.

However, if the clockspring is removed for service or if the steering column is disconnected from the steering gear, the clockspring tape can change position relative to the other steering components. The clockspring must then be re-centered following completion of such service or the clockspring tape may be damaged.

WARNING: ON VEHICLES EQUIPPED WITH AIRBAGS, DISABLE THE SUPPLEMENTAL RESTRAINT SYSTEM BEFORE ATTEMPTING ANY STEERING WHEEL, STEERING COLUMN, DRIVER AIRBAG, PASSENGER AIRBAG, SIDE IMPACT SENSOR, OR INSTRUMENT PANEL COMPONENT DIAGNOSIS OR SERVICE. DISCONNECT AND ISOLATE THE BATTERY NEGATIVE (GROUND) CABLE, THEN WAIT TWO MINUTES FOR THE SYSTEM CAPACITOR TO DISCHARGE BEFORE PERFORMING FURTHER DIAGNOSIS OR SERVICE. THIS IS THE ONLY SURE WAY TO DISABLE THE SUPPLEMENTAL RESTRAINT SYSTEM. FAILURE TO TAKE THE PROPER PRECAUTIONS COULD RESULT IN ACCIDENTAL AIRBAG DEPLOYMENT AND POSSIBLE PERSONAL INJURY.

Note: Before starting this procedure, be certain to turn the steering wheel until the front wheels are in the straight-ahead position.

1. Place the front wheels in the straight-ahead position.
2. Remove the clockspring from the steering column. **Refer to Page 8O-94**.
3. Hold the clockspring case in one hand so that it is oriented as it would be when it is installed on the steering column.
4. Use your other hand to rotate the clockspring rotor clockwise to the end of its travel. **Do not apply excessive torque.**
5. From the end of the clockwise travel, rotate the rotor about two and one-half turns counterclockwise, until the arrows on the clockspring rotor label and the clockspring case are aligned. The uppermost pin on the lower surface of the clockspring rotor should now be the oblong pin.
6. The clockspring is now centered. Secure the clockspring rotor to the clockspring case to maintain clockspring centering until it is reinstalled on the steering column.

7. The front wheels should still be in the straight-ahead position. Reinstall the clockspring onto the steering column. **Refer to Page 8O-96**.

REMOVAL

The clockspring cannot be repaired. It must be replaced if faulty or damaged, or if the driver airbag has been deployed.

WARNING: ON VEHICLES EQUIPPED WITH AIRBAGS, DISABLE THE SUPPLEMENTAL RESTRAINT SYSTEM BEFORE ATTEMPTING ANY STEERING WHEEL, STEERING COLUMN, DRIVER AIRBAG, PASSENGER AIRBAG, SIDE IMPACT SENSOR, OR INSTRUMENT PANEL COMPONENT DIAGNOSIS OR SERVICE. DISCONNECT AND ISOLATE THE BATTERY NEGATIVE (GROUND) CABLE, THEN WAIT TWO MINUTES FOR THE SYSTEM CAPACITOR TO DISCHARGE BEFORE PERFORMING FURTHER DIAGNOSIS OR SERVICE. THIS IS THE ONLY SURE WAY TO DISABLE THE SUPPLEMENTAL RESTRAINT SYSTEM. FAILURE TO TAKE THE PROPER PRECAUTIONS COULD RESULT IN ACCIDENTAL AIRBAG DEPLOYMENT AND POSSIBLE PERSONAL INJURY.

Note: Before starting this procedure, be certain to turn the steering wheel until the front wheels are in the straight-ahead position.

1. Place the front wheels in the straight ahead position.
2. Remove the driver airbag screws (1) from the steering wheel and remove the driver side airbag. **Refer to Page 8O-100**.

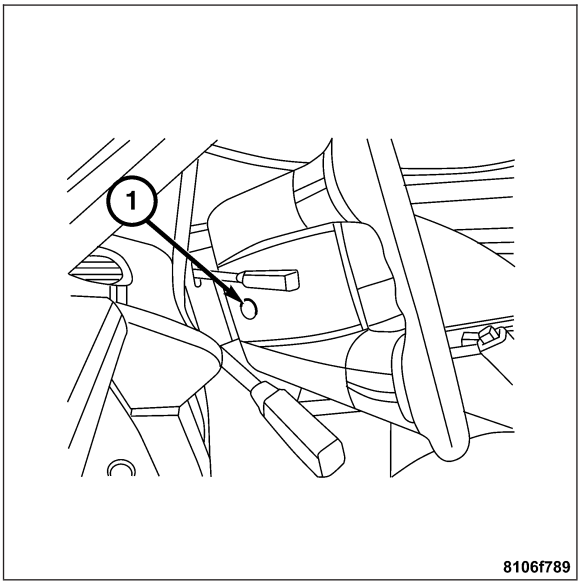

3. Remove the steering wheel's countersunk screw (1) from the steering column with a suitable tool (2). **Refer to Page 19-25**.

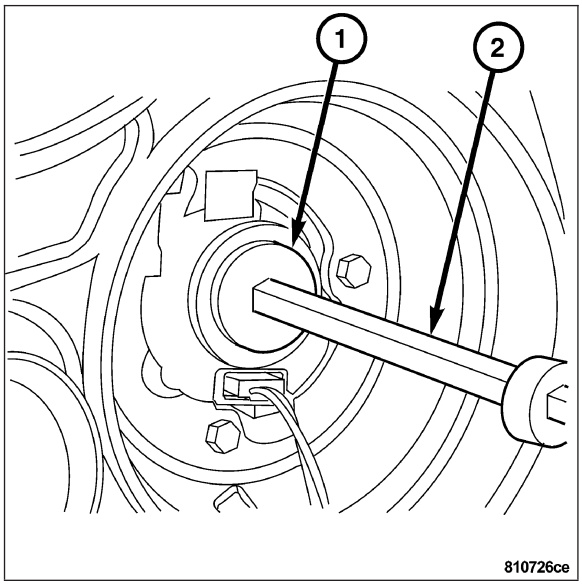

4. Remove the two screws (1) that secure the clockspring case to the multi-function switch mounting housing.
5. Remove the clockspring.
6. If the removed clockspring is to be reused, be certain to secure the clockspring rotor to the clockspring case to maintain clockspring centering until it is reinstalled on the steering column. If clockspring centering is not maintained, the clockspring must be centered again before it is reinstalled. **Refer to Page 8O-93**.

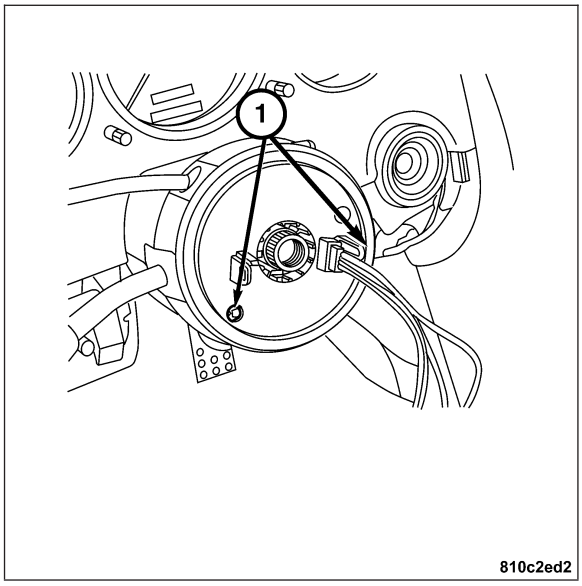

INSTALLATION

1. If the removed clockspring is being reused, be certain to remove anything securing the clockspring rotor to the clockspring case that was used to maintain clockspring centering until reinstallation on the steering column. If clockspring centering was not maintained, the clockspring must be centered again before it is installed. **Refer to Page 8O-93**.
2. Install the clockspring to the steering column.
3. Install the two screws (1) that secure the clockspring case to the multi-function switch mounting housing.

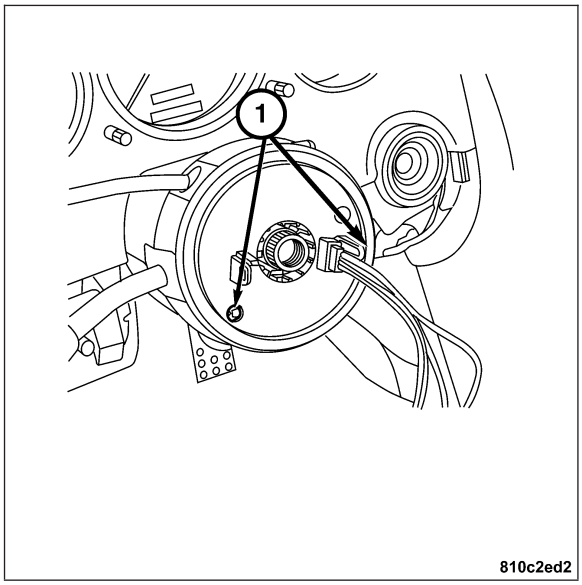

4. Install the steering wheel to the steering column then install the countersunk screw (1). **Refer to Page 19-26**.

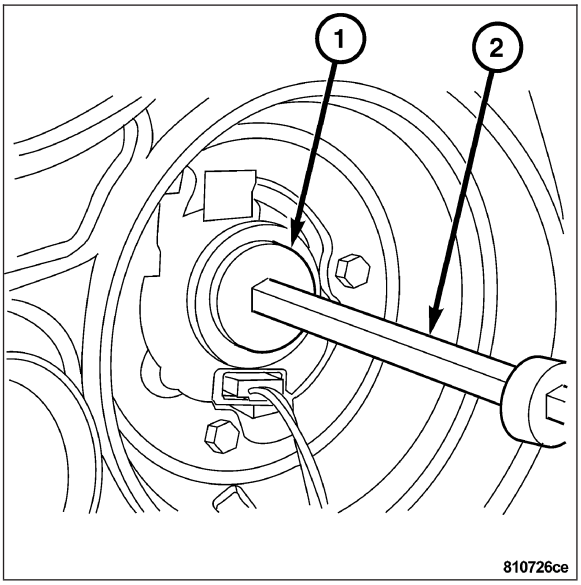

5. Install the driver airbag and screws (1) to the steering wheel. **Refer to Page 8O-100**.
6. Do not reconnect the battery negative cable at this time. The supplemental restraint system verification test procedure should be performed following service of any supplemental restraint system component. **Refer to Page 8O-83**.

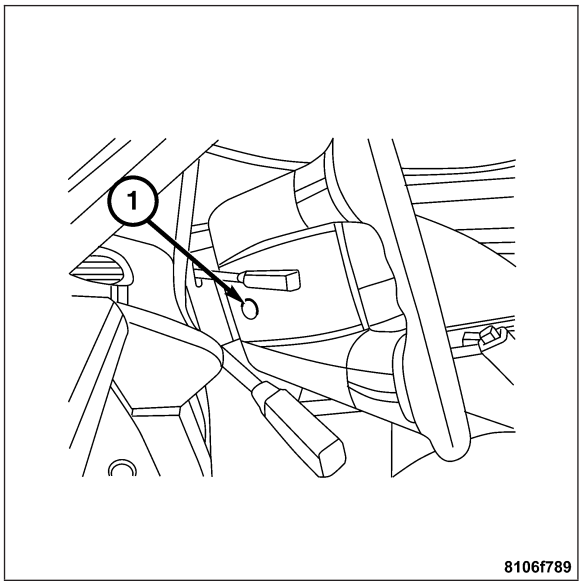

DRIVER AIRBAG

DESCRIPTION

The driver airbag (1) is located in the center of the steering wheel, where it is secured with two screws to the steering wheel. Concealed beneath the driver airbag trim cover are the horn switch, the folded airbag cushion, the airbag cushion retainer, the airbag housing, the airbag inflator, and the retainers that secure the inflator to the airbag housing.

The driver airbag trim cover and the horn switch are available for individual service replacement.

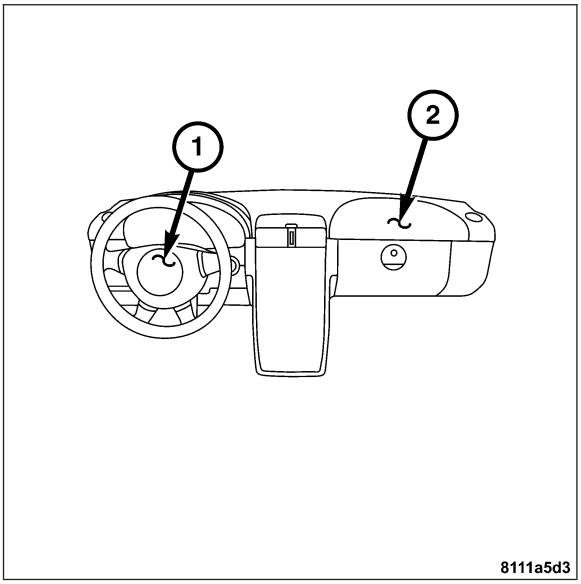

OPERATION

WARNING:
SOME OF THE CHEMICALS USED TO CREATE THE INERT GAS MAY BE CONSIDERED HAZARDOUS WHILE IN THEIR SOLID STATE BEFORE THEY ARE BURNED, BUT THEY ARE SECURELY SEALED WITHIN THE AIRBAG INFLATOR. TYPICALLY, BOTH INITIATORS ARE USED AND ALL POTENTIALLY HAZARDOUS CHEMICALS ARE BURNED DURING AN AIRBAG DEPLOYMENT EVENT. HOWEVER, IT IS POSSIBLE FOR ONLY ONE INITIATOR TO BE USED DURING A DEPLOYMENT DUE TO AN AIRBAG SYSTEM FAULT; THEREFORE, IT IS NECESSARY TO ALWAYS CONFIRM THAT BOTH INITIATORS HAVE BEEN USED IN ORDER TO AVOID THE IMPROPER DISPOSAL OF POTENTIALLY LIVE PYROTECHNIC OR HAZARDOUS MATERIALS.
THE INERT GAS THAT IS PRODUCED WHEN THE CHEMICALS ARE BURNED IS HARMLESS. HOWEVER, A SMALL AMOUNT OF RESIDUE FROM THE BURNED CHEMICALS MAY CAUSE SOME TEMPORARY DISCOMFORT IF IT CONTACTS THE SKIN, EYES, OR BREATHING PASSAGES. IF SKIN OR EYE IRRITATION IS NOTED, RINSE THE AFFECTED AREA WITH PLENTY OF COOL, CLEAN WATER. IF BREATHING PASSAGES ARE IRRITATED, MOVE TO ANOTHER AREA WHERE THERE IS PLENTY OF CLEAN, FRESH AIR TO BREATH. IF THE IRRITATION IS NOT ALLEVIATED BY THESE ACTIONS, CONTACT A PHYSICIAN.

The airbag used in this model is a multistage, Next Generation-type that complies with revised federal airbag standards to deploy with less force than those used in some prior models. A radial deploying fabric airbag cushion with internal tethers is used. The airbag inflator is a dual-initiator, non-azide, pyrotechnic-type unit with four mounting studs and is secured to the stamped metal airbag housing using four hex nuts with washers. The driver airbag cannot be repaired, and must be replaced if deployed or in any way damaged.

The multistage driver airbag is deployed by electrical signals generated by the Occupant Restraint Controller (ORC) through the driver airbag squib 1 and squib 2 circuits to the two initiators in the airbag inflator. By using two initiators, the airbag can be deployed at multiple levels of force. The force level is controlled by the ORC to suit the monitored impact conditions by providing one of four delay intervals between the electrical signals provided to the two initiators. The longer the delay between these signals, the less forcefully the airbag will deploy.

AIRBAG DEPLOYMENT SEQUENCE

1. When the actuation impact threshold for the driver side airbag is exceeded, an electric pulse is transmitted to the squib in the gas generator by the Seat Belt Tensioner (SBT) and Occupant Restraint Controller (ORC).
2. The squib ignites the solid fuel in the gas generator. The solid fuel combusts, developing a gas which explodes under high pressure into the airbag through a filter.

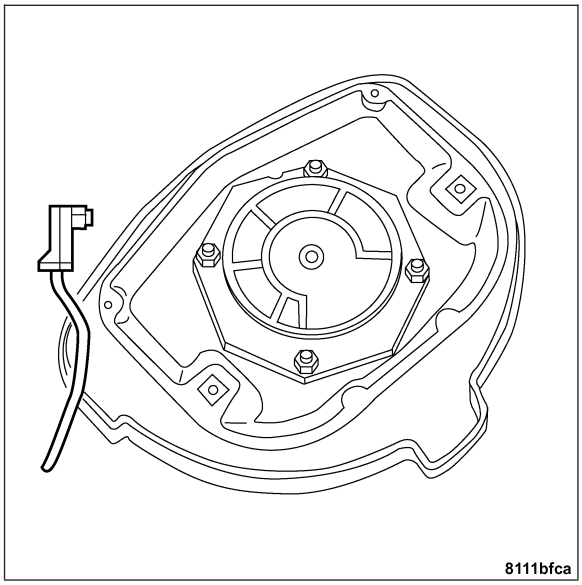

3. The airbag inflates and tears open the steering wheel cushion cover at a predetermined breaking point.

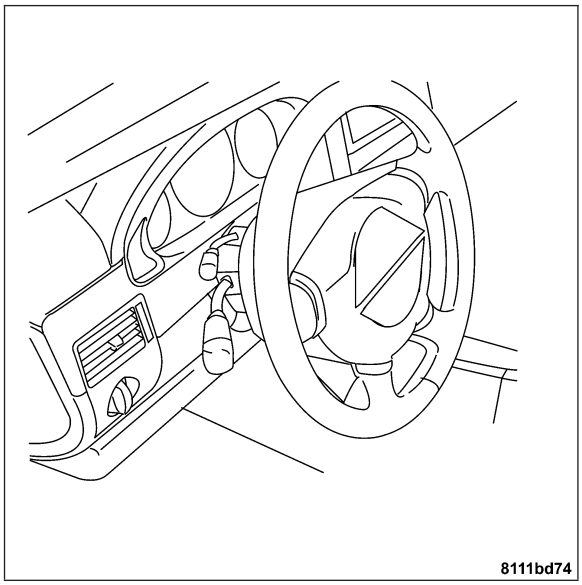
8111bd74

4. While continuously inflating, the airbag begins to exit the steering wheel cushion.

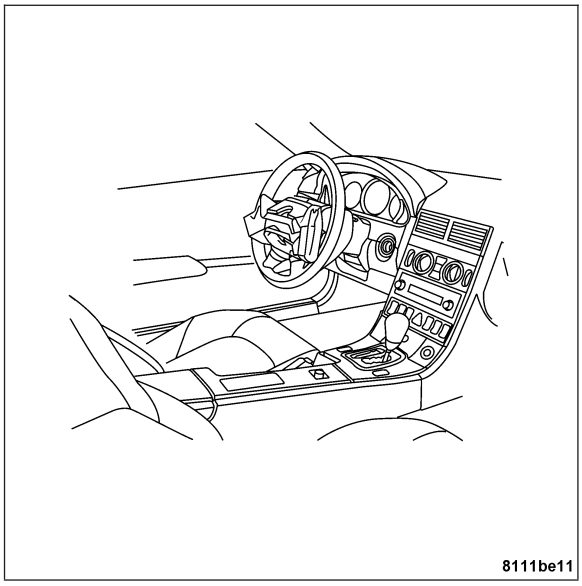
8111be11

5. After approximately 45 ms. the airbag reaches its maximum volume.
6. When the maximum volume is reached, the pressure in the airbag starts decreasing immediately. The gas escapes from the airbag through a filter and the airbag deflates.

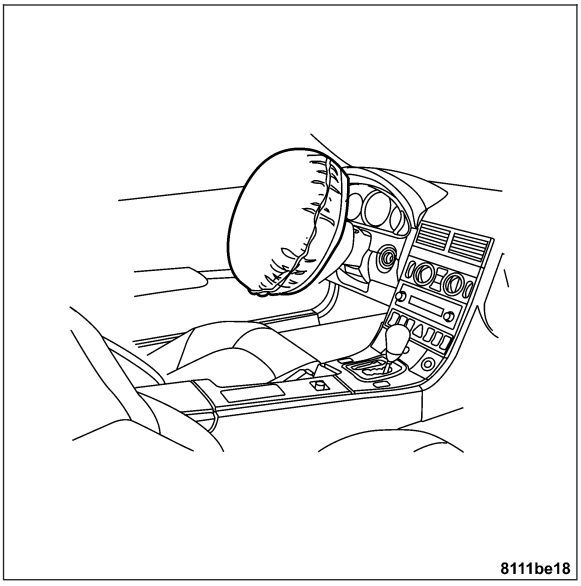
8111be18

REMOVAL

1. Before attempting any service procedure refer to the warnings in this section. **Refer to Page 8O-82**.
2. Disconnect the negative battery cable. **Wait two minutes for the system capacitor to discharge before further service.**
3. From the underside of the steering wheel, remove the two screws (1) that secure the driver airbag to the steering wheel.
4. Pull the driver airbag away from the steering wheel far enough to access the electrical connections to the steering wheel.
5. Disconnect the steering wheel wire harness connectors for the horn switch.
6. Disconnect the clockspring driver airbag pigtail harness connectors.
7. Remove the driver airbag from the steering wheel.

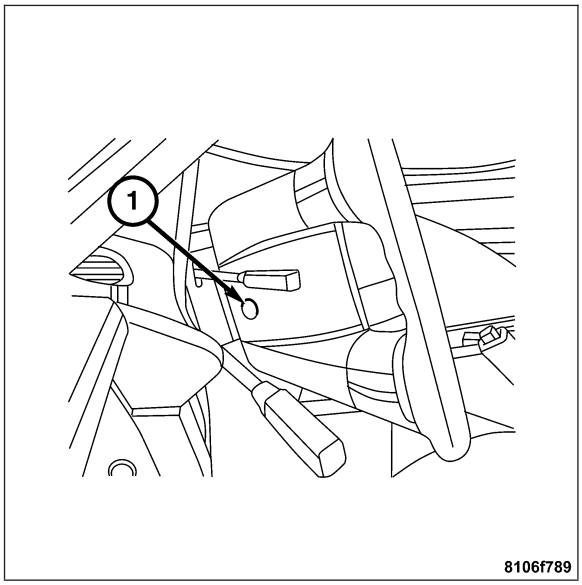

Note: If the driver airbag has been deployed, the clockspring must be replaced. Refer to Page 8O-94.

INSTALLATION

1. Position the driver airbag close enough to the steering wheel to connect the electrical connections.
2. Carefully position the driver airbag in the steering wheel.

Note: Be certain that the clockspring pigtail wires and steering wheel wire harness in the steering wheel hub area are not pinched between the driver airbag and the steering wheel armature.

3. From the underside of the steering wheel, install and tighten the two screws (1) that secure the driver airbag to the steering wheel. Tighten to 8 N·m (71 in. lbs.).
4. Do not reconnect the battery negative cable at this time. The supplemental restraint system verification test procedure should be performed following service of any supplemental restraint system component. **Refer to Page 8O-83**.

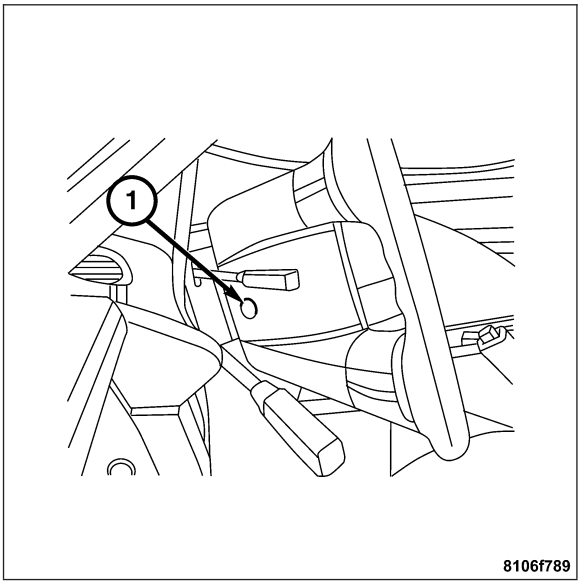

PASSENGER AIRBAG

DESCRIPTION

The surface of the instrument panel top pad above the glove box is the most visible part of the passenger airbag. The passenger airbag door is concealed behind the instrument panel top pad and above the glove box opening on the instrument panel in front of the front seat passenger seating position.

The passenger airbag unit used in this model is a multistage, Next Generation-type that complies with revised federal airbag standards to deploy with less force than those used in some prior models. The passenger airbag unit consists of an extruded aluminum housing, two stamped steel end brackets, a molded plastic inner airbag cushion cover, the rectangular fabric airbag cushion, and the airbag inflator. The airbag housing contains the airbag inflator, while the inner cover contains the folded airbag cushion. The inner cover completely encloses the airbag cushion and is permanently retained to the housing. The airbag cushion is constructed of a coated nylon fabric. The airbag inflator is a dual-initiator, hybrid-type unit that is secured to and sealed within the airbag housing.

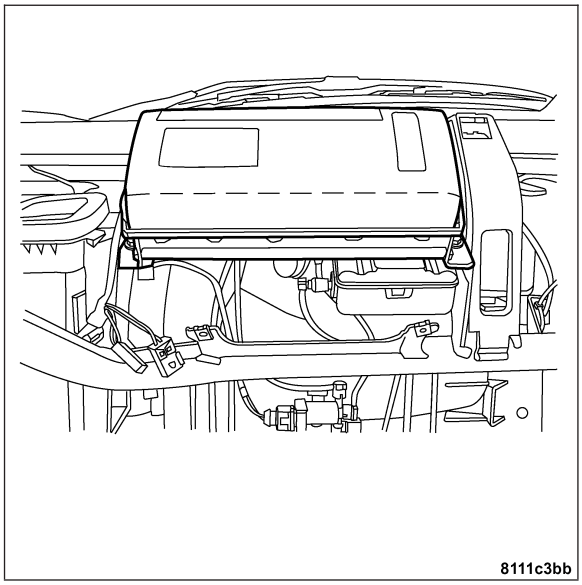

Note: The passenger airbag cannot be repaired, and must be replaced if deployed, faulty, or in any way damaged. The passenger airbag door is serviced only as a unit with the instrument panel top pad. If the passenger airbag is deployed, the instrument panel top pad must also be replaced. If inspection reveals that the passenger airbag mounting points on the instrument panel structural duct have been cracked or damaged by the deployment event, the instrument panel structural duct assembly must also be replaced.

OPERATION

The multistage passenger airbag is deployed by electrical signals generated by the Occupant Restraint Controller (ORC) through the passenger airbag squib 1 and squib 2 circuits to the two initiators in the airbag inflator. By using two initiators, the airbag can be deployed at multiple levels of force. The force level is controlled by the ORC to suit the monitored impact conditions by providing one of four delay intervals between the electrical signals provided to the two initiators. The longer the delay between these signals, the less forcefully the airbag will deploy.

AIRBAG DEPLOYMENT SEQUENCE

1. When the impact threshold for the passenger airbag is exceeded an electric pulse (firing pulse) is sent from the ORC to the squib in the initiator.
2. The squib ignites the solid propellant in the initiator. The solid propellant burns, developing a gas which flows explosively under high pressure into the airbag.
3. Under the pressure of the gas, the airbag rips open the airbag housing, blows the airbag flap out of the instrument panel and inflates in the passenger compartment.
4. After approximately 50 ms. the airbag reaches its maximum volume.
5. After reaching the maximum volume, the pressure in the airbag starts decreasing. The gas escapes from the airbag through a filter and the airbag deflates.

Note: Typically, both initiators are used during an airbag deployment event. However, it is possible for only one initiator to be used during a deployment due to an airbag system fault; therefore, it is necessary to always confirm that both initiators have been used in order to avoid the improper disposal of potentially live pyrotechnic materials.

REMOVAL

1. Before attempting any service procedures refer to the warnings in the beginning of this section. **Refer to Page 8O-82**.
2. Disconnect the negative battery cable. **Wait two minutes for the system capacitor to discharge before further service.**
3. Remove the upper section (1) of instrument panel. **Refer to Page 23-149**.

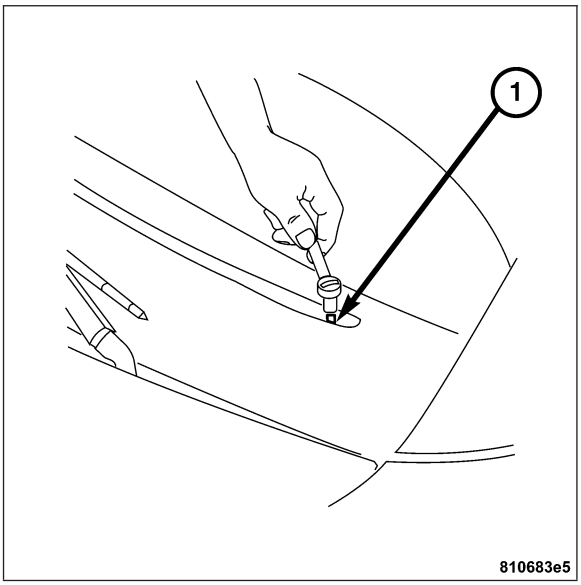

4. Disconnect the passenger airbag electrical connector (1) from the passenger side airbag.

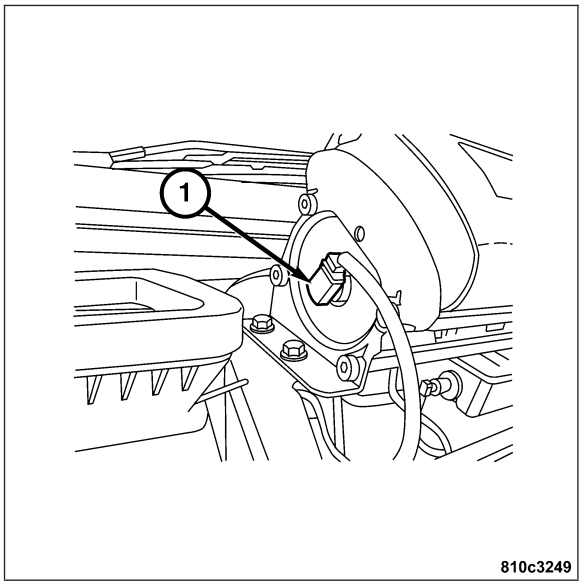

5. Remove the four bolts (1) that secure the airbag to the instrument panel structural duct.
6. Remove the passenger airbag as a unit.

Note: If the passenger airbag has been deployed, carefully inspect the airbag mounting points on the instrument panel structural duct. If the airbag mounting points have been damaged or deformed, the instrument panel structural duct must be replaced.

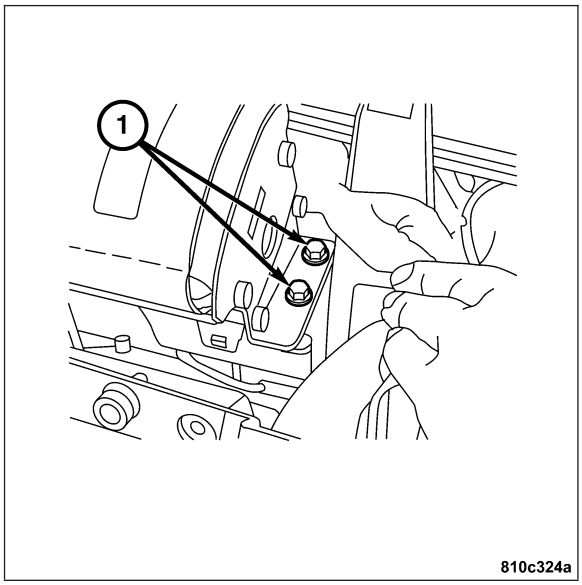

INSTALLATION

1. Carefully position the passenger airbag unit onto the instrument panel structural duct.
2. Install the four bolts (1) that secure the passenger airbag to the instrument panel structural duct. Tighten to 35 N·m (26 ft. lbs.).

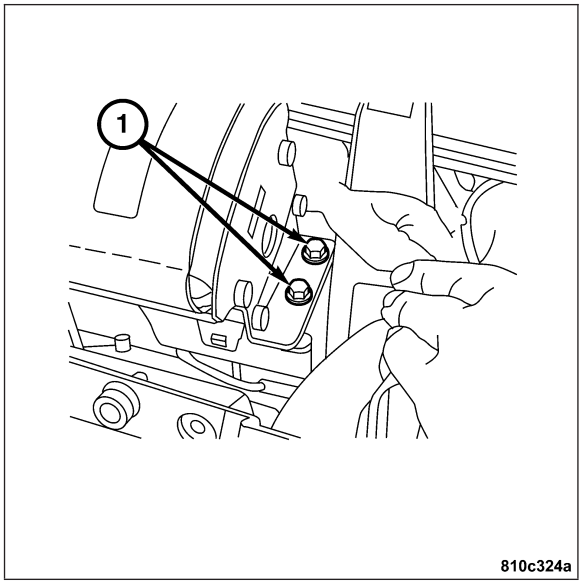

3. Connect the passenger airbag electrical connector (1).

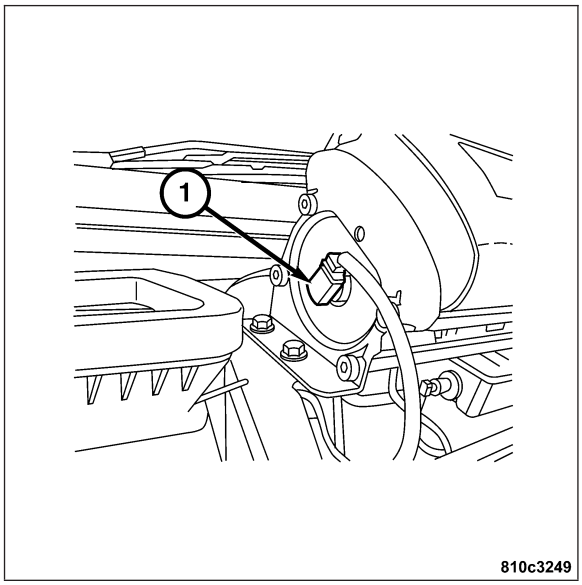

4. Install the top section retaining screw (1) onto the instrument panel. **Refer to Page 23-155**.
5. Do not reconnect the battery negative cable at this time. The supplemental restraint system verification test procedure should be performed following service of any supplemental restraint system component. **Refer to Page 8O-83**.

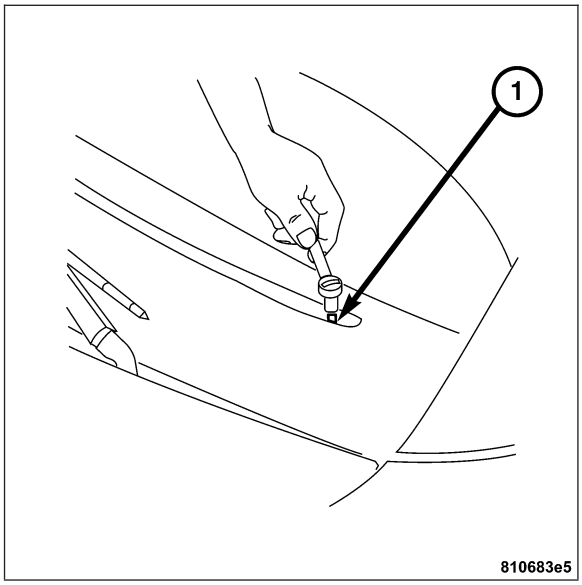

ON / OFF SWITCH INDICATOR MODULE

REMOVAL

1. Disconnect the negative battery cable.
2. Remove the passenger door sill trim panel and kick trim panel.
3. Fold back the carpeting in the passenger footwell.
4. Remove the insulating panel.

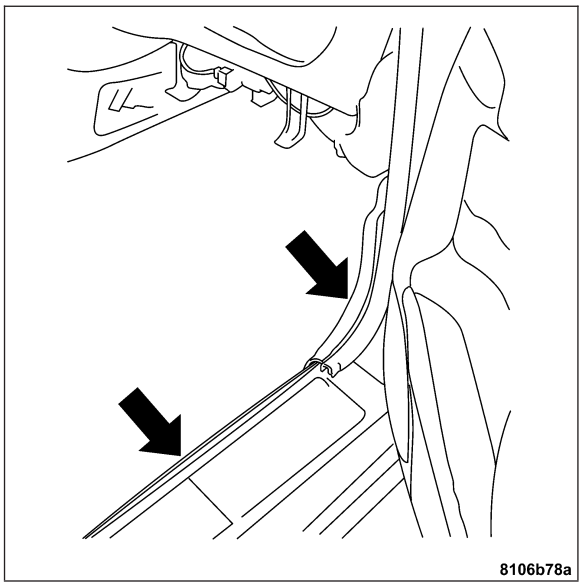

Note: It is not necessary to remove the electrical connectors to rotate the base plate in the passenger footwell.

5. Remove the plastic retaining nuts (1) from the floor panel and rotate the base plate exposing the passenger seat occupant simulator.

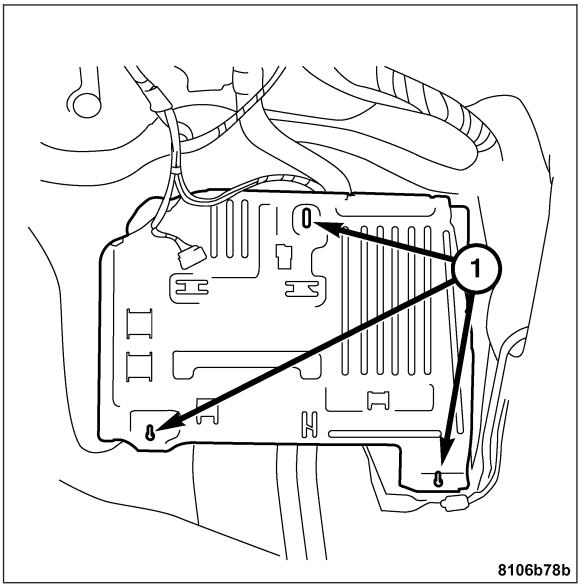

6. Remove the plastic tie, and disconnect the passenger seat occupant simulator harness connector. Remove the passenger seat occupant simulator (1).

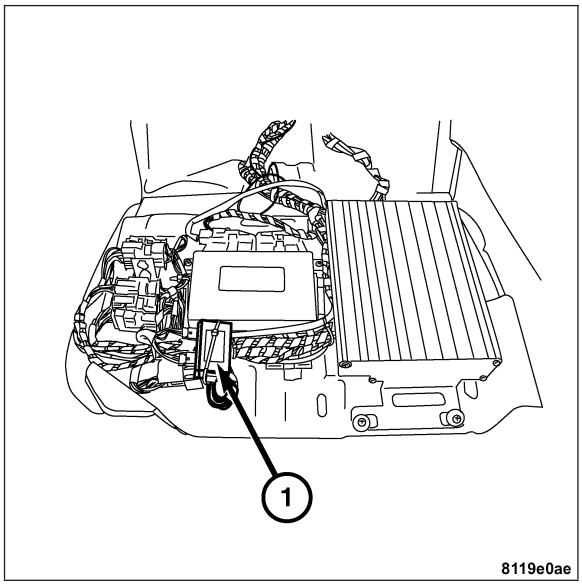

INSTALLATION

1. Connect the passenger seat occupant simulator harness connector and attach the passenger seat occupant simulator (1) to the base plate with a plastic wire tie.

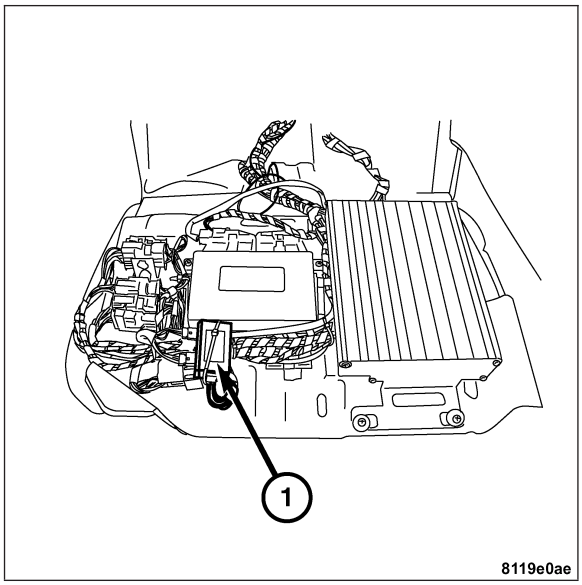

2. Rotate the base plate and install it over the mounting studs on the floor panel.

Note: Be sure not to pinch or cause interference with the wiring harnesses while locating the base plate to the floor mounting studs.

3. Install the plastic retaining nuts (1) and secure the base plate to the vehicle floor.
4. Install the insulating panel.
5. Install the carpeting in the passenger footwell.
6. Install the door sill panel and kick trim panel.
7. Connect the negative battery cable.

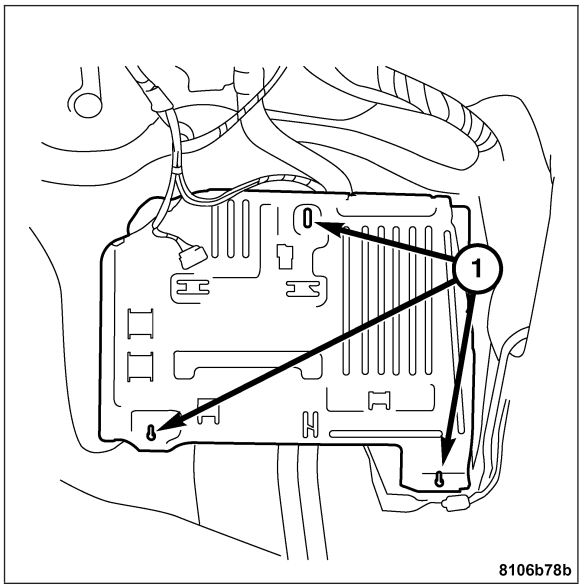

SIDE IMPACT SENSOR

DESCRIPTION

Two side impact sensors (2) are used, one each for the left and right sides of the vehicle. These sensors are mounted remotely from the bi-directional safing sensor that is internal to the Occupant Restraint Controller (ORC). The side impact sensors are secured with two bolts (1) to the floor below the carpet under the seats.

The impact sensor housing has an integral connector receptacle and two integral mounting ears, each with a metal sleeve to provide crush protection. A cavity in the center of the molded black plastic impact sensor housing contains the electronic circuitry of the sensor which includes an electronic communication chip and an electronic impact sensor. Potting material fills the cavity to seal and protect the internal electronic circuitry and components. The side impact sensors are each connected to the vehicle electrical system through a dedicated take out and connector of the airbag overlay wire harness.

The side impact sensors cannot be repaired or adjusted and, if damaged or faulty, they must be replaced.

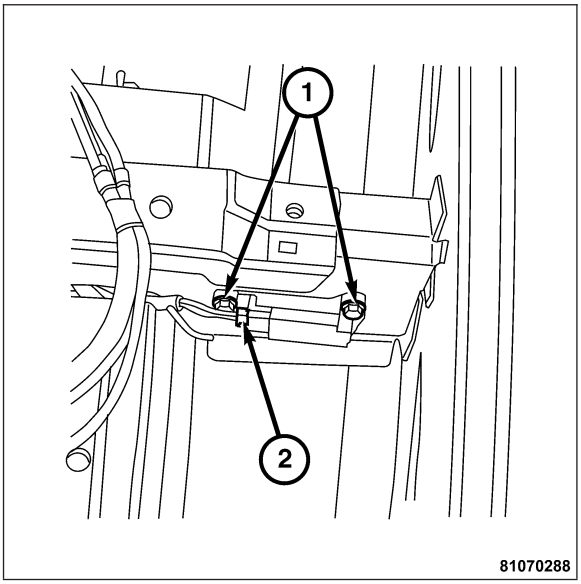

OPERATION

The side impact sensors are electronic accelerometers that sense the rate of vehicle deceleration or acceleration, which provides verification of the direction and severity of an impact. Each sensor also contains an electronic communication chip that allows the unit to communicate the sensor status as well as sensor fault information to the microprocessor in the Occupant Restraint Controller (ORC). The ORC microprocessor continuously monitors all of the passive restraint system electrical circuits to determine the system readiness. If the ORC detects a monitored system fault, it sets a Diagnostic Trouble Code (DTC) and controls the airbag indicator lamp operation accordingly.

The impact sensors each receive battery current and ground through dedicated left and right sensor plus and minus circuits from the ORC. The impact sensors and the ORC communicate by modulating the voltage in the sensor plus circuit. The hard wired circuits between the side impact sensors and the ORC may be diagnosed and tested using conventional diagnostic tools and procedures. However, conventional diagnostic methods will not prove conclusive in the diagnosis of the ORC or the impact sensors. The most reliable, efficient, and accurate means to diagnose the impact sensors, the ORC, and the electronic message communication between the sensors and the ORC requires the use of a DRBIII® scan tool. Refer to the appropriate diagnostic information.

REMOVAL

1. Before attempting any service procedures refer to the warnings in the beginning of this section. **Refer to Page 8O-82**.
2. Disconnect the negative battery cable. **Wait two minutes for the system capacitor to discharge before further service.**
3. Remove the ignition key.
4. Remove the door sill trim plate by pulling straight up on the sill plate to release it from the clips below.

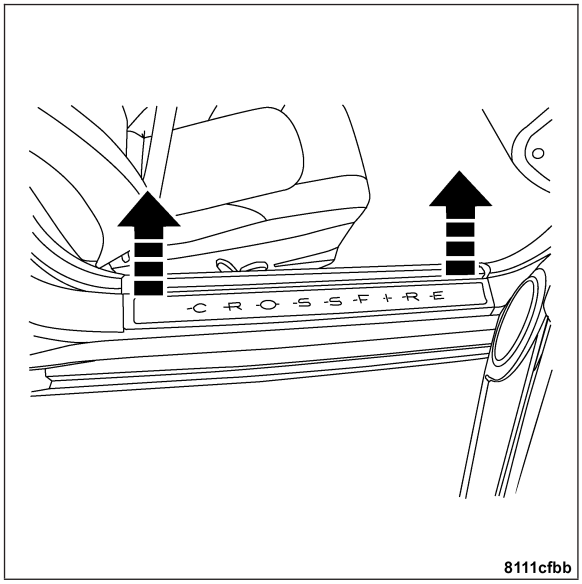

5. Remove the plastic cover (3) on the front of the seat track. Then remove the front seat bolts (2).

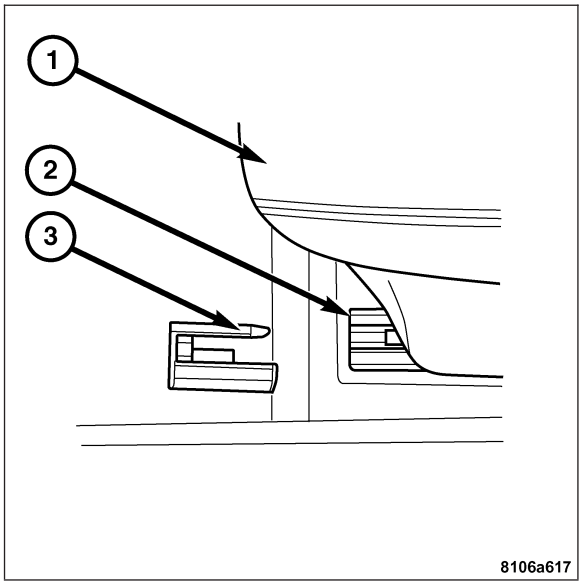

6. Remove the rear seat bolts (1).
7. Remove the seat belt bolt (2) from the vehicle then remove the seat.

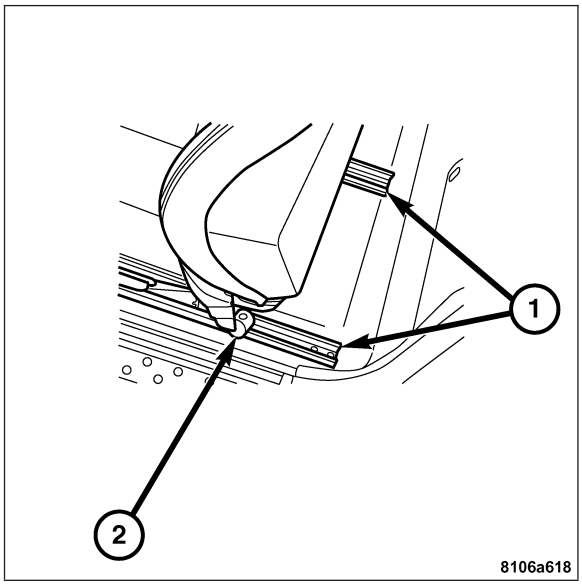

8. Remove the carpet hold down (3) at the rear wall (1).
9. Turn the carpet to the front from the rear to gain access to the side impact sensor which is located under the seat area.

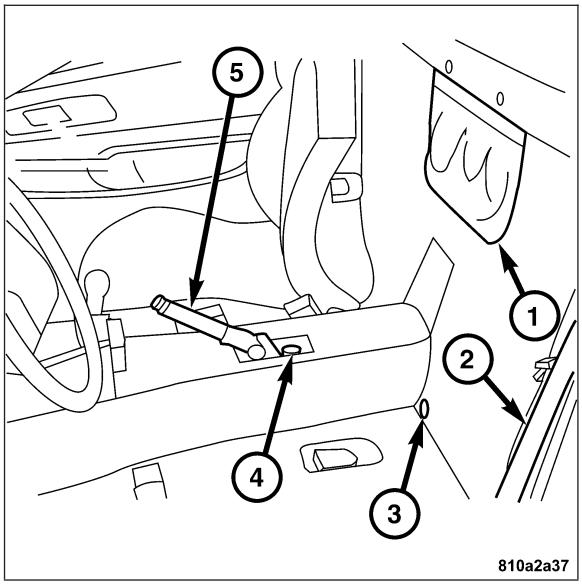

10. Disconnect the side impact sensor harness connector (2).
11. Remove the screws (1) attaching the side impact sensor to the body rail.
12. Remove the side impact sensor from the vehicle.

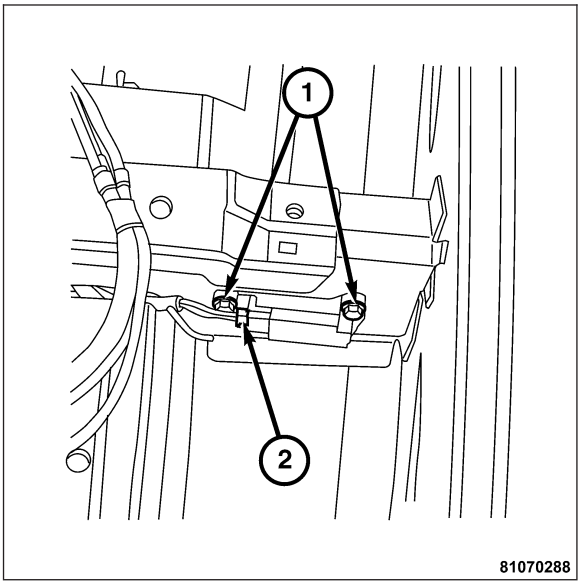

INSTALLATION

1. Position the side impact sensor.
2. Install the bolts (1) attaching the side impact sensor to the body rail.
3. Connect the side impact sensor harness connector (2).

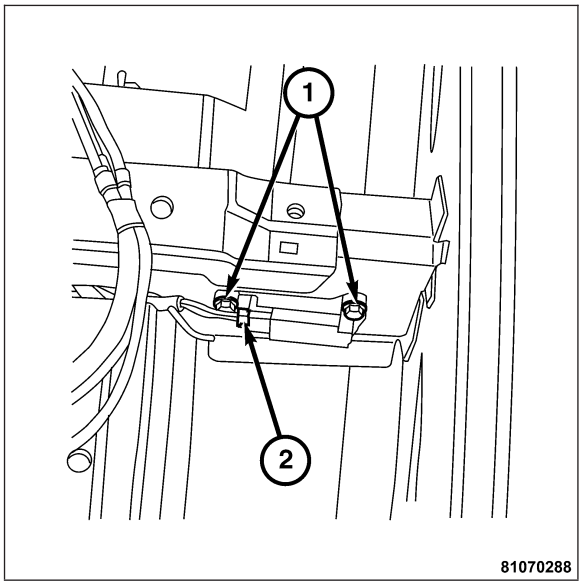

4. Replace the carpet (1) making sure it is fully pushed down into the floor of the vehicle.
5. Install the carpet hold down (3).

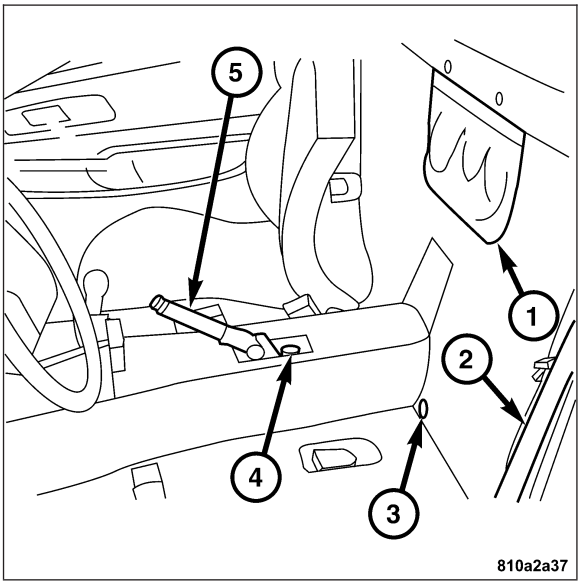

6. Install the front seats (1).
7. Install the front seat bolts (2) then install the plastic cover (3) on the seat track.

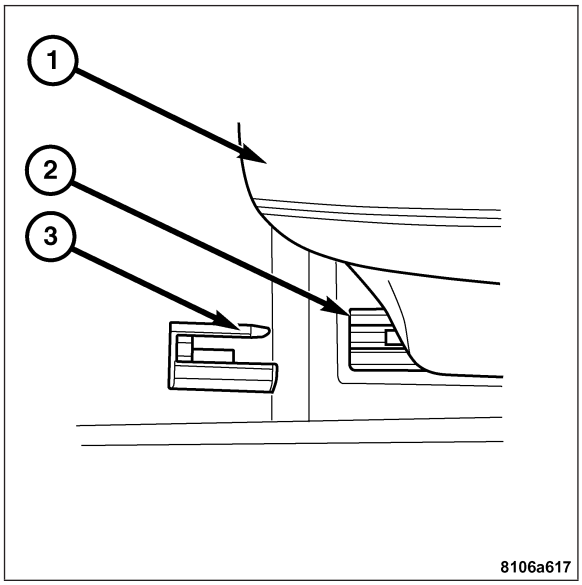

8. Install the rear seat bolts (1) then install the seat belt and bolt (2).

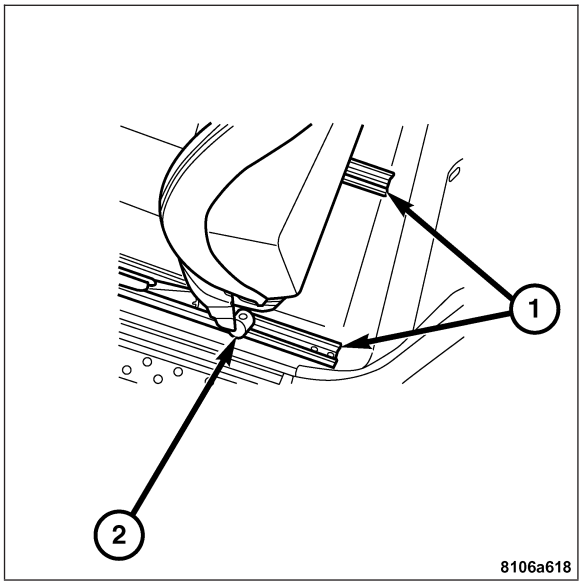

9. Install the door sill trim plate by pushing it straight down onto the clips firmly.
10. Install the ignition key.
11. Do not reconnect the battery negative cable at this time. The supplemental restraint system verification test procedure should be performed following service of any supplemental restraint system component. **Refer to Page 8O-83**.

SIDE IMPACT AIRBAG

DESCRIPTION

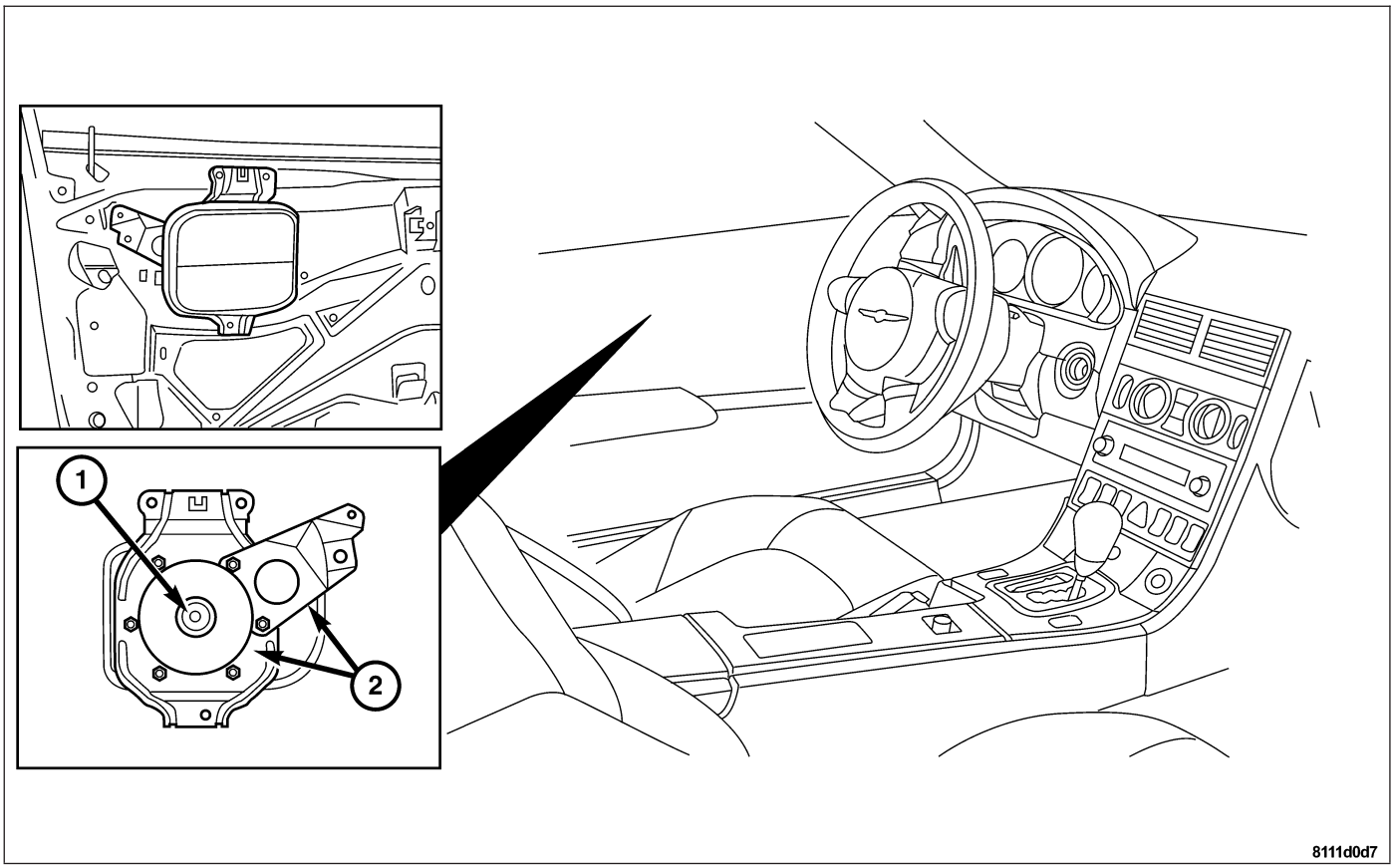

Side air bags with a volume of about 975 cubic inches (16 liters) each are concealed behind the inner door trim above the armrest. If the air bag is triggered during a lateral collision, the air bag tears open a seam on the inner door trim and inflates within 0.007 seconds to form a protective cushion between the passenger and the door. Thus the impact on the passenger's thorax and the ejecting motion of the head, which might otherwise cause serious injuries, are reduced.

The ORC and the IC each contain a central processing unit and programming that allow them to communicate with each other using the Controller Area Network (CAN). This method of communication is used by the ORC for control of the airbag warning indicator lamp.

OPERATION

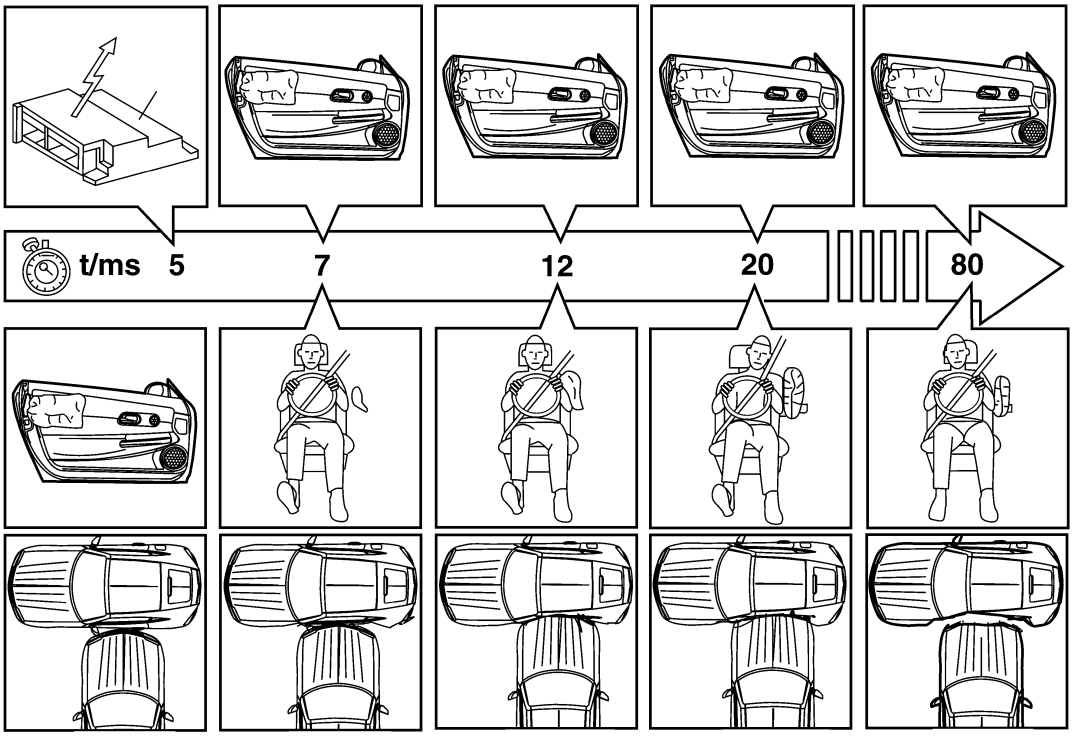

Both side impact airbags are deployed individually by an electrical signal generated by the left or right side impact sensor to which it is connected through left or right curtain airbag line 1 and line 2 (or Squib) circuits. The hybrid-type inflator assembly for each airbag contains a small canister of highly compressed inert gas. When the ORC sends the proper electrical signal to the airbag inflator, the electrical energy creates enough heat to ignite chemical pellets within the inflator. Once ignited, these chemicals burn rapidly and produce the pressure necessary to rupture a containment disk in the inert gas canister. The inflator and inert gas canister are sealed and connected to a tubular manifold so that all of the released gas is directed into the folded airbag cushion, causing the cushion to inflate.

As the airbag cushion inflates it will rip open a predetermined area in the driver or passenger door to form a cushion to protect the vehicle occupants during a side impact collision. Following the airbag deployment, the airbag cushion quickly deflates by venting the inert gas through the loose weave of the cushion fabric, and the deflated cushion hangs down loosely from the door trim panel.

REMOVAL

1. Before attempting any service procedure refer to the warnings at the beginning of this section. **Refer to Page 8O-82**.
2. Disconnect the negative battery cable. **Wait two minutes for the system capacitor to discharge before further service.**
3. Remove the ignition key.
4. Remove the door trim panel. **Refer to Page 23-108**.
5. Disconnect the squib connector (2).
6. Drill out the mounting rivets (1) for the side impact airbag.
7. Remove the side impact airbag from the door.

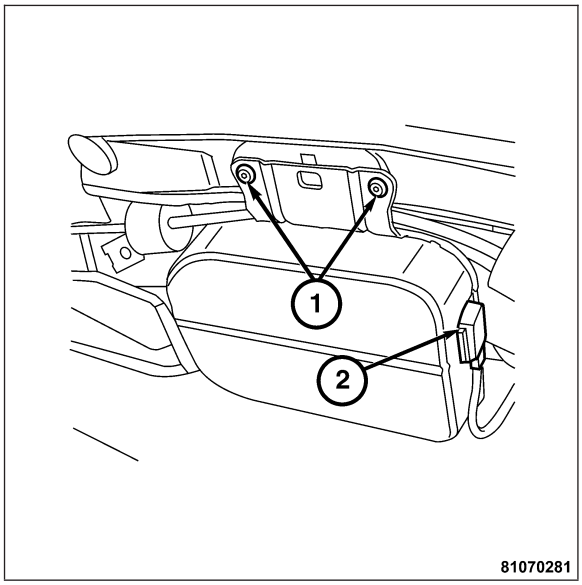

INSTALLATION

WARNING: DISABLE THE SUPPLEMENTAL RESTRAINT SYSTEM BEFORE ATTEMPTING ANY STEERING WHEEL, STEERING COLUMN, DRIVER AIRBAG, PASSENGER AIRBAG, FRONT IMPACT SENSOR, SIDE IMPACT SENSOR, SIDE CURTAIN AIRBAG, OR INSTRUMENT PANEL COMPONENT DIAGNOSIS OR SERVICE. DISCONNECT AND ISOLATE THE BATTERY NEGATIVE (GROUND) CABLE, THEN WAIT TWO MINUTES FOR THE SYSTEM CAPACITOR TO DISCHARGE BEFORE PERFORMING FURTHER DIAGNOSIS OR SERVICE. THIS IS THE ONLY SURE WAY TO DISABLE THE SUPPLEMENTAL RESTRAINT SYSTEM. FAILURE TO TAKE THE PROPER PRECAUTIONS COULD RESULT IN ACCIDENTAL AIRBAG DEPLOYMENT AND POSSIBLE PERSONAL INJURY.

1. Position the side impact airbag to the door.
2. Install new mounting rivets (1) for the side impact airbag.
3. Connect the squib connector (2).
4. Install the door trim panel. **Refer to Page 23-109**.
5. Install the ignition key.
6. Do not reconnect the battery negative cable at this time. The supplemental restraint system verification test procedure should be performed following service of any supplemental restraint system component. **Refer to Page 8O-83**.

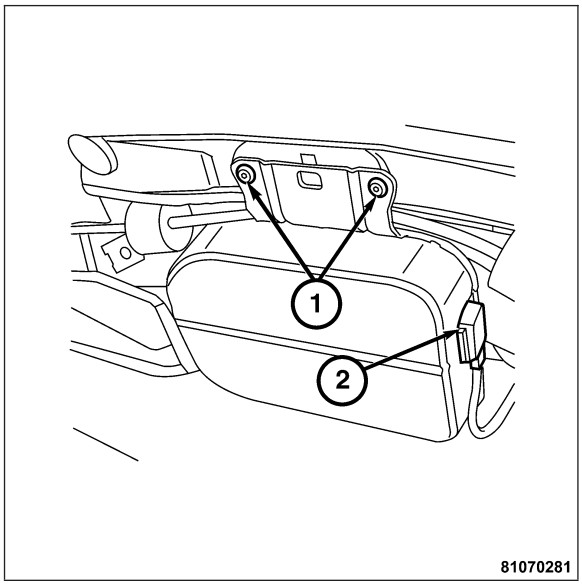

SEAT BELT BUCKLE

DESCRIPTION

The left and right front seat belt buckle restraint systems switches are located in the respective buckles. The seat belt buckles are bolted to the base frame of the seat. The seat belt buckles are a typical buckle design with a release button on the top to free the seat belt.

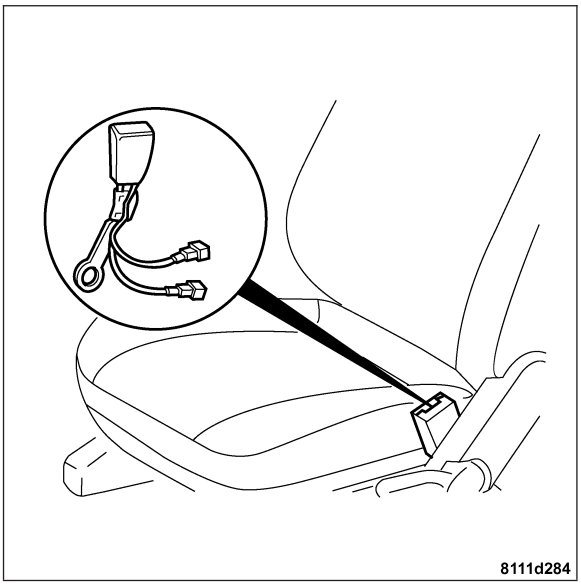

The left and right front seat belt buckle restraint system monitors the status of the driver's and passenger's seat belt switch. The airbag unit can be ignited if the seat belt is not fastened during the initial triggering threshold.

REMOVAL

1. Before attempting any service procedures refer to the warnings at the beginning of this section. **Refer to Page 8O-82**.
2. Disconnect the negative battery cable. **Wait two minutes for the system capacitor to discharge before further service.**
3. Remove the plastic cover (3) from the front of the seat track then remove the front seat bolts (2).

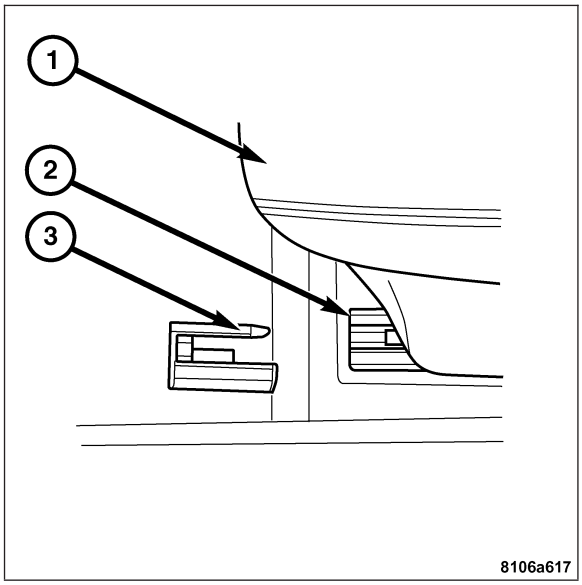

4. Remove the seat belt bolt (1) then remove the rear seat bolts. Remove the seat from the vehicle.

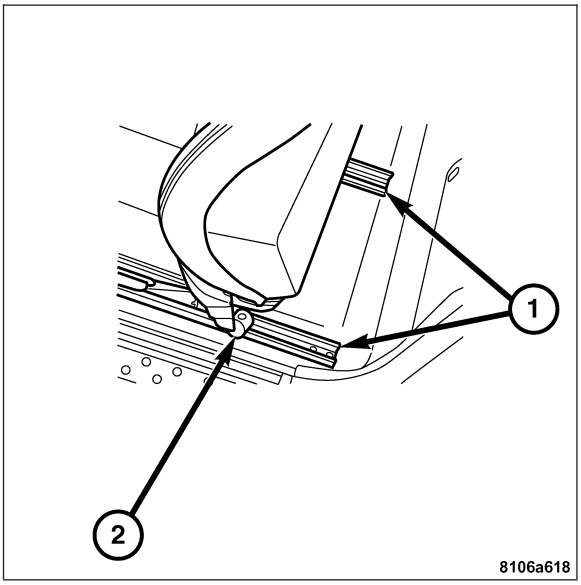

5. Disconnect the seat belt buckle harness connector and remove the bolt (1) attaching the belt buckle to the seat.

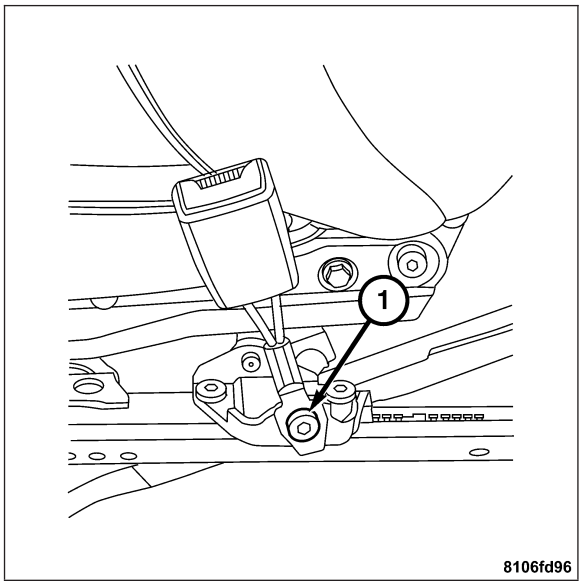

INSTALLATION

1. Position the seat belt buckle to the seat.
2. Install the bolt (1) to the seat belt buckle. Tighten to 35 N·m (26 ft. lbs.).
3. Connect the seat belt buckle harness connector.

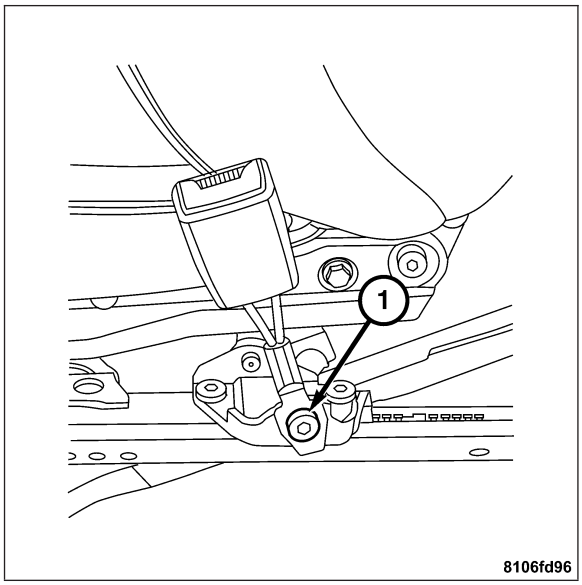

4. Position the front seat in the vehicle (1).
5. Install the front seat bolts (2). Tighten to 50 N·m (37 ft. lbs.).
6. Install the plastic cover on the seat track (3).

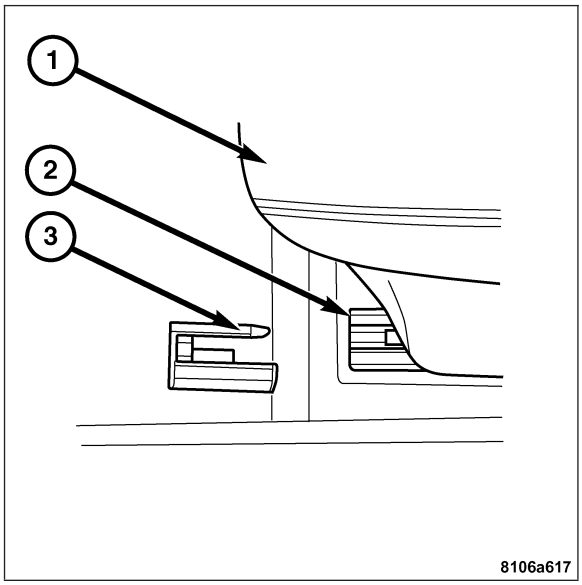

7. Install the rear seat bolts (1). Tighten to 50 N·m (37 ft. lbs.).
8. Install the bolt (2) attaching the seat belt to the seat.
9. Do not reconnect the battery negative cable at this time. The supplemental restraint system verification test procedure should be performed following service of any supplemental restraint system component. **Refer to Page 8O-83**.

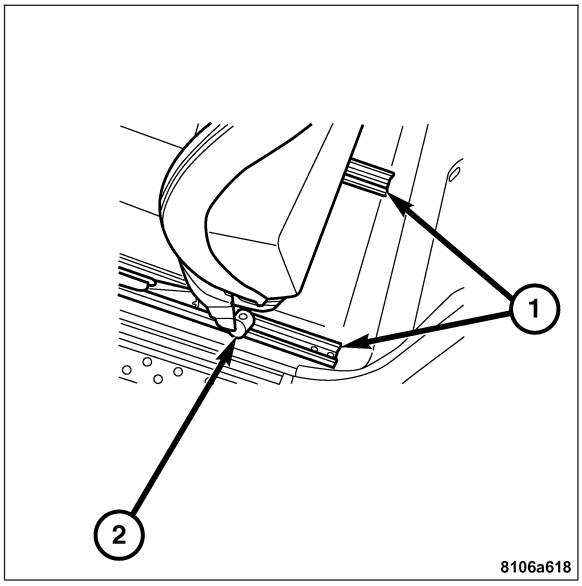

SEAT BELT & SEAT BELT TENSIONER

DESCRIPTION

In the even of a collision (head-on or rear-end) the seat belt tensioner eliminates the slack in the belt and prevents the seat belt from unreeling. The tight seat belt causes the vehicle passengers to decelerate at the same rate as the body at an earlier point in time. The SBT (for the driver and passenger) are located at the bottom of the B-pillar behind the plastic trim panel.

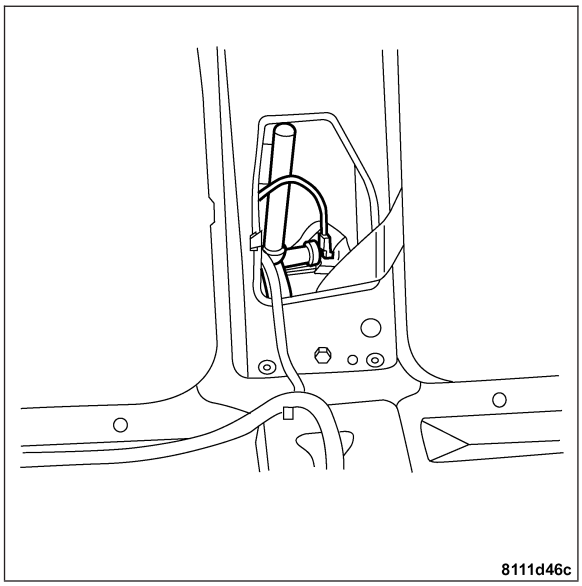

OPERATION

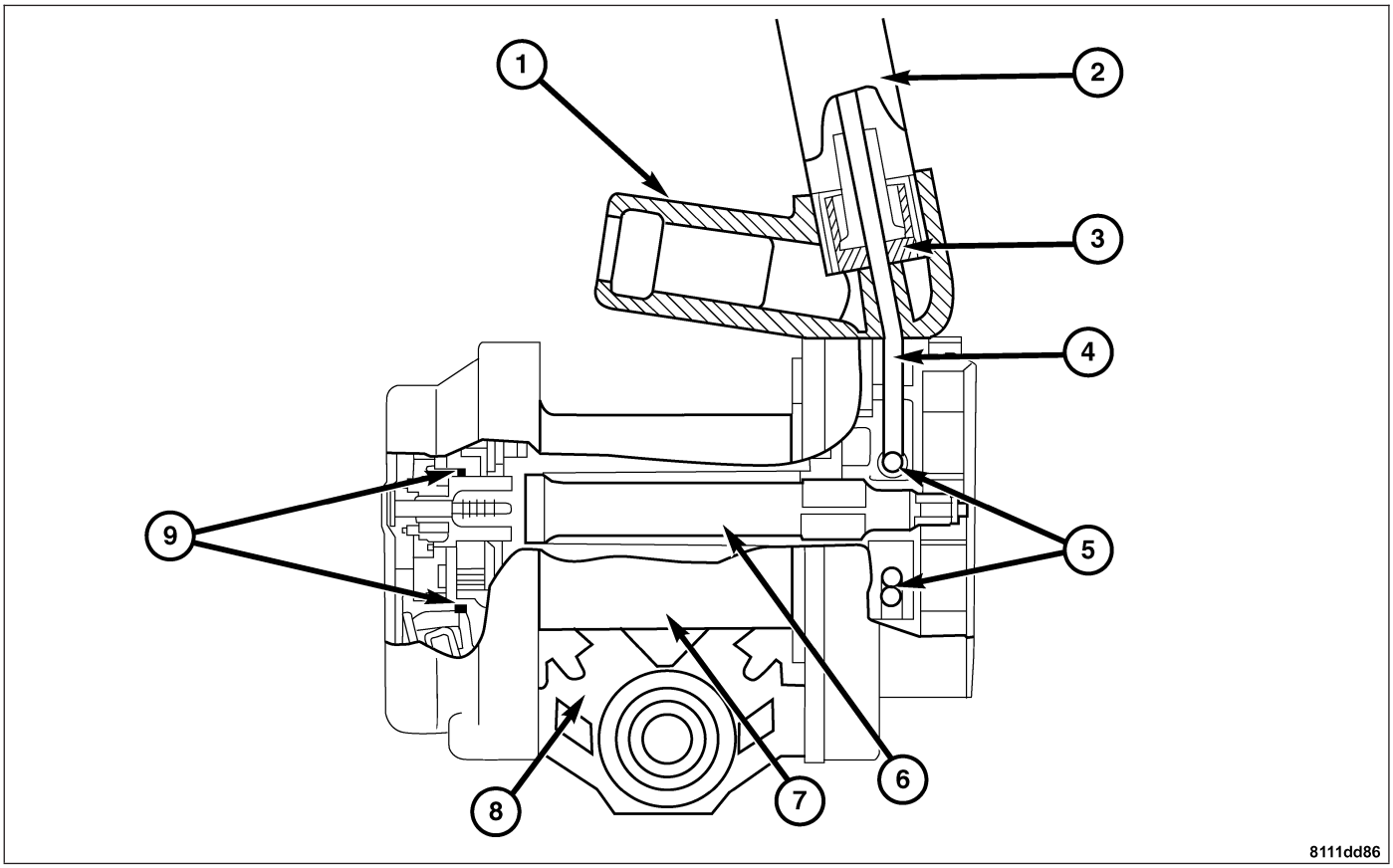

1 - GAS GENERATOR HOUSING
2 - GAS GENERATOR CYLINDER
3 - GAS GENERATOR PISTON
4 - PULL CABLE
5 - TENSIONING SYSTEM (FORCE LIMITATION)
6 - FORCE LIMITATION TORSION ROD
7 - BELT REEL SHAFT
8 - REEL HOUSING
9 - LOCKING SYSTEM

The Seat Belt Tensioners (SBT) are equipped with a force limitation device which reduces the force of the belt on the passenger's body, without affecting the protective function of the seat belt during an impact.

SEAT BELT TENSIONING

In the event of a collision, the Occupant Restraint Controller (ORC) puts out an electrical signal for triggering the Seat Belt Tensioner (SBT) after a certain delay.

The Squib in the gas generator is triggered and the resulting combustion gas moves the piston (2) in the gas generator cylinder (3) up at high speed. The pull cable (4) connected to the piston is tensioned causing the cable pulley (5) to turn. Inertia and centrifugal force cause the pawls (7) in the cable pulley (5) to engage in the teeth in the toothed ring (6).

A positive connection is then present between the gas generator piston and the seat belt retractor shaft via the pull cable (4), the cable pulley (5) and toothed plate pulling and thereby tensioning the seat belt (1).

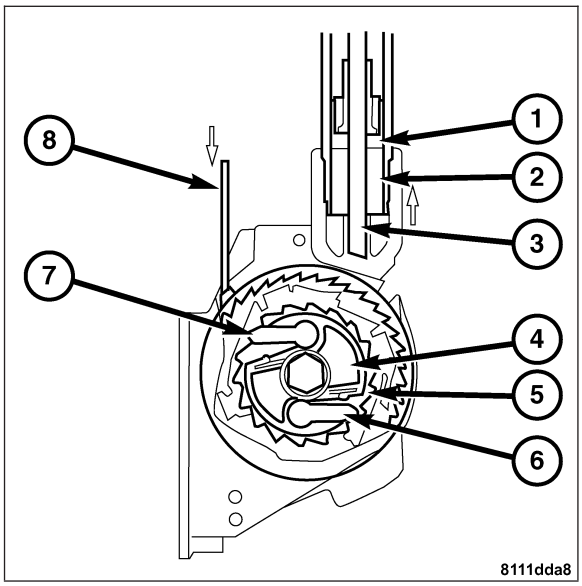

FORCE LIMITATION

After tensioning the seat belt, the gas pressure in the gas generator cylinder (1) decreases. The pull cable (2) is relieved and the force on the cable pulley (4) reduced.

The force exerted by the passenger on the seat belt then changes the direction of pull and the seat belt (8) attempts to unwind. This is prevented by the outer locking pawls (3) in the toothed ring (5). The change in the direction of pull simultaneously causes a change in the direction of rotation of the retractor shaft. Inertia and centrifugal force cause the outer locking pawls (3) on the toothed ring (5) to engage in the inner teeth on the locking ring (7).

As soon as a locking pawl (3) is in contact with the teeth on the locking ring (7) the latter turns until it locks up. The arrested locking ring (7) causes the torsion rod (6) to arrest on one side. The torsion rod (6) forms the heart of the retractor shaft and therefore takes up the tension forces acting on the seat belt.

As soon as the force on the seat belt exceeds 4 kN, the torsion rod (6) deforms, counteracting a further increase in the load and limiting the force.

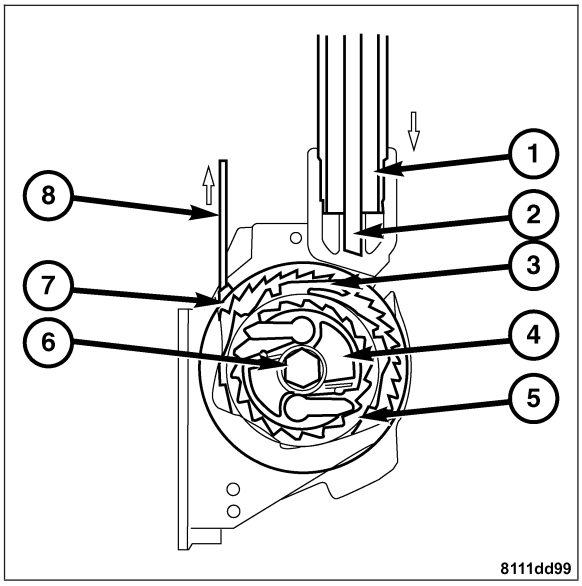

As soon as the force on the seat belt decreases, the locking pawls in the toothed ring and the pawls on the cable pulley return to their initial position as the seat belt is retracted. The locking and retracting functions of the inertia reel are effective again.

Triggering of the emergency tensioning retractors is indicated by the open viewing window (1) on the tensioning system housing

In the event of another collision, the normal protective function of the seat belt is still available. The retractor shaft is locked up by the locking system without tensioning and force limitation so that the entire force is taken up.

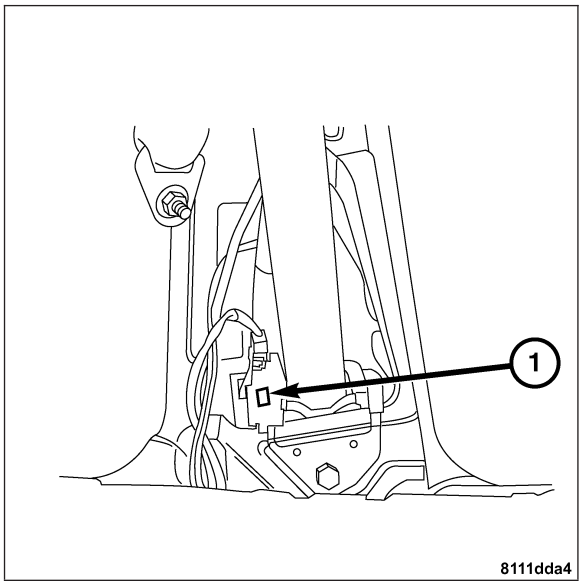

REMOVAL

WARNING: DURING AND FOLLOWING ANY SEAT BELT OR CHILD RESTRAINT ANCHOR SERVICE, CAREFULLY INSPECT ALL SEAT BELTS, BUCKLES, MOUNTING HARDWARE, RETRACTORS, TETHER STRAPS, AND ANCHORS FOR PROPER INSTALLATION, OPERATION, OR DAMAGE. REPLACE ANY BELT THAT IS CUT, FRAYED, OR TORN. STRAIGHTEN ANY BELT THAT IS TWISTED. TIGHTEN ANY LOOSE FASTENERS. REPLACE ANY BELT THAT HAS A DAMAGED OR INOPERATIVE BUCKLE OR RETRACTOR. REPLACE ANY BELT THAT HAS A BENT OR DAMAGED LATCH PLATE OR ANCHOR PLATE. REPLACE ANY CHILD RESTRAINT ANCHOR OR THE UNIT TO WHICH THE ANCHOR IS INTEGRAL THAT HAS BEEN BENT OR DAMAGED. NEVER ATTEMPT TO REPAIR A SEAT BELT OR CHILD RESTRAINT COMPONENT. ALWAYS REPLACE DAMAGED OR FAULTY SEAT BELT AND CHILD RESTRAINT COMPONENTS WITH THE CORRECT, NEW AND UNUSED REPLACEMENT PARTS LISTED IN THE DAIMLERCHRYSLER MOPAR PARTS CATALOG.

WARNING: NEVER DISASSEMBLE THE SEAT BELT TENSIONERS.

CAUTION: Never attempt to eliminate noises by lubricating with oil or grease.

1. Before attempting any service procedure refer to the warnings in this section. **Refer to Page 8O-82**.
2. Disconnect the negative battery cable. **Wait two minutes for the system capacitor to discharge before further service.**
3. Remove the ignition key from the vehicle.
4. Remove the bolt (1) on the belt end attaching it to the seat.

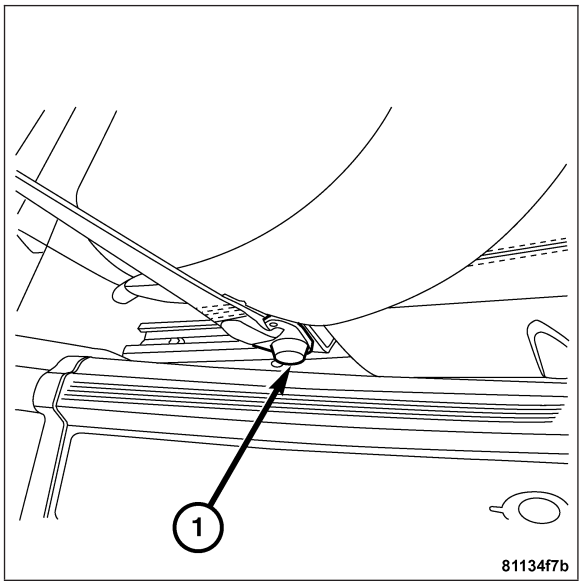

5. Remove the screws (1) attaching the plastic cover (3) to the door opening.
6. Remove the plastic cover (3).
7. Remove the door edge guard (2).

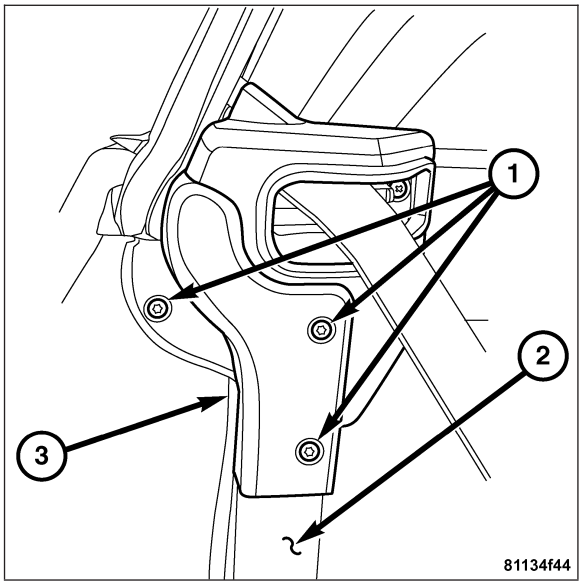

8. Remove the bolt (1) attaching the belt guide to the vehicle.

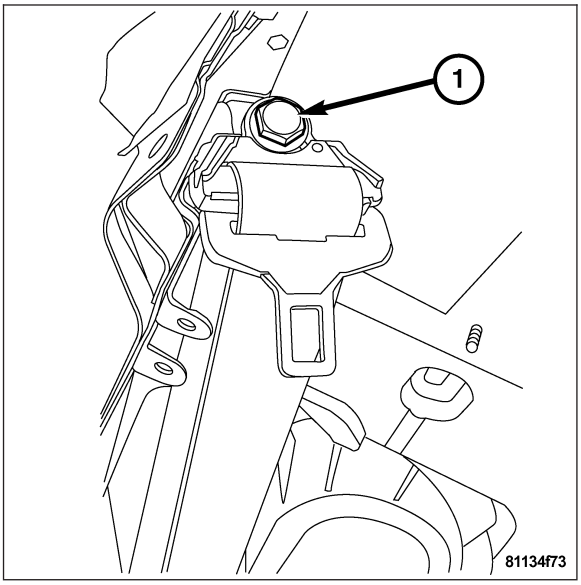

9. Fold back the carpet (1) in the upper corner area.

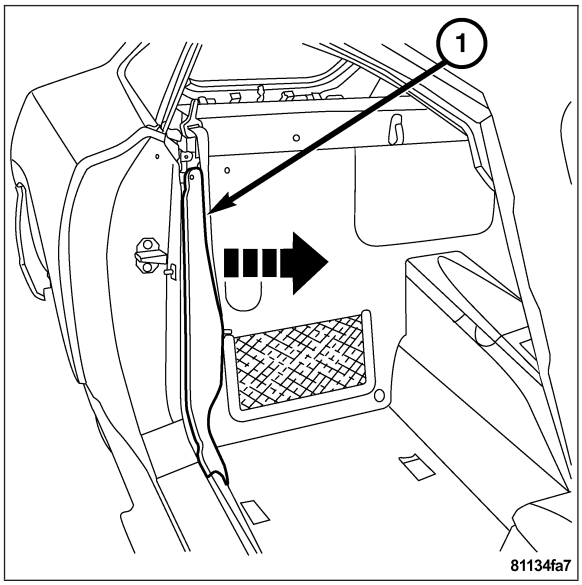

10. Disconnect the SBT Squib harness connector (1).

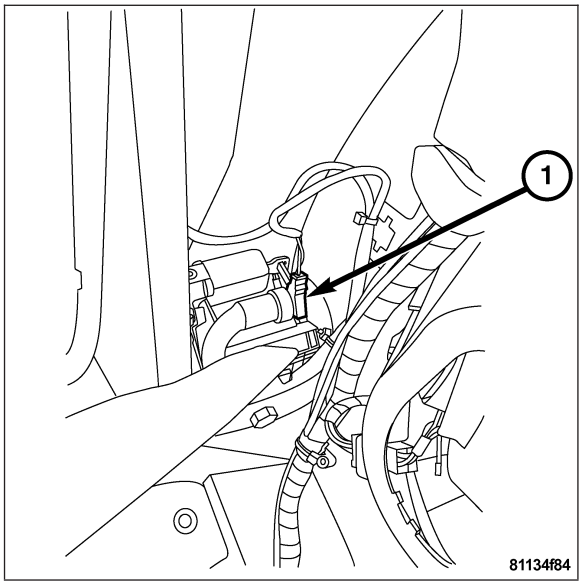

11. Remove the bolt (1) attaching the SBT to the vehicle.
12. Remove the SBT.

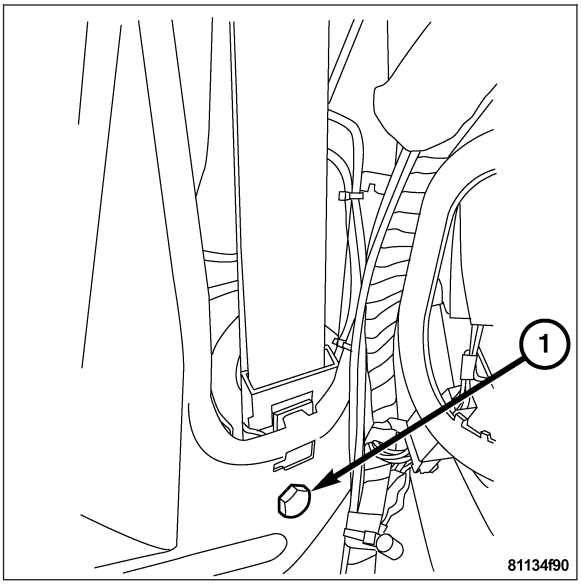

INSPECTION

1. Check the Seat Belt Tensioner (SBT) with the DRBIII®.
2. Read and record all DTCs.
3. Inspect for the following:
   1. If the first ignition Squib has been fired electrically and the red pin (1) is visible, all three ignition Squibs have been fired.
   2. If the first ignition Squib has been fired electrically and the red pin (1) is not visible, not all three ignition Squibs have been fired.

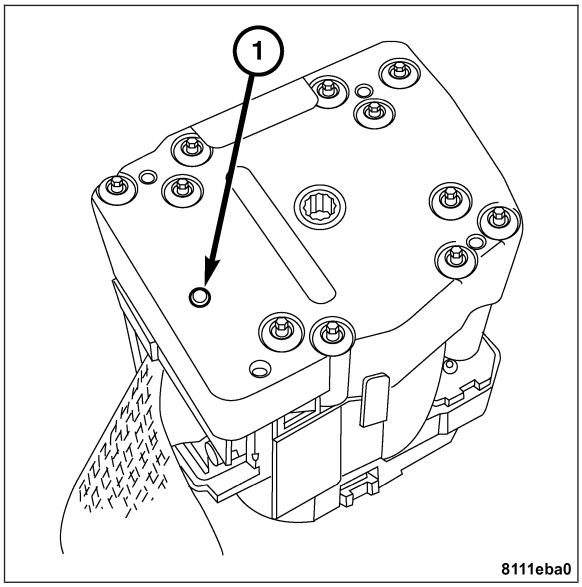

INSTALLATION

1. Position the SBT in the vehicle.
2. Install the bolt (1) attaching the SBT to the vehicle. Tighten to 10 N·m (88 in. lbs.).

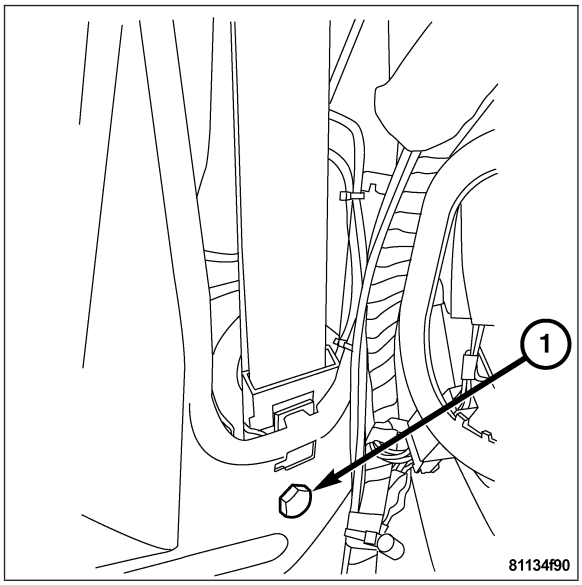

3. Connect the SBT Squib harness connector (1).

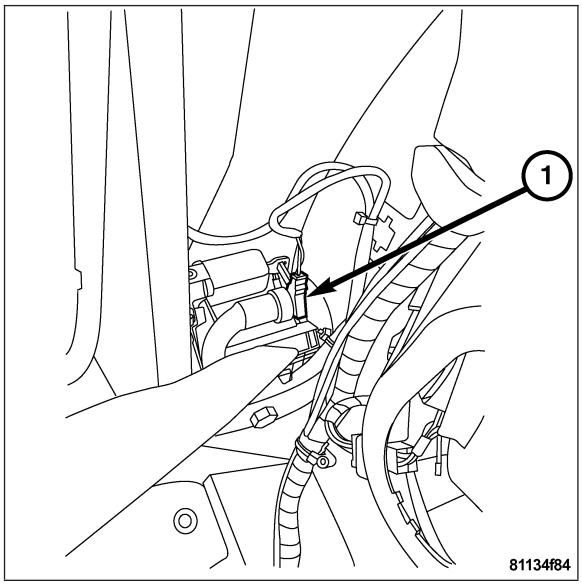

4. Install the bolt (1) on the upper belt guide. Tighten to 35 N·m (26 ft. lbs.).

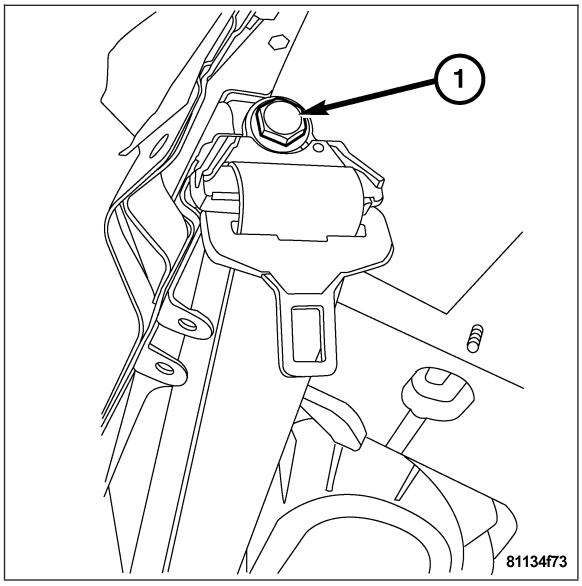

5. Replace the carpet (1) in the upper corner area.

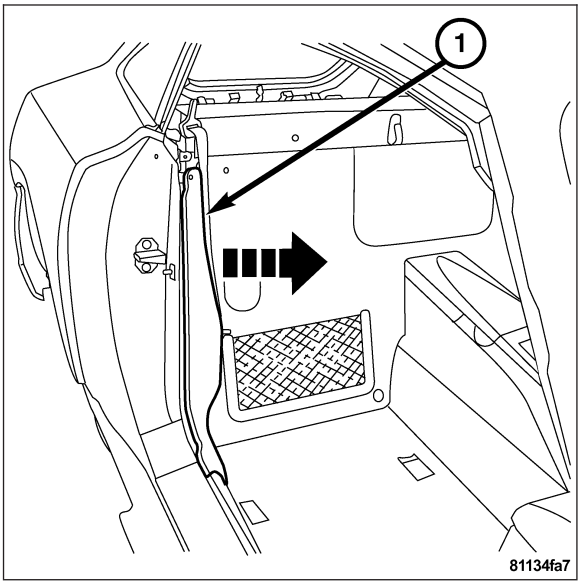

6. Position the plastic cover (3) over the seat belt.
7. Install the screws (1) attaching the plastic cover (3) to the door opening.
8. Install the door edge guard (2).

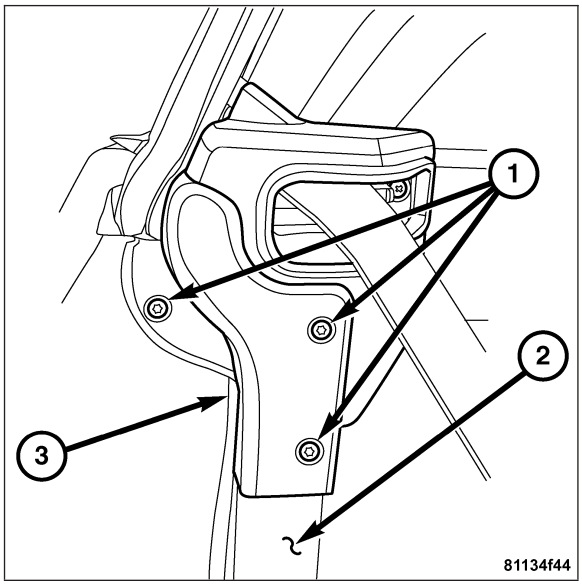

9. Install the bolt (1) on the belt end attaching it to the seat. Tighten to 35 N·m (26 ft. lbs.).
10. Install the ignition key to the vehicle.
11. Do not reconnect the battery negative cable at this time. The supplemental restraint system verification test procedure should be performed following service of any supplemental restraint system component. **Refer to Page 8O-83**.

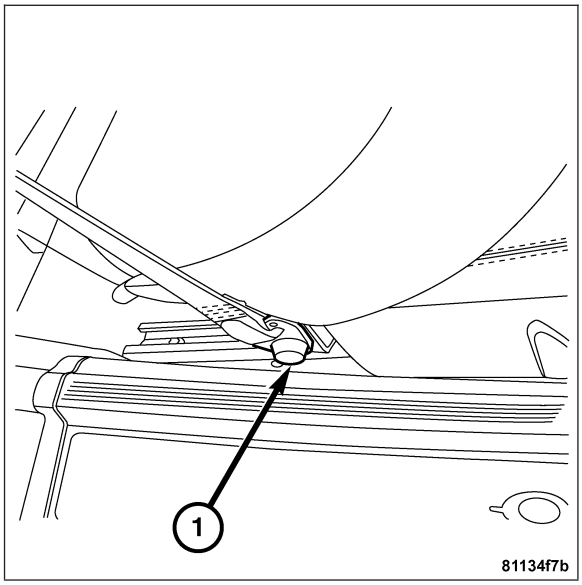

SPEED CONTROL

TABLE OF CONTENTS

page

SPEED CONTROL - ELECTRICAL DIAGNOSTICS 1

page

SPEED CONTROL - SERVICE INFORMATION. 3

SPEED CONTROL - ELECTRICAL DIAGNOSTICS

TABLE OF CONTENTS

page

SPEED CONTROL - ELECTRICAL DIAGNOSTICS
SCHEMATICS AND DIAGRAMS 2

SPEED CONTROL - ELECTRICAL DIAGNOSTICS

SCHEMATICS AND DIAGRAMS

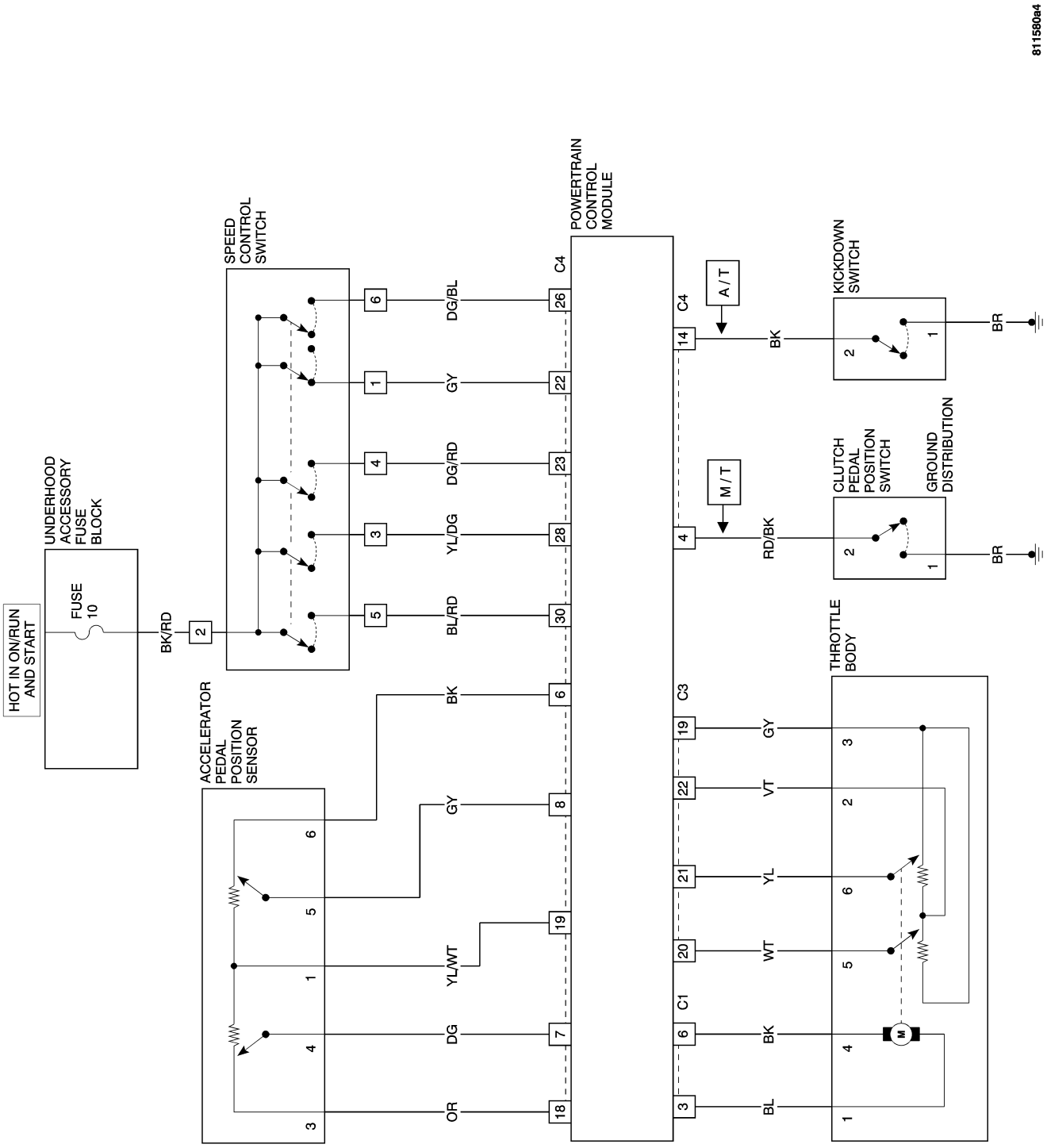

SPEED CONTROL - SERVICE INFORMATION

TABLE OF CONTENTS

page

SPEED CONTROL - SERVICE INFORMATION
DESCRIPTION 3
OPERATION 3

SWITCH
REMOVAL 4
INSTALLATION 5

SPEED CONTROL - SERVICE INFORMATION

DESCRIPTION

WARNING: THE USE OF SPEED CONTROL IS NOT RECOMMENDED WHEN DRIVING CONDITIONS DO NOT PERMIT MAINTAINING A CONSTANT SPEED, SUCH AS IN HEAVY TRAFFIC OR ON ROADS THAT ARE WINDING, ICY, SNOW COVERED, OR SLIPPERY.

Note: A cable and a vacuum controlled servo are not used. This is a servo-less system.

Control of the speed control system is accomplished by a speed control switch (1) which is located just above the multi-function switch (2). The speed control system also uses other components of the vehicle to accomplish its tasks. The five other major components used are as follows; The PCM, Accelerator Pedal Position Sensor, Kickdown Simulator Switch, Throttle Body and the Clutch Pedal Position Switch (Manual Transmission). The speed control system is designed to operate at speeds above 25 m.p.h. (40 km/h).

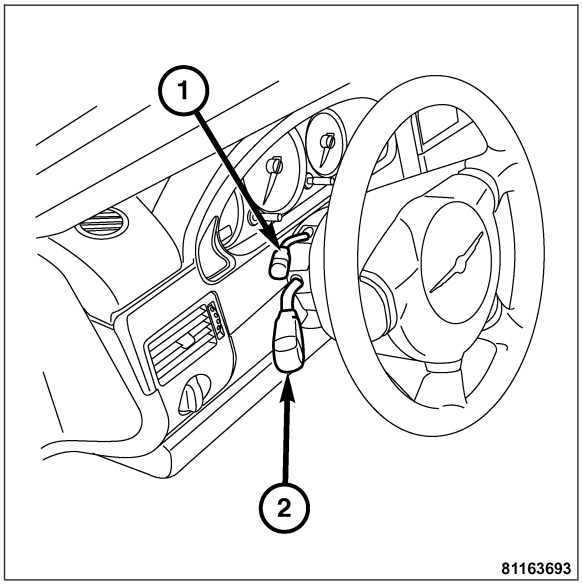

OPERATION

When speed control operation is requested by the speed control switch, the PCM (Powertrain Control Module) allows a set speed to be stored in its memory for speed control. To store a set speed, press either of the SET switch functions while the vehicle is moving, at a speed above 25 m.p.h. (40 km/h). In order for the speed control to engage, the brakes cannot be applied, nor can the gear selector be indicating the transmission is in Park or Neutral.

The speed control can be disengaged manually by:

- Stepping on the brake pedal
- Pressing the speed control switch to OFF
- Depressing the clutch pedal (if equipped).

Note: Turning the Speed Control Switch OFF or turning off the ignition switch will erase the set speed stored in the PCM.

For added safety, the speed control system is programmed to disengage for any of the following conditions:

- An indication of Park or Neutral
- A rapid increase rpm (indicates that the clutch has been disengaged)
- Excessive engine rpm (indicates that the transmission may be in a low gear)
- The speed signal increases at a rate of 10 m.p.h. per second (indicates that the coefficient of friction between the road surface and tires is extremely low)
- The speed signal decreases at a rate of 10 m.p.h. per second (indicates that the vehicle may have decelerated at an extremely high rate)

Once the speed control has been disengaged, pulling the speed control switch forward into the RESUME position (when speed is greater than 30 m.p.h.) restores the vehicle to the target speed that was stored in the PCM.

While the speed control is engaged, the driver can increase the vehicle speed by pushing the speed control switch upward into the ACCEL,SET position. The new target speed is stored in the PCM when the ACCEL,SET switch position is released. The PCM also has a “tap-up” feature in which vehicle speed increases at a rate of approximately 2 m.p.h. for each momentary switch activation of the ACCEL,SET switch position.

A “tap down” feature is used to decelerate without disengaging the speed control system. To decelerate from an existing recorded target speed, momentarily push the speed control switch downward into the DECEL,SET switch position. For each switch activation, speed will be lowered approximately 1 m.p.h.

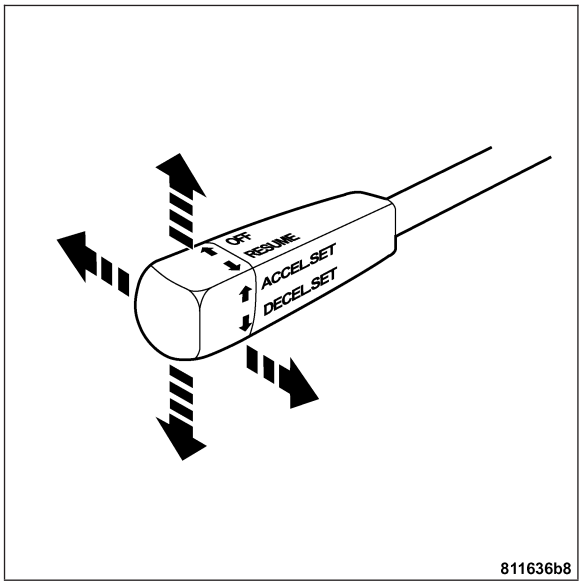

SWITCH

REMOVAL

WARNING: CAREFULLY READ ALL WARNINGS AND CAUTIONS ASSOCIATED WITH THE AIRBAG SYSTEM. Refer to Page 8O-82.

1. Disconnect the negative battery cable.
2. Remove the steering wheel. **Refer to Page 19-25**.
3. Remove the clockspring. **Refer to Page 8O-94**.
4. Remove the lower instrument panel. **Refer to Page 23-149**.

5. Remove the screw (1) attaching the speed control switch to the multi-function switch.
6. Disconnect the electrical connectors on the steering column.
7. Disconnect the wiring from the column.

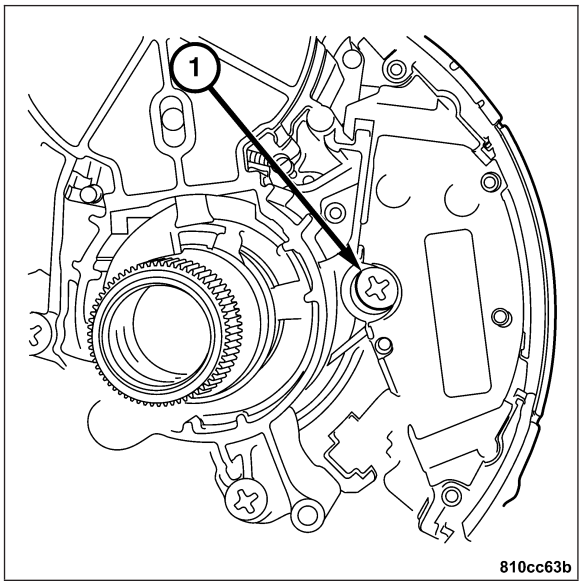

INSTALLATION

1. Connect the wiring to the column.
2. Connect the electrical connectors on the steering column.
3. Install the screw (1) attaching the speed control switch to the multi-function switch.

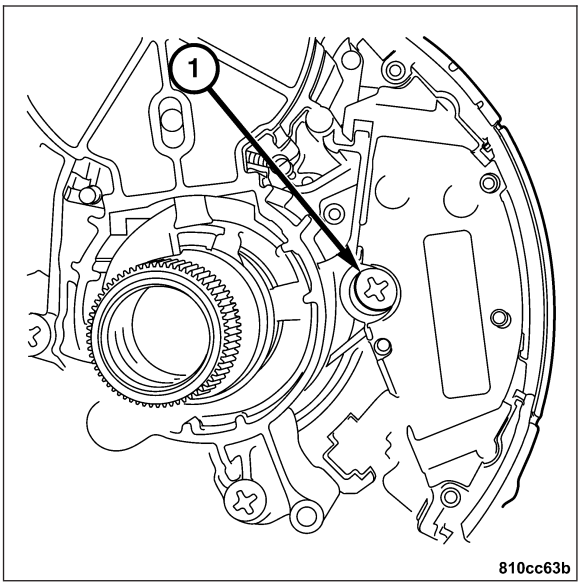

4. Install the lower instrument panel. **Refer to Page 23-155**.
5. Install the clockspring. **Refer to Page 8O-96**.
6. Install the steering wheel. **Refer to Page 19-26**.
7. Connect the negative battery cable.

VEHICLE THEFT SECURITY

TABLE OF CONTENTS

page

VEHICLE THEFT SECURITY - ELECTRICAL DIAGNOSTICS 1

page

VEHICLE THEFT SECURITY - SERVICE INFORMATION 46

VEHICLE THEFT SECURITY - ELECTRICAL DIAGNOSTICS

TABLE OF CONTENTS

page

VEHICLE THEFT SECURITY - ELECTRICAL DIAGNOSTICS
DIAGNOSIS AND TESTING
CENTRAL LOCKING PUMP/SECURITY SYSTEM MODULE SYSTEM UNDERVOLTAGE 2
CENTRAL LOCKING PUMP/SECURITY SYSTEM MODULE SYSTEM OVERVOLTAGE 5
NO COMMUNICATION WITH BCM AND CENTRAL LOCKING PUMP/SECURITY SYSTEM MODULE 8
CAN B BUS (-) CIRCUIT FAILURE 10
CAN B BUS (+) CIRCUIT FAILURE 13
DOOR LOCK SWITCH SENSE CIRCUIT 16
DOOR UNLOCK SWITCH SENSE CIRCUIT . . 19

page

ANTI-THEFT TOW SENSOR SIGNAL CIRCUIT 22
NO CAN COMMUNICATIONS WITH PCM . . . 25
SIREN SIGNAL OUTPUT CIRCUIT 27
CENTRAL LOCKING PUMP/SECURITY SYSTEM MODULE INTERNAL FAILURE 30
*ALARM TRIPS ON ITS OWN 32
VTSS VERIFICATION TEST 33
SENTRY KEY REMOTE ENTRY MODULE INTERNAL FAILURE 34
INVALID TRANSMITTER 36
SENTRY KEY ANTENNA CIRCUIT 38
REMOTE KEYLESS ENTRY RELAY CONTROL CIRCUIT 40
SENTRY KEY VERIFICATION TEST 43
SCHEMATICS AND DIAGRAMS 44

VEHICLE THEFT SECURITY - ELECTRICAL DIAGNOSTICS

DIAGNOSIS AND TESTING

CENTRAL LOCKING PUMP/SECURITY SYSTEM MODULE SYSTEM UNDERVOLTAGE

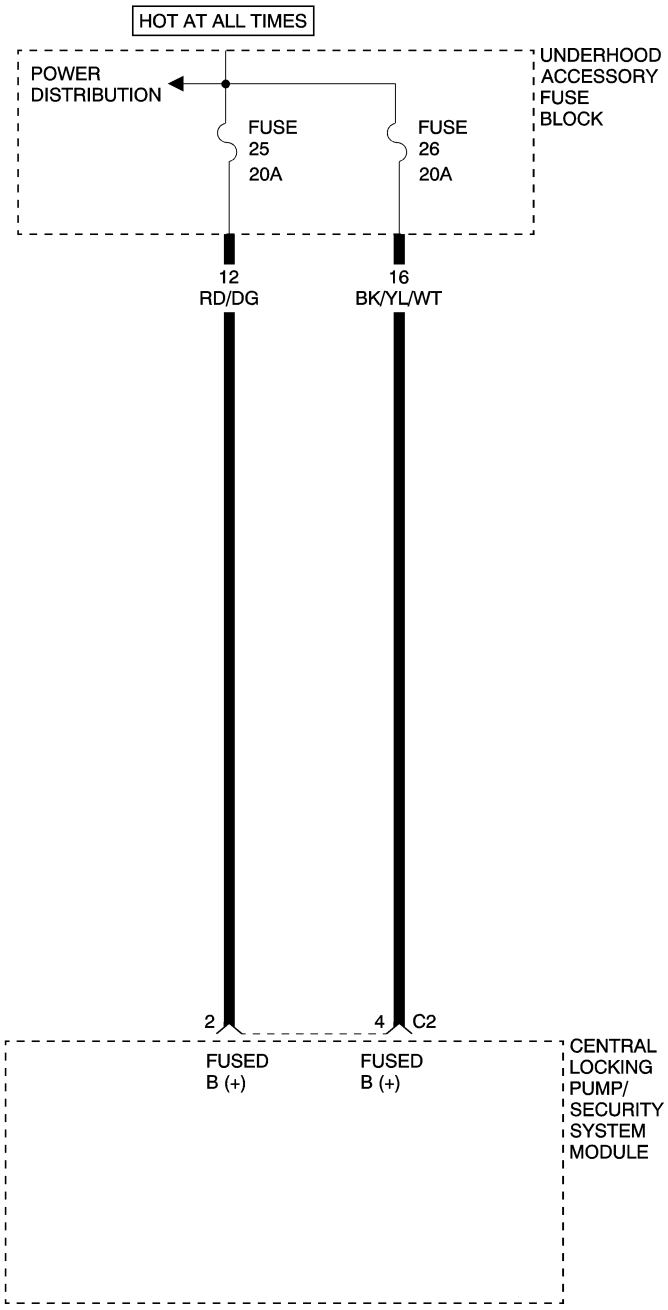

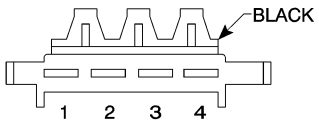

CENTRAL LOCKING PUMP/ SECURITY SYSTEM MODULE C2

8112fc23

CENTRAL LOCKING PUMP/SECURITY SYSTEM MODULE SYSTEM UNDERVOLTAGE — CONTINUED

When Monitored and Set Condition

- When Monitored: Ignition on. The Central Locking Pump/Security System Module (CLP/SSM) monitors the Fused B(+) circuit voltage for proper system voltage.
- Set Condition: If the voltage is below 11 volts, the Diagnostic Trouble Code (DTC) is set.

POSSIBLE CAUSES
BATTERY VOLTAGE LOW
FUSED B(+) CIRCUIT HIGH RESISTANCE
CENTRAL LOCKING PUMP/SECURITY SYSTEM MODULE

For a complete Vehicle Theft Security System Circuit Diagram, **Refer to Page 8Q-44**.

Diagnostic Test

1. WITH THE DRB III®, READ DTCs

Turn the ignition on.
With the DRB III®, erase DTCs.
Turn the ignition off.
Turn the ignition on.
Start the engine.
With the DRB III®, read DTCs.

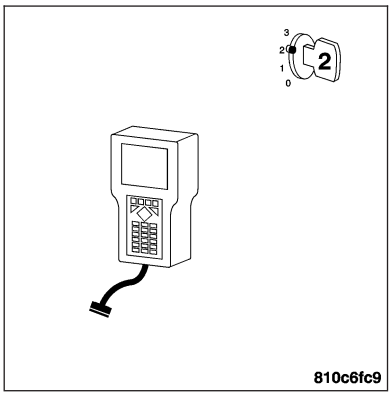

Does the DRB III® display a System Undervoltage DTC?

Yes >> Go to 2

No >> The condition that caused this DTC to set is currently not present. Inspect the related wiring harness for a possible intermittent condition.

2. MEASURE THE BATTERY VOLTAGE

Measure the battery voltage with the engine running.

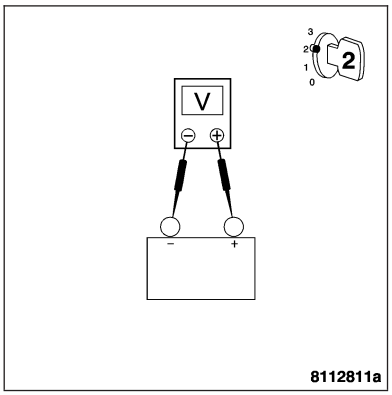

Is the battery voltage below 10 volts?

Yes >> Refer to the appropriate service information for charging system testing and repair.
Perform VTSS VERIFICATION TEST.

No >> Go to 3

CENTRAL LOCKING PUMP/SECURITY SYSTEM MODULE SYSTEM UNDERVOLTAGE — CONTINUED

3. MEASURE THE VOLTAGE OF THE FUSED B(+) CIRCUIT

Turn the ignition off.

Disconnect the CLP/SSM harness connector.

Note: Check connectors - Clean/repair as necessary.

Turn the ignition on.

Measure the voltage of the Fused B(+) circuit (cavity 2) at the CLP/SSM C2 harness connector.

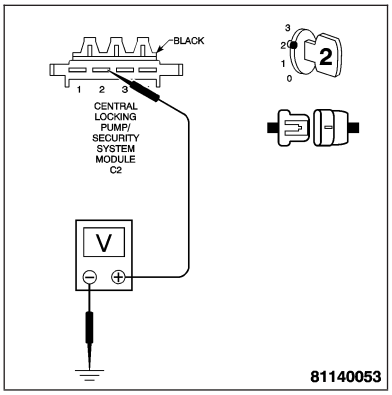

Is the voltage above 11 volts?

Yes >> Go to 4

No >> Repair the Fused B(+) circuit for high resistance.
Perform VTSS VERIFICATION TEST.

4. MEASURE THE VOLTAGE OF THE FUSED B(+) CIRCUIT

Measure the voltage of the Fused B(+) circuit (cavity 4) at the CLP/SSM C2 harness connector.

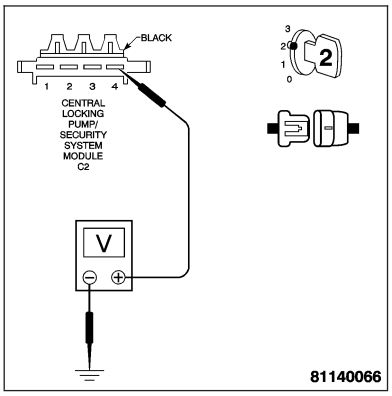

Is the voltage above 11 volts?

Yes >> Replace the Central Locking Pump/Security System Module. **Refer to Page 8Q-48**.
Perform VTSS VERIFICATION TEST.

No >> Repair the Fused B(+) circuit for high resistance.
Perform VTSS VERIFICATION TEST.

CENTRAL LOCKING PUMP/SECURITY SYSTEM MODULE SYSTEM OVERVOLTAGE

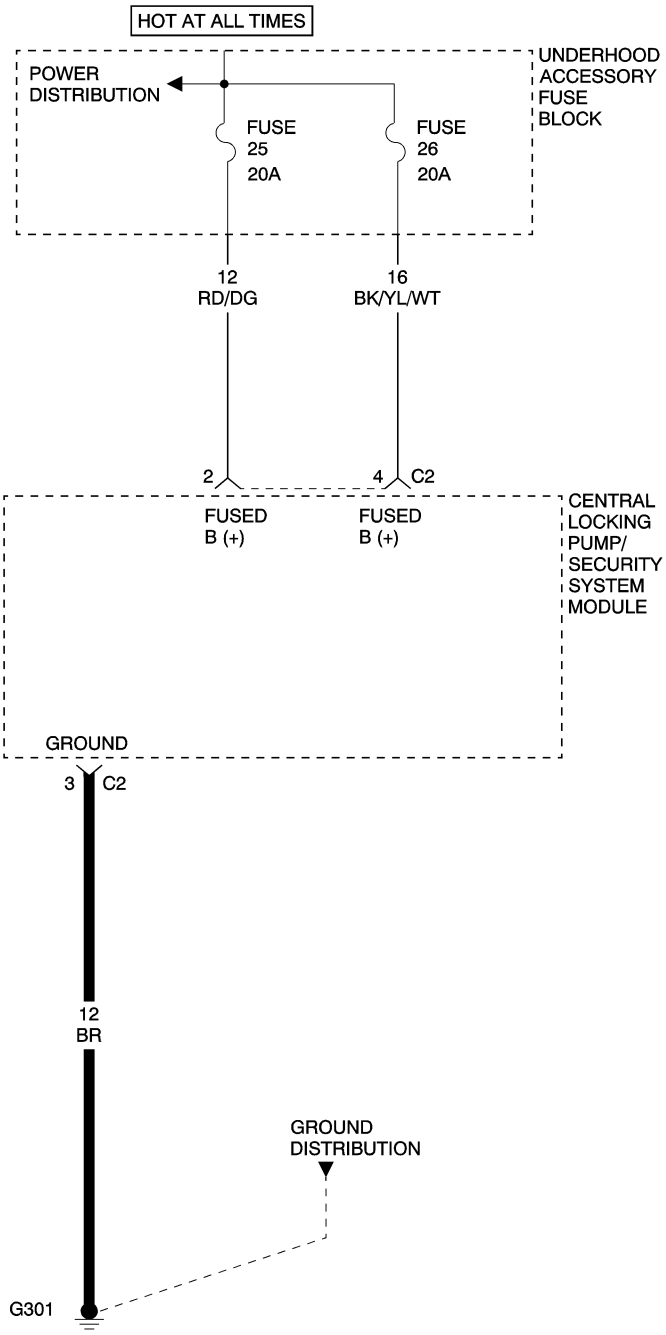

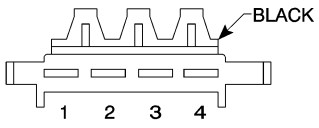

CENTRAL LOCKING PUMP/ SECURITY SYSTEM MODULE C2

8112fd79

CENTRAL LOCKING PUMP/SECURITY SYSTEM MODULE SYSTEM OVERVOLTAGE — CONTINUED

When Monitored and Set Condition

- When Monitored: Ignition on. The Central Locking Pump/Security System Module (CLP/SSM) monitors the Fused B(+) circuit at all times for proper system voltage.
- Set Condition: If the voltage is above 16 volts, the Diagnostic Trouble Code (DTC) is set.

POSSIBLE CAUSES
SYSTEM VOLTAGE HIGH
GROUND CIRCUIT OPEN
CENTRAL LOCKING PUMP/SECURITY SYSTEM MODULE

For a complete Vehicle Theft Security System Circuit Diagram, **Refer to Page 8Q-44**.

Diagnostic Test

1. WITH THE DRB III®, READ DTCs

Turn the ignition on.
With the DRB III®, erase DTCs.
Turn the ignition off.
Turn the ignition on.
Start the engine.
With the DRB III®, read DTCs.

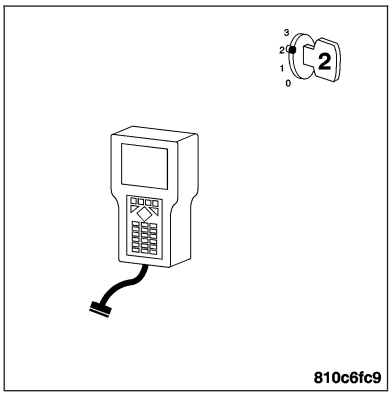

Does the DRB III® display a System Overvoltage DTC?

Yes >> Go to 2

No >> The condition that caused this DTC to set is currently not present. Inspect the related wiring harness for a possible intermittent condition.

2. MEASURE THE BATTERY VOLTAGE

Turn the ignition off.
Disconnect the CLP/SSM harness connector.

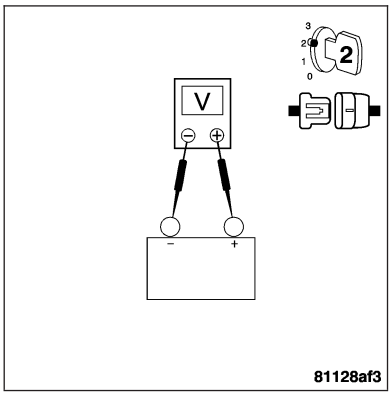

Note: Check connectors - Clean/repair as necessary.
Start the engine.
Raise the engine speed above 1800 RPM.
Measure the battery voltage.

Is the voltage above 16 volts?

Yes >> Refer to the appropriate service information for charging system testing and repair.
Perform VTSS VERIFICATION TEST.

No >> Go to 3

CENTRAL LOCKING PUMP/SECURITY SYSTEM MODULE SYSTEM OVERVOLTAGE — CONTINUED

3. MEASURE THE RESISTANCE OF THE GROUND CIRCUIT

Turn the ignition off.
Measure the resistance between ground and the Ground circuit.

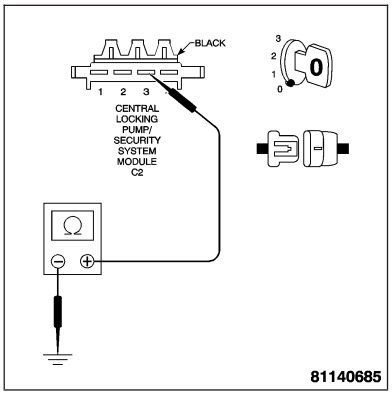

Is the resistance below 1.0 ohm?

Yes >> Replace the Central Locking Pump/Security System Module. **Refer to Page 8Q-48**.
Perform VTSS VERIFICATION TEST.

No >> Repair the Ground circuit for an open.
Perform VTSS VERIFICATION TEST.

NO COMMUNICATION WITH BCM AND CENTRAL LOCKING PUMP/SECURITY SYSTEM MODULE

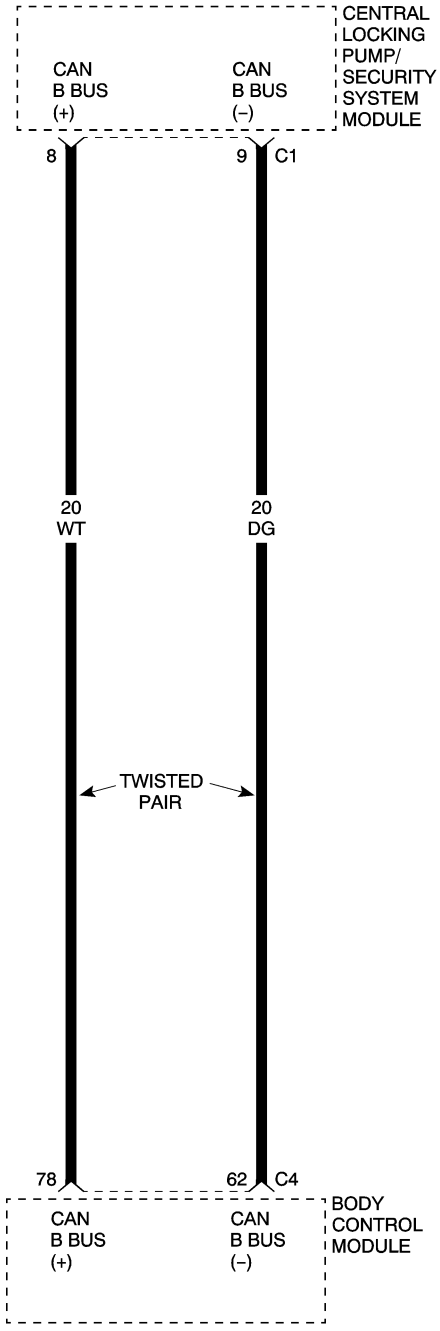

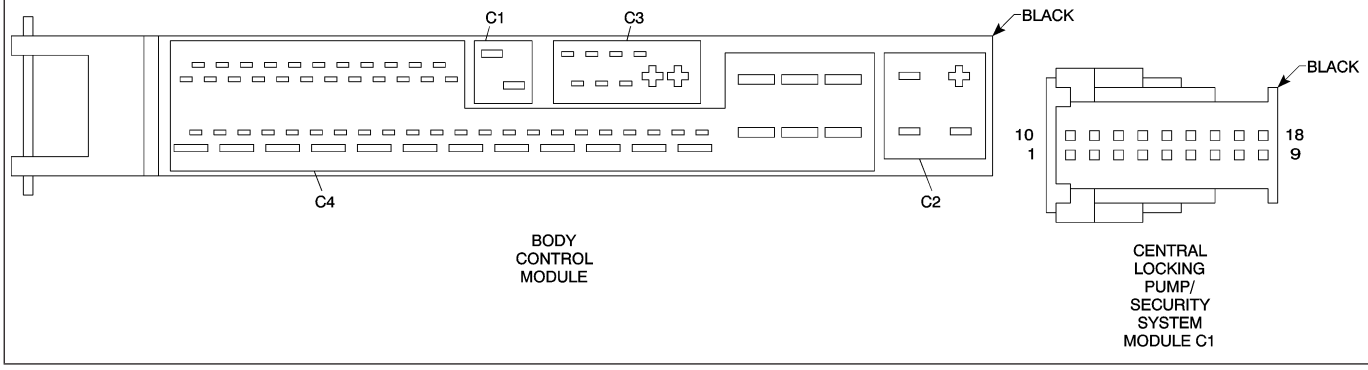

NO COMMUNICATION WITH BCM AND CENTRAL LOCKING PUMP/SECURITY SYSTEM MODULE — CONTINUED

When Monitored and Set Condition

- When Monitored: Continuous.
- Set Condition: CAN Bus communication failure between the Body Control Module (BCM) and the Central Locking Pump/Security System Module (CLP/SSM).

POSSIBLE CAUSES
CAN B BUS (+) CIRCUIT OPEN
CAN B BUS (-) CIRCUIT OPEN
CENTRAL LOCKING PUMP/SECURITY SYSTEM MODULE INTERNAL FAILURE

For a complete Vehicle Theft Security System Circuit Diagram, **Refer to Page 8Q-44**.

Diagnostic Test

1. MEASURE THE RESISTANCE OF THE CAN B BUS (+) CIRCUIT

Turn the ignition off.

Disconnect the CLP/SSM harness connector.

Disconnect the BCM harness connector.

Note: Check connectors - Clean/repair as necessary.

Measure the resistance of the CAN B Bus (+) circuit from the CLP/SSM harness connector to the BCM harness connector.

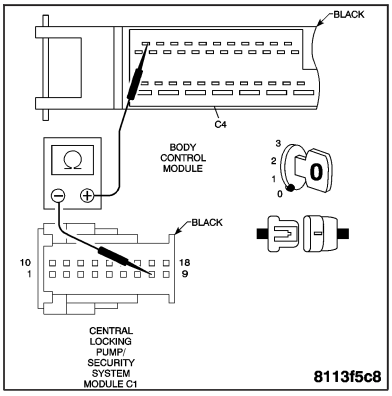

Is the resistance below 1.0 ohm?

Yes >> Go to 2

No >> Repair the CAN B Bus (+) circuit for an open.
Perform VTSS VERIFICATION TEST.

2. MEASURE THE RESISTANCE OF THE CAN B BUS (-) CIRCUIT

Measure the resistance of the CAN B Bus (-) circuit from the CLP/SSM harness connector to the BCM harness connector.

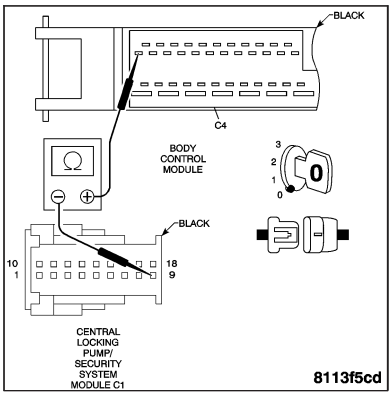

Is the resistance below 1.0 ohm?

Yes >> Replace the Central Locking Pump/Security System Module. **Refer to Page 8Q-48**.
Perform VTSS VERIFICATION TEST.

No >> Repair the CAN B Bus (-) circuit for an open.
Perform VTSS VERIFICATION TEST.

CAN B BUS (-) CIRCUIT FAILURE

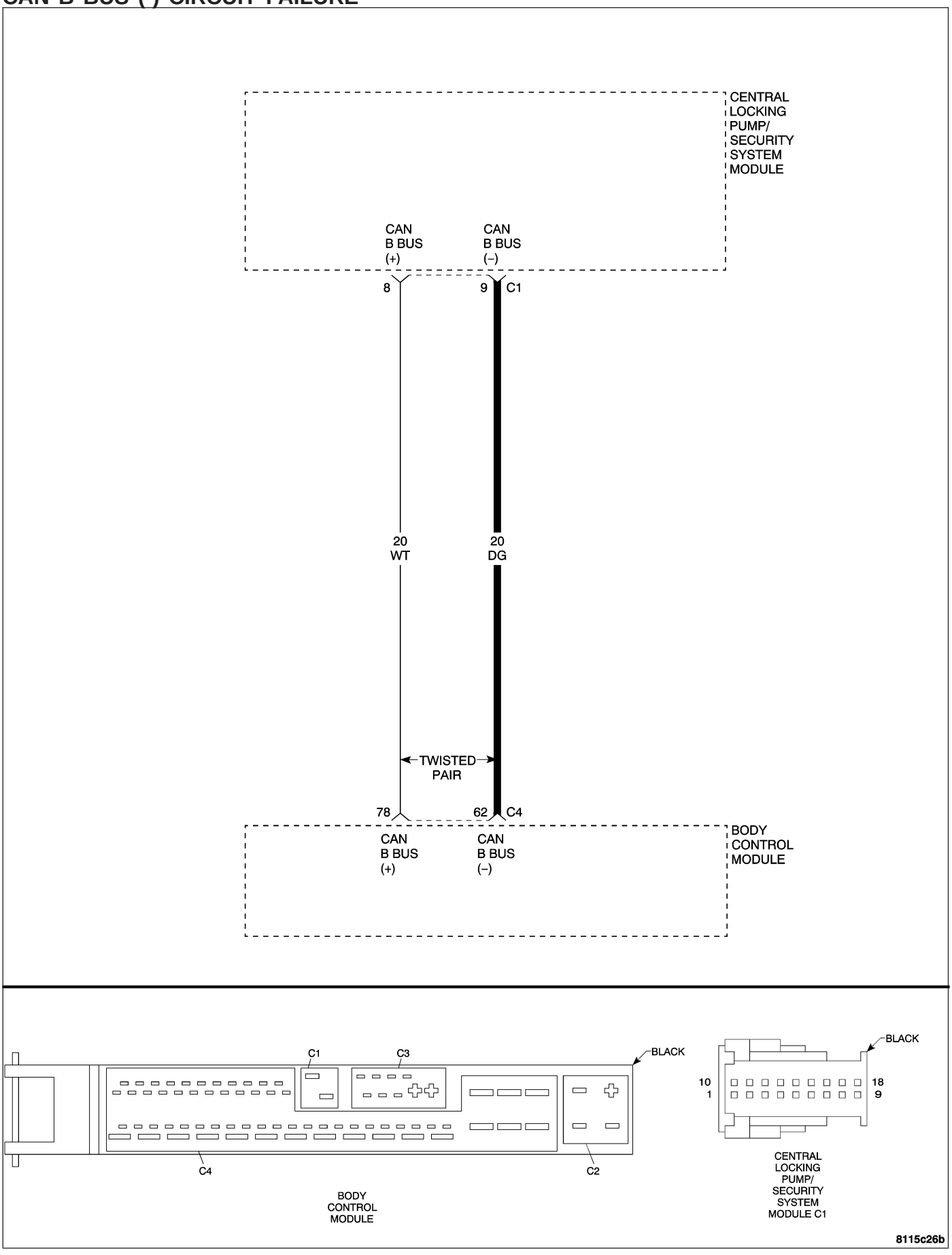

CAN B BUS (-) CIRCUIT FAILURE — CONTINUED

When Monitored and Set Condition

- When Monitored: Continuous.
- Set Condition: CAN B Bus (-) communication failure between the Body Control Module (BCM) and the Central Locking Pump/Security System Module (CLP/SSM).

POSSIBLE CAUSES
CAN B BUS (-) CIRCUIT SHORTED TO VOLTAGE
CAN B BUS (-) CIRCUIT SHORTED TO GROUND
CAN B BUS (-) CIRCUIT OPEN
CENTRAL LOCKING PUMP/SECURITY SYSTEM MODULE

For a complete Vehicle Theft Security System Circuit Diagram, **Refer to Page 8Q-44**.

Diagnostic Test

1. MEASURE THE RESISTANCE OF THE CAN B BUS (-) CIRCUIT

Turn the ignition off.

Disconnect the BCM harness connector.

Disconnect the CLP/SSM harness connector.

Note: Check connectors - Clean/repair as necessary.
Measure the resistance of the CAN B Bus (-) circuit from the BCM harness connector to the CLP/SSM harness connector.

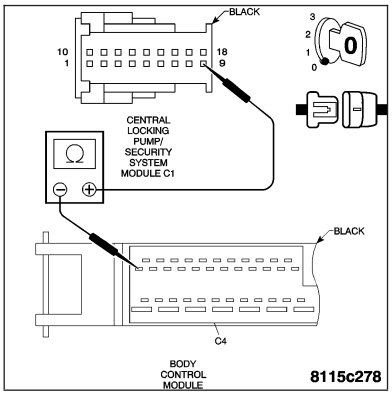

Is the resistance below 1.0 ohm?

Yes >> Go to 2

No >> Repair the CAN B Bus (-) circuit for an open.
Perform VTSS VERIFICATION TEST.

2. MEASURE THE VOLTAGE OF THE CAN B BUS (-) CIRCUIT

Turn the ignition on.

Measure the voltage of the CAN B Bus (-) circuit at the CLP/SSM harness connector.

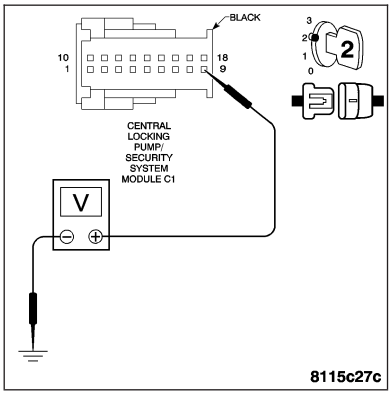

Is voltage present?

Yes >> Repair the CAN B Bus (-) circuit for a short to voltage.
Perform VTSS VERIFICATION TEST.

No >> Go to 3

CAN B BUS (-) CIRCUIT FAILURE — CONTINUED

3. MEASURE THE RESISTANCE OF THE CAN B BUS (-) CIRCUIT

Turn the ignition off.

Measure the resistance between ground and the CAN B Bus (-) circuit at the CLP/SSM harness connector.

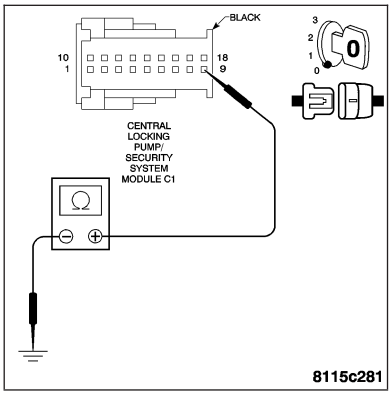

Is the resistance below 10K ohms?

Yes >> Repair the CAN B Bus (-) circuit for a short to ground. Perform VTSS VERIFICATION TEST.

No >> Replace the Central Locking Pump/Security System Module. **Refer to Page 8Q-48**. Perform VTSS VERIFICATION TEST.

CAN B BUS (+) CIRCUIT FAILURE

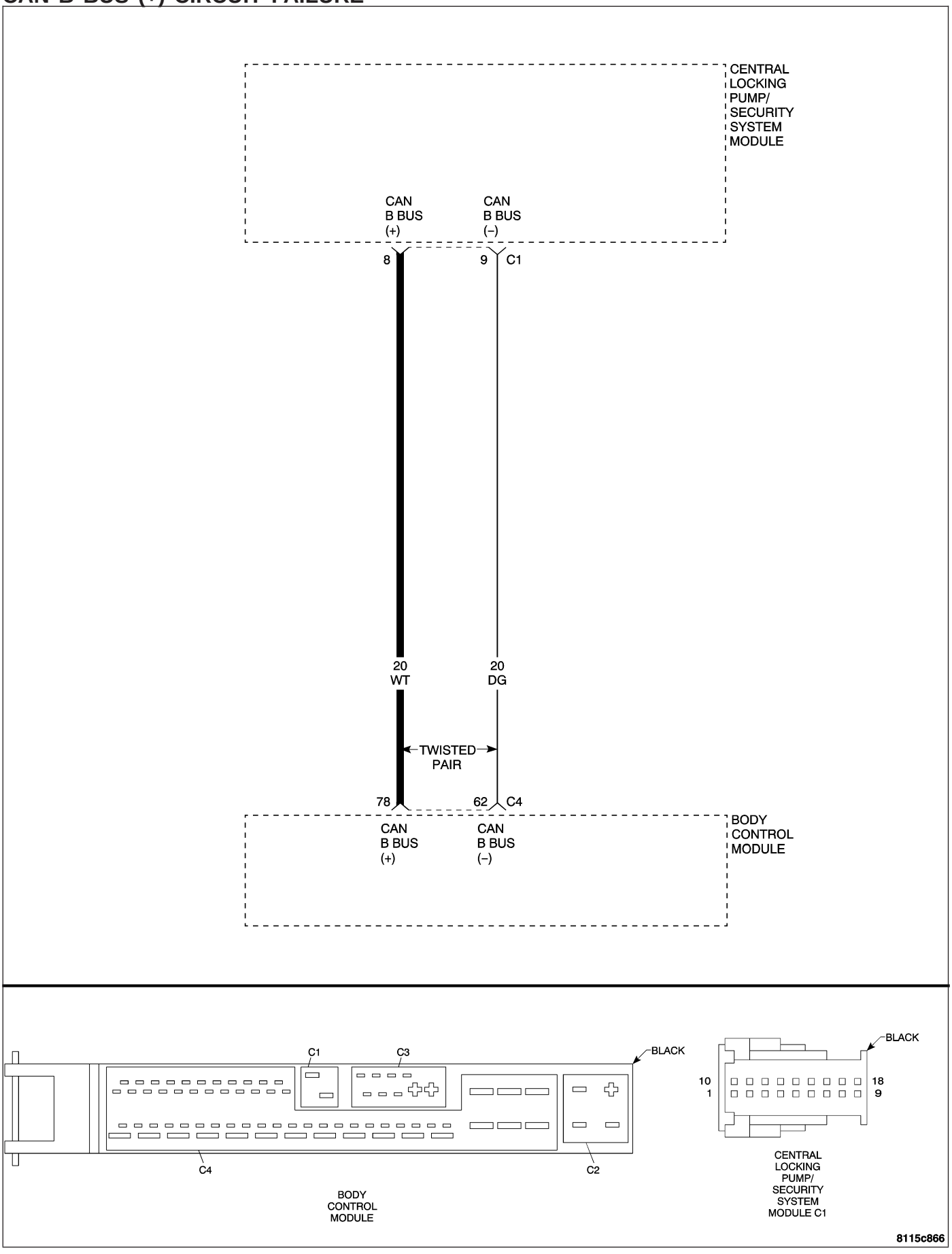

CAN B BUS (+) CIRCUIT FAILURE — CONTINUED

When Monitored and Set Condition

- When Monitored: Continuous.
- Set Condition: CAN B Bus (+) communication failure between the Body Control Module (BCM) and the Central Locking Pump/Security System Module (CLP/SSM).

POSSIBLE CAUSES
CAN B BUS (+) CIRCUIT SHORTED TO VOLTAGE
CAN B BUS (+) CIRCUIT SHORTED TO GROUND
CAN B BUS (+) CIRCUIT OPEN
CENTRAL LOCKING PUMP/SECURITY SYSTEM MODULE

For a complete Vehicle Theft Security System Circuit Diagram, **Refer to Page 8Q-44**.

Diagnostic Test

1. MEASURE THE RESISTANCE OF THE CAN B BUS (+) CIRCUIT

Turn the ignition off.

Disconnect the BCM harness connector.

Disconnect the CLP/SSM harness connector.

Note: Check connectors - Clean/repair as necessary.
Measure the resistance of the CAN B Bus (+) circuit from the BCM harness connector to the CLP/SSM harness connector.

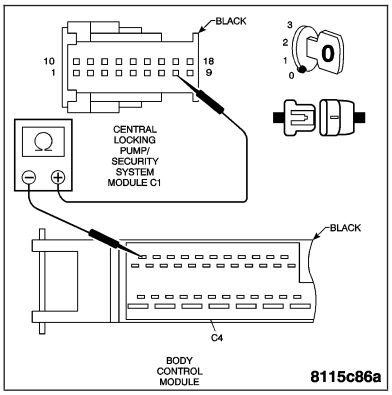

Is the resistance below 1.0 ohm?

Yes >> Go to 2

No >> Repair the CAN B Bus (+) circuit for an open.
Perform VTSS VERIFICATION TEST.

2. MEASURE THE VOLTAGE OF THE CAN B BUS (+) CIRCUIT

Turn the ignition on.

Measure the voltage of the CAN B Bus (+) circuit at the CLP/SSM harness connector.

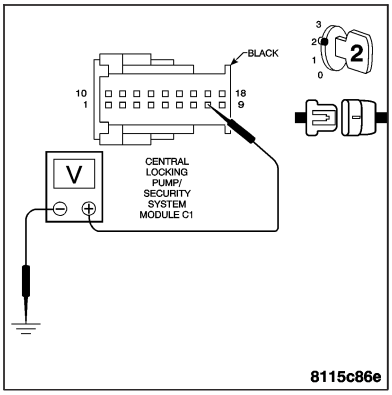

Is voltage present?

Yes >> Repair the CAN B Bus (+) circuit for a short to voltage.
Perform VTSS VERIFICATION TEST.

No >> Go to 3

CAN B BUS (+) CIRCUIT FAILURE — CONTINUED

3. MEASURE THE RESISTANCE OF THE CAN B BUS (+) CIRCUIT

Turn the ignition off.

Measure the resistance between ground and the CAN B Bus (+) circuit at the CLP/SSM harness connector.

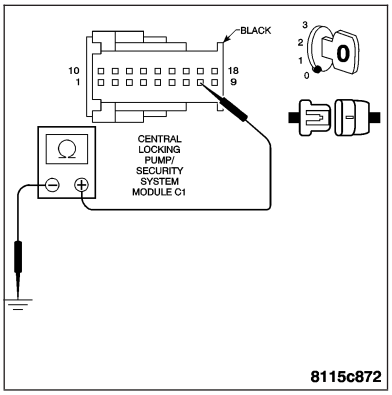

Is the resistance below 10K ohms?

Yes >> Repair the CAN B Bus (+) circuit for a short to ground.
Perform VTSS VERIFICATION TEST.

No >> Replace the Central Locking Pump/Security System Module. **Refer to Page 8Q-48**.
Perform VTSS VERIFICATION TEST.

DOOR LOCK SWITCH SENSE CIRCUIT

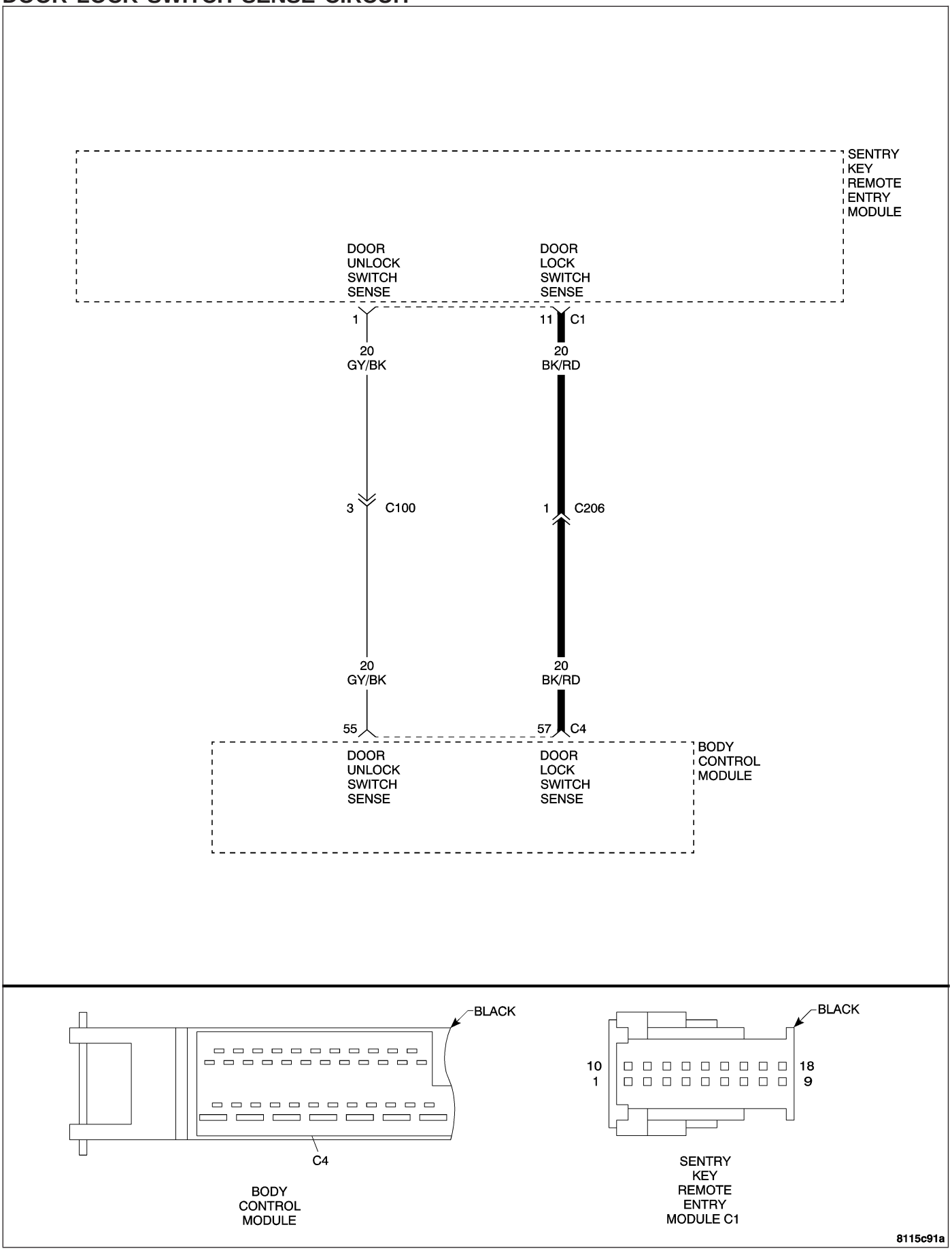

DOOR LOCK SWITCH SENSE CIRCUIT — CONTINUED

When Monitored and Set Condition

- When Monitored: Continuous.
- Set Condition: The Sentry Key Remote Entry Module (SKREEM) reports a short to power, ground, or an open circuit failure on the Door Lock Switch Sense circuit.

POSSIBLE CAUSES
DOOR LOCK SWITCH SENSE CIRCUIT SHORTED TO VOLTAGE
DOOR LOCK SWITCH SENSE CIRCUIT SHORTED TO GROUND
DOOR LOCK SWITCH SENSE CIRCUIT OPEN
SENTRY KEY REMOTE ENTRY MODULE

For a complete Vehicle Theft Security System Circuit Diagram, **Refer to Page 8Q-44**.

Diagnostic Test

1. MEASURE THE RESISTANCE OF THE DOOR LOCK SWITCH SENSE CIRCUIT

Turn the ignition off.

Disconnect the BCM harness connector.

Disconnect the SKREEM harness connector.

Note: Check connectors - Clean/repair as necessary.

Measure the resistance of the Door Lock Switch Sense circuit from the BCM harness connector to the SKREEM harness connector.

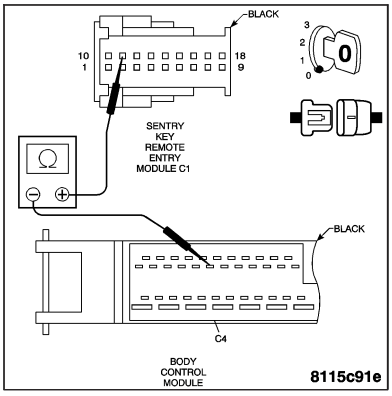

Is the resistance below 5.0 ohms?

Yes >> Go to 2

No >> Repair the Door Lock Switch Sense circuit for an open.
Perform VTSS VERIFICATION TEST.

2. MEASURE THE VOLTAGE OF THE DOOR LOCK SWITCH SENSE CIRCUIT

Turn the ignition on.

Measure the voltage of the Door Lock Switch Sense circuit at the SKREEM harness connector.

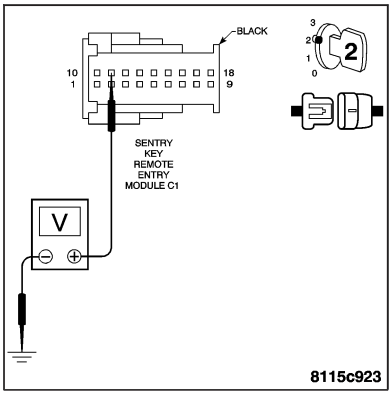

Is voltage present?

Yes >> Repair the Door Lock Switch Sense circuit for a short to voltage.
Perform VTSS VERIFICATION TEST.

No >> Go to 3

DOOR LOCK SWITCH SENSE CIRCUIT — CONTINUED

3. MEASURE THE RESISTANCE OF THE DOOR LOCK SWITCH SENSE CIRCUIT

Turn the ignition off.

Measure the resistance between ground and the Door Lock Switch Sense circuit at the SKREEM harness connector.

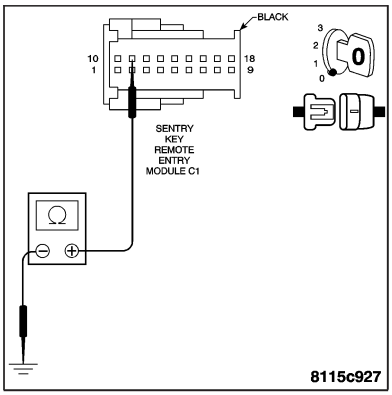

Is the resistance below 10K ohms?

Yes >> Repair the Door Lock Switch Sense circuit for a short to ground.
Perform VTSS VERIFICATION TEST.

No >> Replace the Sentry Key Remote Entry Module. **Refer to Page 8Q-48**.
Perform VTSS VERIFICATION TEST.

DOOR UNLOCK SWITCH SENSE CIRCUIT

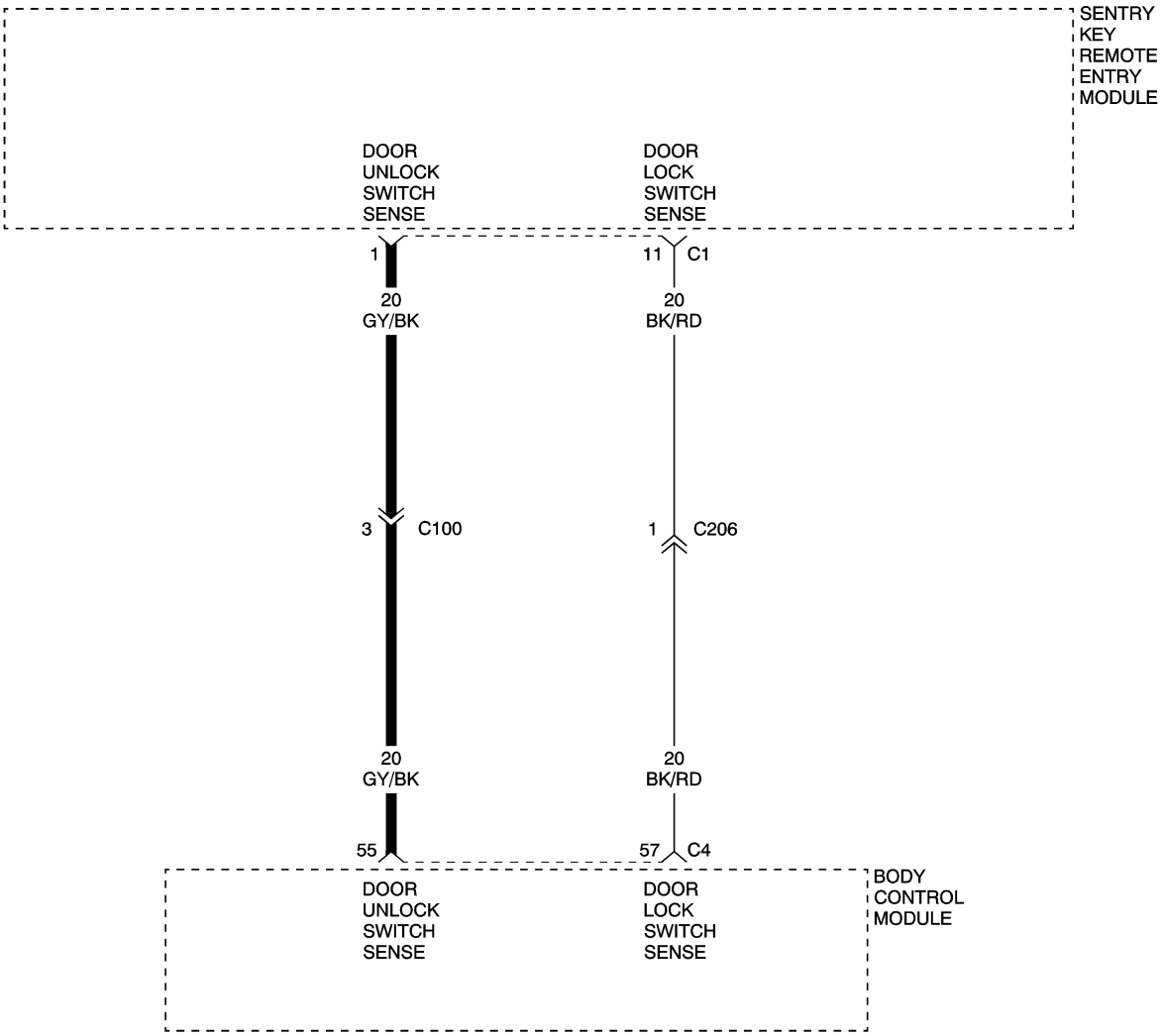

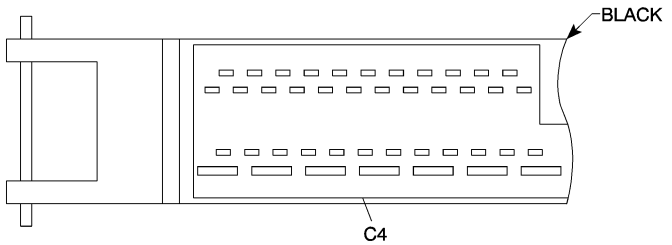

BODY CONTROL MODULE

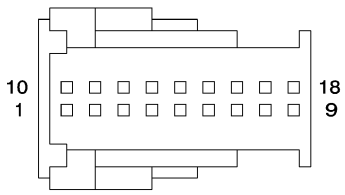

SENTRY KEY REMOTE ENTRY MODULE C1

8115c9c6

DOOR UNLOCK SWITCH SENSE CIRCUIT — CONTINUED

When Monitored and Set Condition

- When Monitored: Continuous.
- Set Condition: The Sentry Key Remote Entry Module (SKREEM) reports a short to power, ground, or an open circuit failure on the Door Unlock Switch Sense circuit.

POSSIBLE CAUSES
DOOR UNLOCK SWITCH SENSE CIRCUIT SHORTED TO VOLTAGE
DOOR UNLOCK SWITCH SENSE CIRCUIT SHORTED TO GROUND
DOOR UNLOCK SWITCH SENSE CIRCUIT OPEN
SENTRY KEY REMOTE ENTRY MODULE

For a complete Vehicle Theft Security System Circuit Diagram, **Refer to Page 8Q-44**.

Diagnostic Test

1. MEASURE THE RESISTANCE OF THE DOOR UNLOCK SWITCH SENSE CIRCUIT

Turn the ignition off.

Disconnect the BCM harness connector.

Disconnect the SKREEM harness connector.

Note: Check connectors - Clean/repair as necessary.

Measure the resistance of the Door Unlock Switch Sense circuit from the BCM harness connector to the SKREEM harness connector.

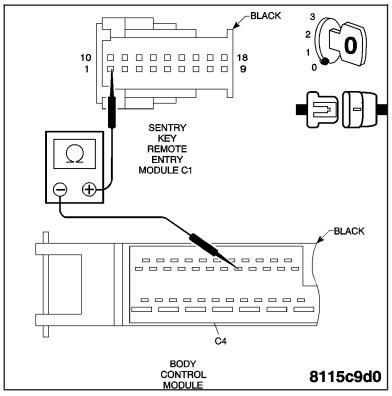

Is the resistance below 5.0 ohms?

Yes >> Go to 2

No >> Repair the Door Unlock Switch Sense circuit for an open.
Perform VTSS VERIFICATION TEST.

2. MEASURE THE VOLTAGE OF THE DOOR UNLOCK SWITCH SENSE CIRCUIT

Turn the ignition on.

Measure the voltage of the Door Unlock Switch Sense circuit at the SKREEM harness connector.

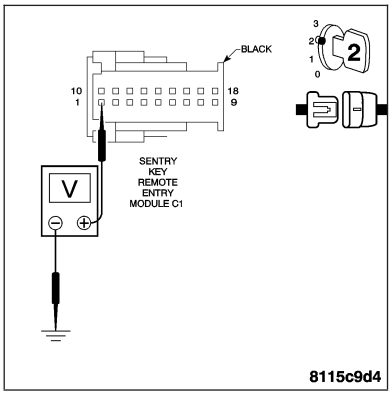

Is voltage present?

Yes >> Repair the Door Unlock Switch Sense circuit for a short to voltage.
Perform VTSS VERIFICATION TEST.

No >> Go to 3

DOOR UNLOCK SWITCH SENSE CIRCUIT — CONTINUED

3. MEASURE THE RESISTANCE OF THE DOOR UNLOCK SWITCH SENSE CIRCUIT

Turn the ignition off.

Measure the resistance between ground and the Door Unlock Switch Sense circuit at the SKREEM harness connector.

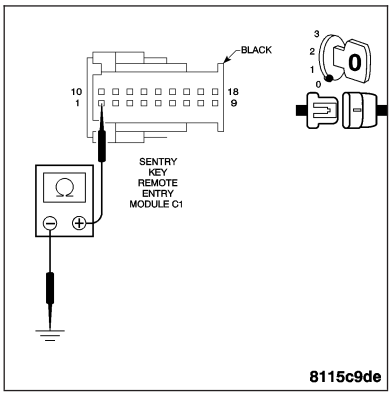

Is the resistance below 10K ohms?

Yes >> Repair the Door Unlock Switch Sense circuit for a short to ground.
Perform VTSS VERIFICATION TEST.

No >> Replace the Sentry Key Remote Entry Module. **Refer to Page 8Q-48**.
Perform VTSS VERIFICATION TEST.

ANTI-THEFT TOW SENSOR SIGNAL CIRCUIT

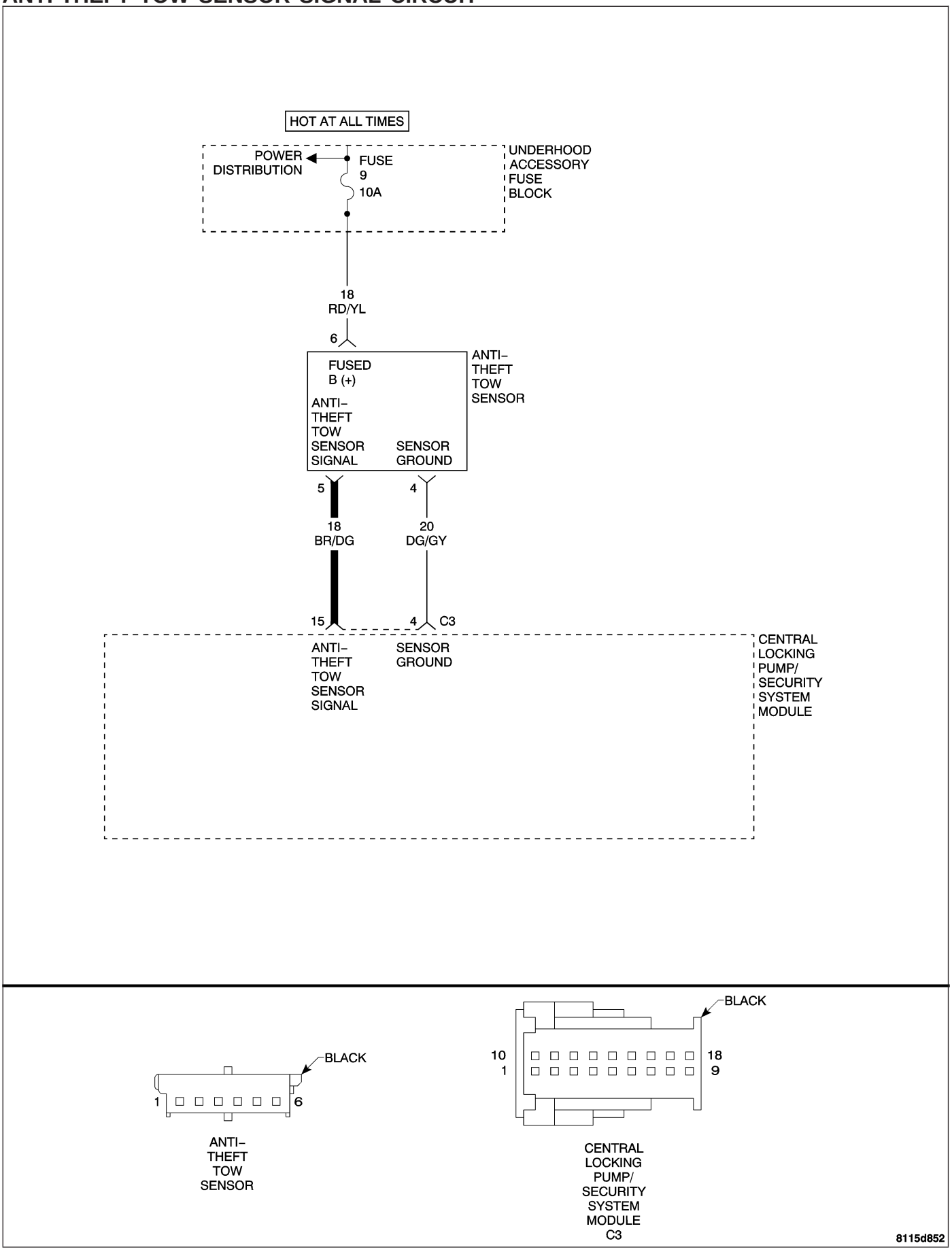

ANTI-THEFT TOW SENSOR SIGNAL CIRCUIT — CONTINUED

When Monitored and Set Condition

- When Monitored: Continuous.
- Set Condition: The Central Locking Pump/Security System Module (CLP/SSM) reports a short to power, ground, or an open circuit failure on the Anti-Theft Tow Sensor Signal circuit.

POSSIBLE CAUSES
ANTI-THEFT TOW SENSOR SIGNAL CIRCUIT SHORTED TO VOLTAGE
ANTI-THEFT TOW SENSOR SIGNAL CIRCUIT SHORTED TO GROUND
ANTI-THEFT TOW SENSOR SIGNAL CIRCUIT OPEN
ANTI-THEFT TOW SENSOR

For a complete Vehicle Theft Security System circuit diagram, **Refer to Page 8Q-44**.

Diagnostic Test

1. MEASURE THE RESISTANCE OF THE ANTI-THEFT TOW SENSOR SIGNAL CIRCUIT

Turn the ignition off.

Disconnect the CLP/SSM harness connector.

Disconnect the Anti-Theft Tow Sensor harness connector.

Note: Check connectors - Clean/repair as necessary.

Measure the resistance of the Anti-Theft Tow Sensor Signal circuit from the CLP/SSM harness connector to the Anti-Theft Tow Sensor harness connector.

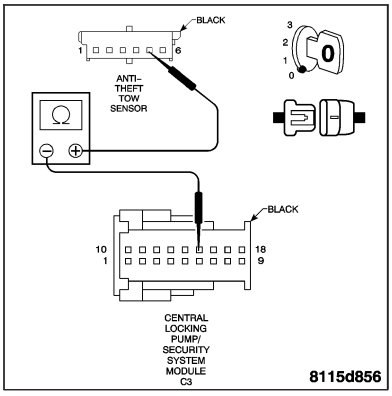

Is the resistance below 5.0 ohms?

Yes >> Go to 2

No >> Repair the Anti-Theft Tow Sensor Signal circuit for an open.
Perform VTSS VERIFICATION TEST.

2. MEASURE THE VOLTAGE OF THE ANTI-THEFT TOW SENSOR SIGNAL CIRCUIT

Turn the ignition on.

Measure the voltage of the Anti-Theft Tow Sensor Signal circuit at the Anti-Theft Tow Sensor harness connector.

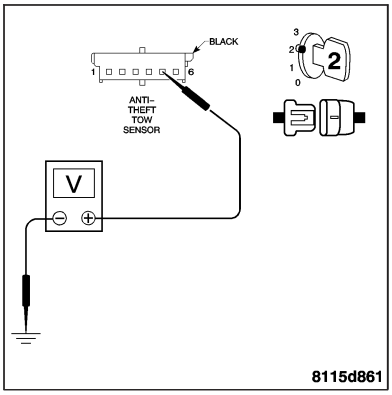

Is voltage present?

Yes >> Repair the Anti-Theft Tow Sensor Signal circuit for a short to voltage.
Perform VTSS VERIFICATION TEST.

No >> Go to 3

ANTI-THEFT TOW SENSOR SIGNAL CIRCUIT — CONTINUED

3. MEASURE THE RESISTANCE OF THE ANTI-THEFT TOW SENSOR SIGNAL CIRCUIT

Turn the ignition off.

Measure the resistance between ground and the Anti-Theft Tow Sensor Signal circuit at the Anti-Theft Tow Sensor harness connector.

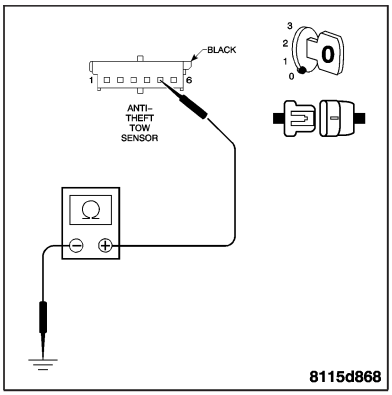

Is the resistance below 10K ohms?

Yes >> Repair the Anti-Theft Tow Sensor Signal circuit for a short to ground.
Perform VTSS VERIFICATION TEST.

No >> Replace the Anti-Theft Tow Sensor. **Refer to Page 8Q-57**.
Perform VTSS VERIFICATION TEST.

NO CAN COMMUNICATIONS WITH PCM

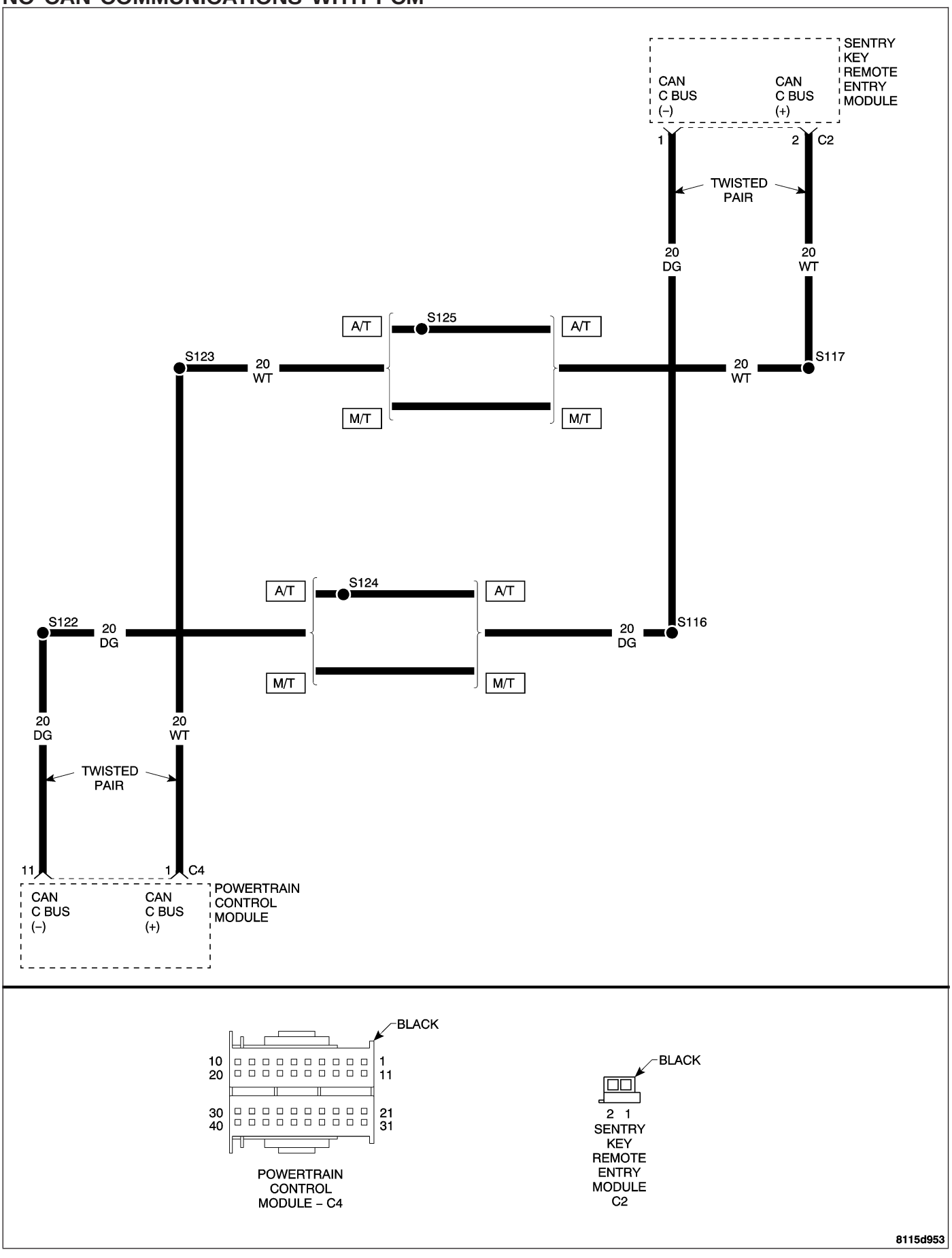

NO CAN COMMUNICATIONS WITH PCM — CONTINUED

When Monitored and Set Condition

- When Monitored: With the ignition on.
- Set Condition: CAN Bus communication failure between the Sentry Key Remote Entry Module (SKREEM) and the Powertrain Control Module (PCM).

POSSIBLE CAUSES
CAN BUS CIRCUIT(S) OPEN
SENTRY KEY REMOTE ENTRY MODULE

For a complete Vehicle Theft Security System Circuit Diagram, **Refer to Page 8Q-44**.

Diagnostic Test

1. MEASURE THE RESISTANCE OF THE CAN C BUS (+) CIRCUIT

Turn the ignition off.

Disconnect the SKREEM harness connector.

Disconnect the PCM harness connector.

Measure the resistance of the CAN C Bus (+) circuit from the SKREEM harness connector to the PCM harness connector.

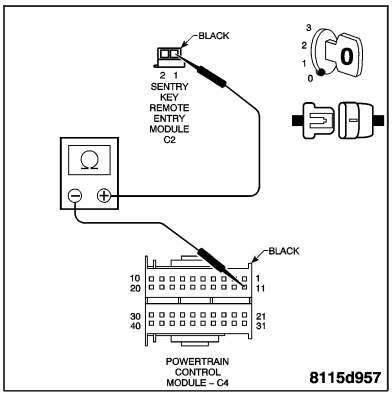

Is the resistance below 1.0 ohm?

Yes >> Go to 2

No >> Repair the CAN C Bus (+) circuit for an open.
Perform VTSS VERIFICATION TEST.

2. MEASURE THE RESISTANCE OF THE CAN C BUS (-) CIRCUIT

Measure the resistance of the CAN C Bus (-) circuit from the SKREEM harness connector and the PCM harness connector.

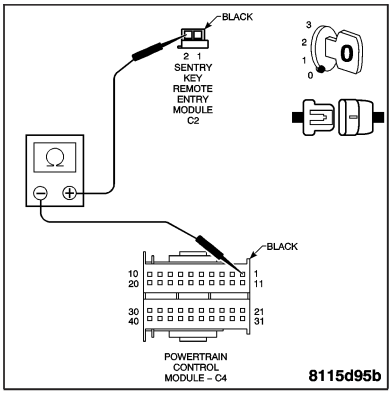

Is the resistance below 1.0 ohm?

Yes >> Replace the Sentry Key Remote Entry Module. **Refer to Page 8Q-48**.
Perform VTSS VERIFICATION TEST.

No >> Repair the CAN C Bus (-) circuit for an open.
Perform VTSS VERIFICATION TEST.

SIREN SIGNAL OUTPUT CIRCUIT

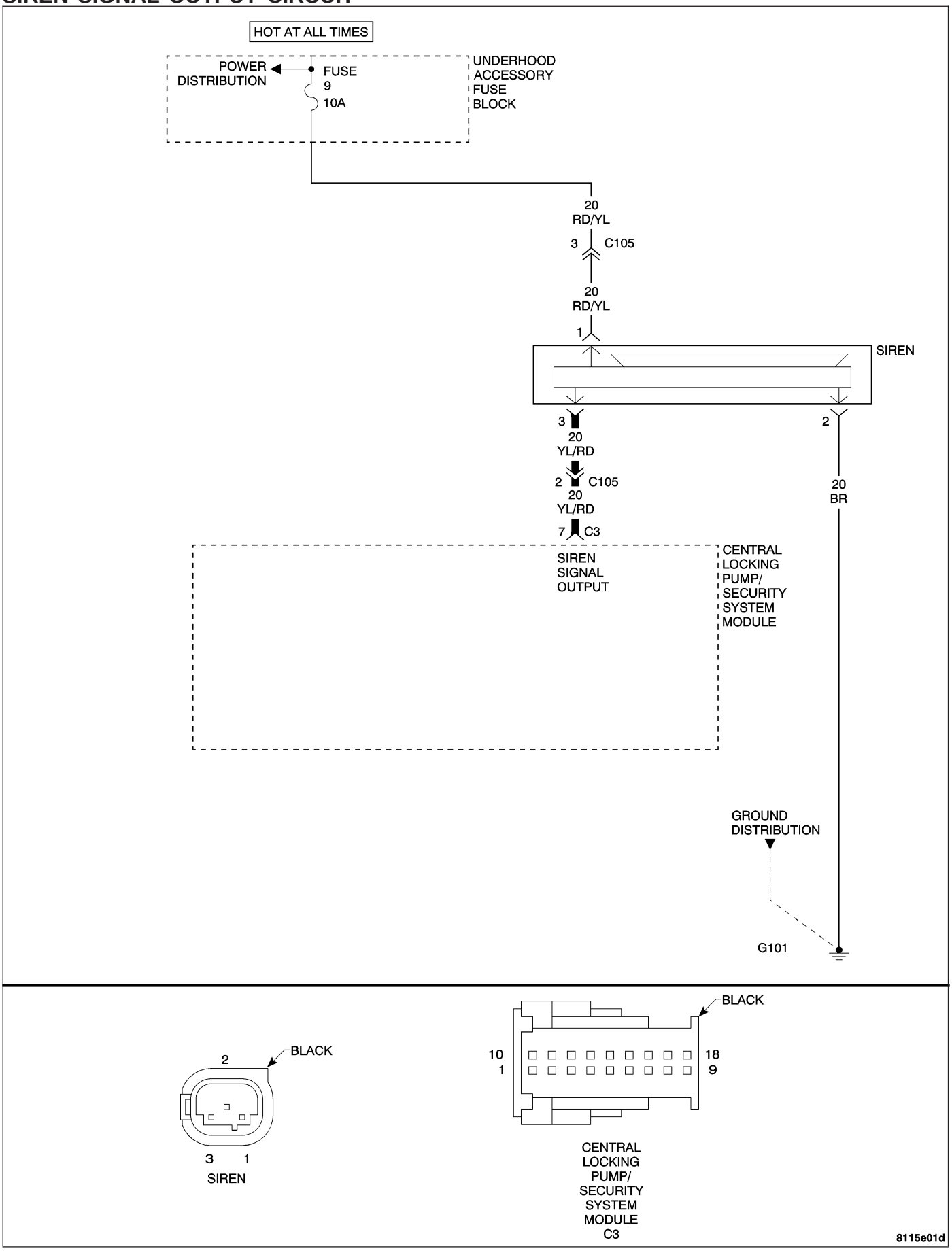

SIREN SIGNAL OUTPUT CIRCUIT — CONTINUED

When Monitored and Set Condition

- When Monitored: Continuous.
- Set Condition: The Central Locking Pump/Security System Module (CLP/SSM) reports a short to power, ground, or an open circuit failure on the Siren Signal Output circuit.

POSSIBLE CAUSES
SIREN SIGNAL OUTPUT CIRCUIT SHORTED TO VOLTAGE
SIREN SIGNAL OUTPUT CIRCUIT SHORTED TO GROUND
SIREN SIGNAL OUTPUT CIRCUIT OPEN
SIREN INTERNAL FAILURE

For a complete Vehicle Theft Security System Circuit Diagram, **Refer to Page 8Q-44**.

Diagnostic Test

1. MEASURE THE RESISTANCE OF THE SIREN SIGNAL OUTPUT CIRCUIT

Turn the ignition off.

Disconnect the CLP/SSM harness connector.

Disconnect the Siren harness connector.

Note: Check connectors - Clean/repair as necessary.

Measure the resistance of the Siren Signal Output circuit from the CLP/SSM harness connector to the Siren harness connector.

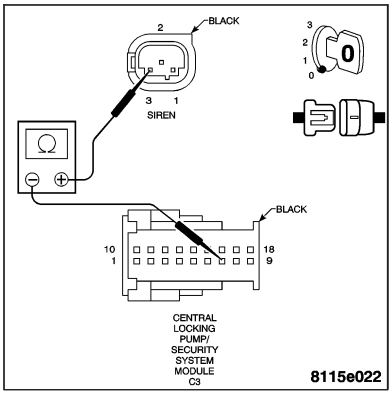

Is the resistance below 5.0 ohms?

Yes >> Go to 2

No >> Repair the Siren Signal Output circuit for an open. Perform VTSS VERIFICATION TEST.

2. MEASURE THE VOLTAGE OF THE SIREN SIGNAL OUTPUT CIRCUIT

Turn the ignition on.

Measure the voltage of the Siren Signal Output circuit at the Siren harness connector.

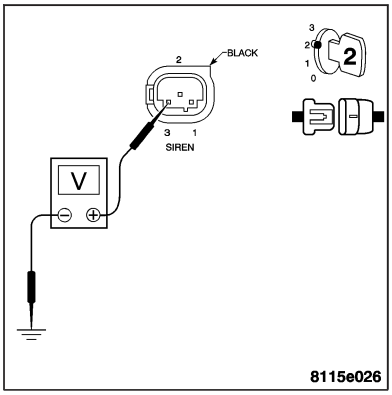

Is voltage present?

Yes >> Repair the Siren Signal Output circuit for a short to voltage. Perform VTSS VERIFICATION TEST.

No >> Go to 3

SIREN SIGNAL OUTPUT CIRCUIT — CONTINUED

3. MEASURE THE RESISTANCE OF THE SIREN SIGNAL OUTPUT CIRCUIT

Turn the ignition off.

Measure the resistance between ground and the Siren Signal Output circuit at the Siren harness connector.

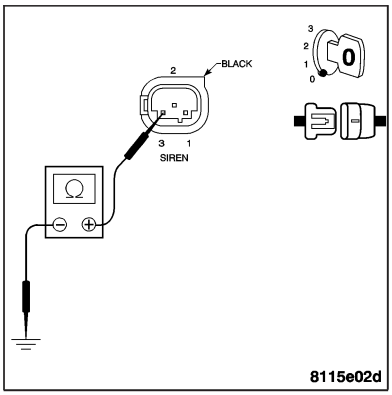

Is the resistance below 10K ohms?

Yes >> Repair the Siren Signal Output circuit for a short to ground.
Perform VTSS VERIFICATION TEST.

No >> Replace the Siren.
Perform VTSS VERIFICATION TEST.

CENTRAL LOCKING PUMP/SECURITY SYSTEM MODULE INTERNAL FAILURE

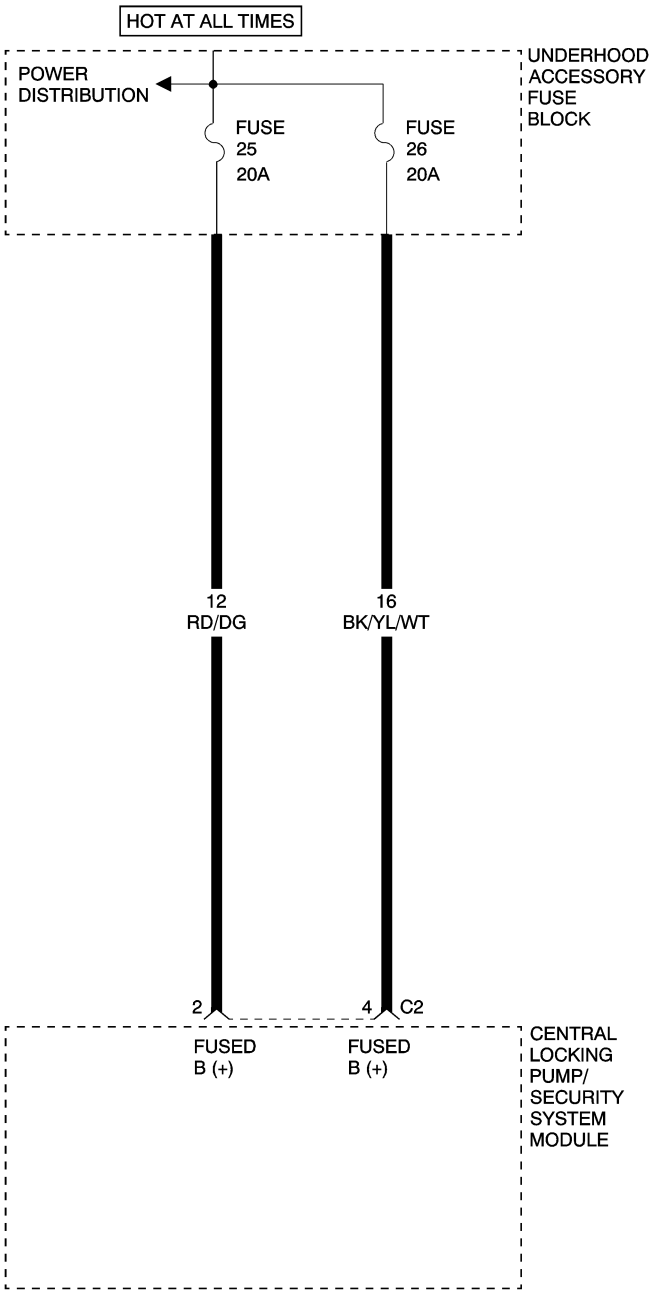

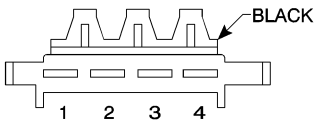

CENTRAL LOCKING PUMP/ SECURITY SYSTEM MODULE C2

8112fbac

CENTRAL LOCKING PUMP/SECURITY SYSTEM MODULE INTERNAL FAILURE — CONTINUED

When Monitored and Set Condition

- When Monitored: Continuous.
- Set Condition: If the Central Locking Pump/Security System Module (CLP/SSM) detects an internal malfunction, the DTC is set.

POSSIBLE CAUSES
NO POWER TO CENTRAL LOCKING PUMP/SECURITY SYSTEM MODULE
CENTRAL LOCKING PUMP/SECURITY SYSTEM MODULE

For a complete Vehicle Theft Security System Circuit Diagram, **Refer to Page 8Q-44**.

Diagnostic Test

1. MEASURE THE VOLTAGE OF THE CLP/SSM POWER CIRCUIT

Turn the ignition off.

Disconnect the CLP/SSM harness connector.

Measure the voltage of the Fused B(+) circuit (cavity 2) at the CLP/SSM C2 harness connector.

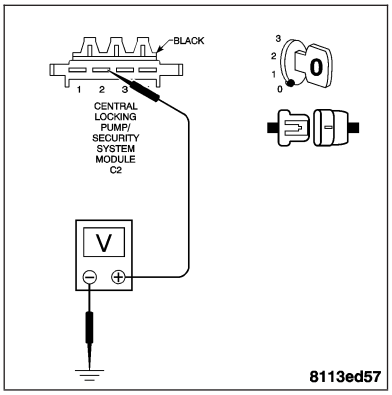

Is the voltage between 12 and 16 volts?

Yes >> Go to 2

No >> System voltage must be between 12 and 16 volts. Repair the voltage concern as necessary.
Perform VTSS VERIFICATION TEST.

2. MEASURE THE VOLTAGE OF THE CLP/SSM POWER CIRCUIT

Measure the voltage of the Fused B(+) circuit (cavity 4) at the CLP/SSM C2 harness connector.

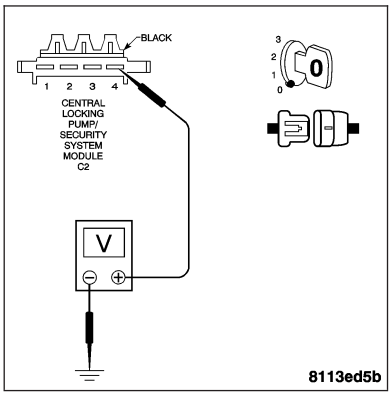

Is the voltage between 12 and 16 volts?

Yes >> Replace the Central Locking Pump/Security System Module. **Refer to Page 8Q-48**.
Perform VTSS VERIFICATION TEST.

No >> System voltage must be between 12 and 16 volts. Repair the voltage concern as necessary.
Perform VTSS VERIFICATION TEST.

*ALARM TRIPS ON ITS OWN

POSSIBLE CAUSES
FALSE GLOVE BOX SWITCH SIGNAL
FALSE LIFTGATE LOCK SWITCH SIGNAL
FALSE HOOD AJAR SWITCH SIGNAL
FALSE LEFT DOOR AJAR SWITCH SIGNAL
FALSE RIGHT DOOR AJAR SWITCH SIGNAL
FALSE IGNITION SWITCH SIGNAL
FALSE BRAKE LAMP SWITCH SIGNAL
FALSE ANTI-THEFT TOW SENSOR SIGNAL
INTERMITTENT CONDITION

For a complete Vehicle Theft Security System Circuit Diagram, **Refer to Page 8Q-44**.

Diagnostic Test

1. MONITOR THE VEHICLE THEFT SECURITY SYSTEM WITH THE DRB III®

Note: If any vehicle theft DTCs are set, diagnose them first before continuing.
With the DRB III® in Inputs/Outputs, read the Central Locking Pump/Security System Module last cause state.

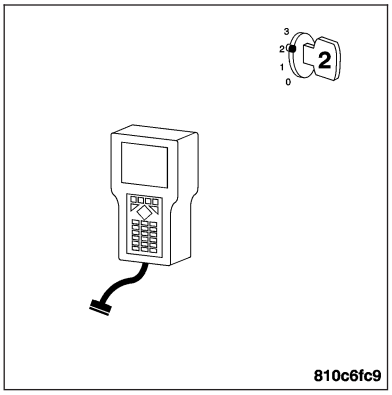

Were there any causes displayed?

Yes >> Check for a possible intermittent condition with the circuit indicated by the DRB III®.
Perform VTSS VERIFICATION TEST.

No >> The condition that caused the alarm is not present at this time. Refer to any Technical Service Bulletins (TSB) that may apply. Visually inspect related wiring harnesses and connectors. Look for damaged wires or connectors.
Perform VTSS VERIFICATION TEST.

VTSS VERIFICATION TEST

1.

Turn the ignition off.

Disconnect all jumper wires and reconnect all previously disconnected components and connectors.

Ensure all doors, liftgate, and hood are closed.

Open the driver door.

Remove the ignition key (but keep in hand).

Lock the doors with the RKE transmitter.

Close the driver door.

Observe the Tow-Away Alarm Switch for flashing.

If the Tow-Away Alarm Switch fails to flash, there is a problem with the system. Select the appropriate VTSS symptom to troubleshoot the failure.

With the DRB III®, erase all Diagnostic Trouble Codes (DTCs) from ALL modules. Operate all functions of the system that caused the original complaint.

Turn the ignition off and wait 5 seconds. Turn the ignition on and using the DRB III®, read DTCs from ALL modules.

Are any DTCs present or is the original complaint still present?

Are any DTCs present?

YES >> Repair is not complete, refer to appropriate symptom.

NO >> Repair is complete.

SENTRY KEY REMOTE ENTRY MODULE INTERNAL FAILURE

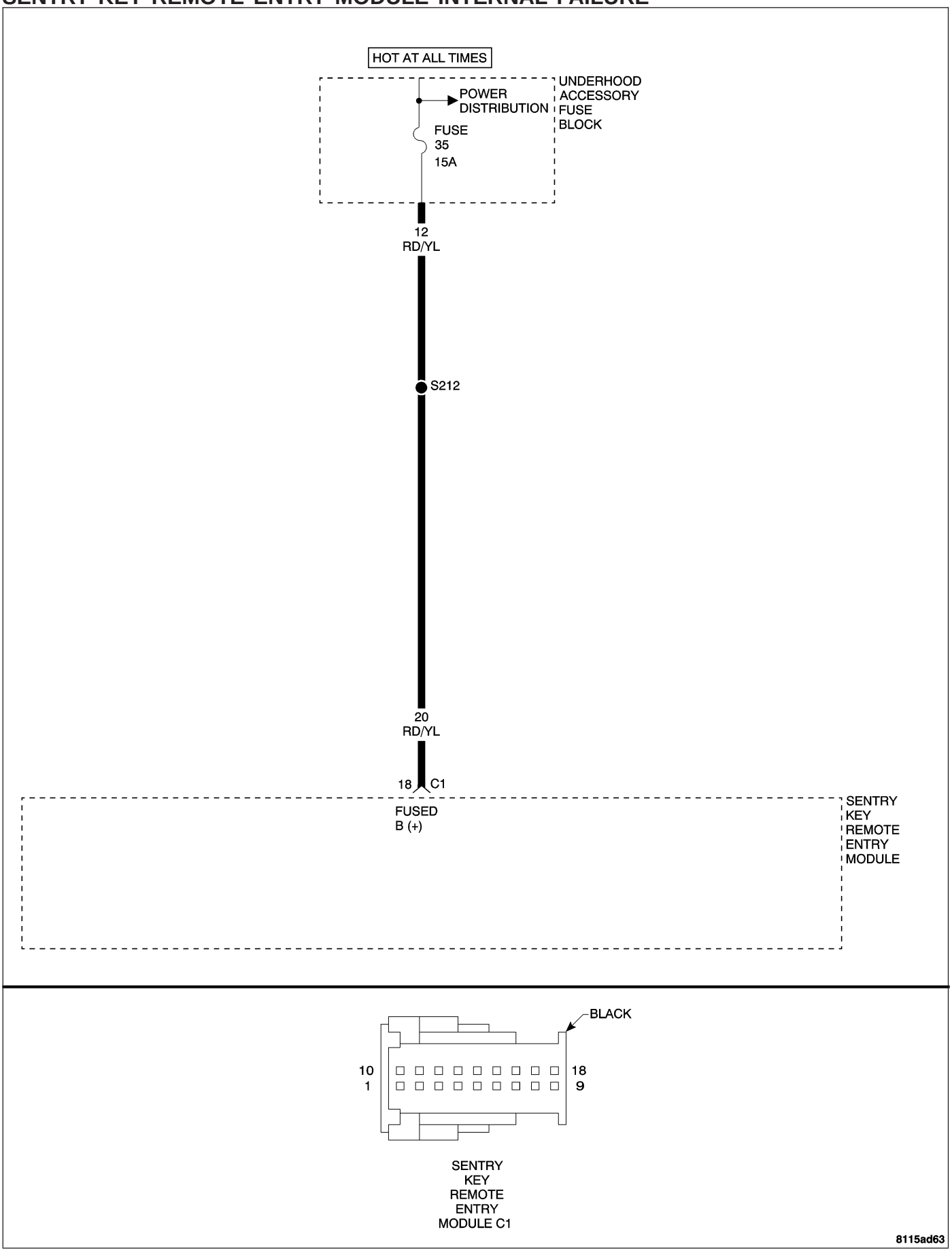

SENTRY KEY REMOTE ENTRY MODULE INTERNAL FAILURE — CONTINUED

When Monitored and Set Condition

- When Monitored: Continuous.
- Set Condition: If the Sentry Key Remote Entry Module (SKREEM) detects an internal malfunction, the DTC is set.

POSSIBLE CAUSES
NO POWER TO SENTRY KEY REMOTE ENTRY MODULE
SENTRY KEY REMOTE ENTRY MODULE

For a complete Sentry Key Remote Entry (SKREEM) Circuit Diagram, **Refer to Page 8Q-44**.

Diagnostic Test

1. MEASURE THE VOLTAGE OF THE SKREEM POWER CIRCUIT

Turn the ignition off.

Disconnect the SKREEM harness connector.

Note: Check connectors - Clean/repair as necessary.

Measure the voltage of the Fused B(+) circuit (cavity 18) at the SKREEM C1 harness connector.

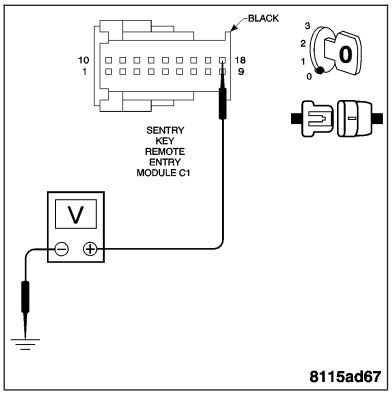

Is the voltage between 12 and 16 volts?

Yes >> Replace the Sentry Key Remote Entry Module.
Perform SENTRY KEY VERIFICATION TEST.

No >> System voltage must be between 12 and 16 volts.
Repair the voltage concern as necessary.
Perform SENTRY KEY VERIFICATION TEST.

INVALID TRANSMITTER

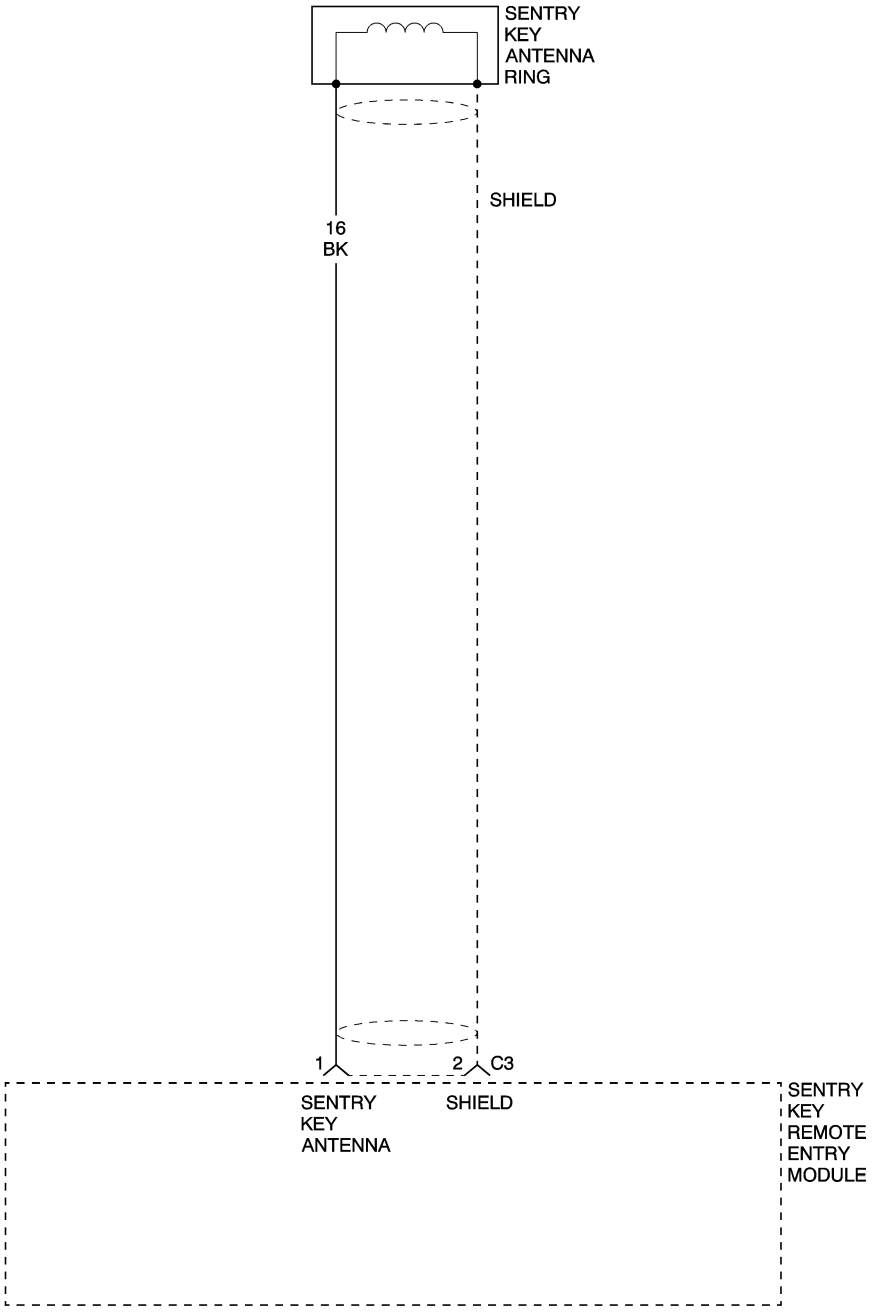

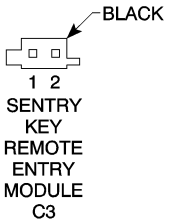

8115af88

INVALID TRANSMITTER — CONTINUED

When Monitored and Set Condition

- When Monitored: Ignition on.
- Set Condition: The Sentry Key Remote Entry Module (SKREEM) detects an ignition key micro-chip malfunction.

POSSIBLE CAUSES
DEFECTIVE IGNITION KEY MICRO-CHIP

For a complete Sentry Key Remote Entry (SKREEM) Circuit Diagram, **Refer to Page 8Q-44**.

Diagnostic Test

1. WITH THE DRB III®, READ DTCs

Turn the ignition on.
With the DRB III®, record and erase DTCs.
Turn the ignition off.
Turn the ignition on.
With the DRB III®, read DTCs.

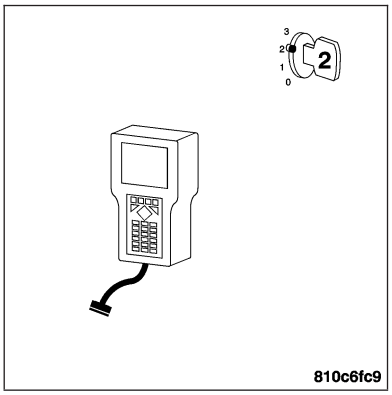

Does the DRB III® display an Invalid Transmitter DTC?

Yes >> Replace the Ignition Key.
Perform SENTRY KEY VERIFICATION TEST.

No >> The condition that caused this DTC to set is currently not present. Inspect the related wiring harness for a possible intermittent condition.
Perform SENTRY KEY VERIFICATION TEST.

SENTRY KEY ANTENNA CIRCUIT

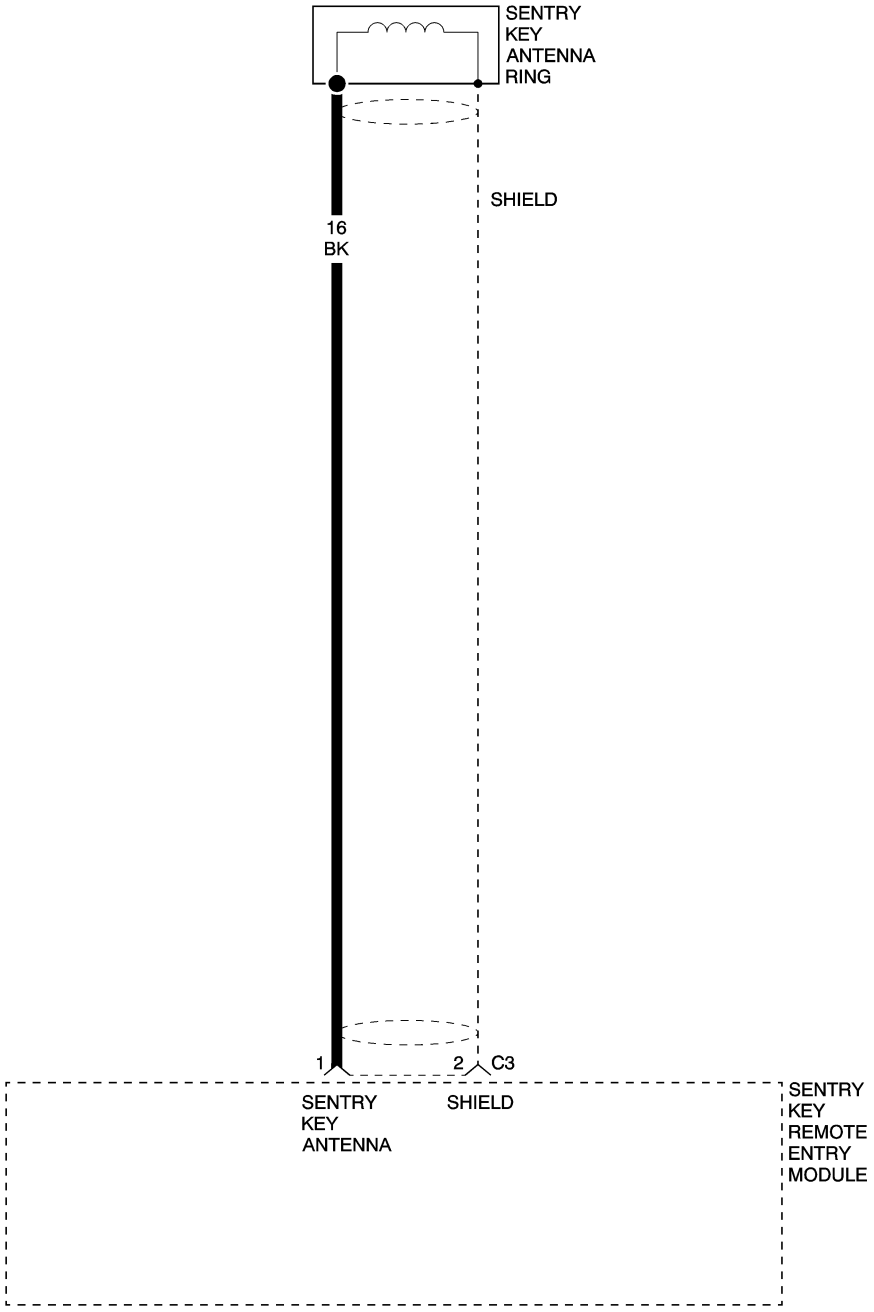

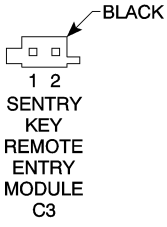

8115afc6

SENTRY KEY ANTENNA CIRCUIT — CONTINUED

When Monitored and Set Condition

- When Monitored: Ignition on.
- Set Condition: The Sentry Key Remote Entry Module (SKREEM) detects a Sentry Key Antenna circuit malfunction.

POSSIBLE CAUSES
SENTRY KEY ANTENNA RING
SENTRY KEY REMOTE ENTRY MODULE

For a complete Sentry Key Remote Entry (SKREEM) Circuit Diagram, **Refer to Page 8Q-44**.

Diagnostic Test

1. MEASURE THE RESISTANCE OF THE SENTRY KEY ANTENNA CIRCUIT

Disconnect the Sentry Key Antenna Ring connector from the SKREEM.

Turn the ignition on.

Measure the resistance of the Sentry Key Antenna circuit from cavity 1 to cavity 2 of the connector.

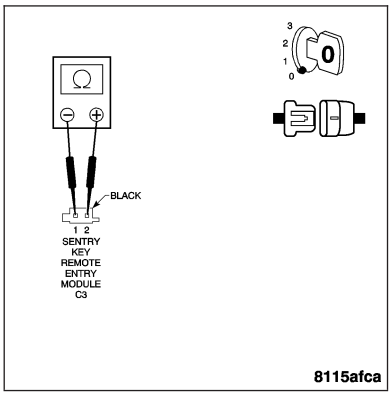

Is the resistance between 4 and 6 ohms?

Yes >> Replace the Sentry Key Remote Entry Module.
Perform SENTRY KEY VERIFICATION TEST.

No >> Replace the Sentry Key Antenna Ring assembly.
Perform SENTRY KEY VERIFICATION TEST.

REMOTE KEYLESS ENTRY RELAY CONTROL CIRCUIT

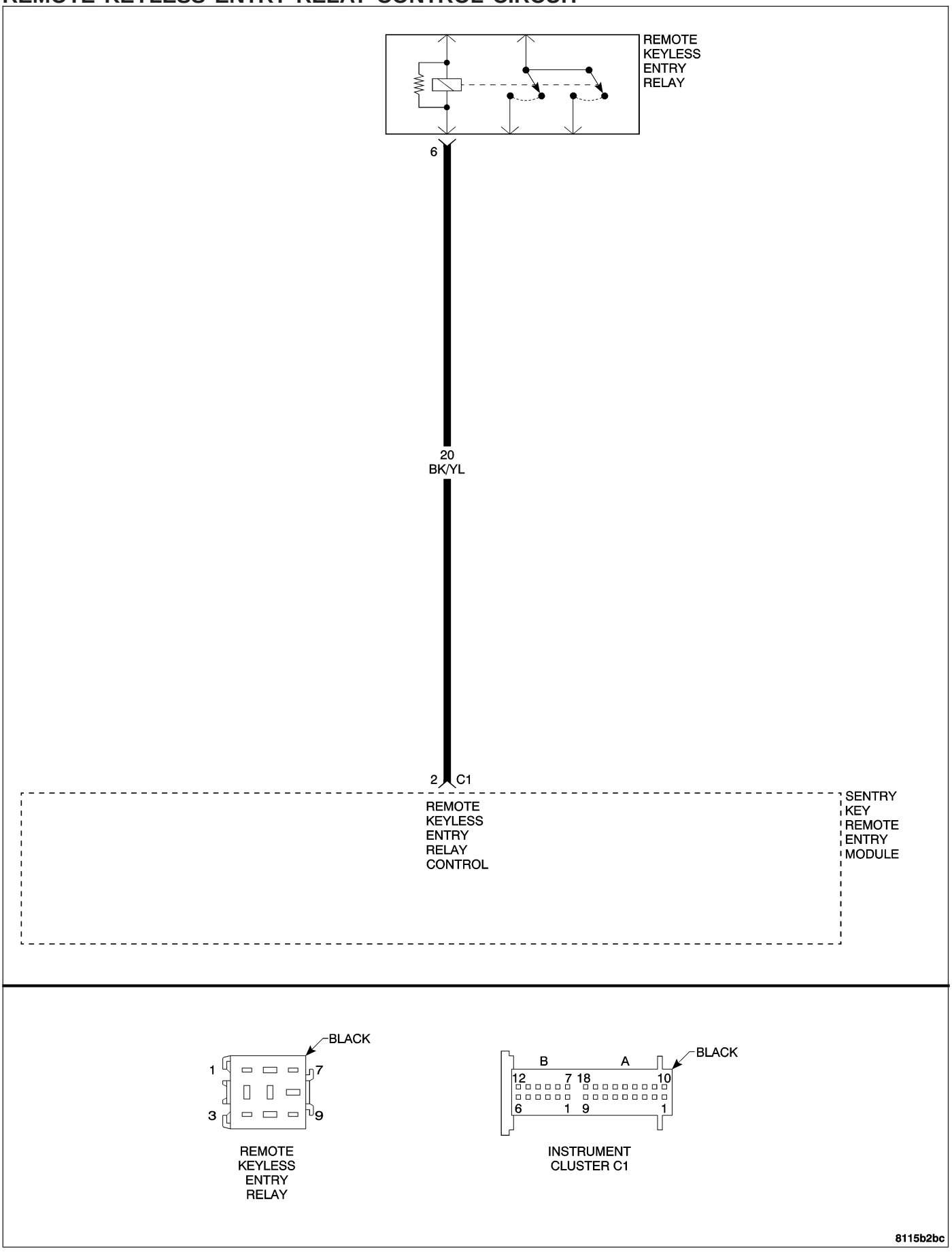

REMOTE KEYLESS ENTRY RELAY CONTROL CIRCUIT — CONTINUED

When Monitored and Set Condition

- When Monitored: Continuous.
- Set Condition: The Sentry Key Remote Entry Module (SKREEM) reports a short to power, ground, or an open circuit failure on the Remote Keyless Entry Relay Control circuit.

POSSIBLE CAUSES
REMOTE KEYLESS ENTRY RELAY CONTROL CIRCUIT SHORTED TO VOLTAGE
REMOTE KEYLESS ENTRY RELAY CONTROL CIRCUIT SHORTED TO GROUND
REMOTE KEYLESS ENTRY RELAY CONTROL CIRCUIT OPEN
REMOTE KEYLESS ENTRY RELAY

For a complete Sentry Key Remote Entry (SKREEM) Circuit Diagram, **Refer to Page 8Q-44**.

Diagnostic Test

1. MEASURE THE RESISTANCE OF THE REMOTE KEYLESS ENTRY RELAY CONTROL CIRCUIT

Turn the ignition off.

Disconnect the SKREEM harness connector.

Remove the Remote Keyless Entry Relay.

Note: Check connectors - Clean/repair as necessary.

Measure the resistance of the Remote Keyless Entry Relay Control circuit from the SKREEM harness connector to the Remote Keyless Entry Relay harness connector.

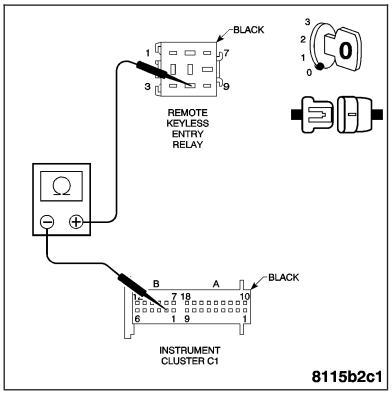

Is the resistance below 5.0 ohms?

Yes >> Go to 2

No >> Repair the Remote Keyless Entry Relay Control circuit for an open.
Perform SENTRY KEY VERIFICATION TEST.

2. MEASURE THE VOLTAGE OF THE REMOTE KEYLESS ENTRY RELAY CONTROL CIRCUIT

Turn the ignition on.

Measure the voltage of the Remote Keyless Entry Relay Control circuit at the Remote Keyless Entry Relay harness connector.

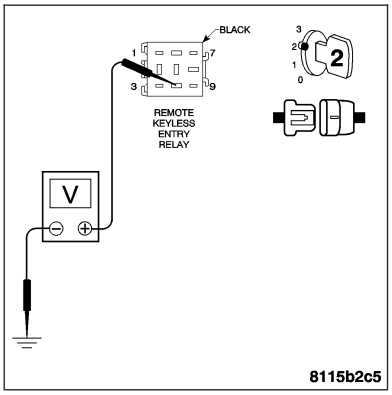

Is voltage present?

Yes >> Repair the Remote Keyless Entry Relay Control circuit for a short to voltage.
Perform SENTRY KEY VERIFICATION TEST.

No >> Go to 3

REMOTE KEYLESS ENTRY RELAY CONTROL CIRCUIT — CONTINUED

3. MEASURE THE RESISTANCE OF THE REMOTE KEYLESS ENTRY RELAY CONTROL CIRCUIT

Turn the ignition off.

Measure the resistance between ground and the Remote Keyless Entry Relay Control circuit at the Remote Keyless Entry Relay harness connector.

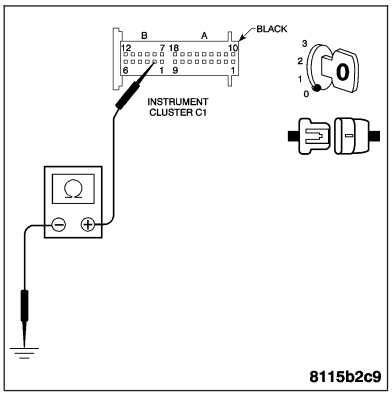

Is the resistance below 10K ohms?

Yes >> Repair the Remote Keyless Entry Relay Control circuit for a short to ground.
Perform SENTRY KEY VERIFICATION TEST.

No >> Replace the Remote Keyless Entry Relay.
Perform SENTRY KEY VERIFICATION TEST.

SENTRY KEY VERIFICATION TEST

1.

Turn the ignition off.

Disconnect all jumper wires and reconnect all previously disconnected components and connectors.

Note: If the SKREEM or the PCM was replaced, refer to the service information for proper programming procedures.

With the DRB III®, erase all Diagnostic Trouble Codes (DTCs) from ALL modules. Operate all functions of the system that caused the original complaint.

Perform 5 ignition key cycles leaving the key on for at least 90 seconds per cycle.

Turn the ignition off and wait 5 seconds. Turn the ignition on and using the DRB III®, read DTCs from ALL modules.

Are any DTCs present or is the original complaint still present?

Are any DTCs present?

YES >> Repair is not complete, refer to appropriate symptom.

NO >> Repair is complete.

SCHEMATICS AND DIAGRAMS

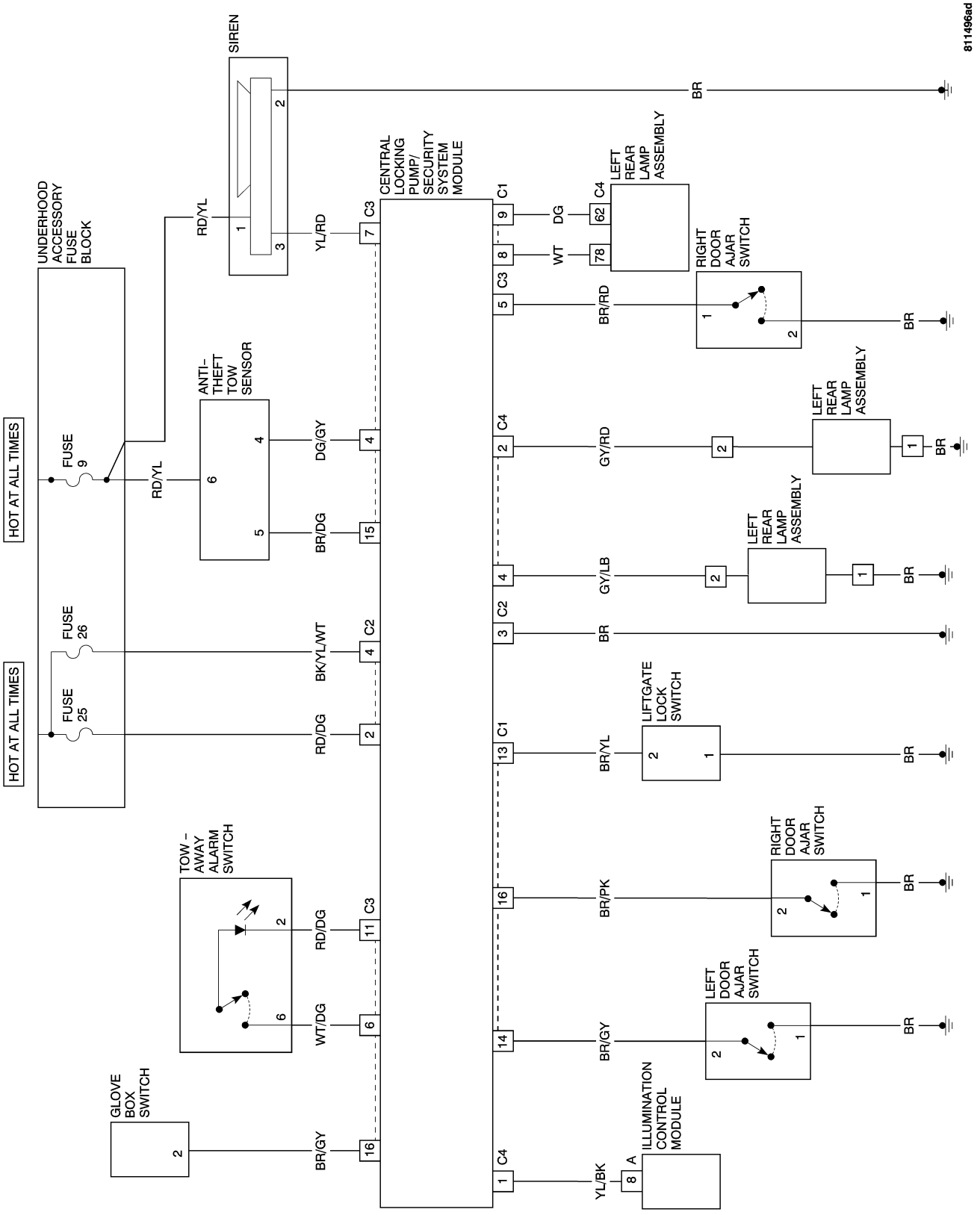

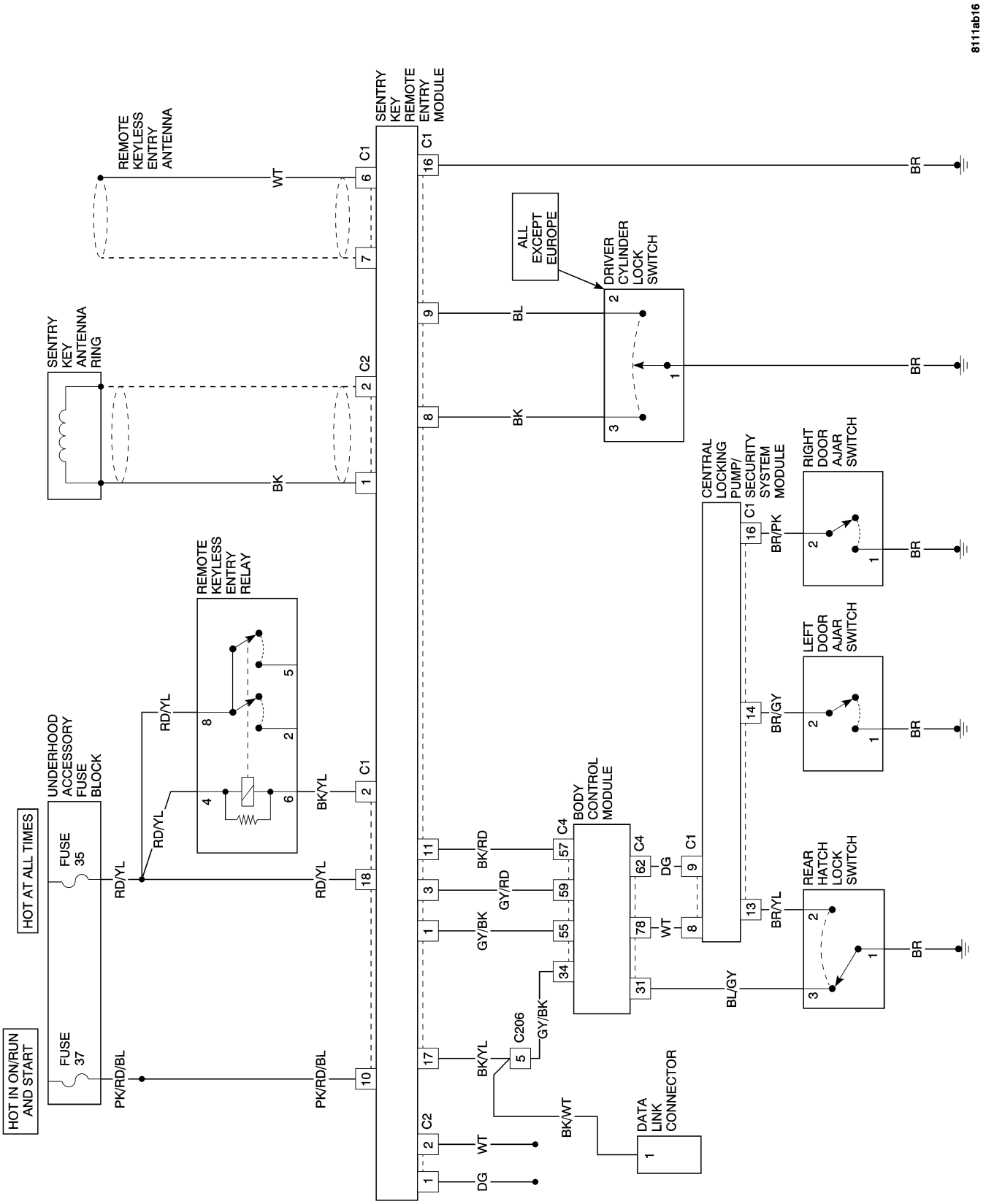

SENTRY KEY REMOTE ENTRY MODULE CIRCUIT DIAGRAM

VEHICLE THEFT SECURITY - SERVICE INFORMATION

TABLE OF CONTENTS

page

VEHICLE THEFT SECURITY - SERVICE INFORMATION
DESCRIPTION 46
OPERATION 47
SECURITY SYSTEM MODULE
REMOVAL 48
INSTALLATION 49
HOOD AJAR SWITCH
REMOVAL 50
INSTALLATION 50
SIREN
REMOVAL 50
INSTALLATION 51
SENTRY KEY REMOTE ENTRY MODULE
DESCRIPTION 52
OPERATION 52
REMOVAL
REMOVAL - SENTRY KEY REMOTE ENTRY MODULE 53
REMOVAL - SENTRY KEY ANTENNA RING . . 54
INSTALLATION
INSTALLATION - SENTRY KEY REMOTE ENTRY MODULE 55
INSTALLATION - SENTRY KEY ANTENNA RING 55
DOOR CYLINDER LOCK SWITCH
REMOVAL 56
INSTALLATION - DRIVER CYLINDER LOCK SWITCH 57
ANTI-THEFT TOW SENSOR
REMOVAL 57
INSTALLATION 58
TOW-AWAY ALARM SWITCH
REMOVAL 59
INSTALLATION 59

VEHICLE THEFT SECURITY - SERVICE INFORMATION

DESCRIPTION

The Central Locking Pump/Security System Module (3) uses a combination of electrical wires (2) and air pressure/vacuum lines (1). The Central Locking Pump/Security System Module is located in the right rear of the luggage compartment underneath the trunk floor covering (4). It is wrapped in a sound deadening material in order to operate quietly without disturbing the vehicle operator.

The Central Locking Pump/Security System Module controls the air and vacuum lines that handle the locking and unlocking of the vehicle doors, the liftgate, and the fuel tank door.

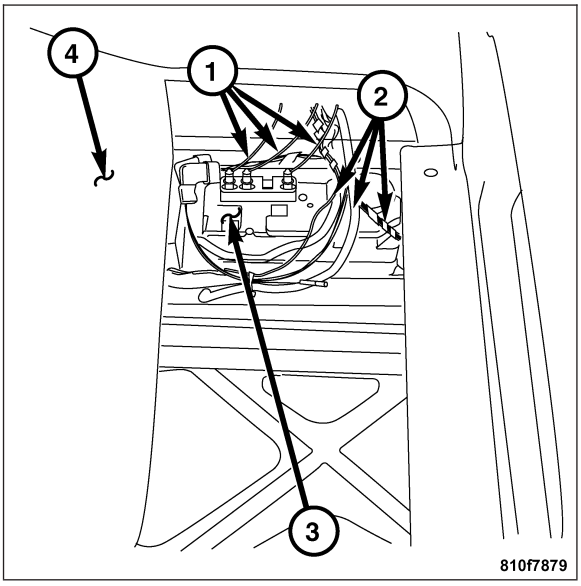

OPERATION

VEHICLE LOCKING/UNLOCKING

To unlock, the Body Control Module is actuated by the SKREEM. The Body Control Module then sends the signal to the Central Locking Pump/Security System Module (CLP/SSM) via the Controller Area Network (CAN) Bus. The CLP/SSM pump motor starts running and supplies air pressure. The door lock actuators are pressurized. When a pressure threshold is reached in the system, the pump is switched off by an internal pressure switch. The pressure in the system is then released by the CLP/SSM and the unlocking operation is completed. The locking procedure is accomplished in a fashion opposite to the unlocking operation. However, the next time the remote control button is pressed, the CLP/SSM is also actuated by connecting it to ground by the second control lead on the SKREEM. The direction of rotation for the CLP/SSM pump motor is reversed, thereby providing the vacuum required to lock. In order to avoid unlocking the vehicle unintentionally, the vehicle is relocked by the CLP/SSM via the SKREEM. Relocking is accomplished after unlocking with the remote control when: a door is not opened within 40 seconds, the key is not inserted into the ignition lock, the interior power door lock switch is not actuated, only the liftgate is opened after unlocking. The CLP/SSM reads the signals (door contacts, trunk lid, interior power door lock switch) and actuates the power door lock actuators. The vehicle security alarm is also activated by the relocking function.

AUTOMATIC LOCKING/UNLOCKING

Upon reaching a speed of 15 km/h (9 MPH), the vehicle doors are locked automatically. The fuel tank flap remains unlocked. If, after automatic locking, the vehicle is unlocked with the interior power door lock switch, this state is maintained until a door is opened or until the ignition is switched off. Automatic locking is accomplished again only upon reaching the specified speed. The logic circuitry for this function is integrated into the CLP/SSM. The automatic locking function can be activated or deactivated with the DRB III®. An alternative is to use the interior power door lock switch with the ignition switched on by pressing and holding the door lock switch for more than 5 seconds in either the lock (auto locking switched on) or unlock (auto locking switched off) position. The alternative of enabling/disabling the auto locking system by using the interior power door lock switch can also be inhibited with the DRB III®.

EMERGENCY UNLOCKING

In the event of a vehicle collision, the doors are unlocked automatically by a crash sensor integrated into the CLP/SSM. The doors are unlocked after a delay time of 8 to 11 seconds. The emergency unlocking function interrupts all functions performed by the CLP/SSM, which are reactivated only after interrupting the ignition. The emergency unlocking function is only active when the vehicle is unlocked from the outside.

VEHICLE RELOCKING

In order to avoid unlocking the vehicle unintentionally, the vehicle is relocked by the CLP/SSM via the SKREEM. Relocking is accomplished after unlocking with the remote control when: a door is not opened within 40 seconds, the key is not inserted into the ignition lock, or the interior power door lock switch is not actuated. The CLP/SSM reads the signals (door contacts, interior power door lock switch) and actuates the power door lock actuators. The vehicle security alarm is also activated by the relocking function.

ANTI-THEFT SYSTEM

Once the anti-theft alarm system is set, the anti-theft alarm can be triggered if:

- The doors, hood, or hatch is opened
- The radio is removed (disconnected electrically)
- The ignition is jumped
- The glove box is opened
- The anti-theft tow sensor is tripped
- The alarm siren is tripped

The inputs ready for triggering an alarm are checked twice per second by the CLP/SSM. If two sequential checks of the same input indicate that the input is not in the non-actuated state, the audible alarm Siren is triggered and the front and rear lamps flash.

SIREN

The vehicle theft system alarm Siren contains a built in rechargeable battery back up and can sound if its electrical circuits are disconnected or if the vehicle battery cables are disconnected. The Siren can also sound if the electrical circuits between it and the CLP/SSM are disconnected. Once triggered, the Siren can only be silenced by unlocking the vehicle with the RF key transmitter or by unlocking the vehicle with the mechanical key.

ANTI-THEFT SWITCH/ANTI-THEFT TOW SENSOR

The Anti-Theft Tow Sensor is an inclination sensor that contains electrodes which are partially immersed in an electrically conductive liquid. If the conductive value between the electrodes changes, the sensor recognizes a change in the inclination of the vehicle. When the vehicle is parked, the value for the vehicle position is stored. If the vehicle is moved with a certain inclination in longitudinal and/or lateral direction for a certain time when the anti-theft alarm system is activated, the Anti-Theft Tow Sensor transmits an alarm signal to the CLP/SSM. In order to allow the vehicle to be towed or transported without sounding the alarm Siren, the Anti-Theft Tow Sensor can be deactivated by pressing the Anti-Theft Switch which is located in the passenger compartment on the center console in front of the shift lever.

SECURITY SYSTEM MODULE

REMOVAL

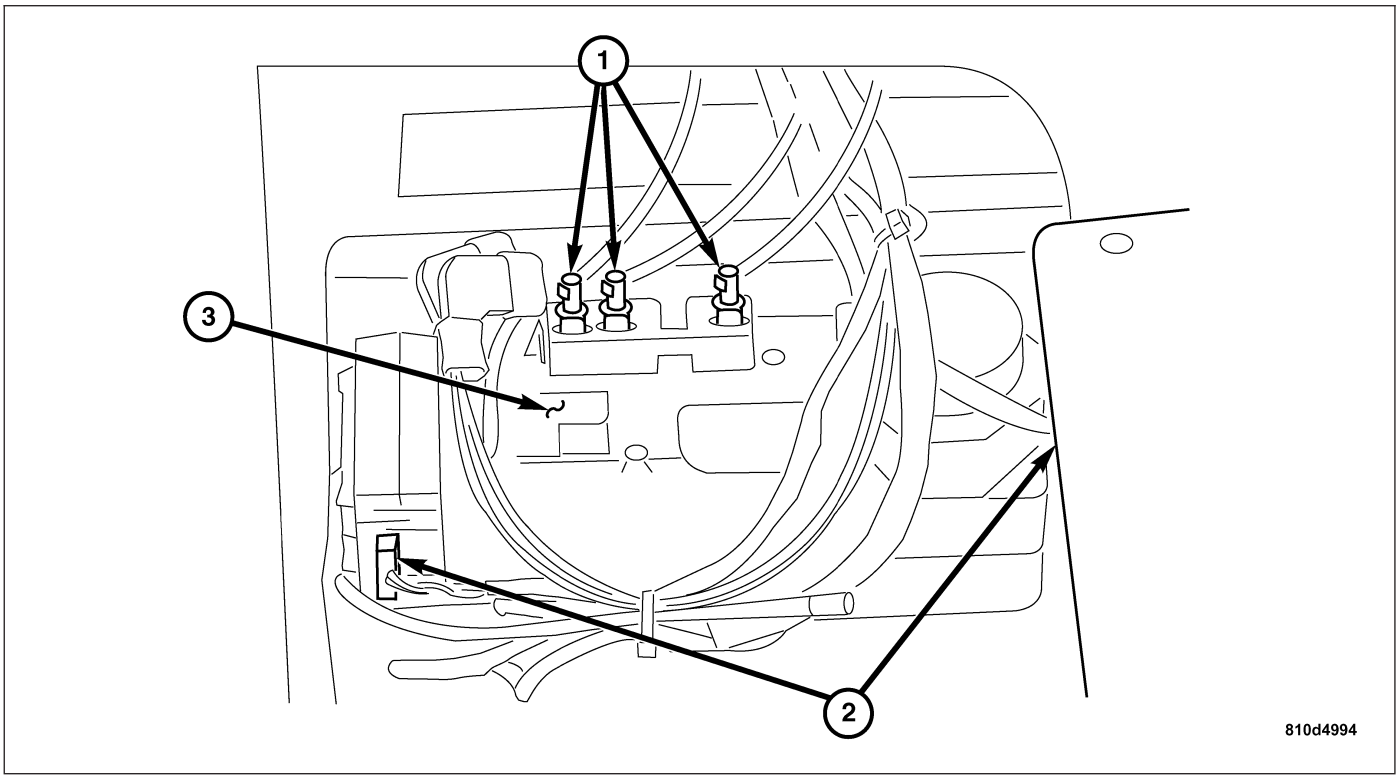

1 - AIR LINES
2 - ELECTRICAL CONNECTORS
3 - CENTRAL LOCKING PUMP/SECURITY SYSTEM MODULE

1. Disconnect the negative battery cable.
2. Remove the trunk floor covering.
3. Remove the vehicle jacking assembly.
4. Remove the sound deadening foam material from the central locking pump/security system module.
5. Disconnect the air lines (1) and the electrical connectors (2) from the central locking pump/security system module (3) and remove the module.

INSTALLATION

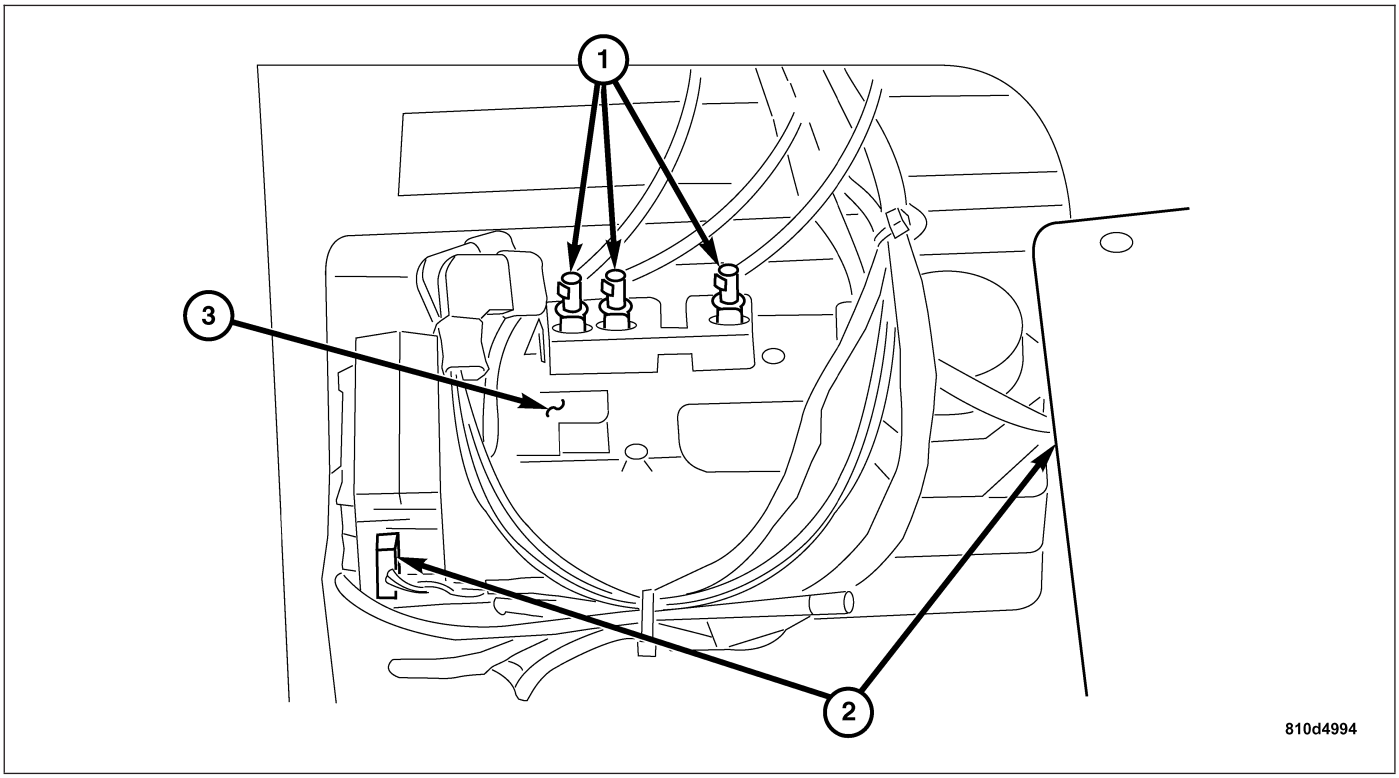

1 - AIR LINES
2 - ELECTRICAL CONNECTORS
3 - CENTRAL LOCKING PUMP/SECURITY SYSTEM MODULE

1. Install the central locking pump/security system module (3) into the trunk and connect the air lines (1) and the electrical connectors (2).
2. Install the sound deadening foam covering to the central locking pump/security system module.
3. Install the vehicle jacking assembly into the trunk next to the central locking pump/security system module.
4. Install the trunk floor covering.
5. Connect the negative battery cable.

HOOD AJAR SWITCH

REMOVAL

The Hood Ajar Switch is an integral part of the hood latch assembly (2) and cannot be adjusted or repaired. If faulty, worn, or damaged, the entire hood latch assembly must be replaced. **Refer to Page 23-136**

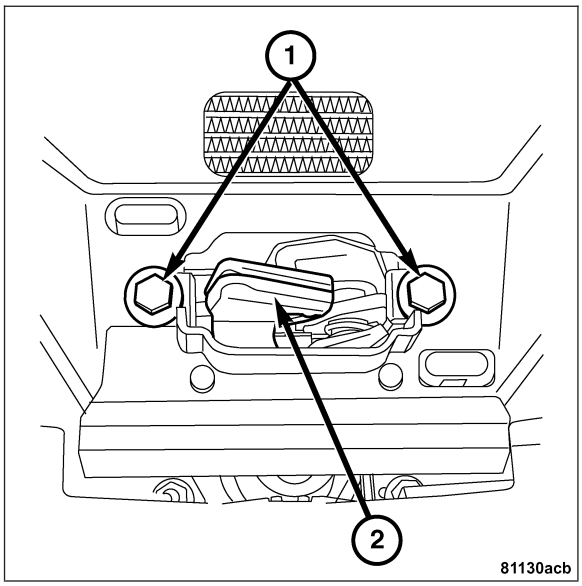

INSTALLATION

The Hood Ajar Switch is an integral part of the hood latch assembly. For installation procedures, see the Body section of this manual. **Refer to Page 23-137**

SIREN

REMOVAL

1. Remove the cowl grille. **Refer to Page 23-114**
2. Remove the bolt (1) from the siren bracket.

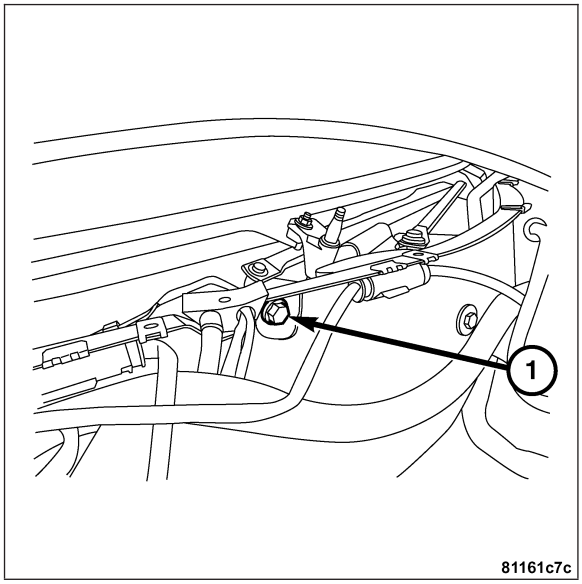

3. Disconnect the siren electrical connector (1).

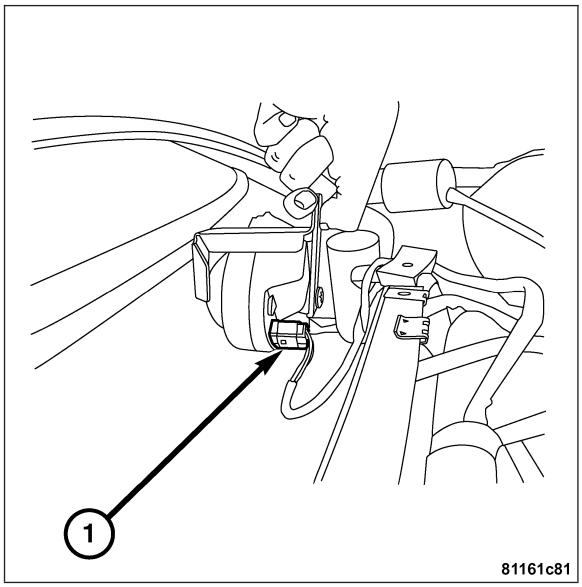

INSTALLATION

1. Connect the siren electrical connector (1).

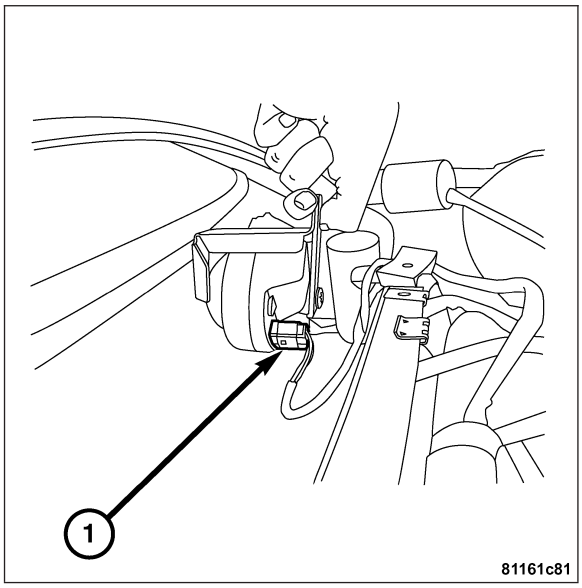

2. Install the bolt (1) to the siren bracket.
3. Install the cowl grille. **Refer to Page 23-114**.

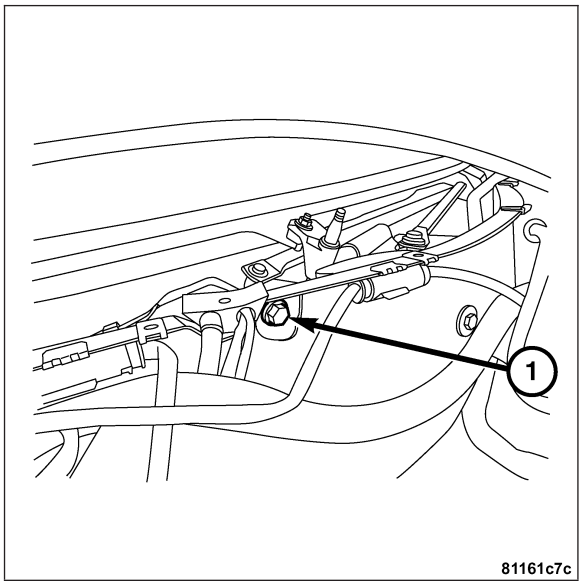

SENTRY KEY REMOTE ENTRY MODULE

DESCRIPTION

The Sentry Key Remote Entry Module (SKREEM) (1) is located underneath the top pad of the instrument panel (2) behind the Instrument Cluster. The SKREEM works in conjunction with the vehicle locking/unlocking remote control and the Central Locking Pump/Security System Module to lock and unlock the vehicle.

The SKREEM is also the primary component of the sentry key system. The SKREEM has a halo-like Antenna Ring that connects by wires to the SKREEM and is mounted around the Ignition Lock Cylinder. The SKREEM cannot be adjusted or repaired. If faulty or damaged, the unit must be replaced.

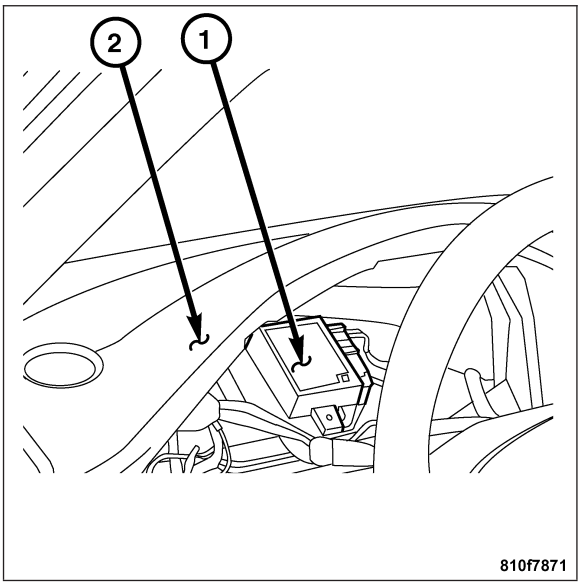

OPERATION

The Sentry Key Remote Entry Module (SKREEM) has the following functions: receiving and evaluating the Radio Frequency (RF) keyless entry remote signal, actuation of door locks in conjunction with the Central Locking Pump/Security System Module, and enabling the vehicle theft security alarm with confirmation via the turn signals. When the RKE transmitter is operated, an RF signal is transmitted. If the SKREEM recognizes the RF signal as valid, it actuates the Central Locking Pump/Security System Module through the Body Control Module. The vehicle is then locked or unlocked through the power locks system. Connected to the SKREEM is a Sentry Key Antenna Ring which surrounds the ignition lock cylinder. When the ignition is switched on, the Sentry Key Antenna Ring is supplied with power. A data block is transmitted inductively via the Sentry Key Antenna Ring to the SKREEM and then

on to the Powertrain Control Module. If the antenna ring data block content is invalid or if vehicle battery power is too low to build up enough power for the antenna ring, the Powertrain Control Module will not receive the proper signal. This is displayed with the message “Start Error” in the Instrument Cluster.

The SKREEM contains an RF transceiver and a microprocessor. The SKREEM transmits RF signals to and receives RF signals from the ignition key transponder through a tuned Sentry Key Antenna Ring that is wired to the SKREEM. If the Sentry Key Antenna Ring is not mounted properly around the ignition lock cylinder housing, communication problems between the SKREEM and the ignition key may arise. These communication problems will result in ignition key transponder-related faults. The SKREEM also communicates over the Controller Area Network (CAN) data bus with the Powertrain Control Module (PCM), the Instrument Cluster, the Body Control Module (BCM), and/or the DRB III® scan tool.

The SKREEM retains in memory the ID numbers of any ignition key transponder that is programmed into it. For added system security each SKREEM is programmed with a unique secret key code. This code is stored in memory, sent over the CAN data bus to the PCM, and is encoded to the transponder of every ignition key that is programmed into the SKREEM.

In the event that a SKREEM replacement is required, the secret key code can be transferred to the new SKREEM from the PCM using the DRB III® scan tool and the ignition key system replacement programming procedure. Proper completion of the ignition key system initialization will allow the existing ignition keys to be programmed into the new SKREEM so that new keys will not be required. In the event that the original secret key code cannot be recovered, SKREEM replacement will also require new ignition keys. The DRB III® scan tool will alert the technician during the key reprogramming procedure if new ignition keys are required.

The sentry key system performs a self-test each time the ignition switch is turned to the On position and will store fault information in the form of Diagnostic Trouble Codes (DTCs) in SKREEM memory if a system malfunction is detected. The SKREEM can be diagnosed and any stored DTCs can be retrieved using a DRB III® scan tool. Refer to the appropriate diagnostic information.

REMOVAL

REMOVAL - SENTRY KEY REMOTE ENTRY MODULE

1. Disconnect the negative battery cable.
2. Remove the instrument cluster. **Refer to Page 8J-83**.

To remove the SKREEM:

3. Disconnect the 2-pin CAN bus connector and the 18-pin electrical connector (1) from the SKREEM.
4. Disconnect the 2-pin connector for the sentry key antenna ring.
5. Press the retaining tabs apart.
6. Remove the SKREEM from the base plate.

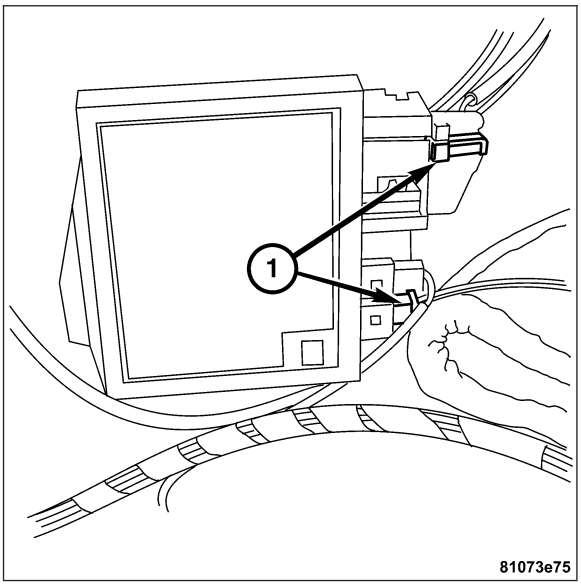

REMOVAL - SENTRY KEY ANTENNA RING

1. Remove the instrument cluster. **Refer to Page 8J-83**.
2. Disconnect the sentry key antenna ring electrical connector (1) from the sentry key remote entry module (2).

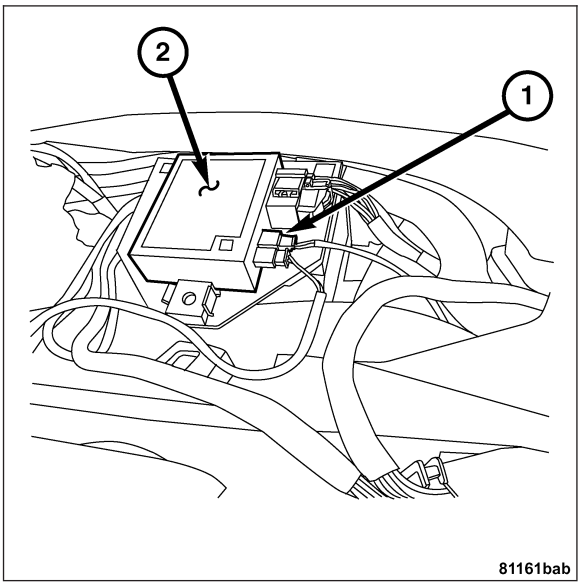

Note: Pay attention to harness routing for proper installation.

3. Pull to remove the sentry key antenna ring (1) from the ignition switch key cylinder (2).

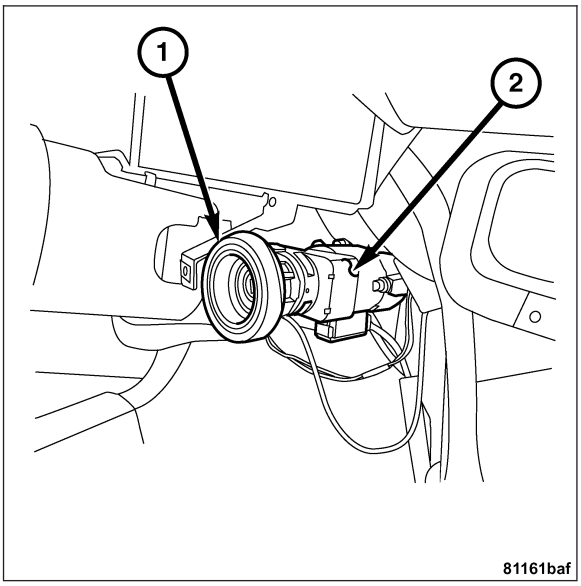

INSTALLATION

INSTALLATION - SENTRY KEY REMOTE ENTRY MODULE

1. Install the SKREEM to the base plate.
2. Connect the 18-pin electrical connector and the 2-pin CAN bus connector (1) to the SKREEM.
3. Connect the 2-pin connector for the sentry key antenna ring.
4. Install the instrument cluster. **Refer to Page 8J-84**.
5. Connect the negative battery cable.

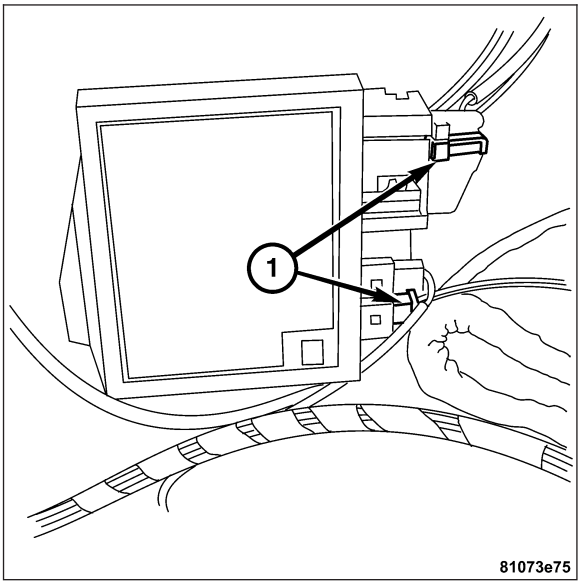

INSTALLATION - SENTRY KEY ANTENNA RING

1. Install the sentry key antenna ring (1) to the ignition switch key cylinder (2).

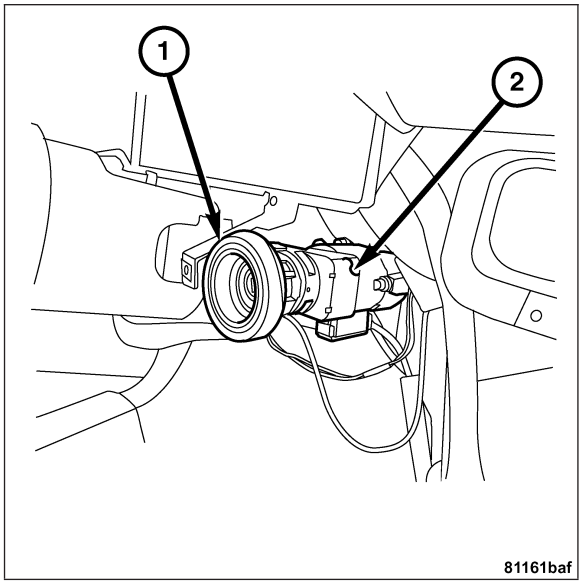

2. Install the sentry key antenna ring electrical connector (1) to the sentry key remote entry module (2).
3. Install the instrument cluster. **Refer to Page 8J-84**.

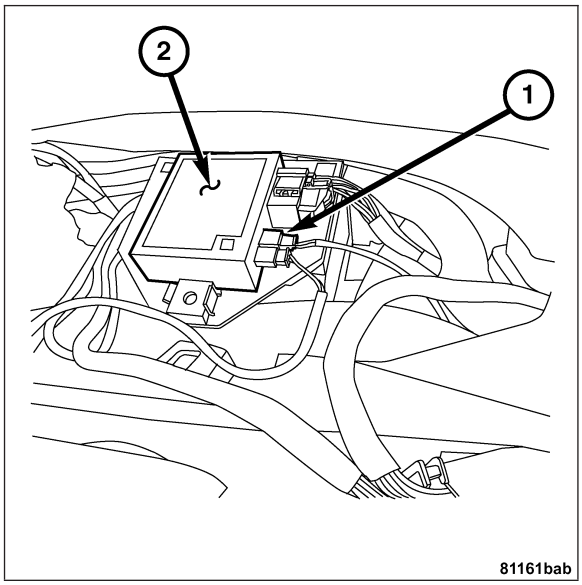

DOOR CYLINDER LOCK SWITCH

REMOVAL

The Driver Cylinder Lock Switch (1) is an integral part of the Driver Door Lock Actuator assembly and cannot be adjusted or repaired. If faulty, worn, or damaged, the entire assembly must be replaced. **Refer to Page 8N-43**.

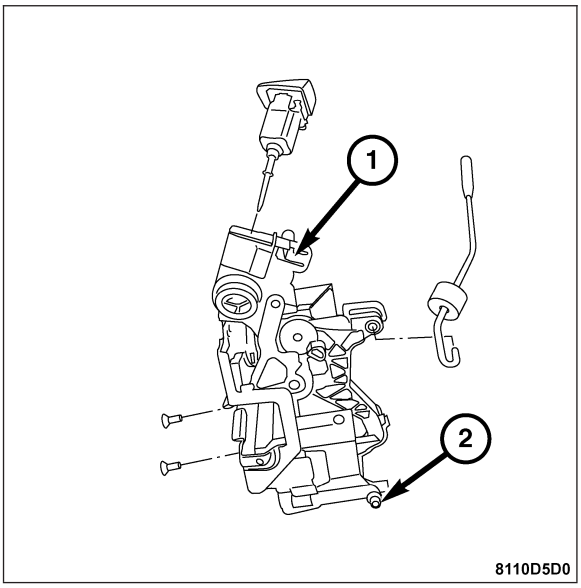

INSTALLATION - DRIVER CYLINDER LOCK SWITCH

The Driver Cylinder Lock Switch is an integral part of the Driver Door Lock Actuator assembly and cannot be adjusted or repaired. If faulty, worn, or damaged, the entire assembly must be replaced. For installation procedures, see the Body section of this manual. **Refer to Page 8N-43**.

ANTI-THEFT TOW SENSOR

REMOVAL

1. Remove the right side trunk inner trim panel.
2. Remove the bolt (1) from the anti-theft tow sensor bracket.

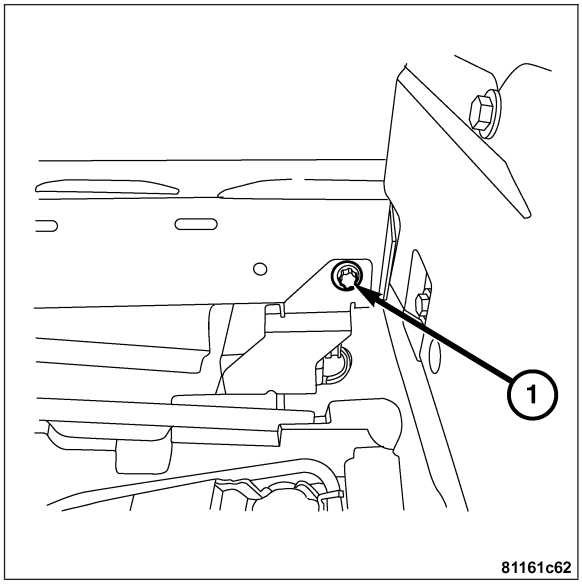

3. Disconnect the anti-theft tow sensor electrical connector (1).

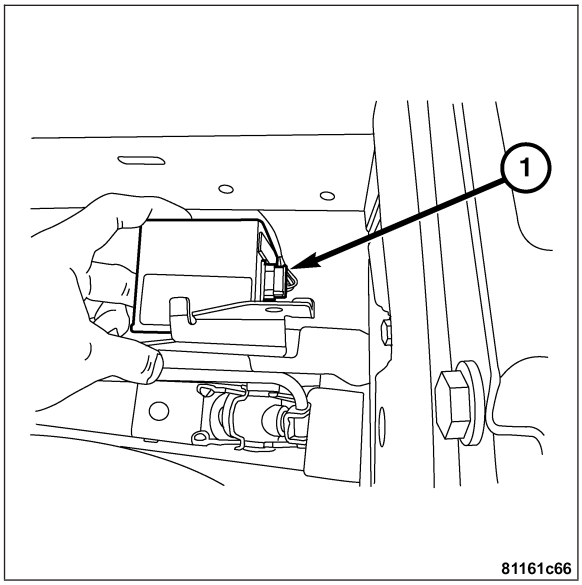

INSTALLATION

Note: Install the anti-theft tow sensor with the “UP” mark properly positioned.

1. Connect the anti-theft tow sensor electrical connector (1).

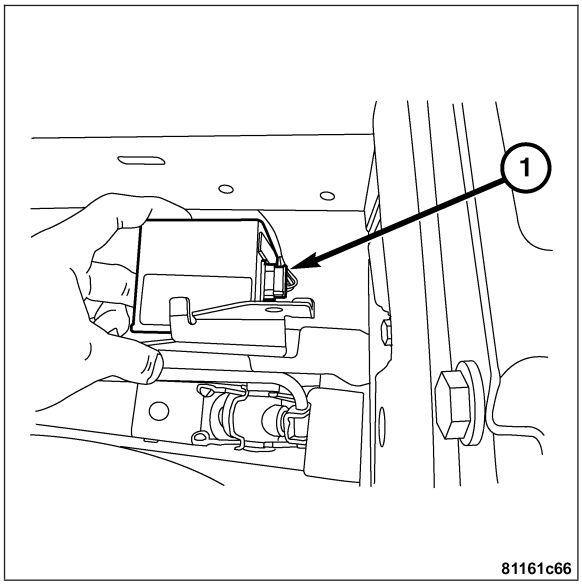

2. Install the bolt (1) to the anti-theft tow sensor bracket.
3. Install the right side trunk inner trim panel.

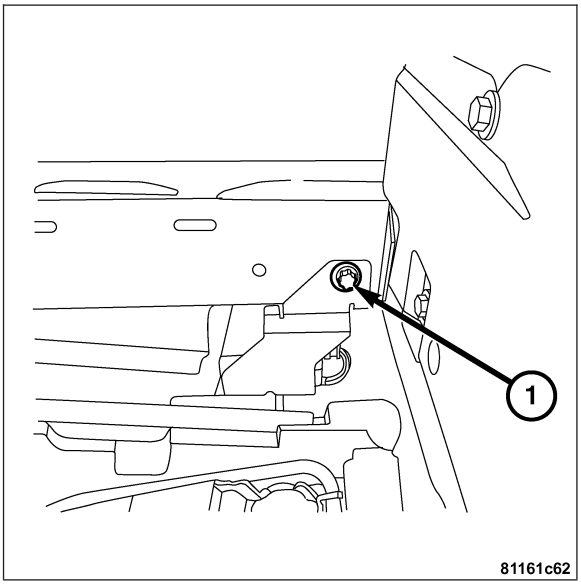

TOW-AWAY ALARM SWITCH

REMOVAL

1. Remove the heated seat switches. **Refer to Page 8G-37**
2. Carefully depress tabs (1) inward to remove the tow-away alarm switch (2).

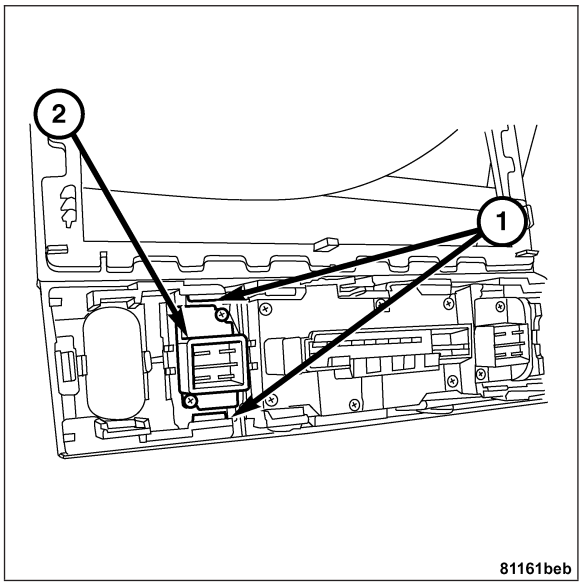

INSTALLATION

1. Install the tow-away alarm switch (2) and secure it by snapping the retaining tabs (1) into place.
2. Install the heated seat switches. **Refer to Page 8G-38**.

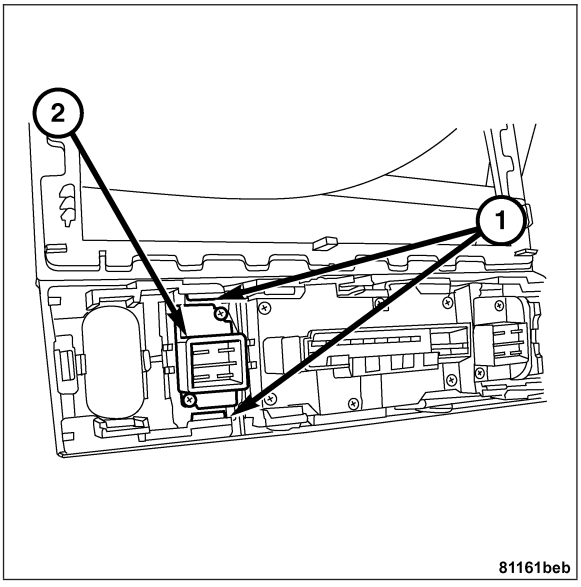

WIPERS/WASHERS

TABLE OF CONTENTS

page

WIPERS/WASHERS - ELECTRICAL DIAGNOSTICS 1

page

WIPERS/WASHERS - SERVICE INFORMATION . . 21

WIPERS/WASHERS - ELECTRICAL DIAGNOSTICS

TABLE OF CONTENTS

page

WIPERS/WASHERS - ELECTRICAL DIAGNOSTICS
DIAGNOSIS AND TESTING
VOLTAGE SUPPLY CIRCUIT OPEN 2
*WASHERS INOPERATIVE 4
*WASHERS RUN CONTINUOUSLY WITH IGNITION ON 6
*WIPERS INOPERATIVE 8

page

*WIPERS HIGH SPEED INOPERATIVE 11
*WIPERS LOW SPEED INOPERATIVE 13
*WIPERS INTERMITTENT SPEED INOPERATIVE 15
*WIPERS RUN CONTINUOUSLY WITH IGNITION ON 17
BODY VERIFICATION TEST 19
SCHEMATICS AND DIAGRAMS 20

WIPERS/WASHERS - ELECTRICAL DIAGNOSTICS

DIAGNOSIS AND TESTING

VOLTAGE SUPPLY CIRCUIT OPEN

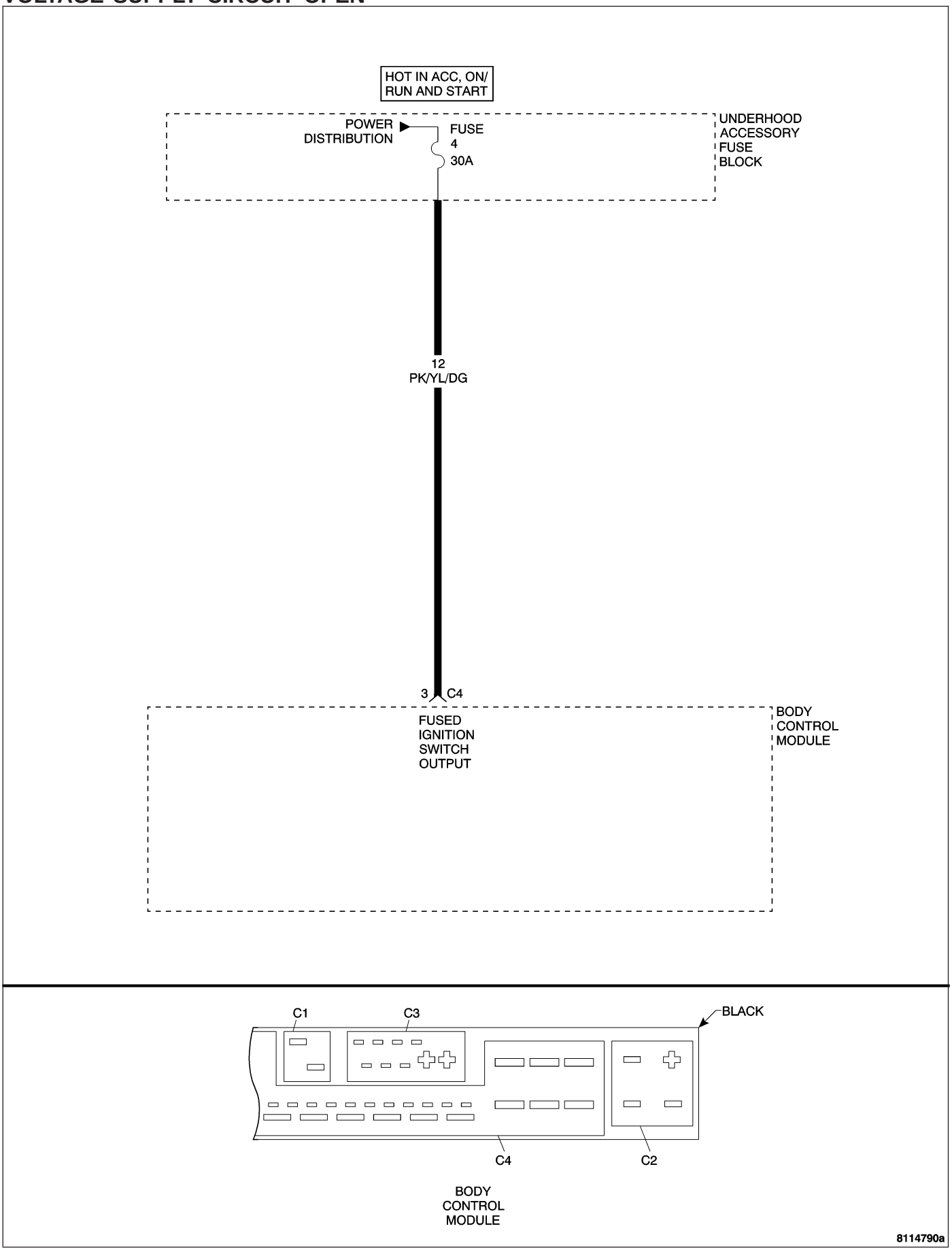

VOLTAGE SUPPLY CIRCUIT OPEN — CONTINUED

When Monitored and Set Condition

- When Monitored: With the wipers/washers on.
- Set Condition: If the Body Control Module (BCM) detects a voltage supply circuit malfunction, the DTC is set.

POSSIBLE CAUSES
FUSED IGNITION SWITCH OUTPUT CIRCUIT OPEN
BODY CONTROL MODULE

For a complete Wipers/Washers Circuit Diagram, **Refer to Page 8R-20**.

Diagnostic Test

1. MEASURE THE VOLTAGE OF THE FUSED IGNITON SWITCH OUTPUT CIRCUIT

Note: Inspect Fuse 4 located in the Underhood Accessory Fuse Block. If the fuse is open, repair the cause of the open fuse before continuing.

Turn the ignition on.

Disconnect the BCM harness connector.

Note: Check connectors - Clean/repair as necessary.

Measure the voltage of the Fused Ignition Switch Output circuit at the BCM C4 harness connector.

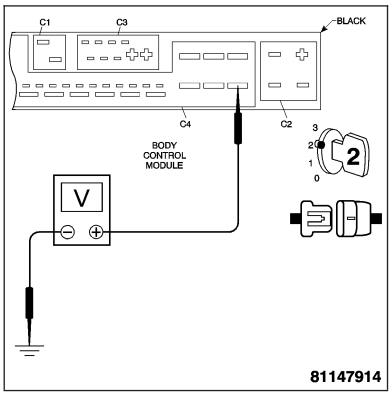

Is the voltage between 12 and 16 volts?

Yes >> Replace the Body Control Module. **Refer to Page 8E-72**
Perform BODY VERIFICATION TEST.

No >> Repair the Fused Ignition Switch Output circuit for an open.
Perform BODY VERIFICATION TEST.

*WASHERS INOPERATIVE

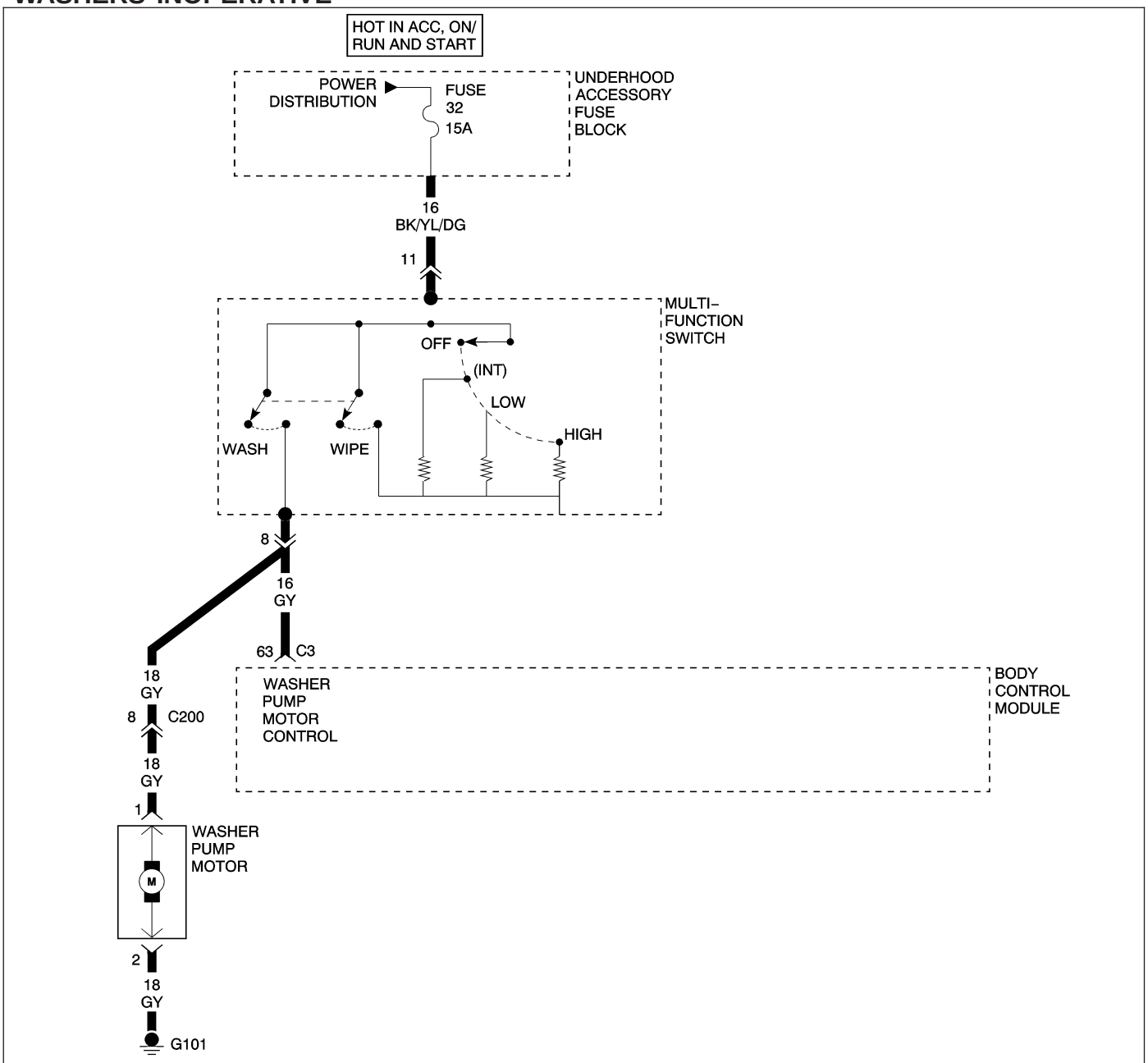

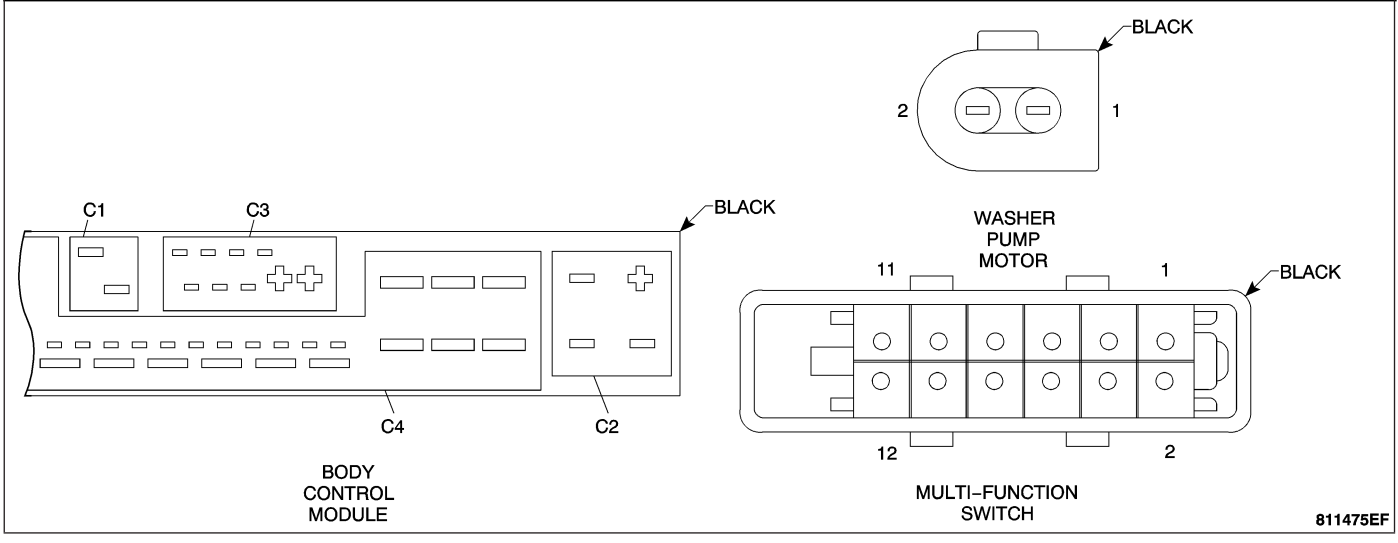

*WASHERS INOPERATIVE — CONTINUED

POSSIBLE CAUSES
MULTI-FUNCTION SWITCH
WASHER PUMP MOTOR CONTROL CIRCUIT OPEN
WASHER PUMP MOTOR

For a complete Wipers/Washers Circuit Diagram, **Refer to Page 8R-20**.

Diagnostic Test

1. MEASURE WASHER PUMP MOTOR CIRCUIT RESISTANCE

Note: If any BCM DTCs are set, diagnose them first before continuing.
Turn the ignition off.
Disconnect the Multi-Function Switch harness connector.
Disconnect the Washer Pump Motor harness connector.

Note: Check connectors - Clean/repair as necessary.
Connect a jumper wire between cavity 1 and cavity 2 of the Washer Pump Motor harness connector.
Measure the resistance between ground and the Washer Pump Motor Control circuit at cavity 8 of the Multi-Function Switch harness connector.

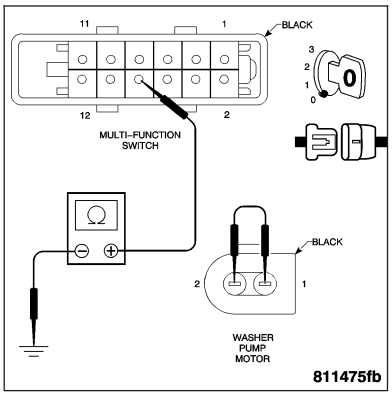

Is the resistance below 5.0 ohms?

Yes >> Go to 2

No >> Repair the Washer Pump Motor Control circuit for an open.
Perform BODY VERIFICATION TEST.

2. MEASURE MULTI-FUNCTION SWITCH VOLTAGE

Disconnect the jumper wire.
Connect the Multi-Function Switch harness connector.
Turn the ignition on.
Depress the washer switch, and measure the voltage of the Washer Pump Motor Control circuit at the Washer Pump Motor Connector.

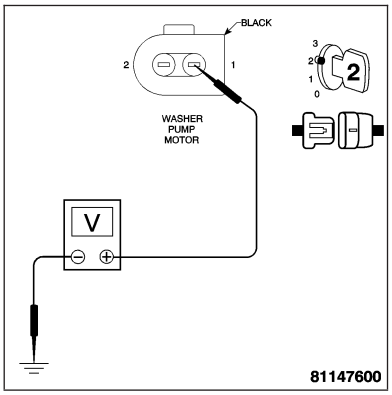

Is the voltage above 10 volts?

Yes >> Replace the Washer Pump Motor. **Refer to Page 8R-31**
Perform BODY VERIFICATION TEST.

No >> Replace the Multi-Function Switch. **Refer to Page 8L-112**
Perform BODY VERIFICATION TEST.

*WASHERS RUN CONTINUOUSLY WITH IGNITION ON

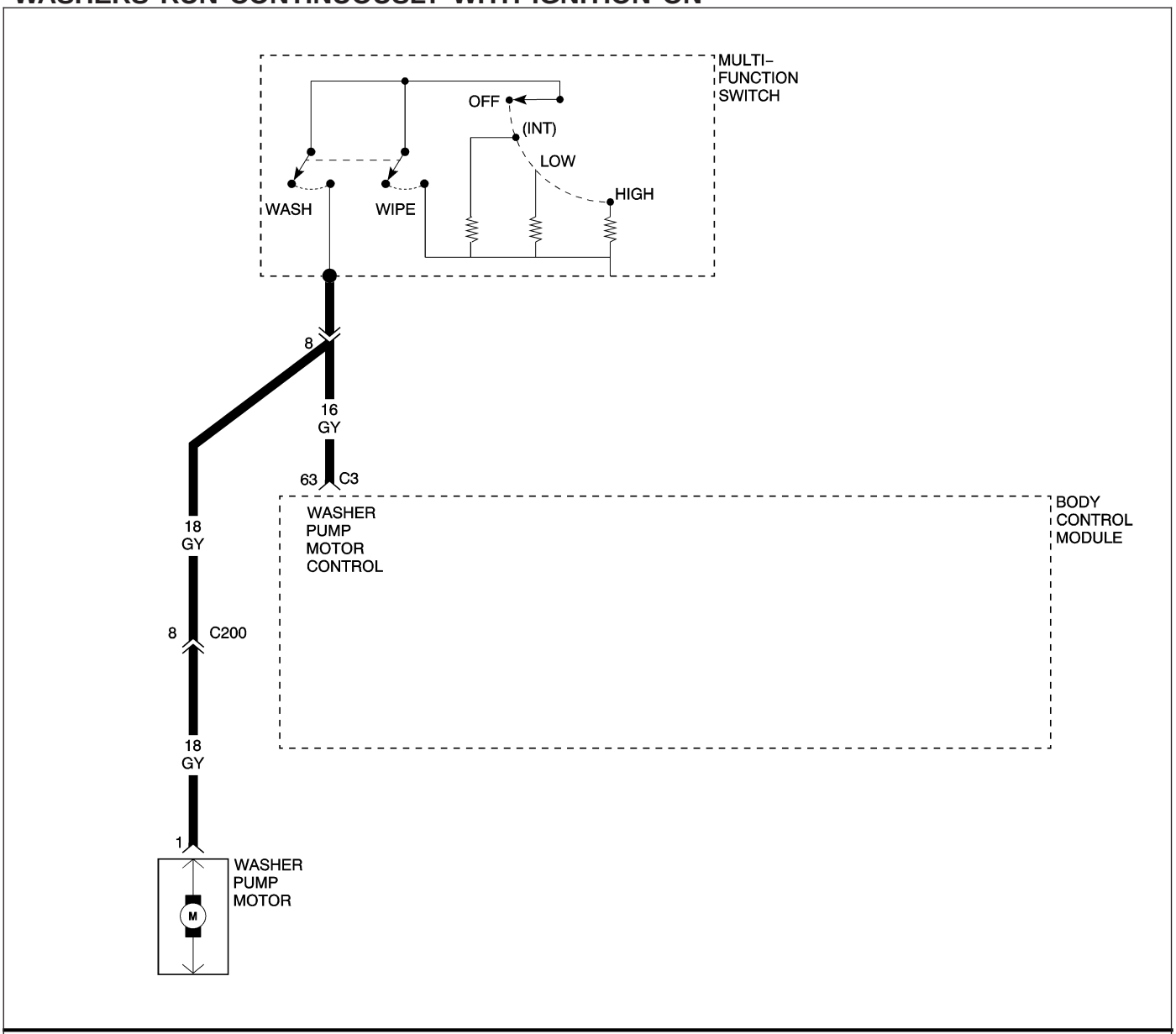

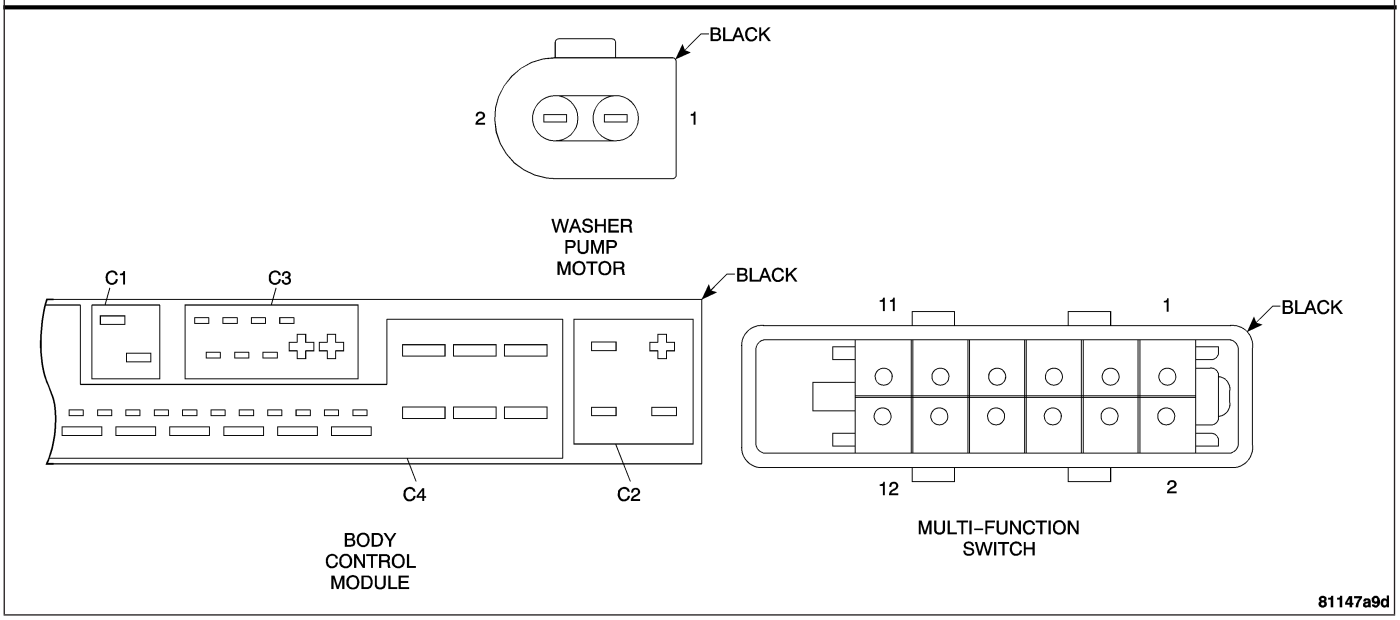

*WASHERS RUN CONTINUOUSLY WITH IGNITION ON — CONTINUED

POSSIBLE CAUSES
MULTI-FUNCTION SWITCH
WASHER PUMP MOTOR CONTROL CIRCUIT SHORT TO VOLTAGE
BODY CONTROL MODULE

For a complete Wipers/Washers Circuit Diagram, **Refer to Page 8R-20**.

Diagnostic Test

1. MEASURE MULTI-FUNCTION SWITCH VOLTAGE

Note: If any BCM DTCs are set, diagnose them first before continuing.
Turn the ignition off.
Disconnect the Multi-Function Switch harness connector.

Note: Check connectors - Clean/repair as necessary.
Connect a fused jumper wire from B(+) to cavity 11 of the Multi-Function Switch.
Measure the voltage of the Washer Pump Motor Control circuit at the Multi-Function Switch harness connector.

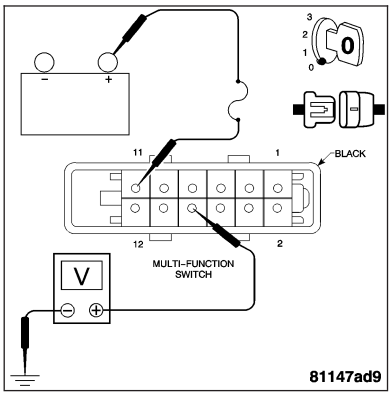

Is voltage present?

Yes >> Replace the Multi-Function Switch. **Refer to Page 8L-112**
Perform BODY VERIFICATION TEST.

No >> Go to 2

2. MEASURE WASHER PUMP MOTOR CIRCUIT VOLTAGE

Disconnect the Washer Pump Motor harness connector.
Disconnect the BCM harness connector.

Note: Check connectors - Clean/repair as necessary.
Turn the ignition on.
Measure the voltage of the Washer Pump Motor Control circuit at cavity 8 of the Multi-Function Switch harness connector.

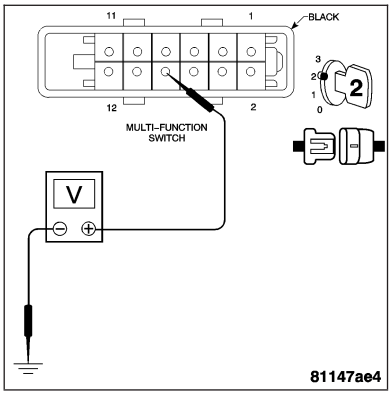

Is voltage present?

Yes >> Repair the Washer Pump Motor Control circuit for a short to voltage.
Perform BODY VERIFICATION TEST.

No >> Replace the Body Control Module. **Refer to Page 8E-72**
Perform BODY VERIFICATION TEST.

*WIPERS INOPERATIVE

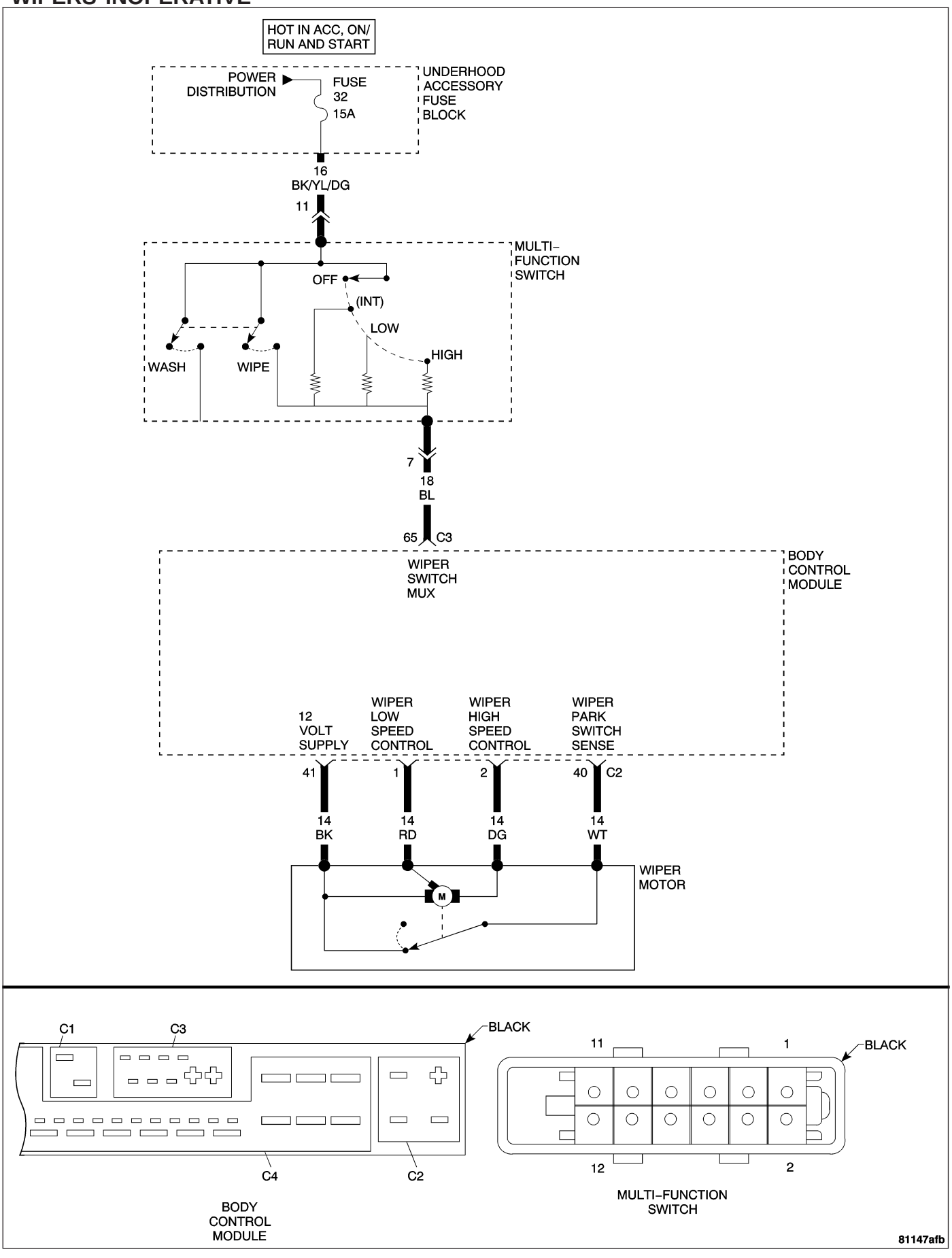

*WIPERS INOPERATIVE — CONTINUED

POSSIBLE CAUSES
FUSED B(+) CIRCUIT OPEN
MULTI-FUNCTION SWITCH
WIPER SWITCH MUX CIRCUIT OPEN
BODY CONTROL MODULE
WIPER MOTOR

For a complete Wipers/Washers Circuit Diagram, **Refer to Page 8R-20**.

Diagnostic Test

1. MEASURE WIPER/WASHER FUSED B(+) CIRCUIT VOLTAGE

Note: If any BCM DTCs are set, diagnose them first before continuing.

Note: Inspect Fuse 32 located in the Underhood Accessory Fuse Block. If the fuse is open, repair the cause of the open fuse before continuing.

Turn the ignition off.

Disconnect the Multi-Function Switch harness connector.

Note: Check connectors - Clean/repair as necessary.

Turn the ignition on.

Measure the voltage of the Fused B(+) circuit at the Multi-Function Switch harness connector.

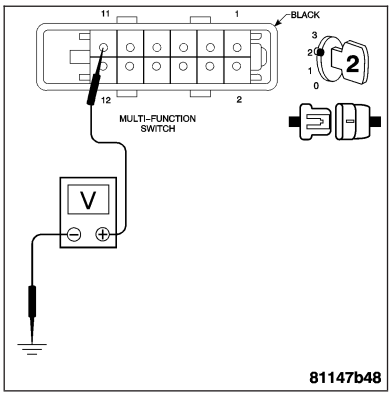

Is the voltage above 10 volts?

Yes >> Go to 2

No >> Repair the Fused B(+) circuit for an open.
Perform BODY VERIFICATION TEST.

2. TEST THE WIPER MOTOR

Turn the ignition off.

Disconnect the Body Control Module (BCM) C2 harness connector.

Note: Check connectors - Clean/repair as necessary.

Connect a jumper wire between cavity 1 of the BCM C2 harness connector and B(+).

Connect a jumper wire between cavity 41 of the BCM C2 harness connector and ground.

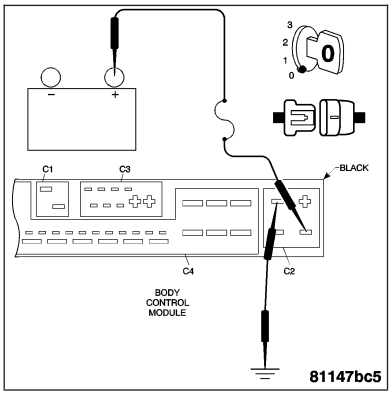

With the jumper wires connected, does the Wiper Motor move?

Yes >> Go to 3

No >> Replace the Wiper Motor. **Refer to Page 8R-47**
Perform BODY VERIFICATION TEST.

*WIPERS INOPERATIVE — CONTINUED

3. MEASURE WIPER SWITCH MUX CIRCUIT RESISTANCE

Measure the resistance of the Wiper Switch Mux circuit from the Multi-Function Switch harness connector to the BCM harness connector.

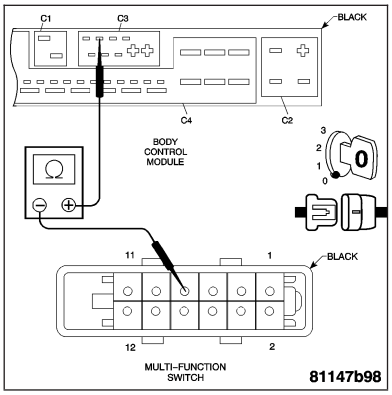

Is the resistance below 5.0 ohms?

Yes >> Go to 4

No >> Repair the Wiper Switch Mux circuit for an open.
Perform BODY VERIFICATION TEST.

4. MEASURE WIPER SWITCH MUX CIRCUIT VOLTAGE

Connect the Multi-Function Switch harness connector.

Turn the ignition on.

Measure the voltage of the Wiper Switch Mux circuit at the BCM C3 connector cavity 65 with the Wiper Switch in the High position.

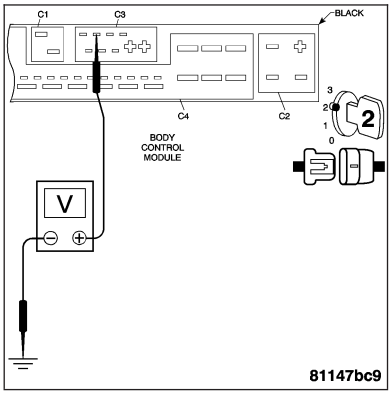

Is the voltage approximately 12 volts?

Yes >> Replace the Body Control Module. **Refer to Page 8E-72**
Perform BODY VERIFICATION TEST.

No >> Replace the Multi-Function Switch. **Refer to Page 8L-112**
Perform BODY VERIFICATION TEST.

*WIPERS HIGH SPEED INOPERATIVE

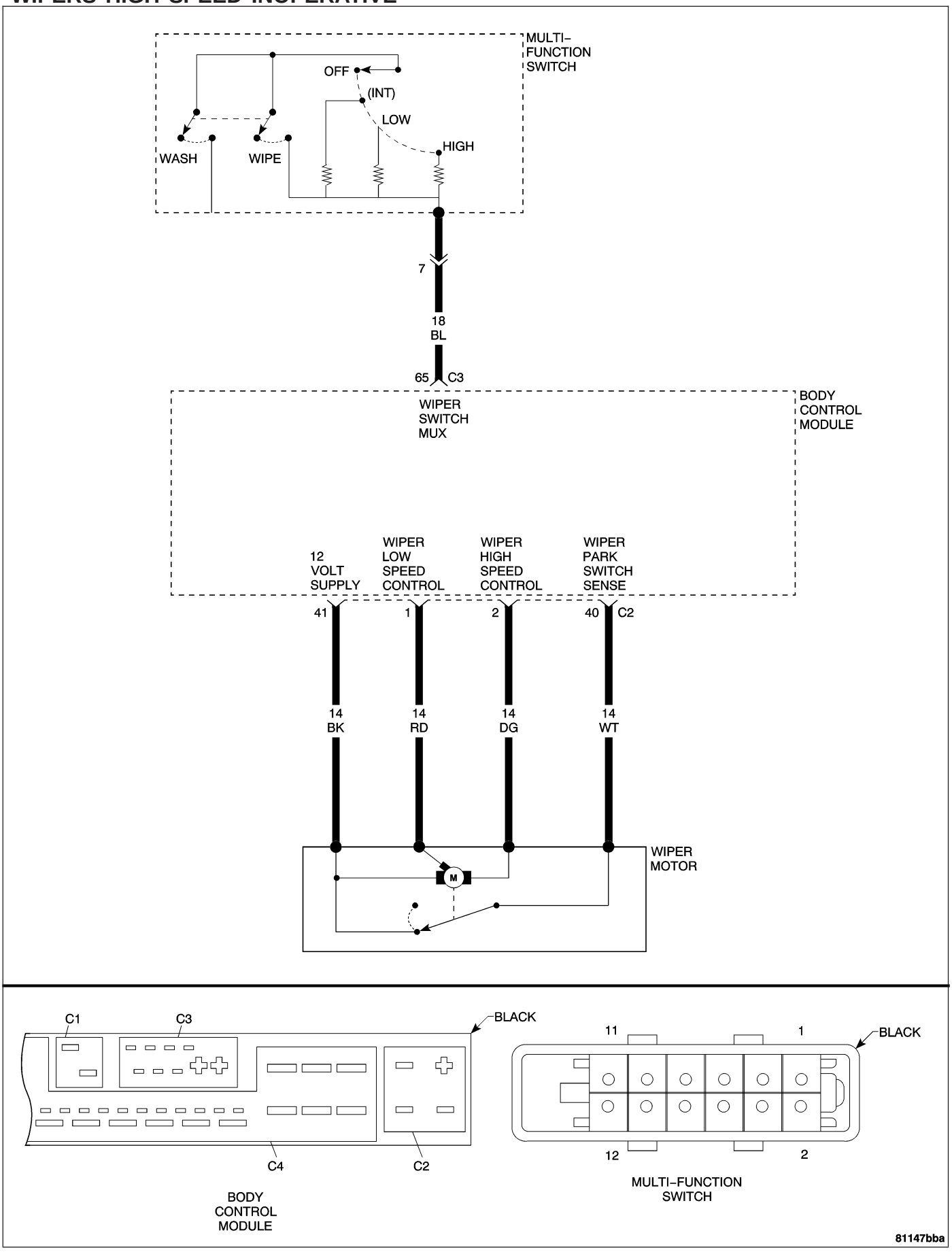

*WIPERS HIGH SPEED INOPERATIVE — CONTINUED

POSSIBLE CAUSES
MULTI-FUNCTION SWITCH
BODY CONTROL MODULE
WIPER MOTOR

For a complete Wipers/Washers Circuit Diagram, **Refer to Page 8R-20**.

Diagnostic Test

1. TEST THE WIPER MOTOR

Note: If any BCM DTCs are set, diagnose them first before continuing.
Turn the ignition off.
Disconnect the Body Control Module (BCM) C2 harness connector.

Note: Check connectors - Clean/repair as necessary.
Connect a jumper wire between cavity 1 of the BCM C2 harness connector and B(+).
Connect a jumper wire between cavity 41 of the BCM C2 harness connector and ground.

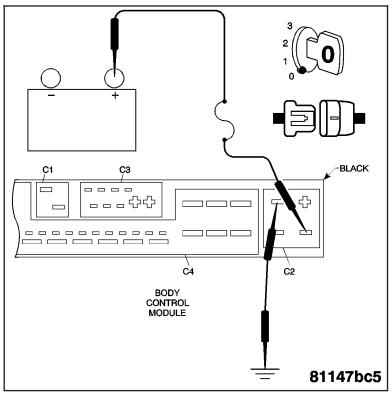

With the jumper wires connected, does the Wiper Motor move?

Yes >> Go to 2

No >> Replace the Wiper Motor. **Refer to Page 8R-47**.
Perform BODY VERIFICATION TEST.

2. MEASURE WIPER SWITCH MUX CIRCUIT VOLTAGE

Connect the BCM harness connector.
Turn the ignition on.
Backprobe the BCM C3 harness connector cavity 65 for voltage with the Wiper Switch in the High position.

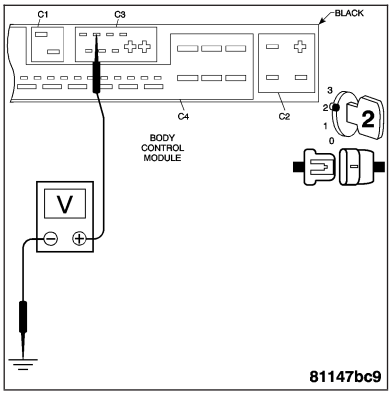

Is the voltage approximately 12 volts?

Yes >> Replace the Body Control Module. **Refer to Page 8E-72**.
Perform BODY VERIFICATION TEST.

No >> Replace the Multi-Function Switch. **Refer to Page 8L-112**.
Perform BODY VERIFICATION TEST.

*WIPERS LOW SPEED INOPERATIVE

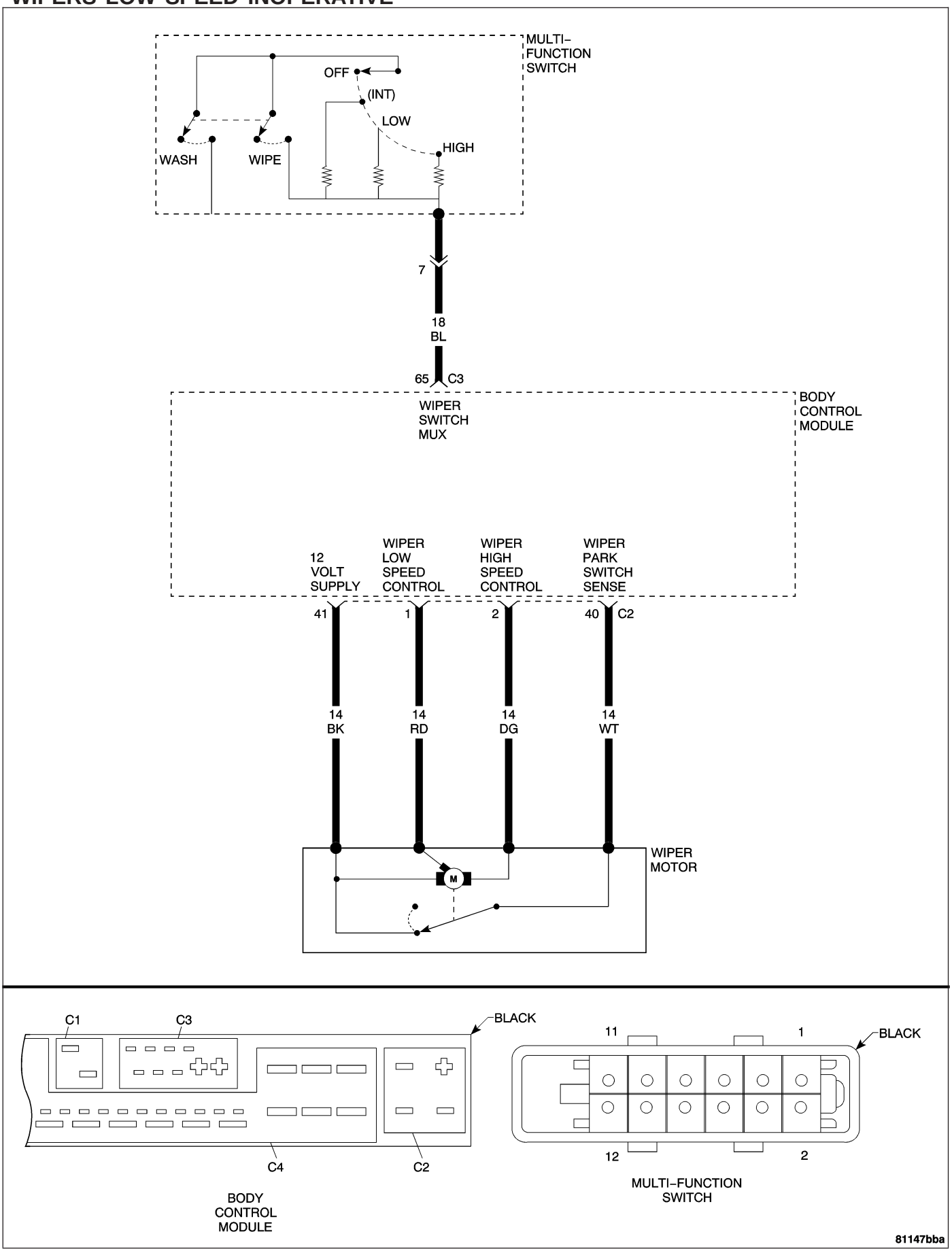

*WIPERS LOW SPEED INOPERATIVE — CONTINUED

POSSIBLE CAUSES
MULTI-FUNCTION SWITCH
BODY CONTROL MODULE
WIPER MOTOR

For a complete Wipers/Washers Circuit Diagram, **Refer to Page 8R-20**.

Diagnostic Test

1. TEST THE WIPER MOTOR

Note: If any BCM DTCs are set, diagnose them first before continuing.
Turn the ignition off.
Disconnect the Body Control Module (BCM) C2 harness connector.

Note: Check connectors - Clean/repair as necessary.
Connect a jumper wire between cavity 2 of the BCM C2 harness connector and B(+).
Connect a jumper wire between cavity 41 of the BCM C2 harness connector and ground.

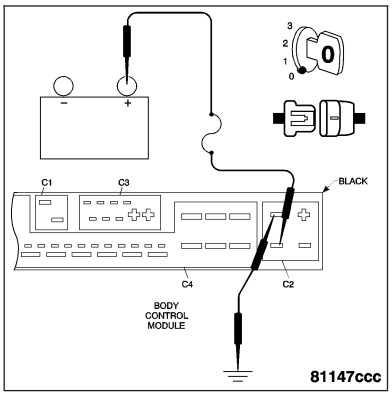

With the jumper wires connected, does the Wiper Motor move?

Yes >> Go to 2

No >> Replace the Wiper Motor. **Refer to Page 8R-47**.
Perform BODY VERIFICATION TEST.

2. MEASURE WIPER SWITCH MUX CIRCUIT VOLTAGE

Disconnect the jumper wires.
Connect the BCM harness connector.
Turn the ignition on.
Backprobe the BCM C3 harness connector cavity 65 for voltage with the Wiper Switch in the Low position.

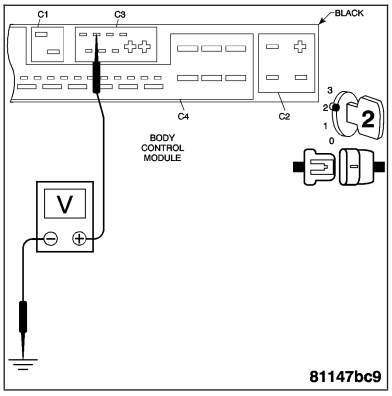

Is the voltage approximately 7 to 8 volts?

Yes >> Replace the Body Control Module. **Refer to Page 8E-72**.
Perform BODY VERIFICATION TEST.

No >> Replace the Multi-Function Switch. **Refer to Page 8L-112**.
Perform BODY VERIFICATION TEST.

*WIPERS INTERMITTENT SPEED INOPERATIVE

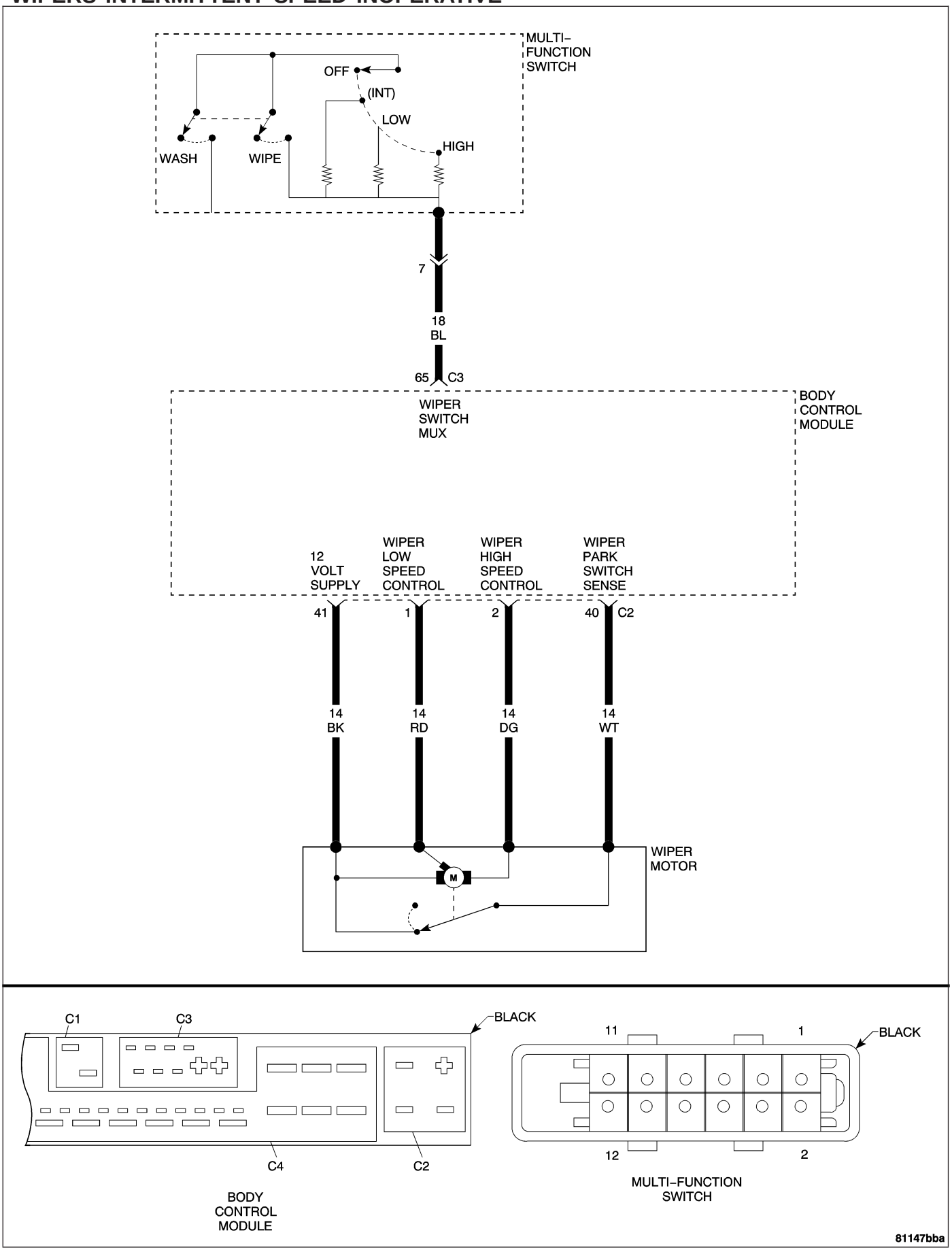

*WIPERS INTERMITTENT SPEED INOPERATIVE — CONTINUED

POSSIBLE CAUSES
MULTI-FUNCTION SWITCH
BODY CONTROL MODULE

For a complete Wipers/Washers Circuit Diagram, **Refer to Page 8R-20**.

Diagnostic Test

1. MEASURE WIPER SWITCH MUX CIRCUIT VOLTAGE

Note: If any BCM DTCs are set, diagnose them first before continuing.

Turn the ignition on.

Backprobe the Body Control Module (BCM) C3 harness connector cavity 65 for voltage with the Wiper Switch in the Intermittent position.

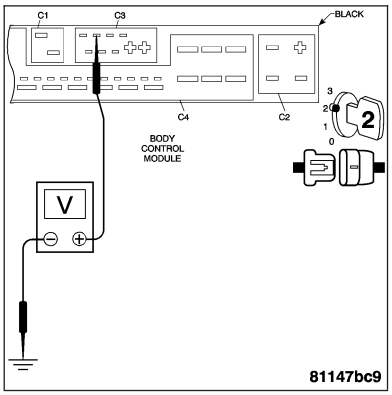

Is the voltage approximately 3 to 4 volts?

Yes >> Replace the Body Control Module. **Refer to Page 8E-72**.
Perform BODY VERIFICATION TEST.

No >> Replace the Multi-Function Switch. **Refer to Page 8L-112**.
Perform BODY VERIFICATION TEST.

*WIPERS RUN CONTINUOUSLY WITH IGNITION ON

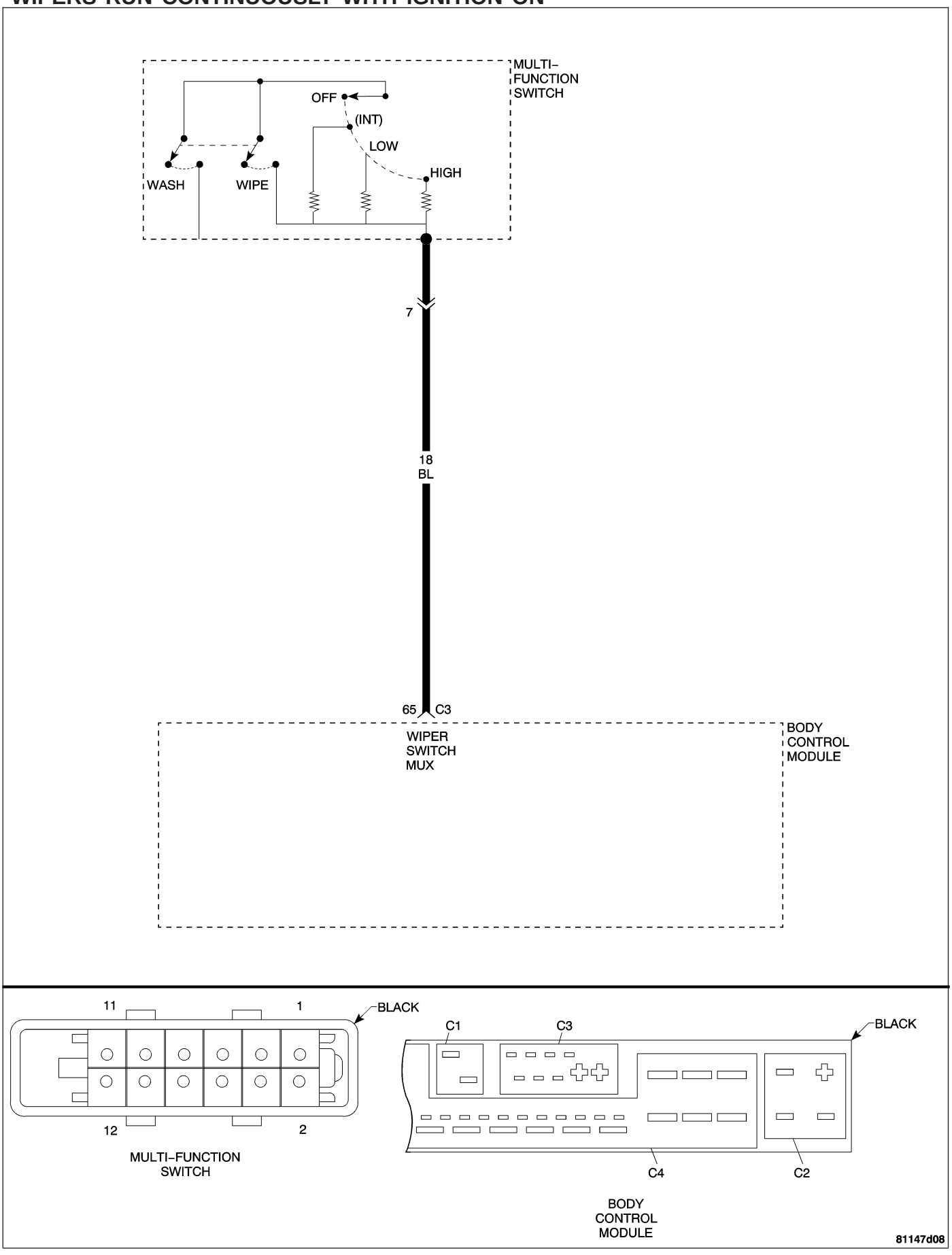

*WIPERS RUN CONTINUOUSLY WITH IGNITION ON — CONTINUED

POSSIBLE CAUSES
MULTI-FUNCTION SWITCH
WIPER MOTOR CIRCUIT SHORT TO VOLTAGE
BODY CONTROL MODULE

For a complete Wipers/Washers Circuit Diagram, **Refer to Page 8R-20**.

Diagnostic Test

1. MEASURE MULTI-FUNCTION SWITCH VOLTAGE

Note: If any BCM DTCs are set, diagnose them first before continuing.
Turn the ignition off.
Disconnect the Multi-Function Switch harness connector.

Note: Check connectors - Clean/repair as necessary.
Connect a fused jumper wire from B(+) to cavity 11 of the Multi-Function Switch.
Measure the voltage of the Wiper Switch Mux circuit at cavity 7 of the Multi-Function Switch harness connector.

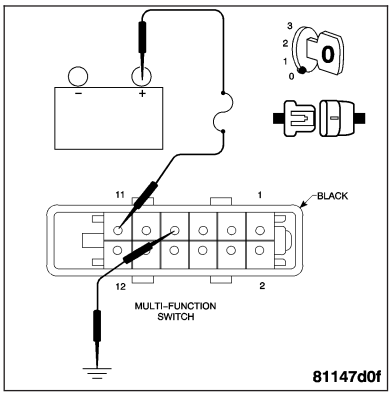

Is voltage present?

Yes >> Replace the Multi-Function Switch. **Refer to Page 8L-112**.
Perform BODY VERIFICATION TEST.

No >> Go to 2

2. MEASURE WIPER SWITCH MUX CIRCUIT VOLTAGE

Disconnect the jumper wire.
Disconnect the BCM harness connector.

Note: Check connectors - Clean/repair as necessary.
Turn the ignition on.
Measure the voltage of the Wiper Switch Mux circuit at cavity 7 of the Multi-Function Switch harness connector.

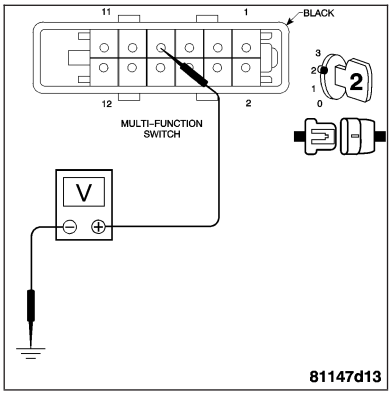

Is voltage present?

Yes >> Repair the Wiper Switch Mux circuit for a short to voltage.
Perform BODY VERIFICATION TEST.

No >> Replace the Body Control Module. **Refer to Page 8E-72**.
Perform BODY VERIFICATION TEST.

BODY VERIFICATION TEST

1.

Turn the ignition off.

Disconnect all jumper wires and reconnect all previously disconnected components and connectors.

Note: If the SKREEM or the PCM was replaced, refer to the service information for proper programming procedures.
If the Body Control Module was replaced, turn the ignition on for 15 seconds (to allow the new BCM to learn VIN) or engine may not start.

Program all RKE transmitters and other options as necessary.

With the DRB III®, erase all Diagnostic Trouble Codes (DTCs) from ALL modules. Start the engine and allow it to run for 2 minutes. Operate all functions of the system that caused the original complaint.

Ensure that all accessories are turned off and the battery is fully charged.

Turn the ignition off and wait 5 seconds. Turn the ignition on and using the DRB III®, read DTCs from ALL modules.

Are any DTCs present or is the original complaint still present?

Are any DTCs present?

YES >> Repair is not complete, refer to appropriate symptom.

NO >> Repair is complete.

SCHEMATICS AND DIAGRAMS

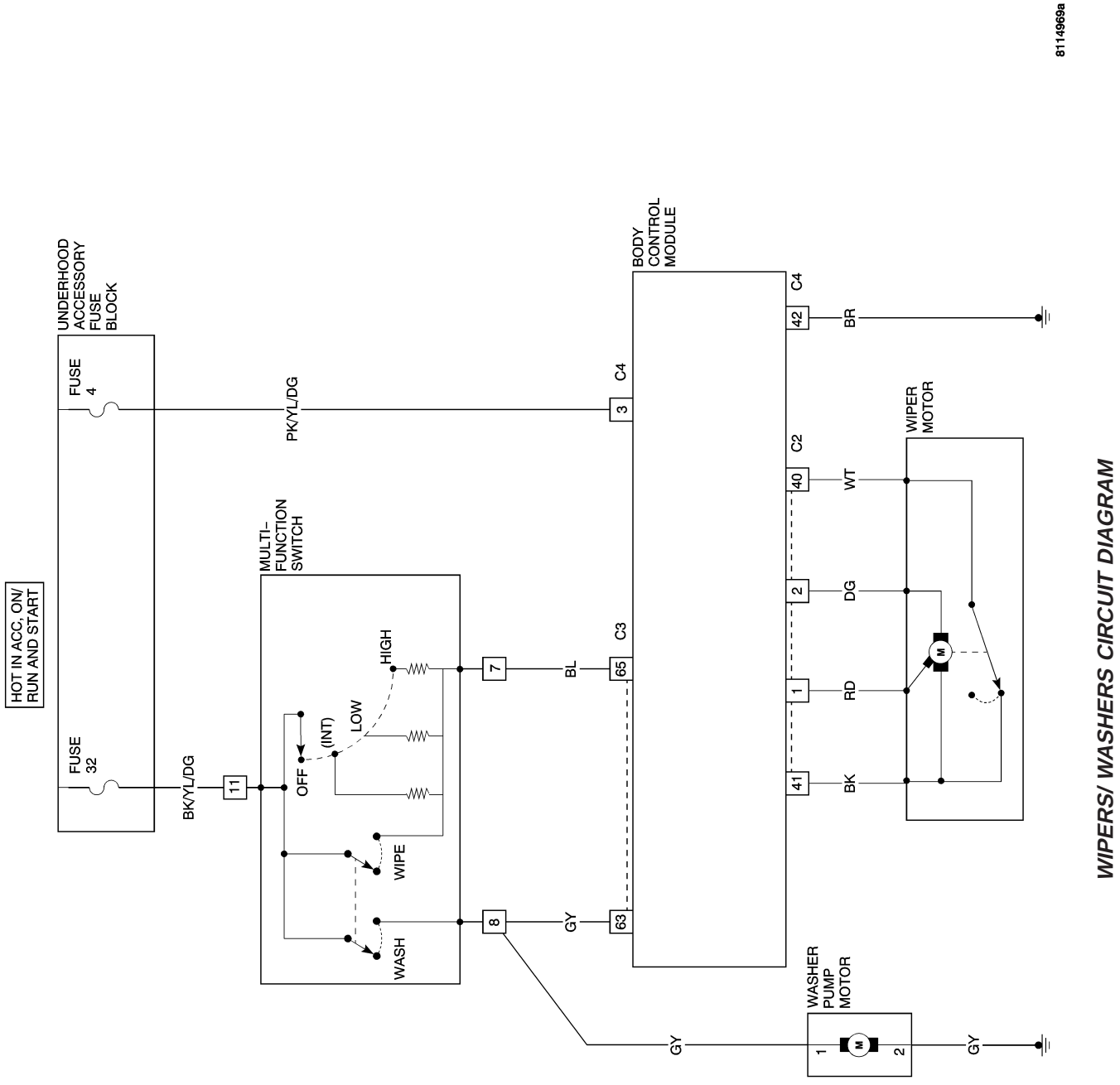

WIPERS/WASHERS - SERVICE INFORMATION

TABLE OF CONTENTS

page

WIPERS/WASHERS - SERVICE INFORMATION
DESCRIPTION 21
OPERATION 22
DIAGNOSIS AND TESTING
WINDSHIELD WIPER/WASHER SYSTEM . . . 23
SPECIFICATIONS 24
MULTI-FUNCTION SWITCH
DESCRIPTION 25
WASHER FLUID LEVEL SWITCH
REMOVAL 26
INSTALLATION 26
WASHER HOSES / TUBES
REMOVAL 26
INSTALLATION 27
WASHER NOZZLE
STANDARD PROCEDURE - WASHER NOZZLE AIMING 28
REMOVAL 29
INSTALLATION 30
WASHER PUMP MOTOR
REMOVAL 31
INSTALLATION 31
WASHER RESERVOIR
REMOVAL 32
INSTALLATION 32

page

WIPER ARMS
DESCRIPTION 33
REMOVAL 33
INSTALLATION 34
ADJUSTMENTS
ADJUSTMENT - WIPER ARMS 36
WIPER BLADES
DESCRIPTION 36
OPERATION 36
STANDARD PROCEDURE
WINDSHIELD WIPER BLADE ALIGNMENT . . 36
REMOVAL 37
INSTALLATION 40
WIPER LINKAGE
DESCRIPTION 42
WIPER MODULE
DESCRIPTION 42
REMOVAL 42
INSTALLATION 44
WIPER MOTOR
STANDARD PROCEDURE - WIPER MOTOR SYNCHRONIZE 46
REMOVAL 47
INSTALLATION 48

WIPERS/WASHERS - SERVICE INFORMATION

DESCRIPTION

An electrically operated intermittent windshield wiper and washer system is standard safety equipment. The windshield wiper and washer systems include the following major components, which are described in further detail within this service information:

- **Body Control Module -** The Body Control Module (BCM) (6) is located in the engine compartment on the passenger side inside the control module box.
- **Washer Nozzle -** Two fluidic washer nozzles (4) are secured with integral snap features into dedicated openings within the cowl grille at the base of the windshield.
- **Washer Plumbing -** The plumbing for the washer system consists of rubber hoses and molded plastic fittings. The plumbing is routed from behind the passenger front inner fender liner, through the right side of the plenum, up along the underside of the cowl grille to the washer nozzles.

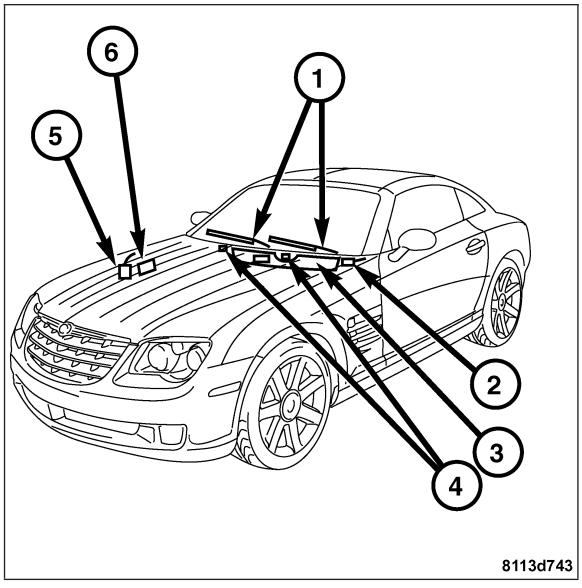

- **Washer Pump/Motor -** The washer pump/motor unit (5) is located on the lower and forward side of the washer reservoir, behind the right front inner fender liner.
- **Wiper Arm -** Two wiper arms (1) are secured with attachment nuts to tapered and threaded studs on the ends of wiper pivot shafts, near the base of the windshield.
- **Wiper Blade -** The two wiper blades (1) are secured with an integral latch to the wiper arms. When the system is not in operation, the wiper blades are parked on the glass at the bottom of the windshield.
- **Wiper Module -** The wiper module (3), except the two pivot shafts, is concealed within the cowl plenum beneath the cowl grille. It includes the module bracket, three rubber-isolated mounts, the wiper motor, the wiper motor crank arm, the wiper linkage and wiper pivot shafts.
- **Multi-Function Switch -** The multi-function switch (2) is secured to the left side and near the top of the steering column, just below the steering wheel. Only the control stalk for the multifunction switch is visible; the remainder of the switch and control circuitry is concealed below the steering column shrouds.
- **Washer Fluid Level Switch -** The washer fluid level switch (6) is located in the washer fluid reservoir, behind the right front inner fender liner.
- **Washer Reservoir -** The washer reservoir (5) is concealed behind the right front inner fender liner. The washer reservoir filler neck is the only visible portion of the reservoir, and it is accessed from the right side of the engine compartment just forward of the battery.

OPERATION

WINDSHIELD WIPER SYSTEM

The windshield wiper system will operate when the ignition switch is in the ACC or ON/RUN position and the multifunction switch lever is rotated to the intermittent, low, or high positions. The wiper system completes the wipe cycle and parks the wiper blades in the lowest portion of the wipe pattern when the multifunction switch lever is rotated to the OFF position. Fuses, located in the underhood accessory fuse block protect the circuitry of the wiper system and the vehicle. The wiper motor has permanent magnet fields. The speeds are determined by current flow to the appropriate set of brushes.

The wiper system in addition to low and high speed has a constant intermittent delay mode. The amount of delay is controlled by the Body Control Module (BCM) and is not adjustable.

The mist function is available by pressing the end of the multifunction switch lever inward toward the steering column to the point of resistance. If the multifunction switch lever is held in, the wipers will continue to operate. If it is pressed inward momentarily then released, the wiper system will only cycle once. A mist and wash function is also available if the multifunction switch lever is pressed inward past the point of resistance momentarily. This will operate the washers and cycle the wiper system twice, then return the wipers to the park position.

The most reliable, efficient, and accurate means to diagnose the BCM inputs and outputs related to the various wiper system operating modes requires the use of a DRB III® scan tool.

WASHER SYSTEM

The washer system is activated by pressing inward on the multifunction switch lever whenever the ignition switch is turned to the ACC or the ON/RUN position. The multifunction switch lever must be pressed past the point of resistance for at least 0.5 seconds to get the wiper system to cycle. Holding the multifunction switch lever switch depressed will operate the wipers and washers continuously. Releasing the switch will stop the washer pump motor, but the wiper system will complete the current wipe cycle, followed by several more wipe cycles (±1) before the wipers park. If the wash switch is pressed momentarily with the wipers in the OFF or INTERMITTENT position, a pulse wipe cycle consisting of two wipes will occur.

Fluid is gravity fed from the washer reservoir to the washer pump motor. The washer fluid is forced by the washer pump motor through rubber hoses to the cowl grille mounted nozzles which distribute the fluid streams on the surface of the windshield. The washer pump motor, washer nozzles, and washer reservoir are serviced separately.

DIAGNOSIS AND TESTING

WINDSHIELD WIPER/WASHER SYSTEM

Windshield Wiper System

Whenever a windshield wiper or washer system malfunction occurs, disconnect the harness connections and clean the terminals. Ensure the wire harness is properly connected before starting diagnosis and repair procedures. For complete windshield wiper/washer schematics and diagrams, see wipers/washers electrical diagnostics in this section. **Refer to Page 8R-20**.

Wiper System Diagnosis

CONDITION	POSSIBLE CAUSES	CORRECTION
WIPER ARM(S) CHATTER ON WINDSHIELD.	1. Permanent set of blade element edge.	1. Inspect rubber element for permanent set. If not OK, replace rubber element.
	2. Bent or damaged blade structure.	2. Inspect blade. If not OK, replace blade.
	3. Bent or damaged arm.	3. Inspect arm. If not OK, adjust blade to arm clearance. See procedure in this section. Reinspect, if not OK, replace arm.
DRIVER AND/OR PASSENGER ARM WILL NOT CYCLE (OPERATE).	1. Loose arm to pivot shaft.	1. Check arm to pivot shaft connection for looseness. Torque attachment nut to specification.
	2. Stripped arm to pivot shaft.	2. Check arm to pivot shaft for stripping. Torque nut to specification. If not OK, replace arm, pivot shaft or both.
DRIVER AND/OR PASSENGER ARM OR BLADE HITS COWL GRILLE OR WINDSHIELD MOLDINGS.	1. Arm(s) out of position.	1. Remove arm off pivot shaft, cycle module to park. Reposition arm/blade to location marks on windshield. Secure arm to pivot shaft and torque to specification. recheck wiper arm travel.
WIPER BLADE(S) STREAK.	1. Contamination on blade element or windshield.	1. Clean blade element edge with mild soap or alcohol and water. Clean windshield with mild soap or non-abrasive cleanser and water. Check for proper wipe quality. If not OK, replace blade element.
	2. Blade element damaged.	2. Replace blade element.

Windshield Washer System

Washer System Diagnosis

CONDITION	POSSIBLE CAUSES	CORRECTION
COWL GRILLE NOZZLE WILL NOT FLOW.	1. Frozen nozzle.	1. De-ice nozzle by allowing time for underhood engine heat to thaw nozzle. If not OK, move vehicle into heated area. Ensure washer fluid is properly blended for ambient outside temperatures.
	2. Nozzle hose not flowing.	2. Ensure nozzle hose is not pinched, loose, broken, or disconnected. If not OK, properly route or repair nozzle hose.
	3. Nozzle or nozzle hose plugged by contamination.	3. Clean nozzle hose of contamination. Determine source of contamination; inspect reservoir and clean system as required.
WASHER FLUID OUTPUT IS LOW.	1. Partially pinched hose.	1. Ensure washer hose is not partially pinched. If not OK, properly route hose.
	2. Reverse polarity to pump.	2. Check for crossed circuity to pump. If not OK, repair circuit.
	3. Nozzle or nozzle hose plugged by contamination.	3. Clean nozzle hose of contamination. Determine source of contamination; inspect reservoir and clean system as required.
COWL GRILLE NOZZLE STREAM OVERSHOOTS WINDSHIELD.	1. Nozzle not seated in cowl grille properly	1. Ensure nozzle is aligned and snapped in place properly.
	2. Nozzle jet(s) out of adjustment.	2. Adjust nozzle jets using a safety pin.

SPECIFICATIONS

TORQUE SPECIFICATIONS

DESCRIPTION	N·m	Ft. Lbs.	In. Lbs.
Wiper Motor Retaining Bolt	11	8	97
Wiper Motor Crank Arm Retaining Nut	26	19	230

MULTI-FUNCTION SWITCH

DESCRIPTION

The multifunction switch and control circuitry (3) is concealed below the steering column shrouds and will operate when the ignition switch is turned to the ACC or ON/RUN positions. Fuse 32 in the underhood accessory fuse block protect the circuitry of the wiper system and the vehicle.

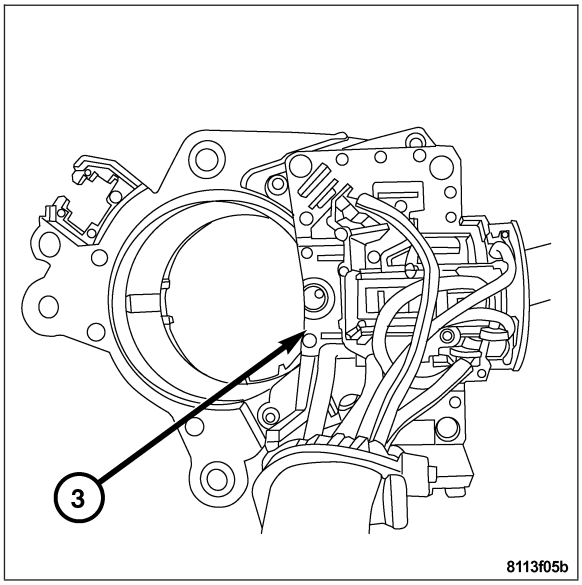

The wiper system in addition to HI (1) and LO (2) speeds, has an intermittent delay (3) mode. The wipers will return to the park position when the wiper portion of the switch is rotated to the OFF position. A mist function can be operated by briefly pressing the end of the multifunction switch lever inward.

The multifunction switch cannot be adjusted, or repaired. If faulty, worn, or damaged, the entire unit must be replaced. For complete multifunction switch removal procedures, see multifunction switch removal in the lamps/lighting exterior section. **Refer to Page 8L-112**.

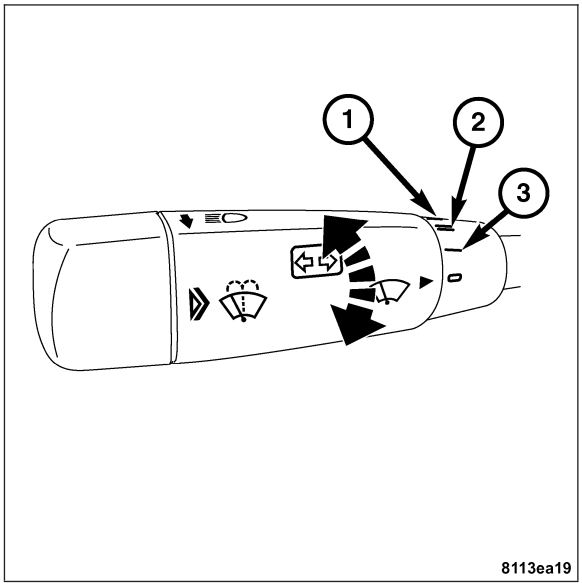

WASHER FLUID LEVEL SWITCH

REMOVAL

1. Remove the washer reservoir. **Refer to Page 7-24**.
2. Gently pry outward on the body of the washer fluid level switch (2) and pull it away from the rubber grommet (3).
3. Remove the washer fluid level switch (2) from the washer reservoir (1).

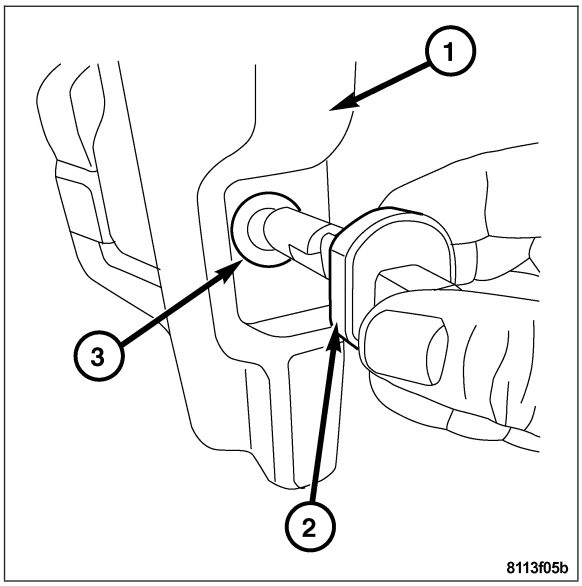

INSTALLATION

1. Insert the washer fluid level switch (2) into the rubber grommet (3) at the rear of the washer reservoir (1).
2. Press the washer fluid level switch inward until fully seated.
3. Install the washer reservoir. **Refer to Page 8R-32**.

WASHER HOSES / TUBES

REMOVAL

1. Remove the right front inner fender liner. Refer to the body section in this manual.
2. Release the washer hose attachment clamp, then remove the washer hose (1) from the washer pump motor (2).

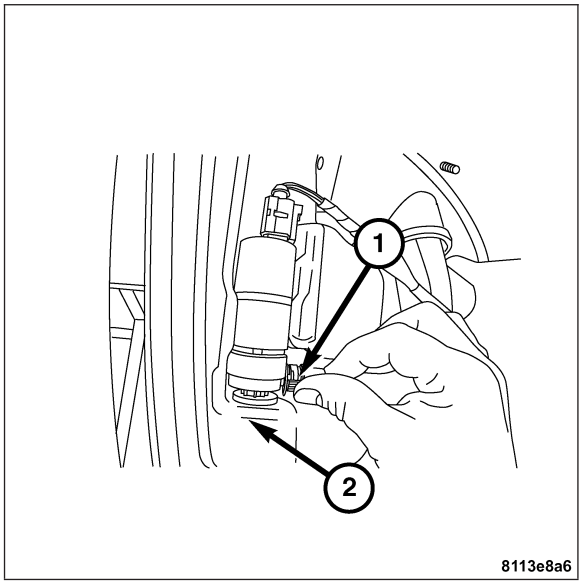

3. Remove the cowl grille. **Refer to Page 23-114**.

4. Remove the washer hose attachment clamps (2) and release the two washer hose retaining clips.
5. Remove the washer hose (1) from the washer nozzles (3).
6. Pull the washer hose from the cowl opening and remove the washer hose from the vehicle.

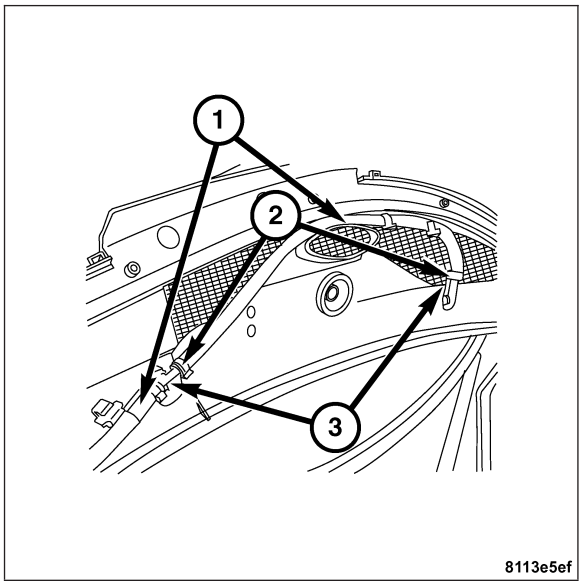

INSTALLATION

1. Route the washer hose (1) through the cowl opening and attach to the washer pump motor (2). Secure the attachment clamp.

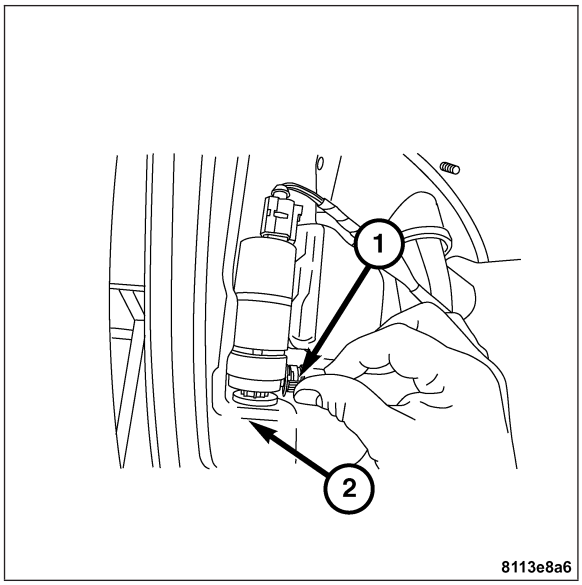

2. Install the washer hose attachment clamp(s) (1) over the hose(s) (2).
3. Install the washer hose(s) (2) to the washer nozzle (3) and secure the washer hose attachment clamp(s) (1) and the two washer hose retaining clips.

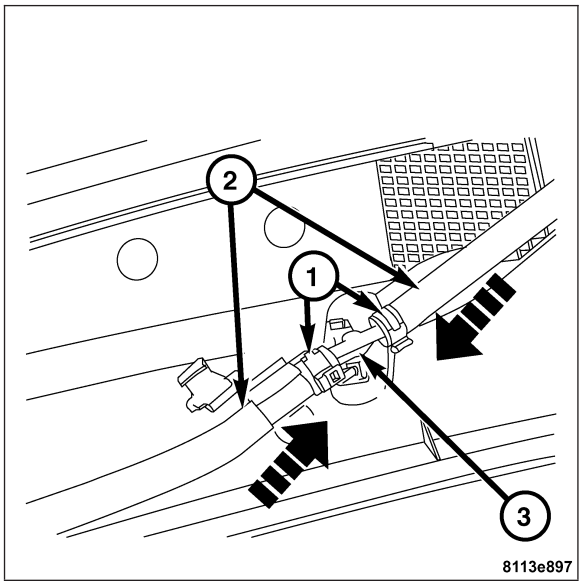

4. Install the cowl grille. **Refer to Page 23-114**.
5. Install the right front inner fender liner. Refer to the body section in this manual.

WASHER NOZZLE

STANDARD PROCEDURE - WASHER NOZZLE AIMING

CAUTION: During adjustment, be careful not to damage inside opening of jet.

Note: Be sure to check that each washer nozzle is properly secured into the cowl grille before attempting any adjustments.

This model is equipped with two adjustable cowl grille mounted washer nozzles. The right and left nozzles are identical. Both nozzles emit two spray streams each onto the wiper sweep pattern. To aim, perform the following steps:

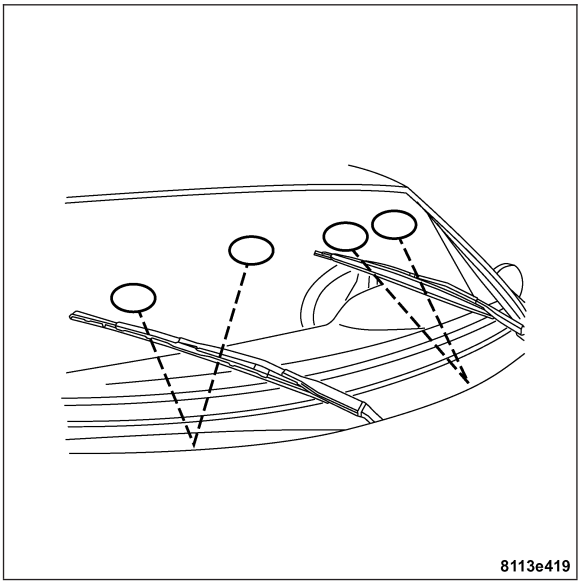

1. Using a safety pin (1), adjust each nozzle jet as required to aim the spray within the wiper sweep pattern.
2. Each adjustment of the jet should be checked by actuating the washer system switch from inside the vehicle.
3. After adjustment, a final check of the spray pattern should be done by actuating the washer system switch from inside the vehicle with the engine idling.

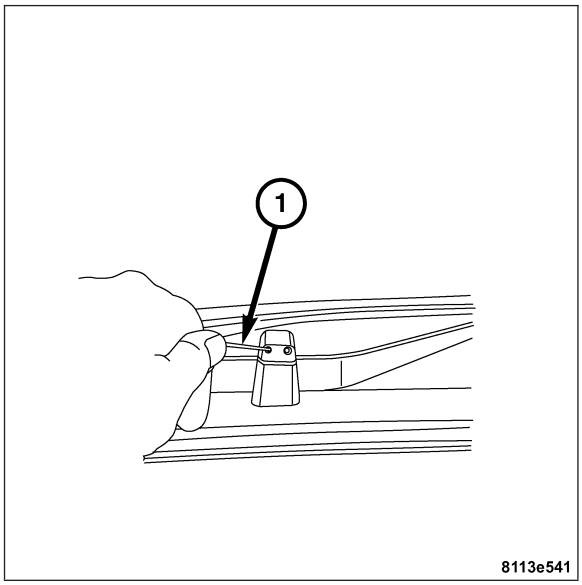

REMOVAL

1. Remove the cowl grille. **Refer to Page 23-114**.
2. Remove the clamp(s) (1) attaching the hose to the washer nozzle (2).

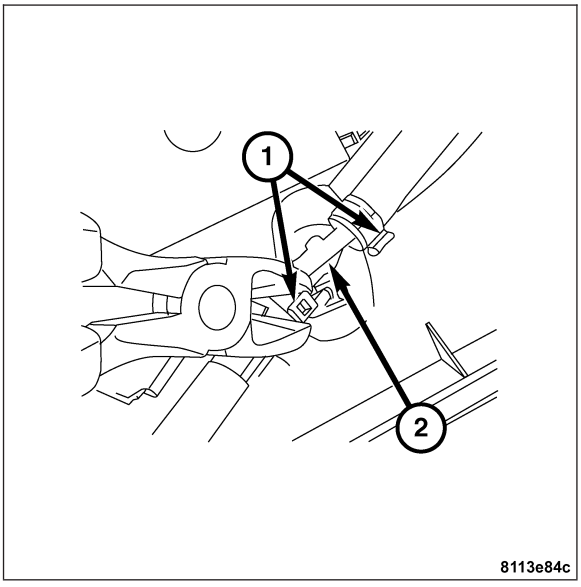

3. Insert a screwdriver into the slot between the washer nozzle (1) and the cowl grille (2) pressing inward to release the retaining clip. Remove the washer nozzle.

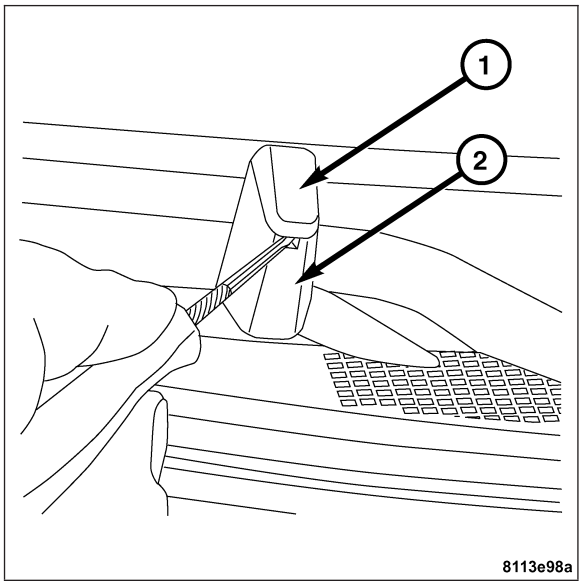

INSTALLATION

1. Install the washer nozzle (1) into the cowl grille (2). Press downward with a rocking motion until the retaining clip is fully seated.

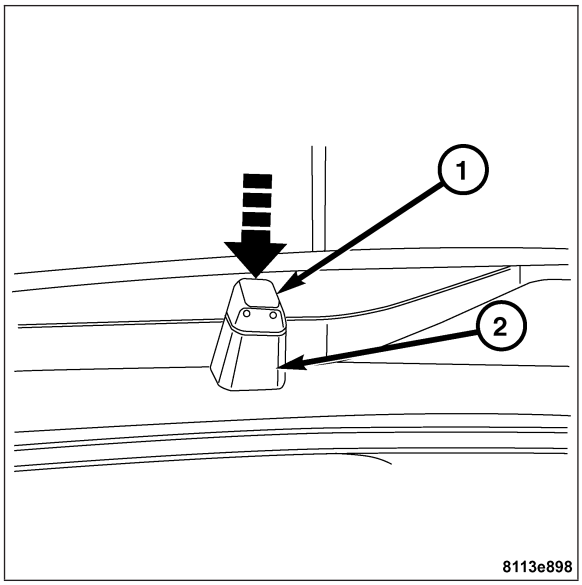

2. Install the washer hose clamps (1) onto the washer hose (2).
3. Install the washer hose (2) over the washer nozzle (3).
4. Tighten the washer clamps (1) onto the washer nozzle (3) allowing approximately 0.78 inch (20 mm) clearance between the washer hoses.

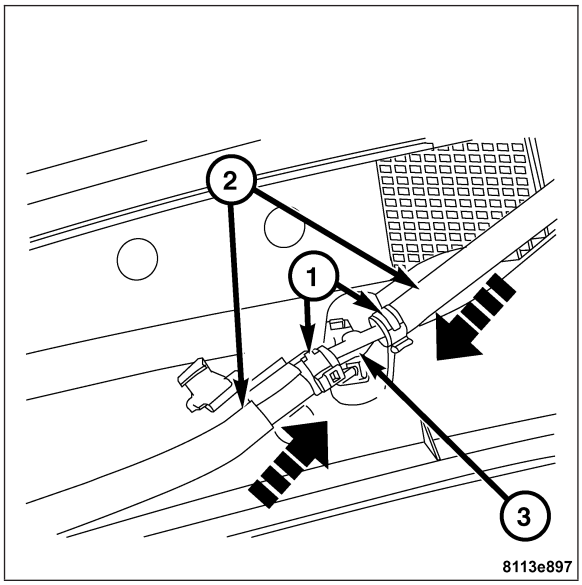

WASHER PUMP MOTOR

REMOVAL

1. Remove the washer reservoir (3). **Refer to Page 8R-32**
2. Gently pry upward on the body of the washer pump motor (1) and pull it out of the rubber grommet (2).

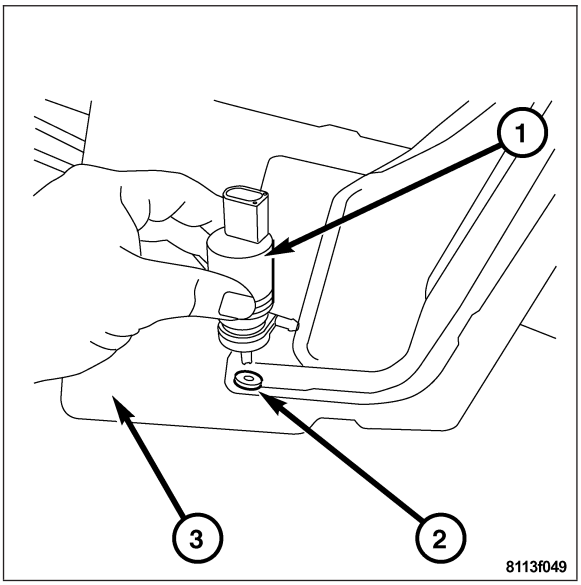

INSTALLATION

1. Insert the washer pump motor into the rubber grommet at the base of the washer reservoir.
2. Press the washer pump motor downward until fully seated.
3. Install the washer reservoir. **Refer to Page 8R-32**.

WASHER RESERVOIR

REMOVAL

1. Disconnect the negative battery cable.
2. Remove the rear half of the right front inner fender liner.
3. Remove the washer fluid filler tube (1) from the washer reservoir.
4. Remove the washer reservoir attachment bolt.
5. Gently pull the washer reservoir (5) forward to release the rubber mounting grommets.
6. Disconnect the washer pump motor harness connector and remove the washer pump motor supply hose from the washer pump motor (3).
7. Disconnect the washer fluid level switch (4) harness connector.
8. Remove the washer reservoir from behind the right front wheel.

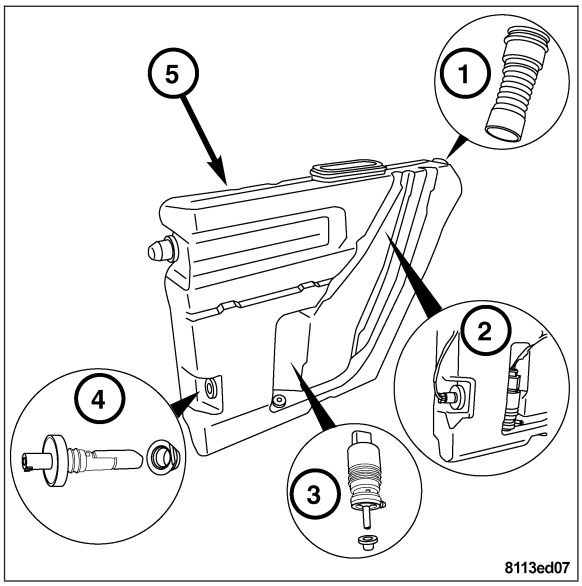

INSTALLATION

1. Connect the washer fluid level switch harness connector.
2. Connect the washer pump motor harness connector and install the washer pump motor supply hose.
3. Insert the washer reservoir behind the right front wheel and align the rubber mounting grommets.
4. Install the washer reservoir attachment bolt (2).
5. Install the washer fluid filler tube (1) to the washer reservoir.
6. Install the right front inner fender liner.
7. Connect the negative battery cable.

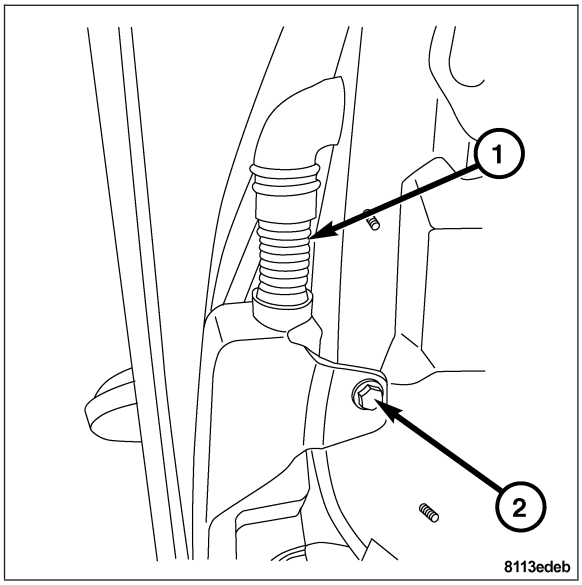

WIPER ARMS

DESCRIPTION

The wiper arms connect the wiper pivots and the wiper blades. They feature an over-center hinge that allows easy access to the windshield glass for cleaning and service operations. A molded black plastic cap fits over the wiper arm attachment nut for protection. The wiper arm cannot be adjusted or repaired. If faulty or damaged, the entire wiper arm must be replaced. For complete removal procedures, see wiper arm removal in this section.

REMOVAL

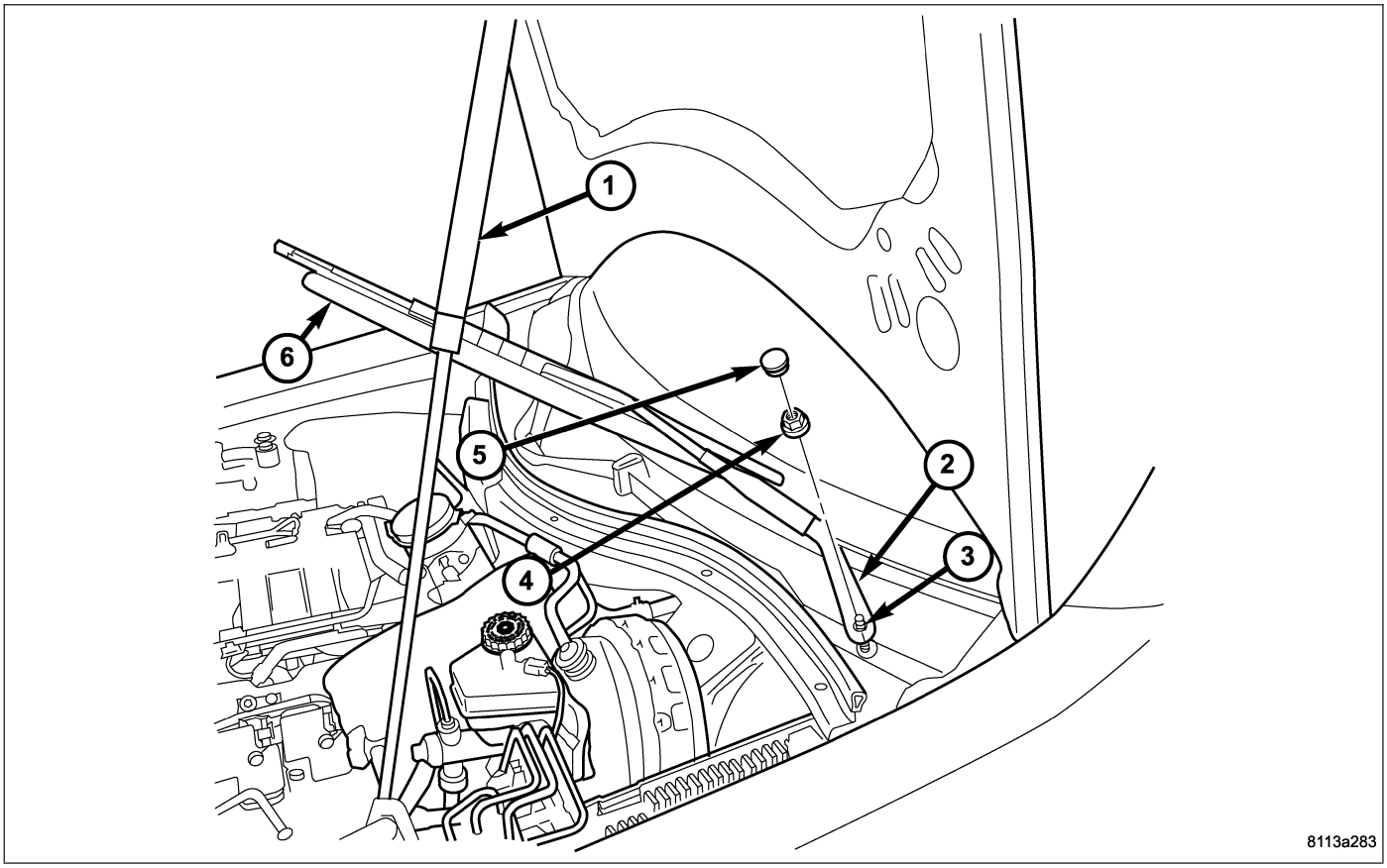

1 - HOOD PROP (EXTENDED POSITION)
2 - WIPER ARM (OVER CENTER POSITION)
3 - WIPER PIVOT SHAFT
4 - WIPER ARM ATTACHMENT NUT
5 - PLASTIC NUT CAP
6 - WIPER BLADE

WARNING: THE WINDSHIELD WIPER MECHANISM CAN PINCH, CRUSH OR, IN EXTREME CASES, EVEN SEVER EXTREMITIES. ALWAYS REMOVE THE IGNITION KEY WHEN WORKING ON WINDSHIELD WIPER MECHANISM.

1. Open the hood, then press the hood prop release button on the hood prop outer sleeve to extend the hood prop fully (1).
2. Lift the wiper arm (2) to its over-center position.
3. Carefully pry the plastic nut cap (5) off of the pivot end of the wiper arm (2).
4. Remove the wiper arm attachment nut (4) from the wiper pivot shaft (3).
5. Use a suitable battery terminal puller to disengage the wiper arm from the wiper pivot shaft tapered splines.
6. Remove the wiper arm pivot end from the wiper pivot shaft (3).

INSTALLATION

1. Install the pivot end of the wiper arm (2) on the wiper pivot shaft.
2. Install the wiper arm attachment nut (1) and secure lightly.

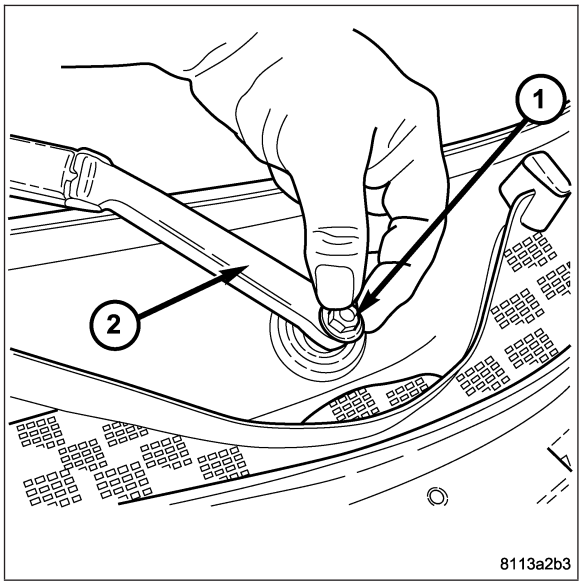

3. Gently set the wiper arm down so the wiper blade touches the glass surface.
4. Align the wiper blade edge (1) with the alignment mark (2) on the windshield and tighten the wiper arm retaining nut.

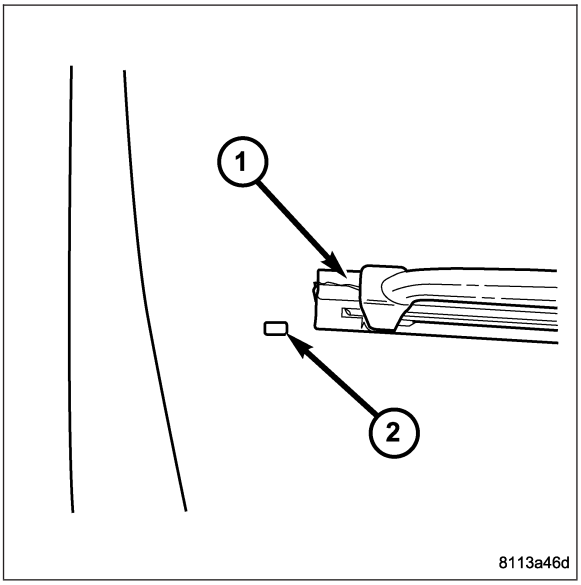

5. Press the plastic nut cap (1) into the wiper arm (2) to cover the wiper arm attachment nut.

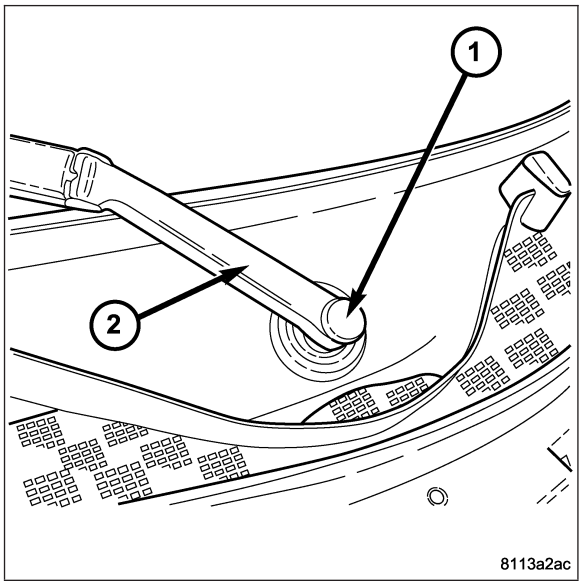

6. Press the hood prop release button (1) and lower the hood prop outer sleeve (2), then close the hood.

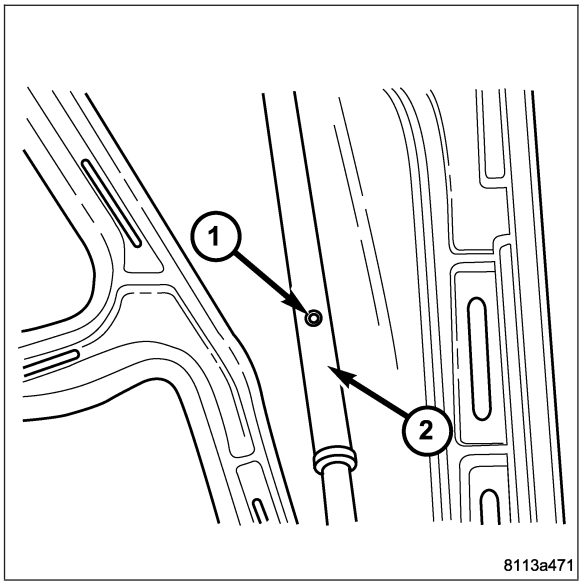

ADJUSTMENTS

ADJUSTMENT - WIPER ARMS

1. Measure the distance between the wiper arm (1) and the wiper blade (3).
2. If the measurement is less than 5 mm, bend the wiper arm bracket (2) in the direction of the windshield until there is a 5 mm clearance.

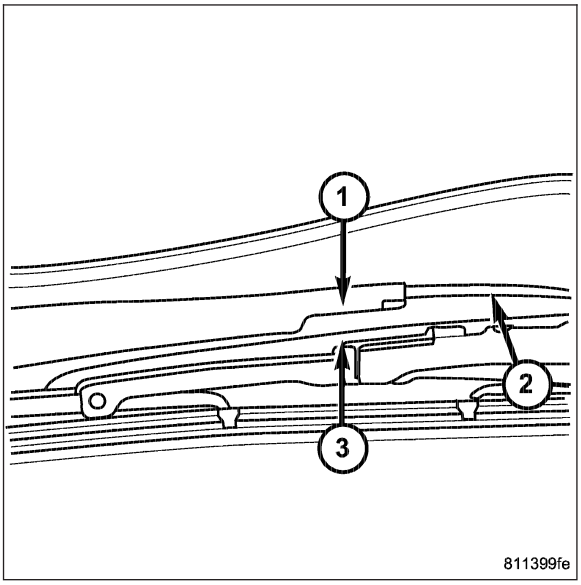

WIPER BLADES

DESCRIPTION

The wiper blades are a rubber element with a steel vertebrae that are mounted on the end of the wiper arm and sweep across the windshield to clear it of water, snow and debris.

OPERATION

When the wiper blade rubber element is exposed to the weather for a long period of time, it tends to lose wiping ability. Periodic cleaning of the wiper blade element is suggested to remove the accumulation of salt and road film. The wiper blades, arms, and windshield should be cleaned with a sponge or cloth and a mild detergent or non-abrasive cleaner. If the wiper blades continue to streak or smear, they should be replaced. The driver blade element is 600 mm in length and the passenger blade element is 550 mm in length.

STANDARD PROCEDURE

WINDSHIELD WIPER BLADE ALIGNMENT

WARNING: THE WINDSHIELD WIPER MECHANISM CAN PINCH, CRUSH OR, IN EXTREME CASES, EVEN SEVER EXTREMITIES. ALWAYS REMOVE THE IGNITION KEY WHEN WORKING ON WINDSHIELD WIPER MECHANISM.

1. Remove both of the wiper arms (2). **Refer to Page 8R-33**.

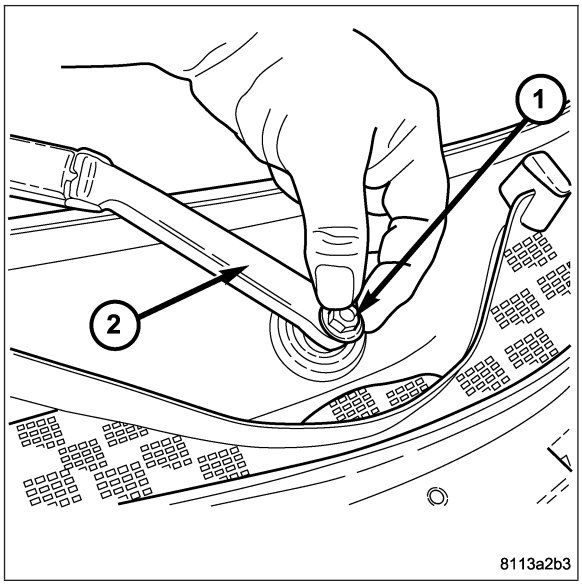

2. Turn the ignition switch to the ACC or ON/RUN position.
3. Rotate the multifunction switch to the LO position for approximately 2 seconds, then rotate back to the OFF position. Ensure the wiper arm pivots have stopped in the park position.
4. Install the wiper arm so the blade (1) is aligned with the mark on the windshield (2) and secure. **Refer to Page 8R-34**.

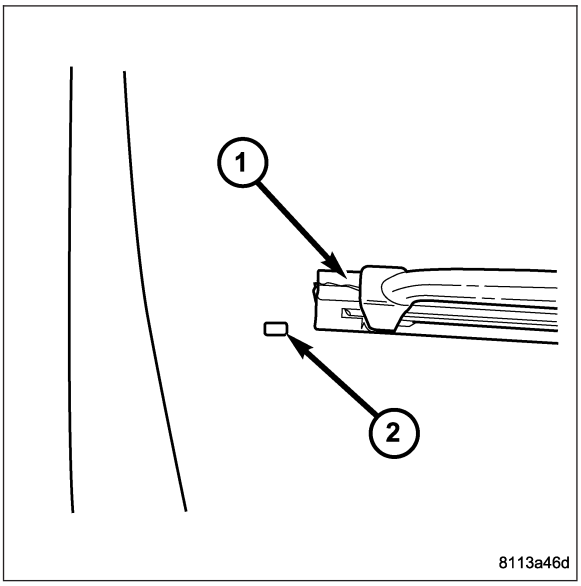

REMOVAL

1. Lift the wiper arm off the glass, and move the wiper arm to the service position.

2. Squeeze the release tab (1) and slide the wiper blade (2) away from the wiper arm.

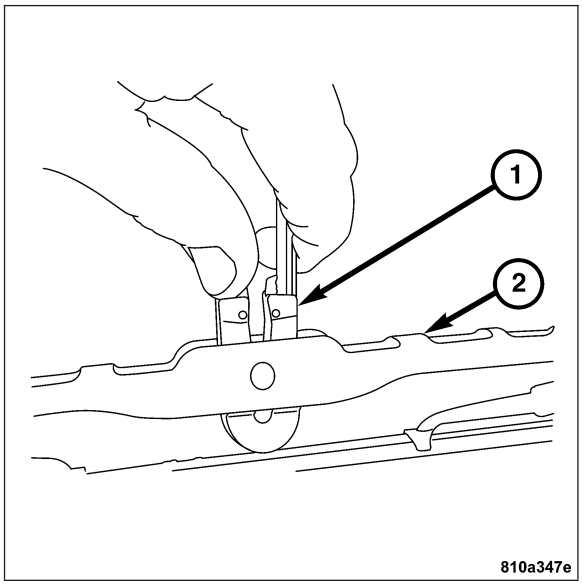

3. Using a small screwdriver (1), gently push the two retainer springs (2) out of their retention slots.

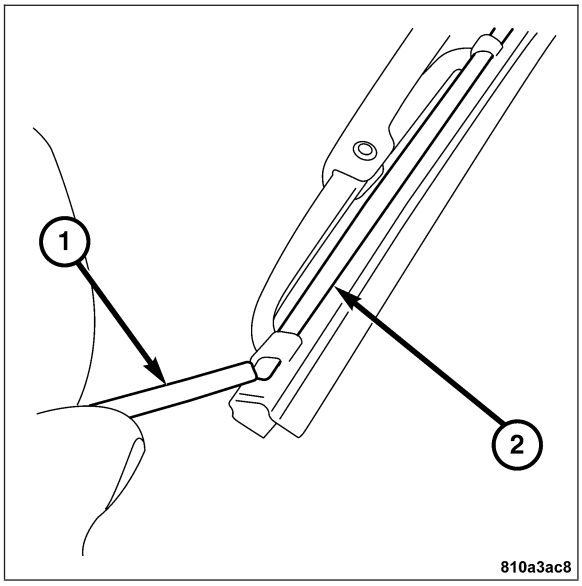

4. Remove the retainer springs (1) by pulling the springs from the opposite end of the wiper blade.

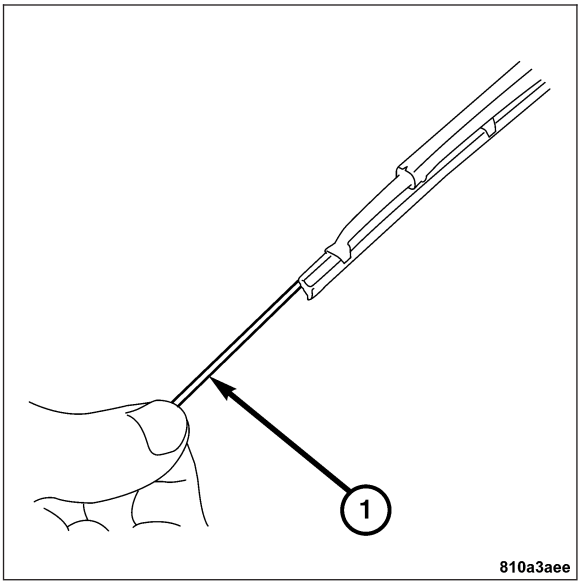

5. Unhook the wiper element (1) from the wiper blade retention slots (2).

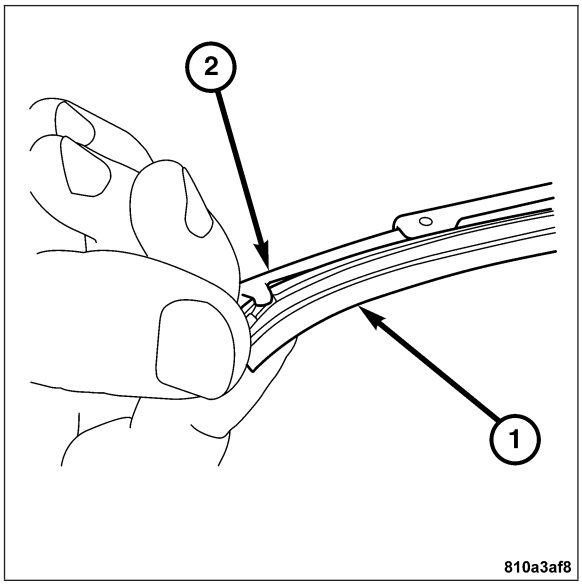

6. Remove the wiper element (1) from the wiper blade by pulling the element through the guides.

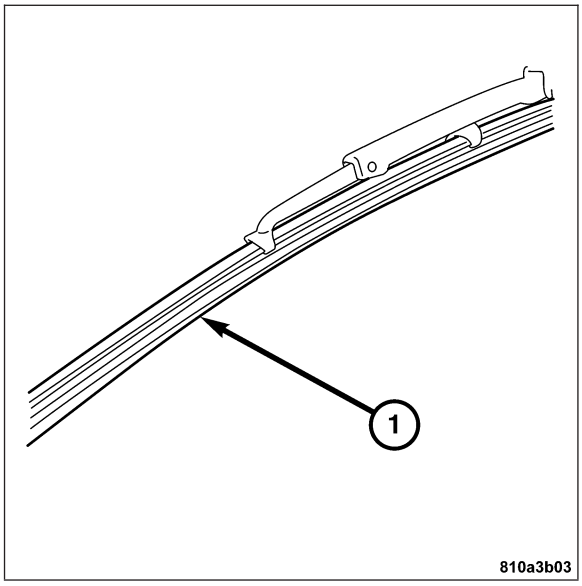

INSTALLATION

1. Install the wiper element (1) onto the wiper blade by sliding the element through the guides.

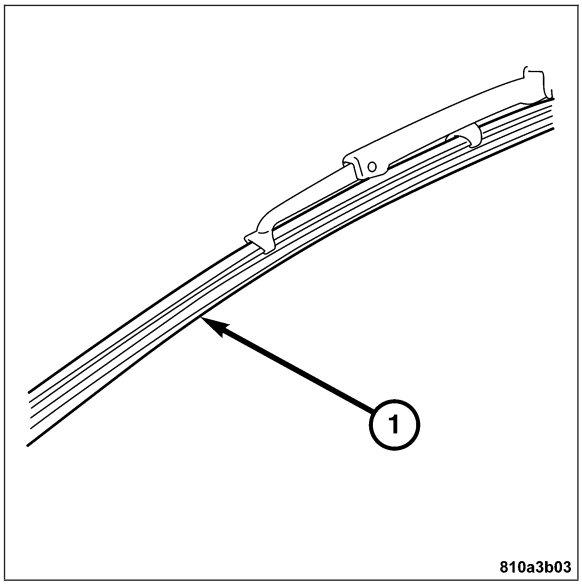

2. Index the wiper element (1) into the wiper blade retention slots (2).

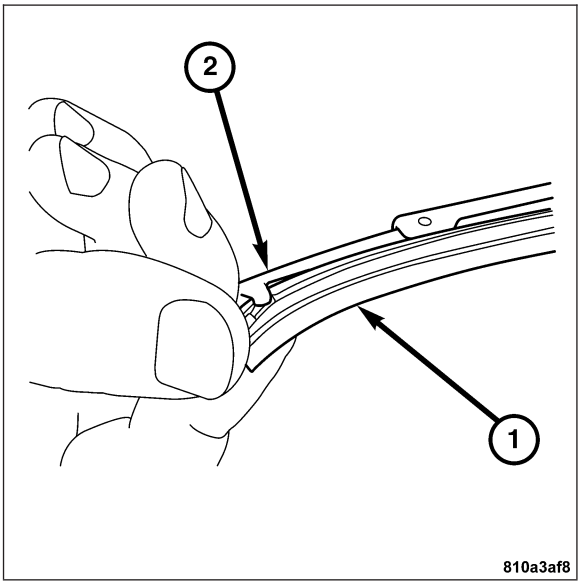

3. Install the retainer springs (1) by sliding the springs onto the edges of the wiper blade.

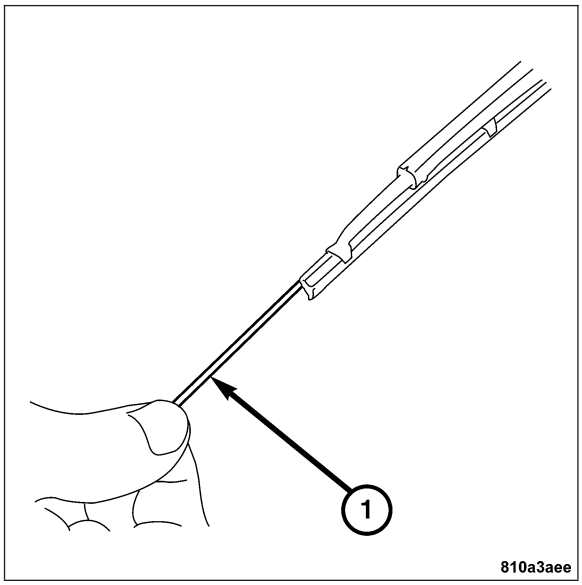

4. Index the two retainer springs (2) into the retention slots.

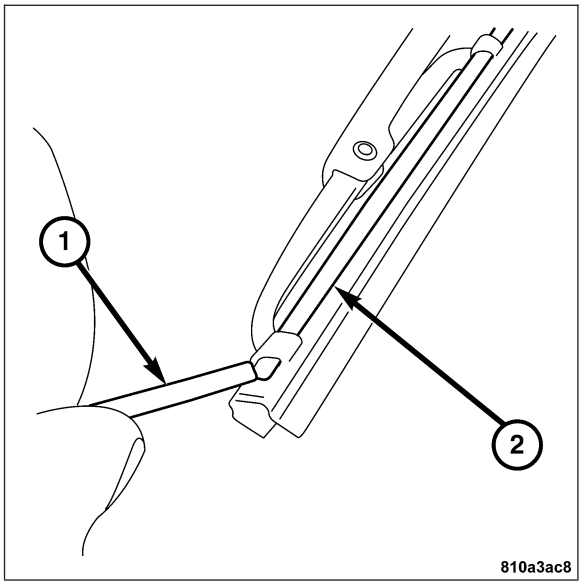

5. Slide the wiper blade (2) onto the wiper arm until fully seated.

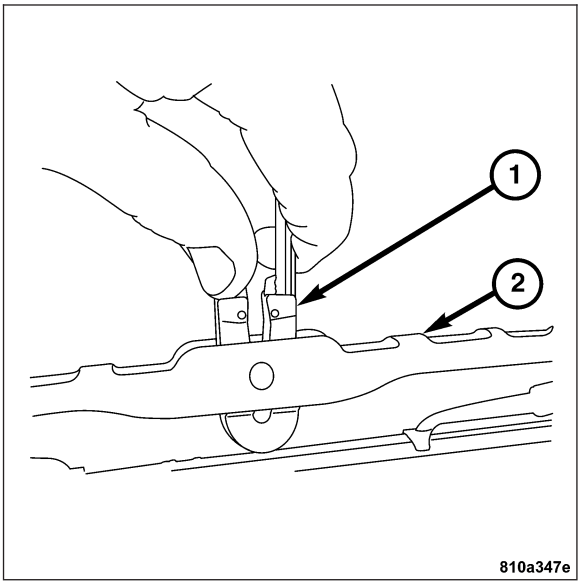

6. Gently return the wiper arm to the operational position.

WIPER LINKAGE

DESCRIPTION

The wiper linkages are integral parts of the wiper module assembly. They cannot be adjusted or repaired. If faulty, worn, or damaged, the entire wiper module must be replaced as an assembly. For complete wiper module removal procedures, see wiper module removal in this section.

WIPER MODULE

DESCRIPTION

The wiper module holds the wiper motor and is secured with two nuts on studs and one bolt, each through rubber isolators to the cowl plenum panel. The ends of the two wiper pivot shafts that protrude through openings in the cowl grille panel and drive the wiper arms are the only visible components of the wiper module on the exterior of the vehicle. The wiper module consists of the following major components:

- Wiper pivot shafts (1).
- Linkage (2).
- Module frame (3).
- Crank arm (4).
- Wiper Motor (5).

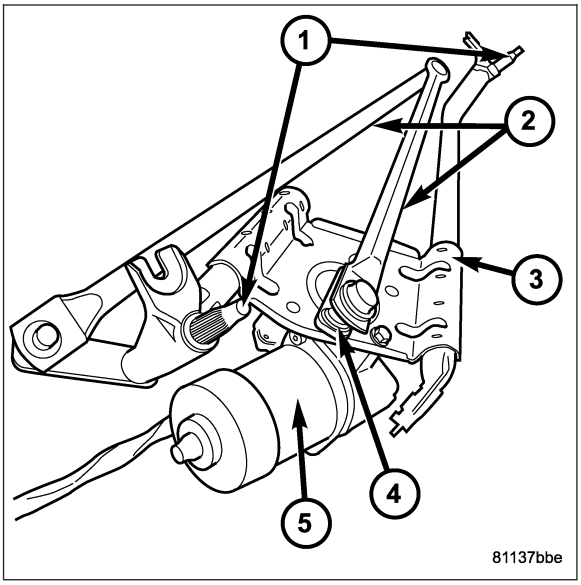

REMOVAL

Note: If possible, cycle the wiper system to position the wiper arms and linkage in the park position before removal is attempted.

1. Disconnect the negative battery cable.
2. Remove the wiper arms. **Refer to Page 8R-33**.
3. Remove the cowl grille. **Refer to Page 23-114**

4. Remove the control module box cover (1).
5. Unlock and disconnect the wiper motor harness connector (2) from the Body Control Module (BCM) (3).

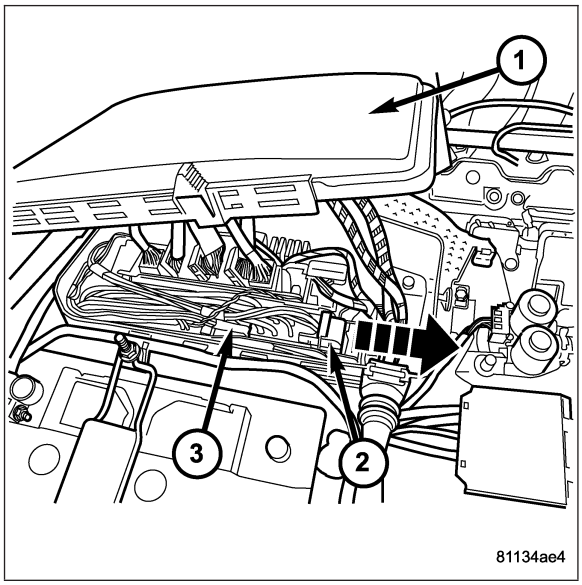

6. Remove the wiper motor harness rubber grommet (1) from the control module box (4).
7. Remove the wiper motor harness rubber grommet (2) from the cowl ledge (3).

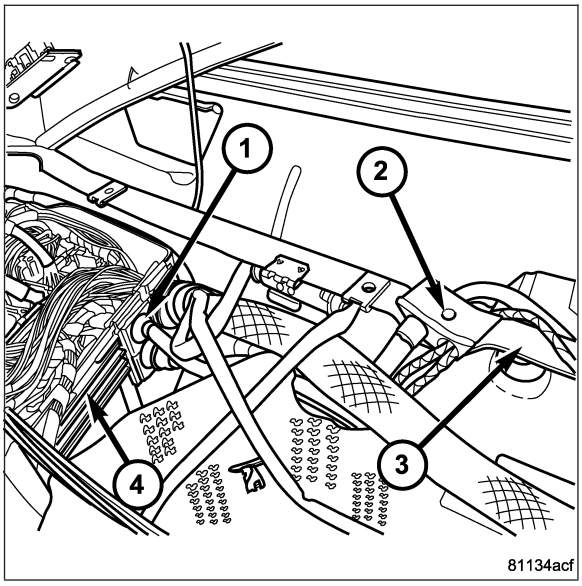

8. Rotate the cowl grille drain (1) counterclockwise, then lift upward and remove from the cowl.

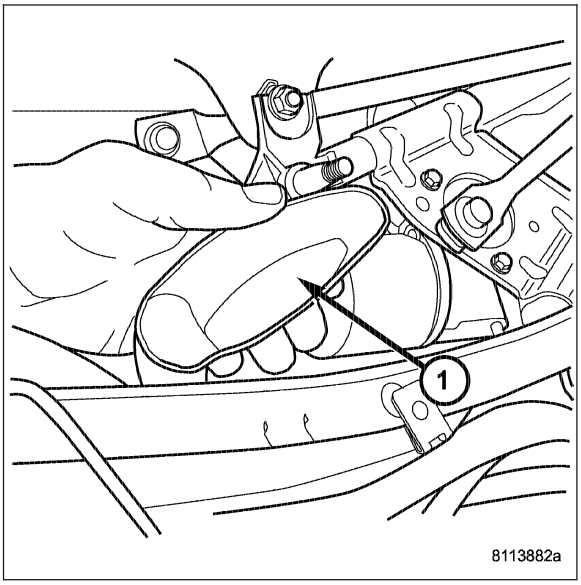

9. Remove the lower wiper module attachment bolt (3) under the cowl ledge (2).
10. Remove the two upper wiper module attachment nuts (1).

CAUTION: Do not allow the wiper module to contact the windshield.

11. Remove the wiper module (4) from the vehicle.

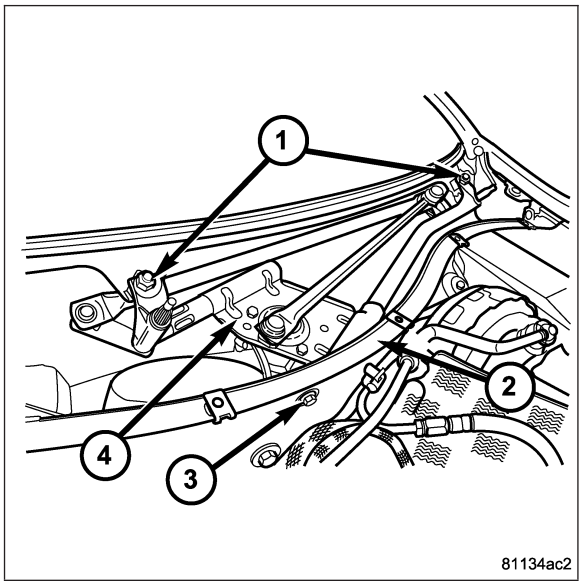

INSTALLATION

CAUTION: Do not allow the wiper module to contact the windshield.

1. Align the wiper module into the cowl over the two upper attachment nut mounting studs (1).
2. Install the two wiper module upper attachment nuts and secure.
3. Install the lower wiper module attachment bolt through the hole (2) in the cowl and secure.

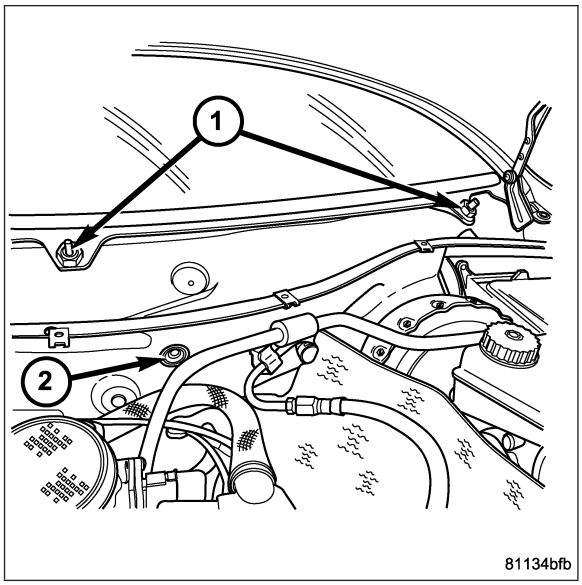

4. Install the cowl grille drain (1) into the cowl and rotate clockwise to secure. Ensure the grommet is seated fully.

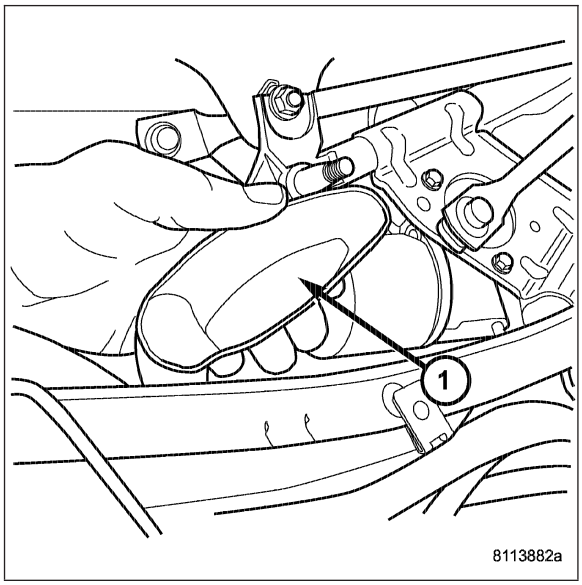

Note: Ensure that the wiper motor harness and its rubber grommets are seated and routed properly to avoid interference with moving parts.

5. Install the wiper motor harness and rubber grommet (2) into the cowl ledge (3).
6. Install the wiper motor harness and rubber grommet (1) into the control module box (4).

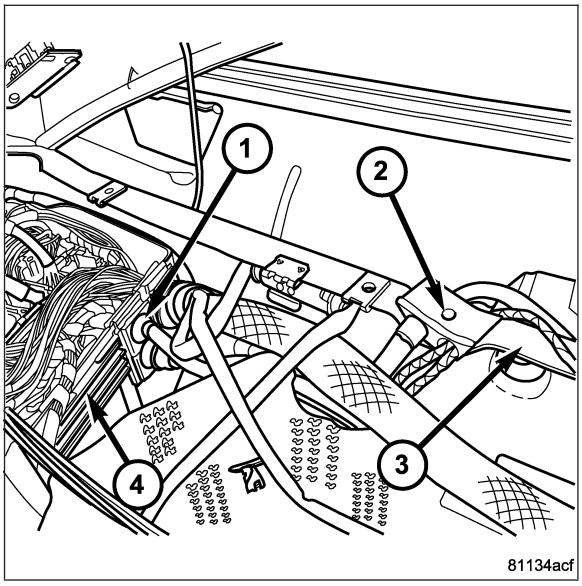

7. Connect the wiper motor harness connector (2) to the Body Control Module (BCM) (3) and slide the locking tab fully over the connector (2).
8. Install the control module box cover (1).

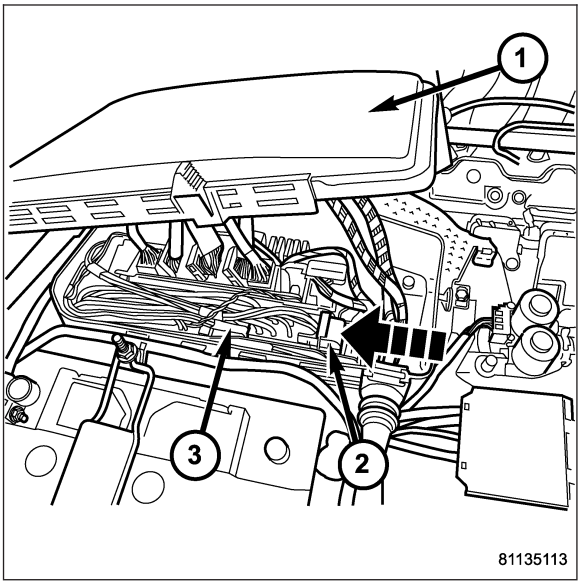

9. Install the cowl grille. **Refer to Page 23-114**.

10. Install the wiper arms. **Refer to Page 8R-34**.
11. Connect the negative battery cable.

WIPER MOTOR

STANDARD PROCEDURE - WIPER MOTOR SYNCHRONIZE

Note: Ensure the multifunction switch is in the OFF position before attempting this procedure.

1. Connect the battery negative cable.
2. Connect the wiper motor harness connector (1) to the Body Control Module (BCM) (2).

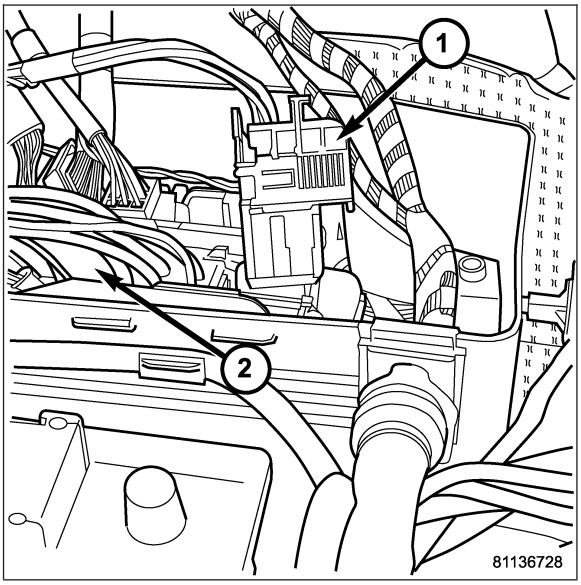

CAUTION: Be sure to keep the wiper motor clear from surrounding wiper system linkage and unsecured harness connectors.

3. Hold the wiper motor in one hand.
4. Turn the ignition switch to the ON/RUN position.
5. Rotate the multifunction switch to the low position.
6. Rotate the multifunction switch back to the OFF position and wait until the wiper motor stops. It should now be in the park position (1) and prepared for wiper motor crank installation.
7. Turn the ignition switch to the OFF/LOCK position.
8. Disconnect the wiper motor harness connector from the BCM.
9. Disconnect the battery negative cable.

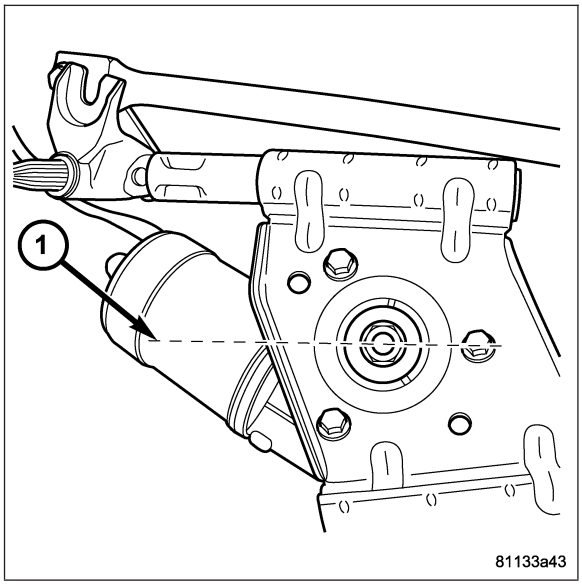

REMOVAL

WARNING: WINDSHIELD WIPER MECHANISM CAN PINCH, CRUSH OR, IN EXTREME CASES, EVEN SEVER EXTREMITIES. ALWAYS REMOVE IGNITION KEY WHEN WORKING ON WINDSHIELD WIPER MECHANISM.

1. Disconnect the negative battery cable.
2. Remove the wiper module (1) from the vehicle. **Refer to Page 8R-42**

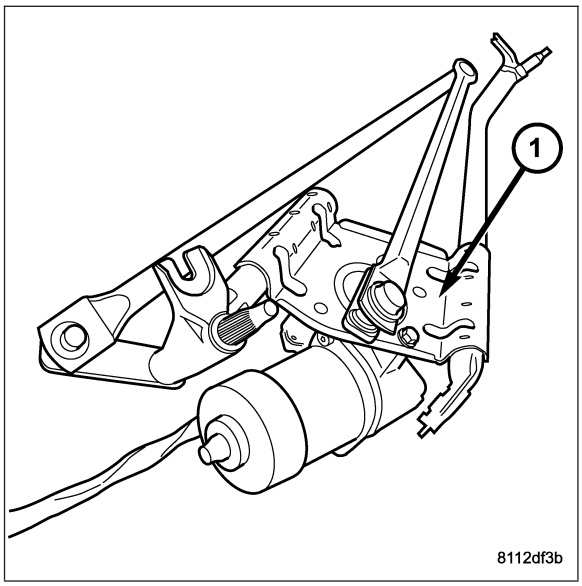

3. Remove the crank arm attachment nut (1) from the wiper motor shaft (2).
4. Scribe a reference mark (3) on both the wiper module and the crank arm for proper alignment during reassembly.
5. Press the crank arm (4) off of the wiper motor shaft (2).

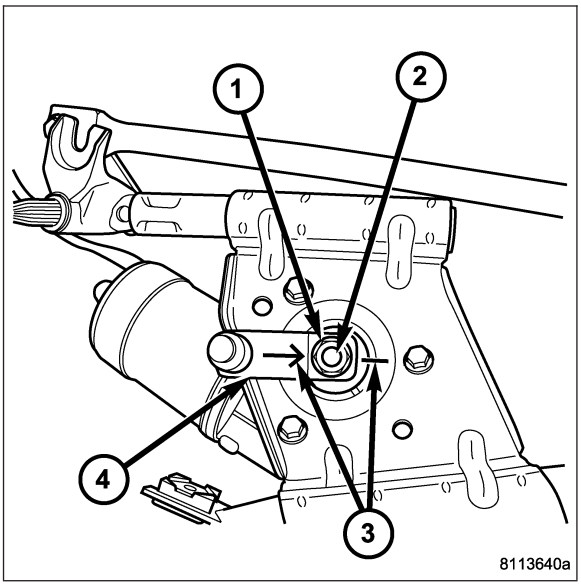

6. Remove the three wiper motor attachment bolts (1) from the wiper module (2).
7. Remove the wiper motor (3) from the wiper module (2).

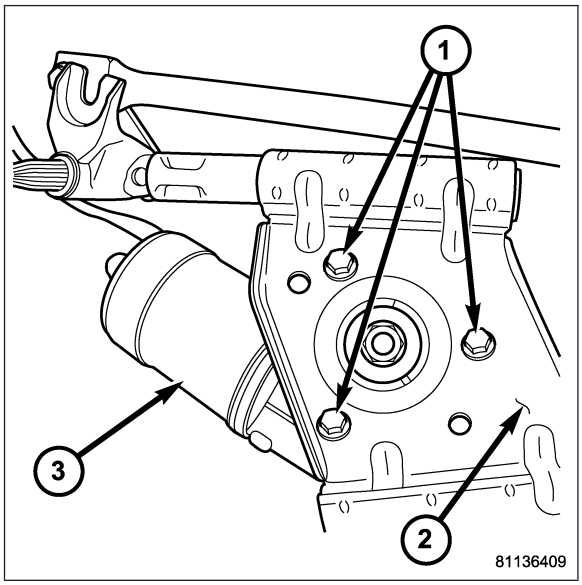

INSTALLATION

Before installing the wiper motor, synchronize the wiper motor shaft into the park position. **Refer to Page 8R-46**.

1. Insert the wiper motor (3) into the wiper motor module (2).
2. Install the three wiper motor attachment bolts (1) and torque to 11 N·m (8.1 ft. lbs.).

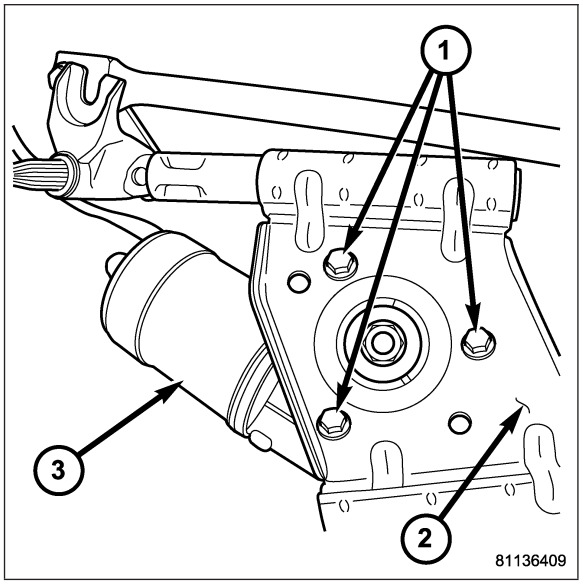

3. Align the wiper motor crank arm (1) onto the wiper motor shaft in the park position (3) and press into place.
4. Install the wiper motor crank arm attachment nut (2) and torque to 26 N·m (19.1 ft. lbs.).
5. Install the wiper motor module into the vehicle. **Refer to Page 8R-44**.

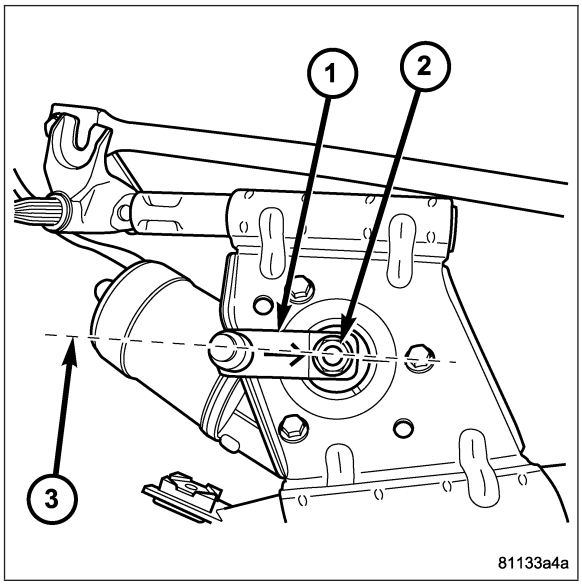

WIRING

TABLE OF CONTENTS

	page		page
WIRING DIAGRAM INFORMATION	8W-01-1	WARNING CHIME	8W-46-1
COMPONENT INDEX	8W-02-1	AUDIO SYSTEM	8W-47-1
POWER DISTRIBUTION	8W-10-1	REAR WINDOW DEFOGGER	8W-48-1
GROUND DISTRIBUTION	8W-15-1	TIRE PRESSURE MONITOR	8W-49-1
DATA LINK CONNECTOR	8W-17-1	FRONT LIGHTING	8W-50-1
BUS COMMUNICATIONS	8W-18-1	REAR LIGHTING	8W-51-1
CHARGING SYSTEM	8W-20-1	TURN SIGNALS	8W-52-1
STARTING SYSTEM	8W-21-1	WIPERS	8W-53-1
ENGINE COOLING	8W-29-1	REAR SPOILER	8W-55-1
FUEL/IGNITION SYSTEM	8W-30-1	POWER WINDOWS	8W-60-1
TRANSMISSION CONTROL SYSTEM	8W-31-1	POWER DOOR LOCKS	8W-61-1
VEHICLE SPEED CONTROL	8W-33-1	POWER MIRRORS	8W-62-1
ANTILOCK BRAKES	8W-35-1	POWER SEATS	8W-63-1
VEHICLE THEFT SECURITY SYSTEM	8W-39-1	REMOTE KEYLESS ENTRY	8W-65-1
INSTRUMENT CLUSTER	8W-40-1	SPLICE INFORMATION	8W-70-1
HORN/CIGAR LIGHTER	8W-41-1	CONNECTOR PIN-OUTS	8W-80-1
AIR CONDITIONING-HEATER	8W-42-1	CONNECTOR/GROUND/SPLICE LOCATION	8W-91-1
AIRBAG SYSTEM	8W-43-1	POWER DISTRIBUTION	8W-97-1
INTERIOR LIGHTING	8W-44-1		
BODY CONTROL MODULE	8W-45-1		

8W-01 WIRING DIAGRAM INFORMATION

TABLE OF CONTENTS

page

WIRING DIAGRAM INFORMATION
DESCRIPTION
DESCRIPTION - HOW TO USE WIRING DIAGRAMS 1
DESCRIPTION - CIRCUIT INFORMATION 5
DESCRIPTION - SECTION IDENTIFICATION AND INFORMATION 5
DESCRIPTION - CONNECTOR, GROUND AND SPLICE INFORMATION 6
WARNING
WARNINGS - GENERAL 7
DIAGNOSIS AND TESTING - WIRING HARNESS 7
STANDARD PROCEDURE
STANDARD PROCEDURE - ELECTROSTATIC DISCHARGE (ESD) SENSITIVE DEVICES 9
STANDARD PROCEDURE - TESTING OF VOLTAGE POTENTIAL 9
STANDARD PROCEDURE - TESTING FOR CONTINUITY 10

page

STANDARD PROCEDURE - TESTING FOR A SHORT TO GROUND 10
STANDARD PROCEDURE - TESTING FOR A SHORT TO GROUND ON FUSES POWERING SEVERAL LOADS 10
STANDARD PROCEDURE - TESTING FOR A VOLTAGE DROP 11
CONNECTOR
REMOVAL 11
INSTALLATION 11
DIODE
REMOVAL 12
INSTALLATION 12
TERMINAL
REMOVAL 12
INSTALLATION 12
WIRE
STANDARD PROCEDURE - WIRE SPLICING . . 13

WIRING DIAGRAM INFORMATION

DESCRIPTION

DESCRIPTION - HOW TO USE WIRING DIAGRAMS

DaimlerChrysler Corporation wiring diagrams are designed to provide information regarding the vehicles wiring content. In order to effectively use the wiring diagrams to diagnose and repair DaimlerChrysler Corporation vehicles, it is important to understand all of their features and characteristics.

Diagrams are arranged such that the power (B+) side of the circuit is placed near the top of the page, and the ground (B-) side of the circuit is placed near the bottom of the page.

All switches, components, and modules are shown in the at rest position with the doors closed and the key removed from the ignition.

Components are shown two ways. A solid line around a component indicates that the component is complete. A dashed line around the component indicates that the component is being shown is not complete. Incomplete components have a reference number to indicate the page where the component is shown complete.

It is important to realize that no attempt is made on the diagrams to represent components and wiring as they appear on the vehicle. For example, a short piece of wire is treated the same as a long one. In addition, switches and other components are shown as simply as possible, with regard to function only.

SYMBOLS

International symbols are used throughout the wiring diagrams. These symbols are consistent with those being used around the world.

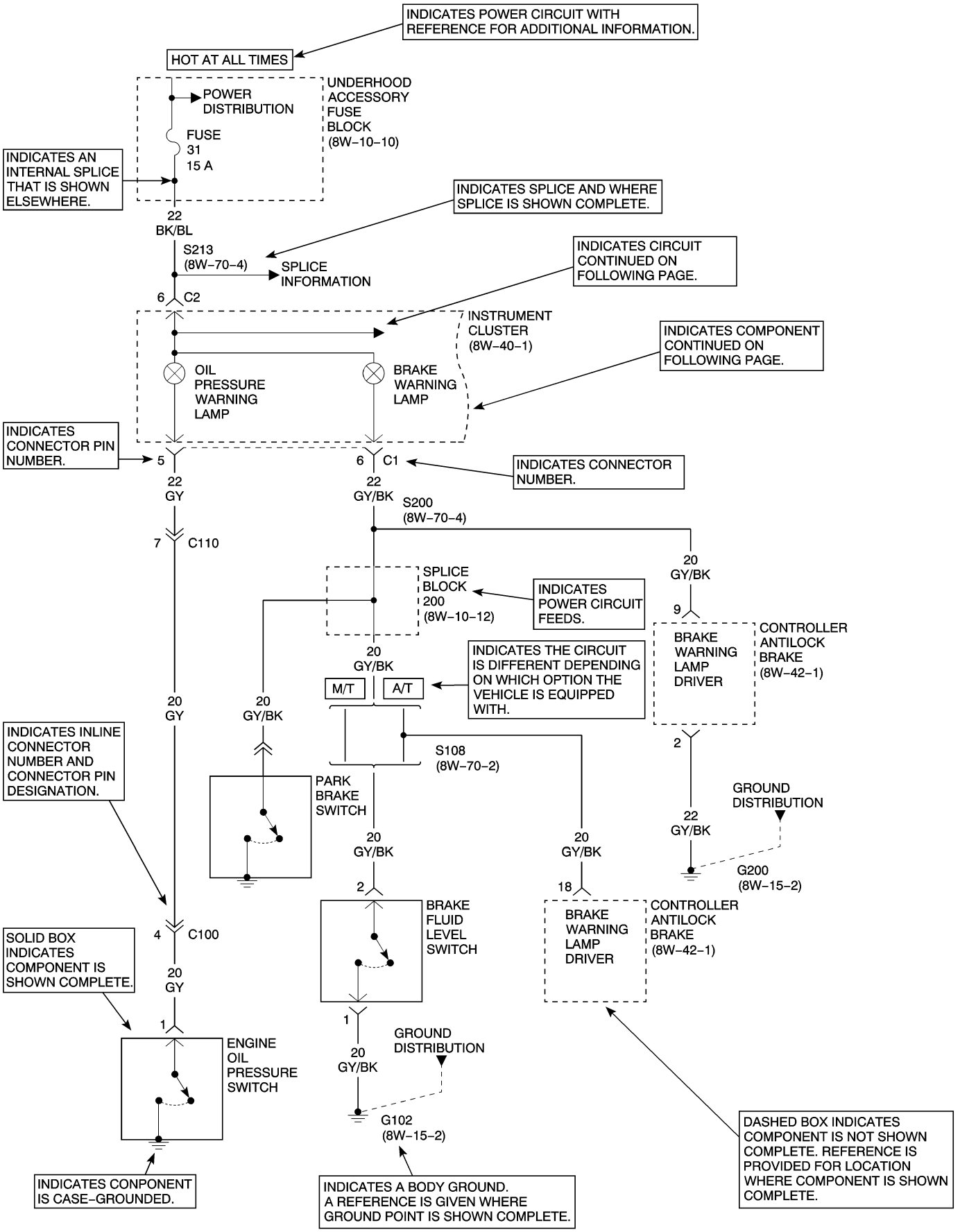

Fig. 1 WIRING DIAGRAM EXAMPLE 1

8116d303

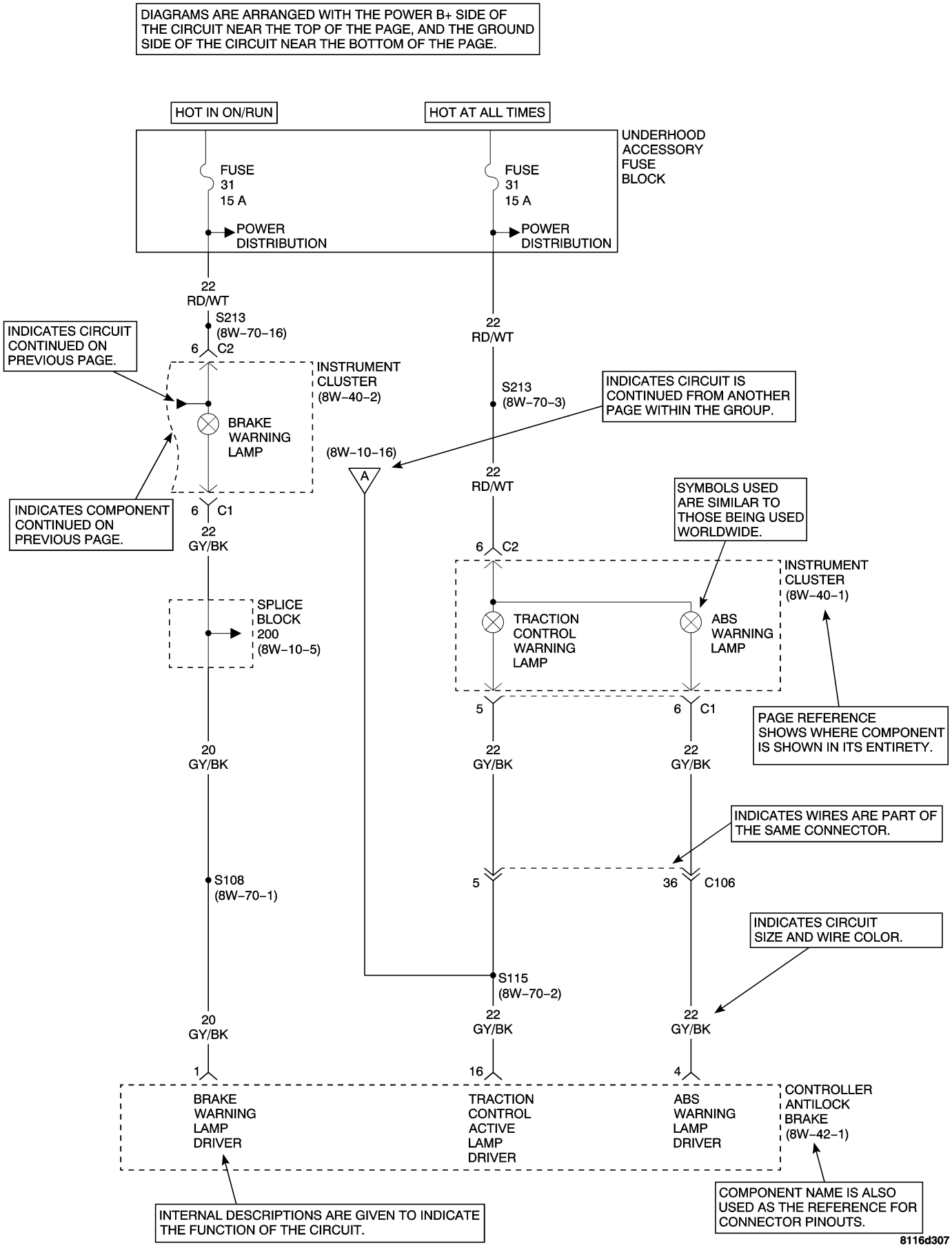

Fig. 2 WIRING DIAGRAM EXAMPLE 2

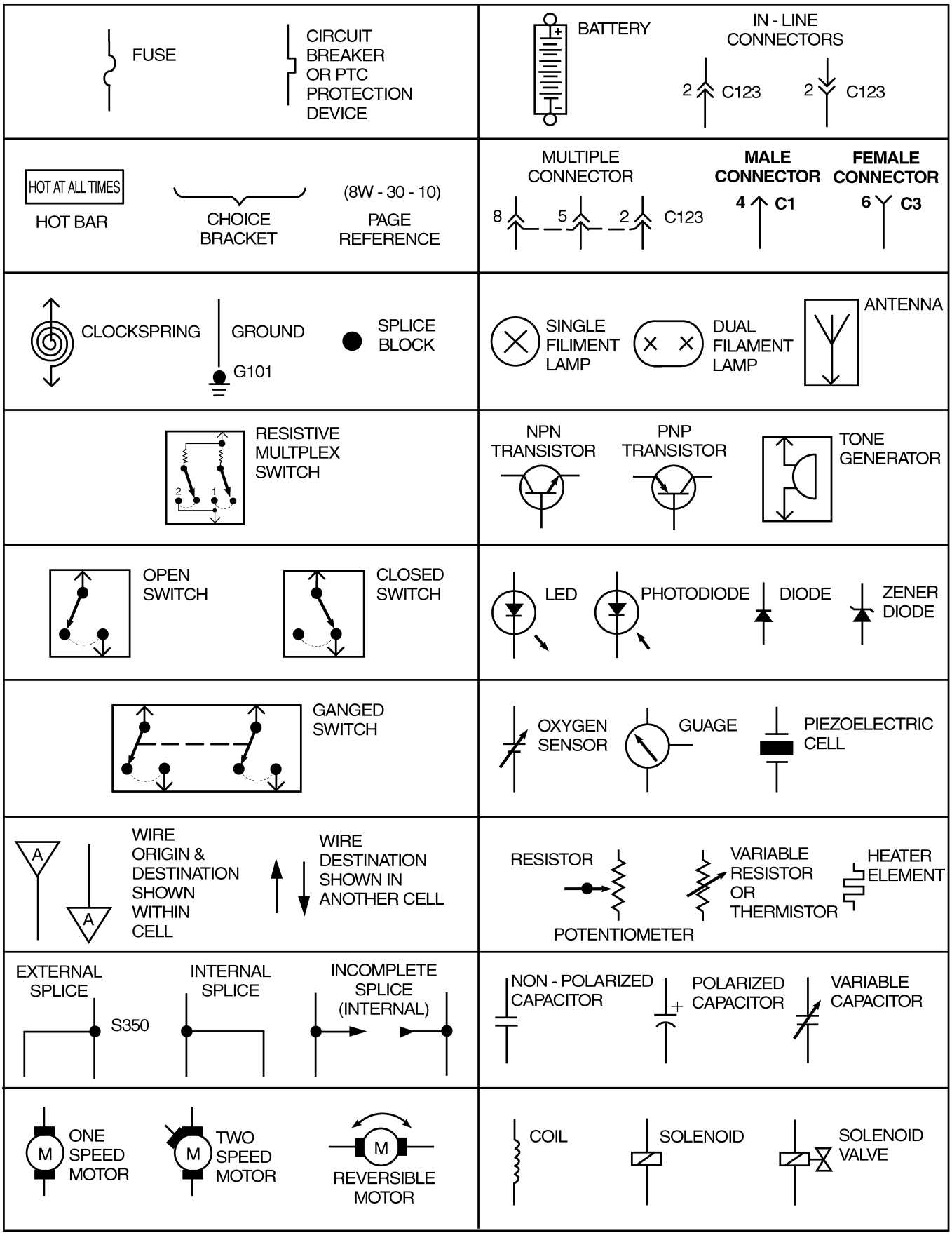
FUSE
CIRCUIT BREAKER OR PTC PROTECTION DEVICE
BATTERY
IN - LINE CONNECTORS
2 C123
2 C123
HOT AT ALL TIMES
HOT BAR
CHOICE BRACKET
(8W - 30 - 10)
PAGE REFERENCE
MULTIPLE CONNECTOR
8 5 2 C123
MALE CONNECTOR
4 C1
FEMALE CONNECTOR
6 C3
CLOCKSPRING
GROUND
G101
SPLICE BLOCK
SINGLE FILIMENT LAMP
DUAL FILAMENT LAMP
ANTENNA
RESISTIVE MULTPLEX SWITCH
2
1
NPN TRANSISTOR
PNP TRANSISTOR
TONE GENERATOR
OPEN SWITCH
CLOSED SWITCH
LED
PHOTODIODE
DIODE
ZENER DIODE
GANGED SWITCH
OXYGEN SENSOR
GUAGE
PIEZOELECTRIC CELL
A
A
WIRE ORIGIN & DESTINATION SHOWN WITHIN CELL
WIRE DESTINATION SHOWN IN ANOTHER CELL
RESISTOR
POTENTIOMETER
VARIABLE RESISTOR OR THERMISTOR
HEATER ELEMENT
EXTERNAL SPLICE
S350
INTERNAL SPLICE
INCOMPLETE SPLICE (INTERNAL)
NON - POLARIZED CAPACITOR
POLARIZED CAPACITOR
VARIABLE CAPACITOR
M
ONE SPEED MOTOR
M
TWO SPEED MOTOR
M
REVERSIBLE MOTOR
COIL
SOLENOID
SOLENOID VALVE

81195f05

TERMINOLOGY

This is a list of terms and definitions used in the wiring diagrams.

LHD . . . . . Left Hand Drive Vehicles
RHD . . . . . Right Hand Drive Vehicles
A/T . . . . . Automatic Transmissions-Rear Wheel Drive
M/T . . . . . Manual Transmissions-Rear Wheel Drive
Export . . . . . Vehicles Built For Sale In Markets Other Than North America
All Except Europe . . . . . Vehicles Built For Sale In Markets Other Than Europe

DESCRIPTION - CIRCUIT INFORMATION

Each wire shown in the diagrams contains a code which identifies gage of wire, and color.

WIRE COLOR CODE CHART

COLOR CODE	COLOR
BL	BLUE
BK	BLACK
BR	BROWN
DB	DARK BLUE
DG	DARK GREEN
GY	GRAY
LB	LIGHT BLUE
LG	LIGHT GREEN
OR	ORANGE
PK	PINK
RD	RED
TN	TAN
VT	VIOLET
WT	WHITE
YL	YELLOW
*	WITH TRACER

DESCRIPTION - SECTION IDENTIFICATION AND INFORMATION

The wiring diagrams are grouped into individual sections. If a component is most likely found in a particular group, it will be shown complete (all wires, connectors, and pins) within that group. For example, the Auto Shutdown Relay is most likely to be found in Group 30, so it is shown there complete. It can, however, be shown partially in another group if it contains some associated wiring.

Splice diagrams in Section 8W-70 show the entire splice and provide references to other sections the splices serves. Section 8W-70 only contains splice diagrams that are not shown in their entirety somewhere else in the wiring diagrams.

Section 8W-80 shows each connector and the circuits involved with that connector. The connectors are identified using the name/number on the diagram pages.

WIRING SECTION CHART

GROUP	TOPIC
8W-01 thru 8W-09	General information and Diagram Overview
8W-10 thru 8W-19	Main Sources of Power and Vehicle Grounding
8W-20 thru 8W-29	Starting and Charging
8W-30 thru 8W-39	Powertrain/Drivetrain Systems
8W-40 thru 8W-49	Body Electrical items and A/C
8W-50 thru 8W-59	Exterior Lighting, Wipers and Trailer Tow
8W-60 thru 8W-69	Power Accessories
8W-70	Splice Information
8W-80	Connector Pin Outs
8W-91	Connector, Ground and Splice Locations

DESCRIPTION - CONNECTOR, GROUND AND SPLICE INFORMATION

CAUTION: Not all connectors are serviced. Some connectors are serviced only with a harness. A typical example might be the Supplemental Restraint System connectors. Always check parts availability before attempting a repair.

IDENTIFICATION

In-line connectors are identified by a number, as follows:

- In-line connectors located in the engine compartment are C100 series numbers
- In-line connectors located in the Instrument Panel area are C200 series numbers.
- In-line connectors located in the body are C300 series numbers.
- Jumper harness connectors are C400 series numbers.
- Grounds and ground connectors are identified with a “G” and follow the same series numbering as the in-line connectors.
- Splices are identified with an “S” and follow the same series numbering as the in-line connectors.
- Component connectors are identified by the component name instead of a number. Multiple connectors on a component use a C1, C2, etc. identifier.

LOCATIONS

Section 8W-91 contains connector/ground/splice location illustrations. The illustrations contain the connector name (or number)/ground number/splice number and component identification. Connector/ground/splice location charts in section 8W-91 reference the figure numbers of the illustrations.

The abbreviation T/O is used in the component location section to indicate a point in which the wiring harness branches out to a component. The abbreviation N/S means Not Shown in the illustrations

WARNING

WARNINGS - GENERAL

WARNINGS provide information to prevent personal injury and vehicle damage. Below is a list of general warnings that should be followed any time a vehicle is being serviced.

WARNING: ALWAYS WEAR SAFETY GLASSES FOR EYE PROTECTION.

WARNING: USE SAFETY STANDS ANYTIME A PROCEDURE REQUIRES BEING UNDER A VEHICLE.

WARNING: BE SURE THAT THE IGNITION SWITCH ALWAYS IS IN THE OFF POSITION, UNLESS THE PROCEDURE REQUIRES IT TO BE ON.

WARNING: SET THE PARKING BRAKE WHEN WORKING ON ANY VEHICLE. AN AUTOMATIC TRANSMISSION SHOULD BE IN PARK. A MANUAL TRANSMISSION SHOULD BE IN NEUTRAL.

WARNING: OPERATE THE ENGINE ONLY IN A WELL-VENTILATED AREA.

WARNING: KEEP AWAY FROM MOVING PARTS WHEN THE ENGINE IS RUNNING, ESPECIALLY THE FAN AND BELTS.

WARNING: TO PREVENT SERIOUS BURNS, AVOID CONTACT WITH HOT PARTS SUCH AS THE RADIATOR, EXHAUST MANIFOLD(S), TAIL PIPE, CATALYTIC CONVERTER AND MUFFLER.

WARNING: DO NOT ALLOW FLAME OR SPARKS NEAR THE BATTERY. GASES ARE ALWAYS PRESENT IN AND AROUND THE BATTERY.

WARNING: ALWAYS REMOVE RINGS, WATCHES, LOOSE HANGING JEWELRY AND AVOID LOOSE CLOTHING.

DIAGNOSIS AND TESTING - WIRING HARNESS

TROUBLESHOOTING TOOLS

When diagnosing a problem in an electrical circuit there are several common tools necessary. These tools are listed and explained below.

- Jumper Wire - This is a test wire used to connect two points of a circuit. It can be used to bypass an open in a circuit.

WARNING: NEVER USE A JUMPER WIRE ACROSS A LOAD, SUCH AS A MOTOR, CONNECTED BETWEEN A BATTERY FEED AND GROUND.

- Voltmeter - Used to check for voltage on a circuit. Always connect the black lead to a known good ground and the red lead to the positive side of the circuit.

CAUTION: Most of the electrical components used in today's vehicles are Solid State. When checking voltages in these circuits, use a meter with a 10 - megohm or greater impedance rating.

- Ohmmeter - Used to check the resistance between two points of a circuit. Low or no resistance in a circuit means good continuity.

CAUTION: Most of the electrical components used in today's vehicles are Solid State. When checking resistance in these circuits use a meter with a 10 - megohm or greater impedance rating. In addition, make sure the power is disconnected from the circuit. Circuits that are powered up by the vehicle's electrical system can cause damage to the equipment and provide false readings.

- Probing Tools - These tools are used for probing terminals in connectors. Select the proper size tool from Special Tool Package 6807, and insert the probing end (2) into the terminal being tested. Use the other end of the tool(1) to insert the meter probe.

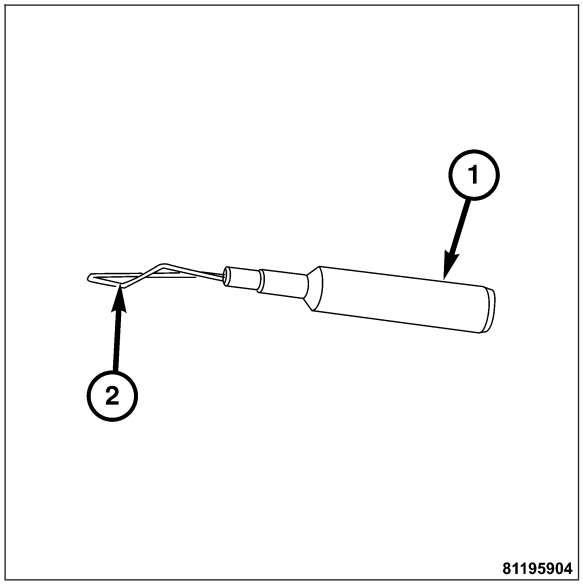

INTERMITTENT AND POOR CONNECTIONS

Most intermittent electrical problems are caused by faulty electrical connections or wiring. It is also possible for a sticking component or relay to cause a problem. Before condemning a component or wiring assembly, check the following items.

- Connectors are fully seated
- Spread terminals, or terminal push out
- Terminals in the wiring assembly are fully seated into the connector/component and locked into position
- Dirt or corrosion on the terminals. Any amount of corrosion or dirt could cause an intermittent problem
- Damaged connector/component casing exposing the item to dirt or moisture
- Wire insulation that has rubbed through causing a short to ground
- Some or all of the wiring strands broken inside of the insulation
- Wiring broken inside of the insulation

TROUBLESHOOTING WIRING PROBLEMS

When troubleshooting wiring problems there are six steps which can aid in the procedure. The steps are listed and explained below. Always check for non-factory items added to the vehicle before doing any diagnosis. If the vehicle is equipped with these items, disconnect them to verify these add-on items are not the cause of the problem.

1. Verify the problem.
2. Verify any related symptoms. Do this by performing operational checks on components that are in the same circuit. Refer to the wiring diagrams.
3. Analyze the symptoms. Use the wiring diagrams to determine what the circuit is doing, where the problem most likely is occurring and where the diagnosis will continue.
4. Isolate the problem area.
5. Repair the problem area.
6. Verify the proper operation. For this step, check for proper operation of all items on the repaired circuit. Refer to the wiring diagrams.

STANDARD PROCEDURE

STANDARD PROCEDURE - ELECTROSTATIC DISCHARGE (ESD) SENSITIVE DEVICES

All ESD sensitive components are solid state and a symbol is used to indicate this. When handling any component with this symbol, comply with the following procedures to reduce the possibility of electrostatic charge build up on the body and inadvertent discharge into the component. If it is not known whether the part is ESD sensitive, assume that it is.

1. Always touch a known good ground before handling the part. This should be repeated while handling the part and more frequently after sliding across a seat, sitting down from a standing position, or walking a distance.
2. Avoid touching electrical terminals of the part, unless instructed to do so by a written procedure.
3. When using a voltmeter, be sure to connect the ground lead first.
4. Do not remove the part form it's protective packing until it is time to install the part.
5. Before removing the part from it's pakage, ground the pakage to a known good ground on the vehicle.

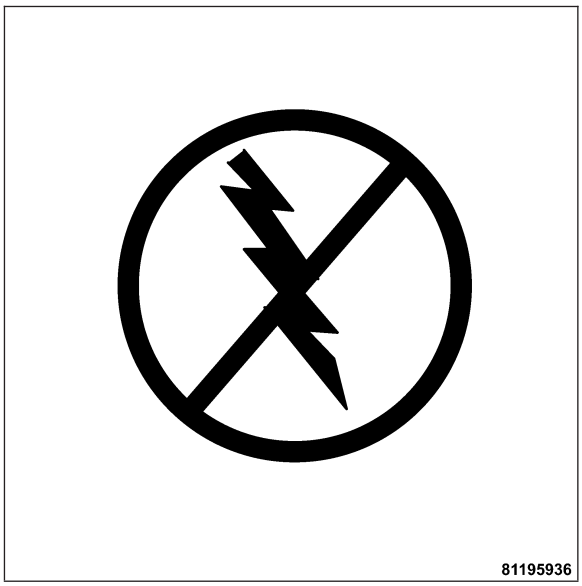

STANDARD PROCEDURE - TESTING OF VOLTAGE POTENTIAL

1. Connect the ground lead of a voltmeter to a known good ground.
2. Connect the other lead of the voltmeter to the selected test point. The vehicle ignition may need to be turned ON to check voltage. Refer to the appropriate test procedure.

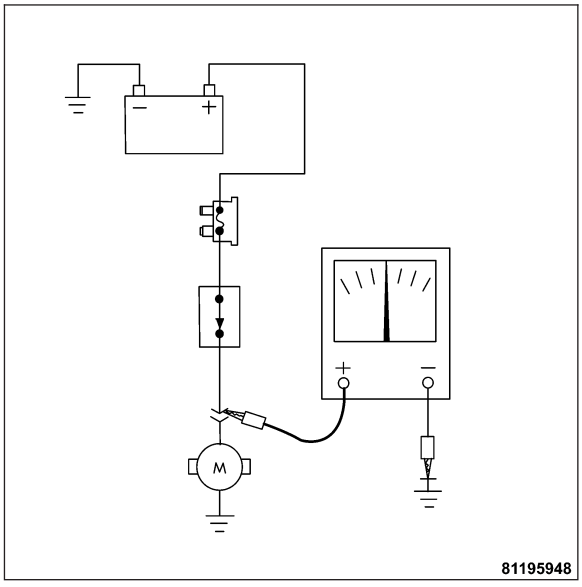

STANDARD PROCEDURE - TESTING FOR CONTINUITY

1. Remove the fuse(1) for the circuit being checked or, disconnect the battery.
2. Connect one lead of the ohmmeter to one side of the circuit being tested.
3. Connect the other lead to the other end of the circuit being tested. Low or no resistance means good continuity.

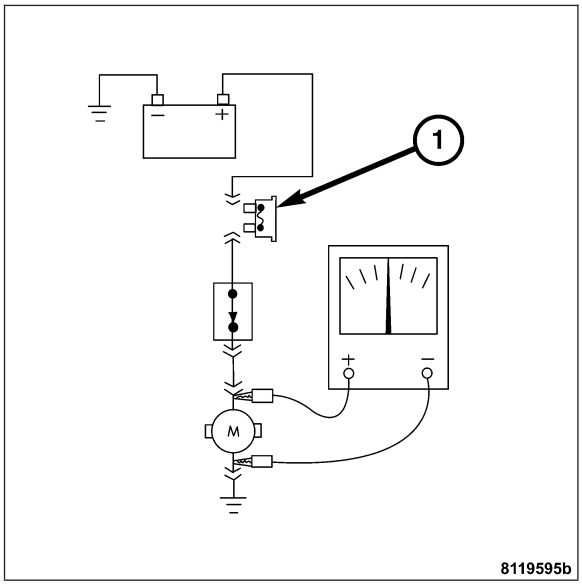

STANDARD PROCEDURE - TESTING FOR A SHORT TO GROUND

1. Remove the fuse and disconnect all items involved with the fuse.
2. Connect a test light or a voltmeter across the terminals of the fuse.
3. Starting at the fuse block, wiggle the wiring harness about six to eight inches apart and watch the voltmeter/test lamp.
4. If the voltmeter registers voltage or the test lamp glows, there is a short to ground in that general area of the wiring harness.

STANDARD PROCEDURE - TESTING FOR A SHORT TO GROUND ON FUSES POWERING SEVERAL LOADS

1. Refer to the wiring diagrams and disconnect or isolate all items on the suspected fused circuits.
2. Replace the blown fuse.
3. Supply power to the fuse by turning ON the ignition switch or re-connecting the battery.
4. Start connecting or energizing the items in the fuse circuit one at a time. When the fuse blows the circuit with the short to ground has been isolated.

STANDARD PROCEDURE - TESTING FOR A VOLTAGE DROP

1. Connect the positive lead of the voltmeter to the side of the circuit closest to the battery.
2. Connect the other lead of the voltmeter to the other side of the switch, component or circuit.
3. Operate the item.
4. The voltmeter will show the difference in voltage between the two points.

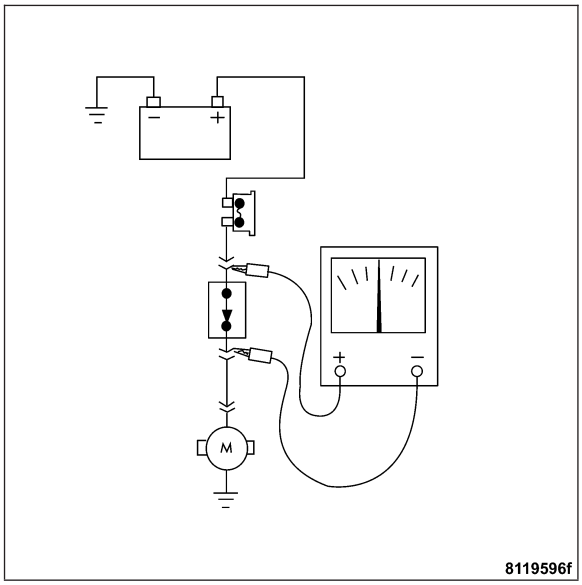

CONNECTOR

REMOVAL

1. Disconnect battery.
2. Release Connector Lock(2).
3. Disconnect the connector(3) being repaired from its mating half/component.
4. Remove the dress cover(1) (if applicable).
5. Release the Secondary Terminal Lock, if required.
6. Position the connector locking finger away from the terminal using the proper special tool. Pull on the wire to remove the terminal from the connector.

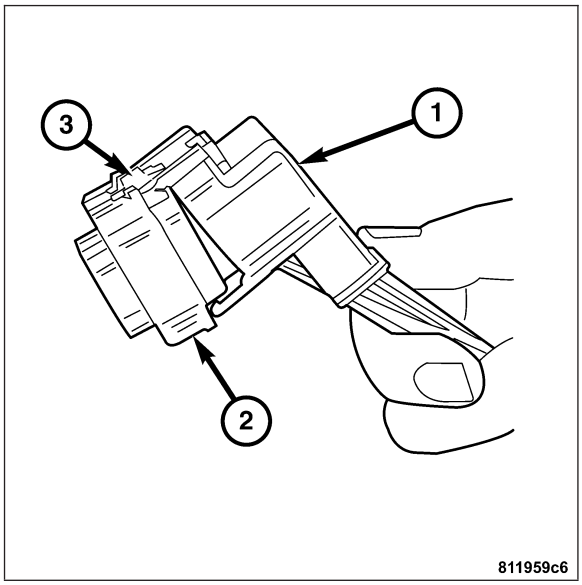

INSTALLATION

1. Insert the removed terminal in the same cavity on the repair connector.
2. Repeat steps for each terminal in the connector, being sure that all wires are inserted into the proper cavities. For additional connector pin-out identification, refer to the wiring diagrams.
3. When the connector is re-assembled, the secondary terminal lock must be placed in the locked position to prevent terminal push out.

4. Replace dress cover (if applicable).
5. Connect connector to its mating half/component.
6. Connect battery and test all affected systems.

DIODE

REMOVAL

1. Disconnect the battery.
2. Locate the diode in the harness, and remove the protective covering.
3. Remove the diode from the harness, pay attention to the current flow direction(1).

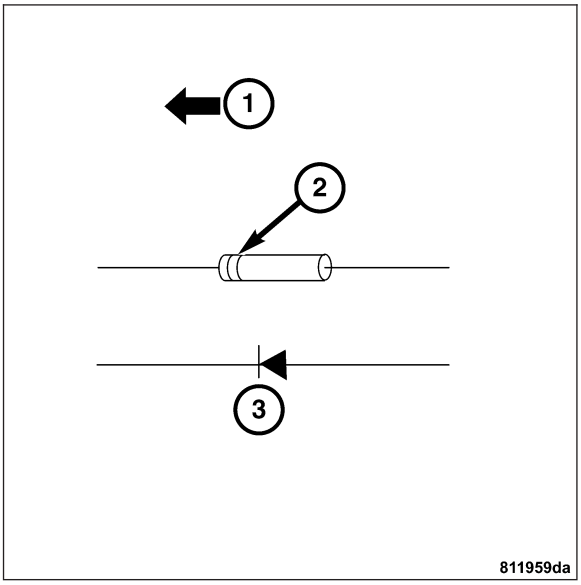

INSTALLATION

1. Remove the insulation from the wires in the harness. Only remove enough insulation to solder in the new diode.
2. Install the new diode in the harness, making sure current flow is correct. If necessary, refer to the appropriate wiring diagram for current flow.
3. Solder the connection together using rosin core type solder only. **Do not use acid core solder.**
4. Tape the diode to the harness using electrical tape. Make sure the diode is completely sealed from the elements.
5. Re-connect the battery and test affected systems.

TERMINAL

REMOVAL

1. Follow steps for removing terminals described in the connector removal section.
2. Cut the wire 6 inches from the back of the connector.

INSTALLATION

1. Select a wire from the terminal repair kit that best matches the color and gage of the wire being repaired.
2. Cut the repair wire to the proper length and remove one–half (1/2) inch of insulation.
3. Splice the repair wire to the wire harness (see wire splicing procedure). **Refer to Page 8W-01-13**.
4. Insert the repaired wire into the connector.
5. Install the connector locking wedge, if required, and reconnect the connector to its mating half/component.
6. Re-tape the wire harness starting at 1–1/2 inches behind the connector and 2 inches past the repair.
7. Connect battery and test all affected systems.

WIRE

STANDARD PROCEDURE - WIRE SPLICING

When splicing a wire, it is important that the correct gage be used as shown in the wiring diagrams.

1. Remove one-half (1/2) inch of insulation from each wire that needs to be spliced.
2. Place a piece of adhesive lined heat shrink tubing on one side of the wire. Make sure the tubing will be long enough to cover and seal the entire repair area.
3. Place the strands of wire overlapping each other inside of the splice clip(1).

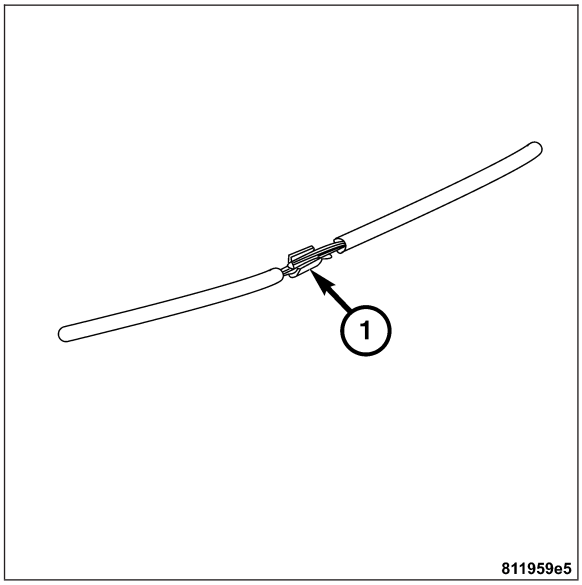

4. Using crimping too(1)l, Mopar p/n 05019912AA, crimp the splice clip and wires together.

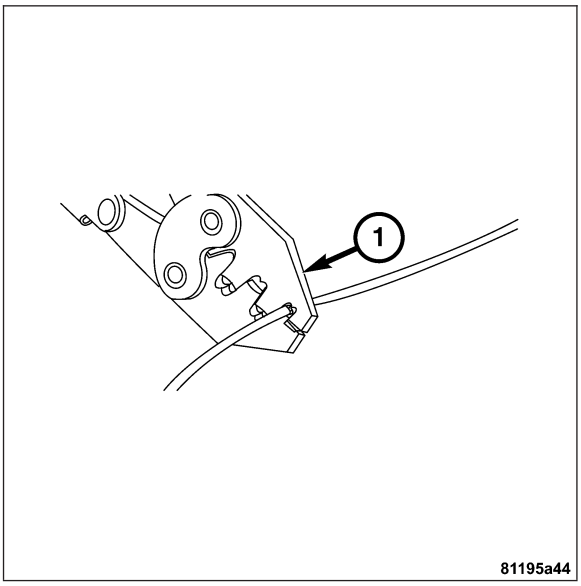

5. Solder the connection(2) together using a soldering iron(3) and rosin core type solder(1) only.

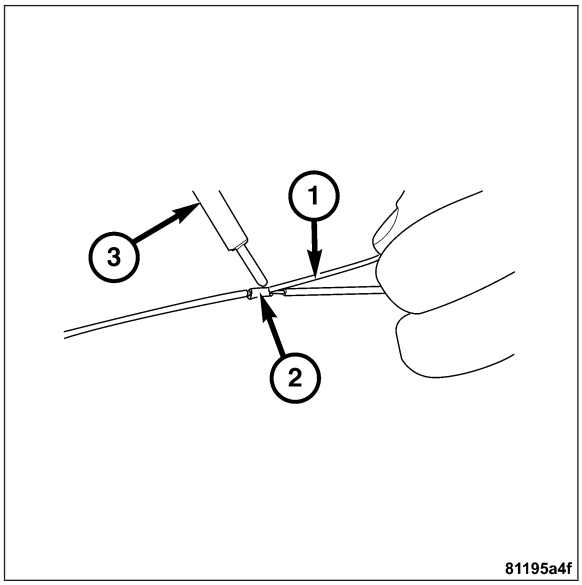

CAUTION: DO NOT USE ACID CORE SOLDER.

6. Center the heat shrink tubing(2) over the joint and heat using a heat gun. Heat the joint until the tubing is tightly sealed and sealant(1) comes out of both ends of the tubing.

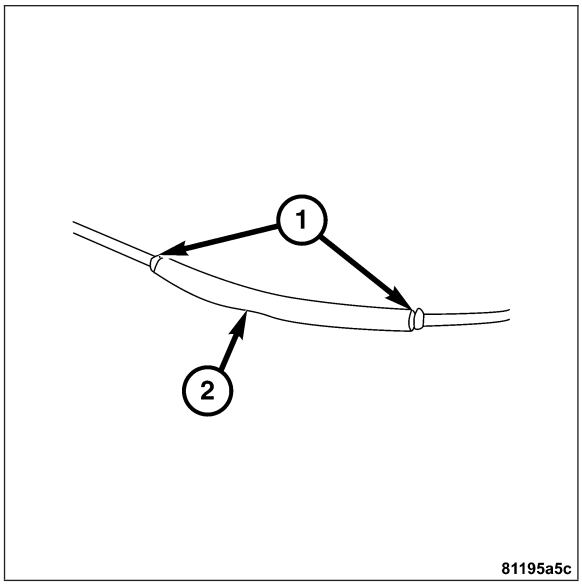

8W-02 COMPONENT INDEX

Component	Page
A/C Compressor Clutch	8W-42
A/C Heater Control Module	8W-10, 15, 17, 40, 42, 45, 48, 49
A/C Pressure Sensor	8W-42
Accelerator Pedal Position Sensor	8W-30, 33
Air Pump Fuse	8W-10, 30
Air Pump Relay	8W-10, 30
Air Pump Switchover Solenoid	8W-10, 30
Air Pump	8W-10, 15, 30
Airbag Off Indicator Lamp	8W-10, 43
Ambient Temperature Sensor	8W-40
Antenna	8W-47
Anti-Theft Tow Sensor	8W-10, 39
Ash Receiver Lamp	8W-10, 15, 40, 44, 51
Automatic Day/Night Mirror	8W-10, 15, 51, 62
BAS Brake Booster	8W-35
Backup Lamp Switch	8W-10, 30, 51, 62
Battery	8W-10, 15, 20, 21
Blower Motor	8W-10, 15, 42
Body Control Module	8W-10, 15, 17, 18, 35, 40, 42, 44, 45, 47, 48, 50, 52, 53, 55, 60, 61, 65
Brake Fluid Level Switch	8W-15, 40
Brake Lamp Relay	8W-10, 35, 51
Brake Lamp Switch	8W-10, 31, 35, 51
Camshaft Position Sensor	8W-10, 30
Cargo Lamp	8W-10, 44
Center High Mounted Stop Lamp	8W-10, 15, 51
Central Locking Pump/Security System Module	8W-10, 15, 18, 39, 44, 45, 48, 50, 51, 61, 65
Charcoal Canister Shutoff Valve	8W-10, 30
Cigar Lighter	8W-10, 15, 41, 44
Clockspring	8W-10, 15, 41, 43
Clutch Interlock Switch	8W-10, 21, 30
Clutch Pedal Position Switch	8W-15, 30, 33
Coil On Plug Driver No. 1	8W-30
Coil On Plug Driver No. 2	8W-30
Coil On Plug Driver No. 3	8W-30
Coil On Plug Driver No. 4	8W-30
Coil On Plug Driver No. 5	8W-30
Coil On Plug Driver No. 6	8W-30
Coil On Plug No. 1	8W-10
Coil On Plug No. 2	8W-10
Coil On Plug No. 3	8W-10
Coil On Plug No. 4	8W-10
Coil On Plug No. 5	8W-10
Coil On Plug No. 6	8W-10
Console Switch Group	8W-10, 15, 40, 44, 45, 52, 61
Control Module Cooling Fan	8W-45
Controller Antilock Brake	8W-10, 15, 17, 18, 31, 35, 45, 47
Coolant Circulation Pump	8W-10, 42
Coolant Circulation Valve	8W-10, 42
Coolant Level Sensor	8W-40, 46
Crankshaft Position Sensor	8W-30
Data Link Connector	8W-10, 15, 17, 30, 31, 35, 40, 42, 43, 45, 47, 49, 65
Dome Lamp	8W-10, 15, 44, 45
Driver Airbag Squib	8W-43
Driver Cylinder Lock Switch	8W-15, 61, 65
Driver Door Lock Actuator	8W-61
Driver Power Seat Front Riser Motor	8W-63
Driver Power Seat Horizontal Motor	8W-63
Driver Power Seat Rear Riser Motor	8W-63
Driver Power Seat Recliner Motor	8W-63
Driver Power Seat Switch	8W-10, 15, 63
Driver Seat Belt Switch	8W-15, 40, 46
Driver Seat Belt Tensioner Squib	8W-43
Driver Seat Belt Tensioner Switch	8W-15, 43
EGR Solenoid	8W-10, 30
ESP Brake Pressure Sensor 1	8W-35
ESP Brake Pressure Sensor 2	8W-35
ESP Lateral Acceleration Sensor	8W-35
ESP Off Switch	8W-35
ESP Yaw Rate Sensor	8W-35
Engine Control Fuse 1	8W-10
Engine Control Fuse 2	8W-10
Engine Control Fuse 2	8W-30
Engine Control Relay	8W-10
Engine Coolant Temperature Sensor	8W-30
Engine Fuse Block	8W-10, 20, 21, 29, 30, 35, 63
Engine Starter Motor	8W-10, 20, 21, 30
Evap Purge Solenoid	8W-10, 30
Evaporator Temperature Sensor	8W-42
Fuel Door Lock Actuator	8W-61
Fuel Injector No. 1	8W-10, 30
Fuel Injector No. 2	8W-10, 30
Fuel Injector No. 3	8W-10, 30
Fuel Injector No. 4	8W-10, 30
Fuel Injector No. 5	8W-10, 30
Fuel Injector No. 6	8W-10, 30
Fuel Level Sensor	8W-40, 46
Fuel Pump Fuse	8W-10, 30
Fuel Pump Relay	8W-10, 30
Fuel Pump	8W-10, 15, 30
Fuel Tank Pressure Sensor	8W-17, 30
Fuse 1	8W-49, 63
Fuse 2	8W-10, 29, 43

Component	Page
Fuse 3	8W-10, 30, 35, 40, 43, 46
Fuse 4	8W-10, 20, 21, 31, 45, 52, 53, 63
Fuse 5	8W-10, 47
Fuse 6	8W-10, 50, 62
Fuse 7	8W-10, 45, 50, 51, 62
Fuse 8	8W-10, 47, 50
Fuse 9	8W-10, 39, 44, 45, 49, 50
Fuse 10	8W-10, 30, 33, 50, 51
Fuse 11	8W-10, 30, 51
Fuse 12	8W-10, 50
Fuse 14	8W-10, 17, 35
Fuse 15	8W-10, 42
Fuse 19	8W-10, 45, 60
Fuse 20	8W-10, 45, 55
Fuse 21	8W-10, 63
Fuse 22	8W-10, 63
Fuse 23	8W-10, 47
Fuse 24	8W-10, 63
Fuse 25	8W-10, 39, 48, 61
Fuse 26	8W-10, 39, 48, 61
Fuse 31	8W-41, 44
Fuse 32	8W-50, 53
Fuse 33	8W-10, 42
Fuse 35	8W-10, 40, 42, 44, 46, 65
Fuse 36	8W-10, 42
Fuse 37	8W-10, 40, 42, 65
G100	8W-15, 29, 30, 33, 35, 39, 40, 41, 50, 52
G101	8W-15, 30, 33, 35, 39, 50, 53
G102	8W-52
G104	8W-15, 30
G105	8W-61
G107	8W-15, 20, 21
G200	8W-15, 17, 35, 40, 41, 42, 44, 61, 65
G201	8W-15, 39, 40, 44, 46, 49, 61, 62, 63, 65
G202	8W-15, 40, 43
G203	8W-15, 31, 35, 47, 62, 63
G204	8W-15, 30, 31, 39, 44, 45, 47, 53, 60, 61, 62, 63, 65
G205	8W-15, 48
G206	8W-15, 45
G300	8W-15, 50, 51, 52, 55
G301	8W-15, 39, 44, 48, 51, 52, 61, 65
Generator	8W-10, 20, 40
Glove Box Lamp	8W-10, 15, 41, 44
Glove Box Switch	8W-15, 44
Heated Seat Module	8W-10, 63
Heater Core Temperature Sensor	8W-42
Hood Ajar Switch	8W-15, 39
Horn Fuse	8W-10, 41
Horn No. 1	8W-10, 15, 41
Horn No. 2	8W-10, 15, 41
Horn Relay	8W-10, 41
Horn Switch	8W-15, 41
Ignition Switch	8W-10, 21, 30, 63
Illumination Control Module	8W-10, 15, 30, 31, 35, 40, 44, 46, 50, 51, 52, 62
Instrument Cluster	8W-10, 15, 17, 18, 20, 40, 42, 43, 44, 45, 46, 49, 50, 51, 65
Key In Ignition Switch	8W-10, 40, 46
Kickdown Switch	8W-15, 30, 33
Left Door Ajar Switch	8W-15, 39, 40, 44, 46, 63, 65
Left Door Speaker	8W-47
Left Door Tweeter	8W-47
Left Fog Lamp	8W-10, 15, 50
Left Front Brake Lining Wear Sensor	8W-35
Left Front Brake Pad Wear Sensor	8W-15
Left Front Lamp Assembly	8W-10, 15, 44, 50, 52
Left Front Power Window Motor	8W-45, 60
Left Front Power Window Switch	8W-10, 45, 60
Left Front Side Marker Lamp	8W-10, 15, 50
Left Front Tire Pressure Sensor/ Transmitter	8W-49
Left Front Wheel Speed Sensor	8W-35
Left Heated Seat Back	8W-15
Left Heated Seat Cushion	8W-15
Left Knock Sensor	8W-30
Left Park Lamp	8W-10, 15, 50
Left Power Mirror	8W-10, 15, 62
Left Rear Lamp Assembly	8W-10, 15, 44, 50, 51, 52
Left Rear Side Marker Lamp	8W-10, 15, 51
Left Rear Speaker	8W-47
Left Rear Tire Pressure Sensor/Transmitter	8W-49
Left Rear Wheel Speed Sensor	8W-35
Left Seat	8W-63
Left Side Airbag Squib	8W-43
Left Side Impact Sensor	8W-10, 15, 43
License Lamp No. 1	8W-10, 15, 51
License Lamp No. 2	8W-10, 15, 51
Liftgate Lock Actuator	8W-61
Liftgate Lock Switch	8W-15, 44, 45, 61, 65
MAF/IAT Sensor	8W-10, 30
Manifold Absolute Pressure Sensor	8W-30
Multi-Function Switch	8W-10, 44, 45, 50, 52, 53
N2 and N3 Speed Sensors	8W-31
Noise Suppressor No. 1	8W-10, 15, 30
Noise Suppressor No. 2	8W-10, 15, 30
Occupant Restraint Controller	8W-10, 15, 17, 30, 40, 43
Oil Sensor	8W-30
Oxygen Sensor 1/1 Upstream	8W-10, 30
Oxygen Sensor 1/2 Downstream	8W-10, 30
Oxygen Sensor 2/1 Upstream	8W-10, 30
Oxygen Sensor 2/2 Downstream	8W-10, 30
Park Brake Switch	8W-10, 15, 35
Passenger Airbag On/Off Switch	8W-43
Passenger Airbag Squib	8W-43

Component	Page
Passenger Door Lock Actuator	8W-61
Passenger Power Seat Horizontal Motor	8W-63
Passenger Power Seat Recliner Motor	8W-63
Passenger Power Seat Switch	8W-10, 15, 63
Passenger Seat Belt Tensioner Squib	8W-43
Passenger Seat Belt Tensioner Switch	8W-15, 43
Passenger Seat Occupant Simulator	8W-10, 15, 43
Power Amplifier	8W-10, 15, 35, 45, 47
Power Mirror Switch	8W-10, 15, 62
Power Seat Relay	8W-10, 15, 63
Powertrain Control Module	8W-10, 15, 17, 18, 21, 29, 30, 33, 43, 51, 62
Pulse Module	8W-10, 15, 21, 30
Radiator Fan Control Module	8W-10, 15, 29, 30
Radiator Fan Motor	8W-29
Radio	8W-10, 15, 17, 47
Rear Spoiler Limit Switch	8W-15, 45, 55
Rear Spoiler Motor	8W-45, 55
Rear Spoiler Switch	8W-45, 55
Rear Window Capacitor	8W-15, 48
Rear Window Defogger	8W-15, 48
Recirculated Air Switchover Valve	8W-10, 42
Relay Control Module	8W-10, 15, 17, 30, 31, 35, 41
Remote Keyless Entry Antenna	8W-65
Remote Keyless Entry Relay	8W-10, 44, 65
Right Door Ajar Switch	8W-15, 39, 44, 63, 65
Right Door Speaker	8W-47
Right Door Tweeter	8W-47
Right Fog Lamp	8W-10, 15, 50
Right Front Brake Lining Wear Sensor	8W-35
Right Front Brake Pad Wear Sensor	8W-15
Right Front Lamp Assembly	8W-10, 15, 44, 50, 52
Right Front Power Window Motor	8W-45, 60
Right Front Power Window Switch	8W-10, 45, 60
Right Front Side Marker Lamp	8W-10, 15, 50
Right Front Tire Pressure Sensory Transmitter	8W-49
Right Front Wheel Speed Sensor	8W-35
Right Heated Seat Back	8W-15
Right Heated Seat Cushion	8W-15
Right Knock Sensor	8W-30
Right Park Lamp	8W-10, 15, 50
Right Power Mirror	8W-10, 15, 62
Right Rear Lamp Assembly	8W-10, 15, 44, 51, 52
Right Rear Side Marker Lamp	8W-10, 15, 51
Right Rear Speaker	8W-47
Right Rear Tire Pressure Sensor/ Transmitter	8W-49
Right Rear Wheel Speed Sensor	8W-35
Right Seat	8W-63
Right Side Airbag Squib	8W-43
Right Side Impact Sensor	8W-10, 15, 43
Sentry Key Antenna Ring	8W-65
Sentry Key Remote Entry Module	8W-10, 15, 17, 18, 45, 61, 65
Shift Lever Assembly	8W-10, 15, 17, 18, 31, 35, 51, 62
Short Runner Valve Solenoid	8W-10, 30
Siren	8W-10, 15, 39
Speed Control Switch	8W-10, 30, 33
Splice Block 100	8W-10, 35, 63
Splice Block 101	8W-10, 29, 30, 35
Splice Block 102	8W-10, 63
Splice Block 200	8W-10, 31, 40, 44, 47
Steering Angle Sensor	8W-10, 15, 35
Telescopic Steering Switch	8W-15, 40
Throttle Body	8W-30, 33
Tow-Away Alarm Switch	8W-39
Traction System Fuse	8W-10, 31
Traction System Relay	8W-10, 31
Transmission Control Module	8W-10, 15, 17, 18, 31
Transmission Solenoid Assembly	8W-31
Transmission Temperature Sensor	8W-31
Underhood Accessory Fuse Block	8W-10, 17, 30, 33, 35, 39, 40, 41, 42, 43, 44, 45, 46, 47, 48, 49, 50, 53, 55, 60, 61, 62, 63, 65
Universal Garage Door Opener/Tire Pressure Monitor	8W-10, 15, 17, 40, 49
Washer Fluid Level Switch	8W-40, 46
Washer Pump Motor	8W-15, 45, 53
Wiper Motor	8W-45, 53

8W-10 POWER DISTRIBUTION

Component	Page
A/C Heater Control Module	8W-10-9, 13, 15
Air Pump Fuse	8W-10-20
Air Pump Relay	8W-10-20
Air Pump Switchover Solenoid	8W-10-22
Air Pump	8W-10-20
Airbag Off Indicator Lamp	8W-10-11
Anti-Theft Tow Sensor	8W-10-10
Ash Receiver Lamp	8W-10-13, 16
Automatic Day/Night Mirror	8W-10-12, 19
Backup Lamp Switch	8W-10-19
Battery	8W-10-8
Blower Motor	8W-10-15
Body Control Module	8W-10-10, 11, 12, 14, 19
Brake Lamp Relay	8W-10-19
Brake Lamp Switch	8W-10-19, 20
Camshaft Position Sensor	8W-10-21
Cargo Lamp	8W-10-10
Center High Mounted Stop Lamp	8W-10-19
Central Locking Pump/Security System Module	8W-10-14, 17, 18
Charcoal Canister Shutoff Valve	8W-10-22
Cigar Lighter	8W-10-11
Clockspring	8W-10-21
Clutch Interlock Switch	8W-10-9
Coil On Plug No. 1	8W-10-12
Coil On Plug No. 2	8W-10-12
Coil On Plug No. 3	8W-10-12
Coil On Plug No. 4	8W-10-12
Coil On Plug No. 5	8W-10-12
Coil On Plug No. 6	8W-10-12
Console Switch Group	8W-10-13, 15, 19
Controller Antilock Brake	8W-10-8, 17, 19, 20
Coolant Circulation Pump	8W-10-10
Coolant Circulation Valve	8W-10-10
Data Link Connector	8W-10-20
Dome Lamp	8W-10-10
Driver Power Seat Switch	8W-10-14
EGR Solenoid	8W-10-22
Engine Control Fuse 1	8W-10-20
Engine Control Fuse 2	8W-10-20
Engine Control Relay	8W-10-20
Engine Fuse Block	8W-10-8, 9
Engine Starter Motor	8W-10-8
Evap Purge Solenoid	8W-10-22
Fuel Injector No. 1	8W-10-21
Fuel Injector No. 2	8W-10-21
Fuel Injector No. 3	8W-10-21
Fuel Injector No. 4	8W-10-21
Fuel Injector No. 5	8W-10-21
Fuel Injector No. 6	8W-10-21
Fuel Pump	8W-10-21
Fuel Pump Fuse	8W-10-21
Fuel Pump Relay	8W-10-21
Fuse 10	8W-10-12, 16
Fuse 11	8W-10-12, 16
Fuse 12	8W-10-12, 18
Fuse 14	8W-10-10
Fuse 15	8W-10-10
Fuse 19	8W-10-14
Fuse 20	8W-10-14
Fuse 21	8W-10-14
Fuse 22	8W-10-14
Fuse 23	8W-10-14
Fuse 24	8W-10-14
Fuse 25	8W-10-14
Fuse 26	8W-10-14
Fuse 2	8W-10-8
Fuse 33	8W-10-9
Fuse 35	8W-10-15
Fuse 36	8W-10-15
Fuse 37	8W-10-13
Fuse 3	8W-10-8, 18
Fuse 4	8W-10-9
Fuse 5	8W-10-18
Fuse 6	8W-10-12, 18
Fuse 7	8W-10-12, 16
Fuse 8	8W-10-10, 18
Fuse 9	8W-10-10, 18
Generator	8W-10-8
Glove Box Lamp	8W-10-11
Heated Seat Module	8W-10-11, 14
Horn Fuse	8W-10-21
Horn No. 1	8W-10-21
Horn No. 2	8W-10-21
Horn Relay	8W-10-21
Ignition Switch	8W-10-9
Illumination Control Module	8W-10-13, 16, 17, 18, 19
Instrument Cluster	8W-10-11, 13, 15, 16, 17, 18
Key In Ignition Switch	8W-10-15
Left Fog Lamp	8W-10-18
Left Front Lamp Assembly	8W-10-18
Left Front Power Window Switch	8W-10-13
Left Front Side Marker Lamp	8W-10-16
Left Park Lamp	8W-10-16
Left Power Mirror	8W-10-12
Left Rear Lamp Assembly	8W-10-17, 18, 19
Left Rear Side Marker Lamp	8W-10-17
Left Side Impact Sensor	8W-10-11
License Lamp No. 1	8W-10-16
License Lamp No. 2	8W-10-16
MAF/IAT Sensor	8W-10-21
Multi-Function Switch	8W-10-11, 18
Noise Suppressor No. 1	8W-10-12
Noise Suppressor No. 2	8W-10-12
Occupant Restraint Controller	8W-10-11
Oxygen Sensor 1/1 Upstream	8W-10-22
Oxygen Sensor 1/2 Downstream	8W-10-22
Oxygen Sensor 2/1 Upstream	8W-10-22
Oxygen Sensor 2/2 Downstream	8W-10-22
Park Brake Switch	8W-10-17
Passenger Power Seat Switch	8W-10-14
Passenger Seat Occupant Simulator	8W-10-11
Power Amplifier	8W-10-14
Power Mirror Switch	8W-10-12
Power Seat Relay	8W-10-11, 14
Powertrain Control Module	8W-10-9, 19, 20, 21
Pulse Module	8W-10-8, 9, 12
Radiator Fan Control Module	8W-10-8, 12
Radio	8W-10-10, 11, 13
Recirculated Air Switchover Valve	8W-10-13
Relay Control Module	8W-10-20, 21
Remote Keyless Entry Relay	8W-10-15
Right Fog Lamp	8W-10-18
Right Front Lamp Assembly	8W-10-18
Right Front Power Window Switch	8W-10-13
Right Front Side Marker Lamp	8W-10-16
Right Park Lamp	8W-10-16
Right Power Mirror	8W-10-12
Right Rear Lamp Assembly	8W-10-17, 19
Right Rear Side Marker Lamp	8W-10-17
Right Side Impact Sensor	8W-10-11
Sentry Key Remote Entry Module	8W-10-13, 15
Shift Lever Assembly	8W-10-13, 19, 20
Short Runner Valve Solenoid	8W-10-22
Siren	8W-10-10
Speed Control Switch	8W-10-12
Splice Block 100	8W-10-9, 10
Splice Block 101	8W-10-12
Splice Block 102	8W-10-11
Splice Block 200	8W-10-13
Steering Angle Sensor	8W-10-10, 12
Traction System Fuse	8W-10-20
Traction System Relay	8W-10-20
Transmission Control Module	8W-10-20
Underhood Accessory Fuse Block	8W-10-9, 10, 11, 12, 13, 14, 15
Universal Garage Door Opener/Tire Pressure Monitor	8W-10-10, 11

UNDERHOOD ACCESSORY FUSE BLOCK

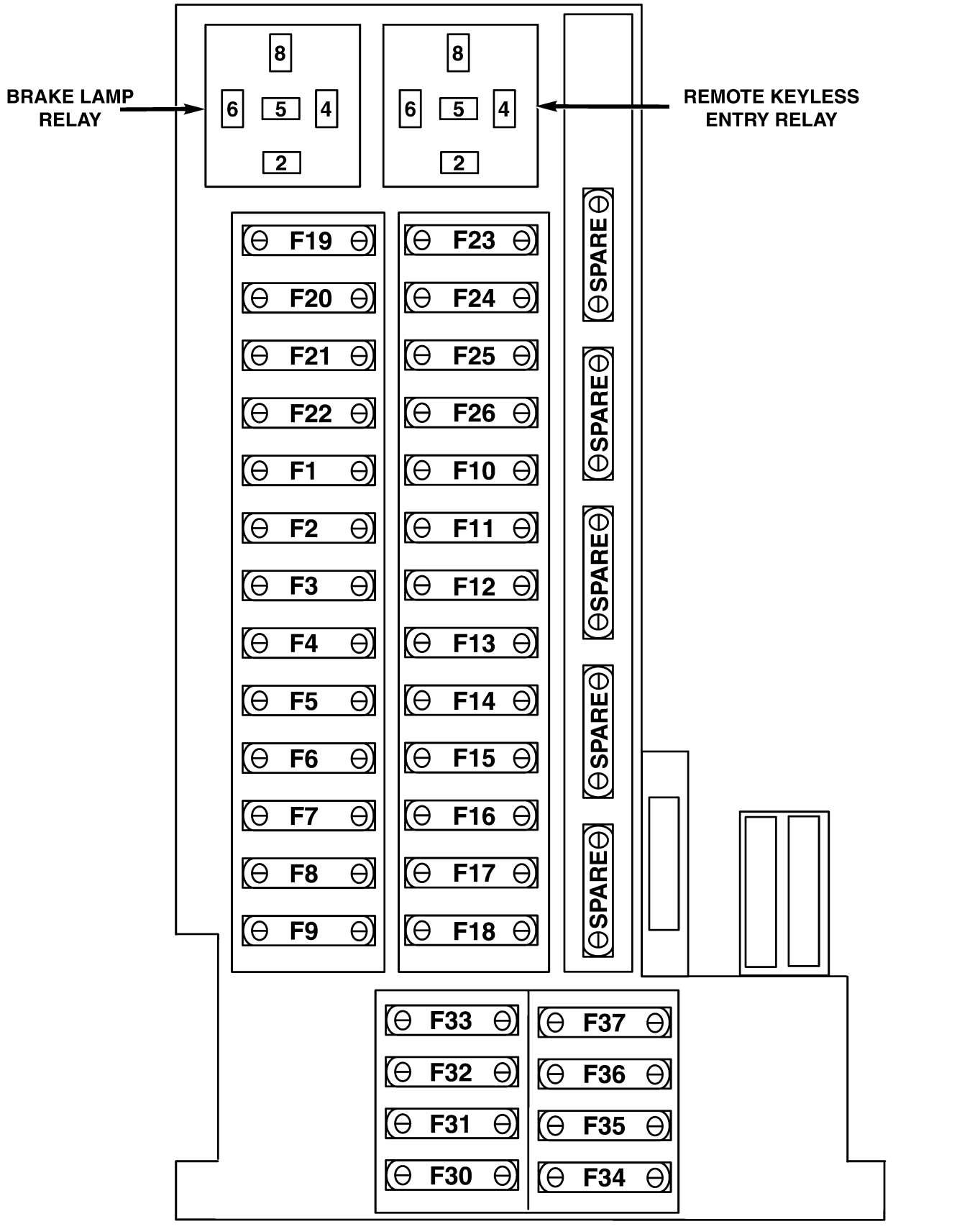

ZH041002

UNDERHOOD ACCESSORY FUSE BLOCK FUSES

FUSE NO.	AMPS	FUSED CIRCUIT	FUNCTION
1	5A	16PK/YL	FUSED IGNITION SWITCH OUTPUT
2	5A	16PK/YL	FUSED IGNITION SWITCH OUTPUT
3	5A	16PK/YL	FUSED IGNITION SWITCH OUTPUT
4	30A	12PK/YL	FUSED IGNITION SWITCH OUTPUT
5	15A	12PK/YL	FUSED IGNITION SWITCH OUTPUT
6	15A	16PK/RD	FUSED IGNITION SWITCH OUTPUT
7	5A	16PK/RD	FUSED IGNITION SWITCH OUTPUT
8	15A	12RD	FUSED B(+)
9	10A	12RD	FUSED B(+)
10	5A	14PK/RD	FUSED IGNITION SWITCH OUTPUT
11	15A	14PK/RD	FUSED IGNITION SWITCH OUTPUT
12	10A	14PK/RD	FUSED IGNITION SWITCH OUTPUT
13	SPARE	SPARE	SPARE
14	10A	12RD	FUSED B(+)
15	5A	12RD	FUSED B(+)
16	SPARE	SPARE	SPARE
17	SPARE	SPARE	SPARE
18	SPARE	SPARE	SPARE
19	40A	10RD	FUSED B(+)
20	10A	10RD	FUSED B(+)
21	30A	12RD/WT	POWER SEAT RELAY OUTPUT
22	30A	12RD/WT	POWER SEAT RELAY OUTPUT
23	15A	12RD	FUSED B(+)
24	30A	10RD	FUSED B(+)
25	20A	10RD	FUSED B(+)
26	20A	10RD	FUSED B(+)
27	N/A	N/A	N/A
28	N/A	N/A	N/A
29	N/A	N/A	N/A
30	SPARE	SPARE	SPARE
31	15A	14PK/YL	FUSED IGNITION SWITCH OUTPUT
32	15A	14PK/YL	FUSED IGNITION SWITCH OUTPUT
33	5A	14PK/YL	FUSED IGNITION SWITCH OUTPUT
34	SPARE	SPARE	SPARE
35	15A	12RD	FUSED B(+)
36	30A	12RD	FUSED B(+)
37	5A	16PK/RD	FUSED IGNITION SWITCH OUTPUT

ZH041003

REMOTE KEYLESS ENTRY RELAY

CAVITY	CIRCUIT	FUNCTION
1	-	-
2	18BK/WT	REMOTE KEYLESS ENTRY RELAY OUTPUT
3	-	-
4	18RD/YL	FUSED B(+)
5	18BK/DG	REMOTE KEYLESS ENTRY RELAY OUTPUT
6	20BK/YL	REMOTE KEYLESS ENTRY RELAY CONTROL
7	-	-
8	14RD/YL	FUSED B(+)
9	-	-

BRAKE LAMP RELAY

CAVITY	CIRCUIT	FUNCTION
1	-	-
2	-	-
3	-	-
4	18RD/WT	FUSED ILLUMINATION CONTROL MODULE OUTPUT
5	20BK/RD	BRAKE LAMP RELAY OUTPUT
6	20BK/YL	BRAKE LAMP RELAY CONTROL
7	-	-
8	18BK/WT	BRAKE LAMP RELAY OUTPUT
9	-	-

ILLUMINATION CONTROL MODULE FUSES

FUSE NO.	AMPS	FUSED CIRCUIT	FUNCTION
1	-	-	-
2	15A	12PK/RD	FUSED IGNITION SWITCH OUTPUT
3	7.5A	16WT	HIGH BEAM INDICATOR LAMP OUTPUT
4	15A	12PK/RD	FUSED IGNITION SWITCH OUTPUT
5	7.5A	16WT	HIGH BEAM INDICATOR LAMP OUTPUT
6	15A	12RD	FUSED B(+)
7	7.5A	18DG/WT	FUSED IGNITION SWITCH OUTPUT
8	15A	12RD	FUSED B(+)
9	15A	12RD	FUSED B(+)
10	7.5A	18DG/WT	FUSED IGNITION SWITCH OUTPUT
11	7.5A	12RD	FUSED B(+)
12	7.5A	12RD	FUSED B(+) EXPORT ONLY

ILLUMINATION CONTROL MODULE

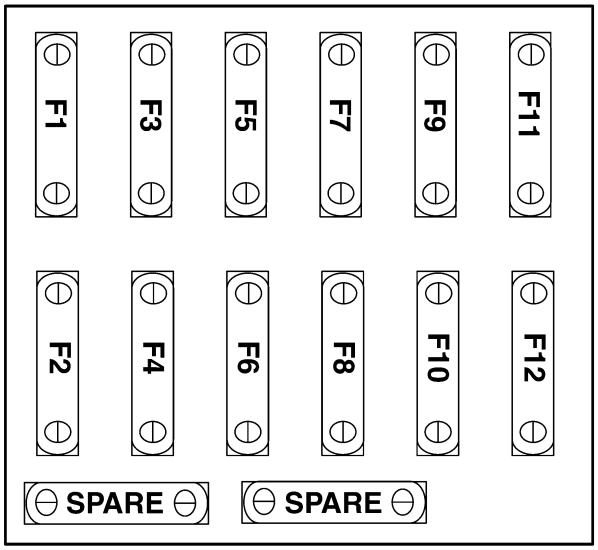

ZH041005

RELAY CONTROL MODULE FUSES

FUSE NO.	AMPS	FUSED CIRCUIT	FUNCTION
1	40A	12RD	FUSED B(+)
2	15A	12RD	FUSED ENGINE CONTROL RELAY OUTPUT
3	15A	12RD	FUSED B(+)
4	15A	12RD	FUSED B(+)
5	15A	12RD	FUSED ENGINE CONTROL RELAY OUTPUT
6	15A	12RD	FUSED B(+)

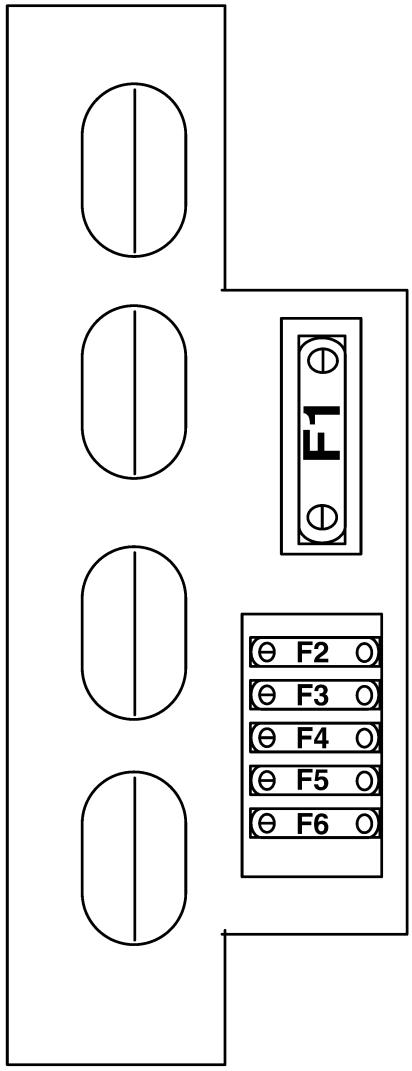

RELAY CONTROL MODULE

ZH041006

ENGINE FUSE BLOCK FUSES

FUSE NO.	AMPS	FUSED CIRCUIT	FUNCTION
1	N/A	-	-
2	50A	4BK	B(+)
3	50A	4BK	B(+)
4	200A	4BK	B(+)
5	BATTERY	-	-

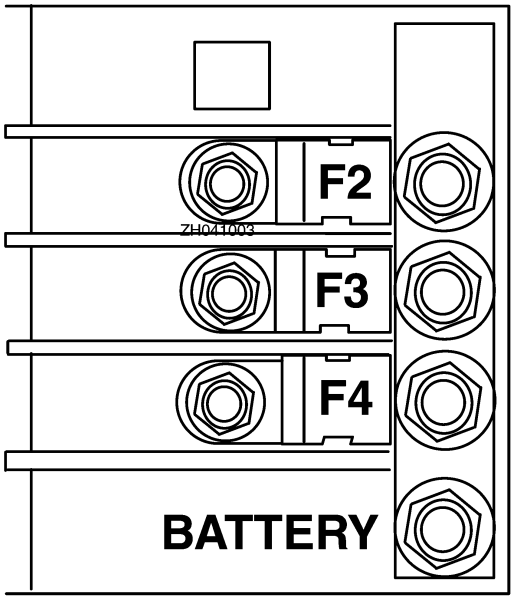

ENGINE FUSE BLOCK

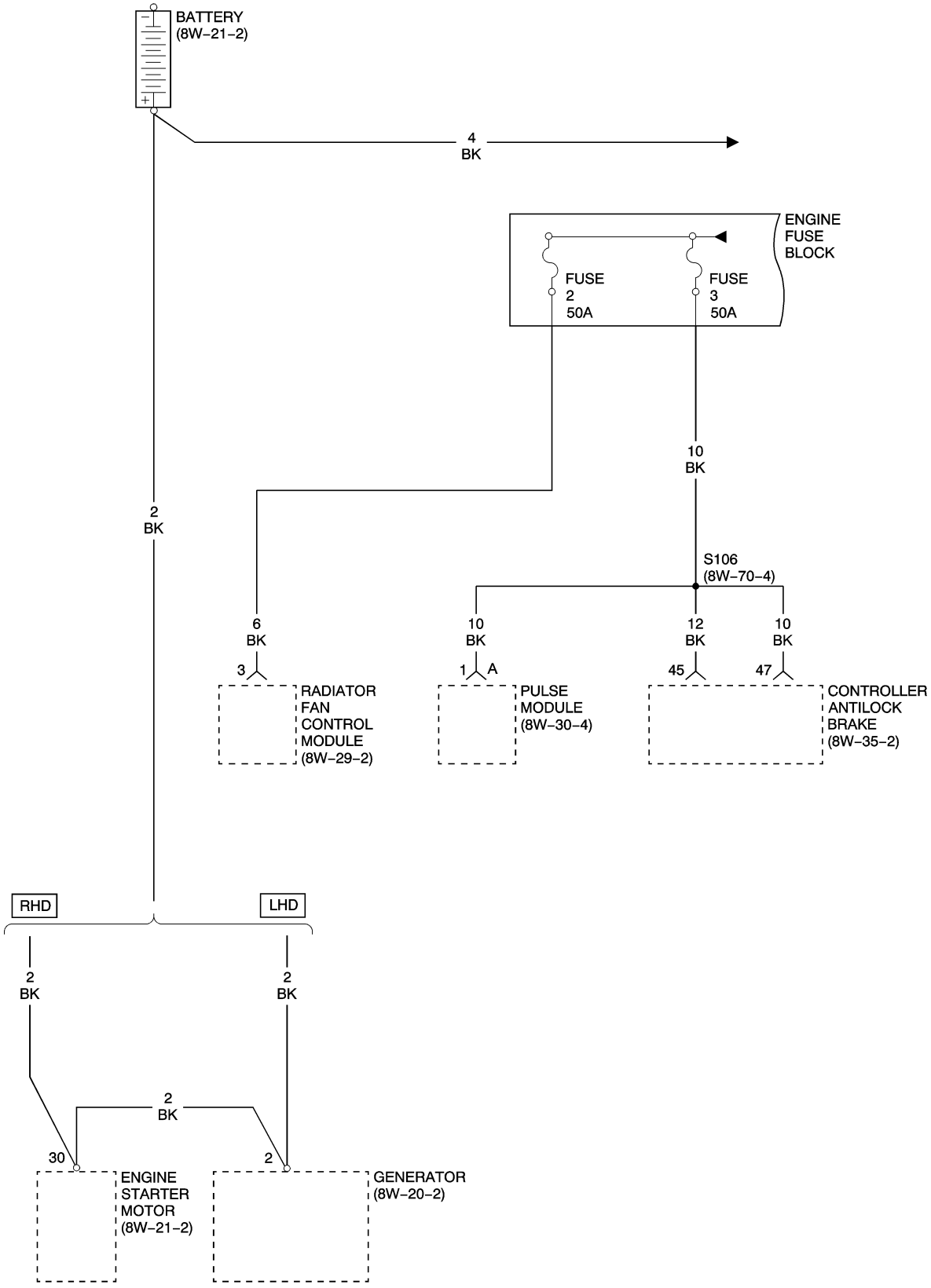
BATTERY
(8W–21–2)
4
BK
ENGINE
FUSE
BLOCK
FUSE
2
50A
FUSE
3
50A
10
BK
2
BK
S106
(8W–70–4)
6
BK
10
BK
12
BK
10
BK
3
1
A
45
47
RADIATOR
FAN
CONTROL
MODULE
(8W–29–2)
PULSE
MODULE
(8W–30–4)
CONTROLLER
ANTILOCK
BRAKE
(8W–35–2)
RHD
LHD
2
BK
2
BK
2
BK
30
2
ENGINE
STARTER
MOTOR
(8W–21–2)
GENERATOR
(8W–20–2)

ZH041008

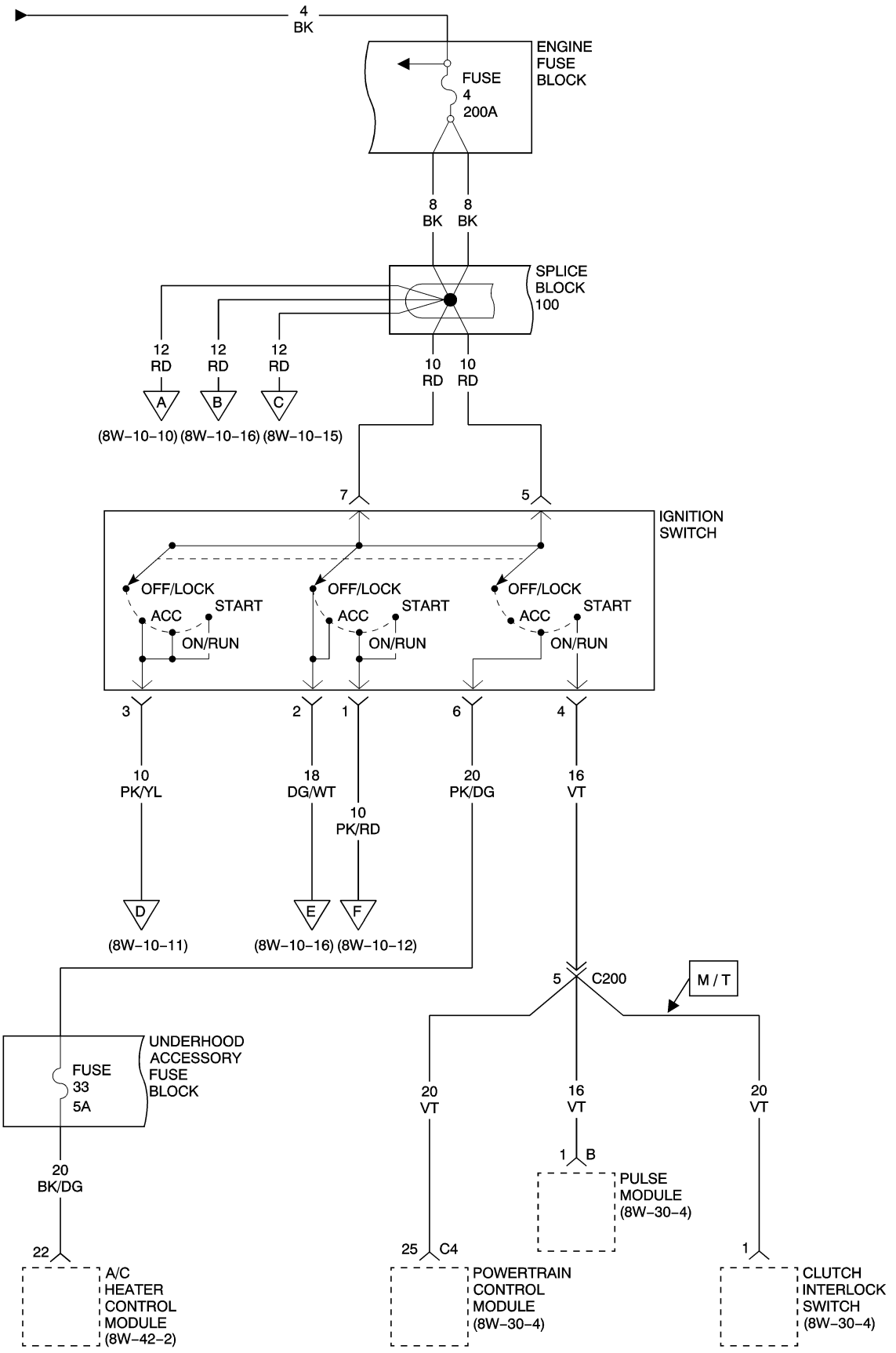
4
BK
ENGINE
FUSE
BLOCK
FUSE
4
200A
8
BK
8
BK
SPLICE
BLOCK
100
12
RD
12
RD
12
RD
10
RD
10
RD
A
B
C
(8W–10–10) (8W–10–16) (8W–10–15)
7
5
IGNITION
SWITCH
OFF/LOCK
ACC
START
ON/RUN
OFF/LOCK
ACC
START
ON/RUN
OFF/LOCK
ACC
START
ON/RUN
3
2
1
6
4
10
PK/YL
18
DG/WT
10
PK/RD
20
PK/DG
16
VT
D
E
F
(8W–10–11)
(8W–10–16) (8W–10–12)
5
C200
M / T
UNDERHOOD
ACCESSORY
FUSE
BLOCK
FUSE
33
5A
20
VT
16
VT
20
VT
1
B
PULSE
MODULE
(8W–30–4)
20
BK/DG
22
25
C4
1
A/C
HEATER
CONTROL
MODULE
(8W–42–2)
POWERTRAIN
CONTROL
MODULE
(8W–30–4)
CLUTCH
INTERLOCK
SWITCH
(8W–30–4)

ZH041009

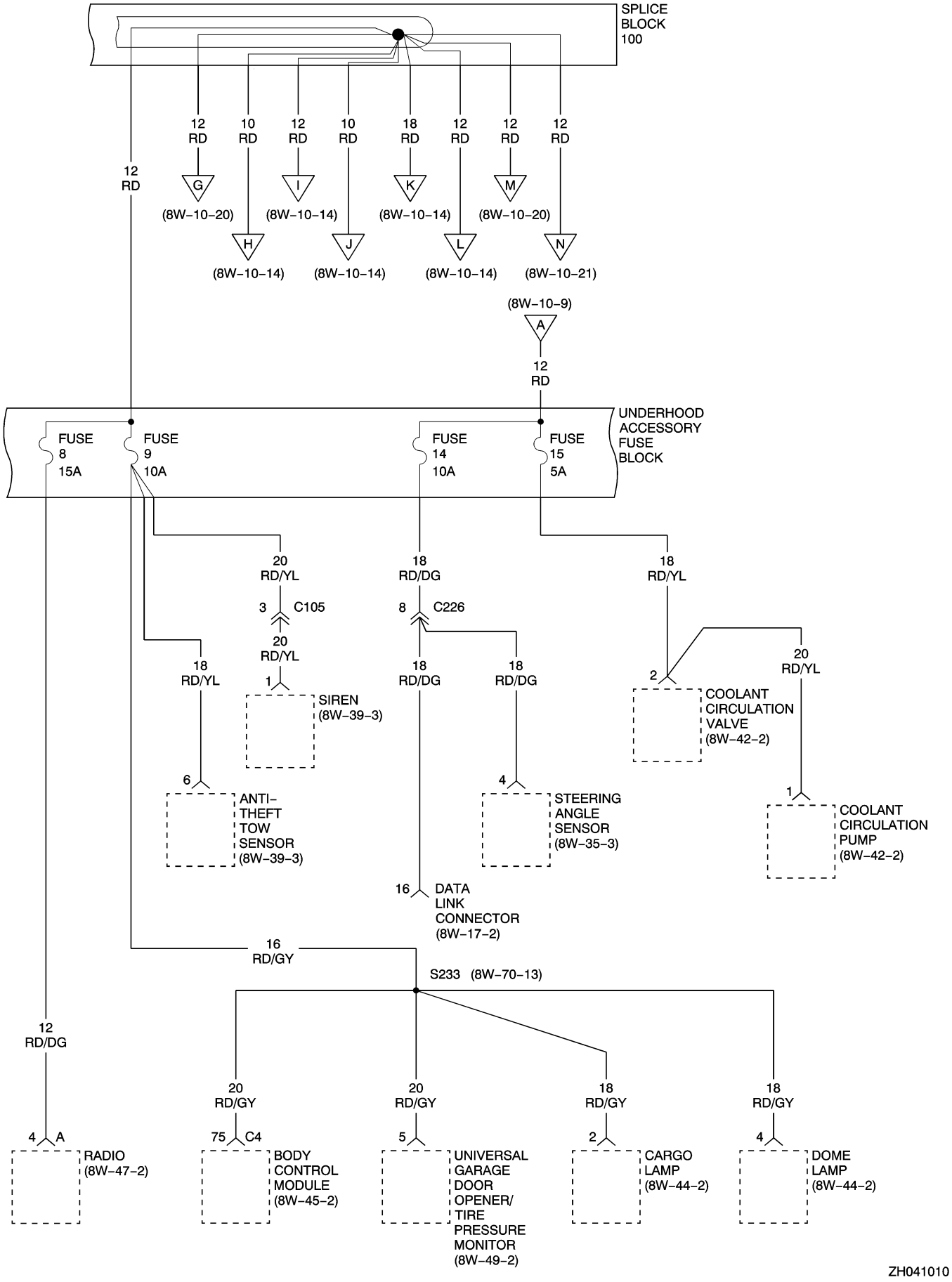
SPLICE BLOCK 100
12 RD
10 RD
12 RD
10 RD
18 RD
12 RD
12 RD
12 RD
12 RD
G
(8W–10–20)
I
(8W–10–14)
K
(8W–10–14)
M
(8W–10–20)
H
(8W–10–14)
J
(8W–10–14)
L
(8W–10–14)
N
(8W–10–21)
(8W–10–9)
A
12 RD
UNDERHOOD ACCESSORY FUSE BLOCK
FUSE 8 15A
FUSE 9 10A
FUSE 14 10A
FUSE 15 5A
20 RD/YL
3 C105
20 RD/YL
1
SIREN (8W–39–3)
18 RD/YL
6
ANTI–THEFT TOW SENSOR (8W–39–3)
18 RD/DG
8 C226
18 RD/DG
4
STEERING ANGLE SENSOR (8W–35–3)
16
DATA LINK CONNECTOR (8W–17–2)
18 RD/YL
2
COOLANT CIRCULATION VALVE (8W–42–2)
20 RD/YL
1
COOLANT CIRCULATION PUMP (8W–42–2)
16 RD/GY
S233 (8W–70–13)
12 RD/DG
4 A
RADIO (8W–47–2)
20 RD/GY
75 C4
BODY CONTROL MODULE (8W–45–2)
20 RD/GY
5
UNIVERSAL GARAGE DOOR OPENER/ TIRE PRESSURE MONITOR (8W–49–2)
18 RD/GY
2
CARGO LAMP (8W–44–2)
18 RD/GY
4
DOME LAMP (8W–44–2)
ZH041010

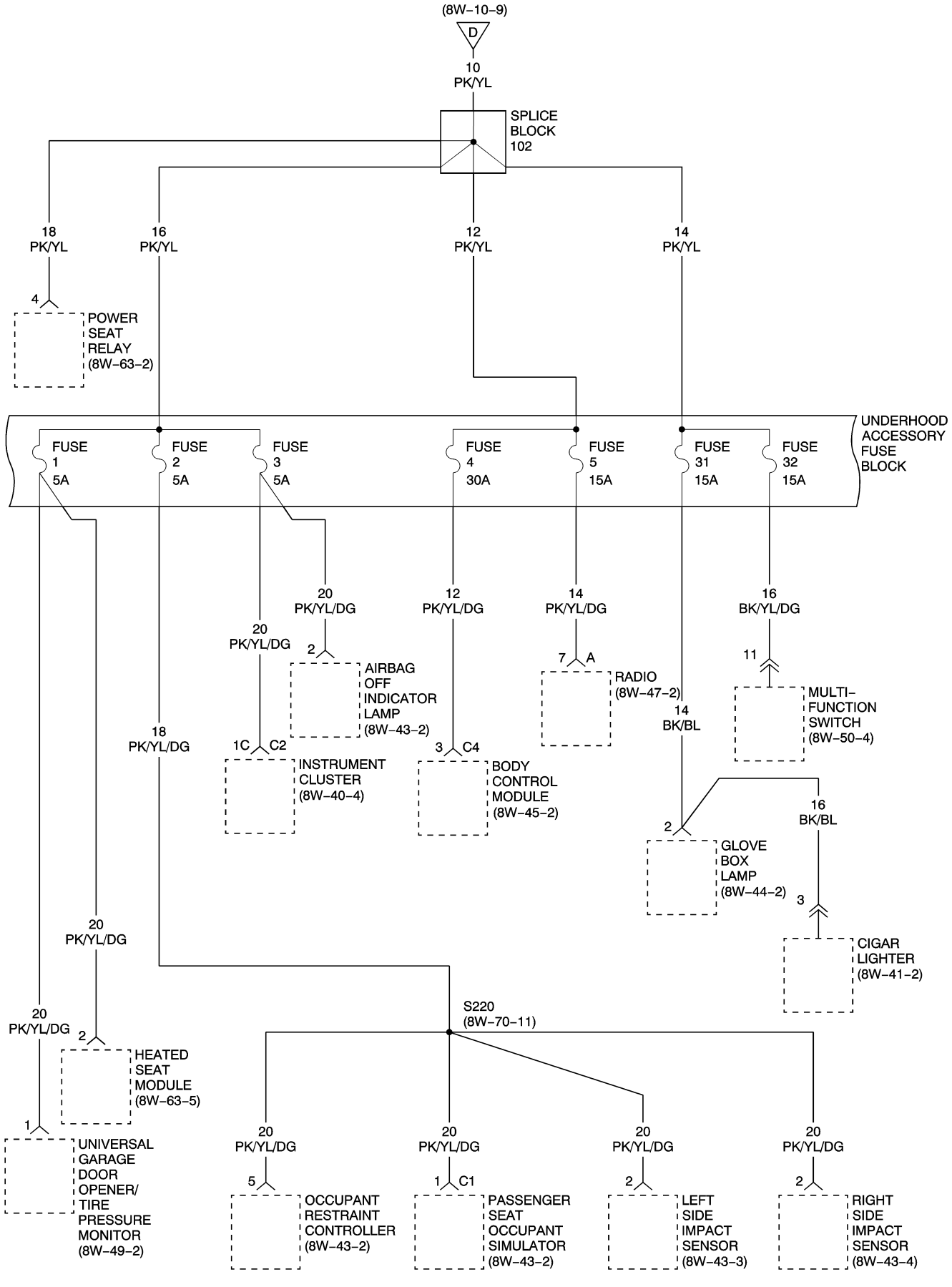
(8W–10–9)
D
10
PK/YL
SPLICE
BLOCK
102
18
PK/YL
16
PK/YL
12
PK/YL
14
PK/YL
4
POWER
SEAT
RELAY
(8W–63–2)
UNDERHOOD
ACCESSORY
FUSE
BLOCK
FUSE
1
5A
FUSE
2
5A
FUSE
3
5A
FUSE
4
30A
FUSE
5
15A
FUSE
31
15A
FUSE
32
15A
20
PK/YL/DG
20
PK/YL/DG
2
AIRBAG
OFF
INDICATOR
LAMP
(8W–43–2)
12
PK/YL/DG
14
PK/YL/DG
16
BK/YL/DG
7
A
RADIO
(8W–47–2)
11
MULTI–
FUNCTION
SWITCH
(8W–50–4)
14
BK/BL
18
PK/YL/DG
1C
C2
INSTRUMENT
CLUSTER
(8W–40–4)
3
C4
BODY
CONTROL
MODULE
(8W–45–2)
2
GLOVE
BOX
LAMP
(8W–44–2)
16
BK/BL
3
CIGAR
LIGHTER
(8W–41–2)
20
PK/YL/DG
20
PK/YL/DG
2
HEATED
SEAT
MODULE
(8W–63–5)
S220
(8W–70–11)
1
UNIVERSAL
GARAGE
DOOR
OPENER/
TIRE
PRESSURE
MONITOR
(8W–49–2)
20
PK/YL/DG
5
OCCUPANT
RESTRAINT
CONTROLLER
(8W–43–2)
20
PK/YL/DG
1
C1
PASSENGER
SEAT
OCCUPANT
SIMULATOR
(8W–43–2)
20
PK/YL/DG
2
LEFT
SIDE
IMPACT
SENSOR
(8W–43–3)
20
PK/YL/DG
2
RIGHT
SIDE
IMPACT
SENSOR
(8W–43–4)

ZH041011

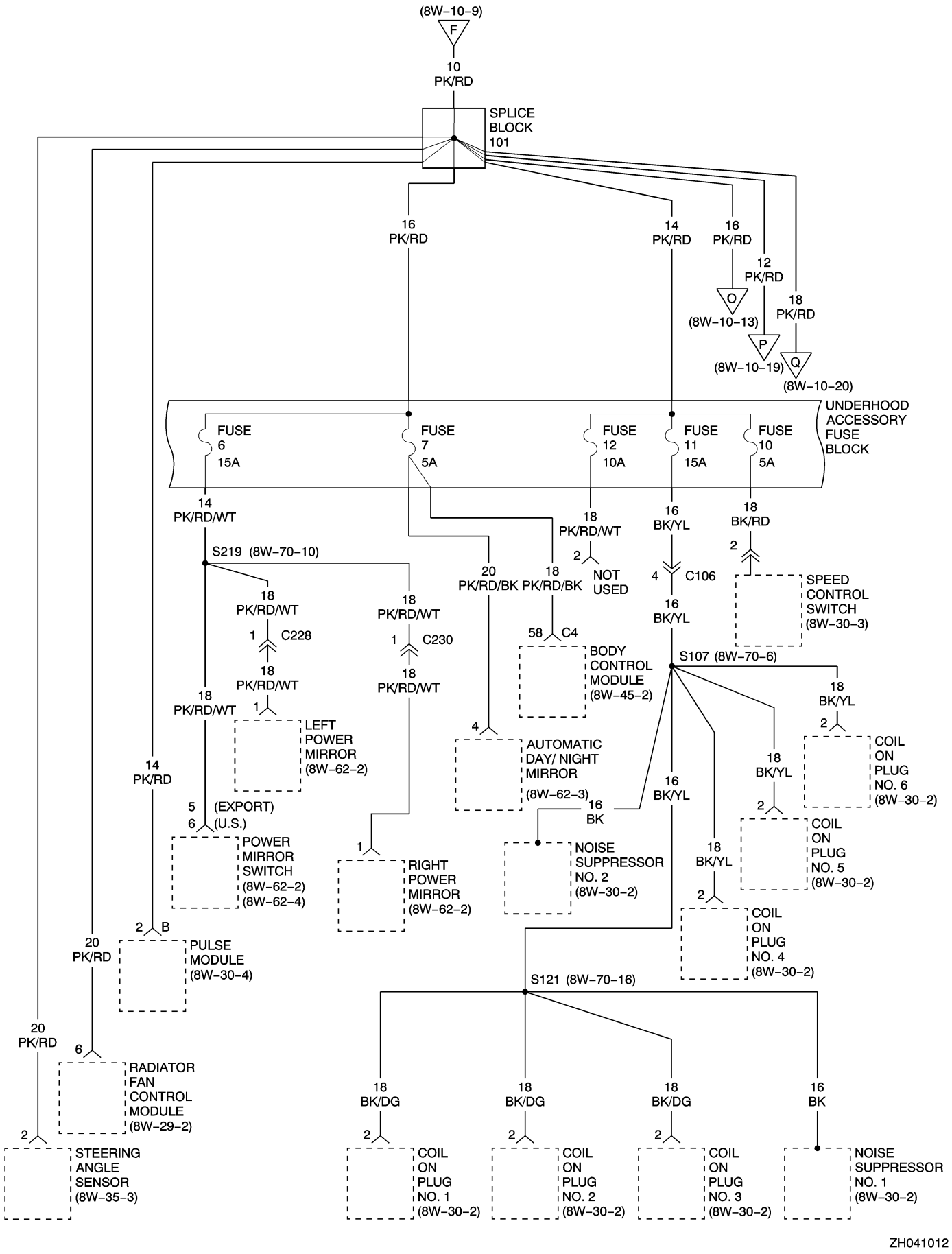
(8W–10–9)
F
10
PK/RD
SPLICE
BLOCK
101
16
PK/RD
14
PK/RD
16
PK/RD
12
PK/RD
18
PK/RD
O
(8W–10–13)
P
(8W–10–19)
Q
(8W–10–20)
UNDERHOOD
ACCESSORY
FUSE
BLOCK
FUSE
6
15A
FUSE
7
5A
FUSE
12
10A
FUSE
11
15A
FUSE
10
5A
14
PK/RD/WT
18
PK/RD/WT
16
BK/YL
18
BK/RD
S219 (8W–70–10)
2
NOT
USED
4
C106
SPEED
CONTROL
SWITCH
(8W–30–3)
20
PK/RD/BK
18
PK/RD/BK
18
PK/RD/WT
1
C228
18
PK/RD/WT
18
PK/RD/WT
1
C230
18
PK/RD/WT
58
C4
BODY
CONTROL
MODULE
(8W–45–2)
S107 (8W–70–6)
18
BK/YL
2
COIL
ON
PLUG
NO. 6
(8W–30–2)
18
PK/RD/WT
1
LEFT
POWER
MIRROR
(8W–62–2)
4
AUTOMATIC
DAY/ NIGHT
MIRROR
(8W–62–3)
14
PK/RD
16
BK/YL
18
BK/YL
5
(EXPORT)
6
(U.S.)
16
BK
2
COIL
ON
PLUG
NO. 5
(8W–30–2)
POWER
MIRROR
SWITCH
(8W–62–2)
(8W–62–4)
1
RIGHT
POWER
MIRROR
(8W–62–2)
NOISE
SUPPRESSOR
NO. 2
(8W–30–2)
18
BK/YL
2
COIL
ON
PLUG
NO. 4
(8W–30–2)
2
B
20
PK/RD
PULSE
MODULE
(8W–30–4)
S121 (8W–70–16)
20
PK/RD
6
RADIATOR
FAN
CONTROL
MODULE
(8W–29–2)
18
BK/DG
18
BK/DG
18
BK/DG
16
BK
2
STEERING
ANGLE
SENSOR
(8W–35–3)
COIL
ON
PLUG
NO. 1
(8W–30–2)
COIL
ON
PLUG
NO. 2
(8W–30–2)
COIL
ON
PLUG
NO. 3
(8W–30–2)
NOISE
SUPPRESSOR
NO. 1
(8W–30–2)

ZH041012

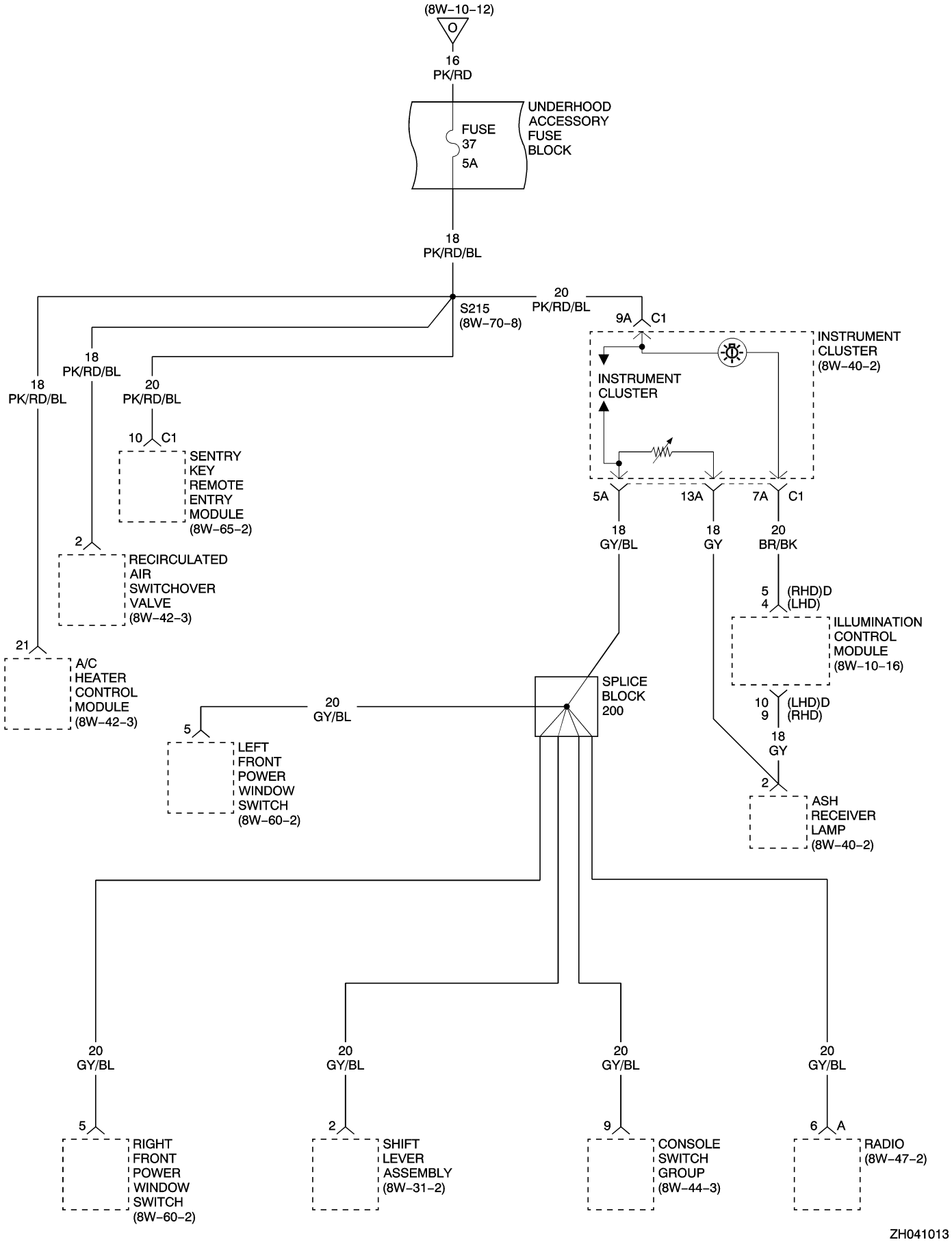
(8W–10–12)
O
16
PK/RD
UNDERHOOD
ACCESSORY
FUSE
BLOCK
FUSE
37
5A
18
PK/RD/BL
S215
(8W–70–8)
20
PK/RD/BL
9A
C1
INSTRUMENT
CLUSTER
(8W–40–2)
INSTRUMENT
CLUSTER
18
PK/RD/BL
18
PK/RD/BL
20
PK/RD/BL
10
C1
SENTRY
KEY
REMOTE
ENTRY
MODULE
(8W–65–2)
2
RECIRCULATED
AIR
SWITCHOVER
VALVE
(8W–42–3)
21
A/C
HEATER
CONTROL
MODULE
(8W–42–3)
5A
13A
7A
C1
18
GY/BL
18
GY
20
BR/BK
5
4
(RHD)D
(LHD)
ILLUMINATION
CONTROL
MODULE
(8W–10–16)
10
9
(LHD)D
(RHD)
18
GY
2
ASH
RECEIVER
LAMP
(8W–40–2)
SPLICE
BLOCK
200
20
GY/BL
5
LEFT
FRONT
POWER
WINDOW
SWITCH
(8W–60–2)
20
GY/BL
5
RIGHT
FRONT
POWER
WINDOW
SWITCH
(8W–60–2)
20
GY/BL
2
SHIFT
LEVER
ASSEMBLY
(8W–31–2)
20
GY/BL
9
CONSOLE
SWITCH
GROUP
(8W–44–3)
20
GY/BL
6
A
RADIO
(8W–47–2)
ZH041013

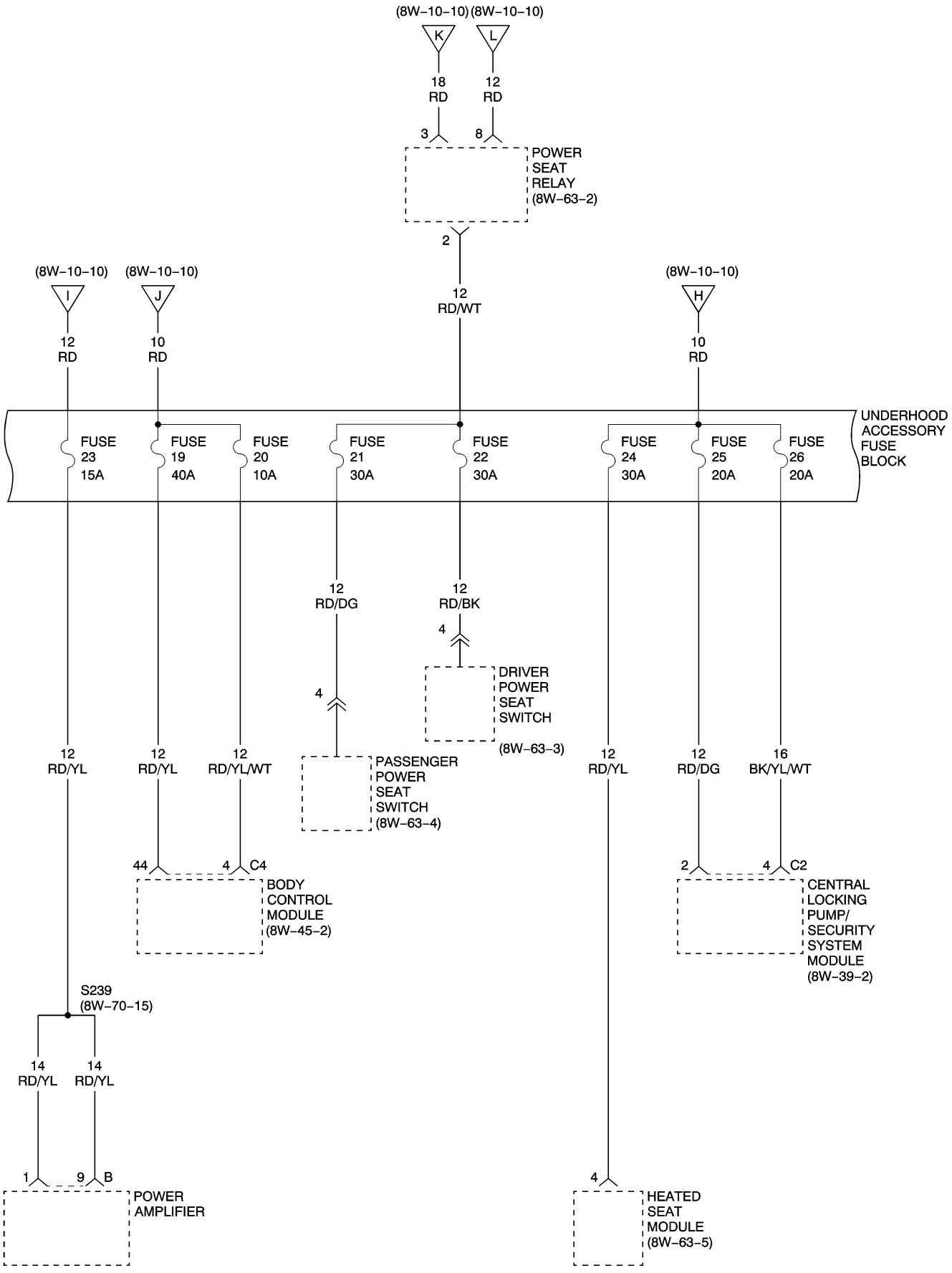
(8W-10-10)
K
18
RD
3
(8W-10-10)
L
12
RD
8
POWER
SEAT
RELAY
(8W-63-2)
2
12
RD/WT
(8W-10-10)
I
12
RD
(8W-10-10)
J
10
RD
(8W-10-10)
H
10
RD
FUSE
23
15A
FUSE
19
40A
FUSE
20
10A
FUSE
21
30A
FUSE
22
30A
FUSE
24
30A
FUSE
25
20A
FUSE
26
20A
UNDERHOOD
ACCESSORY
FUSE
BLOCK
12
RD/DG
4
12
RD/BK
4
DRIVER
POWER
SEAT
SWITCH
(8W-63-3)
PASSENGER
POWER
SEAT
SWITCH
(8W-63-4)
12
RD/YL
12
RD/YL
12
RD/YL/WT
12
RD/YL
12
RD/DG
16
BK/YL/WT
44
4
C4
BODY
CONTROL
MODULE
(8W-45-2)
2
4
C2
CENTRAL
LOCKING
PUMP/
SECURITY
SYSTEM
MODULE
(8W-39-2)
S239
(8W-70-15)
14
RD/YL
14
RD/YL
1
9
B
POWER
AMPLIFIER
4
HEATED
SEAT
MODULE
(8W-63-5)

ZH041014

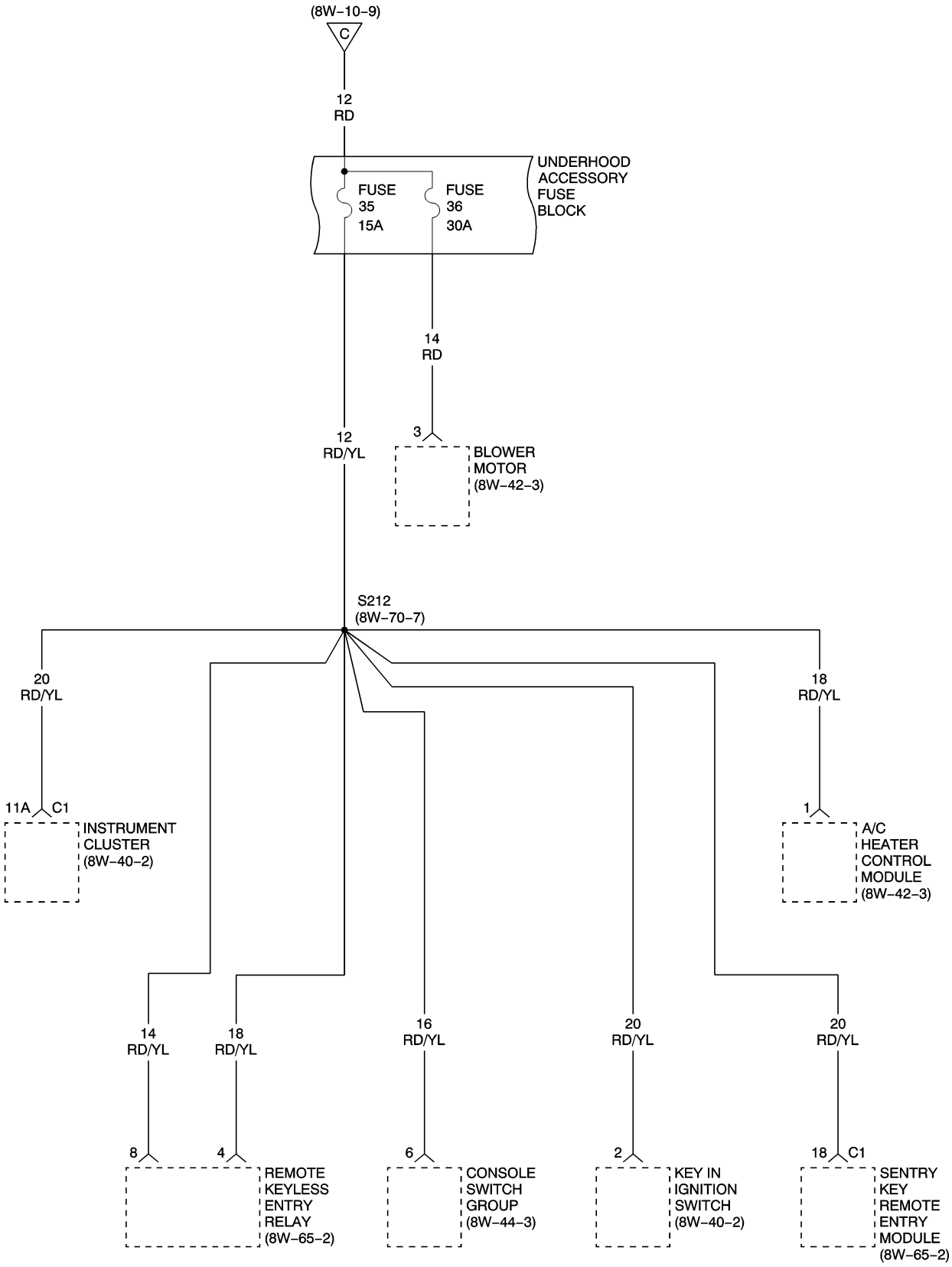
(8W–10–9)
C
12
RD
UNDERHOOD
ACCESSORY
FUSE
BLOCK
FUSE
35
15A
FUSE
36
30A
14
RD
12
RD/YL
3
BLOWER
MOTOR
(8W–42–3)
S212
(8W–70–7)
20
RD/YL
11A
C1
INSTRUMENT
CLUSTER
(8W–40–2)
18
RD/YL
1
A/C
HEATER
CONTROL
MODULE
(8W–42–3)
14
RD/YL
8
REMOTE
KEYLESS
ENTRY
RELAY
(8W–65–2)
18
RD/YL
4
16
RD/YL
6
CONSOLE
SWITCH
GROUP
(8W–44–3)
20
RD/YL
2
KEY IN
IGNITION
SWITCH
(8W–40–2)
20
RD/YL
18
C1
SENTRY
KEY
REMOTE
ENTRY
MODULE
(8W–65–2)

ZH041015

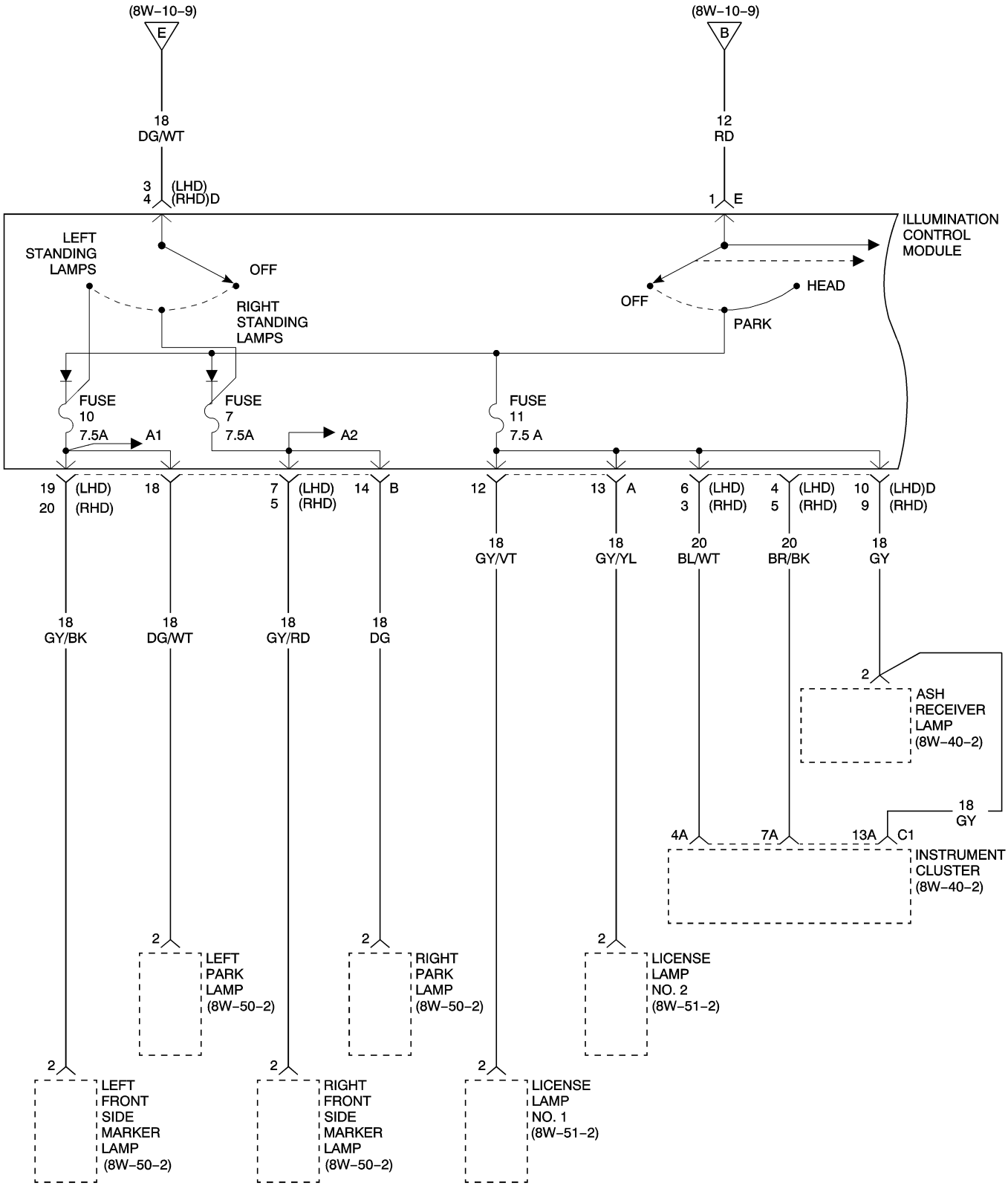
(8W–10–9)
E
18
DG/WT
3
4
(LHD)
(RHD)D
(8W–10–9)
B
12
RD
1
E
ILLUMINATION
CONTROL
MODULE
LEFT
STANDING
LAMPS
OFF
RIGHT
STANDING
LAMPS
OFF
HEAD
PARK
FUSE
10
7.5A
A1
FUSE
7
7.5A
A2
FUSE
11
7.5 A
19
20
(LHD)
(RHD)
18
7
5
(LHD)
(RHD)
14
B
12
13
A
6
3
(LHD)
(RHD)
4
5
(LHD)
(RHD)
10
9
(LHD)D
(RHD)
18
GY/BK
18
DG/WT
18
GY/RD
18
DG
18
GY/VT
18
GY/YL
20
BL/WT
20
BR/BK
18
GY
2
ASH
RECEIVER
LAMP
(8W–40–2)
18
GY
4A
7A
13A
C1
INSTRUMENT
CLUSTER
(8W–40–2)
2
LEFT
PARK
LAMP
(8W–50–2)
2
RIGHT
PARK
LAMP
(8W–50–2)
2
LICENSE
LAMP
NO. 2
(8W–51–2)
2
LEFT
FRONT
SIDE
MARKER
LAMP
(8W–50–2)
2
RIGHT
FRONT
SIDE
MARKER
LAMP
(8W–50–2)
2
LICENSE
LAMP
NO. 1
(8W–51–2)

ZH041016

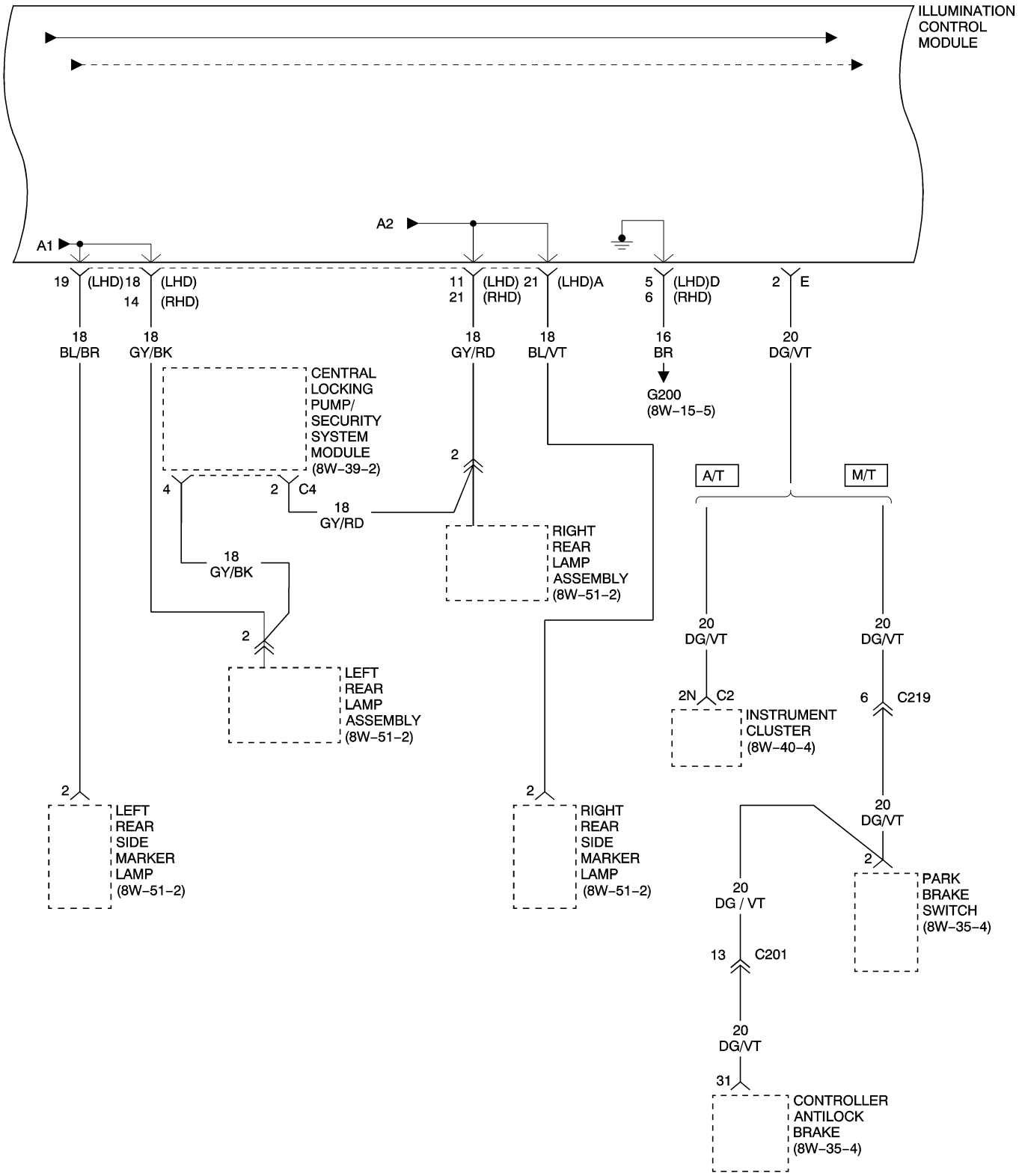
ILLUMINATION CONTROL MODULE
A1
A2
19 (LHD)
18 (LHD)
14 (RHD)
11 (LHD)
21 (RHD)
21 (LHD)A
5 (LHD)D
6 (RHD)
2 E
18 BL/BR
18 GY/BK
18 GY/RD
18 BL/VT
16 BR
20 DG/VT
G200 (8W–15–5)
CENTRAL LOCKING PUMP/ SECURITY SYSTEM MODULE (8W–39–2)
4
2 C4
18 GY/RD
2
18 GY/BK
2
LEFT REAR LAMP ASSEMBLY (8W–51–2)
RIGHT REAR LAMP ASSEMBLY (8W–51–2)
A/T
M/T
20 DG/VT
20 DG/VT
2N C2
INSTRUMENT CLUSTER (8W–40–4)
6 C219
2
LEFT REAR SIDE MARKER LAMP (8W–51–2)
2
RIGHT REAR SIDE MARKER LAMP (8W–51–2)
20 DG/VT
2
PARK BRAKE SWITCH (8W–35–4)
20 DG / VT
13 C201
20 DG/VT
31
CONTROLLER ANTILOCK BRAKE (8W–35–4)

ZH041017

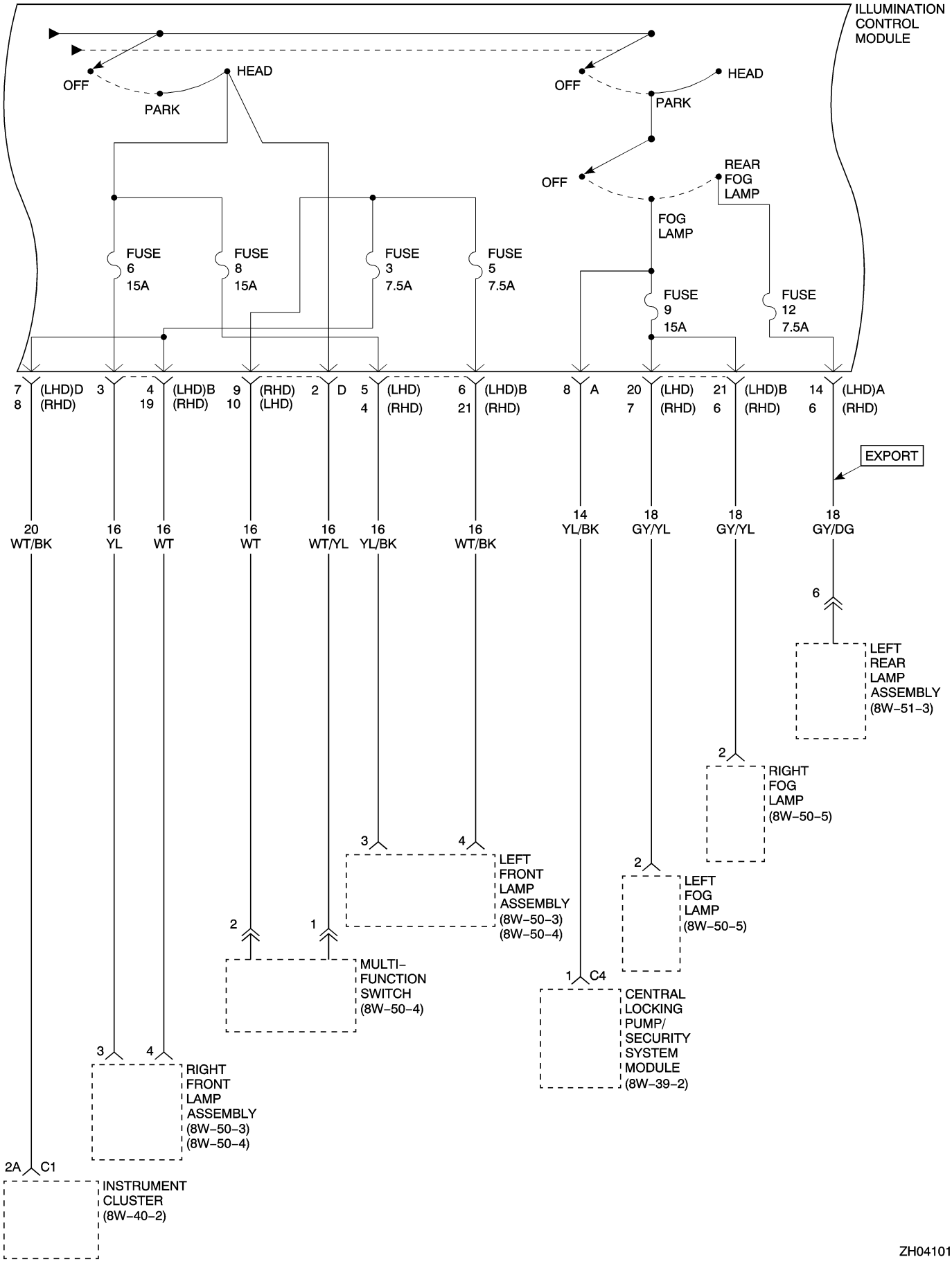
ILLUMINATION CONTROL MODULE
OFF
HEAD
PARK
OFF
HEAD
PARK
OFF
REAR FOG LAMP
FOG LAMP
FUSE 6 15A
FUSE 8 15A
FUSE 3 7.5A
FUSE 5 7.5A
FUSE 9 15A
FUSE 12 7.5A
7 8 (LHD)D (RHD)
3
4 19 (LHD)B (RHD)
9 10 (RHD) (LHD)
2 D
5 4 (LHD) (RHD)
6 21 (LHD)B (RHD)
8 A
20 7 (LHD) (RHD)
21 6 (LHD)B (RHD)
14 6 (LHD)A (RHD)
EXPORT
20 WT/BK
16 YL
16 WT
16 WT
16 WT/YL
16 YL/BK
16 WT/BK
14 YL/BK
18 GY/YL
18 GY/YL
18 GY/DG
6
LEFT REAR LAMP ASSEMBLY (8W–51–3)
2
RIGHT FOG LAMP (8W–50–5)
3
4
LEFT FRONT LAMP ASSEMBLY (8W–50–3) (8W–50–4)
2
LEFT FOG LAMP (8W–50–5)
2
1
MULTI–FUNCTION SWITCH (8W–50–4)
1 C4
CENTRAL LOCKING PUMP/ SECURITY SYSTEM MODULE (8W–39–2)
3
4
RIGHT FRONT LAMP ASSEMBLY (8W–50–3) (8W–50–4)
2A C1
INSTRUMENT CLUSTER (8W–40–2)

ZH041018

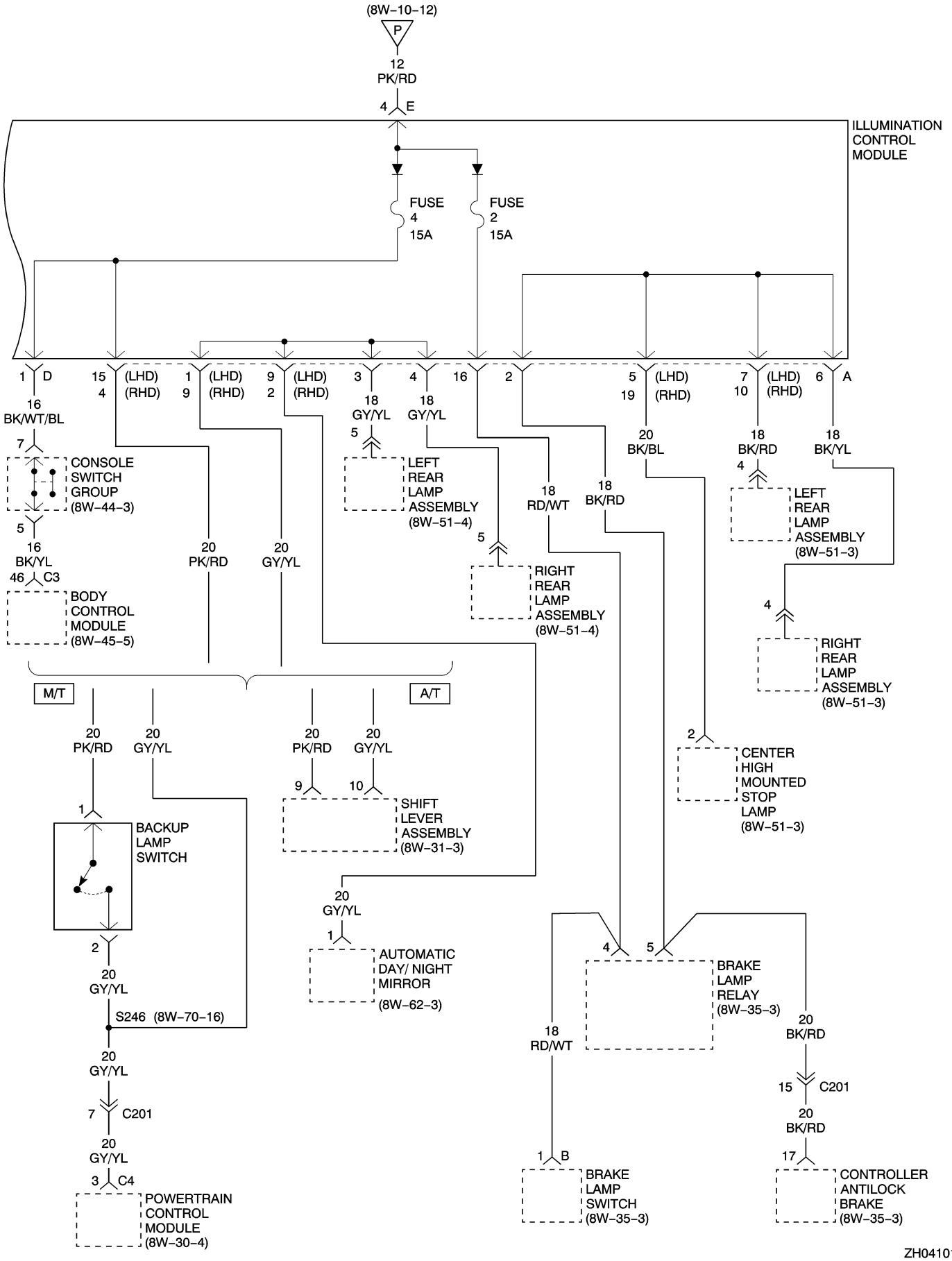
(8W–10–12)
P
12
PK/RD
4 E
ILLUMINATION CONTROL MODULE
FUSE 4 15A
FUSE 2 15A
1 D
15 4 (LHD) (RHD)
1 9 (LHD) (RHD)
9 2 (LHD) (RHD)
3
4
16
2
5 19 (LHD) (RHD)
7 10 (LHD) (RHD)
6 A
16 BK/WT/BL
7
CONSOLE SWITCH GROUP (8W–44–3)
5
16 BK/YL
46 C3
BODY CONTROL MODULE (8W–45–5)
18 GY/YL
5
LEFT REAR LAMP ASSEMBLY (8W–51–4)
18 GY/YL
20 BK/BL
18 BK/RD
4
LEFT REAR LAMP ASSEMBLY (8W–51–3)
18 BK/YL
4
RIGHT REAR LAMP ASSEMBLY (8W–51–3)
18 RD/WT
18 BK/RD
5
RIGHT REAR LAMP ASSEMBLY (8W–51–4)
20 PK/RD
20 GY/YL
M/T
A/T
20 PK/RD
20 GY/YL
1
BACKUP LAMP SWITCH
2
20 GY/YL
S246 (8W–70–16)
20 GY/YL
7 C201
20 GY/YL
3 C4
POWERTRAIN CONTROL MODULE (8W–30–4)
20 PK/RD
20 GY/YL
9
10
SHIFT LEVER ASSEMBLY (8W–31–3)
20 GY/YL
1
AUTOMATIC DAY/ NIGHT MIRROR (8W–62–3)
2
CENTER HIGH MOUNTED STOP LAMP (8W–51–3)
4
5
BRAKE LAMP RELAY (8W–35–3)
18 RD/WT
1 B
BRAKE LAMP SWITCH (8W–35–3)
20 BK/RD
15 C201
20 BK/RD
17
CONTROLLER ANTILOCK BRAKE (8W–35–3)
ZH041019

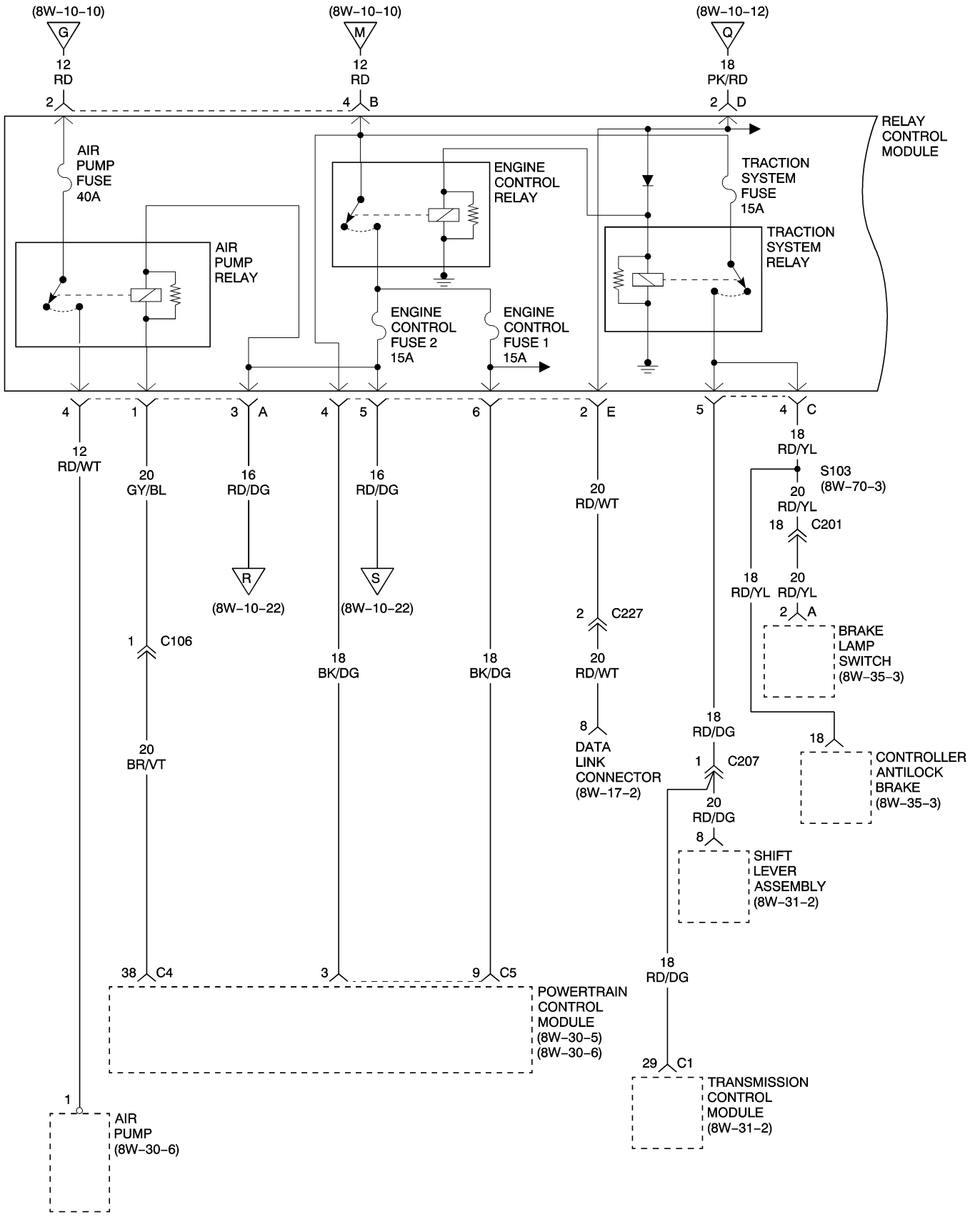
(8W–10–10)
G
12
RD
2
(8W–10–10)
M
12
RD
4 B
(8W–10–12)
Q
18
PK/RD
2 D
RELAY CONTROL MODULE
AIR PUMP FUSE 40A
AIR PUMP RELAY
ENGINE CONTROL RELAY
ENGINE CONTROL FUSE 2 15A
ENGINE CONTROL FUSE 1 15A
TRACTION SYSTEM FUSE 15A
TRACTION SYSTEM RELAY
4 12 RD/WT
1 20 GY/BL
3 A 16 RD/DG
4 5 16 RD/DG
6 18 BK/DG
2 E 20 RD/WT
5 18 RD/DG
4 C 18 RD/YL
S103 (8W–70–3)
20 RD/YL
18 C201
18 RD/YL
20 RD/YL
2 A
BRAKE LAMP SWITCH (8W–35–3)
R
(8W–10–22)
S
(8W–10–22)
1 C106
20 BR/VT
2 C227
20 RD/WT
8 DATA LINK CONNECTOR (8W–17–2)
1 C207
20 RD/DG
8
SHIFT LEVER ASSEMBLY (8W–31–2)
18
CONTROLLER ANTILOCK BRAKE (8W–35–3)
38 C4
3
9 C5
POWERTRAIN CONTROL MODULE (8W–30–5) (8W–30–6)
18 RD/DG
29 C1
TRANSMISSION CONTROL MODULE (8W–31–2)
1
AIR PUMP (8W–30–6)

ZH041020

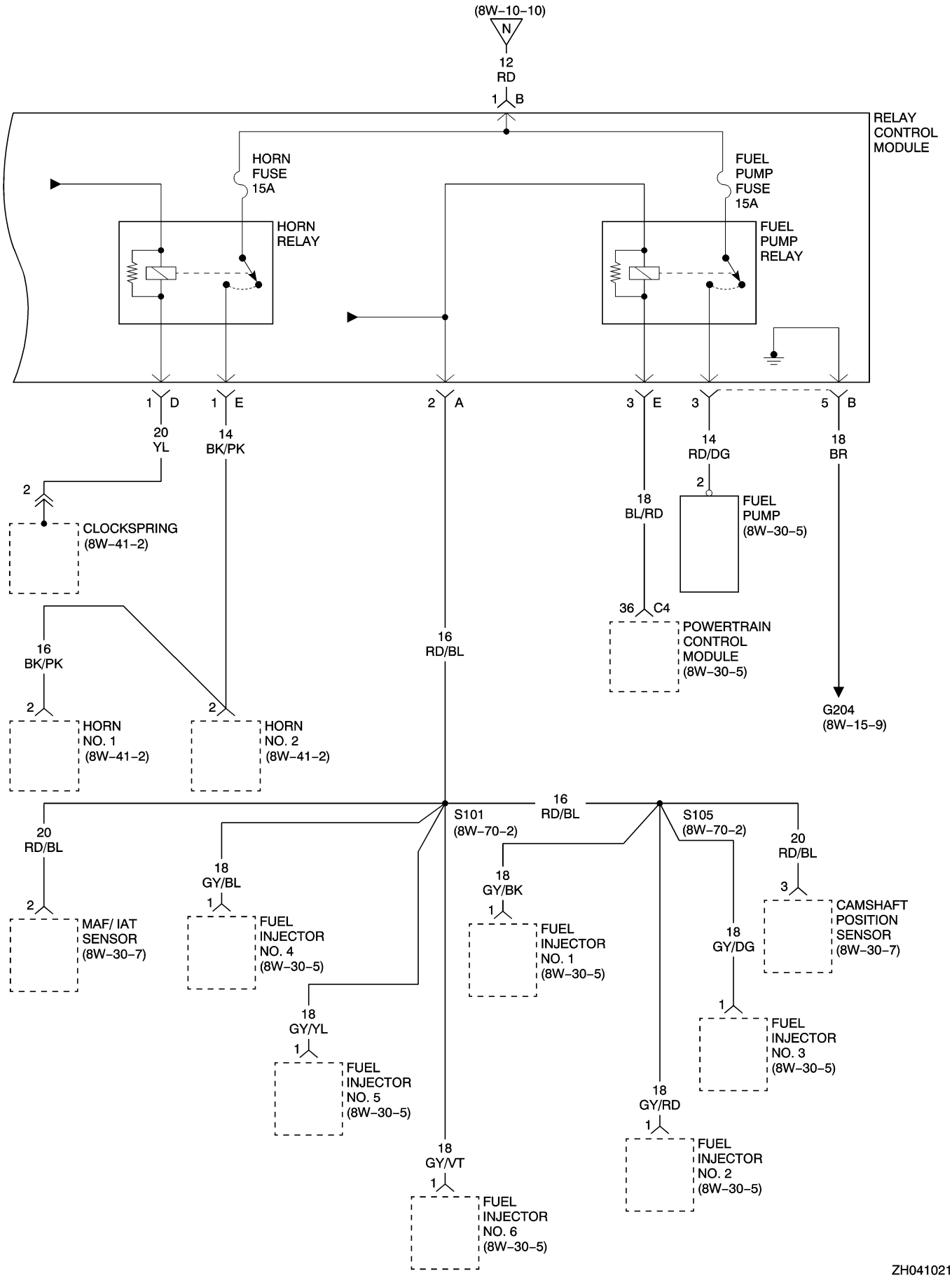
(8W–10–10)
N
12
RD
1 B
RELAY
CONTROL
MODULE
HORN
FUSE
15A
HORN
RELAY
FUEL
PUMP
FUSE
15A
FUEL
PUMP
RELAY
1 D
1 E
2 A
3 E
3
5 B
20
YL
14
BK/PK
14
RD/DG
18
BR
2
CLOCKSPRING
(8W–41–2)
18
BL/RD
2
FUEL
PUMP
(8W–30–5)
36 C4
POWERTRAIN
CONTROL
MODULE
(8W–30–5)
G204
(8W–15–9)
16
BK/PK
16
RD/BL
2
HORN
NO. 1
(8W–41–2)
2
HORN
NO. 2
(8W–41–2)
16
RD/BL
S101
(8W–70–2)
S105
(8W–70–2)
20
RD/BL
18
GY/BL
1
FUEL
INJECTOR
NO. 4
(8W–30–5)
MAF/ IAT
SENSOR
(8W–30–7)
18
GY/BK
1
FUEL
INJECTOR
NO. 1
(8W–30–5)
20
RD/BL
3
CAMSHAFT
POSITION
SENSOR
(8W–30–7)
18
GY/DG
1
FUEL
INJECTOR
NO. 3
(8W–30–5)
18
GY/YL
1
FUEL
INJECTOR
NO. 5
(8W–30–5)
18
GY/RD
1
FUEL
INJECTOR
NO. 2
(8W–30–5)
18
GY/VT
1
FUEL
INJECTOR
NO. 6
(8W–30–5)
ZH041021

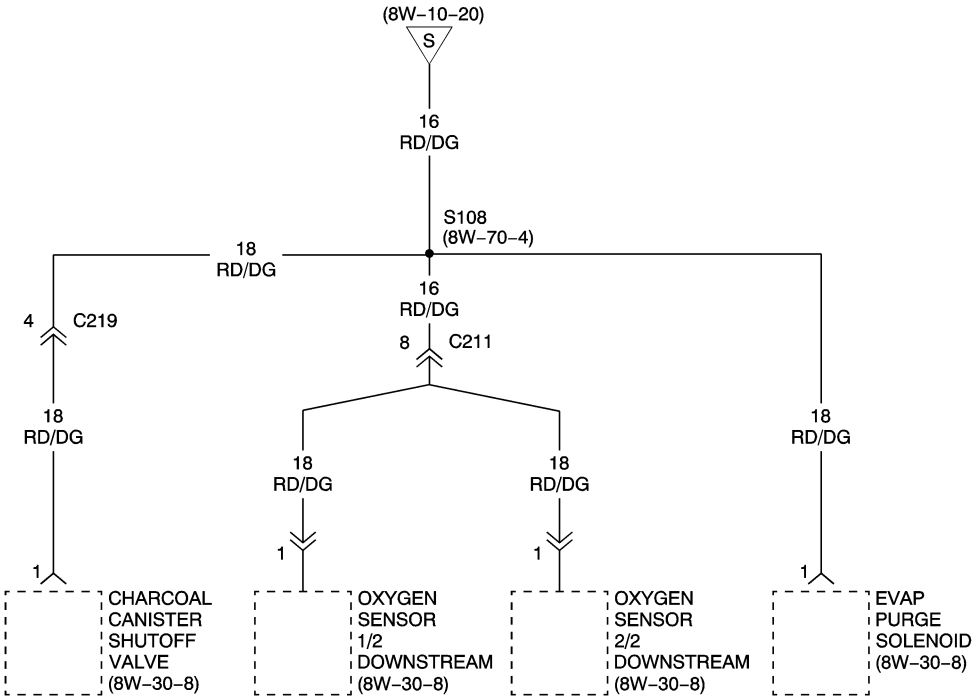
(8W–10–20)
S
16
RD/DG
S108
(8W–70–4)
18
RD/DG
16
RD/DG
4
C219
8
C211
18
RD/DG
18
RD/DG
18
RD/DG
18
RD/DG
1
1
1
1
CHARCOAL
CANISTER
SHUTOFF
VALVE
(8W–30–8)
OXYGEN
SENSOR
1/2
DOWNSTREAM
(8W–30–8)
OXYGEN
SENSOR
2/2
DOWNSTREAM
(8W–30–8)
EVAP
PURGE
SOLENOID
(8W–30–8)

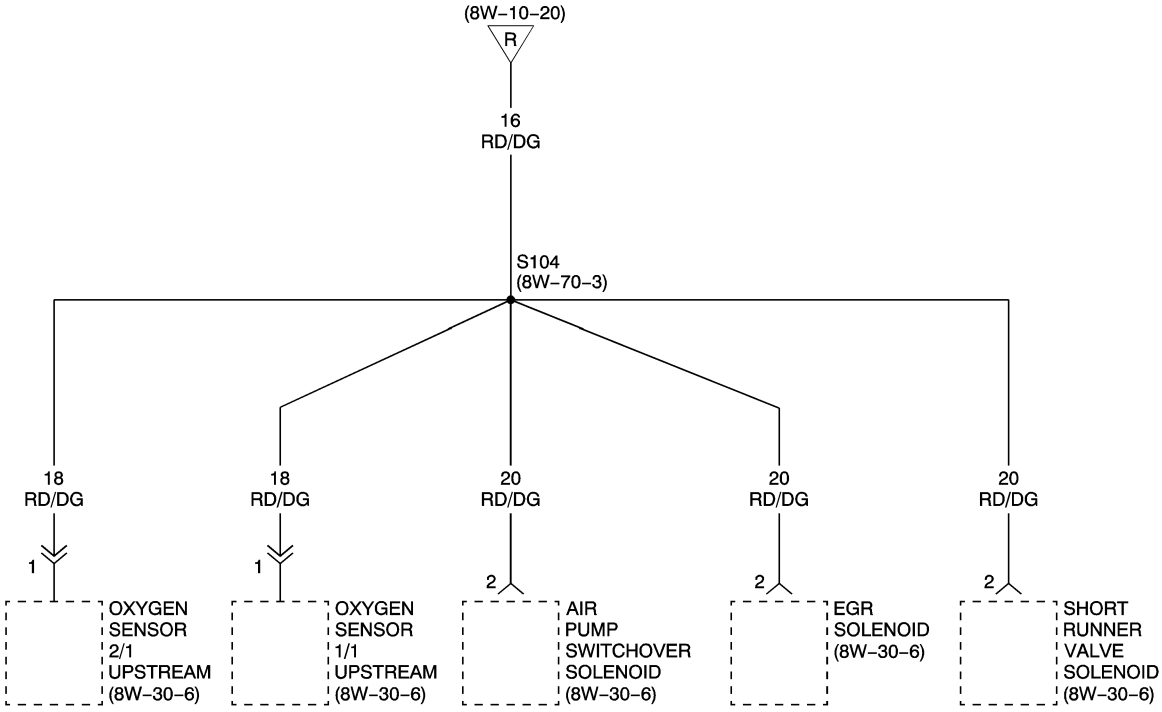
(8W–10–20)
R
16
RD/DG
S104
(8W–70–3)
18
RD/DG
18
RD/DG
20
RD/DG
20
RD/DG
20
RD/DG
1
1
2
2
2
OXYGEN
SENSOR
2/1
UPSTREAM
(8W–30–6)
OXYGEN
SENSOR
1/1
UPSTREAM
(8W–30–6)
AIR
PUMP
SWITCHOVER
SOLENOID
(8W–30–6)
EGR
SOLENOID
(8W–30–6)
SHORT
RUNNER
VALVE
SOLENOID
(8W–30–6)

ZH041022

8W-15 GROUND DISTRIBUTION

Component	Page
A/C Heater Control Module	8W-15-5
Air Pump	8W-15-4
Ash Receiver Lamp	8W-15-5
Automatic Day/Night Mirror	8W-15-6
Battery	8W-15-4
Blower Motor	8W-15-5
Body Control Module	8W-15-9
Brake Fluid Level Switch	8W-15-2
Center High Mounted Stop Lamp	8W-15-10
Central Locking Pump/Security System Module	8W-15-11
Cigar Lighter	8W-15-5
Clockspring	8W-15-5
Clutch Pedal Position Switch	8W-15-2
Console Switch Group	8W-15-5
Controller Antilock Brake	8W-15-2
Data Link Connector	8W-15-5
Dome Lamp	8W-15-9
Driver Cylinder Lock Switch	8W-15-6
Driver Power Seat Switch	8W-15-6
Driver Seat Belt Switch	8W-15-6
Driver Seat Belt Tensioner Switch	8W-15-7
Fuel Pump	8W-15-9
G100	8W-15-2
G101	8W-15-3
G104	8W-15-4
G107	8W-15-4
G200	8W-15-5
G201	8W-15-6
G202	8W-15-7
G203	8W-15-8
G204	8W-15-9
G205	8W-15-9
G206	8W-15-9
G300	8W-15-10
G301	8W-15-11
Glove Box Lamp	8W-15-5
Glove Box Switch	8W-15-5
Hood Ajar Switch	8W-15-2
Horn No. 1	8W-15-2
Horn No. 2	8W-15-2
Horn Switch	8W-15-5
Illumination Control Module	8W-15-5
Instrument Cluster	8W-15-5
Kickdown Switch	8W-15-3
Left Door Ajar Switch	8W-15-6
Left Fog Lamp	8W-15-2
Left Front Brake Pad Wear Sensor	8W-15-2
Left Front Lamp Assembly	8W-15-2
Left Front Side Marker Lamp	8W-15-2
Left Heated Seat Back	8W-15-8
Left Heated Seat Cushion	8W-15-8
Left Park Lamp	8W-15-2
Left Power Mirror	8W-15-6
Left Rear Lamp Assembly	8W-15-10
Left Rear Side Marker Lamp	8W-15-10
Left Side Impact Sensor	8W-15-7
License Lamp No. 1	8W-15-10
License Lamp No. 2	8W-15-11
Liftgate Lock Switch	8W-15-11
Noise Suppressor No. 1	8W-15-4
Noise Suppressor No. 2	8W-15-4
Occupant Restraint Controller	8W-15-7
Park Brake Switch	8W-15-8
Passenger Power Seat Switch	8W-15-6
Passenger Seat Belt Tensioner Switch	8W-15-7
Passenger Seat Occupant Simulator	8W-15-7
Power Amplifier	8W-15-9
Power Mirror Switch	8W-15-8
Power Seat Relay	8W-15-6
Powertrain Control Module	8W-15-3
Pulse Module	8W-15-2
Radiator Fan Control Module	8W-15-2
Radio	8W-15-8
Rear Spoiler Limit Switch	8W-15-10
Rear Window Capacitor	8W-15-11
Rear Window Defogger	8W-15-9
Relay Control Module	8W-15-9
Right Door Ajar Switch	8W-15-9
Right Fog Lamp	8W-15-3
Right Front Brake Pad Wear Sensor	8W-15-3
Right Front Lamp Assembly	8W-15-3
Right Front Side Marker Lamp	8W-15-3
Right Heated Seat Back	8W-15-8
Right Heated Seat Cushion	8W-15-8
Right Park Lamp	8W-15-3
Right Power Mirror	8W-15-9
Right Rear Lamp Assembly	8W-15-11
Right Rear Side Marker Lamp	8W-15-11
Right Side Impact Sensor	8W-15-7
Sentry Key Remote Entry Module	8W-15-5
Shift Lever Assembly	8W-15-8
Siren	8W-15-3
Steering Angle Sensor	8W-15-5
Telescopic Steering Switch	8W-15-5
Transmission Control Module	8W-15-9
Universal Garage Door Opener/Tire Pressure Monitor	8W-15-6
Washer Pump Motor	8W-15-3

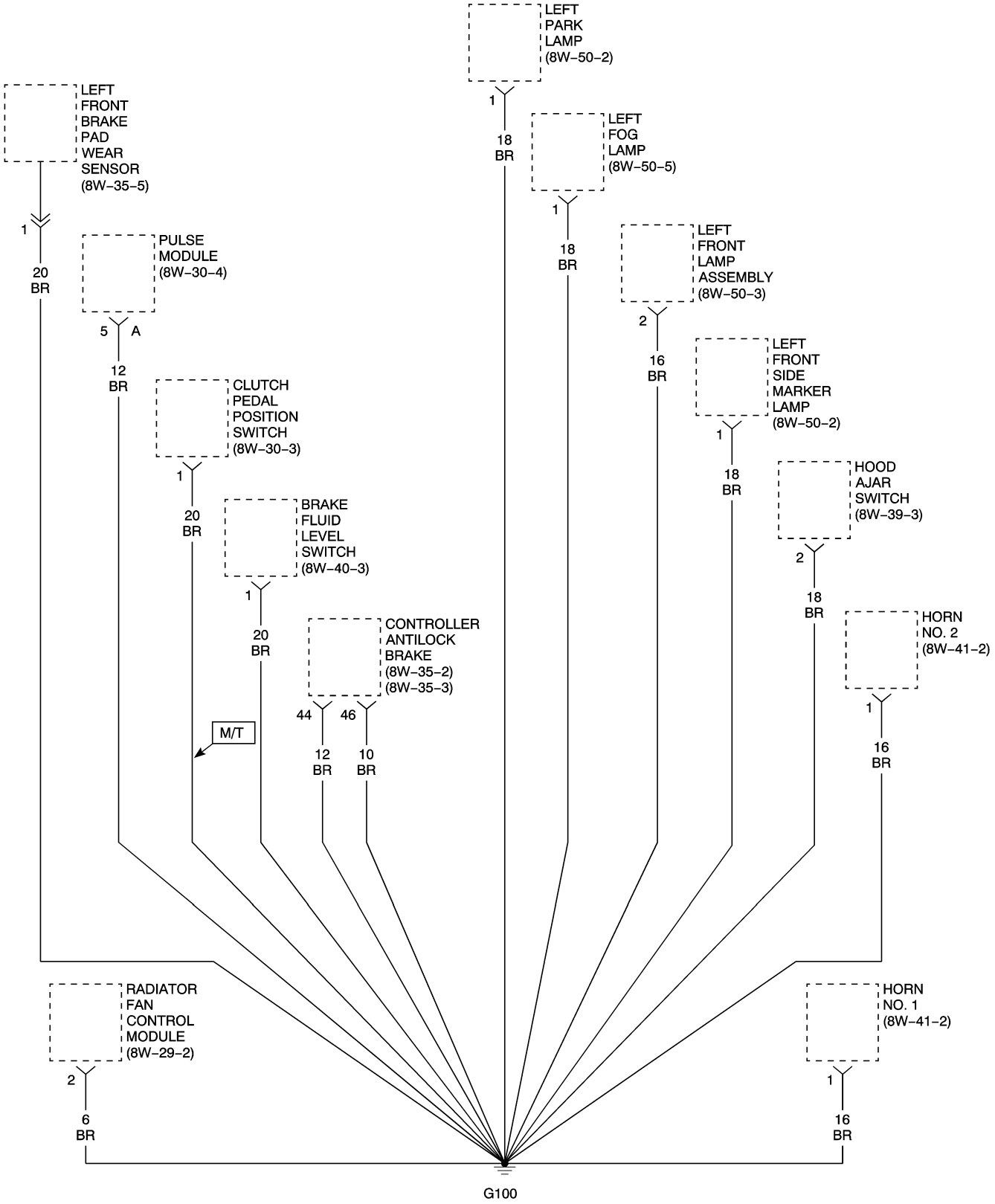
LEFT PARK LAMP (8W–50–2)
1
18 BR
LEFT FRONT BRAKE PAD WEAR SENSOR (8W–35–5)
1
20 BR
PULSE MODULE (8W–30–4)
5
A
12 BR
LEFT FOG LAMP (8W–50–5)
1
18 BR
LEFT FRONT LAMP ASSEMBLY (8W–50–3)
2
16 BR
LEFT FRONT SIDE MARKER LAMP (8W–50–2)
1
18 BR
CLUTCH PEDAL POSITION SWITCH (8W–30–3)
1
20 BR
HOOD AJAR SWITCH (8W–39–3)
2
18 BR
BRAKE FLUID LEVEL SWITCH (8W–40–3)
1
20 BR
HORN NO. 2 (8W–41–2)
1
16 BR
CONTROLLER ANTILOCK BRAKE (8W–35–2) (8W–35–3)
44
46
12 BR
10 BR
M/T
RADIATOR FAN CONTROL MODULE (8W–29–2)
2
6 BR
HORN NO. 1 (8W–41–2)
1
16 BR
G100

ZH041502

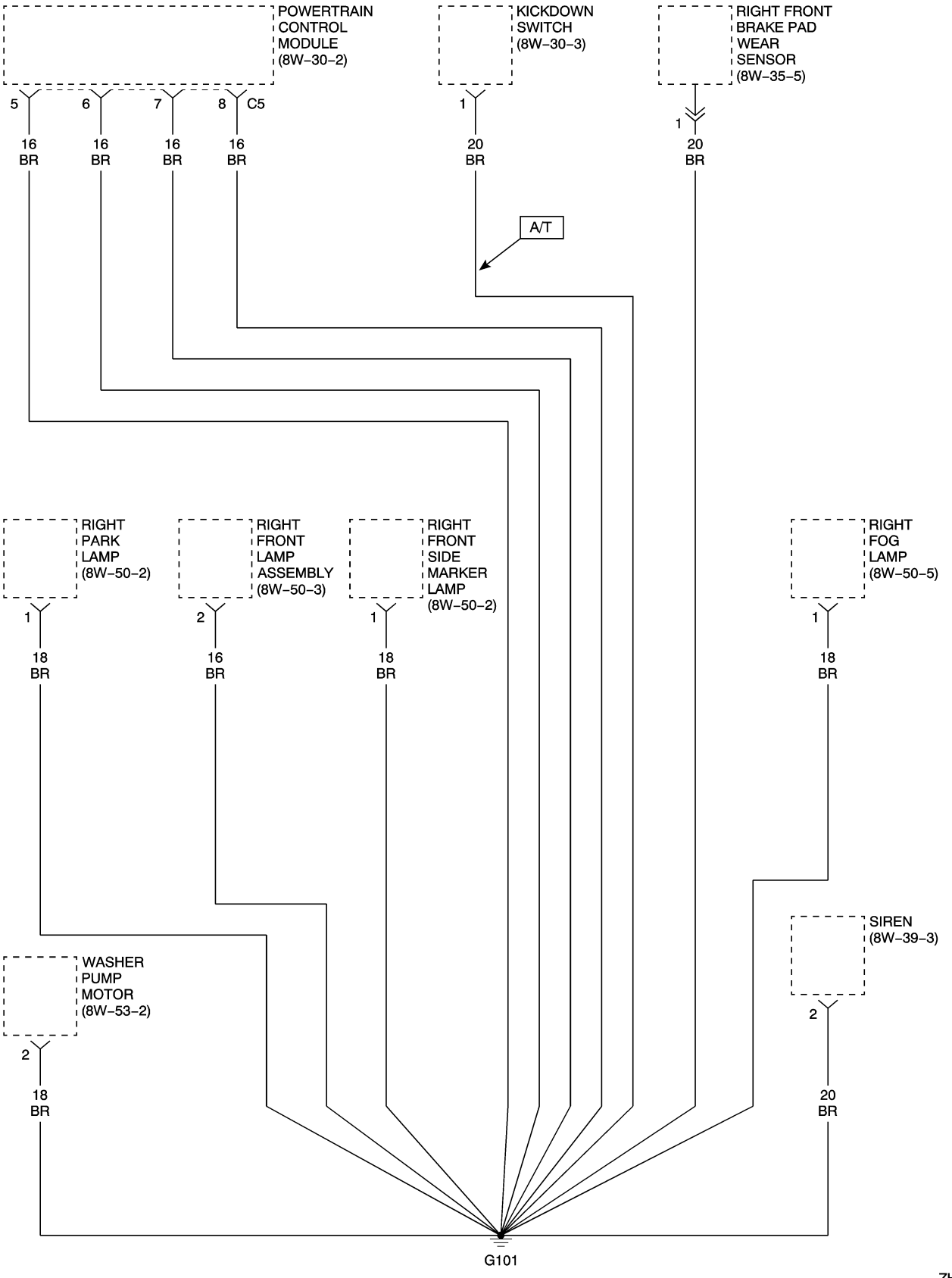
POWERTRAIN CONTROL MODULE (8W–30–2)
5
6
7
8
C5
16 BR
16 BR
16 BR
16 BR
KICKDOWN SWITCH (8W–30–3)
1
20 BR
A/T
RIGHT FRONT BRAKE PAD WEAR SENSOR (8W–35–5)
1
20 BR
RIGHT PARK LAMP (8W–50–2)
1
18 BR
RIGHT FRONT LAMP ASSEMBLY (8W–50–3)
2
16 BR
RIGHT FRONT SIDE MARKER LAMP (8W–50–2)
1
18 BR
RIGHT FOG LAMP (8W–50–5)
1
18 BR
WASHER PUMP MOTOR (8W–53–2)
2
18 BR
SIREN (8W–39–3)
2
20 BR
G101

ZH041503

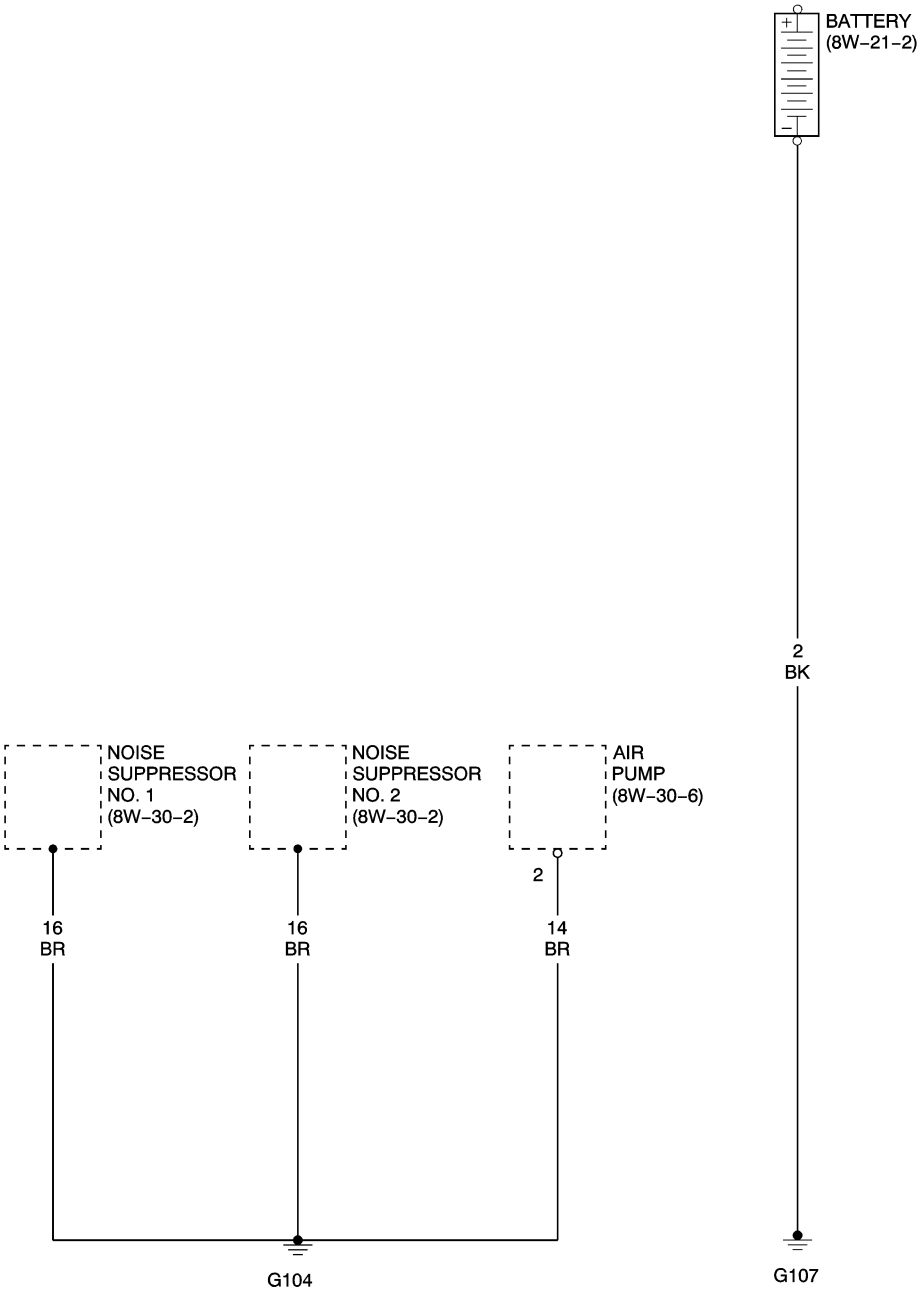
BATTERY
(8W–21–2)
2
BK
NOISE
SUPPRESSOR
NO. 1
(8W–30–2)
NOISE
SUPPRESSOR
NO. 2
(8W–30–2)
AIR
PUMP
(8W–30–6)
2
16
BR
16
BR
14
BR
G104
G107

ZH041504

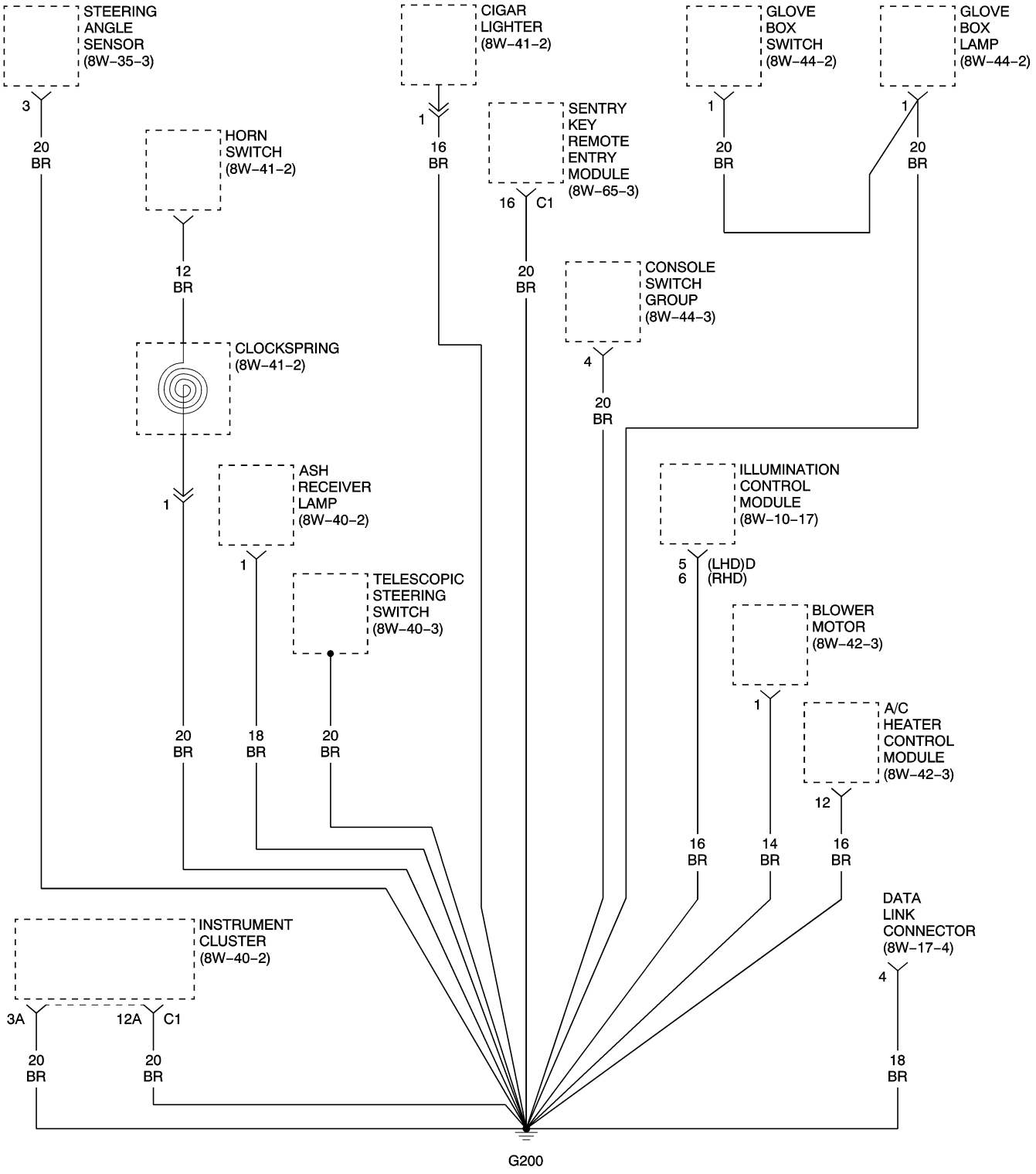
STEERING ANGLE SENSOR (8W–35–3)
3
20 BR
HORN SWITCH (8W–41–2)
12 BR
CLOCKSPRING (8W–41–2)
1
ASH RECEIVER LAMP (8W–40–2)
1
TELESCOPIC STEERING SWITCH (8W–40–3)
20 BR
18 BR
20 BR
INSTRUMENT CLUSTER (8W–40–2)
3A
12A
C1
20 BR
20 BR
CIGAR LIGHTER (8W–41–2)
1
16 BR
SENTRY KEY REMOTE ENTRY MODULE (8W–65–3)
16
C1
20 BR
CONSOLE SWITCH GROUP (8W–44–3)
4
20 BR
GLOVE BOX SWITCH (8W–44–2)
1
20 BR
GLOVE BOX LAMP (8W–44–2)
1
20 BR
ILLUMINATION CONTROL MODULE (8W–10–17)
5
6
(LHD)D
(RHD)
16 BR
BLOWER MOTOR (8W–42–3)
1
14 BR
A/C HEATER CONTROL MODULE (8W–42–3)
12
16 BR
DATA LINK CONNECTOR (8W–17–4)
4
18 BR
G200

ZH041505

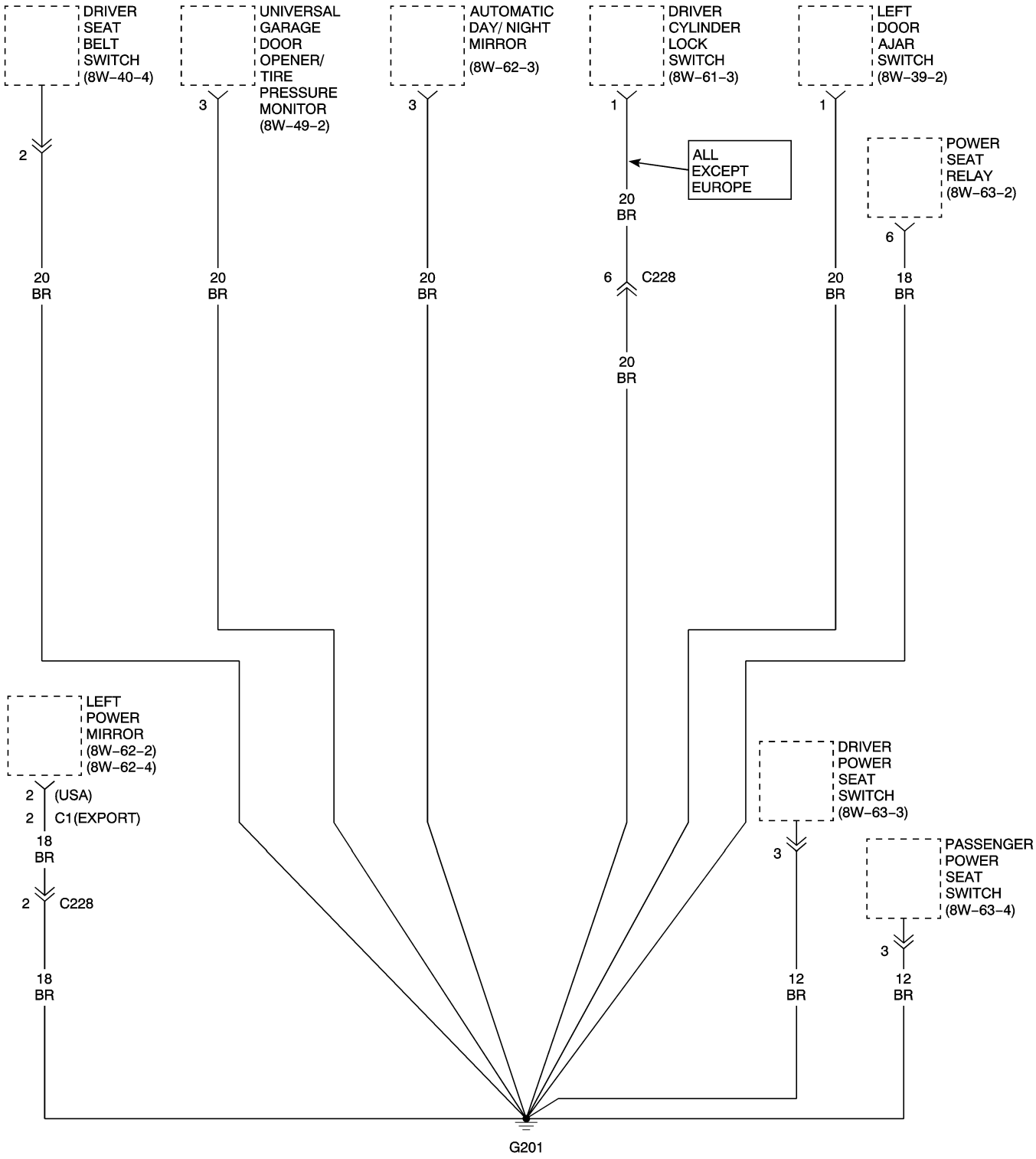
DRIVER SEAT BELT SWITCH (8W–40–4)
UNIVERSAL GARAGE DOOR OPENER/ TIRE PRESSURE MONITOR (8W–49–2)
AUTOMATIC DAY/ NIGHT MIRROR (8W–62–3)
DRIVER CYLINDER LOCK SWITCH (8W–61–3)
LEFT DOOR AJAR SWITCH (8W–39–2)
ALL EXCEPT EUROPE
POWER SEAT RELAY (8W–63–2)
LEFT POWER MIRROR (8W–62–2) (8W–62–4)
(USA)
C1(EXPORT)
C228
DRIVER POWER SEAT SWITCH (8W–63–3)
PASSENGER POWER SEAT SWITCH (8W–63–4)
G201

ZH041506

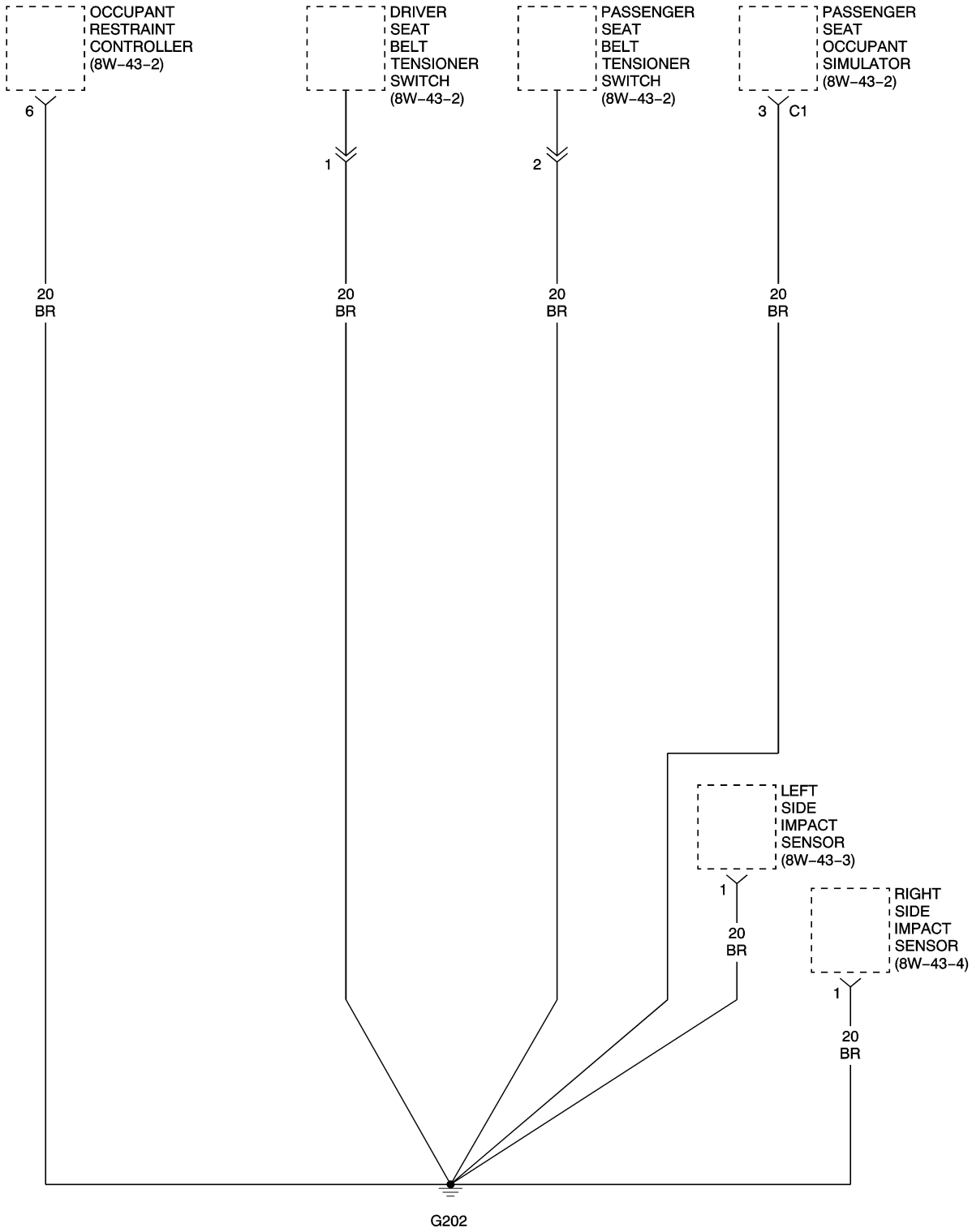
OCCUPANT RESTRAINT CONTROLLER (8W–43–2)
6
20 BR
DRIVER SEAT BELT TENSIONER SWITCH (8W–43–2)
1
20 BR
PASSENGER SEAT BELT TENSIONER SWITCH (8W–43–2)
2
20 BR
PASSENGER SEAT OCCUPANT SIMULATOR (8W–43–2)
3 C1
20 BR
LEFT SIDE IMPACT SENSOR (8W–43–3)
1
20 BR
RIGHT SIDE IMPACT SENSOR (8W–43–4)
1
20 BR
G202

ZH041507

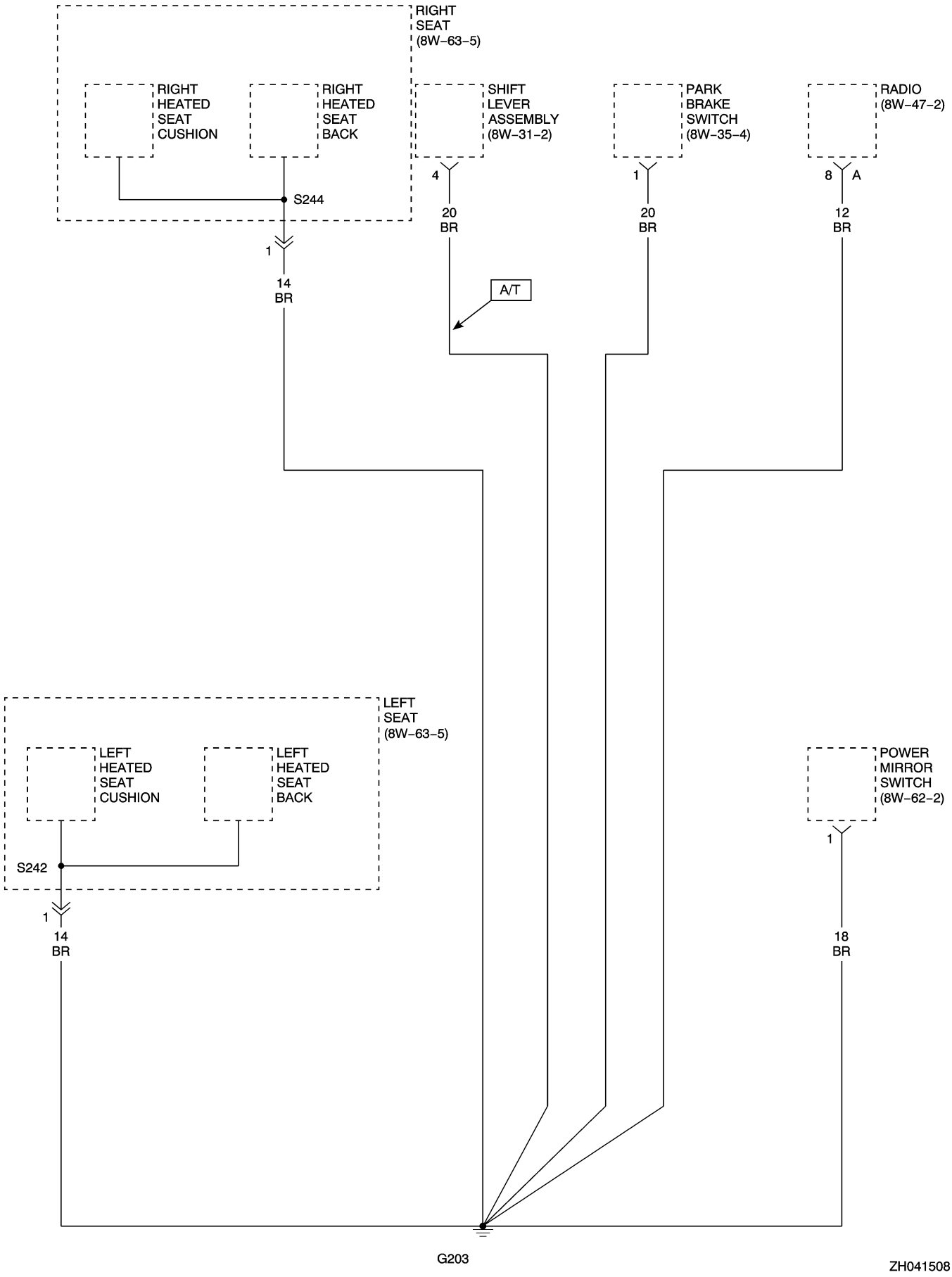
RIGHT SEAT (8W–63–5)
RIGHT HEATED SEAT CUSHION
RIGHT HEATED SEAT BACK
SHIFT LEVER ASSEMBLY (8W–31–2)
PARK BRAKE SWITCH (8W–35–4)
RADIO (8W–47–2)
S244
1
14 BR
4
20 BR
1
20 BR
8
A
12 BR
A/T
LEFT SEAT (8W–63–5)
LEFT HEATED SEAT CUSHION
LEFT HEATED SEAT BACK
S242
1
14 BR
POWER MIRROR SWITCH (8W–62–2)
1
18 BR
G203

ZH041508

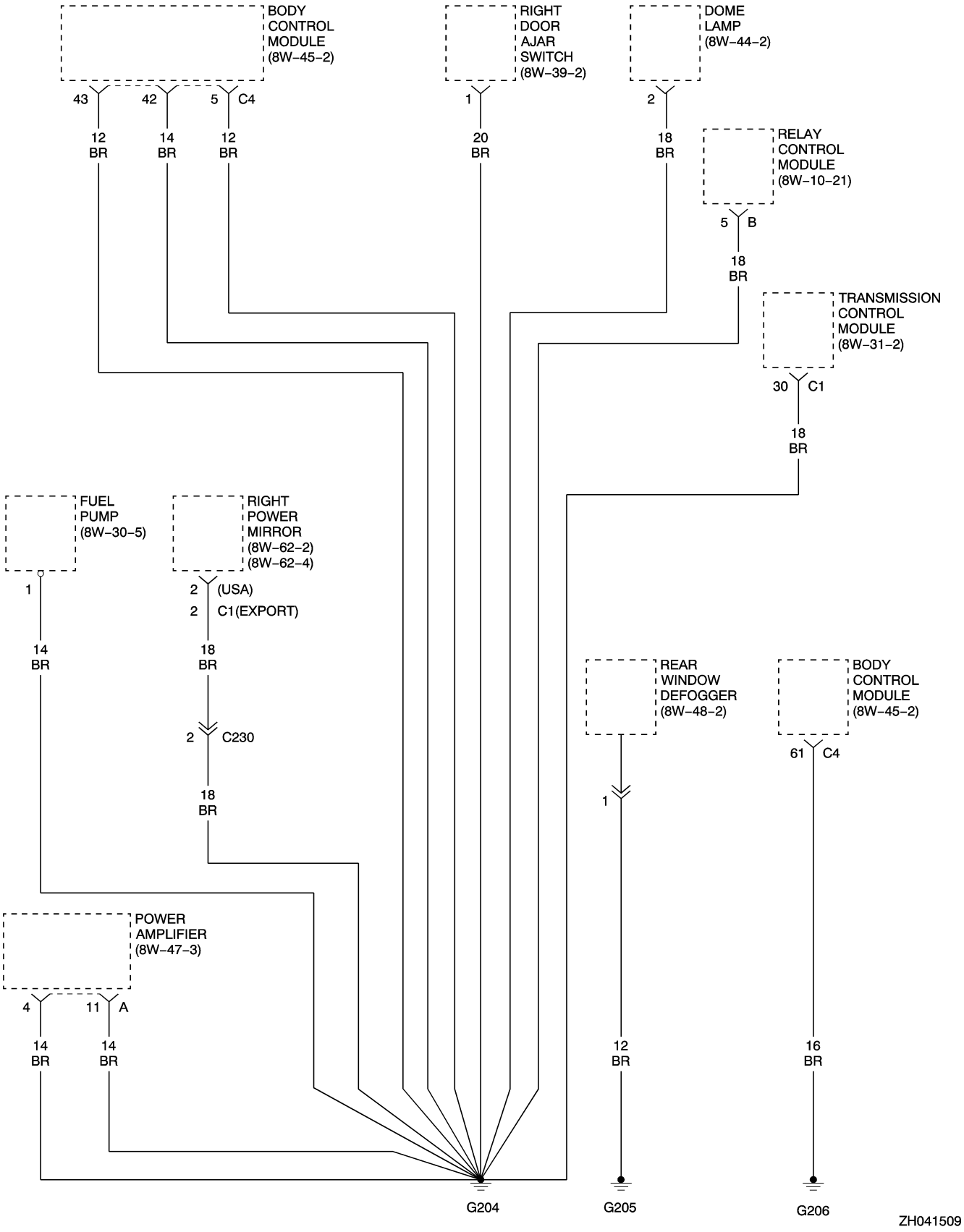
BODY CONTROL MODULE (8W–45–2)
43
42
5
C4
12 BR
14 BR
12 BR
RIGHT DOOR AJAR SWITCH (8W–39–2)
1
20 BR
DOME LAMP (8W–44–2)
2
18 BR
RELAY CONTROL MODULE (8W–10–21)
5
B
18 BR
TRANSMISSION CONTROL MODULE (8W–31–2)
30
C1
18 BR
FUEL PUMP (8W–30–5)
1
14 BR
RIGHT POWER MIRROR (8W–62–2) (8W–62–4)
2 (USA)
2 C1(EXPORT)
18 BR
2
C230
18 BR
REAR WINDOW DEFOGGER (8W–48–2)
1
12 BR
BODY CONTROL MODULE (8W–45–2)
61
C4
16 BR
POWER AMPLIFIER (8W–47–3)
4
11
A
14 BR
14 BR
G204
G205
G206
ZH041509

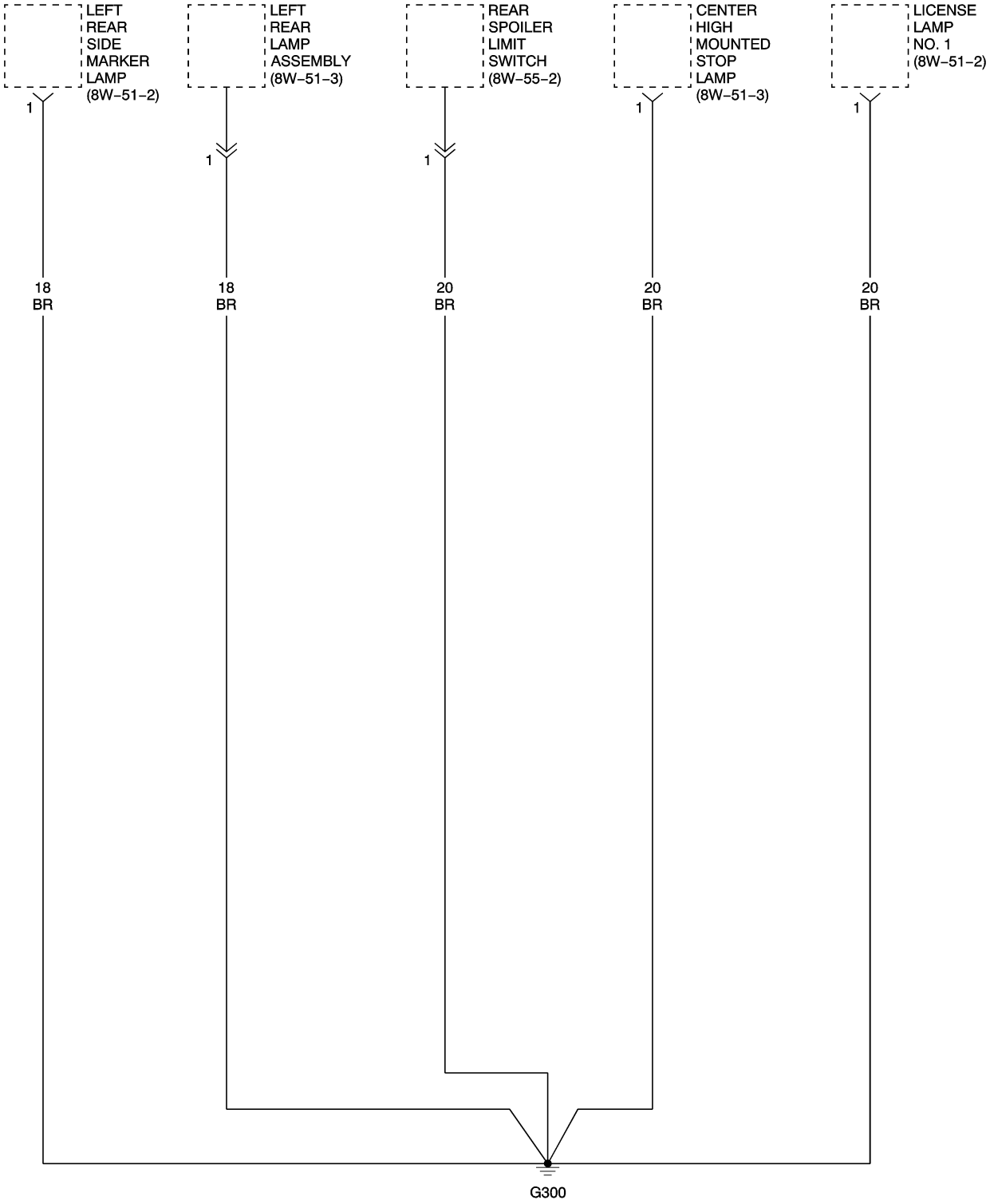
LEFT REAR SIDE MARKER LAMP (8W–51–2)
LEFT REAR LAMP ASSEMBLY (8W–51–3)
REAR SPOILER LIMIT SWITCH (8W–55–2)
CENTER HIGH MOUNTED STOP LAMP (8W–51–3)
LICENSE LAMP NO. 1 (8W–51–2)
1
18 BR
20 BR
G300

ZH041510

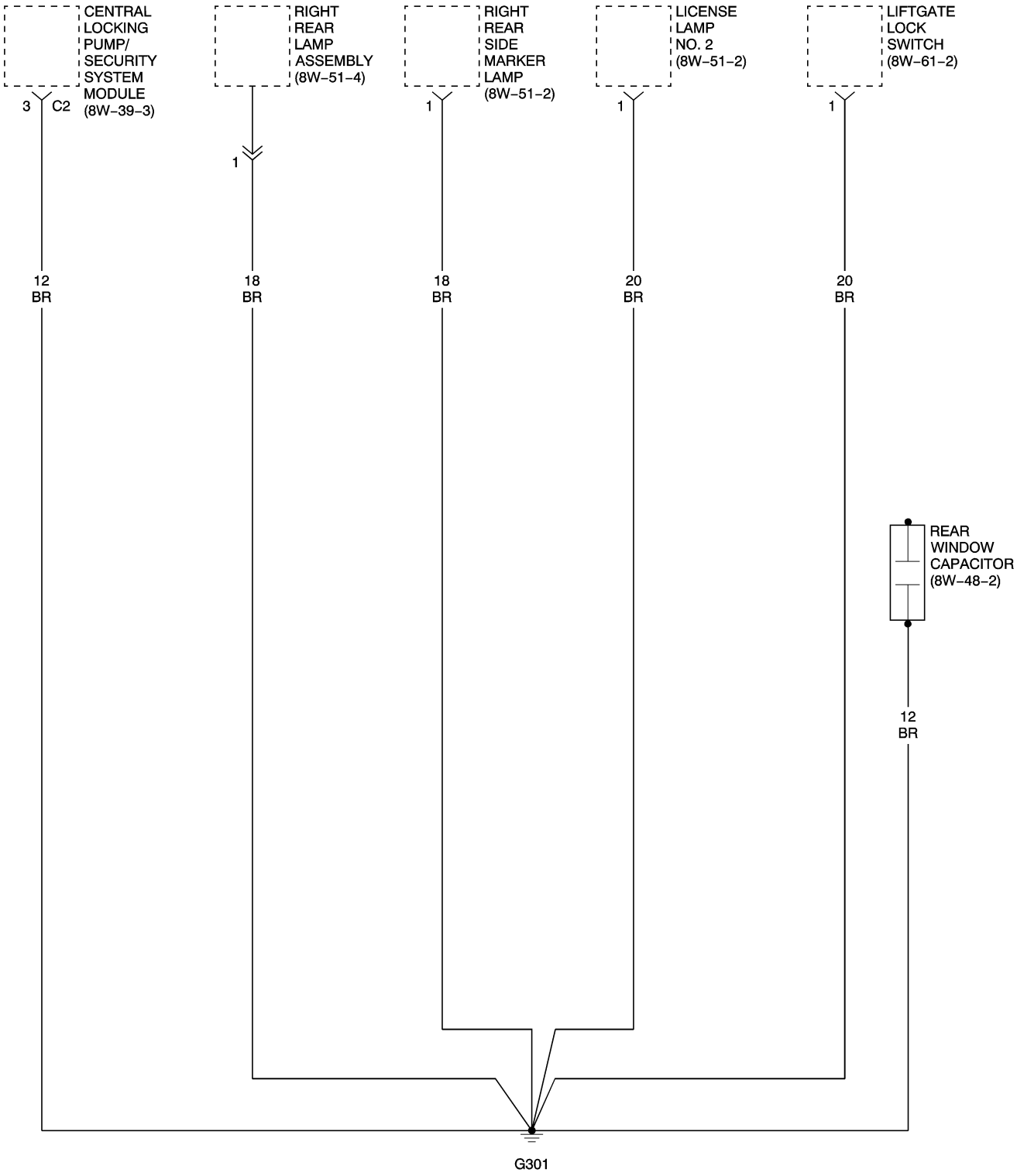
CENTRAL LOCKING PUMP/ SECURITY SYSTEM MODULE (8W–39–3)
3
C2
12 BR
RIGHT REAR LAMP ASSEMBLY (8W–51–4)
1
18 BR
RIGHT REAR SIDE MARKER LAMP (8W–51–2)
1
18 BR
LICENSE LAMP NO. 2 (8W–51–2)
1
20 BR
LIFTGATE LOCK SWITCH (8W–61–2)
1
20 BR
REAR WINDOW CAPACITOR (8W–48–2)
12 BR
G301

ZH041511

8W-17 DATA LINK CONNECTOR

Component	Page
A/C Heater Control Module	8W-17-3
Body Control Module	8W-17-4
Controller Antilock Brake	8W-17-3
Data Link Connector	8W-17-2, 3, 4
Fuel Tank Pressure Sensor	8W-17-2
Fuse 14	8W-17-2
G200	8W-17-4
Instrument Cluster	8W-17-3
Occupant Restraint Controller	8W-17-2
Powertrain Control Module	8W-17-2
Radio	8W-17-4
Relay Control Module	8W-17-2
Sentry Key Remote Entry Module	8W-17-4
Shift Lever Assembly	8W-17-3
Transmission Control Module	8W-17-4
Underhood Accessory Fuse Block	8W-17-2
Universal Garage Door Opener/Tire Pressure Monitor	8W-17-3

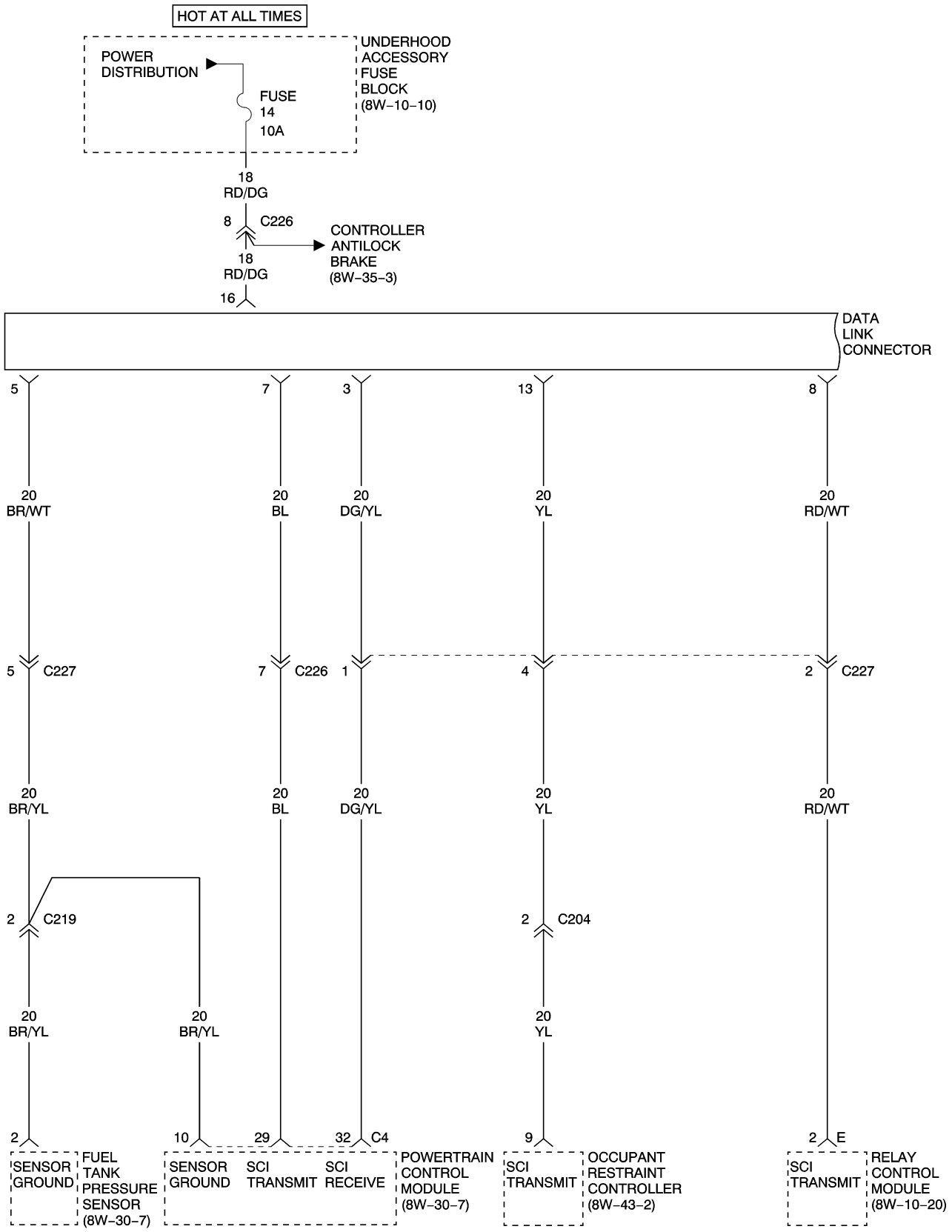
HOT AT ALL TIMES
POWER DISTRIBUTION
FUSE 14 10A
UNDERHOOD ACCESSORY FUSE BLOCK (8W–10–10)
18 RD/DG
8 C226
CONTROLLER ANTILOCK BRAKE (8W–35–3)
18 RD/DG
16
DATA LINK CONNECTOR
5
7
3
13
8
20 BR/WT
20 BL
20 DG/YL
20 YL
20 RD/WT
5 C227
7 C226
1
4
2 C227
20 BR/YL
20 BL
20 DG/YL
20 YL
20 RD/WT
2 C219
2 C204
20 BR/YL
20 BR/YL
20 YL
2
10
29
32 C4
9
2 E
SENSOR GROUND
FUEL TANK PRESSURE SENSOR (8W–30–7)
SENSOR GROUND
SCI TRANSMIT
SCI RECEIVE
POWERTRAIN CONTROL MODULE (8W–30–7)
SCI TRANSMIT
OCCUPANT RESTRAINT CONTROLLER (8W–43–2)
SCI TRANSMIT
RELAY CONTROL MODULE (8W–10–20)

ZH041702

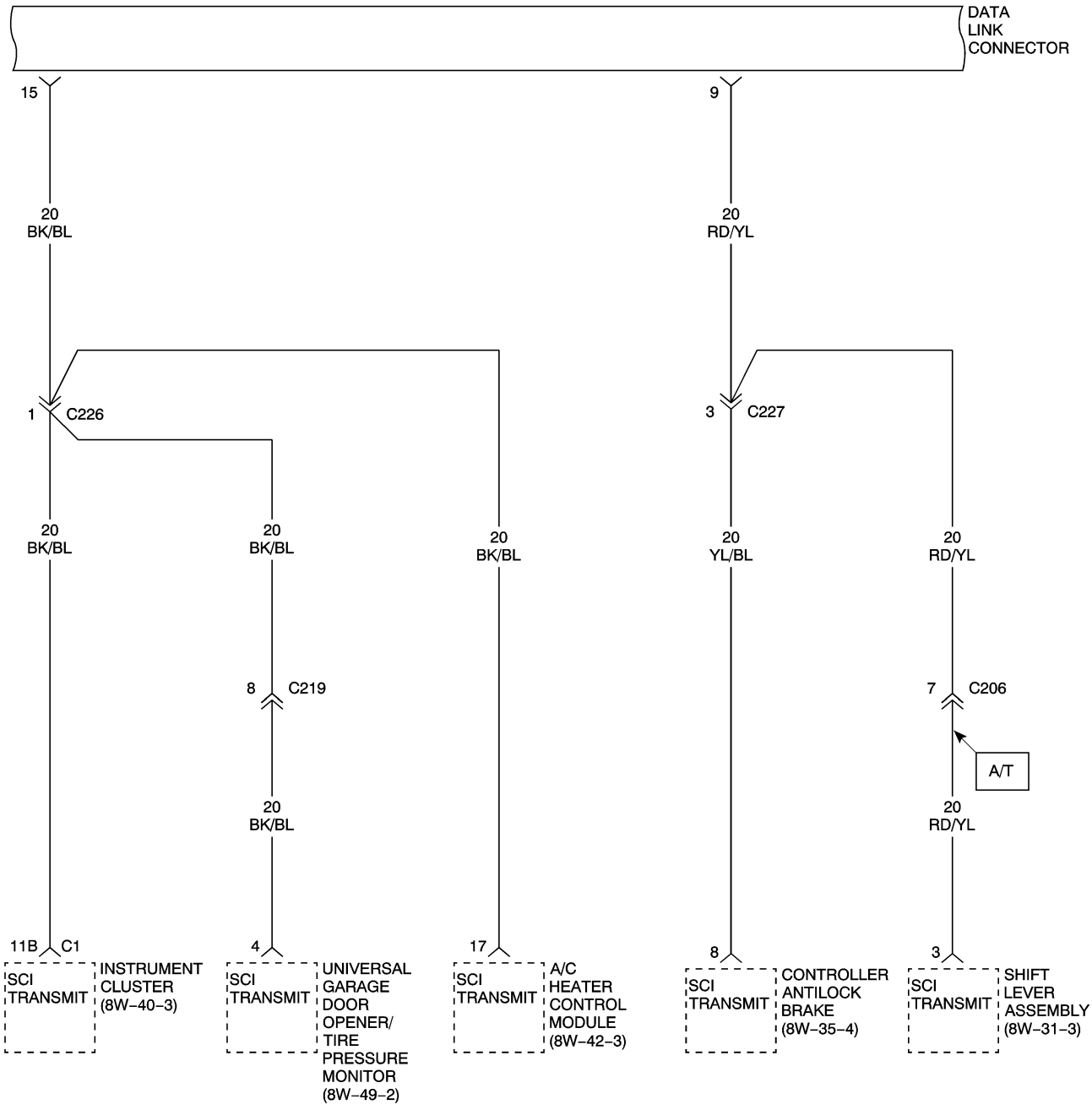
DATA
LINK
CONNECTOR
15
9
20
BK/BL
20
RD/YL
1
C226
3
C227
20
BK/BL
20
BK/BL
20
BK/BL
20
YL/BL
20
RD/YL
8
C219
7
C206
A/T
20
BK/BL
20
RD/YL
11B
C1
4
17
8
3
SCI
TRANSMIT
INSTRUMENT
CLUSTER
(8W–40–3)
SCI
TRANSMIT
UNIVERSAL
GARAGE
DOOR
OPENER/
TIRE
PRESSURE
MONITOR
(8W–49–2)
SCI
TRANSMIT
A/C
HEATER
CONTROL
MODULE
(8W–42–3)
SCI
TRANSMIT
CONTROLLER
ANTILOCK
BRAKE
(8W–35–4)
SCI
TRANSMIT
SHIFT
LEVER
ASSEMBLY
(8W–31–3)

ZH041703

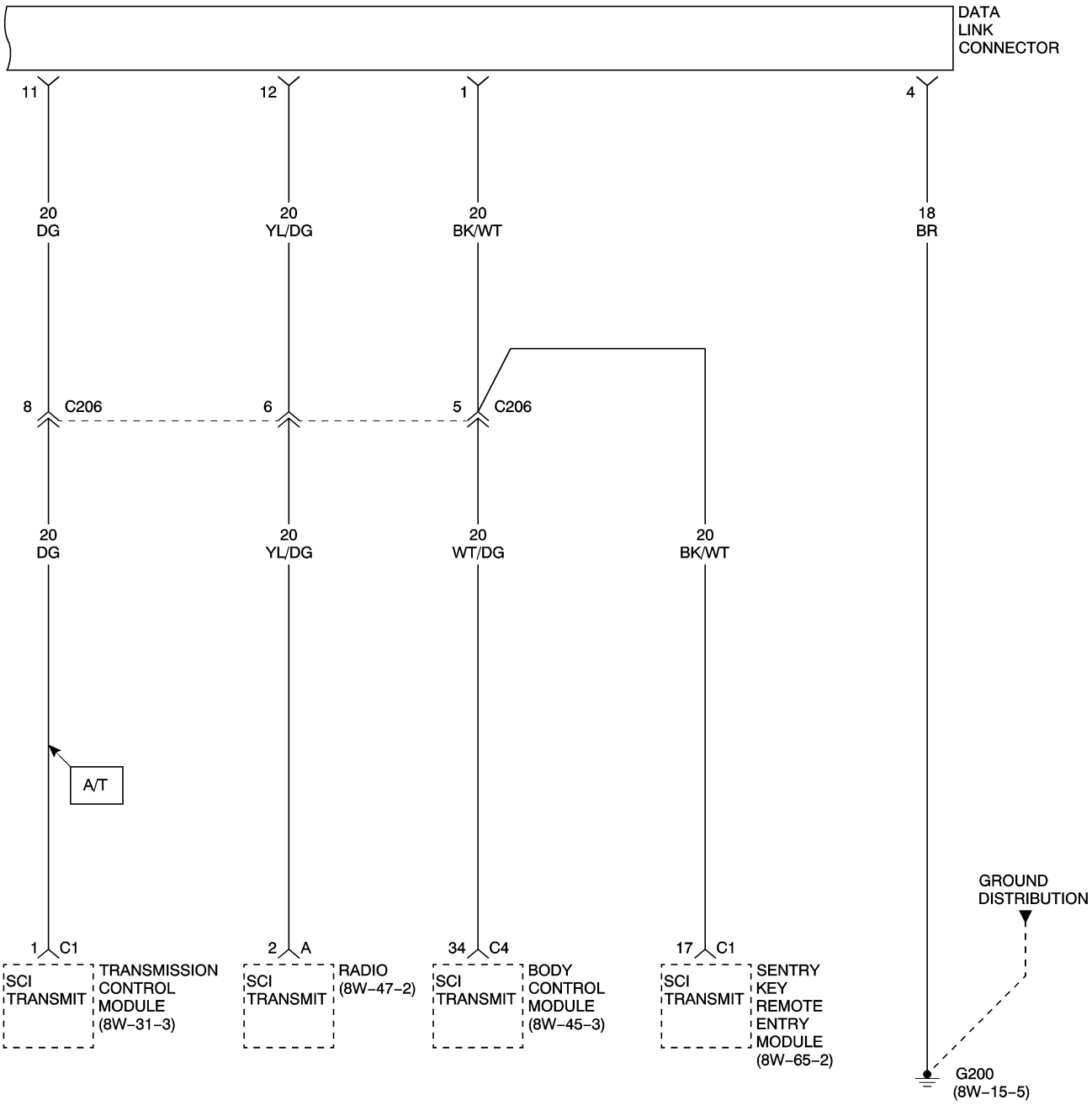
DATA
LINK
CONNECTOR
11
12
1
4
20
DG
20
YL/DG
20
BK/WT
18
BR
8
C206
6
5
C206
20
DG
20
YL/DG
20
WT/DG
20
BK/WT
A/T
1
C1
SCI
TRANSMIT
TRANSMISSION
CONTROL
MODULE
(8W–31–3)
2
A
SCI
TRANSMIT
RADIO
(8W–47–2)
34
C4
SCI
TRANSMIT
BODY
CONTROL
MODULE
(8W–45–3)
17
C1
SCI
TRANSMIT
SENTRY
KEY
REMOTE
ENTRY
MODULE
(8W–65–2)
GROUND
DISTRIBUTION
G200
(8W–15–5)

ZH041704

8W-18 BUS COMMUNICATIONS

Component	Page
Body Control Module	8W-18-4
Central Locking Pump/Security System Module	8W-18-4
Controller Antilock Brake	8W-18-2, 3
Instrument Cluster	8W-18-2, 3
Powertrain Control Module	8W-18-2, 3
Sentry Key Remote Entry Module	8W-18-2, 3
Shift Lever Assembly	8W-18-2
Transmission Control Module	8W-18-2

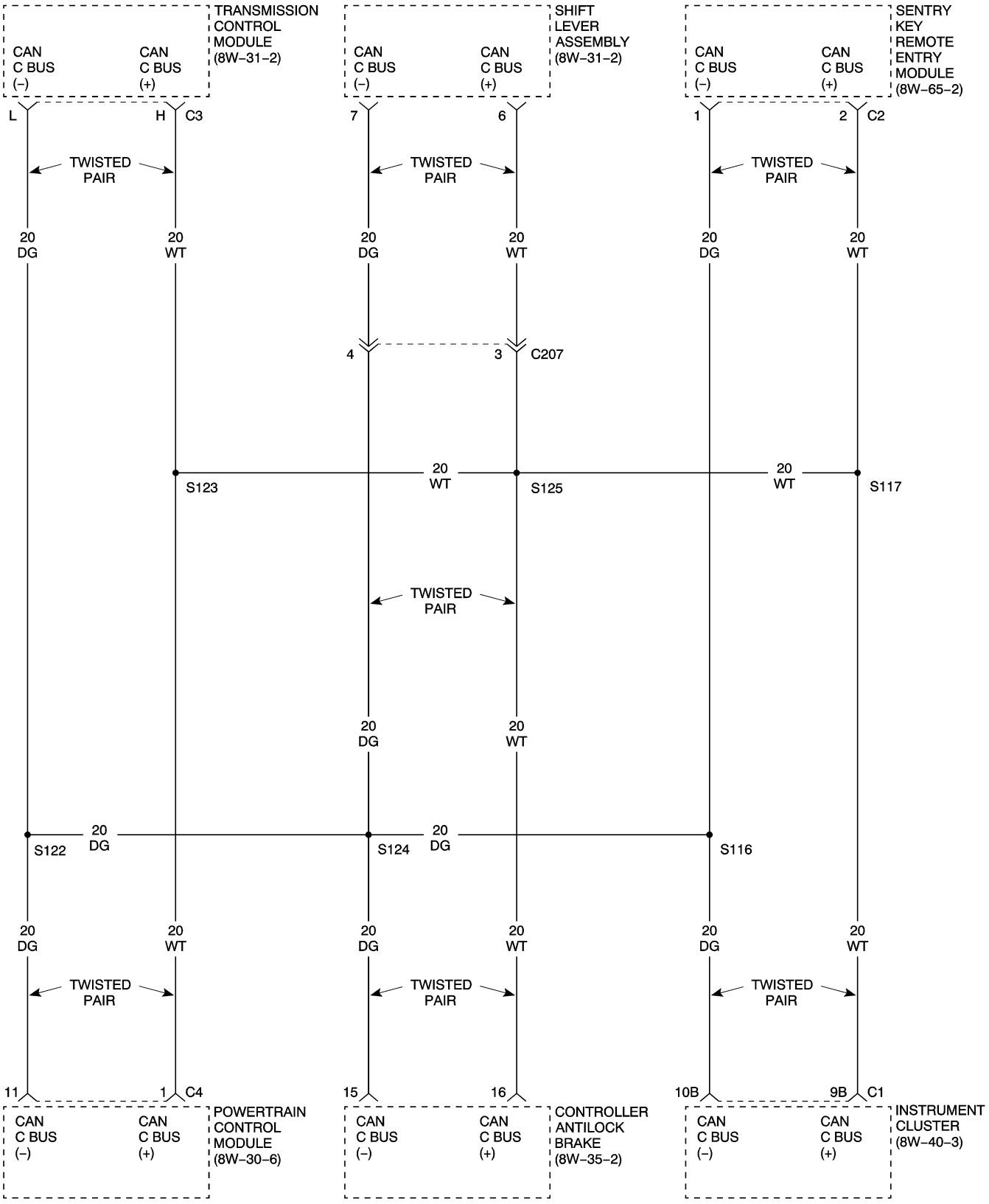
TRANSMISSION CONTROL MODULE (8W–31–2)
CAN C BUS (–)
CAN C BUS (+)
L
H
C3
SHIFT LEVER ASSEMBLY (8W–31–2)
7
6
SENTRY KEY REMOTE ENTRY MODULE (8W–65–2)
1
2
C2
TWISTED PAIR
20 DG
20 WT
4
3
C207
S123
S125
S117
S122
S124
S116
POWERTRAIN CONTROL MODULE (8W–30–6)
11
1
C4
CONTROLLER ANTILOCK BRAKE (8W–35–2)
15
16
INSTRUMENT CLUSTER (8W–40–3)
10B
9B
C1

ZH041802

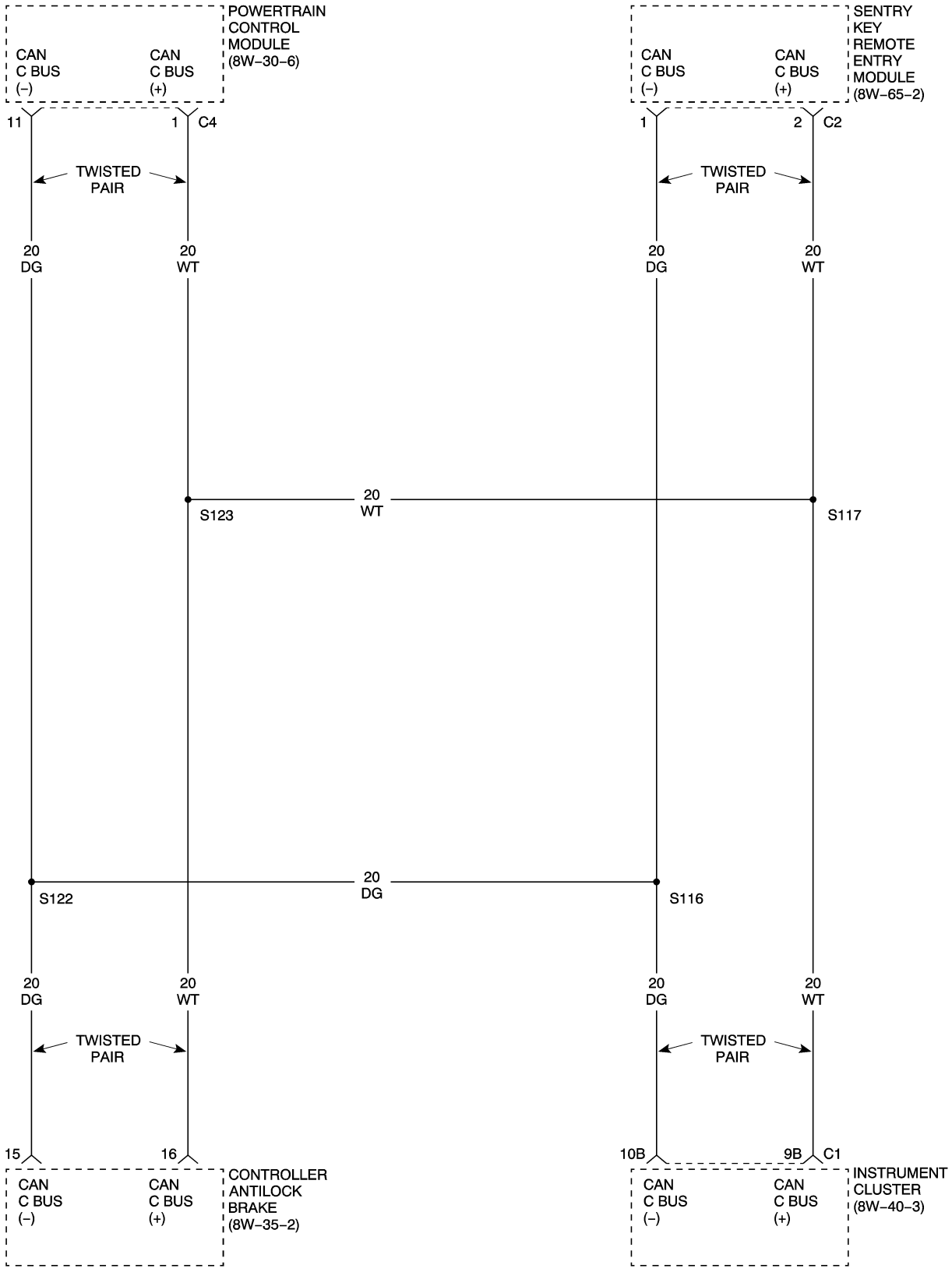
POWERTRAIN CONTROL MODULE (8W–30–6)
CAN C BUS (–)
CAN C BUS (+)
11
1
C4
TWISTED PAIR
20 DG
20 WT
SENTRY KEY REMOTE ENTRY MODULE (8W–65–2)
CAN C BUS (–)
CAN C BUS (+)
1
2
C2
TWISTED PAIR
20 DG
20 WT
S123
20 WT
S117
S122
20 DG
S116
CONTROLLER ANTILOCK BRAKE (8W–35–2)
CAN C BUS (–)
CAN C BUS (+)
15
16
20 DG
20 WT
TWISTED PAIR
INSTRUMENT CLUSTER (8W–40–3)
CAN C BUS (–)
CAN C BUS (+)
10B
9B
C1
20 DG
20 WT
TWISTED PAIR

ZH041803

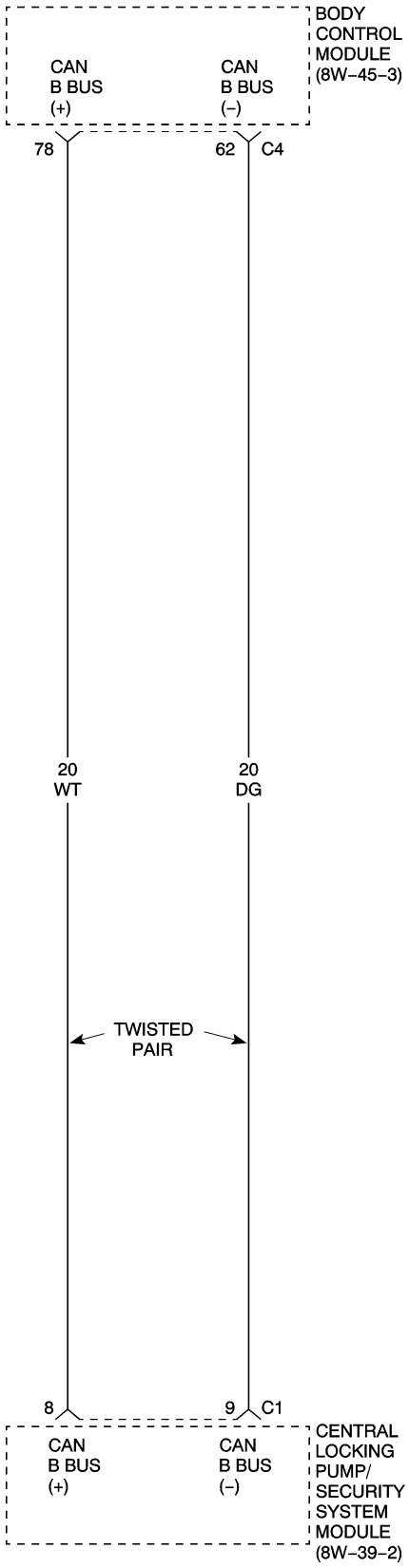
BODY CONTROL MODULE (8W–45–3)
CAN B BUS (+)
CAN B BUS (–)
78
62
C4
20 WT
20 DG
TWISTED PAIR
8
9
C1
CAN B BUS (+)
CAN B BUS (–)
CENTRAL LOCKING PUMP/ SECURITY SYSTEM MODULE (8W–39–2)

ZH041804

8W-20 CHARGING SYSTEM

Component	Page	Component	Page
Battery	8W-20-2	G107	8W-20-2
Engine Fuse Block	8W-20-2	Generator	8W-20-2
Engine Starter Motor	8W-20-2	Instrument Cluster	8W-20-2
Fuse 4	8W-20-2		

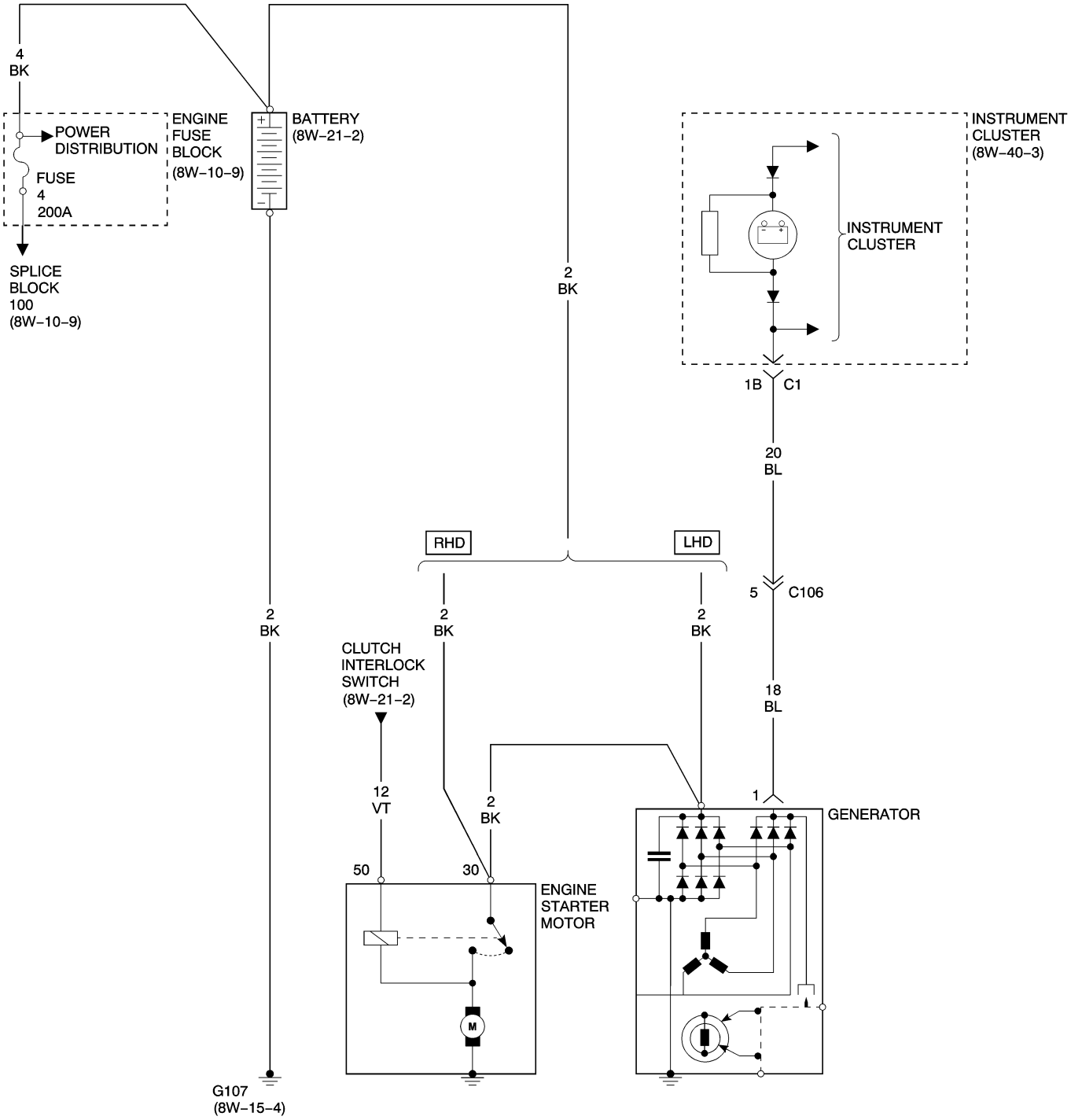
4
BK
POWER
DISTRIBUTION
FUSE
4
200A
ENGINE
FUSE
BLOCK
(8W–10–9)
BATTERY
(8W–21–2)
SPLICE
BLOCK
100
(8W–10–9)
2
BK
INSTRUMENT
CLUSTER
(8W–40–3)
INSTRUMENT
CLUSTER
1B
C1
20
BL
RHD
LHD
5
C106
2
BK
2
BK
2
BK
CLUTCH
INTERLOCK
SWITCH
(8W–21–2)
18
BL
12
VT
2
BK
1
GENERATOR
50
30
ENGINE
STARTER
MOTOR
M
G107
(8W–15–4)

ZH042002

8W-21 STARTING SYSTEM

Component	Page
Battery	8W-21-2
Clutch Interlock Switch	8W-21-2
Engine Fuse Block	8W-21-2
Engine Starter Motor	8W-21-2
Fuse 4	8W-21-2
G107	8W-21-2
Ignition Switch	8W-21-2
Powertrain Control Module	8W-21-2
Pulse Module	8W-21-2

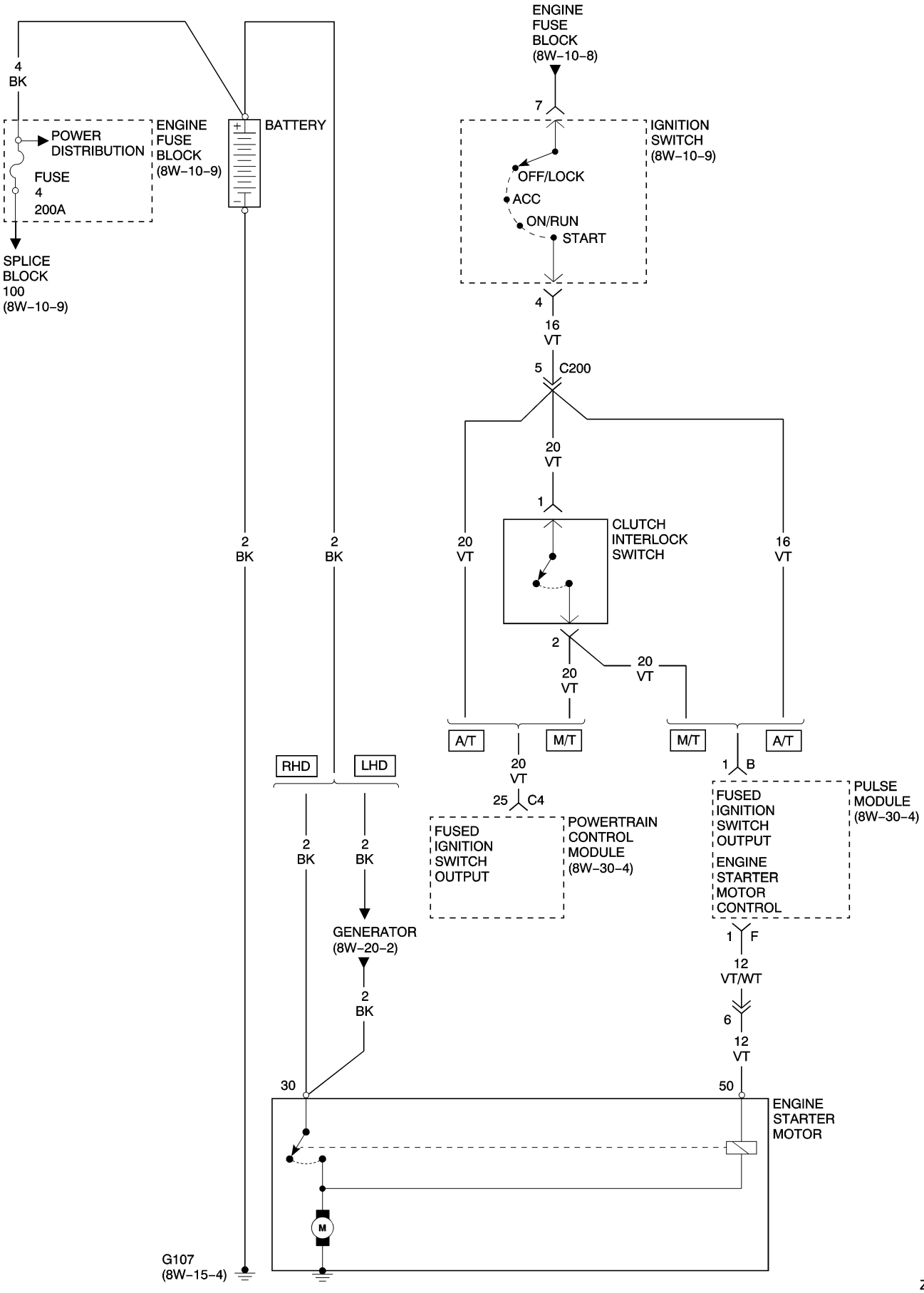
4
BK
POWER
DISTRIBUTION
FUSE
4
200A
ENGINE
FUSE
BLOCK
(8W–10–9)
BATTERY
SPLICE
BLOCK
100
(8W–10–9)
ENGINE
FUSE
BLOCK
(8W–10–8)
7
IGNITION
SWITCH
(8W–10–9)
OFF/LOCK
ACC
ON/RUN
START
4
16
VT
5
C200
20
VT
1
CLUTCH
INTERLOCK
SWITCH
2
BK
2
BK
20
VT
16
VT
2
20
VT
20
VT
A/T
M/T
M/T
A/T
RHD
LHD
20
VT
25
C4
1
B
FUSED
IGNITION
SWITCH
OUTPUT
POWERTRAIN
CONTROL
MODULE
(8W–30–4)
PULSE
MODULE
(8W–30–4)
FUSED
IGNITION
SWITCH
OUTPUT
ENGINE
STARTER
MOTOR
CONTROL
2
BK
2
BK
GENERATOR
(8W–20–2)
1
F
12
VT/WT
6
12
VT
2
BK
30
50
ENGINE
STARTER
MOTOR
M
G107
(8W–15–4)
ZH042102

8W-29 ENGINE COOLING

Component	Page
Engine Fuse Block	8W-29-2
Fuse 2	8W-29-2
G100	8W-29-2
Powertrain Control Module	8W-29-2
Radiator Fan Control Module	8W-29-2
Radiator Fan Motor	8W-29-2
Splice Block 101	8W-29-2

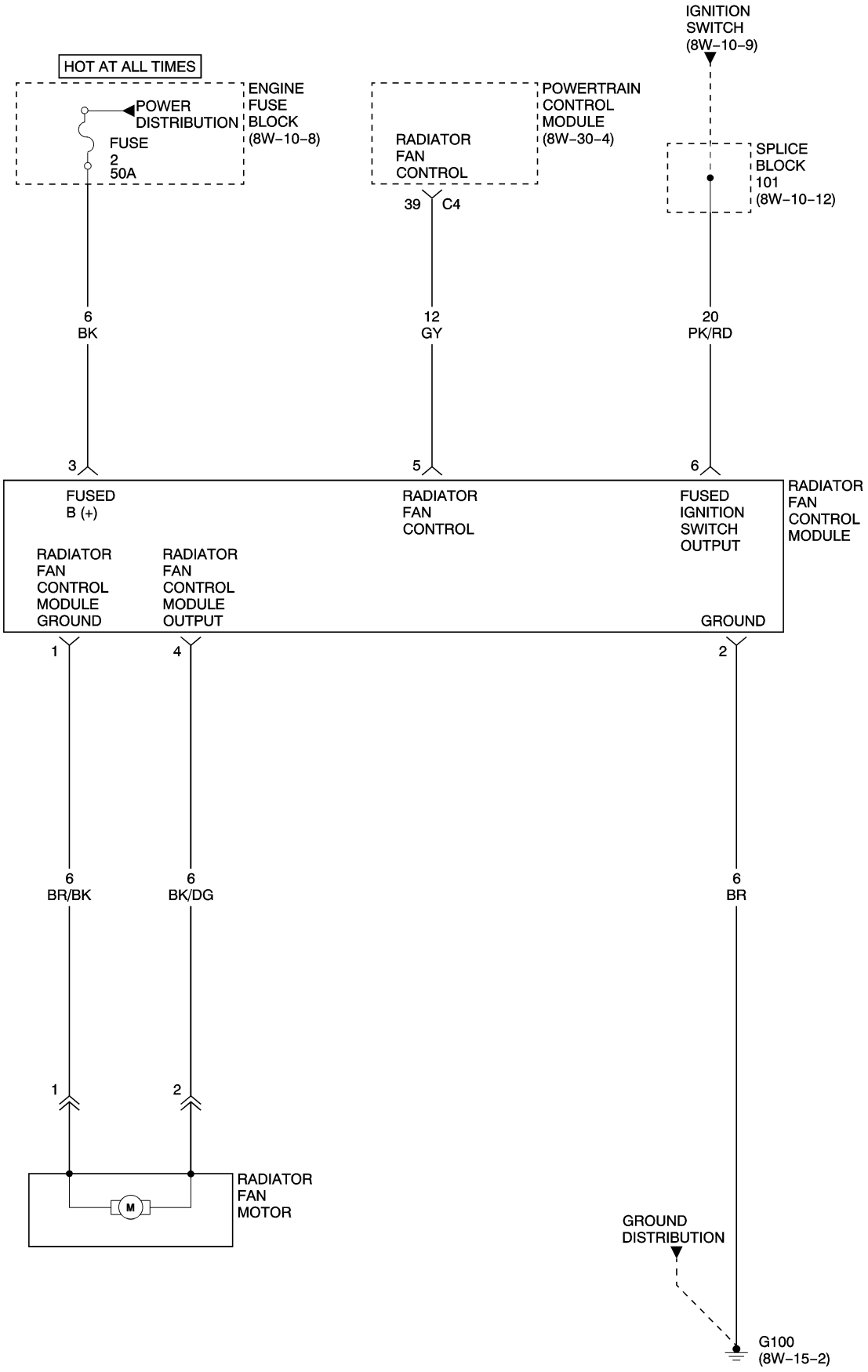
IGNITION SWITCH (8W–10–9)
HOT AT ALL TIMES
ENGINE FUSE BLOCK (8W–10–8)
POWER DISTRIBUTION
FUSE 2 50A
POWERTRAIN CONTROL MODULE (8W–30–4)
RADIATOR FAN CONTROL
39 C4
SPLICE BLOCK 101 (8W–10–12)
6 BK
12 GY
20 PK/RD
3
5
6
FUSED B (+)
RADIATOR FAN CONTROL
FUSED IGNITION SWITCH OUTPUT
RADIATOR FAN CONTROL MODULE
RADIATOR FAN CONTROL MODULE GROUND
RADIATOR FAN CONTROL MODULE OUTPUT
GROUND
1
4
2
6 BR/BK
6 BK/DG
6 BR
1
2
M
RADIATOR FAN MOTOR
GROUND DISTRIBUTION
G100 (8W–15–2)

ZH042902

8W-30 FUEL/IGNITION SYSTEM

Component	Page
Accelerator Pedal Position Sensor	8W-30-3
Air Pump	8W-30-6
Air Pump Fuse	8W-30-6
Air Pump Relay	8W-30-6
Air Pump Switchover Solenoid	8W-30-6
Backup Lamp Switch	8W-30-4
Camshaft Position Sensor	8W-30-7
Charcoal Canister Shutoff Valve	8W-30-8
Clutch Interlock Switch	8W-30-4
Clutch Pedal Position Switch	8W-30-3
Coil On Plug Driver No. 1	8W-30-2
Coil On Plug Driver No. 2	8W-30-2
Coil On Plug Driver No. 3	8W-30-2
Coil On Plug Driver No. 4	8W-30-2
Coil On Plug Driver No. 5	8W-30-2
Coil On Plug Driver No. 6	8W-30-2
Crankshaft Position Sensor	8W-30-8
Data Link Connector	8W-30-7
EGR Solenoid	8W-30-6
Engine Control Fuse 2	8W-30-6
Engine Coolant Temperature Sensor	8W-30-7
Engine Fuse Block	8W-30-4
Engine Starter Motor	8W-30-4
Evap Purge Solenoid	8W-30-8
Fuel Injector No. 1	8W-30-5
Fuel Injector No. 2	8W-30-5
Fuel Injector No. 3	8W-30-5
Fuel Injector No. 4	8W-30-5
Fuel Injector No. 5	8W-30-5
Fuel Injector No. 6	8W-30-5
Fuel Pump Fuse	8W-30-5
Fuel Pump Relay	8W-30-5
Fuel Pump	8W-30-5
Fuel Tank Pressure Sensor	8W-30-7
Fuse 10	8W-30-3
Fuse 11	8W-30-2
Fuse 3	8W-30-4
G100	8W-30-3, 4
G101	8W-30-2, 3
G104	8W-30-2
G204	8W-30-5
Ignition Switch	8W-30-4
Illumination Control Module	8W-30-4
Kickdown Switch	8W-30-3
Left Knock Sensor	8W-30-6
MAF/IAT Sensor	8W-30-7
Manifold Absolute Pressure Sensor	8W-30-7
Noise Suppressor No. 1	8W-30-2
Noise Suppressor No. 2	8W-30-2
Occupant Restraint Controller	8W-30-6
Oil Sensor	8W-30-7
Oxygen Sensor 1/1 Upstream	8W-30-6
Oxygen Sensor 1/2 Downstream	8W-30-8
Oxygen Sensor 2/1 Upstream	8W-30-6
Oxygen Sensor 2/2 Downstream	8W-30-8
Powertrain Control Module	8W-30-2, 3, 4, 5, 6, 7, 8
Pulse Module	8W-30-4
Radiator Fan Control Module	8W-30-4
Relay Control Module	8W-30-5, 6
Right Knock Sensor	8W-30-6
Short Runner Valve Solenoid	8W-30-6
Speed Control Switch	8W-30-3
Splice Block 101	8W-30-4
Throttle Body	8W-30-3
Underhood Accessory Fuse Block	8W-30-2, 3

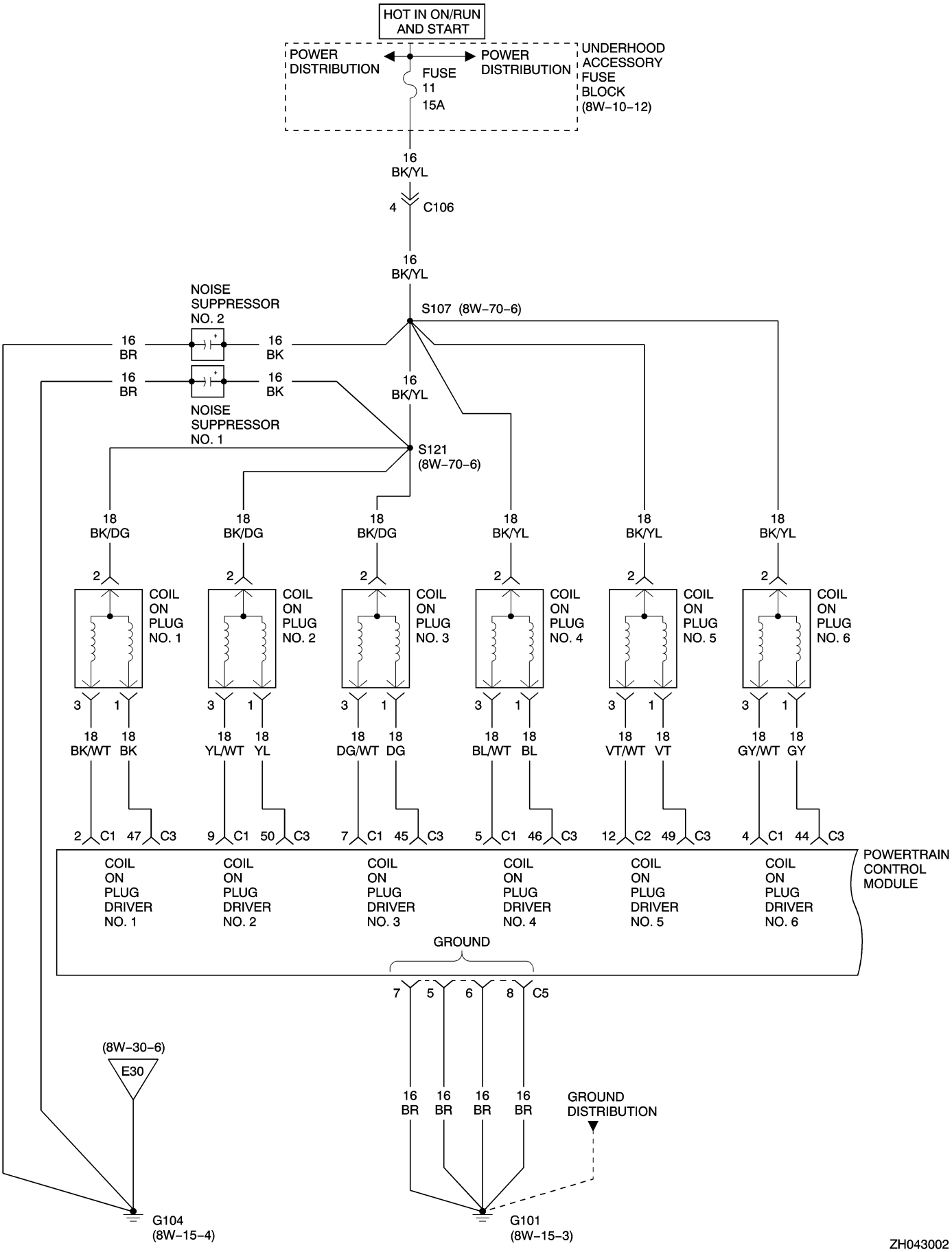
HOT IN ON/RUN AND START
POWER DISTRIBUTION
FUSE 11 15A
POWER DISTRIBUTION
UNDERHOOD ACCESSORY FUSE BLOCK (8W-10-12)
16 BK/YL
4 C106
16 BK/YL
NOISE SUPPRESSOR NO. 2
S107 (8W-70-6)
16 BR
16 BK
16 BR
16 BK
16 BK/YL
NOISE SUPPRESSOR NO. 1
S121 (8W-70-6)
18 BK/DG
18 BK/DG
18 BK/DG
18 BK/YL
18 BK/YL
18 BK/YL
2
COIL ON PLUG NO. 1
COIL ON PLUG NO. 2
COIL ON PLUG NO. 3
COIL ON PLUG NO. 4
COIL ON PLUG NO. 5
COIL ON PLUG NO. 6
3
1
18 BK/WT
18 BK
18 YL/WT
18 YL
18 DG/WT
18 DG
18 BL/WT
18 BL
18 VT/WT
18 VT
18 GY/WT
18 GY
2 C1 47 C3
9 C1 50 C3
7 C1 45 C3
5 C1 46 C3
12 C2 49 C3
4 C1 44 C3
COIL ON PLUG DRIVER NO. 1
COIL ON PLUG DRIVER NO. 2
COIL ON PLUG DRIVER NO. 3
COIL ON PLUG DRIVER NO. 4
COIL ON PLUG DRIVER NO. 5
COIL ON PLUG DRIVER NO. 6
POWERTRAIN CONTROL MODULE
GROUND
7 5 6 8 C5
(8W-30-6)
E30
16 BR
16 BR
16 BR
16 BR
GROUND DISTRIBUTION
G104 (8W-15-4)
G101 (8W-15-3)
ZH043002

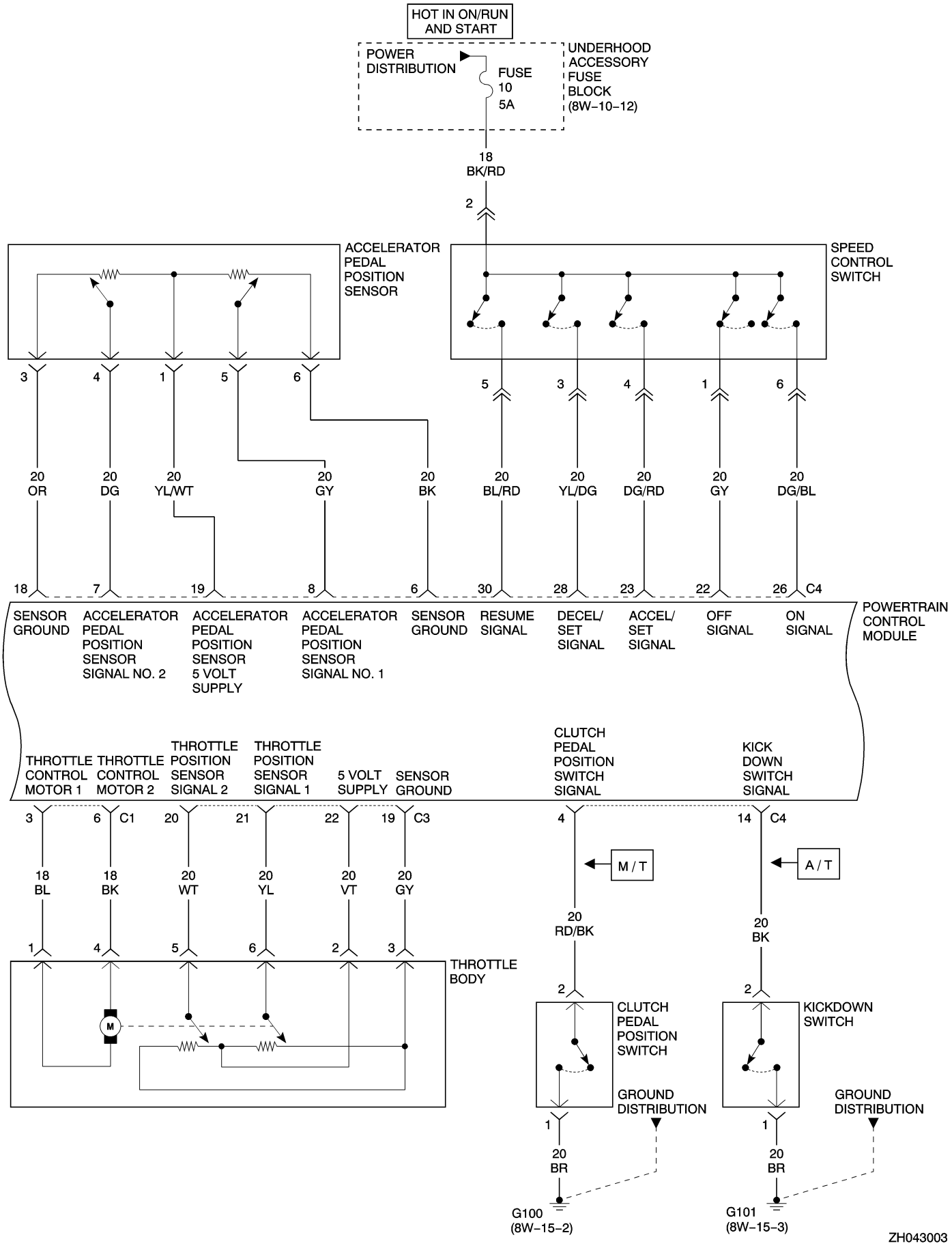
HOT IN ON/RUN AND START
POWER DISTRIBUTION
FUSE 10 5A
UNDERHOOD ACCESSORY FUSE BLOCK (8W-10-12)
18 BK/RD
2
ACCELERATOR PEDAL POSITION SENSOR
SPEED CONTROL SWITCH
3 4 1 5 6
5 3 4 1 6
20 OR
20 DG
20 YL/WT
20 GY
20 BK
20 BL/RD
20 YL/DG
20 DG/RD
20 GY
20 DG/BL
18 7 19 8 6 30 28 23 22 26 C4
SENSOR GROUND
ACCELERATOR PEDAL POSITION SENSOR SIGNAL NO. 2
ACCELERATOR PEDAL POSITION SENSOR 5 VOLT SUPPLY
ACCELERATOR PEDAL POSITION SENSOR SIGNAL NO. 1
SENSOR GROUND
RESUME SIGNAL
DECEL/ SET SIGNAL
ACCEL/ SET SIGNAL
OFF SIGNAL
ON SIGNAL
POWERTRAIN CONTROL MODULE
THROTTLE CONTROL MOTOR 1
THROTTLE CONTROL MOTOR 2
THROTTLE POSITION SENSOR SIGNAL 2
THROTTLE POSITION SENSOR SIGNAL 1
5 VOLT SUPPLY
SENSOR GROUND
CLUTCH PEDAL POSITION SWITCH SIGNAL
KICK DOWN SWITCH SIGNAL
3 6 C1 20 21 22 19 C3
4
14 C4
M / T
A / T
18 BL
18 BK
20 WT
20 YL
20 VT
20 GY
20 RD/BK
20 BK
1 4 5 6 2 3
2
2
THROTTLE BODY
M
CLUTCH PEDAL POSITION SWITCH
KICKDOWN SWITCH
GROUND DISTRIBUTION
GROUND DISTRIBUTION
1
1
20 BR
20 BR
G100 (8W-15-2)
G101 (8W-15-3)
ZH043003

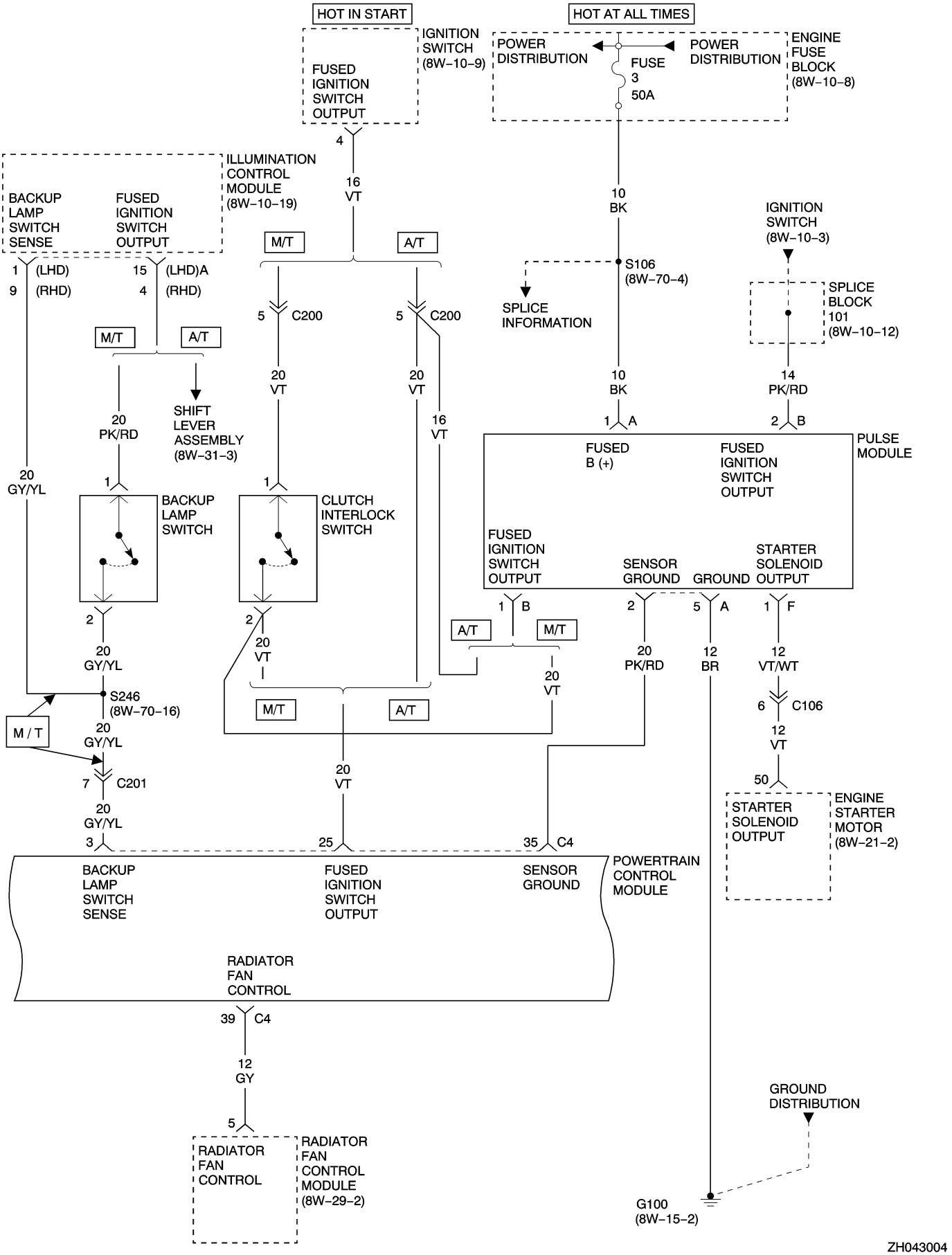
HOT IN START
IGNITION SWITCH (8W–10–9)
FUSED IGNITION SWITCH OUTPUT
HOT AT ALL TIMES
POWER DISTRIBUTION
FUSE 3 50A
POWER DISTRIBUTION
ENGINE FUSE BLOCK (8W–10–8)
4
16 VT
10 BK
ILLUMINATION CONTROL MODULE (8W–10–19)
BACKUP LAMP SWITCH SENSE
FUSED IGNITION SWITCH OUTPUT
1 (LHD) 9 (RHD)
15 (LHD)A 4 (RHD)
M/T
A/T
S106 (8W–70–4)
SPLICE INFORMATION
IGNITION SWITCH (8W–10–3)
SPLICE BLOCK 101 (8W–10–12)
5 C200
5 C200
20 VT
20 VT
10 BK
14 PK/RD
1 A
2 B
20 PK/RD
SHIFT LEVER ASSEMBLY (8W–31–3)
16 VT
PULSE MODULE
FUSED B (+)
FUSED IGNITION SWITCH OUTPUT
20 GY/YL
1
BACKUP LAMP SWITCH
CLUTCH INTERLOCK SWITCH
FUSED IGNITION SWITCH OUTPUT
SENSOR GROUND
GROUND
STARTER SOLENOID OUTPUT
2
2
1 B
2
5 A
1 F
20 GY/YL
20 VT
A/T
M/T
20 PK/RD
12 BR
12 VT/WT
S246 (8W–70–16)
M / T
20 GY/YL
6 C106
12 VT
7 C201
20 VT
50
STARTER SOLENOID OUTPUT
ENGINE STARTER MOTOR (8W–21–2)
20 GY/YL
3
25
35 C4
BACKUP LAMP SWITCH SENSE
FUSED IGNITION SWITCH OUTPUT
SENSOR GROUND
POWERTRAIN CONTROL MODULE
RADIATOR FAN CONTROL
39 C4
12 GY
5
GROUND DISTRIBUTION
RADIATOR FAN CONTROL
RADIATOR FAN CONTROL MODULE (8W–29–2)
G100 (8W–15–2)
ZH043004

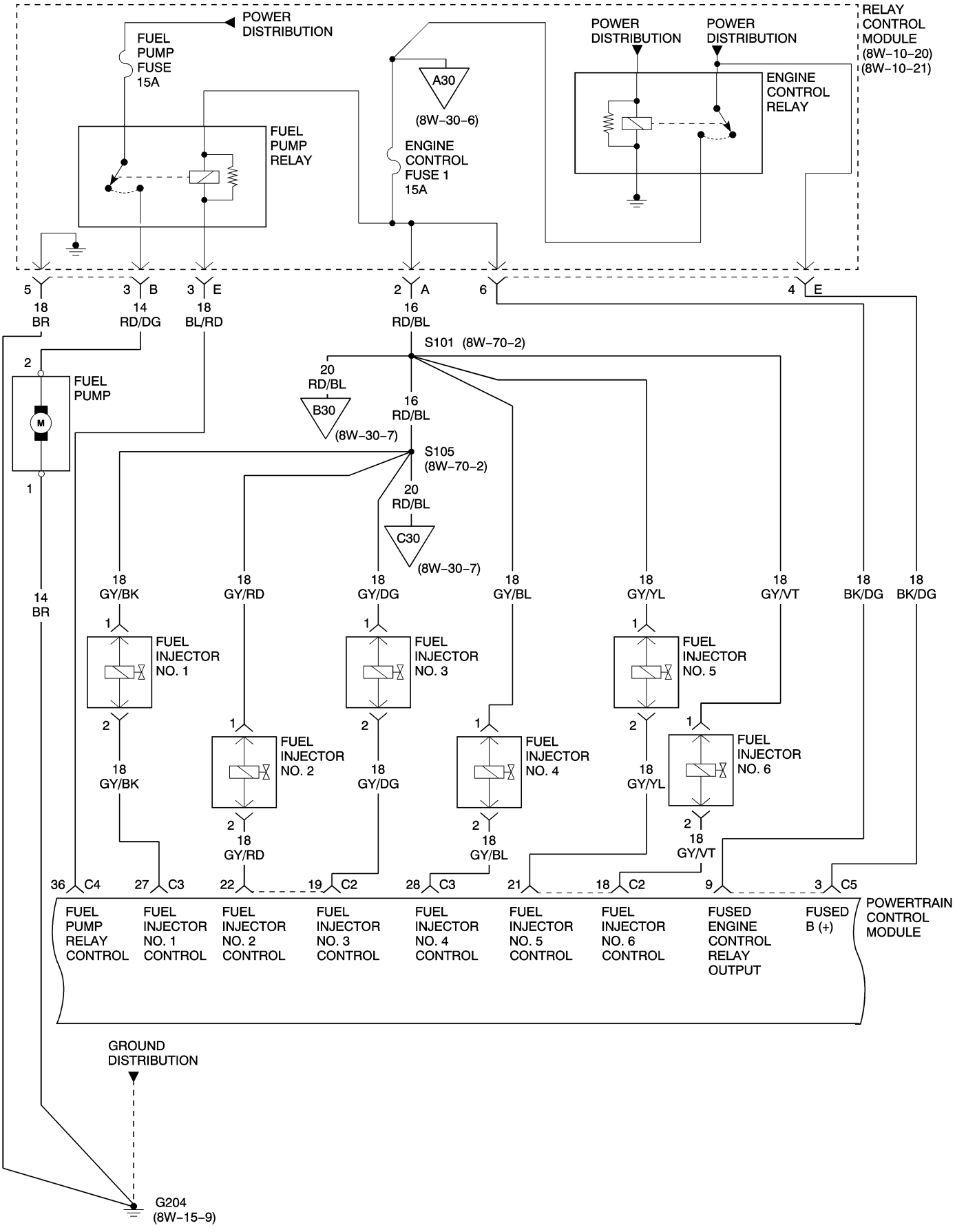
POWER DISTRIBUTION
FUEL PUMP FUSE 15A
FUEL PUMP RELAY
A30
(8W-30-6)
ENGINE CONTROL FUSE 1 15A
POWER DISTRIBUTION
POWER DISTRIBUTION
ENGINE CONTROL RELAY
RELAY CONTROL MODULE (8W-10-20) (8W-10-21)
5 18 BR
3 B 14 RD/DG
3 E 18 BL/RD
2 A 16 RD/BL
6
4 E
S101 (8W-70-2)
2
FUEL PUMP
M
1
20 RD/BL
B30
(8W-30-7)
16 RD/BL
S105 (8W-70-2)
20 RD/BL
C30
(8W-30-7)
14 BR
18 GY/BK
18 GY/RD
18 GY/DG
18 GY/BL
18 GY/YL
18 GY/VT
18 BK/DG
18 BK/DG
FUEL INJECTOR NO. 1
FUEL INJECTOR NO. 2
FUEL INJECTOR NO. 3
FUEL INJECTOR NO. 4
FUEL INJECTOR NO. 5
FUEL INJECTOR NO. 6
36 C4
27 C3
22
19 C2
28 C3
21
18 C2
9
3 C5
FUEL PUMP RELAY CONTROL
FUEL INJECTOR NO. 1 CONTROL
FUEL INJECTOR NO. 2 CONTROL
FUEL INJECTOR NO. 3 CONTROL
FUEL INJECTOR NO. 4 CONTROL
FUEL INJECTOR NO. 5 CONTROL
FUEL INJECTOR NO. 6 CONTROL
FUSED ENGINE CONTROL RELAY OUTPUT
FUSED B (+)
POWERTRAIN CONTROL MODULE
GROUND DISTRIBUTION
G204
(8W-15-9)

ZH043005

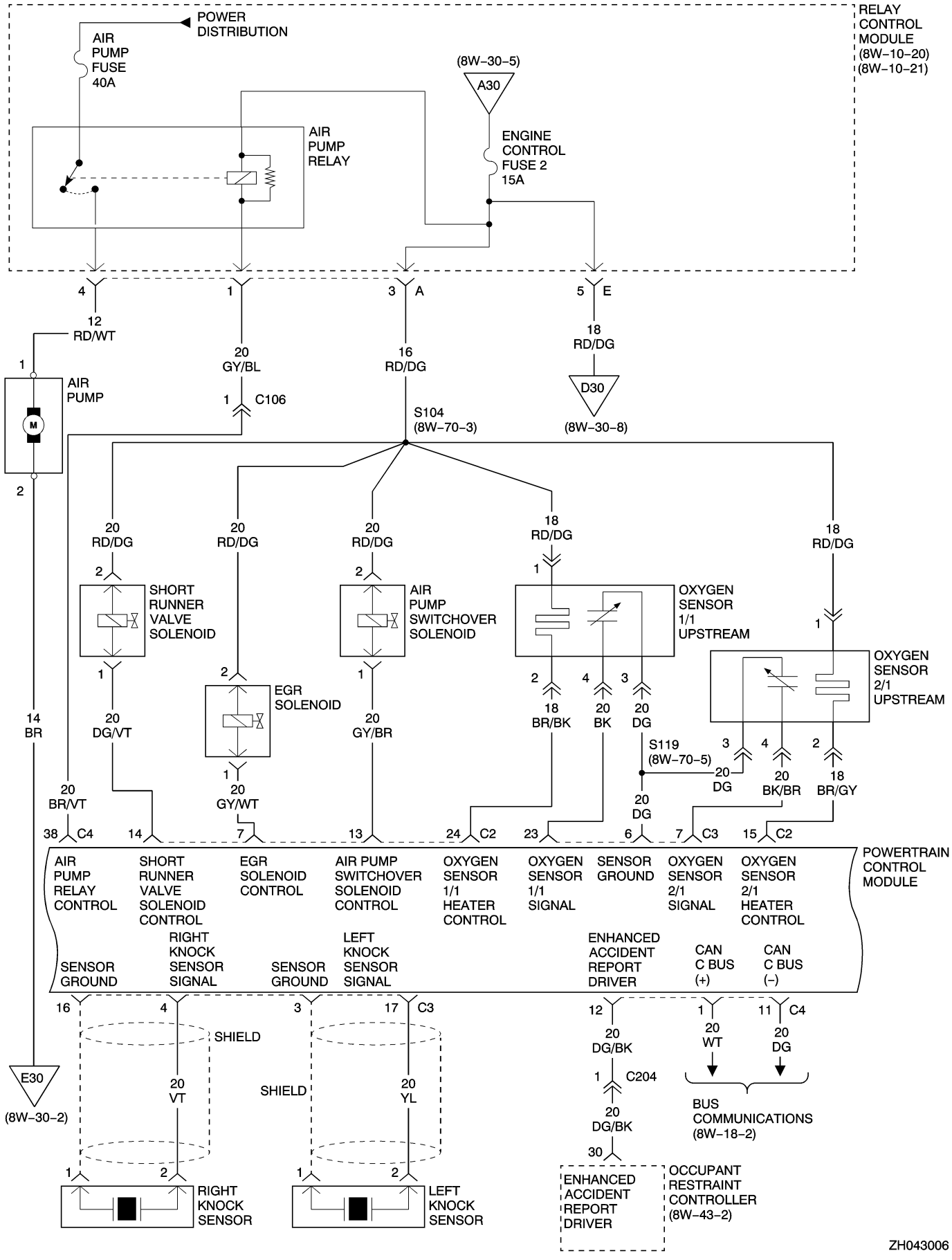
RELAY CONTROL MODULE (8W–10–20) (8W–10–21)
POWER DISTRIBUTION
AIR PUMP FUSE 40A
AIR PUMP RELAY
(8W–30–5)
A30
ENGINE CONTROL FUSE 2 15A
4
12 RD/WT
1
20 GY/BL
1 C106
3 A
16 RD/DG
S104 (8W–70–3)
5 E
18 RD/DG
D30
(8W–30–8)
1
AIR PUMP
M
2
20 RD/DG
2
SHORT RUNNER VALVE SOLENOID
1
20 DG/VT
14 BR
20 BR/VT
38 C4
14
20 RD/DG
2
EGR SOLENOID
1
20 GY/WT
7
20 RD/DG
2
AIR PUMP SWITCHOVER SOLENOID
1
20 GY/BR
13
18 RD/DG
1
OXYGEN SENSOR 1/1 UPSTREAM
2
18 BR/BK
4
20 BK
3
20 DG
24 C2
23
18 RD/DG
1
OXYGEN SENSOR 2/1 UPSTREAM
S119 (8W–70–5)
3
20 DG
4
20 BK/BR
2
18 BR/GY
20 DG
6
7 C3
15 C2
POWERTRAIN CONTROL MODULE
AIR PUMP RELAY CONTROL
SHORT RUNNER VALVE SOLENOID CONTROL
EGR SOLENOID CONTROL
AIR PUMP SWITCHOVER SOLENOID CONTROL
OXYGEN SENSOR 1/1 HEATER CONTROL
OXYGEN SENSOR 1/1 SIGNAL
SENSOR GROUND
OXYGEN SENSOR 2/1 SIGNAL
OXYGEN SENSOR 2/1 HEATER CONTROL
SENSOR GROUND
RIGHT KNOCK SENSOR SIGNAL
SENSOR GROUND
LEFT KNOCK SENSOR SIGNAL
ENHANCED ACCIDENT REPORT DRIVER
CAN C BUS (+)
CAN C BUS (–)
16
4
SHIELD
20 VT
1
2
RIGHT KNOCK SENSOR
3
17 C3
SHIELD
20 YL
1
2
LEFT KNOCK SENSOR
E30
(8W–30–2)
12
20 DG/BK
1 C204
20 DG/BK
30
ENHANCED ACCIDENT REPORT DRIVER
1
20 WT
11 C4
20 DG
BUS COMMUNICATIONS (8W–18–2)
OCCUPANT RESTRAINT CONTROLLER (8W–43–2)
ZH043006

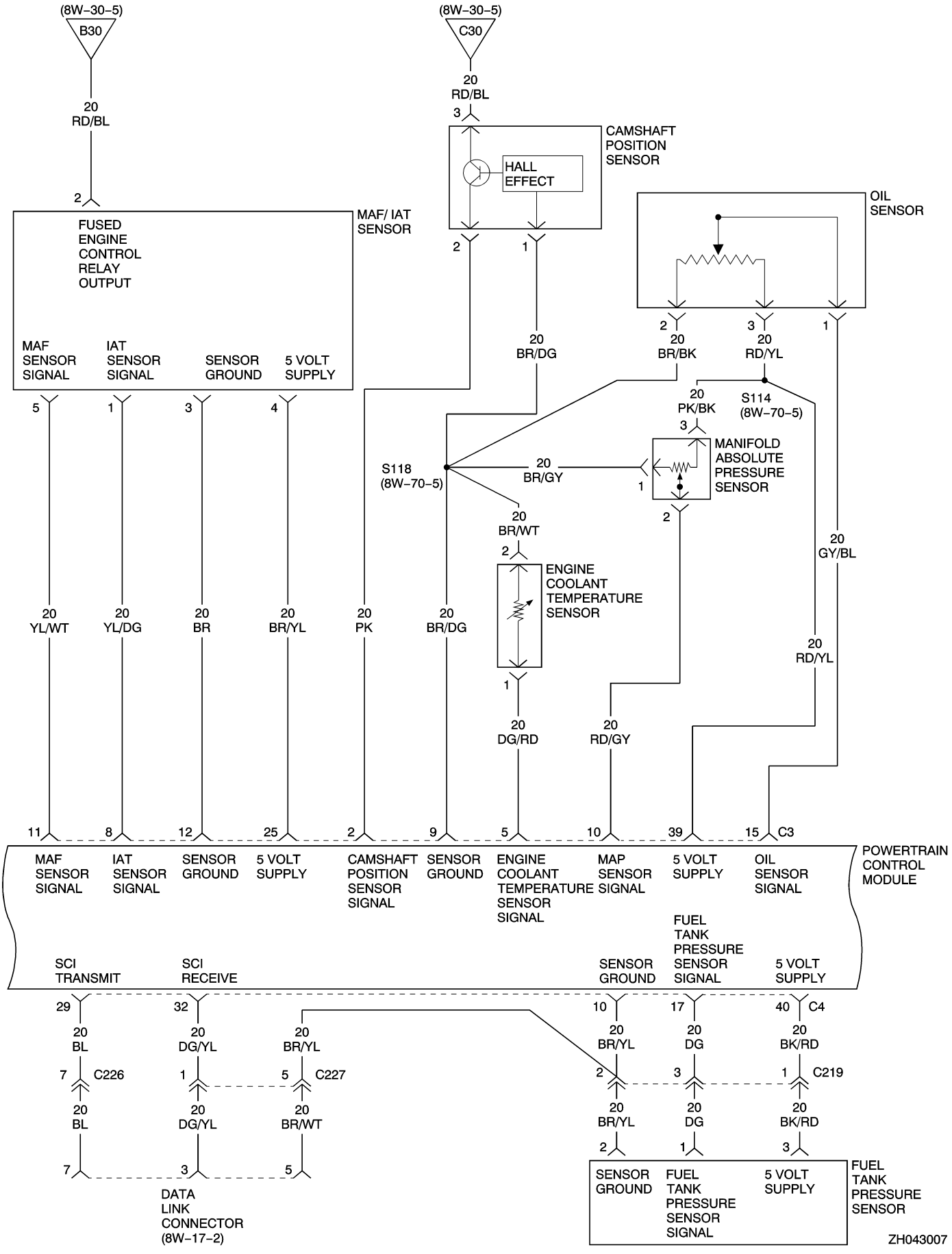
(8W–30–5)
B30
20
RD/BL
2
FUSED
ENGINE
CONTROL
RELAY
OUTPUT
MAF/ IAT
SENSOR
MAF
SENSOR
SIGNAL
IAT
SENSOR
SIGNAL
SENSOR
GROUND
5 VOLT
SUPPLY
5
1
3
4
20
YL/WT
20
YL/DG
20
BR
20
BR/YL
(8W–30–5)
C30
20
RD/BL
3
CAMSHAFT
POSITION
SENSOR
HALL
EFFECT
2
1
20
BR/DG
20
PK
20
BR/DG
OIL
SENSOR
2
3
1
20
BR/BK
20
RD/YL
20
PK/BK
3
S114
(8W–70–5)
MANIFOLD
ABSOLUTE
PRESSURE
SENSOR
S118
(8W–70–5)
20
BR/GY
1
2
20
BR/WT
2
ENGINE
COOLANT
TEMPERATURE
SENSOR
1
20
DG/RD
20
RD/GY
20
GY/BL
20
RD/YL
11
8
12
25
2
9
5
10
39
15
C3
MAF
SENSOR
SIGNAL
IAT
SENSOR
SIGNAL
SENSOR
GROUND
5 VOLT
SUPPLY
CAMSHAFT
POSITION
SENSOR
SIGNAL
SENSOR
GROUND
ENGINE
COOLANT
TEMPERATURE
SENSOR
SIGNAL
MAP
SENSOR
SIGNAL
5 VOLT
SUPPLY
OIL
SENSOR
SIGNAL
POWERTRAIN
CONTROL
MODULE
SCI
TRANSMIT
SCI
RECEIVE
SENSOR
GROUND
FUEL
TANK
PRESSURE
SENSOR
SIGNAL
5 VOLT
SUPPLY
29
32
10
17
40
C4
20
BL
20
DG/YL
20
BR/YL
20
BR/YL
20
DG
20
BK/RD
7
C226
1
5
C227
2
3
1
C219
20
BL
20
DG/YL
20
BR/WT
20
BR/YL
20
DG
20
BK/RD
7
3
5
2
1
3
DATA
LINK
CONNECTOR
(8W–17–2)
SENSOR
GROUND
FUEL
TANK
PRESSURE
SENSOR
SIGNAL
5 VOLT
SUPPLY
FUEL
TANK
PRESSURE
SENSOR
ZH043007

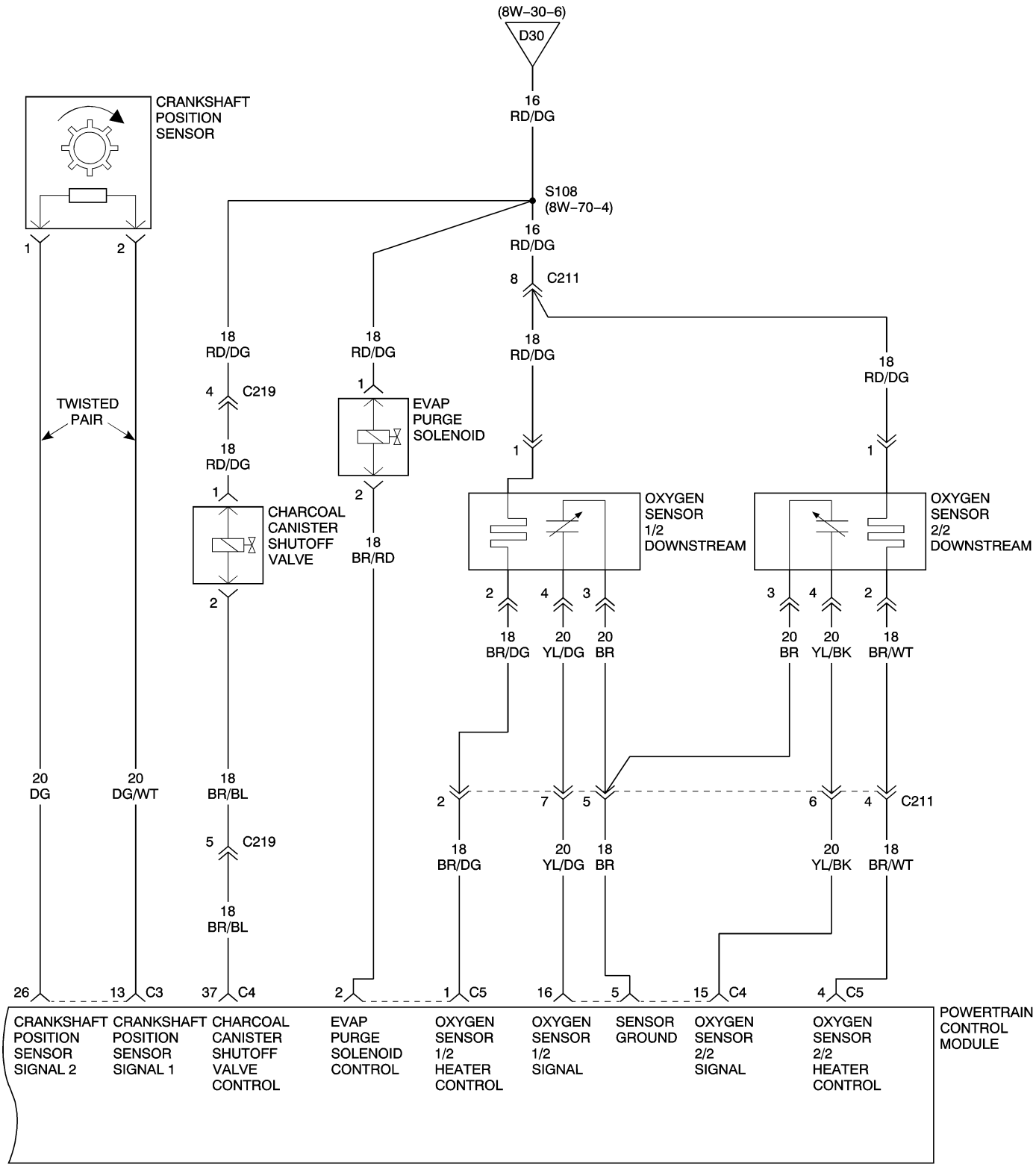
(8W–30–6)
D30
16 RD/DG
CRANKSHAFT POSITION SENSOR
1
2
S108 (8W–70–4)
16 RD/DG
8 C211
18 RD/DG
18 RD/DG
18 RD/DG
18 RD/DG
4 C219
1
EVAP PURGE SOLENOID
TWISTED PAIR
18 RD/DG
1
1
1
CHARCOAL CANISTER SHUTOFF VALVE
2
2
18 BR/RD
OXYGEN SENSOR 1/2 DOWNSTREAM
OXYGEN SENSOR 2/2 DOWNSTREAM
2 4 3
3 4 2
18 BR/DG
20 YL/DG
20 BR
20 BR
20 YL/BK
18 BR/WT
20 DG
20 DG/WT
18 BR/BL
2 7 5
6 4 C211
5 C219
18 BR/DG
20 YL/DG
18 BR
20 YL/BK
18 BR/WT
18 BR/BL
26
13 C3
37 C4
2
1 C5
16
5
15 C4
4 C5
CRANKSHAFT POSITION SENSOR SIGNAL 2
CRANKSHAFT POSITION SENSOR SIGNAL 1
CHARCOAL CANISTER SHUTOFF VALVE CONTROL
EVAP PURGE SOLENOID CONTROL
OXYGEN SENSOR 1/2 HEATER CONTROL
OXYGEN SENSOR 1/2 SIGNAL
SENSOR GROUND
OXYGEN SENSOR 2/2 SIGNAL
OXYGEN SENSOR 2/2 HEATER CONTROL
POWERTRAIN CONTROL MODULE

ZH043008

8W-31 TRANSMISSION CONTROL SYSTEM

Component	Page
Brake Lamp Switch	8W-31-2
Controller Antilock Brake	8W-31-3
Data Link Connector	8W-31-3
Fuse 4	8W-31-3
G203	8W-31-2
G204	8W-31-2
Illumination Control Module	8W-31-3
N2 and N3 Speed Sensors	8W-31-2
Relay Control Module	8W-31-2
Shift Lever Assembly	8W-31-2, 3
Splice Block 200	8W-31-2
Traction System Fuse	8W-31-2
Traction System Relay	8W-31-2
Transmission Control Module	8W-31-2, 3
Transmission Solenoid Assembly	8W-31-2, 3
Transmission Temperature Sensor	8W-31-2

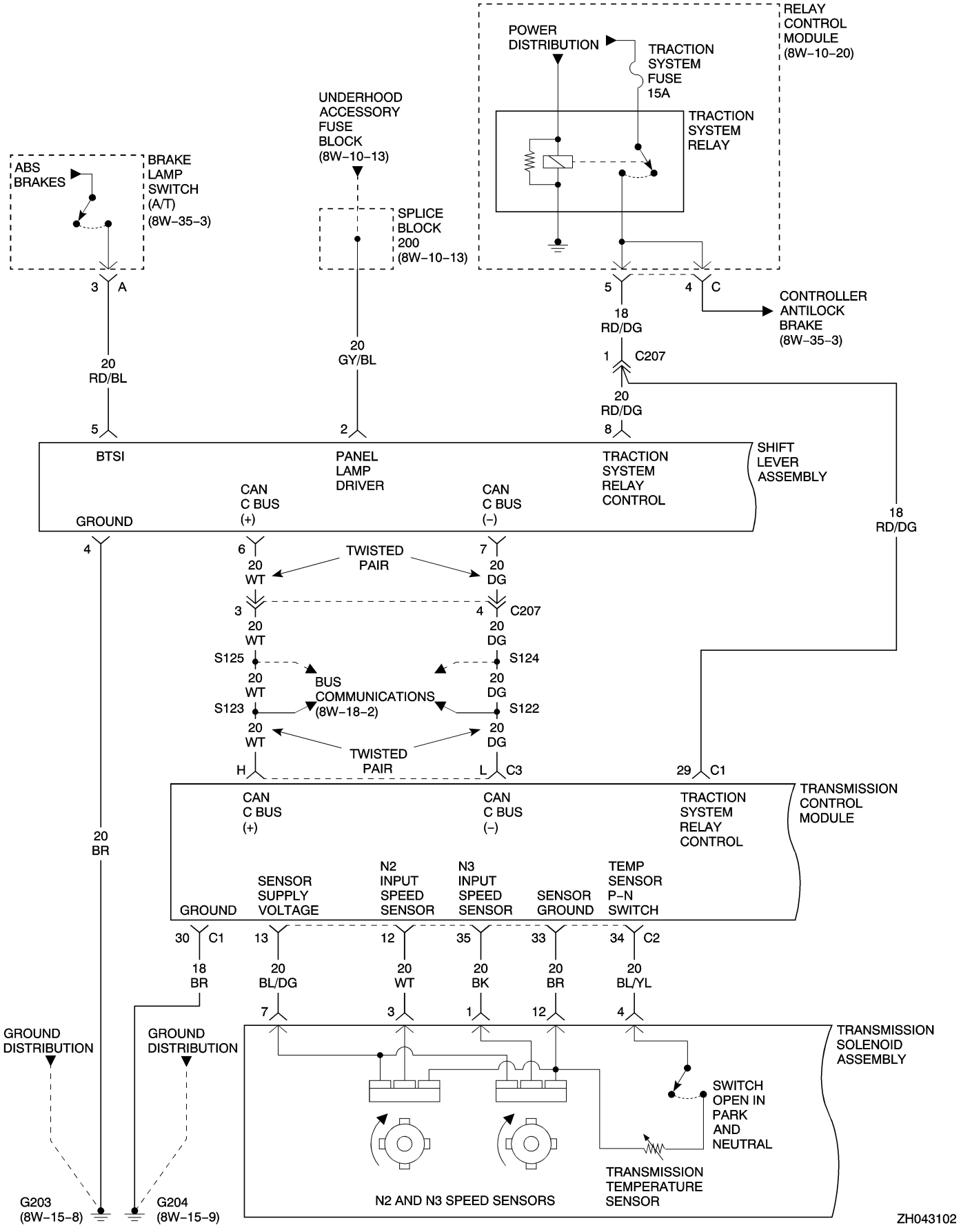
RELAY CONTROL MODULE (8W–10–20)
POWER DISTRIBUTION
TRACTION SYSTEM FUSE 15A
TRACTION SYSTEM RELAY
UNDERHOOD ACCESSORY FUSE BLOCK (8W–10–13)
SPLICE BLOCK 200 (8W–10–13)
ABS BRAKES
BRAKE LAMP SWITCH (A/T) (8W–35–3)
CONTROLLER ANTILOCK BRAKE (8W–35–3)
3 A
20 RD/BL
5
20 GY/BL
2
5
4 C
18 RD/DG
1 C207
20 RD/DG
8
BTSI
PANEL LAMP DRIVER
TRACTION SYSTEM RELAY CONTROL
SHIFT LEVER ASSEMBLY
GROUND
CAN C BUS (+)
CAN C BUS (–)
18 RD/DG
4
6
20 WT
TWISTED PAIR
7
20 DG
3
20 WT
4 C207
20 DG
S125
20 WT
BUS COMMUNICATIONS (8W–18–2)
S124
20 DG
S123
20 WT
S122
20 DG
TWISTED PAIR
H
L C3
29 C1
CAN C BUS (+)
CAN C BUS (–)
TRACTION SYSTEM RELAY CONTROL
TRANSMISSION CONTROL MODULE
20 BR
GROUND
SENSOR SUPPLY VOLTAGE
N2 INPUT SPEED SENSOR
N3 INPUT SPEED SENSOR
SENSOR GROUND
TEMP SENSOR P–N SWITCH
30 C1
13
12
35
33
34 C2
18 BR
20 BL/DG
20 WT
20 BK
20 BR
20 BL/YL
7
3
1
12
4
GROUND DISTRIBUTION
GROUND DISTRIBUTION
TRANSMISSION SOLENOID ASSEMBLY
SWITCH OPEN IN PARK AND NEUTRAL
TRANSMISSION TEMPERATURE SENSOR
N2 AND N3 SPEED SENSORS
G203 (8W–15–8)
G204 (8W–15–9)
ZH043102

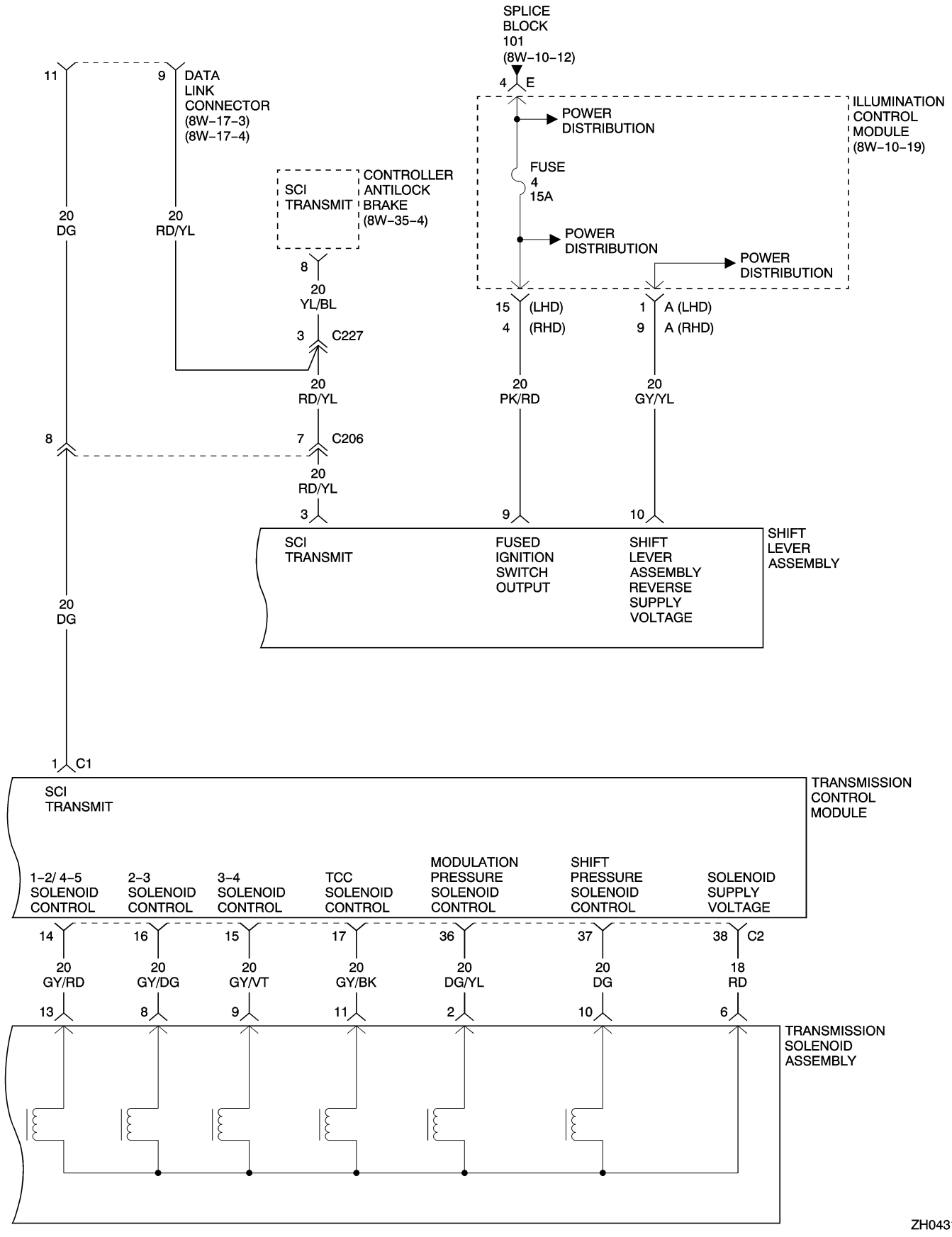
SPLICE
BLOCK
101
(8W–10–12)
4 E
ILLUMINATION
CONTROL
MODULE
(8W–10–19)
POWER
DISTRIBUTION
FUSE
4
15A
POWER
DISTRIBUTION
POWER
DISTRIBUTION
11
9
DATA
LINK
CONNECTOR
(8W–17–3)
(8W–17–4)
SCI
TRANSMIT
CONTROLLER
ANTILOCK
BRAKE
(8W–35–4)
20
DG
20
RD/YL
8
20
YL/BL
3 C227
20
RD/YL
8
7 C206
20
RD/YL
3
15 (LHD)
4 (RHD)
1 A (LHD)
9 A (RHD)
20
PK/RD
20
GY/YL
9
10
SCI
TRANSMIT
FUSED
IGNITION
SWITCH
OUTPUT
SHIFT
LEVER
ASSEMBLY
REVERSE
SUPPLY
VOLTAGE
SHIFT
LEVER
ASSEMBLY
20
DG
1 C1
SCI
TRANSMIT
TRANSMISSION
CONTROL
MODULE
1–2/ 4–5
SOLENOID
CONTROL
2–3
SOLENOID
CONTROL
3–4
SOLENOID
CONTROL
TCC
SOLENOID
CONTROL
MODULATION
PRESSURE
SOLENOID
CONTROL
SHIFT
PRESSURE
SOLENOID
CONTROL
SOLENOID
SUPPLY
VOLTAGE
14
16
15
17
36
37
38 C2
20
GY/RD
20
GY/DG
20
GY/VT
20
GY/BK
20
DG/YL
20
DG
18
RD
13
8
9
11
2
10
6
TRANSMISSION
SOLENOID
ASSEMBLY

ZH043103

8W-33 VEHICLE SPEED CONTROL

Component	Page	Component	Page
Fuse 10	8W-33-2	Kickdown Switch	8W-33-2
Underhood Accessory Fuse Block	8W-33-2	G101	8W-33-2
Speed Control Switch	8W-33-2	G100	8W-33-2
Accelerator Pedal Position Sensor	8W-33-2	Clutch Pedal Position Switch	8W-33-2
Powertrain Control Module	8W-33-2	Throttle Body	8W-33-2

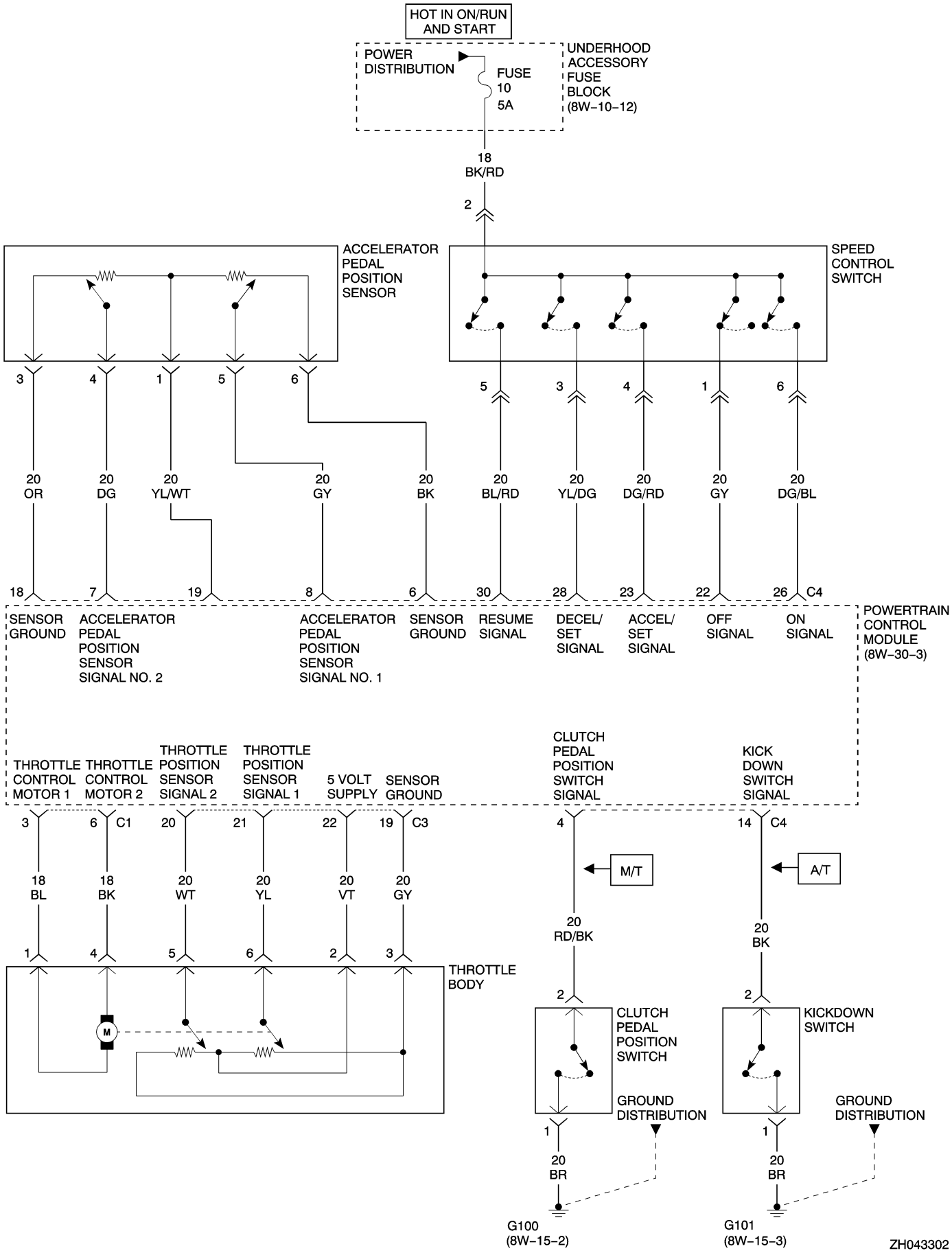
HOT IN ON/RUN AND START
POWER DISTRIBUTION
FUSE 10 5A
UNDERHOOD ACCESSORY FUSE BLOCK (8W-10-12)
18 BK/RD
2
ACCELERATOR PEDAL POSITION SENSOR
SPEED CONTROL SWITCH
3 4 1 5 6
5 3 4 1 6
20 OR
20 DG
20 YL/WT
20 GY
20 BK
20 BL/RD
20 YL/DG
20 DG/RD
20 GY
20 DG/BL
18 7 19 8 6 30 28 23 22 26 C4
SENSOR GROUND
ACCELERATOR PEDAL POSITION SENSOR SIGNAL NO. 2
ACCELERATOR PEDAL POSITION SENSOR SIGNAL NO. 1
SENSOR GROUND
RESUME SIGNAL
DECEL/ SET SIGNAL
ACCEL/ SET SIGNAL
OFF SIGNAL
ON SIGNAL
POWERTRAIN CONTROL MODULE (8W-30-3)
THROTTLE CONTROL MOTOR 1
THROTTLE CONTROL MOTOR 2
THROTTLE POSITION SENSOR SIGNAL 2
THROTTLE POSITION SENSOR SIGNAL 1
5 VOLT SUPPLY
SENSOR GROUND
CLUTCH PEDAL POSITION SWITCH SIGNAL
KICK DOWN SWITCH SIGNAL
3 6 C1 20 21 22 19 C3
4
14 C4
M/T
A/T
18 BL
18 BK
20 WT
20 YL
20 VT
20 GY
20 RD/BK
20 BK
1 4 5 6 2 3
2
2
THROTTLE BODY
M
CLUTCH PEDAL POSITION SWITCH
KICKDOWN SWITCH
GROUND DISTRIBUTION
GROUND DISTRIBUTION
1
1
20 BR
20 BR
G100 (8W-15-2)
G101 (8W-15-3)
ZH043302

8W-35 ANTILOCK BRAKES

Component	Page
BAS Brake Booster	8W-35-2
Body Control Module	8W-35-4
Brake Lamp Relay	8W-35-3
Brake Lamp Switch	8W-35-3
Controller Antilock Brake	8W-35-2, 3, 4, 5
Data Link Connector	8W-35-4
ESP Brake Pressure Sensor 1	8W-35-5
ESP Brake Pressure Sensor 2	8W-35-5
ESP Lateral Acceleration Sensor	8W-35-5
ESP Off Switch	8W-35-4
ESP Yaw Rate Sensor	8W-35-5
Engine Fuse Block	8W-35-2
Fuse 14	8W-35-3
Fuse 3	8W-35-2
G100	8W-35-2, 3, 5
G101	8W-35-5
G200	8W-35-3
G203	8W-35-4
Illumination Control Module	8W-35-4
Left Front Brake Lining Wear Sensor	8W-35-5
Left Front Wheel Speed Sensor	8W-35-4
Left Rear Wheel Speed Sensor	8W-35-4
Park Brake Switch	8W-35-4
Power Amplifier	8W-35-4
Relay Control Module	8W-35-3
Right Front Brake Lining Wear Sensor	8W-35-5
Right Front Wheel Speed Sensor	8W-35-4
Right Rear Wheel Speed Sensor	8W-35-4
Shift Lever Assembly	8W-35-4
Splice Block 100	8W-35-3
Splice Block 101	8W-35-3
Steering Angle Sensor	8W-35-3
Underhood Accessory Fuse Block	8W-35-3

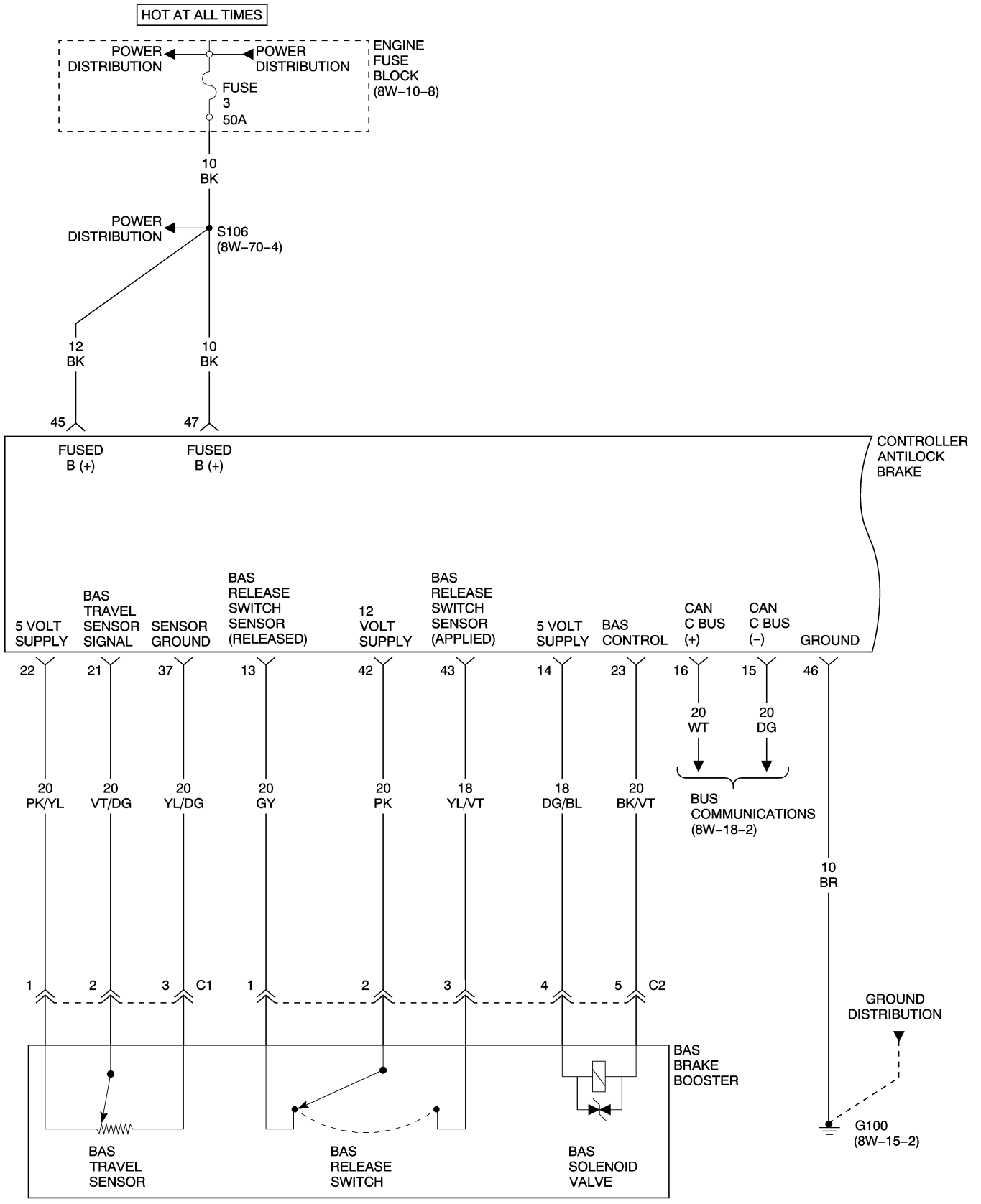
HOT AT ALL TIMES
POWER DISTRIBUTION
POWER DISTRIBUTION
ENGINE FUSE BLOCK (8W–10–8)
FUSE 3 50A
10 BK
POWER DISTRIBUTION
S106 (8W–70–4)
12 BK
10 BK
45
47
FUSED B (+)
FUSED B (+)
CONTROLLER ANTILOCK BRAKE
5 VOLT SUPPLY
BAS TRAVEL SENSOR SIGNAL
SENSOR GROUND
BAS RELEASE SWITCH SENSOR (RELEASED)
12 VOLT SUPPLY
BAS RELEASE SWITCH SENSOR (APPLIED)
5 VOLT SUPPLY
BAS CONTROL
CAN C BUS (+)
CAN C BUS (–)
GROUND
22
21
37
13
42
43
14
23
16
15
46
20 WT
20 DG
20 PK/YL
20 VT/DG
20 YL/DG
20 GY
20 PK
18 YL/VT
18 DG/BL
20 BK/VT
BUS COMMUNICATIONS (8W–18–2)
10 BR
1
2
3
C1
1
2
3
4
5
C2
GROUND DISTRIBUTION
BAS BRAKE BOOSTER
G100 (8W–15–2)
BAS TRAVEL SENSOR
BAS RELEASE SWITCH
BAS SOLENOID VALVE

ZH043502

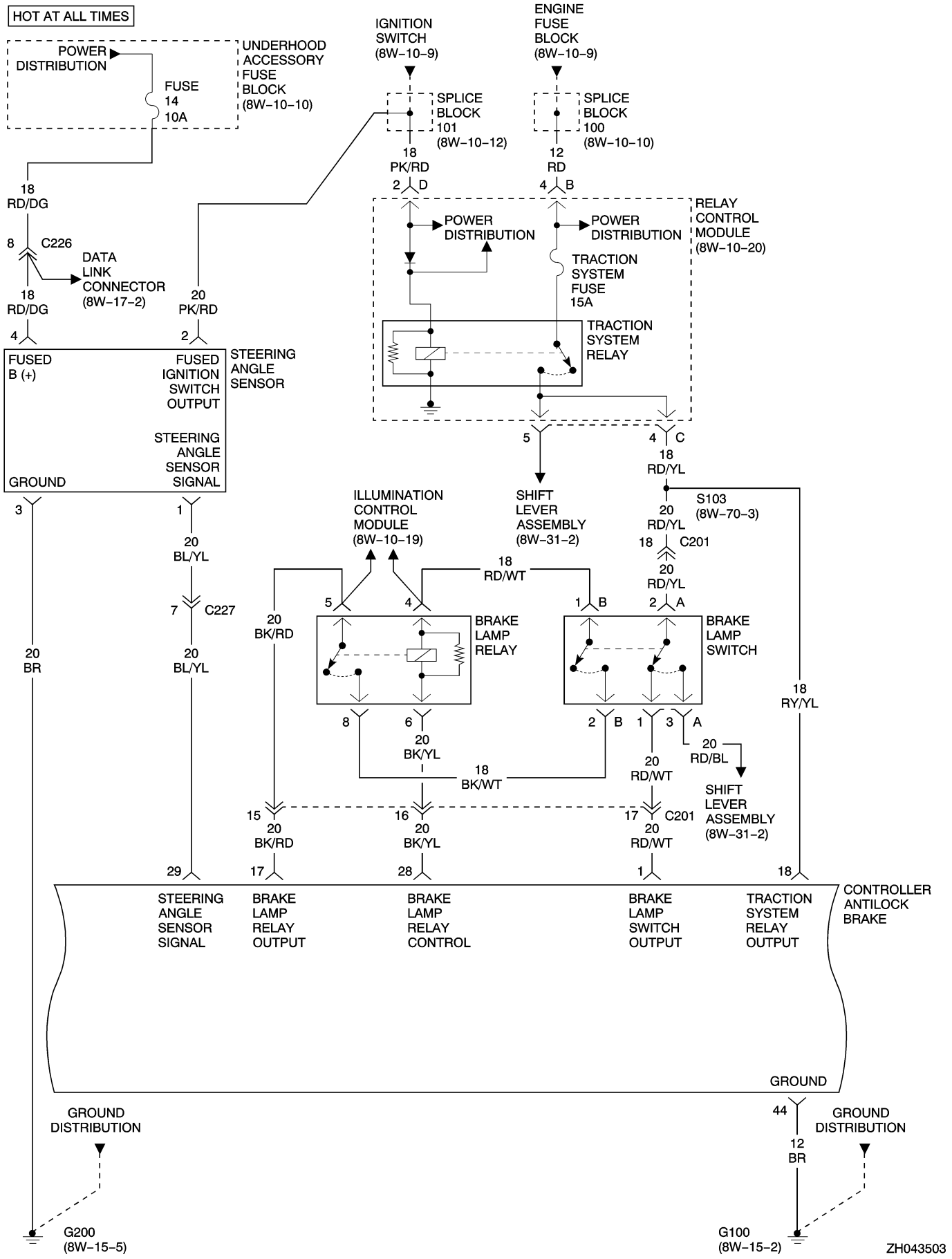
HOT AT ALL TIMES
POWER DISTRIBUTION
FUSE 14 10A
UNDERHOOD ACCESSORY FUSE BLOCK (8W-10-10)
IGNITION SWITCH (8W-10-9)
ENGINE FUSE BLOCK (8W-10-9)
SPLICE BLOCK 101 (8W-10-12)
SPLICE BLOCK 100 (8W-10-10)
18 PK/RD
12 RD
2 D
4 B
18 RD/DG
8 C226
DATA LINK CONNECTOR (8W-17-2)
18 RD/DG
20 PK/RD
4
2
RELAY CONTROL MODULE (8W-10-20)
POWER DISTRIBUTION
POWER DISTRIBUTION
TRACTION SYSTEM FUSE 15A
TRACTION SYSTEM RELAY
FUSED B (+)
FUSED IGNITION SWITCH OUTPUT
STEERING ANGLE SENSOR
STEERING ANGLE SENSOR SIGNAL
GROUND
5
4 C
18 RD/YL
3
1
ILLUMINATION CONTROL MODULE (8W-10-19)
SHIFT LEVER ASSEMBLY (8W-31-2)
S103 (8W-70-3)
20 RD/YL
18 C201
20 BL/YL
18 RD/WT
20 RD/YL
7 C227
5
4
1 B
2 A
20 BK/RD
BRAKE LAMP RELAY
BRAKE LAMP SWITCH
20 BR
20 BL/YL
18 RY/YL
8
6
2 B
1
3 A
20 BK/YL
20 RD/BL
18 BK/WT
20 RD/WT
SHIFT LEVER ASSEMBLY (8W-31-2)
15
16
17 C201
20 BK/RD
20 BK/YL
20 RD/WT
29
17
28
1
18
STEERING ANGLE SENSOR SIGNAL
BRAKE LAMP RELAY OUTPUT
BRAKE LAMP RELAY CONTROL
BRAKE LAMP SWITCH OUTPUT
TRACTION SYSTEM RELAY OUTPUT
CONTROLLER ANTILOCK BRAKE
GROUND
44
12 BR
GROUND DISTRIBUTION
GROUND DISTRIBUTION
G200 (8W-15-5)
G100 (8W-15-2)
ZH043503

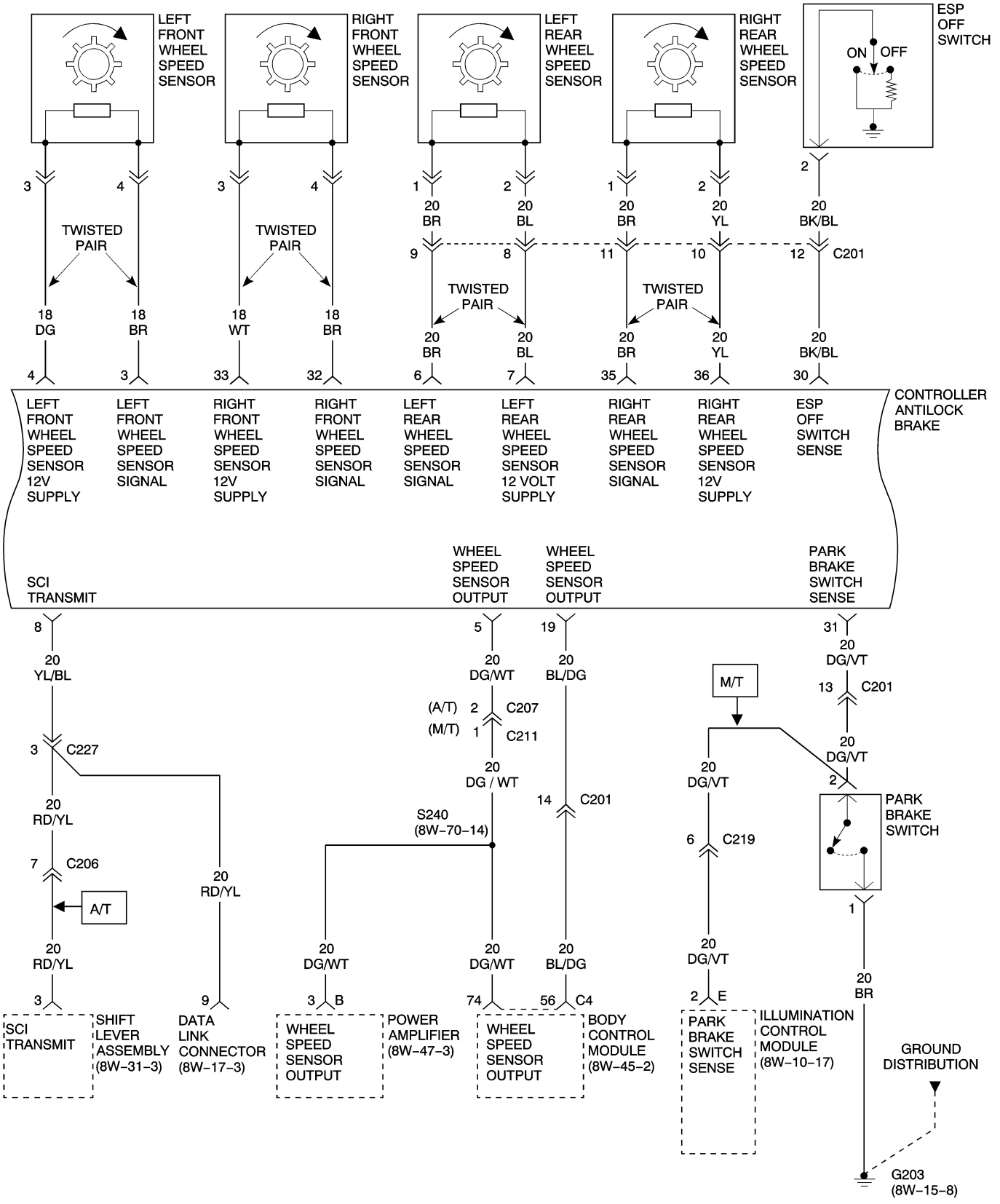
LEFT FRONT WHEEL SPEED SENSOR
RIGHT FRONT WHEEL SPEED SENSOR
LEFT REAR WHEEL SPEED SENSOR
RIGHT REAR WHEEL SPEED SENSOR
ESP OFF SWITCH
ON
OFF
TWISTED PAIR
18 DG
18 BR
18 WT
20 BR
20 BL
20 YL
20 BK/BL
C201
LEFT FRONT WHEEL SPEED SENSOR 12V SUPPLY
LEFT FRONT WHEEL SPEED SENSOR SIGNAL
RIGHT FRONT WHEEL SPEED SENSOR 12V SUPPLY
RIGHT FRONT WHEEL SPEED SENSOR SIGNAL
LEFT REAR WHEEL SPEED SENSOR SIGNAL
LEFT REAR WHEEL SPEED SENSOR 12 VOLT SUPPLY
RIGHT REAR WHEEL SPEED SENSOR SIGNAL
RIGHT REAR WHEEL SPEED SENSOR 12V SUPPLY
ESP OFF SWITCH SENSE
CONTROLLER ANTILOCK BRAKE
SCI TRANSMIT
WHEEL SPEED SENSOR OUTPUT
PARK BRAKE SWITCH SENSE
20 YL/BL
C227
20 RD/YL
C206
A/T
(A/T)
(M/T)
C207
C211
20 DG/WT
20 DG / WT
20 BL/DG
S240 (8W-70-14)
M/T
20 DG/VT
C219
PARK BRAKE SWITCH
SCI TRANSMIT
SHIFT LEVER ASSEMBLY (8W-31-3)
DATA LINK CONNECTOR (8W-17-3)
WHEEL SPEED SENSOR OUTPUT
POWER AMPLIFIER (8W-47-3)
BODY CONTROL MODULE (8W-45-2)
PARK BRAKE SWITCH SENSE
ILLUMINATION CONTROL MODULE (8W-10-17)
GROUND DISTRIBUTION
G203 (8W-15-8)

ZH043504

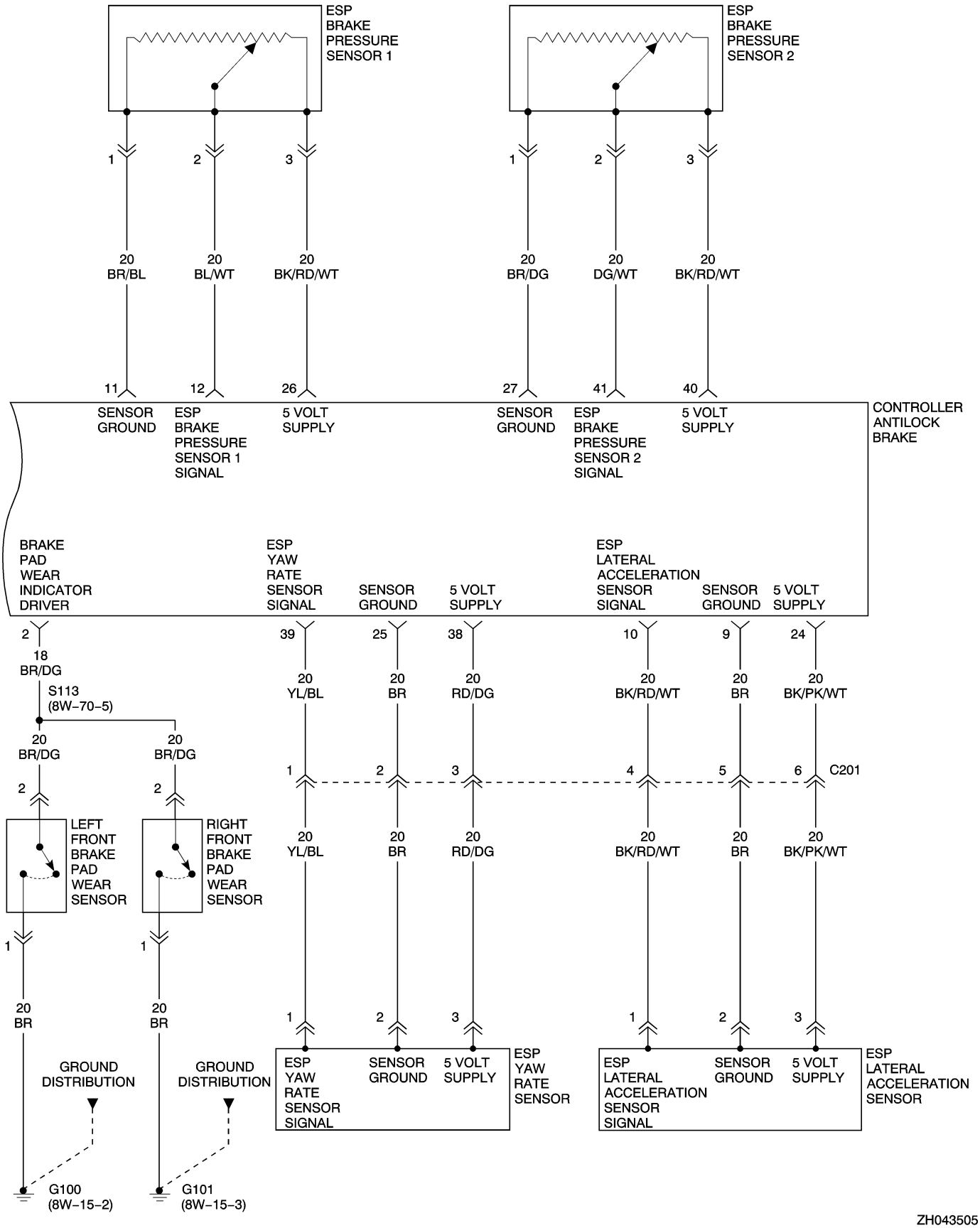
ESP BRAKE PRESSURE SENSOR 1
ESP BRAKE PRESSURE SENSOR 2
1
2
3
20 BR/BL
20 BL/WT
20 BK/RD/WT
20 BR/DG
20 DG/WT
20 BK/RD/WT
11
12
26
27
41
40
SENSOR GROUND
ESP BRAKE PRESSURE SENSOR 1 SIGNAL
5 VOLT SUPPLY
SENSOR GROUND
ESP BRAKE PRESSURE SENSOR 2 SIGNAL
5 VOLT SUPPLY
CONTROLLER ANTILOCK BRAKE
BRAKE PAD WEAR INDICATOR DRIVER
ESP YAW RATE SENSOR SIGNAL
SENSOR GROUND
5 VOLT SUPPLY
ESP LATERAL ACCELERATION SENSOR SIGNAL
SENSOR GROUND
5 VOLT SUPPLY
2
18 BR/DG
S113 (8W-70-5)
39
25
38
10
9
24
20 YL/BL
20 BR
20 RD/DG
20 BK/RD/WT
20 BR
20 BK/PK/WT
20 BR/DG
20 BR/DG
1
2
3
4
5
6
C201
LEFT FRONT BRAKE PAD WEAR SENSOR
RIGHT FRONT BRAKE PAD WEAR SENSOR
20 BR
20 BR
GROUND DISTRIBUTION
GROUND DISTRIBUTION
G100 (8W-15-2)
G101 (8W-15-3)
ESP YAW RATE SENSOR SIGNAL
SENSOR GROUND
5 VOLT SUPPLY
ESP YAW RATE SENSOR
ESP LATERAL ACCELERATION SENSOR SIGNAL
SENSOR GROUND
5 VOLT SUPPLY
ESP LATERAL ACCELERATION SENSOR

ZH043505

8W-39 VEHICLE THEFT SECURITY SYSTEM

Component	Page
Anti-Theft Tow Sensor	8W-39-3
Central Locking Pump/Security System Module	8W-39-2, 3
Fuse 25	8W-39-2
Fuse 26	8W-39-2
Fuse 9	8W-39-3
G100	8W-39-3
G101	8W-39-3
G201	8W-39-2
G204	8W-39-2
G301	8W-39-3
Hood Ajar Switch	8W-39-3
Left Door Ajar Switch	8W-39-2
Right Door Ajar Switch	8W-39-2
Siren	8W-39-3
Tow-Away Alarm Switch	8W-39-2
Underhood Accessory Fuse Block	8W-39-2, 3

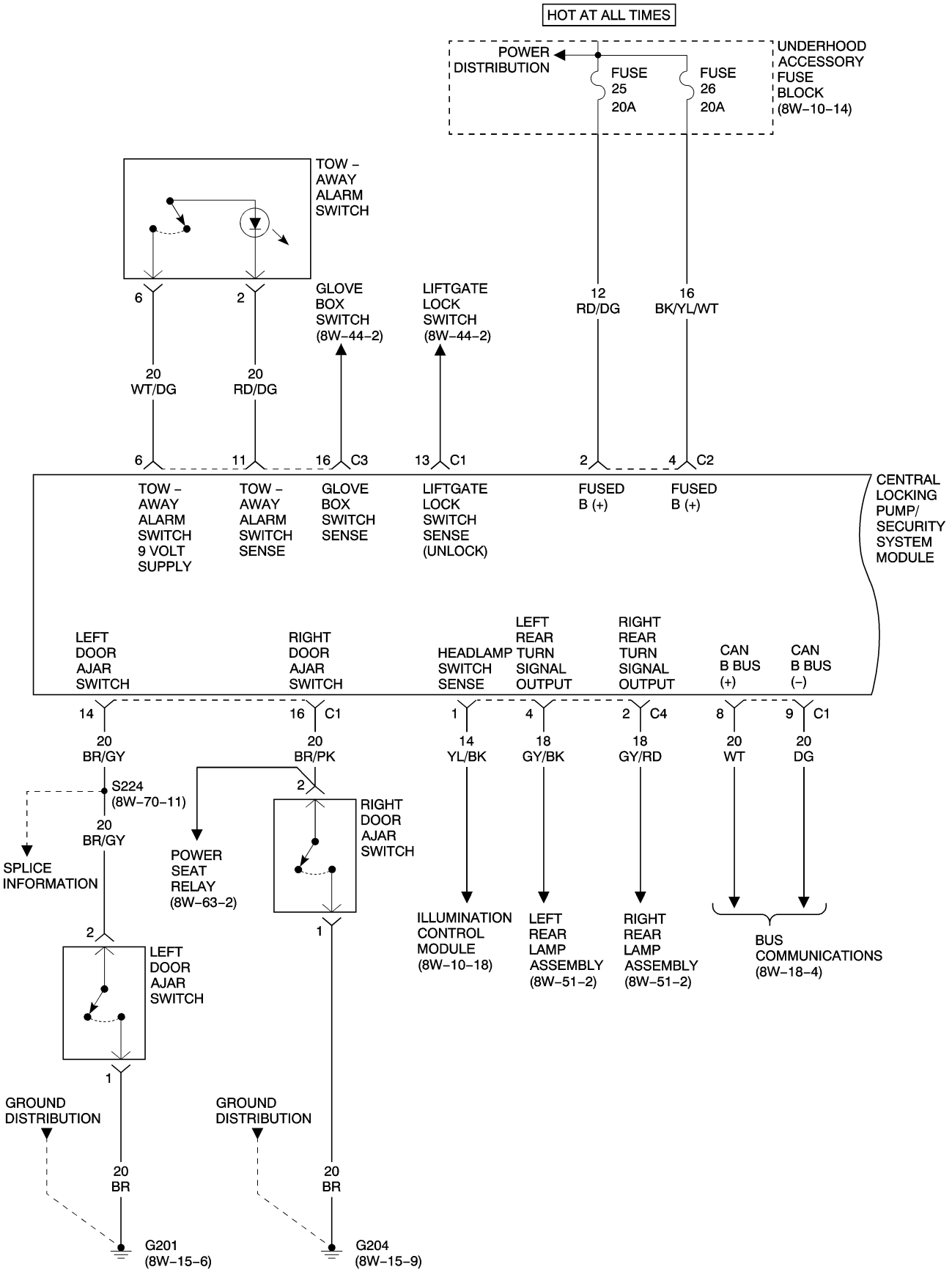
HOT AT ALL TIMES
POWER DISTRIBUTION
FUSE 25 20A
FUSE 26 20A
UNDERHOOD ACCESSORY FUSE BLOCK (8W–10–14)
TOW – AWAY ALARM SWITCH
GLOVE BOX SWITCH (8W–44–2)
LIFTGATE LOCK SWITCH (8W–44–2)
12 RD/DG
16 BK/YL/WT
20 WT/DG
20 RD/DG
TOW – AWAY ALARM SWITCH 9 VOLT SUPPLY
TOW – AWAY ALARM SWITCH SENSE
GLOVE BOX SWITCH SENSE
LIFTGATE LOCK SWITCH SENSE (UNLOCK)
FUSED B (+)
FUSED B (+)
CENTRAL LOCKING PUMP/ SECURITY SYSTEM MODULE
LEFT DOOR AJAR SWITCH
RIGHT DOOR AJAR SWITCH
HEADLAMP SWITCH SENSE
LEFT REAR TURN SIGNAL OUTPUT
RIGHT REAR TURN SIGNAL OUTPUT
CAN B BUS (+)
CAN B BUS (–)
20 BR/GY
20 BR/PK
14 YL/BK
18 GY/BK
18 GY/RD
20 WT
20 DG
S224 (8W–70–11)
SPLICE INFORMATION
POWER SEAT RELAY (8W–63–2)
RIGHT DOOR AJAR SWITCH
LEFT DOOR AJAR SWITCH
ILLUMINATION CONTROL MODULE (8W–10–18)
LEFT REAR LAMP ASSEMBLY (8W–51–2)
RIGHT REAR LAMP ASSEMBLY (8W–51–2)
BUS COMMUNICATIONS (8W–18–4)
GROUND DISTRIBUTION
GROUND DISTRIBUTION
20 BR
20 BR
G201 (8W–15–6)
G204 (8W–15–9)

ZH043902

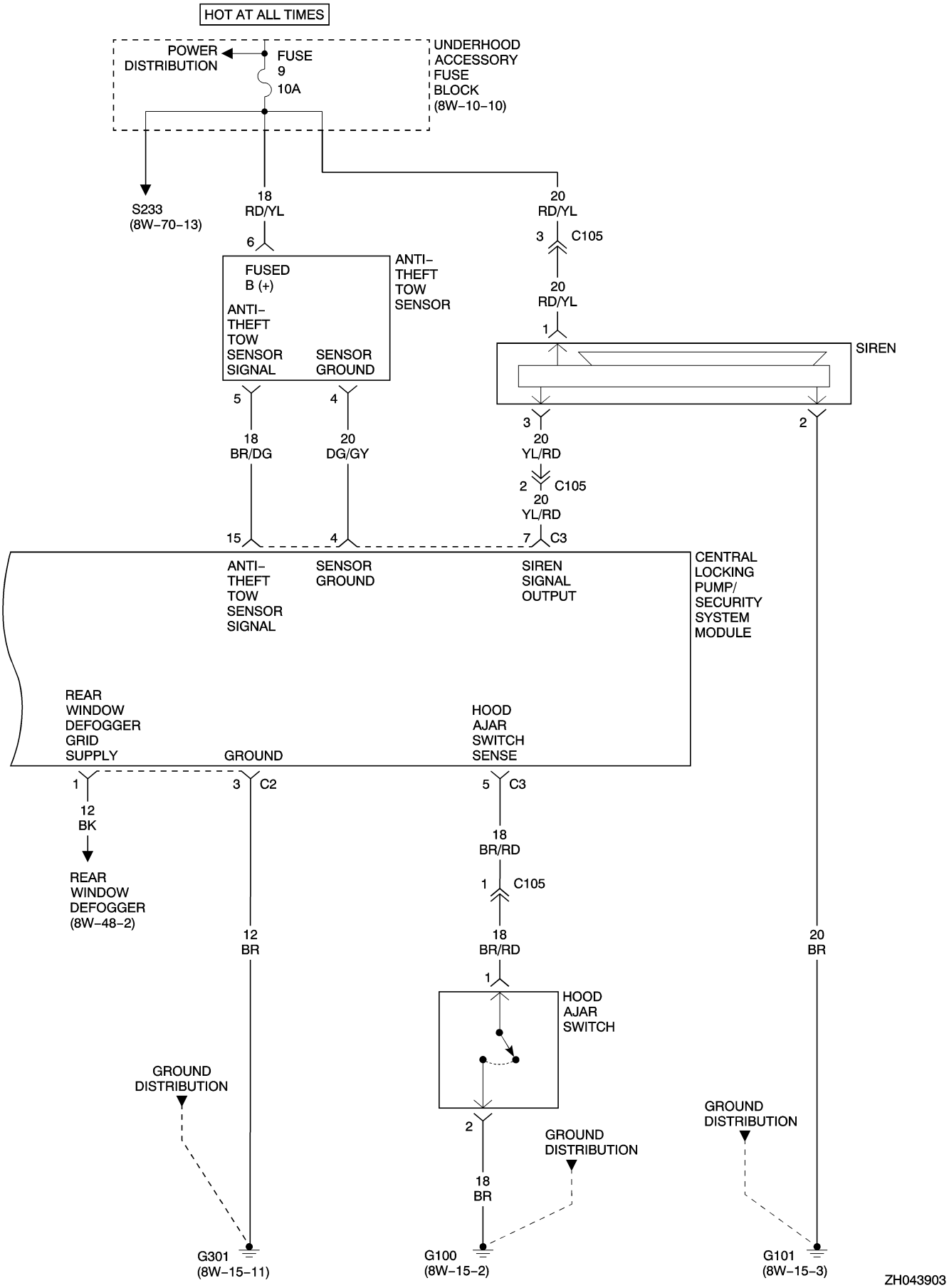
HOT AT ALL TIMES
POWER DISTRIBUTION
FUSE 9 10A
UNDERHOOD ACCESSORY FUSE BLOCK (8W-10-10)
S233 (8W-70-13)
18 RD/YL
6
20 RD/YL
3 C105
20 RD/YL
1
SIREN
FUSED B (+)
ANTI-THEFT TOW SENSOR SIGNAL
SENSOR GROUND
ANTI-THEFT TOW SENSOR
5
4
18 BR/DG
20 DG/GY
3
2
20 YL/RD
2 C105
20 YL/RD
15
4
7 C3
ANTI-THEFT TOW SENSOR SIGNAL
SENSOR GROUND
SIREN SIGNAL OUTPUT
CENTRAL LOCKING PUMP/ SECURITY SYSTEM MODULE
REAR WINDOW DEFOGGER GRID SUPPLY
GROUND
HOOD AJAR SWITCH SENSE
1
3 C2
5 C3
12 BK
REAR WINDOW DEFOGGER (8W-48-2)
18 BR/RD
1 C105
12 BR
18 BR/RD
20 BR
1
HOOD AJAR SWITCH
GROUND DISTRIBUTION
2
GROUND DISTRIBUTION
GROUND DISTRIBUTION
18 BR
G301 (8W-15-11)
G100 (8W-15-2)
G101 (8W-15-3)
ZH043903

8W-40 INSTRUMENT CLUSTER

Component	Page
A/C Heater Control Module	8W-40-3
Ambient Temperature Sensor	8W-40-3
Ash Receiver Lamp	8W-40-2
Body Control Module	8W-40-4
Brake Fluid Level Switch	8W-40-3
Console Switch Group	8W-40-2
Coolant Level Sensor	8W-40-3
Data Link Connector	8W-40-3
Driver Seat Belt Switch	8W-40-4
Fuel Level Sensor	8W-40-3
Fuse 3	8W-40-4
Fuse 35	8W-40-2
Fuse 37	8W-40-2
G100	8W-40-3
G200	8W-40-2, 3
G201	8W-40-4
G202	8W-40-4
Generator	8W-40-3
Illumination Control Module	8W-40-2
Instrument Cluster	8W-40-2, 3, 4
Key In Ignition Switch	8W-40-2
Left Door Ajar Switch	8W-40-4
Occupant Restraint Controller	8W-40-4
Splice Block 200	8W-40-2
Telescopic Steering Switch	8W-40-3
Underhood Accessory Fuse Block	8W-40-2, 4
Universal Garage Door Opener/Tire Pressure Monitor	8W-40-3
Washer Fluid Level Switch	8W-40-3

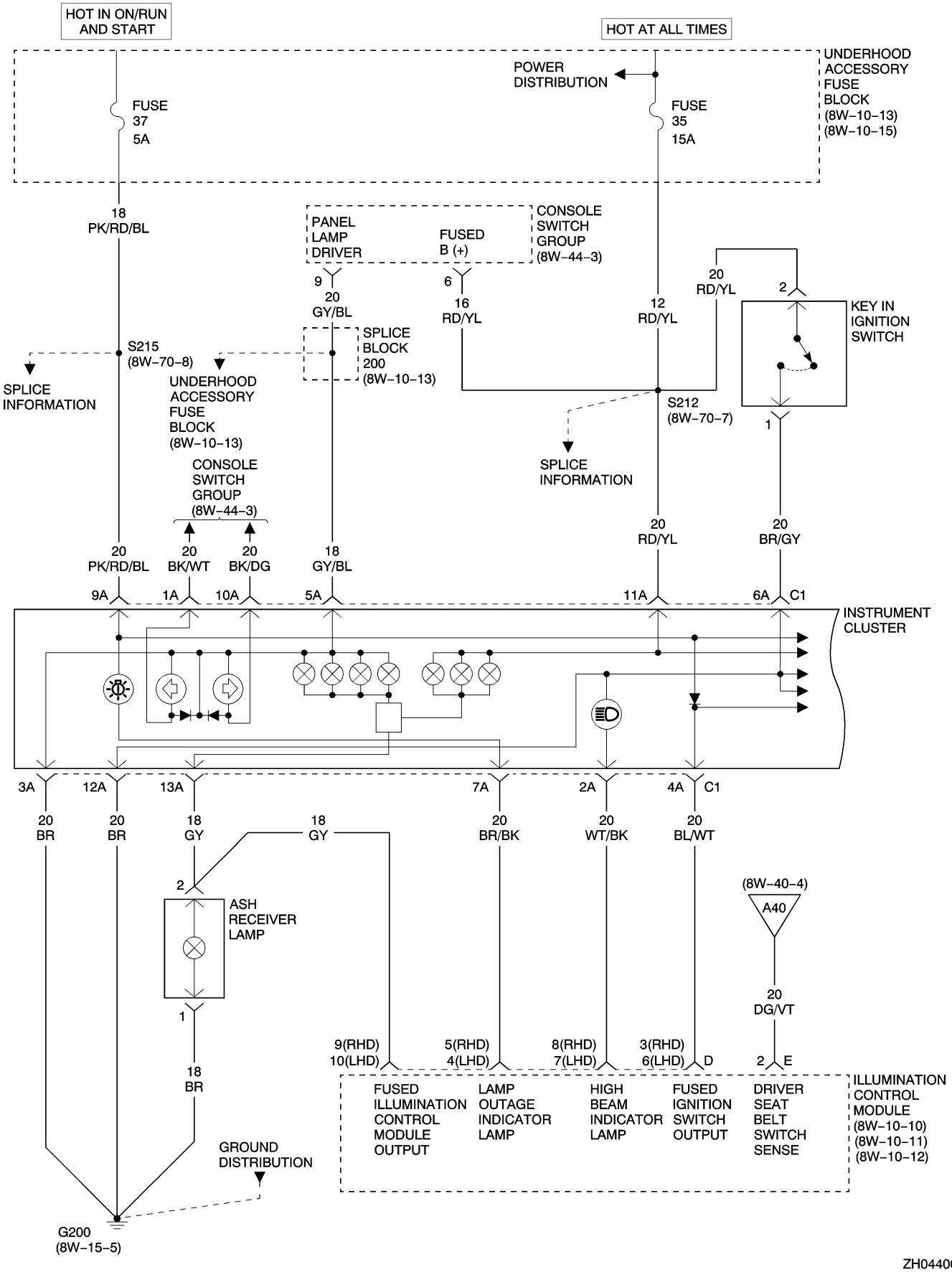
HOT IN ON/RUN AND START
HOT AT ALL TIMES
UNDERHOOD ACCESSORY FUSE BLOCK (8W–10–13) (8W–10–15)
POWER DISTRIBUTION
FUSE 37 5A
FUSE 35 15A
18 PK/RD/BL
PANEL LAMP DRIVER
FUSED B (+)
CONSOLE SWITCH GROUP (8W–44–3)
9
20 GY/BL
6
16 RD/YL
12 RD/YL
20 RD/YL
2
KEY IN IGNITION SWITCH
1
S215 (8W–70–8)
SPLICE INFORMATION
UNDERHOOD ACCESSORY FUSE BLOCK (8W–10–13)
SPLICE BLOCK 200 (8W–10–13)
S212 (8W–70–7)
SPLICE INFORMATION
CONSOLE SWITCH GROUP (8W–44–3)
20 PK/RD/BL
20 BK/WT
20 BK/DG
18 GY/BL
20 RD/YL
20 BR/GY
9A
1A
10A
5A
11A
6A
C1
INSTRUMENT CLUSTER
3A
12A
13A
7A
2A
4A
C1
20 BR
20 BR
18 GY
18 GY
20 BR/BK
20 WT/BK
20 BL/WT
2
ASH RECEIVER LAMP
1
18 BR
(8W–40–4)
A40
20 DG/VT
9(RHD) 10(LHD)
5(RHD) 4(LHD)
8(RHD) 7(LHD)
3(RHD) 6(LHD)
D
2
E
FUSED ILLUMINATION CONTROL MODULE OUTPUT
LAMP OUTAGE INDICATOR LAMP
HIGH BEAM INDICATOR LAMP
FUSED IGNITION SWITCH OUTPUT
DRIVER SEAT BELT SWITCH SENSE
ILLUMINATION CONTROL MODULE (8W–10–10) (8W–10–11) (8W–10–12)
GROUND DISTRIBUTION
G200 (8W–15–5)
ZH044002

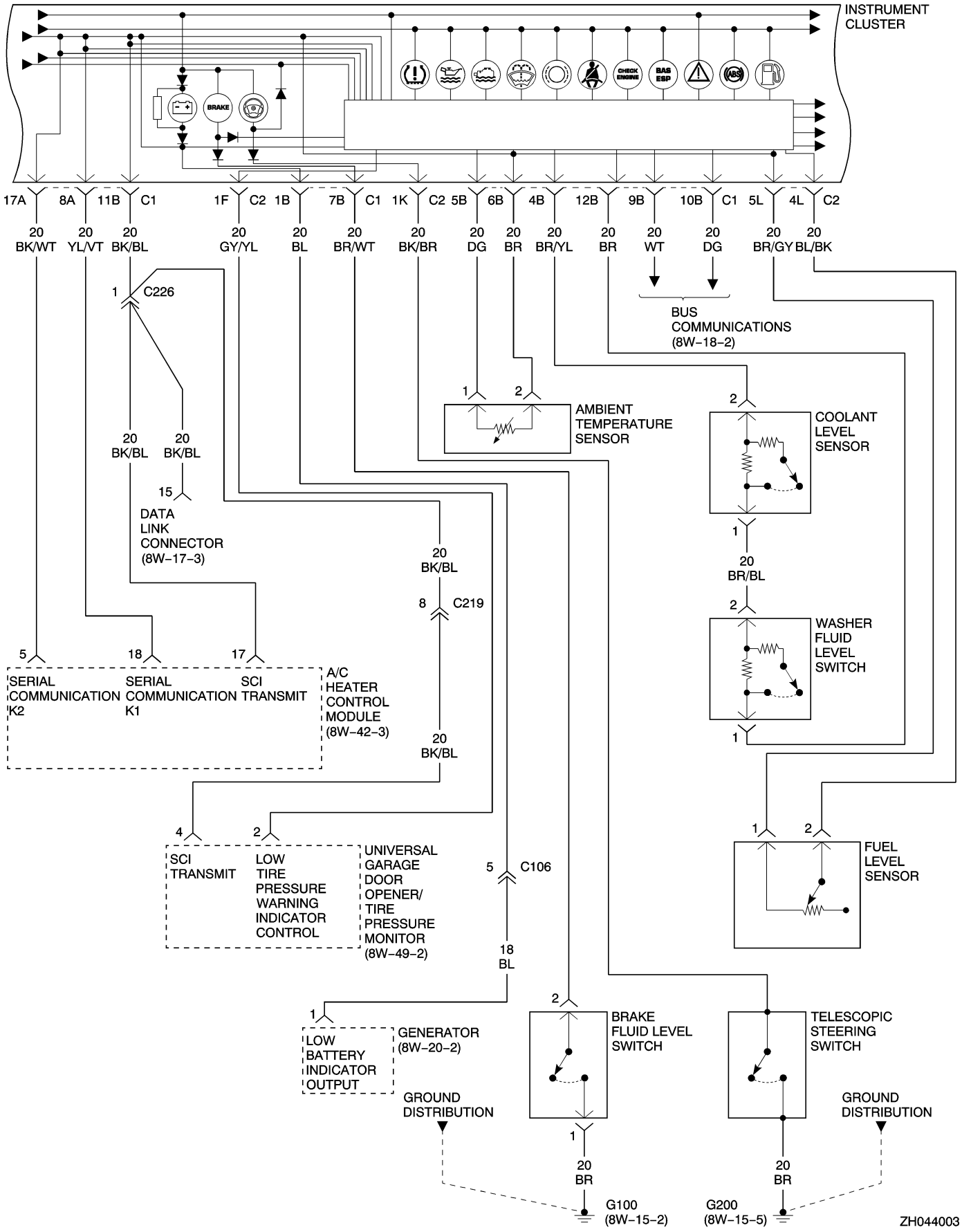
INSTRUMENT CLUSTER
17A 8A 11B C1 1F C2 1B 7B C1 1K C2 5B 6B 4B 12B 9B 10B C1 5L 4L C2
20 BK/WT
20 YL/VT
20 BK/BL
20 GY/YL
20 BL
20 BR/WT
20 BK/BR
20 DG
20 BR
20 BR/YL
20 BR
20 WT
20 DG
20 BR/GY
20 BL/BK
1 C226
BUS COMMUNICATIONS (8W-18-2)
AMBIENT TEMPERATURE SENSOR
COOLANT LEVEL SENSOR
20 BK/BL
20 BK/BL
15
DATA LINK CONNECTOR (8W-17-3)
20 BR/BL
WASHER FLUID LEVEL SWITCH
20 BK/BL
8 C219
5 18 17
SERIAL COMMUNICATION K2
SERIAL COMMUNICATION K1
SCI TRANSMIT
A/C HEATER CONTROL MODULE (8W-42-3)
20 BK/BL
FUEL LEVEL SENSOR
4 2
SCI TRANSMIT
LOW TIRE PRESSURE WARNING INDICATOR CONTROL
UNIVERSAL GARAGE DOOR OPENER/ TIRE PRESSURE MONITOR (8W-49-2)
5 C106
18 BL
GENERATOR (8W-20-2)
LOW BATTERY INDICATOR OUTPUT
BRAKE FLUID LEVEL SWITCH
TELESCOPIC STEERING SWITCH
GROUND DISTRIBUTION
GROUND DISTRIBUTION
20 BR
20 BR
G100 (8W-15-2)
G200 (8W-15-5)
ZH044003

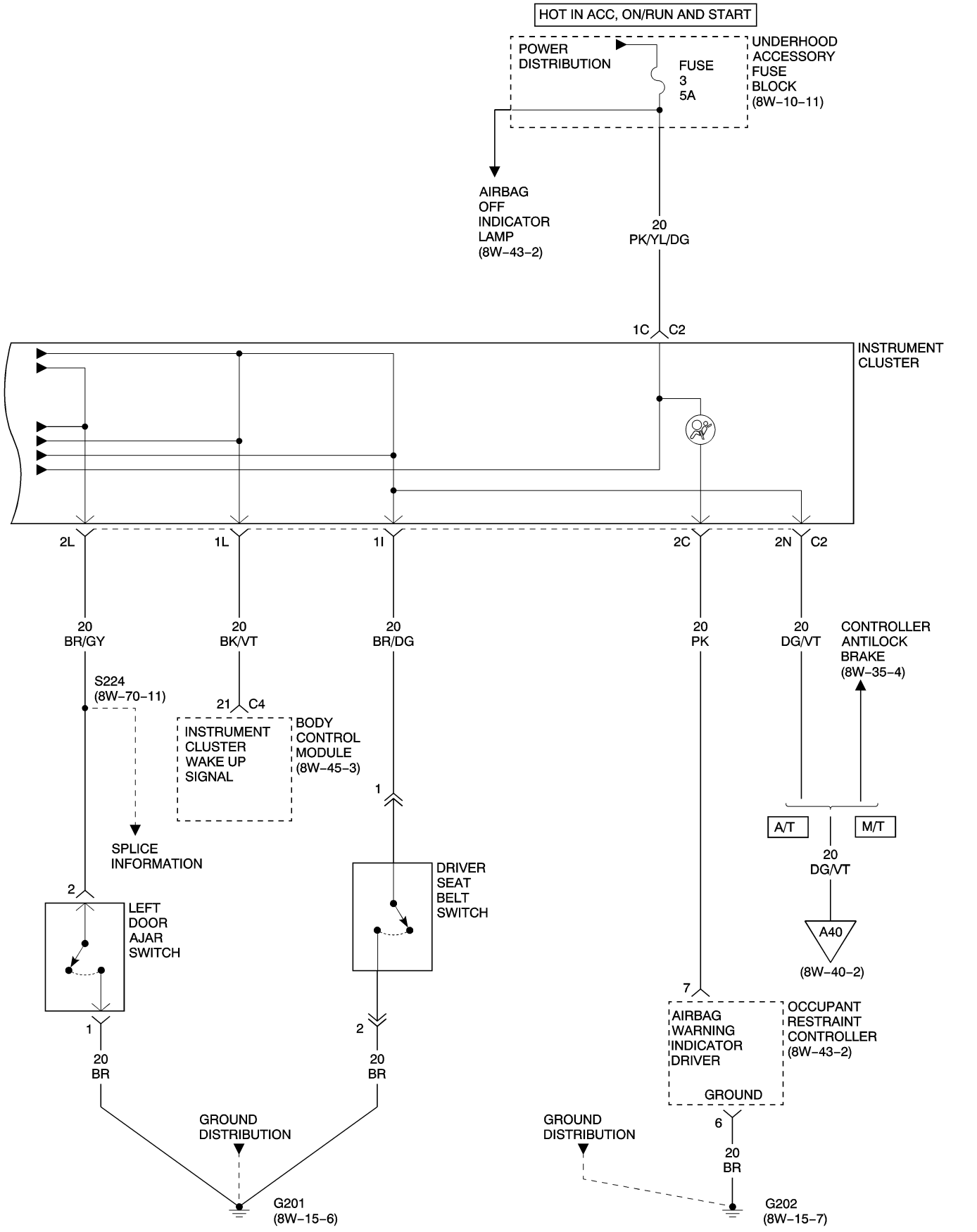
HOT IN ACC, ON/RUN AND START
POWER DISTRIBUTION
FUSE 3 5A
UNDERHOOD ACCESSORY FUSE BLOCK (8W-10-11)
AIRBAG OFF INDICATOR LAMP (8W-43-2)
20 PK/YL/DG
1C C2
INSTRUMENT CLUSTER
2L
1L
1I
2C
2N C2
20 BR/GY
20 BK/VT
20 BR/DG
20 PK
20 DG/VT
CONTROLLER ANTILOCK BRAKE (8W-35-4)
S224 (8W-70-11)
21 C4
INSTRUMENT CLUSTER WAKE UP SIGNAL
BODY CONTROL MODULE (8W-45-3)
1
SPLICE INFORMATION
DRIVER SEAT BELT SWITCH
A/T
M/T
20 DG/VT
A40
(8W-40-2)
2
LEFT DOOR AJAR SWITCH
7
AIRBAG WARNING INDICATOR DRIVER
OCCUPANT RESTRAINT CONTROLLER (8W-43-2)
GROUND
1
2
20 BR
20 BR
GROUND DISTRIBUTION
GROUND DISTRIBUTION
6
20 BR
G201 (8W-15-6)
G202 (8W-15-7)

ZH044004

8W-41 HORN/CIGAR LIGHTER

Component	Page
Cigar Lighter	8W-41-2
Clockspring	8W-41-2
Fuse 31	8W-41-2
G100	8W-41-2
G200	8W-41-2
Glove Box Lamp	8W-41-2
Horn Fuse	8W-41-2
Horn No. 1	8W-41-2
Horn No. 2	8W-41-2
Horn Relay	8W-41-2
Horn Switch	8W-41-2
Relay Control Module	8W-41-2
Underhood Accessory Fuse Block	8W-41-2

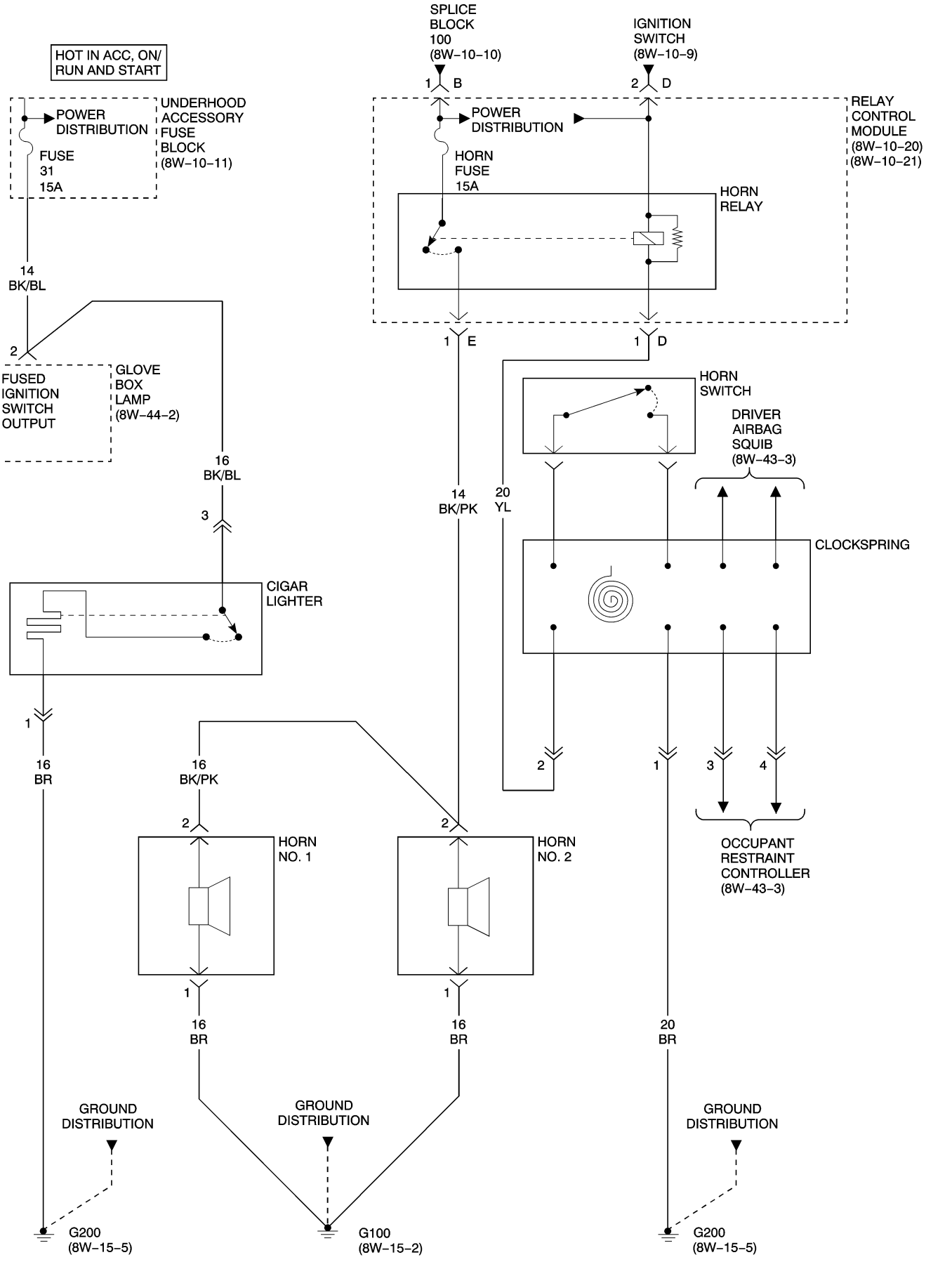
HOT IN ACC, ON/
RUN AND START
UNDERHOOD
ACCESSORY
FUSE
BLOCK
(8W–10–11)
POWER
DISTRIBUTION
FUSE
31
15A
14
BK/BL
2
FUSED
IGNITION
SWITCH
OUTPUT
GLOVE
BOX
LAMP
(8W–44–2)
16
BK/BL
3
CIGAR
LIGHTER
1
16
BR
SPLICE
BLOCK
100
(8W–10–10)
1
B
IGNITION
SWITCH
(8W–10–9)
2
D
RELAY
CONTROL
MODULE
(8W–10–20)
(8W–10–21)
POWER
DISTRIBUTION
HORN
FUSE
15A
HORN
RELAY
1
E
1
D
14
BK/PK
20
YL
HORN
SWITCH
DRIVER
AIRBAG
SQUIB
(8W–43–3)
CLOCKSPRING
2
1
3
4
OCCUPANT
RESTRAINT
CONTROLLER
(8W–43–3)
16
BK/PK
2
HORN
NO. 1
1
16
BR
2
HORN
NO. 2
1
16
BR
20
BR
GROUND
DISTRIBUTION
G200
(8W–15–5)
GROUND
DISTRIBUTION
G100
(8W–15–2)
GROUND
DISTRIBUTION
G200
(8W–15–5)

ZH044102

8W-42 AIR CONDITIONING-HEATER

Component	Page
A/C Compressor Clutch	8W-42-3
A/C Heater Control Module	8W-42-2, 3
A/C Pressure Sensor	8W-42-2
Blower Motor	8W-42-3
Body Control Module	8W-42-3
Coolant Circulation Pump	8W-42-2
Coolant Circulation Valve	8W-42-2
Data Link Connector	8W-42-3
Evaporator Temperature Sensor	8W-42-2
Fuse 15	8W-42-2
Fuse 33	8W-42-2
Fuse 35	8W-42-3
Fuse 36	8W-42-3
Fuse 37	8W-42-3
G200	8W-42-3
Heater Core Temperature Sensor	8W-42-2
Instrument Cluster	8W-42-3
Recirculated Air Switchover Valve	8W-42-3
Underhood Accessory Fuse Block	8W-42-2, 3

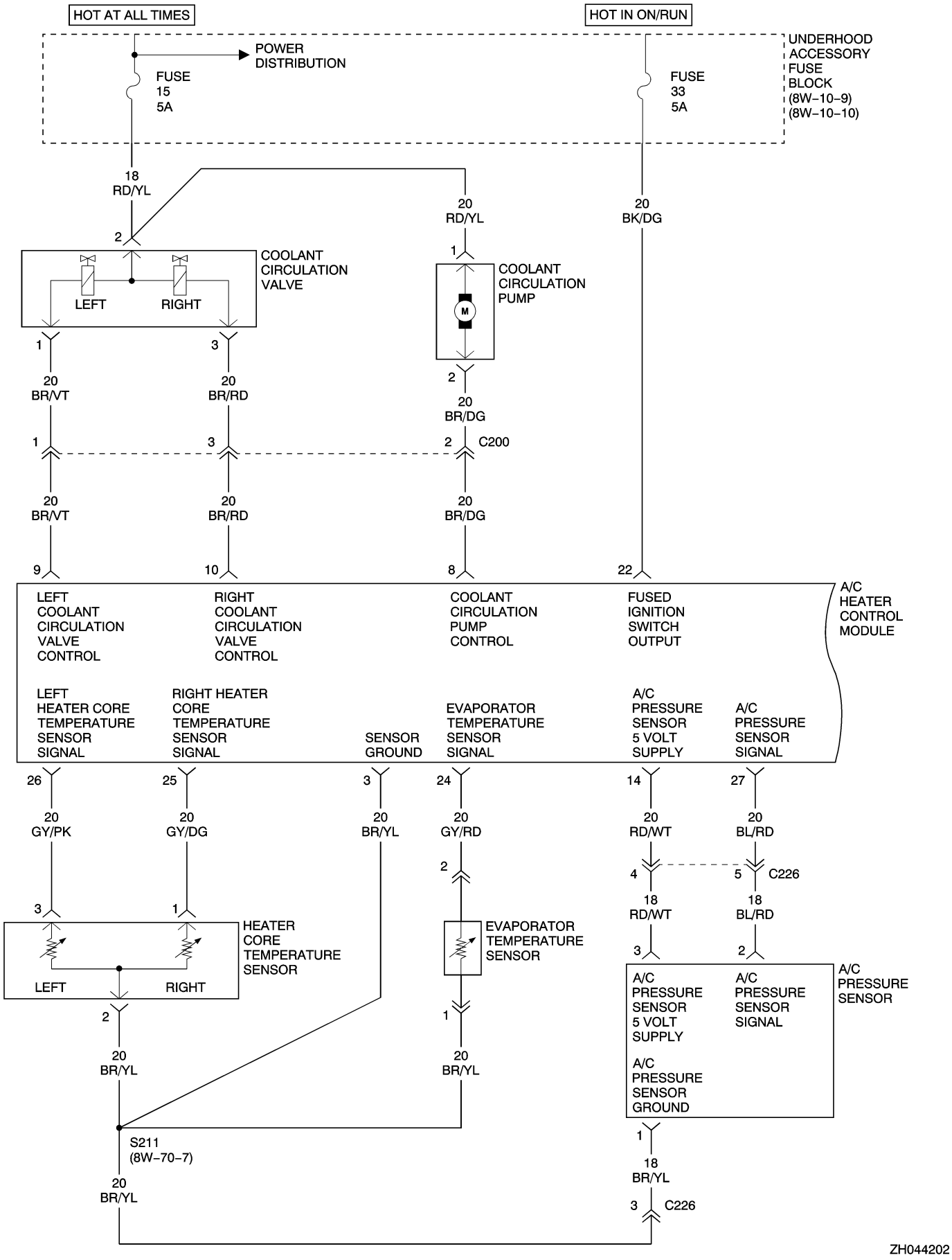
HOT AT ALL TIMES
HOT IN ON/RUN
POWER DISTRIBUTION
FUSE 15 5A
FUSE 33 5A
UNDERHOOD ACCESSORY FUSE BLOCK (8W–10–9) (8W–10–10)
18 RD/YL
20 RD/YL
20 BK/DG
COOLANT CIRCULATION VALVE
LEFT
RIGHT
COOLANT CIRCULATION PUMP
20 BR/VT
20 BR/RD
20 BR/DG
C200
LEFT COOLANT CIRCULATION VALVE CONTROL
RIGHT COOLANT CIRCULATION VALVE CONTROL
COOLANT CIRCULATION PUMP CONTROL
FUSED IGNITION SWITCH OUTPUT
A/C HEATER CONTROL MODULE
LEFT HEATER CORE TEMPERATURE SENSOR SIGNAL
RIGHT HEATER CORE TEMPERATURE SENSOR SIGNAL
SENSOR GROUND
EVAPORATOR TEMPERATURE SENSOR SIGNAL
A/C PRESSURE SENSOR 5 VOLT SUPPLY
A/C PRESSURE SENSOR SIGNAL
20 GY/PK
20 GY/DG
20 BR/YL
20 GY/RD
20 RD/WT
20 BL/RD
C226
18 RD/WT
18 BL/RD
HEATER CORE TEMPERATURE SENSOR
EVAPORATOR TEMPERATURE SENSOR
A/C PRESSURE SENSOR
A/C PRESSURE SENSOR 5 VOLT SUPPLY
A/C PRESSURE SENSOR SIGNAL
A/C PRESSURE SENSOR GROUND
S211 (8W–70–7)
18 BR/YL
C226

ZH044202

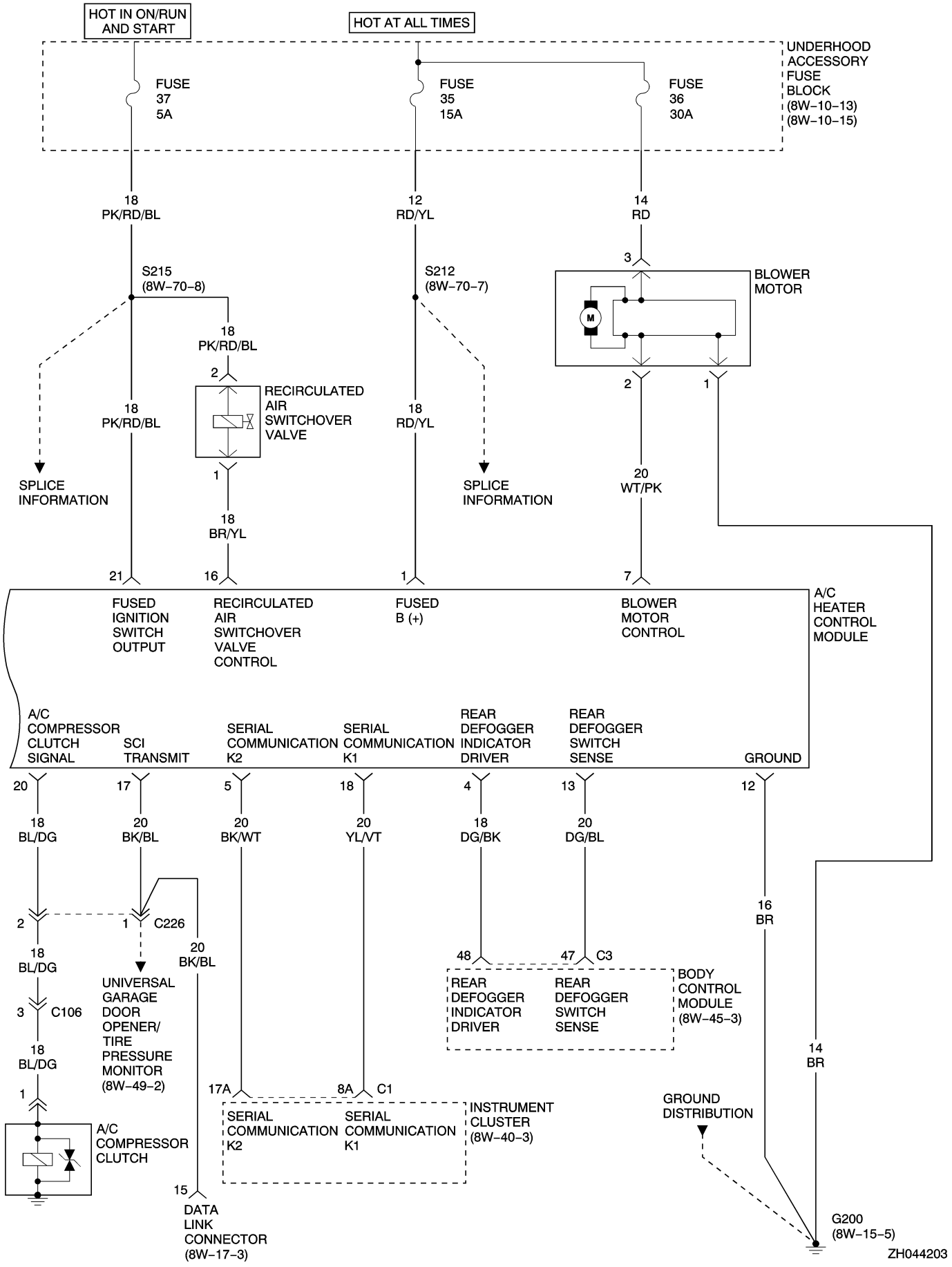
HOT IN ON/RUN AND START
HOT AT ALL TIMES
UNDERHOOD ACCESSORY FUSE BLOCK (8W–10–13) (8W–10–15)
FUSE 37 5A
FUSE 35 15A
FUSE 36 30A
18 PK/RD/BL
12 RD/YL
14 RD
S215 (8W–70–8)
S212 (8W–70–7)
3
BLOWER MOTOR
M
18 PK/RD/BL
2
RECIRCULATED AIR SWITCHOVER VALVE
1
18 PK/RD/BL
18 RD/YL
2
1
SPLICE INFORMATION
SPLICE INFORMATION
20 WT/PK
18 BR/YL
21
16
1
7
FUSED IGNITION SWITCH OUTPUT
RECIRCULATED AIR SWITCHOVER VALVE CONTROL
FUSED B (+)
BLOWER MOTOR CONTROL
A/C HEATER CONTROL MODULE
A/C COMPRESSOR CLUTCH SIGNAL
SCI TRANSMIT
SERIAL COMMUNICATION K2
SERIAL COMMUNICATION K1
REAR DEFOGGER INDICATOR DRIVER
REAR DEFOGGER SWITCH SENSE
GROUND
20
17
5
18
4
13
12
18 BL/DG
20 BK/BL
20 BK/WT
20 YL/VT
18 DG/BK
20 DG/BL
16 BR
2
1 C226
48
47 C3
18 BL/DG
20 BK/BL
BODY CONTROL MODULE (8W–45–3)
REAR DEFOGGER INDICATOR DRIVER
REAR DEFOGGER SWITCH SENSE
UNIVERSAL GARAGE DOOR OPENER/ TIRE PRESSURE MONITOR (8W–49–2)
3 C106
18 BL/DG
14 BR
1
17A
8A C1
GROUND DISTRIBUTION
SERIAL COMMUNICATION K2
SERIAL COMMUNICATION K1
INSTRUMENT CLUSTER (8W–40–3)
A/C COMPRESSOR CLUTCH
15
DATA LINK CONNECTOR (8W–17–3)
G200 (8W–15–5)
ZH044203

8W-43 AIRBAG SYSTEM

Component	Page
Airbag Off Indicator Lamp	8W-43-2
Clockspring	8W-43-3
Data Link Connector	8W-43-2
Driver Airbag Squib	8W-43-3
Driver Seat Belt Tensioner Squib	8W-43-3
Driver Seat Belt Tensioner Switch	8W-43-2
Fuse 2	8W-43-2
Fuse 3	8W-43-2
G202	8W-43-2, 3, 4
Instrument Cluster	8W-43-2
Left Side Airbag Squib	8W-43-3
Left Side Impact Sensor	8W-43-3
Occupant Restraint Controller	8W-43-2, 3, 4
Passenger Airbag On/Off Switch	8W-43-2
Passenger Airbag Squib	8W-43-4
Passenger Seat Belt Tensioner Squib	8W-43-4
Passenger Seat Belt Tensioner Switch	8W-43-2
Passenger Seat Occupant Simulator	8W-43-2
Powertrain Control Module	8W-43-2
Right Side Airbag Squib	8W-43-4
Right Side Impact Sensor	8W-43-4
Underhood Accessory Fuse Block	8W-43-2

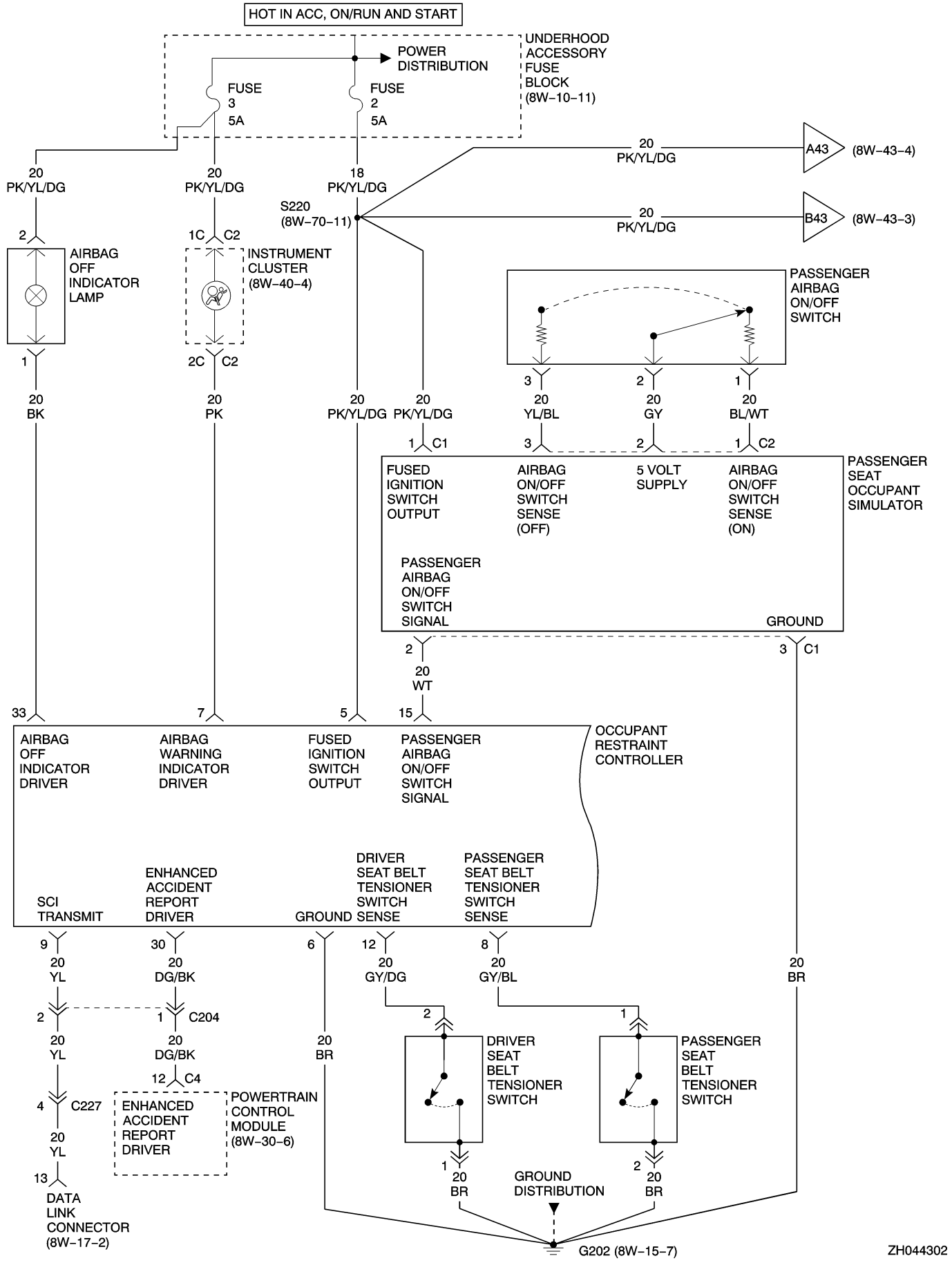
HOT IN ACC, ON/RUN AND START
UNDERHOOD ACCESSORY FUSE BLOCK (8W-10-11)
POWER DISTRIBUTION
FUSE 3 5A
FUSE 2 5A
20 PK/YL/DG
20 PK/YL/DG
18 PK/YL/DG
20 PK/YL/DG
A43 (8W-43-4)
S220 (8W-70-11)
20 PK/YL/DG
B43 (8W-43-3)
2
AIRBAG OFF INDICATOR LAMP
1C C2
INSTRUMENT CLUSTER (8W-40-4)
PASSENGER AIRBAG ON/OFF SWITCH
1
2C C2
3 2 1
20 BK
20 PK
20 PK/YL/DG
20 PK/YL/DG
20 YL/BL
20 GY
20 BL/WT
1 C1
3 2 1 C2
FUSED IGNITION SWITCH OUTPUT
AIRBAG ON/OFF SWITCH SENSE (OFF)
5 VOLT SUPPLY
AIRBAG ON/OFF SWITCH SENSE (ON)
PASSENGER SEAT OCCUPANT SIMULATOR
PASSENGER AIRBAG ON/OFF SWITCH SIGNAL
GROUND
2
3 C1
20 WT
33
7
5
15
AIRBAG OFF INDICATOR DRIVER
AIRBAG WARNING INDICATOR DRIVER
FUSED IGNITION SWITCH OUTPUT
PASSENGER AIRBAG ON/OFF SWITCH SIGNAL
OCCUPANT RESTRAINT CONTROLLER
SCI TRANSMIT
ENHANCED ACCIDENT REPORT DRIVER
GROUND
DRIVER SEAT BELT TENSIONER SWITCH SENSE
PASSENGER SEAT BELT TENSIONER SWITCH SENSE
9
30
6
12
8
20 YL
20 DG/BK
20 GY/DG
20 GY/BL
20 BR
2
1 C204
2
1
20 YL
20 DG/BK
20 BR
12 C4
4 C227
ENHANCED ACCIDENT REPORT DRIVER
POWERTRAIN CONTROL MODULE (8W-30-6)
DRIVER SEAT BELT TENSIONER SWITCH
PASSENGER SEAT BELT TENSIONER SWITCH
20 YL
13
1
2
20 BR
GROUND DISTRIBUTION
20 BR
DATA LINK CONNECTOR (8W-17-2)
G202 (8W-15-7)
ZH044302

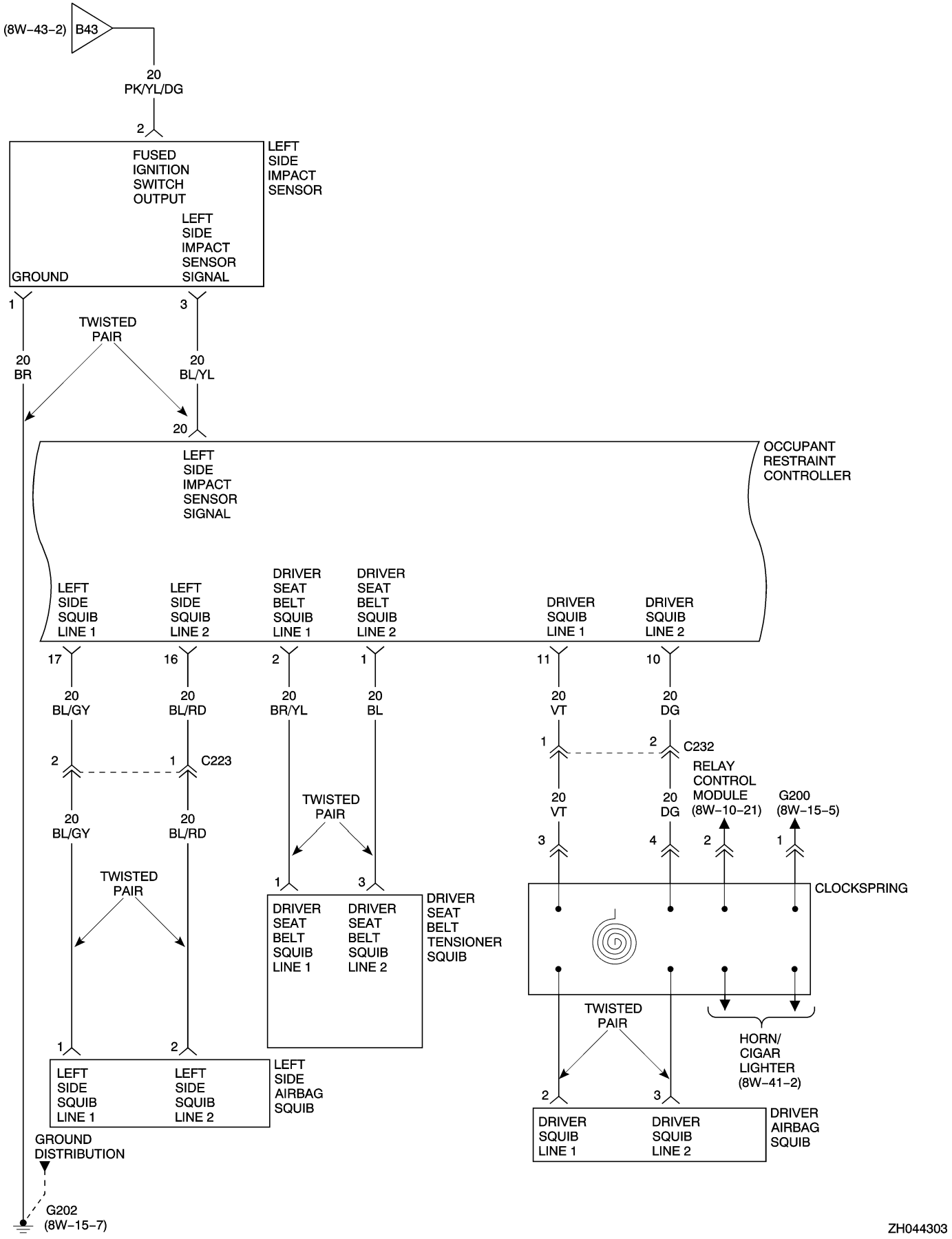
(8W–43–2) B43
20 PK/YL/DG
2
FUSED IGNITION SWITCH OUTPUT
LEFT SIDE IMPACT SENSOR
LEFT SIDE IMPACT SENSOR SIGNAL
GROUND
1
3
TWISTED PAIR
20 BR
20 BL/YL
20
LEFT SIDE IMPACT SENSOR SIGNAL
OCCUPANT RESTRAINT CONTROLLER
LEFT SIDE SQUIB LINE 1
LEFT SIDE SQUIB LINE 2
DRIVER SEAT BELT SQUIB LINE 1
DRIVER SEAT BELT SQUIB LINE 2
DRIVER SQUIB LINE 1
DRIVER SQUIB LINE 2
17
16
2
1
11
10
20 BL/GY
20 BL/RD
20 BR/YL
20 BL
20 VT
20 DG
2
1 C223
1
2 C232
RELAY CONTROL MODULE (8W–10–21)
G200 (8W–15–5)
20 BL/GY
20 BL/RD
TWISTED PAIR
20 VT
20 DG
3
4
2
1
CLOCKSPRING
1
3
DRIVER SEAT BELT SQUIB LINE 1
DRIVER SEAT BELT SQUIB LINE 2
DRIVER SEAT BELT TENSIONER SQUIB
TWISTED PAIR
HORN/ CIGAR LIGHTER (8W–41–2)
1
2
LEFT SIDE SQUIB LINE 1
LEFT SIDE SQUIB LINE 2
LEFT SIDE AIRBAG SQUIB
2
3
DRIVER SQUIB LINE 1
DRIVER SQUIB LINE 2
DRIVER AIRBAG SQUIB
GROUND DISTRIBUTION
G202 (8W–15–7)

ZH044303

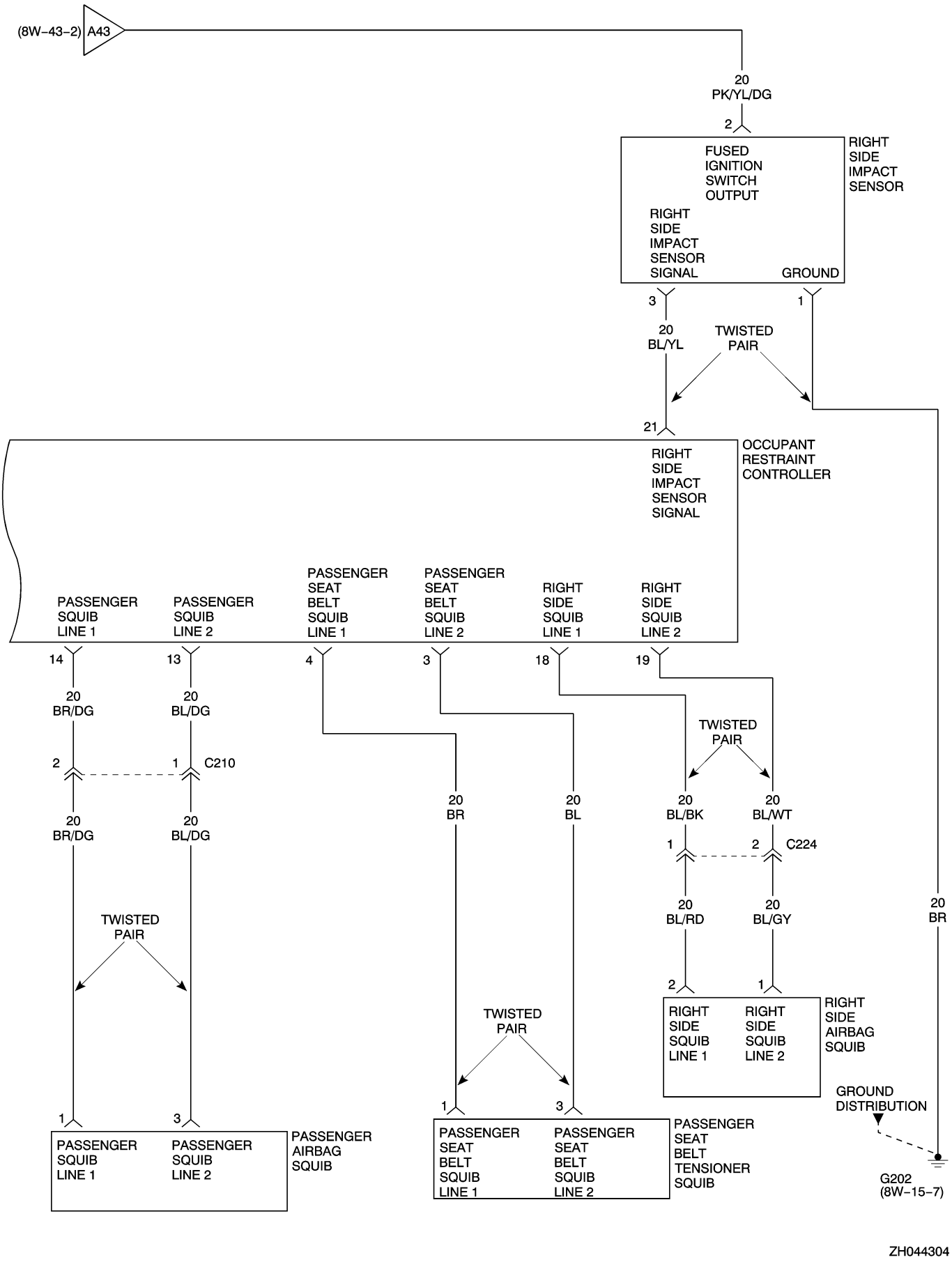
(8W–43–2) A43
20
PK/YL/DG
2
FUSED
IGNITION
SWITCH
OUTPUT
RIGHT
SIDE
IMPACT
SENSOR
SIGNAL
GROUND
RIGHT
SIDE
IMPACT
SENSOR
3
1
20
BL/YL
TWISTED
PAIR
21
OCCUPANT
RESTRAINT
CONTROLLER
PASSENGER
SQUIB
LINE 1
PASSENGER
SQUIB
LINE 2
PASSENGER
SEAT
BELT
SQUIB
LINE 1
PASSENGER
SEAT
BELT
SQUIB
LINE 2
RIGHT
SIDE
SQUIB
LINE 1
RIGHT
SIDE
SQUIB
LINE 2
14
13
4
3
18
19
20
BR/DG
20
BL/DG
TWISTED
PAIR
2
1
C210
20
BR
20
BL
20
BL/BK
20
BL/WT
1
2
C224
20
BR/DG
20
BL/DG
20
BL/RD
20
BL/GY
20
BR
TWISTED
PAIR
2
1
RIGHT
SIDE
SQUIB
LINE 1
RIGHT
SIDE
SQUIB
LINE 2
RIGHT
SIDE
AIRBAG
SQUIB
TWISTED
PAIR
GROUND
DISTRIBUTION
1
3
PASSENGER
SQUIB
LINE 1
PASSENGER
SQUIB
LINE 2
PASSENGER
AIRBAG
SQUIB
PASSENGER
SEAT
BELT
SQUIB
LINE 1
PASSENGER
SEAT
BELT
SQUIB
LINE 2
PASSENGER
SEAT
BELT
TENSIONER
SQUIB
G202
(8W–15–7)

ZH044304

8W-44 INTERIOR LIGHTING

Component	Page
Ash Receiver Lamp	8W-44-2
Body Control Module	8W-44-2, 3
Cargo Lamp	8W-44-2
Central Locking Pump/Security System Module	8W-44-2
Cigar Lighter	8W-44-2
Console Switch Group	8W-44-3
Dome Lamp	8W-44-2
Fuse 31	8W-44-2
Fuse 35	8W-44-3
Fuse 9	8W-44-2
G200	8W-44-2, 3
G201	8W-44-2
G204	8W-44-2
G301	8W-44-2
Glove Box Lamp	8W-44-2
Glove Box Switch	8W-44-2
Illumination Control Module	8W-44-2, 3
Instrument Cluster	8W-44-2, 3
Left Door Ajar Switch	8W-44-2
Left Front Lamp Assembly	8W-44-3
Left Rear Lamp Assembly	8W-44-3
Liftgate Lock Switch	8W-44-2
Multi-Function Switch	8W-44-3
Remote Keyless Entry Relay	8W-44-3
Right Door Ajar Switch	8W-44-2
Right Front Lamp Assembly	8W-44-3
Right Rear Lamp Assembly	8W-44-3
Splice Block 200	8W-44-3
Underhood Accessory Fuse Block	8W-44-2, 3

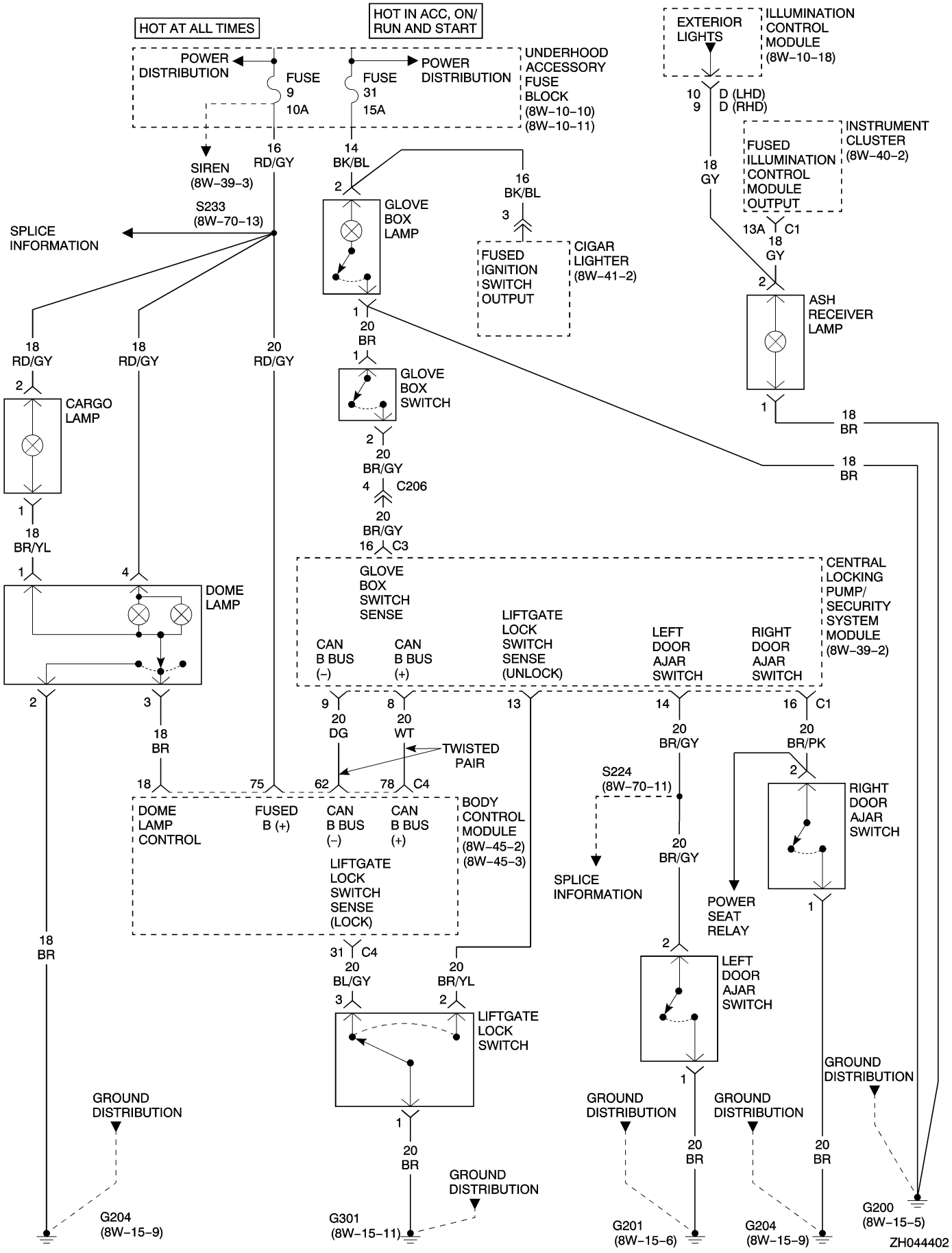
HOT AT ALL TIMES
HOT IN ACC, ON/ RUN AND START
POWER DISTRIBUTION
FUSE 9 10A
FUSE 31 15A
POWER DISTRIBUTION
UNDERHOOD ACCESSORY FUSE BLOCK (8W-10-10) (8W-10-11)
EXTERIOR LIGHTS
ILLUMINATION CONTROL MODULE (8W-10-18)
10 D (LHD)
9 D (RHD)
INSTRUMENT CLUSTER (8W-40-2)
FUSED ILLUMINATION CONTROL MODULE OUTPUT
13A C1
18 GY
SIREN (8W-39-3)
16 RD/GY
14 BK/BL
16 BK/BL
S233 (8W-70-13)
SPLICE INFORMATION
GLOVE BOX LAMP
FUSED IGNITION SWITCH OUTPUT
CIGAR LIGHTER (8W-41-2)
ASH RECEIVER LAMP
18 RD/GY
18 RD/GY
20 RD/GY
20 BR
GLOVE BOX SWITCH
CARGO LAMP
18 BR
20 BR/GY
C206
18 BR/YL
20 BR/GY
C3
DOME LAMP
GLOVE BOX SWITCH SENSE
CENTRAL LOCKING PUMP/ SECURITY SYSTEM MODULE (8W-39-2)
CAN B BUS (-)
CAN B BUS (+)
LIFTGATE LOCK SWITCH SENSE (UNLOCK)
LEFT DOOR AJAR SWITCH
RIGHT DOOR AJAR SWITCH
20 DG
20 WT
TWISTED PAIR
20 BR/GY
20 BR/PK
S224 (8W-70-11)
RIGHT DOOR AJAR SWITCH
DOME LAMP CONTROL
FUSED B (+)
CAN B BUS (-)
CAN B BUS (+)
LIFTGATE LOCK SWITCH SENSE (LOCK)
BODY CONTROL MODULE (8W-45-2) (8W-45-3)
SPLICE INFORMATION
POWER SEAT RELAY
20 BR/GY
LEFT DOOR AJAR SWITCH
18 BR
20 BL/GY
20 BR/YL
LIFTGATE LOCK SWITCH
GROUND DISTRIBUTION
GROUND DISTRIBUTION
GROUND DISTRIBUTION
GROUND DISTRIBUTION
GROUND DISTRIBUTION
20 BR
20 BR
20 BR
G204 (8W-15-9)
G301 (8W-15-11)
G201 (8W-15-6)
G204 (8W-15-9)
G200 (8W-15-5)
ZH044402

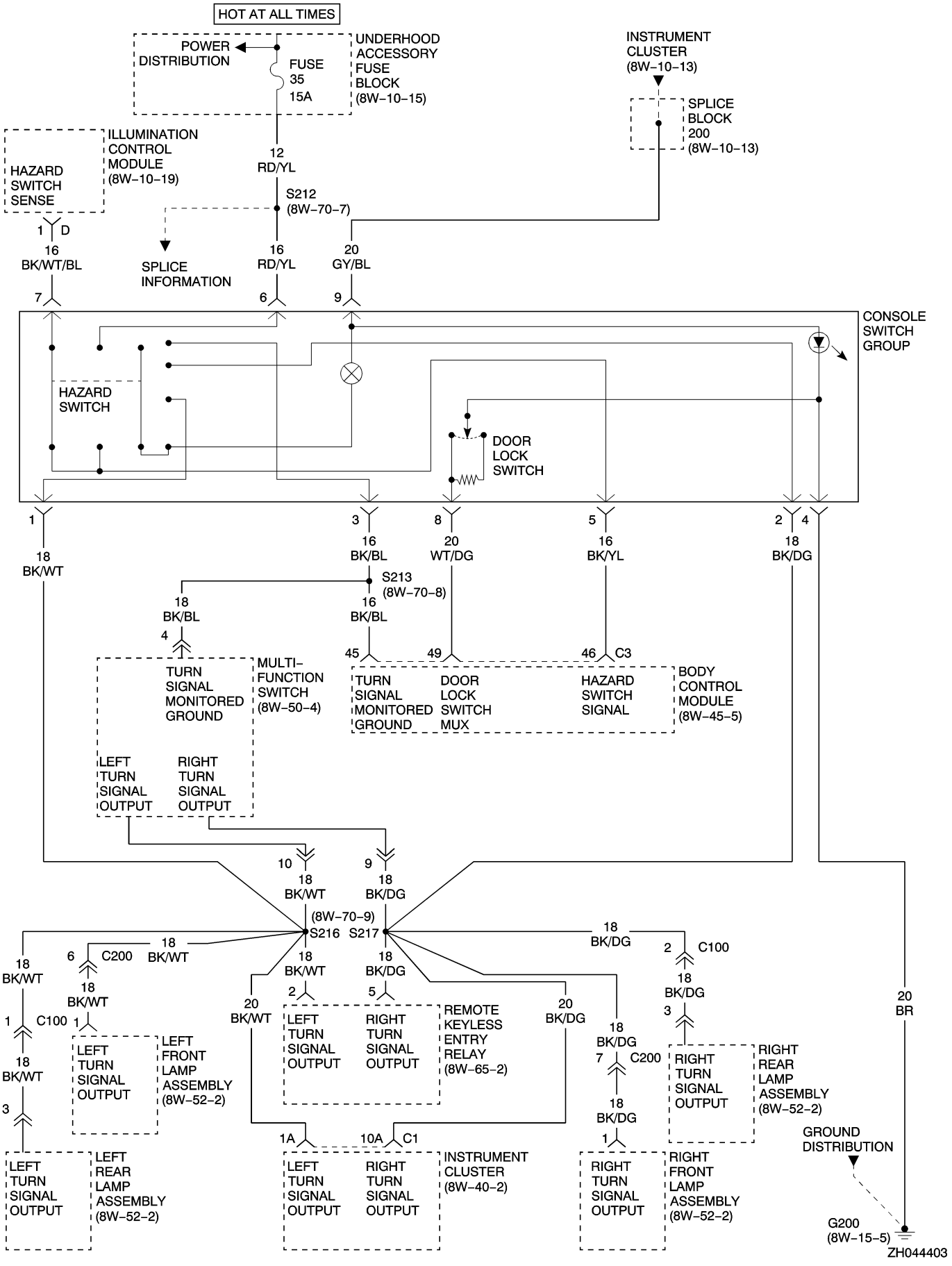
HOT AT ALL TIMES
POWER DISTRIBUTION
FUSE 35 15A
UNDERHOOD ACCESSORY FUSE BLOCK (8W-10-15)
INSTRUMENT CLUSTER (8W-10-13)
SPLICE BLOCK 200 (8W-10-13)
ILLUMINATION CONTROL MODULE (8W-10-19)
HAZARD SWITCH SENSE
12 RD/YL
S212 (8W-70-7)
1 D
16 BK/WT/BL
SPLICE INFORMATION
16 RD/YL
20 GY/BL
CONSOLE SWITCH GROUP
HAZARD SWITCH
DOOR LOCK SWITCH
18 BK/WT
16 BK/BL
20 WT/DG
16 BK/YL
18 BK/DG
S213 (8W-70-8)
18 BK/BL
MULTI-FUNCTION SWITCH (8W-50-4)
TURN SIGNAL MONITORED GROUND
LEFT TURN SIGNAL OUTPUT
RIGHT TURN SIGNAL OUTPUT
BODY CONTROL MODULE (8W-45-5)
TURN SIGNAL MONITORED GROUND
DOOR LOCK SWITCH MUX
HAZARD SWITCH SIGNAL
(8W-70-9) S216 S217
C200
C100
REMOTE KEYLESS ENTRY RELAY (8W-65-2)
LEFT FRONT LAMP ASSEMBLY (8W-52-2)
LEFT REAR LAMP ASSEMBLY (8W-52-2)
RIGHT REAR LAMP ASSEMBLY (8W-52-2)
RIGHT FRONT LAMP ASSEMBLY (8W-52-2)
INSTRUMENT CLUSTER (8W-40-2)
GROUND DISTRIBUTION
G200 (8W-15-5)
20 BR
ZH044403

8W-45 BODY CONTROL MODULE

Component	Page
A/C Heater Control Module	8W-45-3
Body Control Module	8W-45-2, 3, 4, 5, 6
Central Locking Pump/Security System Module	8W-45-3
Console Switch Group	8W-45-5
Controller Antilock Brake	8W-45-2
Control Module Cooling Fan	8W-45-6
Data Link Connector	8W-45-3
Dome Lamp	8W-45-3
Fuse 4	8W-45-2
Fuse 7	8W-45-2
Fuse 9	8W-45-2
Fuse 19	8W-45-2
Fuse 20	8W-45-2
G204	8W-45-2
G206	8W-45-2
Instrument Cluster	8W-45-3
Left Front Power Window Motor	8W-45-5
Left Front Power Window Switch	8W-45-4
Liftgate Lock Switch	8W-45-3
Multi-Function Switch	8W-45-5
Power Amplifier	8W-45-2
Rear Spoiler Limit Switch	8W-45-4
Rear Spoiler Motor	8W-45-4
Rear Spoiler Switch	8W-45-4
Right Front Power Window Motor	8W-45-5
Right Front Power Window Switch	8W-45-4
Sentry Key Remote Entry Module	8W-45-3
Underhood Accessory Fuse Block	8W-45-2
Washer Pump Motor	8W-45-5
Wiper Motor	8W-45-6

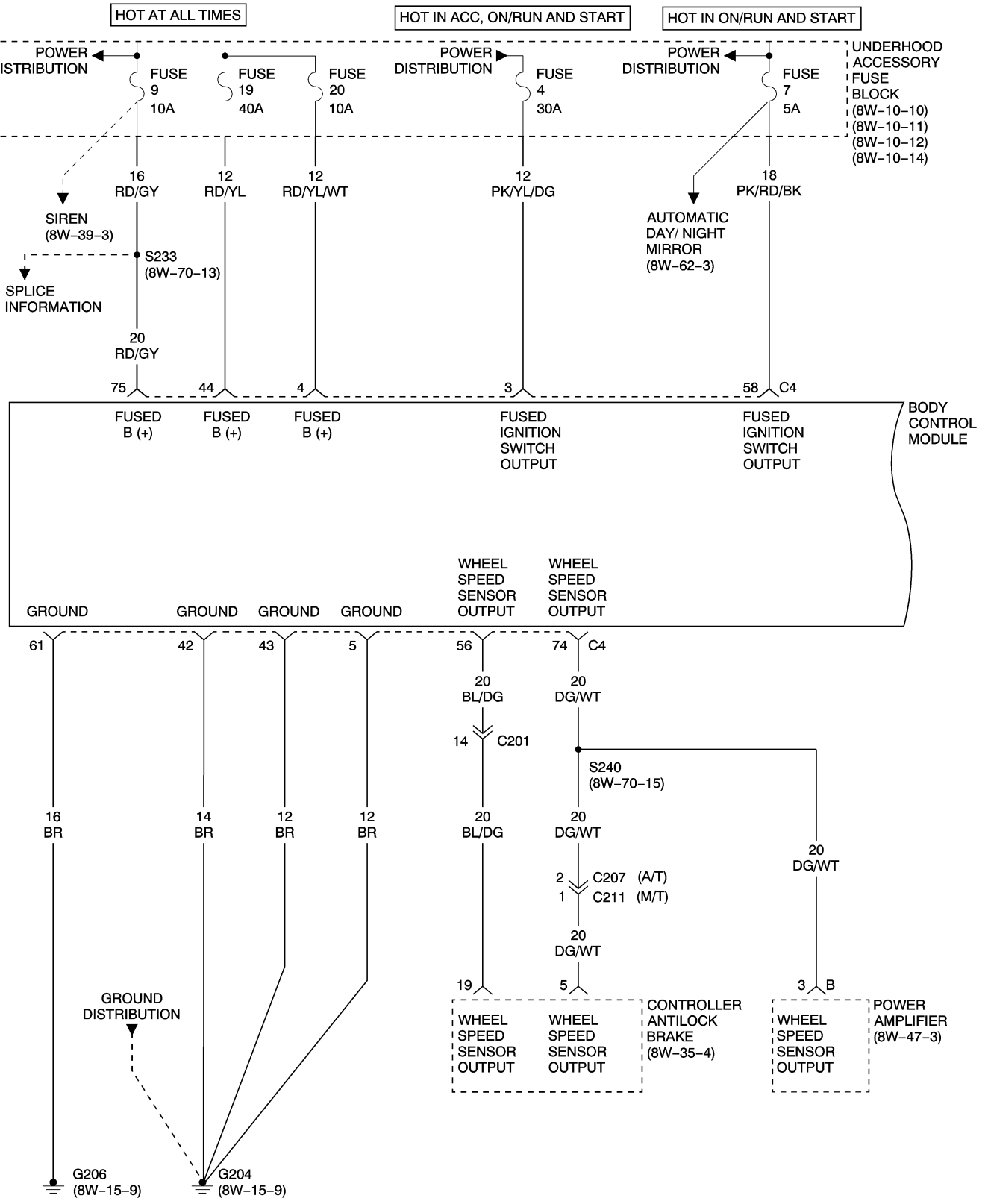
HOT AT ALL TIMES
HOT IN ACC, ON/RUN AND START
HOT IN ON/RUN AND START
POWER DISTRIBUTION
FUSE 9 10A
FUSE 19 40A
FUSE 20 10A
POWER DISTRIBUTION
FUSE 4 30A
POWER DISTRIBUTION
FUSE 7 5A
UNDERHOOD ACCESSORY FUSE BLOCK (8W-10-10) (8W-10-11) (8W-10-12) (8W-10-14)
16 RD/GY
12 RD/YL
12 RD/YL/WT
12 PK/YL/DG
18 PK/RD/BK
SIREN (8W-39-3)
S233 (8W-70-13)
SPLICE INFORMATION
AUTOMATIC DAY/ NIGHT MIRROR (8W-62-3)
20 RD/GY
75
44
4
3
58 C4
FUSED B (+)
FUSED B (+)
FUSED B (+)
FUSED IGNITION SWITCH OUTPUT
FUSED IGNITION SWITCH OUTPUT
BODY CONTROL MODULE
WHEEL SPEED SENSOR OUTPUT
WHEEL SPEED SENSOR OUTPUT
GROUND
GROUND
GROUND
GROUND
61
42
43
5
56
74 C4
20 BL/DG
20 DG/WT
14 C201
S240 (8W-70-15)
16 BR
14 BR
12 BR
12 BR
20 BL/DG
20 DG/WT
20 DG/WT
2 C207 (A/T)
1 C211 (M/T)
20 DG/WT
19
5
3 B
GROUND DISTRIBUTION
WHEEL SPEED SENSOR OUTPUT
WHEEL SPEED SENSOR OUTPUT
CONTROLLER ANTILOCK BRAKE (8W-35-4)
WHEEL SPEED SENSOR OUTPUT
POWER AMPLIFIER (8W-47-3)
G206 (8W-15-9)
G204 (8W-15-9)

ZH044502

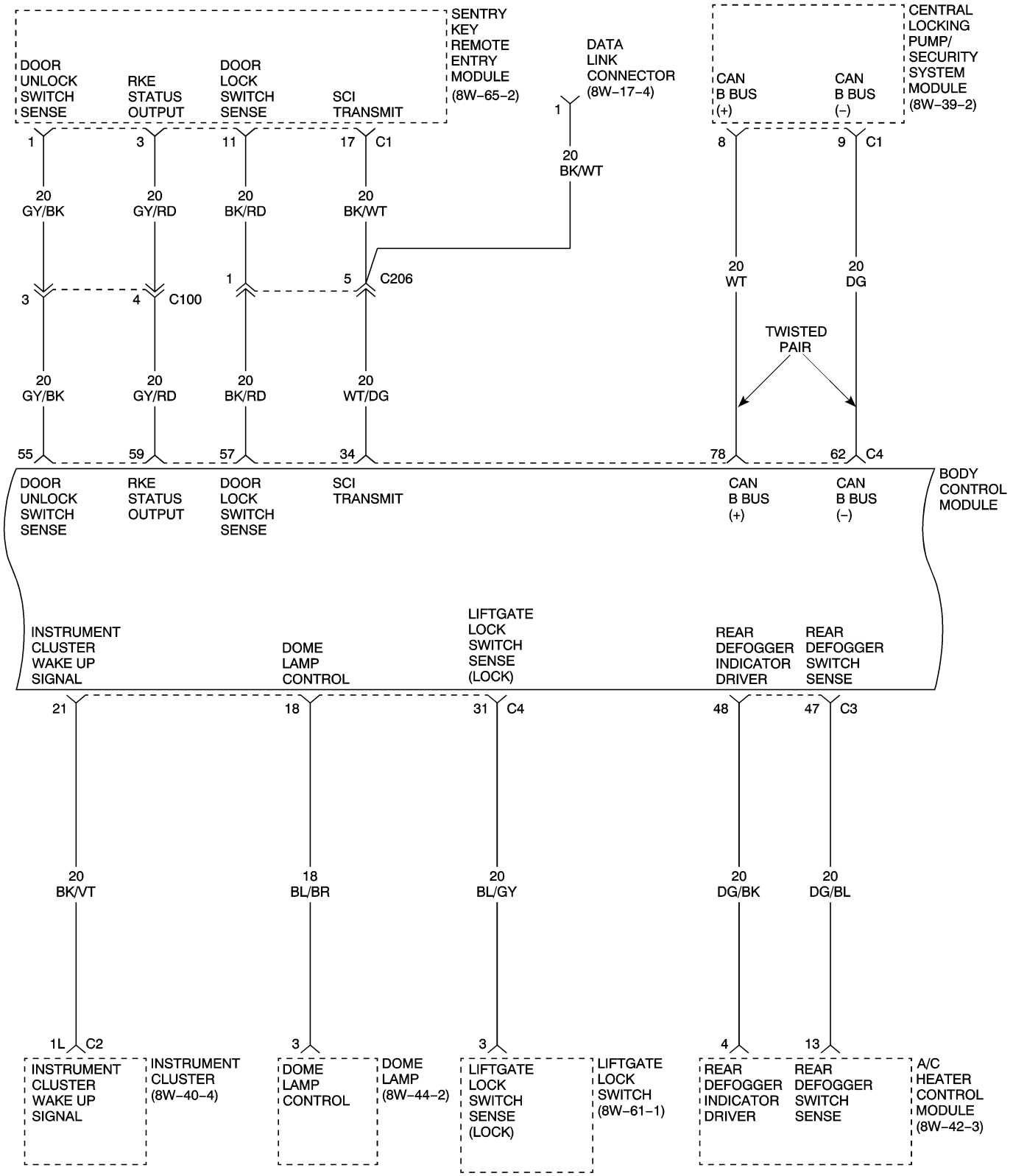
SENTRY KEY REMOTE ENTRY MODULE (8W-65-2)
DOOR UNLOCK SWITCH SENSE
RKE STATUS OUTPUT
DOOR LOCK SWITCH SENSE
SCI TRANSMIT
DATA LINK CONNECTOR (8W-17-4)
CENTRAL LOCKING PUMP/ SECURITY SYSTEM MODULE (8W-39-2)
CAN B BUS (+)
CAN B BUS (-)
1
3
11
17 C1
20 GY/BK
20 GY/RD
20 BK/RD
20 BK/WT
20 BK/WT
8
9 C1
20 WT
20 DG
TWISTED PAIR
3
4 C100
1
5 C206
20 GY/BK
20 GY/RD
20 BK/RD
20 WT/DG
55
59
57
34
78
62 C4
BODY CONTROL MODULE
INSTRUMENT CLUSTER WAKE UP SIGNAL
DOME LAMP CONTROL
LIFTGATE LOCK SWITCH SENSE (LOCK)
REAR DEFOGGER INDICATOR DRIVER
REAR DEFOGGER SWITCH SENSE
21
18
31 C4
48
47 C3
20 BK/VT
18 BL/BR
20 BL/GY
20 DG/BK
20 DG/BL
1L C2
3
3
4
13
INSTRUMENT CLUSTER WAKE UP SIGNAL
INSTRUMENT CLUSTER (8W-40-4)
DOME LAMP CONTROL
DOME LAMP (8W-44-2)
LIFTGATE LOCK SWITCH SENSE (LOCK)
LIFTGATE LOCK SWITCH (8W-61-1)
REAR DEFOGGER INDICATOR DRIVER
REAR DEFOGGER SWITCH SENSE
A/C HEATER CONTROL MODULE (8W-42-3)

ZH044503

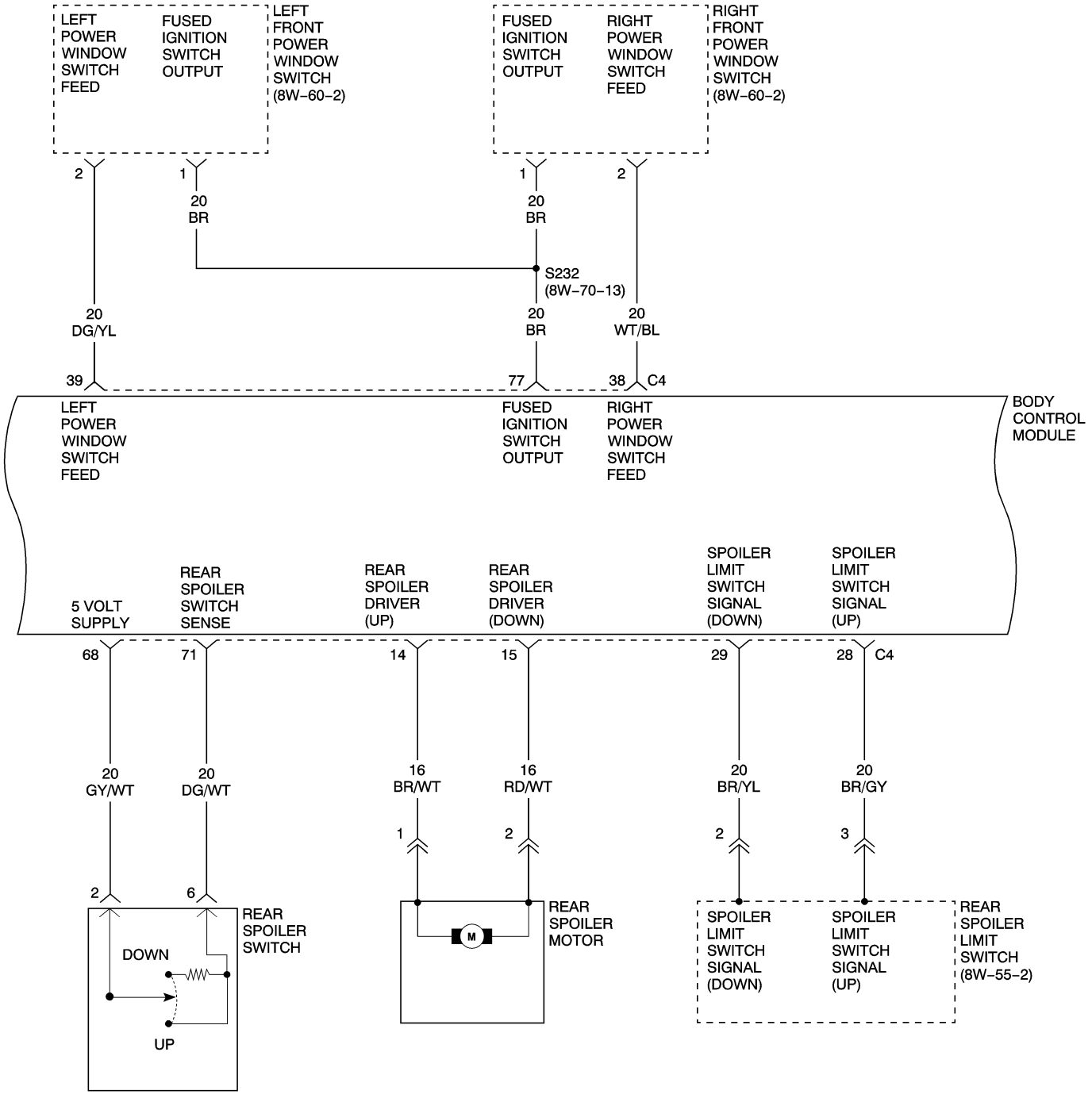
LEFT POWER WINDOW SWITCH FEED
FUSED IGNITION SWITCH OUTPUT
LEFT FRONT POWER WINDOW SWITCH (8W-60-2)
FUSED IGNITION SWITCH OUTPUT
RIGHT POWER WINDOW SWITCH FEED
RIGHT FRONT POWER WINDOW SWITCH (8W-60-2)
2
1
20 BR
1
20 BR
2
S232 (8W-70-13)
20 DG/YL
20 BR
20 WT/BL
39
77
38
C4
LEFT POWER WINDOW SWITCH FEED
FUSED IGNITION SWITCH OUTPUT
RIGHT POWER WINDOW SWITCH FEED
BODY CONTROL MODULE
5 VOLT SUPPLY
REAR SPOILER SWITCH SENSE
REAR SPOILER DRIVER (UP)
REAR SPOILER DRIVER (DOWN)
SPOILER LIMIT SWITCH SIGNAL (DOWN)
SPOILER LIMIT SWITCH SIGNAL (UP)
68
71
14
15
29
28
C4
20 GY/WT
20 DG/WT
16 BR/WT
16 RD/WT
20 BR/YL
20 BR/GY
1
2
2
3
2
6
REAR SPOILER SWITCH
DOWN
UP
M
REAR SPOILER MOTOR
SPOILER LIMIT SWITCH SIGNAL (DOWN)
SPOILER LIMIT SWITCH SIGNAL (UP)
REAR SPOILER LIMIT SWITCH (8W-55-2)

ZH044504

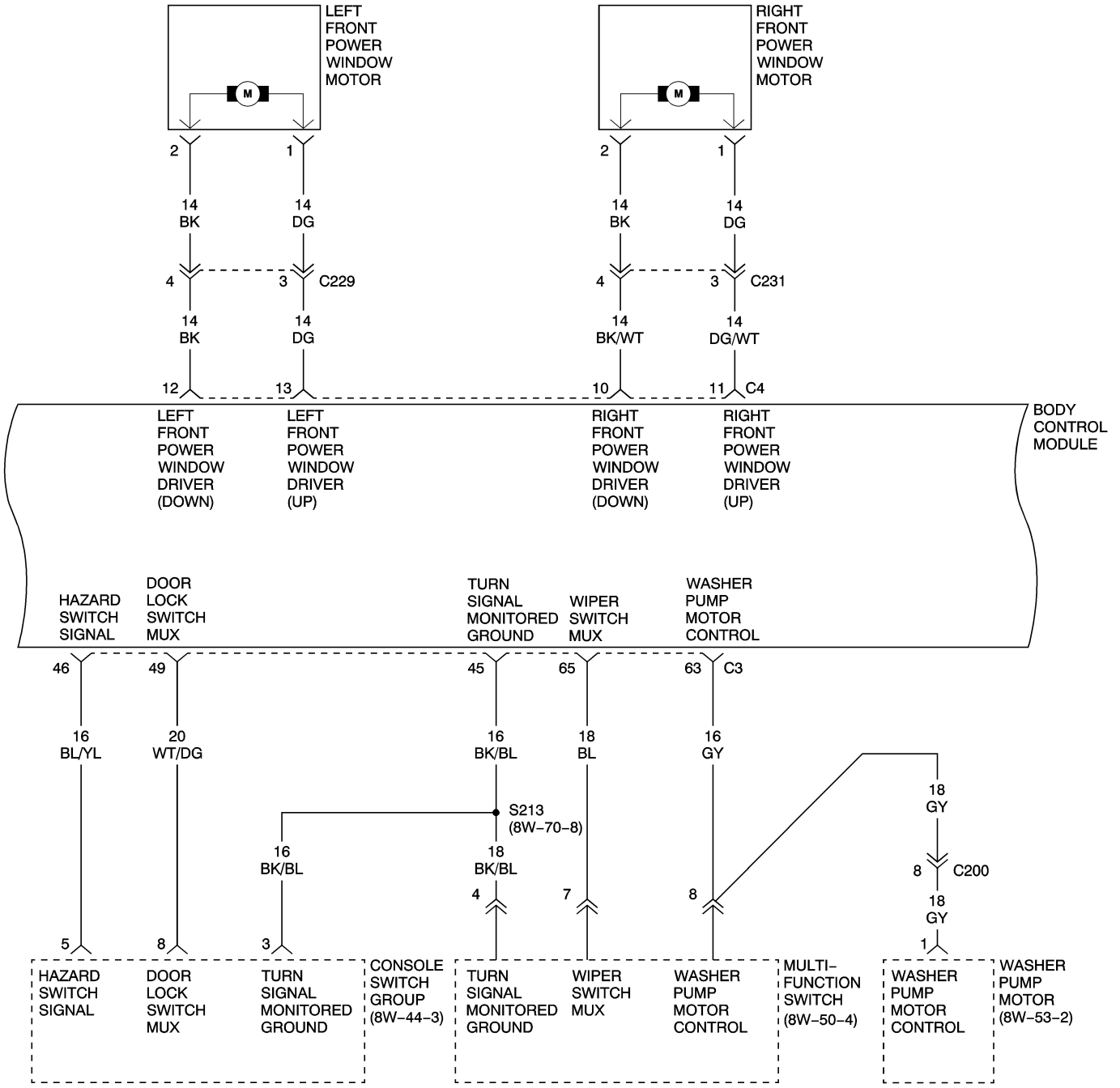
LEFT FRONT POWER WINDOW MOTOR
RIGHT FRONT POWER WINDOW MOTOR
M
2
1
14 BK
14 DG
4
3
C229
C231
14 BK/WT
14 DG/WT
12
13
10
11
C4
LEFT FRONT POWER WINDOW DRIVER (DOWN)
LEFT FRONT POWER WINDOW DRIVER (UP)
RIGHT FRONT POWER WINDOW DRIVER (DOWN)
RIGHT FRONT POWER WINDOW DRIVER (UP)
BODY CONTROL MODULE
HAZARD SWITCH SIGNAL
DOOR LOCK SWITCH MUX
TURN SIGNAL MONITORED GROUND
WIPER SWITCH MUX
WASHER PUMP MOTOR CONTROL
46
49
45
65
63
C3
16 BL/YL
20 WT/DG
16 BK/BL
18 BL
16 GY
S213
(8W–70–8)
18 GY
16 BK/BL
18 BK/BL
8
C200
5
8
3
4
7
1
HAZARD SWITCH SIGNAL
DOOR LOCK SWITCH MUX
TURN SIGNAL MONITORED GROUND
CONSOLE SWITCH GROUP (8W–44–3)
TURN SIGNAL MONITORED GROUND
WIPER SWITCH MUX
WASHER PUMP MOTOR CONTROL
MULTI–FUNCTION SWITCH (8W–50–4)
WASHER PUMP MOTOR CONTROL
WASHER PUMP MOTOR (8W–53–2)

ZH044505

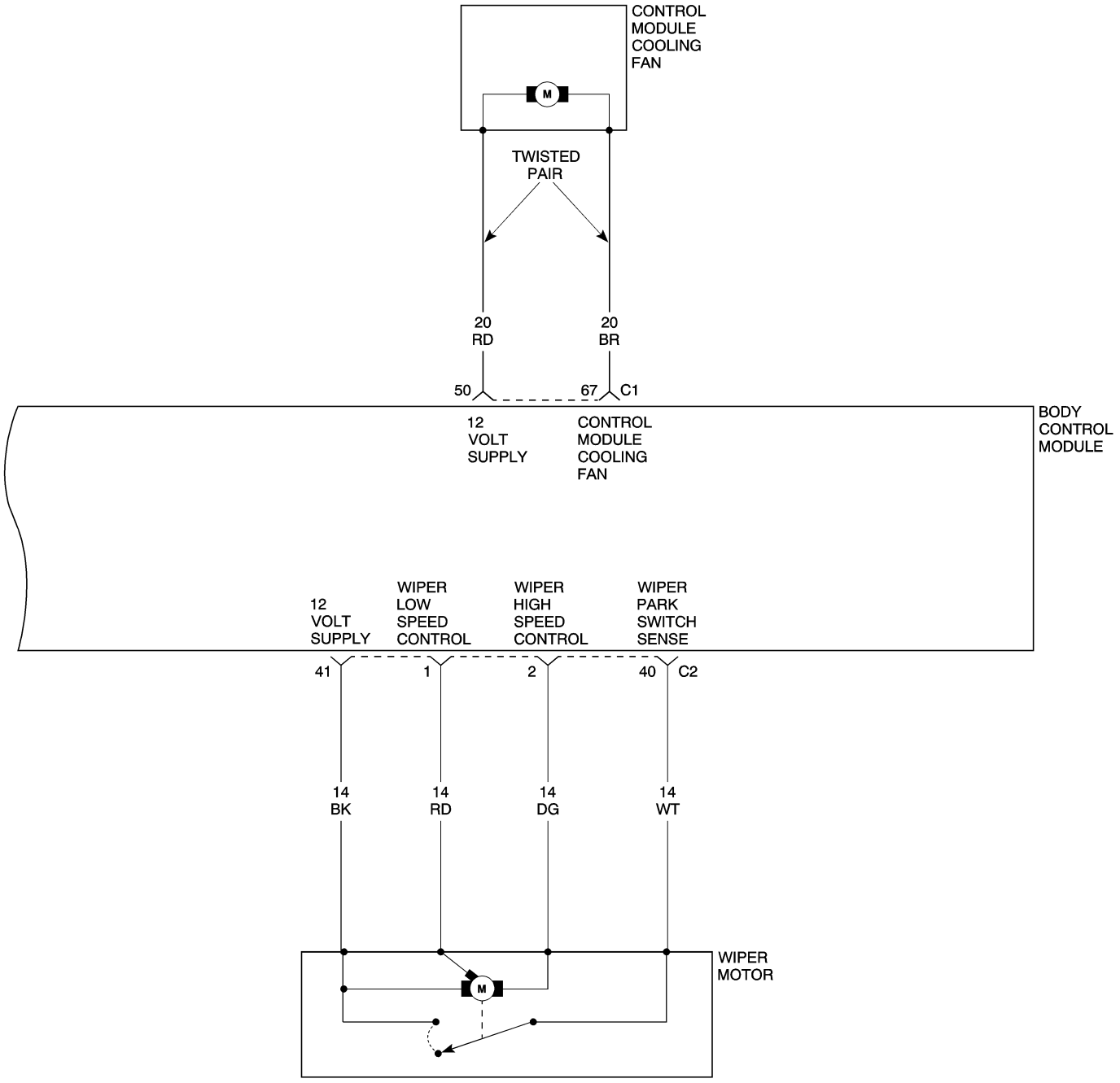
CONTROL
MODULE
COOLING
FAN
M
TWISTED
PAIR
20
RD
20
BR
50
67
C1
12
VOLT
SUPPLY
CONTROL
MODULE
COOLING
FAN
BODY
CONTROL
MODULE
12
VOLT
SUPPLY
WIPER
LOW
SPEED
CONTROL
WIPER
HIGH
SPEED
CONTROL
WIPER
PARK
SWITCH
SENSE
41
1
2
40
C2
14
BK
14
RD
14
DG
14
WT
M
WIPER
MOTOR

ZH044506

8W-46 WARNING CHIME

Component	Page	Component	Page
Coolant Level Sensor	8W-46-2	Illumination Control Module	8W-46-2
Driver Seat Belt Switch	8W-46-2	Instrument Cluster	8W-46-2
Fuel Level Sensor	8W-46-2	Key In Ignition Switch	8W-46-2
Fuse 3	8W-46-2	Left Door Ajar Switch	8W-46-2
Fuse 35	8W-46-2	Underhood Accessory Fuse Block	8W-46-2
G201	8W-46-2	Washer Fluid Level Switch	8W-46-2

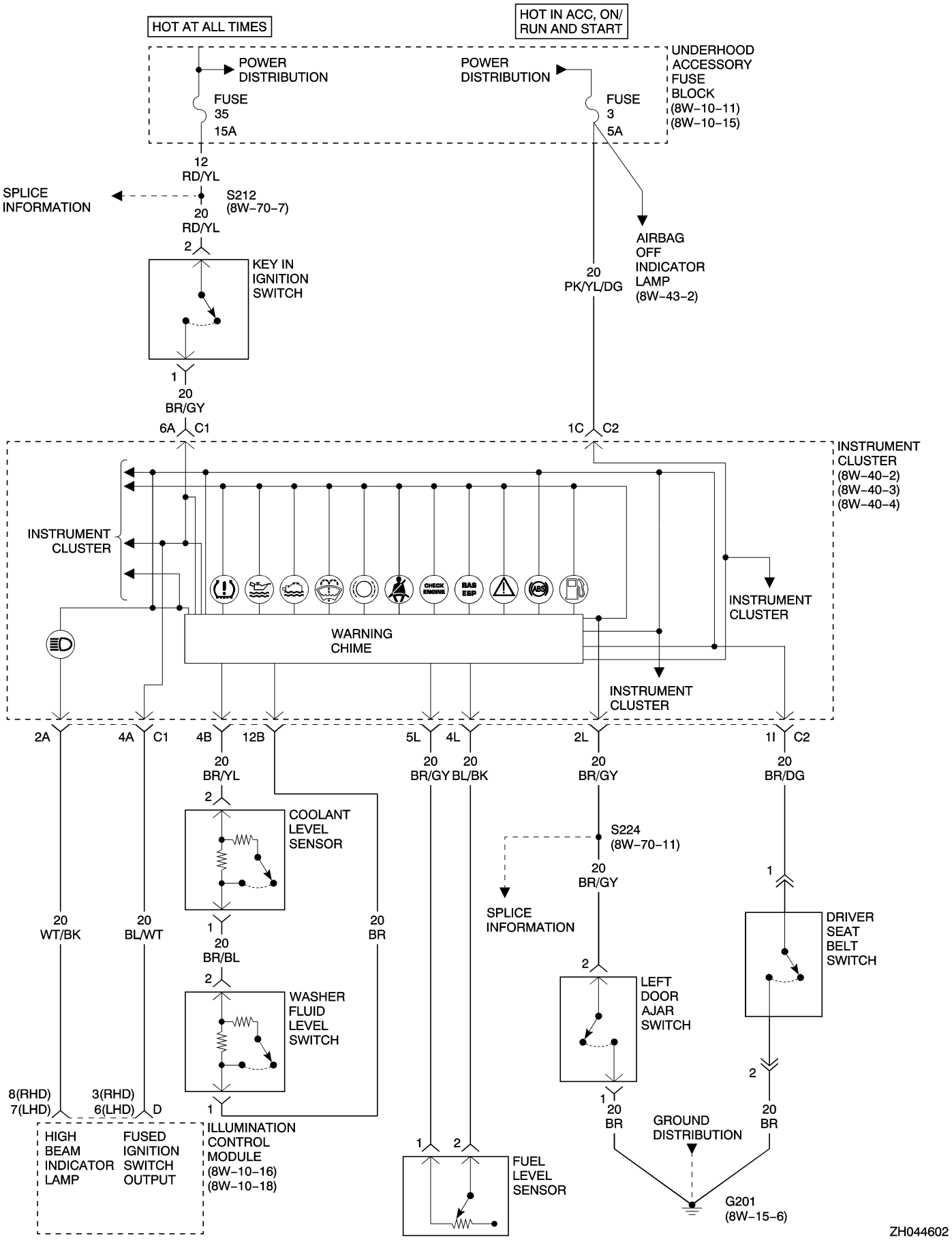
HOT AT ALL TIMES
HOT IN ACC, ON/ RUN AND START
POWER DISTRIBUTION
POWER DISTRIBUTION
FUSE 35 15A
FUSE 3 5A
UNDERHOOD ACCESSORY FUSE BLOCK (8W-10-11) (8W-10-15)
12 RD/YL
SPLICE INFORMATION
S212 (8W-70-7)
20 RD/YL
2
KEY IN IGNITION SWITCH
1
20 BR/GY
6A C1
20 PK/YL/DG
AIRBAG OFF INDICATOR LAMP (8W-43-2)
1C C2
INSTRUMENT CLUSTER (8W-40-2) (8W-40-3) (8W-40-4)
INSTRUMENT CLUSTER
WARNING CHIME
INSTRUMENT CLUSTER
INSTRUMENT CLUSTER
2A 4A C1 4B 12B 5L 4L 2L 1I C2
20 BR/YL
20 BR/GY
20 BL/BK
20 BR/GY
20 BR/DG
2
COOLANT LEVEL SENSOR
1
20 BR/BL
2
WASHER FLUID LEVEL SWITCH
1
S224 (8W-70-11)
20 BR/GY
SPLICE INFORMATION
2
LEFT DOOR AJAR SWITCH
1
1
DRIVER SEAT BELT SWITCH
2
20 WT/BK
20 BL/WT
20 BR
8(RHD) 7(LHD)
3(RHD) 6(LHD)
D
HIGH BEAM INDICATOR LAMP
FUSED IGNITION SWITCH OUTPUT
ILLUMINATION CONTROL MODULE (8W-10-16) (8W-10-18)
1 2
FUEL LEVEL SENSOR
20 BR
GROUND DISTRIBUTION
20 BR
G201 (8W-15-6)
ZH044602

8W-47 AUDIO SYSTEM

Component	Page
Antenna	8W-47-3
Body Control Module	8W-47-3
Controller Antilock Brake	8W-47-3
Data Link Connector	8W-47-2
Fuse 5	8W-47-2
Fuse 8	8W-47-2
Fuse 23	8W-47-3
G203	8W-47-2
G204	8W-47-3
Left Door Speaker	8W-47-4
Left Door Tweeter	8W-47-4
Left Rear Speaker	8W-47-5
Power Amplifier	8W-47-3, 4, 5
Radio	8W-47-2, 3
Right Door Speaker	8W-47-4
Right Door Tweeter	8W-47-4
Right Rear Speaker	8W-47-5
Splice Block 200	8W-47-2
Underhood Accessory Fuse Block	8W-47-2, 3

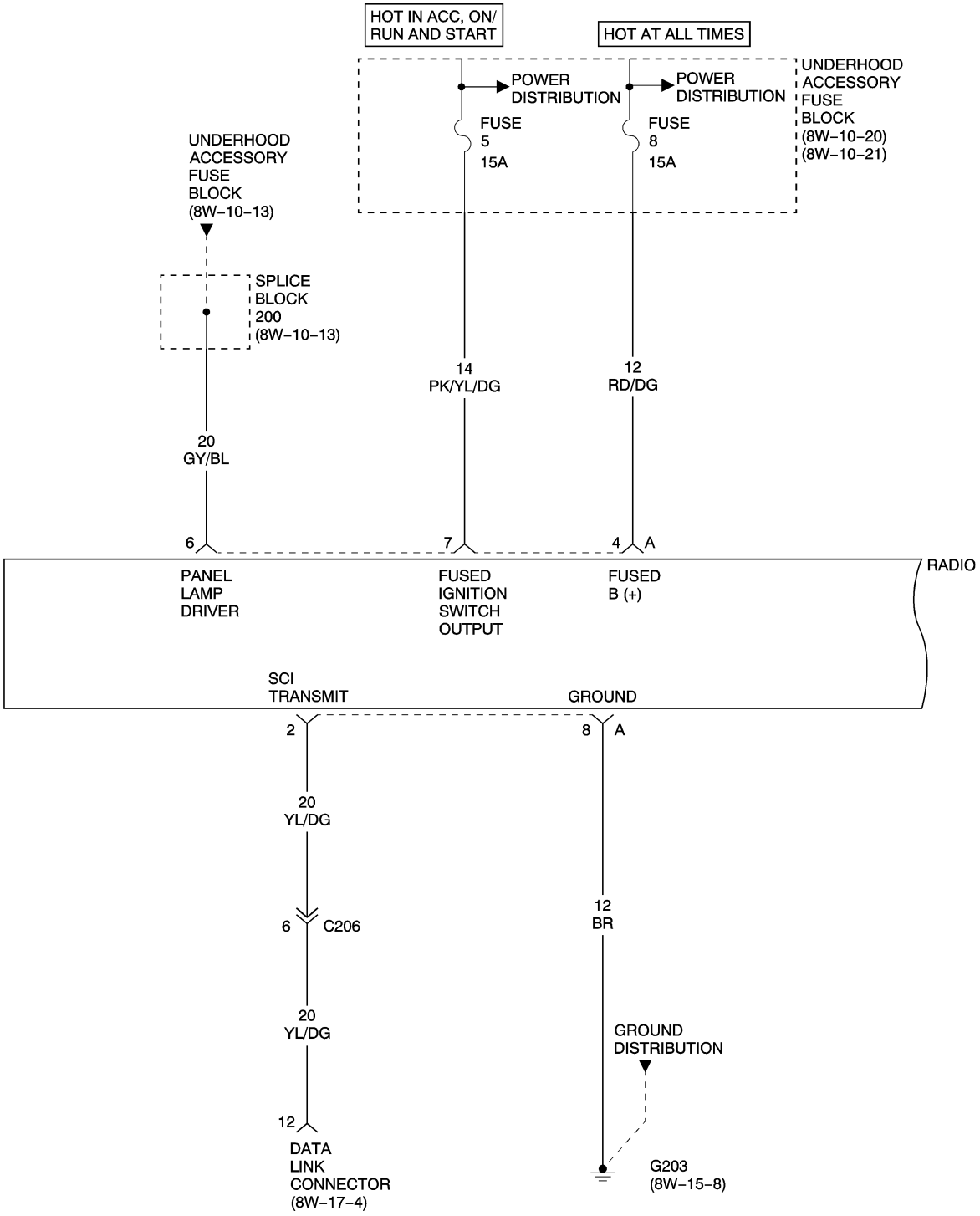
HOT IN ACC, ON/ RUN AND START
HOT AT ALL TIMES
POWER DISTRIBUTION
POWER DISTRIBUTION
UNDERHOOD ACCESSORY FUSE BLOCK (8W–10–20) (8W–10–21)
FUSE 5 15A
FUSE 8 15A
UNDERHOOD ACCESSORY FUSE BLOCK (8W–10–13)
SPLICE BLOCK 200 (8W–10–13)
14 PK/YL/DG
12 RD/DG
20 GY/BL
6
7
4
A
RADIO
PANEL LAMP DRIVER
FUSED IGNITION SWITCH OUTPUT
FUSED B (+)
SCI TRANSMIT
GROUND
2
8
A
20 YL/DG
6
C206
20 YL/DG
12
12 BR
GROUND DISTRIBUTION
DATA LINK CONNECTOR (8W–17–4)
G203 (8W–15–8)

ZH044702

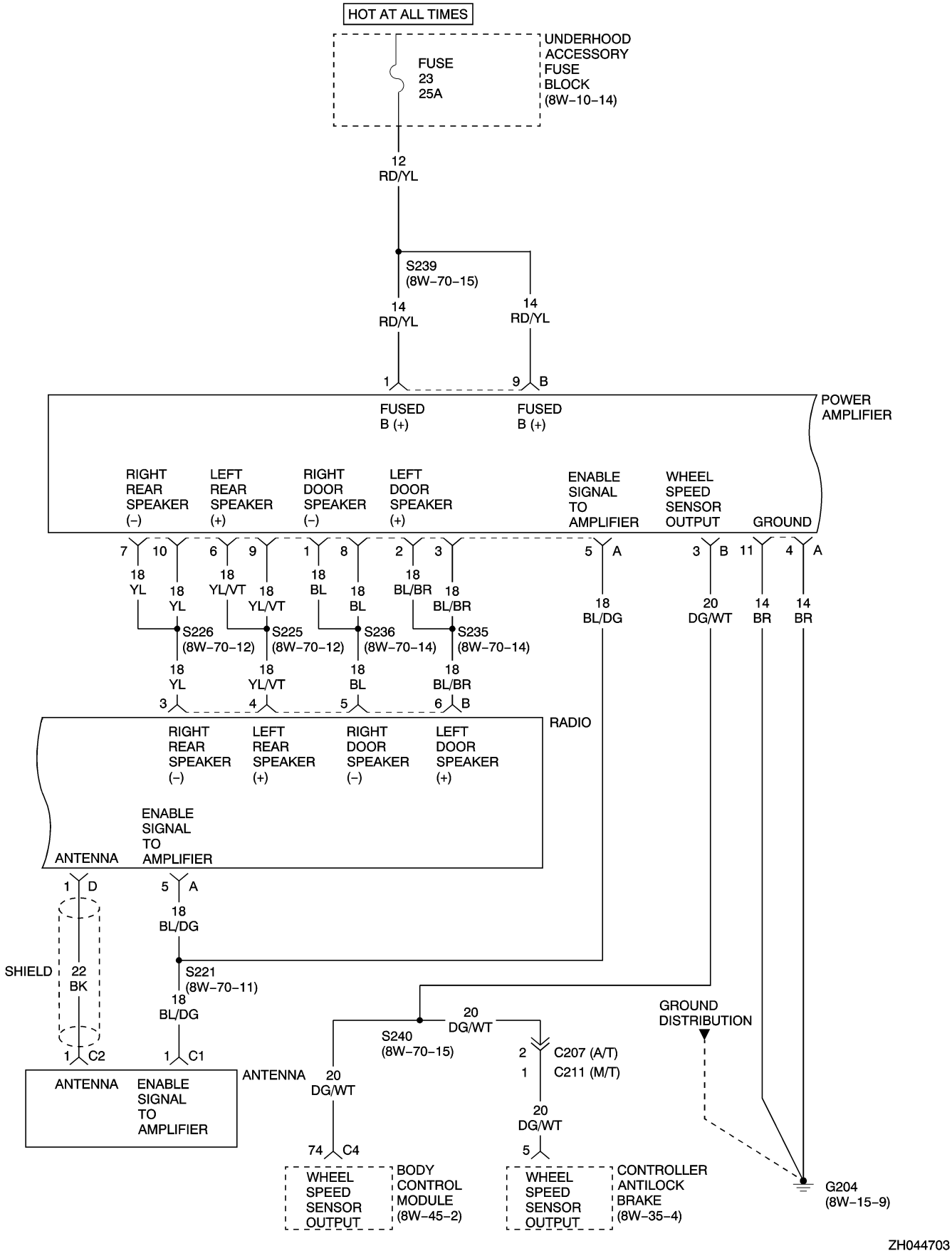
HOT AT ALL TIMES
FUSE 23 25A
UNDERHOOD ACCESSORY FUSE BLOCK (8W–10–14)
12 RD/YL
S239 (8W–70–15)
14 RD/YL
14 RD/YL
1
9 B
FUSED B (+)
FUSED B (+)
POWER AMPLIFIER
RIGHT REAR SPEAKER (–)
LEFT REAR SPEAKER (+)
RIGHT DOOR SPEAKER (–)
LEFT DOOR SPEAKER (+)
ENABLE SIGNAL TO AMPLIFIER
WHEEL SPEED SENSOR OUTPUT
GROUND
7 10 6 9 1 8 2 3 5 A 3 B 11 4 A
18 YL 18 YL 18 YL/VT 18 YL/VT 18 BL 18 BL 18 BL/BR 18 BL/BR
18 BL/DG
20 DG/WT
14 BR
14 BR
S226 (8W–70–12)
S225 (8W–70–12)
S236 (8W–70–14)
S235 (8W–70–14)
18 YL 18 YL/VT 18 BL 18 BL/BR
3 4 5 6 B
RADIO
RIGHT REAR SPEAKER (–)
LEFT REAR SPEAKER (+)
RIGHT DOOR SPEAKER (–)
LEFT DOOR SPEAKER (+)
ENABLE SIGNAL TO AMPLIFIER
ANTENNA
1 D
5 A
18 BL/DG
SHIELD
22 BK
S221 (8W–70–11)
18 BL/DG
1 C2
1 C1
ANTENNA
ENABLE SIGNAL TO AMPLIFIER
ANTENNA
20 DG/WT
S240 (8W–70–15)
20 DG/WT
2 C207 (A/T)
1 C211 (M/T)
GROUND DISTRIBUTION
20 DG/WT
74 C4
5
WHEEL SPEED SENSOR OUTPUT
BODY CONTROL MODULE (8W–45–2)
WHEEL SPEED SENSOR OUTPUT
CONTROLLER ANTILOCK BRAKE (8W–35–4)
G204 (8W–15–9)

ZH044703

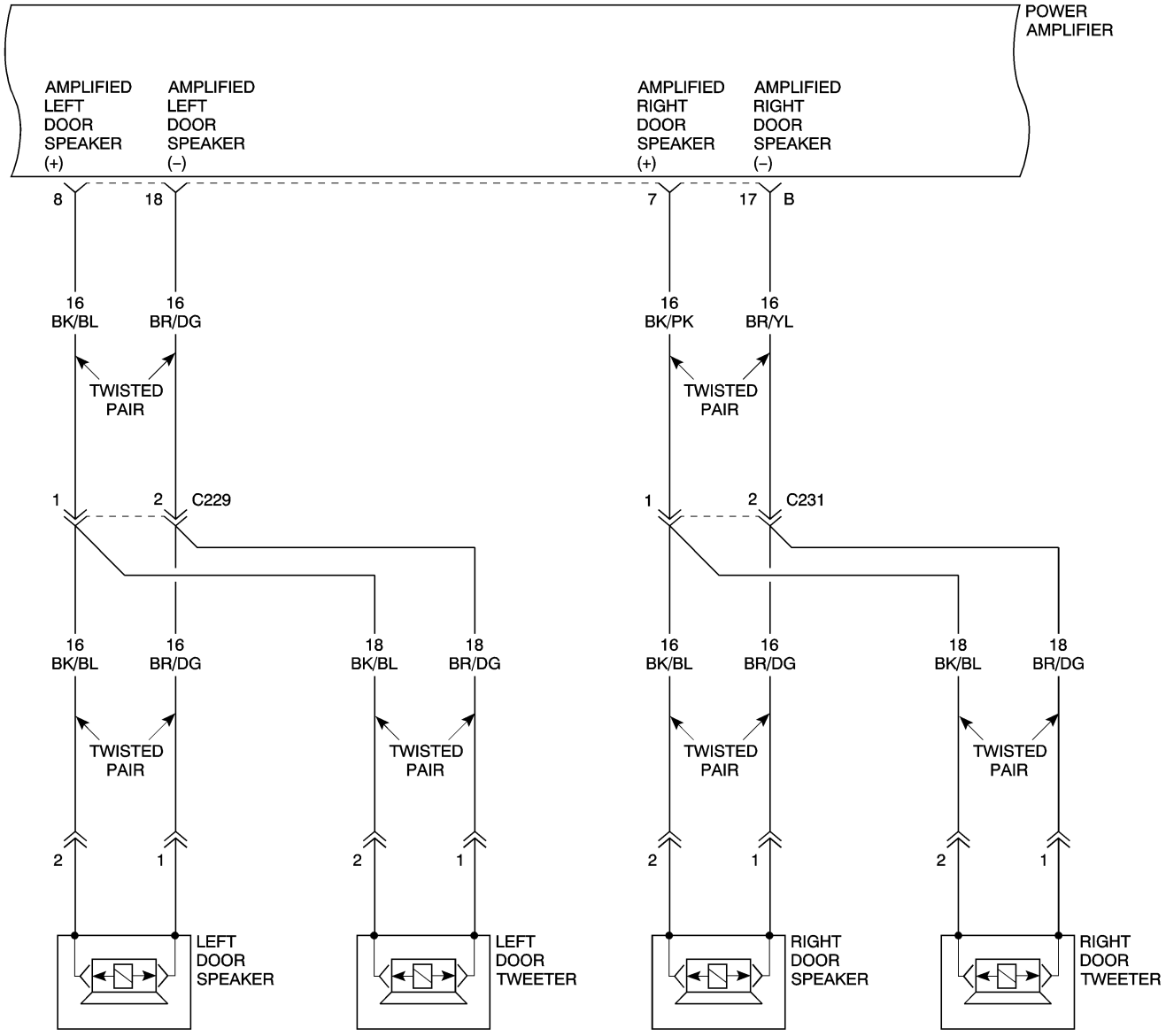
POWER AMPLIFIER
AMPLIFIED LEFT DOOR SPEAKER (+)
AMPLIFIED LEFT DOOR SPEAKER (–)
AMPLIFIED RIGHT DOOR SPEAKER (+)
AMPLIFIED RIGHT DOOR SPEAKER (–)
8
18
7
17
B
16 BK/BL
16 BR/DG
16 BK/PK
16 BR/YL
TWISTED PAIR
1
2
C229
C231
18 BK/BL
18 BR/DG
LEFT DOOR SPEAKER
LEFT DOOR TWEETER
RIGHT DOOR SPEAKER
RIGHT DOOR TWEETER

ZH044704

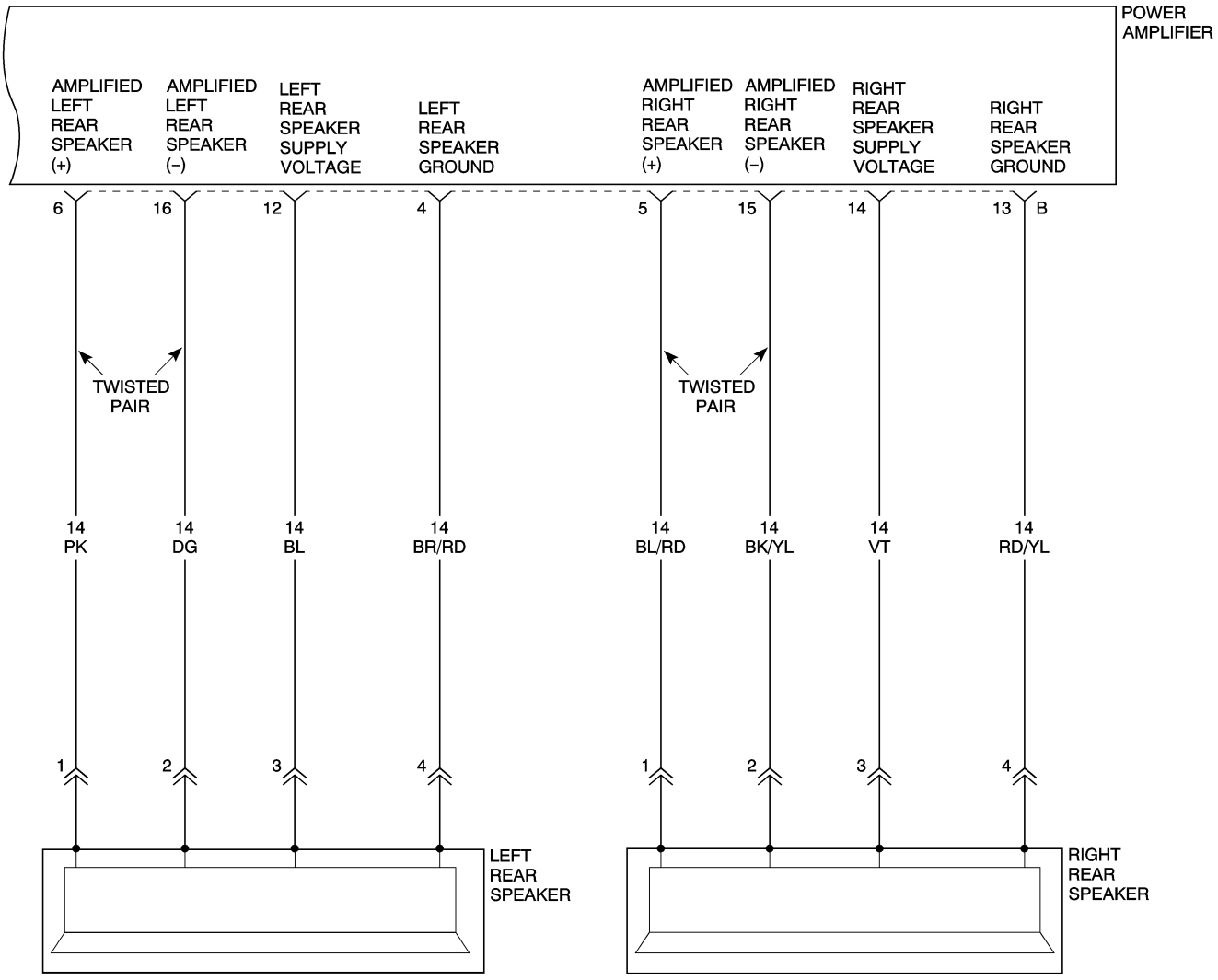
POWER AMPLIFIER
AMPLIFIED LEFT REAR SPEAKER (+)
AMPLIFIED LEFT REAR SPEAKER (–)
LEFT REAR SPEAKER SUPPLY VOLTAGE
LEFT REAR SPEAKER GROUND
AMPLIFIED RIGHT REAR SPEAKER (+)
AMPLIFIED RIGHT REAR SPEAKER (–)
RIGHT REAR SPEAKER SUPPLY VOLTAGE
RIGHT REAR SPEAKER GROUND
6
16
12
4
5
15
14
13
B
TWISTED PAIR
TWISTED PAIR
14 PK
14 DG
14 BL
14 BR/RD
14 BL/RD
14 BK/YL
14 VT
14 RD/YL
1
2
3
4
1
2
3
4
LEFT REAR SPEAKER
RIGHT REAR SPEAKER

ZH044705

8W-48 REAR WINDOW DEFOGGER

Component	Page
A/C Heater Control Module	8W-48-2
Body Control Module	8W-48-2
Central Locking Pump/Security System Module	8W-48-2
Fuse 25	8W-48-2
Fuse 26	8W-48-2
G205	8W-48-2
G301	8W-48-2
Rear Window Capacitor	8W-48-2
Rear Window Defogger	8W-48-2
Underhood Accessory Fuse Block	8W-48-2

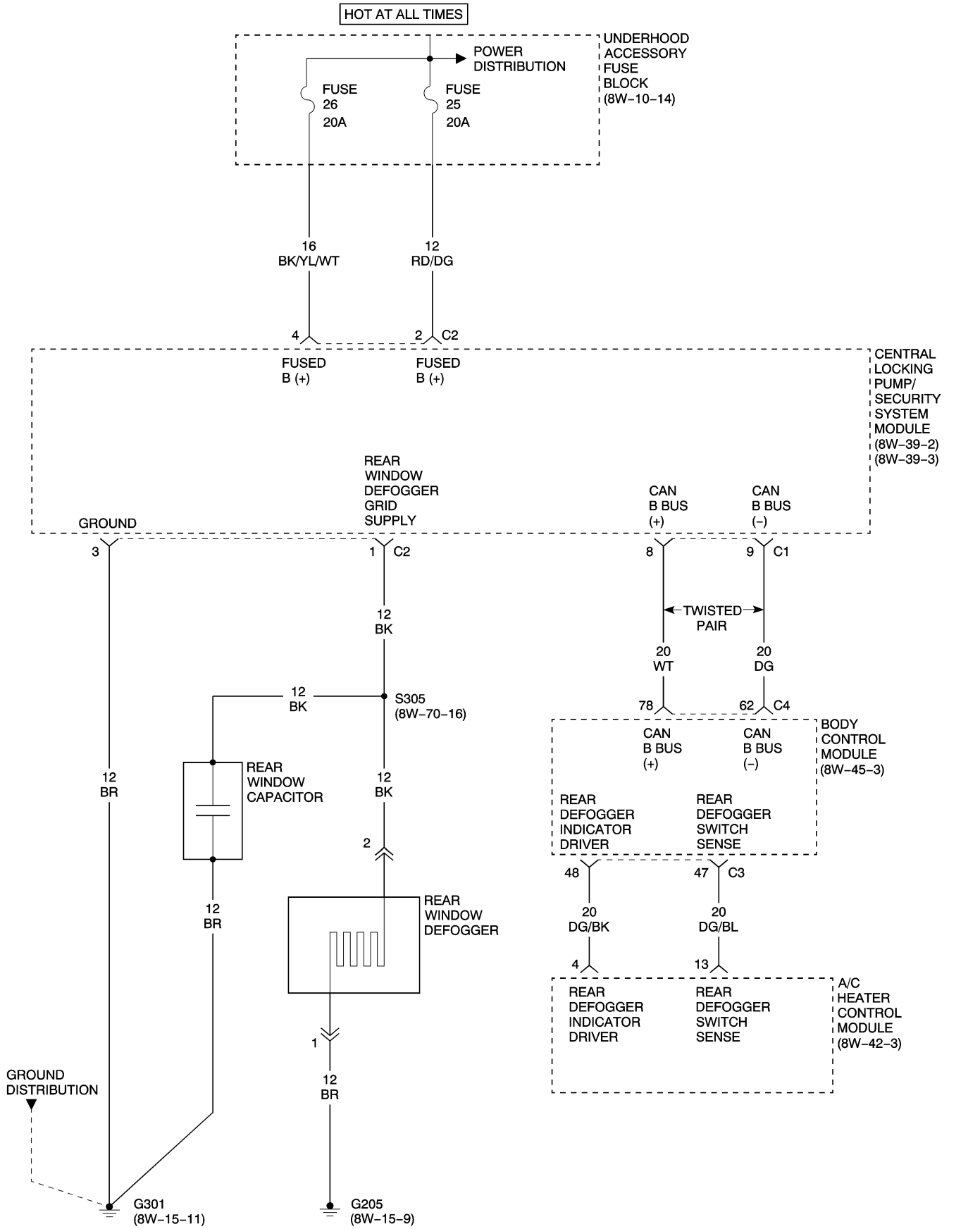
HOT AT ALL TIMES
POWER DISTRIBUTION
UNDERHOOD ACCESSORY FUSE BLOCK (8W-10-14)
FUSE 26 20A
FUSE 25 20A
16 BK/YL/WT
12 RD/DG
4
2 C2
FUSED B (+)
FUSED B (+)
CENTRAL LOCKING PUMP/ SECURITY SYSTEM MODULE (8W-39-2) (8W-39-3)
REAR WINDOW DEFOGGER GRID SUPPLY
GROUND
CAN B BUS (+)
CAN B BUS (-)
3
1 C2
8
9 C1
TWISTED PAIR
12 BK
20 WT
20 DG
12 BK
S305 (8W-70-16)
78
62 C4
BODY CONTROL MODULE (8W-45-3)
CAN B BUS (+)
CAN B BUS (-)
REAR DEFOGGER INDICATOR DRIVER
REAR DEFOGGER SWITCH SENSE
12 BR
REAR WINDOW CAPACITOR
12 BK
2
48
47 C3
20 DG/BK
20 DG/BL
12 BR
REAR WINDOW DEFOGGER
4
13
REAR DEFOGGER INDICATOR DRIVER
REAR DEFOGGER SWITCH SENSE
A/C HEATER CONTROL MODULE (8W-42-3)
1
12 BR
GROUND DISTRIBUTION
G301 (8W-15-11)
G205 (8W-15-9)

ZH044802

8W-49 TIRE PRESSURE MONITOR

Component	Page
A/C Heater Control Module	8W-49-2
Data Link Connector	8W-49-2
Fuse 1	8W-49-2
Fuse 9	8W-49-2
G201	8W-49-2
Instrument Cluster	8W-49-2
Left Front Tire Pressure Sensor/ Transmitter	8W-49-2
Left Rear Tire Pressure Sensor/ Transmitter	8W-49-2
Right Front Tire Pressure Sensory Transmitter	8W-49-2
Right Rear Tire Pressure Sensor/ Transmitter	8W-49-2
Underhood Accessory Fuse Block	8W-49-2
Universal Garage Door Opener/Tire Pressure Monitor	8W-49-2

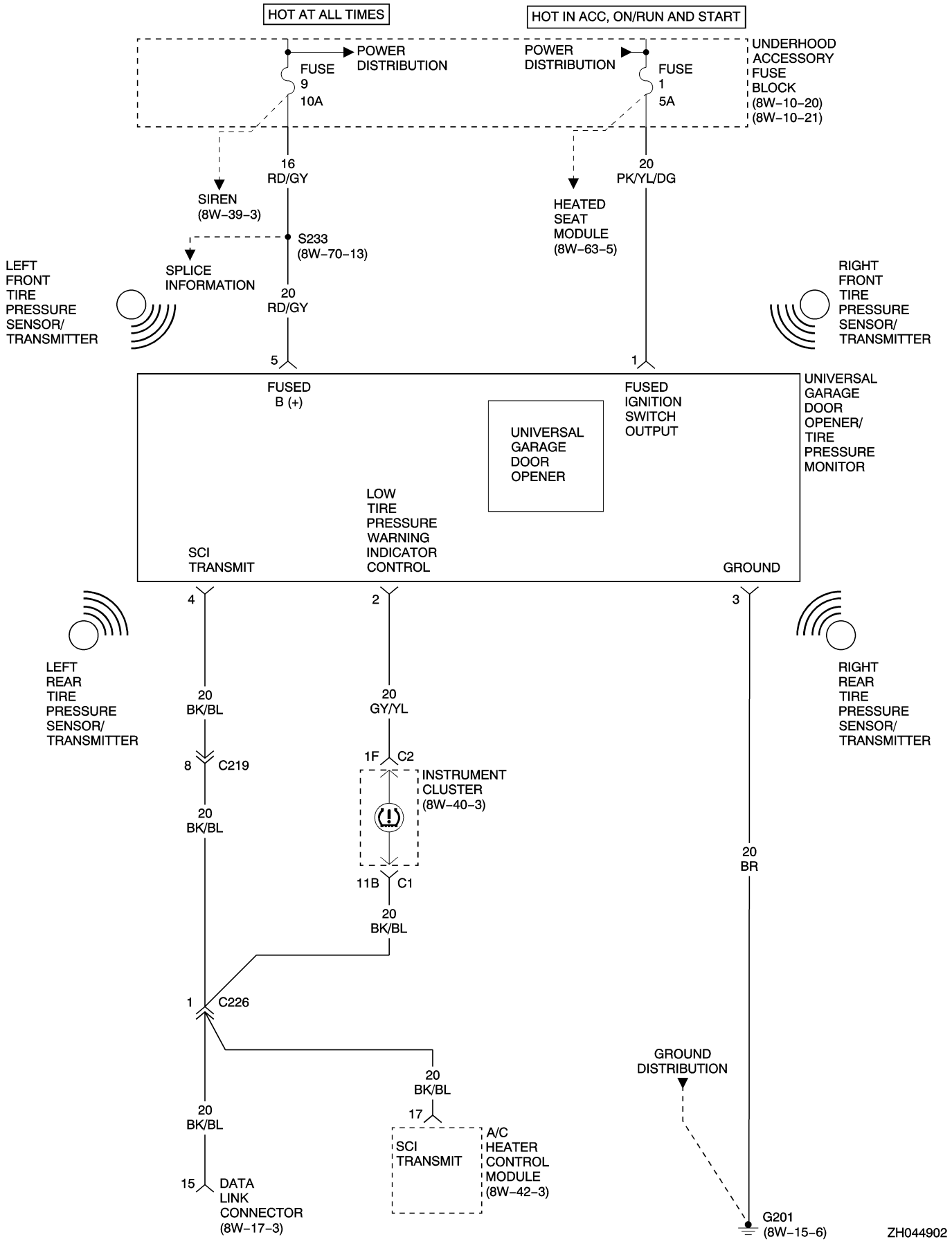
HOT AT ALL TIMES
HOT IN ACC, ON/RUN AND START
POWER DISTRIBUTION
FUSE 9 10A
POWER DISTRIBUTION
FUSE 1 5A
UNDERHOOD ACCESSORY FUSE BLOCK (8W-10-20) (8W-10-21)
16 RD/GY
20 PK/YL/DG
SIREN (8W-39-3)
HEATED SEAT MODULE (8W-63-5)
S233 (8W-70-13)
SPLICE INFORMATION
LEFT FRONT TIRE PRESSURE SENSOR/ TRANSMITTER
20 RD/GY
RIGHT FRONT TIRE PRESSURE SENSOR/ TRANSMITTER
5
1
FUSED B (+)
FUSED IGNITION SWITCH OUTPUT
UNIVERSAL GARAGE DOOR OPENER
UNIVERSAL GARAGE DOOR OPENER/ TIRE PRESSURE MONITOR
LOW TIRE PRESSURE WARNING INDICATOR CONTROL
SCI TRANSMIT
GROUND
4
2
3
LEFT REAR TIRE PRESSURE SENSOR/ TRANSMITTER
RIGHT REAR TIRE PRESSURE SENSOR/ TRANSMITTER
20 BK/BL
20 GY/YL
8 C219
1F C2
INSTRUMENT CLUSTER (8W-40-3)
20 BK/BL
11B C1
20 BK/BL
20 BR
1 C226
20 BK/BL
17
20 BK/BL
SCI TRANSMIT
A/C HEATER CONTROL MODULE (8W-42-3)
GROUND DISTRIBUTION
15 DATA LINK CONNECTOR (8W-17-3)
G201 (8W-15-6)
ZH044902

8W-50 FRONT LIGHTING

Component	Page
Body Control Module	8W-50-4
Central Locking Pump/Security System Module	8W-50-5
Fuse 10	8W-50-2
Fuse 12	8W-50-5
Fuse 32	8W-50-4
Fuse 6	8W-50-3
Fuse 7	8W-50-2
Fuse 8	8W-50-3
Fuse 9	8W-50-5
G100	8W-50-2, 3, 4, 5
G101	8W-50-2, 3, 4, 5
G300	8W-50-5
Illumination Control Module	8W-50-2, 3, 4, 5
Instrument Cluster	8W-50-4
Left Fog Lamp	8W-50-5
Left Front Lamp Assembly	8W-50-3, 4
Left Front Side Marker Lamp	8W-50-2
Left Park Lamp	8W-50-2
Left Rear Lamp Assembly	8W-50-5
Multi-Function Switch	8W-50-4
Right Fog Lamp	8W-50-5
Right Front Lamp Assembly	8W-50-3, 4
Right Front Side Marker Lamp	8W-50-2
Right Park Lamp	8W-50-2
Underhood Accessory Fuse Block	8W-50-4

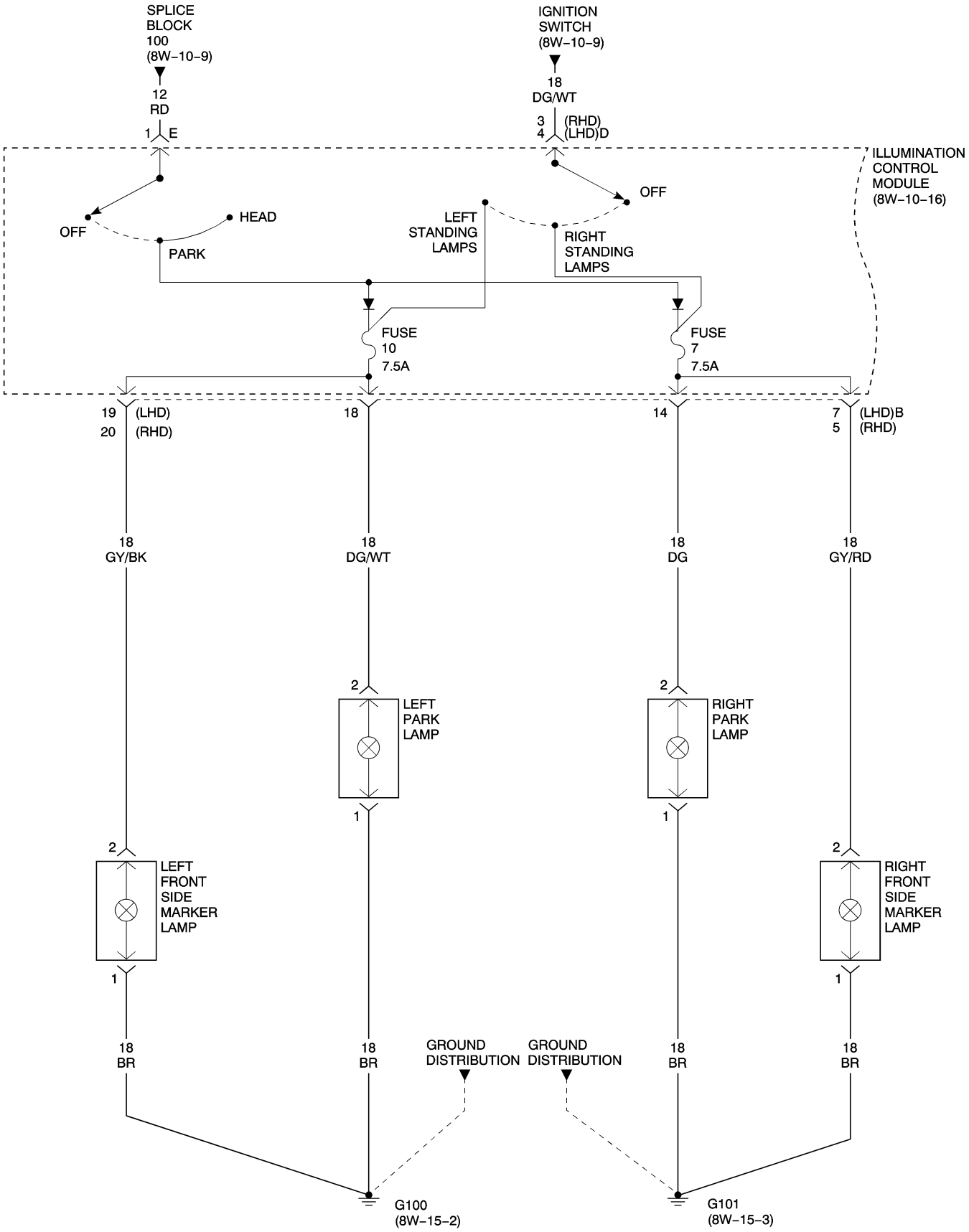
SPLICE
BLOCK
100
(8W–10–9)
12
RD
1 E
IGNITION
SWITCH
(8W–10–9)
18
DG/WT
3 (RHD)
4 (LHD)D
ILLUMINATION
CONTROL
MODULE
(8W–10–16)
OFF
HEAD
PARK
OFF
LEFT
STANDING
LAMPS
RIGHT
STANDING
LAMPS
FUSE
10
7.5A
FUSE
7
7.5A
19 (LHD)
20 (RHD)
18
14
7 (LHD)B
5 (RHD)
18
GY/BK
18
DG/WT
18
DG
18
GY/RD
2
LEFT
PARK
LAMP
2
RIGHT
PARK
LAMP
1
1
2
LEFT
FRONT
SIDE
MARKER
LAMP
2
RIGHT
FRONT
SIDE
MARKER
LAMP
1
1
18
BR
18
BR
GROUND
DISTRIBUTION
GROUND
DISTRIBUTION
18
BR
18
BR
G100
(8W–15–2)
G101
(8W–15–3)

ZH045002

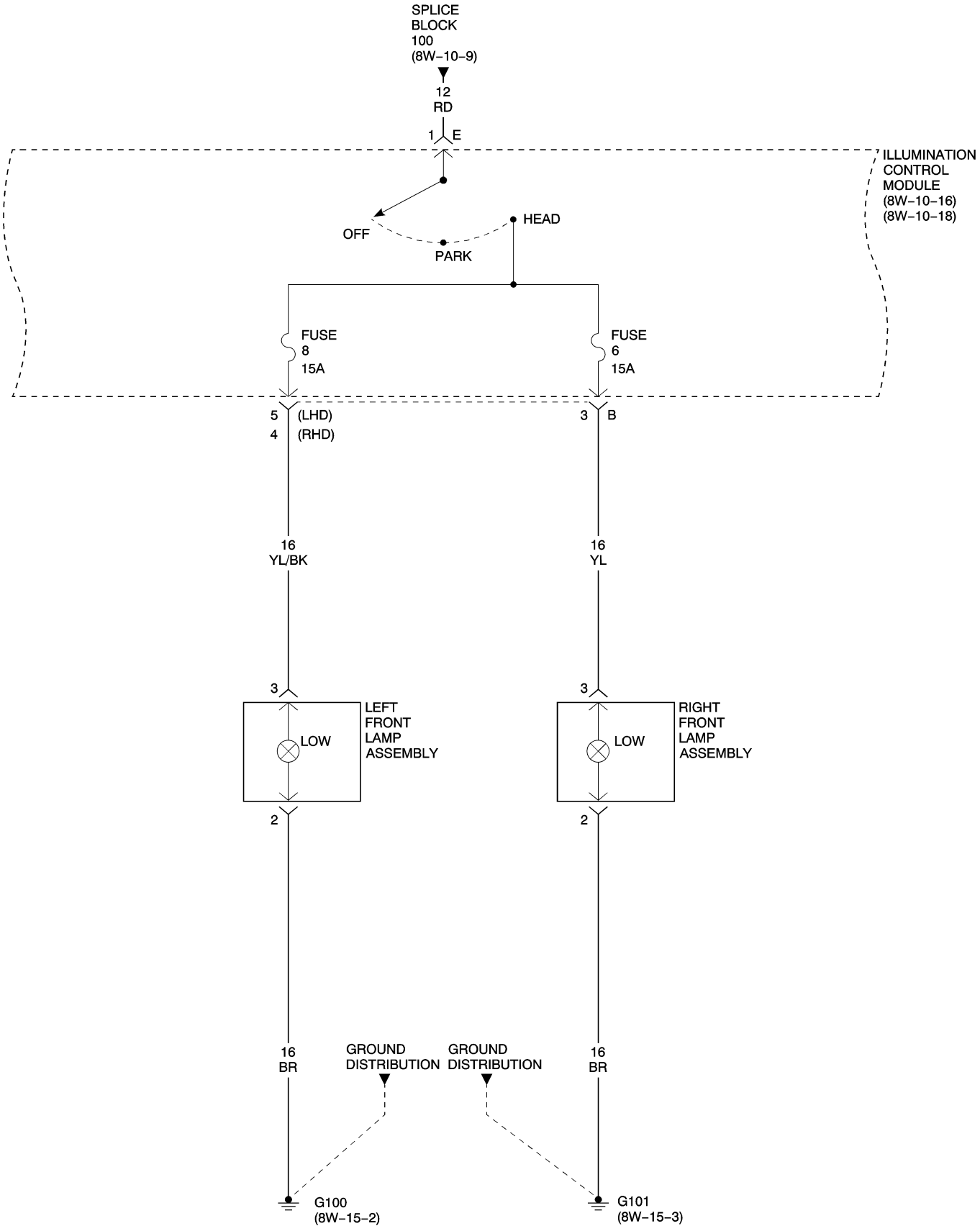
SPLICE
BLOCK
100
(8W–10–9)
12
RD
1
E
ILLUMINATION
CONTROL
MODULE
(8W–10–16)
(8W–10–18)
OFF
HEAD
PARK
FUSE
8
15A
FUSE
6
15A
5
4
(LHD)
(RHD)
3
B
16
YL/BK
16
YL
3
3
LEFT
FRONT
LAMP
ASSEMBLY
LOW
RIGHT
FRONT
LAMP
ASSEMBLY
LOW
2
2
16
BR
GROUND
DISTRIBUTION
GROUND
DISTRIBUTION
16
BR
G100
(8W–15–2)
G101
(8W–15–3)

ZH045003

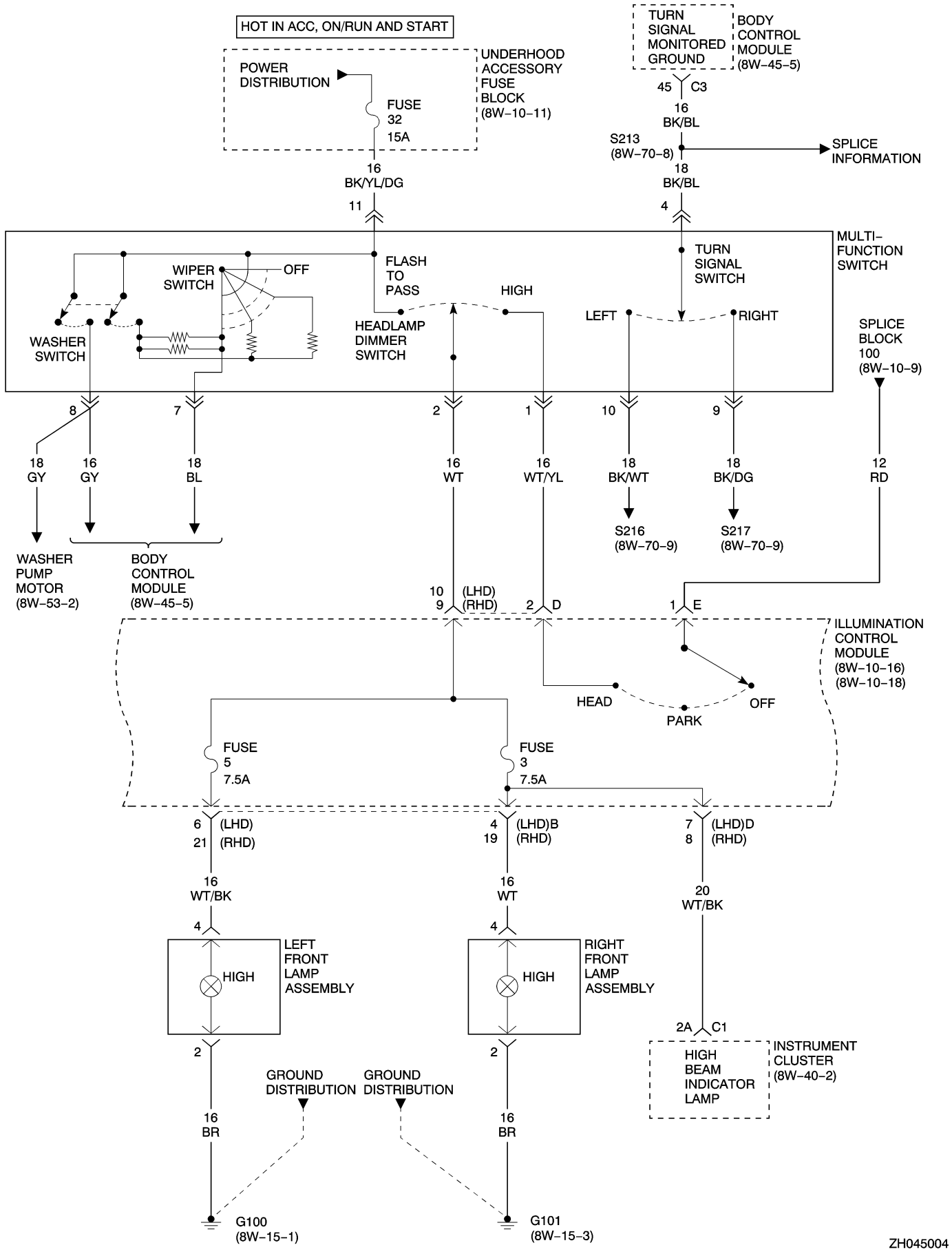
HOT IN ACC, ON/RUN AND START
POWER DISTRIBUTION
FUSE 32 15A
UNDERHOOD ACCESSORY FUSE BLOCK (8W–10–11)
16 BK/YL/DG
11
TURN SIGNAL MONITORED GROUND
BODY CONTROL MODULE (8W–45–5)
45 C3
16 BK/BL
S213 (8W–70–8)
SPLICE INFORMATION
18 BK/BL
4
MULTI–FUNCTION SWITCH
WIPER SWITCH
OFF
FLASH TO PASS
HIGH
HEADLAMP DIMMER SWITCH
TURN SIGNAL SWITCH
LEFT
RIGHT
WASHER SWITCH
SPLICE BLOCK 100 (8W–10–9)
8
7
2
1
10
9
18 GY
16 GY
18 BL
16 WT
16 WT/YL
18 BK/WT
18 BK/DG
12 RD
S216 (8W–70–9)
S217 (8W–70–9)
WASHER PUMP MOTOR (8W–53–2)
BODY CONTROL MODULE (8W–45–5)
10 (LHD) 9 (RHD)
2 D
1 E
ILLUMINATION CONTROL MODULE (8W–10–16) (8W–10–18)
HEAD
PARK
OFF
FUSE 5 7.5A
FUSE 3 7.5A
6 (LHD) 21 (RHD)
4 (LHD)B 19 (RHD)
7 (LHD)D 8 (RHD)
16 WT/BK
16 WT
20 WT/BK
4
4
LEFT FRONT LAMP ASSEMBLY
HIGH
RIGHT FRONT LAMP ASSEMBLY
HIGH
2A C1
HIGH BEAM INDICATOR LAMP
INSTRUMENT CLUSTER (8W–40–2)
2
2
GROUND DISTRIBUTION
GROUND DISTRIBUTION
16 BR
16 BR
G100 (8W–15–1)
G101 (8W–15–3)
ZH045004

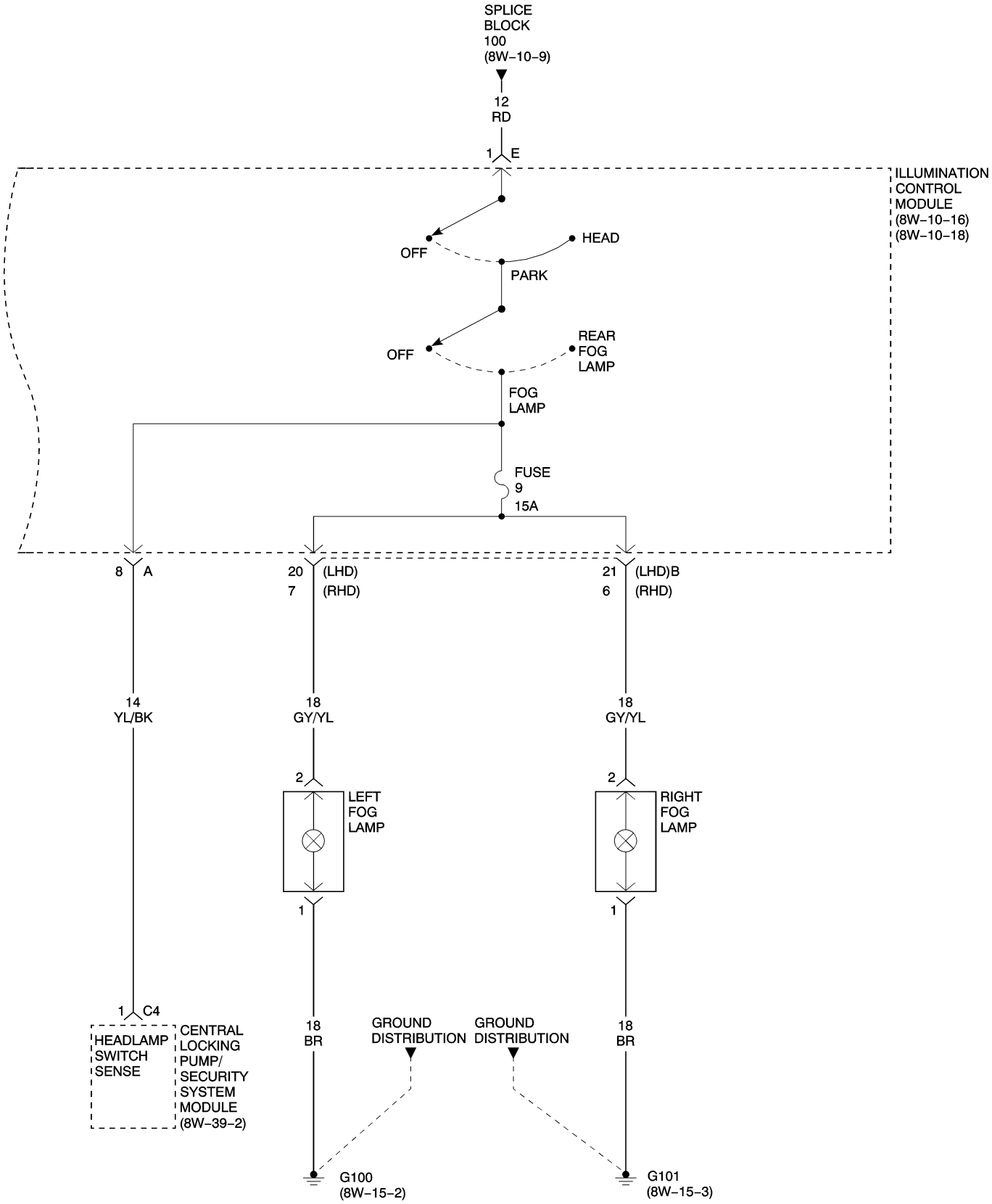
SPLICE
BLOCK
100
(8W–10–9)
12
RD
1
E
ILLUMINATION
CONTROL
MODULE
(8W–10–16)
(8W–10–18)
OFF
HEAD
PARK
OFF
REAR
FOG
LAMP
FOG
LAMP
FUSE
9
15A
8
A
20
7
(LHD)
(RHD)
21
6
(LHD)B
(RHD)
14
YL/BK
18
GY/YL
18
GY/YL
2
2
LEFT
FOG
LAMP
RIGHT
FOG
LAMP
1
1
1
C4
18
BR
GROUND
DISTRIBUTION
GROUND
DISTRIBUTION
18
BR
HEADLAMP
SWITCH
SENSE
CENTRAL
LOCKING
PUMP/
SECURITY
SYSTEM
MODULE
(8W–39–2)
G100
(8W–15–2)
G101
(8W–15–3)

ZH045005

8W-51 REAR LIGHTING

Component	Page
Ash Receiver Lamp	8W-51-2
Automatic Day/Night Mirror	8W-51-4
Backup Lamp Switch	8W-51-4
Brake Lamp Relay	8W-51-3
Brake Lamp Switch	8W-51-3
Center High Mounted Stop Lamp	8W-51-3
Central Locking Pump/Security System Module	8W-51-2
Fuse 7	8W-51-2
Fuse 10	8W-51-2
Fuse 11	8W-51-2
G300	8W-51-2, 3, 4
G301	8W-51-2, 3, 4
Illumination Control Module	8W-51-2, 3, 4
Instrument Cluster	8W-51-2
Left Rear Lamp Assembly	8W-51-2, 3, 4
Left Rear Side Marker Lamp	8W-51-2
License Lamp No. 1	8W-51-2
License Lamp No. 2	8W-51-2
Powertrain Control Module	8W-51-4
Right Rear Lamp Assembly	8W-51-2, 3, 4
Right Rear Side Marker Lamp	8W-51-2
Shift Lever Assembly	8W-51-4

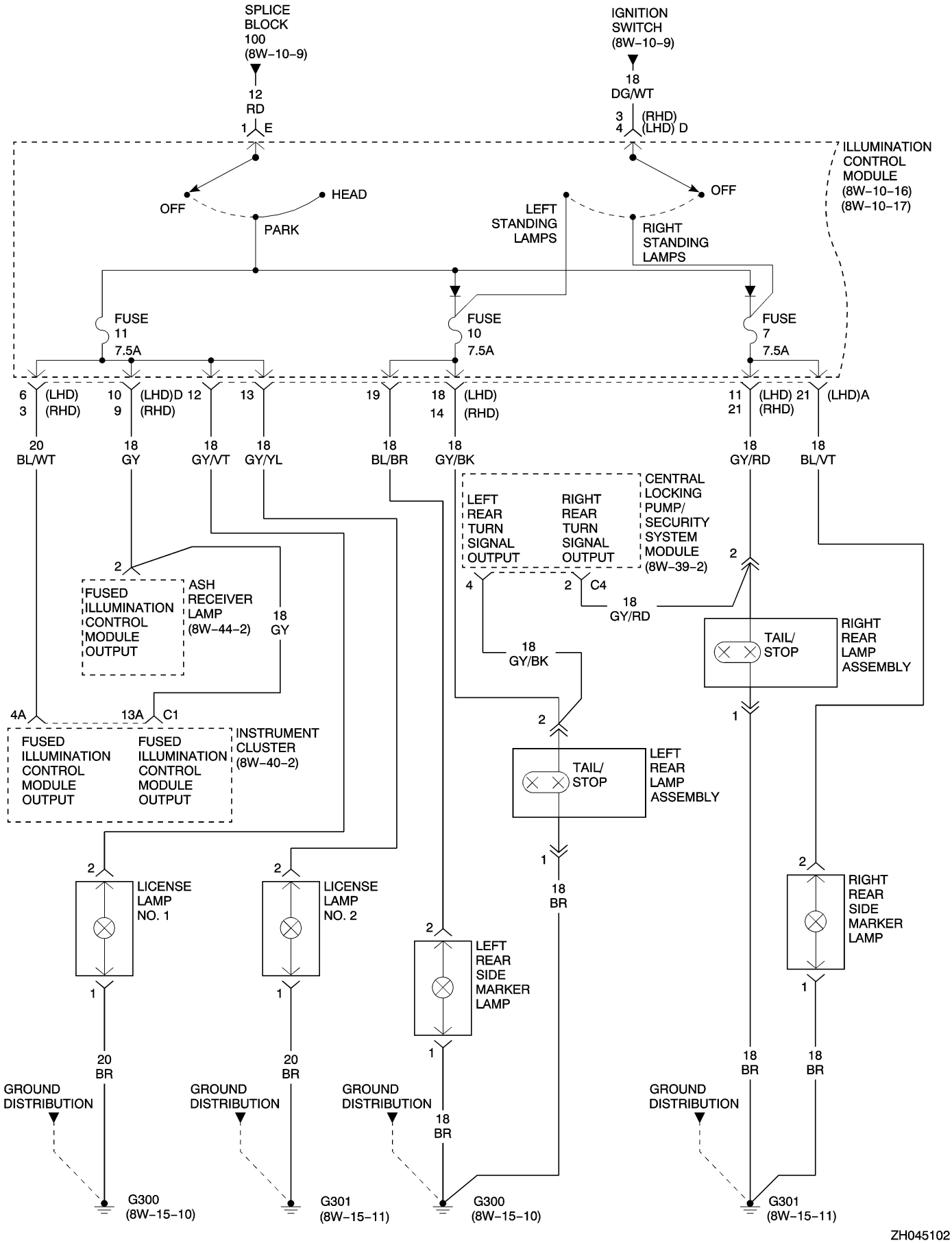
SPLICE BLOCK 100 (8W–10–9)
12 RD
1 E
IGNITION SWITCH (8W–10–9)
18 DG/WT
3 (RHD)
4 (LHD) D
ILLUMINATION CONTROL MODULE (8W–10–16) (8W–10–17)
OFF
HEAD
PARK
OFF
LEFT STANDING LAMPS
RIGHT STANDING LAMPS
FUSE 11 7.5A
FUSE 10 7.5A
FUSE 7 7.5A
6 (LHD) 3 (RHD)
10 (LHD) 9 (RHD)
12
13
19
18 (LHD) 14 (RHD)
11 (LHD) 21 (RHD)
21 (LHD)A
20 BL/WT
18 GY
18 GY/VT
18 GY/YL
18 BL/BR
18 GY/BK
18 GY/RD
18 BL/VT
CENTRAL LOCKING PUMP/ SECURITY SYSTEM MODULE (8W–39–2)
LEFT REAR TURN SIGNAL OUTPUT
RIGHT REAR TURN SIGNAL OUTPUT
C4
18 GY/RD
FUSED ILLUMINATION CONTROL MODULE OUTPUT
ASH RECEIVER LAMP (8W–44–2)
18 GY
18 GY/BK
TAIL/ STOP
RIGHT REAR LAMP ASSEMBLY
4A
13A C1
INSTRUMENT CLUSTER (8W–40–2)
FUSED ILLUMINATION CONTROL MODULE OUTPUT
FUSED ILLUMINATION CONTROL MODULE OUTPUT
TAIL/ STOP
LEFT REAR LAMP ASSEMBLY
18 BR
LICENSE LAMP NO. 1
LICENSE LAMP NO. 2
LEFT REAR SIDE MARKER LAMP
RIGHT REAR SIDE MARKER LAMP
20 BR
20 BR
18 BR
18 BR
18 BR
GROUND DISTRIBUTION
GROUND DISTRIBUTION
GROUND DISTRIBUTION
GROUND DISTRIBUTION
G300 (8W–15–10)
G301 (8W–15–11)
G300 (8W–15–10)
G301 (8W–15–11)
ZH045102

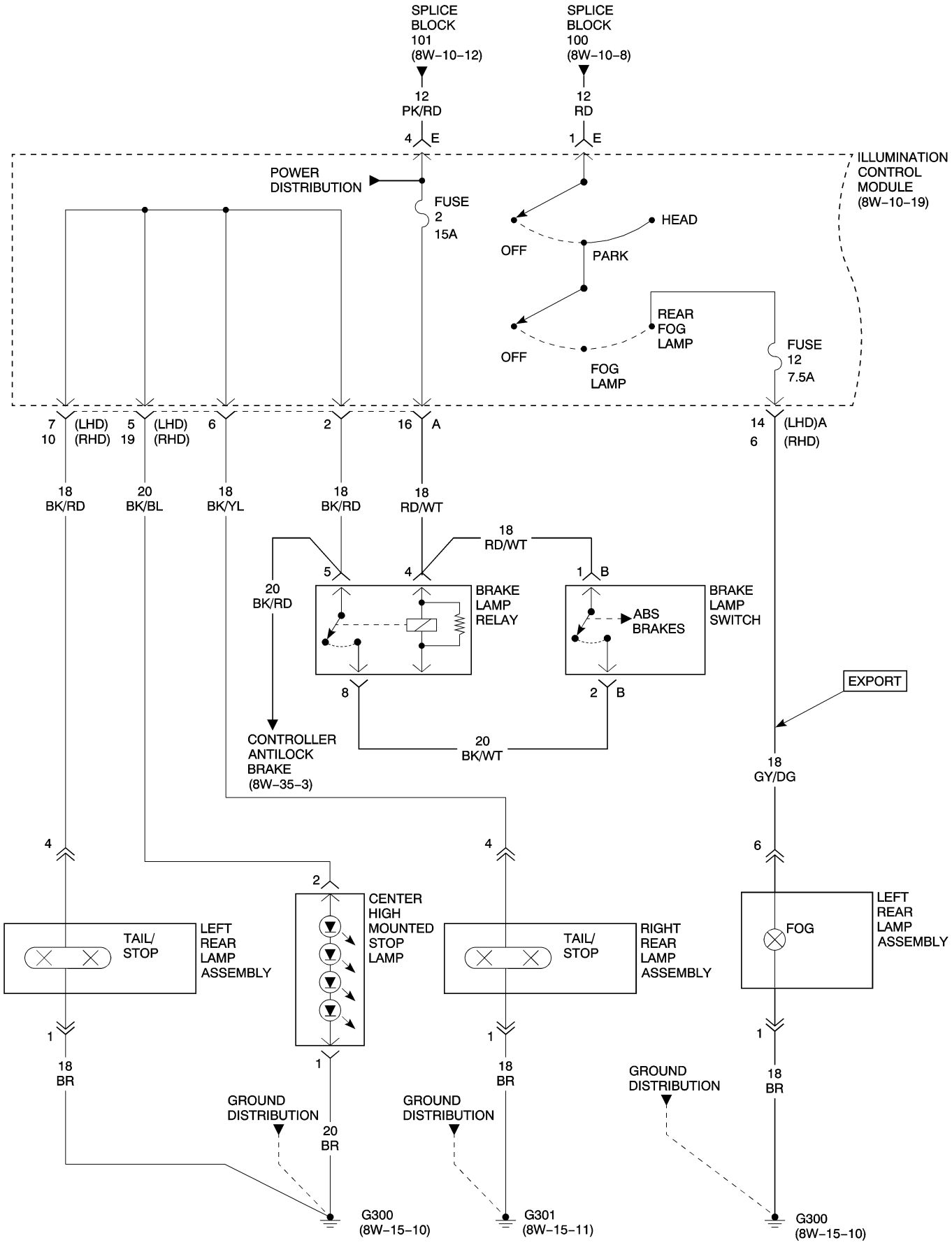
SPLICE BLOCK 101 (8W-10-12)
SPLICE BLOCK 100 (8W-10-8)
12 PK/RD
12 RD
4 E
1 E
ILLUMINATION CONTROL MODULE (8W-10-19)
POWER DISTRIBUTION
FUSE 2 15A
HEAD
OFF
PARK
REAR FOG LAMP
OFF
FOG LAMP
FUSE 12 7.5A
7 10 (LHD) (RHD)
5 19 (LHD) (RHD)
6
2
16 A
14 6 (LHD)A (RHD)
18 BK/RD
20 BK/BL
18 BK/YL
18 BK/RD
18 RD/WT
18 RD/WT
20 BK/RD
5
4
1 B
BRAKE LAMP RELAY
ABS BRAKES
BRAKE LAMP SWITCH
8
2 B
20 BK/WT
CONTROLLER ANTILOCK BRAKE (8W-35-3)
EXPORT
18 GY/DG
4
4
6
2
TAIL/ STOP
LEFT REAR LAMP ASSEMBLY
CENTER HIGH MOUNTED STOP LAMP
TAIL/ STOP
RIGHT REAR LAMP ASSEMBLY
FOG
LEFT REAR LAMP ASSEMBLY
1
1
1
18 BR
18 BR
18 BR
GROUND DISTRIBUTION
GROUND DISTRIBUTION
GROUND DISTRIBUTION
20 BR
G300 (8W-15-10)
G301 (8W-15-11)
G300 (8W-15-10)

ZH045103

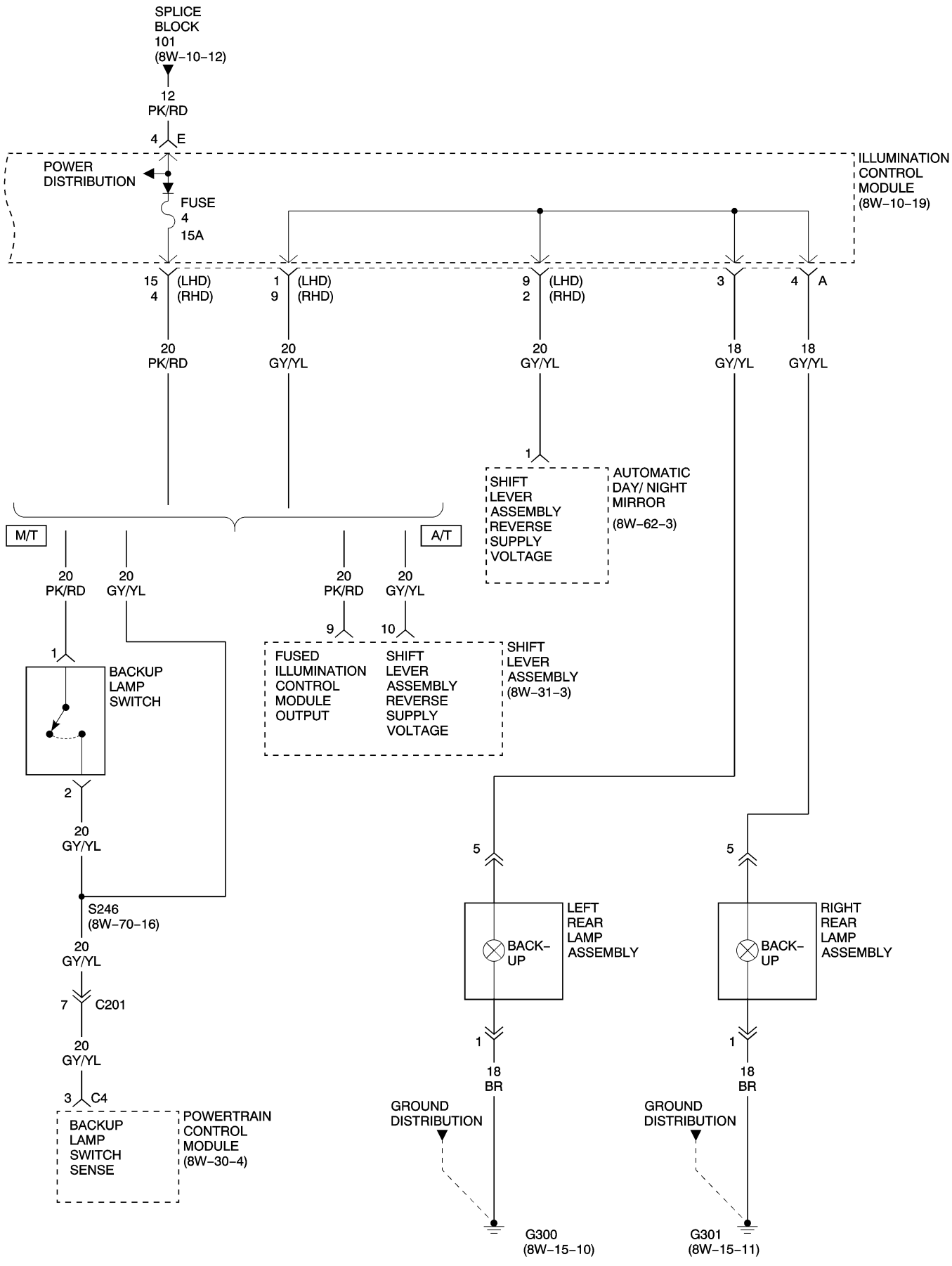
SPLICE BLOCK 101 (8W–10–12)
12 PK/RD
4 E
POWER DISTRIBUTION
FUSE 4 15A
ILLUMINATION CONTROL MODULE (8W–10–19)
15 4 (LHD) (RHD)
1 9 (LHD) (RHD)
9 2 (LHD) (RHD)
3
4 A
20 PK/RD
20 GY/YL
20 GY/YL
18 GY/YL
18 GY/YL
1
SHIFT LEVER ASSEMBLY REVERSE SUPPLY VOLTAGE
AUTOMATIC DAY/ NIGHT MIRROR (8W–62–3)
M/T
A/T
20 PK/RD
20 GY/YL
20 PK/RD
20 GY/YL
9
10
FUSED ILLUMINATION CONTROL MODULE OUTPUT
SHIFT LEVER ASSEMBLY REVERSE SUPPLY VOLTAGE
SHIFT LEVER ASSEMBLY (8W–31–3)
1
BACKUP LAMP SWITCH
2
20 GY/YL
S246 (8W–70–16)
20 GY/YL
7 C201
20 GY/YL
3 C4
BACKUP LAMP SWITCH SENSE
POWERTRAIN CONTROL MODULE (8W–30–4)
5
5
BACK–UP
LEFT REAR LAMP ASSEMBLY
BACK–UP
RIGHT REAR LAMP ASSEMBLY
1
1
18 BR
18 BR
GROUND DISTRIBUTION
GROUND DISTRIBUTION
G300 (8W–15–10)
G301 (8W–15–11)

ZH045104

8W-52 TURN SIGNALS

Component	Page
Body Control Module	8W-52-2
Console Switch Group	8W-52-2
Fuse 4	8W-52-2
G100	8W-52-2
G102	8W-52-2
G300	8W-52-2
G301	8W-52-2
Illumination Control Module	8W-52-2
Left Front Lamp Assembly	8W-52-2
Left Rear Lamp Assembly	8W-52-2
Multi-Function Switch	8W-52-2
Right Front Lamp Assembly	8W-52-2
Right Rear Lamp Assembly	8W-52-2

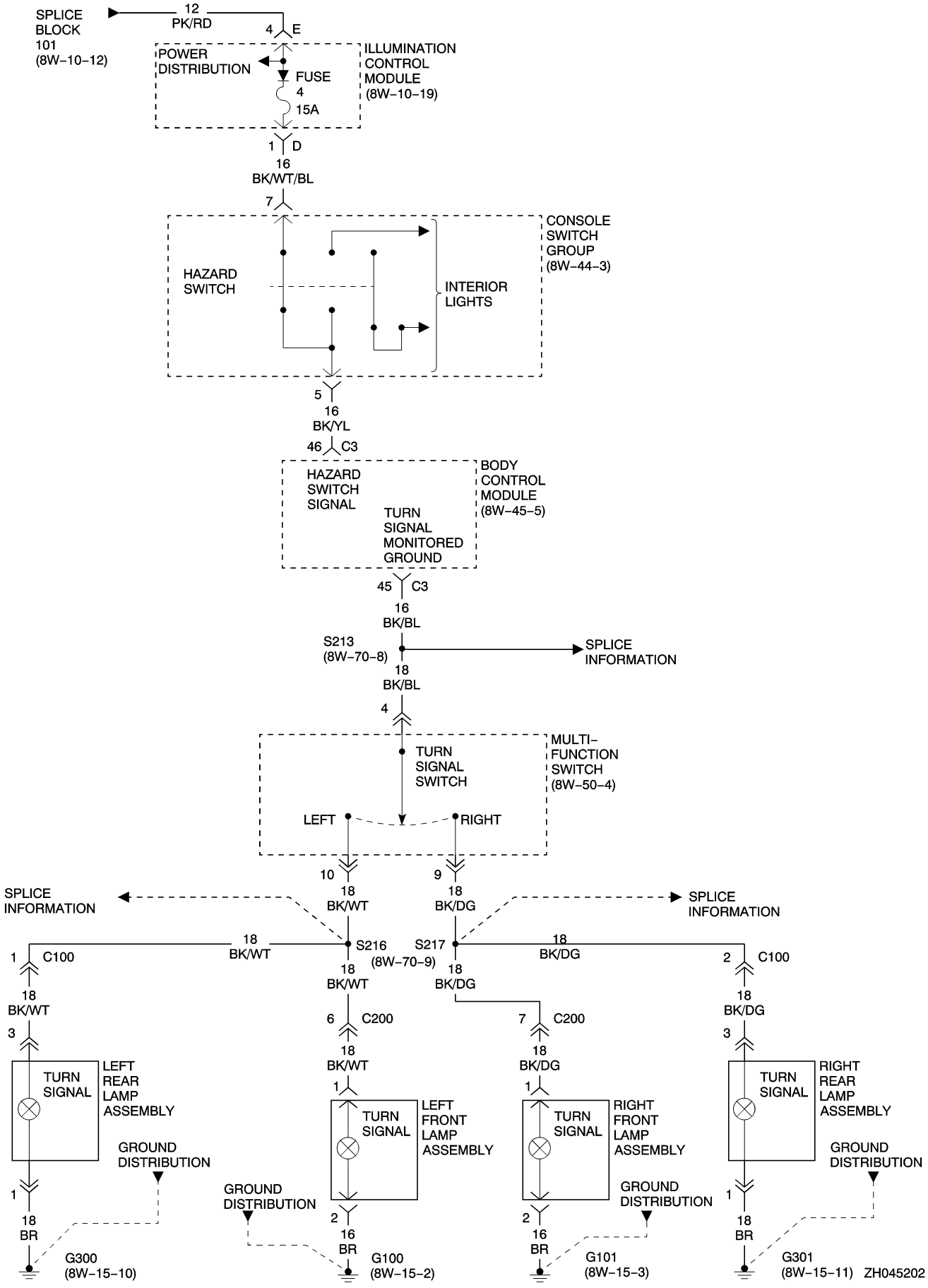
SPLICE BLOCK 101 (8W-10-12)
12 PK/RD
4 E
POWER DISTRIBUTION
FUSE 4 15A
ILLUMINATION CONTROL MODULE (8W-10-19)
1 D
16 BK/WT/BL
7
HAZARD SWITCH
INTERIOR LIGHTS
CONSOLE SWITCH GROUP (8W-44-3)
5
16 BK/YL
46 C3
HAZARD SWITCH SIGNAL
TURN SIGNAL MONITORED GROUND
BODY CONTROL MODULE (8W-45-5)
45 C3
16 BK/BL
S213 (8W-70-8)
SPLICE INFORMATION
18 BK/BL
4
TURN SIGNAL SWITCH
LEFT
RIGHT
MULTI-FUNCTION SWITCH (8W-50-4)
10
18 BK/WT
9
18 BK/DG
SPLICE INFORMATION
SPLICE INFORMATION
1 C100
18 BK/WT
18 BK/WT
S216 (8W-70-9)
S217
18 BK/DG
2 C100
18 BK/DG
18 BK/WT
18 BK/DG
3
6 C200
7 C200
3
TURN SIGNAL
LEFT REAR LAMP ASSEMBLY
18 BK/WT
18 BK/DG
TURN SIGNAL
RIGHT REAR LAMP ASSEMBLY
GROUND DISTRIBUTION
GROUND DISTRIBUTION
1
1
1
1
TURN SIGNAL
LEFT FRONT LAMP ASSEMBLY
TURN SIGNAL
RIGHT FRONT LAMP ASSEMBLY
GROUND DISTRIBUTION
GROUND DISTRIBUTION
18 BR
2
16 BR
2
16 BR
1
18 BR
G300 (8W-15-10)
G100 (8W-15-2)
G101 (8W-15-3)
G301 (8W-15-11)
ZH045202

8W-53 WIPERS

Component	Page
Body Control Module	8W-53-2
Fuse 4	8W-53-2
Fuse 32	8W-53-2
G101	8W-53-2
G204	8W-53-2
Multi-Function Switch	8W-53-2
Underhood Accessory Fuse Block	8W-53-2
Washer Pump Motor	8W-53-2
Wiper Motor	8W-53-2

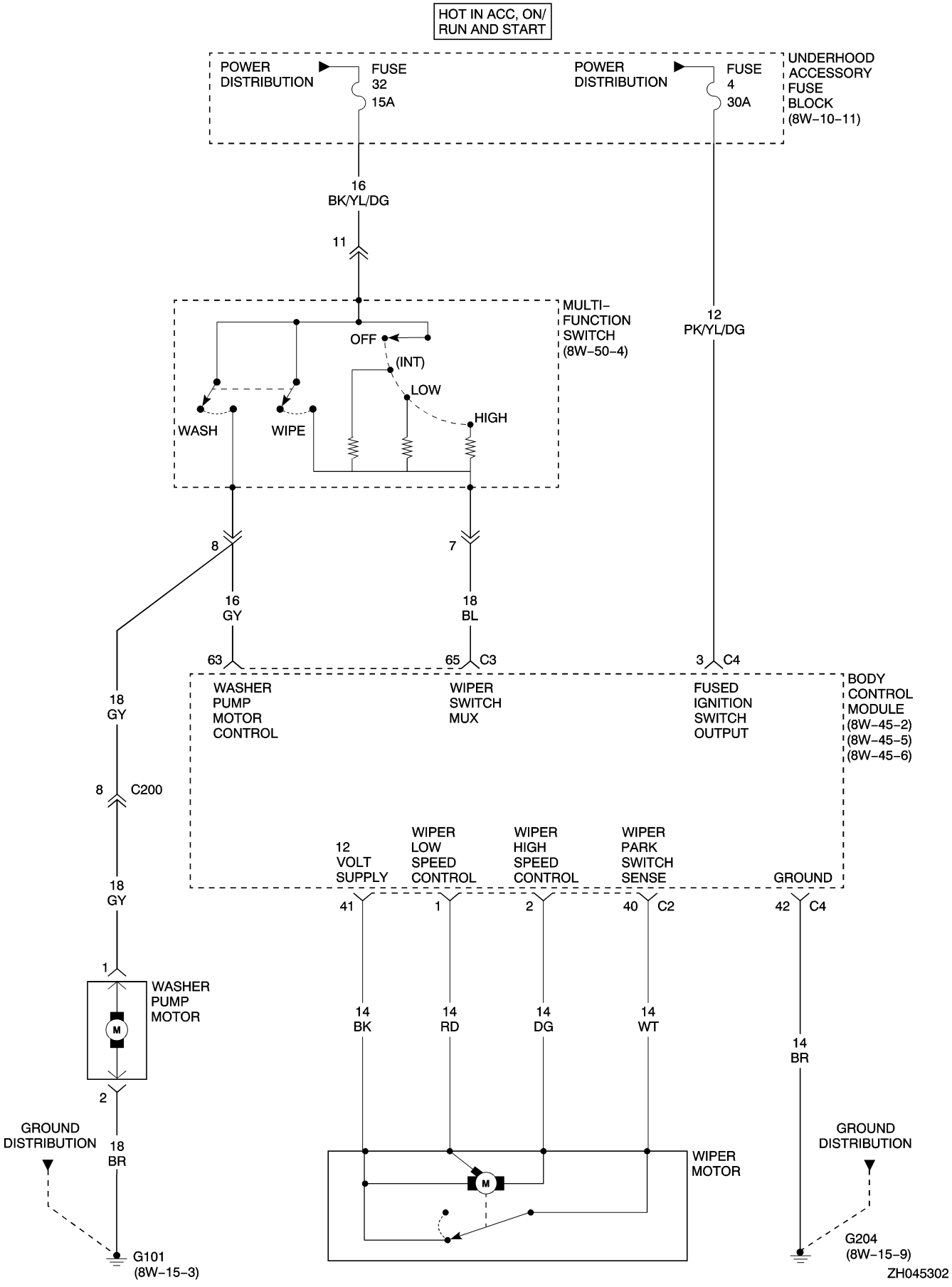
HOT IN ACC, ON/ RUN AND START
POWER DISTRIBUTION
FUSE 32 15A
POWER DISTRIBUTION
FUSE 4 30A
UNDERHOOD ACCESSORY FUSE BLOCK (8W–10–11)
16 BK/YL/DG
11
MULTI–FUNCTION SWITCH (8W–50–4)
OFF
(INT)
LOW
HIGH
WASH
WIPE
12 PK/YL/DG
8
7
16 GY
18 BL
63
65 C3
3 C4
WASHER PUMP MOTOR CONTROL
WIPER SWITCH MUX
FUSED IGNITION SWITCH OUTPUT
BODY CONTROL MODULE (8W–45–2) (8W–45–5) (8W–45–6)
18 GY
8 C200
18 GY
12 VOLT SUPPLY
WIPER LOW SPEED CONTROL
WIPER HIGH SPEED CONTROL
WIPER PARK SWITCH SENSE
GROUND
41
1
2
40 C2
42 C4
1
WASHER PUMP MOTOR
M
2
14 BK
14 RD
14 DG
14 WT
14 BR
GROUND DISTRIBUTION
18 BR
GROUND DISTRIBUTION
WIPER MOTOR
M
G101 (8W–15–3)
G204 (8W–15–9)
ZH045302

8W-55 REAR SPOILER

Component	Page
Body Control Module	8W-55-2
Fuse 20	8W-55-2
G300	8W-55-2
Rear Spoiler Limit Switch	8W-55-2
Rear Spoiler Motor	8W-55-2
Rear Spoiler Switch	8W-55-2
Underhood Accessory Fuse Block	8W-55-2

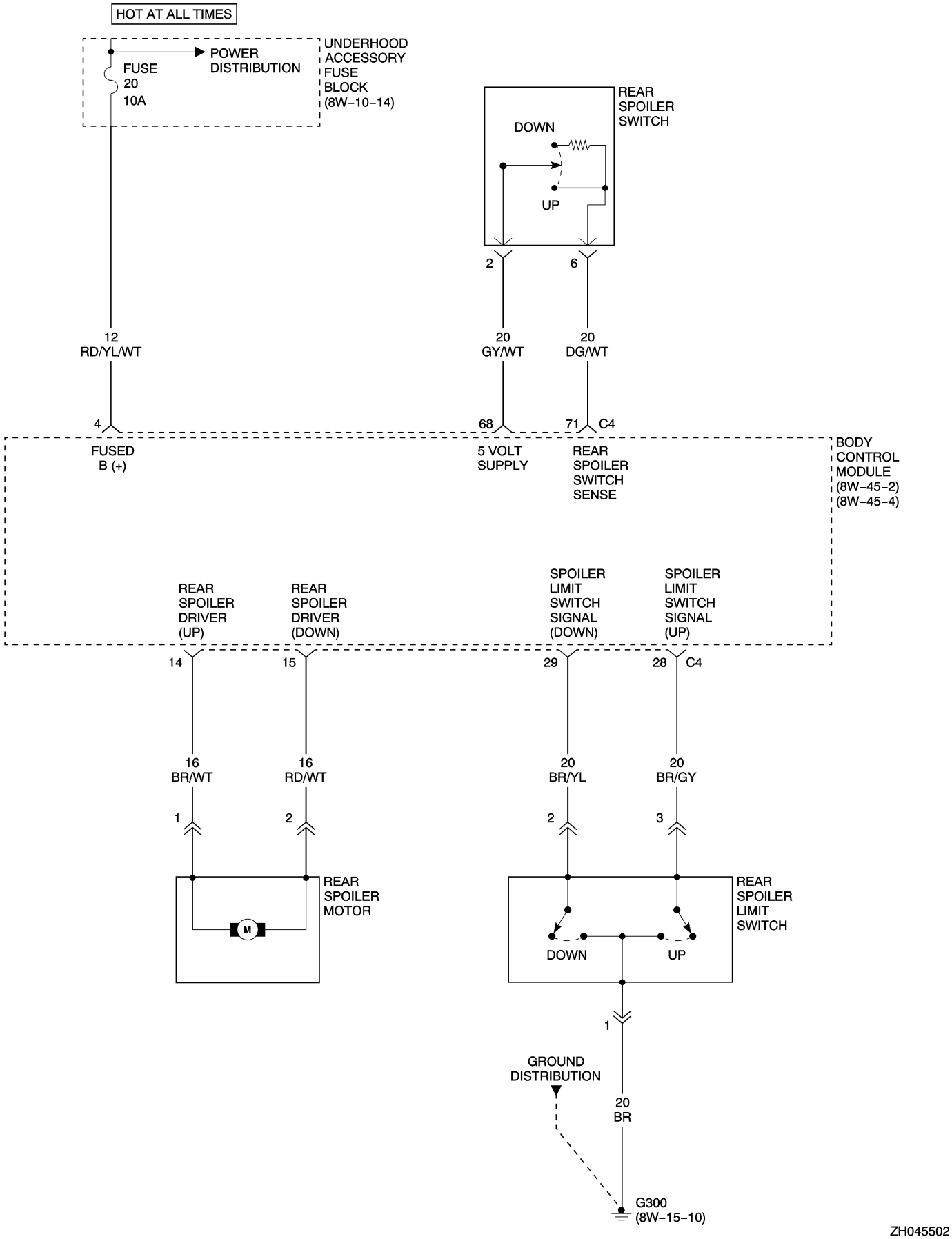
HOT AT ALL TIMES
POWER DISTRIBUTION
FUSE 20 10A
UNDERHOOD ACCESSORY FUSE BLOCK (8W-10-14)
REAR SPOILER SWITCH
DOWN
UP
2
6
12 RD/YL/WT
20 GY/WT
20 DG/WT
4
68
71
C4
FUSED B (+)
5 VOLT SUPPLY
REAR SPOILER SWITCH SENSE
BODY CONTROL MODULE (8W-45-2) (8W-45-4)
REAR SPOILER DRIVER (UP)
REAR SPOILER DRIVER (DOWN)
SPOILER LIMIT SWITCH SIGNAL (DOWN)
SPOILER LIMIT SWITCH SIGNAL (UP)
14
15
29
28
C4
16 BR/WT
16 RD/WT
20 BR/YL
20 BR/GY
1
2
2
3
REAR SPOILER MOTOR
M
REAR SPOILER LIMIT SWITCH
DOWN
UP
1
GROUND DISTRIBUTION
20 BR
G300 (8W-15-10)

ZH045502

8W-60 POWER WINDOWS

Component	Page	Component	Page
Body Control Module	8W-60-2	Left Front Power Window Switch	8W-60-2
Fuse 19	8W-60-2	Right Front Power Window Motor	8W-60-2
G204	8W-60-2	Right Front Power Window Switch	8W-60-2
Left Front Power Window Motor	8W-60-2	Underhood Accessory Fuse Block	8W-60-2

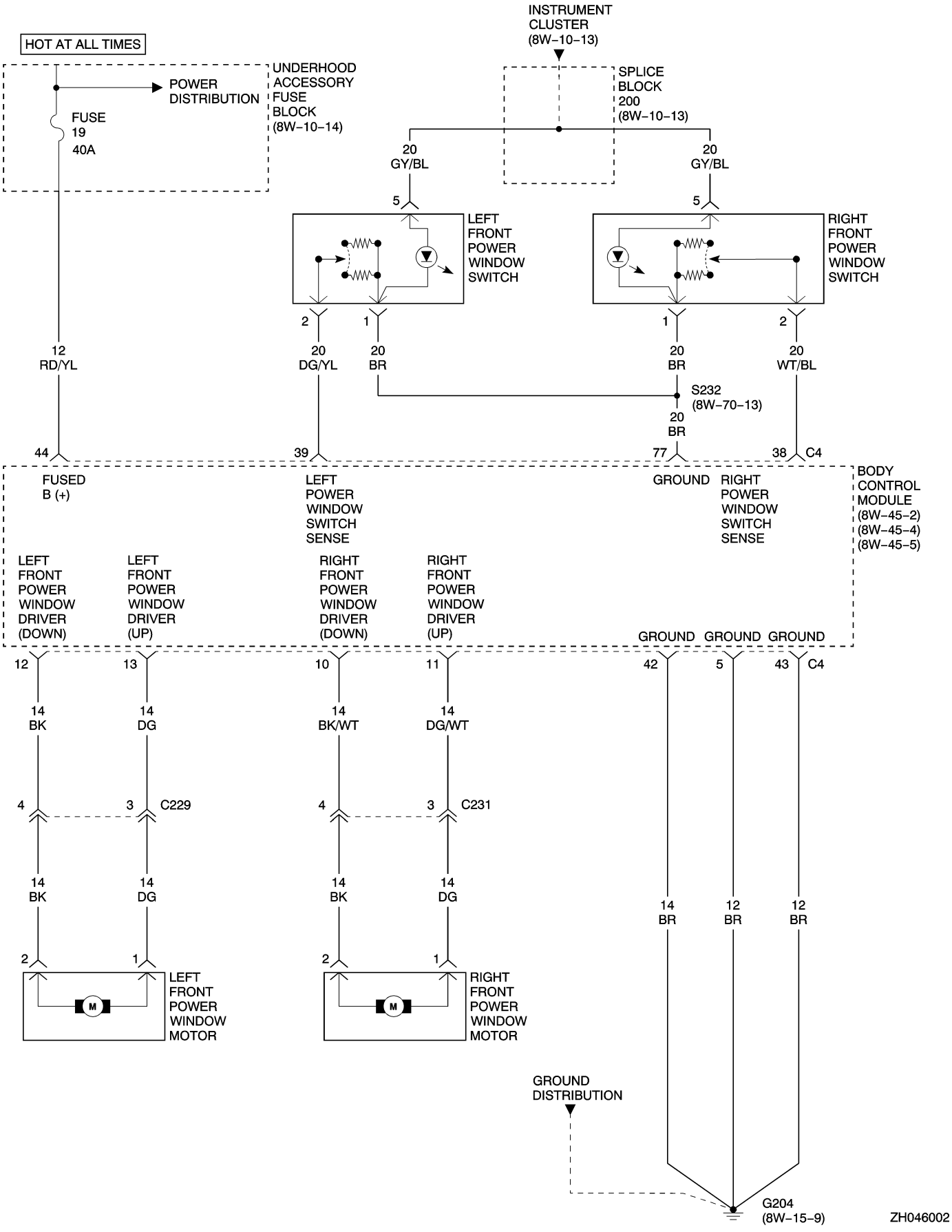
HOT AT ALL TIMES
POWER DISTRIBUTION
FUSE 19 40A
UNDERHOOD ACCESSORY FUSE BLOCK (8W–10–14)
INSTRUMENT CLUSTER (8W–10–13)
SPLICE BLOCK 200 (8W–10–13)
20 GY/BL
20 GY/BL
5
5
LEFT FRONT POWER WINDOW SWITCH
RIGHT FRONT POWER WINDOW SWITCH
2
1
1
2
12 RD/YL
20 DG/YL
20 BR
20 BR
20 WT/BL
S232 (8W–70–13)
20 BR
44
39
77
38
C4
FUSED B (+)
LEFT POWER WINDOW SWITCH SENSE
GROUND
RIGHT POWER WINDOW SWITCH SENSE
BODY CONTROL MODULE (8W–45–2) (8W–45–4) (8W–45–5)
LEFT FRONT POWER WINDOW DRIVER (DOWN)
LEFT FRONT POWER WINDOW DRIVER (UP)
RIGHT FRONT POWER WINDOW DRIVER (DOWN)
RIGHT FRONT POWER WINDOW DRIVER (UP)
GROUND
GROUND
GROUND
12
13
10
11
42
5
43
C4
14 BK
14 DG
14 BK/WT
14 DG/WT
4
3
C229
4
3
C231
14 BK
14 DG
14 BK
14 DG
14 BR
12 BR
12 BR
2
1
2
1
M
LEFT FRONT POWER WINDOW MOTOR
M
RIGHT FRONT POWER WINDOW MOTOR
GROUND DISTRIBUTION
G204 (8W–15–9)
ZH046002

8W-61 POWER DOOR LOCKS

Component	Page
Body Control Module	8W-61-2, 3
Central Locking Pump/Security System Module	8W-61-2
Console Switch Group	8W-61-3
Driver Cylinder Lock Switch	8W-61-3
Driver Door Lock Actuator	8W-61-2
Fuel Door Lock Actuator	8W-61-2
Fuse 25	8W-61-2
Fuse 26	8W-61-2
G105	8W-61-2
G200	8W-61-3
G201	8W-61-3
G204	8W-61-2
G301	8W-61-2
Liftgate Lock Actuator	8W-61-2
Liftgate Lock Switch	8W-61-2
Passenger Door Lock Actuator	8W-61-2
Sentry Key Remote Entry Module	8W-61-3
Underhood Accessory Fuse Block	8W-61-2

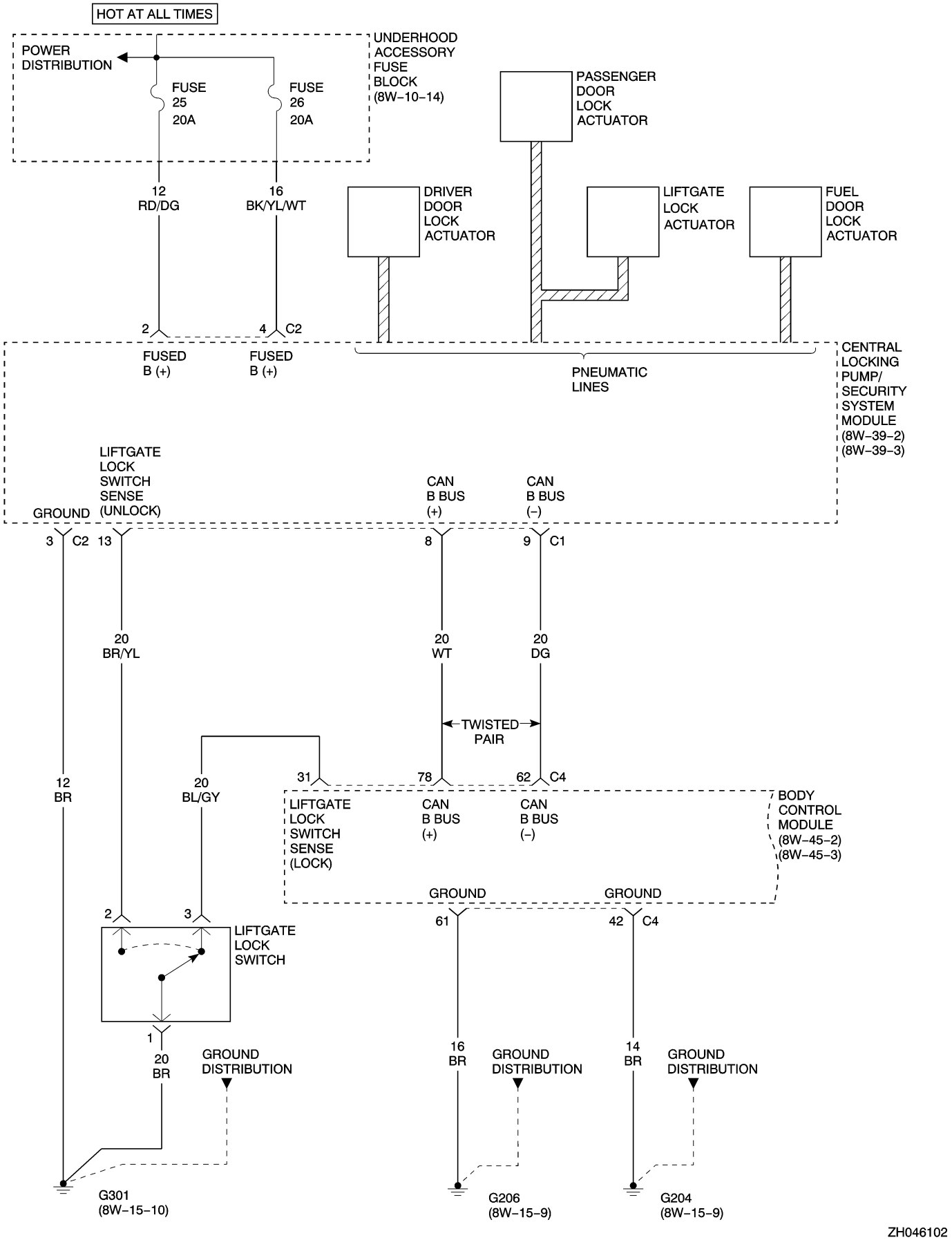
HOT AT ALL TIMES
POWER DISTRIBUTION
FUSE 25 20A
FUSE 26 20A
UNDERHOOD ACCESSORY FUSE BLOCK (8W-10-14)
PASSENGER DOOR LOCK ACTUATOR
DRIVER DOOR LOCK ACTUATOR
LIFTGATE LOCK ACTUATOR
FUEL DOOR LOCK ACTUATOR
12 RD/DG
16 BK/YL/WT
2
4 C2
FUSED B (+)
FUSED B (+)
PNEUMATIC LINES
CENTRAL LOCKING PUMP/ SECURITY SYSTEM MODULE (8W-39-2) (8W-39-3)
GROUND
LIFTGATE LOCK SWITCH SENSE (UNLOCK)
CAN B BUS (+)
CAN B BUS (-)
3 C2
13
8
9 C1
20 BR/YL
20 WT
20 DG
TWISTED PAIR
12 BR
20 BL/GY
31
78
62 C4
LIFTGATE LOCK SWITCH SENSE (LOCK)
CAN B BUS (+)
CAN B BUS (-)
BODY CONTROL MODULE (8W-45-2) (8W-45-3)
GROUND
GROUND
2
3
61
42 C4
LIFTGATE LOCK SWITCH
1
20 BR
GROUND DISTRIBUTION
16 BR
GROUND DISTRIBUTION
14 BR
GROUND DISTRIBUTION
G301 (8W-15-10)
G206 (8W-15-9)
G204 (8W-15-9)

ZH046102

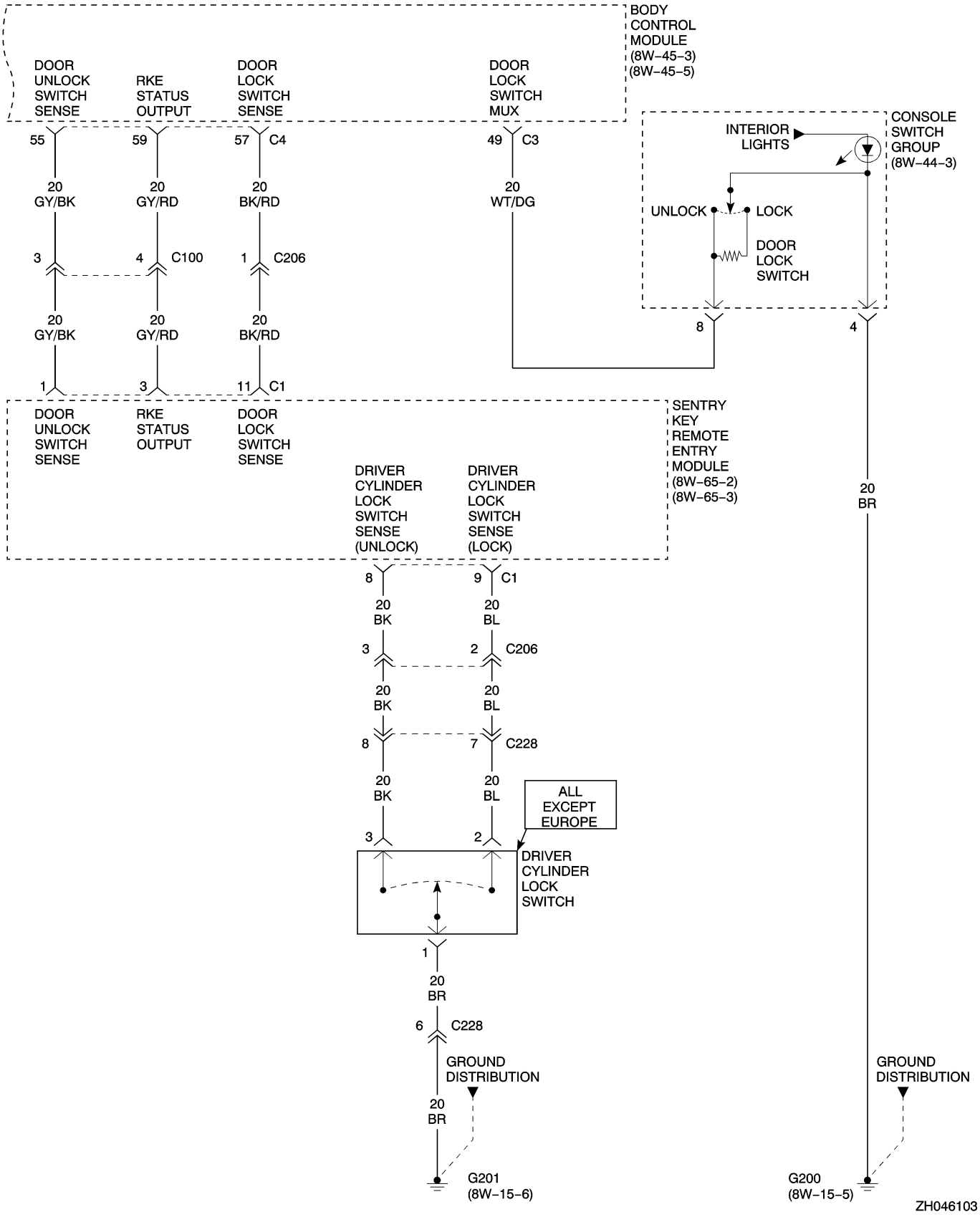
BODY CONTROL MODULE (8W-45-3) (8W-45-5)
DOOR UNLOCK SWITCH SENSE
RKE STATUS OUTPUT
DOOR LOCK SWITCH SENSE
DOOR LOCK SWITCH MUX
55
59
57 C4
49 C3
20 GY/BK
20 GY/RD
20 BK/RD
20 WT/DG
3
4 C100
1 C206
20 GY/BK
20 GY/RD
20 BK/RD
1
3
11 C1
CONSOLE SWITCH GROUP (8W-44-3)
INTERIOR LIGHTS
UNLOCK
LOCK
DOOR LOCK SWITCH
8
4
SENTRY KEY REMOTE ENTRY MODULE (8W-65-2) (8W-65-3)
DOOR UNLOCK SWITCH SENSE
RKE STATUS OUTPUT
DOOR LOCK SWITCH SENSE
DRIVER CYLINDER LOCK SWITCH SENSE (UNLOCK)
DRIVER CYLINDER LOCK SWITCH SENSE (LOCK)
20 BR
8
9 C1
20 BK
20 BL
3
2 C206
20 BK
20 BL
8
7 C228
20 BK
20 BL
ALL EXCEPT EUROPE
3
2
DRIVER CYLINDER LOCK SWITCH
1
20 BR
6 C228
GROUND DISTRIBUTION
20 BR
G201 (8W-15-6)
GROUND DISTRIBUTION
G200 (8W-15-5)
ZH046103

8W-62 POWER MIRRORS

Component	Page
Automatic Day/Night Mirror	8W-62-3
Backup Lamp Switch	8W-62-3
Fuse 6	8W-62-2, 4
Fuse 7	8W-62-3
G201	8W-62-2, 3, 4
G203	8W-62-2, 4
G204	8W-62-2, 4
Illumination Control Module	8W-62-3
Left Power Mirror	8W-62-2, 4
Power Mirror Switch	8W-62-2, 4
Powertrain Control Module	8W-62-3
Right Power Mirror	8W-62-2, 4
Shift Lever Assembly	8W-62-3
Underhood Accessory Fuse Block	8W-62-2, 3, 4

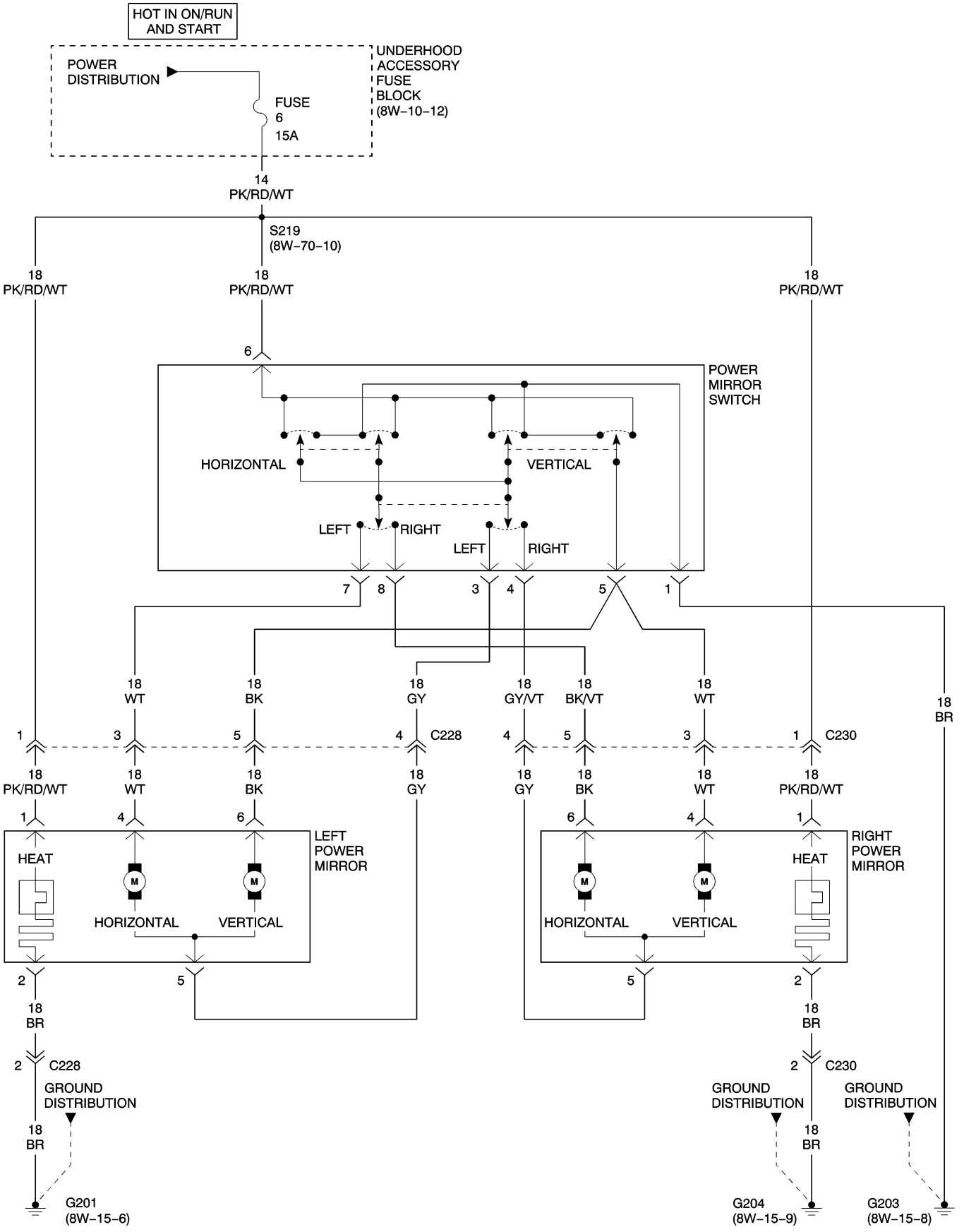
HOT IN ON/RUN AND START
POWER DISTRIBUTION
FUSE 6 15A
UNDERHOOD ACCESSORY FUSE BLOCK (8W-10-12)
14 PK/RD/WT
S219 (8W-70-10)
18 PK/RD/WT
18 PK/RD/WT
18 PK/RD/WT
6
POWER MIRROR SWITCH
HORIZONTAL
VERTICAL
LEFT
RIGHT
LEFT
RIGHT
7
8
3
4
5
1
18 WT
18 BK
18 GY
18 GY/VT
18 BK/VT
18 WT
18 BR
1
3
5
4
C228
4
5
3
1
C230
18 PK/RD/WT
18 WT
18 BK
18 GY
18 GY
18 BK
18 WT
18 PK/RD/WT
1
4
6
6
4
1
LEFT POWER MIRROR
HEAT
M
M
HORIZONTAL
VERTICAL
RIGHT POWER MIRROR
HEAT
M
M
HORIZONTAL
VERTICAL
2
5
5
2
18 BR
18 BR
2
C228
2
C230
GROUND DISTRIBUTION
GROUND DISTRIBUTION
GROUND DISTRIBUTION
18 BR
18 BR
G201 (8W-15-6)
G204 (8W-15-9)
G203 (8W-15-8)

ZH046202

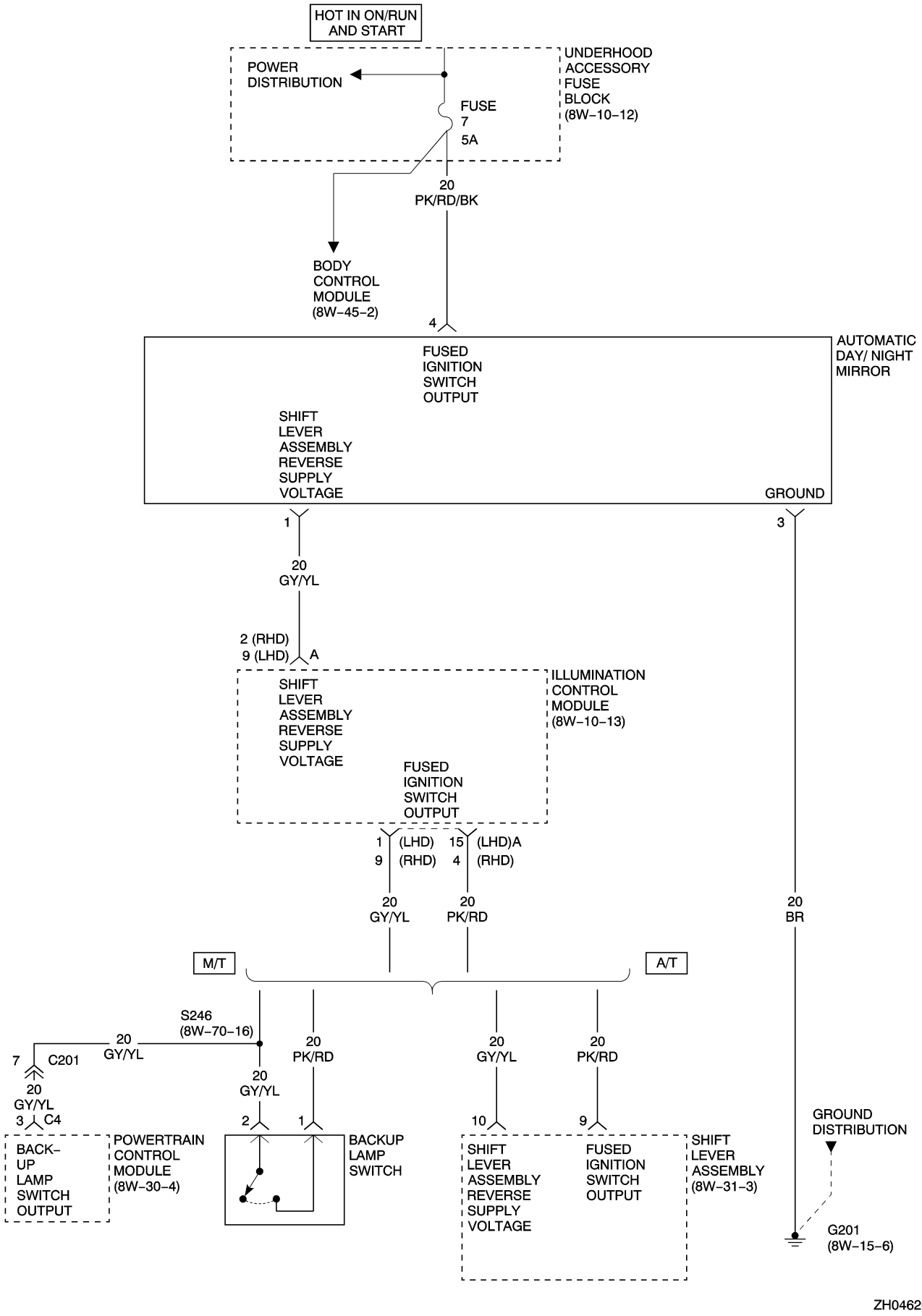
HOT IN ON/RUN AND START
POWER DISTRIBUTION
UNDERHOOD ACCESSORY FUSE BLOCK (8W–10–12)
FUSE 7 5A
20 PK/RD/BK
BODY CONTROL MODULE (8W–45–2)
4
AUTOMATIC DAY/ NIGHT MIRROR
FUSED IGNITION SWITCH OUTPUT
SHIFT LEVER ASSEMBLY REVERSE SUPPLY VOLTAGE
GROUND
1
3
20 GY/YL
2 (RHD) 9 (LHD) A
ILLUMINATION CONTROL MODULE (8W–10–13)
SHIFT LEVER ASSEMBLY REVERSE SUPPLY VOLTAGE
FUSED IGNITION SWITCH OUTPUT
1 (LHD) 9 (RHD)
15 (LHD)A 4 (RHD)
20 GY/YL
20 PK/RD
20 BR
M/T
A/T
S246 (8W–70–16)
20 GY/YL
7 C201
20 GY/YL
3 C4
20 PK/RD
20 GY/YL
2
1
BACK–UP LAMP SWITCH OUTPUT
POWERTRAIN CONTROL MODULE (8W–30–4)
BACKUP LAMP SWITCH
20 GY/YL
20 PK/RD
10
9
SHIFT LEVER ASSEMBLY REVERSE SUPPLY VOLTAGE
FUSED IGNITION SWITCH OUTPUT
SHIFT LEVER ASSEMBLY (8W–31–3)
GROUND DISTRIBUTION
G201 (8W–15–6)

ZH046203

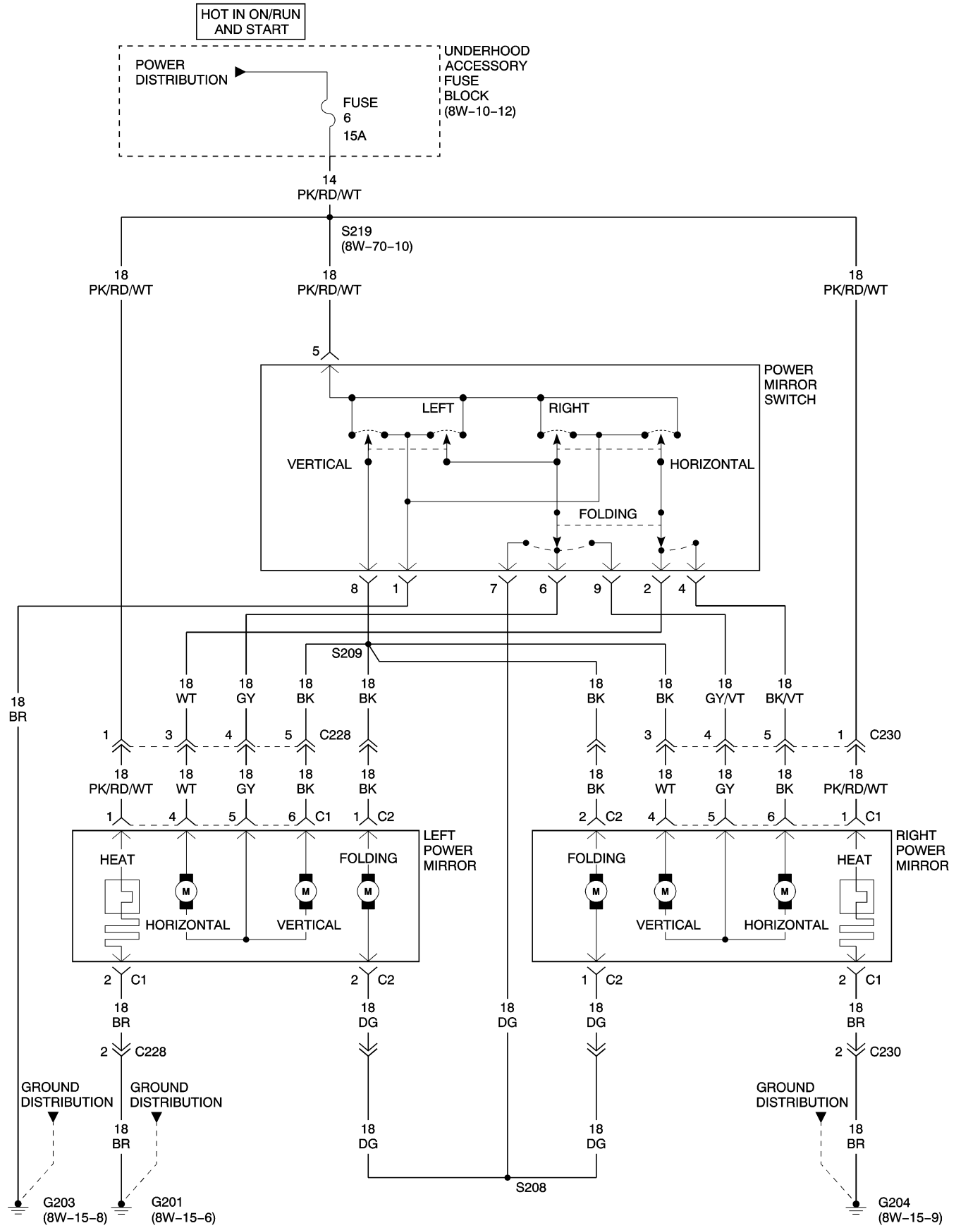
HOT IN ON/RUN AND START
POWER DISTRIBUTION
FUSE 6 15A
UNDERHOOD ACCESSORY FUSE BLOCK (8W-10-12)
14 PK/RD/WT
S219 (8W-70-10)
18 PK/RD/WT
18 PK/RD/WT
18 PK/RD/WT
5
POWER MIRROR SWITCH
LEFT
RIGHT
VERTICAL
HORIZONTAL
FOLDING
8 1 7 6 9 2 4
S209
18 BR
18 WT
18 GY
18 BK
18 BK
18 BK
18 BK
18 GY/VT
18 BK/VT
1 3 4 5 C228
3 4 5 1 C230
18 PK/RD/WT
18 WT
18 GY
18 BK
18 BK
18 BK
18 WT
18 GY
18 BK
18 PK/RD/WT
1 4 5 6 C1 1 C2
2 C2 4 5 6 1 C1
LEFT POWER MIRROR
HEAT
FOLDING
HORIZONTAL
VERTICAL
RIGHT POWER MIRROR
FOLDING
HEAT
VERTICAL
HORIZONTAL
2 C1
2 C2
1 C2
2 C1
18 BR
18 DG
18 DG
18 DG
18 BR
2 C228
2 C230
GROUND DISTRIBUTION
GROUND DISTRIBUTION
GROUND DISTRIBUTION
18 BR
18 DG
18 DG
18 BR
S208
G203 (8W-15-8)
G201 (8W-15-6)
G204 (8W-15-9)

ZH046204

8W-63 POWER SEATS

Component	Page
Driver Power Seat Front Riser Motor	8W-63-3
Driver Power Seat Horizontal Motor	8W-63-3
Driver Power Seat Rear Riser Motor	8W-63-3
Driver Power Seat Recliner Motor	8W-63-3
Driver Power Seat Switch	8W-63-3
Engine Fuse Block	8W-63-2
Fuse 1	8W-63-5
Fuse 21	8W-63-3
Fuse 22	8W-63-3
Fuse 24	8W-63-5
Fuse 4	8W-63-2
G201	8W-63-2, 3, 4
G203	8W-63-5
G204	8W-63-2
Heated Seat Module	8W-63-5
Ignition Switch	8W-63-2
Left Door Ajar Switch	8W-63-2
Left Seat	8W-63-5
Passenger Power Seat Horizontal Motor	8W-63-4
Passenger Power Seat Recliner Motor	8W-63-4
Passenger Power Seat Switch	8W-63-4
Power Seat Relay	8W-63-2
Right Door Ajar Switch	8W-63-2
Right Seat	8W-63-5
Splice Block 100	8W-63-2
Splice Block 102	8W-63-2
Underhood Accessory Fuse Block	8W-63-3, 5

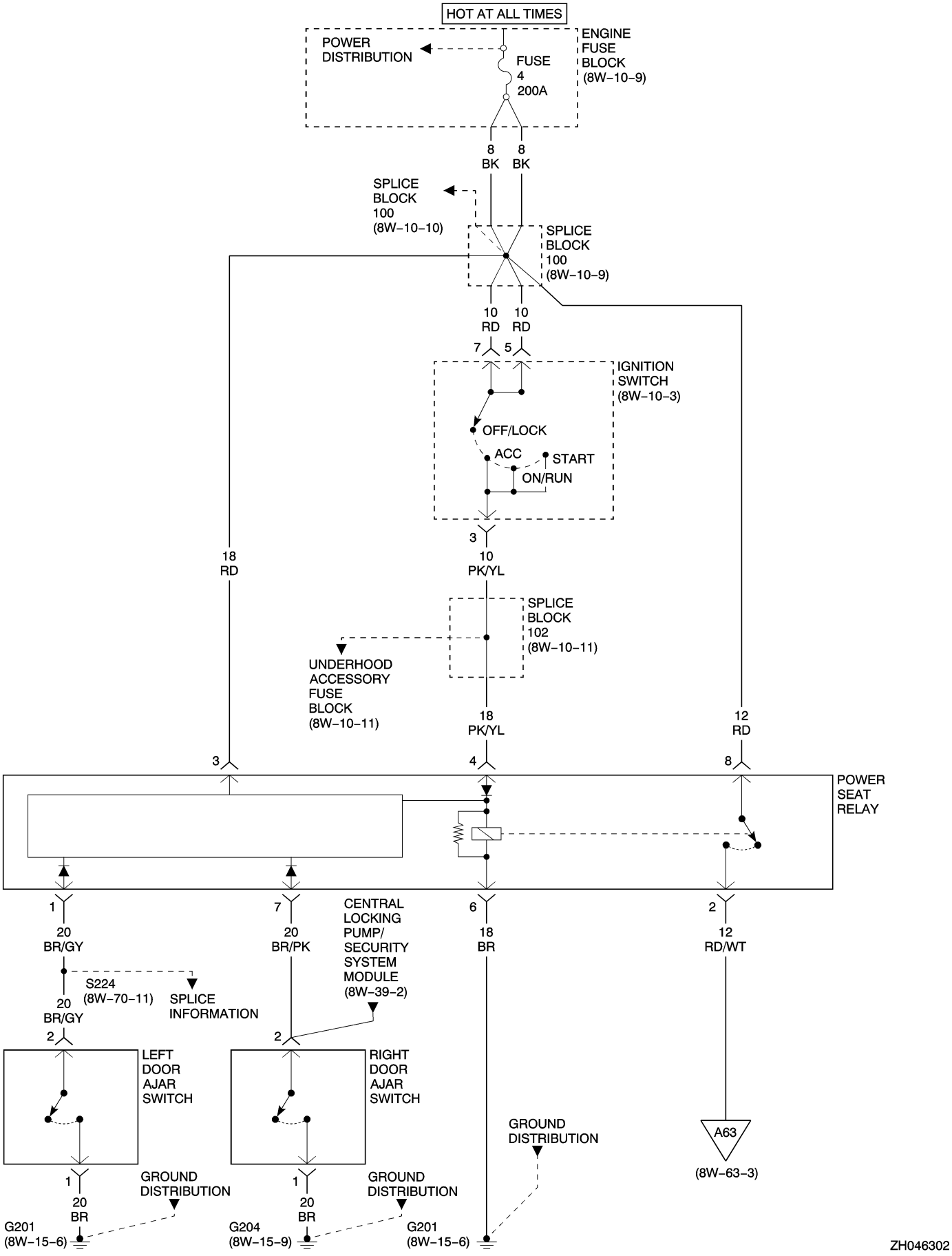
HOT AT ALL TIMES
POWER DISTRIBUTION
FUSE 4 200A
ENGINE FUSE BLOCK (8W-10-9)
8 BK
8 BK
SPLICE BLOCK 100 (8W-10-10)
SPLICE BLOCK 100 (8W-10-9)
10 RD
10 RD
7
5
IGNITION SWITCH (8W-10-3)
OFF/LOCK
ACC
START
ON/RUN
3
10 PK/YL
18 RD
SPLICE BLOCK 102 (8W-10-11)
UNDERHOOD ACCESSORY FUSE BLOCK (8W-10-11)
18 PK/YL
12 RD
3
4
8
POWER SEAT RELAY
1
20 BR/GY
7
20 BR/PK
CENTRAL LOCKING PUMP/ SECURITY SYSTEM MODULE (8W-39-2)
6
18 BR
2
12 RD/WT
20 BR/GY
S224 (8W-70-11)
SPLICE INFORMATION
2
2
LEFT DOOR AJAR SWITCH
RIGHT DOOR AJAR SWITCH
GROUND DISTRIBUTION
A63
(8W-63-3)
1
20 BR
GROUND DISTRIBUTION
1
20 BR
GROUND DISTRIBUTION
G201 (8W-15-6)
G204 (8W-15-9)
G201 (8W-15-6)
ZH046302

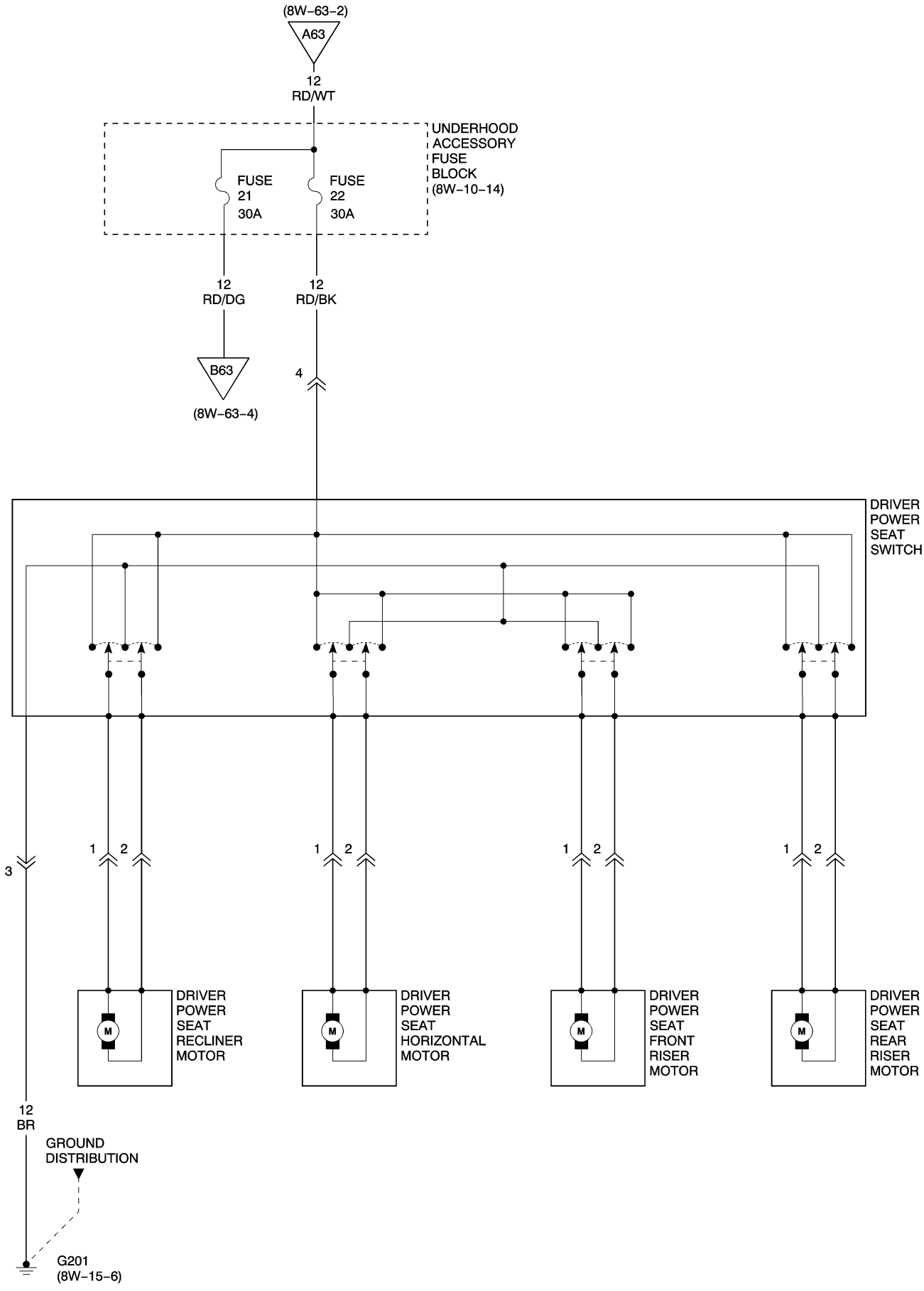
(8W–63–2)
A63
12
RD/WT
UNDERHOOD
ACCESSORY
FUSE
BLOCK
(8W–10–14)
FUSE
21
30A
FUSE
22
30A
12
RD/DG
12
RD/BK
B63
(8W–63–4)
4
DRIVER
POWER
SEAT
SWITCH
3
1
2
1
2
1
2
1
2
DRIVER
POWER
SEAT
RECLINER
MOTOR
DRIVER
POWER
SEAT
HORIZONTAL
MOTOR
DRIVER
POWER
SEAT
FRONT
RISER
MOTOR
DRIVER
POWER
SEAT
REAR
RISER
MOTOR
M
12
BR
GROUND
DISTRIBUTION
G201
(8W–15–6)

ZH046303

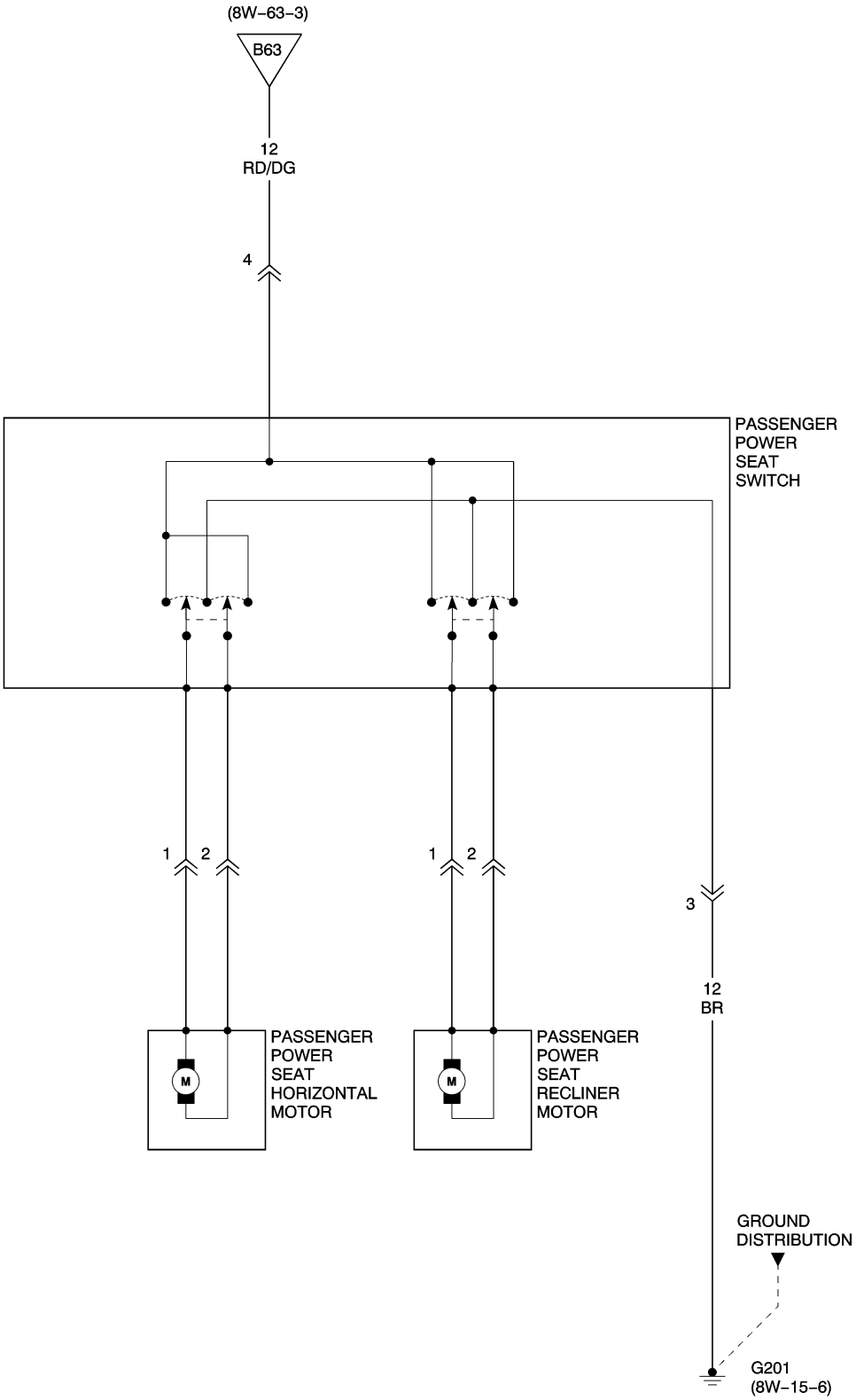
(8W–63–3)
B63
12
RD/DG
4
PASSENGER
POWER
SEAT
SWITCH
1
2
1
2
3
12
BR
PASSENGER
POWER
SEAT
HORIZONTAL
MOTOR
M
PASSENGER
POWER
SEAT
RECLINER
MOTOR
M
GROUND
DISTRIBUTION
G201
(8W–15–6)

ZH046304

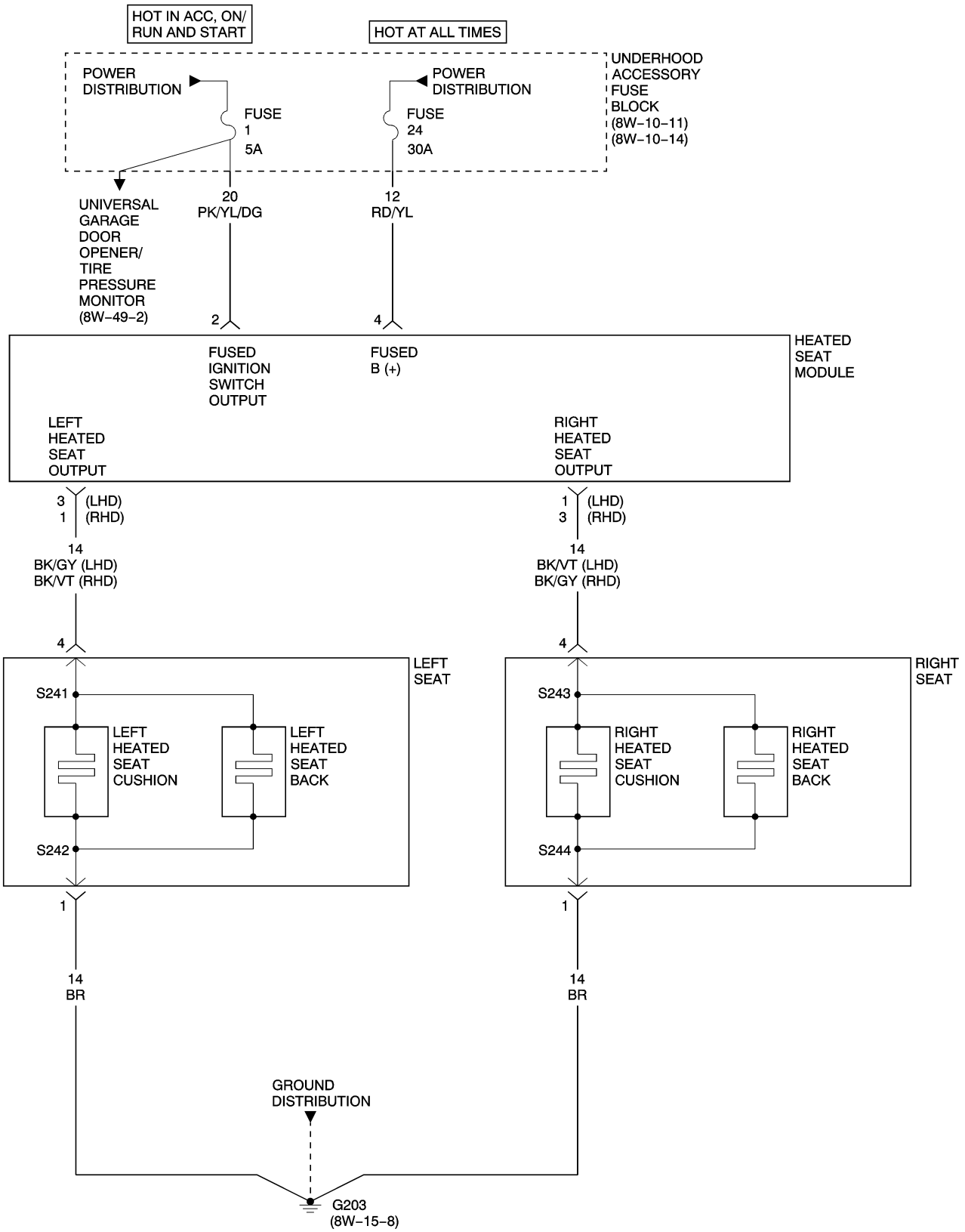
HOT IN ACC, ON/ RUN AND START
HOT AT ALL TIMES
POWER DISTRIBUTION
FUSE 1 5A
POWER DISTRIBUTION
FUSE 24 30A
UNDERHOOD ACCESSORY FUSE BLOCK (8W-10-11) (8W-10-14)
UNIVERSAL GARAGE DOOR OPENER/ TIRE PRESSURE MONITOR (8W-49-2)
20 PK/YL/DG
12 RD/YL
2
4
FUSED IGNITION SWITCH OUTPUT
FUSED B (+)
HEATED SEAT MODULE
LEFT HEATED SEAT OUTPUT
RIGHT HEATED SEAT OUTPUT
3 1 (LHD) (RHD)
1 3 (LHD) (RHD)
14 BK/GY (LHD) BK/VT (RHD)
14 BK/VT (LHD) BK/GY (RHD)
4
4
LEFT SEAT
RIGHT SEAT
S241
S242
S243
S244
LEFT HEATED SEAT CUSHION
LEFT HEATED SEAT BACK
RIGHT HEATED SEAT CUSHION
RIGHT HEATED SEAT BACK
1
1
14 BR
14 BR
GROUND DISTRIBUTION
G203 (8W-15-8)

ZH046305

8W-65 REMOTE KEYLESS ENTRY

Component	Page
Body Control Module	8W-65-2, 3
Central Locking Pump/Security System Module	8W-65-3, 4
Data Link Connector	8W-65-2
Driver Cylinder Lock Switch	8W-65-3
Fuse 35	8W-65-2
Fuse 37	8W-65-2
G200	8W-65-3
G201	8W-65-3, 4
G204	8W-65-4
G301	8W-65-3
Instrument Cluster	8W-65-4
Left Door Ajar Switch	8W-65-4
Liftgate Lock Switch	8W-65-3
Remote Keyless Entry Antenna	8W-65-3
Remote Keyless Entry Relay	8W-65-2
Right Door Ajar Switch	8W-65-4
Sentry Key Antenna Ring	8W-65-3
Sentry Key Remote Entry Module	8W-65-2, 3
Underhood Accessory Fuse Block	8W-65-2

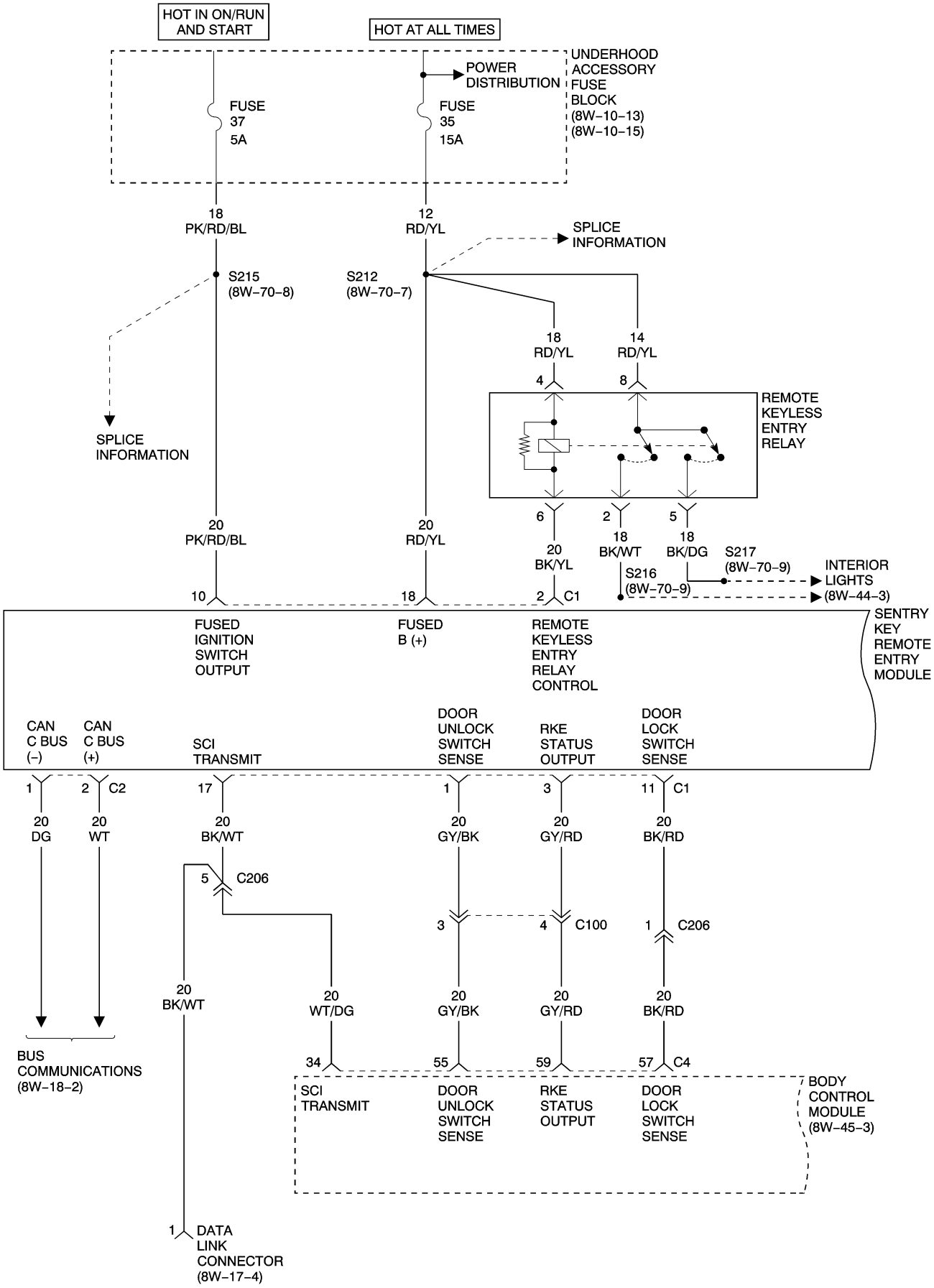
HOT IN ON/RUN AND START
HOT AT ALL TIMES
UNDERHOOD ACCESSORY FUSE BLOCK (8W–10–13) (8W–10–15)
POWER DISTRIBUTION
FUSE 37 5A
FUSE 35 15A
18 PK/RD/BL
12 RD/YL
SPLICE INFORMATION
S215 (8W–70–8)
S212 (8W–70–7)
SPLICE INFORMATION
18 RD/YL
14 RD/YL
4
8
REMOTE KEYLESS ENTRY RELAY
6
2
5
20 PK/RD/BL
20 RD/YL
20 BK/YL
18 BK/WT
18 BK/DG
S217 (8W–70–9)
INTERIOR LIGHTS (8W–44–3)
S216 (8W–70–9)
10
18
2 C1
FUSED IGNITION SWITCH OUTPUT
FUSED B (+)
REMOTE KEYLESS ENTRY RELAY CONTROL
SENTRY KEY REMOTE ENTRY MODULE
CAN C BUS (–)
CAN C BUS (+)
SCI TRANSMIT
DOOR UNLOCK SWITCH SENSE
RKE STATUS OUTPUT
DOOR LOCK SWITCH SENSE
1
2 C2
17
1
3
11 C1
20 DG
20 WT
20 BK/WT
20 GY/BK
20 GY/RD
20 BK/RD
5 C206
3
4 C100
1 C206
20 BK/WT
20 WT/DG
20 GY/BK
20 GY/RD
20 BK/RD
34
55
59
57 C4
BUS COMMUNICATIONS (8W–18–2)
SCI TRANSMIT
DOOR UNLOCK SWITCH SENSE
RKE STATUS OUTPUT
DOOR LOCK SWITCH SENSE
BODY CONTROL MODULE (8W–45–3)
1
DATA LINK CONNECTOR (8W–17–4)

ZH046502

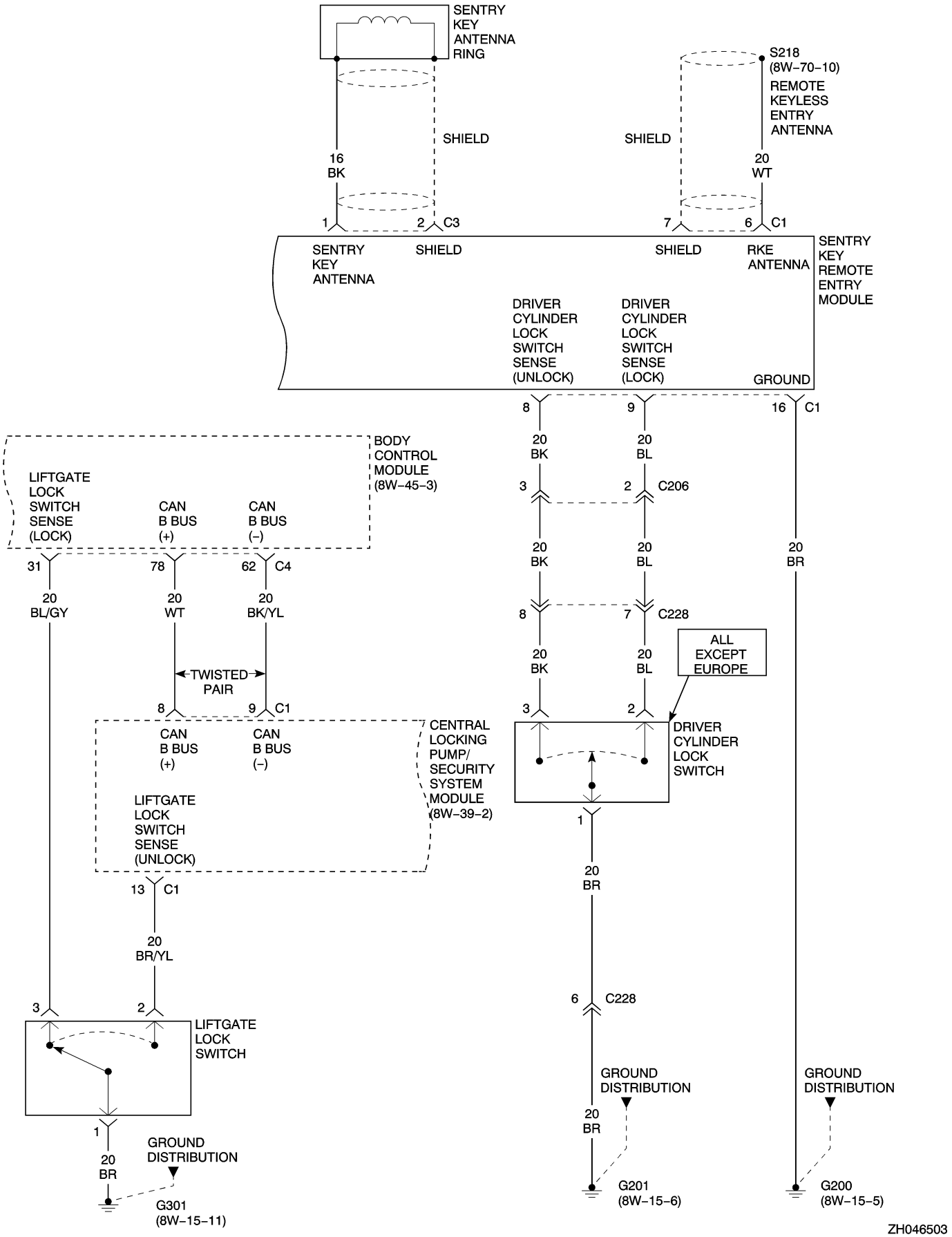
SENTRY KEY ANTENNA RING
SHIELD
16 BK
1
2 C3
S218 (8W–70–10)
REMOTE KEYLESS ENTRY ANTENNA
SHIELD
20 WT
7
6 C1
SENTRY KEY ANTENNA
SHIELD
SHIELD
RKE ANTENNA
SENTRY KEY REMOTE ENTRY MODULE
DRIVER CYLINDER LOCK SWITCH SENSE (UNLOCK)
DRIVER CYLINDER LOCK SWITCH SENSE (LOCK)
GROUND
8
9
16 C1
BODY CONTROL MODULE (8W–45–3)
LIFTGATE LOCK SWITCH SENSE (LOCK)
CAN B BUS (+)
CAN B BUS (–)
31
78
62 C4
20 BL/GY
20 WT
20 BK/YL
TWISTED PAIR
8
9 C1
20 BK
20 BL
3
2 C206
20 BK
20 BL
8
7 C228
20 BK
20 BL
3
2
ALL EXCEPT EUROPE
20 BR
CENTRAL LOCKING PUMP/ SECURITY SYSTEM MODULE (8W–39–2)
CAN B BUS (+)
CAN B BUS (–)
LIFTGATE LOCK SWITCH SENSE (UNLOCK)
13 C1
20 BR/YL
DRIVER CYLINDER LOCK SWITCH
1
20 BR
6 C228
3
2
LIFTGATE LOCK SWITCH
1
20 BR
GROUND DISTRIBUTION
G301 (8W–15–11)
GROUND DISTRIBUTION
20 BR
G201 (8W–15–6)
GROUND DISTRIBUTION
G200 (8W–15–5)

ZH046503

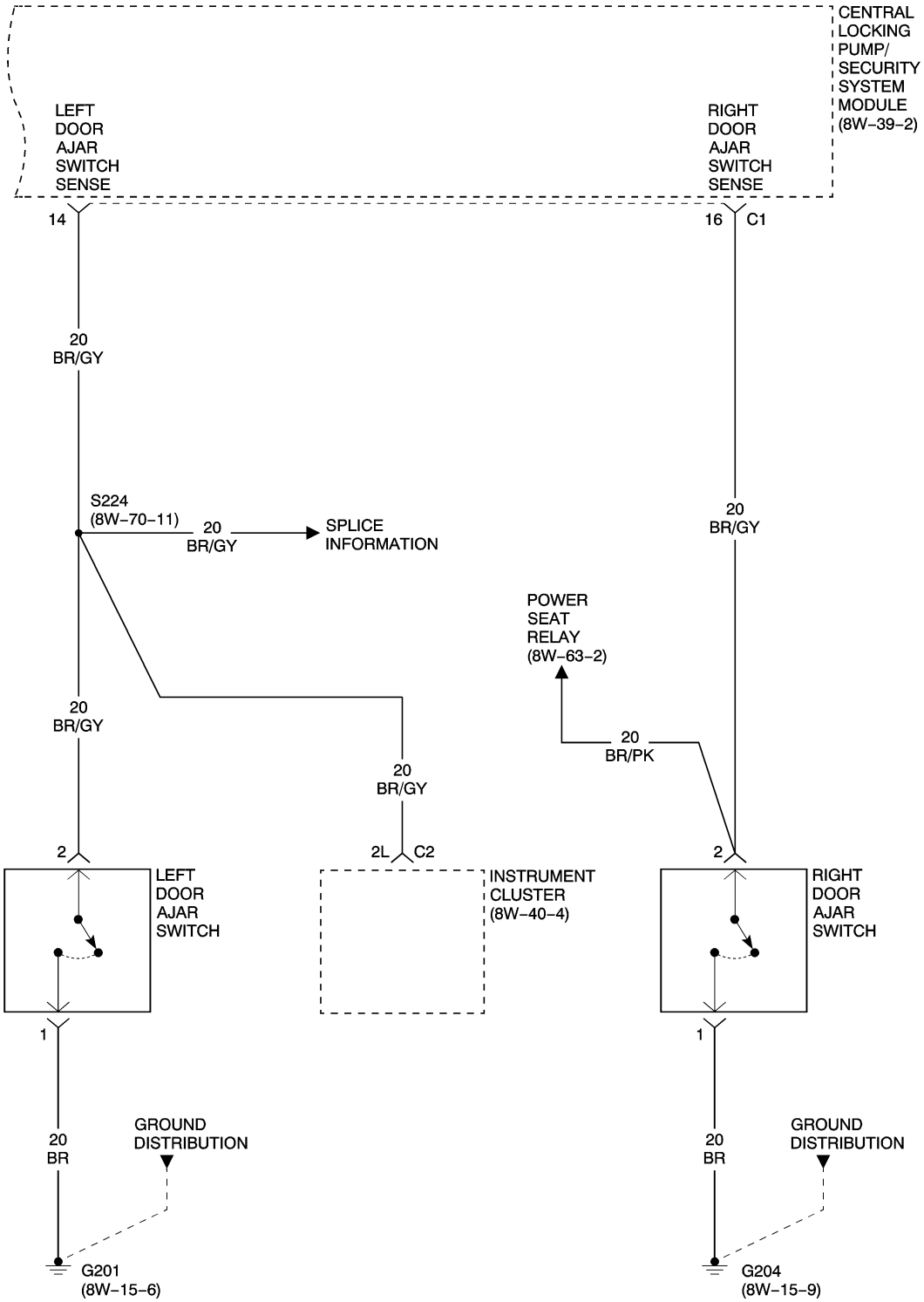
CENTRAL LOCKING PUMP/ SECURITY SYSTEM MODULE (8W–39–2)
LEFT DOOR AJAR SWITCH SENSE
RIGHT DOOR AJAR SWITCH SENSE
14
16
C1
20 BR/GY
S224 (8W–70–11)
20 BR/GY
SPLICE INFORMATION
20 BR/GY
POWER SEAT RELAY (8W–63–2)
20 BR/PK
20 BR/GY
20 BR/GY
2
2L
C2
2
LEFT DOOR AJAR SWITCH
INSTRUMENT CLUSTER (8W–40–4)
RIGHT DOOR AJAR SWITCH
1
1
20 BR
GROUND DISTRIBUTION
20 BR
GROUND DISTRIBUTION
G201 (8W–15–6)
G204 (8W–15–9)

ZH046504

8W-70 SPLICE INFORMATION

Component	Page
S101	8W-70-2
S103	8W-70-3
S104	8W-70-3
S105	8W-70-2
S106	8W-70-4
S107	8W-70-6
S108	8W-70-4
S113	8W-70-5
S114	8W-70-5
S118	8W-70-5
S119	8W-70-5
S121	8W-70-6
S211	8W-70-7
S212	8W-70-7
S213	8W-70-7
S215	8W-70-8
S216	8W-70-9
S217	8W-70-9
S218	8W-70-10
S219	8W-70-10
S220	8W-70-11
S221	8W-70-11
S224	8W-70-11
S225	8W-70-12
S226	8W-70-12
S232	8W-70-13
S233	8W-70-13
S235	8W-70-14
S236	8W-70-14
S239	8W-70-15
S240	8W-70-15

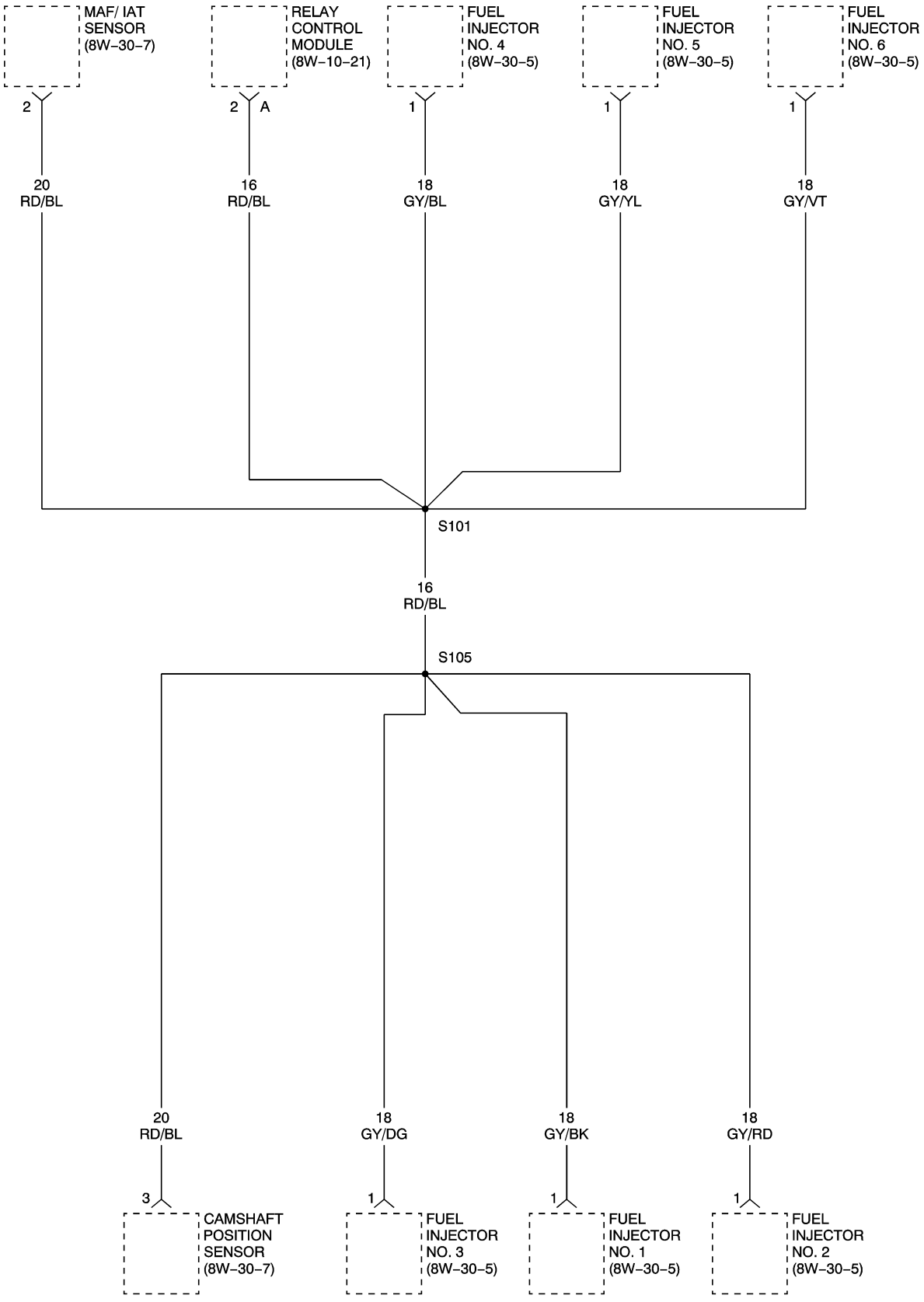
MAF/ IAT SENSOR (8W–30–7)
RELAY CONTROL MODULE (8W–10–21)
FUEL INJECTOR NO. 4 (8W–30–5)
FUEL INJECTOR NO. 5 (8W–30–5)
FUEL INJECTOR NO. 6 (8W–30–5)
2
2 A
1
1
1
20 RD/BL
16 RD/BL
18 GY/BL
18 GY/YL
18 GY/VT
S101
16 RD/BL
S105
20 RD/BL
18 GY/DG
18 GY/BK
18 GY/RD
3
1
1
1
CAMSHAFT POSITION SENSOR (8W–30–7)
FUEL INJECTOR NO. 3 (8W–30–5)
FUEL INJECTOR NO. 1 (8W–30–5)
FUEL INJECTOR NO. 2 (8W–30–5)

ZH047002

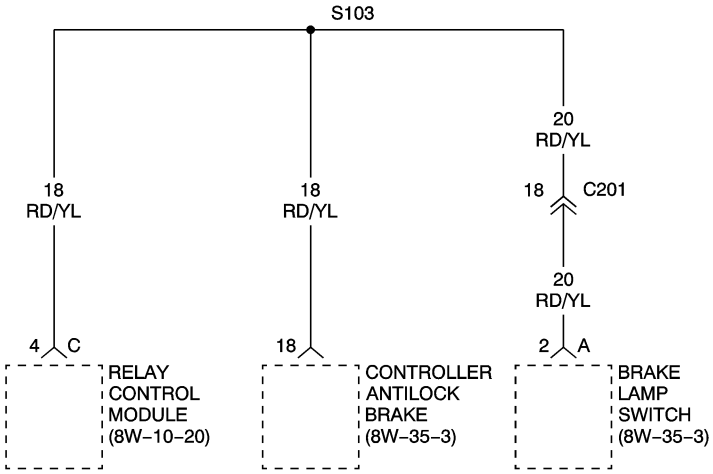
S103
18
RD/YL
18
RD/YL
20
RD/YL
18
C201
20
RD/YL
4
C
18
2
A
RELAY
CONTROL
MODULE
(8W–10–20)
CONTROLLER
ANTILOCK
BRAKE
(8W–35–3)
BRAKE
LAMP
SWITCH
(8W–35–3)

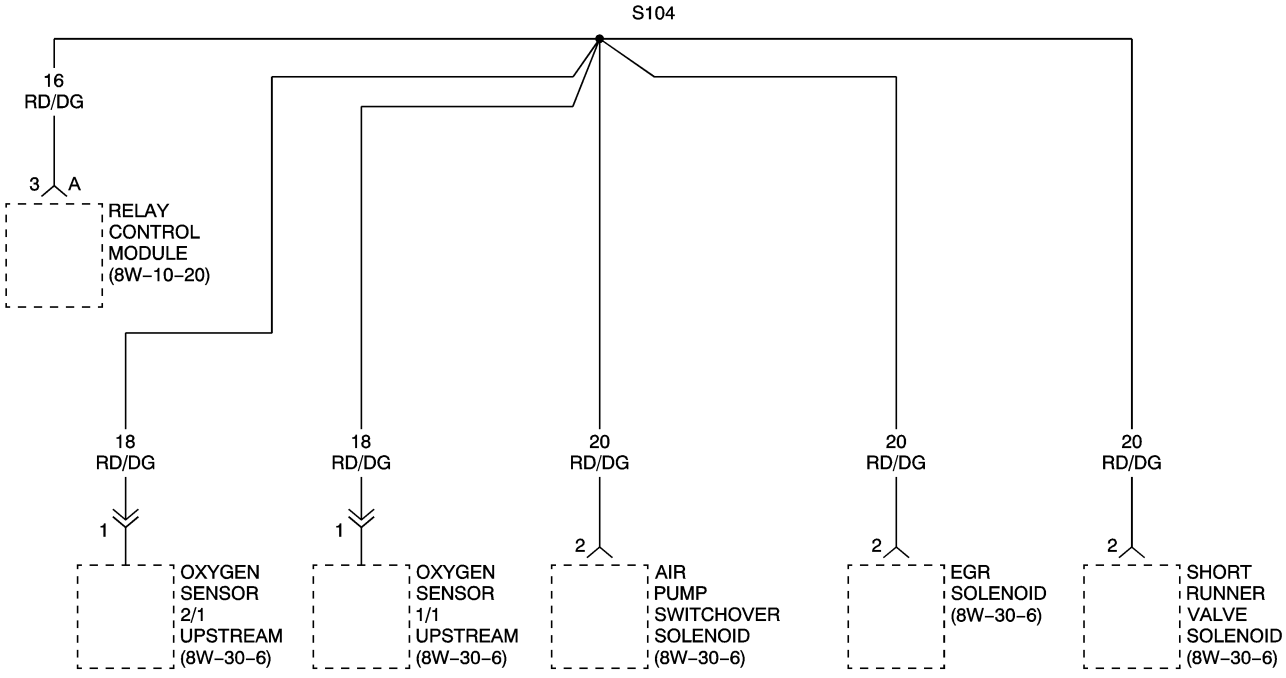
S104
16
RD/DG
3
A
RELAY
CONTROL
MODULE
(8W–10–20)
18
RD/DG
18
RD/DG
20
RD/DG
20
RD/DG
20
RD/DG
1
1
2
2
2
OXYGEN
SENSOR
2/1
UPSTREAM
(8W–30–6)
OXYGEN
SENSOR
1/1
UPSTREAM
(8W–30–6)
AIR
PUMP
SWITCHOVER
SOLENOID
(8W–30–6)
EGR
SOLENOID
(8W–30–6)
SHORT
RUNNER
VALVE
SOLENOID
(8W–30–6)

ZH047003

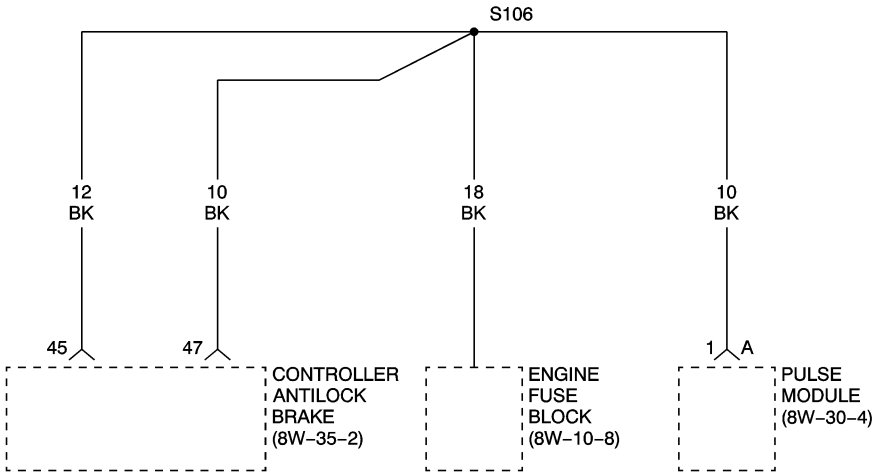
S106
12
BK
10
BK
18
BK
10
BK
45
47
1
A
CONTROLLER
ANTILOCK
BRAKE
(8W–35–2)
ENGINE
FUSE
BLOCK
(8W–10–8)
PULSE
MODULE
(8W–30–4)

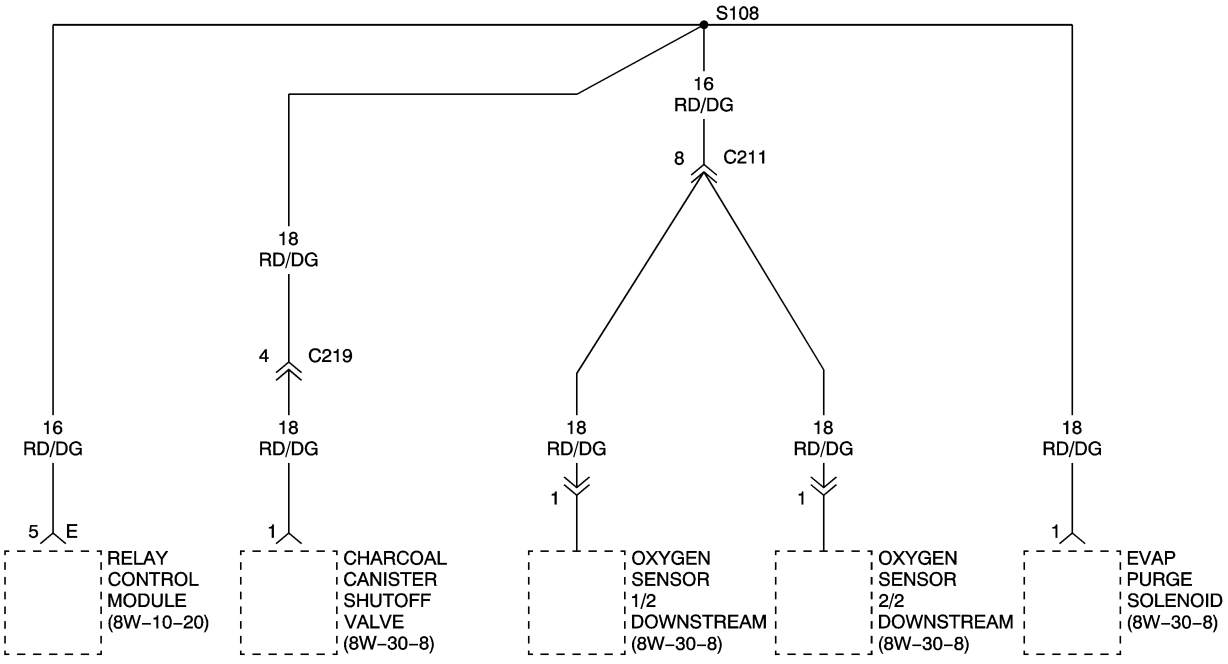
S108
16
RD/DG
8
C211
18
RD/DG
4
C219
16
RD/DG
18
RD/DG
18
RD/DG
18
RD/DG
18
RD/DG
5
E
1
1
1
1
RELAY
CONTROL
MODULE
(8W–10–20)
CHARCOAL
CANISTER
SHUTOFF
VALVE
(8W–30–8)
OXYGEN
SENSOR
1/2
DOWNSTREAM
(8W–30–8)
OXYGEN
SENSOR
2/2
DOWNSTREAM
(8W–30–8)
EVAP
PURGE
SOLENOID
(8W–30–8)

ZH047004

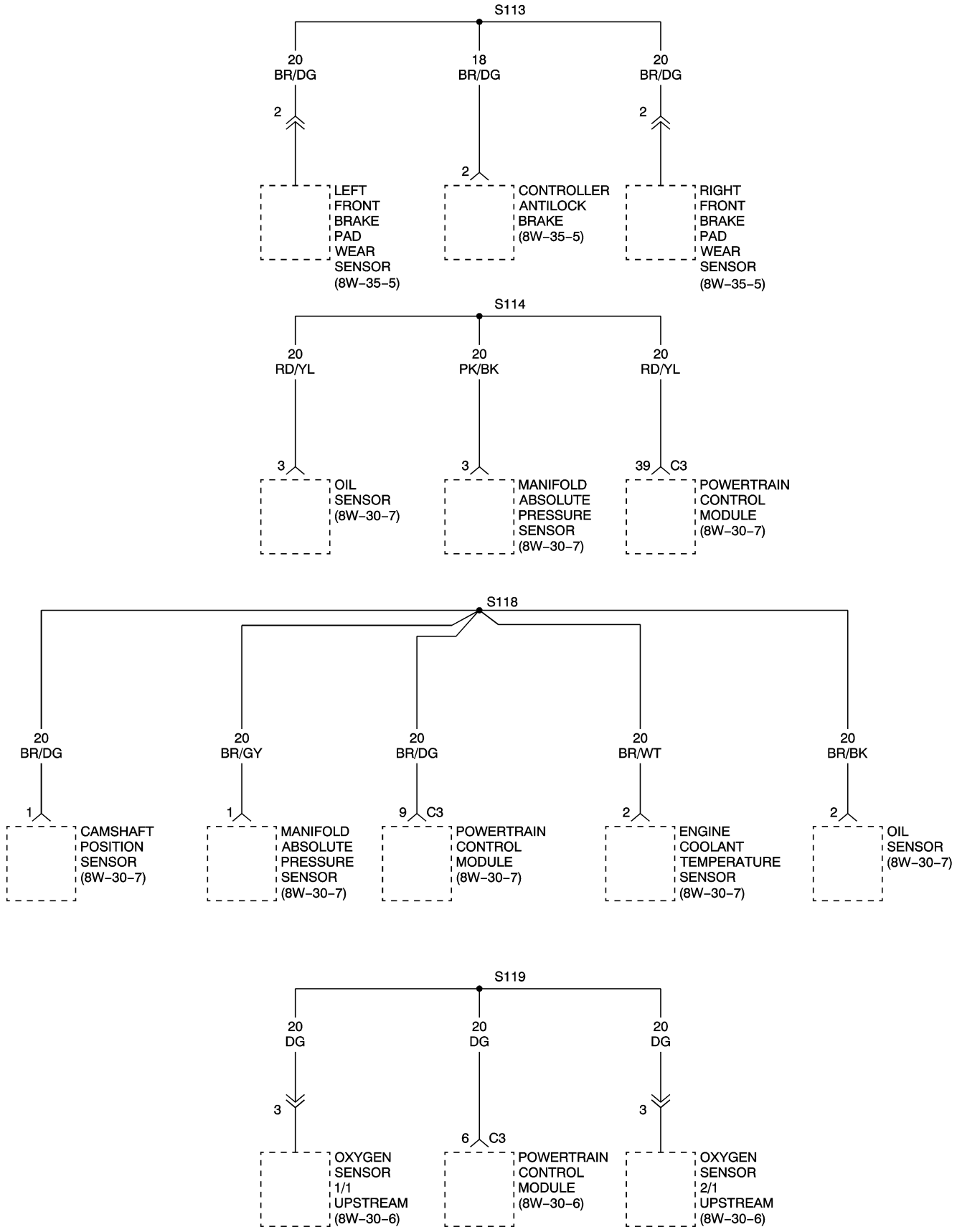
S113
20 BR/DG
2
LEFT FRONT BRAKE PAD WEAR SENSOR (8W–35–5)
18 BR/DG
2
CONTROLLER ANTILOCK BRAKE (8W–35–5)
20 BR/DG
2
RIGHT FRONT BRAKE PAD WEAR SENSOR (8W–35–5)
S114
20 RD/YL
3
OIL SENSOR (8W–30–7)
20 PK/BK
3
MANIFOLD ABSOLUTE PRESSURE SENSOR (8W–30–7)
20 RD/YL
39 C3
POWERTRAIN CONTROL MODULE (8W–30–7)
S118
20 BR/DG
1
CAMSHAFT POSITION SENSOR (8W–30–7)
20 BR/GY
1
MANIFOLD ABSOLUTE PRESSURE SENSOR (8W–30–7)
20 BR/DG
9 C3
POWERTRAIN CONTROL MODULE (8W–30–7)
20 BR/WT
2
ENGINE COOLANT TEMPERATURE SENSOR (8W–30–7)
20 BR/BK
2
OIL SENSOR (8W–30–7)
S119
20 DG
3
OXYGEN SENSOR 1/1 UPSTREAM (8W–30–6)
20 DG
6 C3
POWERTRAIN CONTROL MODULE (8W–30–6)
20 DG
3
OXYGEN SENSOR 2/1 UPSTREAM (8W–30–6)

ZH047005

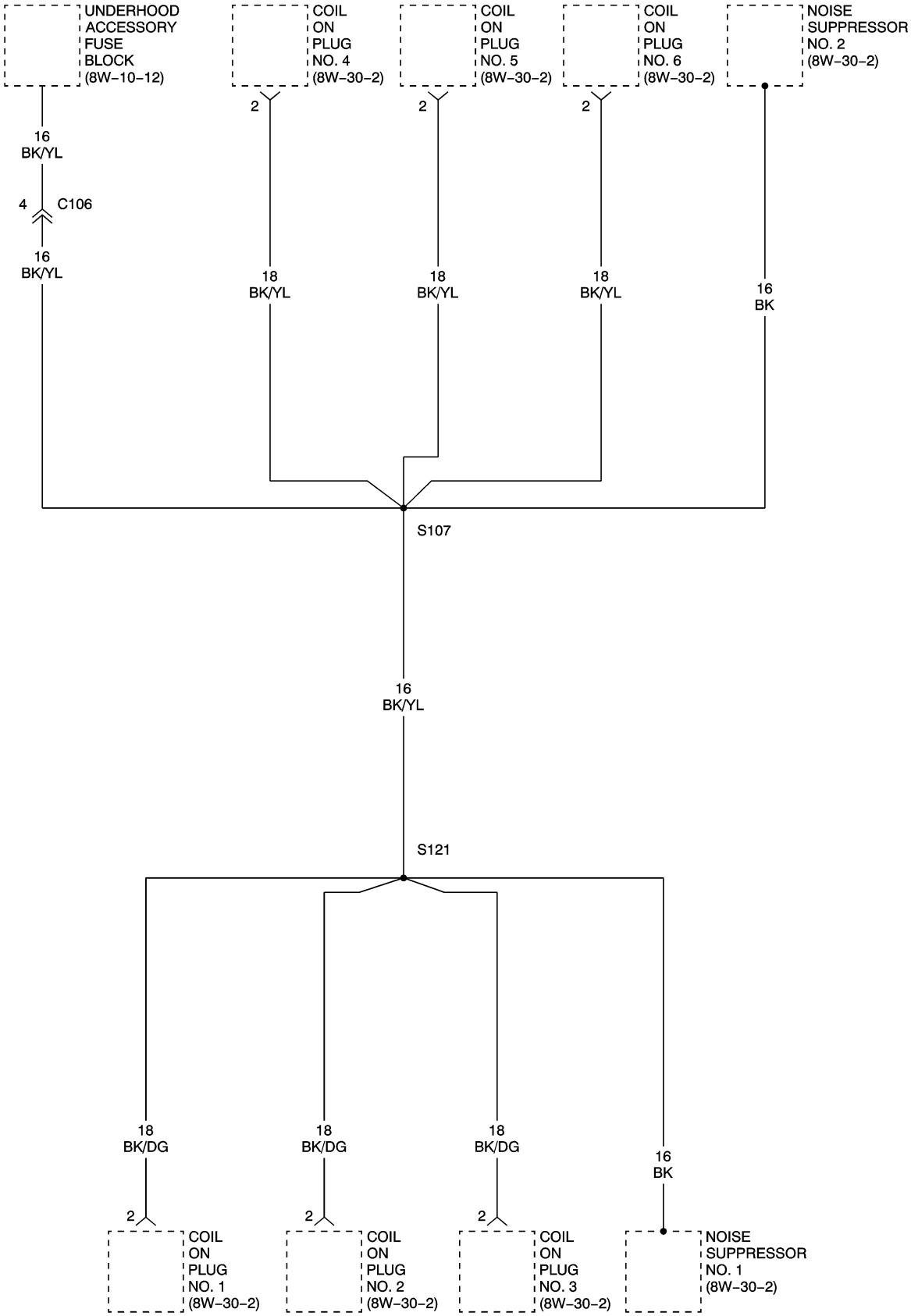
UNDERHOOD ACCESSORY FUSE BLOCK (8W–10–12)
COIL ON PLUG NO. 4 (8W–30–2)
COIL ON PLUG NO. 5 (8W–30–2)
COIL ON PLUG NO. 6 (8W–30–2)
NOISE SUPPRESSOR NO. 2 (8W–30–2)
16 BK/YL
4
C106
16 BK/YL
2
2
2
18 BK/YL
18 BK/YL
18 BK/YL
16 BK
S107
16 BK/YL
S121
18 BK/DG
18 BK/DG
18 BK/DG
16 BK
2
2
2
COIL ON PLUG NO. 1 (8W–30–2)
COIL ON PLUG NO. 2 (8W–30–2)
COIL ON PLUG NO. 3 (8W–30–2)
NOISE SUPPRESSOR NO. 1 (8W–30–2)

ZH047006

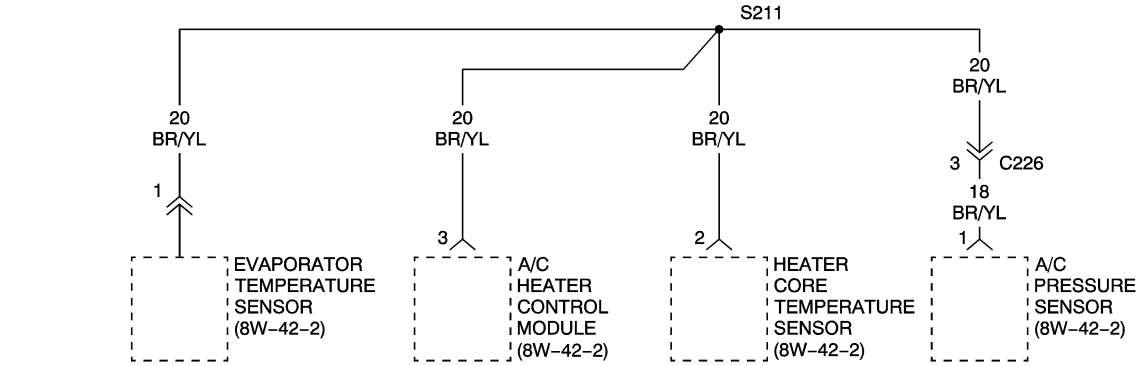
S211
20
BR/YL
1
EVAPORATOR
TEMPERATURE
SENSOR
(8W–42–2)
20
BR/YL
3
A/C
HEATER
CONTROL
MODULE
(8W–42–2)
20
BR/YL
2
HEATER
CORE
TEMPERATURE
SENSOR
(8W–42–2)
20
BR/YL
3
C226
18
BR/YL
1
A/C
PRESSURE
SENSOR
(8W–42–2)

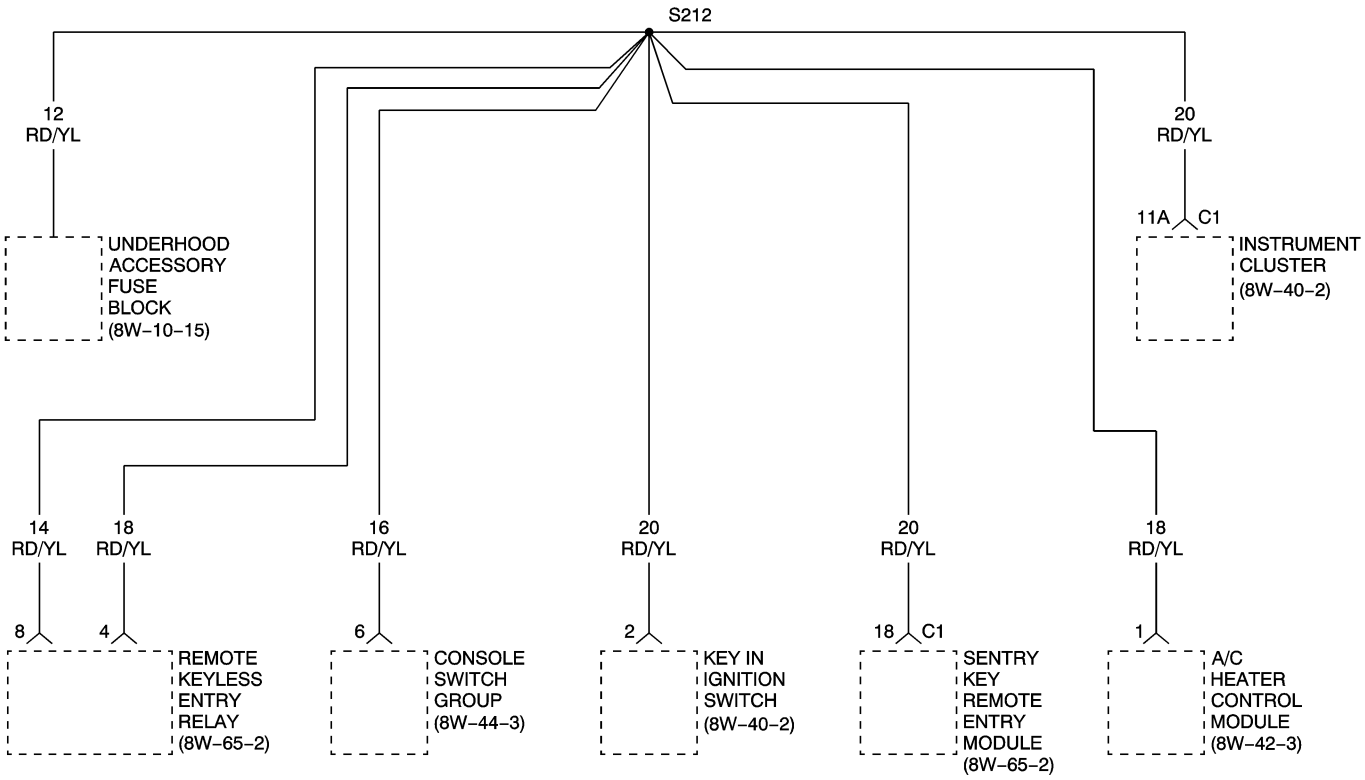
S212
12
RD/YL
UNDERHOOD
ACCESSORY
FUSE
BLOCK
(8W–10–15)
20
RD/YL
11A
C1
INSTRUMENT
CLUSTER
(8W–40–2)
14
RD/YL
8
18
RD/YL
4
REMOTE
KEYLESS
ENTRY
RELAY
(8W–65–2)
16
RD/YL
6
CONSOLE
SWITCH
GROUP
(8W–44–3)
20
RD/YL
2
KEY IN
IGNITION
SWITCH
(8W–40–2)
20
RD/YL
18
C1
SENTRY
KEY
REMOTE
ENTRY
MODULE
(8W–65–2)
18
RD/YL
1
A/C
HEATER
CONTROL
MODULE
(8W–42–3)

ZH047007

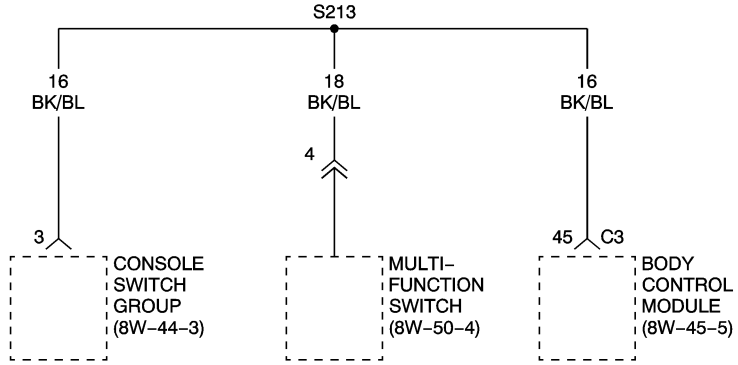
S213
16
BK/BL
18
BK/BL
16
BK/BL
4
3
45
C3
CONSOLE
SWITCH
GROUP
(8W–44–3)
MULTI–
FUNCTION
SWITCH
(8W–50–4)
BODY
CONTROL
MODULE
(8W–45–5)

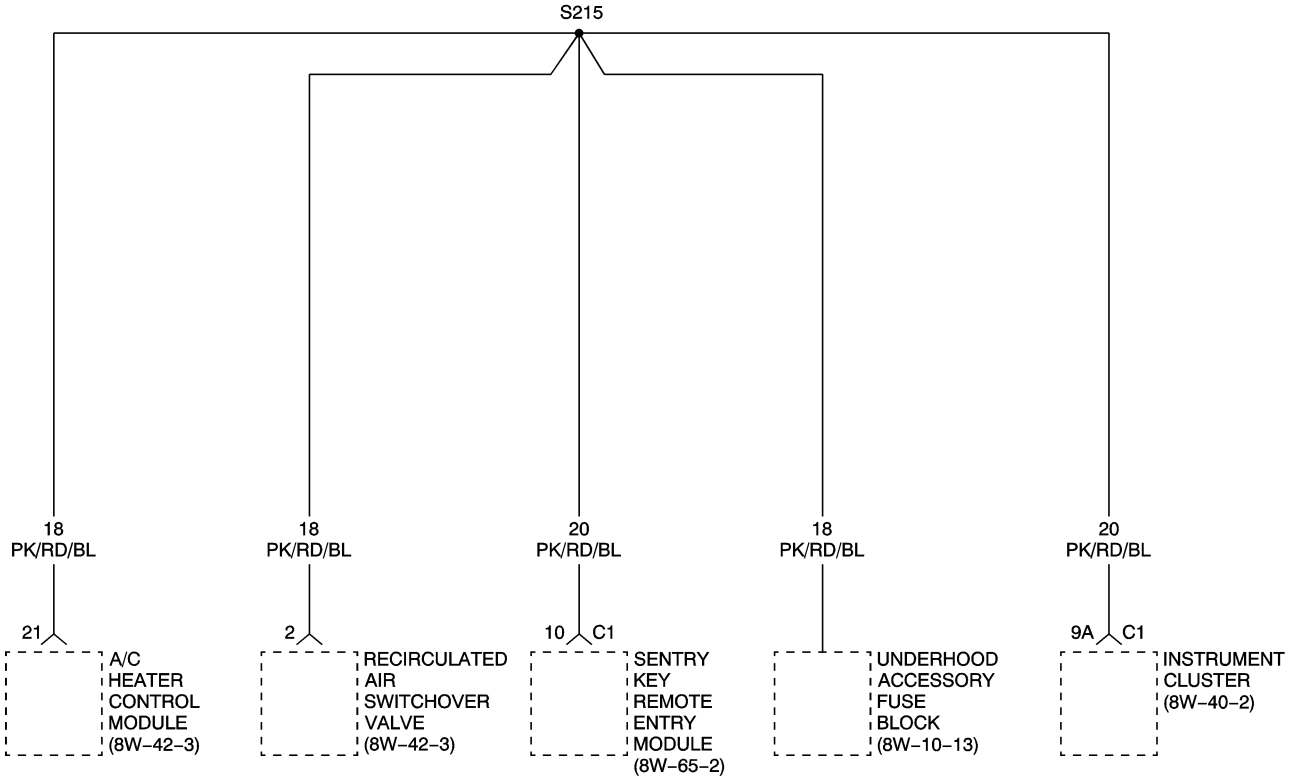
S215
18
PK/RD/BL
18
PK/RD/BL
20
PK/RD/BL
18
PK/RD/BL
20
PK/RD/BL
21
2
10
C1
9A
C1
A/C
HEATER
CONTROL
MODULE
(8W–42–3)
RECIRCULATED
AIR
SWITCHOVER
VALVE
(8W–42–3)
SENTRY
KEY
REMOTE
ENTRY
MODULE
(8W–65–2)
UNDERHOOD
ACCESSORY
FUSE
BLOCK
(8W–10–13)
INSTRUMENT
CLUSTER
(8W–40–2)

ZH047008

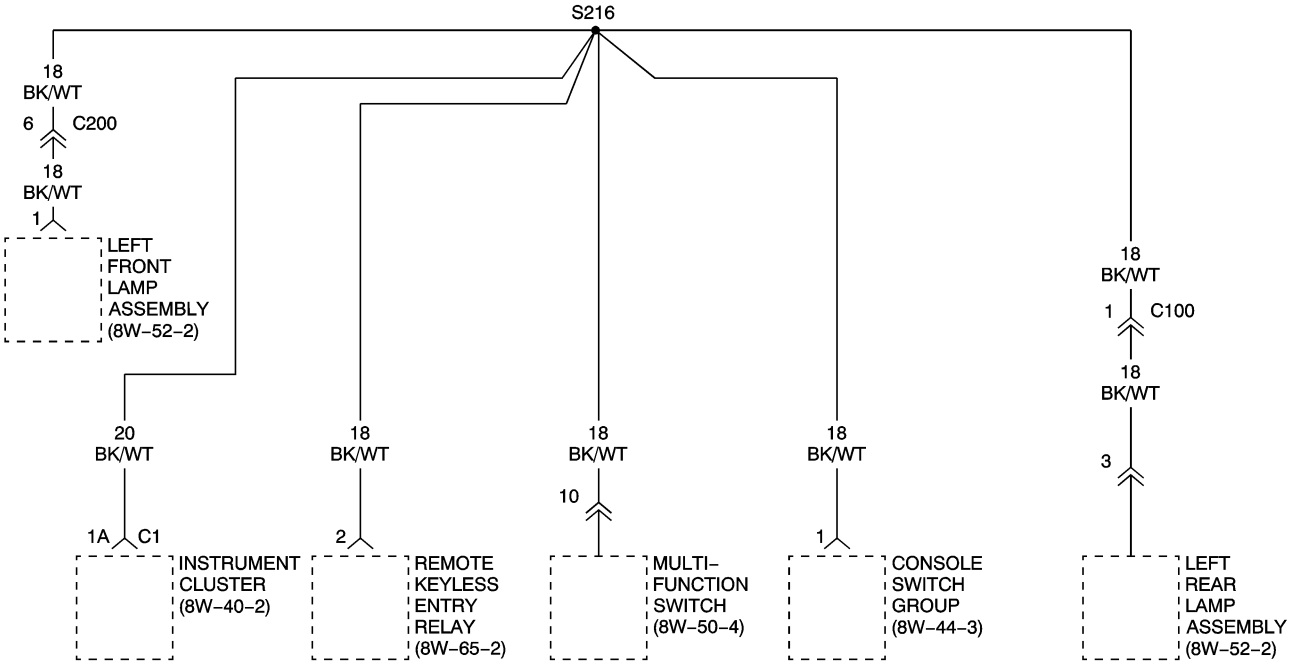
S216
18
BK/WT
6
C200
18
BK/WT
1
LEFT
FRONT
LAMP
ASSEMBLY
(8W–52–2)
20
BK/WT
1A
C1
INSTRUMENT
CLUSTER
(8W–40–2)
18
BK/WT
2
REMOTE
KEYLESS
ENTRY
RELAY
(8W–65–2)
18
BK/WT
10
MULTI–
FUNCTION
SWITCH
(8W–50–4)
18
BK/WT
1
CONSOLE
SWITCH
GROUP
(8W–44–3)
18
BK/WT
1
C100
18
BK/WT
3
LEFT
REAR
LAMP
ASSEMBLY
(8W–52–2)

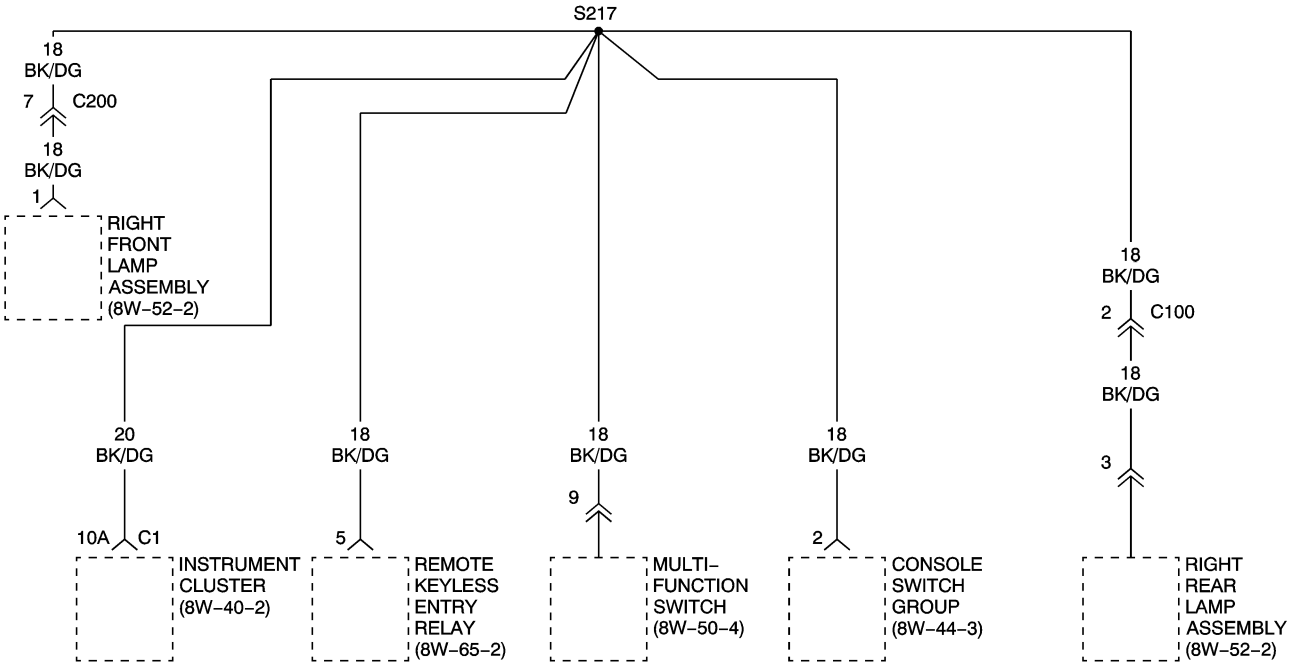
S217
18
BK/DG
7
C200
18
BK/DG
1
RIGHT
FRONT
LAMP
ASSEMBLY
(8W–52–2)
20
BK/DG
10A
C1
INSTRUMENT
CLUSTER
(8W–40–2)
18
BK/DG
5
REMOTE
KEYLESS
ENTRY
RELAY
(8W–65–2)
18
BK/DG
9
MULTI–
FUNCTION
SWITCH
(8W–50–4)
18
BK/DG
2
CONSOLE
SWITCH
GROUP
(8W–44–3)
18
BK/DG
2
C100
18
BK/DG
3
RIGHT
REAR
LAMP
ASSEMBLY
(8W–52–2)

ZH047009

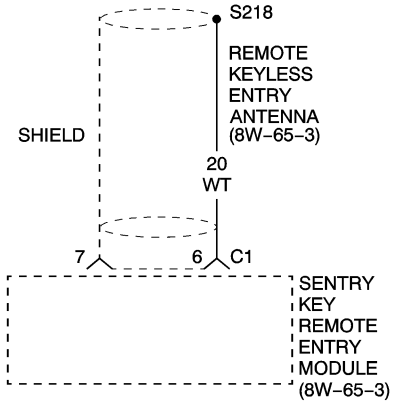
S218
REMOTE
KEYLESS
ENTRY
ANTENNA
(8W–65–3)
SHIELD
20
WT
7
6
C1
SENTRY
KEY
REMOTE
ENTRY
MODULE
(8W–65–3)

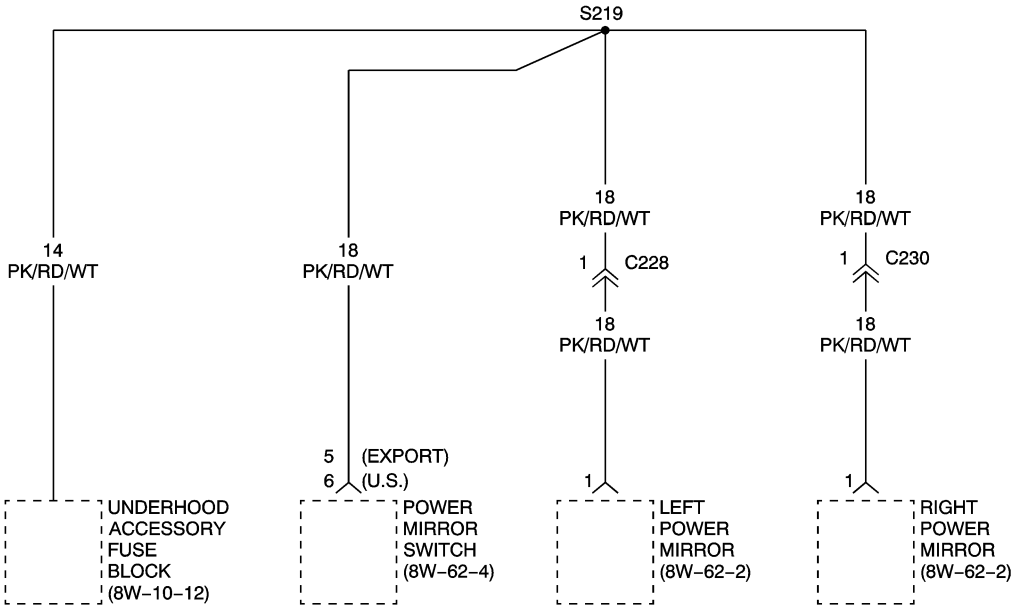
S219
14
PK/RD/WT
18
PK/RD/WT
18
PK/RD/WT
1
C228
18
PK/RD/WT
18
PK/RD/WT
1
C230
18
PK/RD/WT
5
(EXPORT)
6
(U.S.)
1
1
UNDERHOOD
ACCESSORY
FUSE
BLOCK
(8W–10–12)
POWER
MIRROR
SWITCH
(8W–62–4)
LEFT
POWER
MIRROR
(8W–62–2)
RIGHT
POWER
MIRROR
(8W–62–2)

ZH047010

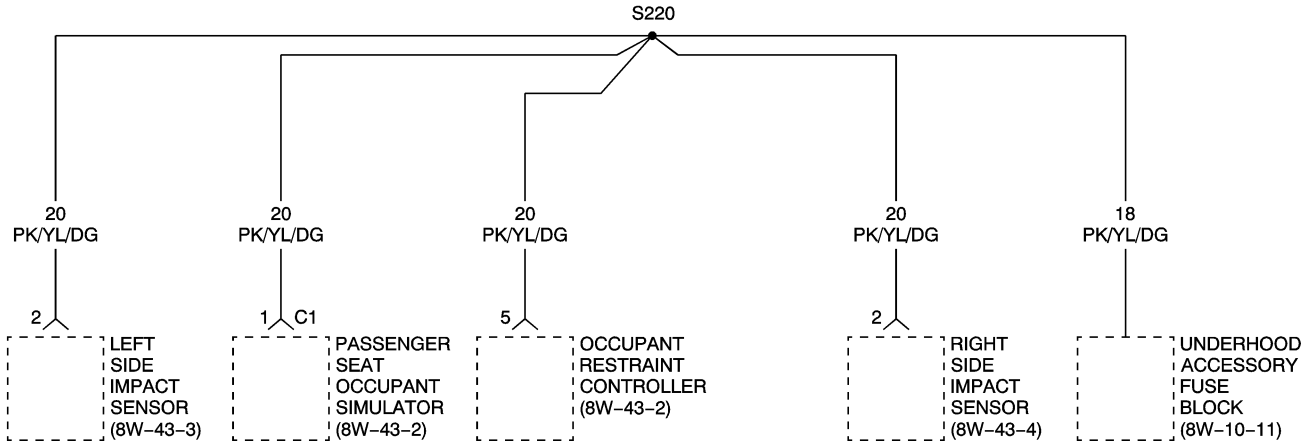
S220
20
PK/YL/DG
2
LEFT
SIDE
IMPACT
SENSOR
(8W–43–3)
20
PK/YL/DG
1 C1
PASSENGER
SEAT
OCCUPANT
SIMULATOR
(8W–43–2)
20
PK/YL/DG
5
OCCUPANT
RESTRAINT
CONTROLLER
(8W–43–2)
20
PK/YL/DG
2
RIGHT
SIDE
IMPACT
SENSOR
(8W–43–4)
18
PK/YL/DG
UNDERHOOD
ACCESSORY
FUSE
BLOCK
(8W–10–11)

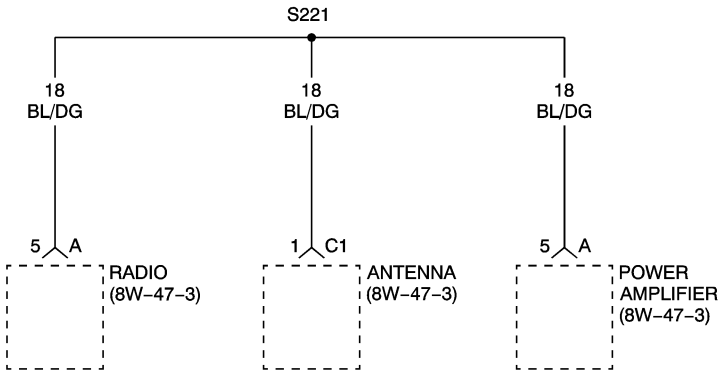
S221
18
BL/DG
5 A
RADIO
(8W–47–3)
18
BL/DG
1 C1
ANTENNA
(8W–47–3)
18
BL/DG
5 A
POWER
AMPLIFIER
(8W–47–3)

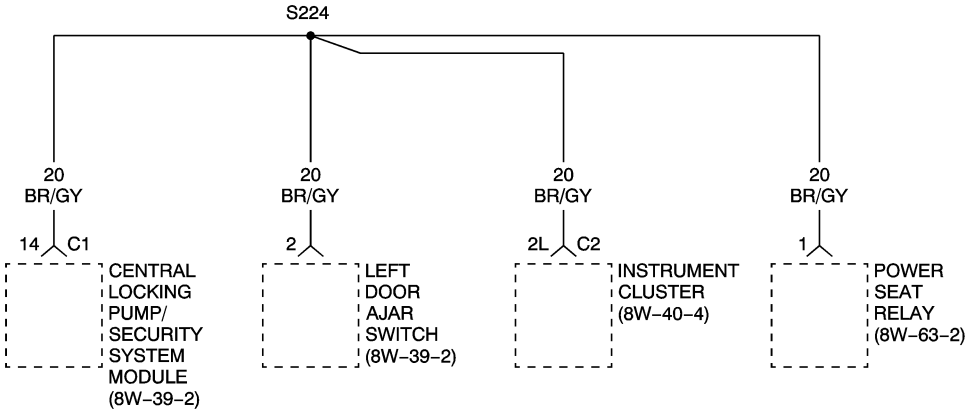
S224
20
BR/GY
14 C1
CENTRAL
LOCKING
PUMP/
SECURITY
SYSTEM
MODULE
(8W–39–2)
20
BR/GY
2
LEFT
DOOR
AJAR
SWITCH
(8W–39–2)
20
BR/GY
2L C2
INSTRUMENT
CLUSTER
(8W–40–4)
20
BR/GY
1
POWER
SEAT
RELAY
(8W–63–2)

ZH047011

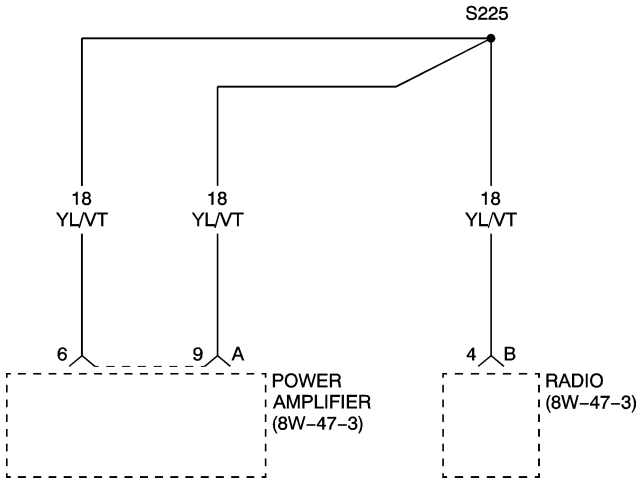
S225
18
YL/VT
18
YL/VT
18
YL/VT
6
9
A
4
B
POWER
AMPLIFIER
(8W–47–3)
RADIO
(8W–47–3)

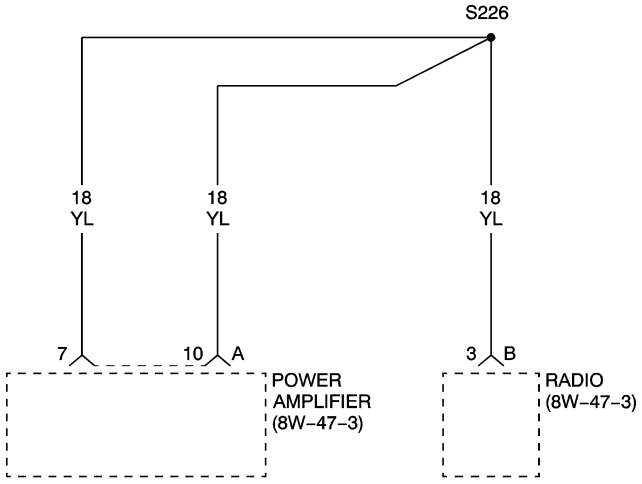
S226
18
YL
18
YL
18
YL
7
10
A
3
B
POWER
AMPLIFIER
(8W–47–3)
RADIO
(8W–47–3)

ZH047012

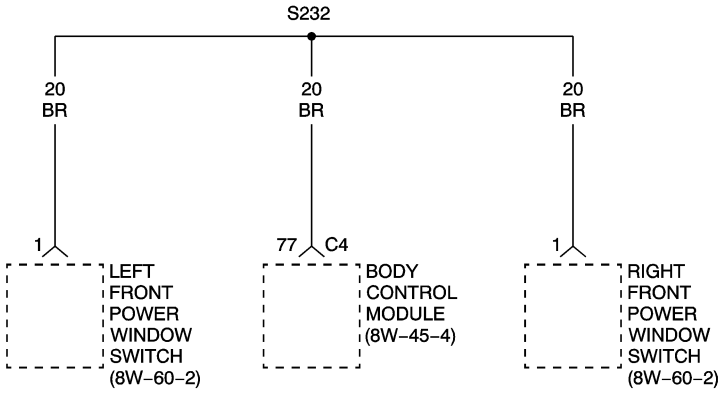
S232
20
BR
20
BR
20
BR
1
77
C4
1
LEFT
FRONT
POWER
WINDOW
SWITCH
(8W–60–2)
BODY
CONTROL
MODULE
(8W–45–4)
RIGHT
FRONT
POWER
WINDOW
SWITCH
(8W–60–2)

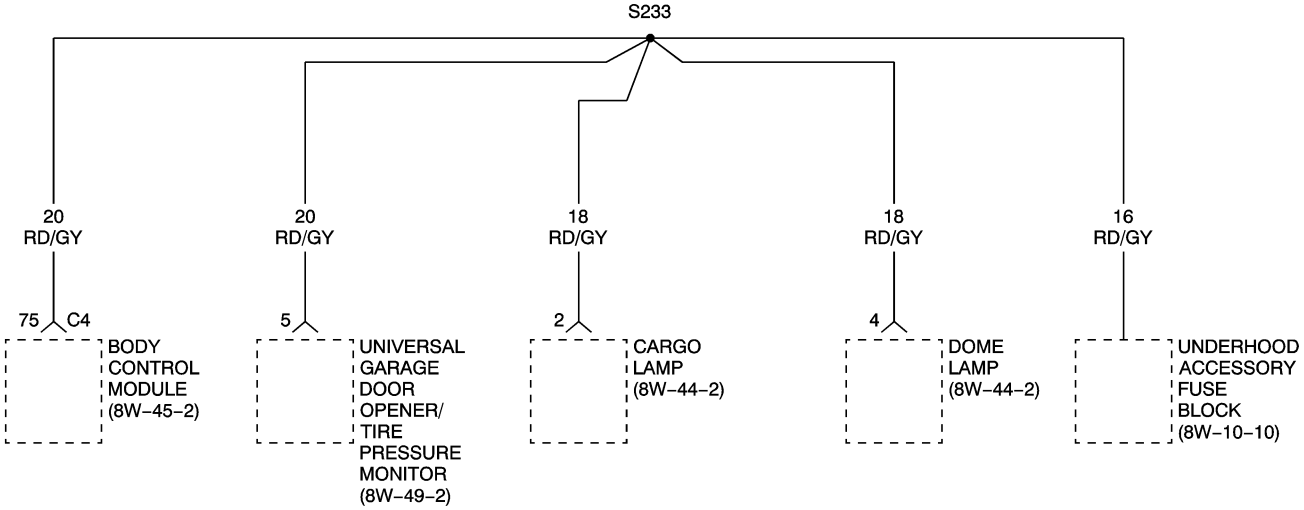
S233
20
RD/GY
20
RD/GY
18
RD/GY
18
RD/GY
16
RD/GY
75
C4
5
2
4
BODY
CONTROL
MODULE
(8W–45–2)
UNIVERSAL
GARAGE
DOOR
OPENER/
TIRE
PRESSURE
MONITOR
(8W–49–2)
CARGO
LAMP
(8W–44–2)
DOME
LAMP
(8W–44–2)
UNDERHOOD
ACCESSORY
FUSE
BLOCK
(8W–10–10)

ZH047013

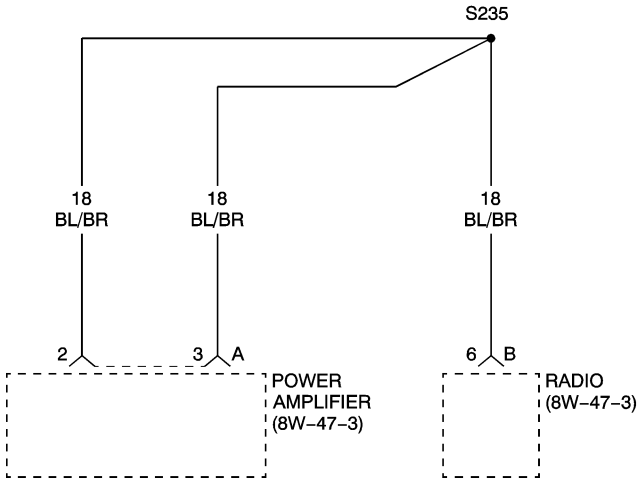
S235
18
BL/BR
18
BL/BR
18
BL/BR
2
3
A
6
B
POWER
AMPLIFIER
(8W–47–3)
RADIO
(8W–47–3)

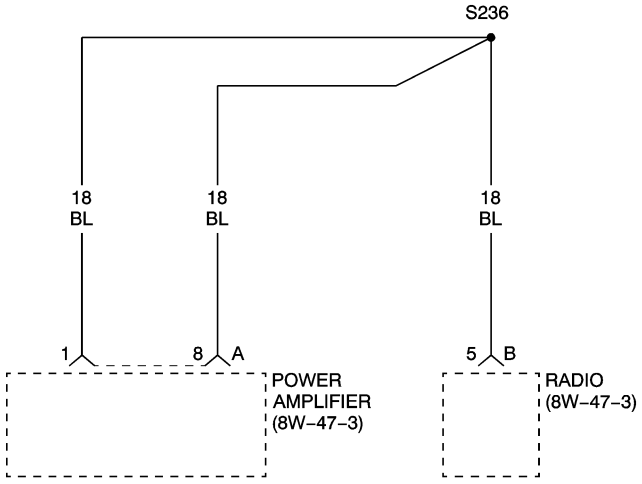
S236
18
BL
18
BL
18
BL
1
8
A
5
B
POWER
AMPLIFIER
(8W–47–3)
RADIO
(8W–47–3)

ZH047014

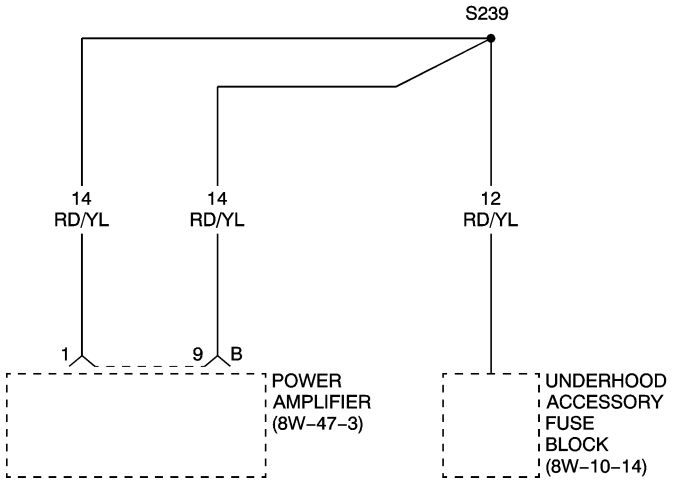
S239
14
RD/YL
14
RD/YL
12
RD/YL
1
9
B
POWER
AMPLIFIER
(8W–47–3)
UNDERHOOD
ACCESSORY
FUSE
BLOCK
(8W–10–14)

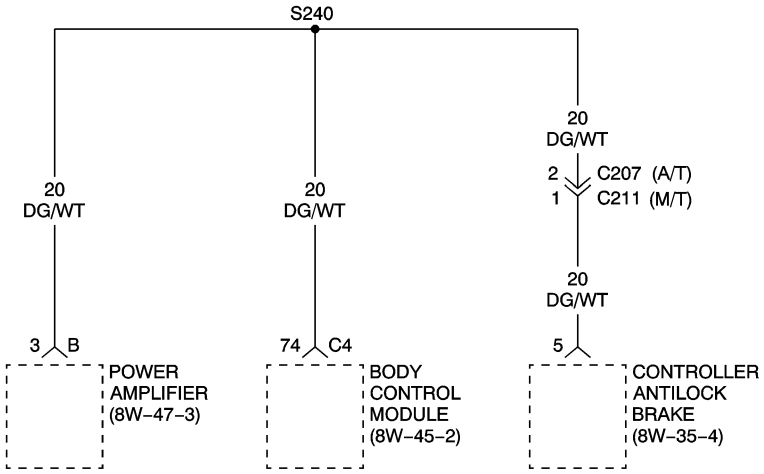
S240
20
DG/WT
20
DG/WT
20
DG/WT
2
C207 (A/T)
1
C211 (M/T)
20
DG/WT
3
B
74
C4
5
POWER
AMPLIFIER
(8W–47–3)
BODY
CONTROL
MODULE
(8W–45–2)
CONTROLLER
ANTILOCK
BRAKE
(8W–35–4)

ZH047015

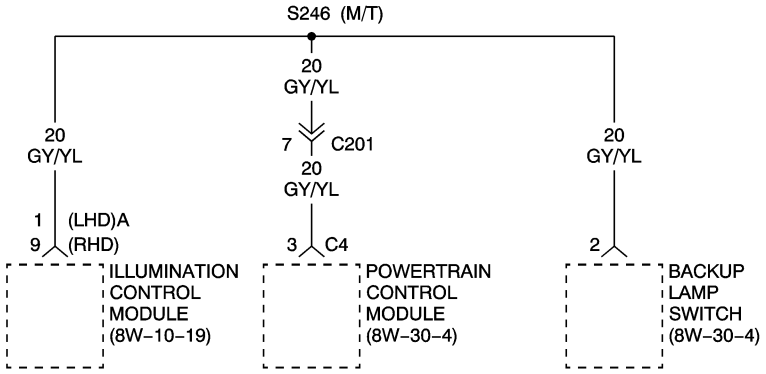
S246 (M/T)
20
GY/YL
20
GY/YL
7
C201
20
GY/YL
20
GY/YL
1
9
(LHD)A
(RHD)
3
C4
2
ILLUMINATION CONTROL MODULE (8W–10–19)
POWERTRAIN CONTROL MODULE (8W–30–4)
BACKUP LAMP SWITCH (8W–30–4)

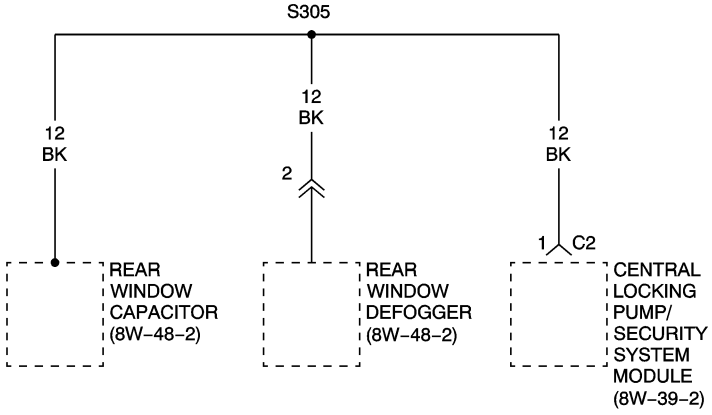
S305
12
BK
12
BK
2
12
BK
1
C2
REAR WINDOW CAPACITOR (8W–48–2)
REAR WINDOW DEFOGGER (8W–48–2)
CENTRAL LOCKING PUMP/ SECURITY SYSTEM MODULE (8W–39–2)

ZH047016

8W-80 CONNECTOR PIN-OUTS

Component	Page
A/C COMPRESSOR CLUTCH	8W-80-4
A/C HEATER CONTROL MODULE	8W-80-4
A/C PRESSURE SENSOR	8W-80-5
ACCELERATOR PEDAL POSITION SENSOR	8W-80-5
AIR PUMP SWITCHOVER SOLENOID	8W-80-5
AIR PUMP	8W-80-5
AMBIENT TEMPERATURE SENSOR	8W-80-5
ANTENNA C1	8W-80-6
ANTENNA C2	8W-80-6
ANTI-THEFT TOW SENSOR	8W-80-6
ASH RECEIVER LAMP	8W-80-6
AUTOMATIC DAY/ NIGHT MIRROR	8W-80-6
BACKUP LAMP SWITCH	8W-80-7
BAS BRAKE BOOSTER C1	8W-80-7
BAS BRAKE BOOSTER C2	8W-80-7
BLOWER MOTOR	8W-80-7
BODY CONTROL MODULE	8W-80-8
BODY CONTROL MODULE	8W-80-9
BODY CONTROL MODULE	8W-80-10
BODY CONTROL MODULE	8W-80-10
BRAKE FLUID LEVEL SWITCH	8W-80-11
BRAKE LAMP RELAY	8W-80-11
BRAKE LAMP SWITCH A (A/T)	8W-80-11
BRAKE LAMP SWITCH A (M/T)	8W-80-11
BRAKE LAMP SWITCH B (A/T)	8W-80-12
BRAKE LAMP SWITCH B (M/T)	8W-80-12
C100	8W-80-12
C100	8W-80-12
C105	8W-80-12
C105	8W-80-13
C106	8W-80-13
C106	8W-80-13
C200	8W-80-13
C200	8W-80-14
C201	8W-80-14
C201	8W-80-15
C204	8W-80-15
C204	8W-80-15
C206	8W-80-15
C206	8W-80-16
C207	8W-80-16
C207	8W-80-16
C210	8W-80-16
C210	8W-80-16
C211	8W-80-17
C211	8W-80-17
C219	8W-80-17
C219	8W-80-18
C223	8W-80-18
C223	8W-80-18
C224	8W-80-18
C224	8W-80-18
C226	8W-80-19
C226	8W-80-19
C227	8W-80-19
C227	8W-80-19
C228	8W-80-20
C228	8W-80-20
C229	8W-80-20
C229	8W-80-20
C230	8W-80-21
C230	8W-80-21
C231	8W-80-21
C231	8W-80-21
C232	8W-80-21
C232	8W-80-22
CAMSHAFT POSITION SENSOR	8W-80-22
CARGO LAMP	8W-80-22
CENTER HIGH MOUNTED STOP LAMP	8W-80-22
CENTRAL LOCKING PUMP/ SECURITY SYSTEM MODULE C1	8W-80-22
CENTRAL LOCKING PUMP/ SECURITY SYSTEM MODULE C2	8W-80-23
CENTRAL LOCKING PUMP/ SECURITY SYSTEM MODULE C3	8W-80-23
CENTRAL LOCKING PUMP/ SECURITY SYSTEM MODULE C4	8W-80-23
CHARCOAL CANISTER SHUTOFF VALVE	8W-80-24
CIGAR LIGHTER	8W-80-24
CLOCKSPRING	8W-80-24
CLUTCH INTERLOCK SWITCH	8W-80-24
CLUTCH PEDAL POSITION SWITCH	8W-80-24
COIL ON PLUG NO. 1	8W-80-25
COIL ON PLUG NO. 2	8W-80-25
COIL ON PLUG NO. 3	8W-80-25
COIL ON PLUG NO. 4	8W-80-25
COIL ON PLUG NO. 5	8W-80-26
COIL ON PLUG NO. 6	8W-80-26
CONSOLE SWITCH GROUP	8W-80-26
CONTROLLER ANTILOCK BRAKE	8W-80-27
COOLANT CIRCULATION PUMP	8W-80-28
COOLANT CIRCULATION VALVE	8W-80-28
COOLANT LEVEL SENSOR	8W-80-28
CRANKSHAFT POSITION SENSOR	8W-80-28
DATA LINK CONNECTOR	8W-80-28
DOME LAMP	8W-80-29
DRIVER CYLINDER LOCK SWITCH	8W-80-29

Component	Page
DRIVER POWER SEAT/ SEAT BELT	8W-80-29
DRIVER SEAT BELT TENSIONER SQUIB	8W-80-29
DRIVER SEAT BELT TENSIONER SWITCH	8W-80-30
EGR SOLENOID	8W-80-30
ENGINE COOLANT TEMPERATURE SENSOR	8W-80-30
ESP LATERAL ACCELERATION SENSOR	8W-80-30
ESP BRAKE PRESSURE SENSOR 1	8W-80-30
ESP BRAKE PRESSURE SENSOR 2	8W-80-31
ESP OFF SWITCH	8W-80-31
ESP YAW RATE SENSOR	8W-80-31
EVAP PURGE SOLENOID	8W-80-31
EVAPORATOR TEMPERATURE SENSOR	8W-80-31
FUEL TANK PRESSURE SENSOR	8W-80-32
FUEL INJECTOR NO. 1	8W-80-32
FUEL INJECTOR NO. 2	8W-80-32
FUEL INJECTOR NO. 3	8W-80-32
FUEL INJECTOR NO. 4	8W-80-32
FUEL INJECTOR NO. 5	8W-80-33
FUEL INJECTOR NO. 6	8W-80-33
FUEL LEVEL SENSOR	8W-80-33
GENERATOR	8W-80-33
GLOVE BOX LAMP	8W-80-33
GLOVE BOX SWITCH	8W-80-33
HEATED SEAT MODULE	8W-80-34
HEATER CORE TEMPERATURE SENSOR	8W-80-34
HOOD AJAR SWITCH	8W-80-34
IGNITION SWITCH	8W-80-34
ILLUMINATION CONTROL MODULE A	8W-80-35
ILLUMINATION CONTROL MODULE B	8W-80-36
ILLUMINATION CONTROL MODULE D	8W-80-37
ILLUMINATION CONTROL MODULE E	8W-80-37
INSTRUMENT CLUSTER C1	8W-80-38
INSTRUMENT CLUSTER C2	8W-80-39
KEY IN IGNITION SWITCH	8W-80-39
KICKDOWN SWITCH	8W-80-39
LEFT DOOR AJAR SWITCH	8W-80-40
LEFT DOOR SPEAKER	8W-80-40
LEFT DOOR TWEETER	8W-80-40
LEFT FOG LAMP	8W-80-40
LEFT FRONT LAMP ASSEMBLY	8W-80-40
LEFT FRONT POWER WINDOW MOTOR	8W-80-41
LEFT FRONT POWER WINDOW SWITCH	8W-80-41
LEFT FRONT SIDE MARKER LAMP	8W-80-41
LEFT FRONT WSS/ BRAKE PAD WEAR SENSOR	8W-80-41
LEFT HEATED SEAT BACK/ HEATED SEAT CUSHION	8W-80-42
LEFT KNOCK SENSOR	8W-80-42
LEFT PARK LAMP	8W-80-42
LEFT POWER MIRROR	8W-80-42
LEFT REAR LAMP ASSEMBLY	8W-80-43
LEFT REAR SIDE MARKER LAMP	8W-80-43
LEFT REAR SPEAKER	8W-80-43
LEFT REAR WHEEL SPEED SENSOR	8W-80-43
LEFT SIDE AIRBAG SQUIB	8W-80-44
LEFT SIDE IMPACT SENSOR	8W-80-44
LICENSE LAMP NO. 1	8W-80-44
LICENSE LAMP NO. 2	8W-80-44
LIFTGATE LOCK SWITCH	8W-80-44
MAF/ IAT SENSOR	8W-80-45
MANIFOLD ABSOLUTE PRESSURE SENSOR	8W-80-45
MULTI-FUNCTION SWITCH	8W-80-45
OCCUPANT RESTRAINT CONTROLLER	8W-80-46
OIL SENSOR	8W-80-47
OXYGEN SENSOR 1/1 UPSTREAM	8W-80-47
OXYGEN SENSOR 1/2 DOWNSTREAM	8W-80-47
OXYGEN SENSOR 2/1 UPSTREAM	8W-80-47
OXYGEN SENSOR 2/2 DOWNSTREAM	8W-80-47
PASSENGER AIRBAG ON/OFF SWITCH	8W-80-48
PASSENGER AIRBAG SQUIB	8W-80-48
PASSENGER POWER SEAT/ SEAT BELT	8W-80-48
PASSENGER SEAT BELT TENSIONER SQUIB	8W-80-48
PASSENGER SEAT BELT TENSIONER SWITCH	8W-80-49
PASSENGER SEAT OCCUPANT SIMULATOR C1	8W-80-49
PASSENGER SEAT OCCUPANT SIMULATOR C2	8W-80-49
POWER AMPLIFIER A	8W-80-49
POWER AMPLIFIER B	8W-80-50
POWER MIRROR SWITCH	8W-80-50
POWER SEAT RELAY	8W-80-50
POWERTRAIN CONTROL MODULE - C1	8W-80-51
POWERTRAIN CONTROL MODULE - C2	8W-80-51
POWERTRAIN CONTROL MODULE - C3	8W-80-52
POWERTRAIN CONTROL MODULE - C4	8W-80-53

Component	Page
POWERTRAIN CONTROL MODULE - C5	8W-80-54
PULSE MODULE A	8W-80-54
PULSE MODULE B	8W-80-54
PULSE MODULE F	8W-80-54
RADIATOR FAN CONTROL MODULE	8W-80-54
RADIATOR FAN MOTOR	8W-80-55
RADIO	8W-80-55
RADIO D	8W-80-55
REAR SPOILER LIMIT SWITCH	8W-80-55
REAR SPOILER MOTOR	8W-80-56
REAR SPOILER SWITCH	8W-80-56
RECIRCULATED AIR SWITCHOVER VALVE	8W-80-56
RELAY CONTROL MODULE A	8W-80-56
RELAY CONTROL MODULE B	8W-80-56
RELAY CONTROL MODULE C	8W-80-57
RELAY CONTROL MODULE D	8W-80-57
RELAY CONTROL MODULE E	8W-80-57
REMOTE KEYLESS ENTRY RELAY	8W-80-57
RIGHT DOOR AJAR SWITCH	8W-80-58
RIGHT DOOR SPEAKER	8W-80-58
RIGHT DOOR TWEETER	8W-80-58
RIGHT FOG LAMP	8W-80-58
RIGHT FRONT LAMP ASSEMBLY	8W-80-58
RIGHT FRONT POWER WINDOW MOTOR	8W-80-59
RIGHT FRONT POWER WINDOW SWITCH	8W-80-59
RIGHT FRONT SIDE MARKER LAMP	8W-80-59
RIGHT FRONT WSS/ BRAKE PAD WEAR SENSOR	8W-80-59
RIGHT HEATED SEAT BACK/ HEATED SEAT CUSHION	8W-80-60
RIGHT KNOCK SENSOR	8W-80-60
RIGHT PARK LAMP	8W-80-60
RIGHT POWER MIRROR	8W-80-60
RIGHT REAR LAMP ASSEMBLY	8W-80-61
RIGHT REAR SIDE MARKER LAMP	8W-80-61
RIGHT REAR SPEAKER	8W-80-61
RIGHT REAR WHEEL SPEED SENSOR	8W-80-61
RIGHT SIDE AIRBAG SQUIB	8W-80-62
RIGHT SIDE IMPACT SENSOR	8W-80-62
SENTRY KEY REMOTE ENTRY MODULE C1	8W-80-62
SENTRY KEY REMOTE ENTRY MODULE C2	8W-80-63
SENTRY KEY REMOTE ENTRY MODULE C3	8W-80-63
SHIFT LEVER ASSEMBLY	8W-80-63
SHORT RUNNER VALVE SOLENOID	8W-80-63
SIREN	8W-80-63
SPEED CONTROL SWITCH	8W-80-64
STEERING ANGLE SENSOR	8W-80-64
THROTTLE BODY	8W-80-64
TOW - AWAY ALARM SWITCH	8W-80-64
TRANSMISSION CONTROL MODULE C1	8W-80-65
TRANSMISSION CONTROL MODULE C2	8W-80-65
TRANSMISSION CONTROL MODULE C3	8W-80-65
TRANSMISSION SOLENOID ASSEMBLY	8W-80-66
UNIVERSAL GARAGE DOOR OPENER/ TIRE PRESSURE MONITOR	8W-80-66
WASHER FLUID LEVEL SWITCH	8W-80-66
WASHER PUMP MOTOR	8W-80-66

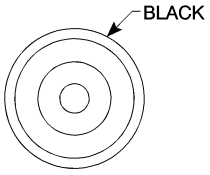

A/C
COMPRESSOR
CLUTCH

A/C COMPRESSOR CLUTCH — BLACK 1 WAY

CAVITY	COLOR	GAUGE	FUNCTION
1	BL/DG	18	A/C COMPRESSOR CLUTCH SIGNAL

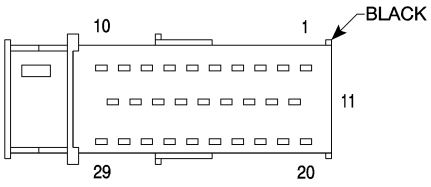

A/C
HEATER
CONTROL
MODULE

A/C HEATER CONTROL MODULE — BLACK 29 WAY

CAVITY	COLOR	GAUGE	FUNCTION
1	RD/YL	18	FUSED B+
2	—	—	—
3	BR/YL	20	SENSOR GROUND
4	DG/BK	20	REAR DEFOGGER INDICATOR DRIVER
5	BK/WT	20	SERIAL COMMUNICATION K2
6	—	—	—
7	WT/RD	20	BLOWER MOTOR CONTROL
8	BR/DG	20	COOLANT CIRCULATION PUMP CONTROL
9	BR/VT	20	LEFT COOLANT CIRCULATION VALVE CONTROL
10	BR/RD	20	RIGHT COOLANT CIRCULATION VALVE CONTROL
11	—	—	—
12	BR	16	GROUND
13	DG/BL	20	REAR DEFOGGER SWITCH SENSE
14	RD/WT	20	A/C PRESSURE SENSOR 5 VOLT SUPPLY
15	—	—	—
16	BR/YL	18	RECIRCULATED AIR SWITCHOVER VALVE CONTROL
17	BK/BL	20	SCI TRNASMIT
18	YL/VT	20	SERIAL COMMUNICATION K1
19	—	—	—
20	BL/DG	18	A/C COMPRESSOR CLUTCH CONTROL
21	PK/RD/BL	18	FUSED IGNITION SWITCH OUTPUT
22	BK/DG	20	FUSED IGNITION SWITCH OUTPUT
23	—	—	—
24	GY/RD	20	EVAPORATOR TEMPERATURE SENSOR SIGNAL
25	GY/DG	20	RIGHT HEATER CORE TEMPERATURE SENSOR SIGNAL
26	GY/PK	20	LEFT HEATER CORE TEMPERATURE SENSOR SIGNAL
27	BL/RD	20	A/C PRESSURE SENSOR SIGNAL
28	—	—	—
29	—	—	—

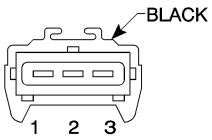

A/C PRESSURE SENSOR

A/C PRESSURE SENSOR — BLACK 3 WAY

CAVITY	COLOR	GAUGE	FUNCTION
1	BR/YL	18	A/C PRESSURE SENSOR GROUND
2	BL/RD	18	A/C PRESSURE SENSOR SIGNAL
3	RD/WT	18	A/C PRESSURE SENSOR 5 VOLT SUPPLY

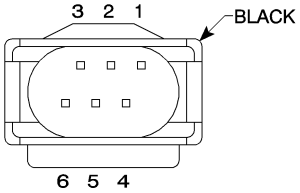

ACCELERATOR PEDAL POSITION SENSOR

ACCELERATOR PEDAL POSITION SENSOR — BLACK 6 WAY

CAVITY	COLOR	GAUGE	FUNCTION
1	YL/WT	20	ACCELERATOR PEDAL POSITION SENSOR 5 VOLT SUPPLY
2	—	—	—
3	OR	20	SENSOR GROUND
4	DG	20	ACCELERATOR PEDAL POSITION SENSOR SIGNAL NO. 2
5	GY	20	ACCELERATOR PEDAL POSITION SENSOR SIGNAL NO. 1
6	BK	20	SENSOR GROUND

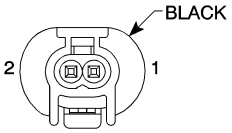

AIR PUMP SWITCHOVER SOLENOID

AIR PUMP SWITCHOVER SOLENOID — BLACK 2 WAY

CAVITY	COLOR	GAUGE	FUNCTION
1	GY/BR	20	AIR PUMP SWITCHOVER SOLENOID CONTROL
2	RD/DG	20	FUSED ENGINE CONTROL RELAY OUTPUT

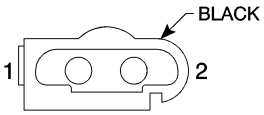

AIR PUMP

AIR PUMP — BLACK 2 WAY

CAVITY	COLOR	GAUGE	FUNCTION
1	RD/WT	20	AIR PUMP RELAY OUTPUT
2	BR	20	GROUND

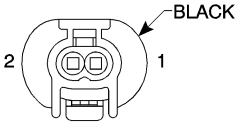

AMBIENT TEMPERATURE SENSOR

AMBIENT TEMPERATURE SENSOR — BLACK 2 WAY

CAVITY	COLOR	GAUGE	FUNCTION
1	DG	20	AMBIENT TEMPERATURE SENSOR SIGNAL
2	BR	20	SENSOR GROUND

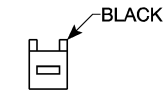

ANTENNA
C1

ANTENNA C1 — BLACK 1 WAY

CAVITY	COLOR	GAUGE	FUNCTION
1	BL/DG	18	ENABLE SIGNAL TO AMPLIFIER

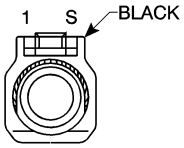

ANTENNA
C2

ANTENNA C2 — BLACK 1 WAY

CAVITY	COLOR	GAUGE	FUNCTION
1	BK	22	ANTENNA
2	BK	—	SHIELD

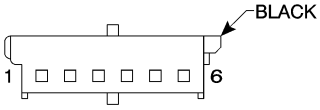

ANTI–
THEFT
TOW
SENSOR

ANTI-THEFT TOW SENSOR — BLACK 6 WAY

CAVITY	COLOR	GAUGE	FUNCTION
1	—	—	—
2	—	—	—
3	—	—	—
4	DG/GY	20	SENSOR GROUND
5	BR/DG	18	ANTI-THEFT TOW SENSOR SIGNAL
6	RD/YL	18	FUSED B(+)

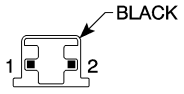

ASH
RECEIVER
LAMP

ASH RECEIVER LAMP — BLACK 2 WAY

CAVITY	COLOR	GAUGE	FUNCTION
1	BR	18	GROUND
2	GY	18	FUSED ILLUMINATION CONTROL MODULE OUTPUT

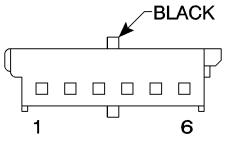

AUTOMATIC
DAY/ NIGHT
MIRROR

AUTOMATIC DAY/NIGHT MIRROR — BLACK 6 WAY

CAVITY	COLOR	GAUGE	FUNCTION
1	GY/YL	20	SHIFT LEVER ASSEMBLY REVERSE SUPPLY VOLTAGE
2	—	—	—
3	BR	20	GROUND
4	PK/RD/BK	20	FUSED IGNITION SWITCH OUTPUT
5	—	—	—
6	—	—	—

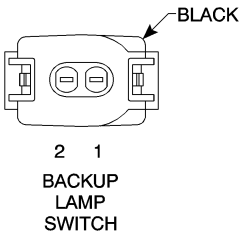

BACK UP LAMP SWITCH — BLACK 2 WAY

CAVITY	COLOR	GAUGE	FUNCTION
1	PK/RD	20	FUSED ILLUMINATION CONTROL MODULE SUPPLY VOLTAGE
2	GY/YL	20	BACKUP LAMP SWITCH OUTPUT

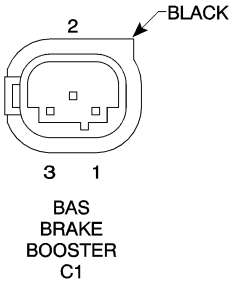

BAS BRAKE BOOSTER C1 — BLACK 3 WAY

CAVITY	COLOR	GAUGE	FUNCTION
1	PK/YL	20	5 VOLT SUPPLY
2	VT/DG	20	BAS TRAVEL SENSOR SIGNAL
3	YL/DG	20	SENSOR GROUND

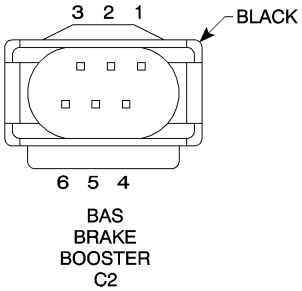

BAS BRAKE BOOSTER C2 — BLACK 6 WAY

CAVITY	COLOR	GAUGE	FUNCTION
1	GY	20	BAS RELEASE SWITCH SENSOR (RELEASED)
2	PK	20	12 VOLT SUPPLY
3	YL/VT	18	BAS RELEASE SWITCH SENSOR (APPLIED)
4	DG/BL	18	5 VOLT SUPPLY
5	BK/VT	18	BAS CONTROL
6	—	—	—

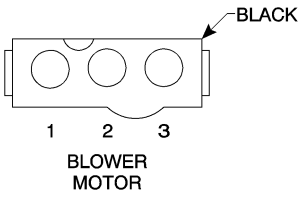

BLOWER MOTOR — BLACK 3 WAY

CAVITY	COLOR	GAUGE	FUNCTION
1	BR	14	BLOWER MOTOR GROUND
2	WT/PK	20	BLOWER MOTOR CONTROL
3	RD	14	FUSED B(+)

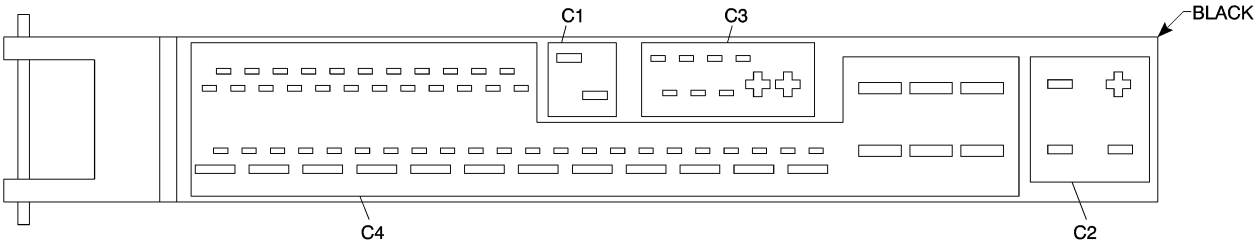

BODY CONTROL MODULE

BODY CONTROL MODULE C4 — BLACK 63 WAY

CAVITY	COLOR	GAUGE	FUNCTION
3	PK/YL/DG	12	FUSED IGNITION SWITCH OUTPUT
4	RD/YL/WT	12	FUSED B(+)
5	BR	12	GROUND
6	—	—	—
7	—	—	—
8	—	—	—
9	—	—	—
10	BK/WT	14	RIGHT FRONT POWER WINDOW DRIVER (DOWN)
11	DG/WT	14	RIGHT FRONT POWER WINDOW DRIVER (UP)
12	BK	14	LEFT FRONT POWER WINDOW DRIVER (DOWN)
13	DG	14	LEFT FRONT POWER WINDOW DRIVER (UP)
14	BR/WT	16	REAR SPOILER DRIVER (UP)
15	RD/WT	16	REAR SPOILER DRIVER (DOWN)
16	—	—	—
17	—	—	—
18	BL/BR	18	DOME LAMP CONTROL
19	—	—	—
20	—	—	—
21	BK/VT	20	INSTRUMENT CLUSTER WAKE UP SIGNAL
22	—	—	—
23	—	—	—
24	—	—	—
25	—	—	—
26	—	—	—
27	—	—	—
28	BR/GY	20	SPOILER LIMIT SWITCH SIGNAL (UP)
29	BR/YL	20	SPOILER LIMIT SWITCH SIGNAL (DOWN)
30	—	—	—
31	BL/GY	20	LIFTGATE LOCK SWITCH SENSE (LOCK)
32	—	—	—
33	—	—	—
34	WT/DG	20	SCI TRANSMIT
35	—	—	—
36	—	—	—
37	—	—	—
38	WT/BL	20	RIGHT POWER WINDOW SWITCH FEED
39	DG/YL	20	LEFT POWER WINDOW SWITCH FEED
42	BR	14	GROUND
43	BR	12	GROUND
44	RD/YL	12	FUSED B(+)
51	—	—	—

BODY CONTROL MODULE C4 — BLACK 63 WAY

CAVITY	COLOR	GAUGE	FUNCTION
52	—	—	—
53	—	—	—
54	—	—	—
55	GY/BK	20	DOOR UNLOCK SWITCH SENSE
56	BL/DG	20	WHEEL SPEED SENSOR OUTPUT
57	BK/RD	20	DOOR LOCK SWITCH SENSE
58	PK/RD/BK	18	FUSED IGNITION SWITCH OUTPUT
59	GY/RD	20	RKE STATUS OUTPUT
60	—	—	—
61	BR	16	GROUND
62	DG	20	CAN B BUS (-)
68	GY/WT	20	5 VOLT SUPPLY
69	—	—	—
70	—	—	—
71	DG/WT	20	REAR SPOILER SWITCH SENSE
72	—	—	—
73	—	—	—
74	DG/WT	20	WHEEL SPEED SENSOR OUTPUT
75	RD/GY	20	FUSED B(+)
76	—	—	—
77	BR	20	FUSED IGNITION SWITCH OUTPUT
78	WT	20	CAN B BUS (+)

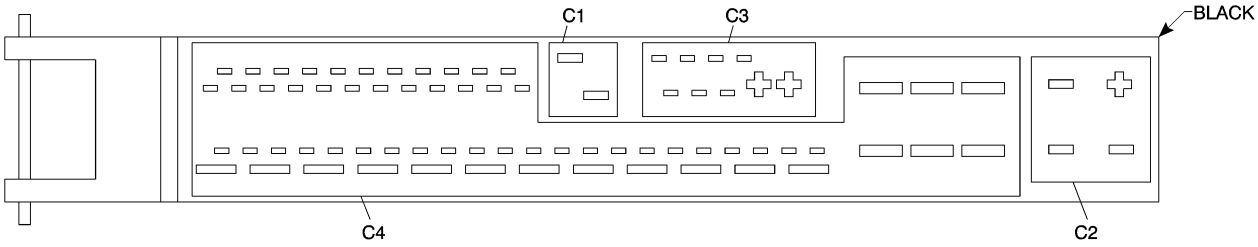

BODY CONTROL MODULE

BODY CONTROL MODULE C2 — BLACK 4 WAY

CAVITY	COLOR	GAUGE	FUNCTION
1	RD	14	WIPER LOW SPEED CONTROL
2	DG	14	WIPER HIGH SPEED CONTROL
40	WT	14	WIPER PARK SWITCH SENSE
41	BK	14	12 VOLT SUPPLY

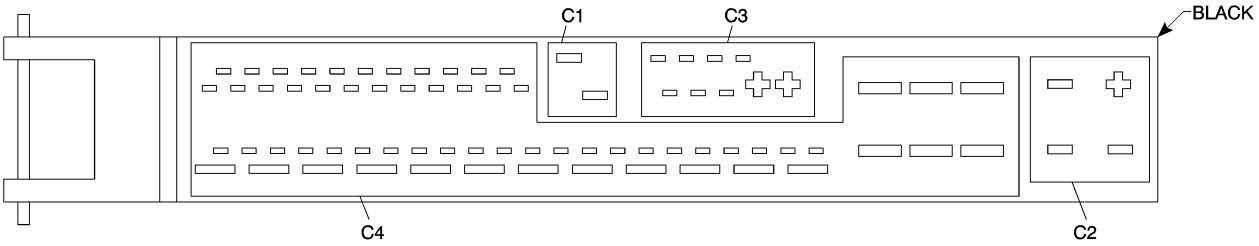

BODY
CONTROL
MODULE

BODY CONTROL MODULE C1 — GREY 2 WAY

CAVITY	COLOR	GAUGE	FUNCTION
50	RD	20	12 VOLT SUPPLY
67	BR	20	CONTROL MODULE COOLING FAN CONTROL

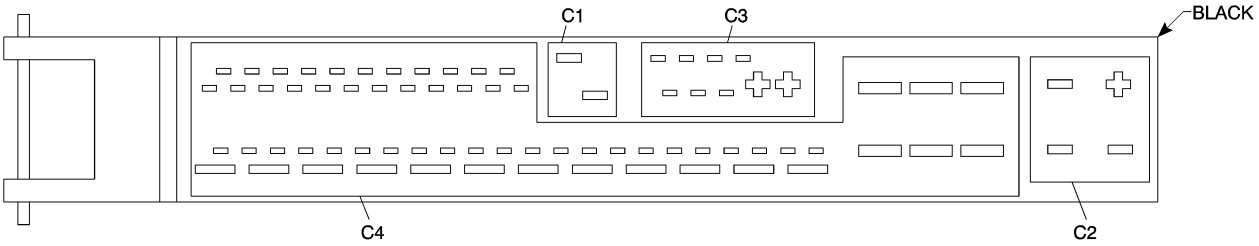

BODY
CONTROL
MODULE

BODY CONTROL MODULE C3 — GREY 9 WAY

CAVITY	COLOR	GAUGE	FUNCTION
45	BK/BL	16	TURN SIGNAL MONITORED GROUND
46	BK/YL	16	HAZARD SWITCH SIGNAL
47	DG/BL	20	REAR DEFOGGER SWITCH SENSE
48	DG/BK	20	REAR DEFOGGER INDICATOR DRIVER
49	WT/DG	20	DOOR LOCK SWITCH MUX
63	GY	16	WASHER PUMP MOTOR CONTROL
64	—	—	—
65	BL	18	WIPER SWITCH MUX
66	—	—	—

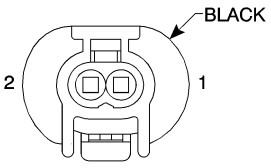

BRAKE FLUID LEVEL SWITCH

BRAKE FLUID LEVEL SWITCH — BLACK 2 WAY

CAVITY	COLOR	GAUGE	FUNCTION
1	BR	20	GROUND
2	BR/WT	20	BRAKE FLUID LEVEL SWITCH OUTPUT

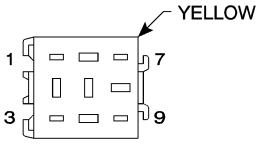

BRAKE LAMP RELAY

BRAKE LAMP RELAY — YELLOW 9 WAY

CAVITY	COLOR	GAUGE	FUNCTION
1	—	—	—
2	—	—	—
3	—	—	—
4	RD/WT	18	FUSED ILLUMINATION CONTROL MODULE OUTPUT
5	BK/RD	20	BRAKE LAMP RELAY OUTPUT
6	BK/YL	20	BRAKE LAMP RELAY CONTROL
7	—	—	—
8	BK/WT	18	BRAKE LAMP SWITCH OUTPUT
9	—	—	—

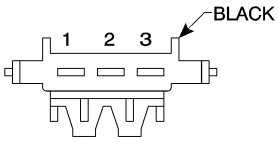

BRAKE LAMP SWITCH A (A/T)

BRAKE LAMP SWITCH A (A/T) — BLACK 3 WAY

CAVITY	COLOR	GAUGE	FUNCTION
1	RD/WT	20	BRAKE LAMP SWITCH OUTPUT
2	RD/YL	20	TRACTION SYSTEM RELAY OUTPUT
3	RD/BL	20	BTSI FEED

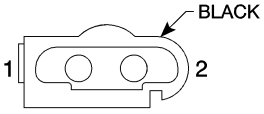

BRAKE LAMP SWITCH A (M/T)

BRAKE LAMP SWITCH A (M/T) — BLACK 2 WAY

CAVITY	COLOR	GAUGE	FUNCTION
1	RD/WT	20	BRAKE LAMP SWITCH OUTPUT
2	RD/YL	20	TRACTION SYSTEM RELAY OUTPUT

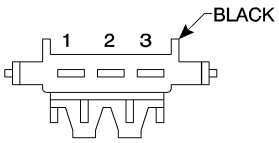

BRAKE
LAMP
SWITCH B
(A/T)

BRAKE LAMP SWITCH B (A/T) — BLACK 3 WAY

CAVITY	COLOR	GAUGE	FUNCTION
1	RD/WT	18	FUSED B(+)
2	BK/WT	18	BRAKE LAMP SWITCH OUTPUT
3	—	—	—

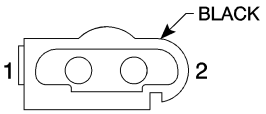

BRAKE
LAMP
SWITCH B
(M/T)

BRAKE LAMP SWITCH B (M/T) — BLACK 2 WAY

CAVITY	COLOR	GAUGE	FUNCTION
1	RD/WT	18	FUSED B(+)
2	BK/WT	18	BRAKE LAMP SWITCH OUTPUT

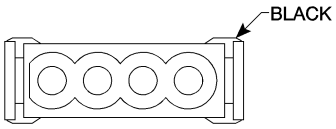

C100

C100 — BLACK 4 WAY F

CAVITY	COLOR	GAUGE	FUNCTION
1	BK/WT	20	LEFT TURN SIGNAL OUTPUT
2	BK/DG	20	RIGHT TURN SIGNAL OUTPUT
3	GY/BK	18	DOOR UNLOCK SWITCH SENSE
4	GY/RD	18	RKE STATUS OUTPUT

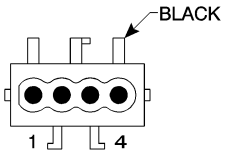

C100

C100 — BLACK 4 WAY M

CAVITY	COLOR	GAUGE	FUNCTION
1	BK/WT	20	LEFT TURN SIGNAL OUTPUT
2	BK/DG	20	RIGHT TURN SIGNAL OUTPUT
3	GY/BK	18	DOOR UNLOCK SWITCH SENSE
4	GY/RD	18	RKE STATUS OUTPUT

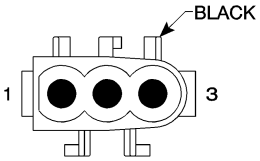

C105

C105 — BLACK 3 WAY M

CAVITY	COLOR	GAUGE	FUNCTION
1	BR/RD	18	HOOD AJAR SWITCH SENSE
2	YL/RD	20	SIREN SIGNAL OUTPUT
3	RD/YL	20	FUSED B(+)

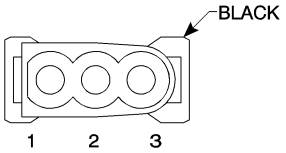

C105

C105 — BLACK 3 WAY F

CAVITY	COLOR	GAUGE	FUNCTION
1	BR/RD	18	HOOD AJAR SWITCH SENSE
2	YL/RD	20	SIREN SIGNAL OUTPUT
3	RD/YL	20	FUSED B(+)

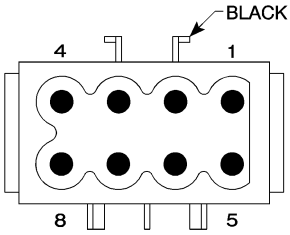

C106

C106 — BLACK 8 WAY M

CAVITY	COLOR	GAUGE	FUNCTION
1	BR/VT	20	AIR PUMP RELAY CONTROL
2	—	—	—
3	BL/DG	18	A/C COMPRESSOR CLUTCH SIGNAL
4	BK/YL	16	FUSED IGNITION SWITCH OUTPUT
5	BL	18	LOW BATTERY INDICATOROUTPUT
6	VT	14	ENGINE STARTER MOTOR CONTROL
7	—	—	—
8	—	—	—

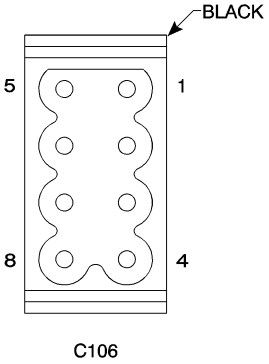

C106

C106 — BLACK 8 WAY F

CAVITY	COLOR	GAUGE	FUNCTION
1	GY/BL	20	AIR PUMP RELAY CONTROL
2	—	—	—
3	BL/DG	18	A/C COMPRESSOR CLUTCH SIGNAL
4	BK/YL	16	FUSED IGNITION SWITCH OUTPUT
5	BL	18	LOW BATTERY INDICATOROUTPUT
6	VT	14	ENGINE STARTER MOTOR CONTROL
7	—	—	—
8	—	—	—

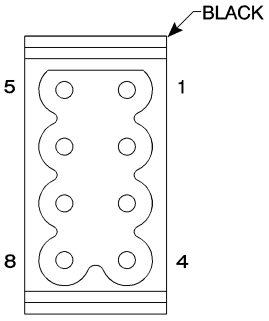

C200

C200 — BLACK 8 WAY F

CAVITY	COLOR	GAUGE	FUNCTION
1	BR/VT	20	LEFT COOLANT CIRCLATION VALVE CONTROL
2	BR/DG	20	COOLANT CIRCULATION PUMP CONTROL
3	BR/RD	20	RIGHT COOLANT CIRCLATION VALVE CONTROL
4	BL/DG	18	HEADLAMP CLEANING SWITCH SENSE (EXPORT ONLY)
5	VT	20	FUSED IGNITION SWITCH OUTPUT
6	BK/WT	18	LEFT TURN SIGNAL OUTPUT
7	BK/DG	18	RIGHT TURN SIGNAL OUTPUT
8	GY	18	WASHER PUMP MOTOR CONTROL

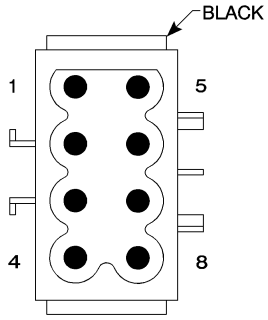

C200

C200 — BLACK 8 WAY M

CAVITY	COLOR	GAUGE	FUNCTION
1	BR/VT	20	LEFT COOLANT CIRCULATION VALVE CONTROL
2	BR/DG	20	COOLANT CIRCULATION PUMP CONTROL
3	BR/RD	20	RIGHT COOLANT CIRCULATION VALVE CONTROL
4	BL/DG	18	HEADLAMP CLEANING SWITCH SENSE (EXPORT ONLY)
5	VT	20	FUSED IGNITION SWITCH OUTPUT
6	BK/WT	18	LEFT TURN SIGNAL OUTPUT
7	BK/DG	18	RIGHT TURN SIGNAL OUTPUT
8	GY	18	WASHER PUMP MOTOR CONTROL

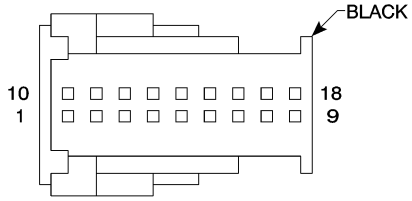

C201

C201 — BLACK 18 WAY F

CAVITY	COLOR	GAUGE	FUNCTION
1	YL/BL	20	ESP YAW RATE SENSOR SIGNAL
2	BR	20	SENSOR GROUND
3	RD/DG	20	5 VOLT SUPPLY
4	BK/RD/WT	20	ESP LATERAL ACCELERATION SENSOR SIGNAL
5	BR	20	SENSOR GROUND
6	BK/PK/WT	20	5 VOLT SUPPLY
7	GY/YL	20	BACKUP LAMP SWITCH SENSE
8	BL	20	LEFT REAR WHEEL SPEED SENSOR 12 VOLT SUPPLY
9	BR	20	LEFT REAR WHEEL SPEED SENSOR SIGNAL
10	YL	20	RIGHT REAR WHEEL SPEED SENSOR 12V SUPPLY
11	BR	20	RIGHT REAR WHEEL SPEED SENSOR SIGNAL
12	BK/BL	20	ESP OFF SWITCH SENSE
13	DG/VT	20	PARK BRAKE SWITCH SENSE
14	BL/DG	20	WHEEL SPEED SENSOR OUTPUT
15	BK/RD	20	BRAKE LAMP RELAY OUTPUT
16	BK/YL	20	BRAKE LAMP RELAY CONTROL
17	RD/WT	20	BRAKE LAMP SWITCH OUTPUT
18	RD/YL	20	TRACTION SYSTEM RELAY OUTPUT

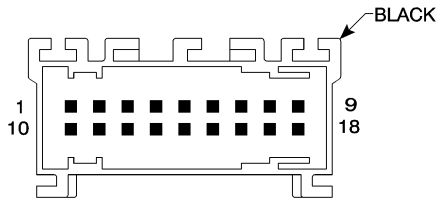

C201

C201 — BLACK 18 WAY M

CAVITY	COLOR	GAUGE	FUNCTION
1	YL/BL	20	ESP YAW RATE SENSOR SIGNAL
2	BR	20	SENSOR GROUND
3	RD/DG	20	5 VOLT SUPPLY
4	BK/RD/WT	20	ESP LATERAL ACCELERATION SENSOR SIGNAL
5	BR	20	SENSOR GROUND
6	BK/PK/WT	20	5 VOLT SUPPLY
7	GY/YL	20	BACKUP LAMP SWITCH SENSE
8	BL	20	LEFT REAR WHEEL SPEED SENSOR 12 VOLT SUPPLY
9	BR	20	LEFT REAR WHEEL SPEED SENSOR SIGNAL
10	YL	20	RIGHT REAR WHEEL SPEED SENSOR 12V SUPPLY
11	BR	20	RIGHT REAR WHEEL SPEED SENSOR SIGNAL
12	BK/BL	20	ESP OFF SWITCH SENSE
13	DG/VT	20	PARK BRAKE SWITCH SENSE
14	BL/DG	20	WHEEL SPEED SENSOR OUTPUT
15	BK/RD	20	BRAKE LAMP RELAY OUTPUT
16	BK/YL	20	BRAKE LAMP RELAY CONTROL
17	RD/WT	20	BRAKE LAMP SWITCH OUTPUT
18	RD/YL	20	TRACTION SYSTEM RELAY OUTPUT

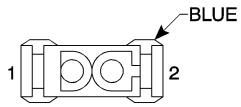

C204

C204 — BLUE 2 WAY F

CAVITY	COLOR	GAUGE	FUNCTION
1	DG/BK	20	ENHANCED ACCIDENT REPORT DRIVER
2	YL	20	SCI TRANSMIT

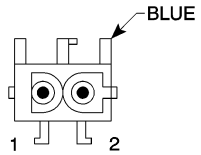

C204

C204 — BLUE 2 WAY M

CAVITY	COLOR	GAUGE	FUNCTION
1	DG/WT	20	ENHANCED ACCIDENT REPORT DRIVER
2	YL	20	SCI TRANSMIT

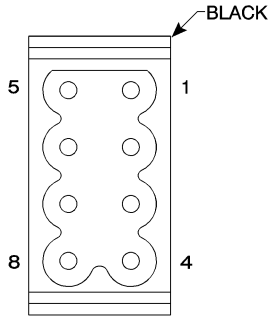

C206

C206 — BLACK 8 WAY F

CAVITY	COLOR	GAUGE	FUNCTION
1	BK/RD	20	DOOR LOCK SWITCH SENSE
2	BL	20	DRIVER CYLINDER LOCK SWITCH SENSE (LOCK)
3	BK	20	DRIVER CYLINDER LOCK SWITCH SENSE (UNLOCK)
4	BK/GY	20	GLOVE BOX SWITCH SENSE
5	BK/WT	20	SCI TRANSMIT
6	YL/DG	20	SCI TRANSMIT
7	RD/YL	20	SCI TRANSMIT (A/T ONLY)
8	DG	20	SCI TRANSMIT (A/T ONLY)

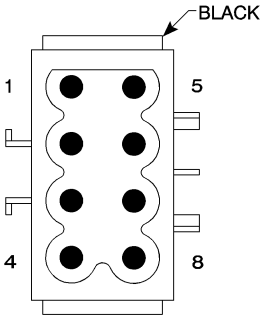

C206

C206 — BLACK 8 WAY M

CAVITY	COLOR	GAUGE	FUNCTION
1	BK/RD	20	DOOR LOCK SWITCH SENSE
2	BL	20	DRIVER CYLINDER LOCK SWITCH SENSE (LOCK)
3	BK	20	DRIVER CYLINDER LOCK SWITCH SENSE (UNLOCK)
4	BK/GY	20	GLOVE BOX SWITCH SENSE
5	BK/WT	20	SCI TRANSMIT
6	YL/DG	20	SCI TRANSMIT
7	RD/YL	20	SCI TRANSMIT (A/T ONLY)
8	DG	20	SCI TRANSMIT (A/T ONLY)

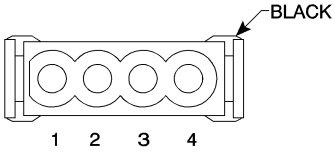

C207

C207 — BLACK 4 WAY F

CAVITY	COLOR	GAUGE	FUNCTION
1	RD/DG	20	FUSED SUPPLY VOLTAGE
2	DG/WT	18	WHEEL SPEED SENSOR OUTPUT
3	WT	18	CAN HIGH
4	DG	18	CAN LOW

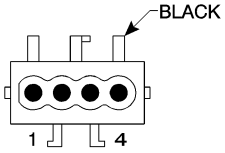

C207

C207 — BLACK 4 WAY M

CAVITY	COLOR	GAUGE	FUNCTION
1	RD/DG	20	FUSED SUPPLY VOLTAGE
2	DG/WT	18	WHEEL SPEED SENSOR OUTPUT
3	WT	18	CAN HIGH
4	DG	18	CAN LOW

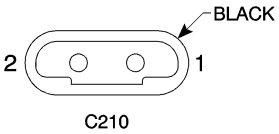

C210

C210 - RED 2 WAY F

CAVITY	COLOR	GAUGE	FUNCTION
1	BL/DG	20	PASSENGER SQUIB LINE 2
2	BR/DG	20	PASSENGER SQUIB LINE 1

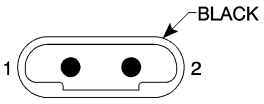

C210

C210 — BLACK 2 WAY M

CAVITY	COLOR	GAUGE	FUNCTION
1	BL/DG	20	PASSENGER SQUIB LINE 2
2	BR/DG	20	PASSENGER SQUIB LINE 1

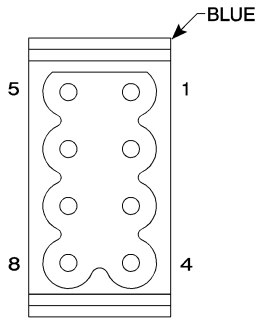

C211

C211 — BLUE 8 WAY F

CAVITY	COLOR	GAUGE	FUNCTION
1	DG/WT	20	WHEEL SPEED SENSOR OUTPUT
2	BR/DG	18	OXYGEN SENSOR 1/2 HEATER CONTROL
3	—	—	—
4	BR/WT	18	OXYGEN SENSOR 2/2 HEATER CONTROL
5	BL/RD	18	SENSOR GROUND
6	DG/BL	20	OXYGEN SENSOR 2/2 SIGNAL
7	YL/DG	20	OXYGEN SENSOR 1/2 SIGNAL
8	RD/DG	16	FUSED B(+)

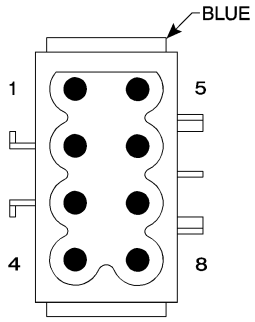

C211

C211 — BLUE 8 WAY M

CAVITY	COLOR	GAUGE	FUNCTION
1	DG/WT	20	WHEEL SPEED SENSOR OUTPUT
2	BR/DG	18	OXYGEN SENSOR 1/2 HEATER CONTROL
3	—	—	—
4	BR/WT	18	OXYGEN SENSOR 2/2 HEATER CONTROL
5	BL/RD	18	SENSOR GROUND
6	DG/BL	20	OXYGEN SENSOR 2/2 SIGNAL
7	YL/DG	20	OXYGEN SENSOR 1/2 SIGNAL
8	RD/DG	16	FUSED B(+)

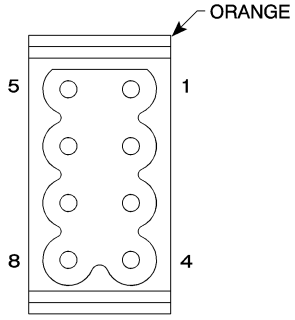

C219

C219 — ORANGE 8 WAY F

CAVITY	COLOR	GAUGE	FUNCTION
1	BK/RD	20	5 VOLT SUPPLY
2	BR/YL	20	SENSOR GROUND
3	DG	20	FUEL TANK PRESSURE SENSOR SIGNAL
4	RD/DG	18	FUSED ENGINE CONTROL RELAY OUTPUT
5	BR/BL	18	CHARCOAL CANISTER SHUT OFF VALVE CONTROL
6	DG/VT	20	FUSED IGNITION SWITCH OUTPUT
7	—	—	—
8	BK/BL	20	SCI TRANSMIT

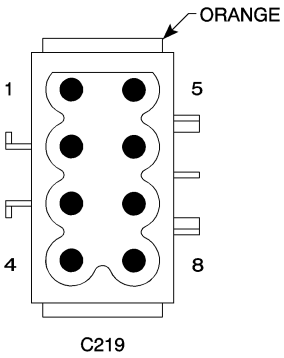

C219 — ORANGE 8 WAY M

CAVITY	COLOR	GAUGE	FUNCTION
1	BK/RD	20	5 VOLT SUPPLY
2	BR/YL	20	SENSOR GROUND
3	DG	20	FUEL TANK PRESSURE SENSOR SIGNAL
4	RD/DG	18	FUSED ENGINE CONTROL RELAY OUTPUT
5	BR/BL	18	CHARCOAL CANISTER SHUT OFF VALVE CONTROL
6	DG/VT	20	FUSED IGNITION SWITCH OUTPUT
7	—	—	—
8	BK/BL	20	SCI TRANSMIT

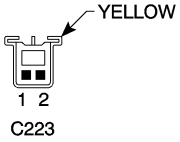

C223 — YELLOW 2 WAY M

CAVITY	COLOR	GAUGE	FUNCTION
1	BL/RD	20	LEFT SIDE SQUIB LINE 2
2	BL/GY	20	LEFT SIDE SQUIB LINE 1

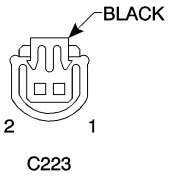

C223 — BLACK 2 WAY F

CAVITY	COLOR	GAUGE	FUNCTION
1	BL/RD	20	LEFT SIDE SQUIB LINE 2
2	BL/GY	20	LEFT SIDE SQUIB LINE 1

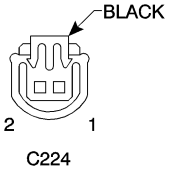

C224 — BLACK 2 WAY F

CAVITY	COLOR	GAUGE	FUNCTION
1	BL/BK	20	RIGHT SIDE SQUIB LINE 1
2	BL/WT	20	RIGHT SIDE SQUIB LINE 2

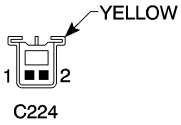

C224 — YELLOW 2 WAY M

CAVITY	COLOR	GAUGE	FUNCTION
1	BL/BK	20	RIGHT SIDE SQUIB LINE 1
2	BL/WT	20	RIGHT SIDE SQUIB LINE 2

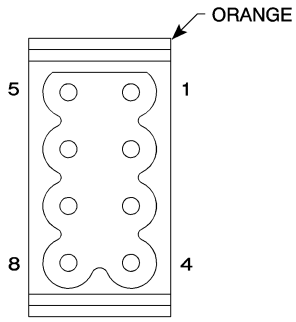

C226

C226 — ORANGE 8 WAY F

CAVITY	COLOR	GAUGE	FUNCTION
1	BK/BL	20	SCI TRANSMIT
2	BL/DG	18	A/C COMPRESSOR CLUTCH SIGNAL
3	BR/YL	18	A/C PRESSURE SENSOR GROUND
4	RD/WT	18	A/C PRESSURE SENSOR 5 VOLT SUPPLY
5	BL/RD	18	A/C PRESSURE SENSOR SIGNAL
6	—	—	—
7	BL	20	SCI TRANSMIT
8	RD/DG	18	FUSED B(+)

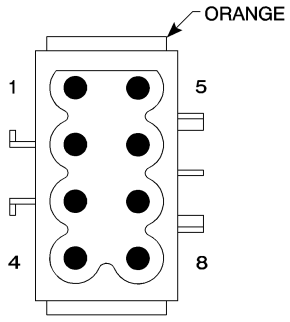

C226

C226 — ORANGE 8 WAY M

CAVITY	COLOR	GAUGE	FUNCTION
1	BK/BL	20	SCI TRANSMIT
2	BL/DG	18	A/C COMPRESSOR CLUTCH SIGNAL
3	BR/YL	18	A/C PRESSURE SENSOR GROUND
4	RD/WT	18	A/C PRESSURE SENSOR 5 VOLT SUPPLY
5	BL/RD	18	A/C PRESSURE SENSOR SIGNAL
6	—	—	—
7	BL	20	SCI TRANSMIT
8	RD/DG	18	FUSED B(+)

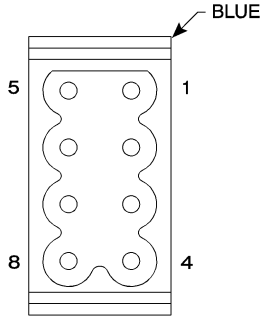

C227

C227 — BLUE 8 WAY F

CAVITY	COLOR	GAUGE	FUNCTION
1	DG/YL	20	SCI RECEIVE
2	RD/WT	20	SCI TRANSMIT
3	YL/BL	20	SCI TRANSMIT
4	YL	20	SCI TRANSMIT
5	BR/YL	20	SENSOR GROUND
6	—	—	—
7	BL/YL	20	STEERING ANGLE SENSOR SIGNAL
8	—	—	—

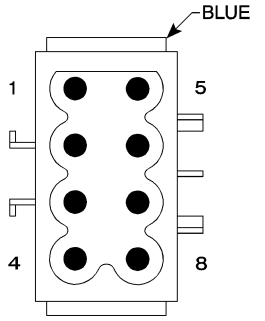

C227

C227 — BLUE 8 WAY M

CAVITY	COLOR	GAUGE	FUNCTION
1	DG/YL	20	SCI RECEIVE
2	RD/WT	20	SCI TRANSMIT
3	YL/BL	20	SCI TRANSMIT
4	YL	20	SCI TRANSMIT
5	BR/YL	20	SENSOR GROUND
6	—	—	—
7	BL/YL	20	STEERING ANGLE SENSOR SIGNAL
8	—	—	—

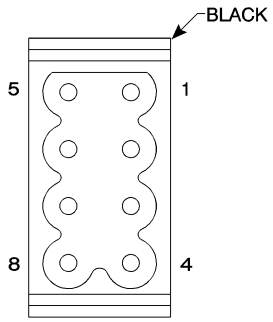

C228

C228 — BLACK 8 WAY F

CAVITY	COLOR	GAUGE	FUNCTION
1	PK/RD/WT	18	FUSED IGNITION SWITCH OUTPUT
2	BR	18	GROUND
3	WT	18	LEFT MIRROR LEFT DRIVER
4	GY	18	MIRROR COMMON DRIVER
5	BK	18	LEFT MIRROR UP DRIVER
6	BR	20	GROUND
7	BL	20	DRIVER CYLINDER LOCK SWITCH SENSE (LOCK)
8	BK	20	DRIVER CYLINDER LOCK SWITCH SENSE (UNLOCK)

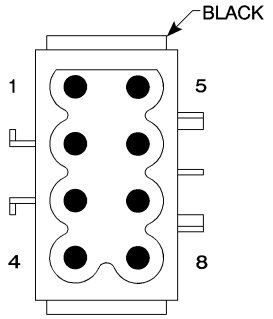

C228

C228 — BLACK 8 WAY M

CAVITY	COLOR	GAUGE	FUNCTION
1	PK/RD/WT	18	FUSED IGNITION SWITCH OUTPUT
2	BR	18	GROUND
3	WT	18	LEFT MIRROR LEFT DRIVER
4	GY	18	MIRROR COMMON DRIVER
5	BK	18	LEFT MIRROR UP DRIVER
6	BR	20	GROUND
7	BL	20	DRIVER CYLINDER LOCK SWITCH SENSE (LOCK)
8	BK	20	DRIVER CYLINDER LOCK SWITCH SENSE (UNLOCK)

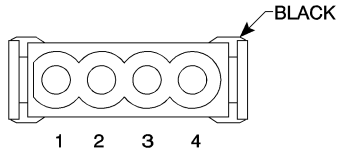

C229

C229 — BLACK 4 WAY F

CAVITY	COLOR	GAUGE	FUNCTION
1	BK/BL	18	AMPLIFIED LEFT DOOR SPEAKER (+)
2	BR/DG	18	AMPLIFIED LEFT DOOR SPEAKER (-)
3	DG	14	LEFT FRONT POWER WINDOW DRIVER (UP)
4	BK	14	LEFT FRONT POWER WINDOW DRIVER (DOWN)

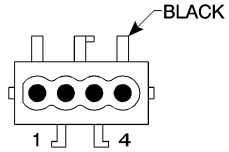

C229

C229 — BLACK 4 WAY M

CAVITY	COLOR	GAUGE	FUNCTION
1	BK/BL	18	AMPLIFIED LEFT DOOR SPEAKER (+)
2	BR/DG	18	AMPLIFIED LEFT DOOR SPEAKER (-)
3	DG	14	LEFT FRONT POWER WINDOW DRIVER (UP)
4	BK	14	LEFT FRONT POWER WINDOW DRIVER (DOWN)

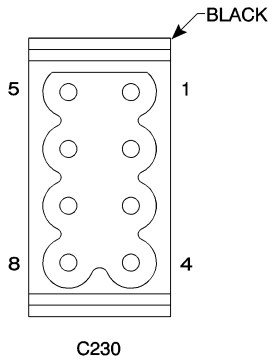

C230

C230 — BLACK 8 WAY F

CAVITY	COLOR	GAUGE	FUNCTION
1	PK/RD/WT	18	FUSED IGNITION SWITCH OUTPUT
2	BR	18	GROUND
3	WT	18	RIGHT MIRROR UP DRIVER
4	GY	18	MIRROR COMMON DRIVER
5	BK	18	RIGHT MIRROR LEFT DRIVER
6	—	—	—
7	—	—	—
8	—	—	—

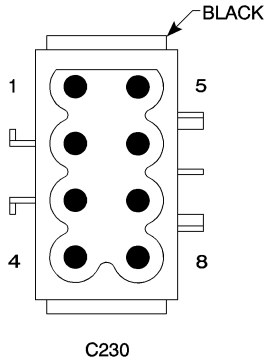

C230

C230 — BLACK 8 WAY M

CAVITY	COLOR	GAUGE	FUNCTION
1	PK/RD/WT	18	FUSED IGNITION SWITCH OUTPUT
2	BR	18	GROUND
3	WT	18	RIGHT MIRROR UP DRIVER
4	GY	18	MIRROR COMMON DRIVER
5	BK	18	RIGHT MIRROR LEFT DRIVER
6	—	—	—
7	—	—	—
8	—	—	—

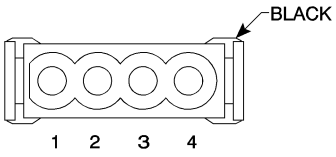

C231

C231 — BLACK 4 WAY F

CAVITY	COLOR	GAUGE	FUNCTION
1	BK/BL	18	AMPLFIED RIGHT DOOR SPEAKER (+)
2	BR/DG	18	AMPLIFIED RIGHT DOOR SPEAKER (-)
3	DG	14	RIGHT FRONT POWER WINDOW DRIVER (UP)
4	BK	14	RIGHT FRONT POWER WINDOW DRIVER (DOWN)

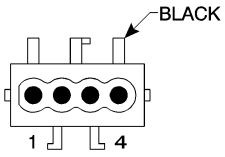

C231

C231 — BLACK 4 WAY M

CAVITY	COLOR	GAUGE	FUNCTION
1	BK/BL	18	AMPLIFIED RIGHT DOOR SPEAKER (+)
2	BR/DG	18	AMPLIFIED RIGHT DOOR SPEAKER (-)
3	DG	14	RIGHT FRONT POWER WINDOW DRIVER (UP)
4	BK	14	RIGHT FRONT POWER WINDOW DRIVER (DOWN)

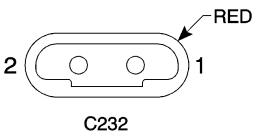

C232

C232 — RED 2 WAY F

CAVITY	COLOR	GAUGE	FUNCTION
1	VT	20	DRIVER SQUIB LINE 1
2	DG	20	DRIVER SQUIB LINE 2

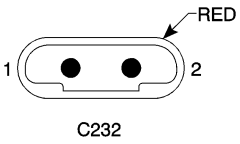

C232

C232 — RED 2 WAY M

CAVITY	COLOR	GAUGE	FUNCTION
1	VT	20	DRIVER SQUIB LINE 1
2	DG	20	DRIVER SQUIB LINE 2

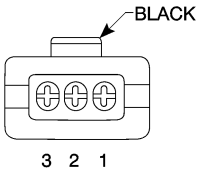

CAMSHAFT POSITION SENSOR

CAMSHAFT POSITION SENSOR — BLACK 3 WAY

CAVITY	COLOR	GAUGE	FUNCTION
1	BR/DG	20	SENSOR GROUND
2	PK	20	CAMSHAFT POSITION SENSOR SIGNAL
3	RD/BL	20	FUSED ENGINE CONTROL RELAY OUTPUT

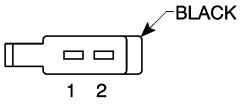

CARGO LAMP

CARGO LAMP— BLACK 2 WAY

CAVITY	COLOR	GAUGE	FUNCTION
1	BR/YL	18	GROUND
2	RD/DG	18	FUSED B(+)

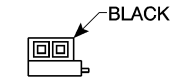

CENTER HIGH MOUNTED STOP LAMP

CENTER HIGH MOUNTED STOP LAMP (CHMSL) — VIOLET 2 WAY

CAVITY	COLOR	GAUGE	FUNCTION
1	BR	20	GROUND
2	BK/BL	20	BRAKE LAMP RELAY OUTPUT

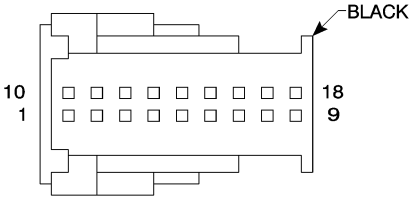

CENTRAL LOCKING PUMP/ SECURITY SYSTEM MODULE C1

CENTRAL LOCKING PUMP/ SECURITY SYSTEM MODULE C1 — BLACK 18 WAY

CAVITY	COLOR	GAUGE	FUNCTION
1	—	—	—
2	—	—	—
3	—	—	—
4	—	—	—
5	—	—	—
6	—	—	—
7	—	—	—
8	WT	20	CAN B BUS (+)
9	DG	20	CAN B BUS (-)
10	—	—	—
11	—	—	—
12	—	—	—
13	BR/YL	20	LIFTGATE LOCK SWITCH SENSE (UNLOCK)
14	BR/GY	20	LEFT DOOR AJAR SWITCH SENSE
15	—	—	—
16	BR/PK	20	RIGHT DOOR AJAR SWITCH SENSE
17	—	—	—
18	—	—	—

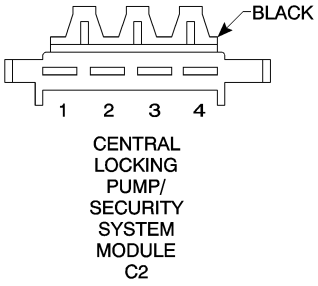

CENTRAL LOCKING PUMP/ SECURITY SYSTEM MODULE C2

CENTRAL LOCKING PUMP/ SECURITY SYSTEM MODULE C2 — BLACK 4 WAY

CAVITY	COLOR	GAUGE	FUNCTION
1	BK	12	REAR WINDOW DEFOGGER GRID
2	RD/DG	12	FUSED B(+)
3	BR	12	GROUND
4	BK/YL/WT	16	FUSED B(+)

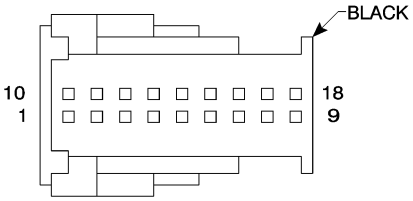

CENTRAL LOCKING PUMP/ SECURITY SYSTEM MODULE C3

CENTRAL LOCKING PUMP/ SECURITY SYSTEM MODULE C3 — BLACK 18 WAY

CAVITY	COLOR	GAUGE	FUNCTION
1	—	—	—
2	—	—	—
3	—	—	—
4	DG/GY	20	SENSOR GROUND
5	BR/RD	18	HOOD AJAR SWITCH SENSE
6	WT/DG	20	TOW–AWAY ALARM SWITCH 9 VOLT SUPPLY
7	YL/RD	20	SIREN SIGNAL OUTPUT
8	—	—	—
9	—	—	—
10	—	—	—
11	RD/DG	20	TOW–AWAY ALARM SWITCH SENSE
12	—	—	—
13	—	—	—
14	—	—	—
15	BR/DG	18	
16	BR/GY	20	GLOVE BOX SWITCH SENSE
17	—	—	—
18	—	—	—

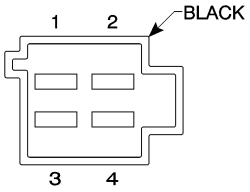

CENTRAL LOCKING PUMP/ SECURITY SYSTEM MODULE C4

CENTRAL LOCKING PUMP/ SECURITY SYSTEM MODULE C4 — BLACK 4 WAY

CAVITY	COLOR	GAUGE	FUNCTION
1	YL/BK	14	HEADLAMP SWITCH SENSE
2	GY/RD	18	RIGHT REAR TURN SIGNAL OUTPUT
3	—	—	—
4	GY/BK	18	LEFT REAR TURN SIGNAL OUTPUT

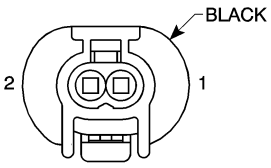

CHARCOAL CANISTER SHUTOFF VALVE

CHARCOAL CANISTER SHUTOFF VALVE — BLACK 2 WAY

CAVITY	COLOR	GAUGE	FUNCTION
1	BR/DG	18	FUSED ENGINE CONTROL RELAY OUTPUT
2	BR/BL	18	CHARCOAL CANISTER SHUT OFF VALVE CONTROL

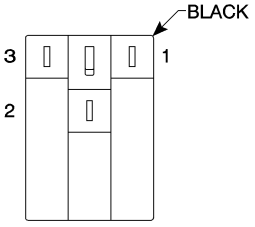

CIGAR LIGHTER

CIGAR LIGHTER — BLACK 3 WAY

CAVITY	COLOR	GAUGE	FUNCTION
1	BR	16	GROUND
2	—	—	—
3	BK/BL	16	FUSED IGNITION SWITCH OUTPUT

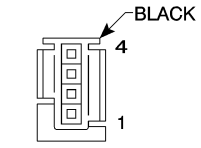

CLOCKSPRING

CLOCKSPRING — BLACK 4 WAY

CAVITY	COLOR	GAUGE	FUNCTION
1	BR	20	HORN GROUND
2	YL	20	FUSED B(+)
3	VT	20	DRIVER SQUIB LINE 1
4	DG	20	DRIVER SQUIB LINE 2

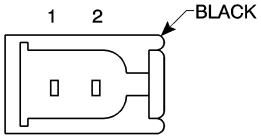

CLUTCH INTERLOCK SWITCH

CLUTCH INTERLOCK SWITCH — BLACK 2 WAY

CAVITY	COLOR	GAUGE	FUNCTION
1	VT	20	FUSED IGNTION SWITCH OUTPUT
2	VT	20	CLUTCH INTERLOCK SWITCH OUTPUT A/T
2	VT	20	CLUTCH INTERLOCK SWITCH OUTPUT M/T

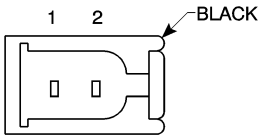

CLUTCH PEDAL POSITION SWITCH

CLUTCH PEDAL POSITION SWITCH — BLACK 2 WAY

CAVITY	COLOR	GAUGE	FUNCTION
1	BR	20	GROUND
2	RD/BK	20	CLUTCH PEDAL POSITION SWITCH SIGNAL

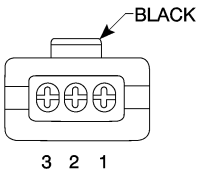

COIL
ON
PLUG
NO. 1

COIL ON PLUG NO. 1 — BLACK 3 WAY

CAVITY	COLOR	GAUGE	FUNCTION
1	BK	18	COIL ON PLUG NO. 1 DRIVER
2	BK/DG	18	FUSED IGNITION SWITCH OUTPUT
3	BK/WT	18	COIL ON PLUG NO. 1 DRIVER

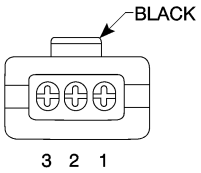

COIL
ON
PLUG
NO. 2

COIL ON PLUG NO. 2 — BLACK 3 WAY

CAVITY	COLOR	GAUGE	FUNCTION
1	YL	18	COIL ON PLUG DRIVER NO. 2
2	BK/DG	18	FUSED IGNITION SWITCH OUTPUT
3	YL/WT	18	COIL ON PLUG DRIVER NO. 2

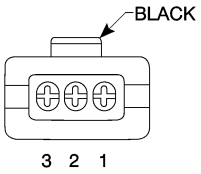

COIL
ON
PLUG
NO. 3

COIL ON PLUG NO. 3 — BLACK 3 WAY

CAVITY	COLOR	GAUGE	FUNCTION
1	DG	18	COIL ON PLUG DRIVER NO. 3
2	BK/DG	18	FUSED IGNITION SWITCH OUTPUT
3	DG/WT	18	COIL ON PLUG DRIVER NO. 3

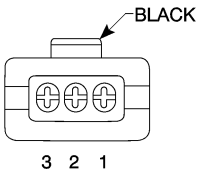

COIL
ON
PLUG
NO. 4

COIL ON PLUG NO. 4 — BLACK 3 WAY

CAVITY	COLOR	GAUGE	FUNCTION
1	BL	18	COIL ON PLUG DRIVER NO. 4
2	BK/YL	18	FUSED IGNITION SWITCH OUTPUT
3	BL/WT	18	COIL ON PLUG DRIVER NO. 4

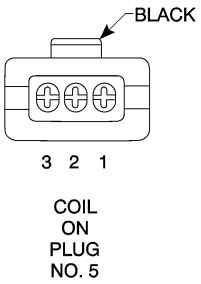

COIL
ON
PLUG
NO. 5

COIL ON PLUG NO. 5 — BLACK 3 WAY

CAVITY	COLOR	GAUGE	FUNCTION
1	VT	18	COIL ON PLUG DRIVER NO. 5
2	BK/YL	18	FUSED IGNITION SWITCH OUTPUT
3	VT/WT	18	COIL ON PLUG DRIVER NO. 5

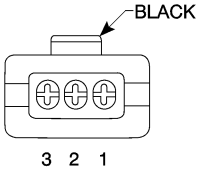

COIL
ON
PLUG
NO. 6

COIL ON PLUG NO. 6 — BLACK 3 WAY

CAVITY	COLOR	GAUGE	FUNCTION
1	GY	18	COIL ON PLUG DRIVER NO. 6
2	BK/YL	18	FUSED IGNITION SWITCH OUTPUT
3	GY/WT	18	COIL ON PLUG DRIVER NO. 6

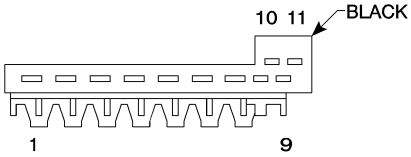

CONSOLE
SWITCH
GROUP

CONSOLE SWITCH GROUP — BLACK 11 WAY

CAVITY	COLOR	GAUGE	FUNCTION
1	BK/WT	18	LEFT TURN SIGNAL OUTPUT
2	BK/DG	18	RIGHT TURN SIGNAL OUTPUT
3	BK/BL	16	12 VOLT SUPPLY
4	BR	20	GROUND
5	BK/YL	16	FUSED B(+)
6	RD/YL	16	FUSED B(+)
7	BK/WT/BL	16	HAZARD SWITCH SENSE
8	WT/DG	20	DOOR LOCK SWITCH MUX
9	GY/BL	20	ILLUMINATION FEED
10	—	—	—
11	—	—	—

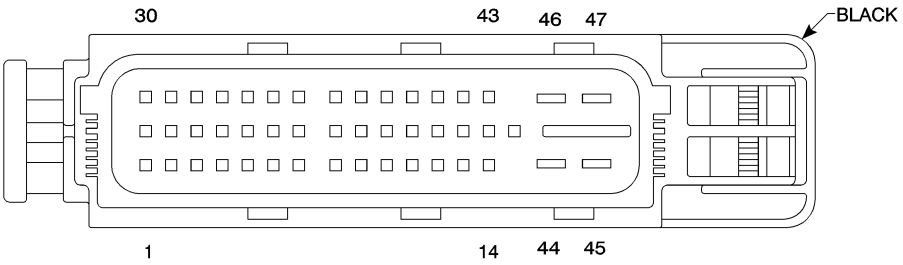

CONTROLLER ANTILOCK BRAKE

CONTROLLER ANTILOCK BRAKE — BLACK 47 WAY

CAVITY	COLOR	GAUGE	FUNCTION
1	RD/WT	20	BRAKE LAMP SWITCH OUTPUT
2	BR/DG	18	BRAKE PAD WEAR INDICATOR DRIVER
3	BR	18	LEFT FRONT WHEEL SPEED SENSOR SIGNAL
4	DG	18	LEFT FRONT WHEEL SPEED SENSOR 12V SUPPLY
5	DG/WT	20	WHEEL SPEED SENSOR OUTPUT
6	BR	20	LEFT REAR WHEEL SPEED SENSOR SIGNAL
7	BL	20	LEFT REAR WHEEL SPEED SENSOR 12 VOLT SUPPLY
8	YL/BL	20	SCI TRANSMIT
9	BR	20	SENSOR GROUND
10	BK/RD/WT	20	ESP LATERAL ACCELERATION SENSOR SIGNAL
11	BR/BL	20	SENSOR GROUND
12	BL/WT	20	ESP BRAKE PRESSURE SENSOR 1 SIGNAL
13	GY	20	BAS RELEASE SWITCH SENSOR (RELEASED)
14	DG/BL	18	5 VOLT SUPPLY
15	DG	20	CAN HIGH
16	WT	20	CAN LOW
17	BK/RD	20	BRAKE LAMP RELAY OUTPUT
18	RD/YL	18	TRACTION SYSTEM RELAY OUTPUT
19	BL/DG	20	WHEEL SPEED SENSOR OUTPUT
20	—	—	—
21	VT/DG	20	BAS TRAVEL SENSOR SIGNAL
22	PK/YL	20	5 VOLT SUPPLY
23	BK/VT	20	BAS CONTROL
24	BK/PK/WT	20	5 VOLT SUPPLY
25	BR	20	SENSOR GROUND
26	BK/RD/WT	20	5 VOLT SUPPLY
27	BR/DG	20	SENSOR GROUND
28	BK/YL	20	BRAKE LAMP RELAY CONTROL
29	BL/YL	20	STEERING ANGLE SENSOR SIGNAL
30	YL	20	ESP OFF SWITCH SENSE
31	DG/VT	20	PARK BRAKE SWITCH SENSE
32	BR	18	RIGHT FRONT WHEEL SPEED SENSOR SIGNAL
33	WT	18	RIGHT FRONT WHEEL SPEED SENSOR 12V SUPPLY
34	—	—	—
35	BR	20	RIGHT REAR WHEEL SPEED SENSOR SIGNAL
36	YL	20	RIGHT REAR WHEEL SPEED SENSOR 12V SUPPLY
37	YL/DG	20	SENSOR GROUND
38	RD/DG	20	5 VOLT SUPPLY
39	YL/BL	20	ESP YAW RATE SENSOR SIGNAL
40	BK/RD/WT	20	5 VOLT SUPPLY
41	DG/WT	20	ESP BRAKE PRESSURE SENSOR 2 SIGNAL
42	PK	20	12 VOLT SUPPLY
43	YL/VT	18	BAS RELEASE SWITCH SENSOR (APPLIED)
44	BR	12	GROUND
45	BK	14	FUSED B(+)
46	BR	10	GROUND
47	BK	10	FUSED B(+)

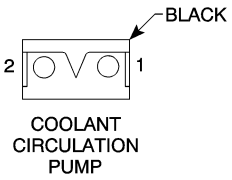

COOLANT CIRCULATION PUMP

COOLANT CIRCULATION PUMP — BLACK 2 WAY

CAVITY	COLOR	GAUGE	FUNCTION
1	RD/YL	20	FUSED B(+)
2	BR/DG	20	COOLANT CIRCULATION PUMP CONTROL

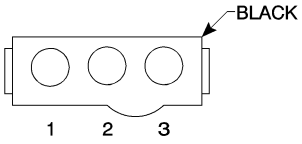

COOLANT CIRCULATION VALVE

COOLANT CIRCULATION VALVE — BLACK 3 WAY

CAVITY	COLOR	GAUGE	FUNCTION
1	BR/VT	20	LEFT COOLANT CIRCULATION VALVE CONTROL
2	RD/YL	18	FUSED B(+)
3	BR/RD	20	RIGHT COOLANT CIRCULATION VALVE CONTROL

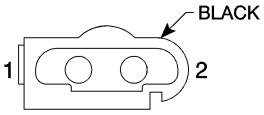

COOLANT LEVEL SENSOR

COOLANT LEVEL SENSOR — BLACK 2 WAY

CAVITY	COLOR	GAUGE	FUNCTION
1	BR/BL	20	COOLANT LEVEL SENSOR GROUND
2	BR/YL	20	COOLANT LEVEL SENSOR SIGNAL

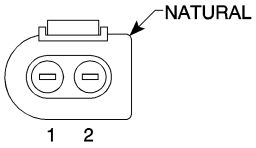

CRANKSHAFT POSITION SENSOR

CRANKSHAFT POSITION SENSOR — NATURAL 2 WAY

CAVITY	COLOR	GAUGE	FUNCTION
1	DG	20	SENSOR GROUND
2	DG/WT	20	CRANKSHAFT POSITION SENSOR SIGNAL

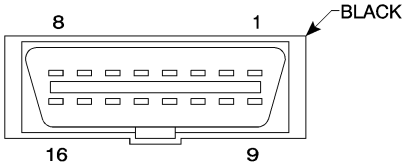

DATA LINK CONNECTOR

DATA LINK CONNECTOR — BLACK 16 WAY

CAVITY	COLOR	GAUGE	FUNCTION
1	BK/WT	20	SCI TRANSMIT
2	—	—	—
3	DG/YL	20	SCI RECEIVE
4	BR	18	GROUND
5	BR/WT	20	SENSOR GROUND
6	—	—	—
7	BL	20	SCI TRANSMIT
8	RD/WT	20	SCI TRANSMIT
9	RD/YL	20	SCI TRANSMIT
10	—	—	—
11	DG	20	SCI TRANSMIT
12	YL/DG	20	SCI TRANSMIT
13	YL	20	SCI TRANSMIT
14	—	—	—
15	BK/BL	20	SCI TRANSMIT
16	RD/DG	18	FUSED B(+)

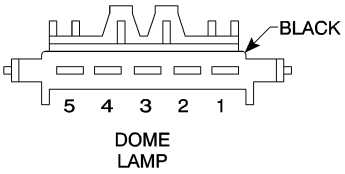

DOME LAMP

DOME LAMP — BLACK 5 WAY

CAVITY	COLOR	GAUGE	FUNCTION
1	BR/YL	18	DOME LAMP SWITCH OUTPUT
2	BR	18	GROUND
3	BL/BR	18	DOME LAMP CONTROL
4	RD/DG	18	FUSED B(+)
5	—	—	—

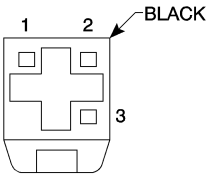

DRIVER CYLINDER LOCK SWITCH

DRIVER CYLINDER LOCK SWITCH — BLACK 3 WAY

CAVITY	COLOR	GAUGE	FUNCTION
1	BR	20	GROUND
2	BL	20	DRIVER CYLINDER LOCK SWITCH SENSE (LOCK)
3	BK	20	DRIVER CYLINDER LOCK SWITCH SENSE (UNLOCK)

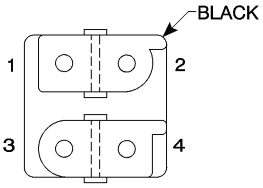

DRIVER POWER SEAT/ SEAT BELT

DRIVER POWER SEAT/ SEAT BELT — BLACK 4 WAY

CAVITY	COLOR	GAUGE	FUNCTION
1	BR/DG	20	FUSED IGNITION SWITCH OUTPUT
2	BR	20	GROUND
3	BR	14	GROUND
4	RD/BK	14	FUSED POWER SEAT RELAY OUTPUT

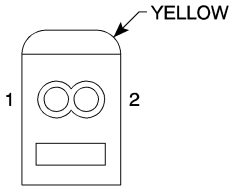

DRIVER SEAT BELT TENSIONER SQUIB

DRIVER SEAT BELT TENSIONER SQUIB — YELLOW 3 WAY

CAVITY	COLOR	GAUGE	FUNCTION
1	BR/YL	20	DRIVER SEAT BELT SQUIB LINE 1
2	—	—	—
3	BL	20	DRIVER SEAT BELT SQUIB LINE 2

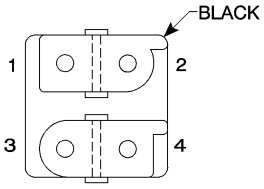

DRIVER SEAT BELT TENSIONER SWITCH

DRIVER SEAT BELT TENSIONER SWITCH — BLACK 4 WAY

CAVITY	COLOR	GAUGE	FUNCTION
1	BR	20	GROUND
2	GY/DG	20	DRIVER SEAT BELT TENSIONER SWITCH SENSE
3	—	—	—
4	—	—	—

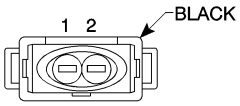

EGR SOLENOID

EGR SOLENOID — BLACK 2 WAY

CAVITY	COLOR	GAUGE	FUNCTION
1	GY/WT	20	EGR SOLENOID CONTROL
2	RD/DG	20	FUSED ENGINE CONTROL RELAY OUTPUT

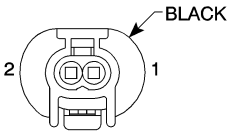

ENGINE COOLANT TEMPERATURE SENSOR

ENGINE COOLANT TEMPERATURE SENSOR — BLACK 2 WAY

CAVITY	COLOR	GAUGE	FUNCTION
1	DG/RD	20	ENGINE COOLANT TEMPERATURE SENSOR SIGNAL
2	BR/WT	20	SENSOR GROUND

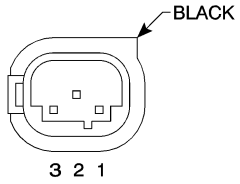

ESP LATERAL ACCELERATION SENSOR

ESP LATERAL ACCELERATION SENSOR — BLACK 3 WAY

CAVITY	COLOR	GAUGE	FUNCTION
1	BK/RD/WT	20	ESP LATERAL ACCELERATION SENSOR SIGNAL
2	BR	20	SENSOR GROUND
3	BK/PK/WT	20	5 VOLT SUPPLY

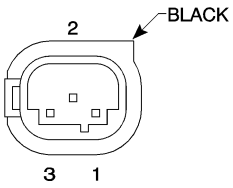

ESP BRAKE PRESSURE SENSOR 1

ESP BRAKE PRESSURE SENSOR 1 — BLACK 3 WAY

CAVITY	COLOR	GAUGE	FUNCTION
1	BR/BL	20	SENSOR GROUND
2	BL/WT	20	ESP BRAKE PRESSURE SENSOR 1 SIGNAL
3	BK/RD/WT	20	5 VOLT SUPPLY

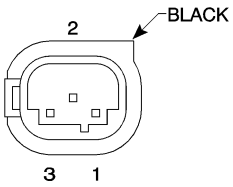

ESP BRAKE PRESSURE SENSOR 2

ESP BRAKE PRESSURE SENSOR 2 — BLACK 3 WAY

CAVITY	COLOR	GAUGE	FUNCTION
1	BR/DG	20	SENSOR GROUND
2	DG/WT	20	ESP BRAKE PRESSURE SENSOR 2 SIGNAL
3	BK/RD/WT	20	5 VOLT SUPPLY

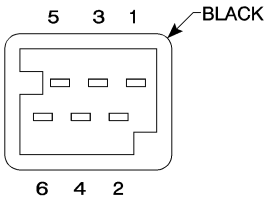

ESP OFF SWITCH

ESP OFF SWITCH — BLACK 6 WAY

CAVITY	COLOR	GAUGE	FUNCTION
1	—	—	—
2	BK/BL	20	ESP OFF SWITCH SENSE
3	—	—	—
4	—	—	—
5	—	—	—
6	—	—	—

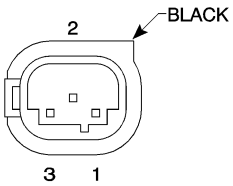

ESP YAW RATE SENSOR

ESP YAW RATE SENSOR — BLACK 3 WAY

CAVITY	COLOR	GAUGE	FUNCTION
1	YL/BL	20	ESP YAW RATE SENSOR SIGNAL
2	BR	20	SENSOR GROUND
3	RD/DG	20	5 VOLT SUPPLY

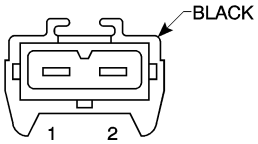

EVAP PURGE SOLENOID

EVAP PURGE SOLENOID — BLACK 2 WAY

CAVITY	COLOR	GAUGE	FUNCTION
1	RD/DG	18	FUSED ENGINE CONTROL RELAY OUTPUT
2	BR/RD	18	EVAP PURGE SOLENOID CONTROL

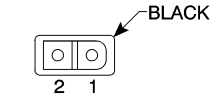

EVAPORATOR TEMPERATURE SENSOR

EVAPORATOR TEMPERATURE SENSOR — BLACK 2 WAY

CAVITY	COLOR	GAUGE	FUNCTION
1	BR/YL	20	EVAPORATOR TEMPERATURE SENSOR GROUND
2	GY/RD	20	EVAPORATOR TEMPERATURE SENSOR SIGNAL

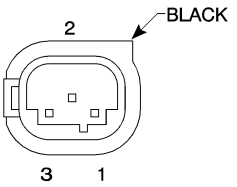

FUEL TANK PRESSURE SENSOR

FUEL TANK PRESSURE SENSOR — BLACK 3 WAY

CAVITY	COLOR	GAUGE	FUNCTION
1	DG	20	FUEL TANK PRESSURE SENSOR SIGNAL
2	BR/YL	20	SENSOR GROUND
3	BK/RD	20	5 VOLT REFERENCE

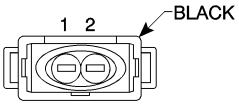

FUEL INJECTOR NO. 1

FUEL INJECTOR NO. 1 — BLACK 2 WAY

CAVITY	COLOR	GAUGE	FUNCTION
1	GY/BK	18	FUSED ENGINE CONTROL RELAY OUTPUT
2	GY/BK	18	FUEL INJECTOR NO. 1 CONTROL

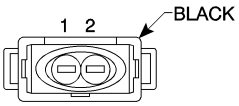

FUEL INJECTOR NO. 2

FUEL INJECTOR NO. 2 — BLACK 2 WAY

CAVITY	COLOR	GAUGE	FUNCTION
1	GY/RD	18	FUSED ENGINE CONTROL RELAY OUTPUT
2	GY/RD	18	FUEL INJECTOR NO. 2 CONTROL

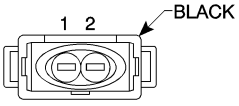

FUEL INJECTOR NO. 3

FUEL INJECTOR NO. 3 — BLACK 2 WAY

CAVITY	COLOR	GAUGE	FUNCTION
1	GY/DG	18	FUSED ENGINE CONTROL RELAY OUTPUT
2	GY/DG	18	FUEL INJECTOR NO. 3 CONTROL

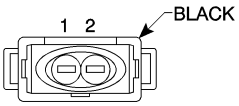

FUEL INJECTOR NO. 4

FUEL INJECTOR NO. 4 — BLACK 2 WAY

CAVITY	COLOR	GAUGE	FUNCTION
1	GY/RD	18	FUSED ENGINE CONTROL RELAY OUTPUT
2	GY/RD	18	FUEL INJECTOR NO. 4 CONTROL

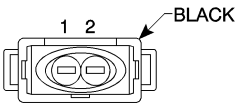

FUEL INJECTOR NO. 5

FUEL INJECTOR NO. 5 — BLACK 2 WAY

CAVITY	COLOR	GAUGE	FUNCTION
1	GY/YL	18	FUSED ENGINE CONTROL RELAY OUTPUT
2	GY/YL	18	FUEL INJECTOR NO. 5 CONTROL

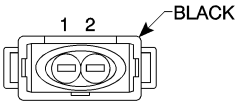

FUEL INJECTOR NO. 6

FUEL INJECTOR NO. 6 — BLACK 2 WAY

CAVITY	COLOR	GAUGE	FUNCTION
1	GY/VT	18	FUSED ENGINE CONTROL RELAY OUTPUT
2	GY/VT	18	FUEL INJECTOR NO. 6 CONTROL

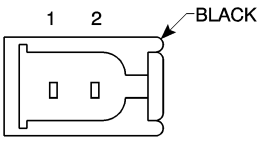

FUEL LEVEL SENSOR

FUEL LEVEL SENSOR — BLACK 2 WAY

CAVITY	COLOR	GAUGE	FUNCTION
1	BR/DG	20	FUEL LEVEL SENSOR SIGNAL
2	BL/BK	20	FUEL LEVEL SENSOR RETURN

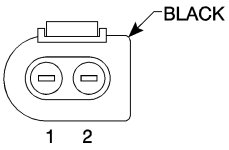

GENERATOR

GENERATOR — BLACK 2 WAY

CAVITY	COLOR	GAUGE	FUNCTION
1	BL	18	LOW BATTERY INDICATOR FEED
2	—	—	—

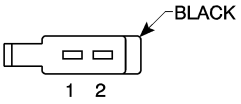

GLOVE BOX LAMP

GLOVE BOX LAMP— WHITE 2 WAY

CAVITY	COLOR	GAUGE	FUNCTION
1	BR	20	GROUND
2	BK/BL	16	FUSED B(+)

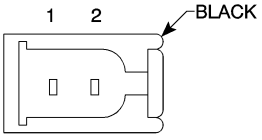

GLOVE BOX SWITCH

GLOVE BOX SWITCH — BLACK 2 WAY

CAVITY	COLOR	GAUGE	FUNCTION
1	BR	20	GLOVE BOX SWITCH OUTPUT
2	BR/DG	20	GLOVE BOX SWITCH SENSE

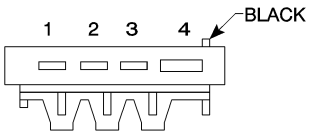

HEATED SEAT MODULE

HEATED SEAT MODULE — BLACK 4 WAY

CAVITY	COLOR	GAUGE	FUNCTION
1	BK/VT	16	RIGHT HEATED SEAT OUTPUT
2	PK/YL/DG	20	FUSED IGNITION SWITCH OUTPUT
3	BK/GY	16	LEFT HEATED SEAT OUTPUT
4	RD/YL	14	FUSED B(+)

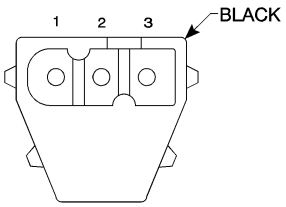

HEATER CORE TEMPERATURE SENSOR

HEATER CORE TEMPERATURE SENSOR — BLACK 3 WAY

CAVITY	COLOR	GAUGE	FUNCTION
1	GY/DG	20	RIGHT HEATER CORE TEMPERATURE SENSOR SIGNAL
2	BR/YL	20	SENSOR GROUND
3	GY/PK	20	LEFT HEATER CORE TEMPERATURE SENSOR SIGNAL

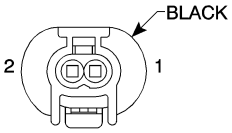

HOOD AJAR SWITCH

HOOD AJAR SWITCH — BLACK 2 WAY

CAVITY	COLOR	GAUGE	FUNCTION
1	BR/RD	18	HOOD AJAR SWITCH SENSE
2	BR	18	GROUND

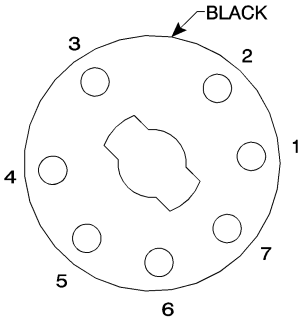

IGNITION SWITCH

IGNITION SWITCH — BLACK 7 WAY

CAVITY	COLOR	GAUGE	FUNCTION
1	PK/RD	12	FUSED IGNITION SWITCH OUTPUT
2	DG/WT	18	FUSED IGNITION SWITCH OUTPUT
3	PK/YL	12	FUSED IGNITION SWITCH OUTPUT
4	VT	16	FUSED IGNITION SWITCH OUTPUT
5	RD	12	FUSED B+
6	PK/DG	20	FUSED IGNITION SWITCH OUTPUT
7	RD	12	FUSED B+

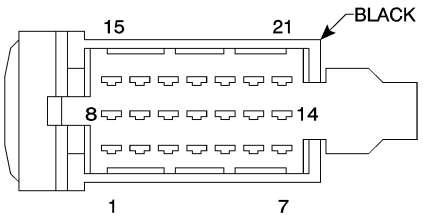

ILLUMINATION CONTROL MODULE A

ILLUMINATION CONTROL MODULE A — BLACK 21 WAY

CAVITY	COLOR	GAUGE	FUNCTION
1 (LHD)	GY/YL	20	BACK UP LAMP SWITCH OUTPUT
2 (LHD)	BK/RD	18	BRAKE LAMP RELAY OUTPUT
2 (RHD)	BK/RD	18	BACK UP LAMP SWITCH OUTPUT
3	GY/YL	18	BACK UP LAMP SWITCH OUTPUT
4 (LHD)	GY/YL	18	BACK UP LAMP SWITCH OUTPUT
4 (RHD)	PK/RD	20	FUSED ILLUMINATION CONTROL MODULE OUTPUT
5 (LHD)	BK/BL	20	BRAKE LAMP RELAY OUTPUT
6 (LHD)	BK/YL	18	BRAKE LAMP RELAY OUTPUT
6 (RHD)	GY/DG	18	FUSED ILLUMINATION CONTROL MODULE OUTPUT
7 (LHD)	BK/RD	18	BRAKE LAMP RELAY OUTPUT
8	YL/BK	14	ILLUMINATION CONTROL MODULE OUTPUT
9 (LHD)	GY/YL	20	BACK UP LAMP SWITCH OUTPUT
9 (RHD)	GY/YL	20	BACK UP LAMP SWITCH OUTPUT
10 (RHD)	BK/RD	18	BRAKE LAMP RELAY OUTPUT
11 (LHD)	GY/RD	18	FUSED ILLUMINATION CONTROL MODULE OUTPUT
12	GY/VT	18	FUSED ILLUMINATION CONTROL MODULE OUTPUT
13	GY/YL	18	FUSED ILLUMINATION CONTROL MODULE OUTPUT
14 (LHD)	GY/DG	18	FUSED ILLUMINATION CONTROL MODULE OUTPUT
14 (RHD)	GY/BK	18	FUSED ILLUMINATION CONTROL MODULE OUTPUT
15 (LHD)	PK/RD	20	FUSED ILLUMINATION CONTROL MODULE OUTPUT
16	RD/WT	18	FUSED ILLUMINATION CONTROL MODULE OUTPUT
17	—	—	—
18	GY/BK	18	FUSED ILLUMINATION CONTROL MODULE OUTPUT
19 (LHD)	BL/BR	18	FUSED ILLUMINATION CONTROL MODULE OUTPUT
19 (RHD)	BK/BL	20	BRAKE LAMP RELAY OUTPUT
20	—	—	—
21 (LHD)	BL/VT	18	FUSED ILLUMINATION CONTROL MODULE OUTPUT
21 (RHD)	GY/RD	18	FUSED ILLUMINATION CONTROL MODULE OUTPUT

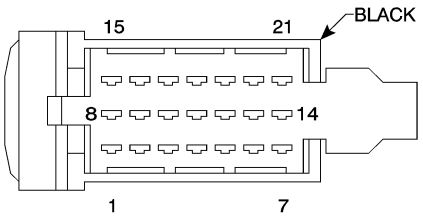

ILLUMINATION CONTROL MODULE B

ILLUMINATION CONTROL MODULE B — BLACK 21 WAY

CAVITY	COLOR	GAUGE	FUNCTION
1	—	—	—
2	—	—	—
3	YL	16	FUSED ILLUMINATION CONTROL MODULE OUTPUT
4 (LHD)	WT	16	FUSED ILLUMINATION CONTROL MODULE OUTPUT
4 (RHD)	YL/BK	16	FUSED ILLUMINATION CONTROL MODULE OUTPUT
5 (LHD)	YL/BK	16	FUSED ILLUMINATION CONTROL MODULE OUTPUT
5 (RHD)	GY/RD	18	FUSED ILLUMINATION CONTROL MODULE OUTPUT
6 (LHD)	WT/BK	16	FUSED ILLUMINATION CONTROL MODULE OUTPUT
6 (RHD)	GY/YL	18	FUSED ILLUMINATION CONTROL MODULE OUTPUT
7 (LHD)	GY/RD	18	FUSED ILLUMINATION CONTROL MODULE OUTPUT
7 (RHD)	GY/YL	18	FUSED ILLUMINATION CONTROL MODULE OUTPUT
8	—	—	—
9	—	—	—
10	—	—	—
11	—	—	—
12	—	—	—
13	—	—	—
14	DG	18	FUSED ILLUMINATION CONTROL MODULE OUTPUT
15	—	—	—
16	—	—	—
17	—	—	—
18	DG/WT	18	FUSED ILLUMINATION CONTROL MODULE OUTPUT
19 (LHD)	GY/BK	18	FUSED ILLUMINATION CONTROL MODULE OUTPUT
19 (RHD)	WT	16	FUSED ILLUMINATION CONTROL MODULE OUTPUT
20 (LHD)	GY/YL	18	FUSED ILLUMINATION CONTROL MODULE OUTPUT
20 (RHD)	GY/BK	18	FUSED ILLUMINATION CONTROL MODULE OUTPUT
21 (LHD)	GY/YL	18	FUSED ILLUMINATION CONTROL MODULE OUTPUT
21 (RHD)	WT/BK	16	FUSED ILLUMINATION CONTROL MODULE OUTPUT

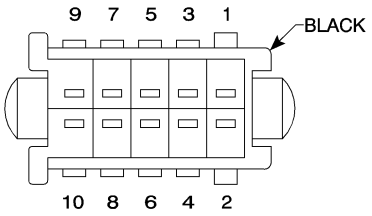

ILLUMINATION CONTROL MODULE D

ILLUMINATION CONTROL MODULE D — VIOLET 10 WAY

CAVITY	COLOR	GAUGE	FUNCTION
1	BK/WT/BL	16	FUSED ILLUMINATION CONTROL MODULE OUTPUT
2	WT/YL	16	ILLUMINATION CONTROL MODULE OUTPUT
3 (LHD)	DG/WT	18	FUSED IGNITION SWITCH OUTPUT
3 (RHD)	BL/WT	20	FUSED ILLUMINATION CONTROL MODULE OUTPUT
4 (LHD)	BR/BK	20	LAMP OUTAGE INDICATOR LAMP
4 (RHD)	DG/WT	18	FUSED IGNITION SWITCH OUTPUT
5 (LHD)	BR	16	GROUND
5 (RHD)	BR/BK	20	LAMP OUTAGE INDICATOR LAMP
6 (LHD)	BL/WT	20	FUSED ILLUMINATION CONTROL MODULE OUTPUT
7 (LHD)	WT/BK	20	FUSED ILLUMINATION CONTROL MODULE OUTPUT
8 (RHD)	WT/BK	20	FUSED ILLUMINATION CONTROL MODULE OUTPUT
9 (LHD)	WT	16	HEADLAMP HIGH BEAM SUPPLY
9 (RHD)	GY	18	FUSED ILLUMINATION CONTROL MODULE OUTPUT
10 (LHD)	GY	18	FUSED ILLUMINATION CONTROL MODULE OUTPUT
10 (RHD)	WT	16	HEADLAMP HIGH BEAM SUPPLY

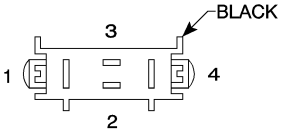

ILLUMINATION CONTROL MODULE E

ILLUMINATION CONTROL MODULE E — BLACK 4 WAY

CAVITY	COLOR	GAUGE	FUNCTION
1	RD	12	FUSED B(+)
2	DG/VT	20	PARK BRAKE SWITCH SENSE
3	—	—	—
4	PK/RD	12	FUSED IGNITION SWITCH OUTPUT

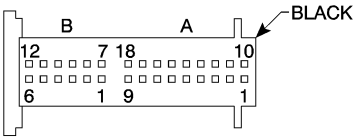

INSTRUMENT
CLUSTER C1

INSTRUMENT CLUSTER C1 — BLACK 30 WAY

CAVITY	COLOR	GAUGE	FUNCTION
1B	BL	20	GENERATOR OUTPUT SENSE
2B	—	—	—
3B	—	—	—
4B	BR/YL	20	COOLANT LEVEL SENSOR
5B	DG	20	AMBIENT TEMPERATURE SENSOR SIGNAL
6B	BR	20	AMBIENT TEMPERATURE SENSOR GROUND
7B	BR/WT	20	BRAKE FLUID LEVEL SWITCH SENSE
8B	—	—	—
9B	WT	20	CAN C BUS (+)
10B	DG	20	CAN C BUS (-)
11B	BK/BL	20	SCI TRANSMIT
12B	BR	20	
1A	BK/WT	20	LEFT TURN SIGNAL OUTPUT
2A	WT/BK	20	HIGH BEAM INDICATOR LIGHT
3A	BR	20	GROUND
4A	BL/WT	20	FUSED IGNITION SWITCH OUTPUT
5A	GY/BL	18	FUSED B(+)
6A	BR/GY	20	KEY IN IGNITION SWITCH SENSE
7A	BR/BK	20	LAMP OUTAGE INDICATOR LAMP
8A	YL/VT	20	SERIAL COMMUNICATION K1
9A	PK/RD/BL	20	FUSED IGNITION SWITCH OUTPUT
10A	BK/DG	20	RIGHT TURN SIGNAL OUTPUT
11A	RD/YL	20	FUSED B(+)
12A	BR	20	GROUND
13A	GY	18	FUSED B(+)
14A	—	—	—
15A	—	—	—
16A	—	—	—
17A	BK/WT	20	SERIAL COMMUNICATION K2
18A	—	—	—

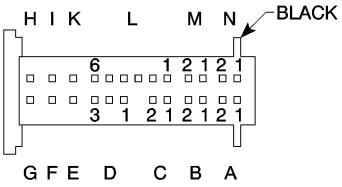

INSTRUMENT CLUSTER C2

INSTRUMENT CLUSTER C2 — BLACK 25 WAY

CAVITY	COLOR	GAUGE	FUNCTION
1A	—	—	—
2A	—	—	—
1B	—	—	—
2B	—	—	—
1C	PK/YL/DG	20	FUSED IGNITION SWITCH OUTPUT
2C	PK	20	AIRBAG WARNING INDICATOR DRIVER
1D	—	—	—
2D	—	—	—
3D	—	—	—
1E	—	—	—
1F	GY/YL	20	LOW TIRE PRESSURE WARNINGINDICATOR CONTROL
1G	—	—	—
1H	—	—	—
1I	BR/DG	20	DRIVER SEAT BELT SWITCH SENSE
1K	BK/BR	20	TELESCOPING STEERING SWITCH SENSE
1L	BK/VT	20	INSTRUMENT CLUSTER WAKE UP SIGNAL
2L	BR/GY	20	LEFT DOOR AJAR SWITCH SENSE
3L	—	—	—
4L	BL/BK	20	FUEL LEVEL SENSOR SIGNAL
5L	BR/GY	20	FUEL LEVEL SENSOR GROUND
6L	—	—	—
1M	—	—	—
2M	—	—	—
1N	—	—	—
2N	DG/VT	20	FUSED IGNITION SWITCH OUTPUT

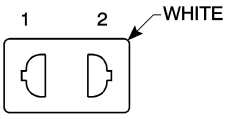

KEY IN IGNITION SWITCH

KEY IN IGNITION SWITCH — WHITE 2 WAY

CAVITY	COLOR	GAUGE	FUNCTION
1	BR/GY	20	KEY IN IGNITION SWITCH SENSE
2	RD/YL	20	FUSED B(+)

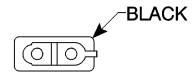

KICKDOWN SWITCH

KICKDOWN SWITCH — BLACK 2 WAY

CAVITY	COLOR	GAUGE	FUNCTION
1	BR	20	GROUND
2	BK	20	KICKDOWN SWITCH SIGNAL

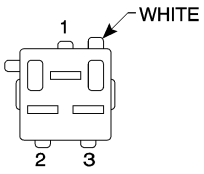

LEFT
DOOR
AJAR
SWITCH

LEFT DOOR AJAR SWITCH — WHITE 3 WAY

CAVITY	COLOR	GAUGE	FUNCTION
1	BR	20	GROUND
2	BR/GY	20	LEFT DOOR AJAR SWITCH SENSE
3	—	—	—

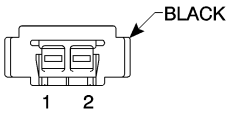

LEFT
DOOR
SPEAKER

LEFT DOOR SPEAKER — BLACK 2 WAY

CAVITY	COLOR	GAUGE	FUNCTION
1	BR/DG	16	AMPLIFIED LEFT DOOR SPEAKER (-)
2	BK/BL	16	AMPLIFIED LEFT DOOR SPEAKER (+)

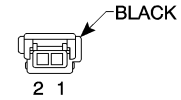

LEFT
DOOR
TWEETER

LEFT DOOR TWEETER — BLACK 2 WAY

CAVITY	COLOR	GAUGE	FUNCTION
1	BR/DG	18	AMPLIFIED LEFT DOOR SPEAKER (-)
2	BK/BL	18	AMPLIFIED LEFT DOOR SPEAKER (+)

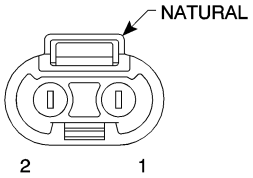

LEFT
FOG
LAMP

LEFT FOG LAMP — WHITE 2 WAY

CAVITY	COLOR	GAUGE	FUNCTION
1	BR	18	GROUND
2	GY/YL	18	SWITCHED FUSED B(+)

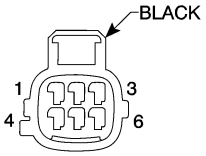

LEFT
FRONT
LAMP
ASSEMBLY

LEFT FRONT LAMP ASSEMBLY — BLACK 6 WAY

CAVITY	COLOR	GAUGE	FUNCTION
1	BK/WT	18	
2	BR	16	GROUND
3	YL/BK	16	HEADLAMP LOW BEAM SWITCH OUTPUT
4	WT/BK	16	HEADLAMP HIGH BEAM SWITCH OUTPUT
5	—	—	—
6	—	—	—

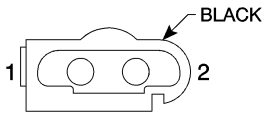

LEFT FRONT POWER WINDOW MOTOR

LEFT FRONT POWER WINDOW MOTOR — BLACK 2 WAY

CAVITY	COLOR	GAUGE	FUNCTION
1	DG	12	LEFT FRONT POWER WINDOW DRIVER (UP)
2	BK	12	LEFT FRONT POWER WINDOW DRIVER (DOWN)

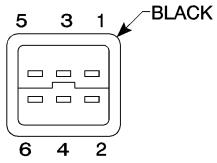

LEFT FRONT POWER WINDOW SWITCH

LEFT FRONT POWER WINDOW SWITCH — BLACK 6 WAY

CAVITY	COLOR	GAUGE	FUNCTION
1	BR	20	GROUND
2	DG/YL	20	LEFT POWER WINDOW SWITCH SENSE
3	—	—	—
4	—	—	—
5	DG/BL	20	FUSED ILLUMINATION FEED
6	—	—	—

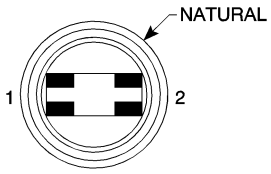

LEFT FRONT SIDE MARKER LAMP

LEFT FRONT SIDE MARKER LAMP — BLACK 2 WAY

CAVITY	COLOR	GAUGE	FUNCTION
1	BR	18	GROUND
2	GY/BK	18	SWITCHED FUSED B(+)

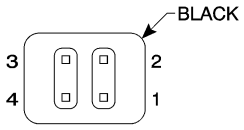

LEFT FRONT WSS/ BRAKE PAD WEAR SENSOR

LEFT FRONT WSS/ BRAKE PAD WEAR SENSOR — BLACK 4 WAY

CAVITY	COLOR	GAUGE	FUNCTION
1	BR	20	GROUND
2	BR/DG	20	BRAKE PAD WEAR INDICATOR DRIVER
3	DG	18	LEFT FRONT WHEEL SPEED SENSOR 12V SUPPLY
4	BR	18	LEFT FRONT WHEEL SPEED SENSOR SIGNAL

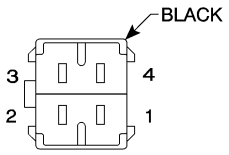

LEFT HEATED SEAT BACK/ HEATED SEAT CUSHION

LEFT HEATED SEAT BACK/HEATED CUSHION — BLACK 4 WAY

CAVITY	COLOR	GAUGE	FUNCTION
1	BR	14	GROUND
2	—	—	—
3	—	—	—
4	BK/GY	14	LEFT HEATED SEAT OUTPUT

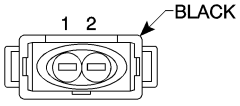

LEFT KNOCK SENSOR

LEFT KNOCK SENSOR — BLACK 2 WAY

CAVITY	COLOR	GAUGE	FUNCTION
1	SHEILD	20	SHEILD
2	VT	20	LEFT KNOCK SENSOR SIGNAL

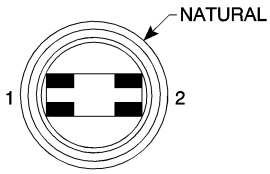

LEFT PARK LAMP

LEFT PARK LAMP — BLACK 2 WAY

CAVITY	COLOR	GAUGE	FUNCTION
1	BR	18	GROUND
2	DG/WT	18	FUSED B(+)

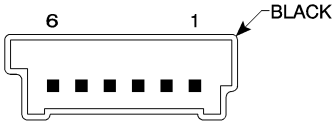

LEFT POWER MIRROR

LEFT POWER MIRROR — BLACK 6 WAY

CAVITY	COLOR	GAUGE	FUNCTION
1	PK/RD/WT	18	FUSED IGNITION SWITCH OUTPUT
2	BR	18	GROUND
3	—	—	—
4	WT	18	MIRROR HORIZONTAL DRIVER
5	GY	18	MIRROR COMMON DRIVER
6	BK	18	MIRROR VERTICAL DRIVER

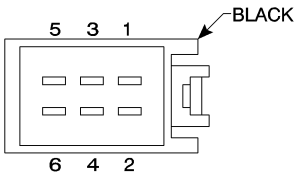

LEFT REAR LAMP ASSEMBLY

LEFT REAR LAMP ASSEMBLY — BLACK 6 WAY

CAVITY	COLOR	GAUGE	FUNCTION
1	BR	18	GROUND
2	GY/BK	18	HEADLAMP SWITCH OUTPUT
3	BK/WT	18	TURN SIGNAL SWITCH OUTPUT
4	BK/RD	18	BRAKE LAMP RELAY OUTPUT
5	GY/YL	18	BACK UP LAMP SWITCH OUTPUT
6	GY/DG	18	REAR FOG LAMPS SWITCH OUTPUT (EXPORT)

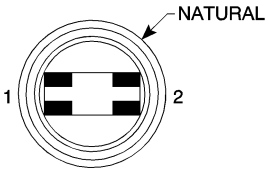

LEFT REAR SIDE MARKER LAMP

LEFT REAR SIDE MARKER LAMP — BLACK 2 WAY

CAVITY	COLOR	GAUGE	FUNCTION
1	BR	18	GROUND
2	BL/BR	18	SWITCHED FUSED B(+)

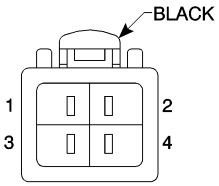

LEFT REAR SPEAKER

LEFT REAR SPEAKER — BLACK 4 WAY

CAVITY	COLOR	GAUGE	FUNCTION
1	RD	14	AMPLIFIED LEFT REAR SPEAKER (+)
2	DG	14	AMPLIFIED LEFT REAR SPEAKER (-)
3	BL	14	LEFT REAR SPEAKER SUPPLY VOLTAGE
4	BK/RD	14	LEFT REAR SPEAKER GROUND

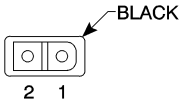

LEFT REAR WHEEL SPEED SENSOR

LEFT REAR WHEEL SPEED SENSOR — BLACK 2 WAY

CAVITY	COLOR	CIRCUIT	FUNCTION
1	BR	20	LEFT REAR WHEEL SPEED SENSOR SIGNAL
2	YL	20	LEFT REAR WHEEL SPEED SENSOR 12V SUPPLY

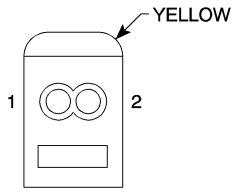

LEFT
SIDE
AIRBAG
SQUIB

LEFT SIDE AIRBAG SQUIB — YELLOW 3 WAY

CAVITY	COLOR	GAUGE	FUNCTION
1	BL/GY	20	LEFT SIDE SQUIB LINE 1
2	BL/RD	20	LEFT SIDE SQUIB LINE 2
3	—	—	—

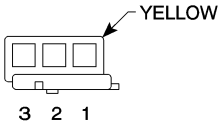

LEFT
SIDE
IMPACT
SENSOR

LEFT SIDE IMPACT SENSOR — YELLOW 3 WAY

CAVITY	COLOR	GAUGE	FUNCTION
1	BR	20	GROUND
2	PK/YL/DG	20	FUSED IGNITION SWITCH OUTPUT
3	BL/YL	20	LEFT SIDE IMPACT SENSOR SIGNAL

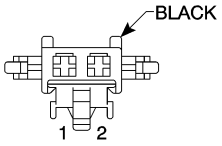

LICENSE
LAMP
NO. 1

LICENSE LAMP NO. 1 — BLACK 2 WAY

CAVITY	COLOR	GAUGE	FUNCTION
1	BR	20	GROUND
2	GY/VT	18	SWITCHED FUSED B(+)

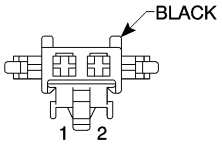

LICENSE
LAMP
NO. 2

LICENSE LAMP NO. 2 — BLACK 2 WAY

CAVITY	COLOR	GAUGE	FUNCTION
1	BR	20	GROUND
2	GY/YL	18	SWITCHED FUSED B(+)

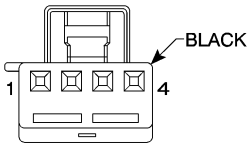

LIFTGATE
LOCK
SWITCH

LIFTGATE LOCK SWITCH — BLACK 4 WAY

CAVITY	COLOR	GAUGE	FUNCTION
1	BR	20	GROUND
2	BR/YL	20	LIFTGATE LOCK SWITCH SENSE (UNLOCK)
3	BL/GY	20	LIFTGATE LOCK SWITCH SENSE (LOCK)
4	—	—	—

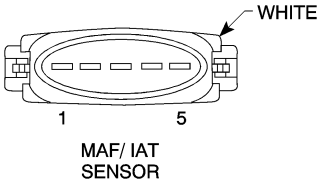

MAF/ IAT SENSOR

MAF/ IAT SENSOR — WHITE 5 WAY

CAVITY	COLOR	GAUGE	FUNCTION
1	YL/DG	18	IAT SENSOR SIGNAL
2	RD/BL	18	FUSED ENGINE CONTROL RELAY OUTPUT
3	BR	18	SENSOR GROUND
4	BR/YL	18	5 VOLT SUPPLY
5	YL/WT	18	MAF SENSOR SIGNAL

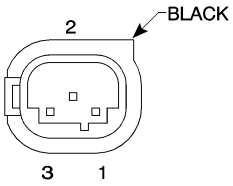

MANIFOLD ABSOLUTE PRESSURE SENSOR

MANIFOLD ABSOLUTE PRESSURE SENSOR — BLACK 3 WAY

CAVITY	COLOR	GAUGE	FUNCTION
1	BR/GY	20	SENSOR GROUND
2	RD/GY	20	MAP SENSOR SIGNAL
3	PK/BK	20	5 VOLT SUPPLY

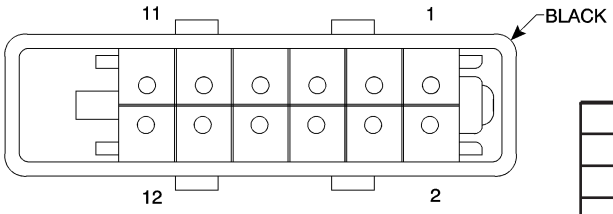

MULTI–FUNCTION SWITCH

MULTIFUNCTION SWITCH — BLACK 12 WAY

CAVITY	COLOR	GAUGE	FUNCTION
1	WT/YL	16	HIGH BEAM OUTPUT
2	WT	16	FLASH TO PASS OUTPUT
3	—	—	—
4	BK/BL	18	TURN SIGNAL MONITORED GROUND
5	—	—	—
6	—	—	—
7	BL	18	WIPER SWITCH MUX
8	GY	18	WASHER PUMP MOTOR CONTROL
9	BK/DG	18	RIGHT TURN SIGNAL OUTPUT
10	BK/WT	18	LEFT TURN SIGNAL OUTPUT
11	BK/YL/DG	16	FUSED IGNITION SWITCH OUTPUT
12	—	—	—

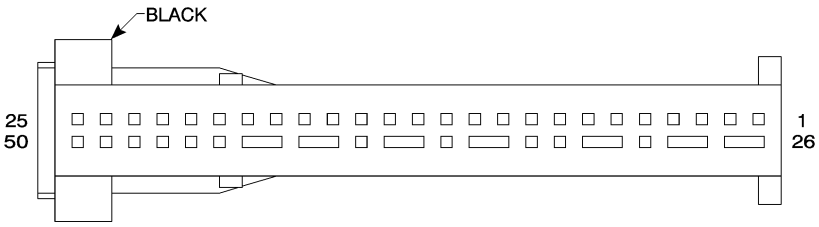

OCCUPANT RESTRAINT CONTROLLER

OCCUPANT RESTRAINT CONTROLLER — ORANGE 50 WAY

CAVITY	COLOR	GAUGE	FUNCTION
1	BL	20	DRIVER SEAT BELT SQUIB LINE 2
2	BR/YL	20	DRIVER SEAT BELT SQUIB LINE 1
3	BL	20	PASSENGER SEAT BELT SQUIB LINE 2
4	BR	20	PASSENGER SEAT BELT SQUIB LINE 1
5	PK/YL/DG	20	FUSED IGNITION SWITCH OUTPUT
6	BR	20	GROUND
7	PK	20	AIRBAG WARNING INDICATOR DRIVER
8	GY/BL	20	PASSENGER SEAT BELT TENSIONER SWITCH SENSE
9	YL	20	SCI TRANSMIT
10	DG	20	DRIVER SQUIB LINE 2
11	VT	20	DRIVER SQUIB LINE 1
12	GY/DG	20	DRIVER SEAT BELT TENSIONER SWITCH SENSE
13	BL/DG	20	PASSENGER SQUIB LINE 2
14	BR/DG	20	PASSENGER SQUIB LINE 1
15	WT	20	PASSENGER AIRBAG ON/OFF SWITCH SIGNAL
16	BL/RD	20	LEFT SIDE SQUIB LINE 2
17	BL/GY	20	LEFT SIDE SQUIB LINE 1
18	BL/BK	20	RIGHT SIDE SQUIB LINE 1
19	BL/WT	20	RIGHT SIDE SQUIB LINE 2
20	BL/YL	20	LEFT SIDE IMPACT SENSOR SIGNAL
21	BL/YL	20	RIGHT SIDE IMPACT SENSOR SIGNAL
22	—	—	—
23	—	—	—
24	—	—	—
25	—	—	—
26	—	—	—
27	—	—	—
28	—	—	—
29	—	—	—
30	DG/BK	20	ENHANCED ACCIDENT REPORT DRIVER
31	—	—	—
32	—	—	—
33	BK	20	AIRBAG OFF INDICATOR DRIVER
34	—	—	—
35	—	—	—
36	—	—	—
37	—	—	—
38	—	—	—
39	—	—	—
40	—	—	—
41	—	—	—
42	—	—	—
43	—	—	—
44	—	—	—
45	—	—	—
46	—	—	—
47	—	—	—
48	—	—	—
49	—	—	—
50	—	—	—

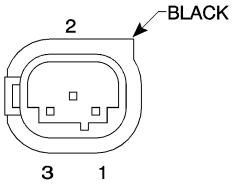

OIL
SENSOR

OIL SENSOR (LEVEL, TEMPERATURE, QUALITY) — BLACK 3 WAY

CAVITY	COLOR	GAUGE	FUNCTION
1	GY/BL	20	OIL SENSOR SIGNAL
2	BR/BK	20	SENSOR GROUND
3	RD/YL	20	5 VOLT SUPPLY

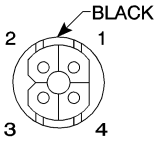

OXYGEN
SENSOR
1/1
UPSTREAM

OXYGEN SENSOR 1/1 UPSTREAM — BLACK 4 WAY

CAVITY	COLOR	GAUGE	FUNCTION
1	RD/DG	18	FUSED ENGINE CONTROL REALY OUTPUT
2	BR/BK	18	OXYGEN SENSOR 1/1 HEATER CONTROL
3	DG	20	SENSOR GROUND
4	BK	20	OXYGEN SENSOR 1/1 SIGNAL

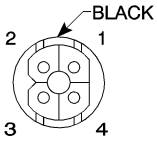

OXYGEN
SENSOR
1/2
DOWNSTREAM

OXYGEN SENSOR 1/2 DOWNSTREAM — BLACK 4 WAY

CAVITY	COLOR	GAUGE	FUNCTION
1	RD/DG	18	FUSED ENGINE CONTROL RELAY OUTPUT
2	BR/DG	18	OXYGEN SENSOR 1/2 HEATER CONTROL
3	BR	20	SENSOR GROUND
4	YL/DG	20	OXYGEN SENSOR 1/2 SIGNAL

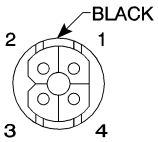

OXYGEN
SENSOR
2/1
UPSTREAM

OXYGEN SENSOR 2/1 UPSTREAM — BLACK 4 WAY

CAVITY	COLOR	GAUGE	FUNCTION
1	RD/DG	18	FUSED ENGINE CONTROL RELAY OUTPUT
2	BR/GY	18	OXYGEN SENSOR 2/1 HEATER CONTROL
3	DG	20	SENSOR GROUND
4	BK/BR	20	OXYGEN SENSOR 2/1 SIGNAL

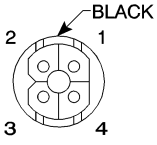

OXYGEN
SENSOR
2/2
DOWNSTREAM

OXYGEN SENSOR 2/2 DOWNSTREAM — BLACK 4 WAY

CAVITY	COLOR	GAUGE	FUNCTION
1	RD/DG	18	FUSED ENGINE CONTROL RELAY OUTPUT
2	BR/WT	18	OXYGEN SENSOR 2/2 HEATER CONTROL
3	BR	20	SENSOR GROUND
4	YL/BK	20	OXYGEN SENSOR 2/2 SIGNAL

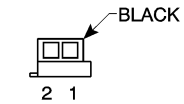

PASSENGER AIRBAG ON/OFF SWITCH

PASSENGER AIRBAG ON/OFF SWITCH — BLACK 2 WAY

CAVITY	COLOR	GAUGE	FUNCTION
1	BK	20	AIRBAG OFF INDICATOR DRIVER
2	PK/YL/DG	20	FUSED IGNITION SWITCH OUTPUT

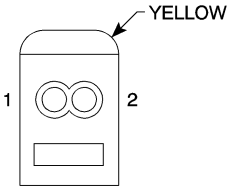

PASSENGER AIRBAG SQUIB

PASSENGER AIRBAG SQUIB — YELLOW 3 WAY

CAVITY	COLOR	GAUGE	FUNCTION
1	BR/DG	20	PASSENGER SQUIB LINE 1
2	—	—	—
3	BL/DG	20	PASSENGER SQUIB LINE 2

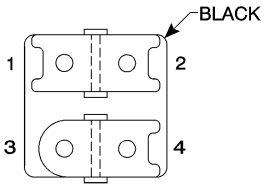

PASSENGER POWER SEAT/ SEAT BELT

PASSENGER POWER SEAT/ SEAT BELT — BLACK 4 WAY

CAVITY	COLOR	GAUGE	FUNCTION
1	—	—	—
2	—	—	—
3	BR	14	GROUND
4	RD/DG	14	FUSED POWER SEAT RELAY OUTPUT

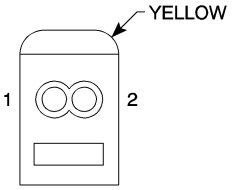

PASSENGER SEAT BELT TENSIONER SQUIB

PASSENGER SEAT BELT TENSIONER SQUIB — YELLOW 3 WAY

CAVITY	COLOR	GAUGE	FUNCTION
1	BR	20	PASSENGER SEAT BELT SQUIB LINE 1
2	—	—	—
3	BL	20	PASSENGER SEAT BELT SQUIB LINE 2

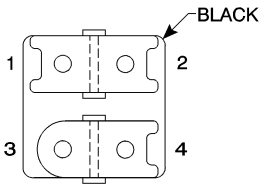

PASSENGER SEAT BELT TENSIONER SWITCH

PASSENGER SEAT BELT TENSIONER SWITCH — BLACK 4 WAY

CAVITY	COLOR	GAUGE	FUNCTION
1	GY/BL	20	PASSENGER SEAT BELT TENSIONER SWITCH SENSE
2	BR	20	GROUND
3	—	—	—
4	—	—	—

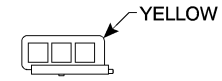

PASSENGER SEAT OCCUPANT SIMULATOR C1

PASSENGER SEAT OCCUPANT SIMULATOR C2 — YELLOW 3 WAY

CAVITY	COLOR	GAUGE	FUNCTION
1	PK/YL/DG	20	AIRBAG ON/OFF SWITCH SENSE (ON)
2	WT	20	5 VOLT SUPPLY
3	BR	20	AIRBAG ON/OFF SWITCH SENSE (OFF)

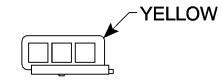

PASSENGER SEAT OCCUPANT SIMULATOR C2

PASSENGER SEAT OCCUPANT SIMULATOR C1 — YELLOW 3 WAY

CAVITY	COLOR	GAUGE	FUNCTION
1	YL/BL	20	FUSED IGNITION SWITCH OUTPUT
2	GY	20	PASSENGER AIRBAG ON/OFF SWITCH SIGNAL
3	BL/WT	20	GROUND

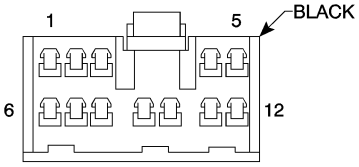

POWER AMPLIFIER A

POWER AMPLIFIER A — BLACK 12 WAY

CAVITY	COLOR	GAUGE	FUNCTION
1	BL	18	RIGHT DOOR SPEAKER (-)
2	BL/BR	18	LEFT DOOR SPEAKER (+)
3	BL/BR	18	LEFT DOOR SPEAKER (+)
4	BR	16	GROUND
5	BK/DG	18	ENABLE SIGNAL TO AMPLIFIER
6	YL/VT	18	LEFT REAR SPEAKER (+)
7	YL	18	RIGHT REAR SPEAKER (-)
8	BL	18	RIGHT DOOR SPEAKER (-)
9	YL/VT	18	LEFT REAR SPEAKER (+)
10	YL	18	RIGHT REAR SPEAKER (-)
11	BR	16	GROUND
12	—	—	—

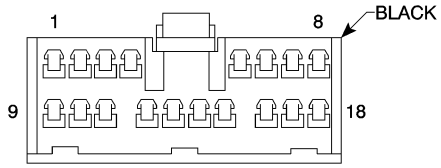

POWER AMPLIFIER B

POWER AMPLIFIER B — BLACK 18 WAY

CAVITY	COLOR	GAUGE	FUNCTION
1	RD/YL	16	FUSED B(+)
2	—	—	—
3	DG/WT	20	VSS SIGNAL
4	BK/RD	16	LEFT REAR SPEAKER GROUND
5	BL/RD	16	AMPLIFIED RIGHT REAR SPEAKER (+)
6	PK	16	AMPLIFIED LEFT REAR SPEAKER (+)
7	BK/PK	16	AMPLIFIED RIGHT DOOR SPEAKER (+)
8	BK/BL	16	AMPLIFIED LEFT DOOR SPEAKER (+)
9	RD/YL	16	FUSED B(+)
10	—	—	—
11	—	—	—
12	BL	16	LEFT REAR SPEAKER SUPPLY VOLTAGE
13	RD/YL	16	RIGHT REAR SPEAKER GROUND
14	VT	16	RIGHT REAR SPEAKER SUPPLY VOLTAGE
15	BK/YL	16	AMPLIFIED RIGHT REAR SPEAKER (-)
16	DG	16	AMPLIFIED LEFT REAR SPEAKER (-)
17	BR/YL	16	AMPLIFIED RIGHT DOOR SPEAKER (-)
18	BR/DG	16	AMPLIFIED LEFT DOOR SPEAKER (-)

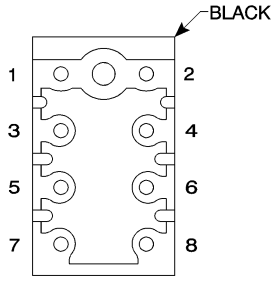

POWER MIRROR SWITCH

POWER MIRROR SWITCH — BLACK 8 WAY

CAVITY	COLOR	GAUGE	FUNCTION
1	BR	18	GROUND
2	—	—	—
3	GY	18	MIRROR COMMON DRIVER
4	GY/VT	18	LEFT MIRROR LEFT DRIVER
5	WT	18	RIGHT MIRROR UP DRIVER
5	BK	18	LEFT MIRROR UP DRIVER
6	PK/RD/WT	18	FUSED IGNITION SWITCH OUTPUT
7	WT	18	LEFT MIRROR LEFT DRIVER
8	BK/VT	18	RIGHT MIRROR LEFT DRIVER

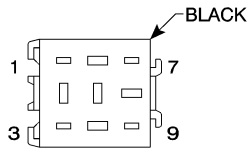

POWER SEAT RELAY

POWER SEAT RELAY — BLACK 9 WAY

CAVITY	COLOR	GAUGE	FUNCTION
1	BR/GY	20	LEFT DOOR AJAR SWITCH SENSE
2	RD/WT	12	POWER SEAT RELAY SWITCHED OUTPUT
3	RD	18	FUSED B(+)
4	PK/YL	18	FUSED IGNITION SWITCH OUTPUT
5	—	—	—
6	BR	18	GROUND
7	BR/PK	20	RIGHT DOOR AJAR SWITCH SENSE
8	RD	12	FUSED B(+)
9	—	—	—

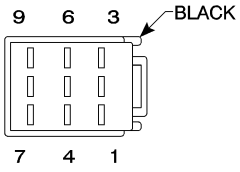

POWERTRAIN CONTROL MODULE – C1

POWERTRAIN CONTROL MODULE C1 — BLACK 9 WAY

CAVITY	COLOR	GAUGE	FUNCTION
1	—	—	—
2	BK/WT	18	COIL ON PLUG DRIVER NO. 1
3	BL	18	SENSOR GROUND
4	GY/WT	18	COIL ON PLUG DRIVER NO. 6
5	BL/WT	18	COIL ON PLUG DRIVER NO. 4
6	BK	18	THROTTLE CONTROL MOTOR 2
7	DG/WT	18	COIL ON PLUG DRIVER NO. 3
8	—	—	—
9	YL/WT	18	COIL ON PLUG DRIVER NO. 2

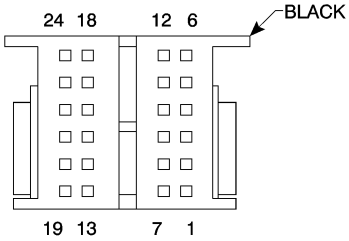

POWERTRAIN CONTROL MODULE – C2

POWERTRAIN CONTROL MODULE C2 — BLACK 24 WAY

CAVITY	COLOR	GAUGE	FUNCTION
1	—	—	—
2	—	—	—
3	—	—	—
4	—	—	—
5	—	—	—
6	—	—	—
7	GY/WT	20	EGR SOLENOID CONTROL
8	—	—	—
9	—	—	—
10	—	—	—
11	—	—	—
12	VT/WT	18	COIL ON PLUG DRIVER NO. 5
13	GY/BR	20	AIR PUMP SWITCH OVER SOLENOID CONTROL
14	DG/VT	20	SHORT RUNNER VALVE SOLENOID CONTROL
15	BR/GY	18	OXYGEN SENSOR 2/1 HEATER CONTROL
16	—	—	—
17	—	—	—
18	GY/VT	18	FUEL INJECTOR NO. 6 CONTROL
19	GY/DG	18	FUEL INJECTOR NO. 3 CONTROL
20	—	—	—
21	GY/YL	18	FUEL INJECTOR NO. 5 CONTROL
22	GY/RD	18	FUEL INJECTOR NO. 2 CONTROL
23	—	—	—
24	BR/BK	18	OXYGEN SENSOR 1/1 HEATER CONTROL

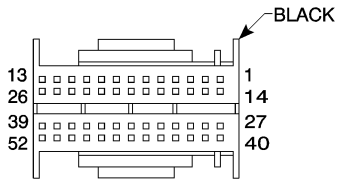

POWERTRAIN CONTROL MODULE – C3

POWERTRAIN CONTROL MODULE C3 — BLACK 52 WAY

CAVITY	COLOR	GAUGE	FUNCTION
1	—	—	—
2	PK	20	CAMSHAFT POSITION SENSOR SIGNAL
3	BK	20	SENSOR GROUND
4	VT	20	RIGHT KNOCK SENSOR SIGNAL
5	DG/RD	20	ENGINE COOLANT TEMPERATURE SENSOR SIGNAL
6	DG	20	SENSOR GROUND
7	BK/BR	20	OXYGEN SENSOR 2/1 SIGNAL
8	YL/DG	20	IAT SENSOR SIGNAL
9	BR/DG	20	SENSOR GROUND
10	RD/DG	20	MAP SENSOR SIGNAL
11	YL/WT	20	MAF SENSOR SIGNAL
12	BR	20	SENSOR GROUND
13	DG/WT	20	CAMSHAFT POSITION SENSOR SIGNAL 1
14	—	—	—
15	GY/BL	20	OIL SENSOR SIGNAL
16	BK	20	SENSOR GROUND
17	YL	20	LEFT KNOCK SENSOR SIGNAL
18	—	—	—
19	GY	20	SENSOR GROUND
20	WT	20	THROTTLE POSITION SENSOR SIGNAL 2
21	YL	20	THROTTLE POSITION SENSOR SIGNAL 1
22	VT	20	5 VOLT SUPPLY
23	BK	20	OXYGEN SENSOR 1/1 SIGNAL
24	—	—	—
25	BR/YL	20	5 VOLT SUPPLY
26	DG	20	CAMSHAFT POSITION SENSOR SIGNAL 2
27	GY/BK	18	FUEL INJECTOR NO. 1 CONTROL
28	GY/BL	18	FUEL INJECTOR NO. 4 CONTROL
29	—	—	—
30	—	—	—
31	—	—	—
32	—	—	—
33	—	—	—
34	—	—	—
35	—	—	—
36	—	—	—
37	—	—	—
38	—	—	—
39	RD/YL	20	5 VOLT SUPPLY
40	—	—	—
41	—	—	—
42	—	—	—
43	—	—	—
44	GY	18	COIL ON PLUG DRIVER NO. 6
45	DG	18	COIL ON PLUG DRIVER NO. 3
46	BL	18	COIL ON PLUG DRIVER NO. 4
47	BK	18	COIL ON PLUG DRIVER NO. 1
48	—	—	—
49	VT	18	COIL ON PLUG DRIVER NO. 5
50	YL	18	COIL ON PLUG DRIVER NO. 2
51	—	—	—
52	—	—	—

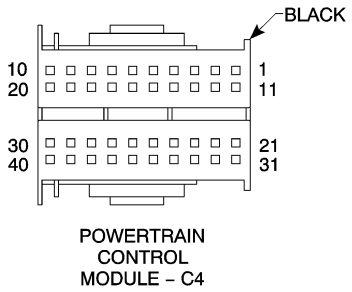

POWERTRAIN CONTROL MODULE – C4

POWERTRAIN CONTROL MODULE C4 — BLACK 40 WAY

CAVITY	COLOR	GAUGE	FUNCTION
1	WT	20	CAN C BUS (+)
2	—	—	—
3	GY/YL	20	BACKUP LAMP SWITCH SENSE
4	RD/BK	20	CLUTCH PEDAL POSITION SWITCH SIGNAL
5	BR	18	SENSOR GROUND
6	BK	20	SENSOR GROUND
7	DG	20	ACCELERATOR PEDAL POSITION SENSOR SIGNAL NO. 2
8	GY	20	ACCELERATOR PEDAL POSITION SENSOR SIGNAL NO. 1
9	—	—	—
10	BR/YL	20	SENSOR GROUND
11	DG	20	CAN C BUS (-)
12	DG/BK	20	ENHANCED ACCIDENT REPORT DRIVER
13	—	—	—
14	BK	20	KICKDOWN SWITCH SIGNAL
15	YL/BK	20	OXYGEN SENSOR 2/2 SIGNAL
16	YL/DG	20	OXYGEN SENSOR 1/2 SIGNAL
17	DG	20	FUEL TANK PRESSURE SENSOR SIGNAL
18	OR	20	SENSOR GROUND
19	YL/WT	20	ACCELERATOR PEDAL POSITION SENSOR 5 VOLT SUPPLY
20	—	—	—
21	—	—	—
22	GY	20	OFF SIGNAL
23	DG/RD	20	ACCEL/SET SIGNAL
24	—	—	—
25	VT	20	FUSED IGNITION SWITCH OUTPUT
26	DG/BL	20	ON SIGNAL
27	—	—	—
28	YL/DG	20	DECEL/SET SIGNAL
29	BL	20	SCI TRANSMIT
30	BL/RD	20	RESUME SIGNAL
31	—	—	—
32	DG/YL	20	SCI RECEIVE
33	—	—	—
34	—	—	—
35	PK/RD	20	SENSOR GROUND
36	BL/RD	18	FUEL PUMP RELAY CONTROL
37	BR/BL	18	CHARCOAL CANISTER SHUT OFF VALVE CONTROL
38	BR/VT	20	AIR PUMP RELAY CONTROL
39	GY	12	RADIATOR FAN CONTROL
40	BK/RD	20	5 VOLT SUPPLY

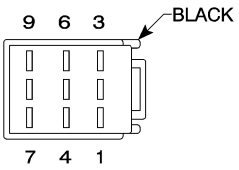

POWERTRAIN CONTROL MODULE – C5

POWERTRAIN CONTROL MODULE C5 — BLACK 9 WAY

CAVITY	COLOR	GAUGE	FUNCTION
1	BR/DG	18	OXYGEN SENSOR 1/2 HEATER CONTROL
2	BR/RD	18	EVAP PURGE SOLENOID CONTROL
3	BK/DG	18	FUSED B+
4	BR/WT	18	OXYGEN SENSOR 2/2 HEATER CONTROL
5	BR	16	GROUND
6	BR	16	GROUND
7	BR	16	GROUND
8	BR	16	GROUND
9	RD/DG	18	ENGINE CONROL RELAY OUTPUT

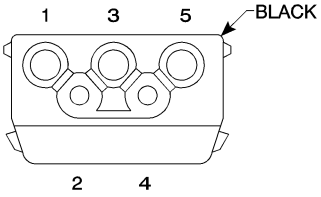

PULSE MODULE A

PULSE MODULE A — BLACK 5 WAY

CAVITY	COLOR	GAUGE	FUNCTION
1	BK	12	FUSED B(+)
2	PK/RD	20	SENSOR GROUND
3	—	—	—
4	—	—	—
5	BR	12	GROUND

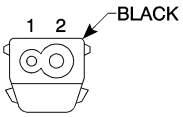

PULSE MODULE B

PULSE MODULE B — BLACK 2 WAY

CAVITY	COLOR	GAUGE	FUNCTION
1	VT	20	FUSED IGNITION SWITCH OUTPUT
2	PK/RD	14	FUSED IGNITION SWITCH OUTPUT

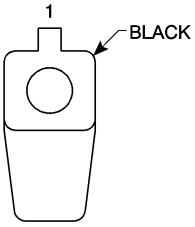

PULSE MODULE F

PULSE MODULE F — GREY 1 WAY

CAVITY	COLOR	GAUGE	FUNCTION
1	VT/WT	12	STARTER SOLENOID OUTPUT

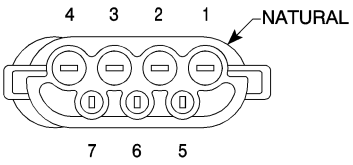

RADIATOR FAN CONTROL MODULE

RADIATOR FAN CONTROL MODULE — NATURAL 7 WAY

CAVITY	COLOR	GAUGE	FUNCTION
1	BR/BK	6	RADIATOR FAN CONTROL MODULE GROUND
2	BR	6	GROUND
3	BK	6	FUSED B+
4	BK/DG	6	RADIATOR FAN CONTROL MODULE OUTPUT
5	GY	20	RADIATOR FAN CONTROL
6	PK/RD	20	FUSED IGNITION SWITCH OUTPUT
7	—	—	—

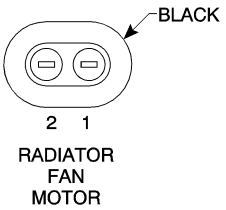

RADIATOR FAN MOTOR

RADIATOR FAN MOTOR — BLACK 2 WAY

CAVITY	COLOR	GAUGE	FUNCTION
1	BR/BK	6	RADIATOR FAN MOTOR GROUND
2	BK/DG	6	RADIATOR FAN MOTOR OUTPUT

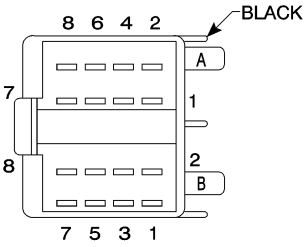

RADIO

RADIO — BLACK 16 WAY

CAVITY	COLOR	GAUGE	FUNCTION
1A	—	—	—
2A	YL/DG	20	DATA LINK CONNECTOR
3A	—	—	—
4A	RD/DG	14	FUSED B (+)
5A	BL/DG	18	ENABLE SIGNAL TO AMPLIFIER
6A	GY/BL	20	FUSED ILLUMINATION FEED
7A	PK/YL/DG	16	FUSED B (+)
8A	BR	14	GROUND
1B	—	—	—
2B	—	—	—
3B	YL	18	RIGHT REAR SPEAKER (-)
4B	YL/VT	18	LEFT REAR SPEAKER (+)
5B	BL	18	RIGHT DOOR SPEAKER (-)
6B	BL/BR	18	LEFT DOOR SPEAKER (+)
7B	—	—	—
8B	—	—	—

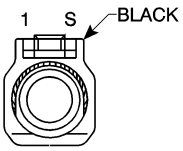

RADIO D

RADIO D — BLACK 1 WAY

CAVITY	COLOR	GAUGE	FUNCTION
1	BK	22	ANTENNA
2	BK	—	SHIELD

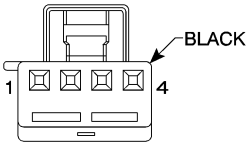

REAR SPOILER LIMIT SWITCH

REAR SPOILER LIMIT SWITCH — BLACK 4 WAY

CAVITY	COLOR	GAUGE	FUNCTION
1	BR	20	GROUND
2	BR/YL	20	SPOILER LIMIT SWITCH SIGNAL (DOWN)
3	BR/GY	20	SPOILER LIMIT SWITCH SIGNAL (DOWN)
4	—	—	—

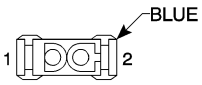

REAR SPOILER MOTOR

REAR SPOILER MOTOR — BLUE 2 WAY

CAVITY	COLOR	GAUGE	FUNCTION
1	BR/WT	14	REAR SPOILER DRIVER (UP)
2	RD/WT	14	REAR SPOILER DRIVER (DOWN)

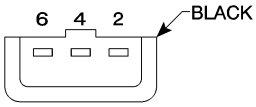

REAR SPOILER SWITCH

REAR SPOILER SWITCH — BLACK 3 WAY

CAVITY	COLOR	GAUGE	FUNCTION
2	GY/WT	20	5 VOLT SUPPLY
4	—	—	—
6	DG/WT	20	REAR SPOILER SWITCH SENSE

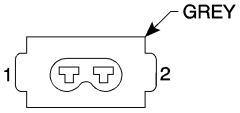

RECIRCULATED AIR SWITCHOVER VALVE

RECIRCULATED AIR SWITCHOVER VALVE — GREY 2 WAY

CAVITY	COLOR	GAUGE	FUNCTION
1	BR/YL	18	RECIRCULATED AIR SWITCHOVER VALVE CONTROL
2	PK/RD/BL	18	FUSED B(+)

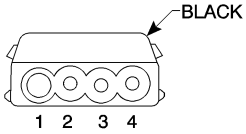

RELAY CONTROL MODULE A

RELAY CONTROL MODULE A — BLACK 4 WAY

CAVITY	COLOR	GAUGE	FUNCTION
1	GY/BL	20	AIR PUMP RELAY CONTROL
2	RD/BL	16	FUSED ENGINE CONTROL RELAY OUTPUT
3	RD/DG	16	FUSED ENGINE CONTROL RELAY OUTPUT
4	RD/WT	12	FUSED AIR PUMP RELAY OUTPUT

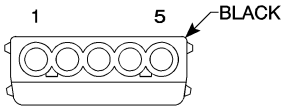

RELAY CONTROL MODULE B

RELAY CONTROL MODULE B — BLACK 5 WAY

CAVITY	COLOR	GAUGE	FUNCTION
1	RD	12	FUSED B(+)
2	RD	12	FUSED B(+)
3	RD/DG	14	FUEL PUMP RELAY OUTPUT
4	RD	14	FUSED IGNITION SWITCH OUTPUT
5	BR	18	GROUND

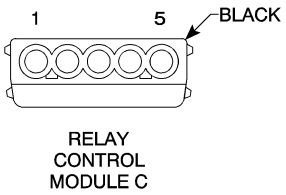

RELAY CONTROL MODULE C

RELAY CONTROL MODULE C — BLACK 5 WAY

CAVITY	COLOR	GAUGE	FUNCTION
1	—	—	—
2	—	—	—
3	—	—	—
4	RD/YL	18	FUSED TRACTION SYSTEM RELAY OUTPUT
5	RD/DG	18	FUSED TRACTION SYSTEM RELAY OUTPUT

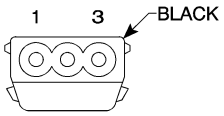

RELAY CONTROL MODULE D

RELAY CONTROL MODULE D — BLACK 3 WAY

CAVITY	COLOR	GAUGE	FUNCTION
1	YL	20	HORN SWITCH OUTPUT
2	PK/RD	18	FUSED IGNITION SWITCH OUTPUT
3	—	—	—

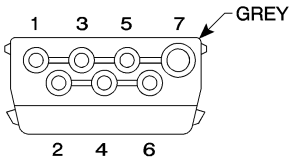

RELAY CONTROL MODULE E

RELAY CONTROL MODULE E — GREY 7 WAY

CAVITY	COLOR	GAUGE	FUNCTION
1	BK/PK	14	FUSED HORN RELAY OUTPUT
2	RD/WT	18	FUSED IGNITION SWITCH OUTPUT
3	BL/RD	18	FUEL PUMP RELAY CONTROL
4	BK/DG	18	FUSED B(+)
5	RD/DG	16	FUSED ENGINE CONTROL RELAY OUTPUT
6	BK/DG	18	FUSED ENGINE CONTROL RELAY OUTPUT
7	—	—	—

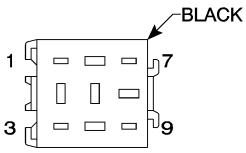

REMOTE KEYLESS ENTRY RELAY

REMOTE KEYLESS ENTRY RELAY — BLACK 9 WAY

CAVITY	COLOR	GAUGE	FUNCTION
1	—	—	—
2	BK/WT	18	REMOTE KEYLESS ENTRY RELAY OUTPUT
3	—	—	—
4	RD/YL	18	FUSED B(+)
5	BK/DG	18	REMOTE KEYLESS ENTRY RELAY OUTPUT
6	BK/YL	20	REMOTE KEYLESS ENTRY RELAY CONTROL
7	—	—	—
8	RD/YL	14	FUSED B(+)
9	—	—	—

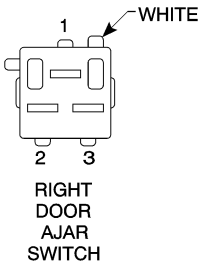

RIGHT DOOR AJAR SWITCH

RIGHT DOOR AJAR SWITCH — WHITE 3 WAY

CAVITY	COLOR	GAUGE	FUNCTION
1	BR	20	GROUND
2	BR/PK	20	RIGHT DOOR AJAR SWITCH SENSE
3	—	—	—

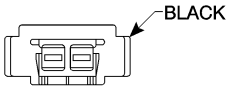

RIGHT DOOR SPEAKER

RIGHT DOOR SPEAKER — BLACK 2 WAY

CAVITY	COLOR	GAUGE	FUNCTION
1	BR/DG	16	AMPLIFIED RIGHT DOOR SPEAKER (-)
2	BK/BL	16	AMPLIFIED RIGHT DOOR SPEAKER (+)

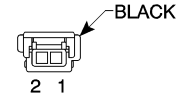

RIGHT DOOR TWEETER

RIGHT DOOR TWEETER — BLACK 2 WAY

CAVITY	COLOR	GAUGE	FUNCTION
1	BR/DG	18	AMPLIFIED RIGHT DOOR SPEAKER (-)
2	BK/BL	18	AMPLIFIED RIGHT DOOR SPEAKER (+)

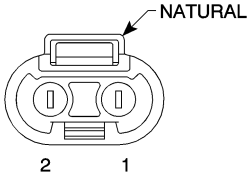

RIGHT FOG LAMP

RIGHT FOG LAMP — WHITE 2 WAY

CAVITY	COLOR	GAUGE	FUNCTION
1	BR	18	GROUND
2	GY/YL	18	SWITCHED FUSED B(+)

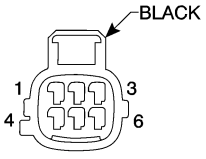

RIGHT FRONT LAMP ASSEMBLY

RIGHT FRONT LAMP ASSEMBLY — BLACK 6 WAY

CAVITY	COLOR	GAUGE	FUNCTION
1	BK/DG	18	
2	BR	16	GROUND
3	YL	16	HEADLAMP LOW BEAM SWITCH OUTPUT
4	WT	16	HEADLAMP HIGH BEAM SWITCH OUTPUT
5	—	—	—
6	—	—	—

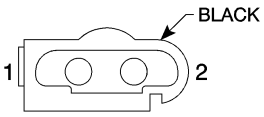

RIGHT FRONT POWER WINDOW MOTOR

RIGHT FRONT POWER WINDOW MOTOR — BLACK 2 WAY

CAVITY	COLOR	GAUGE	FUNCTION
1	DG	14	RIGHT FRONT POWER WINDOW DRIVER (UP)
2	BK	14	RIGHT FRONT POWER WINDOW DRIVER (DOWN)

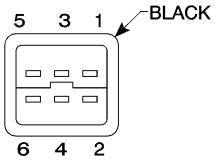

RIGHT FRONT POWER WINDOW SWITCH

RIGHT FRONT POWER WINDOW SWITCH — BLACK 6 WAY

CAVITY	COLOR	GAUGE	FUNCTION
1	BR	20	GROUND
2	WT/BL	20	RIGHT POWER WINDOW SWITCH SENSE
3	—	—	—
4	—	—	—
5	GY/BL	20	FUSED ILLUMINATION FEED
6	—	—	—

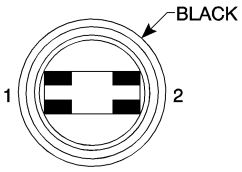

RIGHT FRONT SIDE MARKER LAMP

RIGHT FRONT SIDE MARKER LAMP — BLACK 2 WAY

CAVITY	COLOR	GAUGE	FUNCTION
1	BR	18	GROUND
2	GY/RD	18	SWITCHED FUSED B(+)

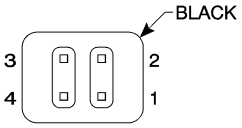

RIGHT FRONT WSS/ BRAKE PAD WEAR SENSOR

RIGHT FRONT WSS/ BRAKE PAD WEAR SENSOR — BLACK 4 WAY

CAVITY	COLOR	GAUGE	FUNCTION
1	BR	20	GROUND
2	BR/DG	20	BRAKE PAD WEAR INDICATOR DRIVER
3	WT	18	RIGHT FRONT WHEEL SPEED SENSOR 12V SUPPLY
4	BR	18	RIGHT FRONT WHEEL SPEED SENSOR SIGNAL

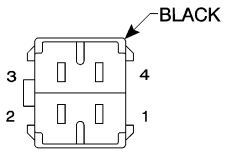

RIGHT HEATED SEAT BACK/ HEATED SEAT CUSHION

RIGHT HEATED SEAT BACK/HEATED CUSHION — BLACK 4 WAY

CAVITY	COLOR	GAUGE	FUNCTION
1	BR	14	GROUND
2	—	—	—
3	—	—	—
4	BK/VT	14	RIGHT HEATED SEAT OUTPUT

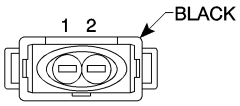

RIGHT KNOCK SENSOR

RIGHT KNOCK SENSOR — BLACK 2 WAY

CAVITY	COLOR	GAUGE	FUNCTION
1	SHEILD	20	SHEILD
2	YL	20	RIGHT KNOCK SENSOR SIGNAL

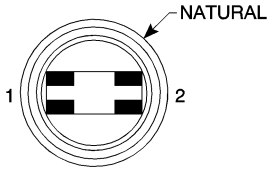

RIGHT PARK LAMP

RIGHT PARK LAMP — BLACK 2 WAY

CAVITY	COLOR	GAUGE	FUNCTION
1	BR	18	GROUND
2	DG	18	FUSED B(+)

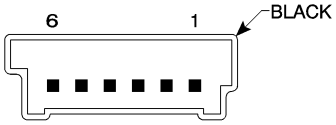

RIGHT POWER MIRROR

RIGHT POWER MIRROR — BLACK 6 WAY

CAVITY	COLOR	GAUGE	FUNCTION
1	PK/RD/WT	18	FUSED IGNITION SWITCH OUTPUT
2	BR	18	GROUND
3	—	—	—
4	WT	18	MIRROR VERTICAL DRIVER
5	GY	18	MIRROR COMMON DRIVER
6	BK	18	MIRROR HORIZONTAL DRIVER

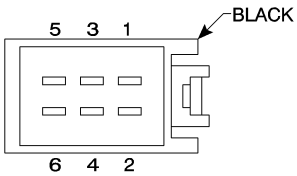

RIGHT REAR LAMP ASSEMBLY

RIGHT REAR LAMP ASSEMBLY — BLACK 6 WAY

CAVITY	COLOR	GAUGE	FUNCTION
1	BR	18	GROUND
2	GY/RD	18	HEADLAMP SWITCH OUTPUT
3	BK/DG	18	RIGHT TURN SIGNAL OUTPUT
4	BK/YL	18	BRAKE LAMP RELAY OUTPUT
5	GY/YL	18	BACK UP LAMP SWITCH OUTPUT
6	—	—	—

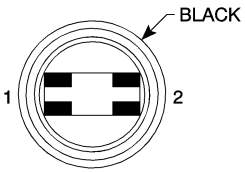

RIGHT REAR SIDE MARKER LAMP

RIGHT REAR SIDE MARKER LAMP — BLACK 2 WAY

CAVITY	COLOR	GAUGE	FUNCTION
1	BR	18	GROUND
2	BK/VT	18	SWITCHED FUSED B(+)

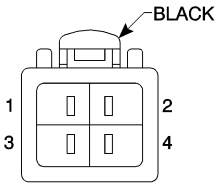

RIGHT REAR SPEAKER

RIGHT REAR SPEAKER — BLACK 4 WAY

CAVITY	COLOR	GAUGE	FUNCTION
1	BL/RD	14	AMPLIFIED RIGHT REAR SPEAKER (+)
2	BK/YL	14	AMPLIFIED RIGHT REAR SPEAKER (-)
3	VT	14	RIGHT REAR SPEAKER SUPPLY VOLTAGE
4	RD/YL	14	RIGHT REAR SPEAKER GROUND

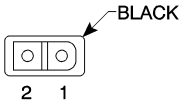

RIGHT REAR WHEEL SPEED SENSOR

RIGHT REAR WHEEL SPEED SENSOR — BLACK 2 WAY

CAVITY	COLOR	GAUGE	FUNCTION
1	BR	20	RIGHT REAR WHEEL SPEED SENSOR SIGNAL
2	BL	20	RIGHT REAR WHEEL SPEED SENSOR 12 VOLT SUPPLY

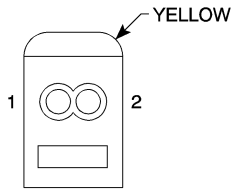

RIGHT SIDE AIRBAG SQUIB

RIGHT SIDE AIRBAG SQUIB — YELLOW 2 WAY

CAVITY	COLOR	GAUGE	FUNCTION
1	BL/RD	20	RIGHT SIDE SQUIB LINE 2
2	BL/GY	20	RIGHT SIDE SQUIB LINE 1

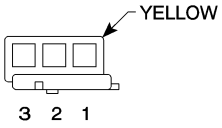

RIGHT SIDE IMPACT SENSOR

RIGHT SIDE IMPACT SENSOR — YELLOW 3 WAY

CAVITY	COLOR	GAUGE	FUNCTION
1	BR	20	GROUND
2	PK/YL/DG	20	FUSED IGNITION SWITCH OUTPUT
3	BL/YL	20	RIGHT SIDE IMPACT SENSOR SIGNAL

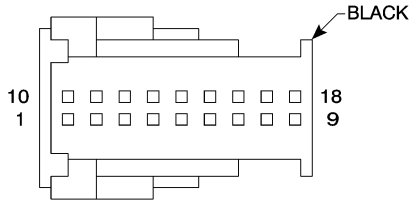

SENTRY KEY REMOTE ENTRY MODULE C1

SENTRY KEY REMOTE ENTRY MODULE C1 — BLACK 18 WAY

CAVITY	COLOR	GAUGE	FUNCTION
1	GY/BK	20	DOOR UNLOCK SWITCH SENSE
2	BK/YL	20	REMOTE KEYLESS ENTRY RELAY CONTROL
3	GY/RD	20	RKE STATUS OUTPUT
4	—	—	—
5	—	—	—
6	WT	20	RKE ANTENNA
7	—	SHEILD	SHEILD
8	BK	20	DRIVER CYLINDER LOCK SWITCH SENSE (UNLOCK)
9	BL	20	DRIVER CYLINDER LOCK SWITCH SENSE (LOCK)
10	PK/RD/BL	20	FUSED IGNITION SWITCH OUTPUT
11	BK/RD	20	DOOR LOCK SWITCH SENSE
12	—	—	—
13	—	—	—
14	—	—	—
15	—	—	—
16	BR	20	GROUND
17	BK/WT	20	SCI TRANSMIT
18	RD/YL	20	FUSED B(+)

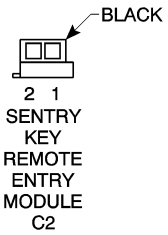

SENTRY KEY REMOTE ENTRY MODULE C2 — WHITE 2 WAY

CAVITY	COLOR	GAUGE	FUNCTION
1	DG	20	CAN LOW
2	WT	20	CAN HIGH

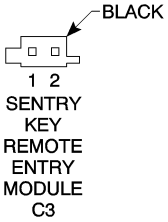

SENTRY KEY REMOTE ENTRY MODULE C3 — BLACK 2 WAY

CAVITY	COLOR	GAUGE	FUNCTION
1	BK	16	SENTRY KEY ANTENNA
2	—	SHIELD	SHEILD

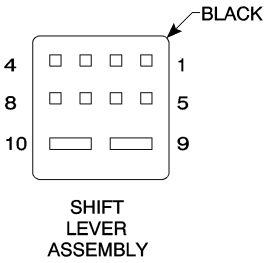

SHIFT LEVER ASSEMBLY — BLACK 10 WAY

CAVITY	COLOR	GAUGE	FUNCTION
1	—	—	—
2	GY/BL	20	PANEL LAMP DRIVER
3	RD/YL	20	SCI TRANSMIT
4	BR	20	GROUND
5	RD/BL	20	BTSI
6	WT	20	CAN C BUS (+)
7	DG	20	CAN C BUS (+)
8	RD/DG	20	TRACTION SYSTEM RELAY CONTROL
9	PK/RD	20	FUSED IGNITION SWITCH OUTPUT
10	GY/YL	20	SHIFT LEVER ASSEMBLY REVERSE SUPPLY VOLTAGE

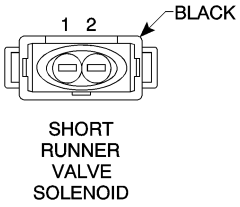

SHORT RUNNER VALVE SOLENOID — BLACK 2 WAY

CAVITY	COLOR	GAUGE	FUNCTION
1	DG/VT	20	SHORT RUNNER VALVE SOLENOID CONTROL
2	RD/DG	20	FUSED ENGINE CONTROL RELAY OUTPUT

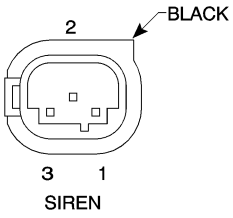

SIREN — BLACK 3 WAY

CAVITY	COLOR	GAUGE	FUNCTION
1	RD/YL	20	FUSED B(+)
2	BR	20	GROUND
3	YL/RD	20	SIREN SIGNAL OUTPUT

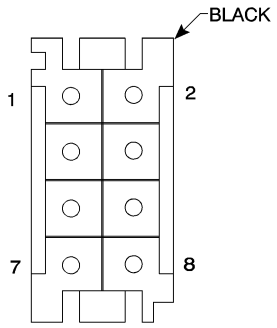

SPEED CONTROL SWITCH

SPEED CONTROL SWITCH — BLACK 8 WAY

CAVITY	COLOR	GAGUE	FUNCTION
1	GY	20	OFF SIGNAL
2	BK/RD	18	FUSED IGNITION SWITCH OUTPUT
3	YL/DG	20	DECEL/SET SIGNAL
4	BL/RD	20	ACCEL/SET SIGNAL
5	BL/RD	20	RESUME SIGNAL
6	DG/BL	20	ON SIGNAL
7	—	—	—
8	—	—	—

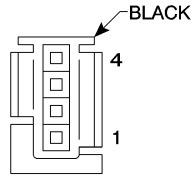

STEERING ANGLE SENSOR

STEERING ANGLE SENSOR — BLACK 4 WAY

CAVITY	COLOR	GAGUE	FUNCTION
1	BL/YL	20	STEERING ANGLE SENSOR SIGNAL
2	PK/RD	20	FUSED IGNITION SWITCH OUTPUT
3	BR	20	GROUND
4	RD/DG	18	FUSED B(+)

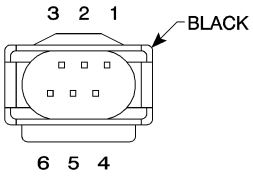

THROTTLE BODY

THROTTLE BODY — BLACK 6 WAY

CAVITY	COLOR	GAGUE	FUNCTION
1	BL	18	THROTTLE CONTROL MOTOR 1
2	VT	20	5 VOLT SUPPLY
3	GY	20	SENSOR GROUND
4	BK	18	THROTTLE CONTROL MOTOR 2
5	WT	20	THROTTLE POSITION SENSOR SIGNAL 2
6	YL	20	THROTTLE POSITION SENSOR SIGNAL 1

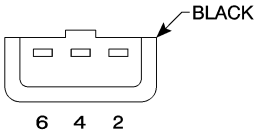

TOW – AWAY ALARM SWITCH

TOW - AWAY ALARM SWITCH — BLACK 3 WAY

CAVITY	COLOR	GAGUE	FUNCTION
2	RD/DG	20	TOW - AWAY ALARM SWITCH SENSE
4	—	—	—
6	WT/DG	20	TOW - AWAY ALARM SWITCH 9 VOLT SUPPLY

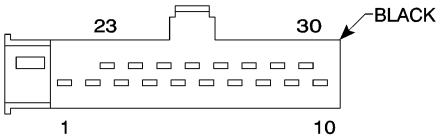

TRANSMISSION CONTROL MODULE C1

TRANSMISSION CONTROL MODULE C1 — BLACK 18 WAY

CAVITY	COLOR	GAUGE	FUNCTION
1	DG	20	SCI TRANSMIT
2	—	—	—
3	—	—	—
4	—	—	—
5	—	—	—
6	—	—	—
7	—	—	—
8	—	—	—
9	—	—	—
10	—	—	—
23	—	—	—
24	—	—	—
25	—	—	—
26	—	—	—
27	—	—	—
28	—	—	—
29	RD/DG	18	FUSED SUPPLY VOLTAGE
30	BR	18	GROUND

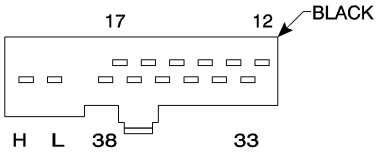

TRANSMISSION CONTROL MODULE C2

TRANSMISSION CONTROL MODULE C2 — BLACK 14 WAY

CAVITY	COLOR	GAUGE	FUNCTION
12	WT	20	N2 INPUT SPEED SENSOR
13	BL/DG	20	SENSOR SUPPLY VOLTAGE
14	GY/RD	20	1-2/4-5 SOLENOID CONTROL
15	GY/VT	20	3-4 SOLENOID CONTROL
16	GY/DG	20	2-3 SOLENOID CONTROL
17	GY/BK	20	TCC SOLENOID CONTROL
33	BR	20	SENSOR GROUND
34	BL/YL	20	TEMP SENSOR P/N SWITCH
35	BK	20	N3 INPUT SPEED SWITCH
36	DG/YL	20	MODULATION PRESSURE SOLENOID CONTROL
37	DG	20	SHIFT PRESSURE SOLENOID CONTROL
38	RD	20	SOLENOID SUPPLY VOLTAGE

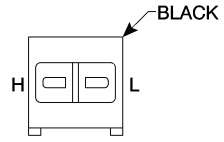

TRANSMISSION CONTROL MODULE C3

TRANSMISSION CONTROL MODULE C3 — BLACK 2 WAY

CAVITY	COLOR	GAUGE	FUNCTION
H	WT	20	CAN HIGH
L	DG	20	CAN LOW

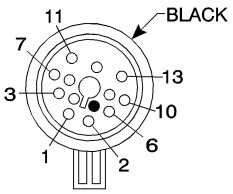

TRANSMISSION SOLENOID ASSEMBLY

TRANSMISSION SOLENOID ASSEMBLY — BLACK 13 WAY

CAVITY	COLOR	GAUGE	FUNCTION
1	BK	20	N3 INPUT SPEED SENSOR
2	DG/YL	20	MODULATION PRESSURE SOLENOID CONTROL
3	WT	20	N2 INPUT SPEED SENSOR
4	BL/YL	20	TEMP SENSOR P-N SWITCH
5	—	—	—
6	RD	18	SOLENOID SUPPLY VOLTAGE
7	BL/DG	20	SENSOR SUPPLY VOLTAGE
8	GY/DG	20	2-3 SOLENOID CONTROL
9	GY/VT	20	3-4 SOLENOID CONTROL
10	DG	20	SHIFT PRESSURE SOLENOID CONTROL
11	GY/BK	20	TCC SOLENOID CONTROL
12	BR	20	SENSOR GROUND
13	GY/RD	20	1-2/3-4 SOLENOID CONTROL

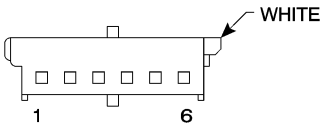

UNIVERSAL GARAGE DOOR OPENER/ TIRE PRESSURE MONITOR

UNIVERSALGARAGE DOOR OPENER/ TIRE PRESSURE MONITOR — WHITE 6 WAY

CAVITY	COLOR	GAUGE	FUNCTION
1	PK/YL/DG	20	FUSED IGNITION SWITCH OUTPUT
2	GY/YL	20	LOW TIRE PRESSURE WARNINGINDICATOR CONTROL
3	BR	20	GROUND
4	BK/BL	20	SCI TRANSMIT
5	RD/GY	20	FUSED B(+)
6	—	—	—

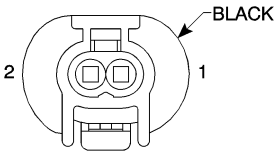

WASHER FLUID LEVEL SWITCH

WASHER FLUID LEVEL SWITCH — BLACK 2 WAY

CAVITY	COLOR	GAUGE	FUNCTION
1	BR	20	GROUND
2	BR/BL	20	WASHER FLUID LEVEL SWITCH OUTPUT

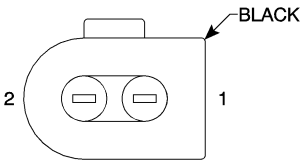

WASHER PUMP MOTOR

FRONT WASHER PUMP — BLACK 2 WAY

CAVITY	COLOR	GAUGE	FUNCTION
1	GY	18	WASHER PUMP MOTOR CONTROL
2	BR	18	GROUND

8W-91 CONNECTOR/GROUND/SPLICE LOCATION

TABLE OF CONTENTS

page

CONNECTOR/GROUND/SPLICE LOCATION
DESCRIPTION 1

CONNECTOR/GROUND/SPLICE LOCATION

DESCRIPTION

This section provides illustrations identifying connector, ground and splice locations in the vehicle. Connector, ground and splice indexes are provided. Use the wiring diagrams in each section for connector, ground and splice identification. Refer to the appropriate index for the proper figure number. For items that are not shown in this section N/S is placed in the Fig. column.

CONNECTORS

CONNECTOR NAME/ NUMBER	COLOR	LOCATION	FIG.
A/C Compressor	BK	Lower Left Side of Engine	11
A/C Pressure Sensor	BK	Behind the Left Front Headlamp	N/S
A/C Heater Control Module	BK	Center of Instrument Panel	16
Accelerator Pedal Position Sensor	BK	Top of Accelerator Pedal	N/S
Air Pump Fuse		On the Relay Control Module	8
Air Pump Relay		In the Relay Control Module	8
Air Pump Switchover Solenoid	BK	Front of Engine	12
Airbag Off Indicator Lamp	BK	Center of Instrument Panel	N/S
Ambient Temperature Sensor	BK	Lower Left Grille	N/S
Antenna C1	BK	Underside of Lower Liftgate	N/S
Antenna C2	BK	Underside Lower Liftgate	N/S
Anti-Theft Switch	BK	Center of Instrument Panel	16
Anti-Theft Tow Sensor	BK	Right Rear Lower Luggage Compartment	3
Ash Receiver Lamp	BK	Center of Instrument Panel	N/S
Automatic Day/Night Mirror	BK	Top of Windshield	N/S
Back-Up Lamp Switch (M/T)	BK	Right Side of Transmission	14
BAS Brake Booster C1	BK	Left Rear of Engine Compartment	N/S
BAS Brake Booster C2	BK	Left Rear of Engine Compartment	N/S
Battery		Right Rear of Engine Compartment	9
Blower Motor	BK	Under Passenger Side of Instrument Panel	N/S
Body Control Module C1	GY	In Control Module Box at Right Rear of Engine Compartment	8
Body Control Module C2	BK	In Control Module Box at Right Rear of Engine Compartment	8

CONNECTOR NAME/ NUMBER	COLOR	LOCATION	FIG.
Body Control Module C3	GY	In Control Module Box at Right Rear of Engine Compartment	8
Body Control Module C4	BK	In Control Module Box at Right Rear of Engine Compartment	8
Brake Fluid Level Switch	BK	Left Rear of Engine Compartment	1
Brake Lamp Relay	YL	Left Rear of Engine Compartment at Rear of Underhood Accessory Fuse Block	4
Brake Lamp Switch A (A/T)	BK	Top of Brake Pedal	N/S
Brake Lamp Switch A (M/T)	BK	Top of Brake Pedal	N/S
Brake Lamp Switch B (A/T)	BK	Top of Brake Pedal	N/S
Brake Lamp Switch B (M/T)	BK	Top of Brake Pedal	N/S
C100	BK	Left of Steering Column Behind the Instrument Panel	N/S
C105	BK	Left Rear of Engine Compartment Under the Underhood Accessory Fuse Block	4
C106	BK	In the Control Module Box at Right Rear of Engine Compartment	8
C200	BK	Left of Steering Column Behind the Instrument Panel	N/S
C201	BK	Behind the Passenger Footwell	2
C204	BL	Behind the Passenger Footwell	2
C206	BK	Behind the Passenger Footwell	2
C207	BK	Behind the Passenger Footwell	2
C210 (MALE)	BK	Behind the Passenger Footwell	2
C210 (FEMALE)	RD	Behind the Passenger Footwell	2
C211	BL	Behind the Passenger Footwell	2
C219	OR	Behind the Passenger Footwell	2
C223 (MALE)	YL	Lower Driver Side Behind Kickpanel	N/S
C223 (FEMALE)	BK	Lower Driver Side Behind Kickpanel	N/S
C224 (MALE)	YL	Lower Passenger Side Behind Kickpanel	5
C224 (FEMALE)	BK	Lower Passenger Side Behind Kickpanel	5
C226	OR	Left of Steering Column Behind the Instrument Panel	N/S
C227	BL	Left of Steering Column Behind the Instrument Panel	N/S
C228	BK	Lower Driver Side Behind Kickpanel	N/S
C229	BK	Lower Driver Side Behind Kickpanel	N/S
C230	BK	Lower Passenger Side Behind Kickpanel	5
C231	BK	Lower Passenger Side Behind Kickpanel	5
C232	RD	Left of Steering Column Behind Instrument Panel	N/S
Camshaft Position Sensor	BK	Right Front of Engine	11
Cargo Lamp	BK	Left Rear of the Luggage Compartment	N/S

CONNECTOR NAME/ NUMBER	COLOR	LOCATION	FIG.
Center High Mounted Stop Lamp (CHMSL)	VT	Top of the Liftgate	N/S
Central Locking Pump/Security System Module C1	BK	Right Rear of the Luggage Compartment	3
Central Locking Pump/Security System Module C2	BK	Right Rear of the Luggage Compartment	3
Central Locking Pump/Security System Module C3	BK	Right Rear of the Luggage Compartment	3
Central Locking Pump/Security System Module C4	BK	Right Rear of the Luggage Compartment	3
Charcoal Canister Shutoff Valve	BK	Under the Right Rear in Front of the Axle	N/S
Cigar Lighter	BK	Center of the Instrument Panel	N/S
Clockspring	BK	Center of the Steering Wheel	N/S
Clutch Interlock Switch (M/T)	BK	Top of the Clutch Pedal	N/S
Clutch Pedal Position Switch (M/T)	BK	Top of the Clutch Pedal	N/S
Coil On Plug No. 1	BK	On the Right Valve Cover	N/S
Coil On Plug No. 2	BK	On the Right Valve Cover	N/S
Coil On Plug No. 3	BK	On the Right Valve Cover	N/S
Coil On Plug No. 4	BK	On the Left Valve Cover	11
Coil On Plug No. 5	BK	On the Left Valve Cover	11
Coil On Plug No. 6	BK	On the Left Valve Cover	11
Console Switch Group	BK	Center of the Instrument Panel	16
Controller Antilock Brake	BK	Left Rear of Engine Compartment	1
Coolant Circulation Pump	BK	Below Right Headlamp	N/S
Coolant Circulation Valve	BK	Right Rear of Engine Compartment in Front of Control Module Box	9
Coolant Level Sensor	BK	Right Front of Engine Compartment Below Coolant Recovery Reservoir	9
Crankshaft Position Sensor	NAT	Rear of Engine	13
Data Link Connector	BK	Under Driver Side Instrument Panel	N/S
Dome Lamp	BK	Top Center of Windshield	N/S
Driver Airbag Squib	YL	Center of Steering Wheel	N/S
Driver Cylinder Lock Switch	BK	Driver Door	N/S
Driver Power Seat Switch	BK	Side of Driver Seat	N/S
Driver Seat Belt Switch	BK	Side of Driver Seat	N/S
Driver Seat Belt Tensioner Squib	YL	Driver Seat Belt Tensioner	N/S
Driver Seat Belt Tensioner Switch	BK	Driver Seat Belt Tensioner	N/S
EGR Solenoid	BK	Rear of Engine	13
Electric Air Pump	BK	Front of Engine	12
Engine Control Fuse 1		On the Relay Control Module	8

CONNECTOR NAME/ NUMBER	COLOR	LOCATION	FIG.
Engine Control Fuse 2		On the Relay Control Module	8
Engine Control Relay		In the Relay Control Module	8
Engine Coolant Temperature Sensor	BK	Front of Engine	12
Engine Fuse Block		Right Rear of Engine Compartment in Front of Battery	8
Engine Starter Motor		Right Lower Side of Engine	N/S
ESP Brake Pressure Sensor 1	BK	Left Rear of Engine Compartment	1
ESP Brake Pressure Sensor 2	BK	Left Rear of Engine Compartment	1
ESP Lateral Acceleration Sensor	BK	Under the Center Console	7
ESP Off Switch	BK	Center of Instrument Panel	16
ESP Yaw Rate Sensor	BK	Under the Center Console	7
Evaporator Temperature Sensor	BK	Right Side of Driver Footwell	N/S
EVAP Purge Solenoid	BK	Left Side of Engine Compartment	1
Fuel Injector No. 1	BK	Right Side of Intake Manifold	N/S
Fuel Injector No. 2	BK	Right Side of Intake Manifold	N/S
Fuel Injector No. 3	BK	Right Side of Intake Manifold	N/S
Fuel Injector No. 4	BK	Left Side of Intake Manifold	11
Fuel Injector No. 5	BK	Left Side of Intake Manifold	11
Fuel Injector No. 6	BK	Left Side of Intake Manifold	11
Fuel Level Sensor	BK	Top of Fuel Tank	N/S
Fuel Pump		Under the Right Rear in Front of the Axle	N/S
Fuel Pump Fuse		On the Relay Control Module	8
Fuel Pump Relay		In the Relay Control Module	8
Fuel Tank Pressure Sensor	BK	Top of Fuel Tank	N/S
Generator	BK	Right Front of Engine	11
Glove Box Lamp	WT	Passenger Side of Instrument Panel	N/S
Glove Box Switch	BK	Passenger Side of Instrument Panel	N/S
Heated Seat Module	BK	Center of Instrument Panel to the Rear of the Heated Seat Switches	N/S
Heater Core Temperature Sensor	BK	Behind the Center of the Instrument Panel	N/S
Hood Ajar Switch	BK	Part of the Hood Latch	N/S
Horn Fuse		On the Relay Control Module	8
Horn No. 1		Behind Grille	N/S
Horn No. 2		Behind Grille	N/S
Horn Relay		In the Relay Control Module	8
Horn Switch		Center of Steering Wheel	N/S
Ignition Switch	BK	Right of Steering Column	N/S
Illumination Control Module A	BK	Left of Steering Column	N/S
Illumination Control Module B	BK	Left of Steering Column	N/S

CONNECTOR NAME/ NUMBER	COLOR	LOCATION	FIG.
Illumination Control Module D	VT	Left of Steering Column	N/S
Illumination Control Module E	BK	Left of Steering Column	N/S
Instrument Cluster C1	BK	Above Steering Column	N/S
Instrument Cluster C2	BK	Above Steering Column	N/S
Key In Ignition Switch	WT	Under Ignition Key Cylinder	N/S
Kickdown Switch	BK	Under Accelerator Pedal	N/S
Left Door Ajar Switch	WT	Rear of Left Door	N/S
Left Fog Lamp	WT	Left Front of Fascia Below Headlamp	N/S
Left Front Brake Pad Wear Sensor	BK	Left Front Brake Caliper	N/S
Left Front Door Speaker	BK	Lower Front of Left Door	N/S
Left Front Door Tweeter	BK	Upper Front of Left Door	N/S
Left Front Lamp Assembly	BK	Left Front of Vehicle	N/S
Left Front Power Window Motor	BK	Inside Center of Left Door	N/S
Left Front Power Window Switch	BK	Center Console	N/S
Left Front Side Marker Lamp	BK	Left Front Fender	N/S
Left Front Wheel Speed Sensor	BK	Behind the Left Front Wheel	N/S
Left Heated Seat Back	BK	Left Seat Back	N/S
Left Heated Seat Cushion	BK	Left Seat Cushion	N/S
Left Knock Sensor	BK	Under Intake Manifold	N/S
Left Park Lamp	BK	Left Corner of Lamp Assembly	N/S
Left Power Mirror	BK	Top Front of Left Door	N/S
Left Rear Lamp Assembly	BK	Left Rear of Vehicle	N/S
Left Rear Side Marker Lamp	BK	Left Corner of Rear Fascia	N/S
Left Rear Speaker	BK	In Back of Left Seat	N/S
Left Rear Wheel Speed Sensor	BK	Left Brake Backing Plate	N/S
Left Side Airbag Squib	YL	Rear of Left Door	N/S
Left Side Impact Sensor	YL	Under Carpet Below Left Seat	N/S
License Lamp No. 1	BK	Below Liftgate	N/S
License Lamp No. 2	BK	Below Liftgate	N/S
Liftgate Lock Switch	BK	Below Liftgate	N/S
MAF/IAT Sensor	WT	Rear of Engine	13
Manifold Absolute Pressure Sensor	BK	Front of Engine	12
Multi-Function Switch	BK	Left Side of Steering Column	N/S
Noise Suppressor 1		Engine Compartment Above Intake Manifold Taped to Wire Harness	N/S
Noise Suppressor 2		Engine Compartment Above Intake Manifold Taped to Wire Harness	N/S
Occupant Restraint Controller	OR	Under the Center Console	7

CONNECTOR NAME/ NUMBER	COLOR	LOCATION	FIG.
Oil Sensor (Level, Temperature, Quality)	BK	Lower Right Side of Engine Oil Pan	N/S
Oxygen Sensor 1/1 Upstream	BK	Rear of Left Exhaust Manifold	N/S
Oxygen Sensor 1/2 Downstream	BK	Exhaust Pipe Rear of Catalytic Converter	N/S
Oxygen Sensor 2/1 Upstream	BK	Rear of Right Exhaust Manifold	N/S
Oxygen Sensor 2/2 Downstream	BK	Exhaust Pipe Rear of Catalytic Converter	N/S
Park Brake Switch		Base of Park Brake Lever	N/S
Passenger Airbag On/Off Switch	BK	Passenger Side of Instrument Panel	N/S
Passenger Airbag Squib	YL	Passenger Side of Instrument Panel	N/S
Passenger Power Seat Switch	BK	Side of Passenger Seat	N/S
Passenger Seat Belt Tensioner Squib	YL	Passenger Seat Belt Tensioner	N/S
Passenger Seat Belt Tensioner Switch	BK	Passenger Seat Belt Tensioner	N/S
Passenger Seat Occupant Simulator C1	YL	Behind the Passenger Footwell	2
Passenger Seat Occupant Simulator C2	YL	Behind the Passenger Footwell	2
Power Amplifier A	BK	Behind the Passenger Footwell	2
Power Amplifier B	BK	Behind the Passenger Footwell	2
Power Mirror Switch	BK	Center Console	N/S
Power Seat Relay	BK	Left Side of Steering Column Under Instrument Panel	N/S
Powertrain Control Module C1	BK	In Control Module Box at Right Rear of Engine Compartment	8
Powertrain Control Module C2	BK	In Control Module Box at Right Rear of Engine Compartment	8
Powertrain Control Module C3	BK	In Control Module Box at Right Rear of Engine Compartment	8
Powertrain Control Module C4	BK	In Control Module Box at Right Rear of Engine Compartment	8
Powertrain Control Module C5	BK	In Control Module Box at Right Rear of Engine Compartment	8
Pulse Module A	BK	Left Rear of Engine Compartment at Side of Underhood Accessory Fuse Block	4
Pulse Module F	GY	Left Rear of Engine Compartment at Side of Underhood Accessory Fuse Block	4
Radiator Fan Control Module	NAT	Left Front of Engine Compartment	9
Radiator Fan Motor	BK	Front of Engine Compartment	N/S
Radio	BK	Center of the Instrument Panel	N/S
Rear Fog Lamp (Export)		In Left Rear Lamp Assembly	N/S
Rear Spoiler Limit Switch	BK	Below the Rear Spoiler	N/S
Rear Spoiler Motor	BL	Below the Rear Spoiler	N/S

CONNECTOR NAME/ NUMBER	COLOR	LOCATION	FIG.
Rear Spoiler Switch	BK	Center of the Instrument Panel	N/S
Rear Window Capacitor		Right Rear Passenger Compartment Taped to Wire Harness	N/S
Rear Window Defogger		Rear Window	N/S
Recirculated Air Switchover Valve	GY	Lower Passenger Instrument Panel	N/S
Relay Control Module A	BK	In Control Module Box at Right Rear of Engine Compartment	8
Relay Control Module B	BK	In Control Module Box at Right Rear of Engine Compartment	8
Relay Control Module C	BK	In Control Module Box at Right Rear of Engine Compartment	8
Relay Control Module D	BK	In Control Module Box at Right Rear of Engine Compartment	8
Relay Control Module E	GY	In Control Module Box at Right Rear of Engine Compartment	8
Remote Keyless Entry Relay	BK	Left Rear of Engine Compartment at Rear of Underhood Accessory Fuse Block	4
Right Door Ajar Switch	WT	Rear of Right Door	N/S
Right Fog Lamp	WT	Right Front of Fascia Below Headlamp	N/S
Right Front Brake Pad Wear Sensor	BK	Right Front Brake Caliper	N/S
Right Front Door Speaker	BK	Lower Front of Right Door	5
Right Front Door Tweeter	BK	Upper Front of Right Door	5
Right Front Lamp Assembly	BK	Right Front of Vehicle	N/S
Right Front Power Window Motor	BK	Inside Center of Right Door	5
Right Front Power Window Switch	BK	Center Console	N/S
Right Front Side Marker Lamp	BK	Right Front Fender	N/S
Right Front Wheel Speed Sensor	BK	Behind the Right Front Wheel	N/S
Right Heated Seat Back	BK	Right Seat Back	N/S
Right Heated Seat Cushion	BK	Right Seat Cushion	N/S
Right Knock Sensor	BK	Under Intake Manifold	N/S
Right Park Lamp	BK	Right Corner of Lamp Assembly	N/S
Right Power Mirror	BK	Top Front of Right Door	N/S
Right Rear Lamp Assembly	BK	Right Rear of Vehicle	3
Right Rear Side Marker Lamp	BK	Right Corner of Rear Fascia	3
Right Rear Speaker	BK	In Back of Right Seat	N/S
Right Rear Wheel Speed Sensor	BK	Right Brake Backing Plate	N/S
Right Side Airbag Squib	YL	Rear of Right Door	5
Right Side Impact Sensor	YL	Under Carpet Below Right Seat	N/S
Sentry Key Antenna Ring	BK	On Ignition Key Cylinder	N/S

CONNECTOR NAME/ NUMBER	COLOR	LOCATION	FIG.
Sentry Key Remote Entry Module C1	BK	Behind Instrument Cluster	N/S
Sentry Key Remote Entry Module C2	WT	Behind Instrument Cluster	N/S
Sentry Key Remote Entry Module C3	BK	Behind Instrument Cluster	N/S
Shift Lever Assembly (A/T)	BK	Center Console	7
Short Runner Valve Solenoid	BK	Front of Engine	N/S
Siren	BK	Base of Windshield Under Cowl Grille	N/S
Speed Control Switch	BK	Left Side of Steering Column	N/S
Steering Angle Sensor	BK	Left Side of Steering Column	N/S
Throttle Body	BK	Rear of Engine	N/S
Traction System Fuse		On the Relay Control Module	8
Traction System Relay		In the Relay Control Module	8
Transmission Control Module C1	BK	Behind the Passenger Footwell	2
Transmission Control Module C2	BK	Behind the Passenger Footwell	2
Transmission Control Module C3	BK	Behind the Passenger Footwell	2
Transmission Solenoid Assembly (A/T)	BK	Bottom of Automatic Transmission	N/S
Underhood Accessory Fuse Block		Left Rear of Engine Compartment	1
Universal Garage Door Opener/Tire Pressure Monitor	WT	Top Center of Windshield	6
Washer Fluid Level Switch	BK	Behind Right Front Wheelwell Splash Shield	N/S
Washer Pump Motor	BK	Behind Right Front Wheelwell Splash Shield	N/S
Wiper Motor		Base of Windshield Under Cowl Grille	N/S

GROUNDS

GROUND	LOCATION	FIG.
G100	Left Side of Engine Compartment	N/S
G101	Right Side of Engine Compartment	8
G104	Top Front of Engine	N/S
G107	Right Side of Engine Compartment, Battery Negative Ground	8
G200	Behind Left Side of Instrument Panel at Base of Windshield	N/S
G201	Lower Left Footwell Behind Kickpanel	N/S
G202	Under the Center Console at the Occupant Restraint Controller	7
G203	Under the Center Console	7
G204	Lower Right Footwell Behind Kickpanel	5
G205	Upper Left Rear Passenger Compartment	N/S
G206	Lower Right Footwell Behind Kickpanel	5
G300	Left Luggage Compartment Behind Trim Panel	N/S
G301	Lower Right Luggage Compartment Behind Trim Panel	3
G303	Upper Right Luggage Compartment Behind Trim Panel	3

SPLICES

SPLICE	LOCATION	FIG.
S101	Engine Compartment on Top Left of Intake Manifold	N/S
S103	Right Rear of Engine Compartment in the Control Module Box	10
S104	Engine Compartment on Top Left of Intake Manifold	N/S
S105	Engine Compartment at the Front of Intake Manifold	N/S
S106	Engine Compartment Behind the Engine	N/S
S107	Engine Compartment on Top Left of Intake Manifold	N/S
S108	Engine Compartment Behind the Engine	N/S
S113	Engine Compartment Behind the Engine	N/S
S114	Right Rear of Engine Compartment in the Control Module Box	10
S116	Left of Steering Column Behind the Instrument Panel	N/S
S117	Left of Steering Column Behind the Instrument Panel	N/S
S118	Right Rear of Engine Compartment in the Control Module Box	10
S119	Right Rear of Engine Compartment in the Control Module Box	10
S121	Engine Compartment at the Front of Intake Manifold	N/S
S122	Engine Compartment Behind the Engine	N/S
S123	Engine Compartment Behind the Engine	N/S
S124 (A/T)	Engine Compartment Behind the Engine	N/S
S125 (A/T)	Engine Compartment Behind the Engine	N/S
S211	Behind the Instrument Cluster	N/S
S212	Behind the Instrument Cluster	N/S
S213	Behind the Instrument Cluster	N/S
S215	Behind the Upper Instrument Panel	N/S
S216	Behind the Upper Instrument Panel	N/S
S217	Behind the Upper Instrument Panel	N/S

SPLICE	LOCATION	FIG.
S218	At the End of the Sentry Key Remote Entry Module (SKREEM) Antenna	N/S
S219	Behind the Lower Instrument Panel	N/S
S220	Behind the Lower Instrument Panel	N/S
S221	Behind the Lower Instrument Panel	N/S
S224	Behind the Lower Instrument Panel	N/S
S225	Behind Passenger Footwell	N/S
S226	Behind Passenger Footwell	N/S
S232	Under the Center Console	7
S233	Lower Passenger Side Behind Kickpanel	N/S
S235	Behind Passenger Footwell	N/S
S236	Behind Passenger Footwell	N/S
S239	Behind Passenger Footwell	N/S
S240	Behind the Lower Instrument Panel	N/S
S241	Part of the Left Seat Assembly	N/S
S242	Part of the Left Seat Assembly	N/S
S243	Part of the Right Seat Assembly	N/S
S244	Part of the Right Seat Assembly	N/S
S246 (M/T)	Behind Passenger Footwell	N/S
S305	Right Rear Passenger Compartment Behind Headliner	N/S
Splice Block 100	Left Rear of Engine Compartment Behind the Underhood Accessory Fuse Block	4
Splice Block 101	Left Rear of Engine Compartment Behind the Underhood Accessory Fuse Block	4
Splice Block 102	Left Rear of Engine Compartment Behind the Underhood Accessory Fuse Block	4
Splice Block 200	Under the Center Console	7

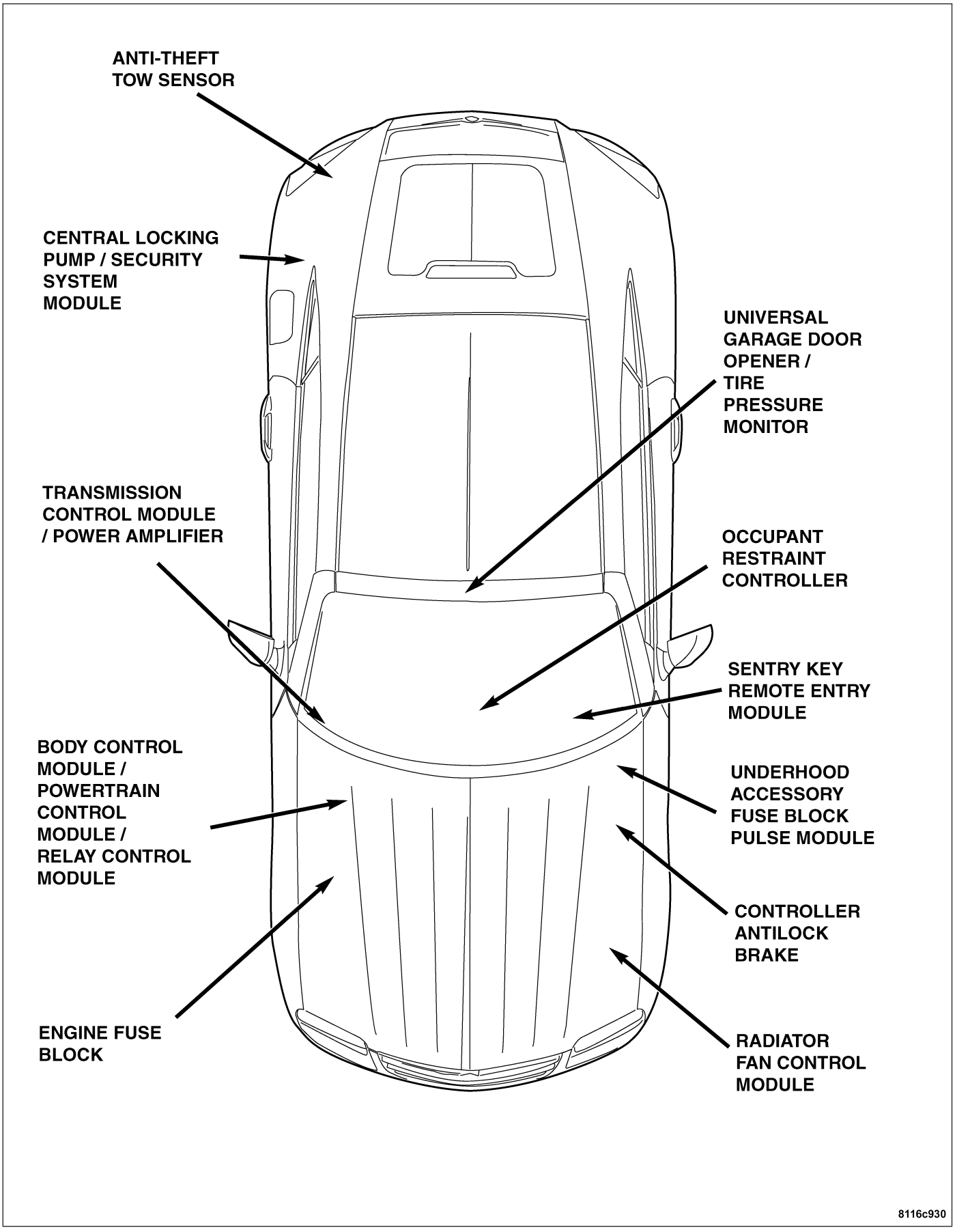

Fig. 1 MODULE OVERVIEW

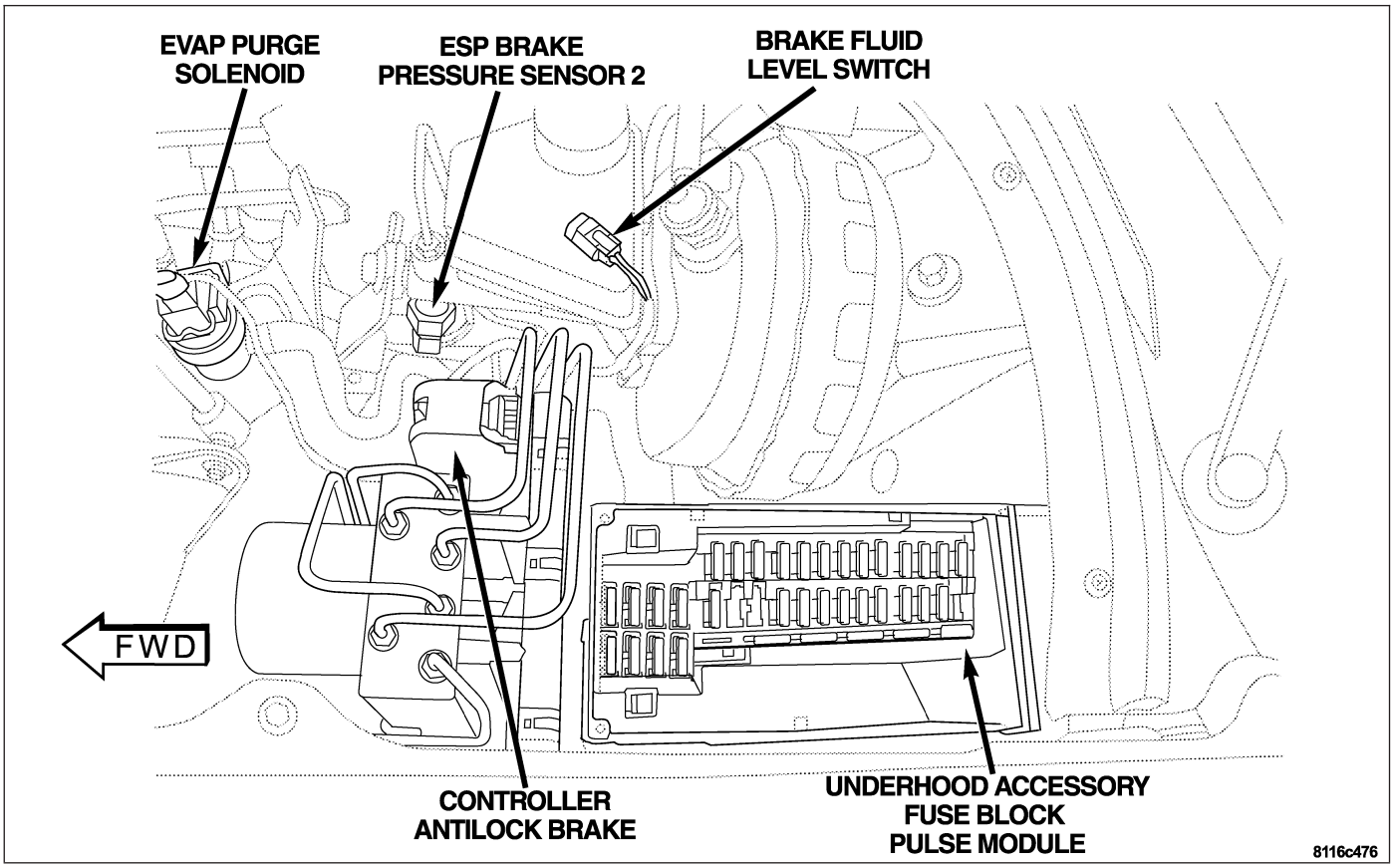

Fig. 2 LEFT SIDE ENGINE COMPARTMENT

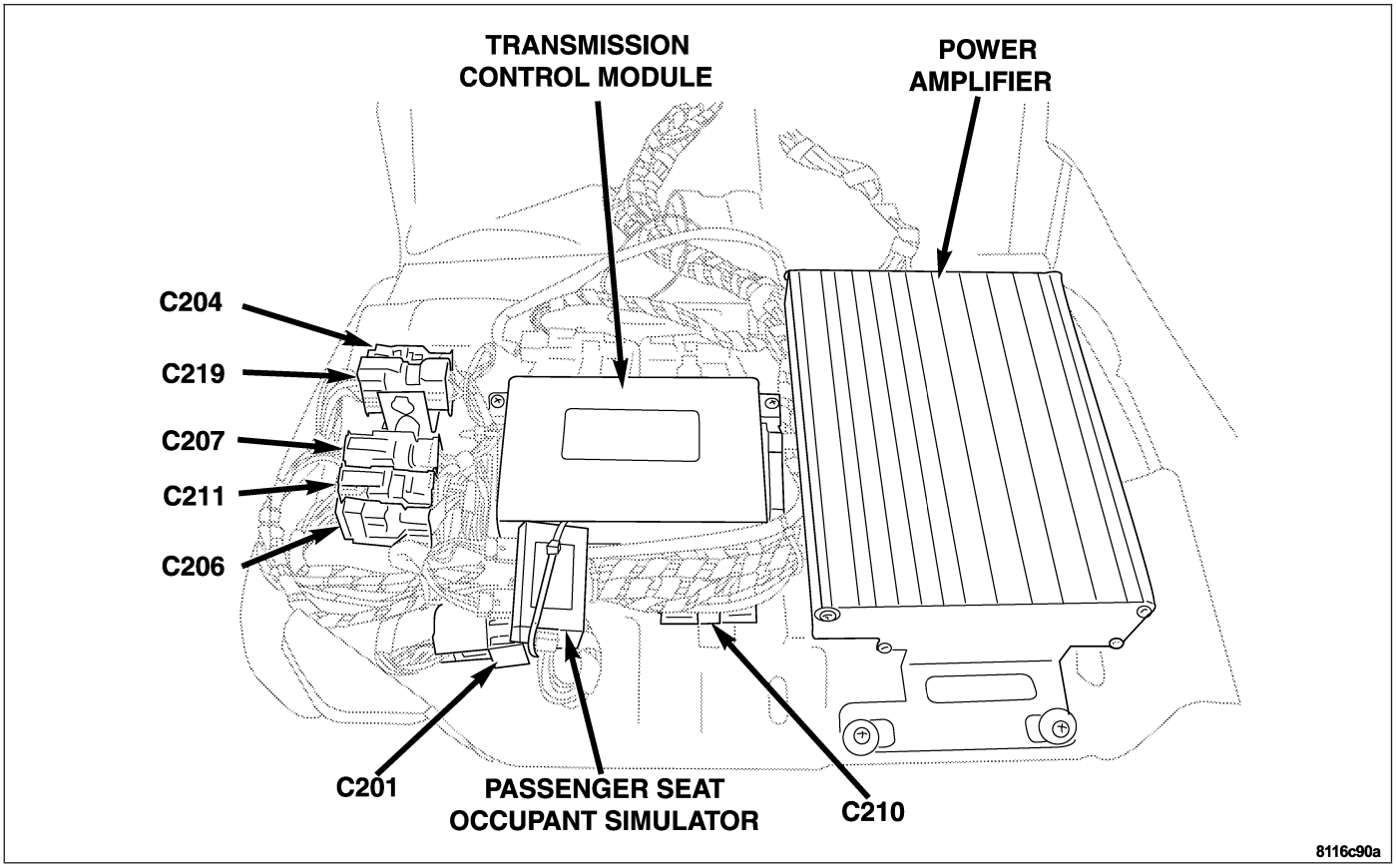

Fig. 3 RIGHT SIDE FLOOR

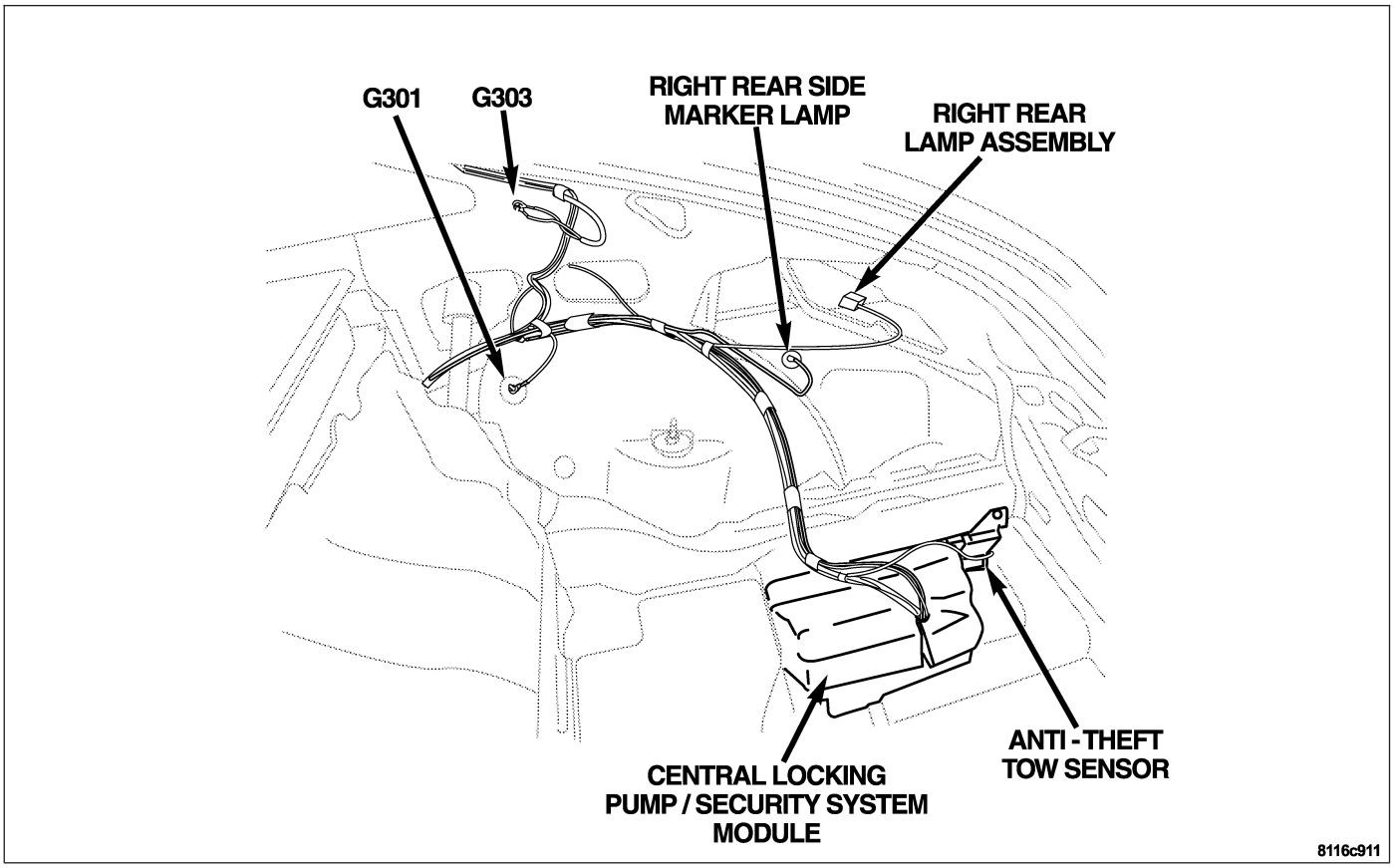

Fig. 4 RIGHT SIDE TRUNK

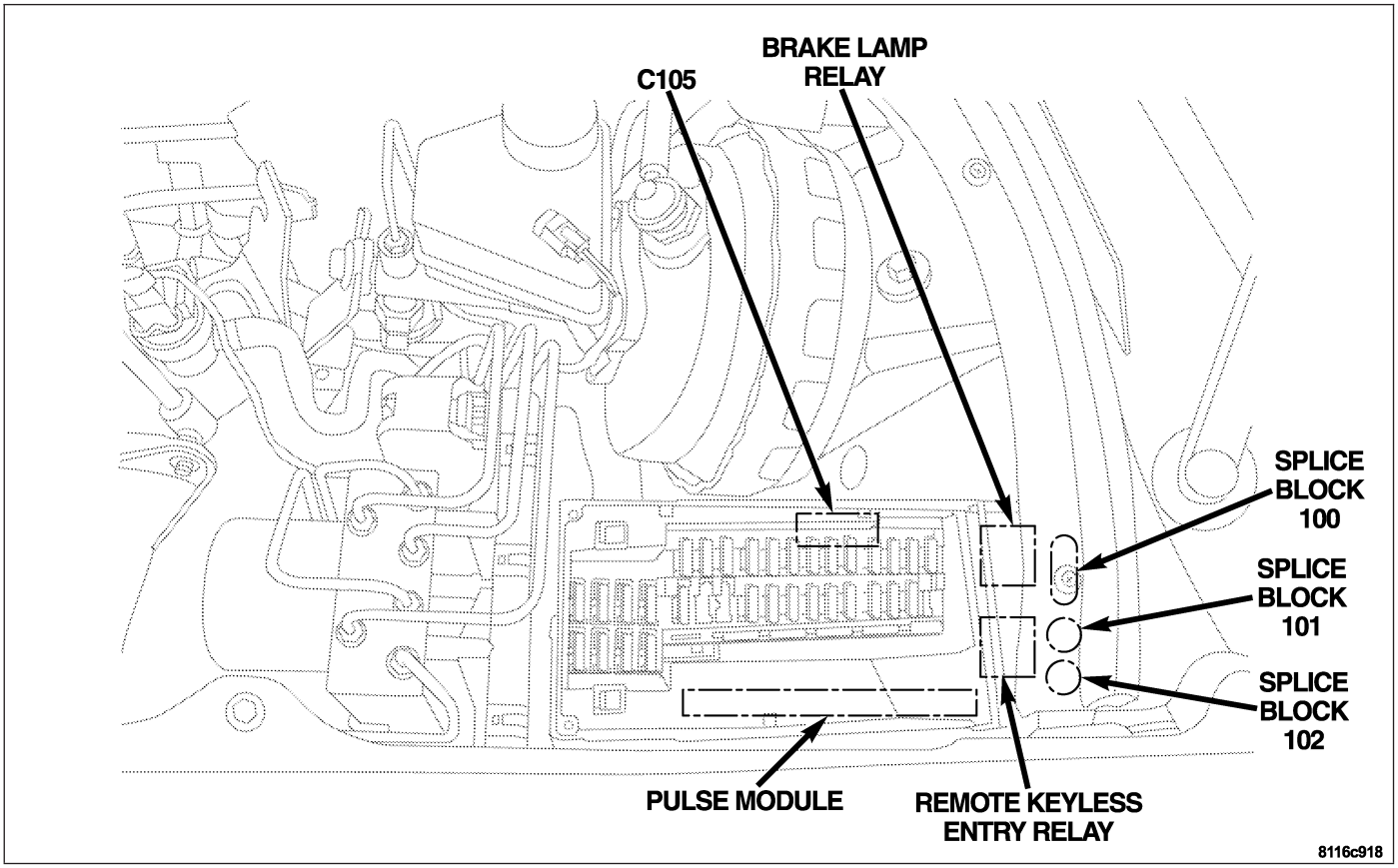

Fig. 5 LEFT SIDE ENGINE COMPARTMENT (PULSE MODULE)

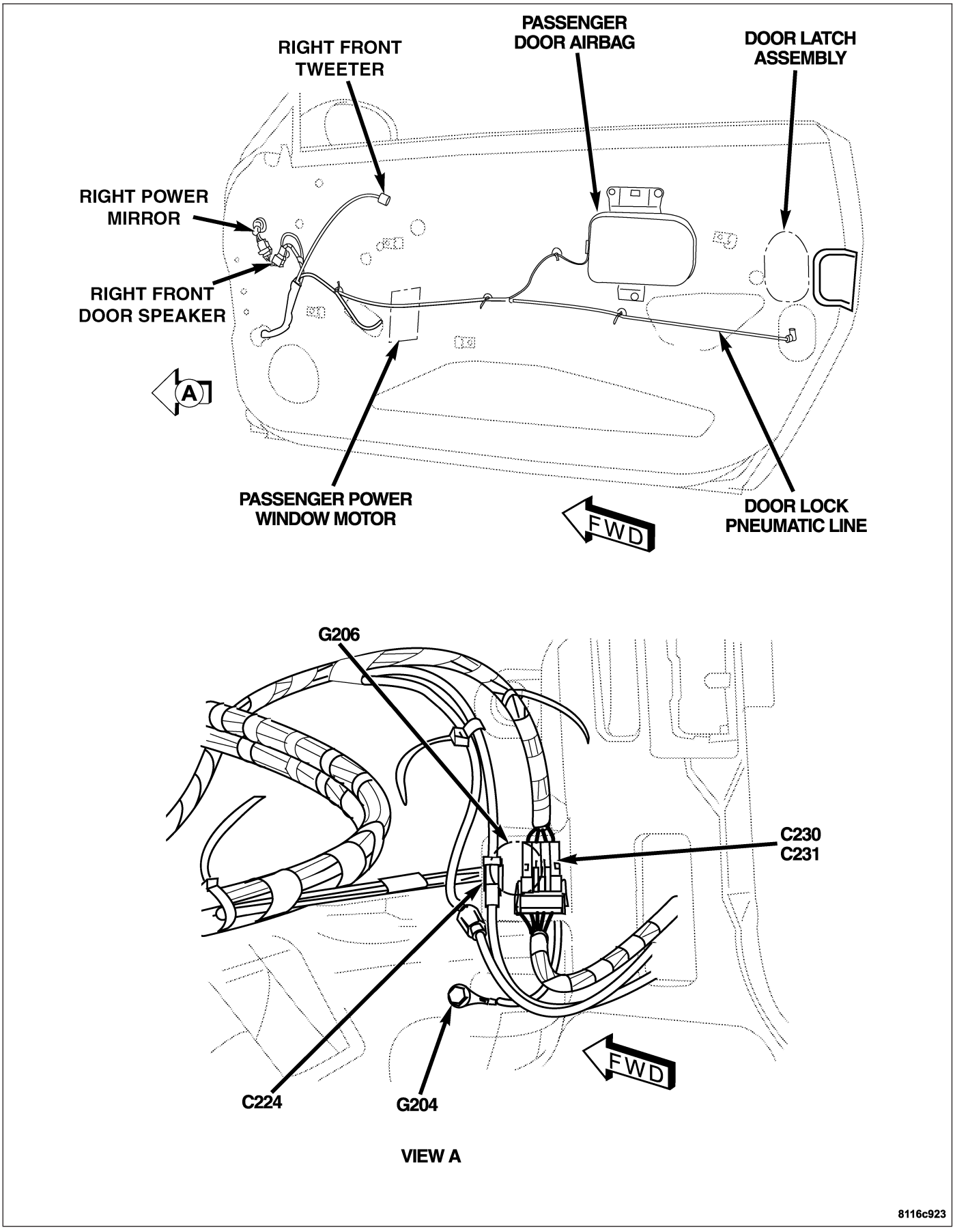

Fig. 6 RIGHT SIDE DOOR (Left hand similar)

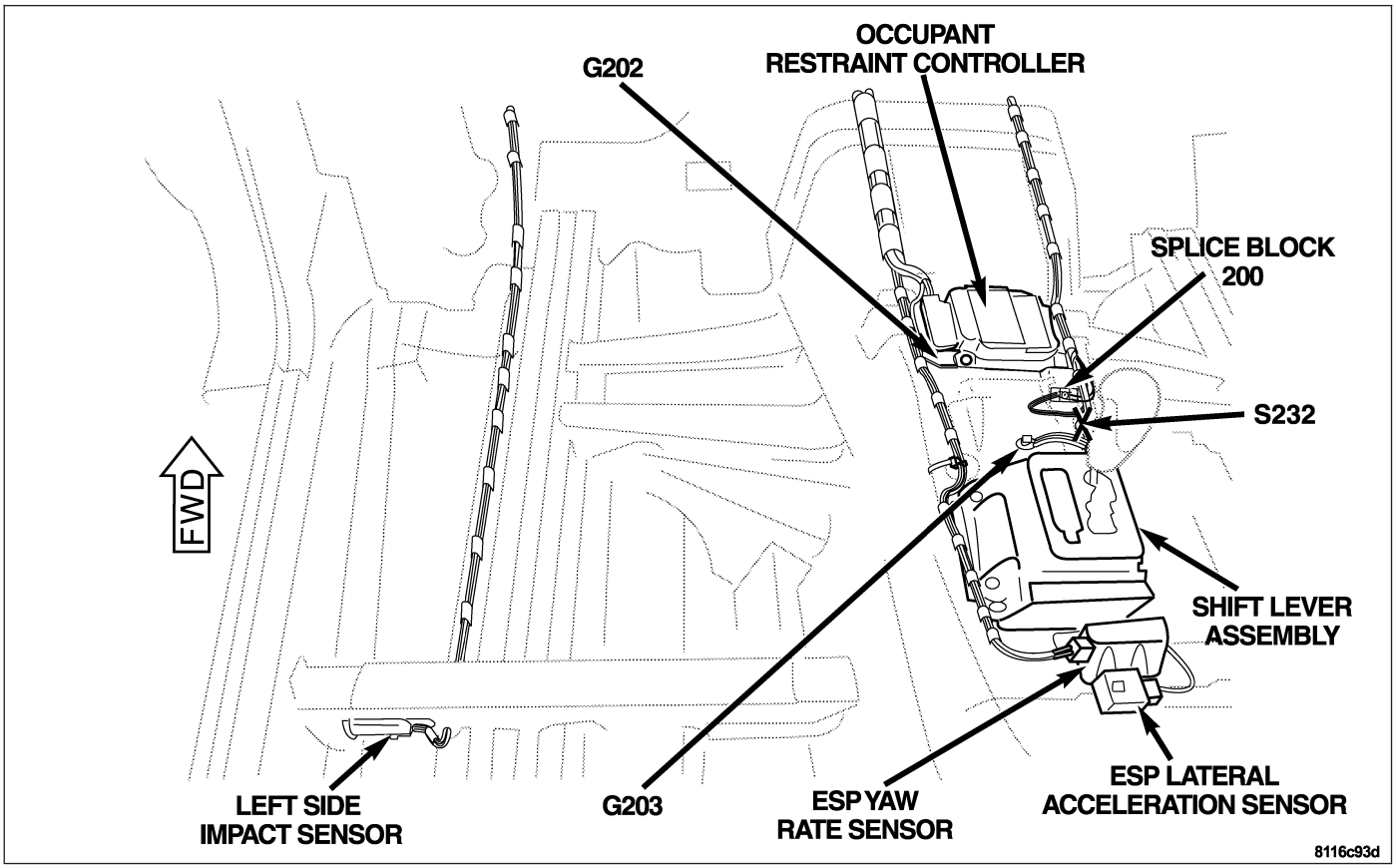

Fig. 7 CENTER CONSOLE

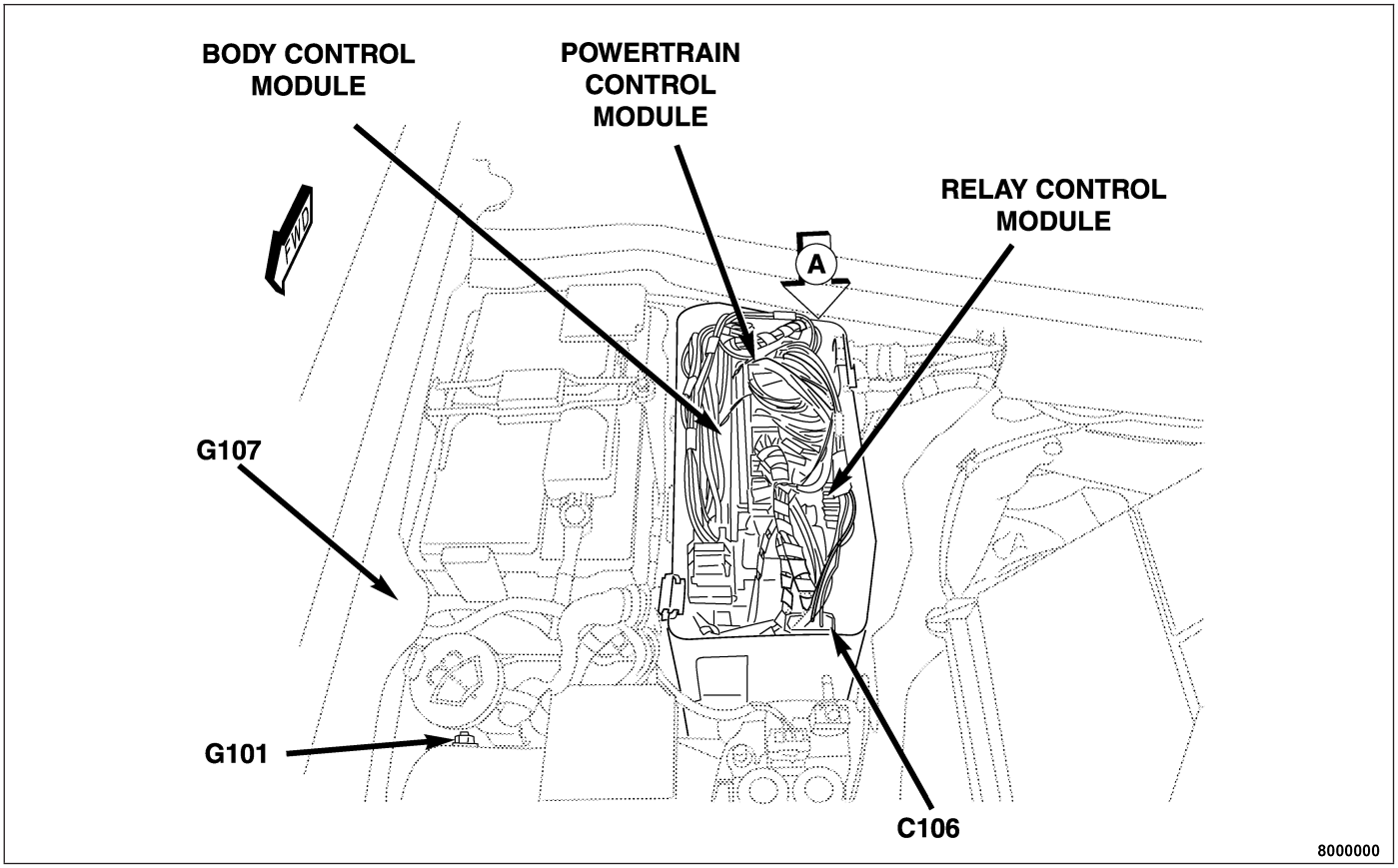

Fig. 8 RIGHT SIDE ENGINE COMPARTMENT

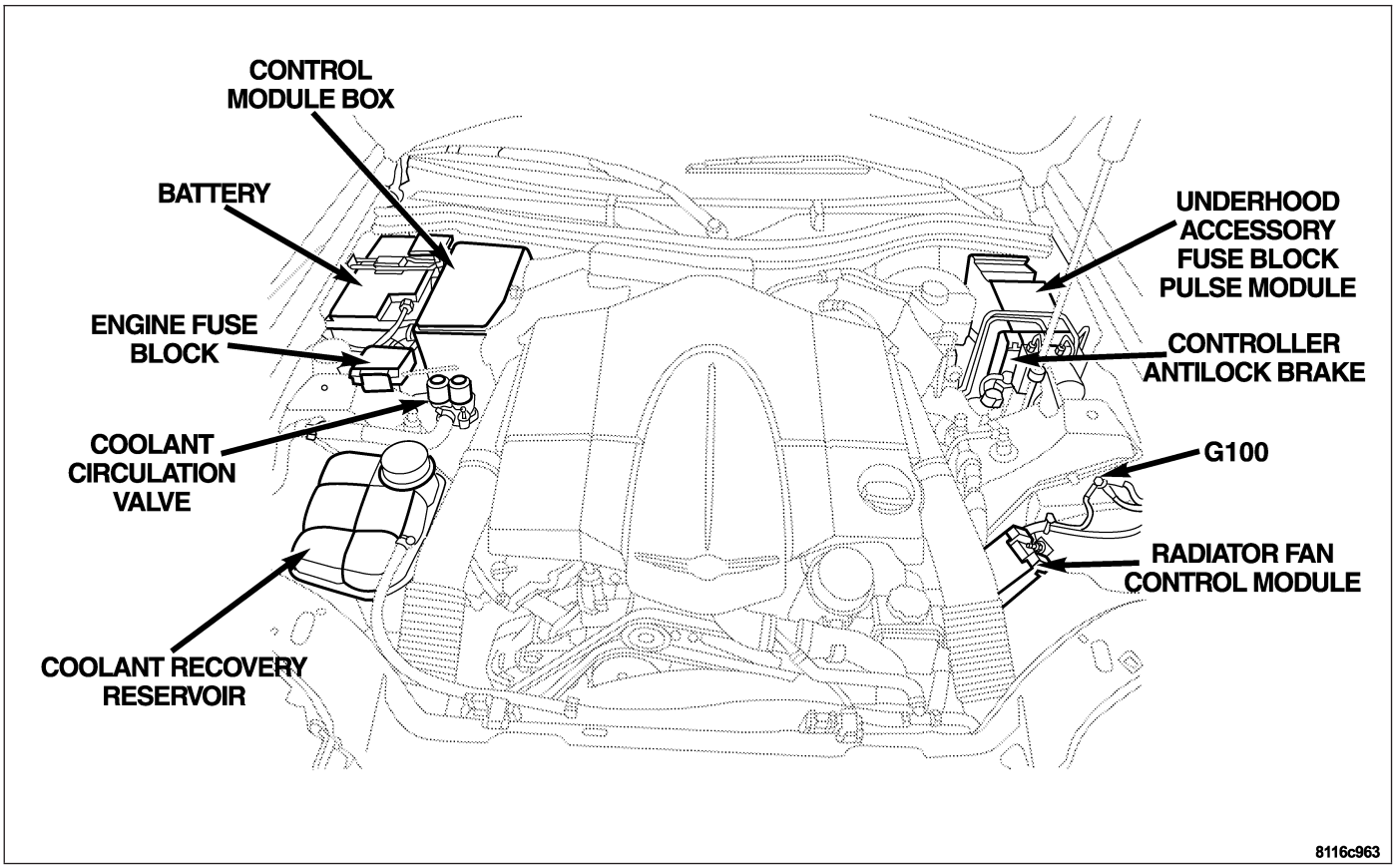

Fig. 9 ENGINE COMPARTMENT

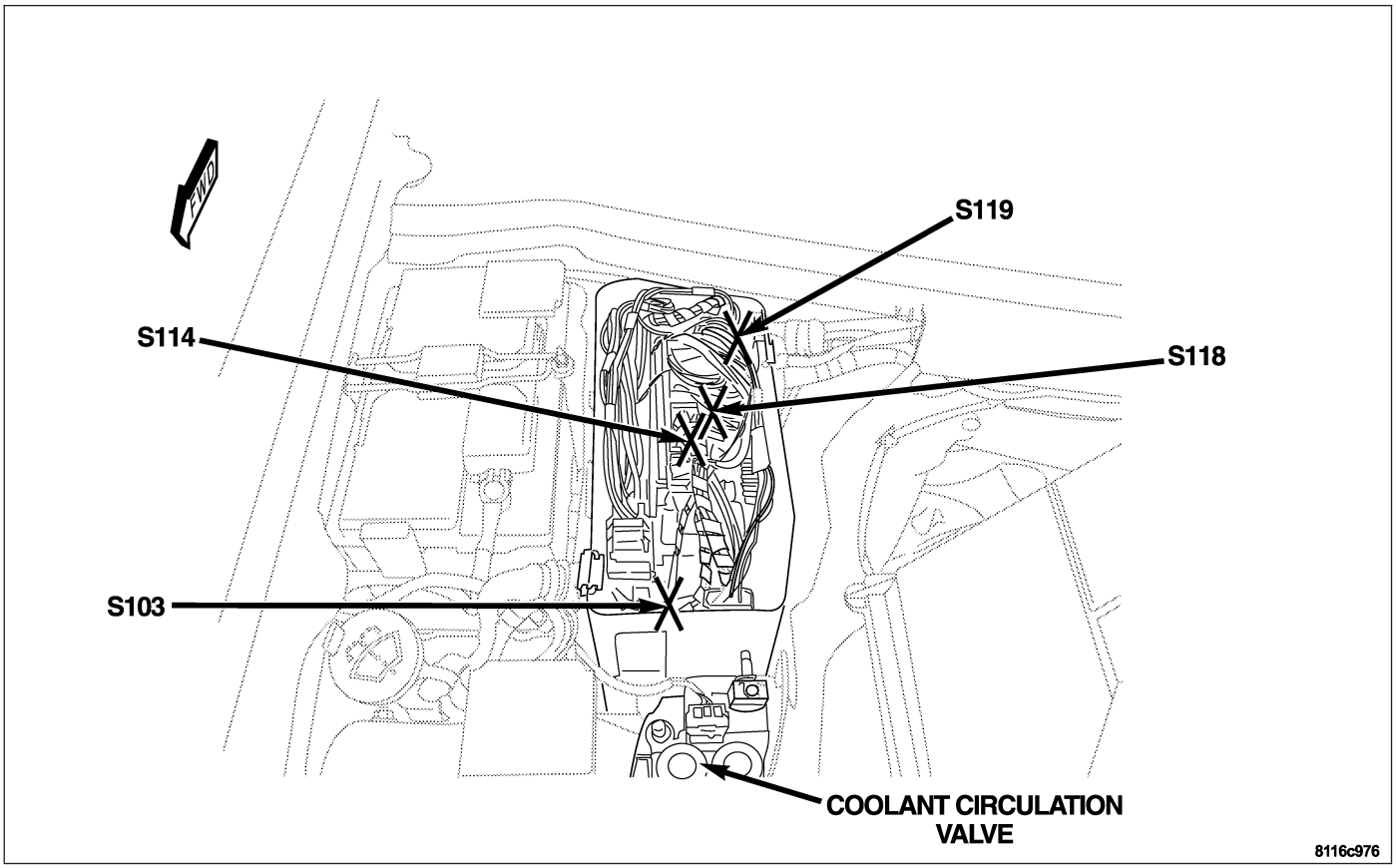

Fig. 10 RIGHT SIDE ENGINE COMPARTMENT SPLICES

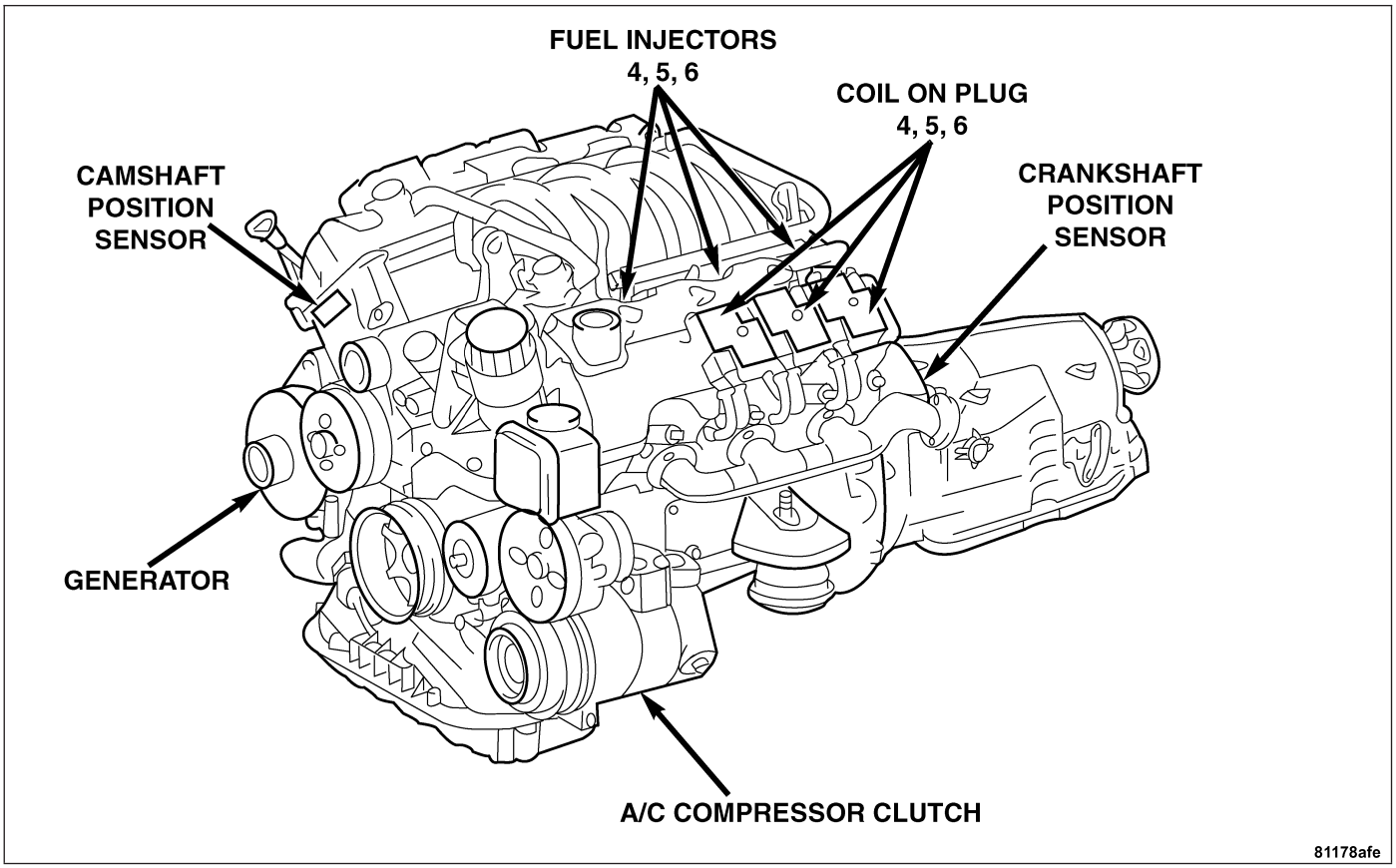

Fig. 11 ENGINE SIDE VIEW

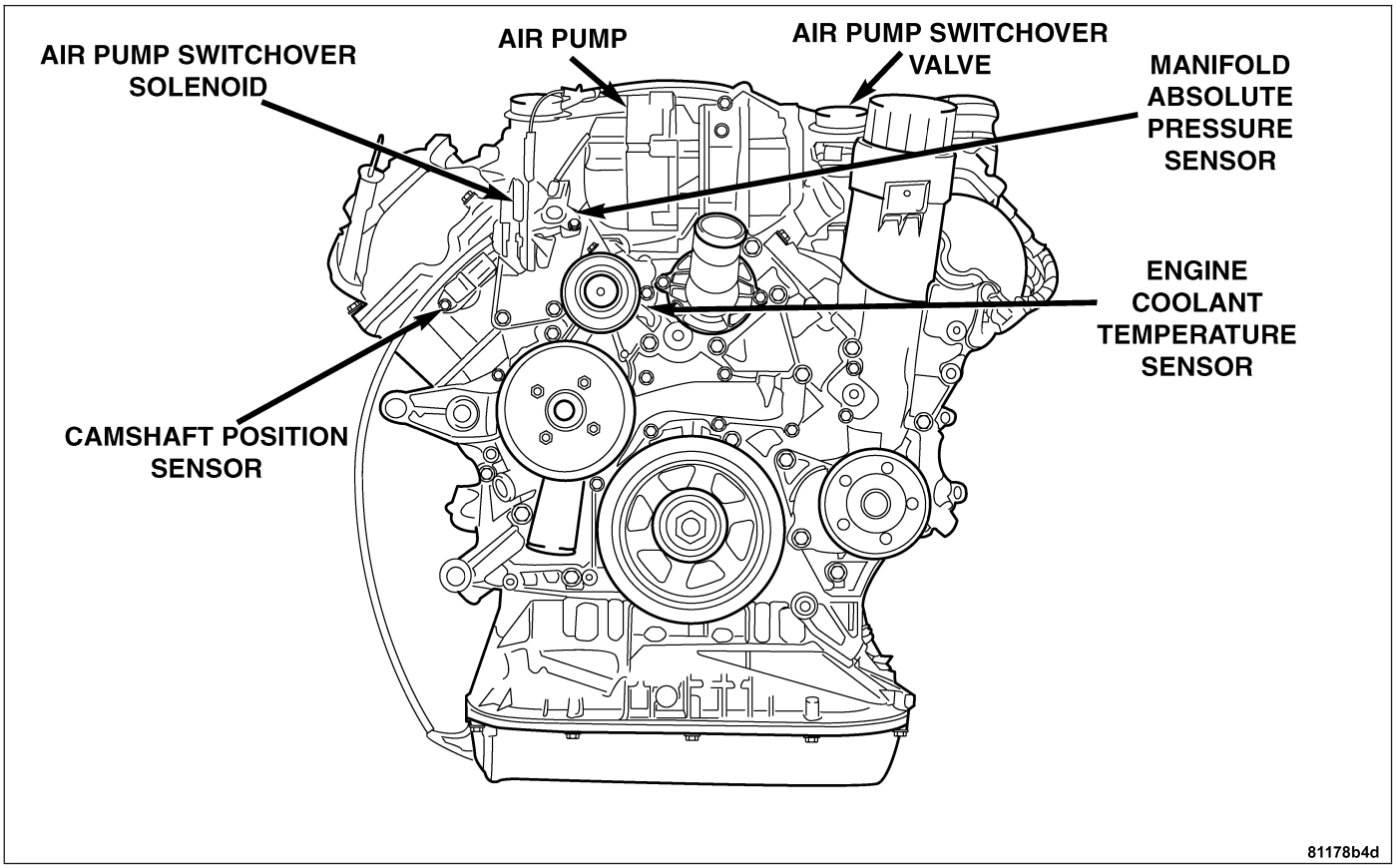

Fig. 12 ENGINE FRONT VIEW

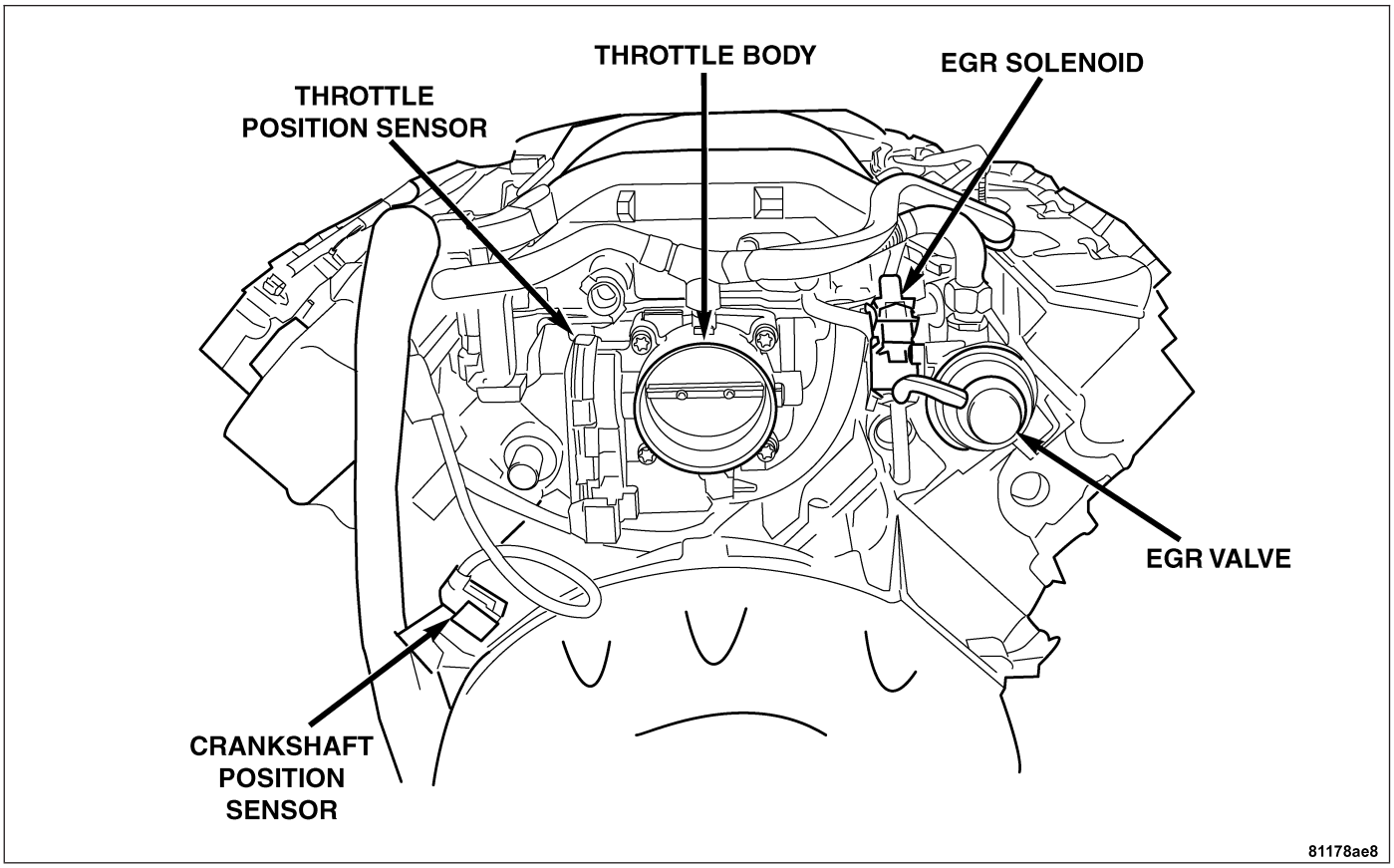

Fig. 13 ENGINE REAR

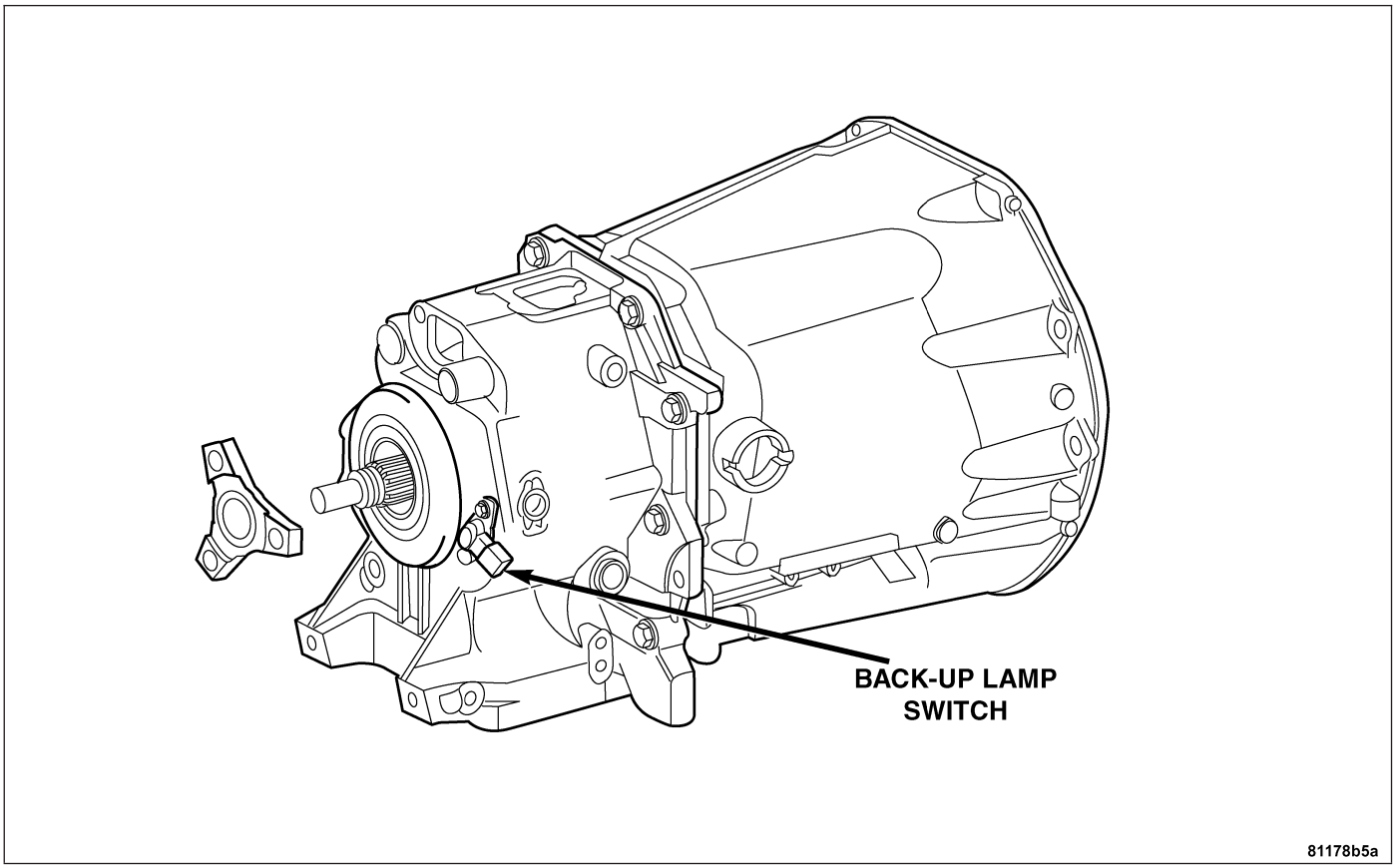

Fig. 14 MANUAL TRANSMISSION

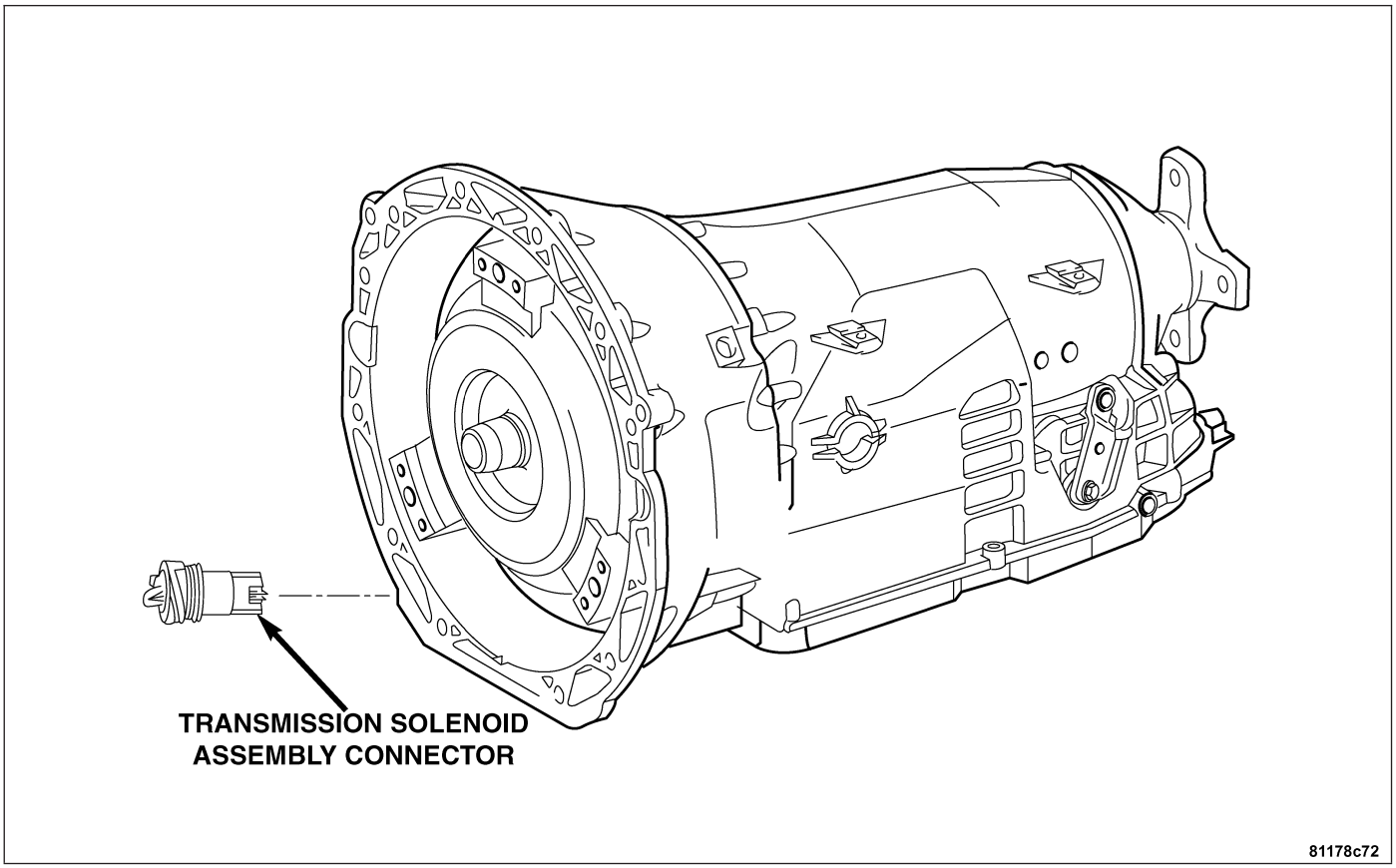

Fig. 15 AUTOMATIC TRANSMISSION

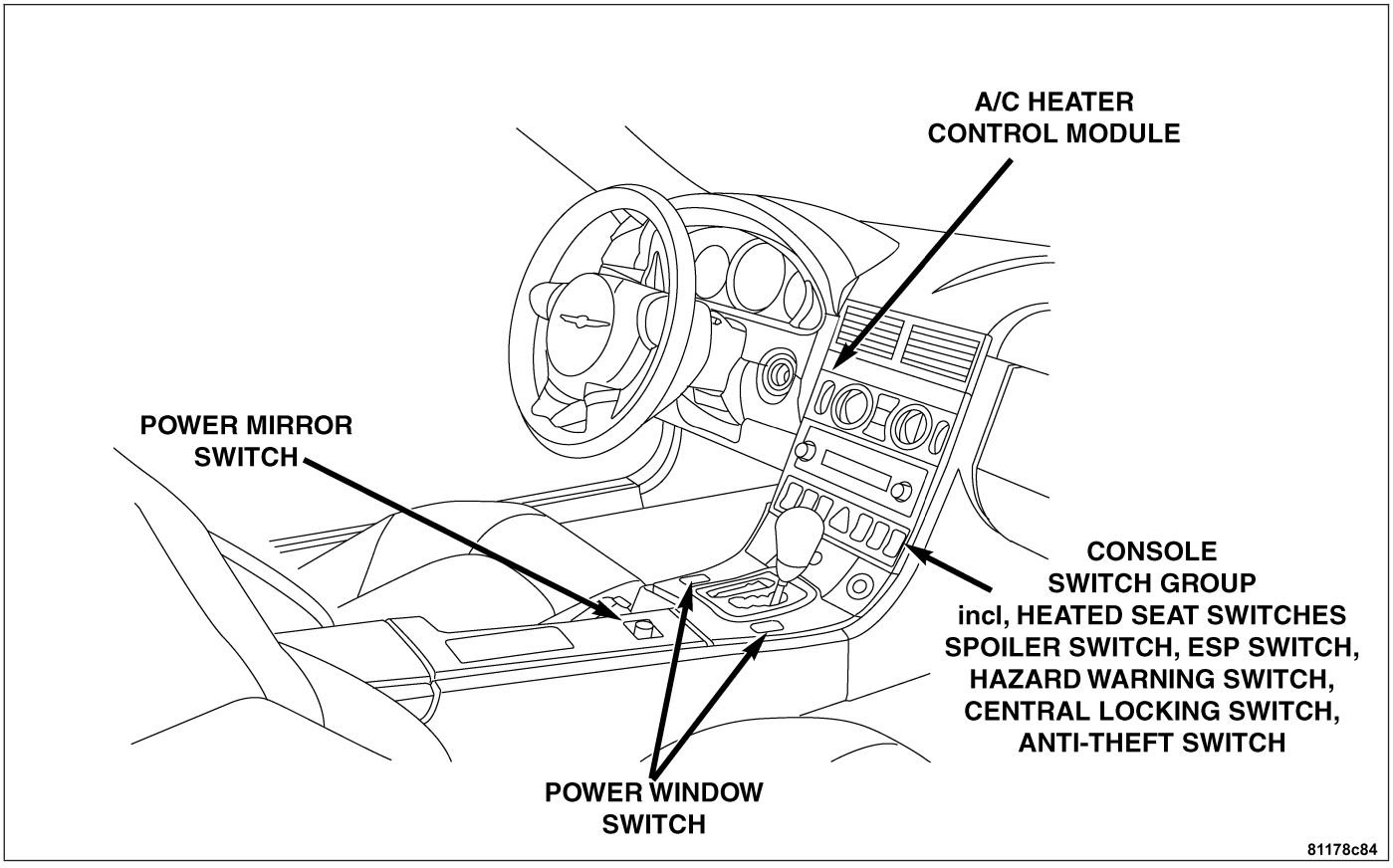

Fig. 16 INTERIOR

8W-97 POWER DISTRIBUTION

TABLE OF CONTENTS

	page
POWER DISTRIBUTION	
DESCRIPTION	1
OPERATION	1
ENGINE FUSE BLOCK	
DESCRIPTION	2
OPERATION	2
REMOVAL	2
INSTALLATION	3
RELAY CONTROL MODULE	
DESCRIPTION	3
OPERATION	3
REMOVAL	4
INSTALLATION	4
UNDERHOOD ACCESSORY FUSE BLOCK	
DESCRIPTION	5
OPERATION	5
REMOVAL	5
INSTALLATION	5
FUSE BLOCK	
DESCRIPTION	6
OPERATION	6

POWER DISTRIBUTION

DESCRIPTION

This group covers the various standard and optional power distribution components used on this model. Refer to the appropriate wiring information. The wiring information includes wiring diagrams, proper wire and connector repair procedures, details of wire harness routing and retention, connector pin-out information and location views for the various wire harness connectors, splices and grounds.

OPERATION

The power distribution system for this vehicle is designed to provide safe, reliable, centralized and convenient to access distribution of the electrical current required to operate all of the many standard and optional factory-installed electrical and electronic powertrain, chassis, safety, comfort and convenience systems. At the same time, these systems were designed to provide centralized locations for conducting diagnosis of faulty circuits, and for sourcing the additional current requirements of many aftermarket vehicle accessory and convenience items.

These power distribution systems also incorporate various types of circuit control and protection features, including:

- Fuses
- Fuse cartridges
- Fusible links
- Automatic resetting circuit breakers
- Relays
- Flashers
- Timers
- Circuit splice blocks

The power distribution system for this vehicle consists of the following components:

- Engine Fuse Block
- Underhood Accessory Fuse Block
- Illumination Control Module
- Relay Control Module

Following are general descriptions of the major components in the power distribution system. Refer to the owner's manual for more information on the features, use and operation of all of the power distribution system components.

ENGINE FUSE BLOCK

DESCRIPTION

All of the electrical current distributed throughout the vehicle is directed through the Engine Fuse Block. The Engine Fuse Block houses three maxi-type bolt in fuses. The Engine Fuse Block is located in front of the control module box, next to the windshield wiper solvent fill tube.

OPERATION

All of the current from the battery and the generator output enters the Engine Fuse Block through the cable and eyelet that are secured with a nut to the Engine Fuse Block B(+) terminal stud located on one end of the Engine Fuse Block housing. The Engine Fuse Block terminal stud cover is unlatched and opened or removed to access the fuses.

REMOVAL

1. Disconnect and isolate the negative battery cable.
2. Open the lid (1) of the engine fuse block.

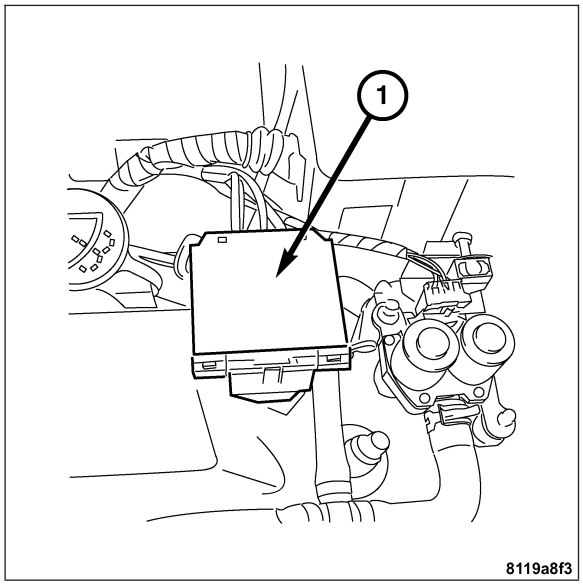

3. Remove the nuts and the electrical leads to the engine fuse block.
4. Close the lid to the engine fuse block.
5. Push the tab at the front of the engine fuse block box and remove it from the vehicle.

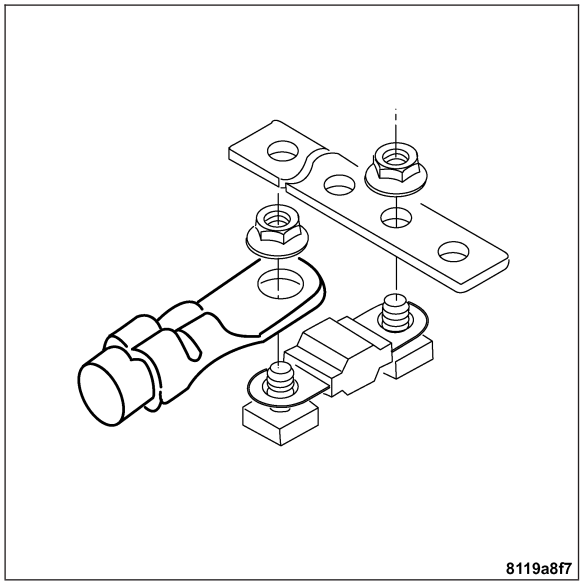

INSTALLATION

1. Install the engine fuse onto the studs.
2. Install the plate and the electrical lead to the engine fuse block.

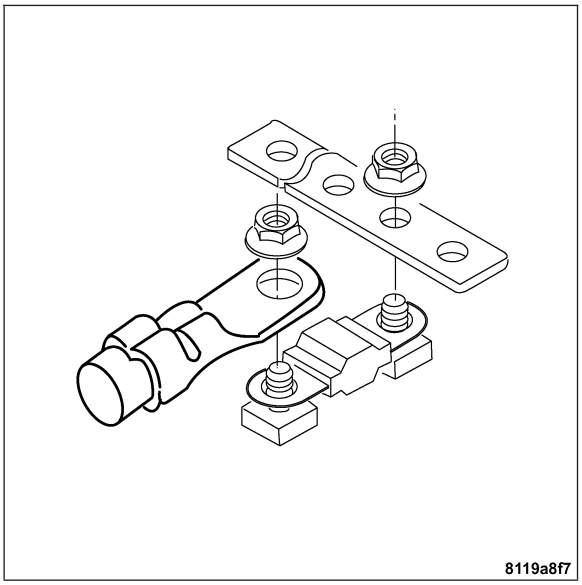

3. Connect the negative battery cable.
4. Close the lid (1) to the engine fuse block.
5. Close the hood.

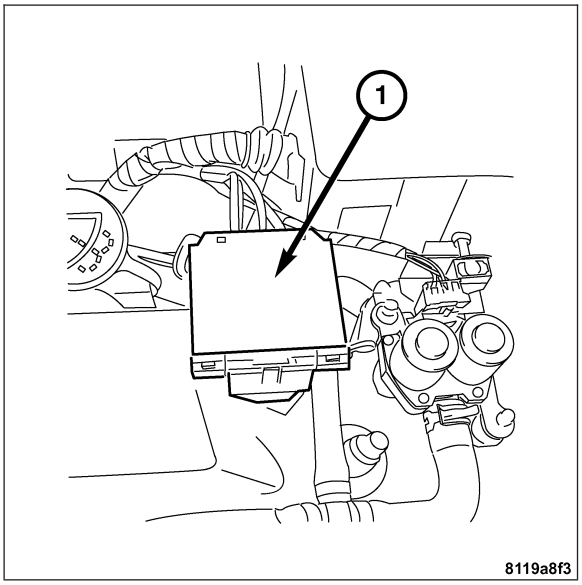

RELAY CONTROL MODULE

DESCRIPTION

The Relay Control Module controls many of the vehicle relays. The Relay Control Module is located inside the control module box. The Relay Control Module can not be serviced and it must be replaced as a unit.

OPERATION

The Relay Control Module is a solid state device containing the following internal relays.

- Air Pump Relay
- Engine Control Relay
- Traction System Relay
- Horn Relay
- Fuel Pump Relay

REMOVAL

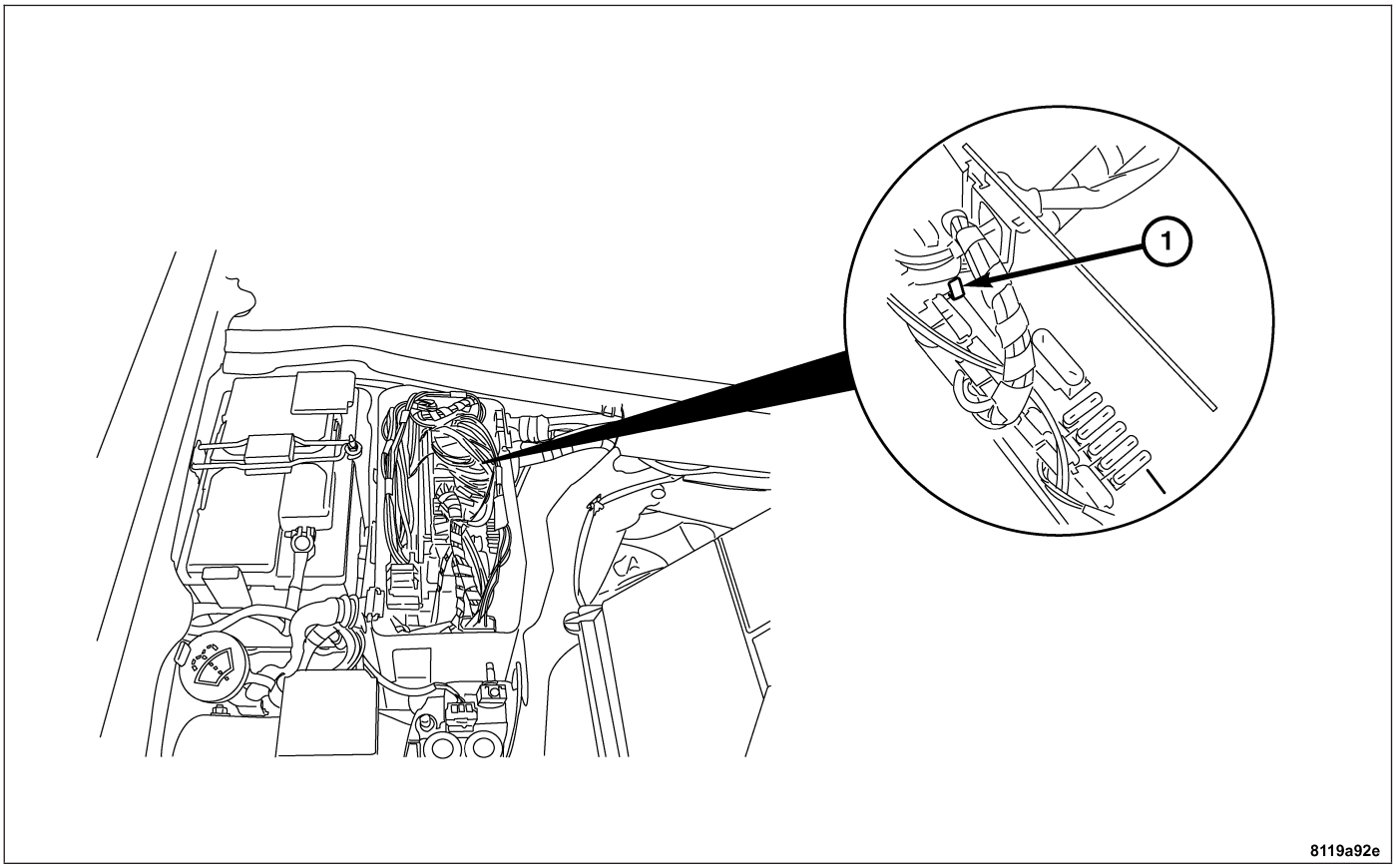

1. Disconnect and isolate the negative battery cable.
2. Open the lid to the control module box.
3. Move the wires away to the side of the box to access the clip (1) that holds the relay control module in the control module box.
4. Push the clip (1) back away from the relay control module and lift the relay control module out of the control module box.
5. Remove all of the relay harness connectors from the relay control module.

INSTALLATION

1. Install the relay control module harness connectors to the relay control module.
2. Install the relay control module into the control module box, pushing the relay control module down until the clips snaps.
3. Install the control module box lid.
4. Connect the negative battery cable.

UNDERHOOD ACCESSORY FUSE BLOCK

DESCRIPTION

The Underhood Accessory Fuse Block houses many of the fuses for the vehicles electrical system. The Underhood Accessory Fuse Block is located on the left side of the engine compartment just in front of the brake booster. The Underhood Accessory Fuse Block can not be serviced it must be replaced as a unit.

OPERATION

All of the circuits entering and leaving the Underhood Accessory Fuse Block do so through seperate wires. There are NO seperate wiring harness connectors that connect to the Underhood Accessary Fuse Block. Each circuit is connected individually to the Underhood Accesssory Fuse Block, and held in place by the use of retention combs.

REMOVAL

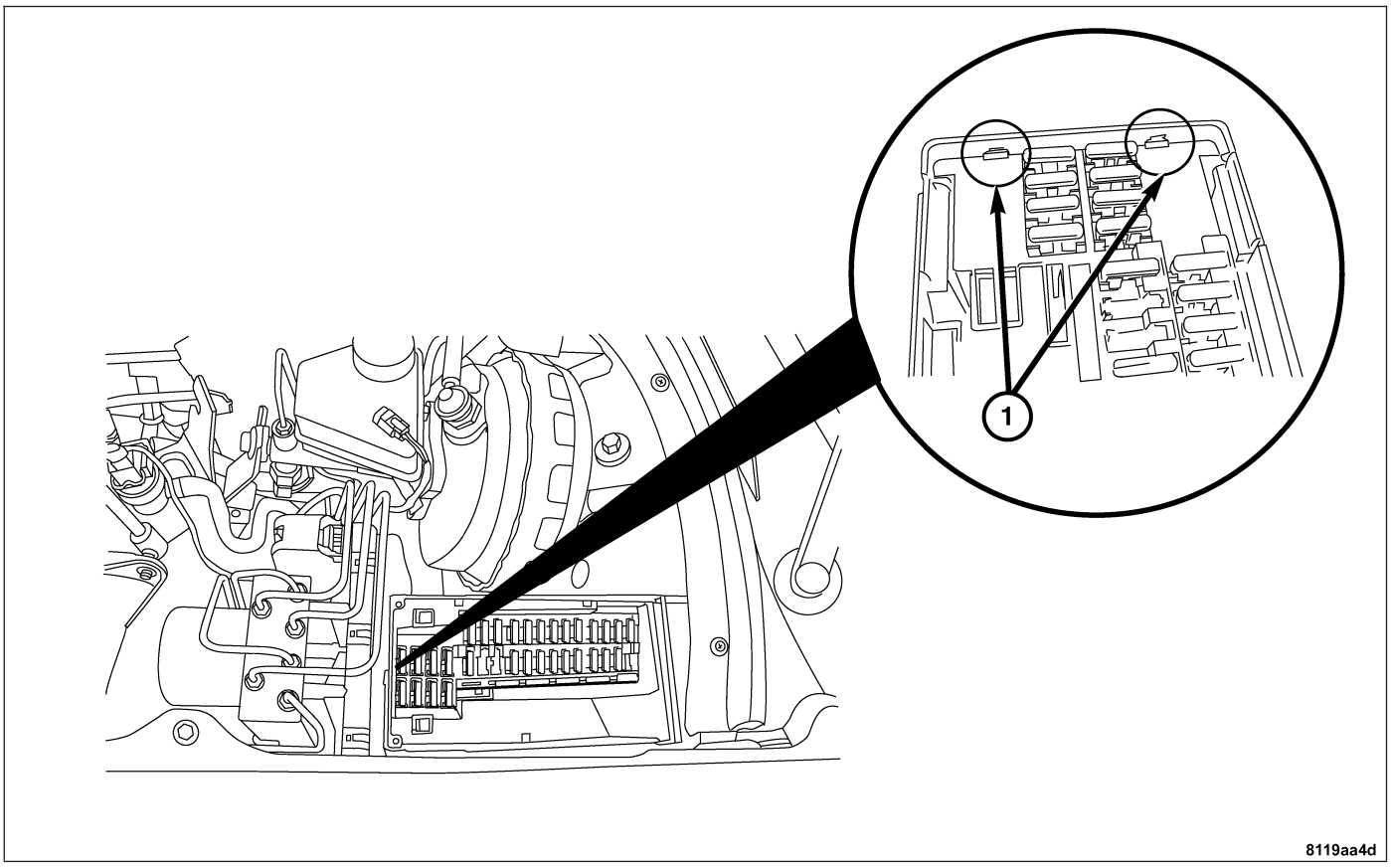

1. Disconnect and isolate the negative battery cable.
2. Remove the lid to the underhood accessory fuse block.
3. Push the front of the underhood accessory fuse box forward releasing the tabs (1) on the underhood fuse block.
4. Pull the underhood accessory fuse block out of the box and remove all of the underhood accessory fuse block harness connectors.

INSTALLATION

1. Install the harness connectors to the underhood accessory fuse block.
2. Push the underhood accessory fuse block down into the box until the rear tabs and the front two tabs connect.
3. Install the lid.
4. Connect the negative battery cable.

FUSE BLOCK

DESCRIPTION

The fuse block is part of the illumination control module. A knob on the face of the module controls the exterior lighting functions. The exterior lighting and headlamp switch portions of the illumination control module cannot be adjusted or repaired. If faulty or damaged, the entire module assembly must be replaced as a unit. **Refer to Page 8L-105**.

OPERATION

The Fuse Block on the side of the Illumination Control Module houses the fuses for the following:

- Fuse 2. Brake Lamp
- Fuse 3. Right High Beam/High Beam Indicator Lamp
- Fuse 4. Reverse Lamp/Turn Signal Lamp/Rear View Mirror
- Fuse 5. Left High Beam
- Fuse 6. Right Low Beam
- Fuse 7. Right Parking/Tail Lamp Side Marker
- Fuse 8. Left Low Beam
- Fuse 9. Fog Lamp
- Fuse 10. Left Parking/Tail Lamp Side Marker
- Fuse 11. License Plate/Instrument Cluster Lighting/Symbol Lighting
- Fuse 12. Rear Fog Lamp (Export Only)

ENGINE

TABLE OF CONTENTS

page

ENGINE - ELECTRICAL DIAGNOSTICS 1

page

ENGINE - SERVICE INFORMATION 581

ENGINE - ELECTRICAL DIAGNOSTICS

TABLE OF CONTENTS

page

ENGINE - ELECTRICAL DIAGNOSTICS
DIAGNOSIS AND TESTING
(P0040) 1/1 AND 2/1 O2 SENSOR HARNESS CONNECTORS REVERSED 5
(P0101) MAF SENSOR PERFORMANCE 8
(P0102) MASS AIR FLOW CIRCUIT 10
(P0103) MAF SENSOR CIRCUIT LOW 17
(P0104) MAF SENSOR THROTTLE ANGLE AND SPEED 19
(P0106) MAP SENSOR PERFORMANCE 21
(P0107) MAP SENSOR CIRCUIT LOW 24
(P0108) MAP SENSOR CIRCUIT HIGH 29
(P0112) INTAKE AIR TEMPERATURE SENSOR CIRCUIT LOW 31
(P0113) INTAKE AIR TEMPERATURE SENSOR CIRCUIT HIGH 36
(P0116) ENGINE COOLANT TEMPERATURE SENSOR PERFORMANCE. 40
(P0116) ENGINE COOLANT TEMPERATURE SENSOR SHORT CIRCUIT 47
(P0117) ENGINE COOLANT TEMPERATURE SENSOR CIRCUIT LOW 49
(P0118) ENGINE COOLANT TEMPERATURE SENSOR CIRCUIT HIGH 51
(P0120) ELECTRONIC THROTTLE CONTROL MOTOR PERFORMANCE 53
(P0120) THROTTLE POSITION SENSOR 1/2 CORRELATION 59
(P0121) APPS 5-VOLT SUPPLY CIRCUIT 61
(P0122) APPS SIGNAL #1 CIRCUIT LOW . . . 65
(P0123) APPS SIGNAL #1 CIRCUIT HIGH . . . 70
(P0128) FORCED LIMITED POWER EXCESSIVE HIGH COOLANT TEMP 74
(P0128) THERMOSTAT RATIONALITY 78
(P0131) O2 SENSOR 1/1 CIRCUIT LOW 86

page

(P0132) O2 SENSOR 1/1 CIRCUIT HIGH 93
(P0133) O2 SENSOR 1/1 SHORT DELAY TIME 95
(P0133) O2 SENSOR 1/1 LONG PERFORMANCE 99
(P0133) O2 SENSOR 1/1 LONG DELAY TIME . 101
(P0133) O2 SENSOR 1/1 SHORT PERFORMANCE 103
(P0134) O2 SENSOR 1/1 CIRCUIT OPEN . . 105
(P0135) O2 SENSOR 1/1 HEATER CIRCUIT LOW 107
(P0135) O2 SENSOR 1/1 HEATER PERFORMANCE 109
(P0135) O2 SENSOR 1/1 HEATER CIRCUIT HIGH 113
(P0135) O2 SENSOR 1/1 HEATER CIRCUIT OPEN. 117
(P0137) O2 SENSOR 1/2 BELOW THRESHOLD 119
(P0137) O2 SENSOR 1/2 ABOVE THRESHOLD 121
(P0137 O2 SENSOR 2/2 ABOVE THRESHOLD 123
(P0137) O2 SENSOR 2/2 BELOW THRESHOLD 127
(P0138) O2 SENSOR 1/2 CIRCUIT HIGH . . . 129
(P0138) O2 SENSOR 1/2 CIRCUIT OPEN . . 131
(P0138) O2 SENSOR 2/2 CIRCUIT LOW . . . 133
(P0138) O2 SENSOR 2/2 CIRCUIT OPEN . . 135
(P0140) O2 SENSOR 1/2 CIRCUIT LOW . . . 137
(P0140) O2 SENSOR 2/2 CIRCUIT HIGH . . . 139
(P0141) O2 SENSOR 1/2 HEATER CIRCUIT LOW 141
(P0141) O2 SENSOR 1/2 HEATER CIRCUIT OPEN 143

(P0141) O2 SENSOR 1/2 HEATER CIRCUIT HIGH 145
(P0141) O2 SENSOR 1/2 HEATER PERFORMANCE 147
(P0151) O2 SENSOR 2/1 CIRCUIT LOW . . . 149
(P0152) O2 SENSOR 2/1 CIRCUIT HIGH . . . 151
(P0153) O2 SENSOR 2/1 LONG PERFORMANCE 153
(P0153) O2 SENSOR 2/1 LONG DELAY TIME . 155
(P0153) O2 SENSOR 2/1 SHORT DELAY TIME 157
(P0153) O2 SENSOR 2/1 SHORT PERFORMANCE 159
(P0154) O2 SENSOR 2/1 CIRCUIT OPEN . . 161
(P0155) O2 SENSOR 2/1 HEATER CIRCUIT LOW 163
(P0155) O2 SENSOR 2/1 HEATER CIRCUIT HIGH 165
(P0155) O2 SENSOR 2/1 HEATER CIRCUIT OPEN. 167
(P0155) O2 SENSOR 2/1 HEATER PERFORMANCE 169
(P0161) O2 SENSOR 2/2 HEATER PERFORMANCE 171
(P0161) O2 SENSOR 2/2 HEATER CIRCUIT LOW 173
(P0161) O2 SENSOR 2/2 HEATER CIRCUIT OPEN. 175
(P0161) O2 SENSOR 2/2 HEATER CIRCUIT HIGH 177
(P0171) FUEL SYSTEM 1/1 UNDERCORRECTION OF FUEL MIXTURE (OFF IDLE). 179
(P0171) FUEL SYSTEM 1/1 RICH CONTROL OVER LIMIT (AT IDLE) 183
(P0171) FUEL SYSTEM 1/1 RICH CONTROL OVER LIMIT (AT LOAD) 187
(P0172) FUEL SYSTEM 1/1 OVERCORRECTION OF FUEL MIXTURE (AT IDLE) 195
(P0172) FUEL SYSTEM 1/1 LEAN CONTROL BELOW LIMIT (AT LOAD) 199
(P0172) FUEL SYSTEM 1/1 LEAN CONTROL BELOW LIMIT (AT IDLE). 207
(P0173) FUEL SYSTEM 2/1 RICH CONTROL OVER LIMIT (AT LOAD) 211
(P0174) FUEL SYSTEM 2/1 RICH CONTROL OVER LIMIT (AT IDLE) 218
(P0174) FUEL SYSTEM 2/1 RICH CONTROL OVER LIMIT (AT LOAD) 221
(P0174) FUEL SYSTEM 2/1 LEAN CONTROL BELOW LIMIT (AT LOAD) 224
(P0174) FUEL SYSTEM 2/1 UNDERCORRECTION OF FUEL MIXTURE (OFF IDLE). 227
(P0175) FUEL SYSTEM 2/1 OVERCORRECTION OF FUEL MIXTURE (OFF IDLE). 230
(P0175) FUEL SYSTEM 2/1 LEAN CONTROL BELOW LIMIT (AT IDLE). 233
(P0200) FUEL INJECTOR CIRCUIT 236
(P0201) FUEL INJECTOR #1 CIRCUIT 238
(P0202) FUEL INJECTOR #2 CIRCUIT 242
(P0203) FUEL INJECTOR #3 CIRCUIT 244
(P0204) FUEL INJECTOR #4 CIRCUIT 246
(P0205) FUEL INJECTOR #5 CIRCUIT 248
(P0206) FUEL INJECTOR #6 CIRCUIT 250
(P0211) THROTTLE ACTUATOR STUCK . . . 252
(P0211) THROTTLE ACTUATOR STUCK . . . 257
(P0221) APPS SENSOR #1 AND #2 VOLTAGE CORRELATION 262
(P0221) IDLE SPEED PERFORMANCE 266
(P0221) ELECTRONIC THROTTLE CONTROL MODULE PERFORMANCE 270
(P0221) ELECTRONIC THROTTLE CONTROL MODULE PROCESSOR 272
(P0222) APPS SIGNAL #2 CIRCUIT LOW . . . 274
(P0223) APPS SIGNAL #2 CIRCUIT HIGH . . 279
(P0300) MULTIPLE CYLINDER MISFIRE . . . 283
(P0301) CYLINDER #1 MISFIRE 294
(P0302) CYLINDER #2 MISFIRE 304
(P0303) CYLINDER #3 MISFIRE 308
(P0304) CYLINDER #4 MISFIRE 312
(P0305) CYLINDER #5 MISFIRE 316
(P0306) CYLINDER #6 MISFIRE 320
(P0325) KNOCK SENSOR #1 CIRCUIT LOW . . 324
(P0325) KNOCK SENSOR #1 CIRCUIT HIGH . 328
(P0330) KNOCK SENSOR #2 CIRCUIT HIGH . 330
(P0330) KNOCK SENSOR #2 CIRCUIT LOW . . 332
(P0335) CRANKSHAFT POSITION SENSOR CIRCUIT 334
(P0341) CAMSHAFT POSITION TIMING OVER-RETARDED 340
(P0341) CAMSHAFT POSITION TIMING OVER-ADVANCED 344
(P0341) CAMSHAFT POSITION SENSOR PERFORMANCE 346
(P0400) EGR SYSTEM PERFORMANCE . . . 350
(P0403) EGR CONTROL CIRCUIT 354
(P0410) SECONDARY AIR INJECTION SYSTEM 356
(P0410) SECONDARY AIR INJECTION RELAY CIRCUIT. 362
(P0412) SECONDARY AIR INJECTION SWITCHOVER SOLENOID CIRCUIT 365
(P0422) CATALYTIC 1/1 EFFICIENCY 369
(P0432) CATALYTIC 2/1 EFFICIENCY 372
(P0440) GENERAL EVAP SYSTEM FAILURE . . 374
(P0441) EVAP PURGE VALVE 376
(P0442) EVAP SYSTEM SMALL LEAK 378
(P0445) EVAP PURGE SOLENOID CIRCUIT . . 380

(P0446) CHARCOAL CANISTER SHUTOFF VALVE 384
(P0446) EVAP PURGE SOLENOID STUCK OPEN 387
(P0451) FUEL TANK PRESSURE SENSOR PERFORMANCE 390
(P0452) FUEL TANK PRESSURE SENSOR CIRCUIT LOW 395
(P0453) FUEL TANK PRESSURE SENSOR CIRCUIT HIGH 397
(P0455) EVAP SYSTEM LARGE LEAK 399
(P0457) EVAP PURGE VALVE LEAKING . . . 406
(P0460) FUEL LEVEL SENSOR CIRCUIT . . . 408
(P0500) NO VEHICLE SPEED SIGNAL (CAB CAN MESSAGE) 410
(P0500) VEHICLE SPEED PERFORMANCE ESP MIL REQUEST 412
(P0561) BATTERY SYSTEM VOLTAGE 414
(P0562) BATTERY SYSTEM LOW 417
(P0563) BATTERY SYSTEM HIGH 419
(P0571) STOP LAMP SWITCH CAN SIGNAL LOST TO TRANS PERFORMANCE 421
(P0571) STOP LAMP SWITCH SIGNAL PERFORMANCE 423
(P0600) INCORRECT CAN MESSAGE FROM EIS CONTROL MODULE 425
(P0600) NO CAN MESSAGE FROM CAB MODULE 427
(P0600) NO TRANSMISSION BUS MESSAGE 433
(P0600) LOST COMM WITH ELECTRIC GEAR SHIFT MODULE (SLA) 439
(P0600) NO CLUSTER BUS MESSAGE 445
(P0602) PCM PROGRAMMED INCORRECT TRANS/NO COMM FROM TCM 451
(P0700) TRANSMISSION CONTROL SYSTEM (MIL REQUEST) 453
(P0702) TRANSMISSION CONTROL MODULE LOW VOLTAGE 455
(P0702) TRANSMISSION CONTROL SYSTEM (MIL REQUEST) 457
(P0702) LOSS OF TORQUE MANAGEMENT SIGNAL 459
(P0702) TCM TORQUE MANAGEMENT REQUEST PERFORMANCE 461
(P0705) SLA CONTROL SYSTEM (MIL REQUEST) 463
(P0705) TRANSMISSION CONTROL SYSTEM (MIL REQUEST) 465
(P0715) TRANSMISSION CONTROL SYSTEM (MIL REQUEST) 467
(P0720) TRANSMISSION INCORRECT TORQUE REQUEST FROM ESP 469
(P0720) TRANSMISSION CONTROL SYSTEM (MIL REQUEST) 475
(P0730) TRANSMISSION CONTROL SYSTEM (MIL REQUEST) 477
(P0740) TRANSMISSION CONTROL SYSTEM (MIL REQUEST) 479
(P0743) TRANSMISSION CONTROL SYSTEM (MIL REQUEST) 481
(P0748) TRANSMISSION CONTROL SYSTEM (MIL REQUEST) 483
(P0753) TRANSMISSION CONTROL SYSTEM (MIL REQUEST) 485
(P0758) TRANSMISSION CONTROL SYSTEM (MIL REQUEST) 487
(P0763) TRANSMISSION CONTROL SYSTEM (MIL REQUEST) 489
(P1386) KNOCK SENSOR SYSTEM FAILURE . 491
(P1600) ROUGH ROAD DETECTED 493
(P2513) ENHANCED ACCIDENT REPORT DRIVER CIRCUIT HIGH 499
(P2513) ENHANCED ACCIDENT REPORT DRIVER CIRCUIT LOW 504
(P2545) ESP TORQUE MANAGEMENT REQUEST PERFORMANCE 506
(P2561) HVAC CONTROL MODULE REQUESTED MIL ILLUMINATION 512
COOLING FAN CONTROL CIRCUIT OPEN . 514
COOLING FAN CONTROL CIRCUIT HIGH . . 517
COOLING FAN CONTROL CIRCUIT LOW . . 519
ENGINE OIL SENSOR LEVEL PERFORMANCE 521
ENGINE OIL SENSOR OVER TEMPERATURE 526
ENGINE OIL SENSOR PERFORMANCE . . . 531
ENGINE OIL SENSOR QUALITY PERFORMANCE 533
ENGINE OIL SENSOR WATER CONTAMINATION 538
SAFETY FUEL SHUT OFF DETECTED 540
SHORT RUNNER SOLENOID CIRCUIT HIGH . 545
SHORT RUNNER SOLENOID CIRCUIT LOW . . 549
SHORT RUNNER SOLENOID CIRCUIT 551
SPEED CONTROL SWITCH INPUT CIRCUIT . . 553
*CHECKING FUEL DELIVERY 556
*CHECKING HARD START (FUEL SYSTEM) . 560
*ENGINE CRANKS BUT DOES NOT START . 563
*INTERMITTENT NO CRANK 567
POWERTRAIN VERIFICATION TEST – VER 1 569
POWERTRAIN VERIFICATION TEST – VER 2 570
POWERTRAIN VERIFICATION TEST – VER 3 571
POWERTRAIN VERIFICATION TEST – VER 4 572
POWERTRAIN VERIFICATION TEST – VER 5 573
SCHEMATICS AND DIAGRAMS 574

ENGINE - ELECTRICAL DIAGNOSTICS

DIAGNOSIS AND TESTING

(P0040) 1/1 AND 2/1 O2 SENSOR HARNESS CONNECTORS REVERSED

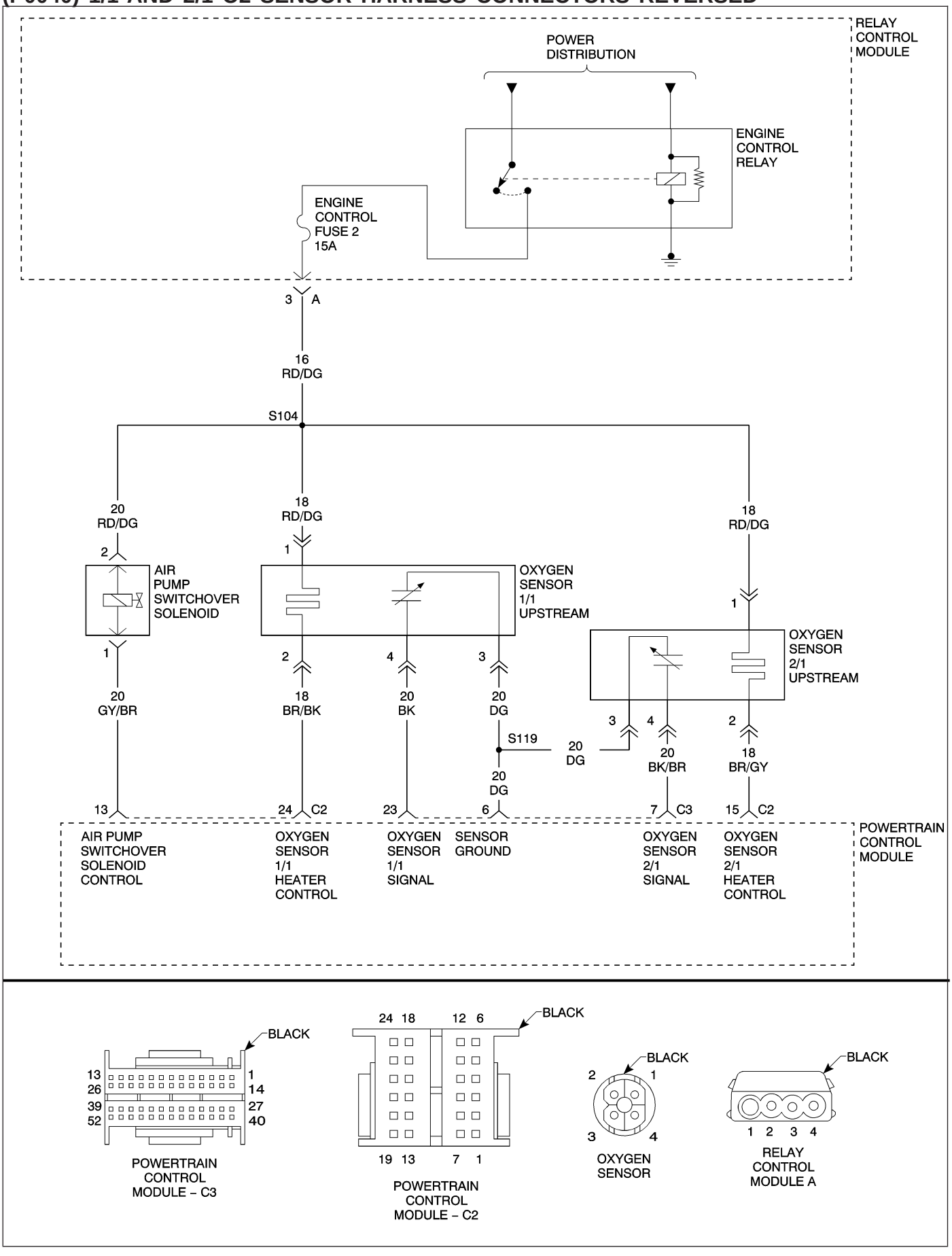

(P0040) 1/1 AND 2/1 O2 SENSOR HARNESS CONNECTORS REVERSED — CONTINUED

When Monitored and Set Condition

- When Monitored: With the ignition on.
- Set Condition: At key on, the Powertrain Control Module (PCM) checks the voltage on the ground side of the O2 Sensor harness connector. If the voltage is higher than two volts, this code will set.

POSSIBLE CAUSES
1/1 O2 SENSOR HARNESS IS CONNECTED TO THE 2/1 O2 SENSOR
POWERTRAIN CONTROL MODULE

For a complete Powertrain Control Module (PCM) Circuit Diagram **Refer to Page 9-574**.

Diagnostic Test

1. POWERTRAIN CONTROL MODULE

Turn the ignition off.

Verify that the upstream O2 Sensors harness connectors are connected to the correct O2 Sensor and repair as necessary.

Turn the ignition on.

With the DRB III®, erase all PCM DTCs.

Turn the ignition off, then back on.

Start and let the engine idle.

If the DTC does not set right away it may be necessary to test drive the vehicle.

With the DRB III®, read PCM DTCs.

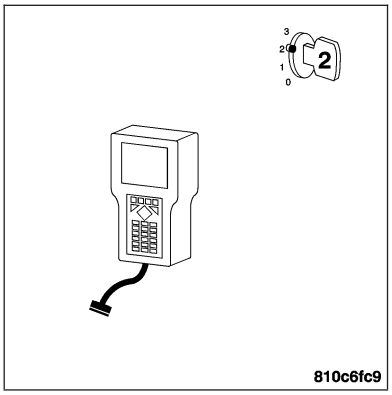

Did DTC (P0040) 1/1 AND 2/1 O2 SENSOR HARNESS CONNECTORS REVERSED set again?

Yes >>

Note: Before continuing, verify the front O2 Sensor harness connectors are connected to the correct O2 Sensor with no damage or terminal push out. Repair as necessary.

If OK, replace and program the Powertrain Control Module. **Refer to Page 8E-56**.

Perform POWERTRAIN VERIFICATION TEST - VER 2.

No >> Go To 2

(P0040) 1/1 AND 2/1 O2 SENSOR HARNESS CONNECTORS REVERSED — CONTINUED

2. INTERMITTENT WIRING AND CONNECTORS

The conditions necessary to set this DTC are not present at this time.

Note: Check connectors — Clean/repair as necessary. Poor pin to terminal connections can set DTCs.Using the wiring diagram/schematic as a guide, inspect the wiring and connectors specific to this DTC. Wiggle the wires while checking for shorts and/or open circuits.

Note: Check for any Technical Service Bulletins that may apply.

Were any problems found?

Yes >> Repair as necessary.
Perform POWERTRAIN VERIFICATION TEST - VER 2.

No >> The condition that caused this DTC to set is currently not present. Inspect the related wiring harness for a possible intermittent condition.

(P0101) MAF SENSOR PERFORMANCE

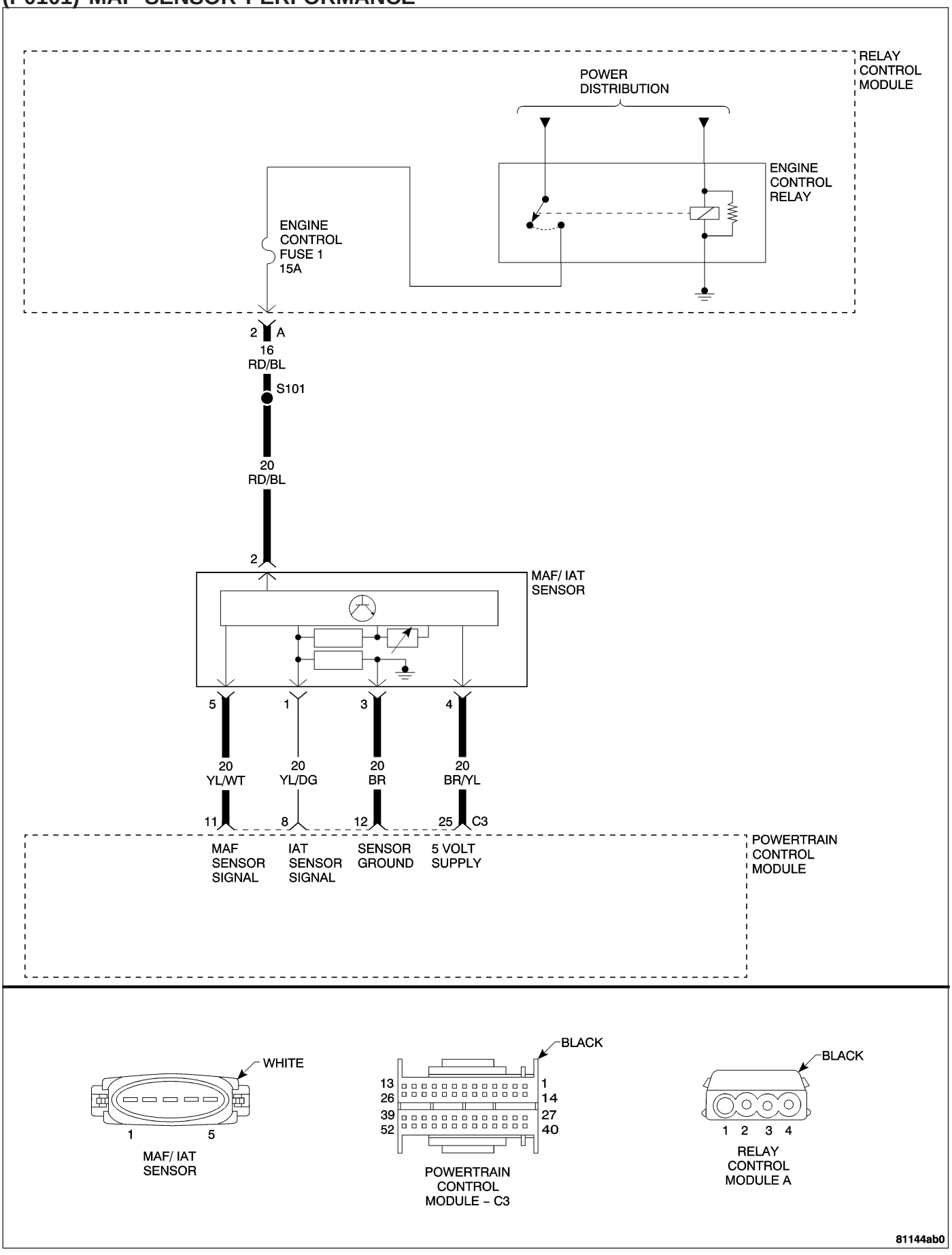

(P0101) MAF SENSOR PERFORMANCE — CONTINUED

When Monitored and Set Condition

- When Monitored: With the engine running and no fault in the throttle valve actuator.
- Set Condition: The Mass Air Flow (MAF) Sensor value is less than 16 kg/h when the throttle valve angle is greater than 14° for approximately 5 seconds, or the MAF Sensor reading is greater than a calculated value that is determined by engine speed and throttle valve angle for approximately 5 seconds.

POSSIBLE CAUSES
FUSED ENGINE CONTROL RELAY OUTPUT CIRCUIT OPEN
FUSED ENGINE CONTROL RELAY OUTPUT CIRCUIT SHORTED TO GROUND
SENSOR GROUND CIRCUIT OPEN
MASS AIR FLOW SENSOR SIGNAL CIRCUIT OPEN
MASS AIR FLOW SENSOR SIGNAL CIRCUIT SHORTED TO GROUND
5-VOLT SUPPLY CIRCUIT OPEN
5-VOLT SUPPLY CIRCUIT SHORTED TO GROUND
MASS AIR FLOW SENSOR
POWERTRAIN CONTROL MODULE

Diagnostic Test

1. CHECK FOR CURRENT DTC

Turn the ignition on.

With the DRB III®, read the PCM DTCs.

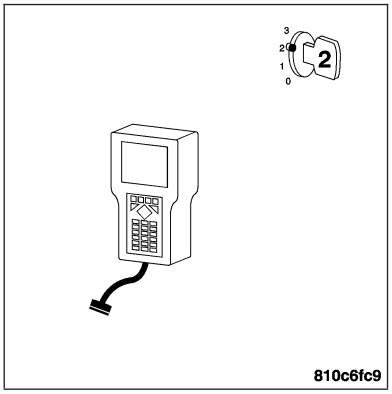

Is this DTC present?

Yes >> For complete diagnosis of this DTC, refer to (P0102) MASS AIR FLOW CIRCUIT.

No >> Go To 2

2. INTERMITTENT WIRING AND CONNECTORS

The conditions necessary to set this DTC are not present at this time.

Note: Check connectors — Clean/repair as necessary. Poor pin to terminal connections can set DTCs.Using the wiring diagram/schematic as a guide, inspect the wiring and connectors specific to this DTC. Wiggle the wires while checking for shorts and open circuits.

Note: Check for any Technical Service Bulletins that may apply.

Were there any problems found?

Yes >> Repair as necessary.
Perform POWERTRAIN VERIFICATION TEST - VER 2.

No >> The condition that caused this DTC to set is currently not present. Inspect the related wiring harness for a possible intermittent condition.

(P0102) MASS AIR FLOW CIRCUIT

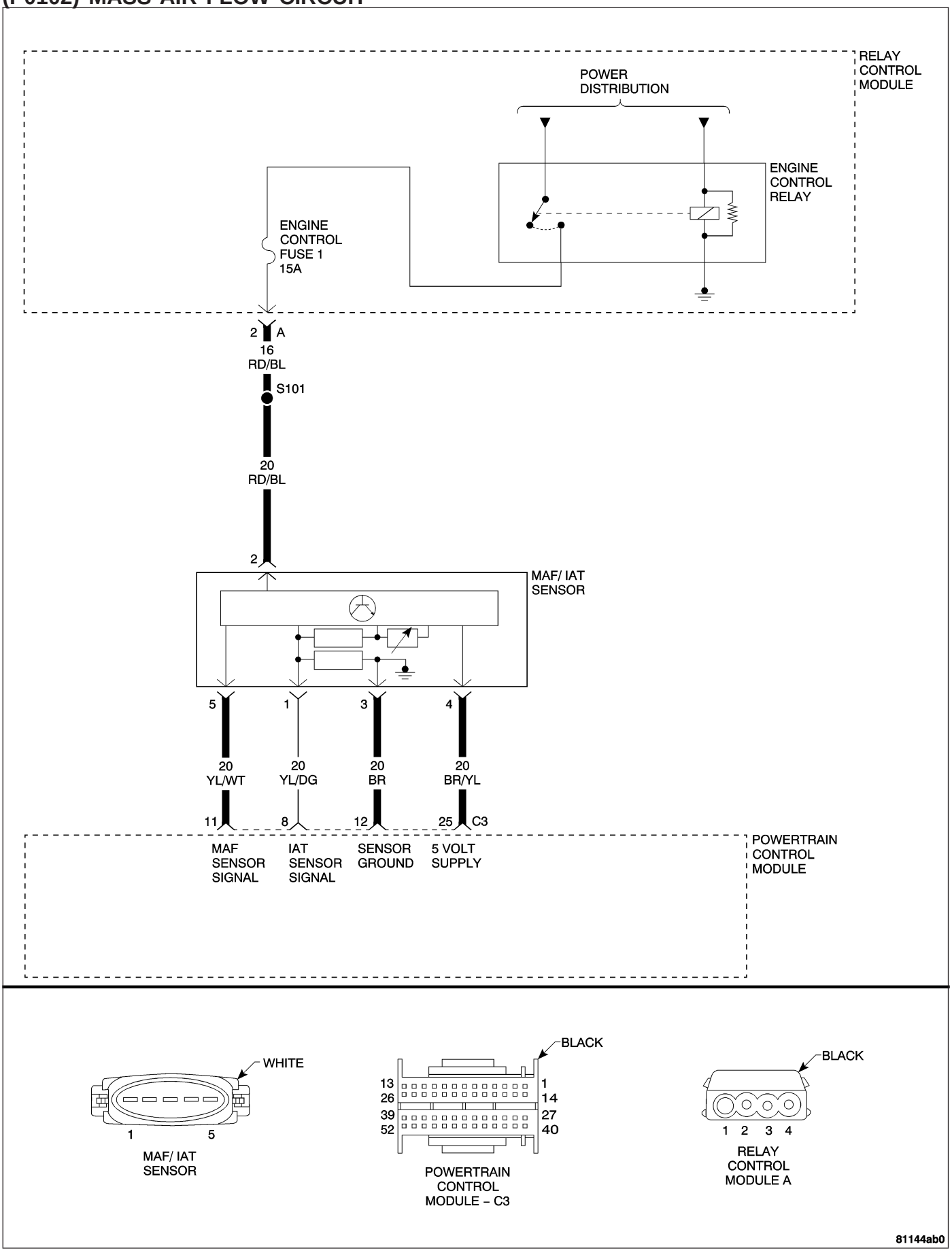

(P0102) MASS AIR FLOW CIRCUIT — CONTINUED

When Monitored and Set Condition

- When Monitored: With the engine running and no fault in the throttle valve actuator.
- Set Condition: The Mass Air Flow (MAF) Sensor value is less than 16 kg/h when the throttle valve angle is greater than 14° for approximately 5 seconds, or the MAF Sensor reading is greater than a calculated value that is determined by engine speed and throttle valve angle for approximately 5 seconds.

POSSIBLE CAUSES
FUSED ENGINE CONTROL RELAY OUTPUT CIRCUIT OPEN
FUSED ENGINE CONTROL RELAY OUTPUT CIRCUIT SHORTED TO GROUND
SENSOR GROUND CIRCUIT OPEN
MASS AIR FLOW SENSOR SIGNAL CIRCUIT OPEN
MASS AIR FLOW SENSOR SIGNAL CIRCUIT SHORTED TO GROUND
5-VOLT SUPPLY CIRCUIT OPEN
5-VOLT SUPPLY CIRCUIT SHORTED TO GROUND
MASS AIR FLOW SENSOR
POWERTRAIN CONTROL MODULE

For a complete Powertrain Control Module (PCM) Circuit Diagram **Refer to Page 9-574**.

Diagnostic Test

1. CHECK FOR CURRENT DTC

Note: If the PCM detects and stores a DTC, the PCM also stores the engine/vehicle operating conditions under which the DTC was set. Some of these conditions are displayed on the DRB III® at the same time the DTC is displayed.

Note: Before erasing stored DTCs, record these conditions. Attempting to duplicate these conditions may assist when checking for an active DTC.

Turn the ignition on.

With the DRB III®, erase PCM DTCs.

Note: It maybe necessary to road test the vehicle for this DTC to set.

With the DRB III®, read the PCM DTCs.

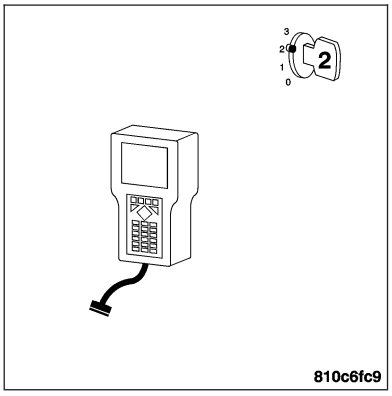

Did this DTC set again?

Yes >> Go To 2

No >> Go To 14

(P0102) MASS AIR FLOW CIRCUIT — CONTINUED

2. JUMPER THE MAF SENSOR SIGNAL AND 5-VOLT SUPPLY CIRCUITS

Turn the ignition off.

Disconnect the MAF/IAT Sensor harness connector.

Note: Check connectors — Clean/repair as necessary.
Connect a jumper wire between the MAF Sensor Signal circuit and the 5-Volt Supply circuit.

Turn the ignition on.

With the DRB III®, read the MAF Sensor voltage.

Is the voltage between 4.7 and 5.2 volts?

Yes >> Go To 10

No >> Go To 3

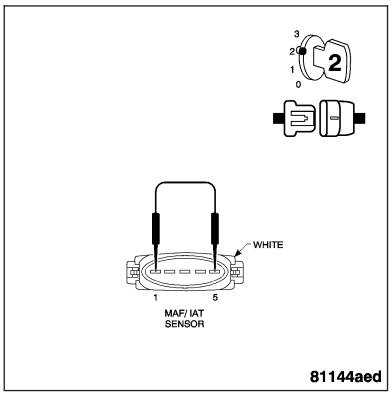

3. CHECKING THE 5-VOLT SUPPLY

With the ignition on.

Remove the jumper wire between the MAF Sensor Signal circuit and the 5-Volt Supply circuit.

Measure the voltage between ground and the 5-Volt Supply circuit.

Is the voltage between 4.7 and 5.2 volts?

Yes >> Go To 7

No >> If the voltage is above 5.2 Go To 6
If the voltage is below 4.7 Go To 4

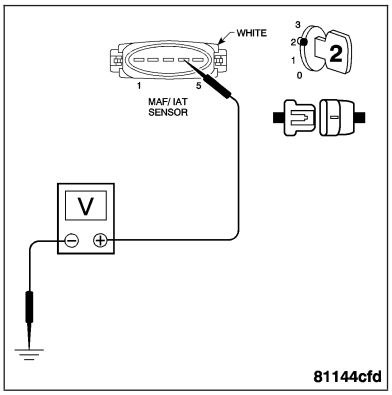

4. 5-VOLT SUPPLY CIRCUIT OPEN

Turn the ignition off.

Disconnect the PCM harness connector.

Note: Check connectors — Clean/repair as necessary.
Measure the resistance of the 5-Volt Supply circuit.

Is the resistance below 5.0 ohms?

Yes >> Go To 5

No >> Repair the 5-Volt Supply circuit for an open.
Perform POWERTRAIN VERIFICATION TEST - VER 2.

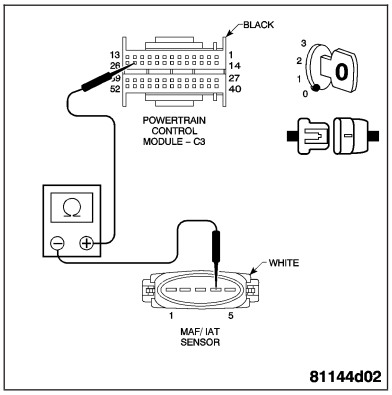

(P0102) MASS AIR FLOW CIRCUIT — CONTINUED

5. 5-VOLT SUPPLY CIRCUIT SHORTED TO GROUND

With the ignition off.
Measure the resistance between ground and the 5-Volt Supply circuit.

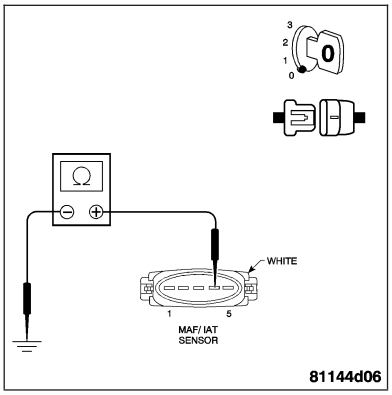

Is the resistance below 100 ohms?

Yes >> Repair the 5-Volt Supply circuit for a short to ground.
Perform POWERTRAIN VERIFICATION TEST - VER 2.

No >> Replace and program the Powertrain Control Module. **Refer to Page 8E-56**.
Perform POWERTRAIN VERIFICATION TEST - VER 2.

6. 5-VOLT SUPPLY CIRCUIT SHORTED TO VOLTAGE

With the ignition on.
Measure the voltage of the 5-Volt Supply circuit at the MAF Sensor harness connector.

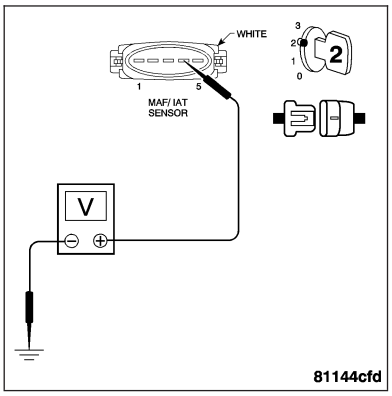

Is the voltage above 1.0 volt?

Yes >> Repair the 5-Volt Supply circuit for a short to voltage.
Perform POWERTRAIN VERIFICATION TEST - VER 2.

No >> Replace and program the Powertrain Control Module. **Refer to Page 8E-56**.
Perform POWERTRAIN VERIFICATION TEST - VER 2.

7. MAF SENSOR SIGNAL CIRCUIT OPEN

Turn the ignition off.
Disconnect the PCM harness connector.

Note: Check connectors - Clean/repair as necessary.
Measure the resistance of the MAF Sensor Signal circuit.

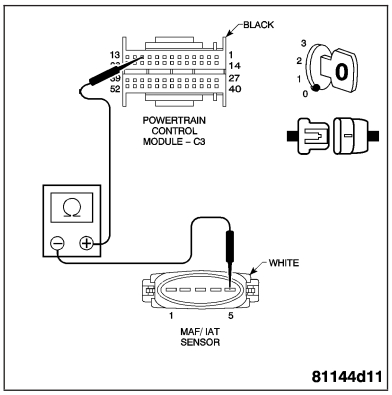

Is the resistance below 5.0 ohms?

Yes >> Go To 8

No >> Repair the MAF Sensor Signal circuit for an open.
Perform POWERTRAIN VERIFICATION TEST - VER 2.

(P0102) MASS AIR FLOW CIRCUIT — CONTINUED

8. MAF SENSOR SIGNAL CIRCUIT SHORTED TO GROUND

With the ignition off.

Measure the resistance between ground and the MAF Sensor Signal circuit.

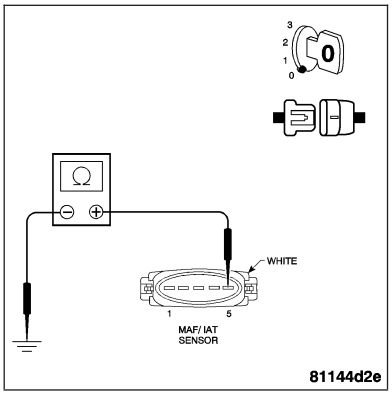

Is the resistance below 100 ohms?

Yes >> Repair the MAF Sensor Signal circuit for a short to ground. Perform POWERTRAIN VERIFICATION TEST - VER 2.

No >> Go To 9

9. MAF SENSOR SIGNAL CIRCUIT SHORTED TO VOLTAGE

Turn the ignition on.

Measure the voltage of the MAF Sensor Signal circuit at the MAF Sensor harness connector.

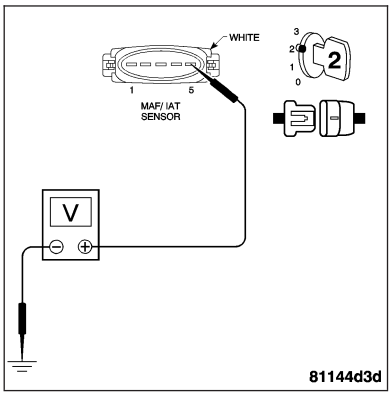

Is the voltage above 1.0 volt?

Yes >> Repair the MAF Sensor Signal circuit for a short to voltage. Perform POWERTRAIN VERIFICATION TEST - VER 2.

No >> Go To 13

10. CHECKING THE FUSED ENGINE CONTROL RELAY OUTPUT CIRCUIT

With the ignition on.

Connect a 12-volt test light between ground and the Fused Engine Control Relay Output circuit.

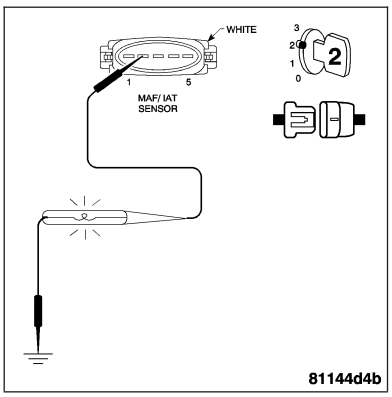

Note: The test light must illuminate brightly. Compare the brightness to when connected directly to B(+).

Does the test light illuminate brightly?

Yes >> Go To 11

No >> Repair the Fused Engine Control Relay Output circuit for an open.
Perform POWERTRAIN VERIFICATION TEST - VER 2.

(P0102) MASS AIR FLOW CIRCUIT — CONTINUED

11. CHECK THE SENSOR GROUND CIRCUIT

With the ignition off.
Measure the resistance between ground and the Sensor Ground circuit.

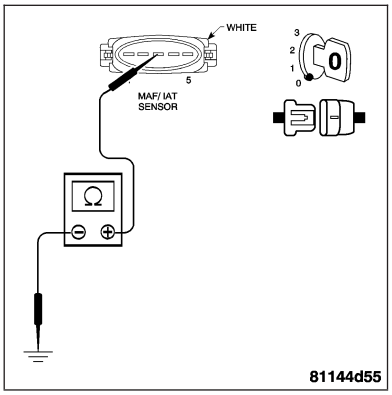

Is the resistance below 5.0 ohms?

Yes >> Go To 13

No >> Go To 12

12. SENSOR GROUND CIRCUIT OPEN

With the ignition off.
Disconnect the PCM harness connector.

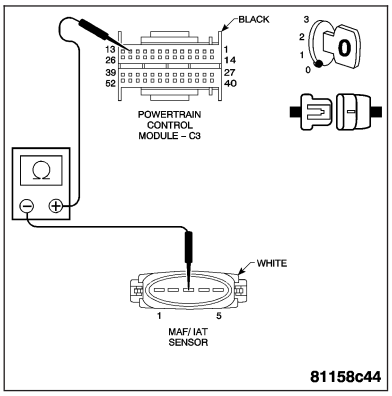

Note: Check connectors - Clean/repair as necessary.
Measure the resistance of the Sensor Ground circuit.

Is the resistance below 5.0 ohms?

Yes >> Replace and program the Powertrain Control Module. **Refer to Page 8E-56**.
Perform POWERTRAIN VERIFICATION TEST - VER 2.

No >> Repair the Sensor Ground circuit for an open.
Perform POWERTRAIN VERIFICATION TEST - VER 2.

13. CHECKING FOR AIR RESTRICTIONS OR LEAKS

Note: Check for any of the following conditions:
- **Restricted air intake ducts.**
- **Misaligned air intake ducts.**
- **Dirty air cleaner element.**
- **Deteriorating air cleaner element.**
- **Any objects blocking the air inlet screen of the MAF Sensor.**
- **Any debris on the sensing elements.**
- **A restricted exhaust system.**

Were any problems found?

Yes >> Repair as necessary.
Perform POWERTRAIN VERIFICATION TEST - VER 2.

No >> Replace the MAF Sensor. **Refer to Page 14-37**.
Perform POWERTRAIN VERIFICATION TEST - VER 2.

(P0102) MASS AIR FLOW CIRCUIT — CONTINUED

14. INTERMITTENT WIRING AND CONNECTORS

The conditions necessary to set this DTC are not present at this time. Using the wiring diagrams as a guide, inspect the wiring and connectors specific to this circuit. Wiggle the wires while checking for shorts and/or open circuits.

Note: Check for any Technical Service Bulletins that may apply.

Note: Check for any of the following conditions:
- **Restricted air intake ducts.**
- **Misaligned air intake ducts.**
- **Dirty air cleaner element.**
- **Deteriorating air cleaner element.**
- **Any objects blocking the air inlet screen of the MAF Sensor.**
- **Any debris on the sensing elements.**
- **A restricted exhaust system.**

Were any problems found?

Yes >> Repair as necessary.
Perform POWERTRAIN VERIFICATION TEST - VER 2.

No >> Test Complete.

(P0103) MAF SENSOR CIRCUIT LOW

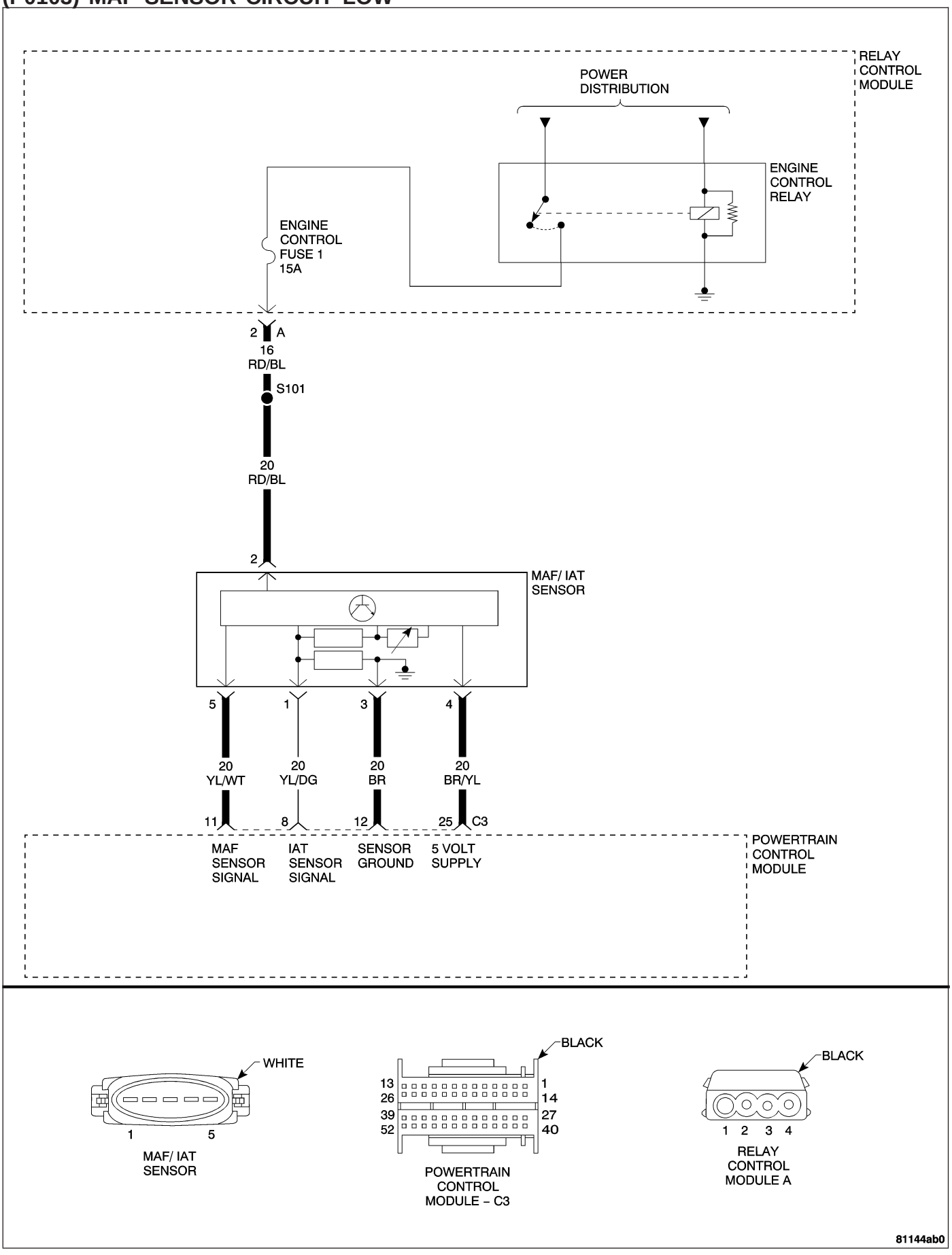

(P0103) MAF SENSOR CIRCUIT LOW — CONTINUED

When Monitored and Set Condition

- When Monitored: With the engine running and no fault in the throttle valve actuator.
- Set Condition: The Mass Air Flow (MAF) Sensor value is less than 16 kg/h when the throttle valve angle is greater than 14° for approximately 5 seconds, or the MAF Sensor reading is greater than a calculated value that is determined by engine speed and throttle valve angle for approximately 5 seconds.

POSSIBLE CAUSES
FUSED ENGINE CONTROL RELAY OUTPUT CIRCUIT OPEN
FUSED ENGINE CONTROL RELAY OUTPUT CIRCUIT SHORTED TO GROUND
MASS AIR FLOW SENSOR SIGNAL CIRCUIT OPEN
MASS AIR FLOW SENSOR SIGNAL CIRCUIT SHORTED TO GROUND
5-VOLT SUPPLY CIRCUIT OPEN
5-VOLT SUPPLY CIRCUIT SHORTED TO GROUND
MASS AIR FLOW SENSOR
POWERTRAIN CONTROL MODULE

Diagnostic Test

1. CHECK FOR CURRENT DTC

Turn the ignition on.
With the DRB III®, read the PCM DTCs.

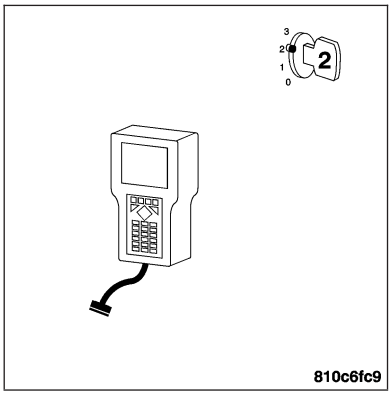

Is this DTC present?

Yes >> For complete diagnosis of this DTC, refer to (P0102) MASS AIR FLOW CIRCUIT.

No >> Go To 2

2. INTERMITTENT WIRING AND CONNECTORS

The conditions necessary to set this DTC are not present at this time.

Note: Check connectors — Clean/repair as necessary. Poor pin to terminal connections can set DTCs.Using the wiring diagram/schematic as a guide, inspect the wiring and connectors specific to this DTC. Wiggle the wires while checking for shorts and open circuits.

Note: Check for any Technical Service Bulletins that may apply.

Were there any problems found?

Yes >> Repair as necessary.
Perform POWERTRAIN VERIFICATION TEST - VER 2.

No >> The condition that caused this DTC to set is currently not present. Inspect the related wiring harness for a possible intermittent condition.

(P0104) MAF SENSOR THROTTLE ANGLE AND SPEED

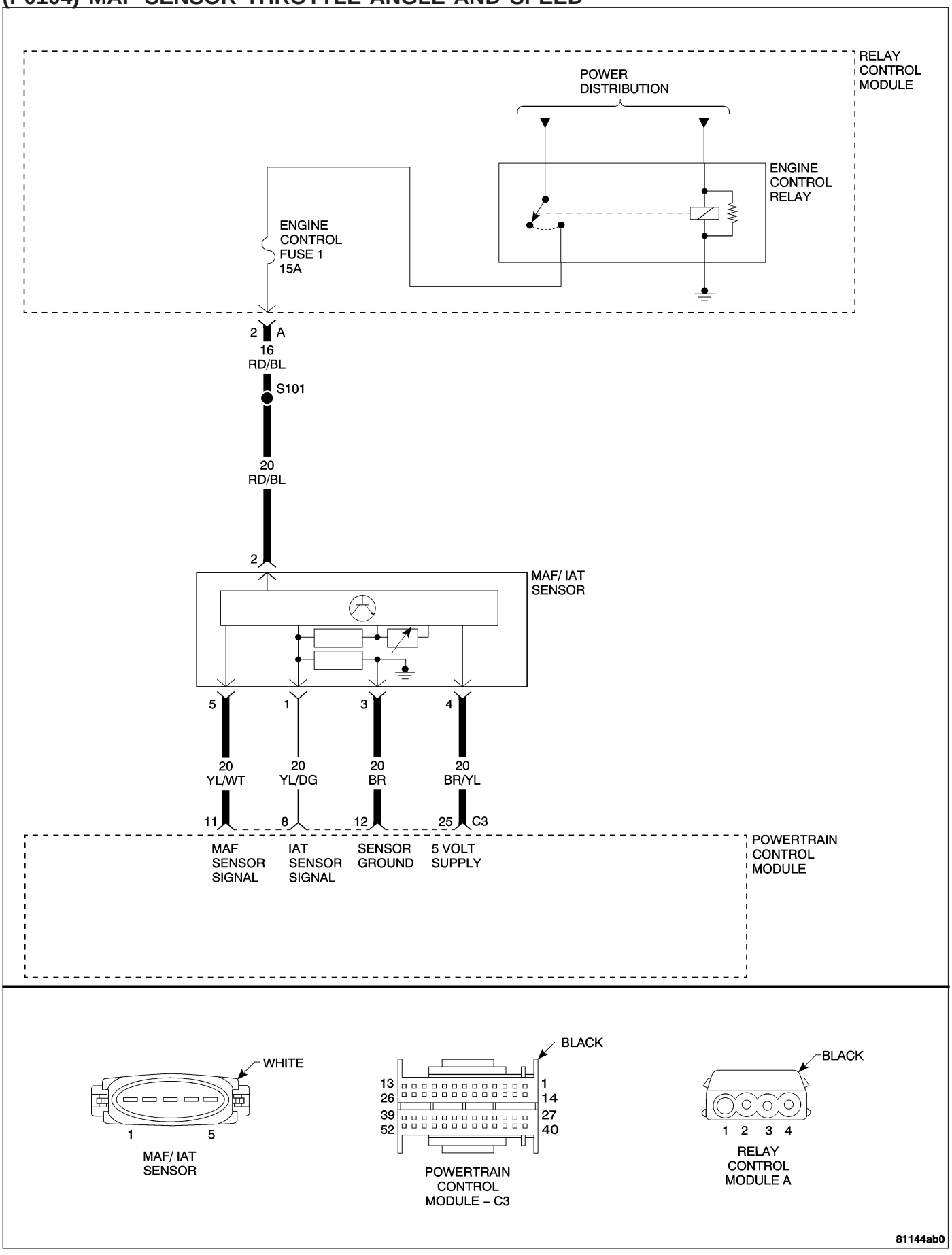

(P0104) MAF SENSOR THROTTLE ANGLE AND SPEED — CONTINUED

When Monitored and Set Condition

- When Monitored: With the engine running and no fault in the throttle valve actuator.
- Set Condition: The Mass Air Flow (MAF) Sensor value is less than 16 kg/h when the throttle valve angle is greater than 14° for approximately 5 seconds, or the MAF Sensor reading is greater than a calculated value that is determined by engine speed and throttle valve angle for approximately 5 seconds.

POSSIBLE CAUSES
FUSED ENGINE CONTROL RELAY OUTPUT CIRCUIT OPEN
FUSED ENGINE CONTROL RELAY OUTPUT CIRCUIT SHORTED TO GROUND
SENSOR GROUND CIRCUIT OPEN
MASS AIR FLOW SENSOR SIGNAL CIRCUIT OPEN
MASS AIR FLOW SENSOR SIGNAL CIRCUIT SHORTED TO GROUND
5-VOLT SUPPLY CIRCUIT OPEN
5-VOLT SUPPLY CIRCUIT SHORTED TO GROUND
MASS AIR FLOW SENSOR
POWERTRAIN CONTROL MODULE

Diagnostic Test

1. CHECK FOR CURRENT DTC

Turn the ignition on.

With the DRB III®, read the PCM DTCs.

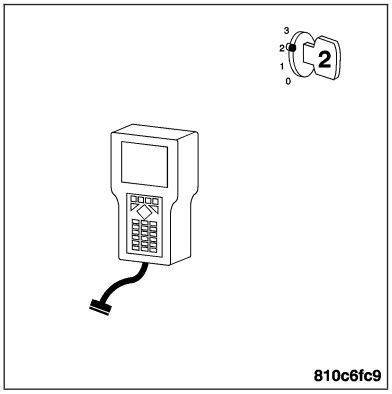

Is this DTC present?

Yes >> For complete diagnosis of this DTC, refer to (P0102) MASS AIR FLOW CIRCUIT.

No >> Go To 2

2. INTERMITTENT WIRING AND CONNECTORS

The conditions necessary to set this DTC are not present at this time.

Note: Check connectors — Clean/repair as necessary. Poor pin to terminal connections can set DTCs.Using the wiring diagram/schematic as a guide, inspect the wiring and connectors specific to this DTC. Wiggle the wires while checking for shorts and open circuits.

Note: Check for any Technical Service Bulletins that may apply.

Were there any problems found?

Yes >> Repair as necessary.
Perform POWERTRAIN VERIFICATION TEST - VER 2.

No >> The condition that caused this DTC to set is currently not present. Inspect the related wiring harness for a possible intermittent condition.

(P0106) MAP SENSOR PERFORMANCE

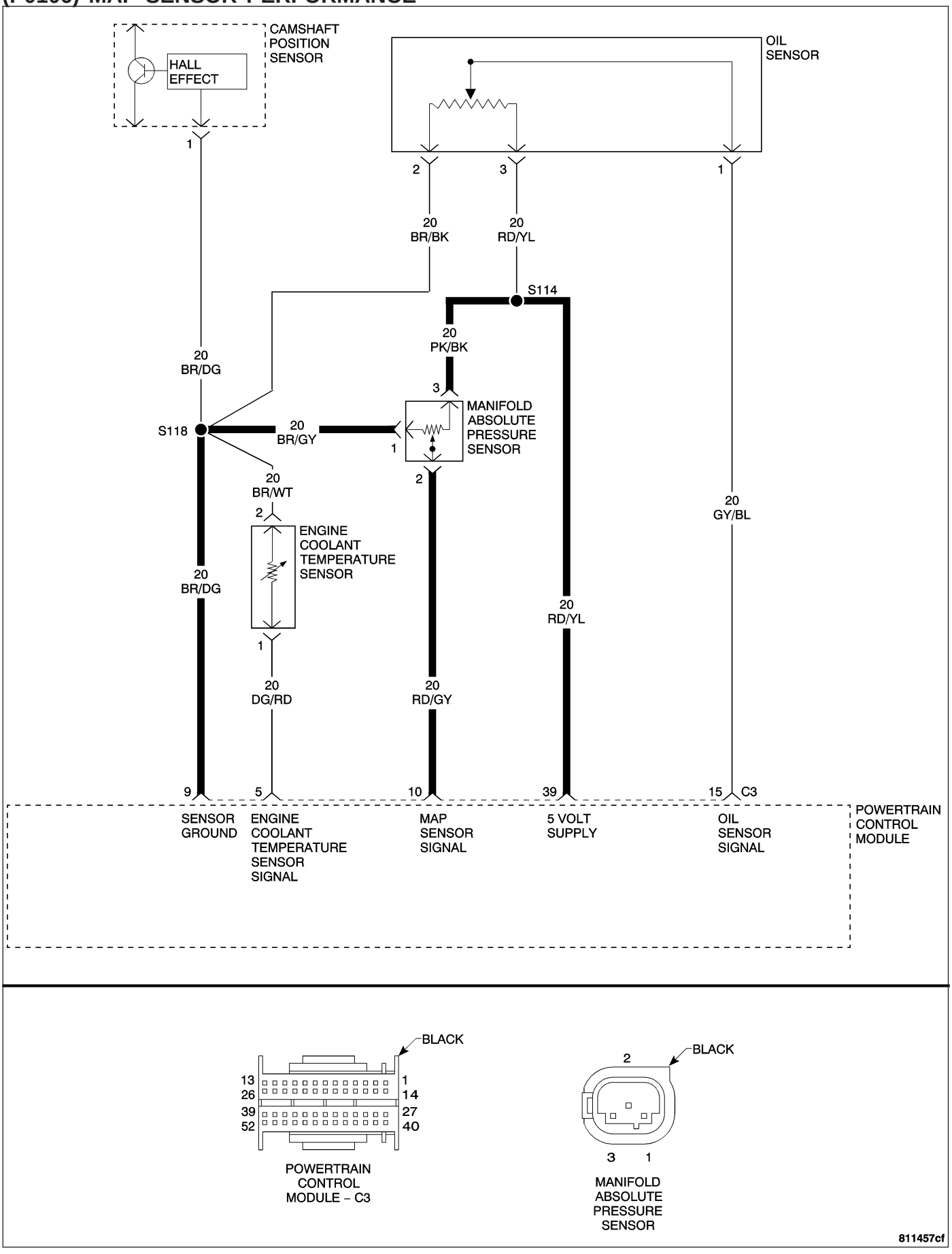

(P0106) MAP SENSOR PERFORMANCE — CONTINUED

When Monitored and Set Condition

- When Monitored: Engine running for at least 30 seconds and no fault in the throttle valve actuator.
- Set Condition: Low limit: The Manifold Absolute Pressure (MAP) Sensor reading is 0 mbar (0 in HG) when the throttle valve angle is greater than 80° for approximately 5 seconds. High limit: The MAP Sensor reading is greater than a calculated value that is determined by engine speed and throttle valve angle for approximately 5 seconds.

POSSIBLE CAUSES
MANIFOLD ABSOLUTE PRESSURE SENSOR SIGNAL CIRCUIT OPEN
MANIFOLD ABSOLUTE PRESSURE SENSOR SIGNAL CIRCUIT SHORTED TO GROUND
MANIFOLD ABSOLUTE PRESSURE SENSOR SIGNAL CIRCUIT SHORTED TO VOLTAGE
5 VOLT SUPPLY CIRCUIT OPEN
5 VOLT SUPPLY CIRCUIT SHORTED TO GROUND
5 VOLT SUPPLY CIRCUIT SHORTED TO VOLTAGE
SENSOR GROUND CIRCUIT OPEN
MANIFOLD ABSOLUTE PRESSURE SENSOR
POWERTRAIN CONTROL MODULE

Diagnostic Test

1. CHECK FOR CURRENT DTC

Turn the ignition on.
With the DRB III®, read the PCM DTCs.

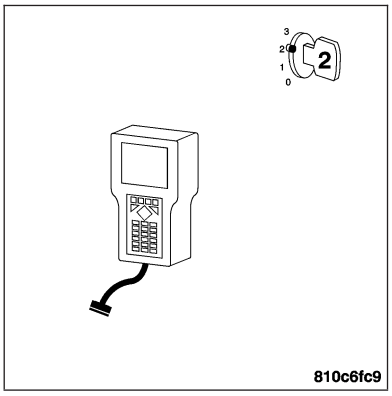

Is this DTC present?

Yes >> For complete diagnosis of this DTC, refer to (P0107) MAP SENSOR CIRCUIT LOW.

No >> Go To 2

(P0106) MAP SENSOR PERFORMANCE — CONTINUED

2. INTERMITTENT WIRING AND CONNECTORS

The conditions necessary to set this DTC are not present at this time.

Note: Check connectors — Clean/repair as necessary. Poor pin to terminal connections can set DTCs.Using the wiring diagram/schematic as a guide, inspect the wiring and connectors specific to this DTC. Wiggle the wires while checking for shorts and open circuits.

Note: Check for any Technical Service Bulletins that may apply.

Were there any problems found?

Yes >> Repair as necessary.
Perform POWERTRAIN VERIFICATION TEST - VER 2.

No >> The condition that caused this DTC to set is currently not present. Inspect the related wiring harness for a possible intermittent condition.

(P0107) MAP SENSOR CIRCUIT LOW

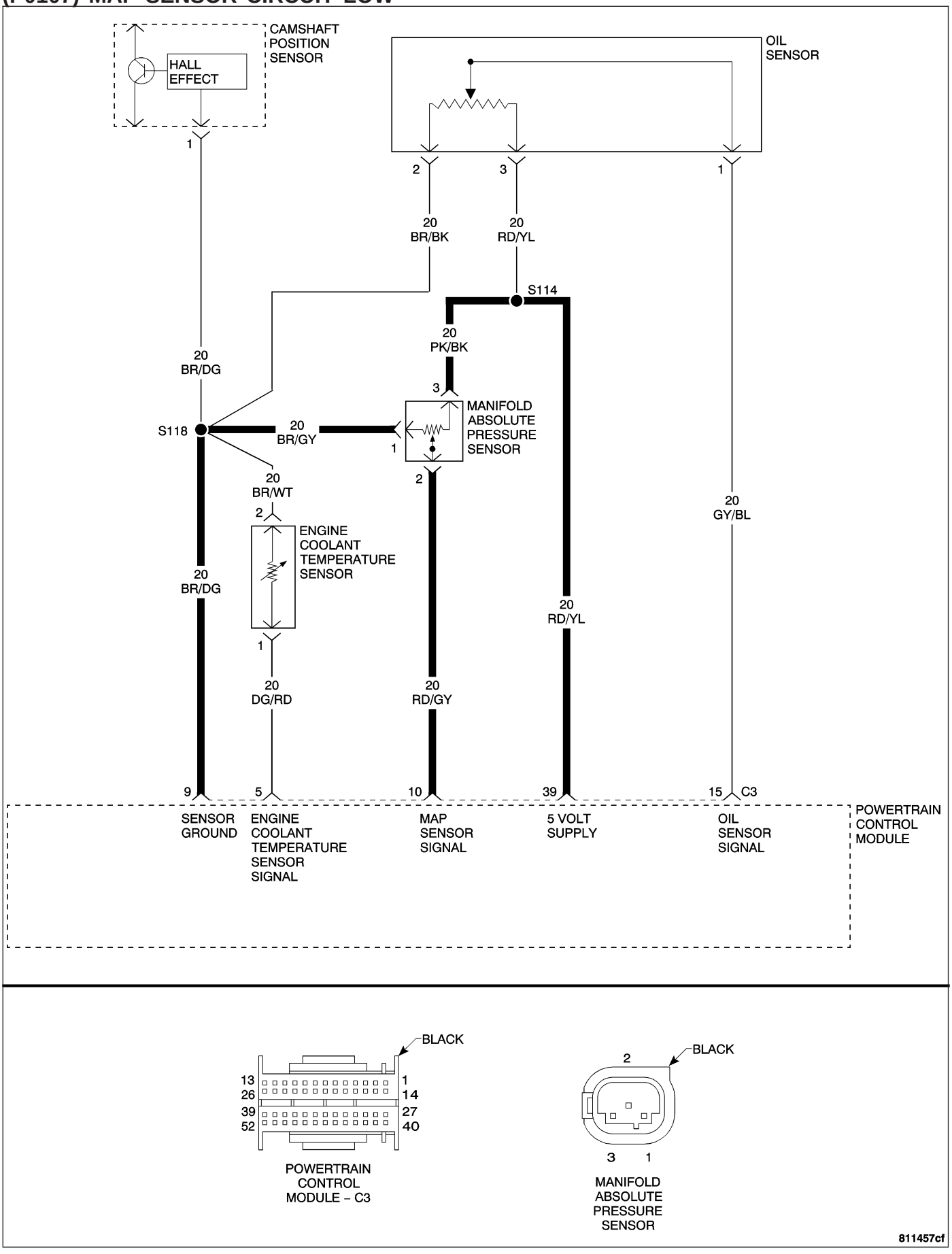

(P0107) MAP SENSOR CIRCUIT LOW — CONTINUED

When Monitored and Set Condition

- When Monitored: Engine running for at least 30 seconds and no fault in the throttle valve actuator.
- Set Condition: Low limit: The Manifold Absolute Pressure (MAP) Sensor reading is 0 mbar (0 in. Hg) when the throttle valve angle is greater than 80° for approximately 5 seconds. High limit: The MAP Sensor reading is greater than a calculated value that is determined by engine speed and throttle valve angle for approximately 5 seconds.

POSSIBLE CAUSES
MANIFOLD ABSOLUTE PRESSURE SENSOR SIGNAL CIRCUIT OPEN
MANIFOLD ABSOLUTE PRESSURE SENSOR SIGNAL CIRCUIT SHORTED TO GROUND
MANIFOLD ABSOLUTE PRESSURE SENSOR SIGNAL CIRCUIT SHORTED TO VOLTAGE
5 VOLT SUPPLY CIRCUIT OPEN
5 VOLT SUPPLY CIRCUIT SHORTED TO GROUND
5 VOLT SUPPLY CIRCUIT SHORTED TO VOLTAGE
SENSOR GROUND CIRCUIT OPEN
MANIFOLD ABSOLUTE PRESSURE SENSOR
POWERTRAIN CONTROL MODULE

For a complete Powertrain Control Module Circuit Diagram **Refer to Page 9-574**.

Diagnostic Test

1. CHECK FOR CURRENT DTC

Note: If the PCM detects and stores a DTC, the PCM also stores the engine/vehicle operating conditions under which the DTC was set. Some of these conditions are displayed on the DRB III® at the same time the DTC is displayed.

Note: Before erasing stored DTCs, record these conditions. Attempting to duplicate these conditions may assist when checking for an active DTC.

Turn the ignition on.

With the DRB III®, erase PCM DTCs.

Note: It maybe necessary to road test the vehicle for this DTC to set.

With the DRB III®, read the PCM DTCs.

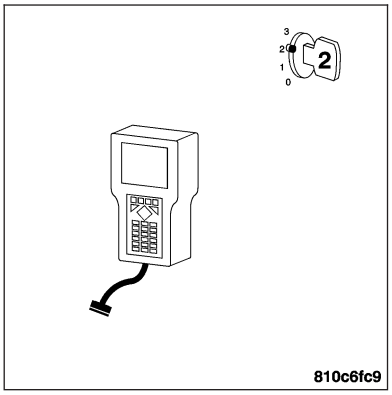

Did this DTC set again?

Yes >> Go To 2

No >> Go To 8

(P0107) MAP SENSOR CIRCUIT LOW — CONTINUED

2. JUMPER THE MAP SENSOR SIGNAL AND 5-VOLT SUPPLY CIRCUITS

Turn the ignition off.

Disconnect the MAP Sensor harness connector.

Note: Check connectors — Clean/repair as necessary.

Connect a jumper wire between the MAP Sensor Signal circuit and the 5-Volt Supply circuit.

Turn the ignition on.

With the DRB III®, read the MAP Sensor voltage.

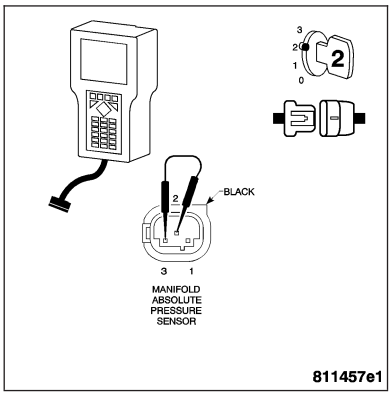

Is the voltage between 4.7 and 5.2 volts?

Yes >> Replace the MAP Sensor. **Refer to Page 14-42**.
Perform POWERTRAIN VERIFICATION TEST - VER 2.

No >> Go To 3

3. CHECKING THE 5-VOLT SUPPLY

With the ignition on.

Remove the jumper wire.

Measure the voltage of the 5-Volt Supply circuit at the MAP Sensor harness connector.

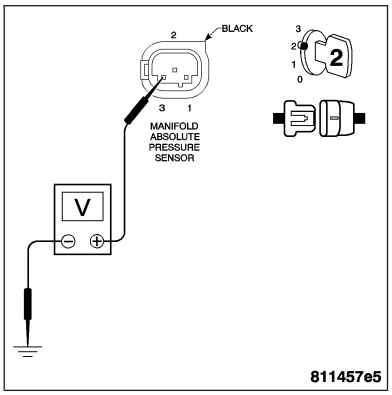

Is the voltage between 4.7 and 5.2 volts?

Yes >> Go To 6

No >> Go To 4

4. 5-VOLT SUPPLY CIRCUIT OPEN

Turn the ignition off.

Disconnect the PCM harness connector.

Note: Check connectors — Clean/repair as necessary.

Measure the resistance of the 5-Volt Supply circuit from the MAP Sensor harness connector to the PCM harness connector.

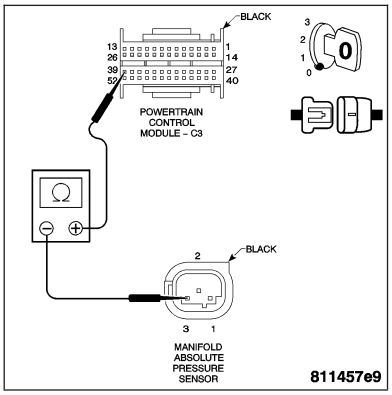

Is the resistance below 5.0 ohms?

Yes >> Go To 5

No >> Repair the 5-Volt Supply circuit for an open.
Perform POWERTRAIN VERIFICATION TEST - VER 2.

(P0107) MAP SENSOR CIRCUIT LOW — CONTINUED

5. 5-VOLT SUPPLY CIRCUIT SHORTED TO GROUND

With the ignition off.
Measure the resistance between ground and the 5-Volt Supply circuit.

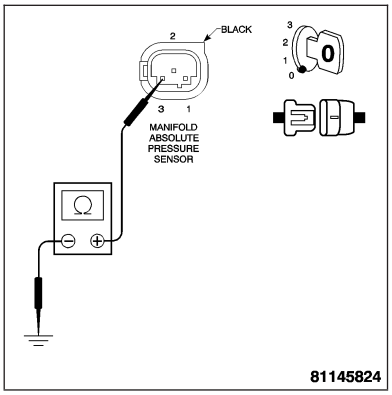

Is the resistance below 100 ohms?

Yes >> Repair the 5-Volt Supply circuit for a short to ground.
Perform POWERTRAIN VERIFICATION TEST - VER 2.

No >> Replace and program the Powertrain Control Module.
Refer to Page 8E-56.
Perform POWERTRAIN VERIFICATION TEST - VER 2.

6. MAP SENSOR SIGNAL CIRCUIT OPEN

Turn the ignition off.
Disconnect the PCM harness connector.

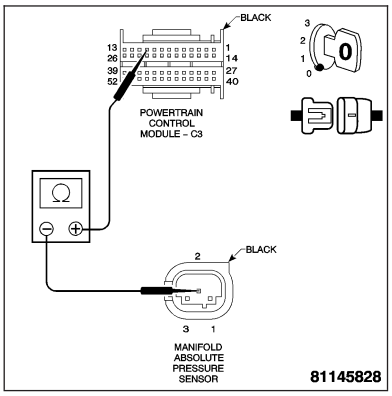

Note: Check connectors — Clean/repair as necessary.
Measure the resistance of the MAP Sensor Signal circuit from the PCM harness connector to the MAP Sensor harness connector.

Is the resistance below 5.0 ohms?

Yes >> Go To 7

No >> Repair the MAP Sensor Signal circuit for an open.
Perform POWERTRAIN VERIFICATION TEST - VER 2.

7. MAP SENSOR SIGNAL CIRCUIT SHORTED TO GROUND

With the ignition off.
Measure the resistance between ground and the MAP Sensor Signal circuit.

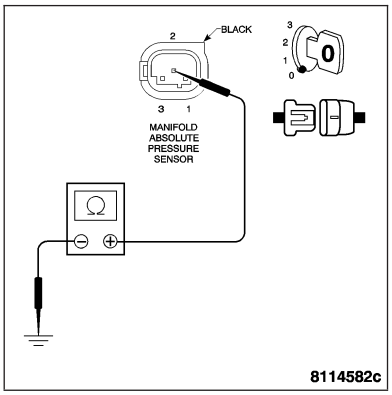

Is the resistance below 100 ohms?

Yes >> Repair the MAP Sensor Signal circuit for a short to ground.
Perform POWERTRAIN VERIFICATION TEST - VER 2.

No >> Replace and program the Powertrain Control Module.
Refer to Page 8E-56.
Perform POWERTRAIN VERIFICATION TEST - VER 2.

(P0107) MAP SENSOR CIRCUIT LOW — CONTINUED

8. INTERMITTENT WIRING AND CONNECTORS

The condition that caused this DTC to set is currently not present. Inspect the related wiring harness for a possible intermittent condition.

Note: Check connectors — Clean/repair as necessary. Poor pin to terminal connections can set DTCs.
Using the wiring diagrams as a guide, inspect the wiring and connectors specific to this DTC. Wiggle the wires while checking for shorts and/or open circuits.

Note: Check for any Technical Service Bulletins that may apply.

Were any problems found?

Yes >> Repair as necessary.
Perform POWERTRAIN VERIFICATION TEST - VER 2.

No >> Test Complete.

(P0108) MAP SENSOR CIRCUIT HIGH

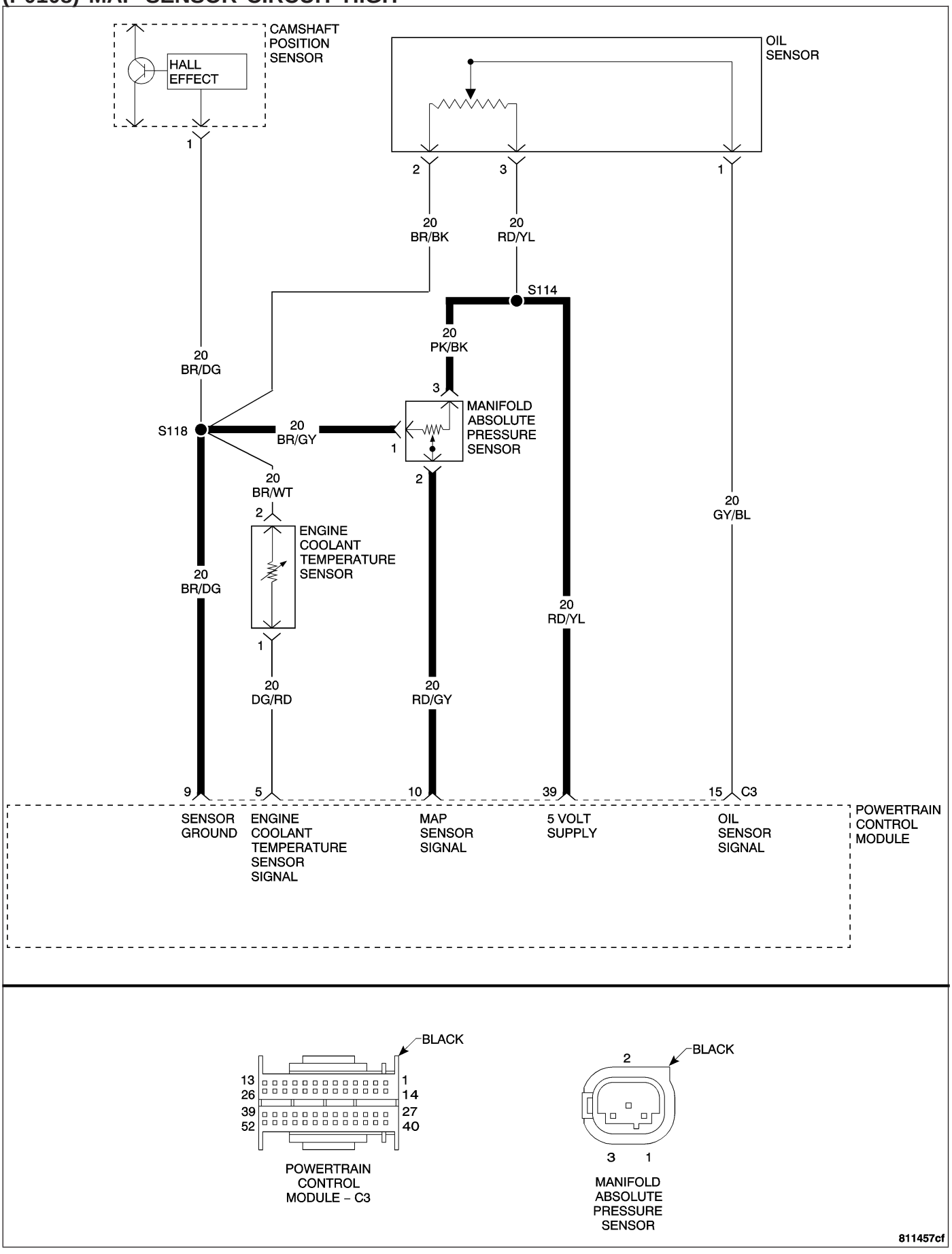

(P0108) MAP SENSOR CIRCUIT HIGH — CONTINUED

When Monitored and Set Condition

- When Monitored: Engine running for at least 30 seconds and no fault in the throttle valve actuator.
- Set Condition: The MAP Sensor reading is greater than a calculated value that is determined by engine speed and throttle valve angle for approximately 5 seconds.

POSSIBLE CAUSES
MANIFOLD ABSOLUTE PRESSURE SENSOR SIGNAL CIRCUIT SHORTED TO VOLTAGE
5 VOLT SUPPLY CIRCUIT SHORTED TO VOLTAGE
MANIFOLD ABSOLUTE PRESSURE SENSOR GROUND CIRCUIT OPEN
MANIFOLD ABSOLUTE PRESSURE SENSOR
POWERTRAIN CONTROL MODULE

Diagnostic Test

1. CHECK FOR CURRENT DTC

Turn the ignition on.
With the DRB III®, read the PCM DTCs.

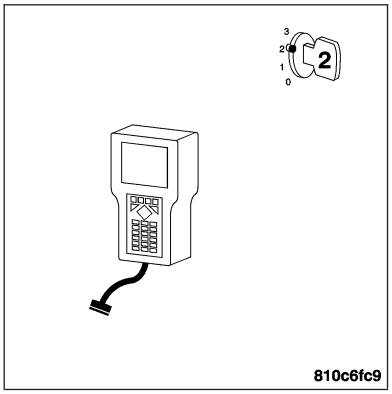

Is this DTC present?

Yes >> For complete diagnosis of this DTC, refer to (P0107) MAP SENSOR CIRCUIT LOW.

No >> Go To 2

2. INTERMITTENT WIRING AND CONNECTORS

The conditions necessary to set this DTC are not present at this time.

Note: Check connectors — Clean/repair as necessary. Poor pin to terminal connections can set DTCs.Using the wiring diagram/schematic as a guide, inspect the wiring and connectors specific to this DTC. Wiggle the wires while checking for shorts and open circuits.

Note: Check for any Technical Service Bulletins that may apply.

Were there any problems found?

Yes >> Repair as necessary.
Perform POWERTRAIN VERIFICATION TEST - VER 2.

No >> The condition that caused this DTC to set is currently not present. Inspect the related wiring harness for a possible intermittent condition.

(P0112) INTAKE AIR TEMPERATURE SENSOR CIRCUIT LOW

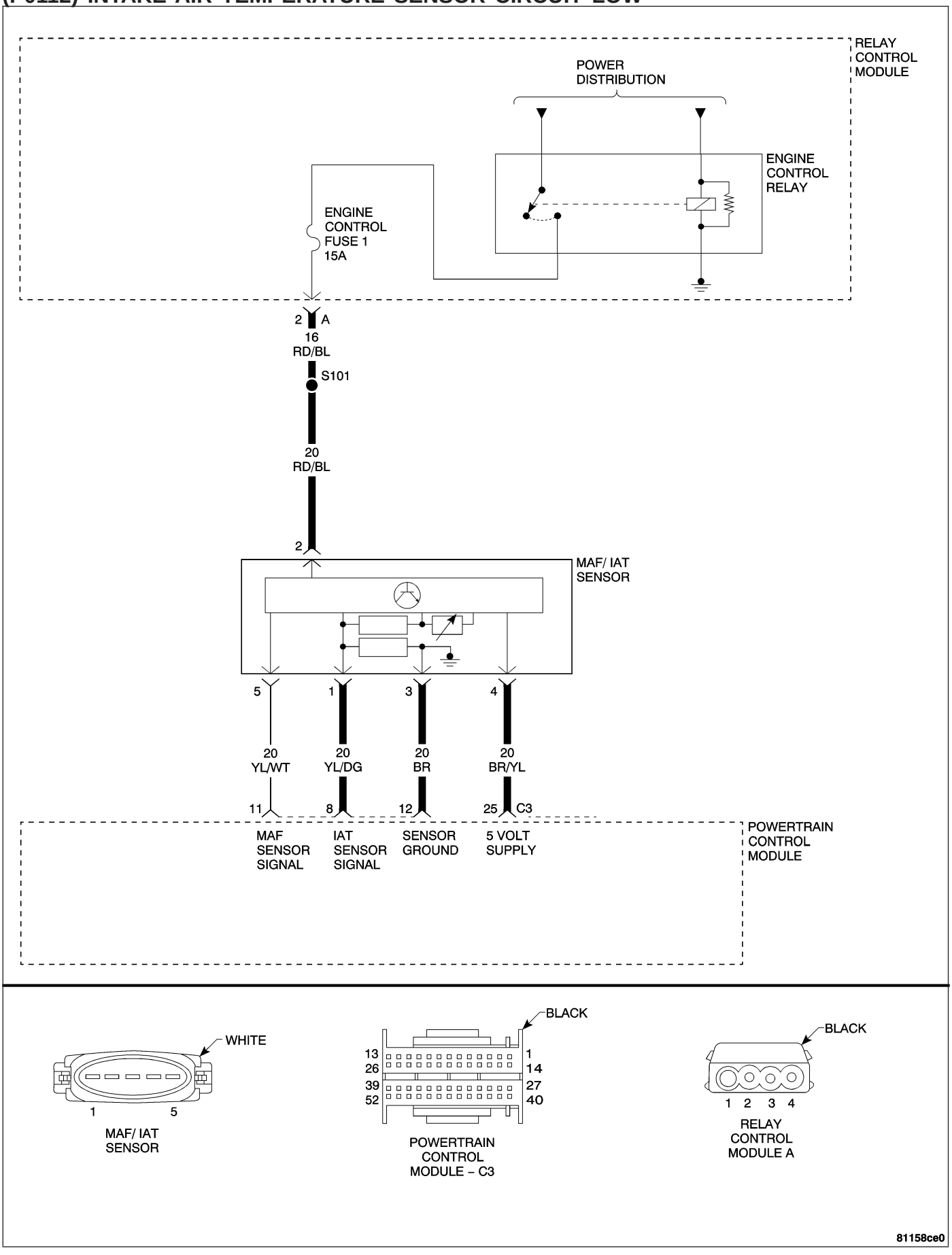

(P0112) INTAKE AIR TEMPERATURE SENSOR CIRCUIT LOW — CONTINUED

When Monitored and Set Condition

- When Monitored: Ignition on.
- Set Condition: The Intake Air Temperature (IAT) Sensor reading is less than 0.1 volt for approximately 1 second.

POSSIBLE CAUSES
INTAKE AIR TEMPERATURE SENSOR SIGNAL CIRCUIT OPEN
INTAKE AIR TEMPERATURE SENSOR SIGNAL CIRCUIT SHORTED TO GROUND
5-VOLT SUPPLY CIRCUIT OPEN
5-VOLT SUPPLY CIRCUIT SHORTED TO GROUND
INTAKE AIR TEMPERATURE SENSOR
POWERTRAIN CONTROL MODULE

For a complete Powertrain Control Module (PCM) Circuit Diagram **Refer to Page 9-574**.

Diagnostic Test

1. PRE-DIAGNOSTIC CHECK OUT

Note: Always perform diagnostics with a fully charged battery.

Note: Check connectors — Clean/repair as necessary. Poor pin to terminal connections can set DTCs.

Note: Check for applicable TSBs related to the problem.

Turn the ignition on.

With the DRB III®, read DTCs.

Using the wiring diagram/schematic as a guide, inspect the wiring and connectors. Repair as necessary.

Perform this procedure prior to symptom diagnosis.

Continue

Go To 2

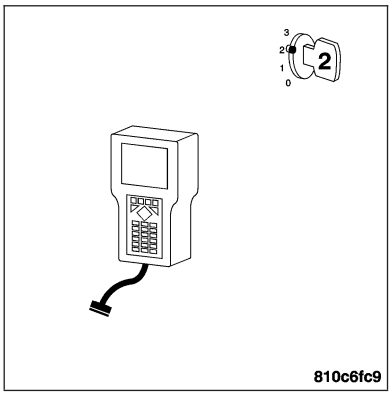

2. CHECK FOR CURRENT DTC

Note: If the PCM detects and stores a DTC, the PCM also stores the engine/vehicle operating conditions under which the DTC was set. Some of these conditions are displayed on the DRB III® at the same time the DTC is displayed.

Note: Before erasing stored DTCs, record these conditions. Attempting to duplicate these conditions may assist when checking for a DTC.

With the ignition on.

With the DRB III®, erase PCM DTCs.

Note: It maybe necessary to road test the vehicle for this DTC to set.

With the DRB III®, read the PCM DTCs.

Did this DTC set again?

Yes >> Go To 3

No >> Go To 9

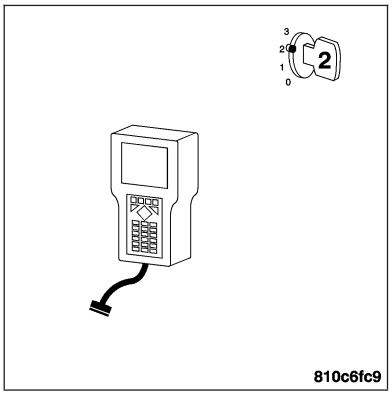

(P0112) INTAKE AIR TEMPERATURE SENSOR CIRCUIT LOW — CONTINUED

3. JUMPER THE IAT SENSOR SIGNAL AND 5-VOLT SUPPLY CIRCUITS

Turn the ignition off.

Disconnect the MAF/IAT Sensor harness connector.

Note: Check connectors — Clean/repair as necessary.

Connect a jumper wire between the IAT Sensor Signal circuit and the 5-Volt Supply circuit.

Turn the ignition on.

With the DRB III®, monitor the IAT Sensor voltage.

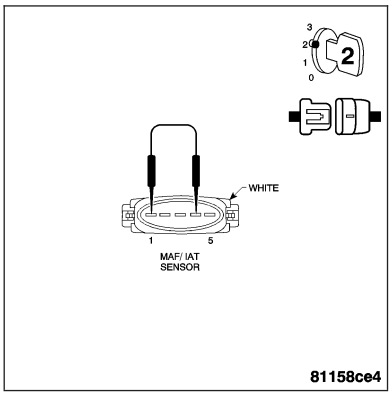

Is the voltage between 4.7 and 5.2 volts?

Yes >> Replace the MAF/IAT Sensor. **Refer to Page 14-37**.
Perform POWERTRAIN VERIFICATION TEST - VER 2.

No >> Go To 4

4. CHECKING THE 5-VOLT SUPPLY

With the ignition on.

Measure the voltage between ground and the 5-Volt Supply circuit.

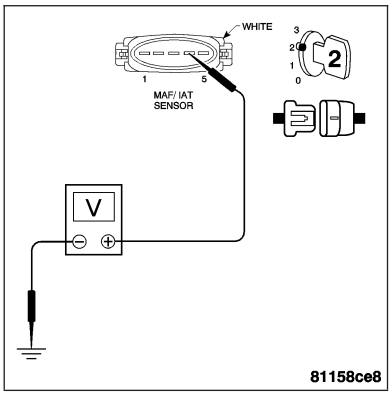

Is the voltage between 4.7 and 5.2 volts?

Yes >> Go To 7

No >> Go To 5

5. 5-VOLT SUPPLY CIRCUIT OPEN

Turn the ignition off.

Disconnect the PCM harness connector.

Note: Check connectors — Clean/repair as necessary.

Measure the resistance of the 5-Volt Supply circuit.

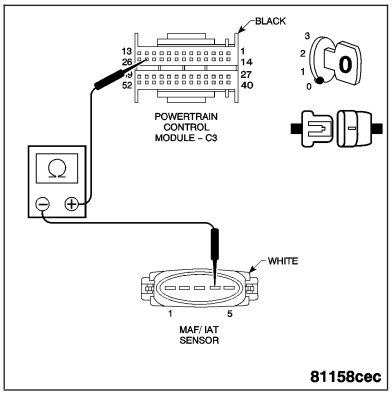

Is the resistance below 5.0 ohms?

Yes >> Go To 6

No >> Repair the 5-Volt Supply circuit for an open.
Perform POWERTRAIN VERIFICATION TEST - VER 2.

(P0112) INTAKE AIR TEMPERATURE SENSOR CIRCUIT LOW — CONTINUED

6. 5-VOLT SUPPLY CIRCUIT SHORTED TO GROUND

With the ignition off.
Measure the resistance between ground and the 5-Volt Supply circuit.

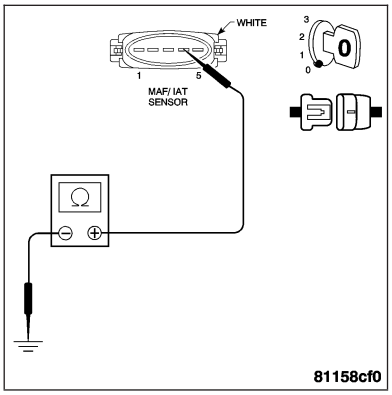

Is the resistance below 100 ohms?

Yes >> Repair the 5-Volt Supply circuit for a short to ground.
Perform POWERTRAIN VERIFICATION TEST - VER 2.

No. >> Replace and program the Powertrain Control Module.
Refer to Page 8E-56
Perform POWERTRAIN VERIFICATION TEST - VER 2.

7. IAT SENSOR SIGNAL CIRCUIT OPEN

Turn the ignition off.
Disconnect the PCM harness connector.

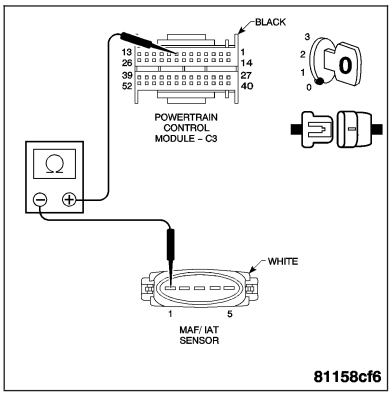

Note: Check connectors — Clean/repair as necessary.
Measure the resistance of the IAT Sensor Signal circuit.

Is the resistance below 5.0 ohms?

Yes >> Go To 8

No >> Repair the IAT Sensor Signal circuit for an open.
Perform POWERTRAIN VERIFICATION TEST - VER 2.

8. IAT SENSOR SIGNAL CIRCUIT SHORTED TO GROUND

With the ignition off.
Measure the resistance between ground and the IAT Sensor Signal circuit.

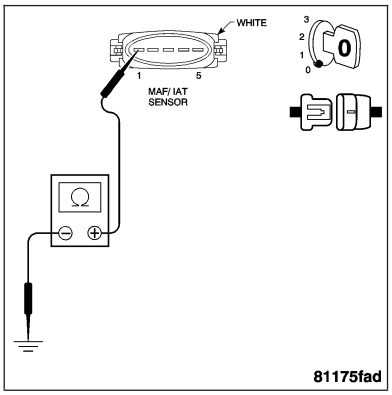

Is the resistance below 100 ohms?

Yes >> Repair the IAT Sensor Signal circuit for a short to ground.
Perform POWERTRAIN VERIFICATION TEST - VER 2.

No >> Replace and program the Powertrain Control Module.
Refer to Page 8E-56
Perform POWERTRAIN VERIFICATION TEST - VER 2.

(P0112) INTAKE AIR TEMPERATURE SENSOR CIRCUIT LOW — CONTINUED

9. INTERMITTENT WIRING AND CONNECTORS

The condition that caused this DTC to set is currently not present. Inspect the related wiring harness for a possible intermittent condition.

Using the wiring diagram/schematic as a guide, inspect the wiring and connectors specific to this DTC. Wiggle the wires while checking for shorts and/or open circuits.

Note: Check connectors — Clean/repair as necessary. Poor pin to terminal connections can set DTCs.

Note: Check for any Technical Service Bulletins that may apply.

Were any problems found?

Yes >> Repair as necessary.
Perform POWERTRAIN VERIFICATION TEST - VER 2.

No >> Test Complete.

(P0113) INTAKE AIR TEMPERATURE SENSOR CIRCUIT HIGH

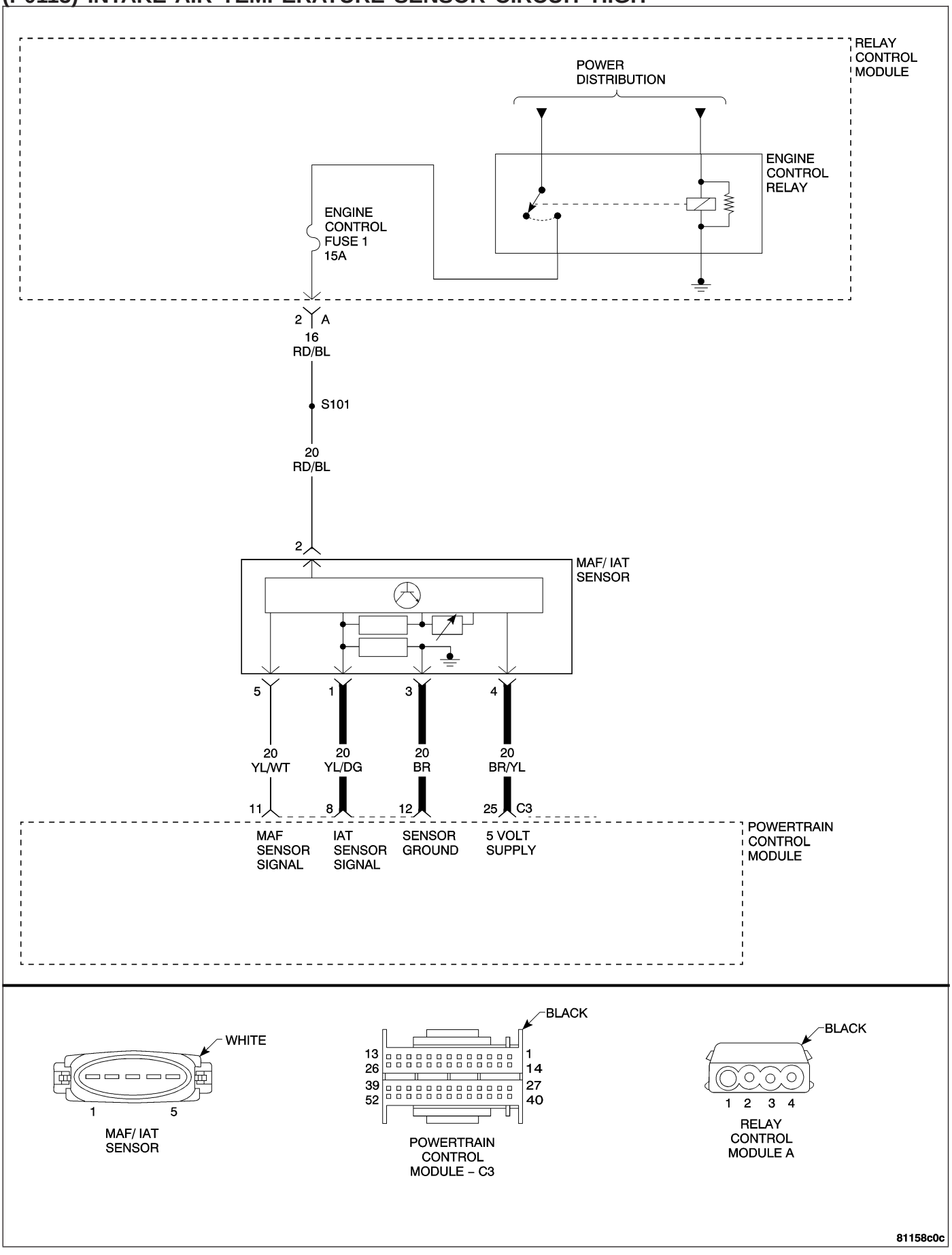

(P0113) INTAKE AIR TEMPERATURE SENSOR CIRCUIT HIGH — CONTINUED

When Monitored and Set Condition

- When Monitored: Ignition on.
- Set Condition: The Intake Air Temperature (IAT) Sensor reading is greater than 4.93 volts for approximately 1 second.

POSSIBLE CAUSES
INTAKE AIR TEMPERATURE SENSOR SIGNAL CIRCUIT SHORTED TO VOLTAGE
SENSOR GROUND CIRCUIT OPEN
5-VOLT SUPPLY CIRCUIT SHORTED TO VOLTAGE
INTAKE AIR TEMPERATURE SENSOR
POWERTRAIN CONTROL MODULE

For a complete Powertrain Control Module (PCM) Circuit Diagram **Refer to Page 9-574**.

Diagnostic Test

1. PRE-DIAGNOSTIC CHECK OUT

Note: Always perform diagnostics with a fully charged battery.

Note: Check connectors — Clean/repair as necessary. Poor pin to terminal connections can set DTCs.

Note: Check for any Technical Service Bulletins that may apply.

Turn the ignition on.

With the DRB III®, read DTCs.

Using the wiring diagram/schematic as a guide, inspect the wiring and connectors. Repair as necessary.

Perform this procedure prior to symptom diagnosis.

Continue

Go To 2

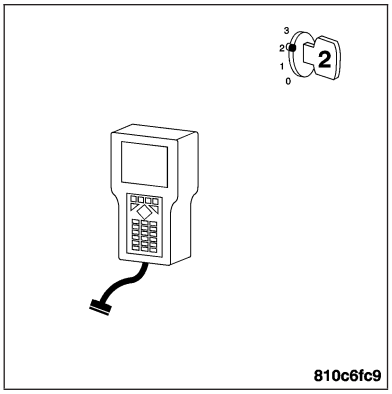

2. CHECK FOR CURRENT DTC

Note: If the PCM detects and stores a DTC, the PCM also stores the engine/vehicle operating conditions under which the DTC was set. Some of these conditions are displayed on the DRB III® at the same time the DTC is displayed.

Note: Before erasing stored DTCs, record these conditions. Attempting to duplicate these conditions may assist when checking for an active DTC.

Turn the ignition on.

With the DRB III®, erase PCM DTCs.

Note: It maybe necessary to road test the vehicle for this DTC to set.

With the DRB III®, read the PCM DTCs.

Did this DTC set again?

Yes >> Go To 3

No >> Go To 8

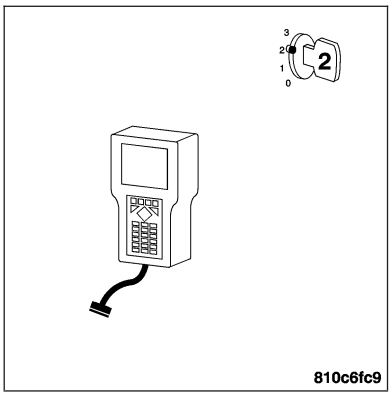

(P0113) INTAKE AIR TEMPERATURE SENSOR CIRCUIT HIGH — CONTINUED

3. IAT SENSOR SIGNAL CIRCUIT SHORTED TO VOLTAGE

Turn the ignition off.
Disconnect the MAF/IAT Sensor harness connector.

Note: Check connectors — Clean/repair as necessary.
Turn the ignition on.
With the DRB III®, read the IAT Sensor voltage.

Is the voltage below 0.3 volts?

Yes >> Go To 4

No >> Repair the IAT Sensor Signal circuit for a short to voltage.
Perform POWERTRAIN VERIFICATION TEST - VER 2.

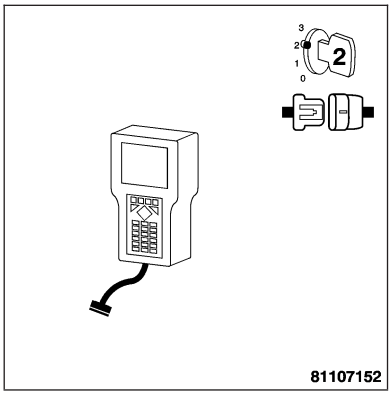

4. CHECK THE SENSOR GROUND CIRCUIT

With the ignition on.
Connect a 12-volt test light between B(+) and the Sensor Ground circuit.

Note: The test light must illuminate brightly. Compare the brightness to when connected directly to a body ground.

Does the test light illuminate brightly?

Yes >> Go To 6

No >> Go To 5

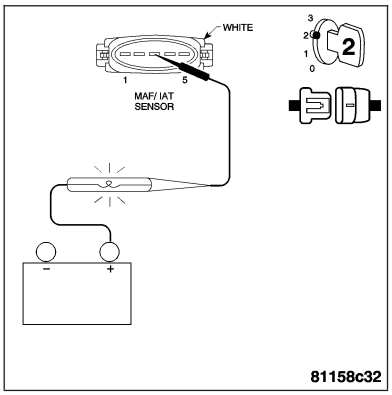

5. SENSOR GROUND CIRCUIT OPEN

Turn the ignition off.
Disconnect PCM harness connector.

Note: Check connectors — Clean/repair as necessary.
Measure the resistance of the Sensor Ground circuit.

Is the resistance below 5.0 ohms?

Yes >> Replace and program the Powertrain Control Module. **Refer to Page 8E-56**.
Perform POWERTRAIN VERIFICATION TEST - VER 2.

No >> Repair the Sensor Ground circuit for an open.
Perform POWERTRAIN VERIFICATION TEST - VER 2.

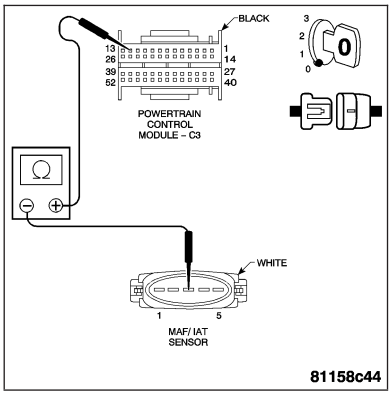

(P0113) INTAKE AIR TEMPERATURE SENSOR CIRCUIT HIGH — CONTINUED

6. 5-VOLT SUPPLY CIRCUIT SHORTED TO VOLTAGE

With the ignition on.
Measure the voltage between ground and the 5-Volt Supply circuit.

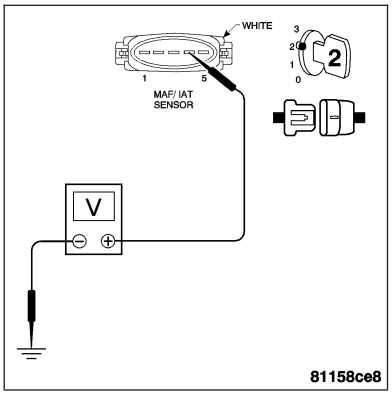

Is the voltage above 5.2 volts?

Yes >> Repair the 5-Volt Supply circuit for a short to voltage.
Perform POWERTRAIN VERIFICATION TEST - VER 2.

No >> Go To 7

7. JUMPER THE IAT SENSOR SIGNAL AND 5-VOLT SUPPLY CIRCUITS

Turn the ignition off.
Connect a jumper wire between the IAT Sensor Signal circuit and the 5-Volt Supply circuit.
Turn the ignition on.
With the DRB III®, read the IAT Sensor voltage.

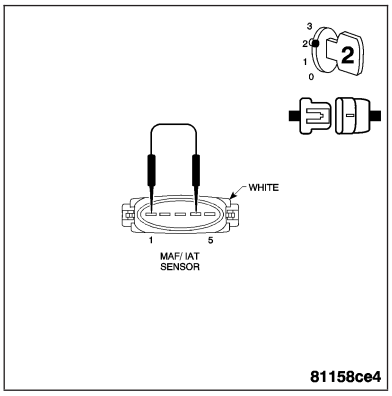

Is the voltage between 4.7 and 5.2 volts?

Yes >> Replace the IAT Sensor. **Refer to Page 14-37**.
Perform POWERTRAIN VERIFICATION TEST - VER 2.

No >> Replace and program the Powertrain Control Module. **Refer to Page 8E-56**.
Perform POWERTRAIN VERIFICATION TEST - VER 2.

8. INTERMITTENT WIRING AND CONNECTORS

The condition that caused this DTC to set is currently not present. Inspect the related wiring harness for a possible intermittent condition.

Note: Check connectors — Clean/repair as necessary. Poor pin to terminal connections can set DTCs.

Note: Check for any Technical Service Bulletins that may apply.
Using the wiring diagram/schematic as a guide, inspect the wiring and connectors specific to this DTC. Wiggle the wires while checking for shorts and open circuits.

Were any problems found?

Yes >> Repair as necessary.
Perform POWERTRAIN VERIFICATION TEST - VER 2.

No >> Test Complete.

(P0116) ENGINE COOLANT TEMPERATURE SENSOR PERFORMANCE

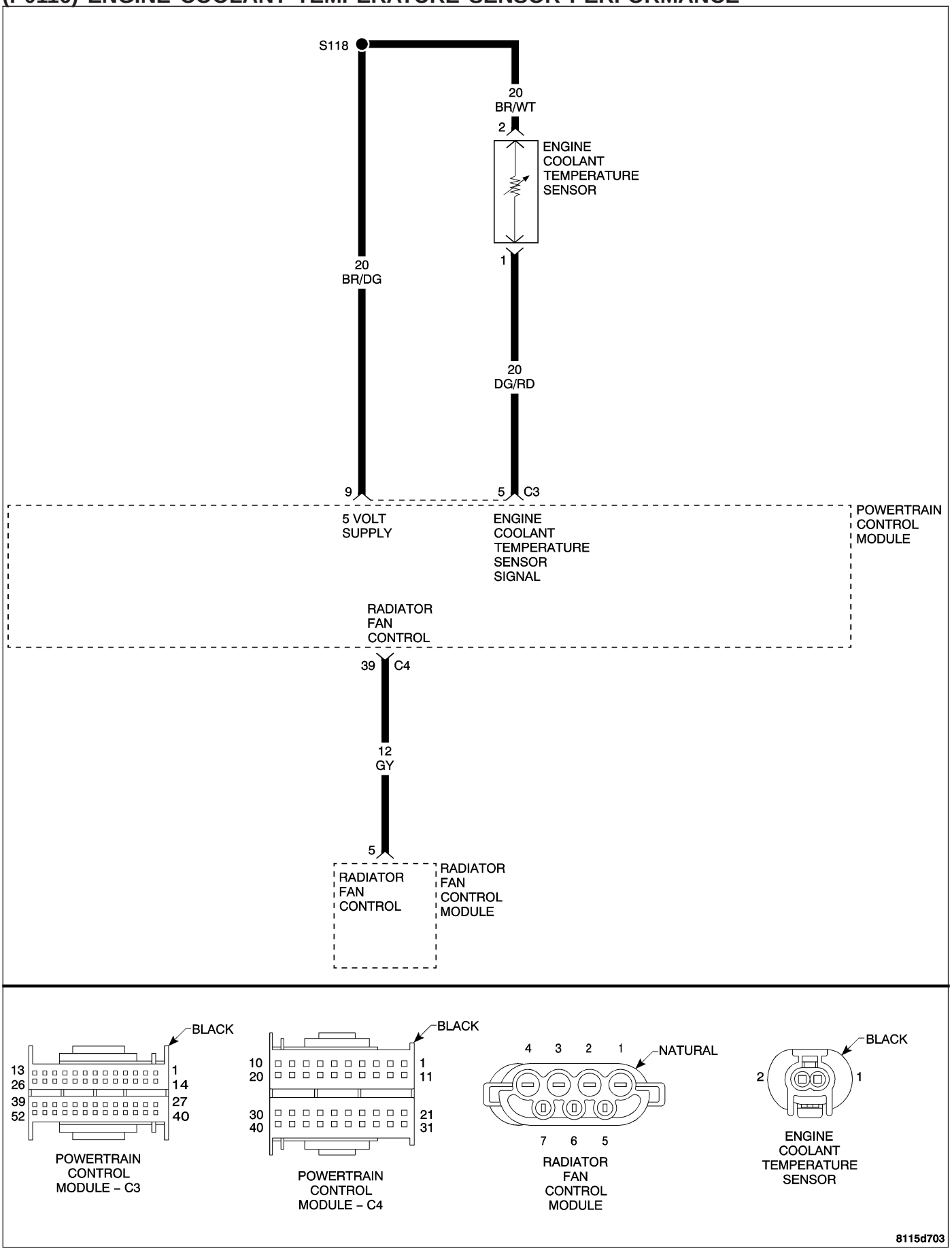

(P0116) ENGINE COOLANT TEMPERATURE SENSOR PERFORMANCE — CONTINUED

When Monitored and Set Condition

- When Monitored: With the engine running and no fault in the throttle valve actuator.
- Set Condition: LOW LIMIT: The ECT Sensor value is less than –39°C (-38°F) for more than 1 second. HIGH LIMIT: The ECT Sensor value is more than 170°C (338°F) for more than 1 second. CLOSED LOOP TEMPERATURE NOT REACHED: The engine coolant temperature does reach 15°C (60°F) in a predetermined time. Failure time varies from 2 to 20 Min and is calculated from start up temperature, engine speed, and ambient temperature.

POSSIBLE CAUSES
ENGINE COOLANT TEMPERATURE (ECT) SENSOR SIGNAL CIRCUIT OPEN
ENGINE COOLANT TEMPERATURE SENSOR SIGNAL CIRCUIT SHORTED TO GROUND
ENGINE COOLANT TEMPERATURE SENSOR SIGNAL CIRCUIT SHORTED TO VOLTAGE
ENGINE COOLANT TEMPERATURE SENSOR GROUND CIRCUIT OPEN
IMPROPER COOLANT LEVEL
ENGINE COOLANT THERMOSTAT
ENGINE COOLANT TEMPERATURE SENSOR
POWERTRAIN CONTROL MODULE

For a complete Powertrain Control Module (PCM) Circuit Diagram **Refer to Page 9-574**.

Diagnostic Test

1. PRE-DIAGNOSTIC CHECK OUT

Note: Low engine coolant level can be the cause of this DTC. If the fluid level is low locate and repair any leaks before diagnosing this DTC.

Note: Always perform diagnostics with a fully charged battery.

Note: Check connectors — Clean/repair as necessary. Poor pin to terminal connections can set DTCs.

Note: Check for applicable TSBs.

Turn the ignition on.

With the DRB III®, read DTCs.

Using the wiring diagram/schematic as a guide, inspect the wiring and connectors. Repair as necessary.

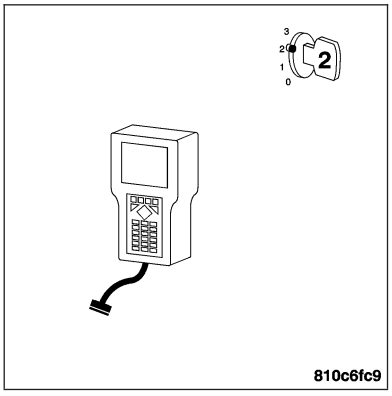

Perform this procedure prior to symptom diagnosis.

Continue

Go To 2

(P0116) ENGINE COOLANT TEMPERATURE SENSOR PERFORMANCE — CONTINUED

2. MONITOR THE ECT SENSOR TEMPERATURE

With the ignition on.
With the DRB III®, monitor the ECT Sensor temperature value.

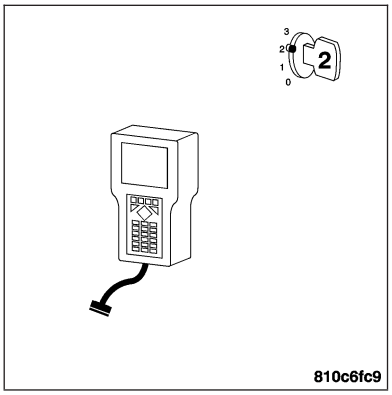

Choose a conclusion that best matches the ECT Temp value.

If the value is greater than 169°C (336°F).
Go To 3

If the value is less than –39°C (-38°F).
Go To 5

If the temp value is within normal operating range.
Go To 10

3. ECT SENSOR

Turn the ignition off.
Disconnect the ECT Sensor harness connector.

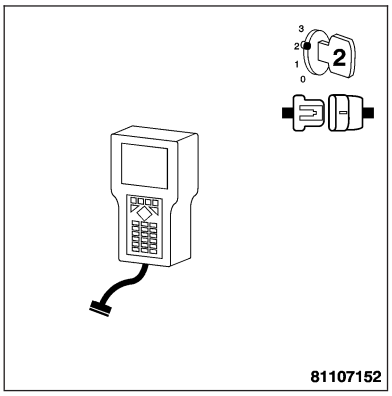

Note: Check connectors — Clean/repair as necessary.
Turn the ignition on.
With the DRB III®, monitor the ECT Sensor temperature.

Is the value less than -38°C (-36°F)?

Yes >> Replace the ECT Sensor. **Refer to Page 7-29**.
Perform POWERTRAIN VERIFICATION TEST - VER 2.

No >> Go To 4

4. ECT SENSOR SIGNAL CIRCUIT SHORT TO VOLTAGE

Turn the ignition off.
Disconnect the PCM C3 harness connector.

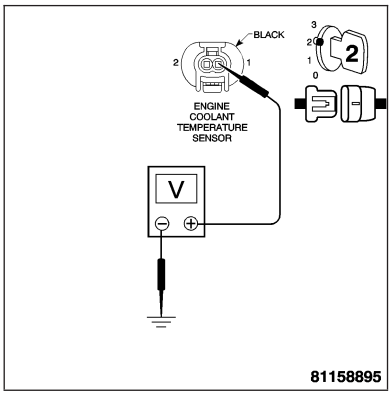

Note: Check connectors — Clean/repair as necessary.
Turn the ignition on.
Measure the voltage of the ECT Sensor Signal circuit at the ECT harness connector.

Is the voltage above 1.0 volts?

Yes >> Repair the ECT Sensor Signal circuit for a short to voltage.
Perform POWERTRAIN VERIFICATION TEST - VER 2.

No >> Replace and program the Powertrain Control Module.
Refer to Page 8E-56.
Perform POWERTRAIN VERIFICATION TEST - VER 2.

(P0116) ENGINE COOLANT TEMPERATURE SENSOR PERFORMANCE — CONTINUED

5. ECT SENSOR

Turn the ignition off.

Disconnect the ECT Sensor harness connector.

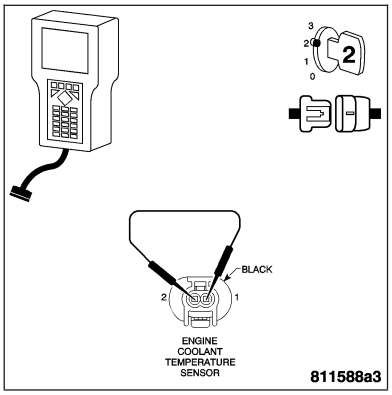

Note: Check connectors — Clean/repair as necessary.

Turn the ignition on.

Connect a jumper wire between the ECT Sensor Signal circuit and the ECT Sensor Ground circuit.

With the DRB III®, monitor the ECT Sensor temperature.

Is the value at or above 170°C (338°F)?

Yes >> Replace the ECT Sensor. **Refer to Page 7-29**.
Perform POWERTRAIN VERIFICATION TEST - VER 2.

No >> Go To 6

6. OPEN ECT SENSOR 5-VOLT SUPPLY CIRCUIT

With the ignition on.

Measure the voltage of the ECT Sensor 5-Volt Supply circuit at the ECT Sensor harness connector.

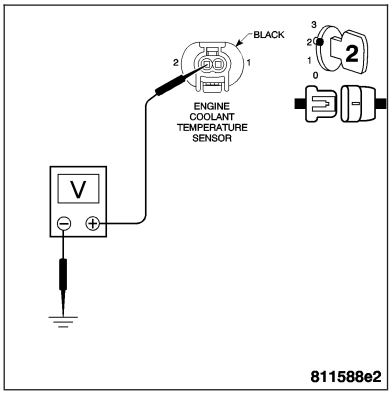

Is the voltage between 4.5 - 5.2 volts?

Yes >> Go To 8

No >> Go To 7

7. OPEN ECT SENSOR 5-VOLT SUPPLY CIRCUIT

Turn the ignition off.

Disconnect PCM C3 harness connector.

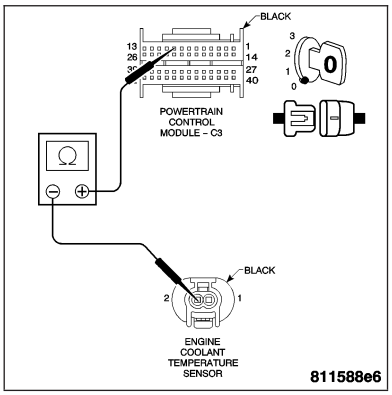

Note: Check connectors — Clean/repair as necessary.

Measure the resistance of the ECT 5-Volt Supply circuit from the ECT harness connector and the PCM C3 harness connector.

Is the resistance less than 5.0 ohms?

Yes >> Replace and program the Powertrain Control Module. **Refer to Page 8E-56**.
Perform POWERTRAIN VERIFICATION TEST - VER 2.

No >> Repair the ECT Sensor 5-Volt Supply circuit for an open.
Perform POWERTRAIN VERIFICATION TEST - VER 2.

(P0116) ENGINE COOLANT TEMPERATURE SENSOR PERFORMANCE — CONTINUED

8. ECT SENSOR SIGNAL CIRCUIT SHORT TO GROUND

Turn the ignition off.

Disconnect PCM C3 harness connector.

Note: Check connectors — Clean/repair as necessary.

Measure the resistance between ground and ECT Sensor Signal circuit.

Is the resistance below 100 ohms?

Yes >> Repair the ECT Sensor Signal circuit for a short to ground. Perform POWERTRAIN VERIFICATION TEST - VER 2.

No >> Go To 9

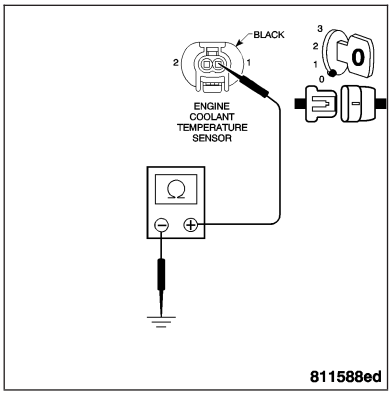

9. OPEN ECT SENSOR SIGNAL CIRCUIT

With the ignition off.

Measure the resistance of the ECT Sensor Signal circuit from the ECT harness connector and the PCM C3 harness connector.

Is the resistance less than 5.0 ohms?

Yes >> Replace and program the Powertrain Control Module. **Refer to Page 8E-56**. Perform POWERTRAIN VERIFICATION TEST - VER 2.

No >> Repair the ECT Sensor Signal circuit for an open. Perform POWERTRAIN VERIFICATION TEST - VER 2.

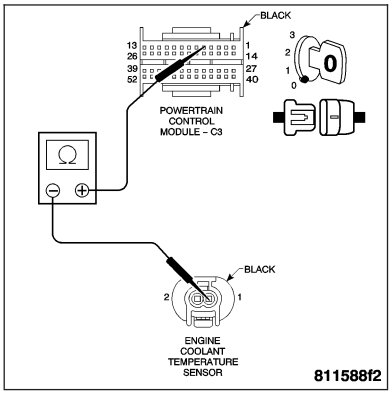

10. CHECKING THE COOLANT LEVEL AND CONDITION

WARNING: NEVER OPEN THE COOLING SYSTEM WHEN THE ENGINE IS HOT. THE SYSTEM IS UNDER PRESSURE. EXTREME BURNS OR SCALDING MAY RESULT. ALLOW THE ENGINE TO COOL BEFORE OPENING THE COOLING SYSTEM.

Turn the ignition off.

Check the coolant level and condition.

Is the coolant level and condition OK?

Yes >> Go To 11

No >> Locate and repair any coolant leaks and add the necessary amount of coolant. Perform POWERTRAIN VERIFICATION TEST - VER 2.

(P0116) ENGINE COOLANT TEMPERATURE SENSOR PERFORMANCE — CONTINUED

11. ECT SENSOR RANGE

Note: This test works best on a cold engine.
Turn the ignition on.

With the DRB III®, read the ECT Sensor value. If the vehicle was allowed to sit overnight, the value should be reasonably close to the ambient temperature.

Note: If engine coolant temperature is above 85°C (185°F), allow the engine to cool until at least 65°C (150°F).
Start the engine.

During engine warm-up monitor the ECT Sensor value as well as the actual engine temperature with a thermometer. The ECT temperature value in the DRB III® should transition smoothly from start-up to operating temperature.

Note: As the engine warms to operating temperature, the actual coolant temperature and the ECT value in the DRB III® should stay relatively close to each other.

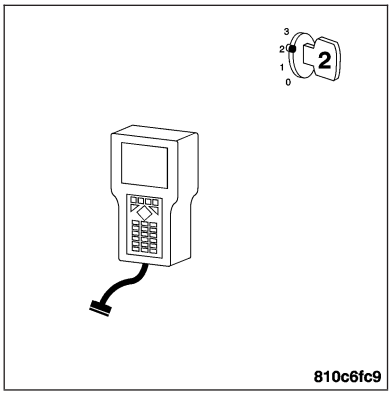

Did the ECT value in the DRB III® and the actual temperature stay relatively close to each other?

Yes >> Go To 12

No >> Replace the ECT Sensor. **Refer to Page 7-29**.
Perform POWERTRAIN VERIFICATION TEST - VER 2.

12. CHECKING COOLANT THERMOSTAT OPERATION

Turn the ignition off.

Remove the thermostat.

Using the appropriate service information, perform thermostat diagnosis.

Did the thermostat open at the proper temperature and to the proper stroke?

Yes >> Go To 13

No >> Replace the thermostat. **Refer to Page 7-23**
Perform POWERTRAIN VERIFICATION TEST - VER 2.

(P0116) ENGINE COOLANT TEMPERATURE SENSOR PERFORMANCE — CONTINUED

13. INTERMITTENT WIRING AND CONNECTORS

The condition that caused this DTC to set is currently not present. Inspect the related wiring harness for a possible intermittent condition.

Note: Check connectors — Clean/repair as necessary. Poor pin to terminal connections can set DTC's.

Note: Check for any Technical Service Bulletins that may apply.
Using the wiring diagram/schematic as a guide, inspect the wiring and connectors specific to this DTC. Wiggle the wires while checking for shorts and open circuits.

Were there any problems found?

Yes >> Repair as necessary.
Perform POWERTRAIN VERIFICATION TEST - VER 2.

No >> The condition that caused this DTC to set is currently not present. Inspect the related wiring harness for a possible intermittent condition.

(P0116) ENGINE COOLANT TEMPERATURE SENSOR SHORT CIRCUIT

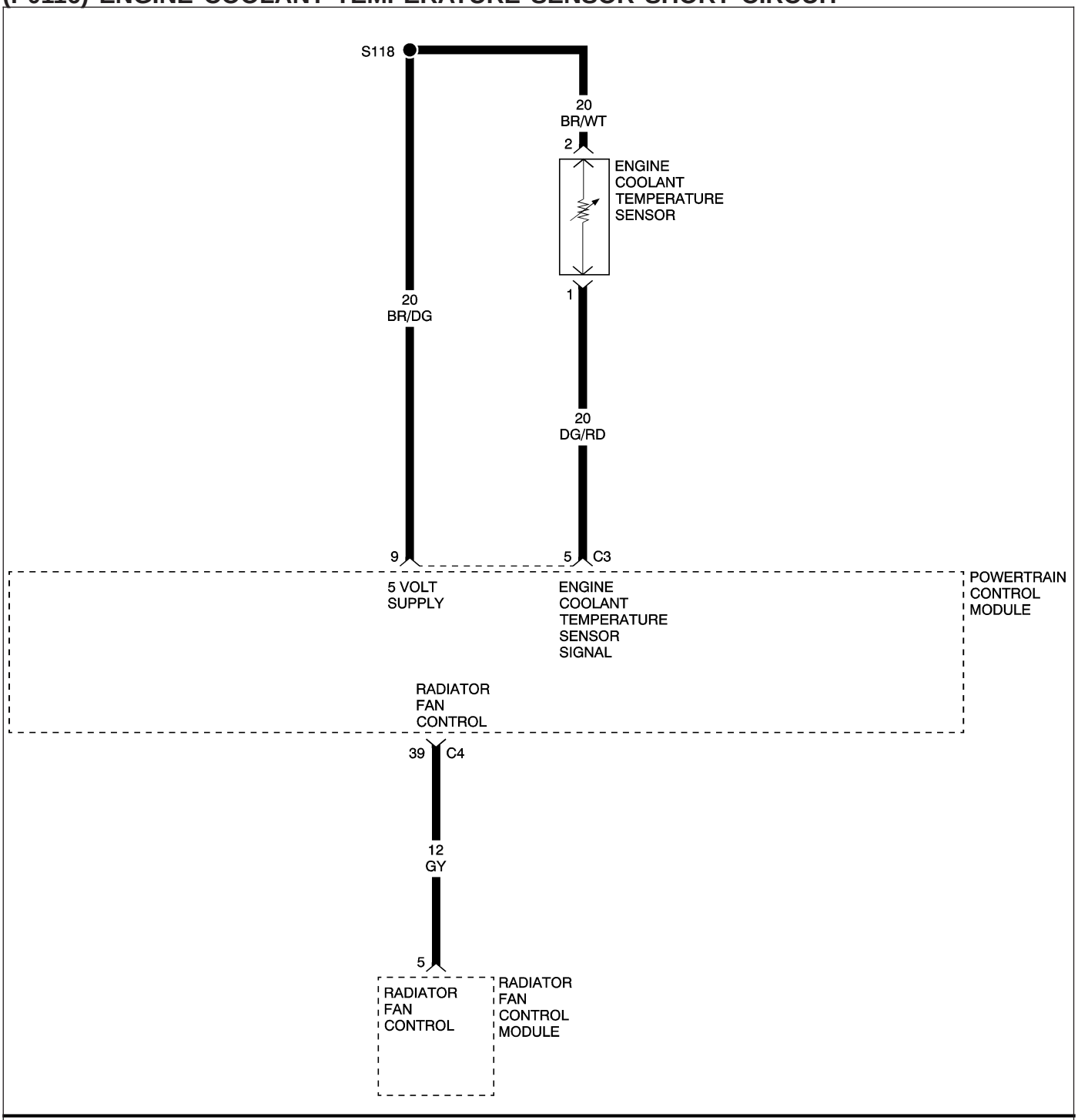

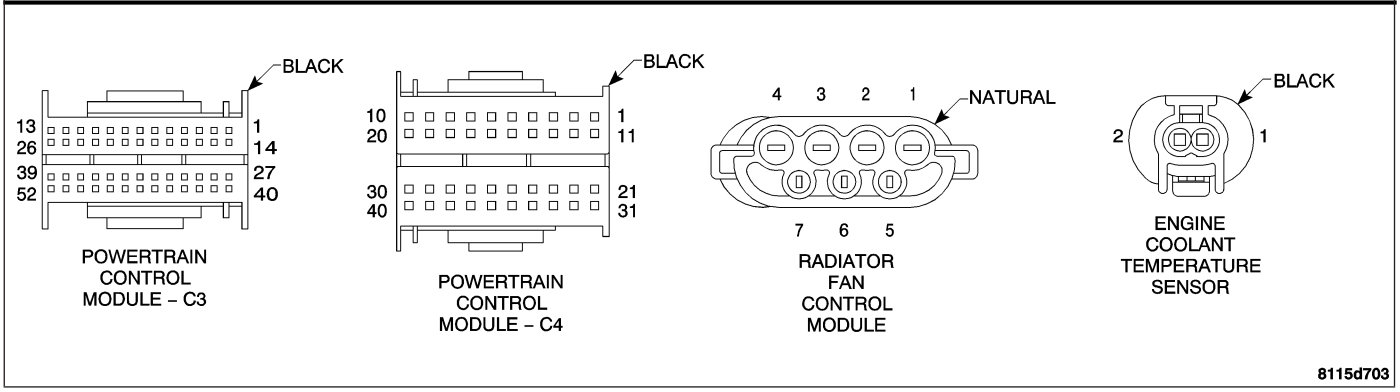

(P0116) ENGINE COOLANT TEMPERATURE SENSOR SHORT CIRCUIT — CONTINUED

When Monitored and Set Condition

- When Monitored: With the engine running and no fault in the throttle valve actuator.
- Set Condition: The ECT Sensor value is more than 170°C (338°F) for more than 1 second.

POSSIBLE CAUSES
ENGINE COOLANT TEMPERATURE SENSOR SIGNAL CIRCUIT SHORTED TO GROUND
ENGINE COOLANT TEMPERATURE SENSOR SIGNAL CIRCUIT SHORTED TO VOLTAGE
ENGINE COOLANT TEMPERATURE SENSOR
POWERTRAIN CONTROL MODULE

Diagnostic Test

1. CHECK FOR CURRENT DTC

Turn the ignition on.
With the DRB III®, read the PCM DTCs.

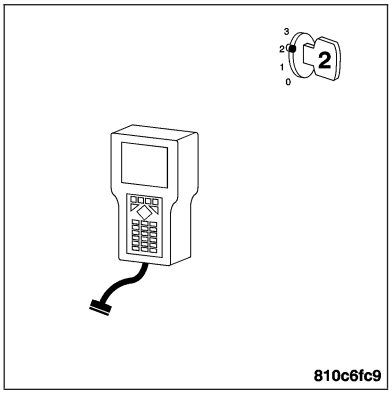

Is this DTC present?

Yes >> For complete diagnosis of this DTC, refer to (P0116) ENGINE COOLANT TEMPERATURE SENSOR PERFORMANCE.

No >> Go To 2

2. INTERMITTENT WIRING AND CONNECTORS

The conditions necessary to set this DTC are not present at this time.

Note: Check connectors — Clean/repair as necessary. Poor pin to terminal connections can set DTCs.Using the wiring diagram/schematic as a guide, inspect the wiring and connectors specific to this DTC. Wiggle the wires while checking for shorts and open circuits.

Note: Check for any Technical Service Bulletins that may apply.

Were there any problems found?

Yes >> Repair as necessary.
Perform POWERTRAIN VERIFICATION TEST - VER 2.

No >> The condition that caused this DTC to set is currently not present. Inspect the related wiring harness for a possible intermittent condition.

(P0117) ENGINE COOLANT TEMPERATURE SENSOR CIRCUIT LOW

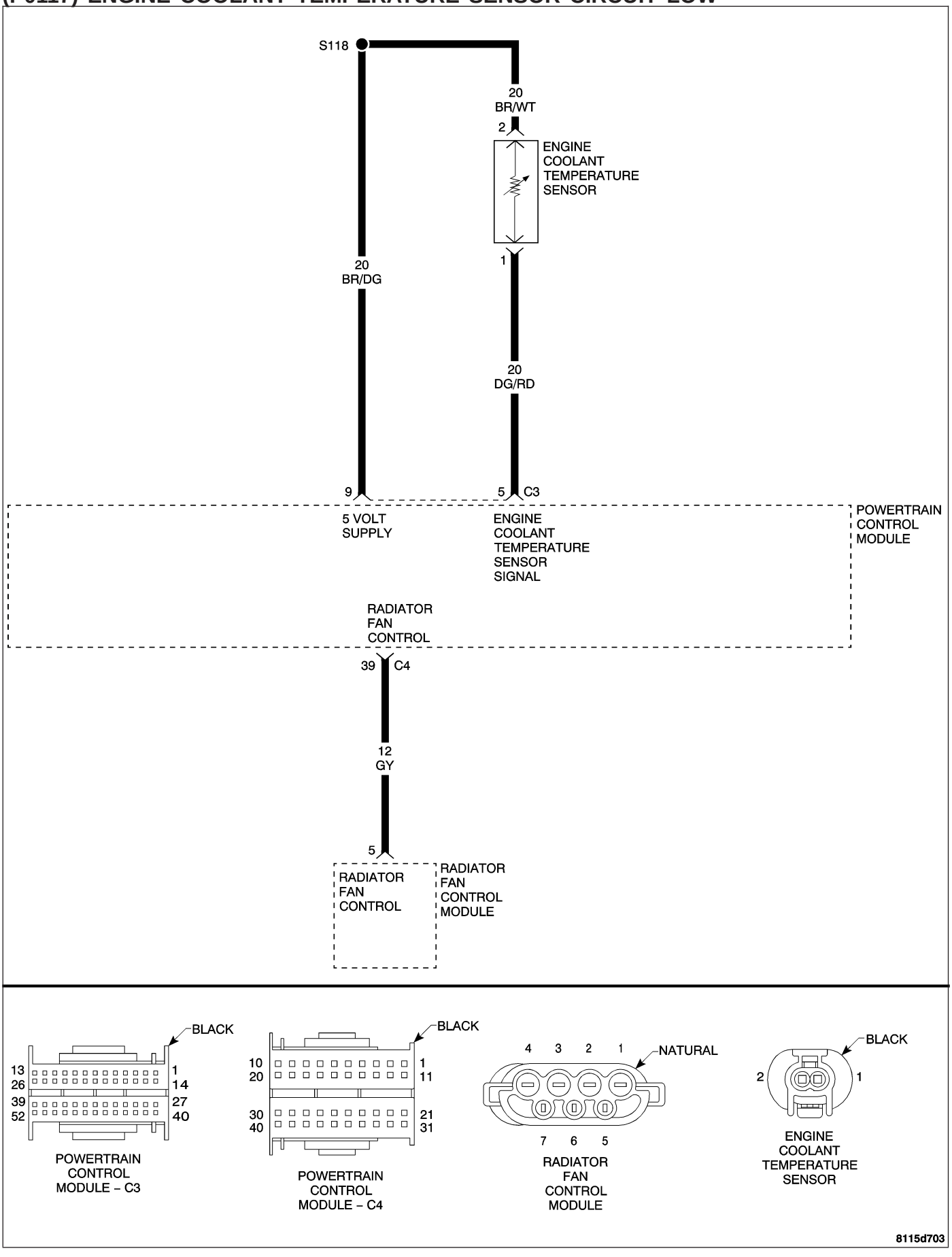

(P0117) ENGINE COOLANT TEMPERATURE SENSOR CIRCUIT LOW — CONTINUED

When Monitored and Set Condition

- When Monitored: With the engine running and no fault in the throttle valve actuator.
- Set Condition: The ECT Sensor value is less than –39°C (-38°F) for more than 1 second.

POSSIBLE CAUSES
ENGINE COOLANT TEMPERATURE (ECT) SENSOR SIGNAL CIRCUIT OPEN
ENGINE COOLANT TEMPERATURE SENSOR SIGNAL CIRCUIT SHORTED TO GROUND
ENGINE COOLANT TEMPERATURE SENSOR
POWERTRAIN CONTROL MODULE

Diagnostic Test

1. CHECK FOR CURRENT DTC

Turn the ignition on.
With the DRB III®, read the PCM DTCs.

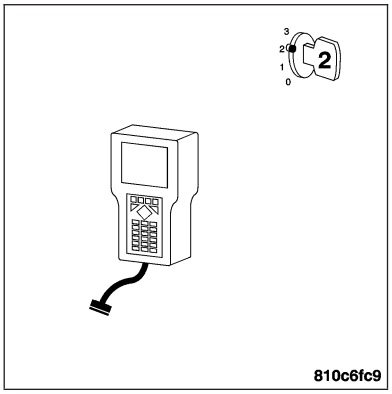

Is this DTC present?

Yes >> For complete diagnosis of this DTC, refer to (P0116) ENGINE COOLANT TEMPERATURE SENSOR PERFORMANCE.

No >> Go To 2

2. INTERMITTENT WIRING AND CONNECTORS

The conditions necessary to set this DTC are not present at this time.

Note: Check connectors — Clean/repair as necessary. Poor pin to terminal connections can set DTCs.Using the wiring diagram/schematic as a guide, inspect the wiring and connectors specific to this DTC. Wiggle the wires while checking for shorts and open circuits.

Note: Check for any Technical Service Bulletins that may apply.

Were there any problems found?

Yes >> Repair as necessary.
Perform POWERTRAIN VERIFICATION TEST - VER 2.

No >> The condition that caused this DTC to set is currently not present. Inspect the related wiring harness for a possible intermittent condition.

(P0118) ENGINE COOLANT TEMPERATURE SENSOR CIRCUIT HIGH

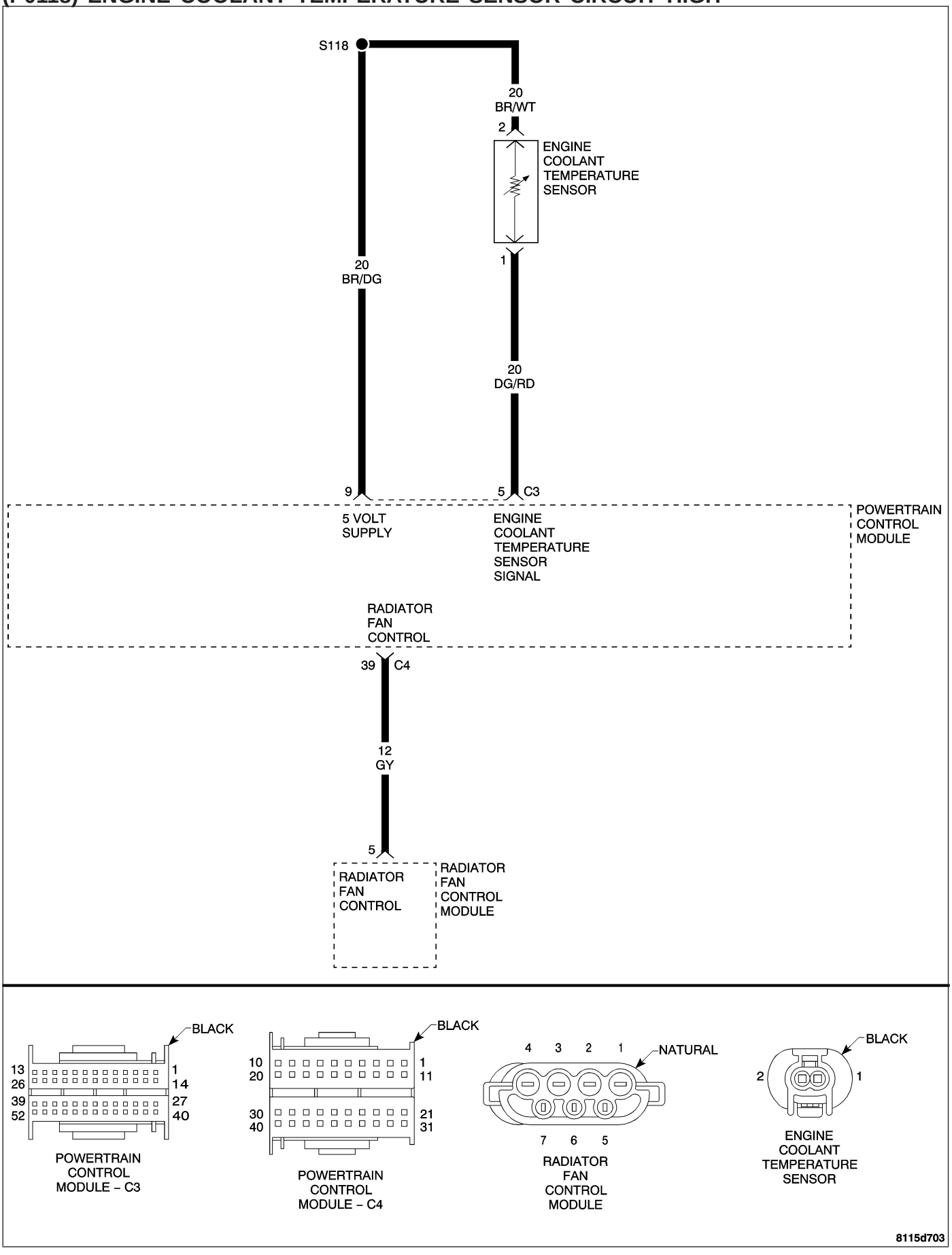

(P0118) ENGINE COOLANT TEMPERATURE SENSOR CIRCUIT HIGH — CONTINUED

When Monitored and Set Condition

- When Monitored: With the engine running and no fault in the throttle valve actuator.
- Set Condition: The ECT Sensor value is more than 170°C (338°F) for more than 1 second.

POSSIBLE CAUSES
ENGINE COOLANT TEMPERATURE SENSOR SIGNAL CIRCUIT SHORTED TO GROUND
ENGINE COOLANT TEMPERATURE SENSOR SIGNAL CIRCUIT SHORTED TO VOLTAGE
IMPROPER COOLANT LEVEL
ENGINE COOLANT THERMOSTAT
ENGINE COOLANT TEMPERATURE SENSOR
POWERTRAIN CONTROL MODULE

Diagnostic Test

1. CHECK FOR CURRENT DTC

Turn the ignition on.
With the DRB III®, read the PCM DTCs.

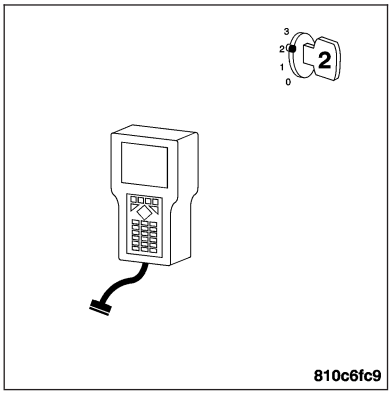

Is this DTC present?

Yes >> For complete diagnosis of this DTC, refer to (P0116) ENGINE COOLANT TEMPERATURE SENSOR PERFORMANCE.

No >> Go To 2

2. INTERMITTENT WIRING AND CONNECTORS

The conditions necessary to set this DTC are not present at this time.

Note: Check connectors — Clean/repair as necessary. Poor pin to terminal connections can set DTCs.Using the wiring diagram/schematic as a guide, inspect the wiring and connectors specific to this DTC. Wiggle the wires while checking for shorts and open circuits.

Note: Check for any Technical Service Bulletins that may apply.

Were there any problems found?

Yes >> Repair as necessary.
Perform POWERTRAIN VERIFICATION TEST - VER 2.

No >> The condition that caused this DTC to set is currently not present. Inspect the related wiring harness for a possible intermittent condition.

(P0120) ELECTRONIC THROTTLE CONTROL MOTOR PERFORMANCE

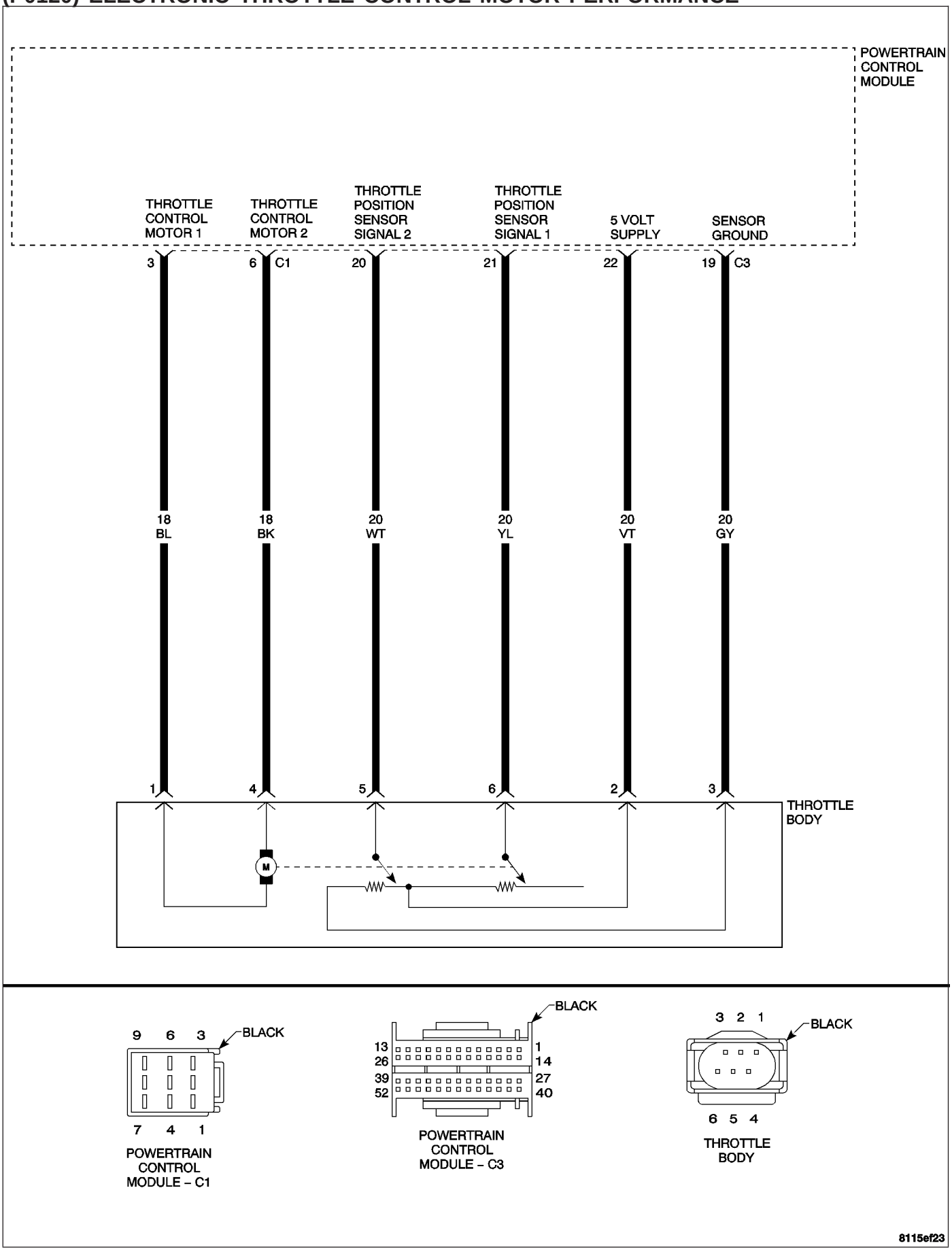

(P0120) ELECTRONIC THROTTLE CONTROL MOTOR PERFORMANCE — CONTINUED

When Monitored and Set Condition

- When Monitored: Ignition on with no MAP Sensor DTCs set.
- Set Condition: TP Sensor signals in the Throttle Body Assembly do not correlate to the MAP Sensor signal.

POSSIBLE CAUSES
TP SENSOR SWEEP
TP SENSOR SIGNAL CIRCUIT SHORTED TO VOLTAGE
OPEN TP SIGNAL CIRCUIT
OPEN 5-VOLT SUPPLY CIRCUIT
5-VOLT SUPPLY CIRCUIT SHORTED TO GROUND
OPEN SENSOR GROUND CIRCUIT
TP SENSOR #1 SIGNAL CIRCUIT SHORTED TO TP SENSOR #2 SIGNAL CIRCUIT
THROTTLE BODY ASSEMBLY
POWERTRAIN CONTROL MODULE

For a complete Powertrain Control Module (PCM) Circuit Diagram, **Refer to Page 9-574**.

Diagnostic Test

1. CHECK FOR CURRENT DTC

Note: Diagnose any other Throttle Body Assembly DTC(s) before continuing.

Note: The throttle plate should be free from binding and carbon build up.

Note: Ensure the throttle plate is at the idle position.

Note: Inspect the engine for vacuum leaks.

Note: If the PCM detects and stores a DTC, the PCM also stores the engine/vehicle operating conditions under which the DTC was set. Some of these conditions are displayed on the DRB III® at the same time the DTC is displayed.

Note: Before erasing stored DTCs, record these conditions. Attempting to duplicate these conditions may assist when checking for a DTC.

Turn the ignition on.

With the DRB III®, erase PCM DTCs.

Note: It maybe necessary to road test the vehicle for this DTC to set.

With the DRB III®, read the PCM DTCs.

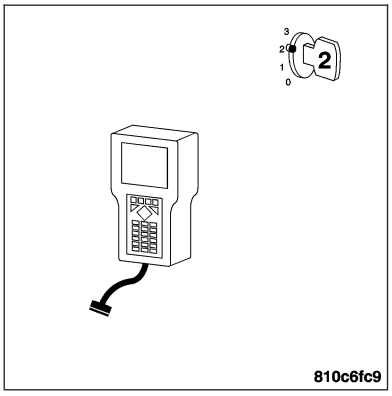

Did this DTC set again?

Yes >> Go To 2

No >> Go To 11

(P0120) ELECTRONIC THROTTLE CONTROL MOTOR PERFORMANCE — CONTINUED

2. TP SENSOR

Turn the ignition off.

Connect the Throttle Body harness connector.

Turn the ignition on.

With the DRB III®, monitor the TP Sensor #1 or #2 voltage.

Connect a jumper wire between the Sensor Ground circuit and the TP Sensor #1 Signal circuit.

TP Sensor #1 voltage should change from approximately 4.5 volts to 0.5 of a volt?

For TP Sensor #2, connect a jumper wire between 5-volt supply circuit and the TP Sensor #2 signal circuit.

TP Sensor #2 voltage should change from approximately 0 volts to 5.0 volts?

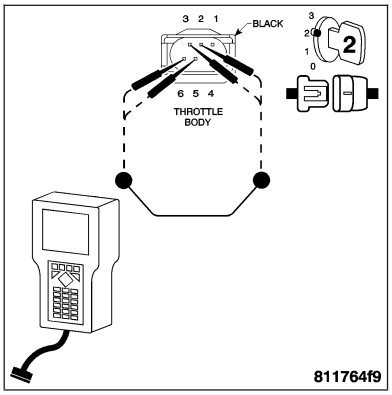

Note: Remove the jumper wire before continuing.

Is the voltage reading within the listed specifications?

Yes >> Replace the Throttle Body Assembly. **Refer to Page 14-48**.
Perform POWERTRAIN VERIFICATION TEST - VER 2.

No >> Go To 3

3. TP SENSOR #1 AND #2 SIGNAL CIRCUIT SHORTED TO BATTERY VOLTAGE

Turn the ignition off.

Disconnect the PCM C3 harness connector.

Disconnect the Throttle Body Assembly harness connector.

Note: Check connectors — Clean/repair as necessary.

Turn the ignition on.

Measure the voltage on the TP #1 Signal and the TP #2 Signal circuits at the Throttle Body harness connector.

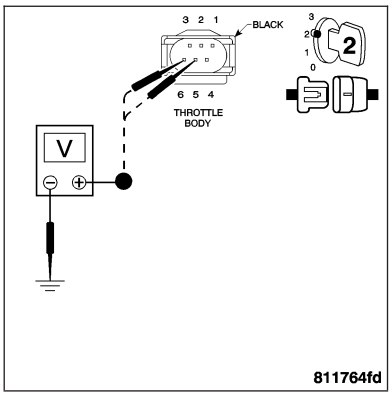

Is the voltage above 1.0 volts?

Yes >> Repair the short to voltage in the TP #1 or TP #2 Signal circuit.
Perform POWERTRAIN VERIFICATION TEST - VER 2.

No >> Go To 4

(P0120) ELECTRONIC THROTTLE CONTROL MOTOR PERFORMANCE — CONTINUED

4. RESISTANCE IN THE #1 AND #2 TP SENSOR SIGNAL CIRCUITS

Turn the ignition off.

Measure the resistance of the TP Sensor #1 Signal circuit and TP Sensor #2 Signal circuit from the Throttle Body harness connector to the PCM harness connector.

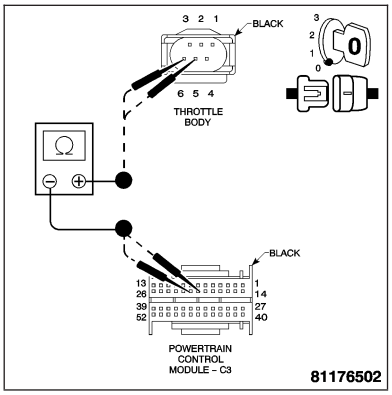

Is the resistance below 5.0 ohms?

Yes >> Go To 5

No >> Repair the excessive resistance in the or TP Sensor Signal circuit.
Perform POWERTRAIN VERIFICATION TEST - VER 2.

5. RESISTANCE BETWEEN GROUND AND THE TP SENSOR SIGNAL CIRCUIT

With the ignition off.

Measure the resistance between ground and the TP Sensor #1 Signal circuit and TP Sensor #2 Signal circuit at the Throttle Body harness connector.

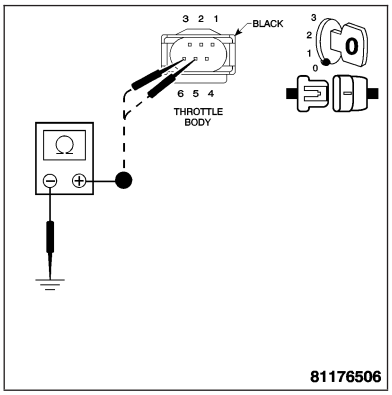

Is the resistance below 100 ohms?

Yes >> Repair the short to ground in the Sensor #1 or Sensor #2 TP Sensor Signal circuit.
Perform POWERTRAIN VERIFICATION TEST - VER 2.

No >> Go To 6

6. RESISTANCE IN THE 5-VOLT SUPPLY CIRCUIT

With the ignition off.

Measure the resistance of the 5-Volt Supply circuit from the Throttle Body harness connector to the PCM harness connector.

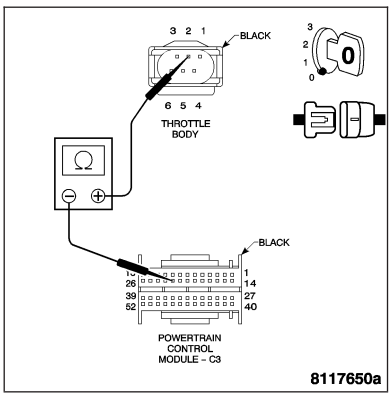

Is the resistance below 5.0 ohms?

Yes >> Go To 7

No >> Repair the excessive resistance in the 5-Volt Supply circuit.
Perform POWERTRAIN VERIFICATION TEST - VER 2.

(P0120) ELECTRONIC THROTTLE CONTROL MOTOR PERFORMANCE — CONTINUED

7. RESISTANCE TO GROUND IN THE 5-VOLT SUPPLY CIRCUIT

With the ignition off.
Measure the resistance between ground and the 5-Volt Supply circuit.

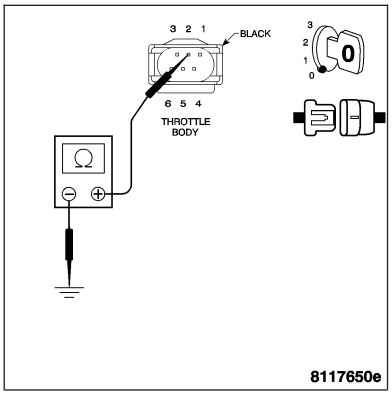

Is the resistance below 100 ohms?

Yes >> Repair the short to ground in the 5-Volt Supply circuit. Perform POWERTRAIN VERIFICATION TEST - VER 2.

No >> Go To 8

8. OPEN SENSOR GROUND CIRCUIT

With the ignition off.
Measure the resistance of the Sensor Ground circuit from the Throttle Body harness connector to the PCM harness connector.

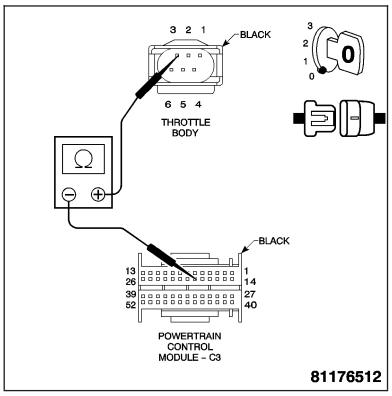

Is the resistance below 5.0 ohms?

Yes >> Go To 9

No >> Repair the Sensor Ground circuit for an open. Perform POWERTRAIN VERIFICATION TEST - VER 2.

9. TP SENSOR #1 SIGNAL CIRCUIT SHORTED TO TP SENSOR #2 SIGNAL CIRCUIT

With the ignition off.
Measure the resistance of the TP Sensor #1 Signal circuit and the TP Sensor #2 Signal circuit at the Throttle Body harness connector.

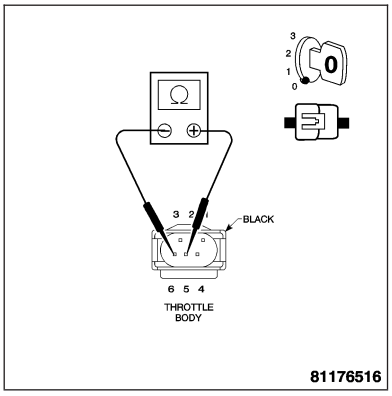

Is the resistance below 5.0 ohms?

Yes >> Repair the short between the TP Sensor #2 Signal circuit and the TP Sensor #1 Signal circuit. Perform POWERTRAIN VERIFICATION TEST - VER 2.

No >> Go To 10

(P0120) ELECTRONIC THROTTLE CONTROL MOTOR PERFORMANCE — CONTINUED

10. PCM

Note: Before continuing, check the PCM harness connector terminals for corrosion, damage, or terminal push out. Repair as necessary.
Using the schematics as a guide, inspect the wire harness and connectors. Pay particular attention to all Power and Ground circuits.

If there are no possible causes remaining, review repair.

Repair >> Replace and program the Powertrain Control Module. **Refer to Page 8E-56**.
Perform POWERTRAIN VERIFICATION TEST - VER 2.

11. TP SENSOR SWEEP

With the ignition on.
With the DRB III®, monitor the APPS TP Sensor #1 or #2 voltage.
Slowly depress the Pedal from the idle position to the wide open throttle position.
The voltage for TP Sensor #1 should start at approximately 0.8 of a volt and increase to above 4.2 volts.
The voltage for TP Sensor #2 should start at approximately 4.2 volts and decrease to approximately 0.8 of a volt.

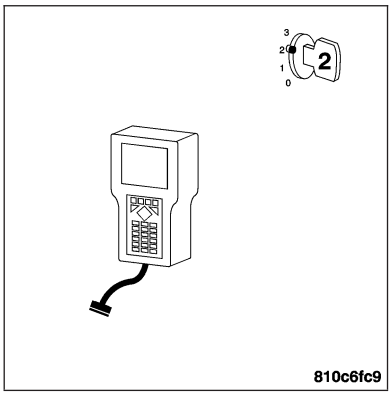

Is the voltage within the range of the listed specification for the appropriate TP Sensor?

Yes >> Go To 12

No >> Replace the Throttle Body Assembly. **Refer to Page 14-48**.
Perform POWERTRAIN VERIFICATION TEST - VER 2.

12. INTERMITTENT WIRING AND CONNECTORS

The condition that caused this DTC to set is currently not present. Inspect the related wiring harness for a possible intermittent condition.

Note: Check connectors — Clean/repair as necessary. Poor pin to terminal connections can set DTCs.

Note: Check for any Technical Service Bulletins that may apply.
Using the wiring diagram/schematic as a guide, inspect the wiring and connectors specific to this DTC. Wiggle the wires while checking for shorts and open circuits.

Were there any problems found?

Yes >> Repair as necessary.
Perform POWERTRAIN VERIFICATION TEST - VER 2.

No >> The condition that caused this DTC to set is currently not present. Inspect the related wiring harness for a possible intermittent condition.

(P0120) THROTTLE POSITION SENSOR 1/2 CORRELATION

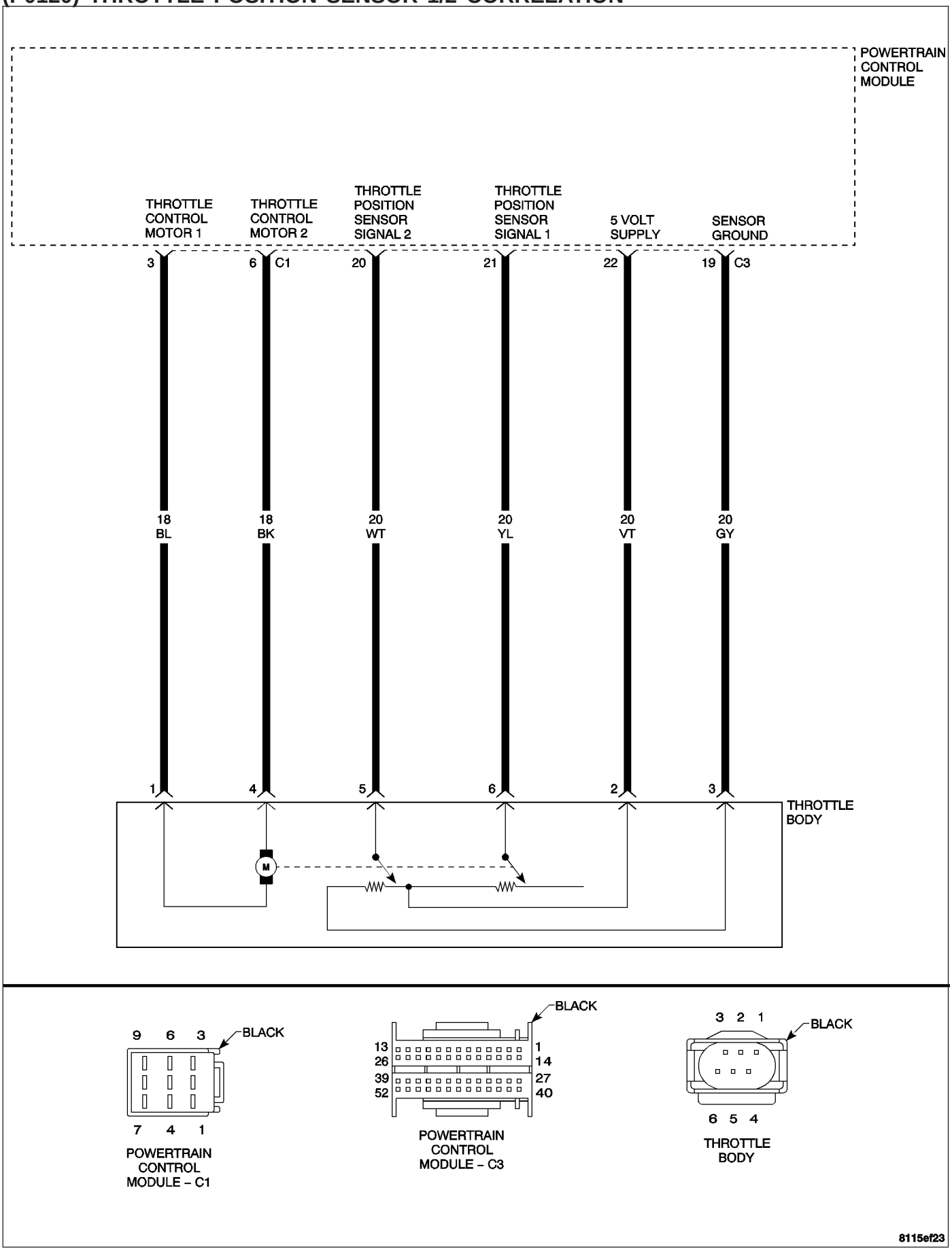

(P0120) THROTTLE POSITION SENSOR 1/2 CORRELATION — CONTINUED

When Monitored and Set Condition

- When Monitored: Ignition on with no MAP Sensor DTCs set.
- Set Condition: TP Sensor signals in the Throttle Body Assembly do not correlate to the MAP Sensor signal.

POSSIBLE CAUSES
THROTTLE POSITION SENSOR SWEEP
THROTTLE POSITION SENSOR SIGNAL CIRCUIT SHORTED TO VOLTAGE
THROTTLE POSITION SENSOR SIGNAL CIRCUIT OPEN
THROTTLE POSITION SENSOR GROUND CIRCUIT OPEN
5-VOLT SUPPLY CIRCUIT SHORTED TO GROUND
5-VOLT SUPPLY CIRCUIT OPEN
THROTTLE POSITION SENSOR #1 SIGNAL CIRCUIT SHORTED TO THROTTLE POSITION SENSOR #2 SIGNAL CIRCUIT
THROTTLE BODY ASSEMBLY
POWERTRAIN CONTROL MODULE

Diagnostic Test

1. CHECK FOR CURRENT DTC

Turn the ignition on.

With the DRB III®, read the PCM DTCs.

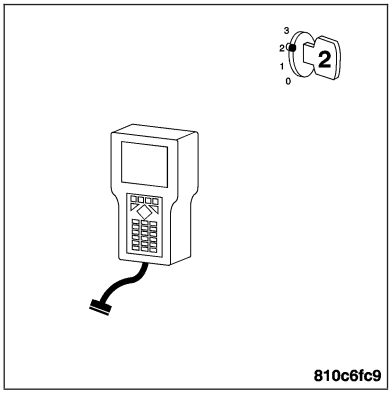

Is this DTC present?

Yes >> For complete diagnosis of this DTC, refer to (P0120) ELECTRONIC THROTTLE CONTROL MOTOR PERFORMANCE.

No >> Go To 2

2. INTERMITTENT WIRING AND CONNECTORS

The conditions necessary to set this DTC are not present at this time.

Note: Check connectors — Clean/repair as necessary. Poor pin to terminal connections can set DTCs.Using the wiring diagram/schematic as a guide, inspect the wiring and connectors specific to this DTC. Wiggle the wires while checking for shorts and open circuits.

Note: Check for any Technical Service Bulletins that may apply.

Were there any problems found?

Yes >> Repair as necessary.
Perform POWERTRAIN VERIFICATION TEST - VER 2.

No >> The condition that caused this DTC to set is currently not present. Inspect the related wiring harness for a possible intermittent condition.

(P0121) APPS 5-VOLT SUPPLY CIRCUIT

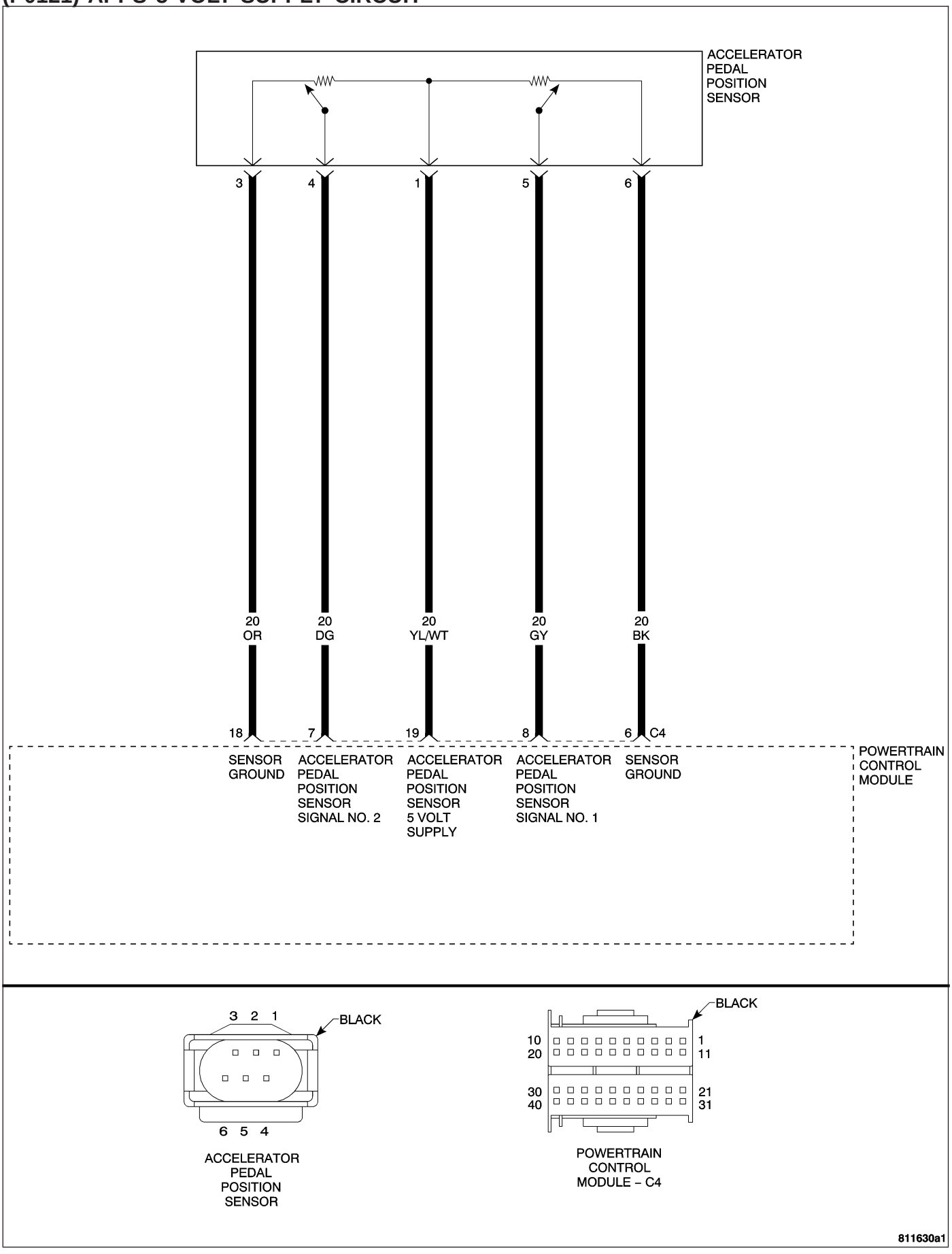

(P0121) APPS 5-VOLT SUPPLY CIRCUIT — CONTINUED

When Monitored and Set Condition

- When Monitored: Ignition on.
- Set Condition: When the PCM recognizes the APPS 5-Volt Supply circuit voltage is below 1.0 volt or higher than 5.2 volts.

POSSIBLE CAUSES
ACCELERATOR PEDAL POSITION SENSOR 5-VOLT SUPPLY SHORTED TO (B+)
ACCELERATOR PEDAL POSITION SENSOR 5-VOLT SUPPLY SHORTED TO GROUND
ACCELERATOR PEDAL POSITION SENSOR 5-VOLT SUPPLY CIRCUIT OPEN
ACCELERATOR PEDAL POSITION SENSOR
POWERTRAIN CONTROL MODULE

For a complete Powertrain Control Module Circuit Diagram, **Refer to Page 9-574**.

Diagnostic Test

1. CHECK FOR CURRENT DTC

Note: If the PCM detects and stores a DTC, the PCM also stores the engine/vehicle operating conditions under which the DTC was set. Some of these conditions are displayed on the DRB III® at the same time the DTC is displayed.

Note: Before erasing stored DTCs, record these conditions. Attempting to duplicate these conditions may assist when checking for a DTC.

Turn the ignition on.

With the DRB III®, erase PCM DTCs.

Note: It maybe necessary to road test the vehicle for this DTC to set.

With the DRB III®, read the PCM DTCs.

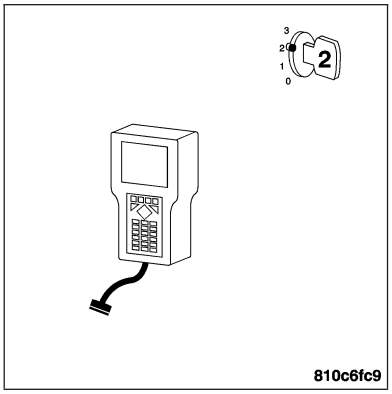

Did this DTC set again?

Yes >> Go To 2

No >> Go To 6

2. APPS 5-VOLT SUPPLY SHORTED TO GROUND

Turn the ignition off.

Disconnect the PCM harness connectors.

Disconnect the APPS Sensor.

Note: Check connectors — Clean/repair as necessary.

Measure the resistance between ground and the APPS 5-Volt Supply circuit.

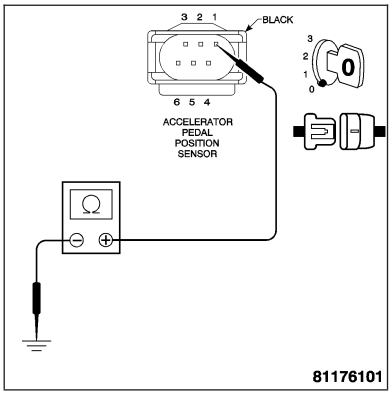

Is the resistance below 100 ohms?

Yes >> Repair the short to ground in the APPS 5-Volt Supply circuit.
Perform POWERTRAIN VERIFICATION TEST - VER 2.

No >> Go To 3

(P0121) APPS 5-VOLT SUPPLY CIRCUIT — CONTINUED

3. APPS 5-VOLT SUPPLY SHORTED TO (B+)

Turn the ignition on.

Measure the voltage between ground and the APPS 5-Volt Supply circuit at the APPS harness connector.

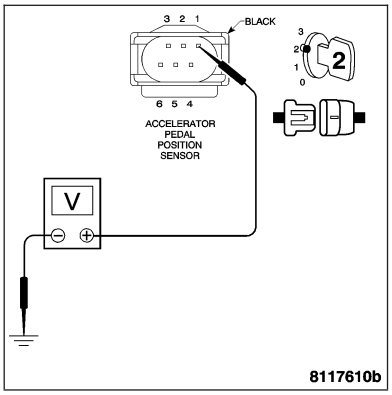

Is the voltage above 5.2 volts?

Yes >> Repair the APPS 5-Volt Supply circuit short to B(+).
Perform POWERTRAIN VERIFICATION TEST - VER 2.

No >> Go To 4

4. OPEN APPS 5-VOLT SUPPLY

Turn the ignition off.

Measure the resistance of the APPS 5-Volt Supply circuit from the APPS harness connector to the PCM harness connector.

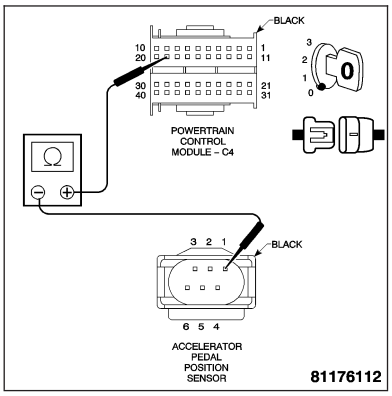

Is the resistance below 5.0 ohms?

Yes >> Go To 5

No >> Repair the APPS 5-Volt Supply circuit for an open.
Perform POWERTRAIN VERIFICATION TEST - VER 2.

5. APPS

With the ignition off.

Connect the PCM harness connectors.

Turn the ignition on.

Measure the voltage between ground and the APPS 5-Volt Supply circuit Signal circuit at the APPS harness connector.

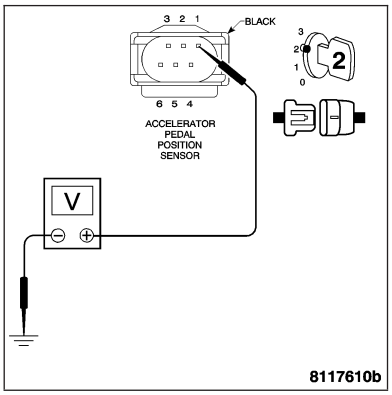

Is the voltage above 4.6 volts?

Yes >> Replace the APPS. **Refer to Page 14-26**.
Perform POWERTRAIN VERIFICATION TEST - VER 2.

No >> Replace and program the Powertrain Control Module. **Refer to Page 8E-56**.
Perform POWERTRAIN VERIFICATION TEST - VER 2.

(P0121) APPS 5-VOLT SUPPLY CIRCUIT — CONTINUED

6. INTERMITTENT WIRING AND CONNECTORS

The condition that caused this DTC to set is currently not present. Inspect the related wiring harness for a possible intermittent condition.

Note: Check connectors — Clean/repair as necessary. Poor pin to terminal connections can set DTC's.

Note: Check for any Technical Service Bulletins that may apply.
Using the wiring diagram/schematic as a guide, inspect the wiring and connectors specific to this DTC. Wiggle the wires while checking for shorts and open circuits.

Were there any problems found?

Yes >> Repair as necessary.
Perform POWERTRAIN VERIFICATION TEST - VER 2.

No >> The condition that caused this DTC to set is currently not present. Inspect the related wiring harness for a possible intermittent condition.

(P0122) APPS SIGNAL #1 CIRCUIT LOW

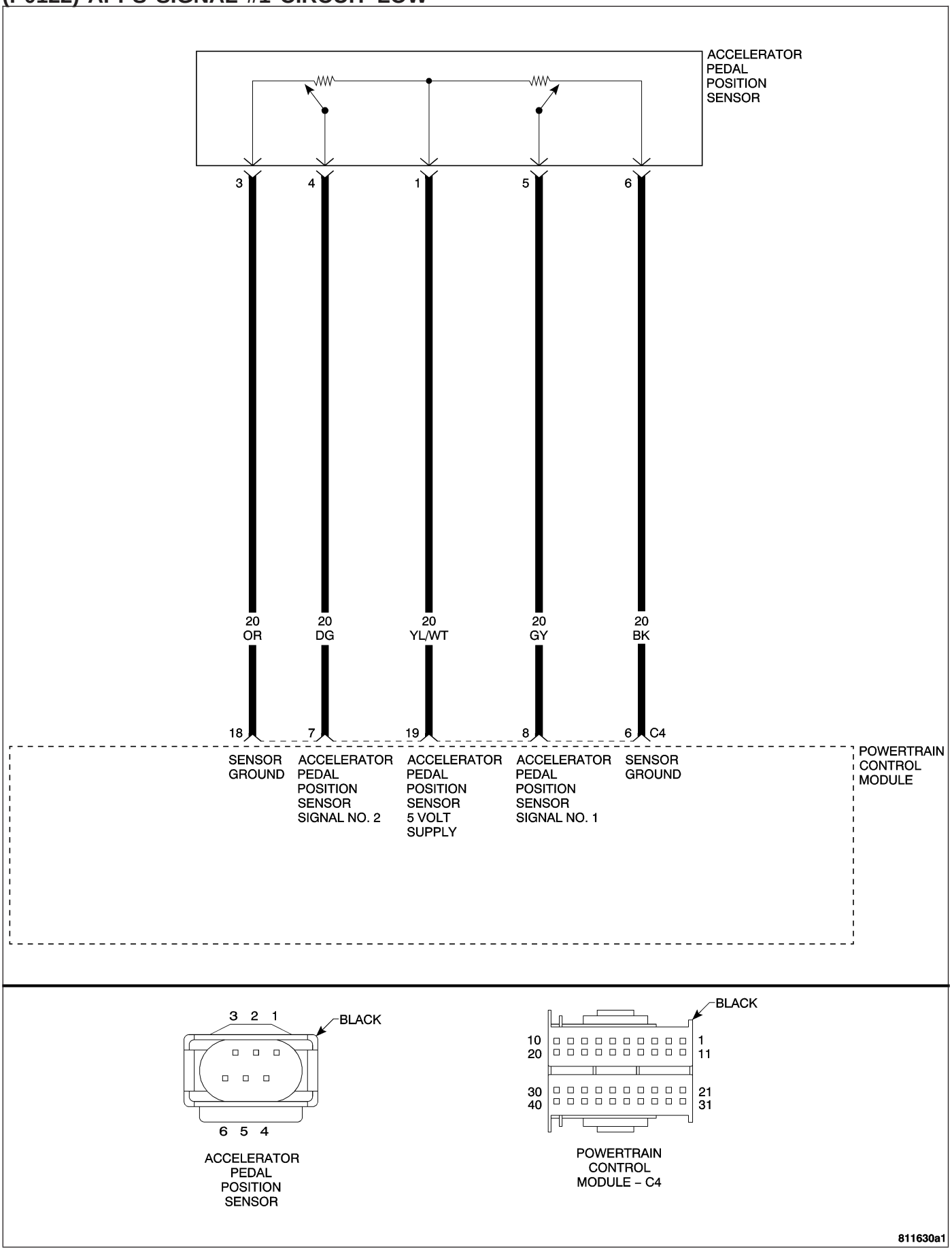

(P0122) APPS SIGNAL #1 CIRCUIT LOW — CONTINUED

When Monitored and Set Condition

- When Monitored: With the ignition on and no other Accelerator Pedal Position Sensor (APPS) #1 DTCs present.
- Set Condition: When the APPS #1 voltage is too low. Engine will only idle if the Brake pedal is pressed or has failed. Acceleration rate and Engine output are limited.

POSSIBLE CAUSES
ACCELERATOR PEDAL POSITION SENSOR (APPS) #1 SWEEP
5-VOLT SUPPLY CIRCUIT OPEN
5-VOLT SUPPLY CIRCUIT SHORTED TO GROUND
ACCELERATOR PEDAL POSITION SENSOR #1 SIGNAL CIRCUIT OPEN
ACCELERATOR PEDAL POSITION SENSOR #1 SIGNAL CIRCUIT SHORTED TO GROUND
ACCELERATOR PEDAL POSITION SENSOR #1 SIGNAL CIRCUIT SHORTED TO SENSOR RETURN CIRCUIT
ACCELERATOR PEDAL POSITION SENSOR
POWERTRAIN CONTROL MODULE

For a complete Powertrain Control Module Circuit Diagram **Refer to Page 9-574**.

Diagnostic Test

1. APPS BELOW 0.25 OF A VOLT

Turn the ignition on.
With the DRB III®, read the APPS #1 voltage.

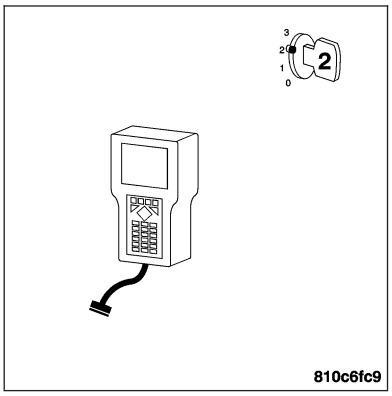

Is the voltage below 0.25 of a volt?

Yes >> Go To 2
No >> Go To 9

2. 5-VOLT SUPPLY CIRCUIT

Turn the ignition off.
Disconnect the APPS harness connector.

Note: Check connectors — Clean/repair as necessary.
Turn the ignition on.
Measure the voltage of the 5-Volt Supply circuit at the APPS harness connector.

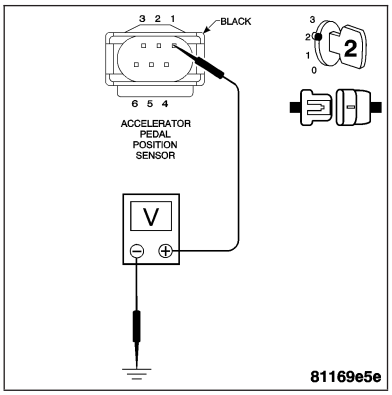

Is the voltage between 4.5 and 5.2 volts?

Yes >> Go To 3
No >> Go To 6

(P0122) APPS SIGNAL #1 CIRCUIT LOW — CONTINUED

3. APPS

With the ignition on.

Connect a jumper wire between the 5-Volt Supply circuit and the APPS #1 Signal circuit in the Sensor harness connector.

With the DRB III®, monitor the APPS #1 voltage.

Note: Remove the jumper wire after this step has been completed.

Is the voltage above 4.5 volts?

Yes >> Replace the APPS in accordance with the Service Information. **Refer to Page 14-26**.
Perform POWERTRAIN VERIFICATION TEST - VER 2.

No >> Go To 4

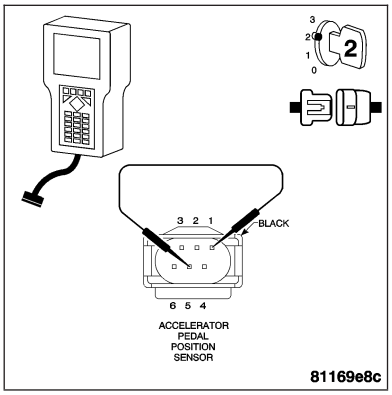

4. APPS #1 SIGNAL CIRCUIT OPEN

Turn the ignition off.

Disconnect the PCM C4 harness connectors.

Note: Check connectors — Clean/repair as necessary.
Measure the resistance of the APPS #1 Signal circuit from the APPS harness connector to the PCM C4 harness connector terminal.

Is the resistance below 5.0 ohms?

Yes >> Go To 5

No >> Repair the APPS #1 Signal circuit for an open.
Perform POWERTRAIN VERIFICATION TEST - VER 2.

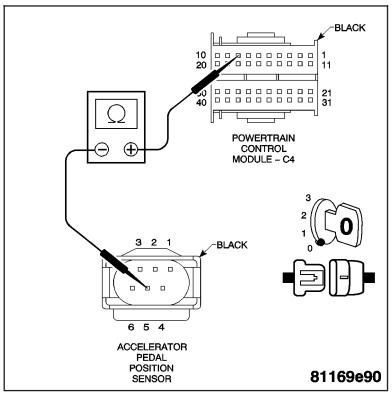

5. APPS SIGNAL CIRCUIT SHORTED TO GROUND

With the ignition off.

Measure the resistance between ground and the APPS #1 Signal circuit.

Is the resistance below 100 ohms?

Yes >> Repair the APPS #1 Signal circuit for a short to ground.
Perform POWERTRAIN VERIFICATION TEST - VER 2.

No >> Go To 8

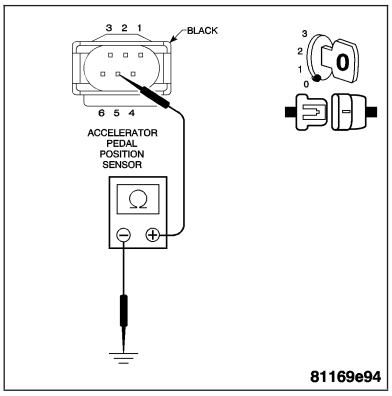

(P0122) APPS SIGNAL #1 CIRCUIT LOW — CONTINUED

6. 5-VOLT SUPPLY CIRCUIT OPEN

CAUTION: Do not probe the PCM harness connectors. Probing the PCM harness connectors will damage the PCM terminals resulting in poor terminal to pin connection. Perform diagnosis by back probing the terminals of each connector.

With the ignition on.

Measure the resistance of the 5-Volt Supply circuit from the APPS Sensor harness connector to the PCM C4 harness connector.

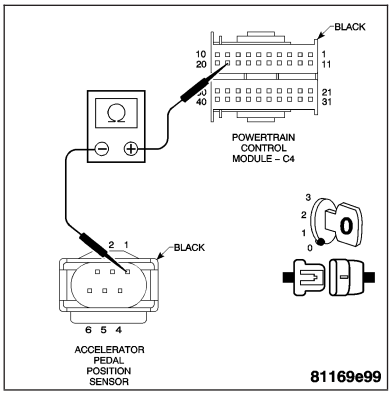

Is the resistance below 5.0 ohms?

Yes >> Go To 7

No >> Repair the 5-Volt Supply circuit for an open.
Perform POWERTRAIN VERIFICATION TEST - VER 2.

7. 5-VOLT SUPPLY CIRCUIT SHORTED TO GROUND

With the ignition on.

Measure the resistance between ground and the 5-Volt Supply circuit.

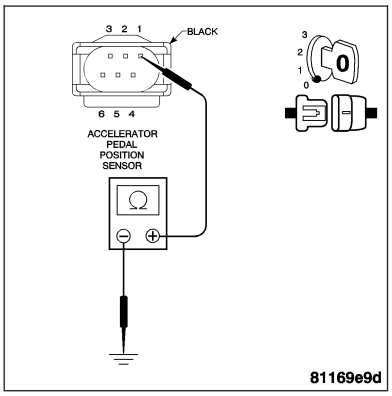

Is the resistance below 100 ohms?

Yes >> Repair the 5-Volt Supply circuit for a short to ground.
Perform POWERTRAIN VERIFICATION TEST - VER 2.

No >> Go To 8

8. PCM

Note: Before continuing, check the PCM harness connector terminals for corrosion, damage, or terminal push out. Repair as necessary.

Using the schematics as a guide, inspect the wire harness and connectors. Pay particular attention to all Power and Ground circuits.

If there are no possible causes remaining, view repair.

Repair >> Replace and program the Powertrain Control Module in accordance with the Service Information. **Refer to Page 8E-56**.
Perform POWERTRAIN VERIFICATION TEST - VER 2.

(P0122) APPS SIGNAL #1 CIRCUIT LOW — CONTINUED

9. APPS SWEEP

With the ignition on.

With the DRB III®, monitor the APPS #1 voltage.

Slowly open the throttle from the idle position to the wide open throttle position.

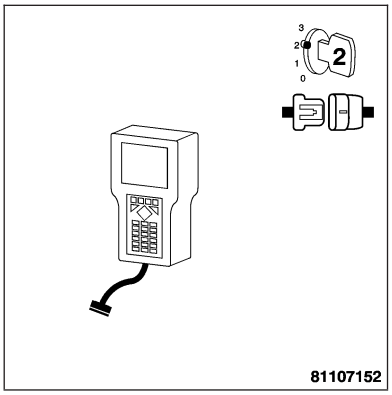

Does voltage start at approximately 0.25 of a volt and go above 4.0 volts with a smooth transition?

Yes >> Go To 10
Perform POWERTRAIN VERIFICATION TEST - VER 2.

No >> Replace the APPS in accordance with the Service Information. **Refer to Page 14-26**.
Perform POWERTRAIN VERIFICATION TEST - VER 2.

10. INTERMITTENT WIRING AND CONNECTORS

The condition that caused this DTC to set is currently not present. Inspect the related wiring harness for a possible intermittent condition.

Note: Check connectors — Clean/repair as necessary. Poor pin to terminal connections can set DTC's.

Note: Check for any Technical Service Bulletins that may apply.

Using the wiring diagram/schematic as a guide, inspect the wiring and connectors specific to this DTC. Wiggle the wires while checking for shorts and open circuits.

Were there any problems found?

Yes >> Repair as necessary.
Perform POWERTRAIN VERIFICATION TEST - VER 2.

No >> The condition that caused this DTC to set is currently not present. Inspect the related wiring harness for a possible intermittent condition.

(P0123) APPS SIGNAL #1 CIRCUIT HIGH

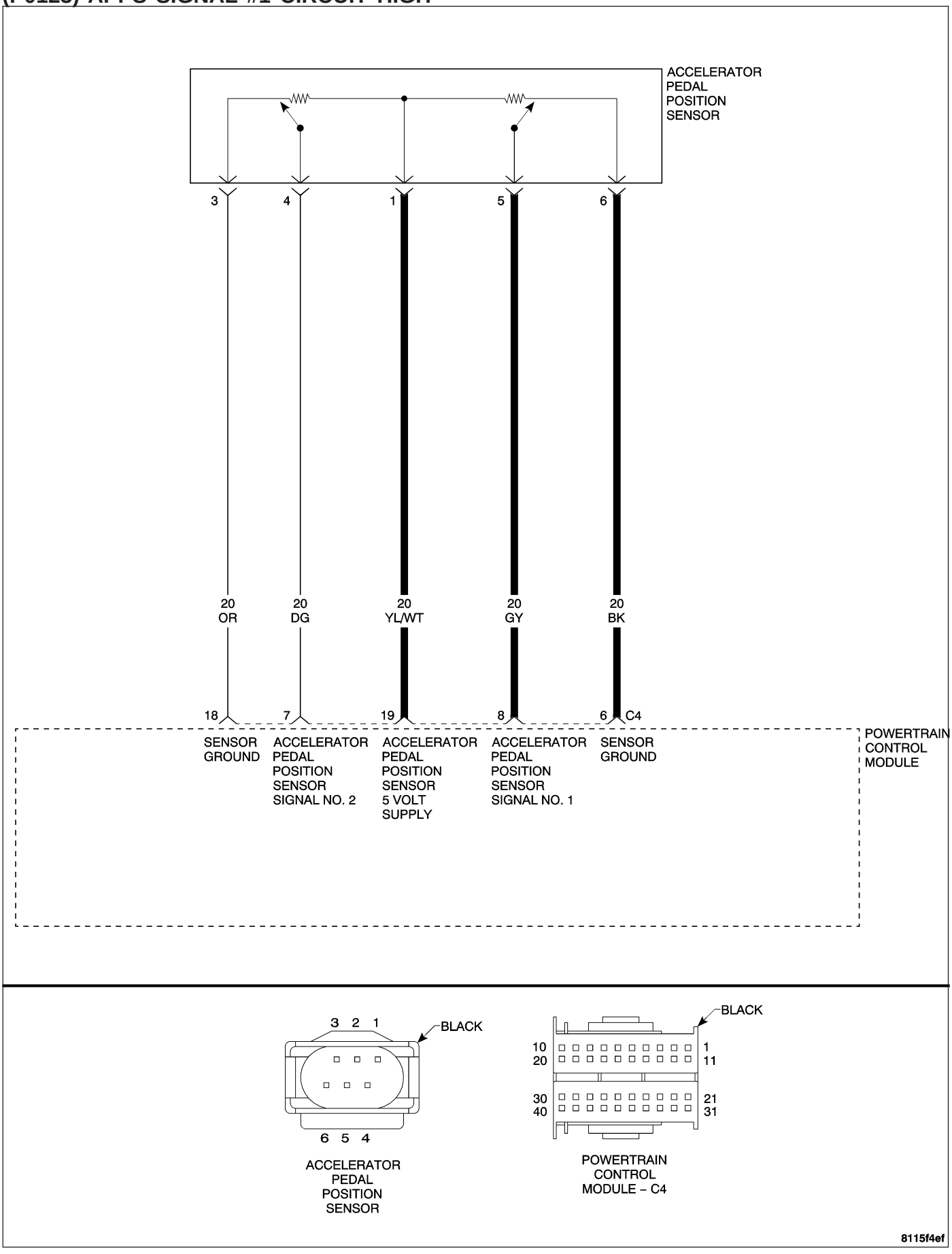

(P0123) APPS SIGNAL #1 CIRCUIT HIGH — CONTINUED

When Monitored and Set Condition

- When Monitored: With the ignition on and no other Accelerator Pedal Position Sensor (APPS) #1 DTCs present.
- Set Condition: When APPS #1 voltage is too high. Engine will only idle if the Brake pedal is pressed or has failed. Acceleration rate and Engine output are limited.

POSSIBLE CAUSES
INTERMITTENT CONDITION
ACCELERATOR PEDAL POSITION SENSOR #1 SWEEP
ACCELERATOR PEDAL POSITION SENSOR #1 SIGNAL CIRCUIT SHORTED TO VOLTAGE
ACCELERATOR PEDAL POSITION SENSOR #1 SIGNAL SHORTED TO 5-VOLT SUPPLY CIRCUIT
ACCELERATOR PEDAL POSITION SENSOR #1 GROUND CIRCUIT OPEN
ACCELERATOR PEDAL POSITION SENSOR (APPS) #1
POWERTRAIN CONTROL MODULE

For a complete Powertrain Control Module Circuit Diagram **Refer to Page 9-574**.

Diagnostic Test

1. APPS #1 VOLTAGE ABOVE 3.5 VOLTS

Turn the ignition on.
With the DRB III® in Sensors, read the APPS voltage.

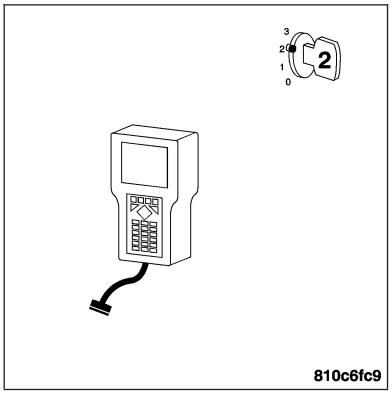

Is the voltage above 3.5 volts?

Yes >> Go To 2

No >> Go To 7

2. APPS

Turn the ignition off.
Disconnect the APPS harness connector.

Note: Check connectors — Clean/repair as necessary.
Turn the ignition on.
Connect a jumper wire between the APPS 5-Volt Supply circuit and the APPS Signal #1 circuit at the APPS harness connector.
With the DRB III®, monitor the APPS #1 voltage.

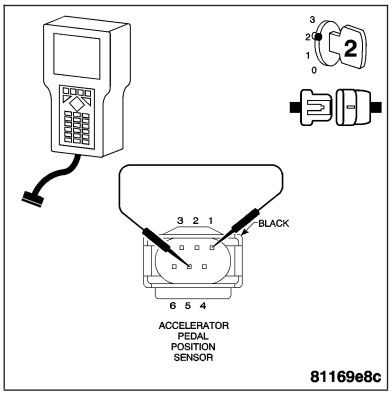

Is the voltage below 2.0 volts?

Yes >> Replace the Accelerator Pedal Position Sensor. **Refer to Page 14-26**.
Perform POWERTRAIN VERIFICATION TEST - VER 2.

No >> Go To 3

(P0123) APPS SIGNAL #1 CIRCUIT HIGH — CONTINUED

3. APPS #1 SIGNAL CIRCUIT SHORTED TO VOLTAGE

Turn the ignition off.

Disconnect the PCM C4 harness connector.

Note: Check connectors — Clean/repair as necessary.

Turn the ignition on.

Measure the voltage of the APPS #1 Signal circuit at the APPS harness connector.

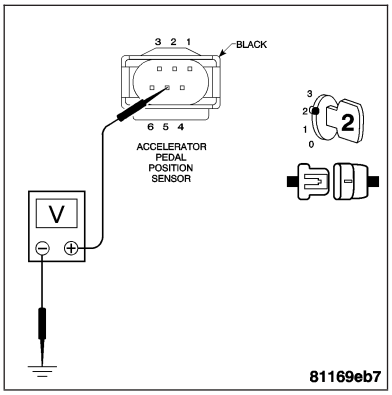

Is the voltage above 1.0 volt?

Yes >> Repair the APPS #1 Signal circuit for a short to voltage.
Perform POWERTRAIN VERIFICATION TEST - VER 2.

No >> Go To 4

4. APPS #1 SIGNAL CIRCUIT SHORTED TO 5-VOLT SUPPLY CIRCUIT

Turn the ignition off.

Measure the resistance of the APPS #1 Signal circuit and the 5-Volt Supply circuit at the APPS harness connector.

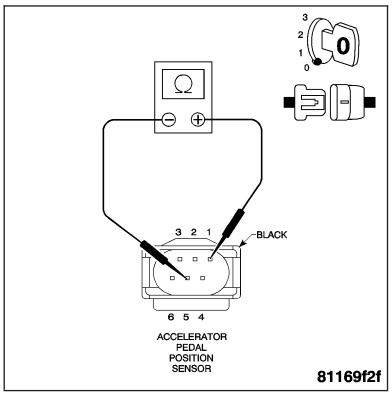

Is the resistance below 100 ohms?

Yes >> Repair the APPS #1 Signal circuit for a short to the 5-Volt Supply circuit.
Perform POWERTRAIN VERIFICATION TEST - VER 2.

No >> Go To 5

5. OPEN APPS #1 GROUND CIRCUIT

With the ignition off.

Measure the resistance of the APPS #1 Ground circuit from the APPS harness connector to the PCM C4 harness connector.

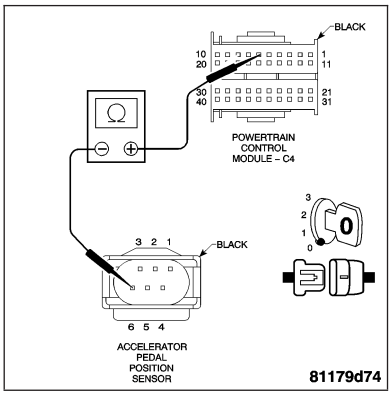

Is the resistance below 5.0 ohms?

Yes >> Go To 6

No >> Repair the APPS #1 Ground circuit for an open.
Perform POWERTRAIN VERIFICATION TEST - VER 2.

(P0123) APPS SIGNAL #1 CIRCUIT HIGH — CONTINUED

6. PCM

Note: Before continuing, check the PCM harness connector terminals for corrosion, damage, or terminal push out. Repair as necessary.
Using the schematics as a guide, inspect the wire harness and connectors. Pay particular attention to all Power and Ground circuits.

If there are no possible causes remaining, view repair.

Repair >> Replace and program the Powertrain Control Module. **Refer to Page 8E-56**.
Perform POWERTRAIN VERIFICATION TEST - VER 2.

7. APPS #1 SWEEP

With the ignition on.
With the DRB III®, monitor the APPS #1 voltage.
Slowly open the throttle from the idle position to the wide open throttle position.

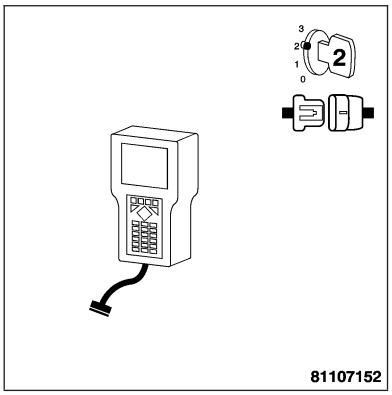

Does voltage start at approximately 0.1 of a volt and go above 2.5 volts with a smooth transition?

Yes >> Go To 8

No >> Replace the Accelerator Pedal Position Sensor. **Refer to Page 14-26**.
Perform POWERTRAIN VERIFICATION TEST - VER 2.

8. INTERMITTENT WIRING AND CONNECTORS

The condition that caused this DTC to set is currently not present. Inspect the related wiring harness for a possible intermittent condition.

Note: Check connectors — Clean/repair as necessary. Poor pin to terminal connections can set DTCs.

Note: Check for any Technical Service Bulletins that may apply.
Using the wiring diagram/schematic as a guide, inspect the wiring and connectors specific to this DTC. Wiggle the wires while checking for shorts and open circuits.

Were there any problems found?

Yes >> Repair as necessary.
Perform POWERTRAIN VERIFICATION TEST - VER 2.

No >> The condition that caused this DTC to set is currently not present. Inspect the related wiring harness for a possible intermittent condition.

(P0128) FORCED LIMITED POWER EXCESSIVE HIGH COOLANT TEMP

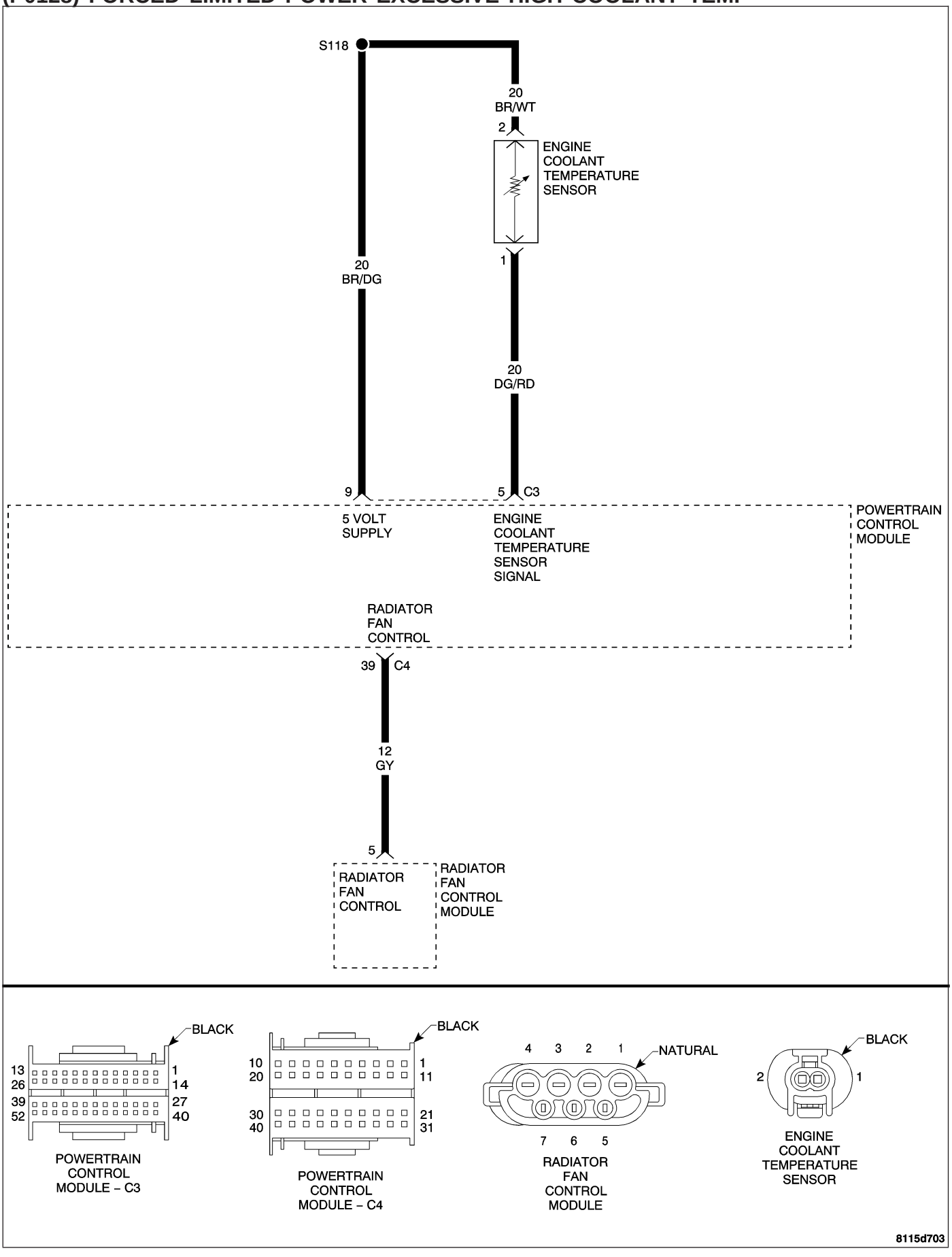

(P0128) FORCED LIMITED POWER EXCESSIVE HIGH COOLANT TEMP — CONTINUED

When Monitored and Set Condition

- When Monitored: With the ignition on engine running.
- Set Condition: The Engine Coolant Temperature (ECT) Sensor exceeds 130° C (265° F) at the PCM. One trip Fault

POSSIBLE CAUSES
ENGINE COOLANT TEMPERATURE (ECT) SENSOR
RADIATOR FAN CONTROL MODULE
RADIATOR FAN
LOW COOLANT LEVEL
THERMOSTAT OPERATION
POWERTRAIN CONTROL MODULE

For a complete Powertrain Control Module Circuit Diagram, **Refer to Page 9-574**.

Diagnostic Test

1. LOW COOLANT LEVEL

Note: If any ECT or Radiator Fan Control Module DTCs have set along with this DTC, diagnose them first before continuing.

Note: If a Engine Coolant Temperature (ECT) DTC is set along with this code, diagnose the ECT DTC first.

Note: Inspect the ECT terminals and related PCM terminals. Ensure the terminals are free from corrosion and damage.

Note: The best way to diagnose this DTC is to allow the vehicle to sit overnight outside in order to have a totally cold soaked engine.

WARNING: NEVER OPEN THE COOLING SYSTEM WHEN THE ENGINE IS HOT. THE SYSTEM IS UNDER PRESSURE. EXTREME BURNS OR SCALDING MAY RESULT. ALLOW THE ENGINE TO COOL BEFORE OPENING THE COOLING SYSTEM.

Check the coolant system to make sure that the coolant is in good condition and at the proper level.

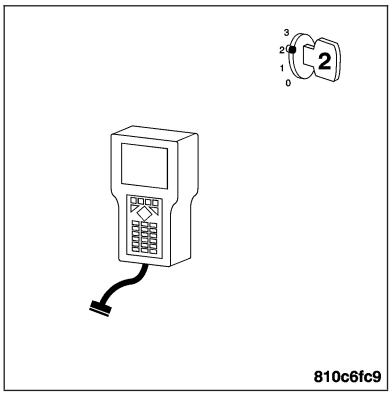

Is the coolant level and condition OK?

Yes >> Go To 2

No >> Inspect the vehicle for a coolant leak and add the necessary amount of coolant.
Perform POWERTRAIN VERIFICATION TEST VER - 2.

(P0128) FORCED LIMITED POWER EXCESSIVE HIGH COOLANT TEMP — CONTINUED

2. THERMOSTAT OPERATION

Note: This test works best if performed on a cold engine (cold soak).
Turn the ignition on.

With the DRBIII®, read the ECT Deg value. If the engine was allowed to sit overnight (cold soak), the temperature value should be a sensible value that is somewhere close to the ambient temperature.

Note: If engine coolant temperature is above 82°C (180°F), allow the engine to cool until 65°C (150°F) is reached.
Start the Engine.

During engine warm-up, monitor the ECT Deg value. The temp deg value change should be a smooth transition from start up to normal operating temp 82°C (180°F). Also monitor the actual coolant temperature with a thermometer.

Note: As the engine warms up to operating temperature, the actual coolant temperature (thermometer reading) and the ECT Deg in the DRB III® sensor should stay relatively close to each other.
Using the appropriate service information, determine the proper opening temperature of the thermostat.

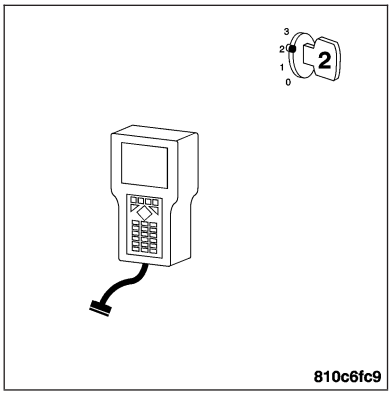

Did the thermostat open at the proper temperature?

Yes >> Go To 3

No >> Replace the thermostat. **Refer to Page 7-23**.
Perform POWERTRAIN VERIFICATION TEST VER - 2.

3. PCM

Note: Inspect the ECT terminals and related PCM terminals. Ensure the terminals are free from corrosion and damage.

Note: Before erasing stored DTCs, record these conditions. Attempting to duplicate these conditions may assist when checking for a DTC.
Turn the ignition on.

With the DRB III®, erase PCM DTCs.

Note: It maybe necessary to road test the vehicle for this DTC to set.
With the DRB III®, read the PCM DTCs.

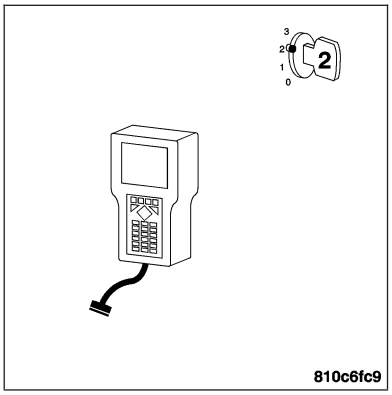

Did this DTC set again?

Yes >> Replace and program the Powertrain Control Module. **Refer to Page 8E-56**.
Perform POWERTRAIN VERIFICATION TEST VER - 2.

No >> Go To 4

(P0128) FORCED LIMITED POWER EXCESSIVE HIGH COOLANT TEMP — CONTINUED

4. INTERMITTENT WIRING AND CONNECTORS

The condition that caused this DTC to set is currently not present. Inspect the related wiring harness for a possible intermittent condition.

Note: Check connectors — Clean/repair as necessary. Poor pin to terminal connections can set DTC's.
Using the wiring diagram/schematic as a guide, inspect the wiring and connectors specific to this DTC. Wiggle the wires while checking for shorts and open circuits.

Note: Check for any Technical Service Bulletins that may apply.

Were there any problems found?

Yes >> Repair as necessary.
Perform POWERTRAIN VERIFICATION TEST - VER 2.

No >> The condition that caused this DTC to set is currently not present. Inspect the related wiring harness for a possible intermittent condition.

(P0128) THERMOSTAT RATIONALITY

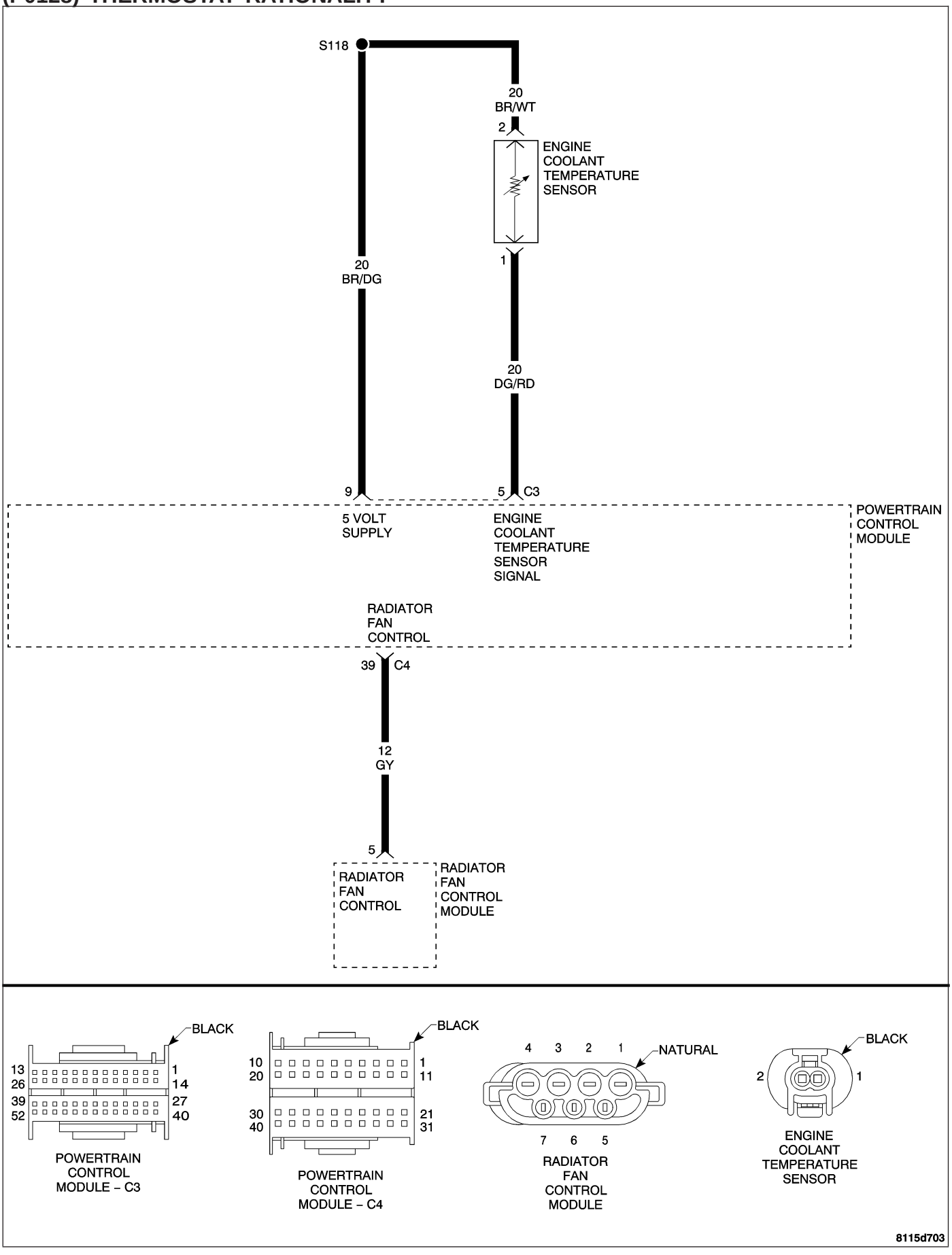

(P0128) THERMOSTAT RATIONALITY — CONTINUED

When Monitored and Set Condition

- When Monitored: With the engine running.
- Set Condition: The PCM predicts a coolant temperature value that it will compare to the actual coolant temperature. If the two coolant temperature values are not within 10°C (18°F) of each other an error is detected. Two Trip Fault.

POSSIBLE CAUSES
LOW COOLANT LEVEL
ENGINE COOLANT TEMPERATURE SIGNAL CIRCUIT SHORTED TO VOLTAGE
THERMOSTAT OPERATION
ENGINE COOLANT TEMPERATURE (ECT) SENSOR VOLTAGE BELOW 1.0 VOLT
ENGINE COOLANT TEMPERATURE SIGNAL CIRCUIT OPEN
ENGINE COOLANT TEMPERATURE SENSOR GROUND CIRCUIT OPEN
ENGINE COOLANT TEMPERATURE SIGNAL CIRCUIT SHORTED TO GROUND
ENGINE COOLANT TEMPERATURE SIGNAL CIRCUIT SHORTED TO SENSOR GROUND
POWERTRAIN CONTROL MODULE

For a complete Powertrain Control Module Circuit Diagram, **Refer to Page 9-574**.

Diagnostic Test

1. CHECK FOR CURRENT DTC

Note: If any ECT, CMP, IAT or CKP sensor DTCs have set along with P0128, diagnose them first before continuing.

Note: If the PCM detects and stores a DTC, the PCM also stores the engine/vehicle operating conditions under which the DTC was set. Some of these conditions are displayed on the DRB III® at the same time the DTC is displayed.

Note: Before erasing stored DTCs, record these conditions. Attempting to duplicate these conditions may assist when checking for an active DTC.

Turn the ignition on.

With the DRB III®, erase PCM DTCs.

Note: It maybe necessary to road test the vehicle for this DTC to set.

With the DRB III®, read the PCM DTCs.

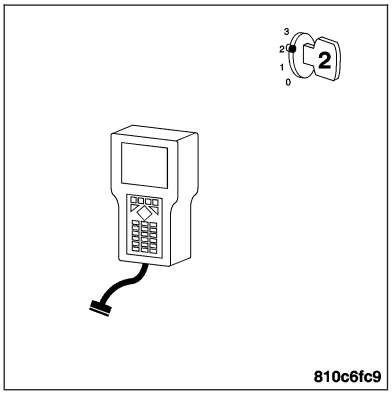

Did this DTC set again?

Yes >> Go To 2

No >> Go To 14

(P0128) THERMOSTAT RATIONALITY — CONTINUED

2. CHECKING THE COOLANT LEVEL AND CONDITION

WARNING: NEVER OPEN THE COOLING SYSTEM WHEN THE ENGINE IS HOT. THE SYSTEM IS UNDER PRESSURE. EXTREME BURNS OR SCALDING MAY RESULT. ALLOW THE ENGINE TO COOL BEFORE OPENING THE COOLING SYSTEM.

Note: If an Engine Coolant Temperature (ECT) DTC is set along with this code, diagnose the ECT DTC first.

Note: Inspect the ECT terminals and related PCM terminals. Ensure the terminals are free from corrosion and damage.

Note: The best way to diagnose this DTC is to allow the vehicle to sit overnight outside in order to have a totally cold soaked engine.

Note: Extremely cold outside ambient temperatures may have caused this DTC to set.
Check the coolant level and condition.

Is the coolant level and condition OK?

Yes >> Go To 3

No >> Locate and repair any coolant leaks and add the necessary amount of coolant. **Refer to Page 7-18**.
Perform POWERTRAIN VERIFICATION TEST - VER 2.

3. THERMOSTAT OPERATION

Note: This test works best if performed on a cold engine (cold soak).
With the ignition on.
With the DRB III®, read the ECT Deg value. If the engine was allowed to sit overnight (cold soak), the temperature value should be a sensible value that is somewhere close to the ambient temperature.

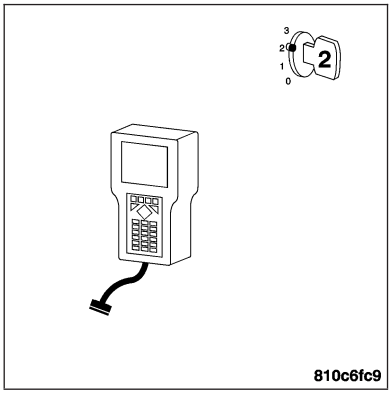

Note: If engine coolant temperature is above 82°C (180°F), allow the engine to cool until 65°C (150°F) is reached.
Start the Engine.
During engine warm-up, monitor the ECT Deg value. The temperature degree value change should be a smooth transition from start up to normal operating temp 82°C (180°F). Also monitor the actual coolant temperature with a thermometer.

Note: As the engine warms up to operating temperature, the actual coolant temperature (thermometer reading) and the ECT Deg in the DRB III® sensor should stay relatively close to each other.
Using the appropriate service information, determine the proper opening temperature of the thermostat.

Did the thermostat open at the proper temperature?

Yes >> Go To 4

No >> Replace the Thermostat in accordance with the Service Information. **Refer to Page 7-23** .
Perform POWERTRAIN VERIFICATION TEST - VER 2.

(P0128) THERMOSTAT RATIONALITY — CONTINUED

4. INTAKE AIR TEMP SENSOR OPERATION

With the ignition on.

With the DRB III®, read and record the IAT Sensor Temperature value

Using the DRB III® Temperature Probe #CH7050, measure the ambient air temperature near the IAT sensor.

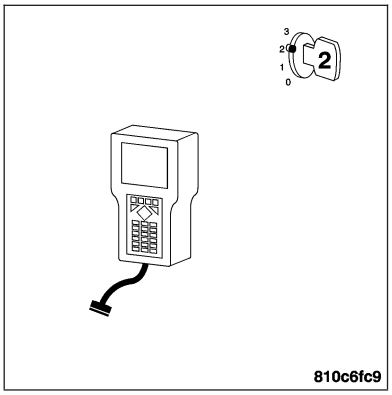

Is the IAT Sensor value within 15°C (5°F) of the temperature probe reading?

Yes >> Go To 5

No >> Go To 7

5. ECT SENSOR OPERATION

WARNING: MAKE SURE THE ENGINE COOLING SYSTEM IS COOL BEFORE REMOVING THE PRESSURE CAP OR ANY HOSE. SEVERE PERSONAL INJURY MAY RESULT FROM ESCAPING HOT COOLANT. THE COOLING SYSTEM IS PRESSURIZED WHEN HOT.

With the ignition on.

With the DRB III®, read and record the ECT Sensor Temperature value

Using the DRB Temperature Probe #CH7050, measure the engine coolant temperature.

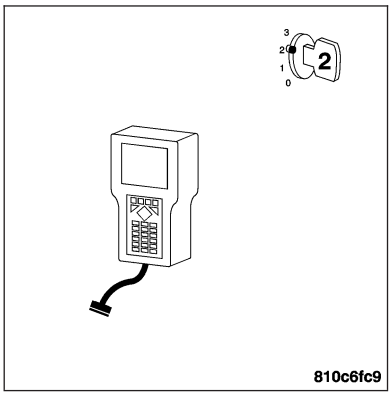

Is the ECT Sensor value within 15°C (5°F) of the temperature probe reading?

Yes >> Go To 6

No >> Go To 7

(P0128) THERMOSTAT RATIONALITY — CONTINUED

6. OTHER POSSIBLE CAUSES

Inspect the Temperature sensors for any physical damage.

Inspect the engine coolant. Ensure the coolant is at the proper level. **Refer to Page 7-18**.

Ensure the Temperature sensors are properly mounted.

Ensure the CMP and CKP sensors are mounted properly. Check the connectors for any signs of damage.

WARNING: WHEN THE ENGINE IS OPERATING, DO NOT STAND IN A DIRECT LINE WITH THE FAN. DO NOT PUT YOUR HANDS NEAR THE PULLEYS, BELTS OR FAN. DO NOT WEAR LOOSE CLOTHING.

Refer to any Technical Service Bulletins (TSBs) that may apply.

With the engine running at normal operating temperature, monitor the Temperature sensor parameters while wiggling the wire harness. Look for parameter values to change.

Visually inspect the related wire harness. Look for any chafed, pierced, pinched, partially broken wires and broken, bent, pushed out, or corroded terminals.

Inspect and clean all PCM, engine, and chassis grounds.

Were any problems found during the above inspections?

Yes >> Repair as necessary.
Perform POWERTRAIN VERIFICATION TEST - VER 2.

No >> Go To 14

7. SIGNAL CIRCUIT SHORTED TO VOLTAGE

Note: Visually inspect both the component and the PCM connectors. Look for damage, partially broken wires and backed out or corroded terminals

Turn the ignition off.

Disconnect the ECT Sensor harness connector.

Note: Check connectors — Clean/repair as necessary.

With the ignition on.

Measure the voltage of the ECT Signal circuit at the Temperature Sensor harness connector.

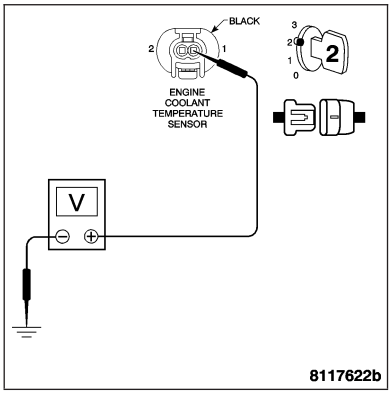

Is the voltage above 5.2 volts?

Yes >> Repair the ECT Signal circuit for a short to voltage.
Perform POWERTRAIN VERIFICATION TEST - VER 2.

No >> Go To 8

(P0128) THERMOSTAT RATIONALITY — CONTINUED

8. TEMPERATURE SENSOR VOLTAGE ABOVE 4.6 VOLTS

With the ignition on.
With the DRB III®, read the ECT Sensor voltage.

Is the voltage above 4.6 volts?

Yes >> Go To 9

No >> Go To 12

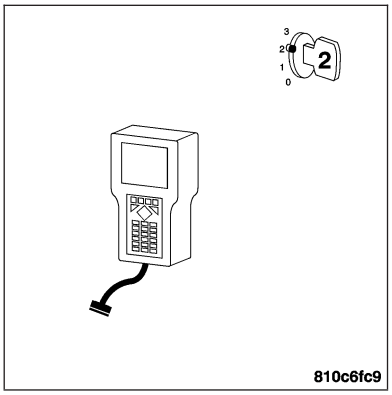

9. ECT SENSOR VOLTAGE BELOW 1.0 VOLTS

Turn the ignition off.
Using a jumper wire, jumper across the ECT Sensor harness connector.
Turn the ignition on.
With the DRB III®, read the Coolant Temp voltage.

Is the voltage below 1.0 volt?

Yes >> Replace the ECT Sensor in accordance with the Service Information. **Refer to Page 7-29**.
Perform POWERTRAIN VERIFICATION TEST - VER 2.

No >> Go To 10

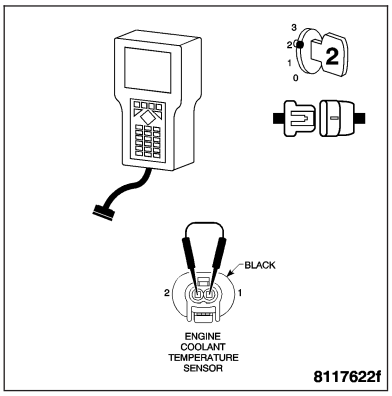

10. SIGNAL CIRCUIT OPEN

Turn the ignition off.
Disconnect the PCM harness connector.

Note: Check connectors — Clean/repair as necessary.
Measure the resistance of the ECT Signal circuit from the ECT Sensor harness connector to the PCM harness connector.

Is the resistance below 5.0 ohms?

Yes >> Go To 11

No >> Repair the ECT Signal circuit for an open.
Perform POWERTRAIN VERIFICATION TEST - VER 2.

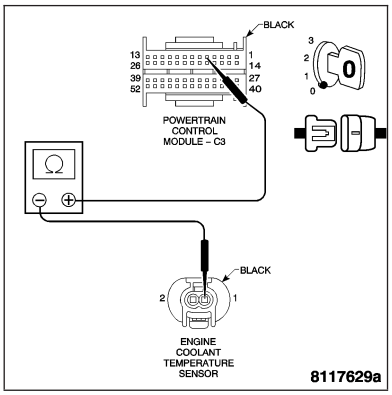

(P0128) THERMOSTAT RATIONALITY — CONTINUED

11. SENSOR GROUND CIRCUIT OPEN

With the ignition off.

Measure the resistance of the Sensor Ground circuit from the ECT Sensor harness connector to the PCM harness connector.

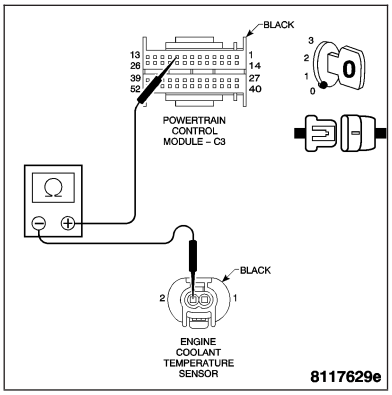

Is the resistance below 5.0 ohms?

Yes >> Replace and program the Powertrain Control Module in accordance with the Service Information. **Refer to Page 8E-56**.
Perform POWERTRAIN VERIFICATION TEST - VER 2.

No >> Repair the ECT Sensor Ground circuit for an open.
Perform POWERTRAIN VERIFICATION TEST - VER 2.

12. SIGNAL CIRCUIT SHORTED TO GROUND

Turn the ignition off.

Measure the resistance between ground and the ECT Sensor Signal circuit.

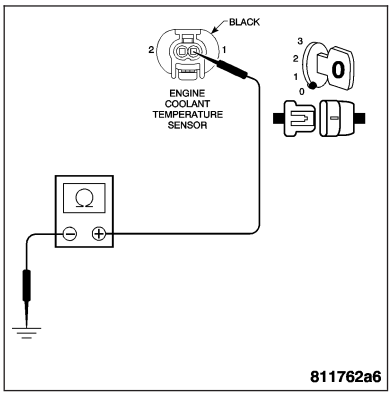

Is the resistance below 100 ohms?

Yes >> Repair the ECT Signal circuit for a short to ground.
Perform POWERTRAIN VERIFICATION TEST - VER 2.

No >> Go To 13

13. SIGNAL CIRCUIT SHORTED TO SENSOR GROUND

With the ignition off.

Measure the resistance between the Sensor Ground and the Signal circuit at the ECT Sensor harness connector.

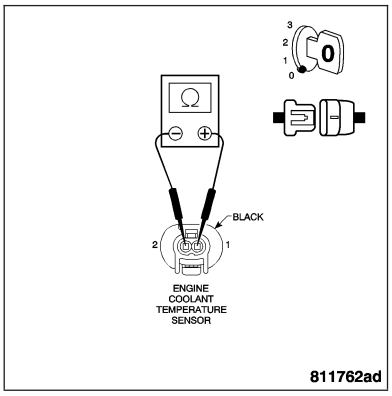

Is the resistance below 100 ohms?

Yes >> Repair the ECT Sensor Ground circuit for a short to the ECT Signal circuit.
Perform POWERTRAIN VERIFICATION TEST - VER 2.

No >> Replace and program the Powertrain Control Module in accordance with the Service Information. **Refer to Page 8E-56**.
Perform POWERTRAIN VERIFICATION TEST - VER 2.

(P0128) THERMOSTAT RATIONALITY — CONTINUED

14. INTERMITTENT WIRING AND CONNECTORS

The condition that caused this DTC to set is currently not present. Inspect the related wiring harness for a possible intermittent condition.

Note: Check connectors — Clean/repair as necessary. Poor pin to terminal connections can set DTCs.
Using the wiring diagram/schematic as a guide, inspect the wiring and connectors specific to this DTC. Wiggle the wires while checking for shorts and open circuits.

Note: Check for any Technical Service Bulletins that may apply.

Were there any problems found?

Yes >> Repair as necessary.
Perform POWERTRAIN VERIFICATION TEST - VER 2.

No >> The condition that caused this DTC to set is currently not present. Inspect the related wiring harness for a possible intermittent condition.

(P0131) O2 SENSOR 1/1 CIRCUIT LOW

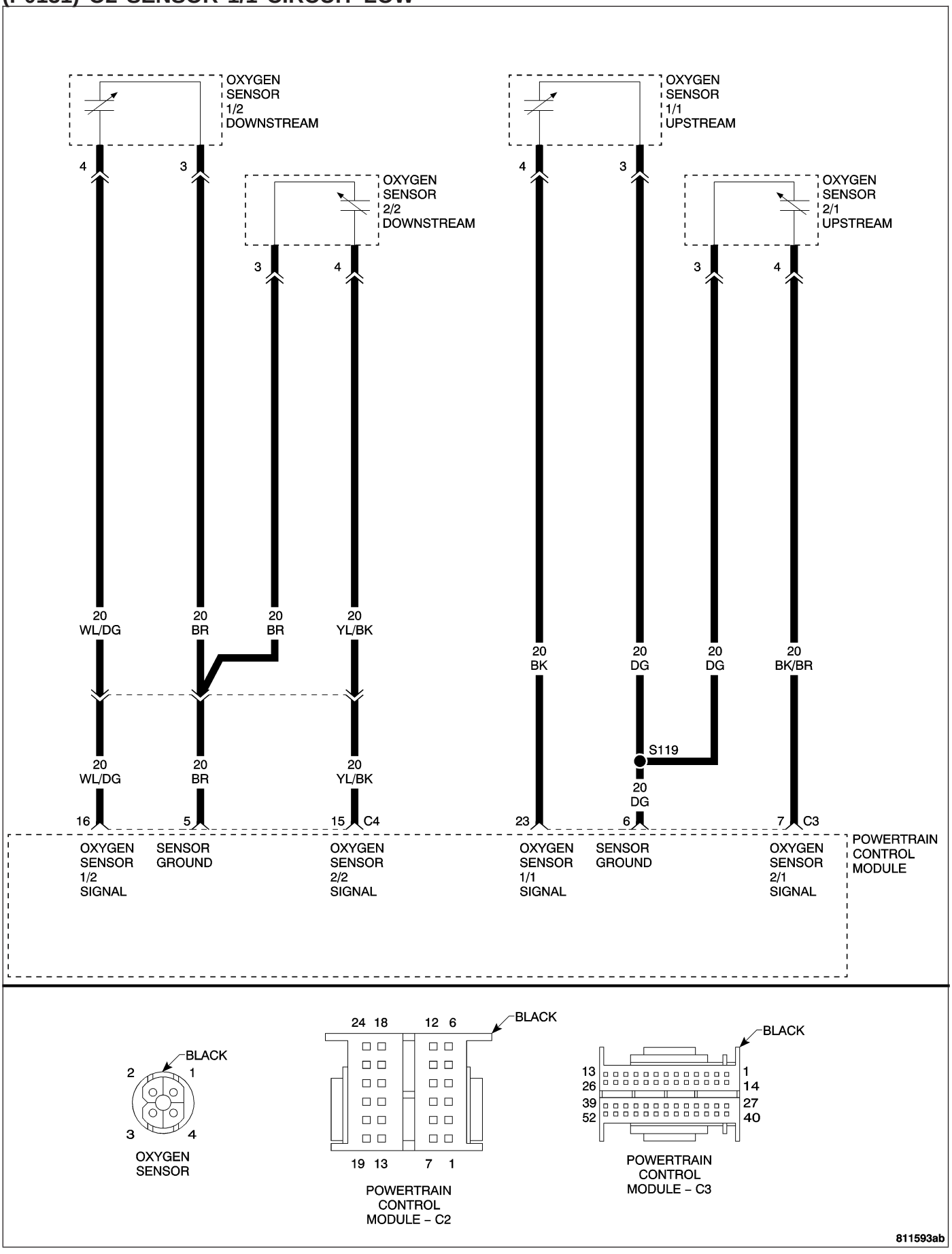

(P0131) O2 SENSOR 1/1 CIRCUIT LOW — CONTINUED

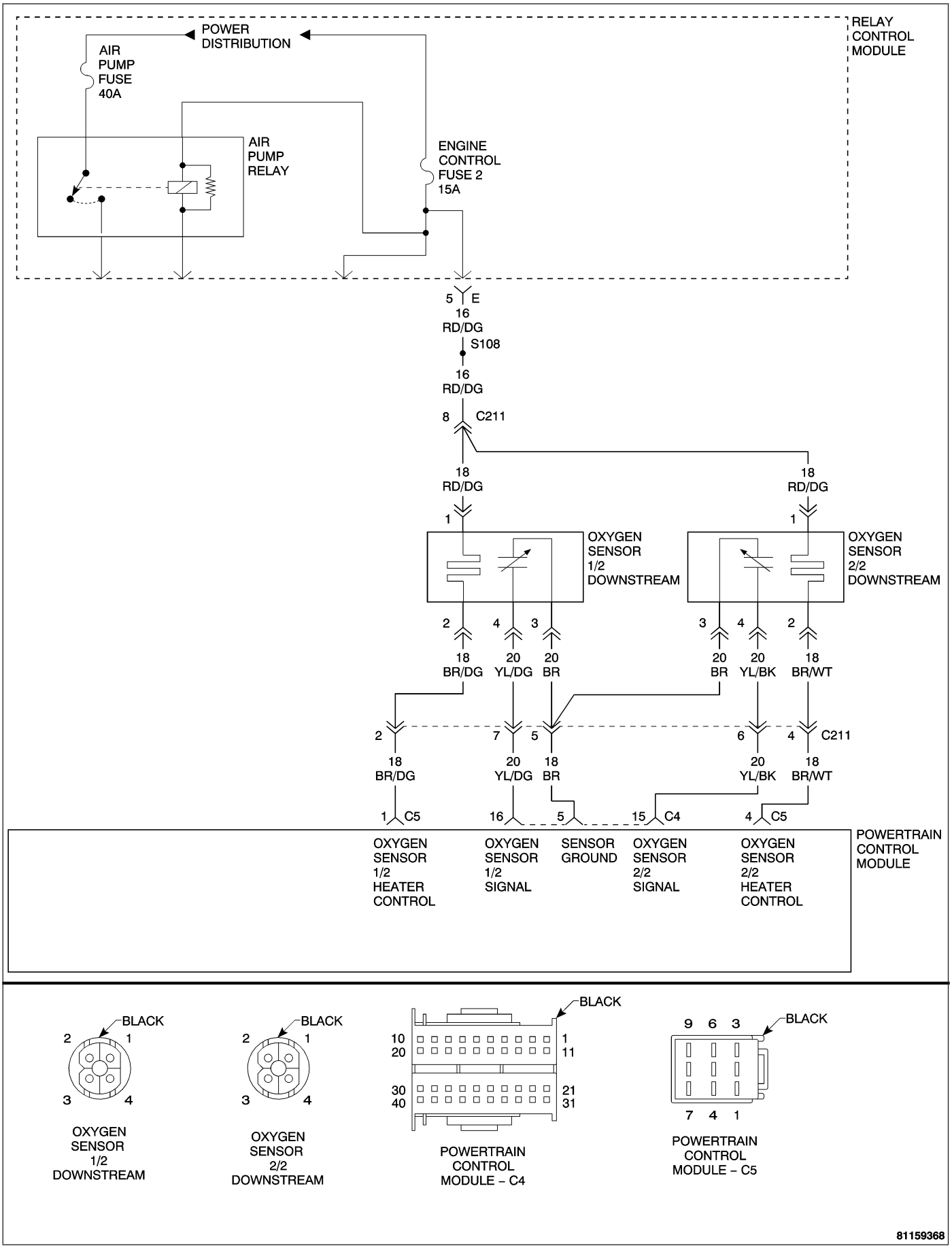

(P0131) O2 SENSOR 1/1 CIRCUIT LOW — CONTINUED

When Monitored and Set Condition

- When Monitored: With the engine running between 1000 and 2000 RPM, engine load between 15% to 50%, closed loop mode, the three way catalytic converter temperature is greater than 380°C (716°F), and the O2 sensor heater must be ON for at least 220 seconds to enable the signal inactive portion of the test.
- Set Condition: The high limit: O2 Sensor voltage is greater than 1.5 volts for approximately 5 seconds. The low limit: O2 Sensor voltage is less than 0.15 volts for approximately 5 seconds. Signal stays at center: The O2 Sensor voltage stays between 0.4 and 0.6 volts for more than approximately 15 seconds after the O2 Sensor heater has been ON for at least 220 seconds.

POSSIBLE CAUSES
O2 SENSOR SIGNAL CIRCUIT OPEN
O2 SENSOR SIGNAL CIRCUIT SHORT TO GROUND
O2 SENSOR SIGNAL CIRCUIT SHORT TO VOLTAGE
O2 SENSOR GROUND CIRCUIT OPEN
ENGINE EXHAUST LEAK
O2 SENSOR
POWERTRAIN CONTROL MODULE

For a complete Powertrain Control Module Circuit Diagram **Refer to Page 9-574**.

1. MONITOR THE O2 SENSOR VOLTAGE

Turn the ignition on.

With the DRB III®, monitor the O2 Sensor Signal voltage of the affected Sensor.

Is the O2 Sensor voltage greater than 1.4 volts or less than 0.15 volts?

Yes >> If the value is greater than 1.4 volts, Go To 3
If the value is less than 0.15 volts, Go To 5

No >> Go To 2

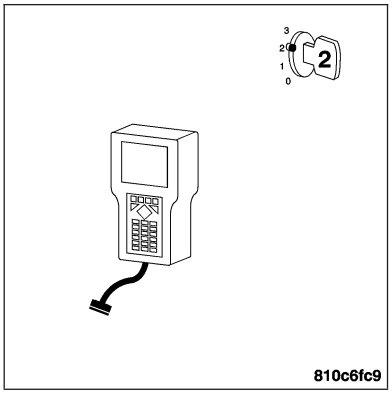

(P0131) O2 SENSOR 1/1 CIRCUIT LOW — CONTINUED

2. O2 SENSOR VOLTAGE

Start the engine.
Operate the engine above 1200 RPM for 3 minutes and 40 seconds.
With the DRB III®, monitor the O2 Sensor Signal voltage.

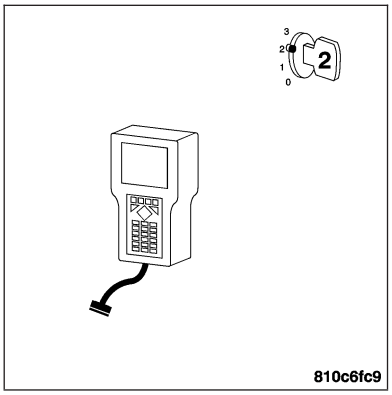

Does the O2 Sensor voltage stay between 0.4 and 0.6 volts?

Yes >> Go To 11

No >> Go To 7

3. DISCONNECT THE O2 SENSOR

Turn the ignition off.
Disconnect the O2 Sensor harness connector of the affected sensor.

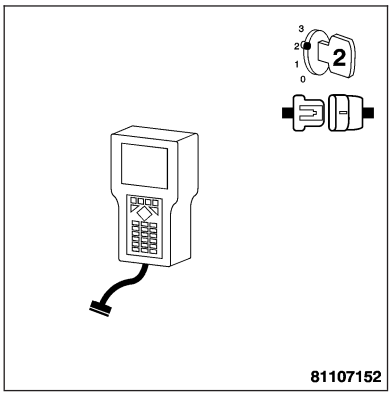

Note: Check connectors — Clean/repair as necessary.
Turn the ignition on.
With the DRB III®, monitor the O2 Sensor Signal voltage.

Is the O2 Sensor voltage less than 1.4 volts?

Yes >> Replace the affected O2 Sensor. **Refer to Page 14-45**
Perform POWERTRAIN VERIFICATION TEST - VER 2.

No >> Go To 4

4. O2 SENSOR SIGNAL CIRCUIT SHORTED TO VOLTAGE

With the ignition on.
With the DRB III®, monitor the O2 Sensor Signal voltage.

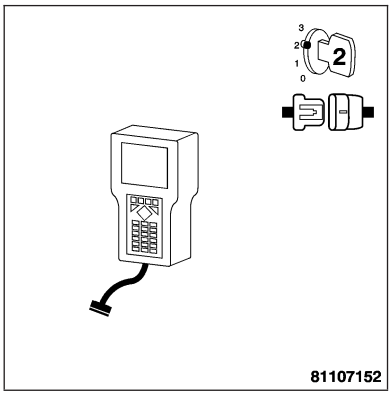

Is the O2 Sensor voltage greater than 2.0 volts?

Yes >> Repair the O2 Sensor Signal circuit for a short to voltage.
Perform POWERTRAIN VERIFICATION TEST - VER 2.

No >> Replace and program the Powertrain Control Module.
Refer to Page 8E-56.
Perform POWERTRAIN VERIFICATION TEST - VER 2.

(P0131) O2 SENSOR 1/1 CIRCUIT LOW — CONTINUED

5. DISCONNECT THE O2 SENSOR

Turn the ignition off.

Disconnect the O2 Sensor harness connector of the affected sensor.

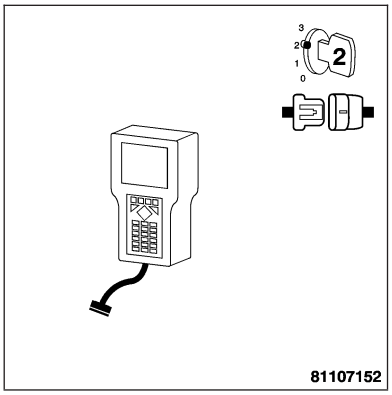

Note: Check connectors — Clean/repair as necessary.

Turn the ignition on.

With the DRB III®, monitor the O2 Sensor Signal voltage.

Is the O2 Sensor voltage more than 0.15 volts?

Yes >>

Note: Determine the cause of any contamination before replacing the sensor. Inspect for the following before replacing the O2 Sensor.

- Fuel contamination.
- Engine oil or coolant consumption.
- Use of improper RTV sealant.

Replace the O2 Sensor if none of the above conditions are present. **Refer to Page 14-45**.

Perform POWERTRAIN VERIFICATION TEST - VER 2.

No >> Go To 6

6. O2 SENSOR SIGNAL CIRCUIT SHORT TO GROUND

Turn the ignition off.

Disconnect the PCM C3 harness connector.

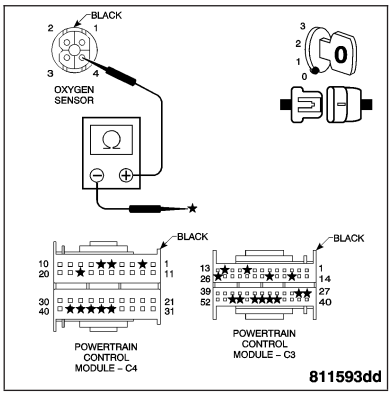

Note: Check connectors — Clean/repair as necessary.

Measure the resistance between ground or any ground circuit in the PCM C3 harness connector and the O2 Sensor Signal circuit.

Is there continuity between the O2 Sensor Signal circuit and ground or any ground circuit in the PCM C3 harness connector?

Yes >> Repair the O2 Sensor Signal circuit for a short to ground or any ground circuit in the PCM C3 harness connector.

Perform POWERTRAIN VERIFICATION TEST - VER 2.

No >> Replace and program the Powertrain Control Module. **Refer to Page 8E-56**.

Perform POWERTRAIN VERIFICATION TEST - VER 2.

7. O2 SENSOR SYSTEM INSPECTION

Turn the ignition off.

Inspect for the following conditions.

- Exhaust leak. **Refer to Page 11-3**.
- Incorrectly installed O2 Sensor.
- Damaged wiring.

Did you find any of the above conditions?

Yes >> Repair the conditions.

Perform POWERTRAIN VERIFICATION TEST - VER 2.

No >> Go To 8

(P0131) O2 SENSOR 1/1 CIRCUIT LOW — CONTINUED

8. JUMPER THE O2 SENSOR

Disconnect the O2 Sensor harness connector of the affected O2 Sensor.

Note: Check connectors — Clean/repair as necessary.
Turn the ignition on.
Jumper the O2 Sensor Signal circuit to a ground.
With the DRB III®, monitor the O2 Sensor Signal voltage.

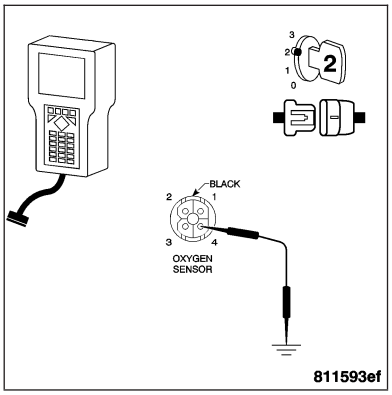

Does the O2 Sensor voltage stay between 0.4 and 0.6 volts?

Yes >> Go To 9

No >> Go To 10

9. O2 SENSOR SIGNAL CIRCUIT OPEN

Turn the ignition off.
Disconnect the PCM harness connectors.

Note: Check connectors — Clean/repair as necessary.
Measure the resistance of the O2 Sensor Signal circuit from the O2 Sensor harness connector to the PCM harness connector.

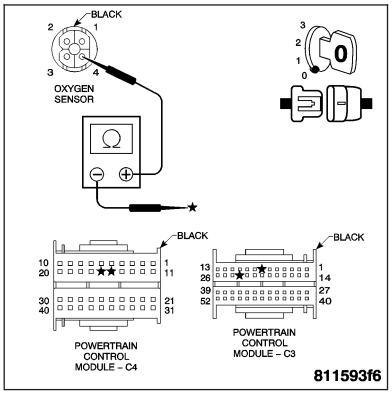

Is the resistance less than 5.0 ohms?

Yes >> Replace and program the Powertrain Control Module. **Refer to Page 8E-56**.
Perform POWERTRAIN VERIFICATION TEST - VER 2.

No >> Repair the O2 Sensor Signal circuit for an open.
Perform POWERTRAIN VERIFICATION TEST - VER 2.

(P0131) O2 SENSOR 1/1 CIRCUIT LOW — CONTINUED

10. O2 SENSOR GROUND CIRCUIT OPEN

Turn the ignition off.

Disconnect the PCM harness connectors.

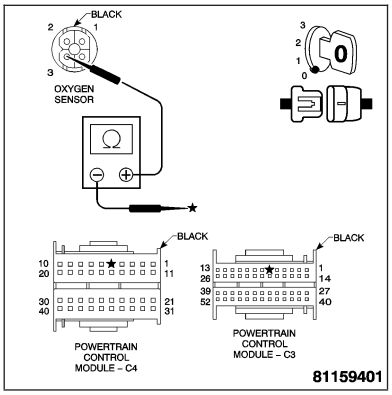

Note: Check connectors — Clean/repair as necessary.
Measure the resistance of the O2 Sensor ground circuit from the O2 Sensor harness connector to the PCM harness connector.

Is the resistance less than 5.0 ohms?

Yes >>

Note: Determine the cause of any contamination before replacing the sensor.Inspect for the following before replacing the O2 Sensor.

- Fuel contamination.
- Engine oil or coolant consumption.
- Use of improper RTV sealant.

Replace the Oxygen Sensor if none of the above conditions are present. **Refer to Page 14-45**.

Perform POWERTRAIN VERIFICATION TEST - VER 2.

No >> Repair the O2 Sensor Ground circuit for an open.

Perform POWERTRAIN VERIFICATION TEST - VER 2.

11. INTERMITTENT WIRING AND CONNECTORS

The condition that caused this DTC to set is currently not present. Inspect the related wiring harness for a possible intermittent condition.

Note: Check connectors — Clean/repair as necessary. Poor pin to terminal connections can set DTCs.Using the wiring diagram/schematic as a guide, inspect the wiring and connectors specific to this DTC. Wiggle the wires while checking for shorts and open circuits.

Note: Check for any Technical Service Bulletins that may apply.

Were there any problems found?

Yes >> Repair as necessary.

Perform POWERTRAIN VERIFICATION TEST - VER 2.

No >> The condition that caused this DTC to set is currently not present. Inspect the related wiring harness for a possible intermittent condition.

(P0132) O2 SENSOR 1/1 CIRCUIT HIGH

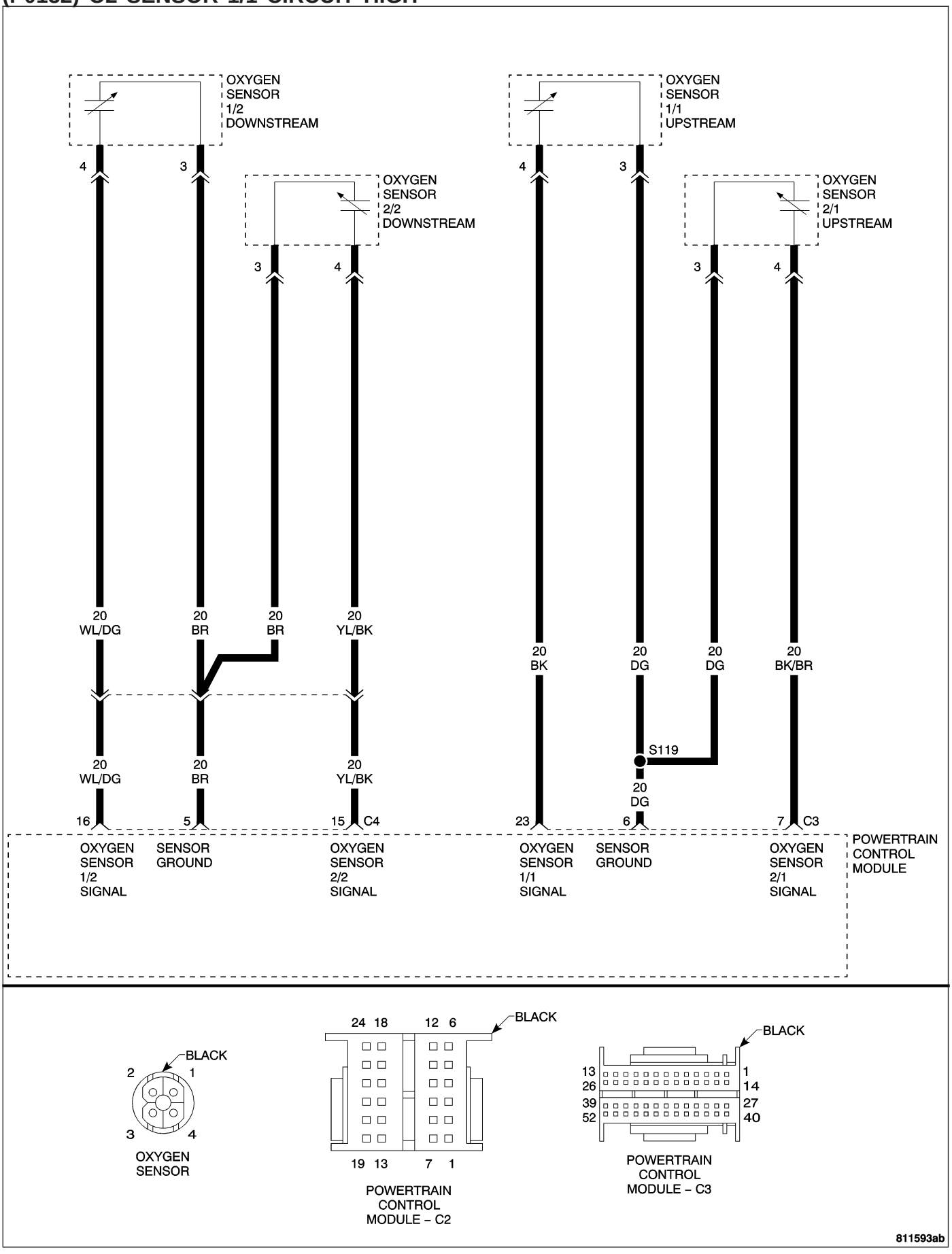

(P0132) O2 SENSOR 1/1 CIRCUIT HIGH — CONTINUED

When Monitored and Set Condition

- When Monitored: With the engine running between 1000 and 2000 RPM, engine load between 15% to 50%, closed loop mode, the three way catalytic converter temperature is greater than 380°C (716°F), and the O2 sensor heater must be ON for at least 220 seconds to enable the signal inactive portion of the test.
- Set Condition: O2 Sensor voltage is greater than 1.5 volts for approximately 5 seconds.

POSSIBLE CAUSES
O2 SENSOR SIGNAL CIRCUIT SHORT TO VOLTAGE
ENGINE EXHAUST LEAK
O2 SENSOR
POWERTRAIN CONTROL MODULE

Diagnostic Test

1. CHECK FOR CURRENT DTC

Turn the ignition on.

With the DRB III®, read the PCM DTCs.

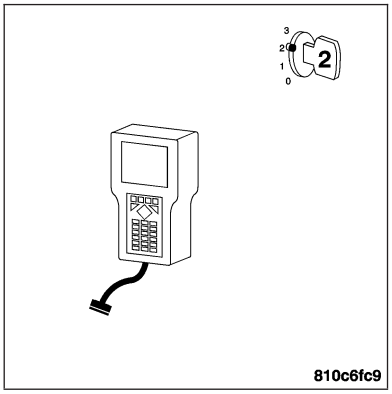

Is this DTC present?

Yes >> For complete diagnosis of this DTC, refer to (P0131) O2 SENSOR 1/1 CIRCUIT LOW.

No >> Go To 2

2. INTERMITTENT WIRING AND CONNECTORS

The conditions necessary to set this DTC are not present at this time.

Note: Check connectors — Clean/repair as necessary. Poor pin to terminal connections can set DTCs.Using the wiring diagram/schematic as a guide, inspect the wiring and connectors specific to this DTC. Wiggle the wires while checking for shorts and open circuits.

Note: Check for any Technical Service Bulletins that may apply.

Were there any problems found?

Yes >> Repair as necessary.
Perform POWERTRAIN VERIFICATION TEST - VER 2.

No >> The condition that caused this DTC to set is currently not present. Inspect the related wiring harness for a possible intermittent condition.

(P0133) O2 SENSOR 1/1 SHORT DELAY TIME

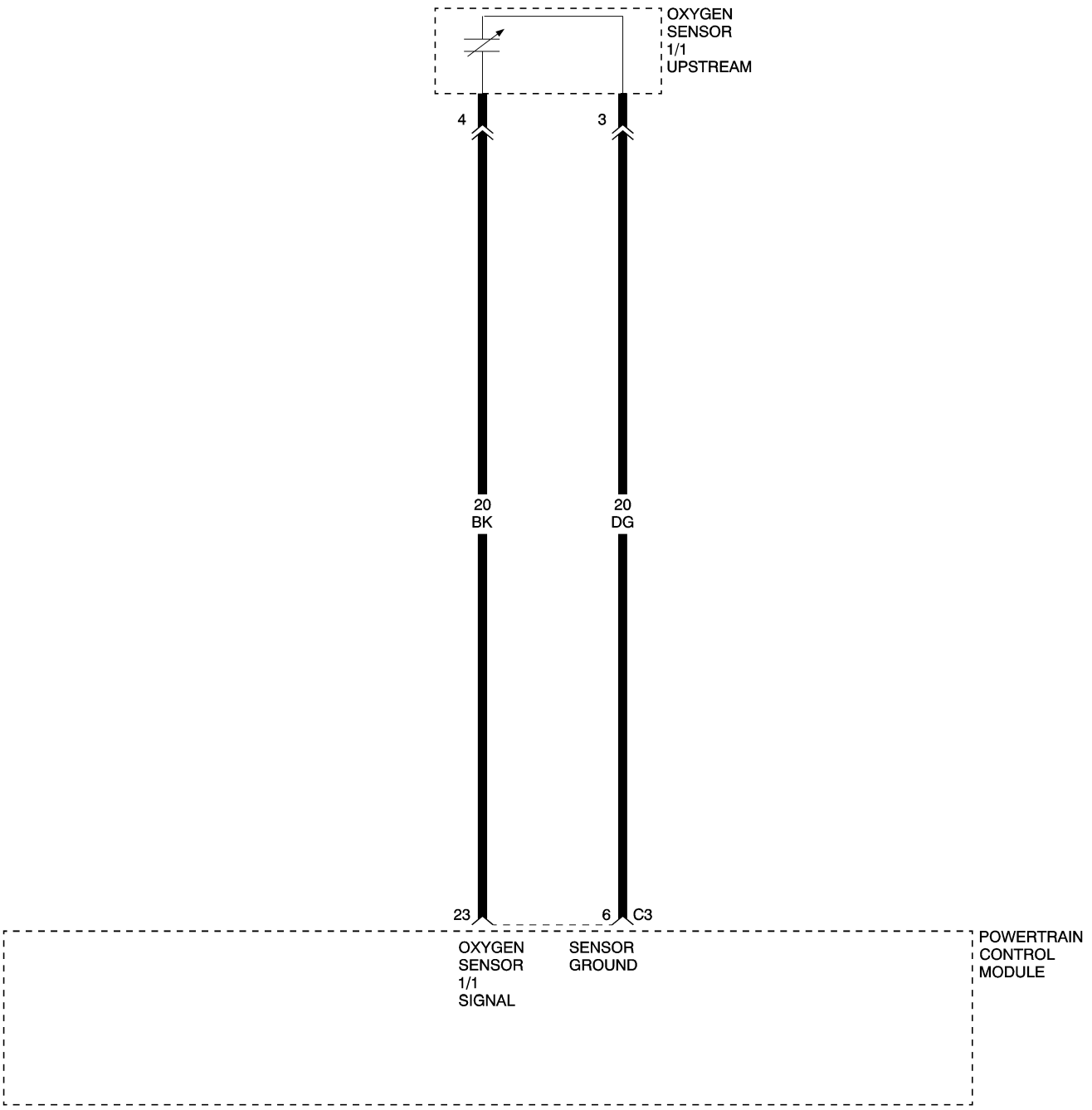

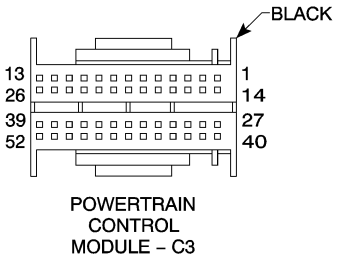

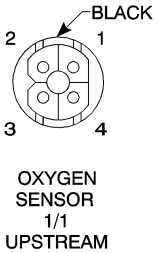

81168145

(P0133) O2 SENSOR 1/1 SHORT DELAY TIME — CONTINUED

When Monitored and Set Condition

- When Monitored: Start and drive vehicle greater than 32 km/h (20 MPH) and less than 89 km/h (55 MPH). Throttle open for a minimum 120 seconds. Coolant Temp greater than 70°C (158°F) Catalytic Converter Temperature greater than 600°C (1112°F).
- Set Condition: The O2 sensor voltage switches only 11 times or less from lean to rich within 20 seconds during monitoring. Two Trip Fault.

POSSIBLE CAUSES
EXHAUST LEAK
O2 SENSOR SIGNAL CIRCUIT OPEN
O2 SENSOR SIGNAL CIRCUIT SHORTED TO VOLTAGE
O2 SENSOR SIGNAL CIRCUIT SHORTED TO GROUND
O2 SENSOR GROUND CIRCUIT OPEN
O2 SENSOR GROUND CIRCUIT SHORTED TO VOLTAGE
O2 SENSOR GROUND CIRCUIT SHORTED TO GROUND
O2 SENSOR

For a complete Powertrain Control Module Circuit Diagram **Refer to Page 9-574**.

Diagnostic Test

1. CHECK FOR CURRENT DTC

Note: It is important to perform the diagnostics on the O2 Sensor that set the DTC.

Note: Check for contaminates that may have damaged the O2 Sensor: contaminated fuel, unapproved silicone, oil and coolant.

Note: If the PCM detects and stores a DTC, the PCM also stores the engine/vehicle operating conditions under which the DTC was set. Some of these conditions are displayed on the DRB III® at the same time the DTC is displayed.

Note: Before erasing stored DTCs, record these conditions. Attempting to duplicate these conditions may assist when checking for a DTC.

Turn the ignition on.

With the DRB III®, erase PCM DTCs.

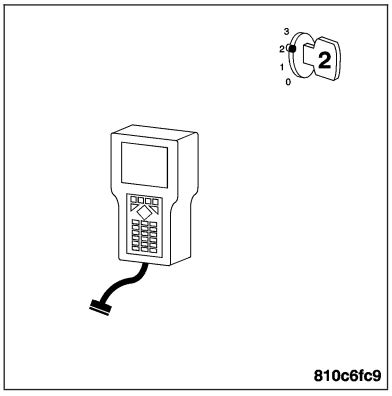

Note: It maybe necessary to road test the vehicle for this DTC to set.
With the DRB III®, read the PCM DTCs.

Did this DTC set again?

Yes >> Go To 2

No >> Go To 5

(P0133) O2 SENSOR 1/1 SHORT DELAY TIME — CONTINUED

2. EXHAUST LEAK

Start the engine.

Inspect the exhaust system for leaks between the engine and the O2 Sensors.

Are there any exhaust leaks?

Yes >> Repair or replace the leaking exhaust parts as necessary. **Refer to Page 11-5**.
Perform POWERTRAIN VERIFICATION TEST - VER 2.

No >> Go To 3

3. O2 SENSOR SIGNAL CIRCUIT

Turn the ignition off.

Disconnect the O2 Sensor harness connector.

Note: Check connectors — Clean/repair as necessary.

Turn the ignition on.

Measure the voltage on the O2 Sensor Signal circuit at the O2 Sensor harness connector.

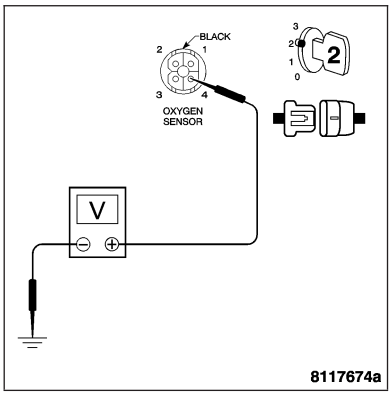

Is the voltage approximately 0.47 volt?

Yes >> Go To 4

No >> Check the O2 Sensor Signal circuit for damage, short to ground, open, or short to voltage. If OK, replace and program the Powertrain Control Module. **Refer to Page 8E-56**.
Perform POWERTRAIN VERIFICATION TEST - VER 2.

4. O2 SENSOR GROUND CIRCUIT

With the ignition on.

Measure the voltage on the O2 Sensor Ground circuit at the O2 Sensor harness connector.

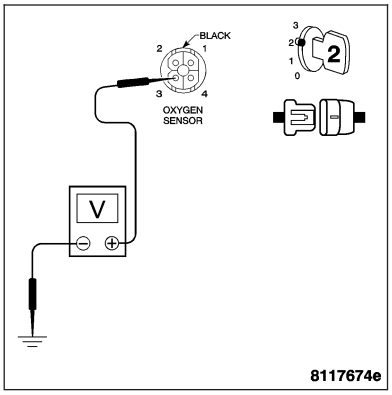

Is the voltage above 0.1 volt?

Yes >> Check the O2 Sensor Ground circuit for damage, short to ground, open, or short to voltage. If OK, replace and program the Powertrain Control Module. **Refer to Page 8E-56**.
Perform POWERTRAIN VERIFICATION TEST - VER 2.

No >> Replace the Oxygen Sensor. **Refer to Page 14-45**.
Perform POWERTRAIN VERIFICATION TEST - VER 2.

(P0133) O2 SENSOR 1/1 SHORT DELAY TIME — CONTINUED

5. INTERMITTENT WIRING AND CONNECTORS

The conditions necessary to set this DTC are not present at this time.

Note: Check connectors — Clean/repair as necessary. Poor pin to terminal connections can set DTCs.
Using the wiring diagram/schematic as a guide, inspect the wiring and connectors specific to this DTC. Wiggle the wires while checking for shorts and open circuits.

Note: Check for any Technical Service Bulletins that may apply.

Were there any problems found?

Yes >> Repair as necessary.
Perform POWERTRAIN VERIFICATION TEST - VER 2.

No >> The condition that caused this DTC to set is currently not present. Inspect the related wiring harness for a possible intermittent condition.

(P0133) O2 SENSOR 1/1 LONG PERFORMANCE

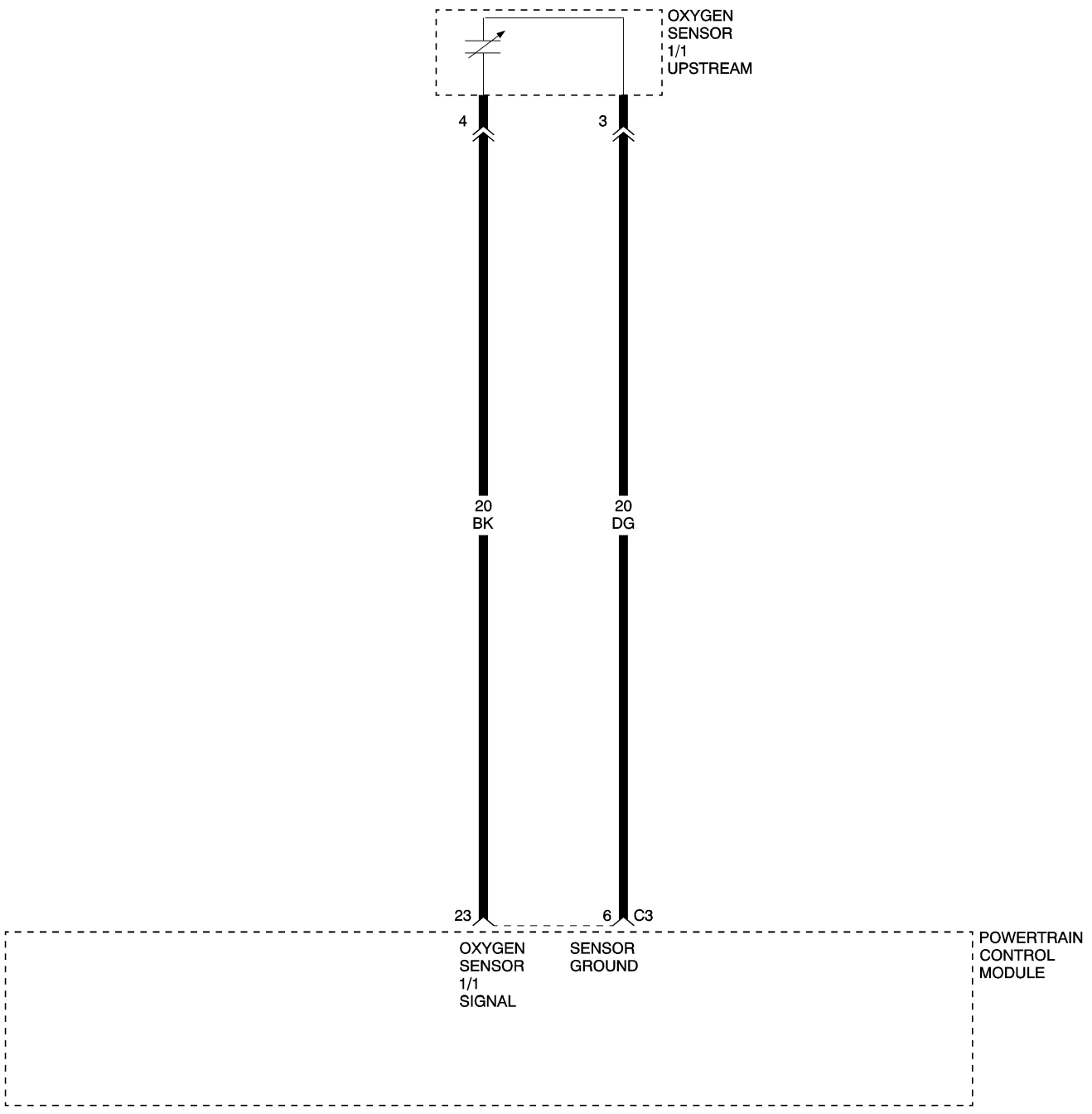

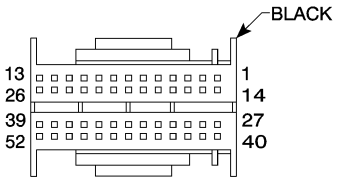

POWERTRAIN
CONTROL
MODULE – C3

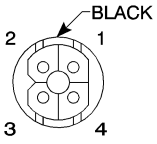

OXYGEN
SENSOR
1/1
UPSTREAM

81168145

(P0133) O2 SENSOR 1/1 LONG PERFORMANCE — CONTINUED

When Monitored and Set Condition

- When Monitored: Start and drive vehicle greater than 32 km/h (20 MPH) and less than 89 km/h (55 MPH). Throttle open for a minimum 120 seconds. Coolant Temp greater than 70°C (158°F) Catalytic Converter Temperature greater than 600°C (1112°F).
- Set Condition: The O2 sensor voltage switches only 11 times or less from lean to rich within 20 seconds during monitoring. Two Trip Fault.

POSSIBLE CAUSES
EXHAUST LEAK
O2 SENSOR SIGNAL CIRCUIT OPEN
O2 SENSOR SIGNAL CIRCUIT SHORTED TO VOLTAGE
O2 SENSOR SIGNAL CIRCUIT SHORTED TO GROUND
O2 SENSOR GROUND CIRCUIT OPEN
O2 SENSOR GROUND CIRCUIT SHORTED TO VOLTAGE
O2 SENSOR GROUND CIRCUIT SHORTED TO GROUND
O2 SENSOR

Diagnostic Test

1. CHECK FOR CURRENT DTC

Turn the ignition on.
With the DRB III®, read the PCM DTCs.

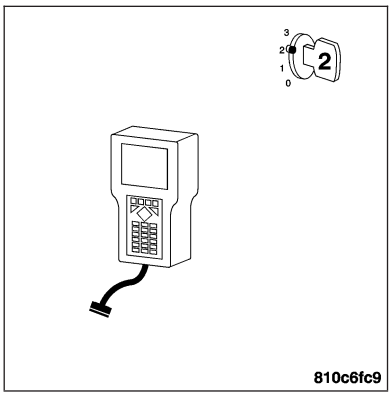

Is this DTC preset?

Yes >> For complete diagnosis of this DTC, refer to (P0133) O2 SENSOR 1/1 SHORT DELAY TIME.

No >> Go To 2

2. INTERMITTENT WIRING AND CONNECTORS

The conditions necessary to set this DTC are not present at this time.

Note: Check connectors — Clean/repair as necessary. Poor pin to terminal connections can set DTCs.Using the wiring diagram/schematic as a guide, inspect the wiring and connectors specific to this DTC. Wiggle the wires while checking for shorts and open circuits.

Note: Check for any Technical Service Bulletins that may apply.

Were there any problems found?

Yes >> Repair as necessary.
Perform POWERTRAIN VERIFICATION TEST - VER 2.

No >> The condition that caused this DTC to set is currently not present. Inspect the related wiring harness for a possible intermittent condition.

(P0133) O2 SENSOR 1/1 LONG DELAY TIME

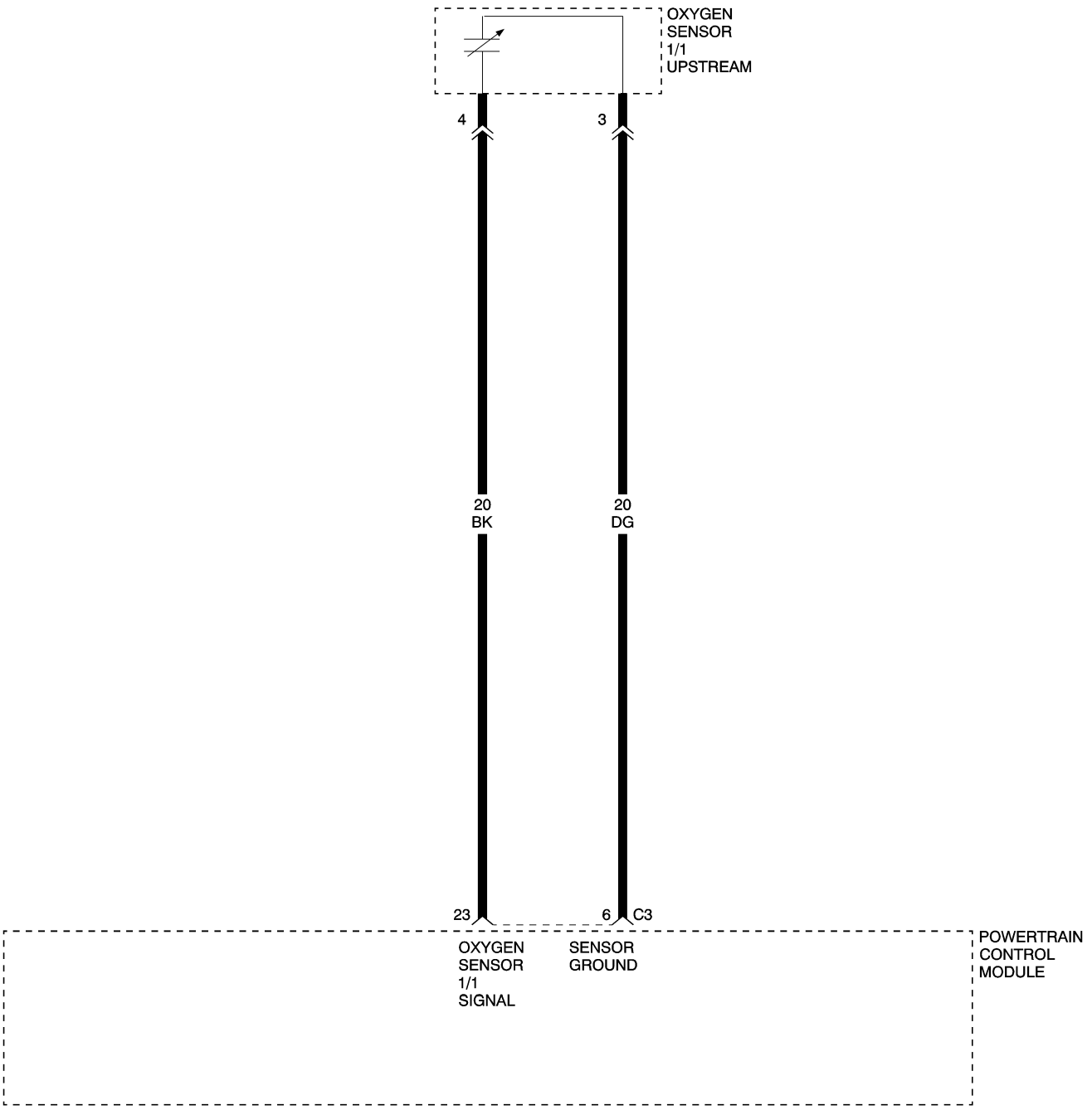

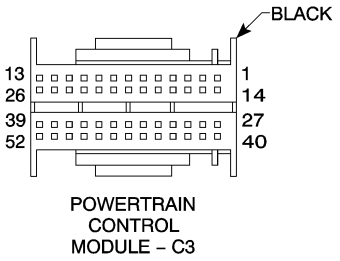

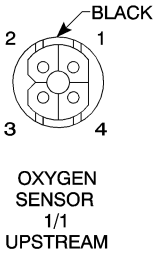

81168145

(P0133) O2 SENSOR 1/1 LONG DELAY TIME — CONTINUED

When Monitored and Set Condition

- When Monitored: Start and drive vehicle greater than 32 km/h (20 MPH) and less than 89 km/h (55 MPH). Throttle open for a minimum 120 seconds. Coolant Temp greater than 70°C (158°F) Catalytic Converter Temperature greater than 600°C (1112°F).
- Set Condition: The O2 sensor voltage switches only 11 times or less from lean to rich within 20 seconds during monitoring. Two Trip Fault.

POSSIBLE CAUSES
EXHAUST LEAK
O2 SENSOR SIGNAL CIRCUIT OPEN
O2 SENSOR SIGNAL CIRCUIT SHORTED TO VOLTAGE
O2 SENSOR SIGNAL CIRCUIT SHORTED TO GROUND
O2 SENSOR GROUND CIRCUIT OPEN
O2 SENSOR GROUND CIRCUIT SHORTED TO VOLTAGE
O2 SENSOR GROUND CIRCUIT SHORTED TO GROUND
O2 SENSOR

Diagnostic Test

1. CHECK FOR CURRENT DTC

Turn the ignition on.
With the DRB III®, read the PCM DTCs.

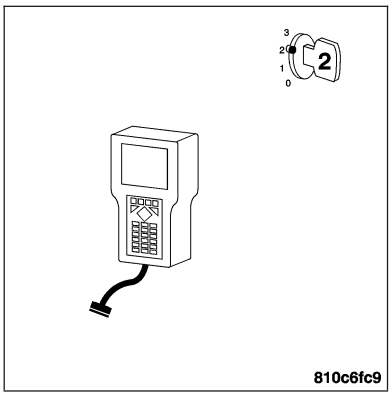

Is this DTC preset?

Yes >> For complete diagnosis of this DTC, refer to (P0133) O2 SENSOR 1/1 SHORT DELAY TIME.

No >> Go To 2

2. INTERMITTENT WIRING AND CONNECTORS

The conditions necessary to set this DTC are not present at this time.

Note: Check connectors — Clean/repair as necessary. Poor pin to terminal connections can set DTCs.Using the wiring diagram/schematic as a guide, inspect the wiring and connectors specific to this DTC. Wiggle the wires while checking for shorts and open circuits.

Note: Check for any Technical Service Bulletins that may apply.

Were there any problems found?

Yes >> Repair as necessary.
Perform POWERTRAIN VERIFICATION TEST - VER 2.

No >> The condition that caused this DTC to set is currently not present. Inspect the related wiring harness for a possible intermittent condition.

(P0133) O2 SENSOR 1/1 SHORT PERFORMANCE

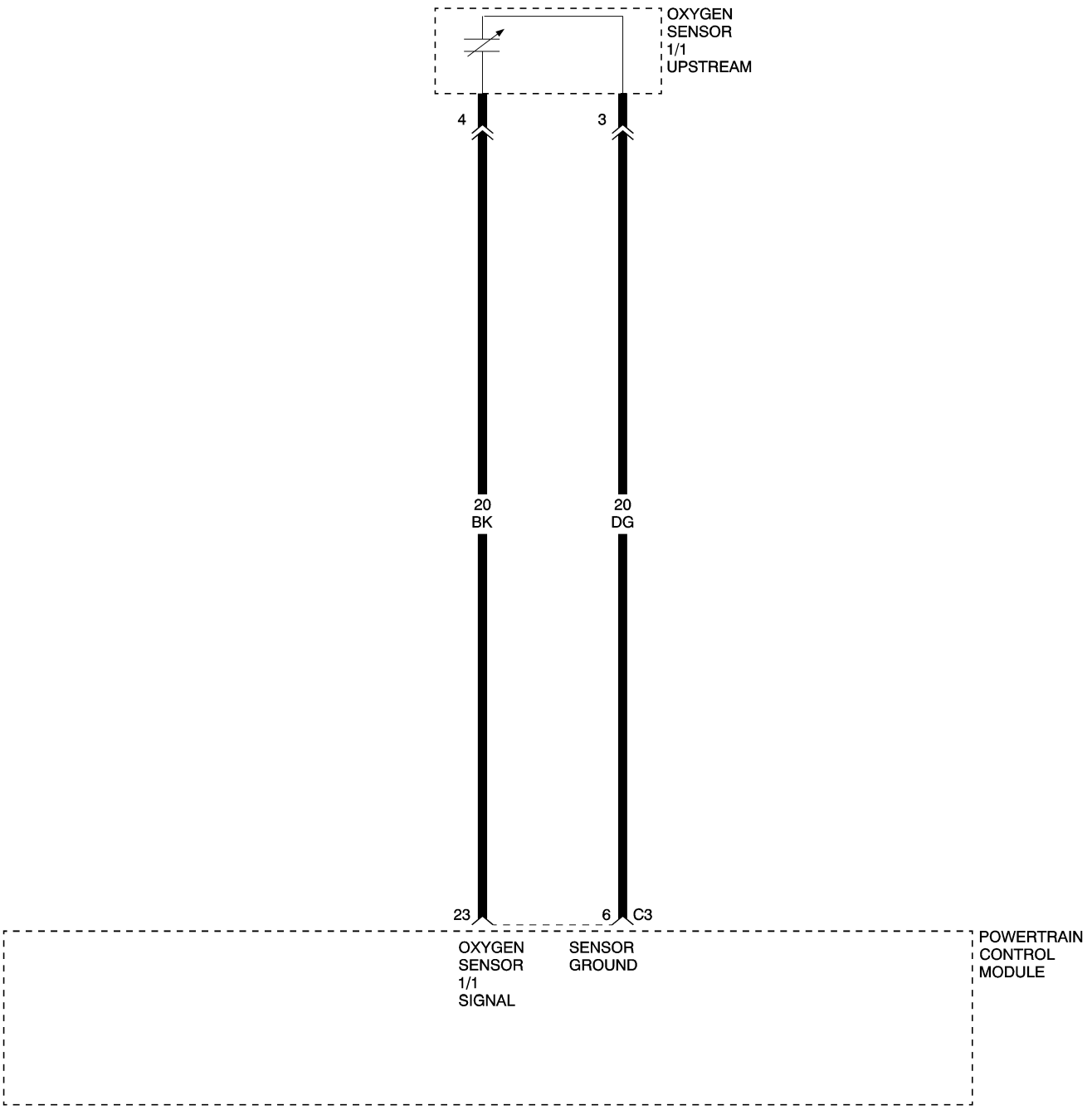

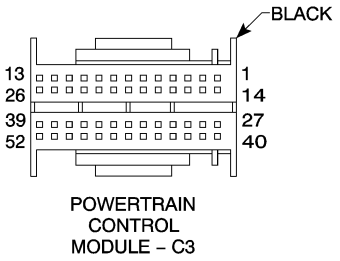

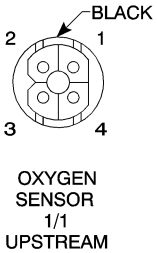

81168145

(P0133) O2 SENSOR 1/1 SHORT PERFORMANCE — CONTINUED

When Monitored and Set Condition

- When Monitored: Start and drive vehicle greater than 32 km/h (20 MPH) and less than 89 km/h (55 MPH). Throttle open for a minimum 120 seconds. Coolant Temp greater than 70°C (158°F) Catalytic Converter Temperature greater than 600°C (1112°F).
- Set Condition: The O2 sensor voltage switches only 11 times or less from lean to rich within 20 seconds during monitoring. Two Trip Fault.

POSSIBLE CAUSES
EXHAUST LEAK
O2 SENSOR SIGNAL CIRCUIT OPEN
O2 SENSOR SIGNAL CIRCUIT SHORTED TO VOLTAGE
O2 SENSOR SIGNAL CIRCUIT SHORTED TO GROUND
O2 SENSOR GROUND CIRCUIT OPEN
O2 SENSOR GROUND CIRCUIT SHORTED TO VOLTAGE
O2 SENSOR GROUND CIRCUIT SHORTED TO GROUND
O2 SENSOR

Diagnostic Test

1. CHECK FOR CURRENT DTC

Turn the ignition on.
With the DRB III®, read the PCM DTCs.

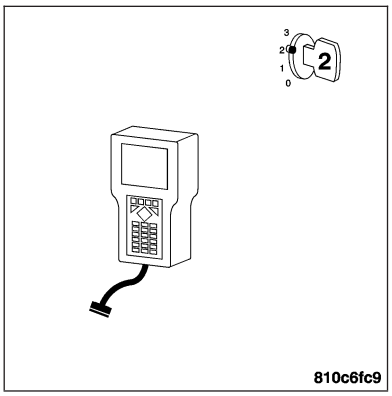

Is this DTC preset?

Yes >> For complete diagnosis of this DTC, refer to (P0133) O2 SENSOR 1/1 SHORT DELAY TIME.

No >> Go To 2

2. INTERMITTENT WIRING AND CONNECTORS

The conditions necessary to set this DTC are not present at this time.

Note: Check connectors — Clean/repair as necessary. Poor pin to terminal connections can set DTCs.Using the wiring diagram/schematic as a guide, inspect the wiring and connectors specific to this DTC. Wiggle the wires while checking for shorts and open circuits.

Note: Check for any Technical Service Bulletins that may apply.

Were there any problems found?

Yes >> Repair as necessary.
Perform POWERTRAIN VERIFICATION TEST - VER 2.

No >> The condition that caused this DTC to set is currently not present. Inspect the related wiring harness for a possible intermittent condition.

(P0134) O2 SENSOR 1/1 CIRCUIT OPEN

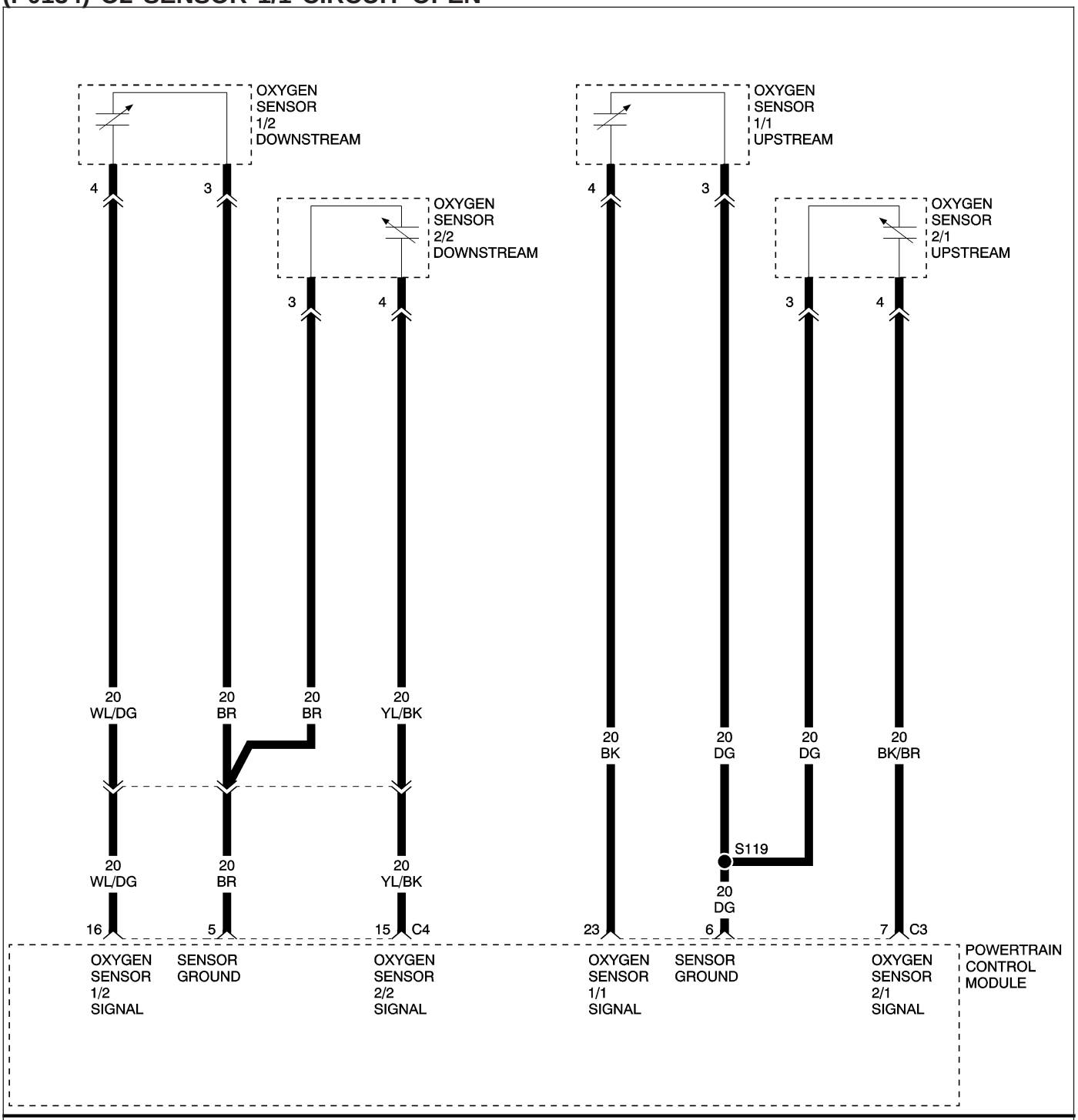

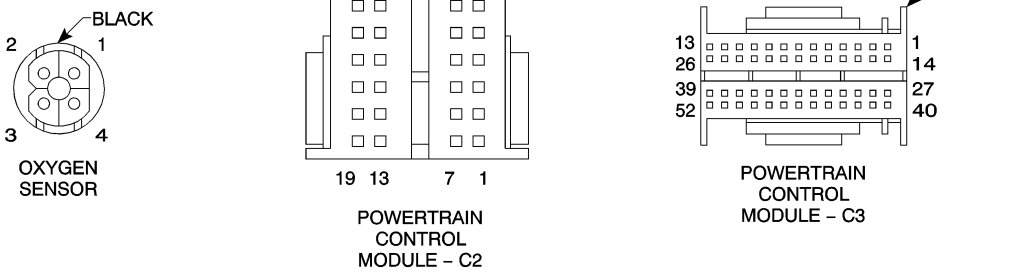

811593ab

(P0134) O2 SENSOR 1/1 CIRCUIT OPEN — CONTINUED

When Monitored and Set Condition

- When Monitored: With the engine running between 1000 and 2000 RPM, engine load between 15% to 50%, closed loop mode, the three way catalytic converter temperature is greater than 380°C (716°F), and the O2 sensor heater must be ON for at least 220 seconds to enable the signal inactive portion of the test.
- Set Condition: O2 Sensor voltage is less than 0.15 volts for approximately 5 seconds. Signal stays at center: The O2 Sensor voltage stays between 0.4 and 0.6 volts for more than approximately 15 seconds after the O2 Sensor heater has been ON for at least 220 seconds.

POSSIBLE CAUSES
O2 SENSOR SIGNAL CIRCUIT OPEN
O2 SENSOR SIGNAL CIRCUIT SHORT TO GROUND
O2 SENSOR GROUND CIRCUIT OPEN
ENGINE EXHAUST LEAK
O2 SENSOR
POWERTRAIN CONTROL MODULE

Diagnostic Test

1. CHECK FOR CURRENT DTC

Turn the ignition on.
With the DRB III®, read the PCM DTCs.

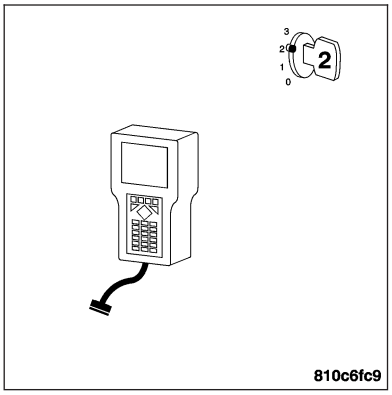

Is this DTC present?

Yes >> For complete diagnosis of this DTC, refer to (P0131) O2 SENSOR 1/1 CIRCUIT LOW.

No >> Go To 2

2. INTERMITTENT WIRING AND CONNECTORS

The conditions necessary to set this DTC are not present at this time.

Note: Check connectors — Clean/repair as necessary. Poor pin to terminal connections can set DTCs.Using the wiring diagram/schematic as a guide, inspect the wiring and connectors specific to this DTC. Wiggle the wires while checking for shorts and open circuits.

Note: Check for any Technical Service Bulletins that may apply.

Were there any problems found?

Yes >> Repair as necessary.
Perform POWERTRAIN VERIFICATION TEST - VER 2.

No >> The condition that caused this DTC to set is currently not present. Inspect the related wiring harness for a possible intermittent condition.

(P0135) O2 SENSOR 1/1 HEATER CIRCUIT LOW

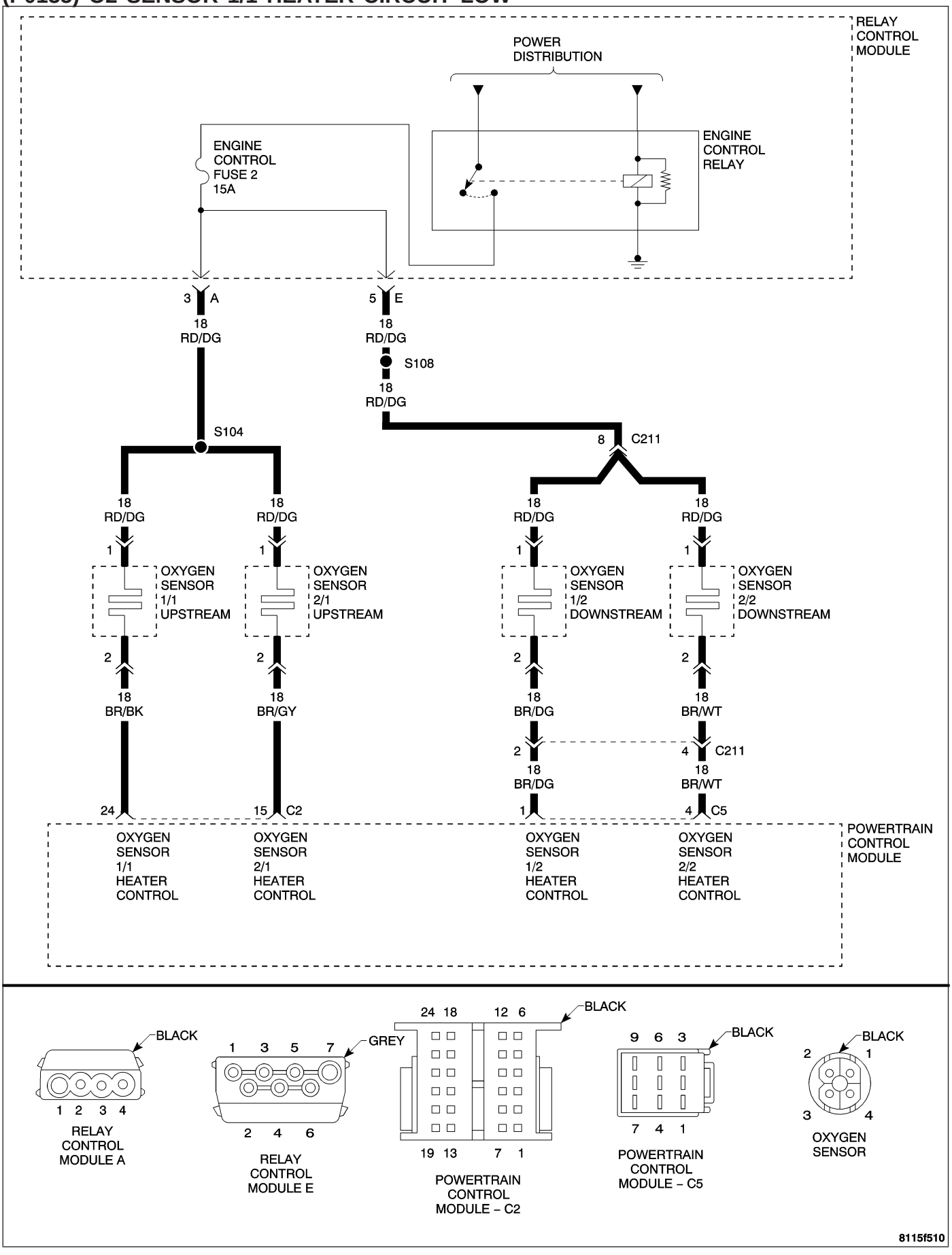

(P0135) O2 SENSOR 1/1 HEATER CIRCUIT LOW — CONTINUED

When Monitored and Set Condition

- When Monitored: Engine Running and Heater duty cycle greater than 0%
- Set Condition: The PCM detects the O2 Heater voltage is out of acceptable range. Below 0.0926 of a volt.

POSSIBLE CAUSES
O2 HEATER CONTROL SHORTED TO GROUND
O2 HEATER ELEMENT
POWERTRAIN CONTROL MODULE

For a complete Powertrain Control Module Circuit Diagram **Refer to Page 9-574**.

Diagnostic Test

1. O2 HEATER ELEMENT

Note: Allow the O2 Sensor to cool down to room temperature.
Turn the ignition off.
Disconnect the O2 Sensor harness connector.

Note: Check connectors — Clean/repair as necessary.
Measure the resistance of the O2 Sensor Heater element at the O2 Sensor harness connector.

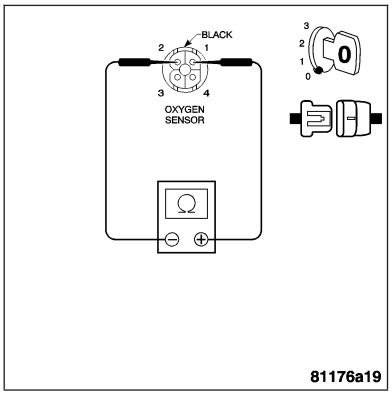

Is the O2 Sensor Heater element resistance between 8.5 and 9.5 ohms?

Yes >> Go To 2

No >> Replace the Oxygen Sensor. **Refer to Page 14-45**.
Perform POWERTRAIN VERIFICATION TEST - VER 2.

2. O2 HEATER CONTROL CIRCUIT SHORTED TO GROUND

With the ignition off.
Disconnect the PCM harness connectors.

Note: Check connectors — Clean/repair as necessary.
Measure the resistance between ground and the O2 Heater Control circuit.

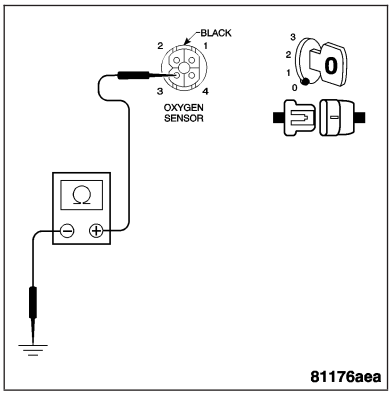

Is the resistance below 100 ohms?

Yes >> Repair the O2 Heater Control circuit for a short to ground.
Perform POWERTRAIN VERIFICATION TEST - VER 2.

No >> Before continuing, check the PCM harness connector terminals for corrosion, damage, or terminal push out. Repair as necessary. Replace and program the Powertrain Control Module. **Refer to Page 8E-56**.
Perform POWERTRAIN VERIFICATION TEST - VER 2.

(P0135) O2 SENSOR 1/1 HEATER PERFORMANCE

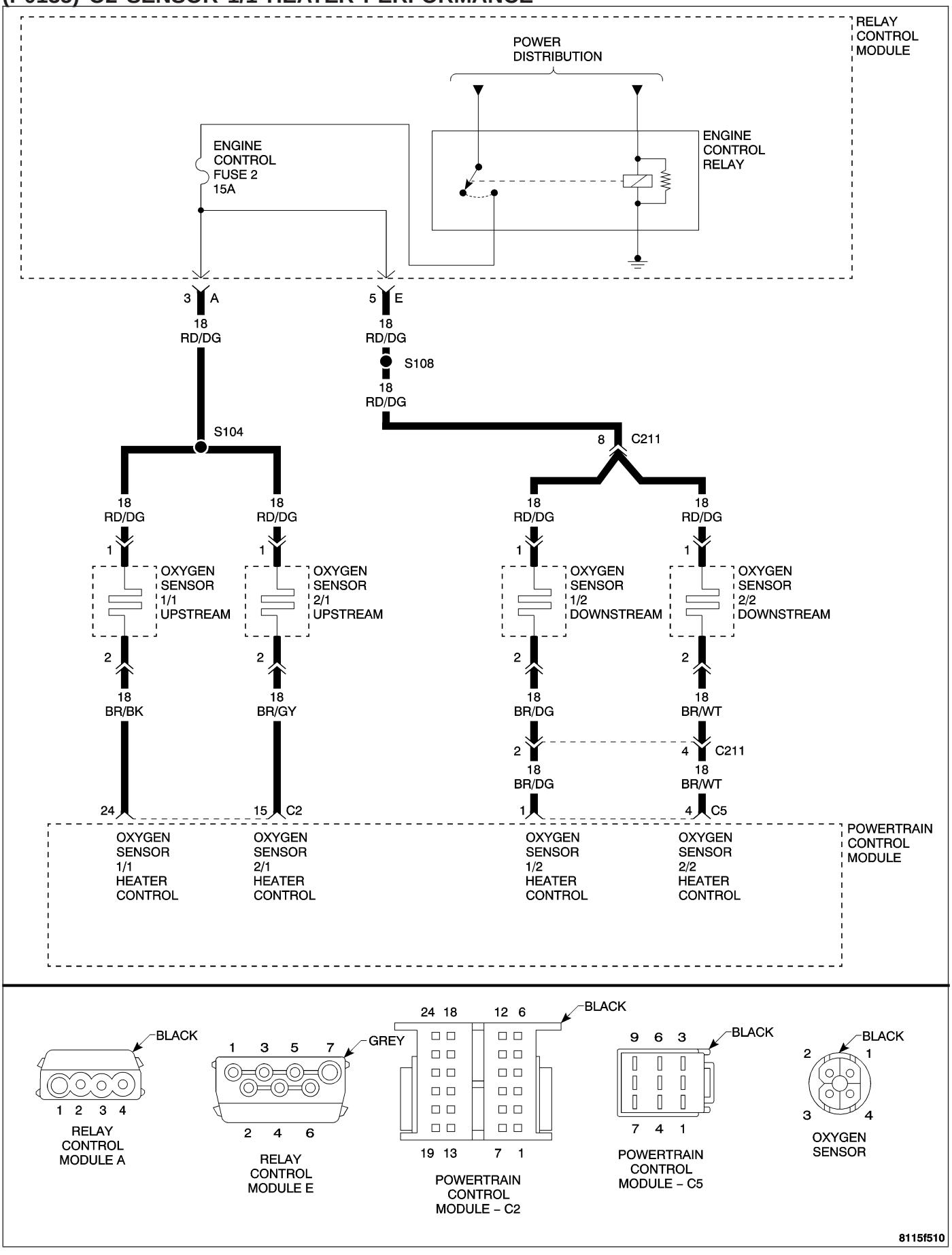

(P0135) O2 SENSOR 1/1 HEATER PERFORMANCE — CONTINUED

When Monitored and Set Condition

- When Monitored: Engine Running and Heater duty cycle greater than 0%.
- Set Condition: O2 Heater Temperature does not reach 575°C (959°F) within 90 second during monitoring conditions. Two Trip Fault.

POSSIBLE CAUSES
O2 SENSOR HEATER FUSED ENGINE CONTROL RELAY OUTPUT CIRCUIT OPEN
O2 SENSOR HEATER CONTROL CIRCUIT SHORT TO VOLTAGE
O2 SENSOR HEATER CONTROL CIRCUIT SHORT TO GROUND
O2 HEATER CONTROL CIRCUIT OPEN
O2 HEATER ELEMENT
POWERTRAIN CONTROL MODULE

For a complete Powertrain Control Module Circuit Diagram **Refer to Page 9-574**.

Diagnostic Test

1. CHECK FOR CURRENT DTC

Note: If the PCM detects and stores a DTC, the PCM also stores the engine/vehicle operating conditions under which the DTC was set. Some of these conditions are displayed on the DRB III® at the same time the DTC is displayed.

Note: Before erasing stored DTCs, record these conditions. Attempting to duplicate these conditions may assist when checking for an active DTC.

Turn the ignition on.

With the DRB III®, erase PCM DTCs.

Note: It maybe necessary to road test the vehicle for this DTC to set.

With the DRB III®, read the PCM DTCs.

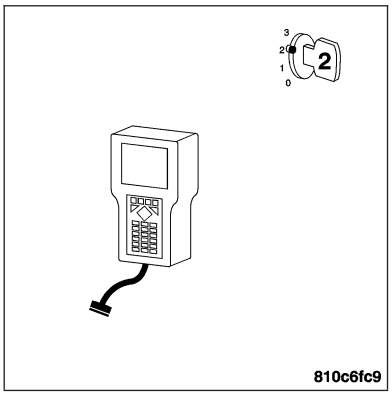

Did this DTC set again?

Yes >> Go To 2

No >> Go To 7

2. PCM

Turn the ignition off.

Disconnect the PCM harness connectors.

Note: Check connectors — Clean/repair as necessary.

Turn the ignition on.

Measure the voltage of the O2 Sensor Heater Control circuit at the PCM harness connector.

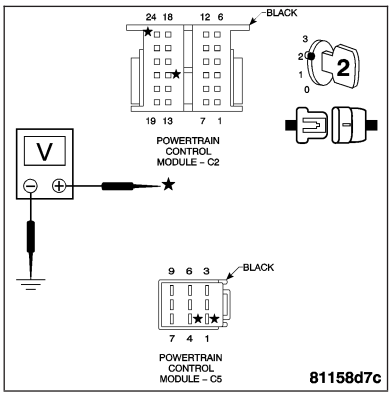

Is the voltage above 10 volts?

Yes >> Replace and program the Powertrain Control Module. **Refer to Page 8E-56**.
Perform POWERTRAIN VERIFICATION TEST - VER 2.

No >> Go To 3

(P0135) O2 SENSOR 1/1 HEATER PERFORMANCE — CONTINUED

3. O2 SENSOR HEATER CONTROL CIRCUIT SHORT TO GROUND

Turn the ignition off.

Disconnect the O2 Sensor harness connector.

Note: Check connectors — Clean/repair as necessary.
Measure the resistance between ground and the O2 Sensor Heater Control circuit.

Is resistance below 100 ohms?

Yes >> Repair the O2 Sensor Heater Control circuit for a short to ground.
Perform POWERTRAIN VERIFICATION TEST - VER 2.

No >> Go To 4

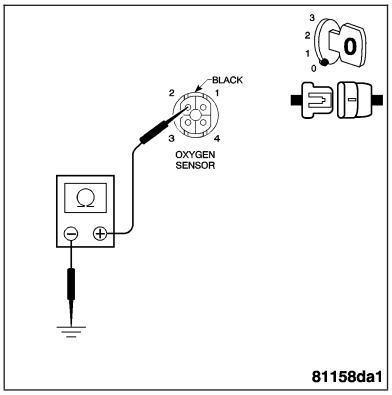

4. O2 SENSOR HEATER CONTROL CIRCUIT SHORTED TO VOLTAGE

Turn the ignition on.

Measure the voltage of the O2 Sensor Heater Control circuit at the O2 Sensor harness connector.

Is the voltage above 1.0 volts?

Yes >> Repair the O2 Sensor Heater Control circuit for a short to voltage.
Perform POWERTRAIN VERIFICATION TEST - VER 2.

No >> Go To 5

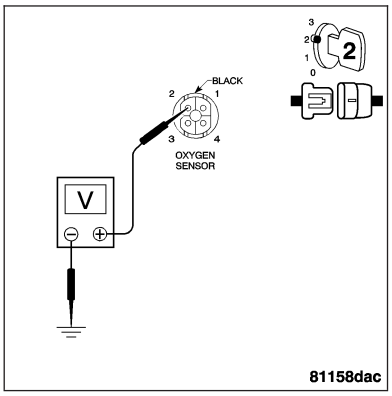

5. O2 SENSOR HEATER CONTROL CIRCUIT OPEN

Turn the ignition off.

Measure the resistance of the O2 Sensor Heater Control circuit from the O2 Sensor harness connector to the PCM harness connector.

Is the resistance below 5.0 ohms?

Yes >> Go To 6

No >> Repair the O2 Sensor Heater Control circuit for an open.
Perform POWERTRAIN VERIFICATION TEST - VER 2.

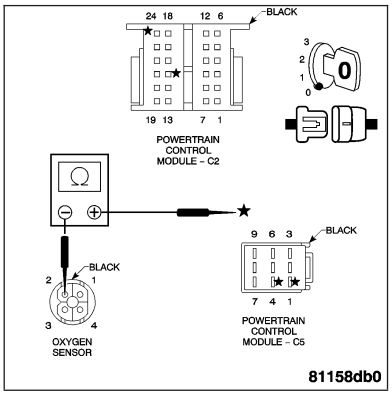

(P0135) O2 SENSOR 1/1 HEATER PERFORMANCE — CONTINUED

6. O2 SENSOR HEATER FUSED ENGINE CONTROL RELAY OUTPUT CIRCUIT

Turn the ignition on.

Measure the voltage of the O2 Sensor Heater Fused Engine Control Relay Output circuit at the O2 Sensor harness connector.

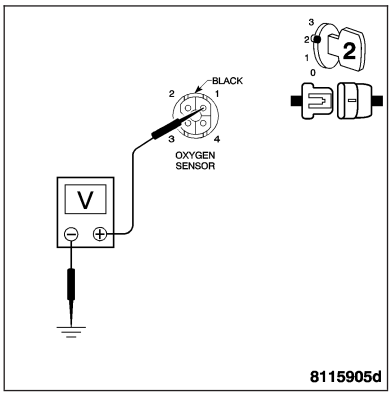

Is the voltage above 10 volts?

Yes >> Replace the O2 Sensor. **Refer to Page 14-45**.
Perform POWERTRAIN VERIFICATION TEST - VER 2.

No >> Repair the O2 Sensor Heater Fused Engine Control Relay Output circuit for an open.
Perform POWERTRAIN VERIFICATION TEST - VER 2.

7. INTERMITTENT WIRING AND CONNECTORS

The condition that caused this DTC to set is currently not present. Inspect the related wiring harness for a possible intermittent condition.

Note: Check connectors — Clean/repair as necessary. Poor pin to terminal connections can set DTC's.

Note: Check for any Technical Service Bulletins that may apply.
Using the wiring diagram/schematic as a guide, inspect the wiring and connectors specific to this DTC. Wiggle the wires while checking for shorts and open circuits.

Were there any problems found?

Yes >> Repair as necessary.
Perform POWERTRAIN VERIFICATION TEST - VER 2.

No >> The condition that caused this DTC to set is currently not present. Inspect the related wiring harness for a possible intermittent condition.

(P0135) O2 SENSOR 1/1 HEATER CIRCUIT HIGH

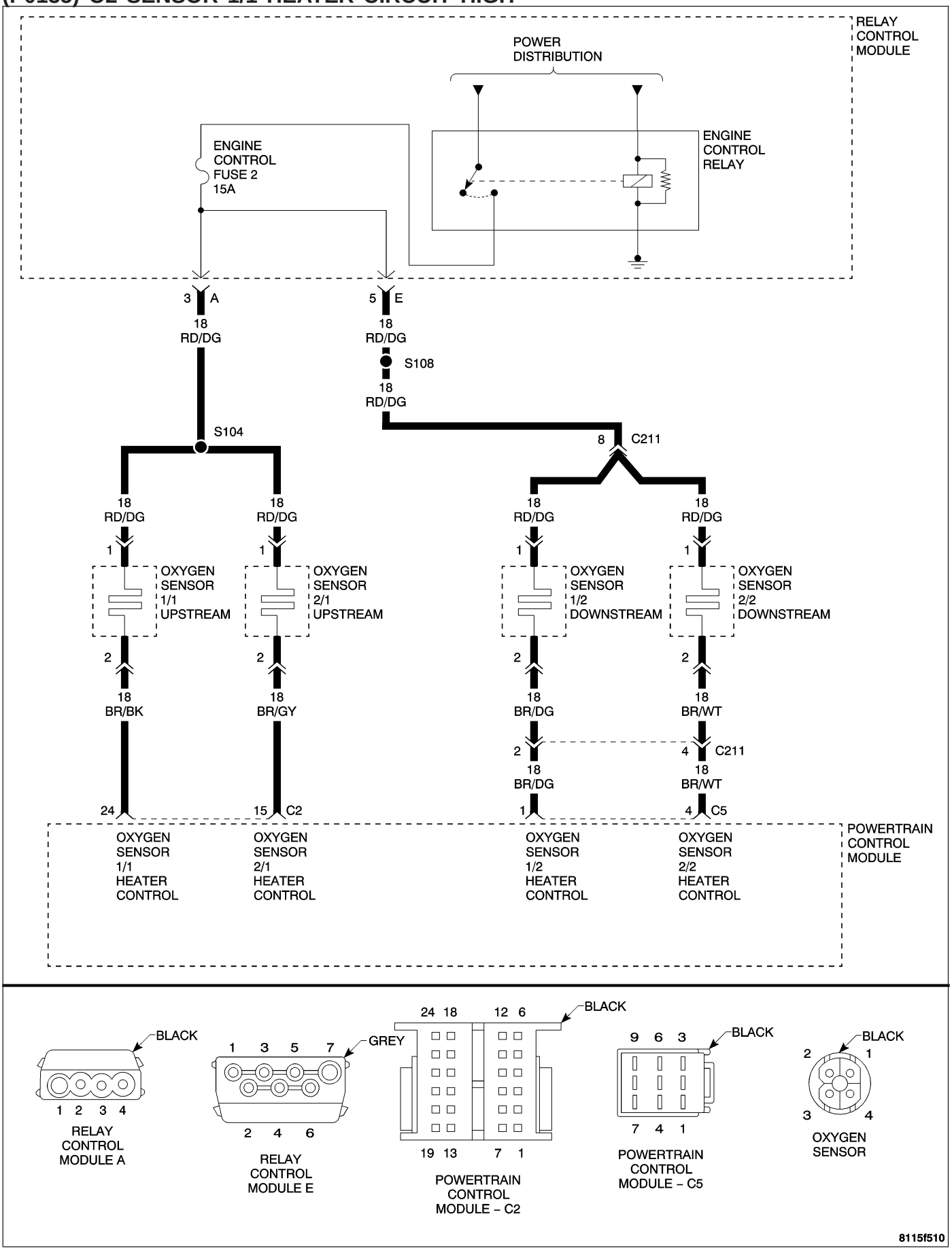

(P0135) O2 SENSOR 1/1 HEATER CIRCUIT HIGH — CONTINUED

When Monitored and Set Condition

- When Monitored: Engine Running and Heater duty cycle greater than 0%.
- Set Condition: O2 Heater Temperature does not reach 575°C (959°F) within 90 second during monitoring conditions. Two Trip Fault.

POSSIBLE CAUSES
O2 HEATER ELEMENT
O2 HEATER FUSED ENGINE CONTROL RELAY OUTPUT CIRCUIT OPEN
O2 HEATER CONTROL CIRCUIT OPEN
POWERTRAIN CONTROL MODULE

For a complete Powertrain Control Module Circuit Diagram **Refer to Page 9-574**.

Diagnostic Test

1. CHECK FOR CURRENT DTC

Note: If the PCM detects and stores a DTC, the PCM also stores the engine/vehicle operating conditions under which the DTC was set. Some of these conditions are displayed on the DRB III® at the same time the DTC is displayed.

Note: Before erasing stored DTCs, record these conditions. Attempting to duplicate these conditions may assist when checking for an active DTC.

Turn the ignition on.

With the DRB III®, erase PCM DTCs.

Note: It maybe necessary to road test the vehicle for this DTC to set.

With the DRB III®, read the PCM DTCs.

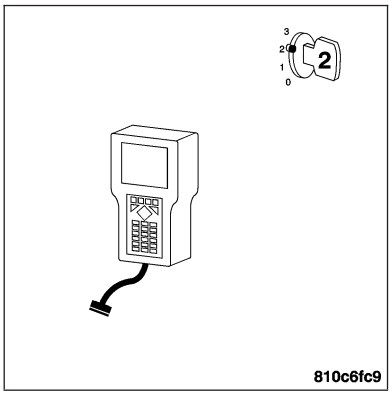

Did this DTC set again?

Yes >> Go To 3

No >> Go To 2

2. O2 SENSOR HEATER OPERATION

Turn the ignition off.

Note: Allow the O2 Sensor to cool down before continuing the test. Raising the hood may help in reducing under hood temperatures.

Turn the ignition on.

With the DRB III®, actuate the O2 Heater Test.

With the DRB III®, monitor O2 Sensor voltage for at least 2 minutes.

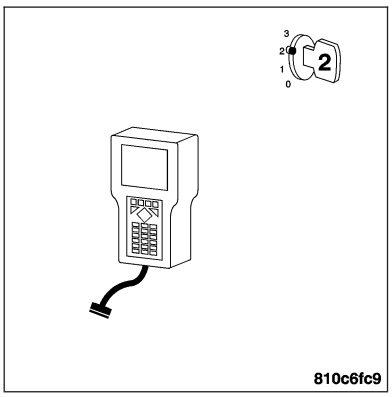

Does the voltage stay above 0.47 volt?

Yes >> Go To 3

No >> Go To 6

(P0135) O2 SENSOR 1/1 HEATER CIRCUIT HIGH — CONTINUED

3. O2 HEATER ELEMENT

Turn the ignition off.

Note: Allow the O2 Sensor to cool down to room temperature. Raising the hood may help in reducing under hood temperatures.
Disconnect the O2 Sensor harness connector.

Note: Check connectors — Clean/repair as necessary.
Measure the resistance of the O2 Sensor Heater element.

Note: O2 Sensor Heater Resistance Specification: 8.5 to 9.5 ohms.

Is the resistance within specifications?

Yes >> Go To 4

No >> Replace the O2 Sensor. **Refer to Page 14-45**.
Perform POWERTRAIN VERIFICATION TEST - VER 2.

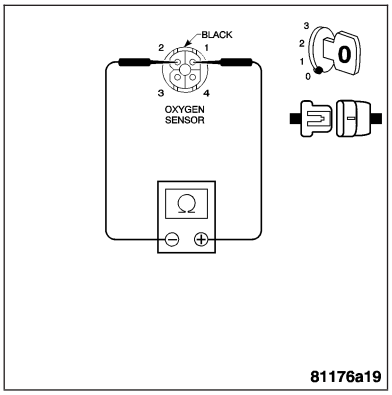

4. O2 HEATER FUSED ENGINE CONTROL RELAY OUTPUT CIRCUIT OPEN

Turn the ignition on.
Measure the voltage of the O2 Heater Fused Engine Control Relay Output circuit at the O2 Sensor harness connector.

Is the voltage above 10 volts?

Yes >> Go To 5

No >> Repair the O2 Heater Fused Engine Control Relay Output circuit for an open.
Perform POWERTRAIN VERIFICATION TEST - VER 2.

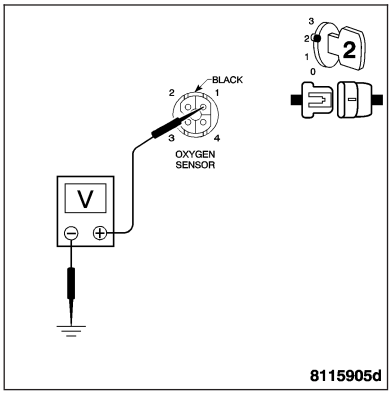

5. O2 HEATER CONTROL CIRCUIT OPEN

Turn the ignition off.
Disconnect the PCM harness connectors.

Note: Check connectors — Clean/repair as necessary.
Measure the resistance of the O2 Heater Control circuit from the O2 Sensor harness connector to the PCM harness connector.

Is the resistance below 5.0 ohms?

Yes >> Replace and program the Powertrain Control Module. **Refer to Page 8E-56**.
Perform POWERTRAIN VERIFICATION TEST - VER 2.

No >> Repair the O2 Heater Control circuit for an open.
Perform POWERTRAIN VERIFICATION TEST - VER 2.

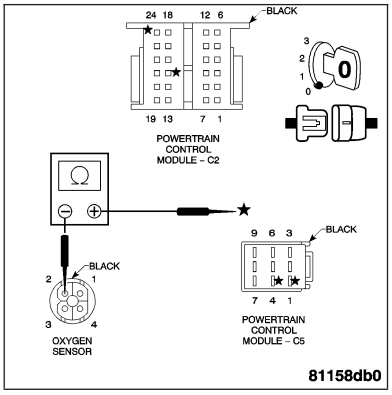

(P0135) O2 SENSOR 1/1 HEATER CIRCUIT HIGH — CONTINUED

6. INTERMITTENT WIRING AND CONNECTORS

The conditions necessary to set this DTC are not present at this time.

Note: Check connectors — Clean/repair as necessary. Poor pin to terminal connections can set DTCs.Using the wiring diagram/schematic as a guide, inspect the wiring and connectors specific to this DTC. Wiggle the wires while checking for shorts and open circuits.

Note: Check for any Technical Service Bulletins that may apply.

Were there any problems found?

Yes >> Repair as necessary.
Perform POWERTRAIN VERIFICATION TEST - VER 2.

No >> The condition that caused this DTC to set is currently not present. Inspect the related wiring harness for a possible intermittent condition.

(P0135) O2 SENSOR 1/1 HEATER CIRCUIT OPEN

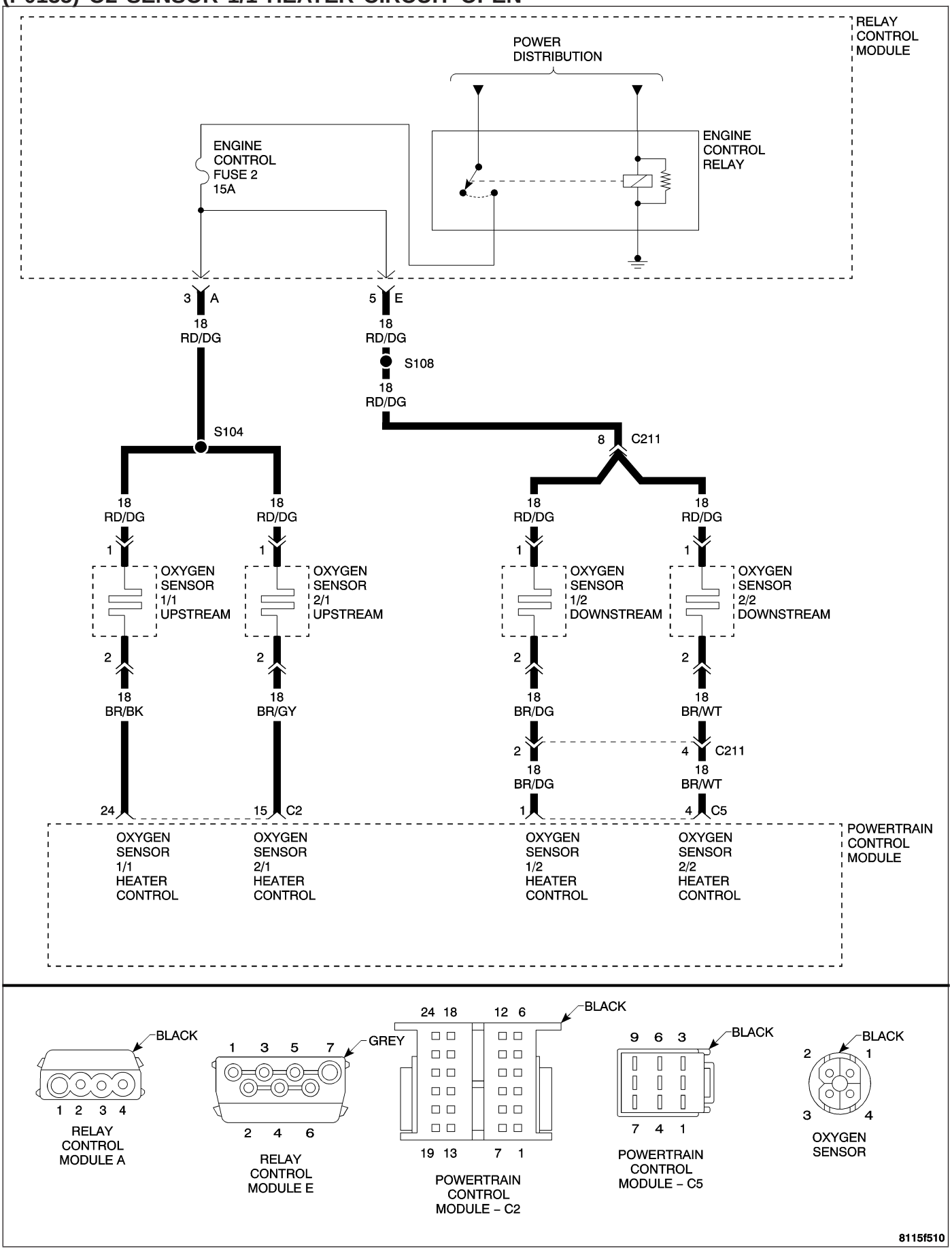

(P0135) O2 SENSOR 1/1 HEATER CIRCUIT OPEN — CONTINUED

When Monitored and Set Condition

- When Monitored: Engine Running and Heater duty cycle greater than 0%.
- Set Condition: O2 Heater Temperature does not reach 575°C (959°F) within 90 second during monitoring conditions. Two Trip Fault.

POSSIBLE CAUSES
O2 HEATER ELEMENT
O2 HEATER FUSED ENGINE CONTROL RELAY OUTPUT CIRCUIT OPEN
O2 HEATER CONTROL CIRCUIT OPEN
POWERTRAIN CONTROL MODULE

Diagnostic Test

1. CHECK FOR CURRENT DTC

Turn the ignition on.
With the DRB III®, read the PCM DTCs.

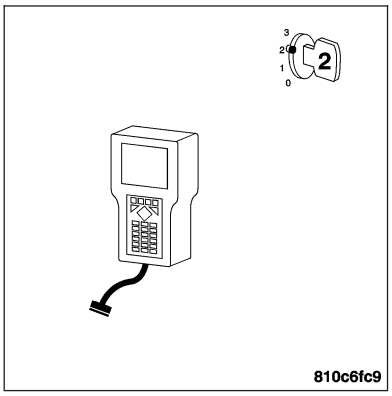

Is this DTC present?

Yes >> For complete diagnosis of this DTC, refer to (P0135) O2 SENSOR 1/1 HEATER CIRCUIT HIGH

No >> Go To 2

2. INTERMITTENT WIRING AND CONNECTORS

The conditions necessary to set this DTC are not present at this time.

Note: Check connectors — Clean/repair as necessary. Poor pin to terminal connections can set DTCs.Using the wiring diagram/schematic as a guide, inspect the wiring and connectors specific to this DTC. Wiggle the wires while checking for shorts and open circuits.

Note: Check for any Technical Service Bulletins that may apply.

Were there any problems found?

Yes >> Repair as necessary.
Perform POWERTRAIN VERIFICATION TEST - VER 2.

No >> The condition that caused this DTC to set is currently not present. Inspect the related wiring harness for a possible intermittent condition.

(P0137) O2 SENSOR 1/2 BELOW THRESHOLD

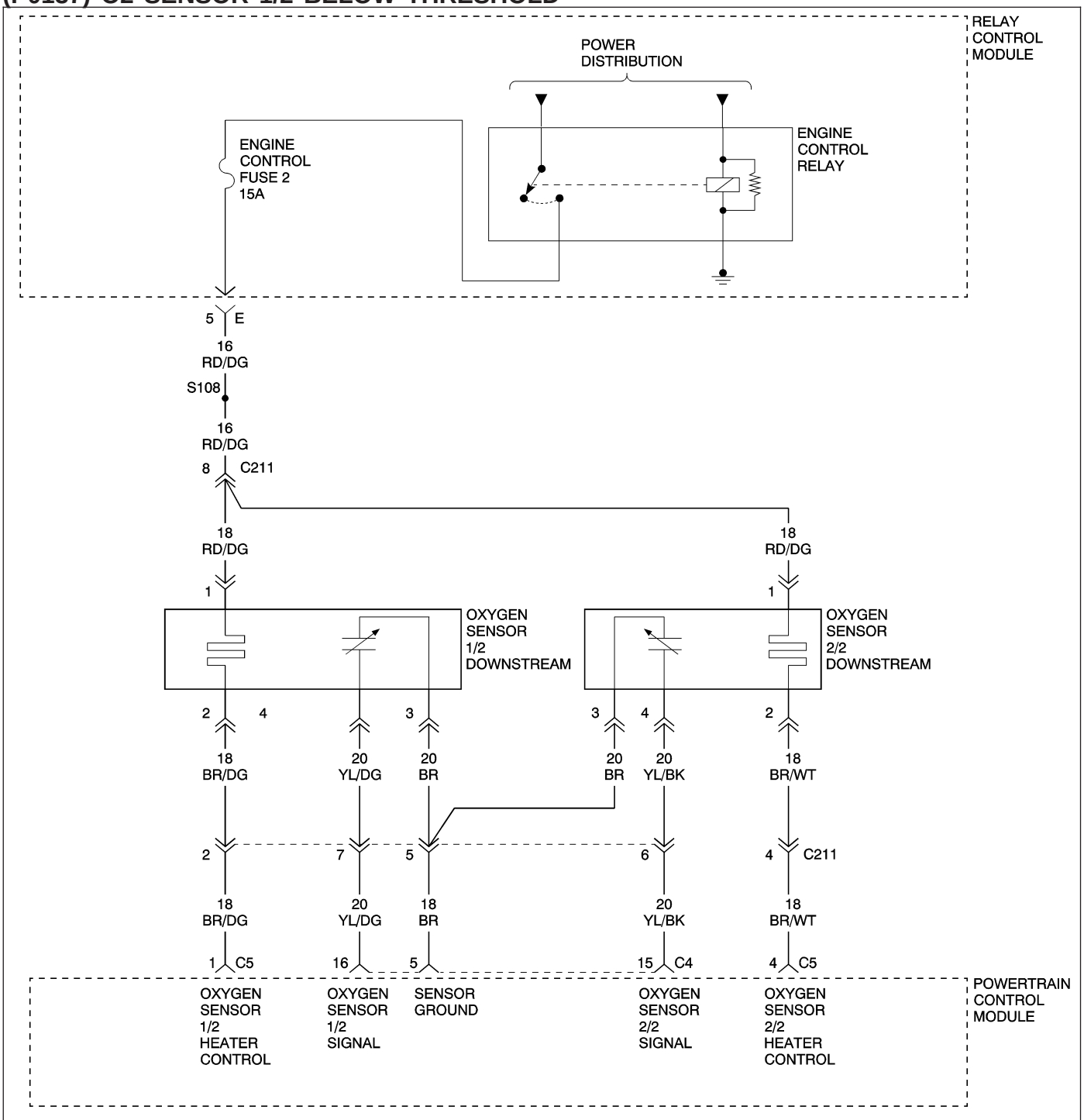

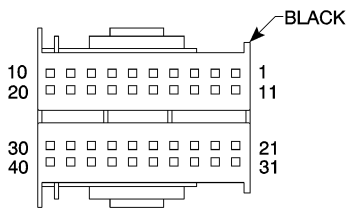

POWERTRAIN CONTROL MODULE – C4

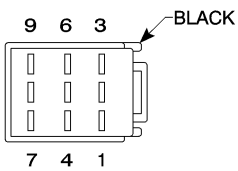

POWERTRAIN CONTROL MODULE – C5

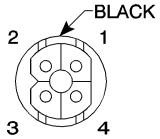

OXYGEN SENSOR

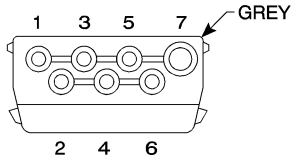

RELAY CONTROL MODULE E

(P0137) O2 SENSOR 1/2 BELOW THRESHOLD — CONTINUED

When Monitored and Set Condition

- When Monitored: Start and drive vehicle greater than 32 km/h (20 MPH) and less than 89 km/h (55 MPH). Throttle open for a minimum 120 seconds. Coolant Temp greater than 70°C (158°F) and Catalytic Converter Temperature greater than 600°C (1112°F).
- Set Condition: The O2 sensor voltage switches only 11 times or less from rich to lean within 20 seconds during monitoring. Two Trip Fault.

POSSIBLE CAUSES
EXHAUST LEAK
O2 SENSOR SIGNAL CIRCUIT
O2 SENSOR GROUND CIRCUIT
O2 SENSOR

Diagnostic Test

1. CHECK FOR CURRENT DTC

Turn the ignition on.
With the DRB III®, read the PCM DTCs.

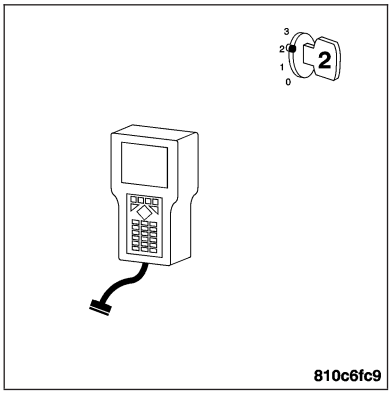

Is this DTC present?

Yes >> For complete diagnosis of this DTC, refer to (P0137 O2 SENSOR 2/2 ABOVE THRESHOLD.

No >> Go To 2

2. INTERMITTENT WIRING AND CONNECTORS

The conditions necessary to set this DTC are not present at this time.

Note: Check connectors — Clean/repair as necessary. Poor pin to terminal connections can set DTCs.Using the wiring diagram/schematic as a guide, inspect the wiring and connectors specific to this DTC. Wiggle the wires while checking for shorts and open circuits.

Note: Check for any Technical Service Bulletins that may apply.

Were there any problems found?

Yes >> Repair as necessary.
Perform POWERTRAIN VERIFICATION TEST - VER 2.

No >> The condition that caused this DTC to set is currently not present. Inspect the related wiring harness for a possible intermittent condition.

(P0137) O2 SENSOR 1/2 ABOVE THRESHOLD

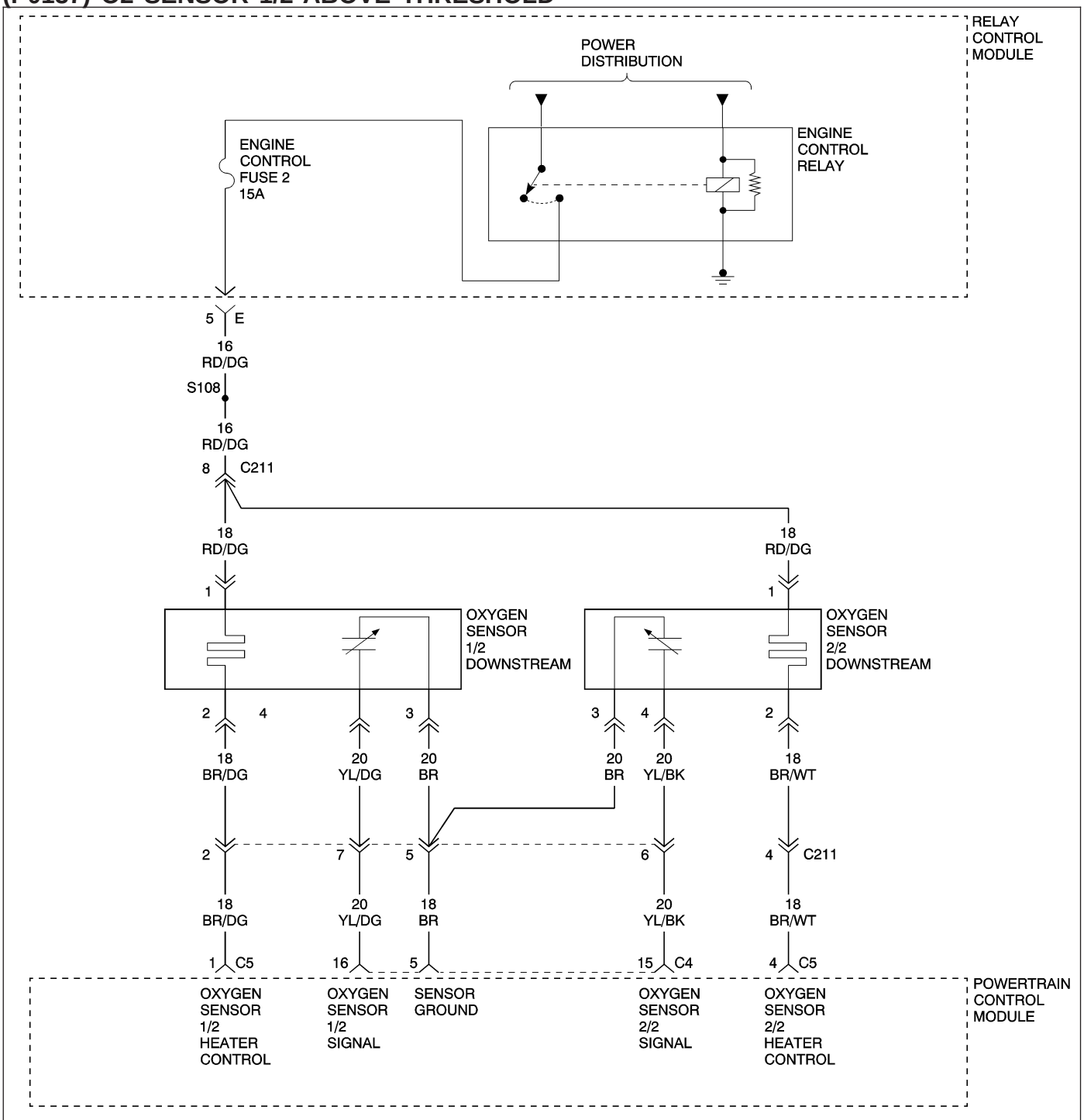

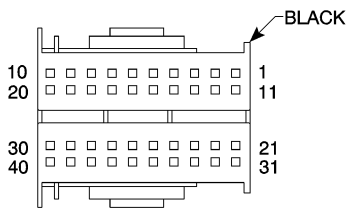

POWERTRAIN CONTROL MODULE – C4

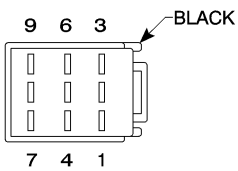

POWERTRAIN CONTROL MODULE – C5

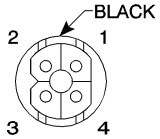

OXYGEN SENSOR

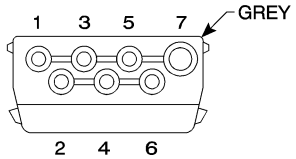

RELAY CONTROL MODULE E

(P0137) O2 SENSOR 1/2 ABOVE THRESHOLD — CONTINUED

When Monitored and Set Condition

- When Monitored: Start and drive vehicle greater than 32 km/h (20 MPH) and less than 89 km/h (55 MPH). Throttle open for a minimum 120 seconds. Coolant Temp greater than 70°C (158°F) and Catalytic Converter Temperature greater than 600°C (1112°F).
- Set Condition: The O2 sensor voltage switches only 11 times or less from lean to rich within 20 seconds during monitoring. Two Trip Fault.

POSSIBLE CAUSES
EXHAUST LEAK
O2 SENSOR SIGNAL CIRCUIT
O2 SENSOR GROUND CIRCUIT
O2 SENSOR

Diagnostic Test

1. CHECK FOR CURRENT DTC

Turn the ignition on.
With the DRB III®, read the PCM DTCs.

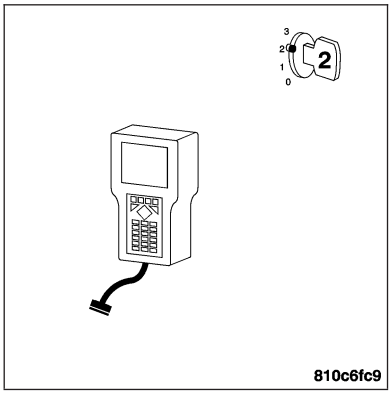

Is this DTC present?

Yes >> For complete diagnosis of this DTC, refer to (P0137 O2 SENSOR 2/2 ABOVE THRESHOLD.

No >> Go To 2

2. INTERMITTENT WIRING AND CONNECTORS

The conditions necessary to set this DTC are not present at this time.

Note: Check connectors — Clean/repair as necessary. Poor pin to terminal connections can set DTCs.Using the wiring diagram/schematic as a guide, inspect the wiring and connectors specific to this DTC. Wiggle the wires while checking for shorts and open circuits.

Note: Check for any Technical Service Bulletins that may apply.

Were there any problems found?

Yes >> Repair as necessary.
Perform POWERTRAIN VERIFICATION TEST - VER 2.

No >> The condition that caused this DTC to set is currently not present. Inspect the related wiring harness for a possible intermittent condition.

(P0137 O2 SENSOR 2/2 ABOVE THRESHOLD

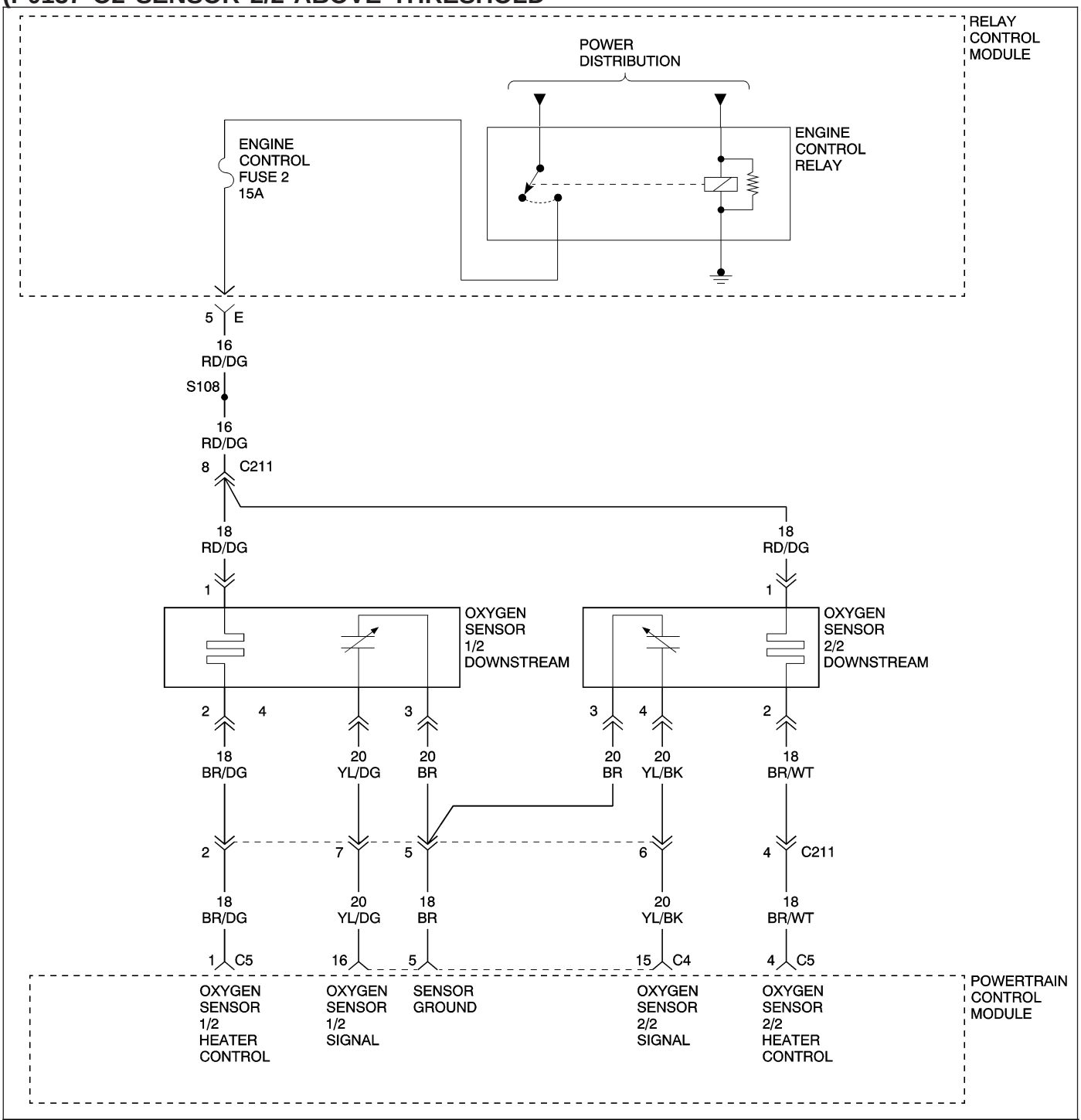

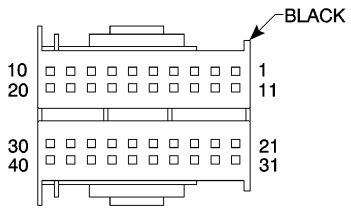

POWERTRAIN CONTROL MODULE – C4

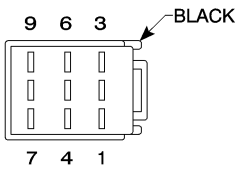

POWERTRAIN CONTROL MODULE – C5

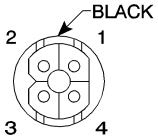

OXYGEN SENSOR

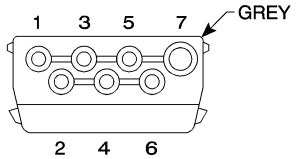

RELAY CONTROL MODULE E

(P0137 O2 SENSOR 2/2 ABOVE THRESHOLD — CONTINUED
When Monitored and Set Condition

(P0137) O2 SENSOR 2/2 ABOVE THRESHOLD

- When Monitored: Start and drive vehicle greater than 32 km/h (20 MPH) and less than 89 km/h (55 MPH). Throttle open for a minimum 120 seconds. Coolant Temp greater than 70°C (158°F) and Catalytic Converter Temperature greater than 600°C (1112°F).
- Set Condition: The O2 sensor voltage switches only 11 times or less from lean to rich within 20 seconds during monitoring. Two Trip Fault.

(P0137) O2 SENSOR 2/2 BELOW THRESHOLD

- When Monitored: Start and drive vehicle greater than 32 km/h (20 MPH) and less than 89 km/h (55 MPH). Throttle open for a minimum 120 seconds. Coolant Temp greater than 70°C (158°F) and Catalytic Converter Temperature greater than 600°C (1112°F).
- Set Condition: The O2 sensor voltage switches only 11 times or less from rich to lean within 20 seconds during monitoring. Two Trip Fault.

POSSIBLE CAUSES
EXHAUST LEAK
O2 SENSOR SIGNAL CIRCUIT
O2 SENSOR GROUND CIRCUIT
O2 SENSOR

For a complete Powertrain Control Module Circuit Diagram **Refer to Page 9-574**.

Diagnostic Test

1. CHECK FOR CURRENT DTC

Note: It is important to perform the diagnostics on the O2 Sensor that set the DTC.

Note: Check for contaminates that may have damaged the O2 Sensor: contaminated fuel, unapproved silicone, oil and coolant.

Note: If the PCM detects and stores a DTC, the PCM also stores the engine/vehicle operating conditions under which the DTC was set. Some of these conditions are displayed on the DRB III® at the same time the DTC is displayed.

Note: Before erasing stored DTCs, record these conditions. Attempting to duplicate these conditions may assist when checking for an active DTC.

Turn the ignition on.

With the DRB III®, erase PCM DTCs.

Note: It maybe necessary to road test the vehicle for this DTC to set.

With the DRB III®, read the PCM DTCs.

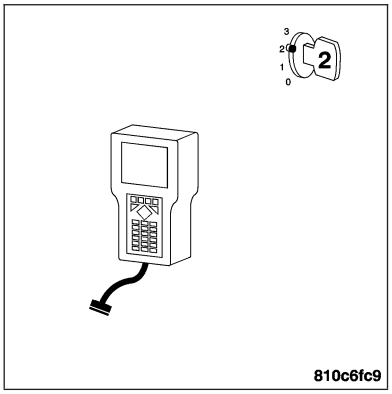

Did this DTC set again?

Yes >> Go To 2

No >> Go To 5

(P0137 O2 SENSOR 2/2 ABOVE THRESHOLD — CONTINUED

2. EXHAUST LEAK

Start the engine.

Inspect the exhaust system for leaks between the engine and the O2 Sensors. **Refer to Page 11-3**.

Are there any exhaust leaks?

Yes >> Repair or replace the leaking exhaust parts as necessary. **Refer to Page 11-5**.
Perform POWERTRAIN VERIFICATION TEST - VER 2.

No >> Go To 3

3. O2 SIGNAL CIRCUIT

Turn the ignition off

Disconnect the O2 Sensor harness connector.

Note: Check connectors — Clean/repair as necessary.
Turn the ignition on.

Measure the voltage on the O2 Signal circuit in the O2 Sensor harness connector.

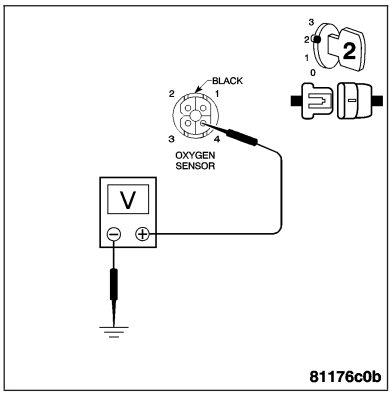

Is the voltage approximately 0.47 volt?

Yes >> Go To 4

No >> Check the O2 Signal circuit for damage, short to ground, open, or short to voltage. If OK, replace and program the Powertrain Control Module. **Refer to Page 8E-56**.
Perform POWERTRAIN VERIFICATION TEST - VER 2.

4. O2 GROUND CIRCUIT

Turn the ignition off.

Disconnect the PCM harness connectors.

Note: Check connectors — Clean/repair as necessary.
Measure the resistance of the O2 Ground circuit from the O2 Sensor harness connector to the PCM harness connector.

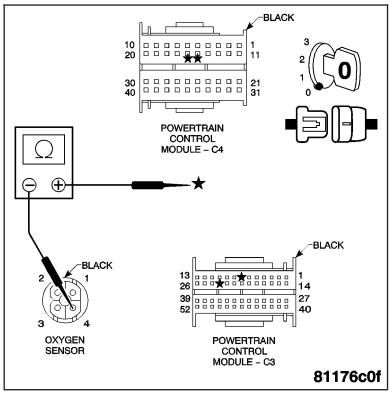

Is the resistance below 5.0 ohms?

Yes >> Replace the Oxygen Sensor. **Refer to Page 14-45**.
Perform POWERTRAIN VERIFICATION TEST - VER 2.

No >> Check the O2 Ground circuit for damage, short to ground, open, or short to voltage. If OK, replace and program the Powertrain Control Module. **Refer to Page 8E-56**.
Perform POWERTRAIN VERIFICATION TEST - VER 2.

(P0137 O2 SENSOR 2/2 ABOVE THRESHOLD — CONTINUED

5. INTERMITTENT WIRING AND CONNECTORS

The conditions necessary to set this DTC are not present at this time.

Note: Check connectors — Clean/repair as necessary. Poor pin to terminal connections can set DTCs.Using the wiring diagram/schematic as a guide, inspect the wiring and connectors specific to this DTC. Wiggle the wires while checking for shorts and open circuits.

Note: Check for any Technical Service Bulletins that may apply.

Were there any problems found?

Yes >> Repair as necessary.
Perform POWERTRAIN VERIFICATION TEST - VER 2.

No >> The condition that caused this DTC to set is currently not present. Inspect the related wiring harness for a possible intermittent condition.

(P0137) O2 SENSOR 2/2 BELOW THRESHOLD

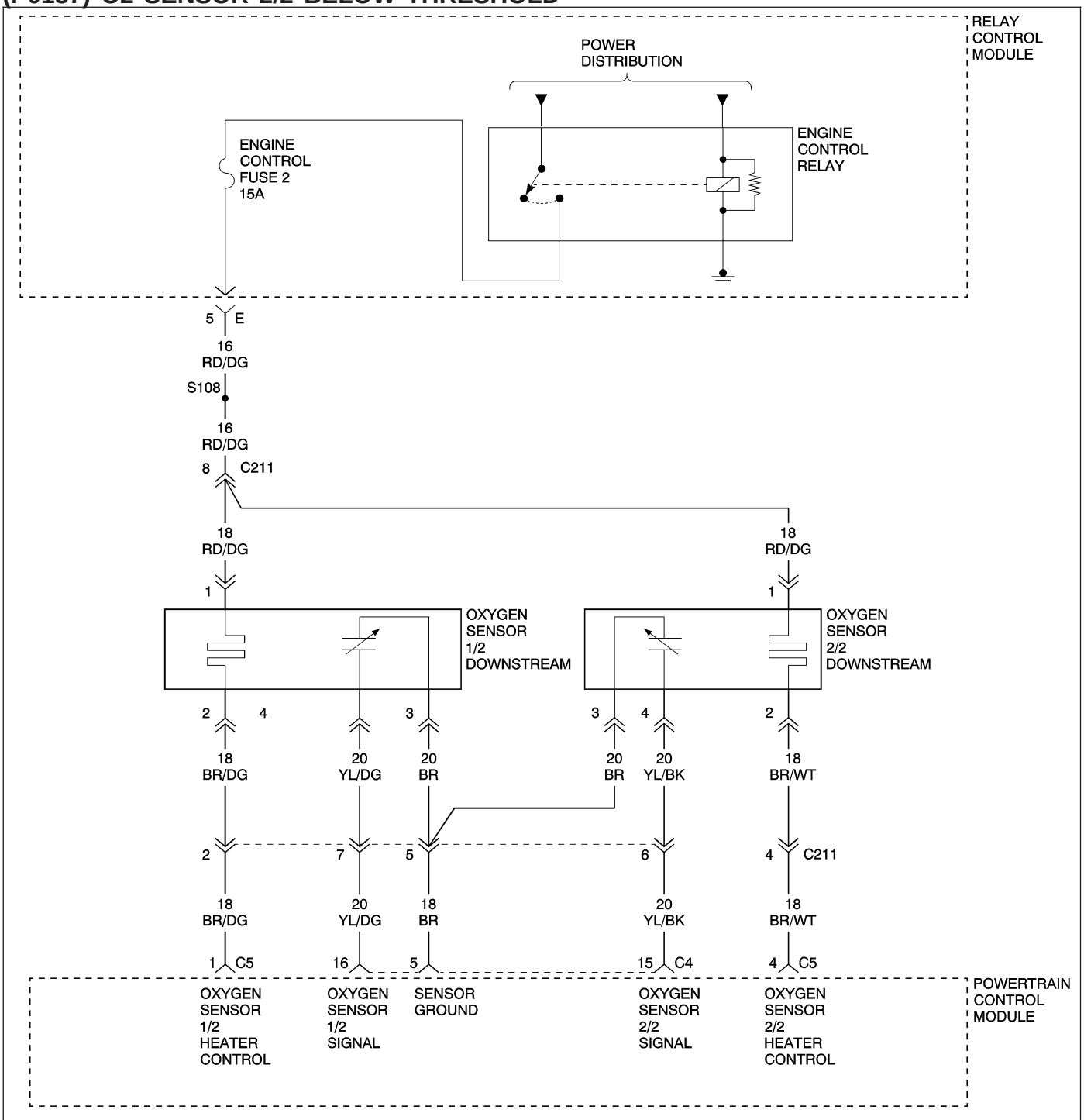

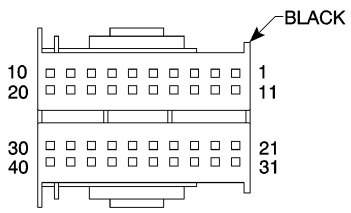

POWERTRAIN CONTROL MODULE – C4

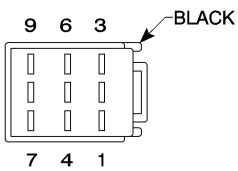

POWERTRAIN CONTROL MODULE – C5

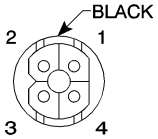

OXYGEN SENSOR

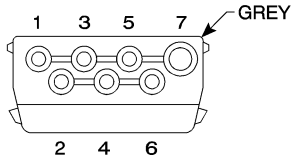

RELAY CONTROL MODULE E

(P0137) O2 SENSOR 2/2 BELOW THRESHOLD — CONTINUED

When Monitored and Set Condition

- When Monitored: Start and drive vehicle greater than 32 km/h (20 MPH) and less than 89 km/h (55 MPH). Throttle open for a minimum 120 seconds. Coolant Temp greater than 70°C (158°F) and Catalytic Converter Temperature greater than 600°C (1112°F).
- Set Condition: The O2 sensor voltage switches only 11 times or less from rich to lean within 20 seconds during monitoring. Two Trip Fault.

POSSIBLE CAUSES
EXHAUST LEAK
O2 SENSOR SIGNAL CIRCUIT
O2 SENSOR GROUND CIRCUIT
O2 SENSOR

Diagnostic Test

1. CHECK FOR CURRENT DTC

Turn the ignition on.
With the DRB III®, read the PCM DTCs.

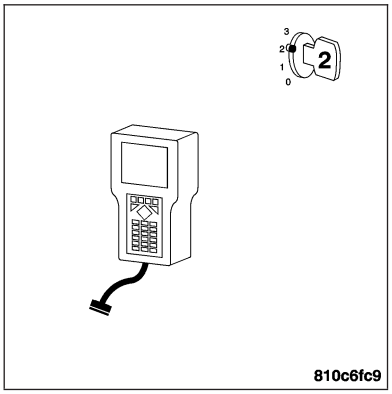

Is this DTC present?

Yes >> For complete diagnosis of this DTC, refer to (P0137 O2 SENSOR 2/2 ABOVE THRESHOLD.

No >> Go To 2

2. INTERMITTENT WIRING AND CONNECTORS

The conditions necessary to set this DTC are not present at this time.

Note: Check connectors — Clean/repair as necessary. Poor pin to terminal connections can set DTCs.Using the wiring diagram/schematic as a guide, inspect the wiring and connectors specific to this DTC. Wiggle the wires while checking for shorts and open circuits.

Note: Check for any Technical Service Bulletins that may apply.

Were there any problems found?

Yes >> Repair as necessary.
Perform POWERTRAIN VERIFICATION TEST - VER 2.

No >> The condition that caused this DTC to set is currently not present. Inspect the related wiring harness for a possible intermittent condition.

(P0138) O2 SENSOR 1/2 CIRCUIT HIGH

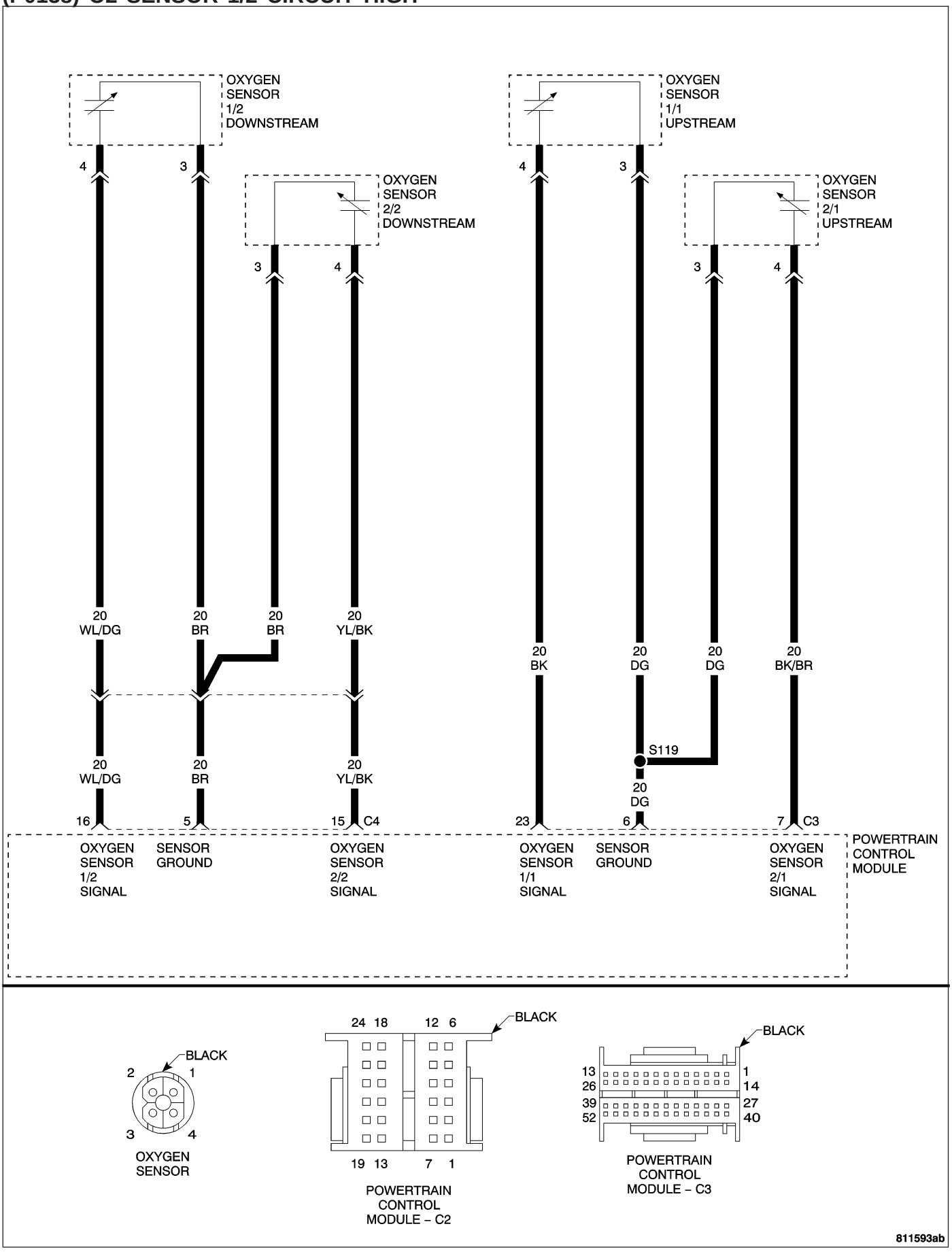

(P0138) O2 SENSOR 1/2 CIRCUIT HIGH — CONTINUED

When Monitored and Set Condition

- When Monitored: With the engine running between 1000 and 2000 RPM, engine load between 15% to 50%, closed loop mode, the three way catalytic converter temperature is greater than 380°C (716°F), and the O2 sensor heater must be ON for at least 220 seconds to enable the signal inactive portion of the test.
- Set Condition: O2 Sensor voltage is greater than 1.5 volts for approximately 5 seconds.

POSSIBLE CAUSES
O2 SENSOR SIGNAL CIRCUIT SHORT TO VOLTAGE
ENGINE EXHAUST LEAK
O2 SENSOR
POWERTRAIN CONTROL MODULE

Diagnostic Test

1. CHECK FOR CURRENT DTC

Turn the ignition on.

With the DRB III®, read the PCM DTCs.

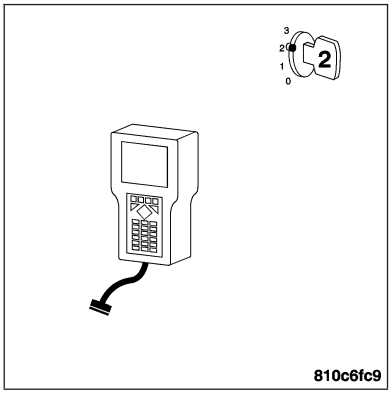

Is this DTC present?

Yes >> For complete diagnosis of this DTC, refer to (P0131) O2 SENSOR 1/1 CIRCUIT LOW.

No >> Go To 2

2. INTERMITTENT WIRING AND CONNECTORS

The conditions necessary to set this DTC are not present at this time.

Note: Check connectors — Clean/repair as necessary. Poor pin to terminal connections can set DTCs.Using the wiring diagram/schematic as a guide, inspect the wiring and connectors specific to this DTC. Wiggle the wires while checking for shorts and open circuits.

Note: Check for any Technical Service Bulletins that may apply.

Were there any problems found?

Yes >> Repair as necessary.
Perform POWERTRAIN VERIFICATION TEST - VER 2.

No >> The condition that caused this DTC to set is currently not present. Inspect the related wiring harness for a possible intermittent condition.

(P0138) O2 SENSOR 1/2 CIRCUIT OPEN

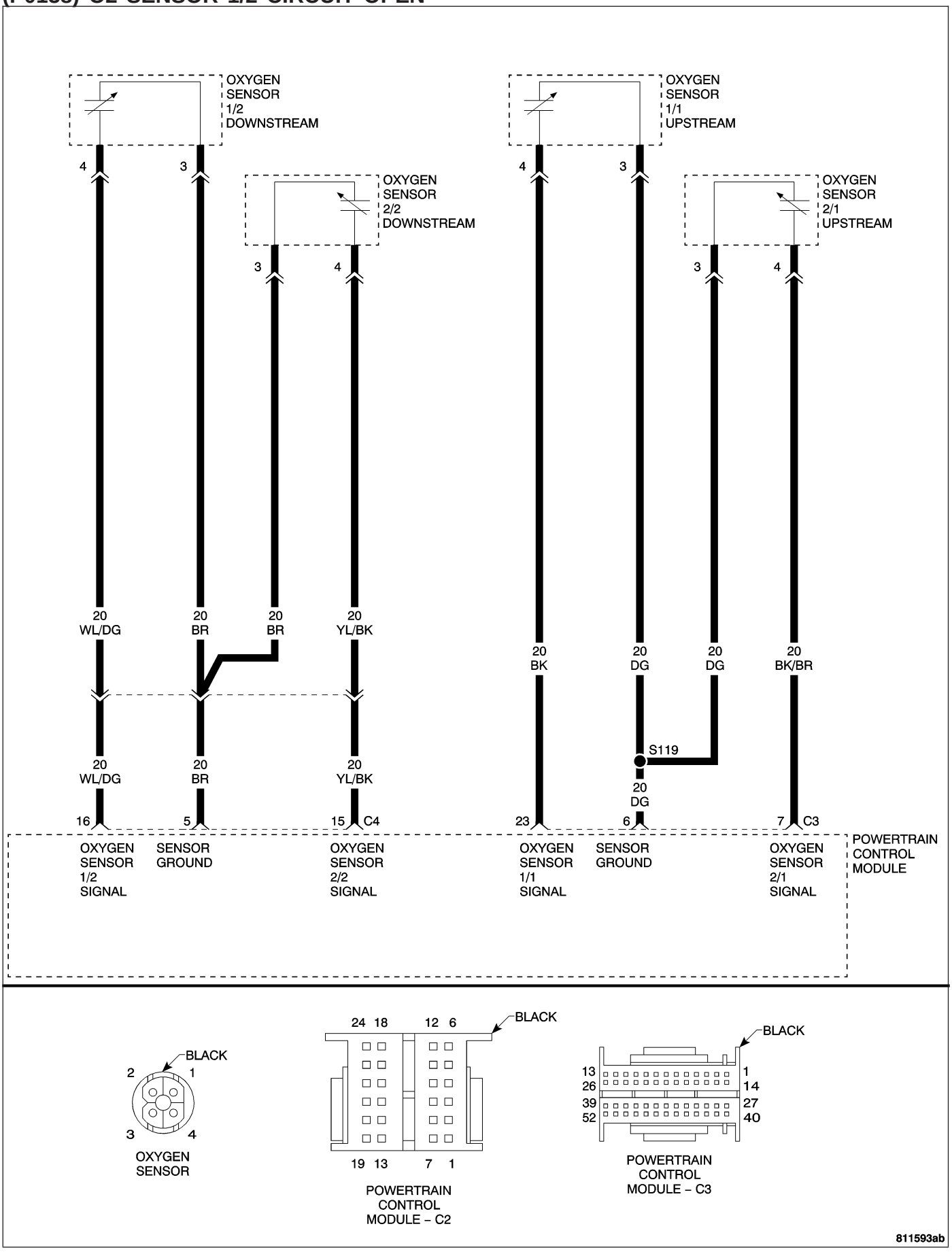

(P0138) O2 SENSOR 1/2 CIRCUIT OPEN — CONTINUED

When Monitored and Set Condition

- When Monitored: With the engine running between 1000 and 2000 RPM, engine load between 15% to 50%, closed loop mode, the three way catalytic converter temperature is greater than 380°C (716°F), and the O2 sensor heater must be ON for at least 220 seconds to enable the signal inactive portion of the test.
- Set Condition: O2 Sensor voltage is less than 0.15 volts for approximately 5 seconds. Signal stays at center: The O2 Sensor voltage stays between 0.4 and 0.6 volts for more than approximately 15 seconds after the O2 Sensor heater has been ON for at least 220 seconds.

POSSIBLE CAUSES
O2 SENSOR SIGNAL CIRCUIT OPEN
O2 SENSOR SIGNAL CIRCUIT SHORT TO GROUND
O2 SENSOR GROUND CIRCUIT OPEN
ENGINE EXHAUST LEAK
O2 SENSOR
POWERTRAIN CONTROL MODULE

Diagnostic Test

1. CHECK FOR CURRENT DTC

Turn the ignition on.
With the DRB III®, read the PCM DTCs.

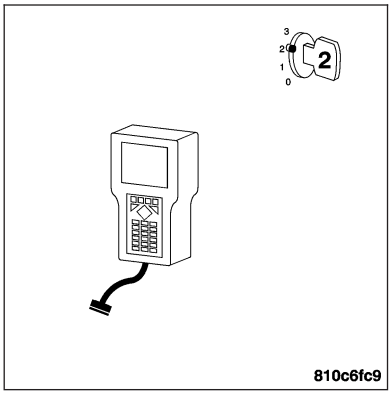

Is this DTC present?

Yes >> For complete diagnosis of this DTC, refer to (P0131) O2 SENSOR 1/1 CIRCUIT LOW.

No >> Go To 2

2. INTERMITTENT WIRING AND CONNECTORS

The conditions necessary to set this DTC are not present at this time.

Note: Check connectors — Clean/repair as necessary. Poor pin to terminal connections can set DTCs.Using the wiring diagram/schematic as a guide, inspect the wiring and connectors specific to this DTC. Wiggle the wires while checking for shorts and open circuits.

Note: Check for any Technical Service Bulletins that may apply.

Were there any problems found?

Yes >> Repair as necessary.
Perform POWERTRAIN VERIFICATION TEST - VER 2.

No >> The condition that caused this DTC to set is currently not present. Inspect the related wiring harness for a possible intermittent condition.

(P0138) O2 SENSOR 2/2 CIRCUIT LOW

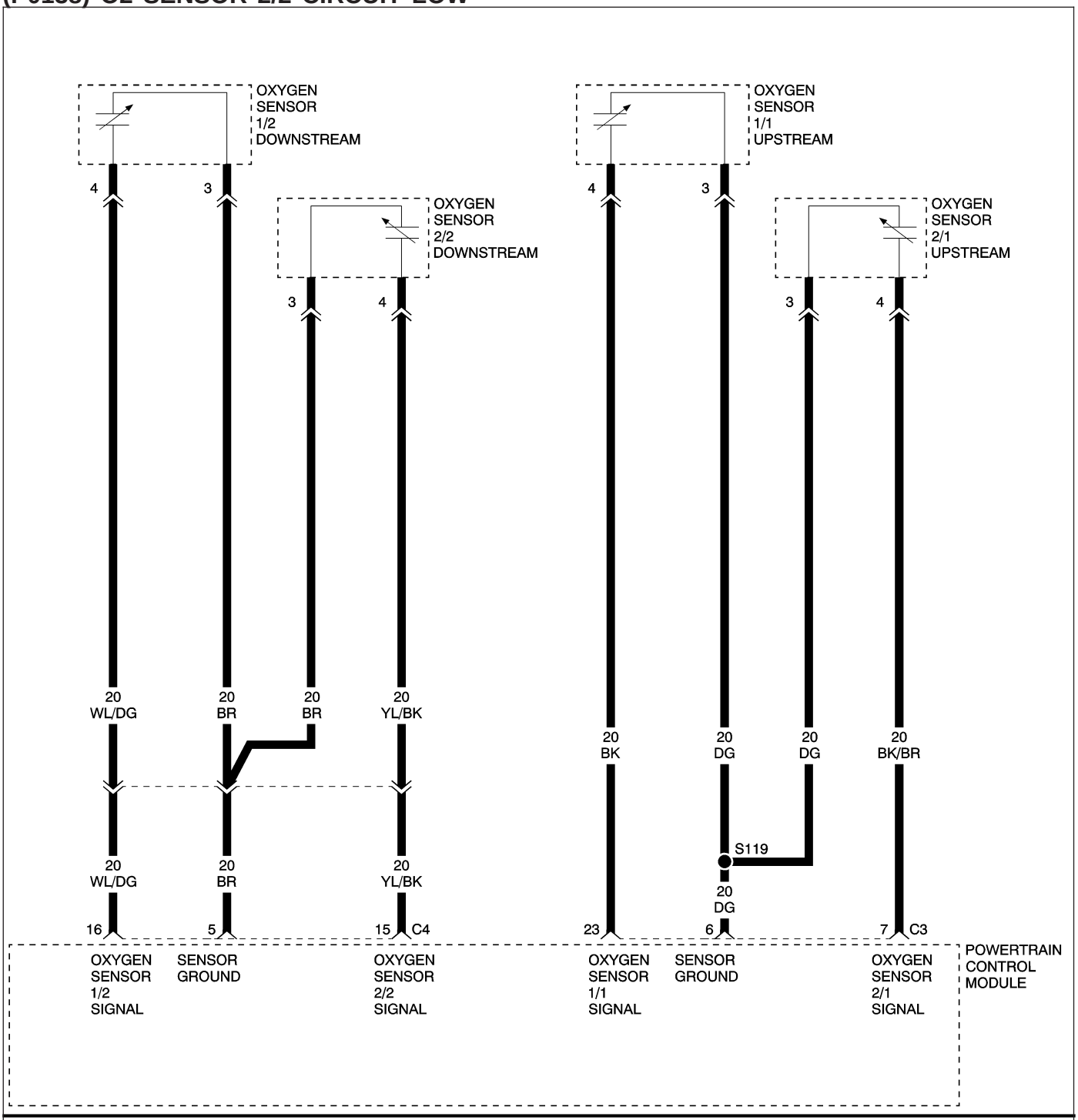

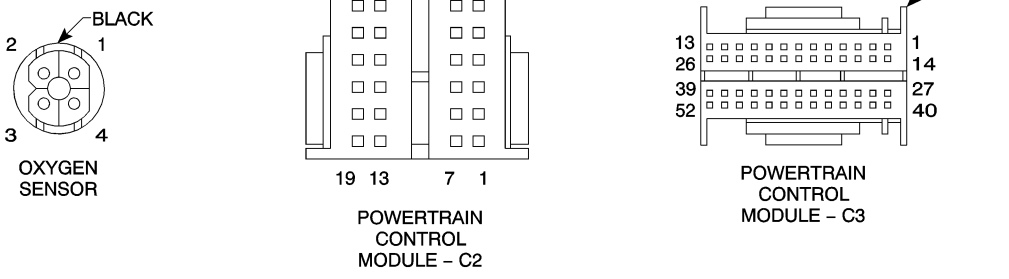

811593ab

(P0138) O2 SENSOR 2/2 CIRCUIT LOW — CONTINUED

When Monitored and Set Condition

- When Monitored: With the engine running between 1000 and 2000 RPM, engine load between 15% to 50%, closed loop mode, the three way catalytic converter temperature is greater than 380°C (716°F), and the O2 sensor heater must be ON for at least 220 seconds to enable the signal inactive portion of the test.
- Set Condition: O2 Sensor voltage is less than 0.15 volts for approximately 5 seconds.

POSSIBLE CAUSES
O2 SENSOR SIGNAL CIRCUIT OPEN
O2 SENSOR SIGNAL CIRCUIT SHORT TO GROUND
O2 SENSOR GROUND CIRCUIT OPEN
ENGINE EXHAUST LEAK
O2 SENSOR
POWERTRAIN CONTROL MODULE

Diagnostic Test

1. CHECK FOR CURRENT DTC

Turn the ignition on.
With the DRB III®, read the PCM DTCs.

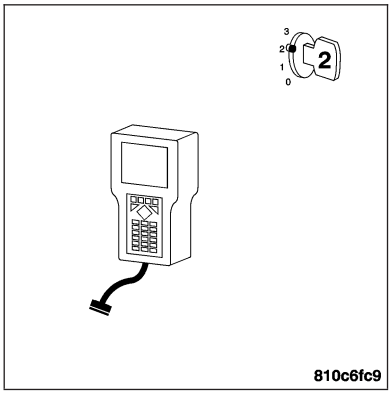

Is this DTC present?

Yes >> For complete diagnosis of this DTC, refer to (P0131) O2 SENSOR 1/1 CIRCUIT LOW.

No >> Go To 2

2. INTERMITTENT WIRING AND CONNECTORS

The conditions necessary to set this DTC are not present at this time.

Note: Check connectors — Clean/repair as necessary. Poor pin to terminal connections can set DTCs.Using the wiring diagram/schematic as a guide, inspect the wiring and connectors specific to this DTC. Wiggle the wires while checking for shorts and open circuits.

Note: Check for any Technical Service Bulletins that may apply.

Were there any problems found?

Yes >> Repair as necessary.
Perform POWERTRAIN VERIFICATION TEST - VER 2.

No >> The condition that caused this DTC to set is currently not present. Inspect the related wiring harness for a possible intermittent condition.

(P0138) O2 SENSOR 2/2 CIRCUIT OPEN

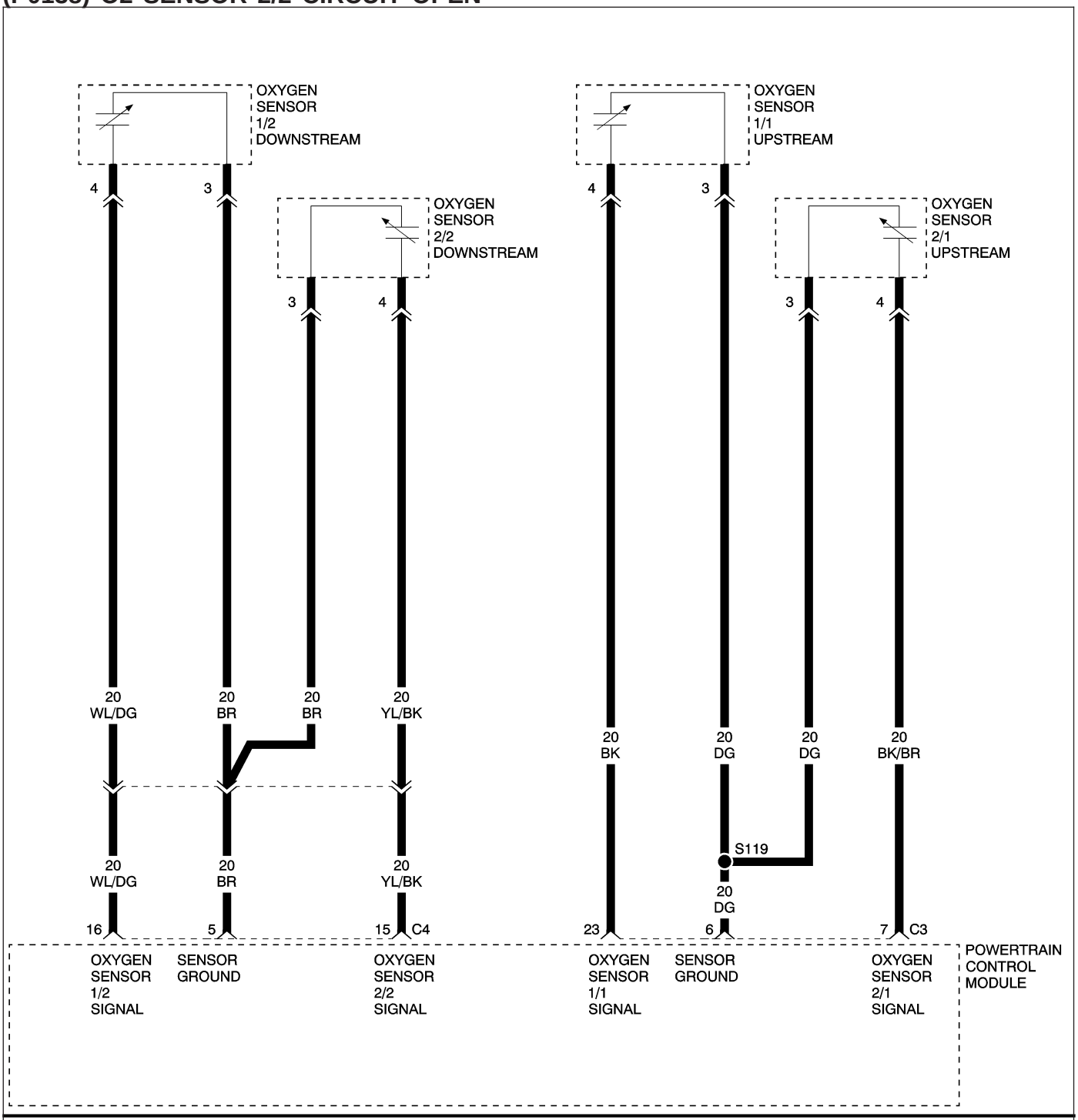

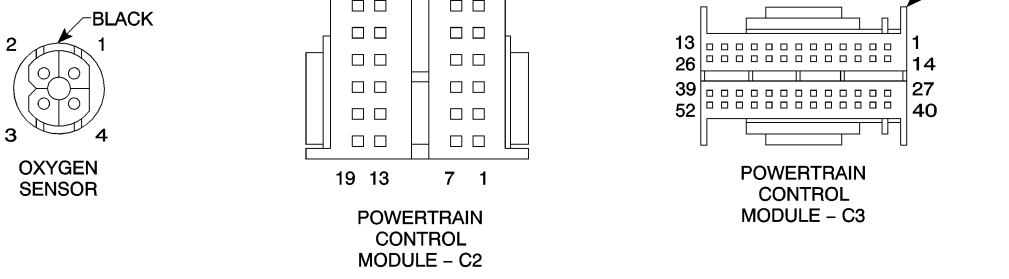

811593ab

(P0138) O2 SENSOR 2/2 CIRCUIT OPEN — CONTINUED

When Monitored and Set Condition

- When Monitored: With the engine running between 1000 and 2000 RPM, engine load between 15% to 50%, closed loop mode, the three way catalytic converter temperature is greater than 380°C (716°F), and the O2 sensor heater must be ON for at least 220 seconds to enable the signal inactive portion of the test.
- Set Condition: O2 Sensor voltage is less than 0.15 volts for approximately 5 seconds. Signal stays at center: The O2 Sensor voltage stays between 0.4 and 0.6 volts for more than approximately 15 seconds after the O2 Sensor heater has been ON for at least 220 seconds.

POSSIBLE CAUSES
O2 SENSOR SIGNAL CIRCUIT OPEN
O2 SENSOR SIGNAL CIRCUIT SHORT TO GROUND
O2 SENSOR GROUND CIRCUIT OPEN
ENGINE EXHAUST LEAK
O2 SENSOR
POWERTRAIN CONTROL MODULE

Diagnostic Test

1. CHECK FOR CURRENT DTC

Turn the ignition on.
With the DRB III®, read the PCM DTCs.

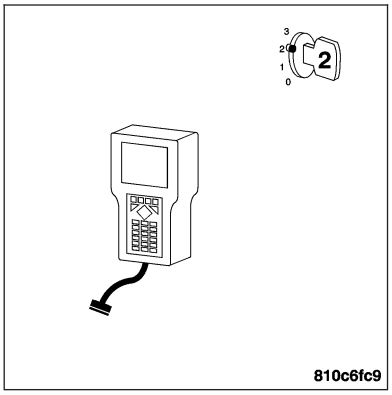

Is this DTC present?

Yes >> For complete diagnosis of this DTC, refer to (P0131) O2 SENSOR 1/1 CIRCUIT LOW.

No >> Go To 2

2. INTERMITTENT WIRING AND CONNECTORS

The conditions necessary to set this DTC are not present at this time.

Note: Check connectors — Clean/repair as necessary. Poor pin to terminal connections can set DTCs.Using the wiring diagram/schematic as a guide, inspect the wiring and connectors specific to this DTC. Wiggle the wires while checking for shorts and open circuits.

Note: Check for any Technical Service Bulletins that may apply.

Were there any problems found?

Yes >> Repair as necessary.
Perform POWERTRAIN VERIFICATION TEST - VER 2.

No >> The condition that caused this DTC to set is currently not present. Inspect the related wiring harness for a possible intermittent condition.

(P0140) O2 SENSOR 1/2 CIRCUIT LOW

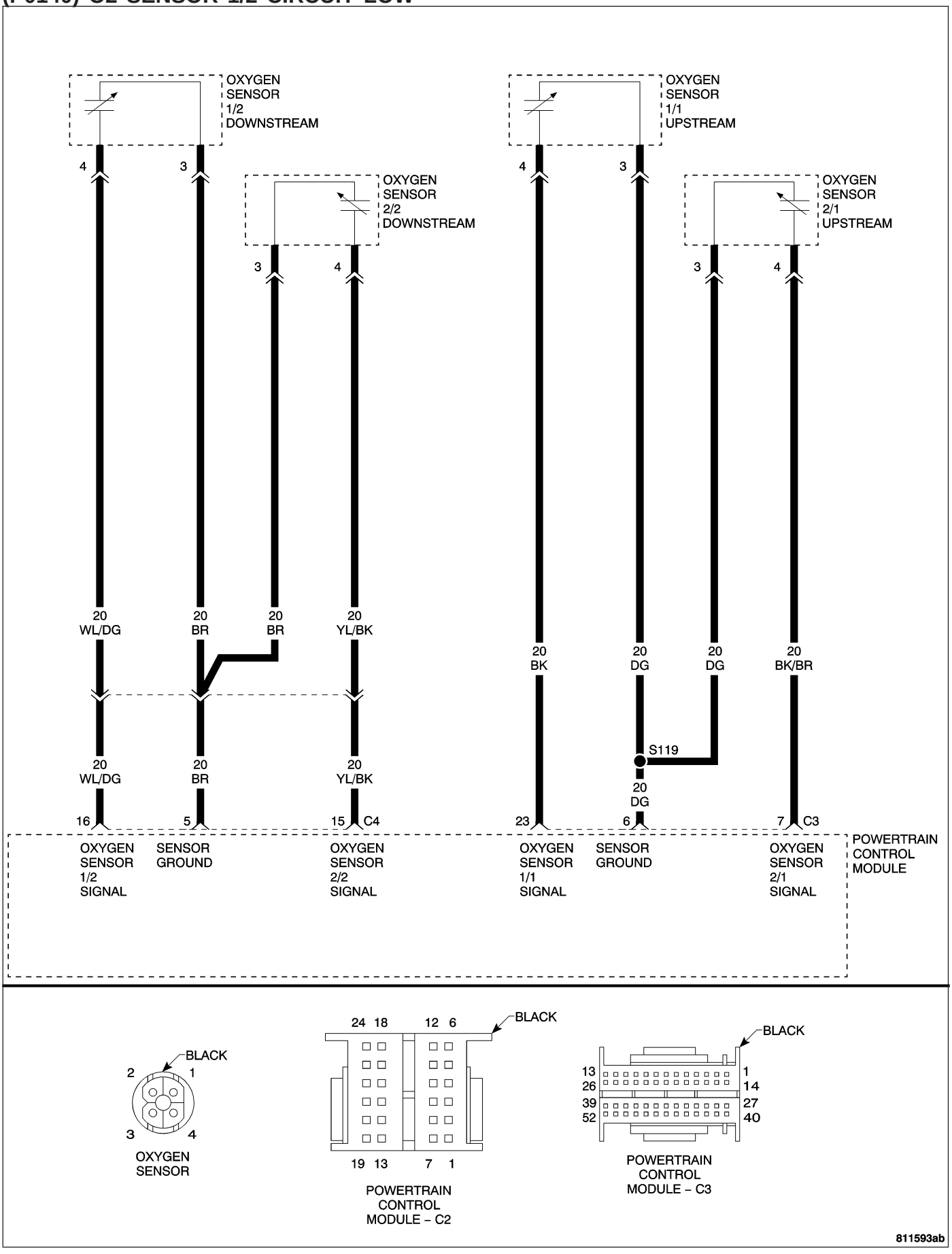

(P0140) O2 SENSOR 1/2 CIRCUIT LOW — CONTINUED

When Monitored and Set Condition

- When Monitored: With the engine running between 1000 and 2000 RPM, engine load between 15% to 50%, closed loop mode, the three way catalytic converter temperature is greater than 380°C (716°F), and the O2 sensor heater must be ON for at least 220 seconds to enable the signal inactive portion of the test.
- Set Condition: O2 Sensor voltage is less than 0.15 volts for approximately 5 seconds. Signal stays at center: The O2 Sensor voltage stays between 0.4 and 0.6 volts for more than approximately 15 seconds after the O2 Sensor heater has been ON for at least 220 seconds.

POSSIBLE CAUSES
O2 SENSOR SIGNAL CIRCUIT OPEN
O2 SENSOR SIGNAL CIRCUIT SHORT TO GROUND
O2 SENSOR GROUND CIRCUIT OPEN
ENGINE EXHAUST LEAK
O2 SENSOR
POWERTRAIN CONTROL MODULE

Diagnostic Test

1. CHECK FOR CURRENT DTC

Turn the ignition on.
With the DRB III®, read the PCM DTCs.

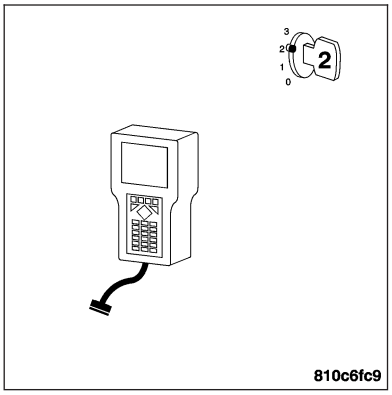

Is this DTC present?

Yes >> For complete diagnosis of this DTC, refer to (P0131) O2 SENSOR 1/1 CIRCUIT LOW.

No >> Go To 2

2. INTERMITTENT WIRING AND CONNECTORS

The conditions necessary to set this DTC are not present at this time.

Note: Check connectors — Clean/repair as necessary. Poor pin to terminal connections can set DTCs.Using the wiring diagram/schematic as a guide, inspect the wiring and connectors specific to this DTC. Wiggle the wires while checking for shorts and open circuits.

Note: Check for any Technical Service Bulletins that may apply.

Were there any problems found?

Yes >> Repair as necessary.
Perform POWERTRAIN VERIFICATION TEST - VER 2.

No >> The condition that caused this DTC to set is currently not present. Inspect the related wiring harness for a possible intermittent condition.

(P0140) O2 SENSOR 2/2 CIRCUIT HIGH

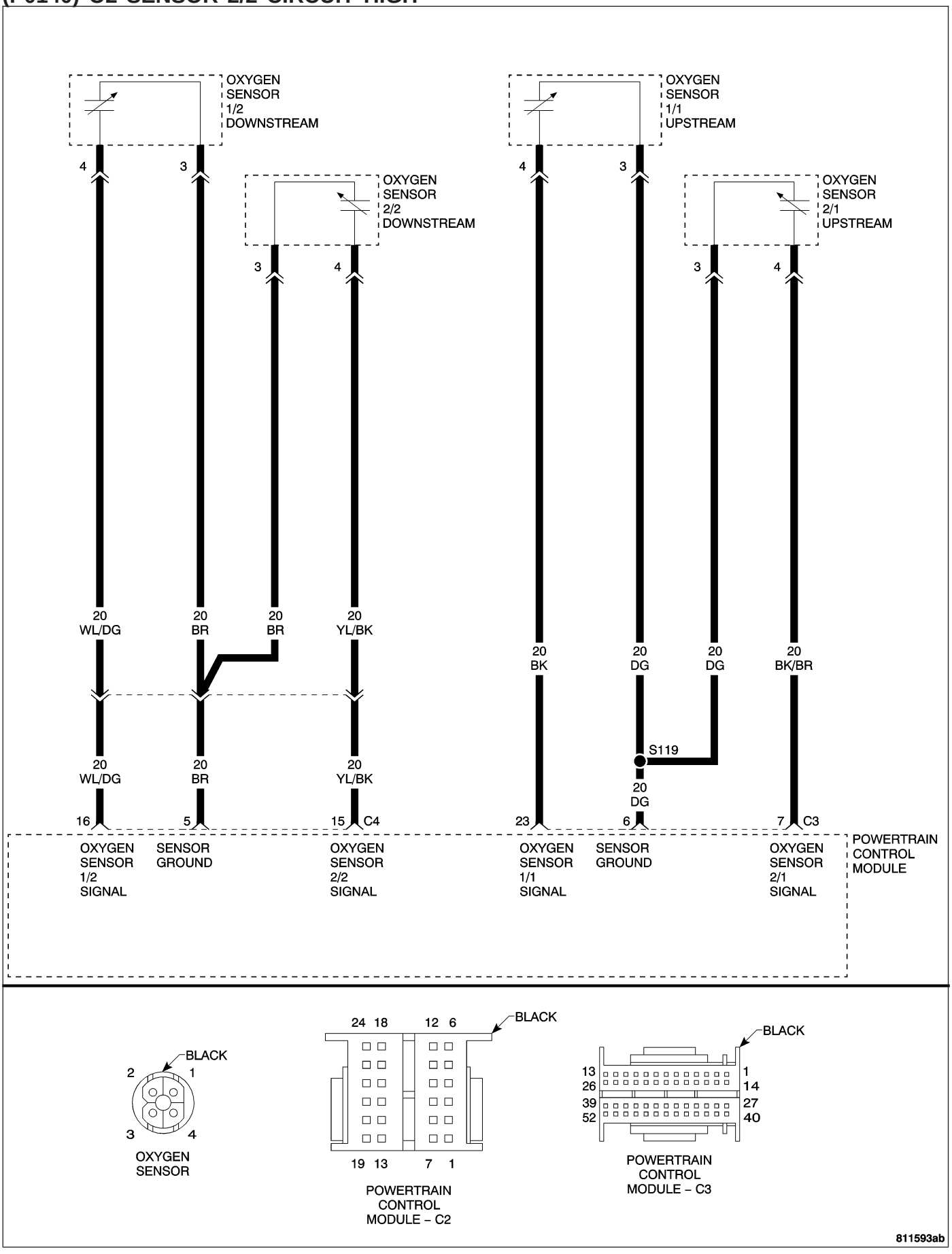

(P0140) O2 SENSOR 2/2 CIRCUIT HIGH — CONTINUED

When Monitored and Set Condition

- When Monitored: With the engine running between 1000 and 2000 RPM, engine load between 15% to 50%, closed loop mode, the three way catalytic converter temperature is greater than 380°C (716°F), and the O2 sensor heater must be ON for at least 220 seconds to enable the signal inactive portion of the test.
- Set Condition: The high limit: O2 Sensor voltage is greater than 1.5 volts for approximately 5 seconds.

POSSIBLE CAUSES
O2 SENSOR SIGNAL CIRCUIT SHORT TO VOLTAGE
ENGINE EXHAUST LEAK
O2 SENSOR
POWERTRAIN CONTROL MODULE

Diagnostic Test

1. CHECK FOR CURRENT DTC

Turn the ignition on.

With the DRB III®, read the PCM DTCs.

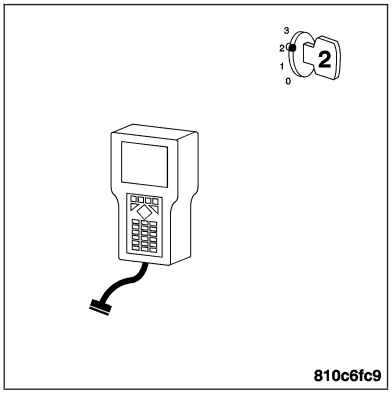

Is this DTC present?

Yes >> For complete diagnosis of this DTC, refer to (P0131) O2 SENSOR 1/1 CIRCUIT LOW.

No >> Go To 2

2. INTERMITTENT WIRING AND CONNECTORS

The conditions necessary to set this DTC are not present at this time.

Note: Check connectors — Clean/repair as necessary. Poor pin to terminal connections can set DTCs.Using the wiring diagram/schematic as a guide, inspect the wiring and connectors specific to this DTC. Wiggle the wires while checking for shorts and open circuits.

Note: Check for any Technical Service Bulletins that may apply.

Were there any problems found?

Yes >> Repair as necessary.
Perform POWERTRAIN VERIFICATION TEST - VER 2.

No >> The condition that caused this DTC to set is currently not present. Inspect the related wiring harness for a possible intermittent condition.

(P0141) O2 SENSOR 1/2 HEATER CIRCUIT LOW

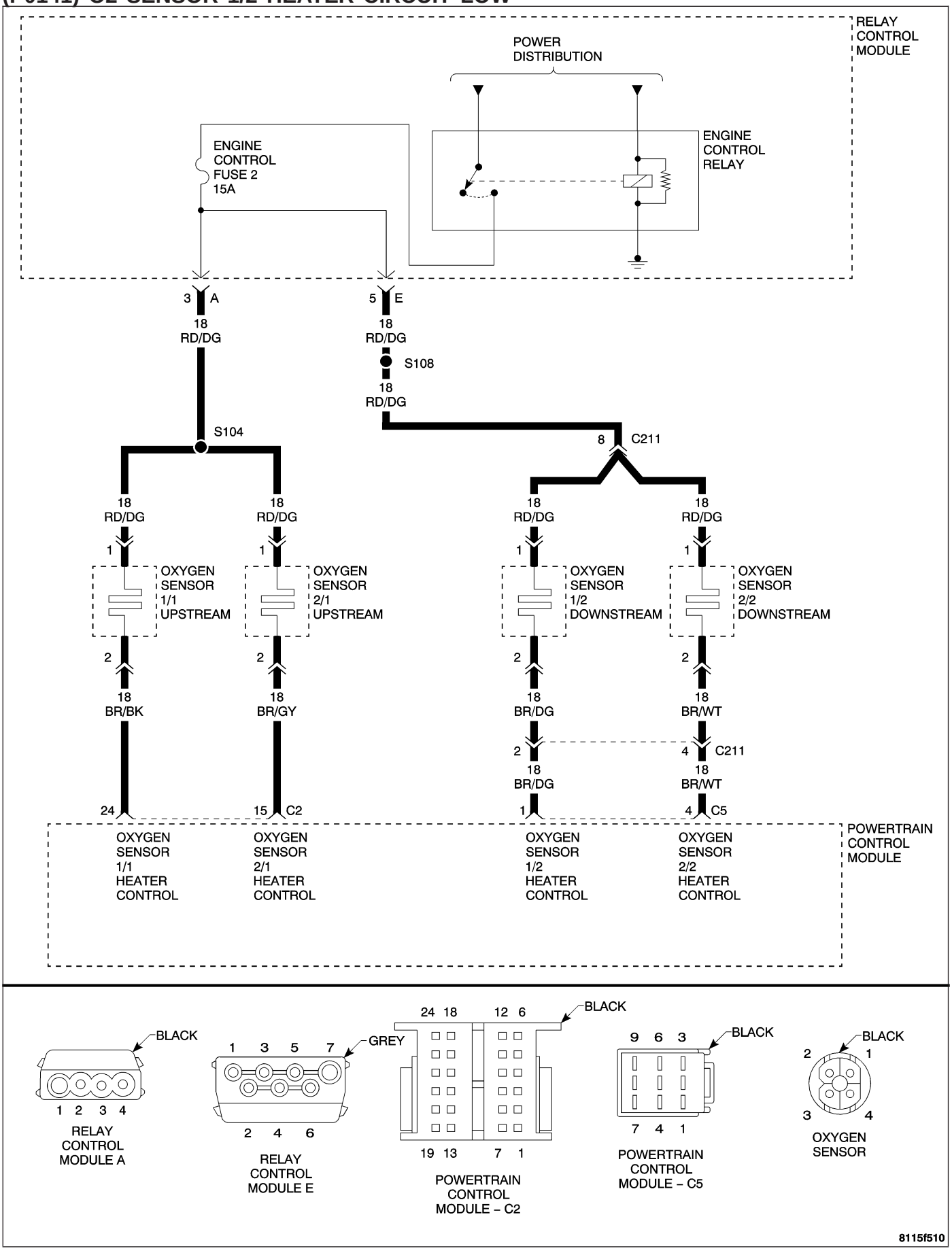

(P0141) O2 SENSOR 1/2 HEATER CIRCUIT LOW — CONTINUED

When Monitored and Set Condition

- When Monitored: Engine Running and Heater duty cycle greater than 0%
- Set Condition: The PCM detects the O2 Heater voltage is out of acceptable range. Below 0.0926 of a volt.

POSSIBLE CAUSES
O2 HEATER CONTROL SHORTED TO GROUND
O2 HEATER ELEMENT
POWERTRAIN CONTROL MODULE

Diagnostic Test

1. CHECK FOR CURRENT DTC

Turn the ignition on.
With the DRB III®, read the PCM DTCs.

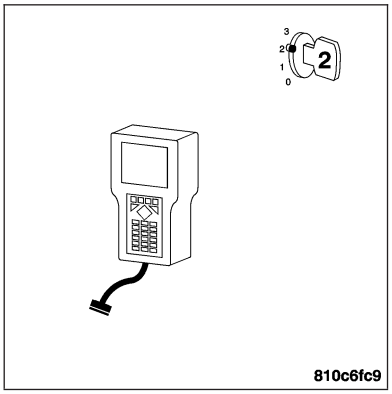

Is this DTC present?

Yes >> For complete diagnosis of this DTC, refer to (P0135) O2 SENSOR 1/1 HEATER CIRCUIT LOW.

No >> Go To 2

2. INTERMITTENT WIRING AND CONNECTORS

The conditions necessary to set this DTC are not present at this time.

Note: Check connectors — Clean/repair as necessary. Poor pin to terminal connections can set DTCs.Using the wiring diagram/schematic as a guide, inspect the wiring and connectors specific to this DTC. Wiggle the wires while checking for shorts and open circuits.

Note: Check for any Technical Service Bulletins that may apply.

Were there any problems found?

Yes >> Repair as necessary.
Perform POWERTRAIN VERIFICATION TEST - VER 2.

No >> The condition that caused this DTC to set is currently not present. Inspect the related wiring harness for a possible intermittent condition.

(P0141) O2 SENSOR 1/2 HEATER CIRCUIT OPEN

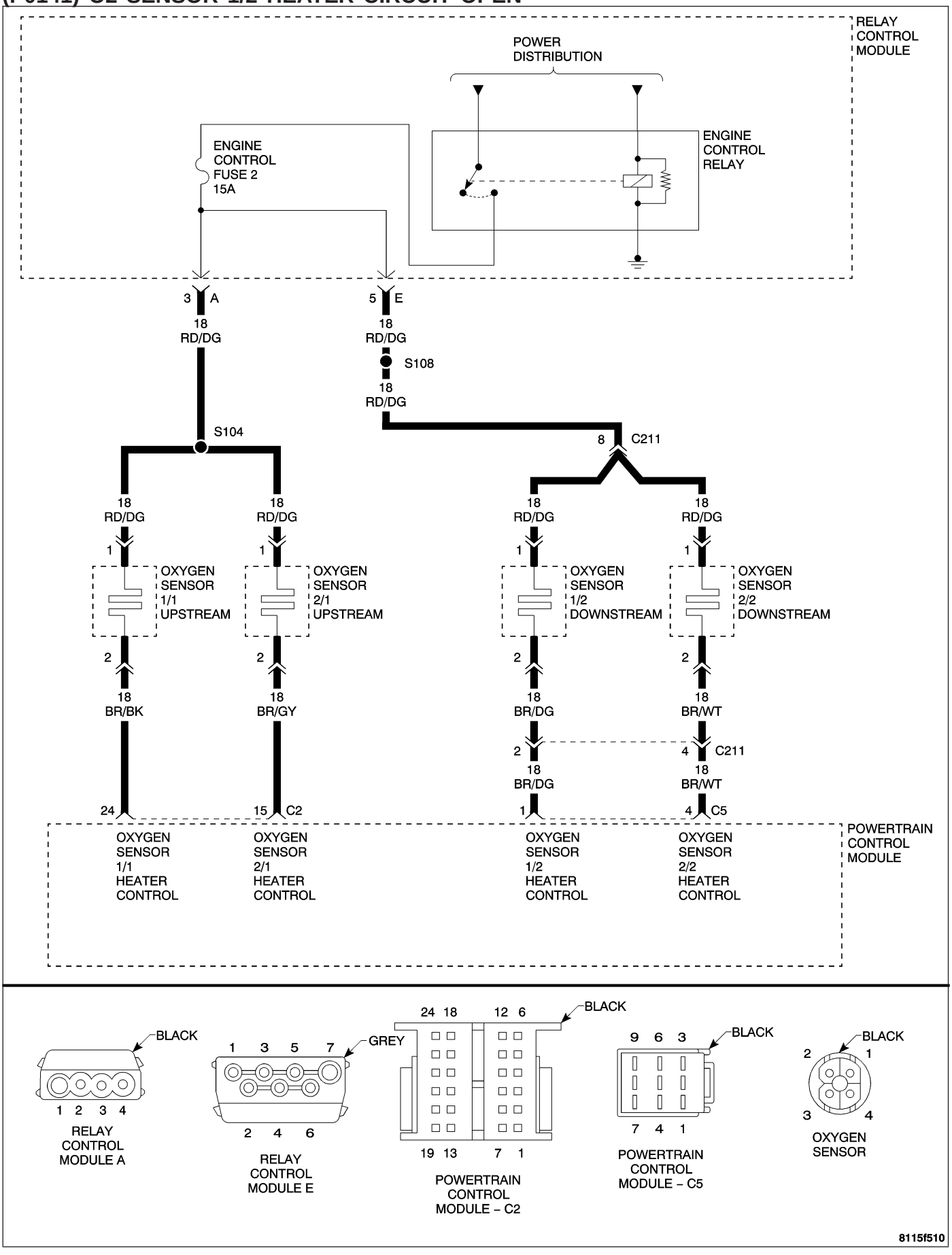

(P0141) O2 SENSOR 1/2 HEATER CIRCUIT OPEN — CONTINUED

When Monitored and Set Condition

- When Monitored: Engine Running and Heater duty cycle greater than 0%.
- Set Condition: O2 Heater Temperature does not reach 575°C (959°F) within 90 second during monitoring conditions. Two Trip Fault.

POSSIBLE CAUSES
O2 HEATER ELEMENT
O2 HEATER FUSED ENGINE CONTROL RELAY OUTPUT CIRCUIT OPEN
O2 HEATER CONTROL CIRCUIT OPEN
POWERTRAIN CONTROL MODULE

Diagnostic Test

1. CHECK FOR CURRENT DTC

Turn the ignition on.
With the DRB III®, read the PCM DTCs.

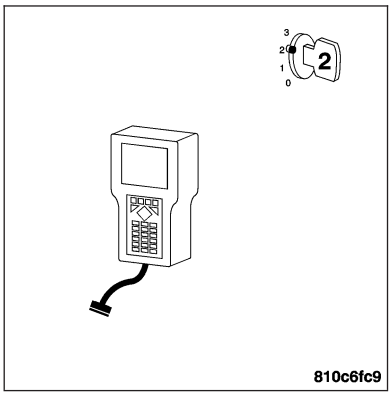

Is this DTC present?

Yes >> For complete diagnosis of this DTC, refer to (P0135) O2 SENSOR 1/1 HEATER CIRCUIT HIGH

No >> Go To 2

2. INTERMITTENT WIRING AND CONNECTORS

The conditions necessary to set this DTC are not present at this time.

Note: Check connectors — Clean/repair as necessary. Poor pin to terminal connections can set DTCs.Using the wiring diagram/schematic as a guide, inspect the wiring and connectors specific to this DTC. Wiggle the wires while checking for shorts and open circuits.

Note: Check for any Technical Service Bulletins that may apply.

Were there any problems found?

Yes >> Repair as necessary.
Perform POWERTRAIN VERIFICATION TEST - VER 2.

No >> The condition that caused this DTC to set is currently not present. Inspect the related wiring harness for a possible intermittent condition.

(P0141) O2 SENSOR 1/2 HEATER CIRCUIT HIGH

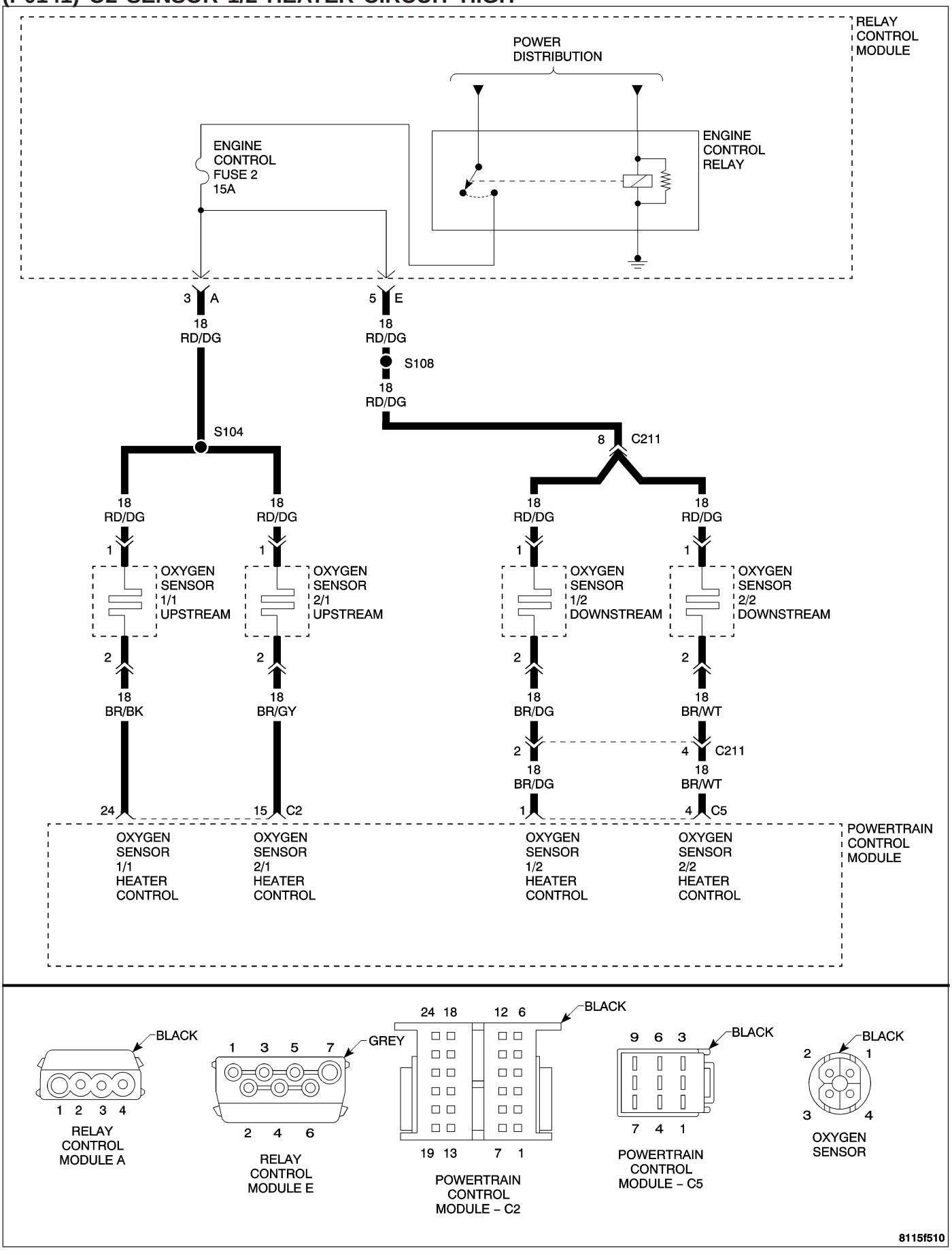

(P0141) O2 SENSOR 1/2 HEATER CIRCUIT HIGH — CONTINUED

When Monitored and Set Condition

- When Monitored: Engine Running and Heater duty cycle greater than 0%.
- Set Condition: O2 Heater Temperature does not reach 575°C (959°F) within 90 second during monitoring conditions. Two Trip Fault.

POSSIBLE CAUSES
O2 HEATER ELEMENT
O2 HEATER FUSED ENGINE CONTROL RELAY OUTPUT CIRCUIT OPEN
O2 HEATER CONTROL CIRCUIT OPEN
POWERTRAIN CONTROL MODULE

Diagnostic Test

1. CHECK FOR CURRENT DTC

Turn the ignition on.
With the DRB III®, read the PCM DTCs.

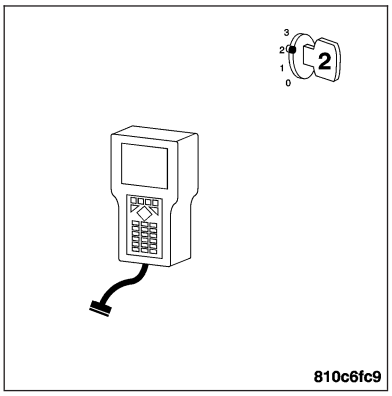

Is this DTC present?

Yes >> For complete diagnosis of this DTC, refer to (P0135) O2 SENSOR 1/1 HEATER CIRCUIT HIGH

No >> Go To 2

2. INTERMITTENT WIRING AND CONNECTORS

The conditions necessary to set this DTC are not present at this time.

Note: Check connectors — Clean/repair as necessary. Poor pin to terminal connections can set DTCs.Using the wiring diagram/schematic as a guide, inspect the wiring and connectors specific to this DTC. Wiggle the wires while checking for shorts and open circuits.

Note: Check for any Technical Service Bulletins that may apply.

Were there any problems found?

Yes >> Repair as necessary.
Perform POWERTRAIN VERIFICATION TEST - VER 2.

No >> The condition that caused this DTC to set is currently not present. Inspect the related wiring harness for a possible intermittent condition.

(P0141) O2 SENSOR 1/2 HEATER PERFORMANCE

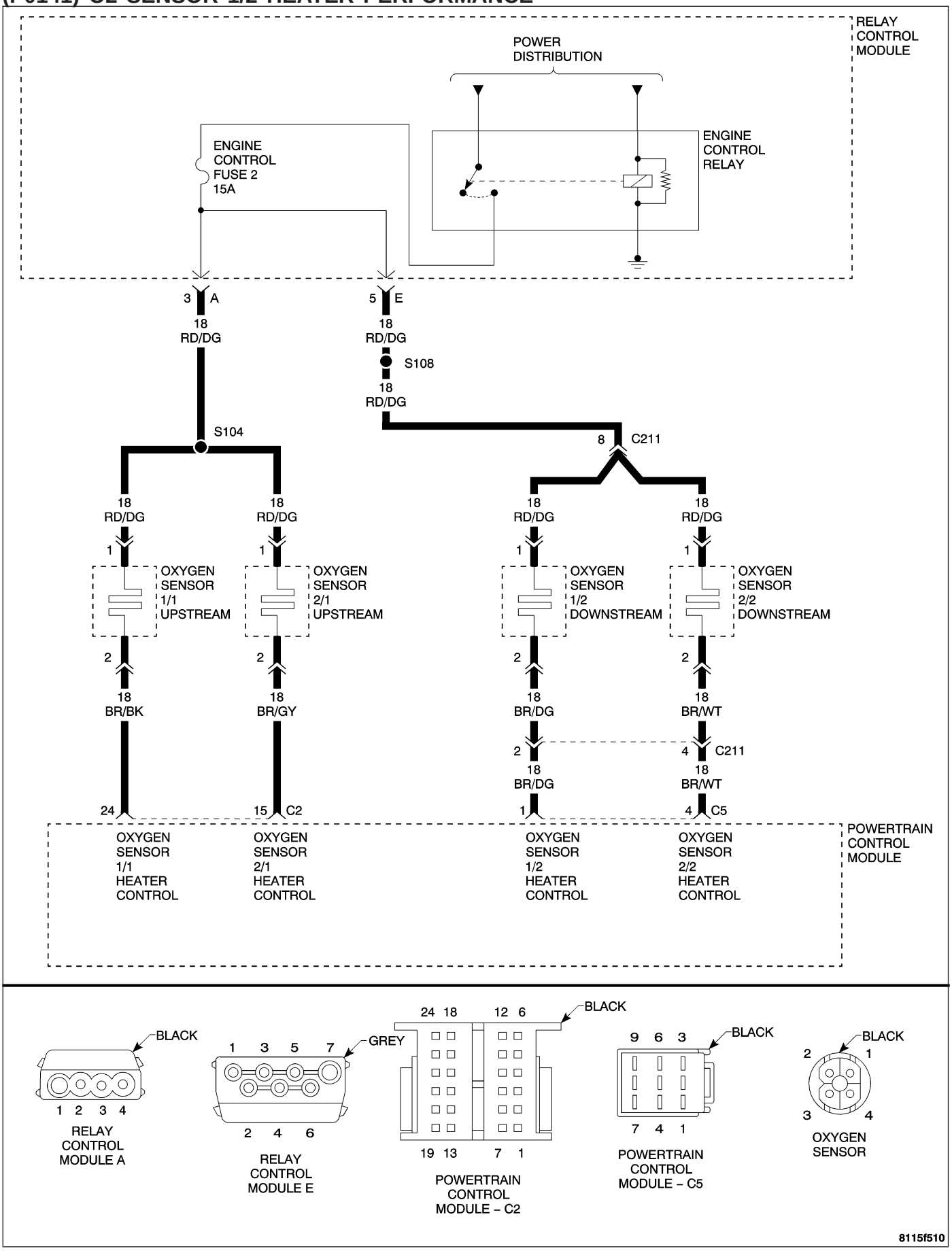

(P0141) O2 SENSOR 1/2 HEATER PERFORMANCE — CONTINUED

When Monitored and Set Condition

- When Monitored: Engine Running and Heater duty cycle greater than 0%.
- Set Condition: O2 Heater Temperature does not reach 575°C (959°F) within 90 second during monitoring conditions. Two Trip Fault.

POSSIBLE CAUSES
O2 SENSOR HEATER FUSED ENGINE CONTROL RELAY OUTPUT CIRCUIT OPEN
O2 SENSOR HEATER CONTROL CIRCUIT SHORT TO VOLTAGE
O2 SENSOR HEATER CONTROL CIRCUIT SHORT TO GROUND
O2 HEATER CONTROL CIRCUIT OPEN
O2 HEATER ELEMENT
POWERTRAIN CONTROL MODULE

Diagnostic Test

1. CHECK FOR CURRENT DTC

Turn the ignition on.
With the DRB III®, read the PCM DTCs.

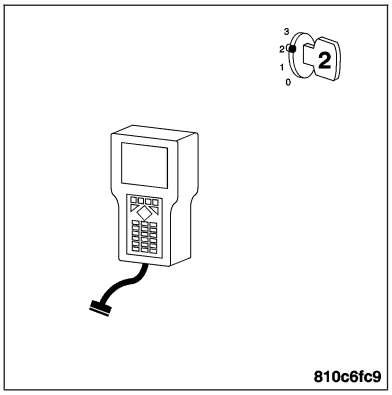

Is this DTC present?

Yes >> For complete diagnosis of this DTC, refer to (P0135) O2 SENSOR 1/1 HEATER PERFORMANCE.

No >> Go To 2

2. INTERMITTENT WIRING AND CONNECTORS

The conditions necessary to set this DTC are not present at this time.

Note: Check connectors — Clean/repair as necessary. Poor pin to terminal connections can set DTCs.Using the wiring diagram/schematic as a guide, inspect the wiring and connectors specific to this DTC. Wiggle the wires while checking for shorts and open circuits.

Note: Check for any Technical Service Bulletins that may apply.

Were there any problems found?

Yes >> Repair as necessary.
Perform POWERTRAIN VERIFICATION TEST - VER 2.

No >> The condition that caused this DTC to set is currently not present. Inspect the related wiring harness for a possible intermittent condition.

(P0151) O2 SENSOR 2/1 CIRCUIT LOW

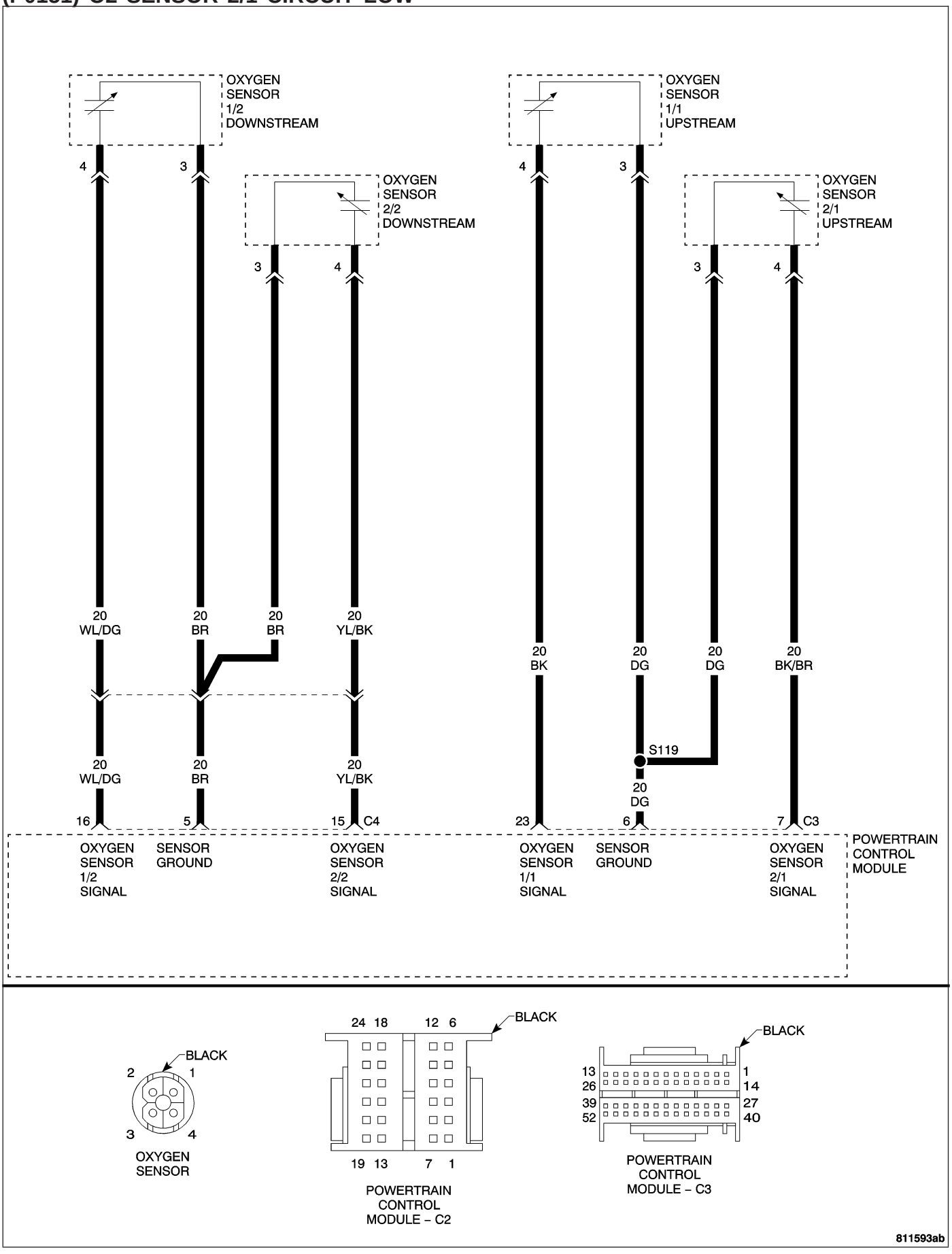

(P0151) O2 SENSOR 2/1 CIRCUIT LOW — CONTINUED

When Monitored and Set Condition

- When Monitored: With the engine running between 1000 and 2000 RPM, engine load between 15% to 50%, closed loop mode, the three way catalytic converter temperature is greater than 380°C (716°F), and the O2 sensor heater must be ON for at least 220 seconds to enable the signal inactive portion of the test.
- Set Condition: O2 Sensor voltage is less than 0.15 volts for approximately 5 seconds. Signal stays at center: The O2 Sensor voltage stays between 0.4 and 0.6 volts for more than approximately 15 seconds after the O2 Sensor heater has been ON for at least 220 seconds.

POSSIBLE CAUSES
O2 SENSOR SIGNAL CIRCUIT OPEN
O2 SENSOR SIGNAL CIRCUIT SHORT TO GROUND
O2 SENSOR GROUND CIRCUIT OPEN
ENGINE EXHAUST LEAK
O2 SENSOR
POWERTRAIN CONTROL MODULE

Diagnostic Test

1. CHECK FOR CURRENT DTC

Turn the ignition on.
With the DRB III®, read the PCM DTCs.

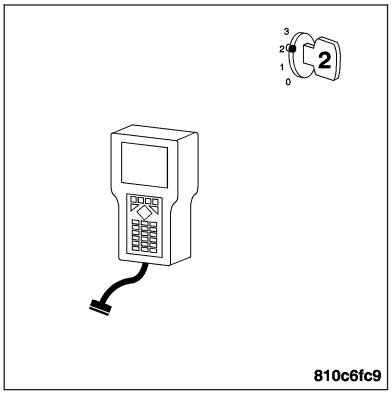

Is this DTC present?

Yes >> For complete diagnosis of this DTC, refer to (P0131) O2 SENSOR 1/1 CIRCUIT LOW.

No >> Go To 2

2. INTERMITTENT WIRING AND CONNECTORS

The conditions necessary to set this DTC are not present at this time.

Note: Check connectors — Clean/repair as necessary. Poor pin to terminal connections can set DTCs.Using the wiring diagram/schematic as a guide, inspect the wiring and connectors specific to this DTC. Wiggle the wires while checking for shorts and open circuits.

Note: Check for any Technical Service Bulletins that may apply.

Were there any problems found?

Yes >> Repair as necessary.
Perform POWERTRAIN VERIFICATION TEST - VER 2.

No >> The condition that caused this DTC to set is currently not present. Inspect the related wiring harness for a possible intermittent condition.

(P0152) O2 SENSOR 2/1 CIRCUIT HIGH

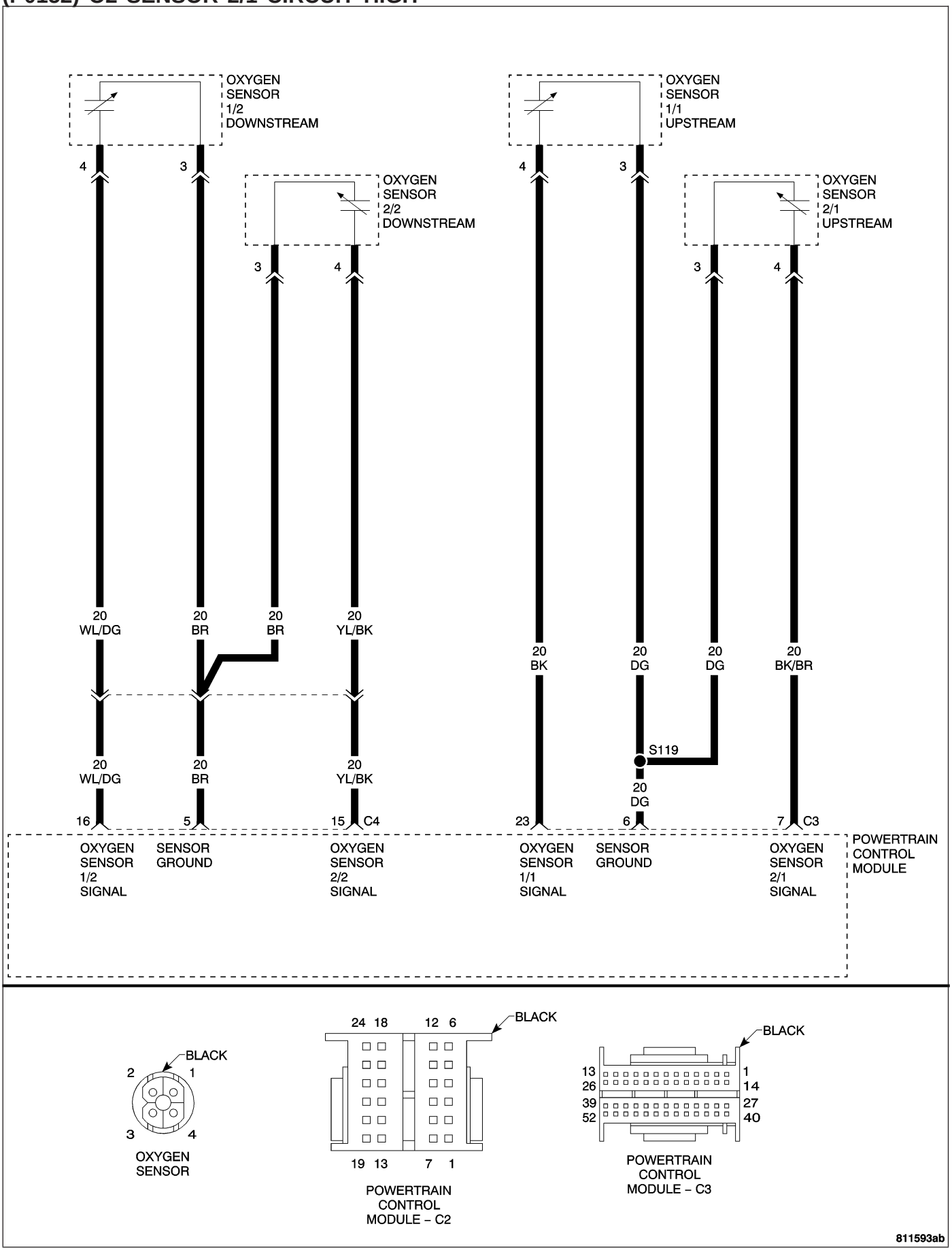

(P0152) O2 SENSOR 2/1 CIRCUIT HIGH — CONTINUED

When Monitored and Set Condition

- When Monitored: With the engine running between 1000 and 2000 RPM, engine load between 15% to 50%, closed loop mode, the three way catalytic converter temperature is greater than 380°C (716°F), and the O2 sensor heater must be ON for at least 220 seconds to enable the signal inactive portion of the test.
- Set Condition: O2 Sensor voltage is greater than 1.5 volts for approximately 5 seconds.

POSSIBLE CAUSES
O2 SENSOR SIGNAL CIRCUIT SHORT TO VOLTAGE
ENGINE EXHAUST LEAK
O2 SENSOR
POWERTRAIN CONTROL MODULE

Diagnostic Test

1. CHECK FOR CURRENT DTC

Turn the ignition on.

With the DRB III®, read the PCM DTCs.

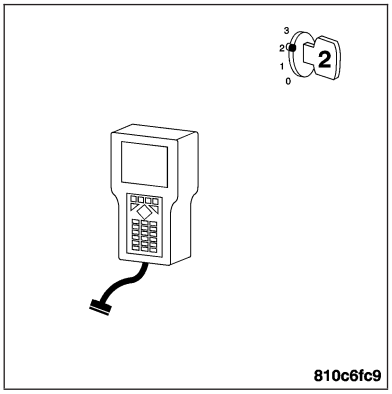

Is this DTC present?

Yes >> For complete diagnosis of this DTC, refer to (P0131) O2 SENSOR 1/1 CIRCUIT LOW.

No >> Go To 2

2. INTERMITTENT WIRING AND CONNECTORS

The conditions necessary to set this DTC are not present at this time.

Note: Check connectors — Clean/repair as necessary. Poor pin to terminal connections can set DTCs.Using the wiring diagram/schematic as a guide, inspect the wiring and connectors specific to this DTC. Wiggle the wires while checking for shorts and open circuits.

Note: Check for any Technical Service Bulletins that may apply.

Were there any problems found?

Yes >> Repair as necessary.
Perform POWERTRAIN VERIFICATION TEST - VER 2.

No >> The condition that caused this DTC to set is currently not present. Inspect the related wiring harness for a possible intermittent condition.

(P0153) O2 SENSOR 2/1 LONG PERFORMANCE

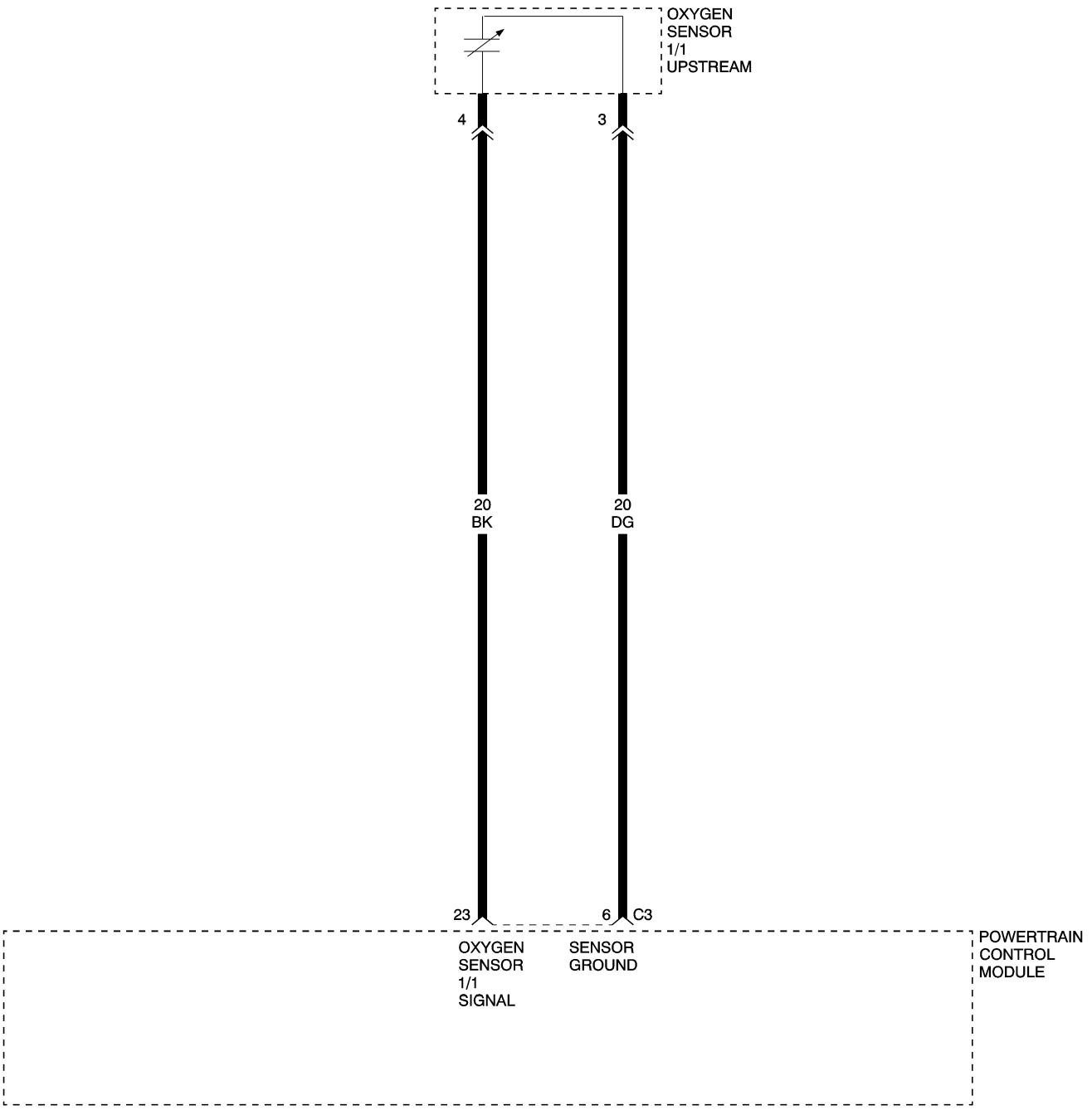

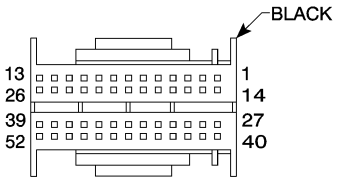

POWERTRAIN
CONTROL
MODULE – C3

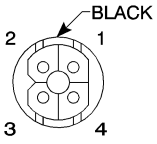

OXYGEN
SENSOR
1/1
UPSTREAM

81168145

(P0153) O2 SENSOR 2/1 LONG PERFORMANCE — CONTINUED

When Monitored and Set Condition

- When Monitored: Start and drive vehicle greater than 32 km/h (20 MPH) and less than 89 km/h (55 MPH). Throttle open for a minimum 120 seconds. Coolant Temp greater than 70°C (158°F) Catalytic Converter Temperature greater than 600°C (1112°F).
- Set Condition: The O2 sensor voltage switches only 11 times or less from lean to rich within 20 seconds during monitoring. Two Trip Fault.

POSSIBLE CAUSES
EXHAUST LEAK
O2 SENSOR SIGNAL CIRCUIT OPEN
O2 SENSOR SIGNAL CIRCUIT SHORTED TO VOLTAGE
O2 SENSOR SIGNAL CIRCUIT SHORTED TO GROUND
O2 SENSOR GROUND CIRCUIT OPEN
O2 SENSOR GROUND CIRCUIT SHORTED TO VOLTAGE
O2 SENSOR GROUND CIRCUIT SHORTED TO GROUND
O2 SENSOR

Diagnostic Test

1. CHECK FOR CURRENT DTC

Turn the ignition on.
With the DRB III®, read the PCM DTCs.

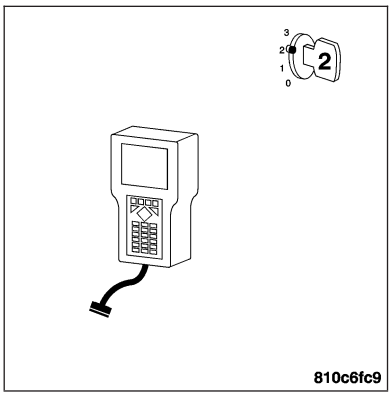

Is this DTC preset?

Yes >> For complete diagnosis of this DTC, refer to (P0133) O2 SENSOR 1/1 SHORT DELAY TIME.

No >> Go To 2

2. INTERMITTENT WIRING AND CONNECTORS

The conditions necessary to set this DTC are not present at this time.

Note: Check connectors — Clean/repair as necessary. Poor pin to terminal connections can set DTCs.Using the wiring diagram/schematic as a guide, inspect the wiring and connectors specific to this DTC. Wiggle the wires while checking for shorts and open circuits.

Note: Check for any Technical Service Bulletins that may apply.

Were there any problems found?

Yes >> Repair as necessary.
Perform POWERTRAIN VERIFICATION TEST - VER 2.

No >> The condition that caused this DTC to set is currently not present. Inspect the related wiring harness for a possible intermittent condition.

(P0153) O2 SENSOR 2/1 LONG DELAY TIME

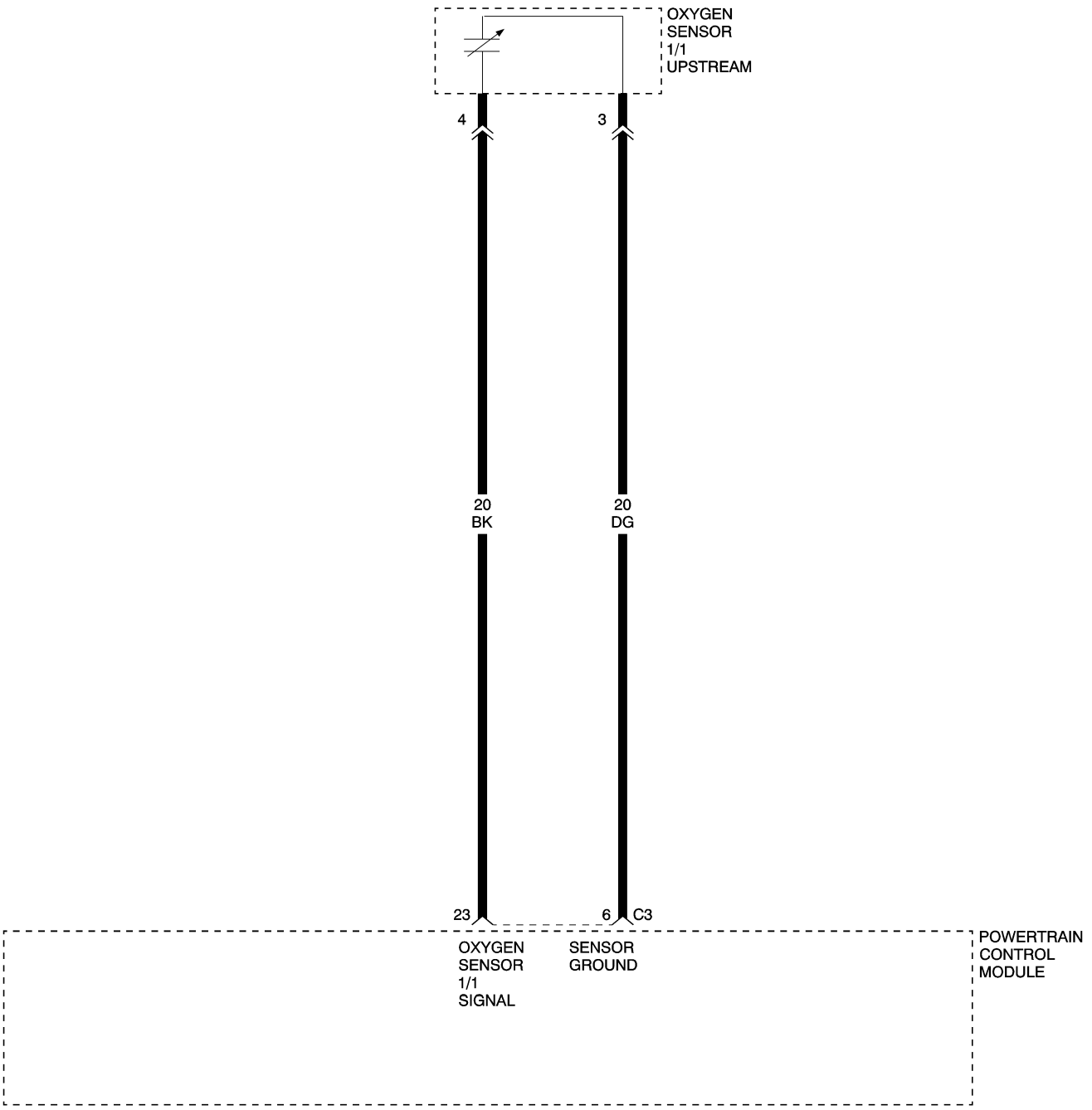

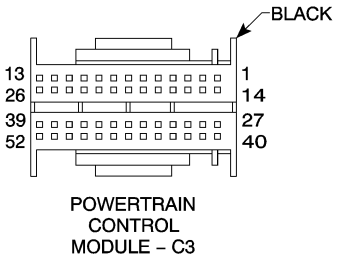

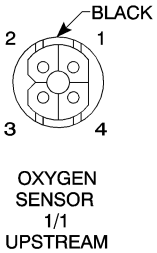

81168145

(P0153) O2 SENSOR 2/1 LONG DELAY TIME — CONTINUED

When Monitored and Set Condition

- When Monitored: Start and drive vehicle greater than 32 km/h (20 MPH) and less than 89 km/h (55 MPH). Throttle open for a minimum 120 seconds. Coolant Temp greater than 70°C (158°F) Catalytic Converter Temperature greater than 600°C (1112°F).
- Set Condition: The O2 sensor voltage switches only 11 times or less from lean to rich within 20 seconds during monitoring. Two Trip Fault.

POSSIBLE CAUSES
EXHAUST LEAK
O2 SENSOR SIGNAL CIRCUIT OPEN
O2 SENSOR SIGNAL CIRCUIT SHORTED TO VOLTAGE
O2 SENSOR SIGNAL CIRCUIT SHORTED TO GROUND
O2 SENSOR GROUND CIRCUIT OPEN
O2 SENSOR GROUND CIRCUIT SHORTED TO VOLTAGE
O2 SENSOR GROUND CIRCUIT SHORTED TO GROUND
O2 SENSOR

Diagnostic Test

1. CHECK FOR CURRENT DTC

Turn the ignition on.
With the DRB III®, read the PCM DTCs.

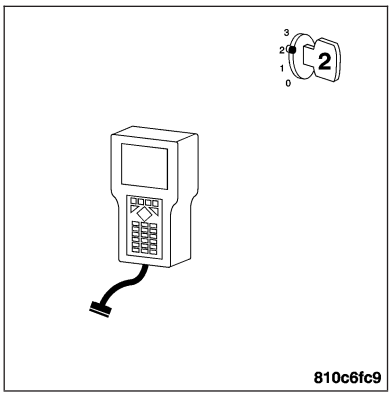

Is this DTC preset?

Yes >> For complete diagnosis of this DTC, refer to (P0133) O2 SENSOR 1/1 SHORT DELAY TIME.

No >> Go To 2

2. INTERMITTENT WIRING AND CONNECTORS

The conditions necessary to set this DTC are not present at this time.

Note: Check connectors — Clean/repair as necessary. Poor pin to terminal connections can set DTCs.Using the wiring diagram/schematic as a guide, inspect the wiring and connectors specific to this DTC. Wiggle the wires while checking for shorts and open circuits.

Note: Check for any Technical Service Bulletins that may apply.

Were there any problems found?

Yes >> Repair as necessary.
Perform POWERTRAIN VERIFICATION TEST - VER 2.

No >> The condition that caused this DTC to set is currently not present. Inspect the related wiring harness for a possible intermittent condition.

(P0153) O2 SENSOR 2/1 SHORT DELAY TIME

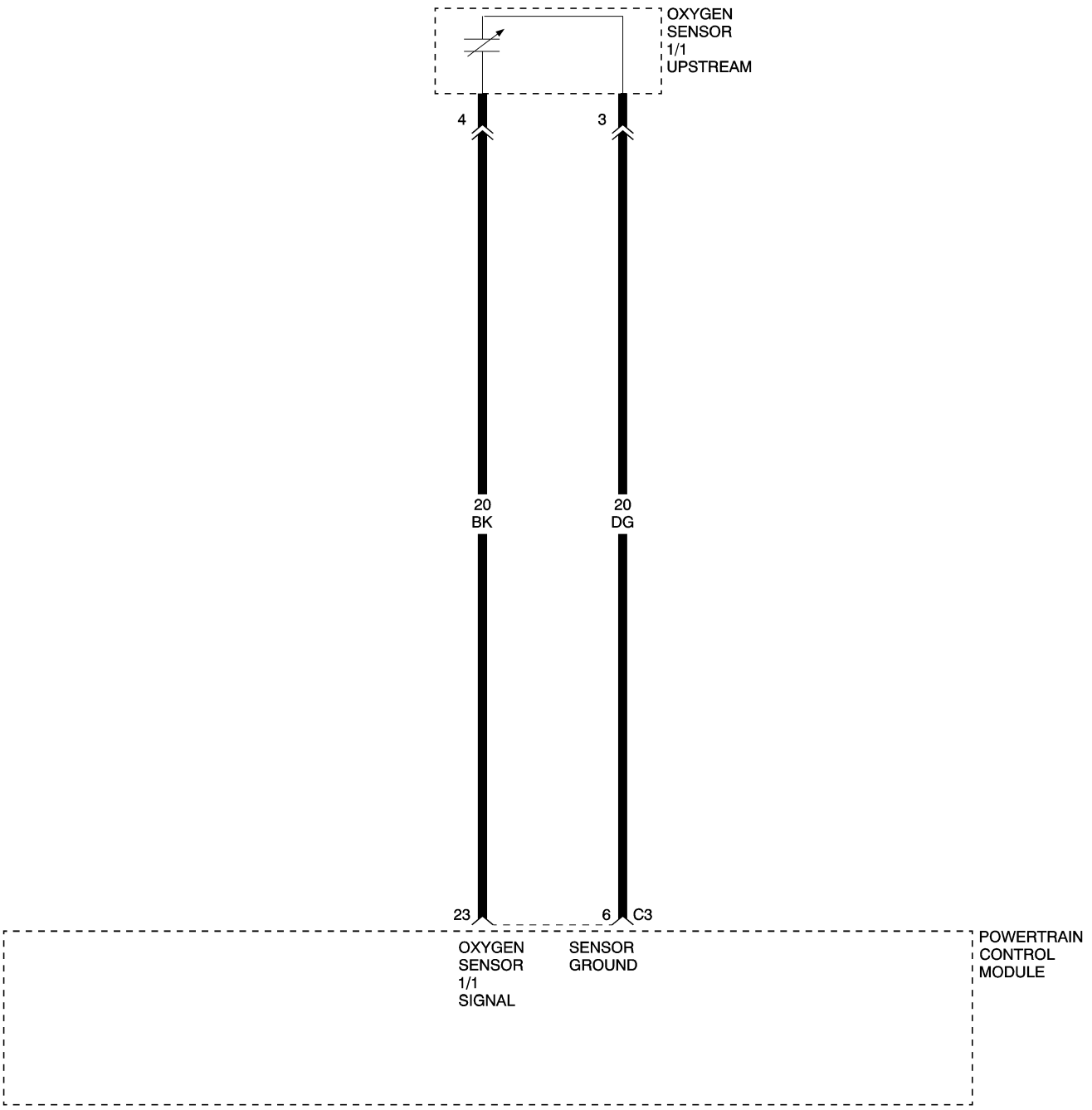

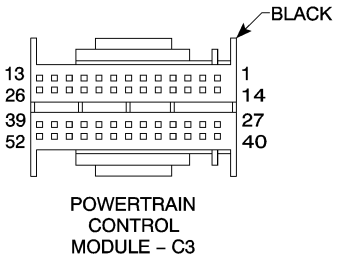

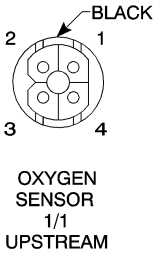

81168145

(P0153) O2 SENSOR 2/1 SHORT DELAY TIME — CONTINUED

When Monitored and Set Condition

- When Monitored: Start and drive vehicle greater than 32 km/h (20 MPH) and less than 89 km/h (55 MPH). Throttle open for a minimum 120 seconds. Coolant Temp greater than 70°C (158°F) Catalytic Converter Temperature greater than 600°C (1112°F).
- Set Condition: The O2 sensor voltage switches only 11 times or less from lean to rich within 20 seconds during monitoring. Two Trip Fault.

POSSIBLE CAUSES
EXHAUST LEAK
O2 SENSOR SIGNAL CIRCUIT OPEN
O2 SENSOR SIGNAL CIRCUIT SHORTED TO VOLTAGE
O2 SENSOR SIGNAL CIRCUIT SHORTED TO GROUND
O2 SENSOR GROUND CIRCUIT OPEN
O2 SENSOR GROUND CIRCUIT SHORTED TO VOLTAGE
O2 SENSOR GROUND CIRCUIT SHORTED TO GROUND
O2 SENSOR

Diagnostic Test

1. CHECK FOR CURRENT DTC

Turn the ignition on.
With the DRB III®, read the PCM DTCs.

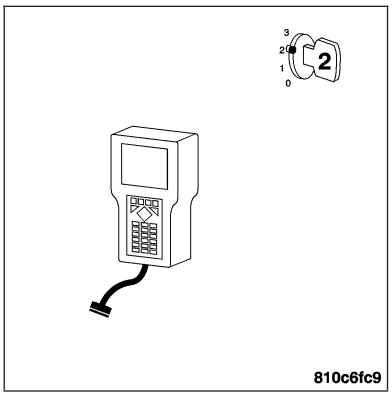

Is this DTC preset?

Yes >> For complete diagnosis of this DTC, refer to (P0133) O2 SENSOR 1/1 SHORT DELAY TIME.

No >> Go To 2

2. INTERMITTENT WIRING AND CONNECTORS

The conditions necessary to set this DTC are not present at this time.

Note: Check connectors — Clean/repair as necessary. Poor pin to terminal connections can set DTCs.Using the wiring diagram/schematic as a guide, inspect the wiring and connectors specific to this DTC. Wiggle the wires while checking for shorts and open circuits.

Note: Check for any Technical Service Bulletins that may apply.

Were there any problems found?

Yes >> Repair as necessary.
Perform POWERTRAIN VERIFICATION TEST - VER 2.

No >> The condition that caused this DTC to set is currently not present. Inspect the related wiring harness for a possible intermittent condition.

(P0153) O2 SENSOR 2/1 SHORT PERFORMANCE

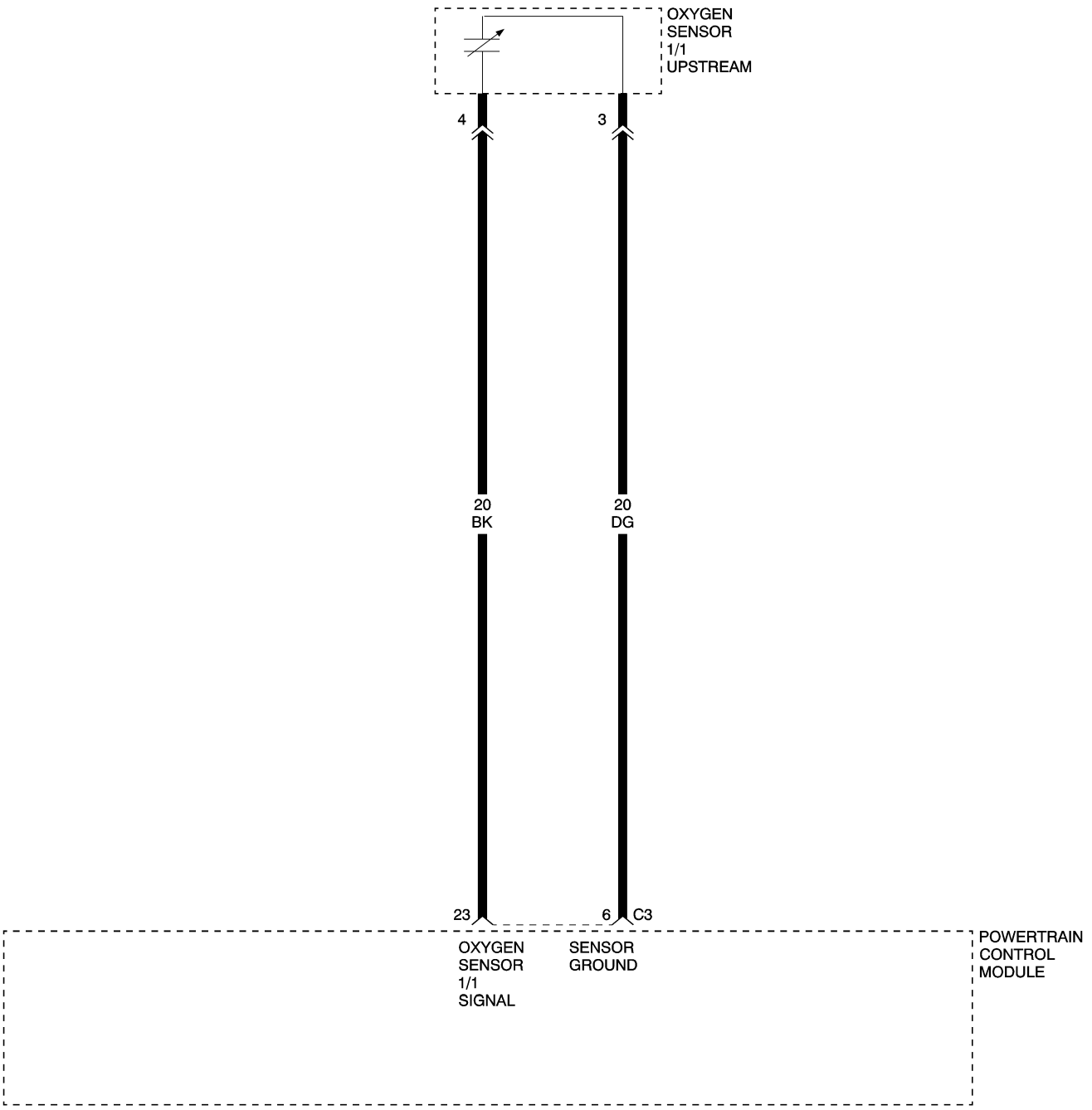

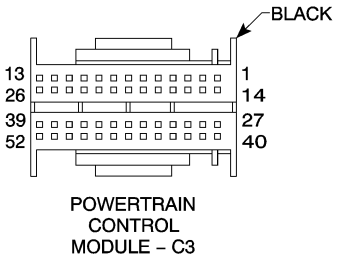

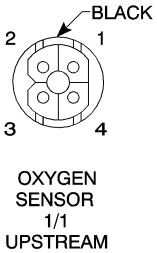

81168145

(P0153) O2 SENSOR 2/1 SHORT PERFORMANCE — CONTINUED

When Monitored and Set Condition

- When Monitored: Start and drive vehicle greater than 32 km/h (20 MPH) and less than 89 km/h (55 MPH). Throttle open for a minimum 120 seconds. Coolant Temp greater than 70°C (158°F) Catalytic Converter Temperature greater than 600°C (1112°F).
- Set Condition: The O2 sensor voltage switches only 11 times or less from lean to rich within 20 seconds during monitoring. Two Trip Fault.

POSSIBLE CAUSES
EXHAUST LEAK
O2 SENSOR SIGNAL CIRCUIT OPEN
O2 SENSOR SIGNAL CIRCUIT SHORTED TO VOLTAGE
O2 SENSOR SIGNAL CIRCUIT SHORTED TO GROUND
O2 SENSOR GROUND CIRCUIT OPEN
O2 SENSOR GROUND CIRCUIT SHORTED TO VOLTAGE
O2 SENSOR GROUND CIRCUIT SHORTED TO GROUND
O2 SENSOR

Diagnostic Test

1. CHECK FOR CURRENT DTC

Turn the ignition on.
With the DRB III®, read the PCM DTCs.

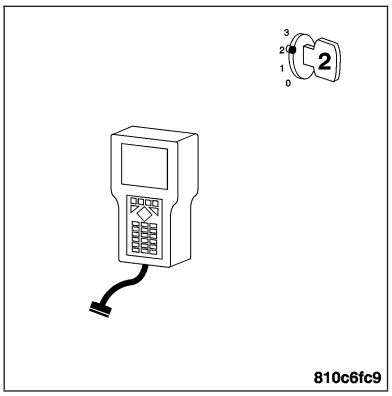

Is this DTC preset?

Yes >> For complete diagnosis of this DTC, refer to (P0133) O2 SENSOR 1/1 SHORT DELAY TIME.

No >> Go To 2

2. INTERMITTENT WIRING AND CONNECTORS

The conditions necessary to set this DTC are not present at this time.

Note: Check connectors — Clean/repair as necessary. Poor pin to terminal connections can set DTCs.Using the wiring diagram/schematic as a guide, inspect the wiring and connectors specific to this DTC. Wiggle the wires while checking for shorts and open circuits.

Note: Check for any Technical Service Bulletins that may apply.

Were there any problems found?

Yes >> Repair as necessary.
Perform POWERTRAIN VERIFICATION TEST - VER 2.

No >> The condition that caused this DTC to set is currently not present. Inspect the related wiring harness for a possible intermittent condition.

(P0154) O2 SENSOR 2/1 CIRCUIT OPEN

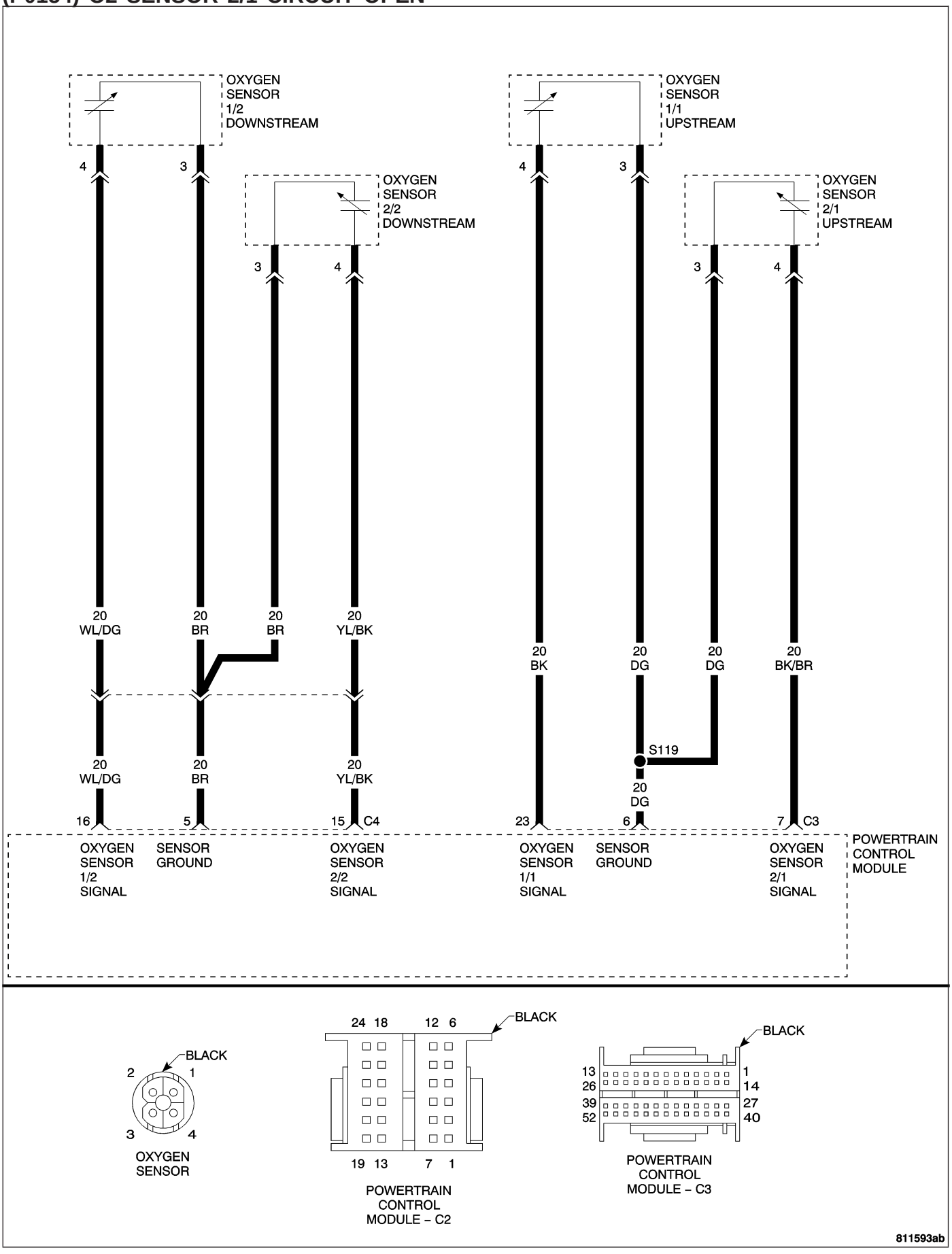

(P0154) O2 SENSOR 2/1 CIRCUIT OPEN — CONTINUED

When Monitored and Set Condition

- When Monitored: With the engine running between 1000 and 2000 RPM, engine load between 15% to 50%, closed loop mode, the three way catalytic converter temperature is greater than 380°C (716°F), and the O2 sensor heater must be ON for at least 220 seconds to enable the signal inactive portion of the test.
- Set Condition: O2 Sensor voltage is less than 0.15 volts for approximately 5 seconds. Signal stays at center: The O2 Sensor voltage stays between 0.4 and 0.6 volts for more than approximately 15 seconds after the O2 Sensor heater has been ON for at least 220 seconds.

POSSIBLE CAUSES
O2 SENSOR SIGNAL CIRCUIT OPEN
O2 SENSOR SIGNAL CIRCUIT SHORT TO GROUND
O2 SENSOR GROUND CIRCUIT OPEN
ENGINE EXHAUST LEAK
O2 SENSOR
POWERTRAIN CONTROL MODULE

Diagnostic Test

1. CHECK FOR CURRENT DTC

Turn the ignition on.
With the DRB III®, read the PCM DTCs.

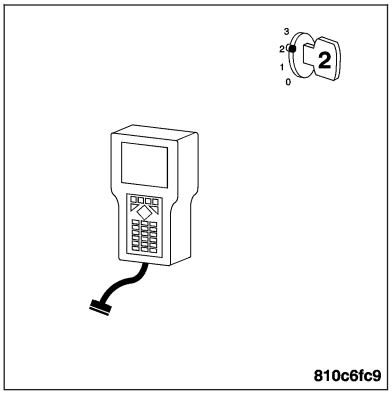

Is this DTC present?

Yes >> For complete diagnosis of this DTC, refer to (P0131) O2 SENSOR 1/1 CIRCUIT LOW.

No >> Go To 2

2. INTERMITTENT WIRING AND CONNECTORS

The conditions necessary to set this DTC are not present at this time.

Note: Check connectors — Clean/repair as necessary. Poor pin to terminal connections can set DTCs.Using the wiring diagram/schematic as a guide, inspect the wiring and connectors specific to this DTC. Wiggle the wires while checking for shorts and open circuits.

Note: Check for any Technical Service Bulletins that may apply.

Were there any problems found?

Yes >> Repair as necessary.
Perform POWERTRAIN VERIFICATION TEST - VER 2.

No >> The condition that caused this DTC to set is currently not present. Inspect the related wiring harness for a possible intermittent condition.

(P0155) O2 SENSOR 2/1 HEATER CIRCUIT LOW

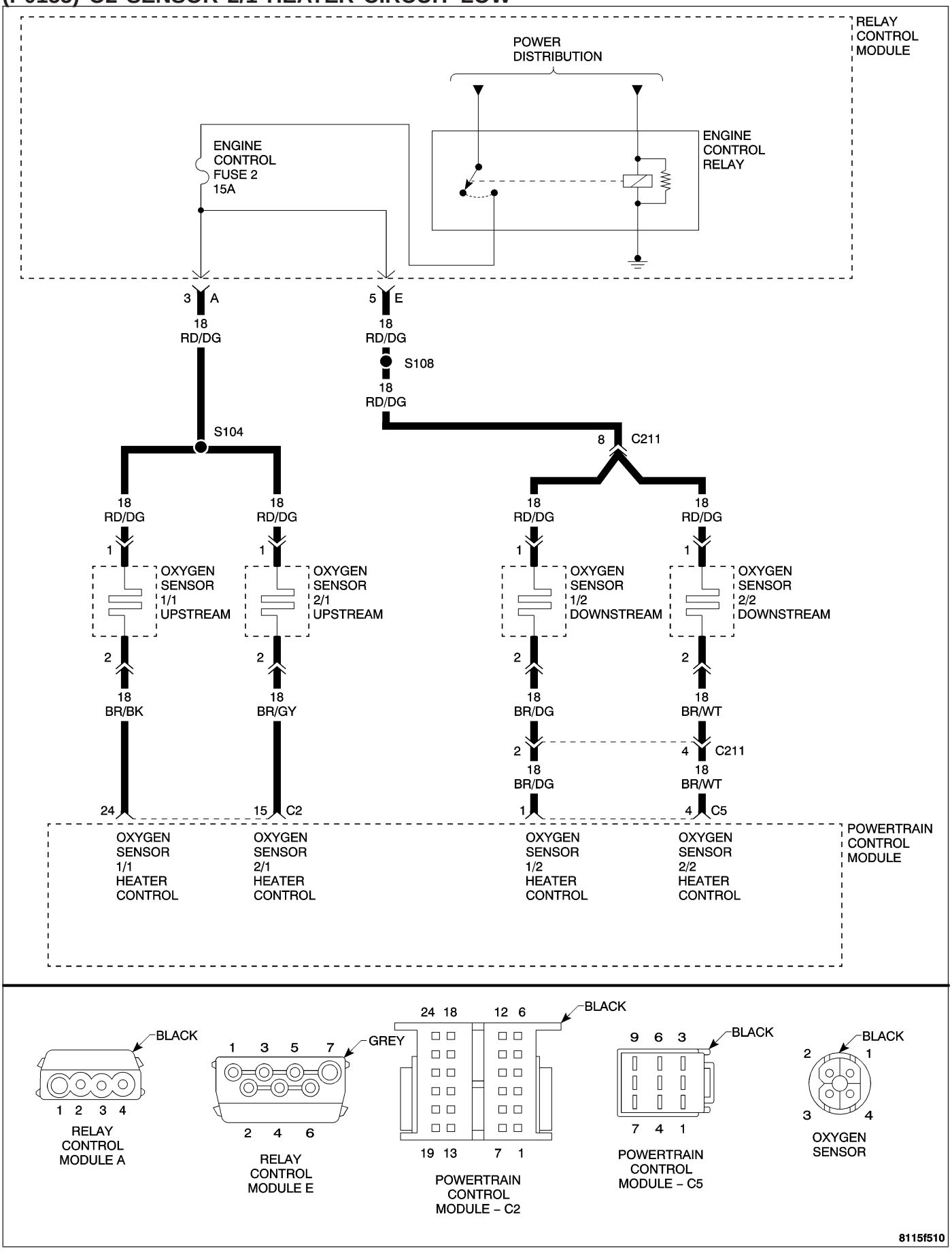

(P0155) O2 SENSOR 2/1 HEATER CIRCUIT LOW — CONTINUED

When Monitored and Set Condition

- When Monitored: Engine Running and Heater duty cycle greater than 0%
- Set Condition: The PCM detects the O2 Heater voltage is out of acceptable range. Below 0.0926 of a volt.

POSSIBLE CAUSES
O2 HEATER CONTROL SHORTED TO GROUND
O2 HEATER ELEMENT
POWERTRAIN CONTROL MODULE

For complete diagnosis of this DTC, refer to (P0135) O2 SENSOR 1/1 HEATER CIRCUIT LOW.

Diagnostic Test

1. CHECK FOR CURRENT DTC

Turn the ignition on.
With the DRB III®, read the PCM DTCs.

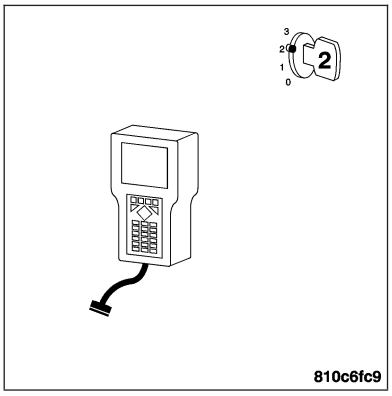

Is this DTC present?

Yes >> For complete diagnosis of this DTC, refer to (P0135) O2 SENSOR 1/1 HEATER CIRCUIT LOW.

No >> Go To 2

2. INTERMITTENT WIRING AND CONNECTORS

The conditions necessary to set this DTC are not present at this time.

Note: Check connectors — Clean/repair as necessary. Poor pin to terminal connections can set DTCs.Using the wiring diagram/schematic as a guide, inspect the wiring and connectors specific to this DTC. Wiggle the wires while checking for shorts and open circuits.

Note: Check for any Technical Service Bulletins that may apply.

Were there any problems found?

Yes >> Repair as necessary.
Perform POWERTRAIN VERIFICATION TEST - VER 2.

No >> The condition that caused this DTC to set is currently not present. Inspect the related wiring harness for a possible intermittent condition.

(P0155) O2 SENSOR 2/1 HEATER CIRCUIT HIGH

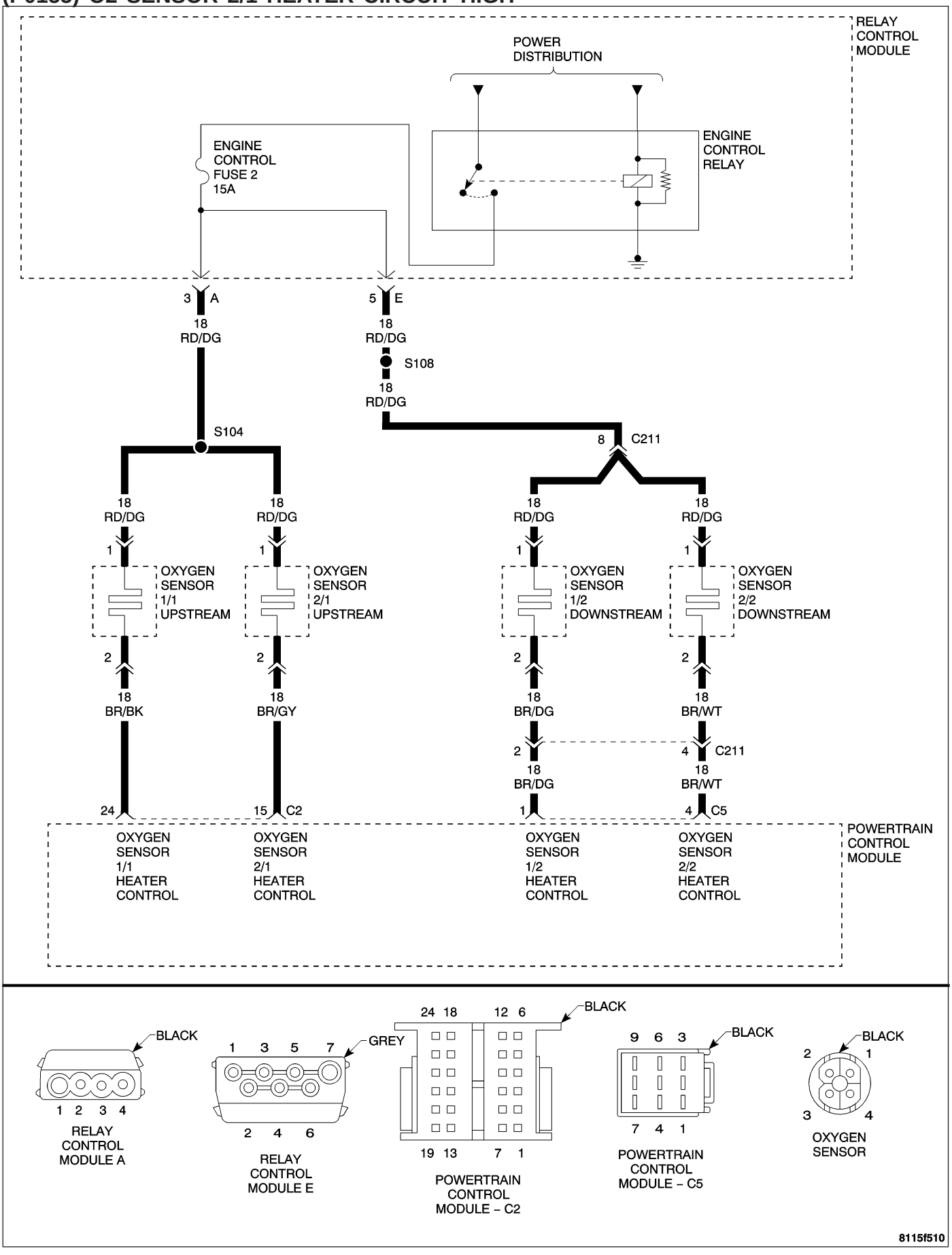

(P0155) O2 SENSOR 2/1 HEATER CIRCUIT HIGH — CONTINUED

When Monitored and Set Condition

- When Monitored: Engine Running and Heater duty cycle greater than 0%.
- Set Condition: O2 Heater Temperature does not reach 575°C (959°F) within 90 second during monitoring conditions. Two Trip Fault.

POSSIBLE CAUSES
O2 HEATER ELEMENT
O2 HEATER FUSED ENGINE CONTROL RELAY OUTPUT CIRCUIT OPEN
O2 HEATER CONTROL CIRCUIT OPEN
POWERTRAIN CONTROL MODULE

Diagnostic Test

1. CHECK FOR CURRENT DTC

Turn the ignition on.
With the DRB III®, read the PCM DTCs.

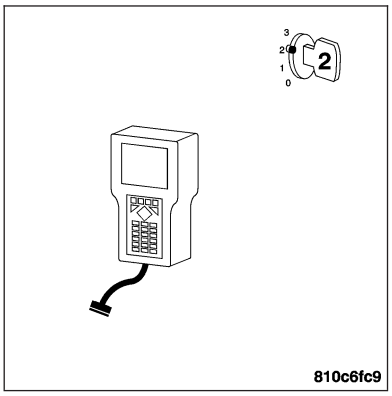

Is this DTC present?

Yes >> For complete diagnosis of this DTC, refer to (P0135) O2 SENSOR 1/1 HEATER CIRCUIT HIGH

No >> Go To 2

2. INTERMITTENT WIRING AND CONNECTORS

The conditions necessary to set this DTC are not present at this time.

Note: Check connectors — Clean/repair as necessary. Poor pin to terminal connections can set DTCs.Using the wiring diagram/schematic as a guide, inspect the wiring and connectors specific to this DTC. Wiggle the wires while checking for shorts and open circuits.

Note: Check for any Technical Service Bulletins that may apply.

Were there any problems found?

Yes >> Repair as necessary.
Perform POWERTRAIN VERIFICATION TEST - VER 2.

No >> The condition that caused this DTC to set is currently not present. Inspect the related wiring harness for a possible intermittent condition.

(P0155) O2 SENSOR 2/1 HEATER CIRCUIT OPEN

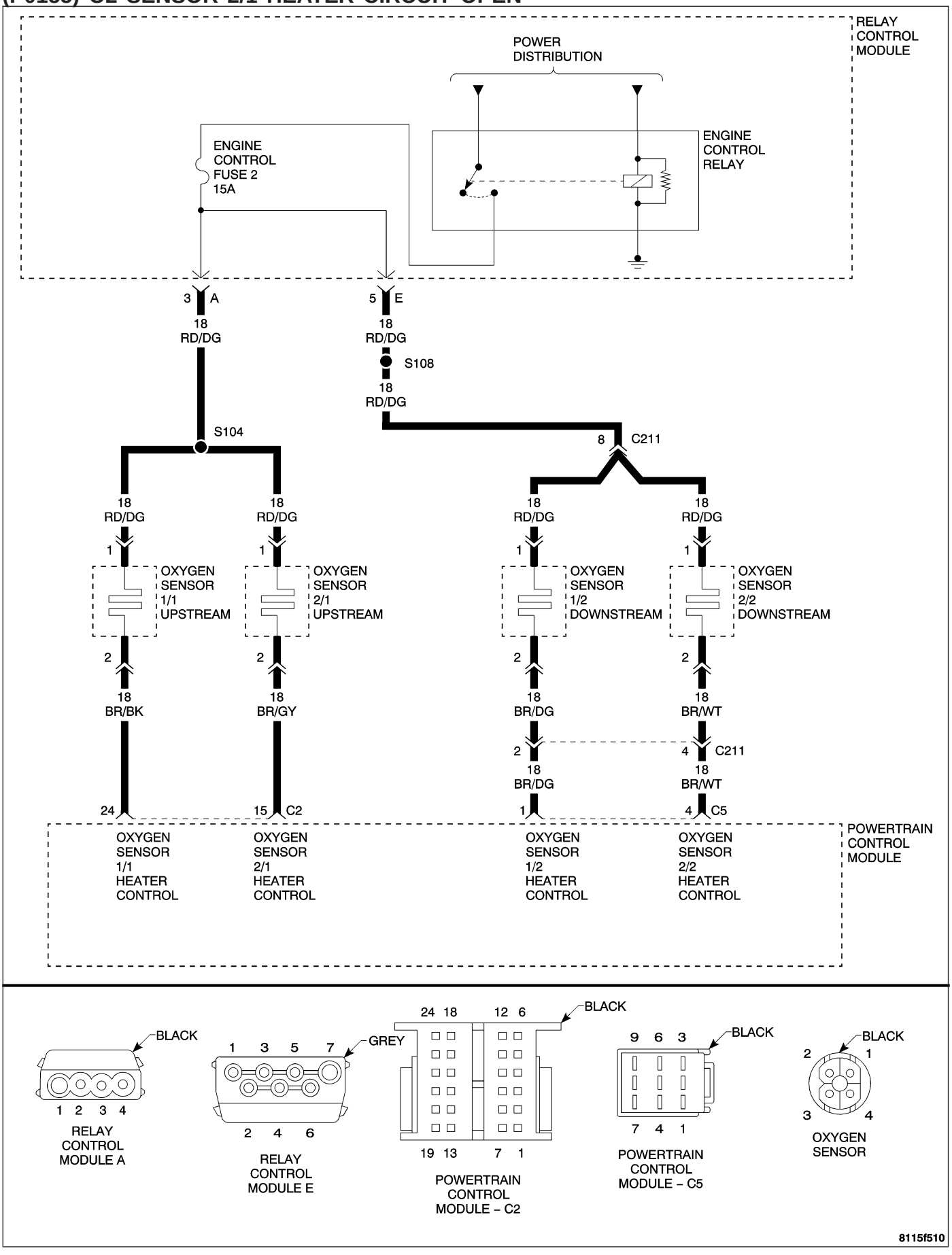

(P0155) O2 SENSOR 2/1 HEATER CIRCUIT OPEN — CONTINUED

When Monitored and Set Condition

- When Monitored: Engine Running and Heater duty cycle greater than 0%.
- Set Condition: O2 Heater Temperature does not reach 575°C (959°F) within 90 second during monitoring conditions. Two Trip Fault.

POSSIBLE CAUSES
O2 HEATER ELEMENT
O2 HEATER FUSED ENGINE CONTROL RELAY OUTPUT CIRCUIT OPEN
O2 HEATER CONTROL CIRCUIT OPEN
POWERTRAIN CONTROL MODULE

Diagnostic Test

1. CHECK FOR CURRENT DTC

Turn the ignition on.
With the DRB III®, read the PCM DTCs.

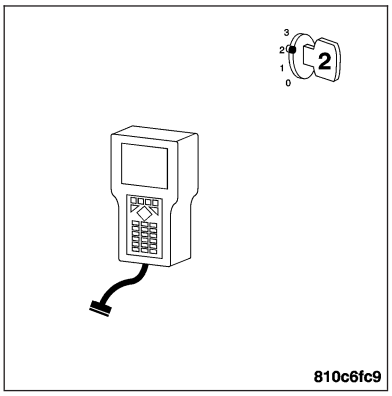

Is this DTC present?

Yes >> For complete diagnosis of this DTC, refer to (P0135) O2 SENSOR 1/1 HEATER CIRCUIT HIGH

No >> Go To 2

2. INTERMITTENT WIRING AND CONNECTORS

The conditions necessary to set this DTC are not present at this time.

Note: Check connectors — Clean/repair as necessary. Poor pin to terminal connections can set DTCs.Using the wiring diagram/schematic as a guide, inspect the wiring and connectors specific to this DTC. Wiggle the wires while checking for shorts and open circuits.

Note: Check for any Technical Service Bulletins that may apply.

Were there any problems found?

Yes >> Repair as necessary.
Perform POWERTRAIN VERIFICATION TEST - VER 2.

No >> The condition that caused this DTC to set is currently not present. Inspect the related wiring harness for a possible intermittent condition.

(P0155) O2 SENSOR 2/1 HEATER PERFORMANCE

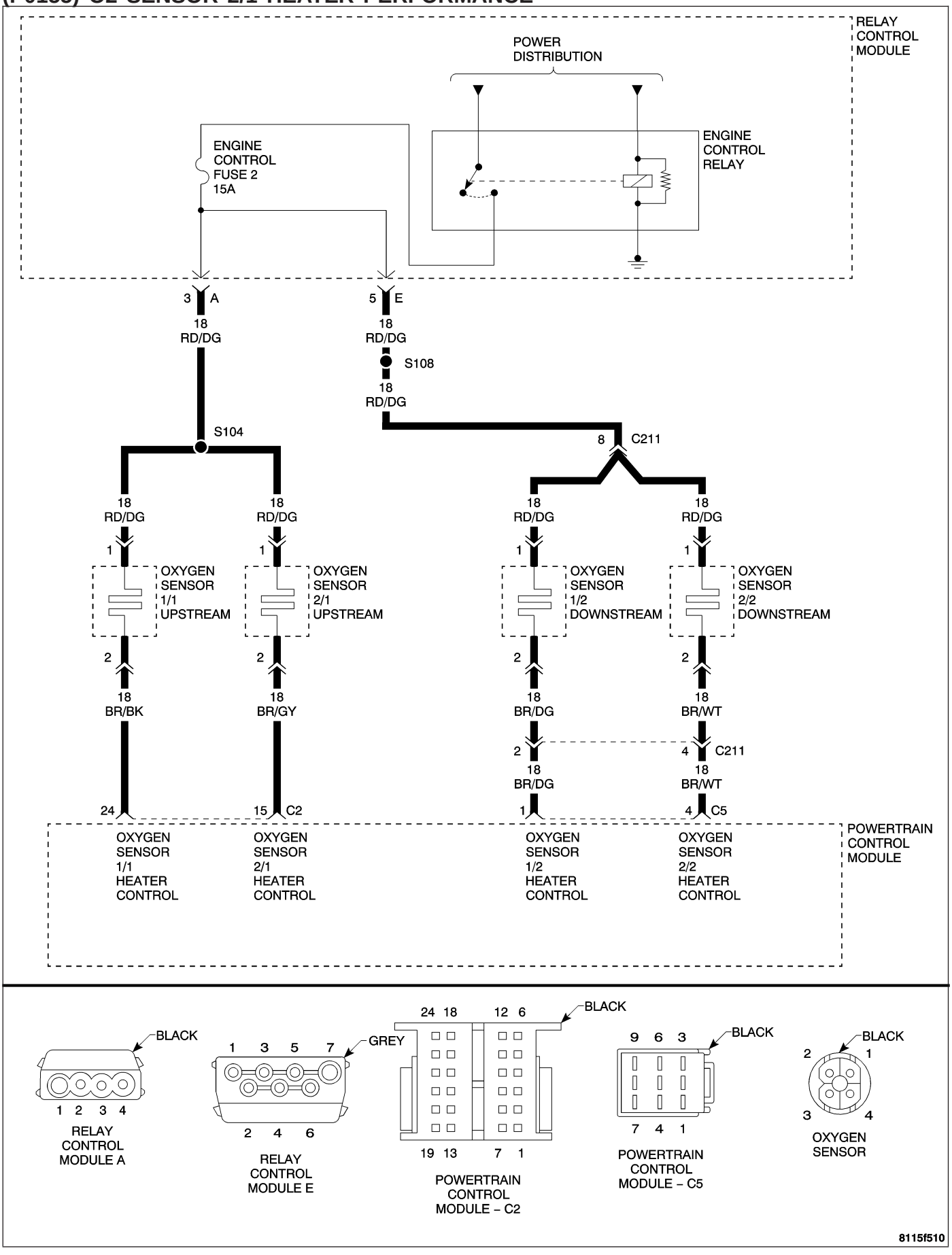

(P0155) O2 SENSOR 2/1 HEATER PERFORMANCE — CONTINUED

When Monitored and Set Condition

- When Monitored: Engine Running and Heater duty cycle greater than 0%.
- Set Condition: O2 Heater Temperature does not reach 575°C (959°F) within 90 second during monitoring conditions. Two Trip Fault.

POSSIBLE CAUSES
O2 SENSOR HEATER FUSED ENGINE CONTROL RELAY OUTPUT CIRCUIT OPEN
O2 SENSOR HEATER CONTROL CIRCUIT SHORT TO VOLTAGE
O2 SENSOR HEATER CONTROL CIRCUIT SHORT TO GROUND
O2 HEATER CONTROL CIRCUIT OPEN
O2 HEATER ELEMENT
POWERTRAIN CONTROL MODULE

Diagnostic Test

1. CHECK FOR CURRENT DTC

Turn the ignition on.
With the DRB III®, read the PCM DTCs.

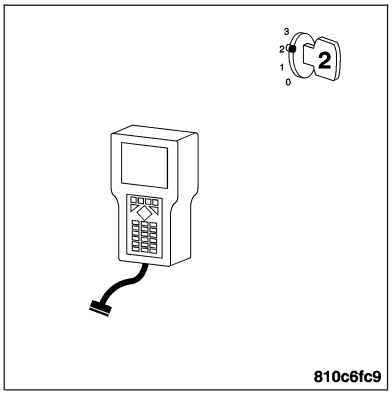

Is this DTC present?

Yes >> For complete diagnosis of this DTC, refer to (P0135) O2 SENSOR 1/1 HEATER PERFORMANCE.

No >> Go To 2

2. INTERMITTENT WIRING AND CONNECTORS

The conditions necessary to set this DTC are not present at this time.

Note: Check connectors — Clean/repair as necessary. Poor pin to terminal connections can set DTCs.Using the wiring diagram/schematic as a guide, inspect the wiring and connectors specific to this DTC. Wiggle the wires while checking for shorts and open circuits.

Note: Check for any Technical Service Bulletins that may apply.

Were there any problems found?

Yes >> Repair as necessary.
Perform POWERTRAIN VERIFICATION TEST - VER 2.

No >> The condition that caused this DTC to set is currently not present. Inspect the related wiring harness for a possible intermittent condition.

(P0161) O2 SENSOR 2/2 HEATER PERFORMANCE

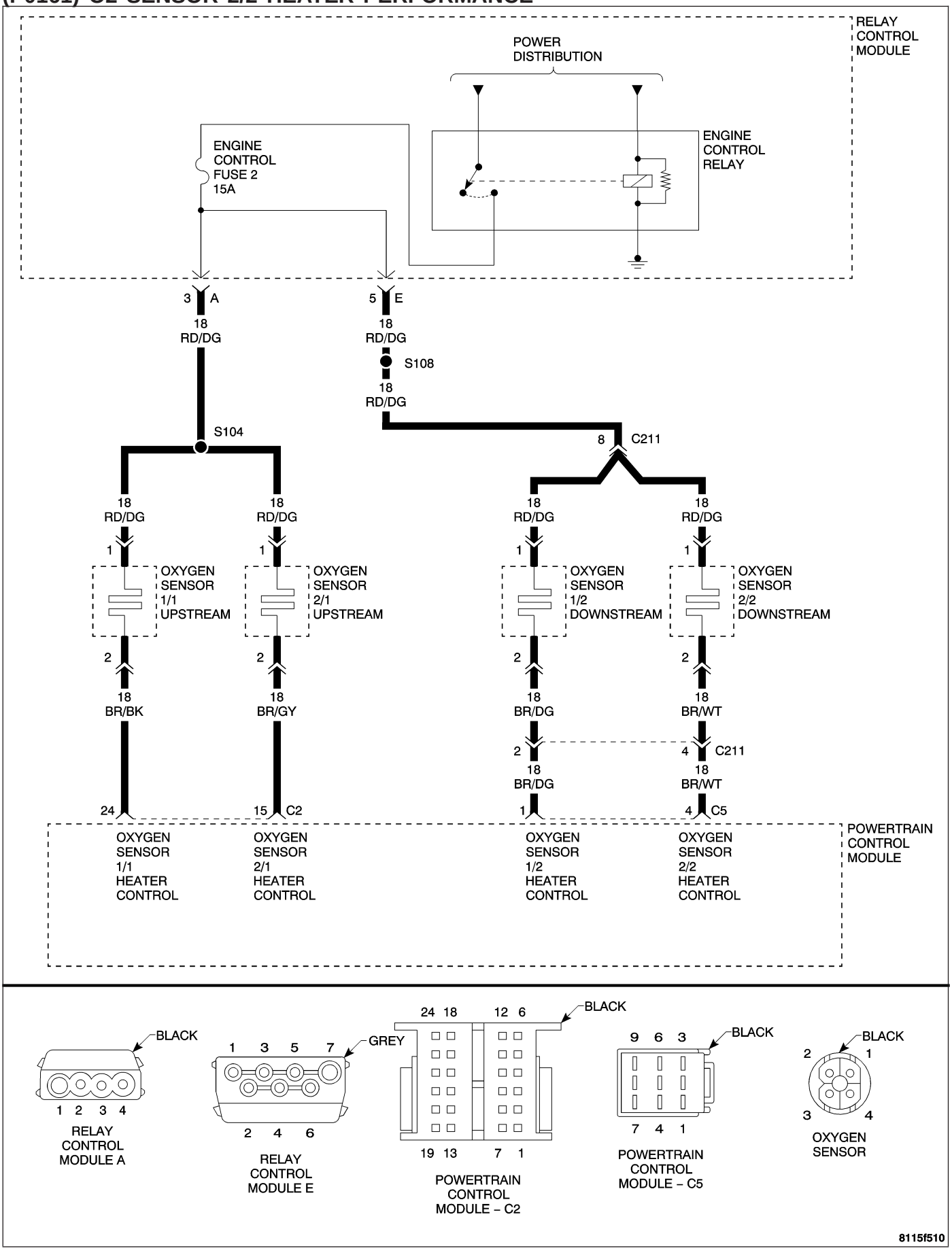

(P0161) O2 SENSOR 2/2 HEATER PERFORMANCE — CONTINUED

When Monitored and Set Condition

- When Monitored: Engine Running and Heater duty cycle greater than 0%.
- Set Condition: O2 Heater Temperature does not reach 575°C (959°F) within 90 second during monitoring conditions. Two Trip Fault.

POSSIBLE CAUSES
O2 SENSOR HEATER FUSED ENGINE CONTROL RELAY OUTPUT CIRCUIT OPEN
O2 SENSOR HEATER CONTROL CIRCUIT SHORT TO VOLTAGE
O2 SENSOR HEATER CONTROL CIRCUIT SHORT TO GROUND
O2 HEATER CONTROL CIRCUIT OPEN
O2 HEATER ELEMENT
POWERTRAIN CONTROL MODULE

Diagnostic Test

1. CHECK FOR CURRENT DTC

Turn the ignition on.
With the DRB III®, read the PCM DTCs.

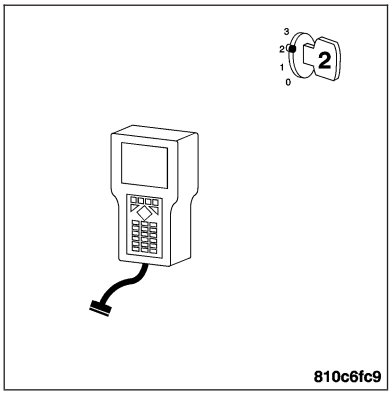

Is this DTC present?

Yes >> For complete diagnosis of this DTC, refer to (P0135) O2 SENSOR 1/1 HEATER PERFORMANCE.

No >> Go To 2

2. INTERMITTENT WIRING AND CONNECTORS

The conditions necessary to set this DTC are not present at this time.

Note: Check connectors — Clean/repair as necessary. Poor pin to terminal connections can set DTCs.Using the wiring diagram/schematic as a guide, inspect the wiring and connectors specific to this DTC. Wiggle the wires while checking for shorts and open circuits.

Note: Check for any Technical Service Bulletins that may apply.

Were there any problems found?

Yes >> Repair as necessary.
Perform POWERTRAIN VERIFICATION TEST - VER 2.

No >> The condition that caused this DTC to set is currently not present. Inspect the related wiring harness for a possible intermittent condition.

(P0161) O2 SENSOR 2/2 HEATER CIRCUIT LOW

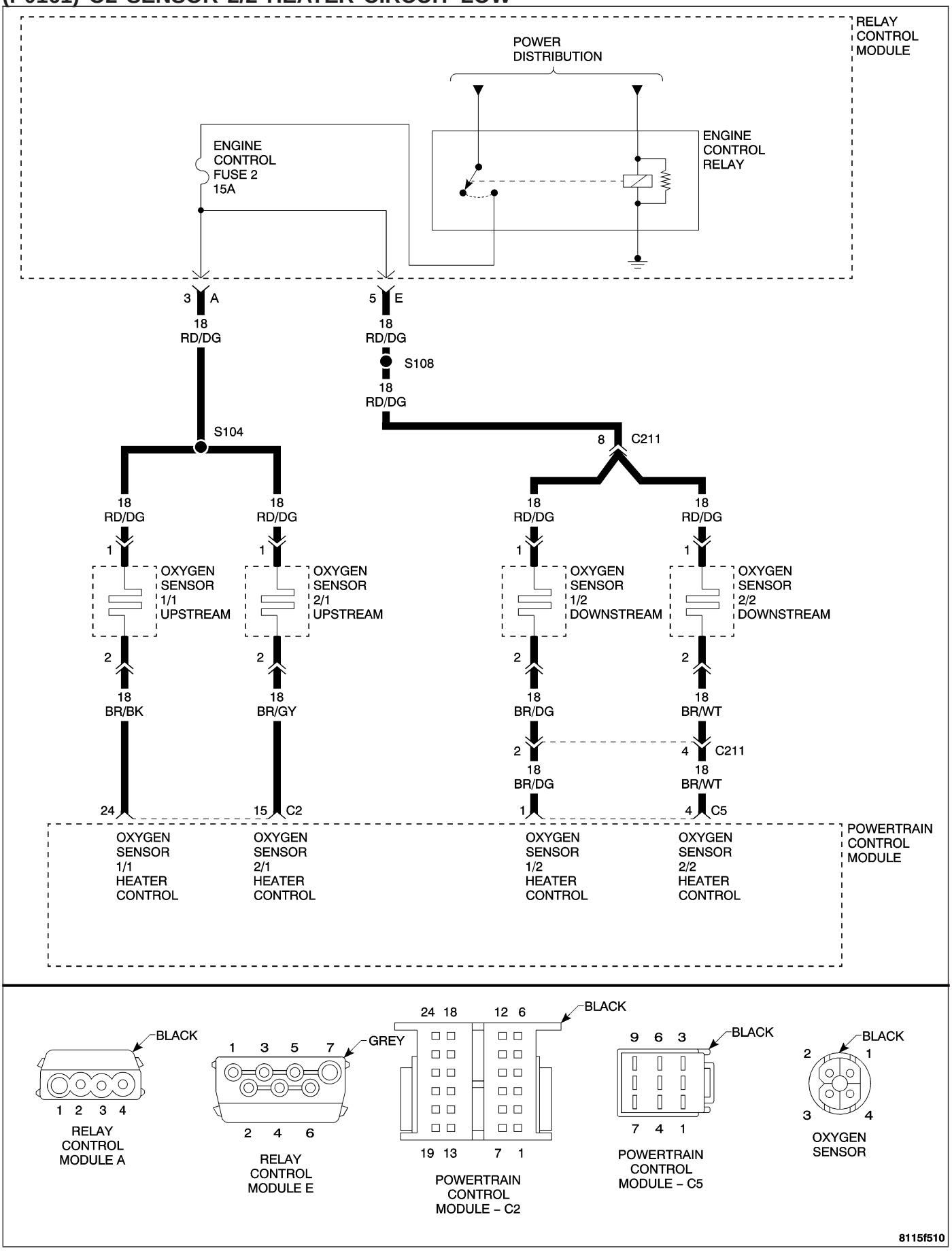

(P0161) O2 SENSOR 2/2 HEATER CIRCUIT LOW — CONTINUED

When Monitored and Set Condition

- When Monitored: Engine Running and Heater duty cycle greater than 0%
- Set Condition: The PCM detects the O2 Heater voltage is out of acceptable range. Below 0.0926 of a volt.

POSSIBLE CAUSES
O2 HEATER CONTROL SHORTED TO GROUND
O2 HEATER ELEMENT
POWERTRAIN CONTROL MODULE

Diagnostic Test

1. CHECK FOR CURRENT DTC

Turn the ignition on.
With the DRB III®, read the PCM DTCs.

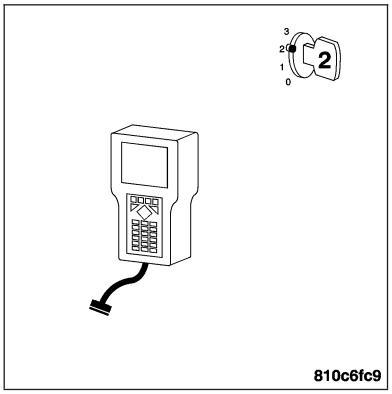

Is this DTC present?

Yes >> For complete diagnosis of this DTC, refer to (P0135) O2 SENSOR 1/1 HEATER CIRCUIT LOW.

No >> Go To 2

2. INTERMITTENT WIRING AND CONNECTORS

The conditions necessary to set this DTC are not present at this time.

Note: Check connectors — Clean/repair as necessary. Poor pin to terminal connections can set DTCs.Using the wiring diagram/schematic as a guide, inspect the wiring and connectors specific to this DTC. Wiggle the wires while checking for shorts and open circuits.

Note: Check for any Technical Service Bulletins that may apply.

Were there any problems found?

Yes >> Repair as necessary.
Perform POWERTRAIN VERIFICATION TEST - VER 2.

No >> The condition that caused this DTC to set is currently not present. Inspect the related wiring harness for a possible intermittent condition.

(P0161) O2 SENSOR 2/2 HEATER CIRCUIT OPEN

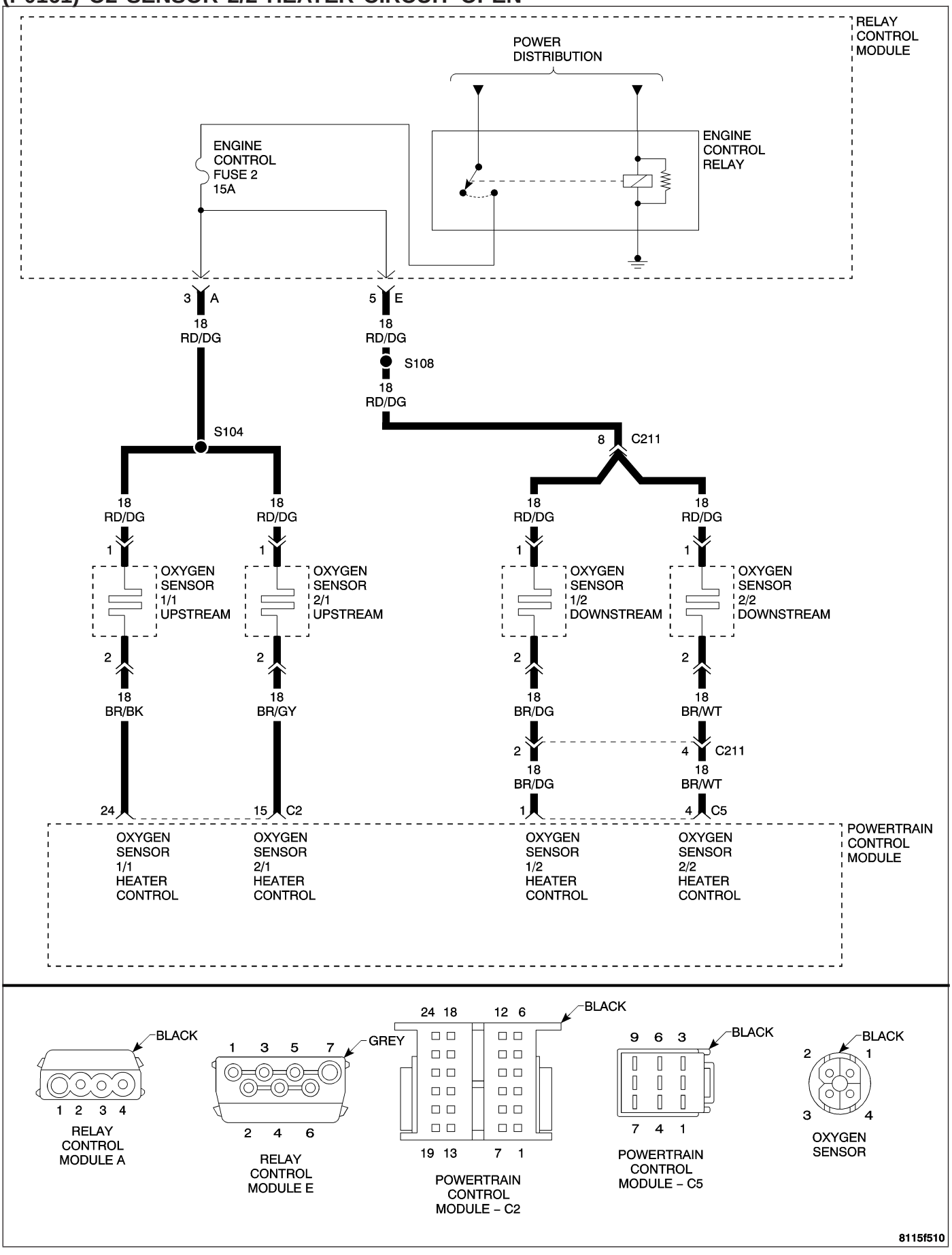

(P0161) O2 SENSOR 2/2 HEATER CIRCUIT OPEN — CONTINUED

When Monitored and Set Condition

- When Monitored: Engine Running and Heater duty cycle greater than 0%.
- Set Condition: O2 Heater Temperature does not reach 575°C (959°F) within 90 second during monitoring conditions. Two Trip Fault.

POSSIBLE CAUSES
O2 HEATER ELEMENT
O2 HEATER FUSED ENGINE CONTROL RELAY OUTPUT CIRCUIT OPEN
O2 HEATER CONTROL CIRCUIT OPEN
POWERTRAIN CONTROL MODULE

Diagnostic Test

1. CHECK FOR CURRENT DTC

Turn the ignition on.
With the DRB III®, read the PCM DTCs.

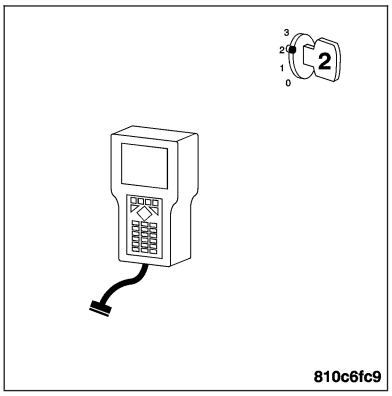

Is this DTC present?

Yes >> For complete diagnosis of this DTC, refer to (P0135) O2 SENSOR 1/1 HEATER CIRCUIT HIGH

No >> Go To 2

2. INTERMITTENT WIRING AND CONNECTORS

The conditions necessary to set this DTC are not present at this time.

Note: Check connectors — Clean/repair as necessary. Poor pin to terminal connections can set DTCs.Using the wiring diagram/schematic as a guide, inspect the wiring and connectors specific to this DTC. Wiggle the wires while checking for shorts and open circuits.

Note: Check for any Technical Service Bulletins that may apply.

Were there any problems found?

Yes >> Repair as necessary.
Perform POWERTRAIN VERIFICATION TEST - VER 2.

No >> The condition that caused this DTC to set is currently not present. Inspect the related wiring harness for a possible intermittent condition.

(P0161) O2 SENSOR 2/2 HEATER CIRCUIT HIGH

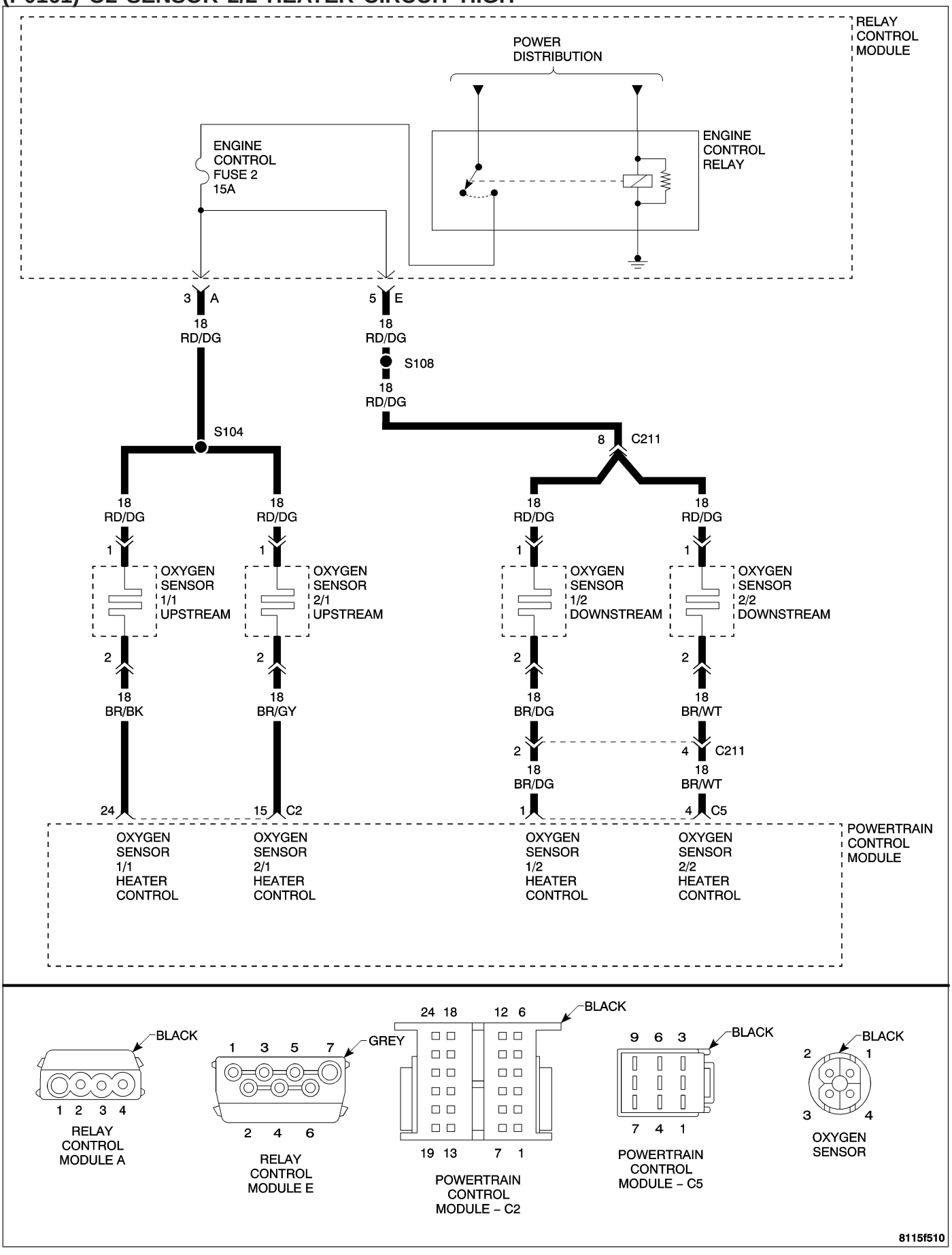

(P0161) O2 SENSOR 2/2 HEATER CIRCUIT HIGH — CONTINUED

When Monitored and Set Condition

- When Monitored: Engine Running and Heater duty cycle greater than 0%.
- Set Condition: O2 Heater Temperature does not reach 575°C (959°F) within 90 second during monitoring conditions. Two Trip Fault.

POSSIBLE CAUSES
O2 HEATER ELEMENT
O2 HEATER FUSED ENGINE CONTROL RELAY OUTPUT CIRCUIT OPEN
O2 HEATER CONTROL CIRCUIT OPEN
POWERTRAIN CONTROL MODULE

Diagnostic Test

1. CHECK FOR CURRENT DTC

Turn the ignition on.
With the DRB III®, read the PCM DTCs.

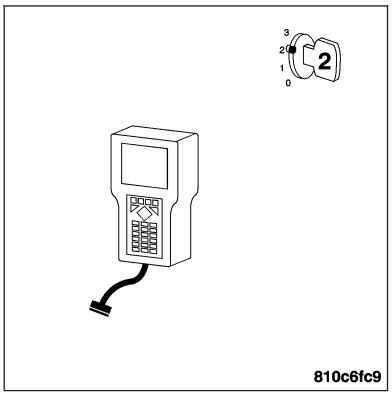

Is this DTC present?

Yes >> For complete diagnosis of this DTC, refer to (P0135) O2 SENSOR 1/1 HEATER CIRCUIT HIGH

No >> Go To 2

2. INTERMITTENT WIRING AND CONNECTORS

The conditions necessary to set this DTC are not present at this time.

Note: Check connectors — Clean/repair as necessary. Poor pin to terminal connections can set DTCs.Using the wiring diagram/schematic as a guide, inspect the wiring and connectors specific to this DTC. Wiggle the wires while checking for shorts and open circuits.

Note: Check for any Technical Service Bulletins that may apply.

Were there any problems found?

Yes >> Repair as necessary.
Perform POWERTRAIN VERIFICATION TEST - VER 2.

No >> The condition that caused this DTC to set is currently not present. Inspect the related wiring harness for a possible intermittent condition.

(P0171) FUEL SYSTEM 1/1 UNDERCORRECTION OF FUEL MIXTURE (OFF IDLE)

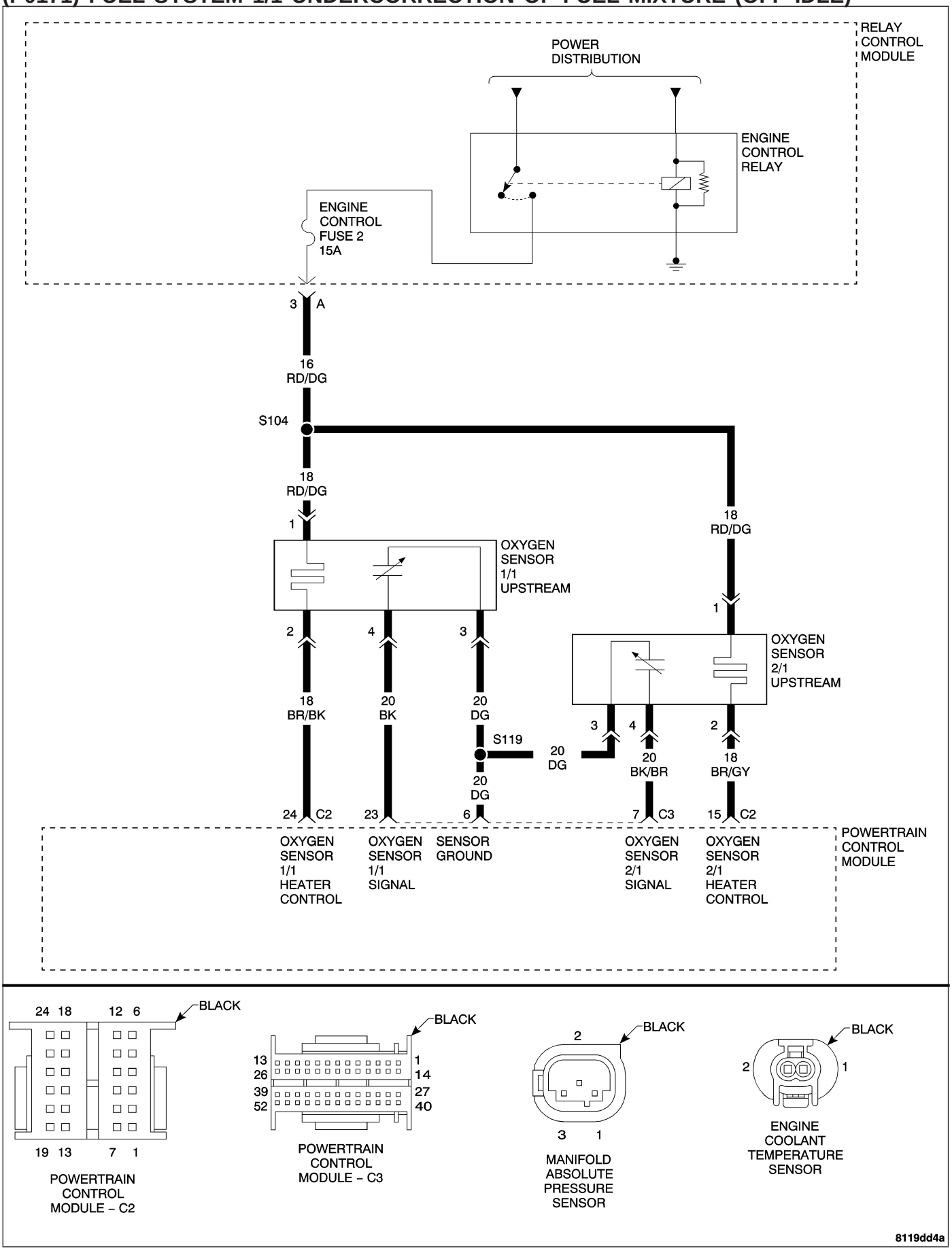

(P0171) FUEL SYSTEM 1/1 UNDERCORRECTION OF FUEL MIXTURE (OFF IDLE) — CONTINUED

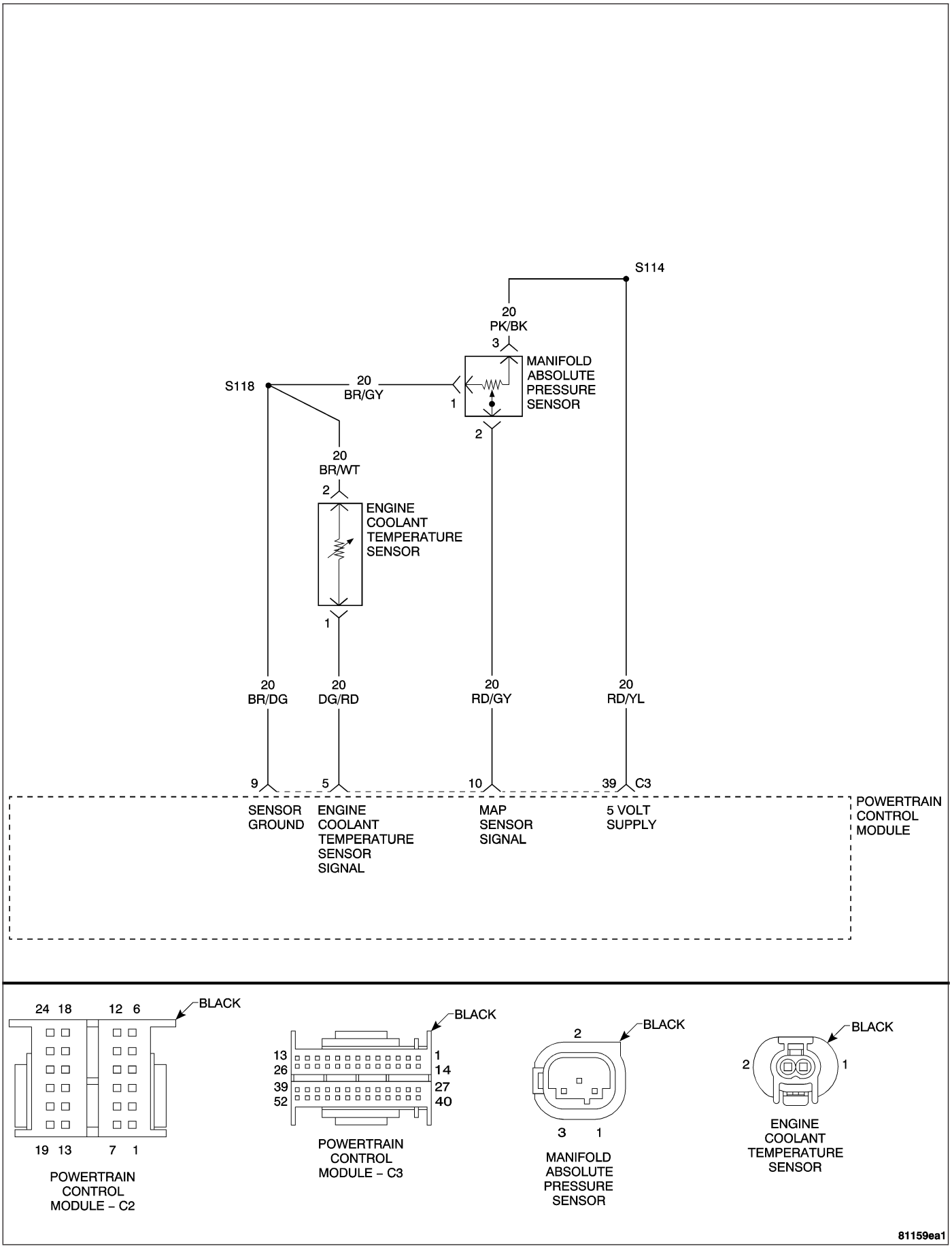

(P0171) FUEL SYSTEM 1/1 UNDERCORRECTION OF FUEL MIXTURE (OFF IDLE) — CONTINUED

When Monitored and Set Condition

- When Monitored: With the engine running in closed loop mode, the ambient/battery temperature above -7°C (20°F), altitude below 2590m (8500 ft). and fuel level greater than 15%.
- Set Condition: If the PCM multiplies short term compensation by long term adaptive and a certain percentage is exceeded for two trips, the MIL illuminates and a trouble code is stored.

POSSIBLE CAUSES
RESTRICTED FUEL SUPPLY LINE
FUEL STRAINER PLUGGED
O2 SENSOR SIGNAL CIRCUIT
O2 SENSOR GROUND CIRCUIT
O2 SENSOR HEATER OPERATION
MANIFOLD ABSOLUTE PRESSURE SENSOR OPERATION
ENGINE COOLANT TEMPERATURE SENSOR OPERATION
ENGINE MECHANICAL PROBLEM
O2 SENSOR
FUEL PUMP
FUEL CONTAMINATION/EXHAUST LEAK

Diagnostic Test

1. CHECK FOR CURRENT DTC

Turn the ignition on.
With the DRB III®, read the PCM DTCs.

Is this DTC present?

Yes >> For complete diagnosis of this DTC, refer to (P0172) FUEL SYSTEM 1/1 LEAN CONTROL BELOW LIMIT (AT LOAD).

No >> Go To 2

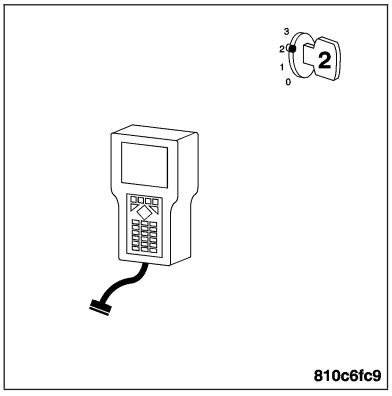

(P0171) FUEL SYSTEM 1/1 UNDERCORRECTION OF FUEL MIXTURE (OFF IDLE) — CONTINUED

2. INTERMITTENT WIRING AND CONNECTORS

The conditions necessary to set this DTC are not present at this time.

Note: Check connectors — Clean/repair as necessary. Poor pin to terminal connections can set DTCs.Using the wiring diagram/schematic as a guide, inspect the wiring and connectors specific to this DTC. Wiggle the wires while checking for shorts and open circuits.

Note: Check for any Technical Service Bulletins that may apply.

Were there any problems found?

Yes >> Repair as necessary.
Perform POWERTRAIN VERIFICATION TEST - VER 2.

No >> The condition that caused this DTC to set is currently not present. Inspect the related wiring harness for a possible intermittent condition.

(P0171) FUEL SYSTEM 1/1 RICH CONTROL OVER LIMIT (AT IDLE)

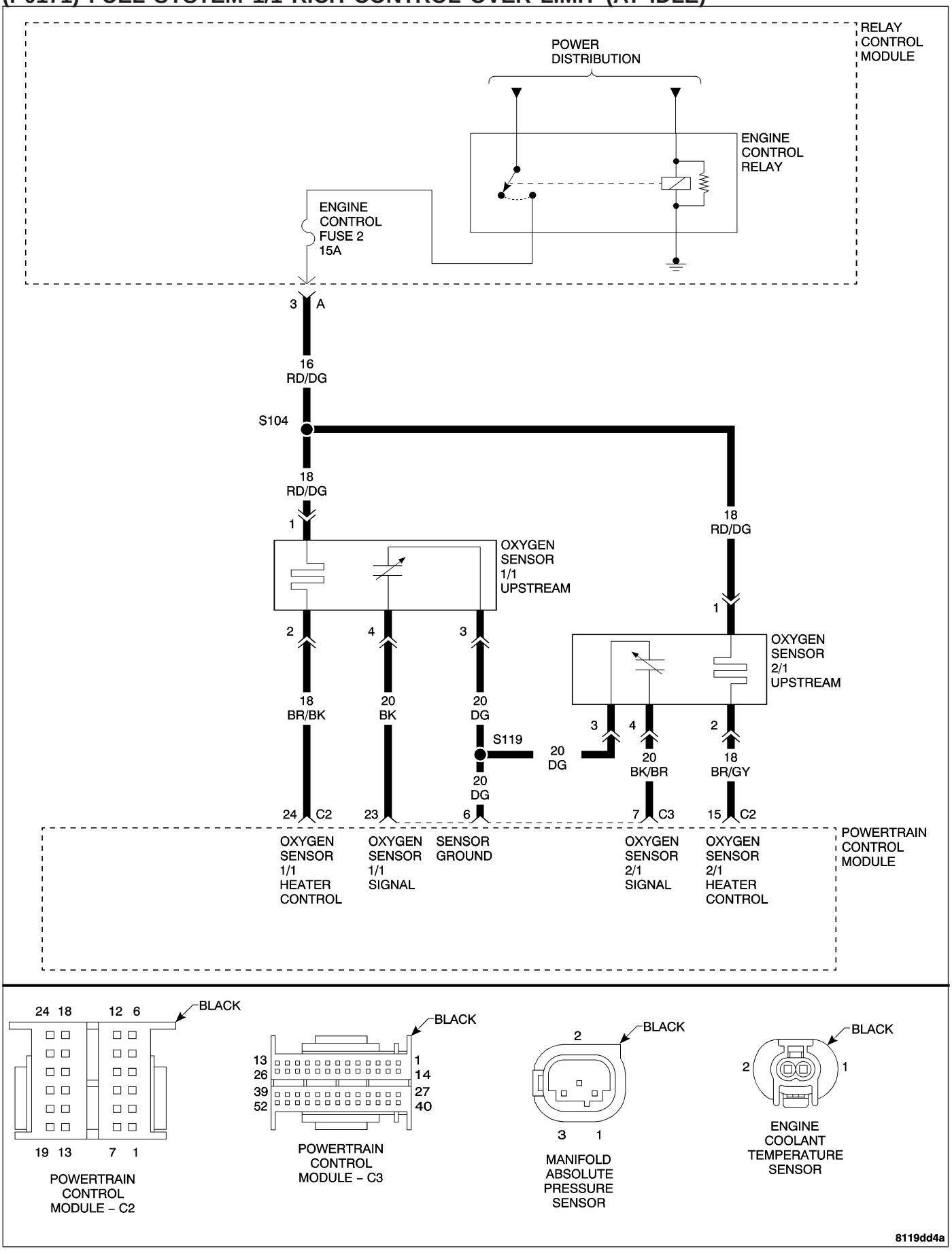

(P0171) FUEL SYSTEM 1/1 RICH CONTROL OVER LIMIT (AT IDLE) — CONTINUED

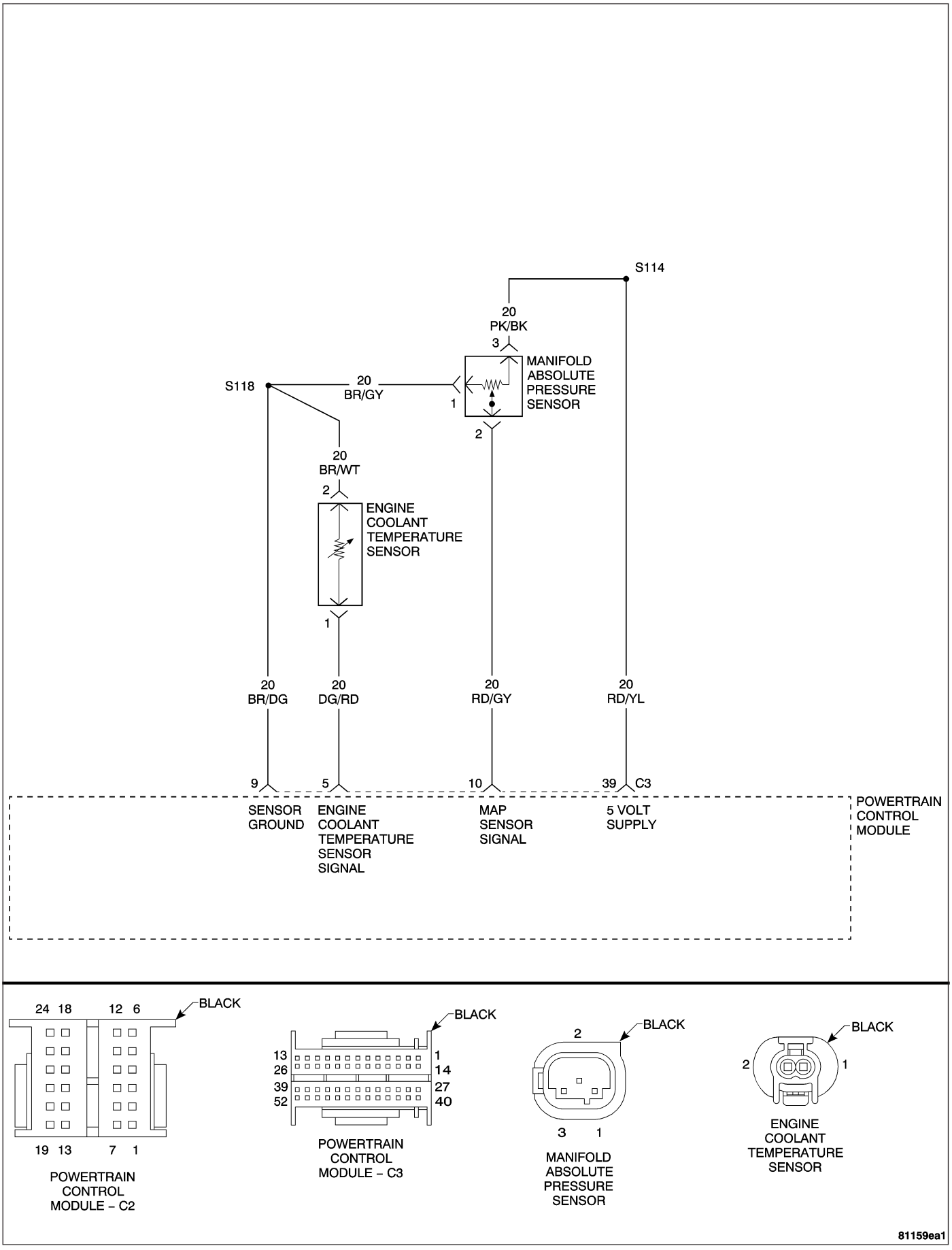

(P0171) FUEL SYSTEM 1/1 RICH CONTROL OVER LIMIT (AT IDLE) — CONTINUED

When Monitored and Set Condition

- When Monitored: With the engine running in closed loop mode, the ambient/battery temperature above -7°C (20°F), altitude below 2590m (8500 ft). and fuel level greater than 15%.
- Set Condition: If the PCM multiplies short term compensation by long term adaptive and a certain percentage is exceeded for two trips, the MIL illuminates and a trouble code is stored.

POSSIBLE CAUSES
EVAP PURGE SOLENOID OPERATION
O2 SIGNAL CIRCUIT
RESTRICTED FUEL SUPPLY LINE
FUEL STRAINER PLUGGED
O2 SENSOR GROUND CIRCUIT
MANIFOLD ABSOLUTE PRESSURE SENSOR OPERATION
ENGINE COOLANT TEMPERATURE SENSOR OPERATION
O2 SENSOR
ENGINE MECHANICAL PROBLEM
FUEL FILTER/PRESSURE REGULATOR
POWERTRAIN CONTROL MODULE

Diagnostic Test

1. CHECK FOR CURRENT DTC

Turn the ignition on.
With the DRB III®, read the PCM DTCs.

Is this DTC present?

Yes >> For complete diagnosis of this DTC, refer to (P0171) FUEL SYSTEM 1/1 RICH CONTROL OVER LIMIT (AT LOAD).

No >> Go To 2

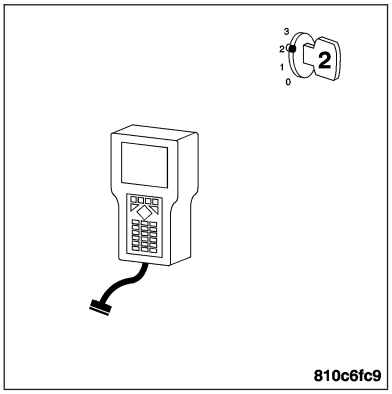

(P0171) FUEL SYSTEM 1/1 RICH CONTROL OVER LIMIT (AT IDLE) — CONTINUED

2. INTERMITTENT WIRING AND CONNECTORS

The conditions necessary to set this DTC are not present at this time.

Note: Check connectors — Clean/repair as necessary. Poor pin to terminal connections can set DTCs.Using the wiring diagram/schematic as a guide, inspect the wiring and connectors specific to this DTC. Wiggle the wires while checking for shorts and open circuits.

Note: Check for any Technical Service Bulletins that may apply.

Were there any problems found?

Yes >> Repair as necessary.
Perform POWERTRAIN VERIFICATION TEST - VER 2.

No >> The condition that caused this DTC to set is currently not present. Inspect the related wiring harness for a possible intermittent condition.

(P0171) FUEL SYSTEM 1/1 RICH CONTROL OVER LIMIT (AT LOAD)

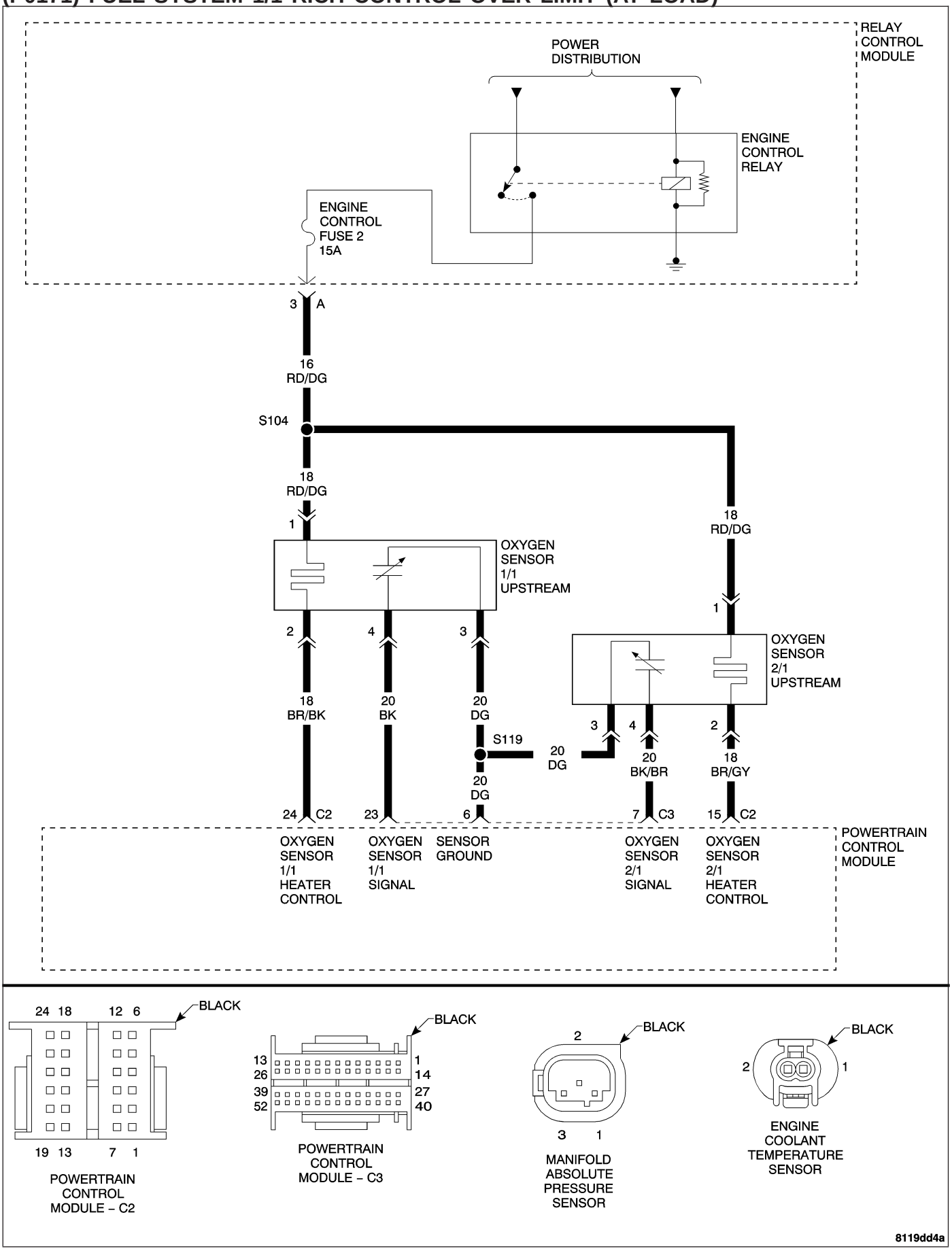

(P0171) FUEL SYSTEM 1/1 RICH CONTROL OVER LIMIT (AT LOAD) — CONTINUED

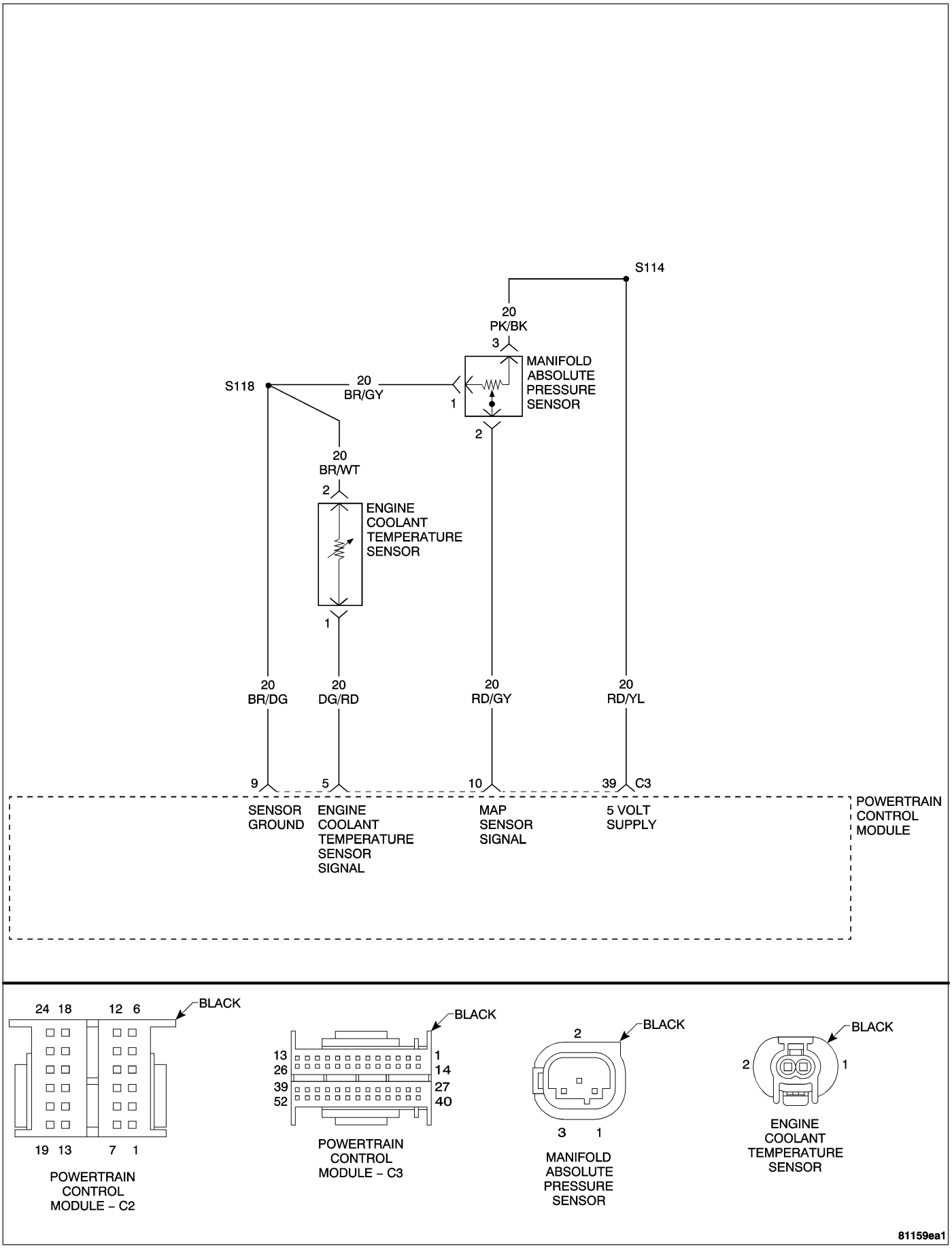

(P0171) FUEL SYSTEM 1/1 RICH CONTROL OVER LIMIT (AT LOAD) — CONTINUED

When Monitored and Set Condition

- When Monitored: With the engine running in closed loop mode, the ambient/battery temperature above -7°C (20°F), altitude below 2590m (8500 ft). and fuel level greater than 15%.
- Set Condition: If the PCM multiplies short term compensation by long term adaptive and a certain percentage is exceeded for two trips, the MIL illuminates and a trouble code is stored.

POSSIBLE CAUSES
EVAP PURGE SOLENOID OPERATION
O2 SIGNAL CIRCUIT
RESTRICTED FUEL SUPPLY LINE
FUEL STRAINER PLUGGED
O2 SENSOR GROUND CIRCUIT
MANIFOLD ABSOLUTE PRESSURE SENSOR OPERATION
ENGINE COOLANT TEMPERATURE SENSOR OPERATION
O2 SENSOR
ENGINE MECHANICAL PROBLEM
FUEL FILTER/PRESSURE REGULATOR
POWERTRAIN CONTROL MODULE

For a complete Powertrain Control Module Circuit Diagram **Refer to Page 9-574**.

Diagnostic Test

1. CHECK FOR CURRENT DTC

Note: Check for contaminates that may have damaged the O2 Sensor: contaminated fuel, unapproved silicone, oil and coolant.

Note: If the PCM detects and stores a DTC, the PCM also stores the engine/vehicle operating conditions under which the DTC was set. Some of these conditions are displayed on the DRB III® at the same time the DTC is displayed.

Note: Before erasing stored DTCs, record these conditions. Attempting to duplicate these conditions may assist when checking for a DTC.

Turn the ignition on.

With the DRB III®, erase PCM DTCs.

Note: It maybe necessary to road test the vehicle for this DTC to set.

With the DRB III®, read the PCM DTCs.

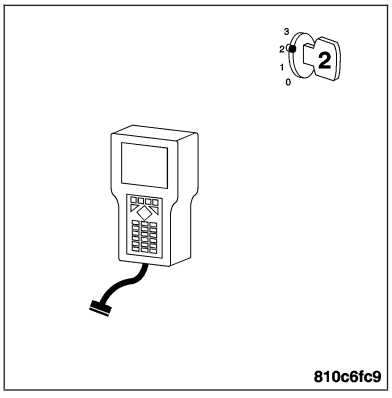

Did this DTC set again?

Yes >> Go To 2

No >> Go To 11

(P0171) FUEL SYSTEM 1/1 RICH CONTROL OVER LIMIT (AT LOAD) — CONTINUED

2. CHECKING FUEL PRESSURE

WARNING: THE FUEL SYSTEM IS UNDER A CONSTANT PRESSURE (EVEN WITH THE ENGINE OFF). BEFORE TESTING OR SERVICING ANY FUEL SYSTEM HOSE, FITTING OR LINE, THE FUEL SYSTEM PRESSURE MUST BE RELEASED.

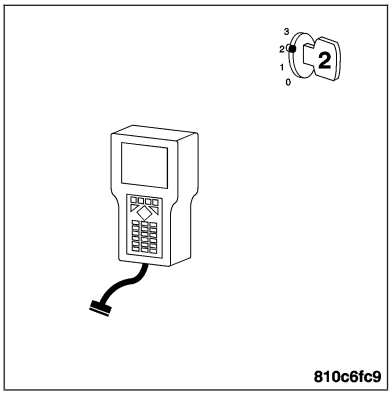

Turn the ignition off.

Install a fuel pressure gauge.

Turn the ignition on.

With the DRB III®, actuate the Fuel Pump Relay and observe the fuel pressure gauge.

Note: Fuel pressure specification is 3.7 to 4.2 bar (54 to 61 psi).

Turn the ignition off.

CAUTION: Stop All Actuations.

Choose a conclusion that best matches your fuel pressure reading.

Within Specification

Go To 3

Above Specification

Replace the fuel filter/pressure regulator. **Refer to Page 14-10**.

Perform POWERTRAIN VERIFICATION TEST - VER 2.

3. O2 SENSOR OPERATION

Start the engine.

Allow the engine to reach normal operating temperature.

With the DRB III®, read the O2 Sensor voltage.

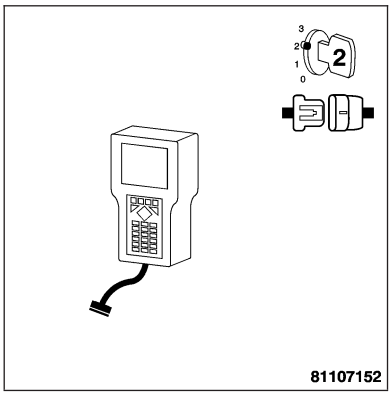

Is the voltage switching between 0.4 and 0.6 volt?

Yes >> Go To 4

No >> Go To 8

(P0171) FUEL SYSTEM 1/1 RICH CONTROL OVER LIMIT (AT LOAD) — CONTINUED

4. EVAP PURGE SOLENOID OPERATION

Turn the ignition off.

Disconnect the hoses at the Evap Purge Solenoid.

Note: Check connectors — Clean/repair as necessary.
Using a hand vacuum pump, apply 10 inches of vacuum to the Evap Purge Solenoid vacuum source port on the component side.

Did the Evap Purge Solenoid hold vacuum?

Yes >> Go To 5

No >> Replace the Evap Purge Solenoid. **Refer to Page 25-17**.
Perform POWERTRAIN VERIFICATION TEST - VER 2.

5. MAP SENSOR OPERATION

With the ignition off.

Connect a Vacuum Gauge to a Manifold Vacuum source.

Start the engine.

Allow the engine to idle.

Note: If engine will not idle, maintain a constant RPM above idle.
With the DRB III® in Sensors, read the MAP Sensor vacuum value.

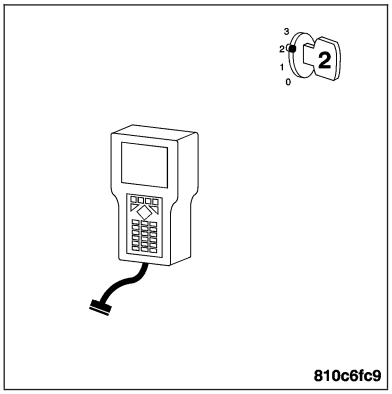

Is the DRB III® reading within 33.9 mbar (1 in. Hg) of the Vacuum Gauge reading?

Yes >> Go To 6

No >> Replace the Manifold Absolute Pressure Sensor. **Refer to Page 14-42**.
Perform POWERTRAIN VERIFICATION TEST - VER 2.

(P0171) FUEL SYSTEM 1/1 RICH CONTROL OVER LIMIT (AT LOAD) — CONTINUED

6. ECT SENSOR OPERATION

Note: For this test to be valid, the thermostat must be operating correctly.

Note: This test works best if performed on a cold engine (cold soak).
Turn the ignition off until the engine is cold.

Turn the ignition on.

With the DRB III®, read the Engine Coolant Temperature Sensor value. If the engine was allowed to sit overnight (cold soak), the temperature value should be a sensible value that is somewhere close to the ambient temperature.

Note: If engine coolant temperature is above 82°C (180°F), allow the engine to cool until 65°C (150°F) is reached.
Start the Engine.

During engine warm-up, monitor the Engine Coolant Temperature value. The temperature value change should be a smooth transition from start up to normal operating temperature 82°C (180°F). The value should reach at least 82°C (180°F).

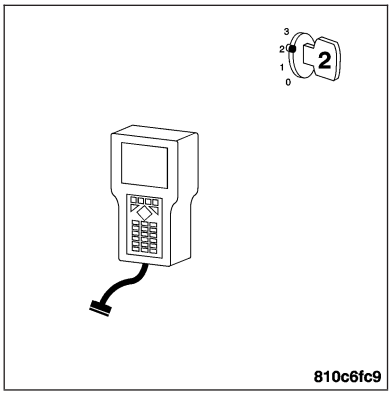

Did the Engine Coolant Temperature value increase with a smooth transition and did it reach at least 82°C (180°F)?

Yes >> Go To 7

No >> Replace the Engine Coolant Temperature Sensor. **Refer to Page 7-29**.
Perform POWERTRAIN VERIFICATION TEST - VER 2.

7. ENGINE MECHANICAL PROBLEM

Turn the ignition off.

Check for any of the following conditions/mechanical problems.

AIR INDUCTION SYSTEM - must be free from restrictions.

ENGINE VACUUM - must be at least 13 inches in neutral.

ENGINE VALVE TIMING - must be within specifications.

ENGINE COMPRESSION - must be within specifications.

ENGINE EXHAUST SYSTEM - must be free of any restrictions or leaks.

TORQUE CONVERTER STALL SPEED - must be within specifications.

POWER BRAKE BOOSTER - must not have any internal vacuum leaks.

FUEL - must be free of contamination.

FUEL INJECTOR - must not be plugged or restricted; harness connectors must be connected to the correct injectors.

Are there any engine mechanical problems?

Yes >> Repair as necessary.
Perform POWERTRAIN VERIFICATION TEST - VER 2.

No >> Go To 11

(P0171) FUEL SYSTEM 1/1 RICH CONTROL OVER LIMIT (AT LOAD) — CONTINUED

8. O2 SENSOR

Turn the ignition off.

Disconnect the O2 Sensor harness connector.

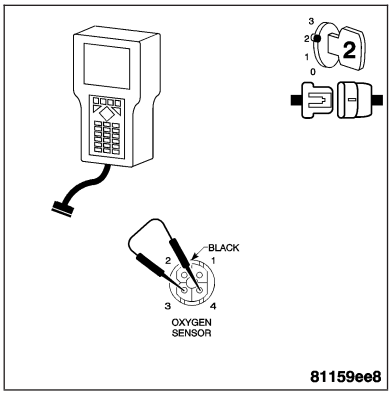

Note: Check connectors — Clean/repair as necessary.

Turn the ignition on.

With the DRB III®, monitor the O2 Sensor voltage.

The O2 Sensor voltage should read 0.47 volts on the DRB III® with the connector disconnected.

Using a jumper wire, jump from the O2 Sensor Signal circuit to the O2 Sensor Ground circuit in the O2 Sensor harness connector.

Note: The voltage should drop from 0.47 volts down to 0.0 volts with the jumper wire connected.

Did the O2 Sensor voltage drop from 0.47 volts to 0.0 volt?

Yes >> Replace the Oxygen Sensor. **Refer to Page 14-45**.
Perform POWERTRAIN VERIFICATION TEST - VER 2.

No >> Go To 9

9. O2 SIGNAL CIRCUIT

With the ignition on.

Measure the voltage of the O2 Sensor Signal circuit at the O2 Sensor harness connector.

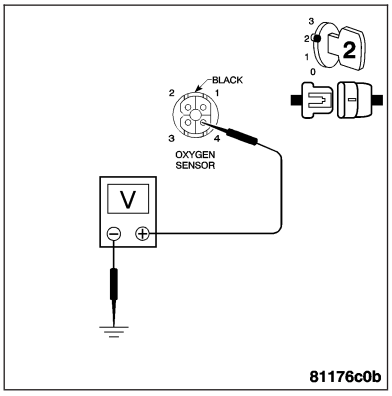

Is the voltage above 0.47 volts?

Yes >> Check the O2 Signal circuit for damage, short to ground, open, or short to voltage. Inspect the O2 Sensor harness connector and the PCM harness connector. If OK, replace the Powertrain Control Module. **Refer to Page 8E-56**.
Perform POWERTRAIN VERIFICATION TEST - VER 2.

No >> Go To 10

(P0171) FUEL SYSTEM 1/1 RICH CONTROL OVER LIMIT (AT LOAD) — CONTINUED

10. O2 SENSOR GROUND CIRCUIT

With the ignition on.

Measure the voltage of the O2 Sensor Ground circuit at the O2 Sensor harness connector.

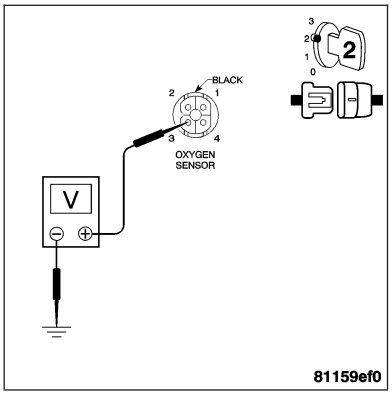

Is the voltage below 0.1 volt?

Yes >> Before continuing, check the PCM harness connector terminals for corrosion, damage, or terminal push out. Repair as necessary. Replace and program the Powertrain Control Module. **Refer to Page 8E-56**.
Perform POWERTRAIN VERIFICATION TEST - VER 2.

No >> Check the O2 Sensor Ground circuit for damage, short to ground, open, or short to voltage. Inspect the O2 Sensor harness connector and the PCM harness connector. If OK, replace and program the Powertrain Control Module. **Refer to Page 8E-56**.
Perform POWERTRAIN VERIFICATION TEST - VER 2.

11. INTERMITTENT WIRING AND CONNECTORS

The condition that caused this DTC to set is currently not present. Inspect the related wiring harness for a possible intermittent condition.

Note: Check connectors — Clean/repair as necessary. Poor pin to terminal connections can set DTCs.Using the wiring diagram/schematic as a guide, inspect the wiring and connectors specific to this DTC. Wiggle the wires while checking for shorts and open circuits.

Note: Check for any Technical Service Bulletins that may apply.

Were there any problems found?

Yes >> Repair as necessary.
Perform POWERTRAIN VERIFICATION TEST - VER 2.

No >> The condition that caused this DTC to set is currently not present. Inspect the related wiring harness for a possible intermittent condition.

(P0172) FUEL SYSTEM 1/1 OVERCORRECTION OF FUEL MIXTURE (AT IDLE)

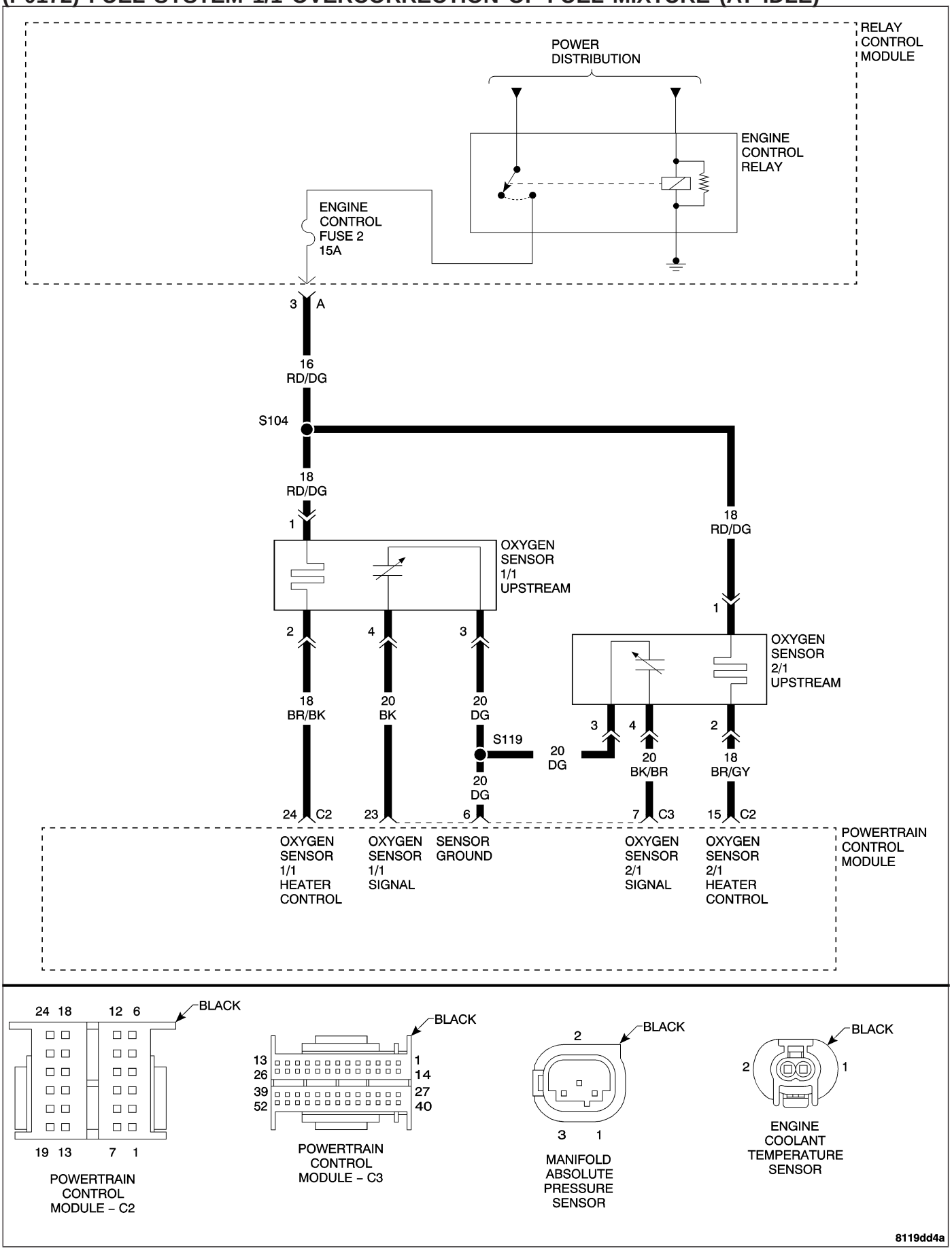

(P0172) FUEL SYSTEM 1/1 OVERCORRECTION OF FUEL MIXTURE (AT IDLE) — CONTINUED

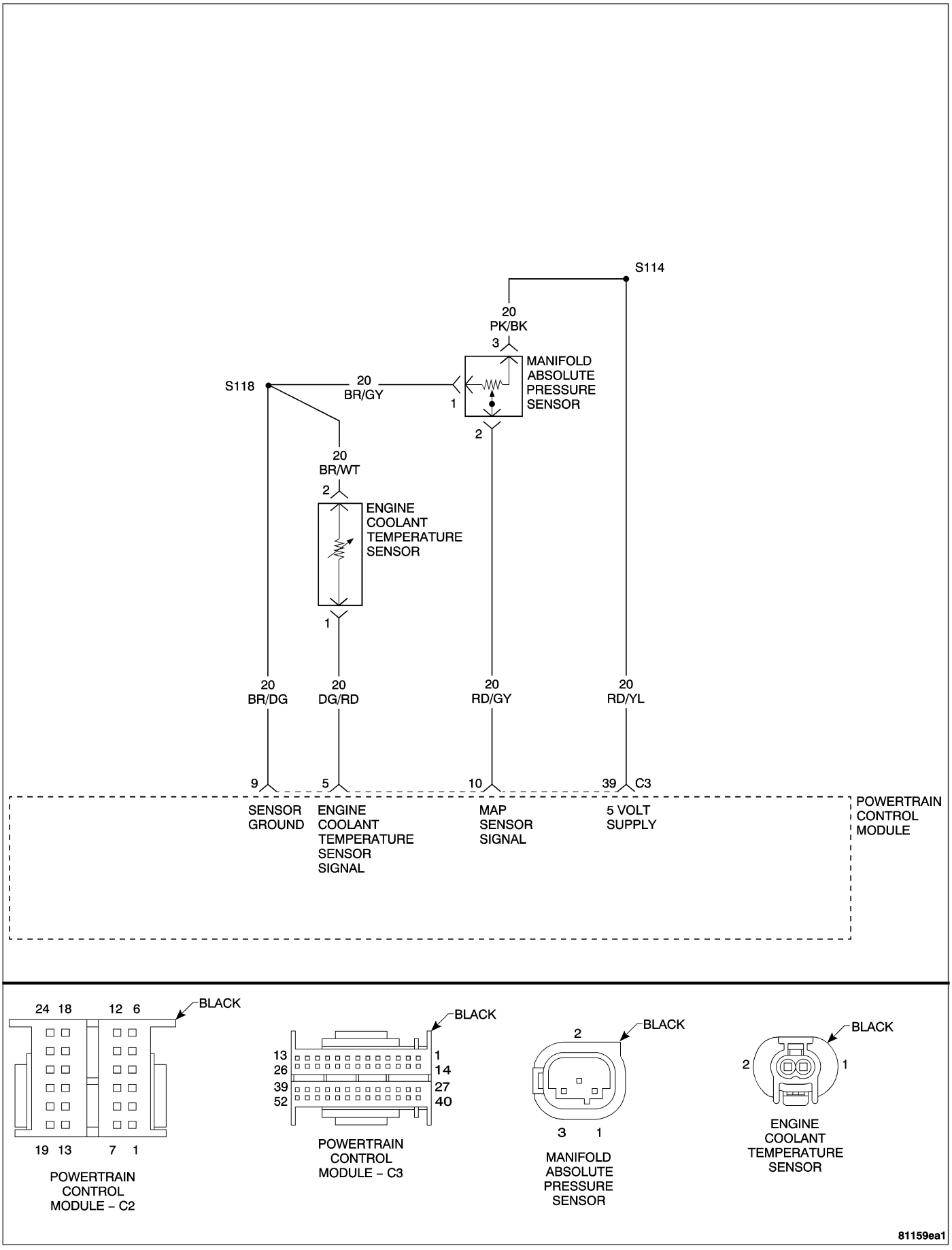

(P0172) FUEL SYSTEM 1/1 OVERCORRECTION OF FUEL MIXTURE (AT IDLE) — CONTINUED

When Monitored and Set Condition

- When Monitored: With the engine running in closed loop mode, the ambient/battery temperature above -7°C (20°F), altitude below 2590m (8500 ft). and fuel level greater than 15%.
- Set Condition: If the PCM multiplies short term compensation by long term adaptive and a certain percentage is exceeded for two trips, the MIL illuminates and a trouble code is stored.

POSSIBLE CAUSES
EVAP PURGE SOLENOID OPERATION
O2 SIGNAL CIRCUIT
RESTRICTED FUEL SUPPLY LINE
FUEL STRAINER PLUGGED
O2 SENSOR GROUND CIRCUIT
MANIFOLD ABSOLUTE PRESSURE SENSOR OPERATION
ENGINE COOLANT TEMPERATURE SENSOR OPERATION
O2 SENSOR
ENGINE MECHANICAL PROBLEM
FUEL FILTER/PRESSURE REGULATOR
POWERTRAIN CONTROL MODULE

Diagnostic Test

1. CHECK FOR CURRENT DTC

Turn the ignition on.
With the DRB III®, read the PCM DTCs.

Is this DTC present?

Yes >> For complete diagnosis of this DTC, refer to (P0171) FUEL SYSTEM 1/1 RICH CONTROL OVER LIMIT (AT LOAD).

No >> Go To 2

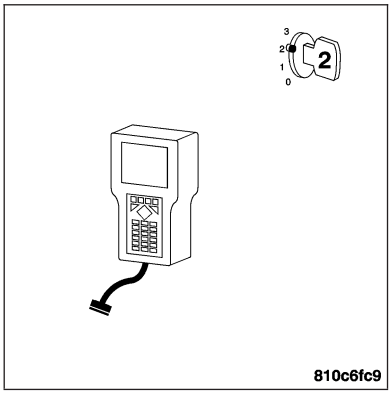

(P0172) FUEL SYSTEM 1/1 OVERCORRECTION OF FUEL MIXTURE (AT IDLE) — CONTINUED

2. INTERMITTENT WIRING AND CONNECTORS

The conditions necessary to set this DTC are not present at this time.

Note: Check connectors — Clean/repair as necessary. Poor pin to terminal connections can set DTCs.Using the wiring diagram/schematic as a guide, inspect the wiring and connectors specific to this DTC. Wiggle the wires while checking for shorts and open circuits.

Note: Check for any Technical Service Bulletins that may apply.

Were there any problems found?

Yes >> Repair as necessary.
Perform POWERTRAIN VERIFICATION TEST - VER 2.

No >> The condition that caused this DTC to set is currently not present. Inspect the related wiring harness for a possible intermittent condition.

(P0172) FUEL SYSTEM 1/1 LEAN CONTROL BELOW LIMIT (AT LOAD)

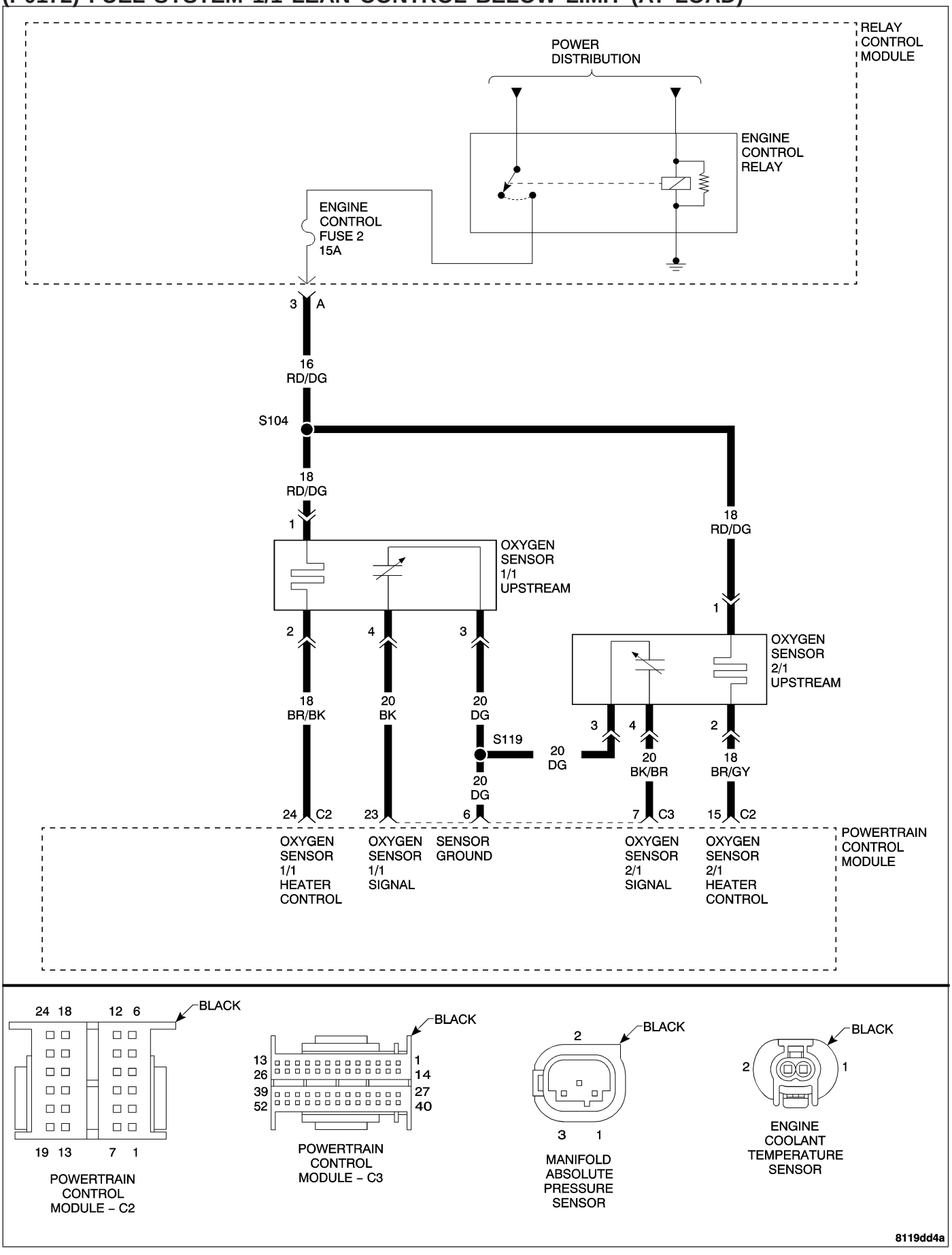

(P0172) FUEL SYSTEM 1/1 LEAN CONTROL BELOW LIMIT (AT LOAD) — CONTINUED

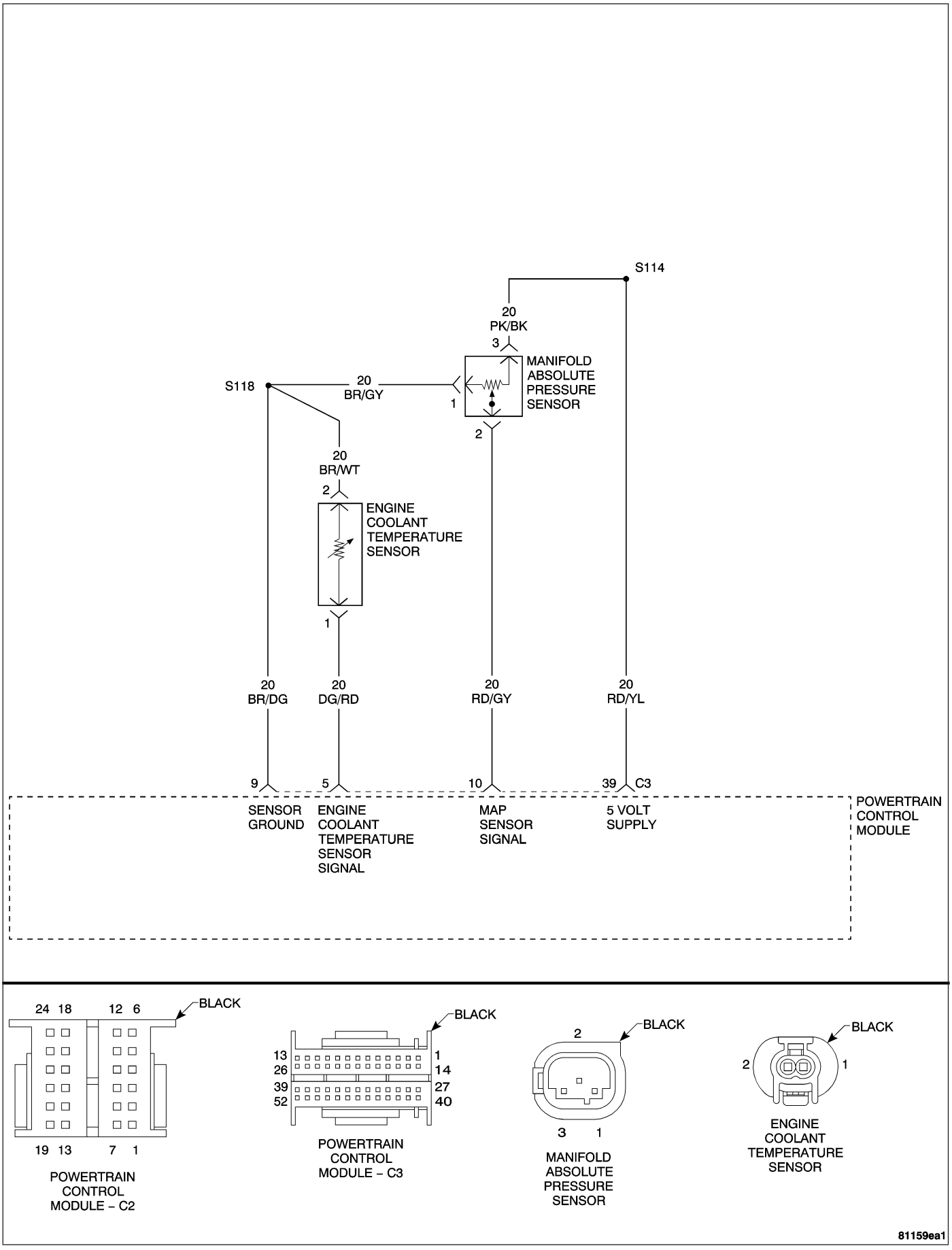

(P0172) FUEL SYSTEM 1/1 LEAN CONTROL BELOW LIMIT (AT LOAD) — CONTINUED

When Monitored and Set Condition

- When Monitored: With the engine running in closed loop mode, the ambient/battery temperature above -7°C (20°F), altitude below 2590m (8500 ft). and fuel level greater than 15%.
- Set Condition: If the PCM multiplies short term compensation by long term adaptive and a certain percentage is exceeded for two trips, the MIL illuminates and a trouble code is stored.

POSSIBLE CAUSES
RESTRICTED FUEL SUPPLY LINE
FUEL STRAINER PLUGGED
O2 SENSOR SIGNAL CIRCUIT
O2 SENSOR GROUND CIRCUIT
O2 SENSOR HEATER OPERATION
MANIFOLD ABSOLUTE PRESSURE SENSOR OPERATION
ENGINE COOLANT TEMPERATURE SENSOR OPERATION
ENGINE MECHANICAL PROBLEM
O2 SENSOR
FUEL PUMP
FUEL CONTAMINATION/EXHAUST LEAK

For a complete Powertrain Control Module Circuit Diagram **Refer to Page 9-574**.

Diagnostic Test

1. CHECK FOR CURRENT DTC

Note: Check for contaminates that may have damaged the O2 Sensor: contaminated fuel, unapproved silicone, oil and coolant.

Note: Diagnose any Misfire, Throttle Body, or Accelerator Pedal Position Sensor DTC(s) first, if set along with the fuel system DTC.

Note: If the PCM detects and stores a DTC, the PCM also stores the engine/vehicle operating conditions under which the DTC was set. Some of these conditions are displayed on the DRB III® at the same time the DTC is displayed.

Note: Before erasing stored DTCs, record these conditions. Attempting to duplicate these conditions may assist when checking for a DTC.

Turn the ignition on.

With the DRB III®, erase PCM DTCs.

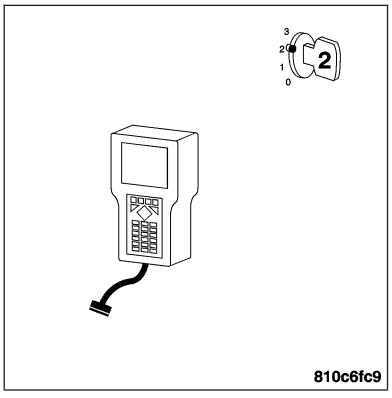

Note: It maybe necessary to road test the vehicle for this DTC to set.

Did this DTC set again?

Yes >> Go To 2

No >> Go To 12

(P0172) FUEL SYSTEM 1/1 LEAN CONTROL BELOW LIMIT (AT LOAD) — CONTINUED

2. CHECKING FUEL PRESSURE

WARNING: THE FUEL SYSTEM IS UNDER A CONSTANT PRESSURE (EVEN WITH THE ENGINE OFF). BEFORE TESTING OR SERVICING ANY FUEL SYSTEM HOSE, FITTING OR LINE, THE FUEL SYSTEM PRESSURE MUST BE RELEASED.

Turn the ignition off.

Install a fuel pressure gauge.

Turn the ignition on.

With the DRB III®, actuate the Fuel Pump Relay and observe the fuel pressure gauge.

Note: Fuel pressure specification is 3.7 to 4.2 bar (54 to 61 psi).

Turn the ignition off.

CAUTION: Stop All Actuations.

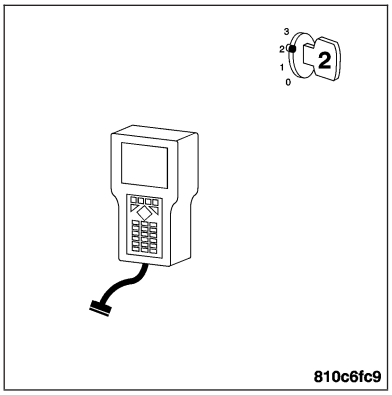

Choose a conclusion that best matches your fuel pressure reading.

Within Specification
Go To 3

Below Specification
Go To 11

3. O2 SENSOR OPERATION

Start the engine.

Allow the engine to reach normal operating temperature.

With the DRB III®, read the O2 Sensor voltage.

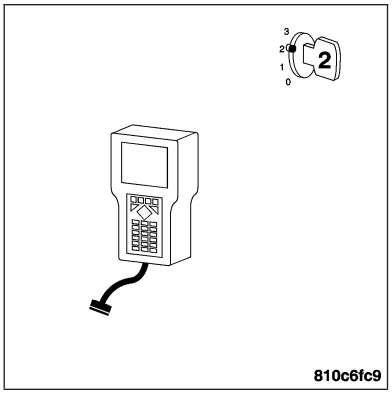

Is the voltage switching between 0.4 and 0.6 volt?

Yes >> Go To 4

No >> Go To 8

4. O2 SENSOR HEATER OPERATION

Turn the ignition off.

Note: Allow the O2 Sensor to cool down before continuing the test. Raising the hood may help in reducing under hood temperatures.

Turn the ignition on.

With the DRB III®, actuate the O2 Heater Test.

With the DRB III®, monitor O2 Sensor voltage for at least 2 minutes.

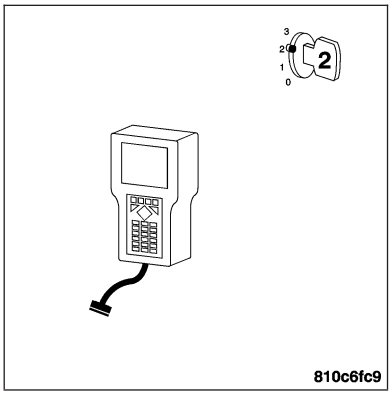

Does the voltage stay above 0.47 volt?

Yes >> Replace the Oxygen Sensor in accordance with the Service Information. **Refer to Page 14-45**.
Perform POWERTRAIN VERIFICATION TEST - VER 2.

No >> Go To 5

(P0172) FUEL SYSTEM 1/1 LEAN CONTROL BELOW LIMIT (AT LOAD) — CONTINUED

5. MAP SENSOR OPERATION

Connect a Vacuum Gauge to a Manifold Vacuum source.

Start the engine.

Allow the engine to idle.

Note: If engine will not idle, maintain a constant RPM above idle.
With the DRB III® in Sensors, read the MAP Sensor vacuum value.

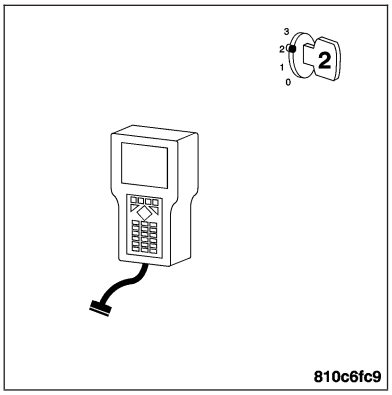

Is the DRB III® reading within 33.9 mbar (1 in. Hg) of the Vacuum Gauge reading?

Yes >> Go To 6

No >> Replace the Manifold Absolute Pressure Sensor in accordance with the Service Information. **Refer to Page 14-42**.
Perform POWERTRAIN VERIFICATION TEST - VER 2.

6. ECT SENSOR OPERATION

Note: For this test to be valid, the thermostat must be operating correctly.

Note: This test works best if performed on a cold engine (cold soak)
Turn the ignition on.

With the DRB III®, read the Engine Coolant Temperature (ECT) Sensor value. If the engine was allowed to sit overnight (cold soak), the temperature value should be a sensible value that is somewhere close to the ambient temperature.

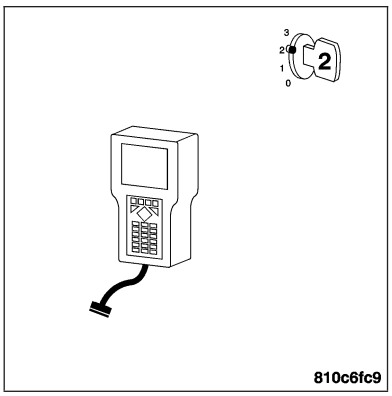

Note: If engine coolant temperature is above 82°C (180°F), allow the engine to cool until 65°C (150°F) is reached.
Start the Engine.

During engine warm-up, monitor the ECT Sensor value. The temperature value change should be a smooth transition from start up to normal operating temperature 82°C (180°F). The value should reach at least 82°C (180°F).

Did the Engine Coolant Temperature value increase with a smooth transition and did it reach at least 82°C (180°F)?

Yes >> Go To 7

No >> Replace the Engine Coolant Temperature Sensor in accordance with the Service Information. **Refer to Page 7-29**.
Perform POWERTRAIN VERIFICATION TEST - VER 2.

(P0172) FUEL SYSTEM 1/1 LEAN CONTROL BELOW LIMIT (AT LOAD) — CONTINUED

7. ENGINE MECHANICAL PROBLEM

Check for any of the following conditions/mechanical problems.
AIR INDUCTION SYSTEM - must be free from leaks.
ENGINE VACUUM - must be at least 13 inches in neutral
ENGINE VALVE TIMING - must be within specifications
ENGINE COMPRESSION - must be within specifications
ENGINE EXHAUST SYSTEM - must be free of any restrictions or leaks.
ENGINE CRANKCASE VENT SYSTEM - must flow freely
TORQUE CONVERTER STALL SPEED - must be within specifications
POWER BRAKE BOOSTER - must not have any internal vacuum leaks.
FUEL - must be free of contamination
FUEL INJECTOR - must not be plugged or restricted; harness connectors must be connected to the correct injectors.

Are there any engine mechanical problems?

Yes >> Repair as necessary.
Perform POWERTRAIN VERIFICATION TEST - VER 2.

No >> Go To 12

8. O2 SENSOR

Turn the ignition off.
Disconnect the O2 Sensor harness connector.

Note: Check connectors — Clean/repair as necessary.
Turn the ignition on.
With the DRB III®, monitor the O2 Sensor voltage.
The O2 Sensor voltage should read 0.47 volts on the DRB III® with the harness connector disconnected.
Using a jumper wire, jump from the O2 Sensor Signal circuit to the O2 Sensor Ground circuit in the O2 Sensor harness connector.

Note: The voltage should drop from 0.47 volts down to 0.0 volts with the jumper wire connected.

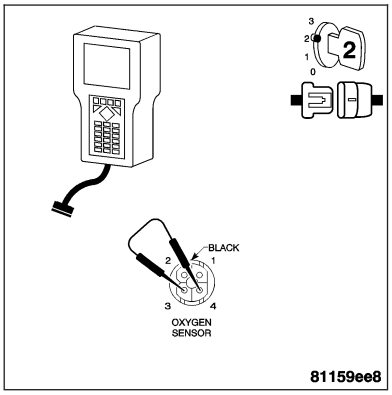

Did the O2 Sensor voltage drop from 0.47 volts to 0.0 volt?

Yes >> Replace the Oxygen Sensor in accordance with the Service Information. **Refer to Page 14-45**.
Perform POWERTRAIN VERIFICATION TEST - VER 2.

No >> Go To 9

(P0172) FUEL SYSTEM 1/1 LEAN CONTROL BELOW LIMIT (AT LOAD) — CONTINUED

9. O2 SENSOR SIGNAL CIRCUIT

With the ignition on.
With the DRB III®, monitor the O2 Sensor voltage.

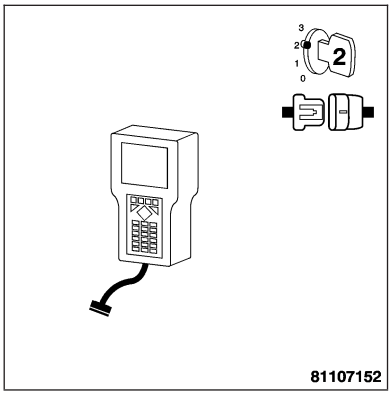

Is the voltage below 0.45 volts?

Yes >> Go To 10

No >> Check the O2 Sensor Signal circuit for a short to ground, open, or short to voltage. Inspect the O2 Sensor harness connector and the PCM harness connector. If OK, replace and program the Powertrain Control Module in accordance with the Service Information. **Refer to Page 8E-56**.
Perform POWERTRAIN VERIFICATION TEST - VER 2.

10. O2 SENSOR GROUND CIRCUIT

With the ignition on.
Measure the voltage on the O2 Sensor Ground circuit in the O2 Sensor harness connector.

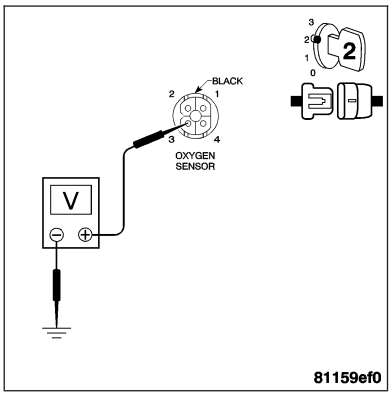

Is the voltage below 0.1 volt?

Yes >> Check the fuel system for contaminates. Also, check the exhaust system for any leaks. **Refer to Page 11-3**.
Perform POWERTRAIN VERIFICATION TEST - VER 2.

No >> Check the O2 Sensor Ground circuit for a short to ground, open, or short to voltage. Inspect the O2 Sensor harness connector and the PCM harness connector. If OK, replace and program the Powertrain Control Module in accordance with the Service Information. **Refer to Page 8E-56**.
Perform POWERTRAIN VERIFICATION TEST - VER 2.

11. FUEL STRAINER

WARNING: THE FUEL SYSTEM IS UNDER A CONSTANT PRESSURE (EVEN WITH THE ENGINE OFF). BEFORE TESTING OR SERVICING ANY FUEL SYSTEM HOSE, FITTING OR LINE, THE FUEL SYSTEM PRESSURE MUST BE RELEASED
With the ignition off.
Remove and inspect the Fuel Strainer.

Is the Fuel Strainer plugged?

Yes >> Replace the Fuel Strainer in accordance with the Service Information. **Refer to Page 14-10**.
Perform POWERTRAIN VERIFICATION TEST - VER 2.

No >> Replace the Fuel Pump in accordance with the Service Information. **Refer to Page 14-17**.
Perform POWERTRAIN VERIFICATION TEST - VER 2.

(P0172) FUEL SYSTEM 1/1 LEAN CONTROL BELOW LIMIT (AT LOAD) — CONTINUED

12. INTERMITTENT WIRING AND CONNECTORS

The conditions necessary to set this DTC are not present at this time.

Note: Check connectors — Clean/repair as necessary. Poor pin to terminal connections can set DTCs.Using the wiring diagram/schematic as a guide, inspect the wiring and connectors specific to this DTC. Wiggle the wires while checking for shorts and open circuits.

Note: Check for any Technical Service Bulletins that may apply.

Were there any problems found?

Yes >> Repair as necessary.
Perform POWERTRAIN VERIFICATION TEST - VER 2.

No >> The condition that caused this DTC to set is currently not present. Inspect the related wiring harness for a possible intermittent condition.

(P0172) FUEL SYSTEM 1/1 LEAN CONTROL BELOW LIMIT (AT IDLE)

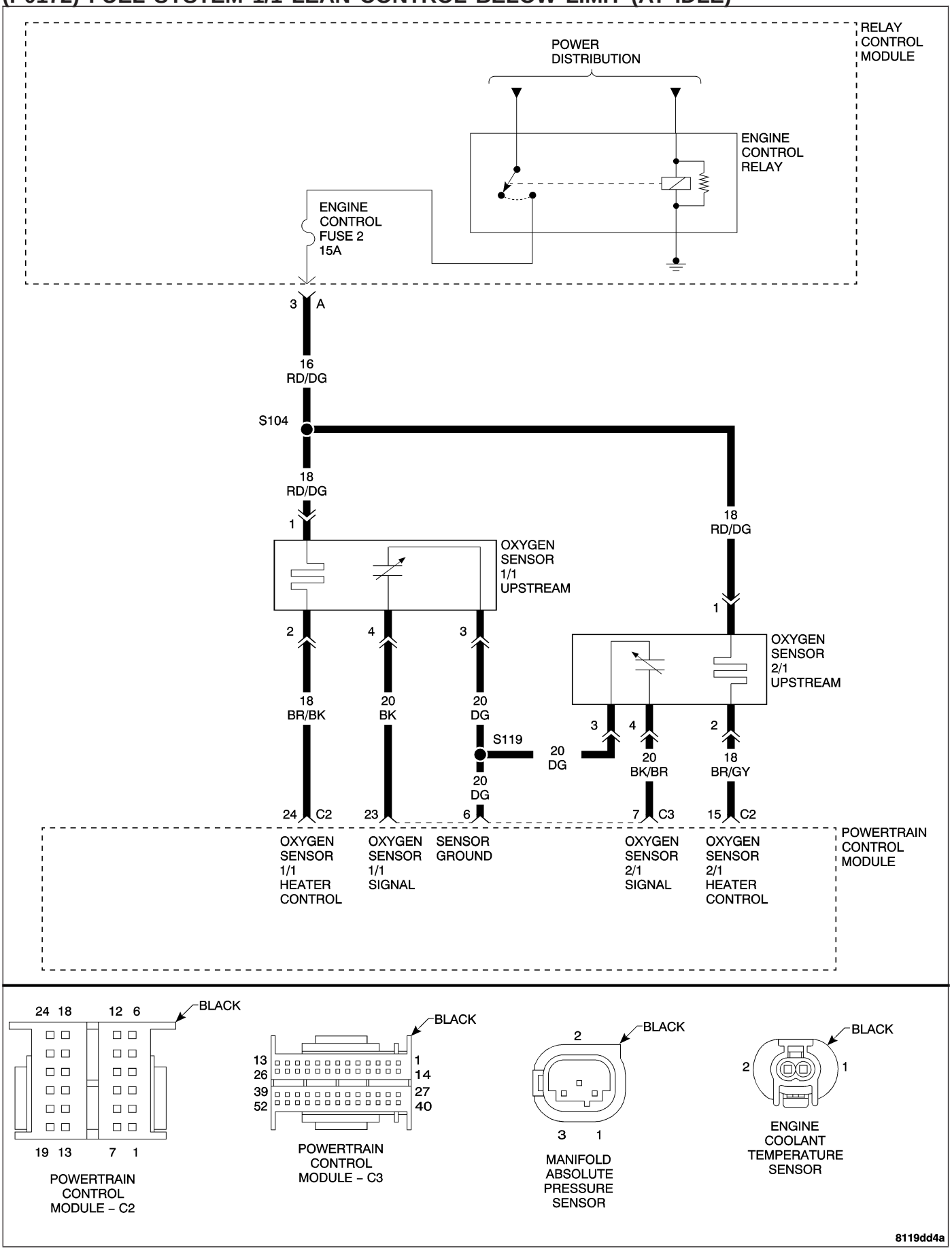

(P0172) FUEL SYSTEM 1/1 LEAN CONTROL BELOW LIMIT (AT IDLE) — CONTINUED

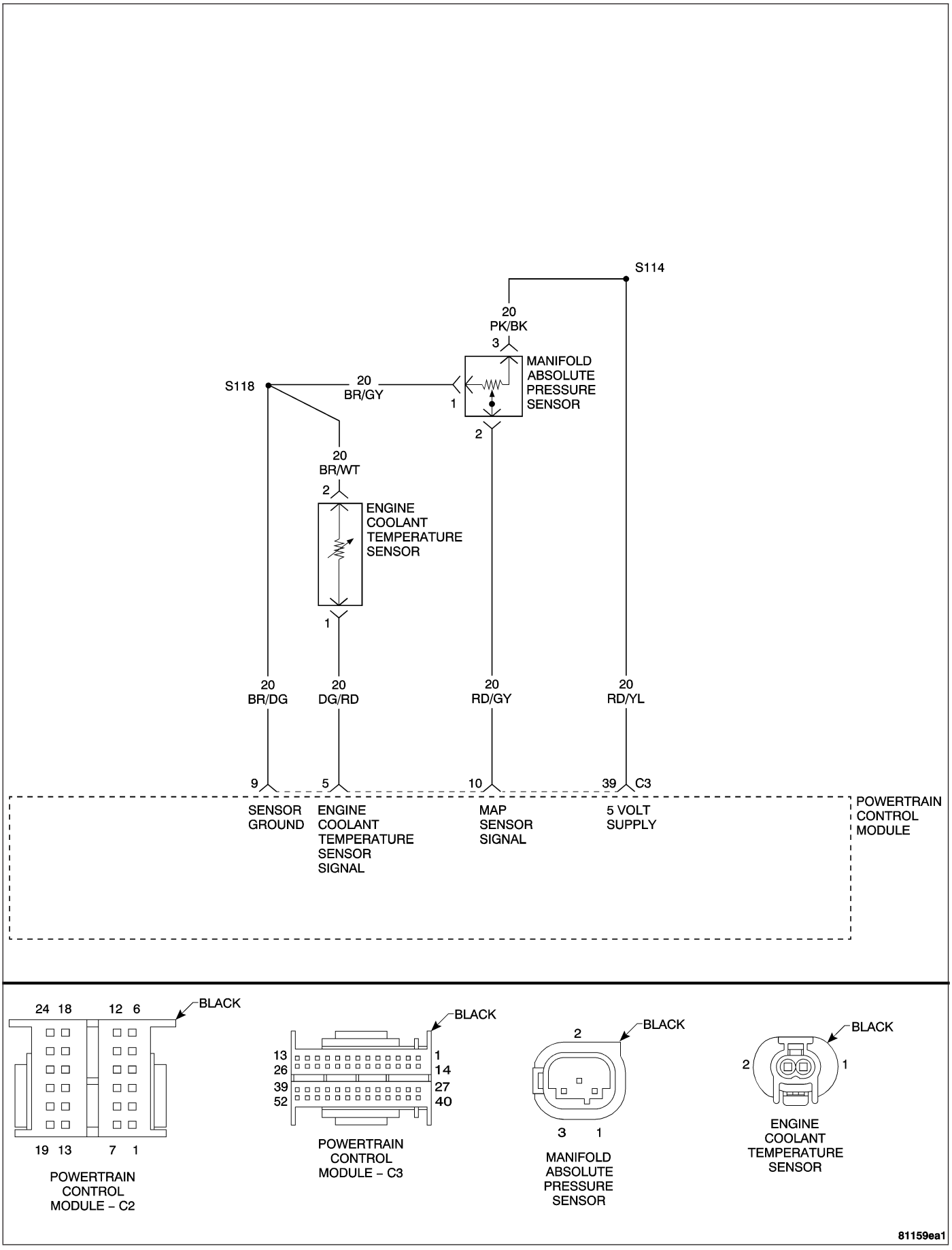

(P0172) FUEL SYSTEM 1/1 LEAN CONTROL BELOW LIMIT (AT IDLE) — CONTINUED

When Monitored and Set Condition

- When Monitored: With the engine running in closed loop mode, the ambient/battery temperature above -7°C (20°F), altitude below 2590m (8500 ft). and fuel level greater than 15%.
- Set Condition: If the PCM multiplies short term compensation by long term adaptive and a certain percentage is exceeded for two trips, the MIL illuminates and a trouble code is stored.

POSSIBLE CAUSES
RESTRICTED FUEL SUPPLY LINE
FUEL STRAINER PLUGGED
O2 SENSOR SIGNAL CIRCUIT
O2 SENSOR GROUND CIRCUIT
O2 SENSOR HEATER OPERATION
MANIFOLD ABSOLUTE PRESSURE SENSOR OPERATION
ENGINE COOLANT TEMPERATURE SENSOR OPERATION
ENGINE MECHANICAL PROBLEM
O2 SENSOR
FUEL PUMP
FUEL CONTAMINATION/EXHAUST LEAK

Diagnostic Test

1. CHECK FOR CURRENT DTC

Turn the ignition on.
With the DRB III®, read the PCM DTCs.

Is this DTC present?

Yes >> For complete diagnosis of this DTC, refer to (P0172) FUEL SYSTEM 1/1 LEAN CONTROL BELOW LIMIT (AT LOAD).

No >> Go To 2

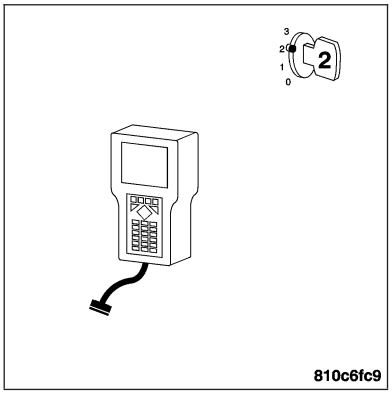

(P0172) FUEL SYSTEM 1/1 LEAN CONTROL BELOW LIMIT (AT IDLE) — CONTINUED

2. INTERMITTENT WIRING AND CONNECTORS

The conditions necessary to set this DTC are not present at this time.

Note: Check connectors — Clean/repair as necessary. Poor pin to terminal connections can set DTCs.Using the wiring diagram/schematic as a guide, inspect the wiring and connectors specific to this DTC. Wiggle the wires while checking for shorts and open circuits.

Note: Check for any Technical Service Bulletins that may apply.

Were there any problems found?

Yes >> Repair as necessary.
Perform POWERTRAIN VERIFICATION TEST - VER 2.

No >> The condition that caused this DTC to set is currently not present. Inspect the related wiring harness for a possible intermittent condition.

(P0173) FUEL SYSTEM 2/1 RICH CONTROL OVER LIMIT (AT LOAD)

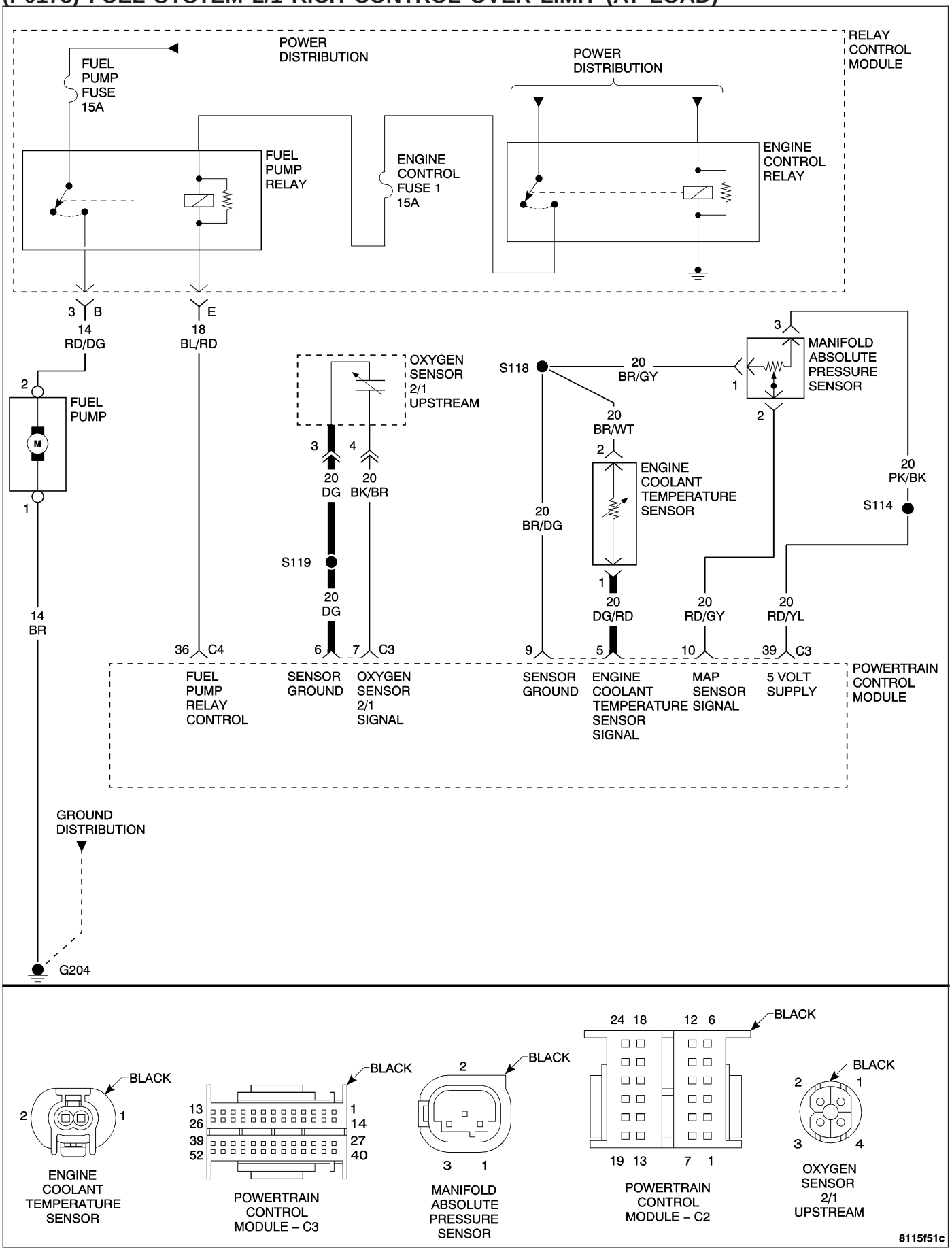

(P0173) FUEL SYSTEM 2/1 RICH CONTROL OVER LIMIT (AT LOAD) — CONTINUED

When Monitored and Set Condition

- When Monitored: With the engine running in closed loop mode, the ambient/battery temperature above -7°C (20°F), altitude below 2590m (8500 ft). and fuel level greater than 15%.
- Set Condition: If the PCM multiplies short term compensation by long term adaptive and a certain percentage is exceeded for two trips, the MIL illuminates and a trouble code is stored.

POSSIBLE CAUSES
RESTRICTED FUEL SUPPLY LINE
FUEL STRAINER PLUGGED
O2 SENSOR SIGNAL CIRCUIT
O2 SENSOR GROUND CIRCUIT
O2 SENSOR HEATER OPERATION
MANIFOLD ABSOLUTE PRESSURE SENSOR OPERATION
ENGINE COOLANT TEMPERATURE SENSOR OPERATION
ENGINE MECHANICAL PROBLEM
FUEL PUMP
O2 SENSOR
FUEL CONTAMINATION/EXHAUST LEAK

For a complete Powertrain Control Module Circuit Diagram **Refer to Page 9-574**.

Diagnostic Test

1. CHECK FOR CURRENT DTC

Note: Check for contaminates that may have damaged the O2 Sensor: contaminated fuel, unapproved silicone, oil and coolant.

Note: Diagnose any Misfire, Throttle Body, or Accelerator Pedal Position Sensor DTC(s) first, if set along with the fuel system DTC.

Note: If the PCM detects and stores a DTC, the PCM also stores the engine/vehicle operating conditions under which the DTC was set. Some of these conditions are displayed on the DRB III® at the same time the DTC is displayed.

Note: Before erasing stored DTCs, record these conditions. Attempting to duplicate these conditions may assist when checking for a DTC.

Turn the ignition on.

With the DRB III®, erase PCM DTCs.

Note: It maybe necessary to road test the vehicle for this DTC to set.

With the DRB III®, read the PCM DTCs.

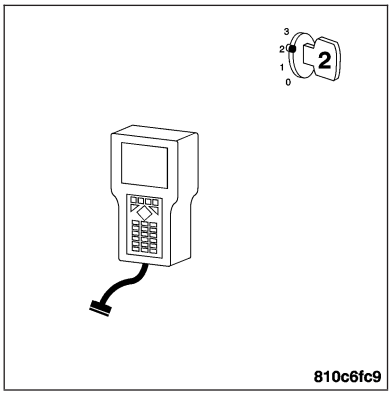

Did this DTC set again?

Yes >> Go To 2

No >> Go To 12

(P0173) FUEL SYSTEM 2/1 RICH CONTROL OVER LIMIT (AT LOAD) — CONTINUED

2. CHECKING FUEL PRESSURE

WARNING: THE FUEL SYSTEM IS UNDER A CONSTANT PRESSURE (EVEN WITH THE ENGINE OFF). BEFORE TESTING OR SERVICING ANY FUEL SYSTEM HOSE, FITTING OR LINE, THE FUEL SYSTEM PRESSURE MUST BE RELEASED.

Turn the ignition off.

Install a fuel pressure gauge.

Turn the ignition on.

With the DRB III®, actuate the Fuel Pump and observe the fuel pressure gauge.

Note: Fuel pressure specification is 3.7 to 4.2 bar (54 to 61 psi).

Turn the ignition off.

CAUTION: Stop All Actuations.

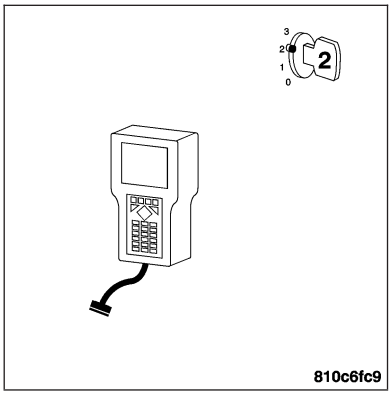

Choose a conclusion that best matches your fuel pressure reading.

Within Specification
Go To 3

Below Specification
Go To 11

3. O2 SENSOR OPERATION

Note: If one of the O2 Sensors Signal or Ground circuits are shorted to ground or voltage, all the other O2 Sensor voltage readings will be affected.

Note: After the repairs have been made, verify proper O2 Sensor operation. If all the O2 Sensor voltage readings have not returned to normal, follow the diagnostic procedure for the remaining O2 Sensors.

Start the engine.

Allow the engine to reach normal operating temperature.

With the DRB III®, read the O2 Sensor voltage.

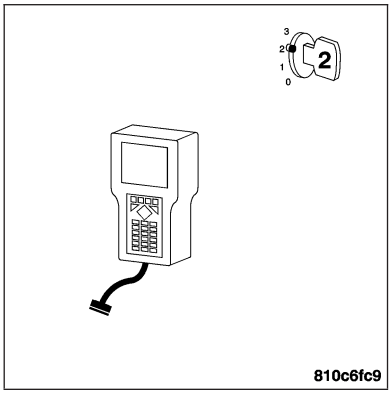

Is the voltage switching between 0.4 and 0.6 volt?

Yes >> Go To 4

No >> Go To 8

(P0173) FUEL SYSTEM 2/1 RICH CONTROL OVER LIMIT (AT LOAD) — CONTINUED

4. O2 SENSOR HEATER OPERATION

Turn the ignition off.

Note: Allow the O2 Sensor to cool down before continuing the test. Raising the hood may help in reducing under hood temperatures.
Turn the ignition on.
With the DRB III®, actuate the O2 Heater Test.
With the DRB III®, monitor O2 Sensor voltage for at least 2 minutes.

Does the voltage stay above 0.6 volt?

Yes >> Replace the Oxygen Sensor. **Refer to Page 14-45**.
Perform POWERTRAIN VERIFICATION TEST - VER 2.

No >> Go To 5

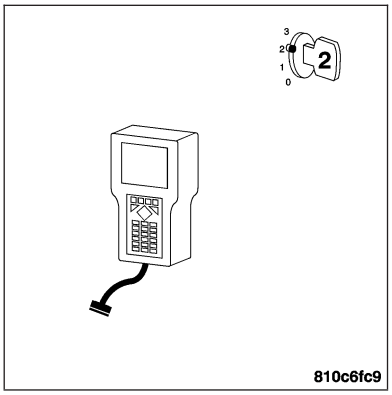

5. MAP SENSOR OPERATION

Turn the ignition off.
Connect a Vacuum Gauge to a Manifold Vacuum source.
Start the engine.
Allow the engine to idle.

Note: If engine will not idle, maintain a constant RPM above idle.
With the DRB III® in Sensors, read the MAP Sensor vacuum value.

Is the DRB III® reading within 1 inch of the Vacuum Gauge reading?

Yes >> Go To 6

No >> Replace the Manifold Absolute Pressure Sensor. **Refer to Page 14-42**.
Perform POWERTRAIN VERIFICATION TEST - VER 2.

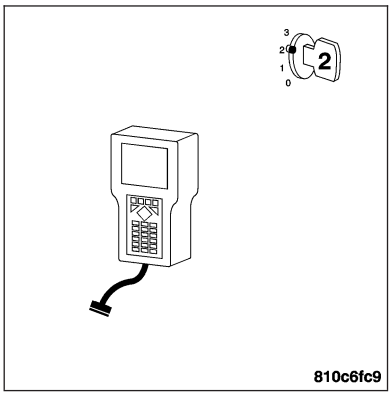

(P0173) FUEL SYSTEM 2/1 RICH CONTROL OVER LIMIT (AT LOAD) — CONTINUED

6. ECT SENSOR OPERATION

Note: For this test to be valid, the thermostat must be operating correctly.

Note: This test works best if performed on a cold engine (cold soak)
Turn the engine off.

Turn the ignition on.

With the DRB III®, read the Engine Coolant Temperature (ECT) Sensor value. If the engine was allowed to sit overnight (cold soak), the temperature value should be a sensible value that is somewhere close to the ambient temperature.

Note: If engine coolant temperature is above 82°C (180°F), allow the engine to cool until 65°C (150°F) is reached.
Start the engine.

During engine warm-up, monitor the ECT Sensor value. The temperature value change should be a smooth transition from start up to normal operating temperature 82°C (180°F). The value should reach at least 82°C (180°F).

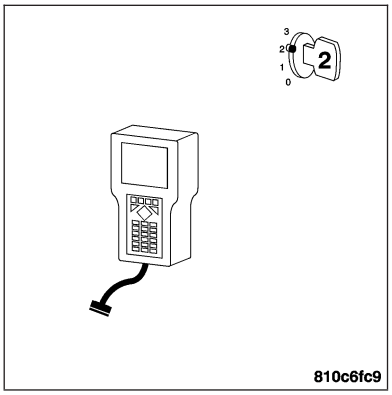

Did the ECT value increase with a smooth transition and did it reach at least 82°C (180°F)?

Yes >> Go To 7

No >> Replace the Engine Coolant Temperature Sensor. **Refer to Page 7-29**.
Perform POWERTRAIN VERIFICATION TEST - VER 2.

7. ENGINE MECHANICAL PROBLEM

Turn the ignition off.

Check for any of the following conditions/mechanical problems.

AIR INDUCTION SYSTEM - must be free from leaks.

ENGINE VACUUM - must be at least 13 inches in neutral

ENGINE VALVE TIMING - must be within specifications

ENGINE COMPRESSION - must be within specifications

ENGINE EXHAUST SYSTEM - must be free of any restrictions or leaks.

ENGINE PCV SYSTEM - must flow freely

TORQUE CONVERTER STALL SPEED - must be within specifications

POWER BRAKE BOOSTER - must not have any internal vacuum leaks

FUEL - must be free of contamination

FUEL INJECTOR - must not have a plugged or restricted injector; or control wire not connected to correct injector

Are there any engine mechanical problems?

Yes >> Repair as necessary.
Perform POWERTRAIN VERIFICATION TEST - VER 2.

No >> Go To 12

(P0173) FUEL SYSTEM 2/1 RICH CONTROL OVER LIMIT (AT LOAD) — CONTINUED

8. O2 SENSOR

Turn the ignition off.

Disconnect the O2 Sensor harness connector.

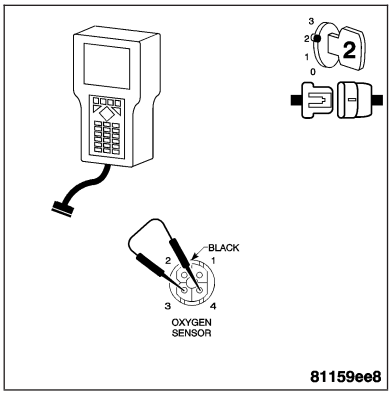

Note: Check connectors — Clean/repair as necessary.

Turn the ignition on.

With the DRB III®, monitor the O2 Sensor voltage.

The O2 Sensor voltage should read 0.47 volts on the DRB III® with the harness connector disconnected.

Using a jumper wire, jump from the O2 Sensor Signal circuit to the O2 Sensor Ground circuit in the O2 Sensor harness connector.

Note: The voltage should drop from 0.47 volts down to 0.0 volts with the jumper wire connected.

Did the O2 Sensor voltage drop from 0.47 volts to 0.0 volt?

Yes >> Replace the Oxygen Sensor. **Refer to Page 14-45**.
Perform POWERTRAIN VERIFICATION TEST - VER 2.

No >> Go To 9

9. O2 SENSOR SIGNAL CIRCUIT

With the ignition on.

With the DRB III®, monitor the O2 Sensor voltage.

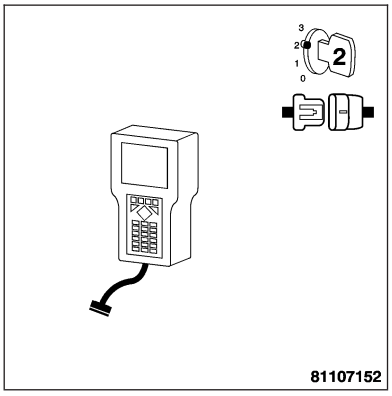

Is the voltage below 0.45 volts?

Yes >> Go To 10

No >> Check the O2 Signal circuit for a short to ground, open, or short to voltage. Inspect the O2 Sensor connector and the PCM harness connector. If OK, replace and program the Powertrain Control Module. **Refer to Page 8E-56**.
Perform POWERTRAIN VERIFICATION TEST - VER 2.

10. O2 SENSOR GROUND CIRCUIT

With the ignition on.

Measure the voltage on the O2 Sensor Ground circuit in the O2 Sensor harness connector.

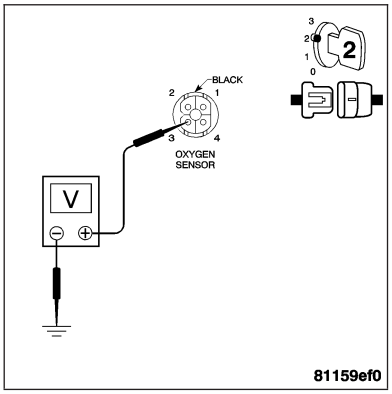

Is the voltage below 0.1 volt?

Yes >> Check the fuel system for contaminates. Also, check the exhaust system for any leaks. **Refer to Page 11-3**.
Perform POWERTRAIN VERIFICATION TEST - VER 2.

No >> Check the O2 Ground circuit for a short to ground, open, or short to voltage. Inspect the O2 Sensor connector and the PCM harness connector. If OK, replace and program the Powertrain Control Module. **Refer to Page 8E-56**.
Perform POWERTRAIN VERIFICATION TEST - VER 2.

(P0173) FUEL SYSTEM 2/1 RICH CONTROL OVER LIMIT (AT LOAD) — CONTINUED

11. FUEL STRAINER

WARNING: THE FUEL SYSTEM IS UNDER A CONSTANT PRESSURE (EVEN WITH THE ENGINE OFF). BEFORE TESTING OR SERVICING ANY FUEL SYSTEM HOSE, FITTING OR LINE, THE FUEL SYSTEM PRESSURE MUST BE RELEASED

With the ignition off.

Remove and inspect the Fuel Strainer.

Is the Fuel Strainer plugged?

Yes >> Replace the Fuel Strainer. **Refer to Page 14-10**.
Perform POWERTRAIN VERIFICATION TEST - VER 2.

No >> Replace the Fuel Pump. **Refer to Page 14-17**.
Perform POWERTRAIN VERIFICATION TEST - VER 2.

12. INTERMITTENT WIRING AND CONNECTORS

The conditions necessary to set this DTC are not present at this time.

Note: Check connectors — Clean/repair as necessary. Poor pin to terminal connections can set DTCs.Using the wiring diagram/schematic as a guide, inspect the wiring and connectors specific to this DTC. Wiggle the wires while checking for shorts and open circuits.

Note: Check for any Technical Service Bulletins that may apply.

Were there any problems found?

Yes >> Repair as necessary.
Perform POWERTRAIN VERIFICATION TEST - VER 2.

No >> The condition that caused this DTC to set is currently not present. Inspect the related wiring harness for a possible intermittent condition.

(P0174) FUEL SYSTEM 2/1 RICH CONTROL OVER LIMIT (AT IDLE)

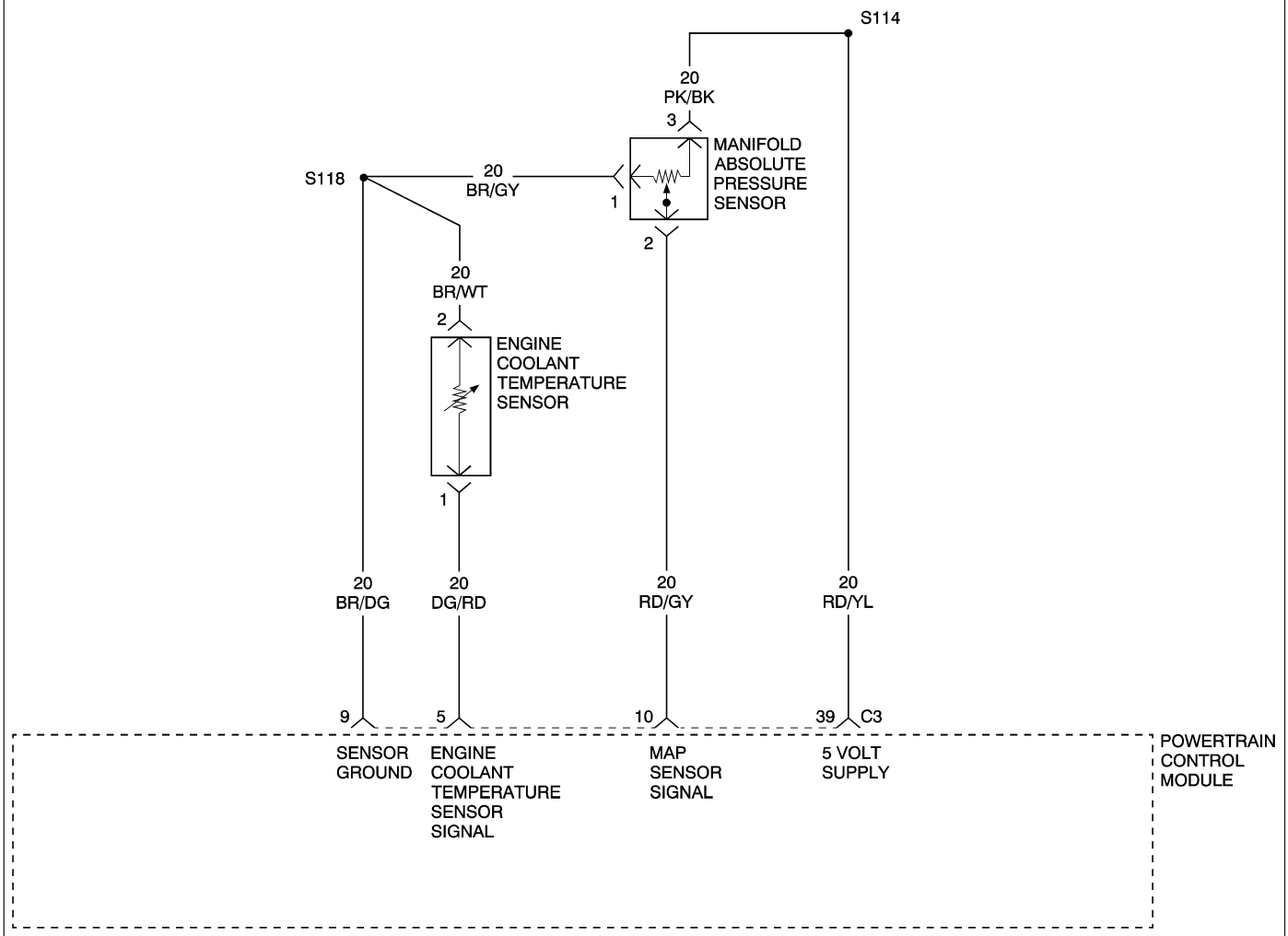

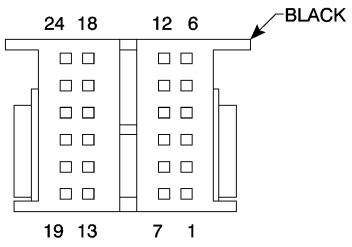

POWERTRAIN
CONTROL
MODULE – C2

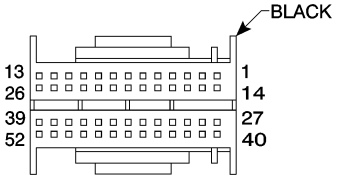

POWERTRAIN
CONTROL
MODULE – C3

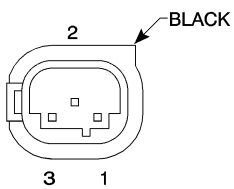

MANIFOLD
ABSOLUTE
PRESSURE
SENSOR

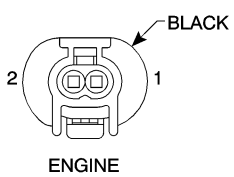

ENGINE
COOLANT
TEMPERATURE
SENSOR

81159ea1

(P0174) FUEL SYSTEM 2/1 RICH CONTROL OVER LIMIT (AT IDLE) — CONTINUED

When Monitored and Set Condition

- When Monitored: With the engine running in closed loop mode, the ambient/battery temperature above -7°C (20°F), altitude below 2590m (8500 ft). and fuel level greater than 15%.
- Set Condition: If the PCM multiplies short term compensation by long term adaptive and a certain percentage is exceeded for two trips, the MIL illuminates and a trouble code is stored.

POSSIBLE CAUSES
EVAP PURGE SOLENOID OPERATION
O2 SIGNAL CIRCUIT
RESTRICTED FUEL SUPPLY LINE
FUEL STRAINER PLUGGED
O2 SENSOR GROUND CIRCUIT
MANIFOLD ABSOLUTE PRESSURE SENSOR OPERATION
ENGINE COOLANT TEMPERATURE SENSOR OPERATION
O2 SENSOR
ENGINE MECHANICAL PROBLEM
FUEL FILTER/PRESSURE REGULATOR
POWERTRAIN CONTROL MODULE

Diagnostic Test

1. CHECK FOR CURRENT DTC

Turn the ignition on.
With the DRB III®, read the PCM DTCs.

Is this DTC present?

Yes >> For complete diagnosis of this DTC, refer to (P0171) FUEL SYSTEM 1/1 RICH CONTROL OVER LIMIT (AT LOAD).

No >> Go To 2

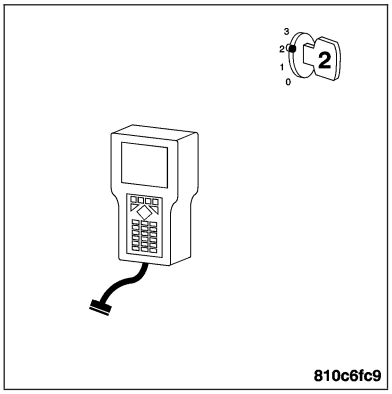

(P0174) FUEL SYSTEM 2/1 RICH CONTROL OVER LIMIT (AT IDLE) — CONTINUED

2. INTERMITTENT WIRING AND CONNECTORS

The conditions necessary to set this DTC are not present at this time.

Note: Check connectors — Clean/repair as necessary. Poor pin to terminal connections can set DTCs.Using the wiring diagram/schematic as a guide, inspect the wiring and connectors specific to this DTC. Wiggle the wires while checking for shorts and open circuits.

Note: Check for any Technical Service Bulletins that may apply.

Were there any problems found?

Yes >> Repair as necessary.
Perform POWERTRAIN VERIFICATION TEST - VER 2.

No >> The condition that caused this DTC to set is currently not present. Inspect the related wiring harness for a possible intermittent condition.

(P0174) FUEL SYSTEM 2/1 RICH CONTROL OVER LIMIT (AT LOAD)

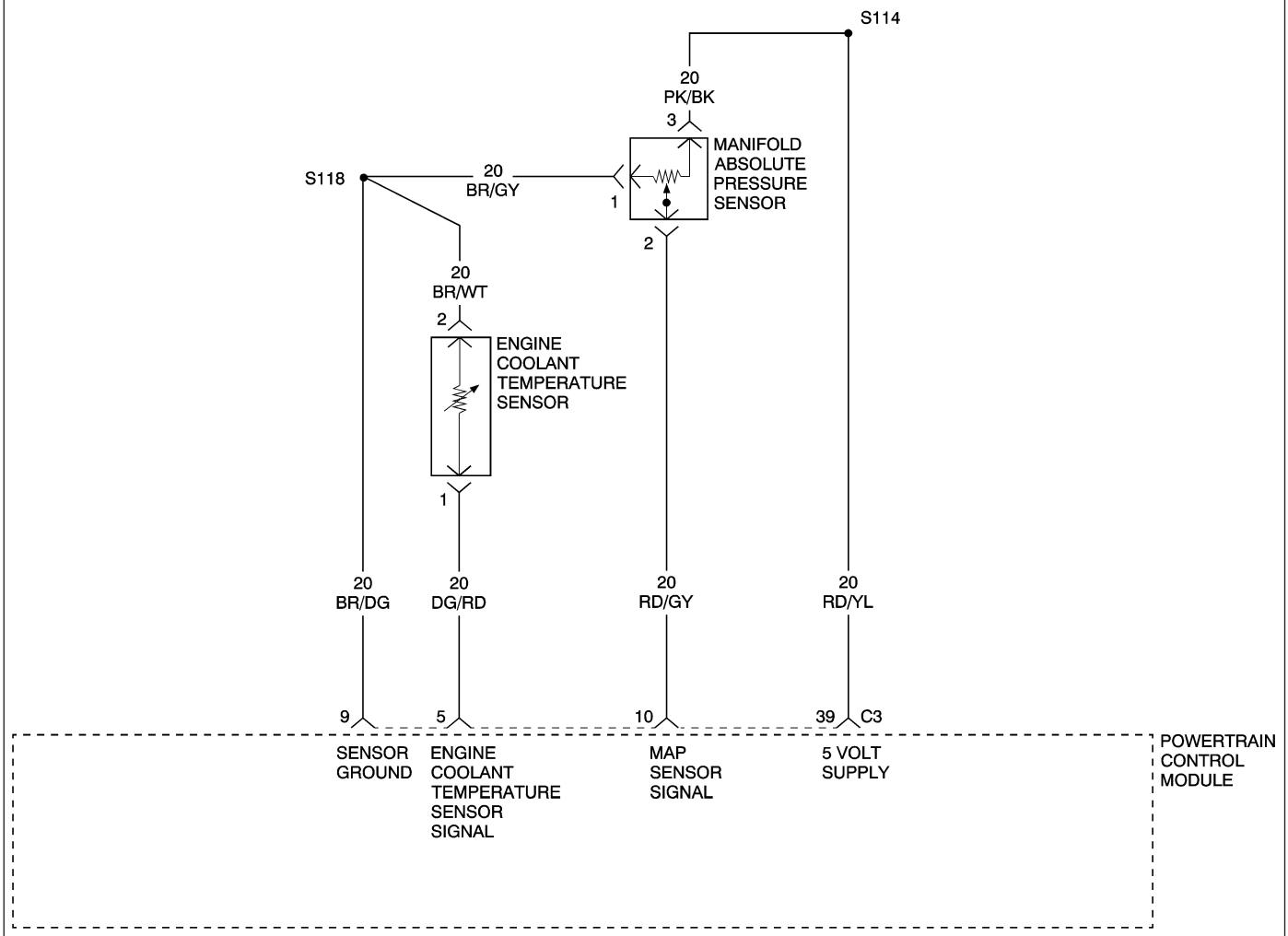

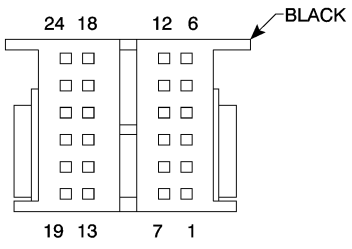

POWERTRAIN
CONTROL
MODULE – C2

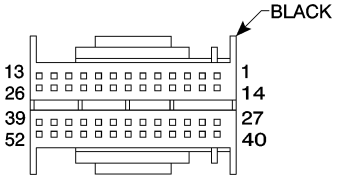

POWERTRAIN
CONTROL
MODULE – C3

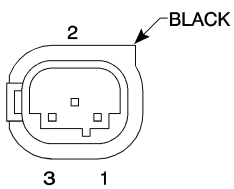

MANIFOLD
ABSOLUTE
PRESSURE
SENSOR

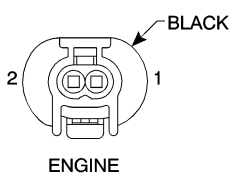

ENGINE
COOLANT
TEMPERATURE
SENSOR

81159ea1

(P0174) FUEL SYSTEM 2/1 RICH CONTROL OVER LIMIT (AT LOAD) — CONTINUED

When Monitored and Set Condition

- When Monitored: With the engine running in closed loop mode, the ambient/battery temperature above -7°C (20°F), altitude below 2590m (8500 ft). and fuel level greater than 15%.
- Set Condition: If the PCM multiplies short term compensation by long term adaptive and a certain percentage is exceeded for two trips, the MIL illuminates and a trouble code is stored.

POSSIBLE CAUSES
EVAP PURGE SOLENOID OPERATION
O2 SIGNAL CIRCUIT
RESTRICTED FUEL SUPPLY LINE
FUEL STRAINER PLUGGED
O2 SENSOR GROUND CIRCUIT
MANIFOLD ABSOLUTE PRESSURE SENSOR OPERATION
ENGINE COOLANT TEMPERATURE SENSOR OPERATION
O2 SENSOR
ENGINE MECHANICAL PROBLEM
FUEL FILTER/PRESSURE REGULATOR
POWERTRAIN CONTROL MODULE

Diagnostic Test

1. CHECK FOR CURRENT DTC

Turn the ignition on.
With the DRB III®, read the PCM DTCs.

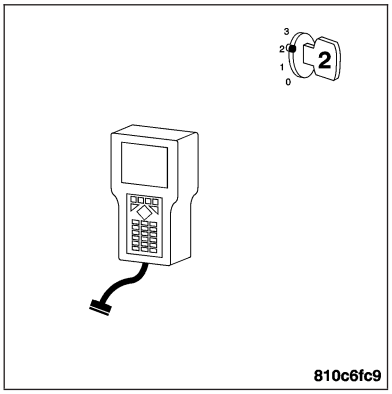

Is this DTC present?

Yes >> For complete diagnosis of this DTC, refer to (P0171) FUEL SYSTEM 1/1 RICH CONTROL OVER LIMIT (AT LOAD).

No >> Go To 2

(P0174) FUEL SYSTEM 2/1 RICH CONTROL OVER LIMIT (AT LOAD) — CONTINUED

2. INTERMITTENT WIRING AND CONNECTORS

The conditions necessary to set this DTC are not present at this time.

Note: Check connectors — Clean/repair as necessary. Poor pin to terminal connections can set DTCs.Using the wiring diagram/schematic as a guide, inspect the wiring and connectors specific to this DTC. Wiggle the wires while checking for shorts and open circuits.

Note: Check for any Technical Service Bulletins that may apply.

Were there any problems found?

Yes >> Repair as necessary.
Perform POWERTRAIN VERIFICATION TEST - VER 2.

No >> The condition that caused this DTC to set is currently not present. Inspect the related wiring harness for a possible intermittent condition.

(P0174) FUEL SYSTEM 2/1 LEAN CONTROL BELOW LIMIT (AT LOAD)

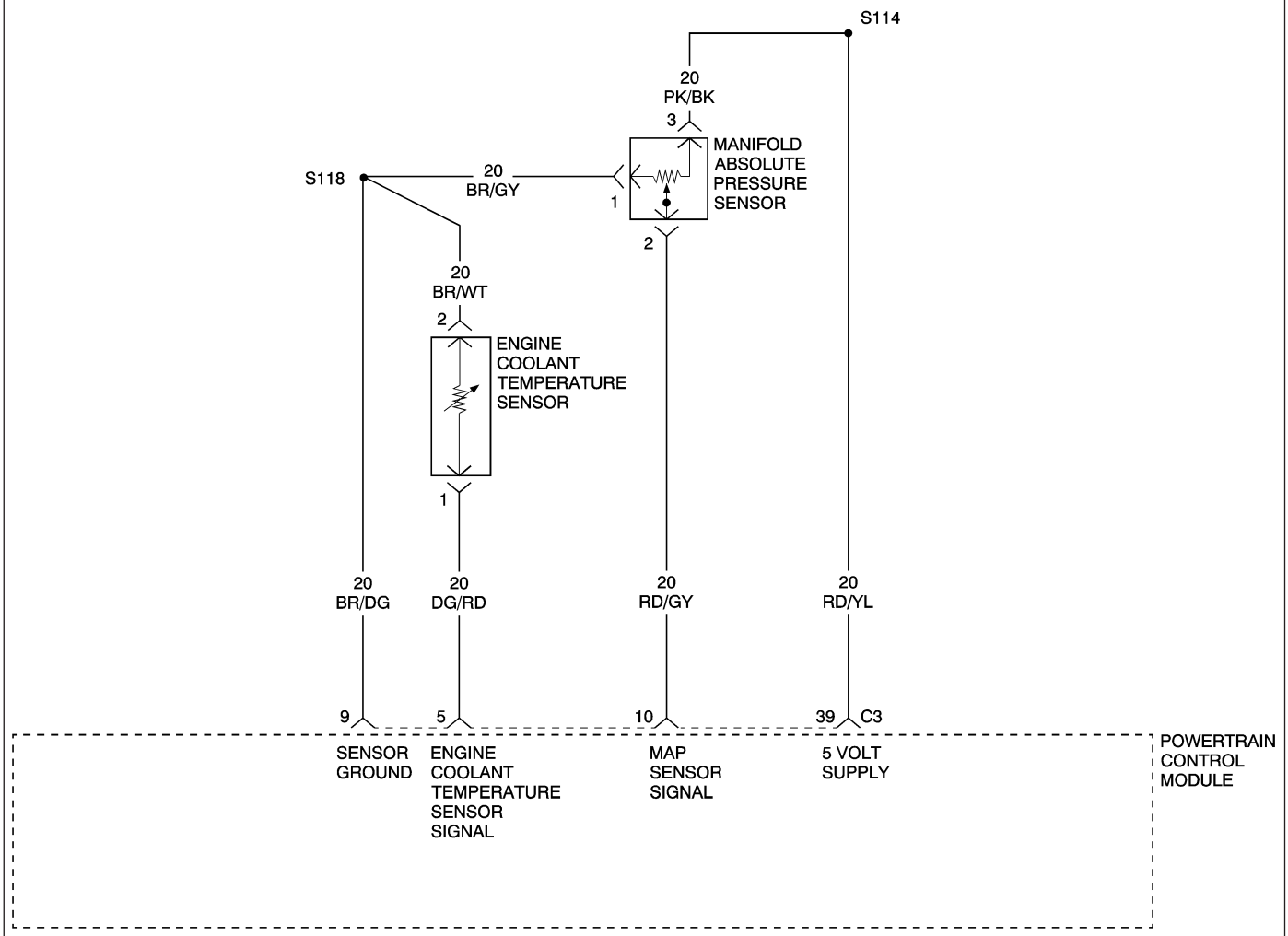

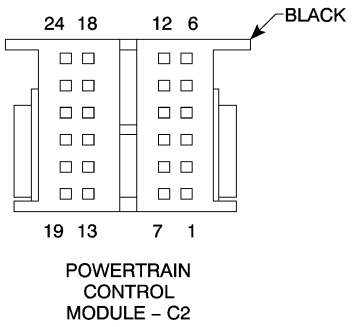

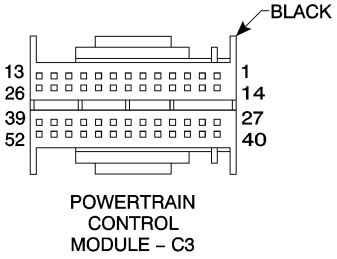

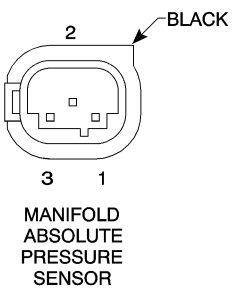

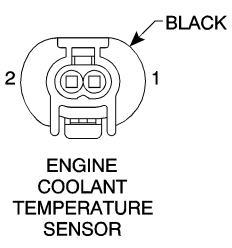

81159ea1

(P0174) FUEL SYSTEM 2/1 LEAN CONTROL BELOW LIMIT (AT LOAD) — CONTINUED

When Monitored and Set Condition

- When Monitored: With the engine running in closed loop mode, the ambient/battery temperature above -7°C (20°F), altitude below 2590m (8500 ft). and fuel level greater than 15%.
- Set Condition: If the PCM multiplies short term compensation by long term adaptive and a certain percentage is exceeded for two trips, the MIL illuminates and a trouble code is stored.

POSSIBLE CAUSES
RESTRICTED FUEL SUPPLY LINE
FUEL STRAINER PLUGGED
O2 SENSOR SIGNAL CIRCUIT
O2 SENSOR GROUND CIRCUIT
O2 SENSOR HEATER OPERATION
MANIFOLD ABSOLUTE PRESSURE SENSOR OPERATION
ENGINE COOLANT TEMPERATURE SENSOR OPERATION
ENGINE MECHANICAL PROBLEM
O2 SENSOR
FUEL PUMP
FUEL CONTAMINATION/EXHAUST LEAK

Diagnostic Test

1. CHECK FOR CURRENT DTC

Turn the ignition on.
With the DRB III®, read the PCM DTCs.

Is this DTC present?

Yes >> For complete diagnosis of this DTC, refer to (P0172) FUEL SYSTEM 1/1 LEAN CONTROL BELOW LIMIT (AT LOAD).

No >> Go To 2

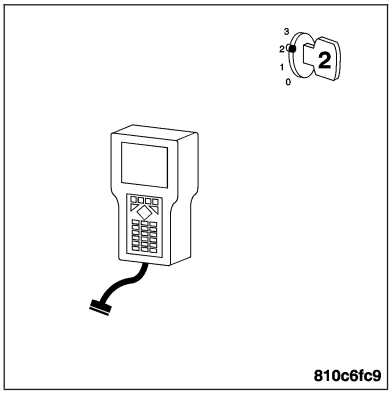

(P0174) FUEL SYSTEM 2/1 LEAN CONTROL BELOW LIMIT (AT LOAD) — CONTINUED

2. INTERMITTENT WIRING AND CONNECTORS

The conditions necessary to set this DTC are not present at this time.

Note: Check connectors — Clean/repair as necessary. Poor pin to terminal connections can set DTCs.Using the wiring diagram/schematic as a guide, inspect the wiring and connectors specific to this DTC. Wiggle the wires while checking for shorts and open circuits.

Note: Check for any Technical Service Bulletins that may apply.

Were there any problems found?

Yes >> Repair as necessary.
Perform POWERTRAIN VERIFICATION TEST - VER 2.

No >> The condition that caused this DTC to set is currently not present. Inspect the related wiring harness for a possible intermittent condition.

(P0174) FUEL SYSTEM 2/1 UNDERCORRECTION OF FUEL MIXTURE (OFF IDLE)

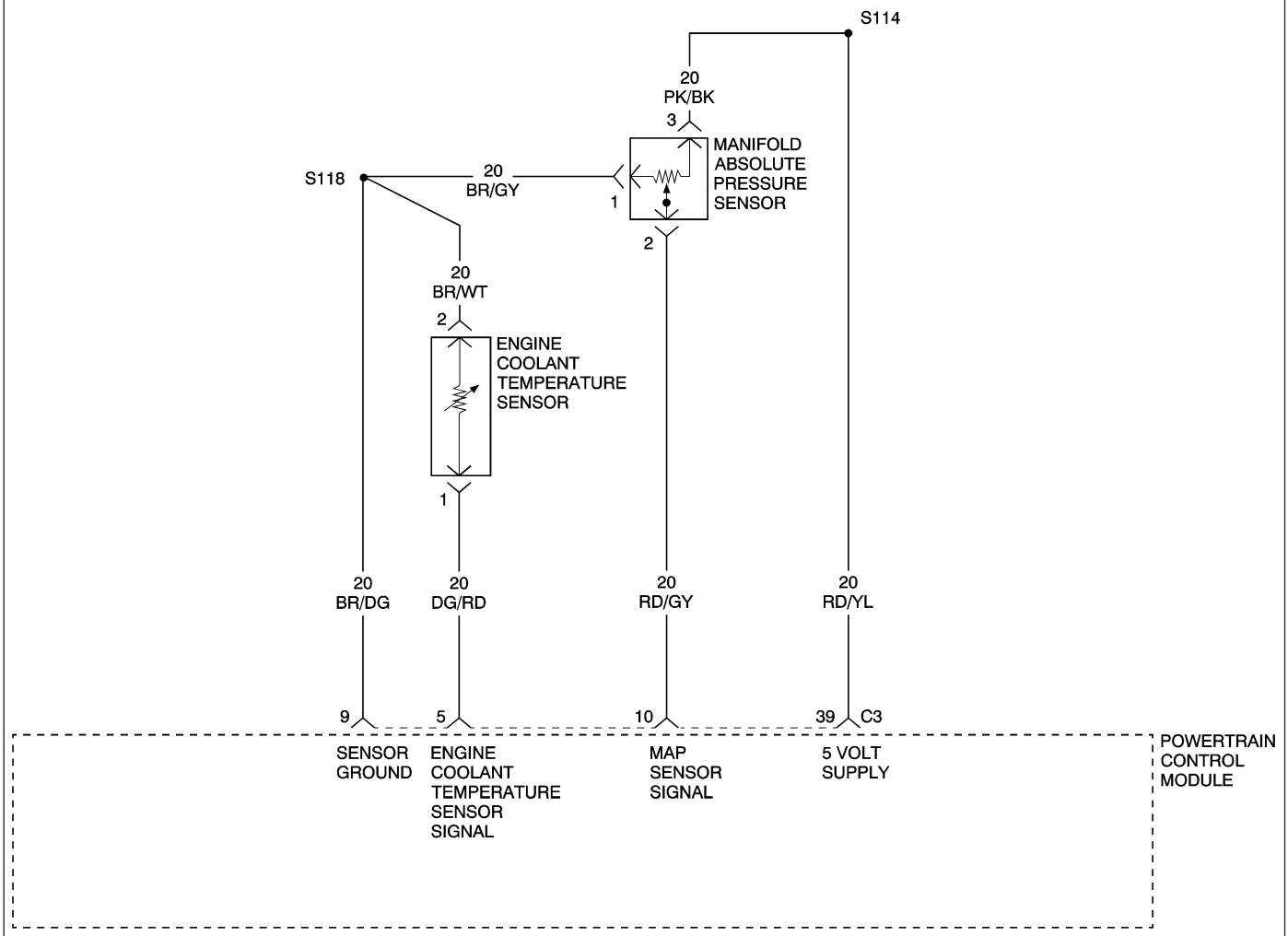

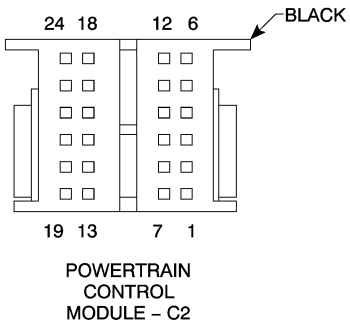

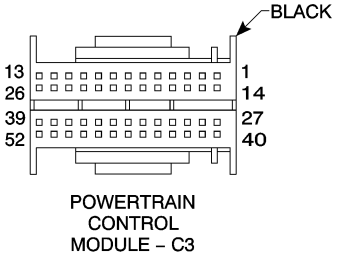

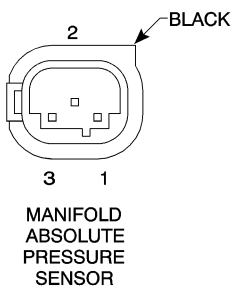

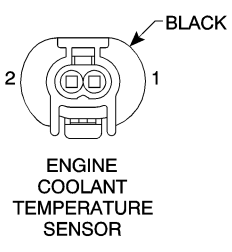

81159ea1

(P0174) FUEL SYSTEM 2/1 UNDERCORRECTION OF FUEL MIXTURE (OFF IDLE) — CONTINUED

When Monitored and Set Condition

- When Monitored: With the engine running in closed loop mode, the ambient/battery temperature above -7°C (20°F), altitude below 2590m (8500 ft). and fuel level greater than 15%.
- Set Condition: If the PCM multiplies short term compensation by long term adaptive and a certain percentage is exceeded for two trips, the MIL illuminates and a trouble code is stored.

POSSIBLE CAUSES
RESTRICTED FUEL SUPPLY LINE
FUEL STRAINER PLUGGED
O2 SENSOR SIGNAL CIRCUIT
O2 SENSOR GROUND CIRCUIT
O2 SENSOR HEATER OPERATION
MANIFOLD ABSOLUTE PRESSURE SENSOR OPERATION
ENGINE COOLANT TEMPERATURE SENSOR OPERATION
ENGINE MECHANICAL PROBLEM
O2 SENSOR
FUEL PUMP
FUEL CONTAMINATION/EXHAUST LEAK

Diagnostic Test

1. CHECK FOR CURRENT DTC

Turn the ignition on.
With the DRB III®, read the PCM DTCs.

Is this DTC present?

Yes >> For complete diagnosis of this DTC, refer to (P0172) FUEL SYSTEM 1/1 LEAN CONTROL BELOW LIMIT (AT LOAD).

No >> Go To 2

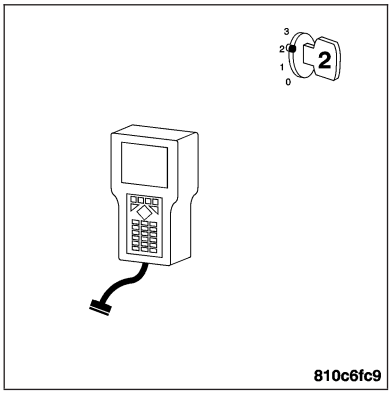

(P0174) FUEL SYSTEM 2/1 UNDERCORRECTION OF FUEL MIXTURE (OFF IDLE) — CONTINUED

2. INTERMITTENT WIRING AND CONNECTORS

The conditions necessary to set this DTC are not present at this time.

Note: Check connectors — Clean/repair as necessary. Poor pin to terminal connections can set DTCs.Using the wiring diagram/schematic as a guide, inspect the wiring and connectors specific to this DTC. Wiggle the wires while checking for shorts and open circuits.

Note: Check for any Technical Service Bulletins that may apply.

Were there any problems found?

Yes >> Repair as necessary.
Perform POWERTRAIN VERIFICATION TEST - VER 2.

No >> The condition that caused this DTC to set is currently not present. Inspect the related wiring harness for a possible intermittent condition.

(P0175) FUEL SYSTEM 2/1 OVERCORRECTION OF FUEL MIXTURE (OFF IDLE)

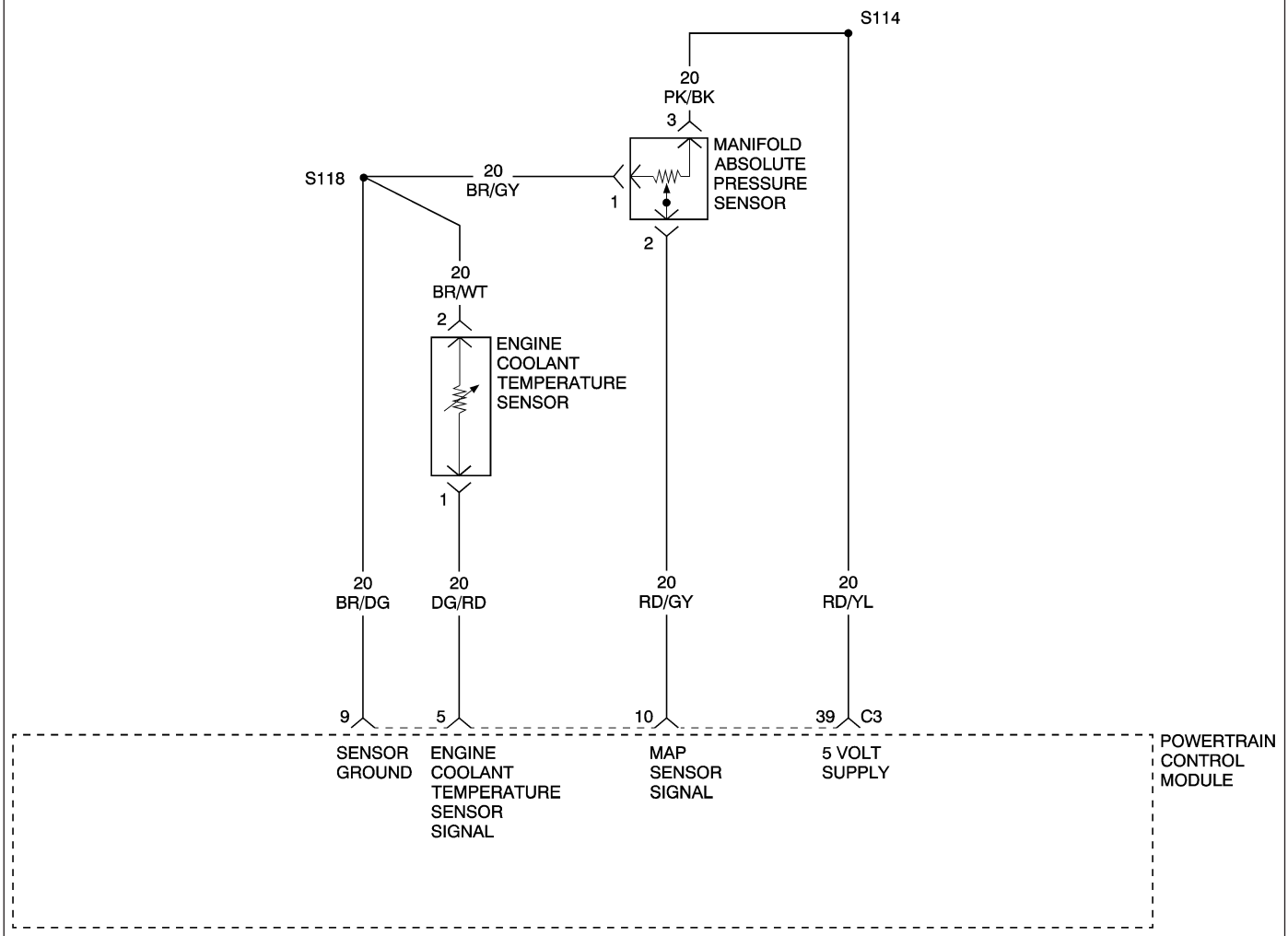

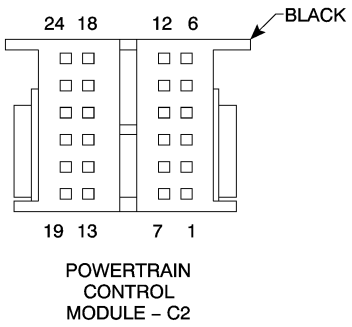

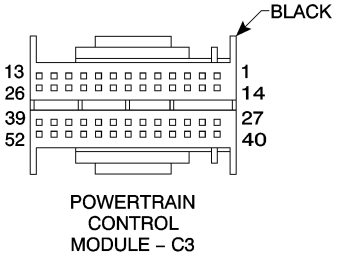

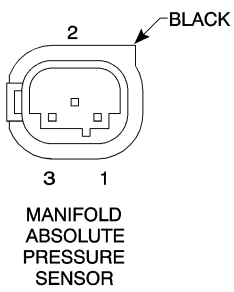

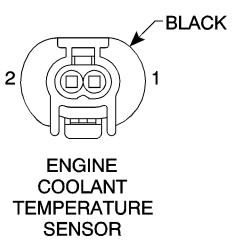

81159ea1

(P0175) FUEL SYSTEM 2/1 OVERCORRECTION OF FUEL MIXTURE (OFF IDLE) — CONTINUED

When Monitored and Set Condition

- When Monitored: With the engine running in closed loop mode, the ambient/battery temperature above -7°C (20°F), altitude below 2590m (8500 ft). and fuel level greater than 15%.
- Set Condition: If the PCM multiplies short term compensation by long term adaptive and a certain percentage is exceeded for two trips, the MIL illuminates and a trouble code is stored.

POSSIBLE CAUSES
EVAP PURGE SOLENOID OPERATION
O2 SIGNAL CIRCUIT
RESTRICTED FUEL SUPPLY LINE
FUEL STRAINER PLUGGED
O2 SENSOR GROUND CIRCUIT
MANIFOLD ABSOLUTE PRESSURE SENSOR OPERATION
ENGINE COOLANT TEMPERATURE SENSOR OPERATION
O2 SENSOR
ENGINE MECHANICAL PROBLEM
FUEL FILTER/PRESSURE REGULATOR
POWERTRAIN CONTROL MODULE

Diagnostic Test

1. CHECK FOR CURRENT DTC

Turn the ignition on.
With the DRB III®, read the PCM DTCs.

Is this DTC present?

Yes >> For complete diagnosis of this DTC, refer to (P0171) FUEL SYSTEM 1/1 RICH CONTROL OVER LIMIT (AT LOAD).

No >> Go To 2

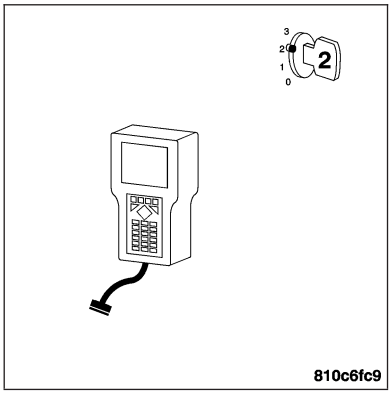

(P0175) FUEL SYSTEM 2/1 OVERCORRECTION OF FUEL MIXTURE (OFF IDLE) — CONTINUED

2. INTERMITTENT WIRING AND CONNECTORS

The conditions necessary to set this DTC are not present at this time.

Note: Check connectors — Clean/repair as necessary. Poor pin to terminal connections can set DTCs.Using the wiring diagram/schematic as a guide, inspect the wiring and connectors specific to this DTC. Wiggle the wires while checking for shorts and open circuits.

Note: Check for any Technical Service Bulletins that may apply.

Were there any problems found?

Yes >> Repair as necessary.
Perform POWERTRAIN VERIFICATION TEST - VER 2.

No >> The condition that caused this DTC to set is currently not present. Inspect the related wiring harness for a possible intermittent condition.

(P0175) FUEL SYSTEM 2/1 LEAN CONTROL BELOW LIMIT (AT IDLE)

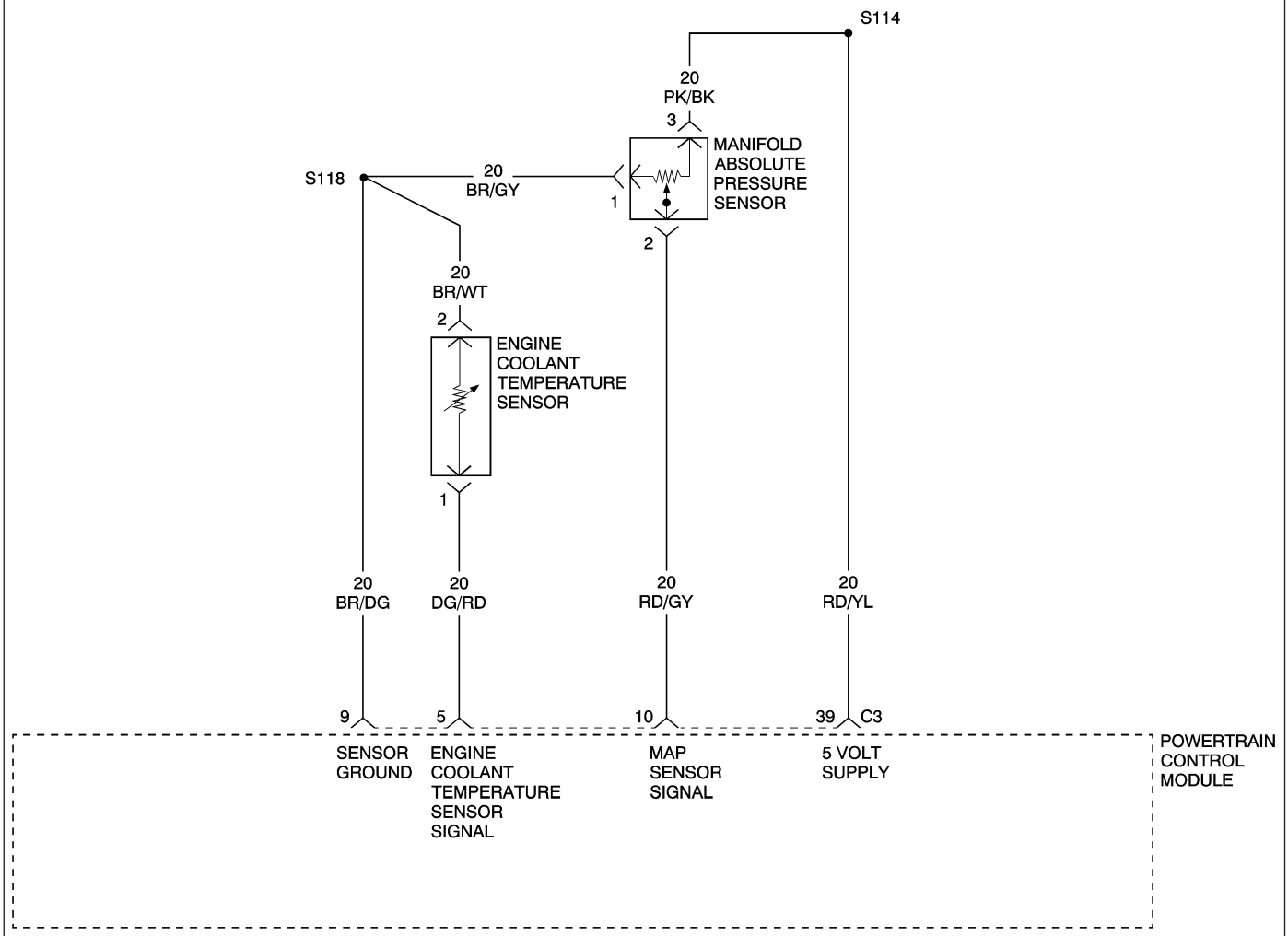

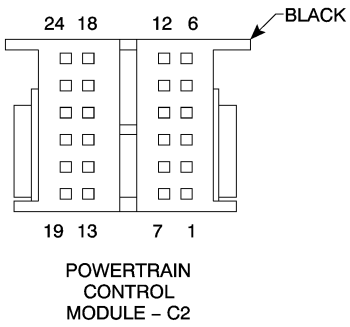

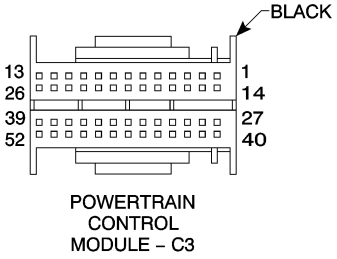

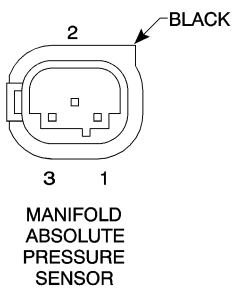

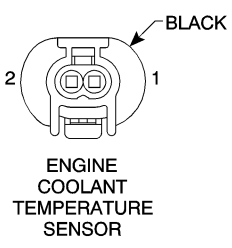

81159ea1

(P0175) FUEL SYSTEM 2/1 LEAN CONTROL BELOW LIMIT (AT IDLE) — CONTINUED

When Monitored and Set Condition

- When Monitored: With the engine running in closed loop mode, the ambient/battery temperature above -7°C (20°F), altitude below 2590m (8500 ft). and fuel level greater than 15%.
- Set Condition: If the PCM multiplies short term compensation by long term adaptive and a certain percentage is exceeded for two trips, the MIL illuminates and a trouble code is stored.

POSSIBLE CAUSES
RESTRICTED FUEL SUPPLY LINE
FUEL STRAINER PLUGGED
O2 SENSOR SIGNAL CIRCUIT
O2 SENSOR GROUND CIRCUIT
O2 SENSOR HEATER OPERATION
MANIFOLD ABSOLUTE PRESSURE SENSOR OPERATION
ENGINE COOLANT TEMPERATURE SENSOR OPERATION
ENGINE MECHANICAL PROBLEM
O2 SENSOR
FUEL PUMP
FUEL CONTAMINATION/EXHAUST LEAK

Diagnostic Test

1. CHECK FOR CURRENT DTC

Turn the ignition on.
With the DRB III®, read the PCM DTCs.

Is this DTC present?

Yes >> For complete diagnosis of this DTC, refer to (P0172) FUEL SYSTEM 1/1 LEAN CONTROL BELOW LIMIT (AT LOAD).

No >> Go To 2

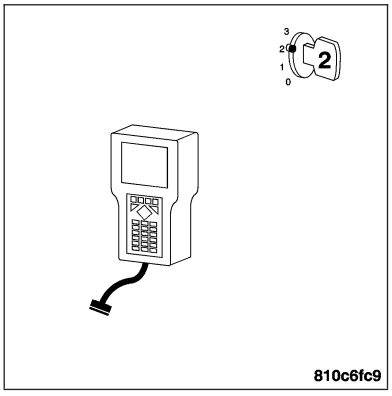

(P0175) FUEL SYSTEM 2/1 LEAN CONTROL BELOW LIMIT (AT IDLE) — CONTINUED

2. INTERMITTENT WIRING AND CONNECTORS

The conditions necessary to set this DTC are not present at this time.

Note: Check connectors — Clean/repair as necessary. Poor pin to terminal connections can set DTCs.Using the wiring diagram/schematic as a guide, inspect the wiring and connectors specific to this DTC. Wiggle the wires while checking for shorts and open circuits.

Note: Check for any Technical Service Bulletins that may apply.

Were there any problems found?

Yes >> Repair as necessary.
Perform POWERTRAIN VERIFICATION TEST - VER 2.

No >> The condition that caused this DTC to set is currently not present. Inspect the related wiring harness for a possible intermittent condition.

(P0200) FUEL INJECTOR CIRCUIT

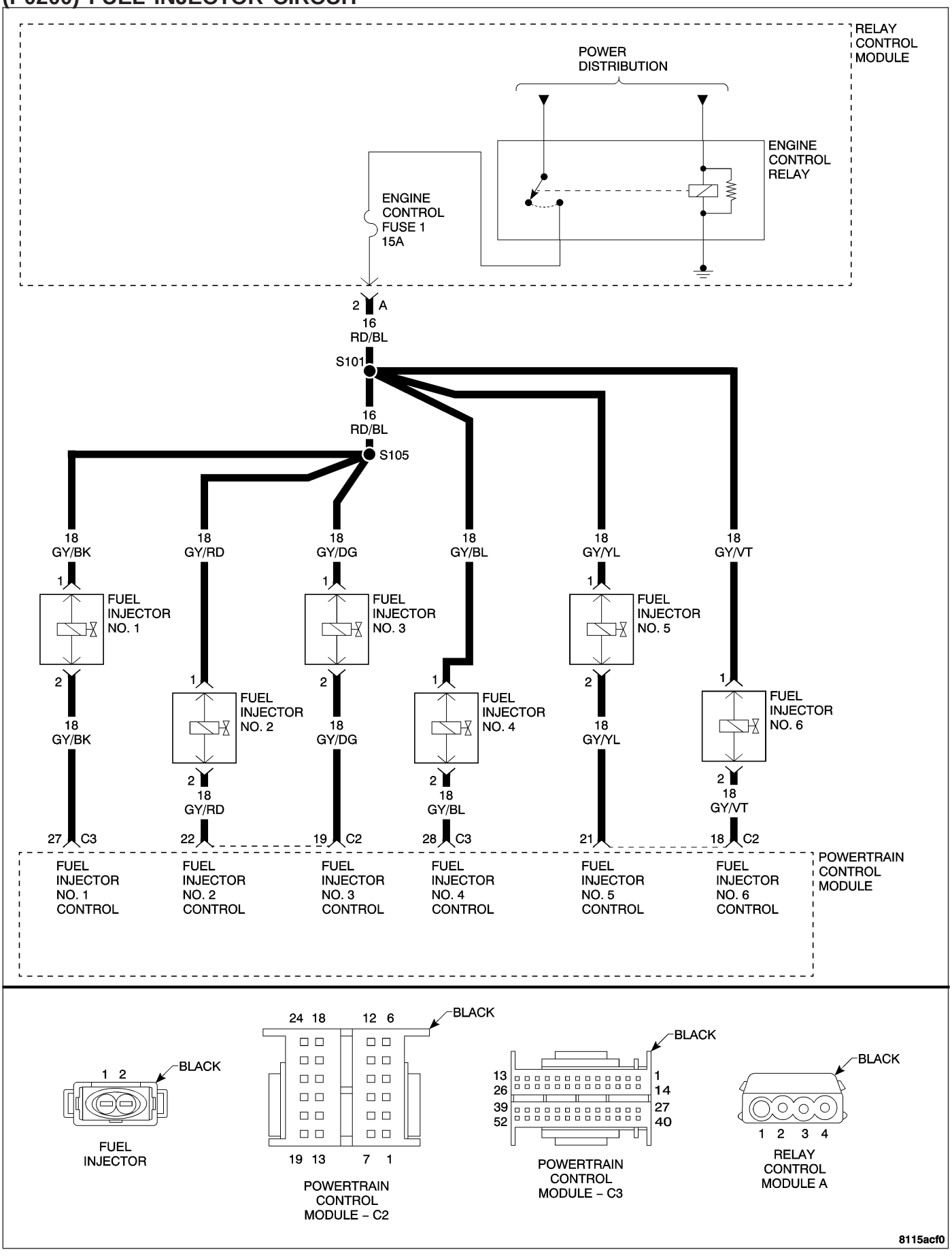

(P0200) FUEL INJECTOR CIRCUIT — CONTINUED

When Monitored and Set Condition

- When Monitored: With battery voltage greater than 10 volts. Engine Control Relay energized. Engine speed less than 3000 RPM.
- Set Condition: No inductive spike is detected after injector turn off. One Trip Fault.

POSSIBLE CAUSES
INJECTOR CONTROL CIRCUIT OPEN
FUSED ENGINE CONTROL RELAY OUTPUT CIRCUIT OPEN
INJECTOR CONTROL CIRCUIT SHORTED TO GROUND
FUSED ENGINE CONTROL RELAY OUTPUT CIRCUIT SHORTED TO INJECTOR CONTROL CIRCUIT
FUEL INJECTOR
POWERTRAIN CONTROL MODULE

Diagnostic Test

1. CHECK FOR CURRENT DTC

Turn the ignition on.
With the DRB III®, read the PCM DTCs.

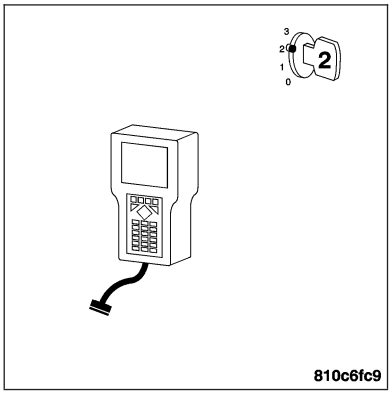

Is this DTC present?

Yes >> For complete diagnosis of this DTC, refer to (P0201) FUEL INJECTOR #1 CIRCUIT

No >> Go To 2

2. INTERMITTENT WIRING AND CONNECTORS

The conditions necessary to set this DTC are not present at this time.

Note: Check connectors — Clean/repair as necessary. Poor pin to terminal connections can set DTCs.Using the wiring diagram/schematic as a guide, inspect the wiring and connectors specific to this DTC. Wiggle the wires while checking for shorts and open circuits.

Note: Check for any Technical Service Bulletins that may apply.

Were there any problems found?

Yes >> Repair as necessary.
Perform POWERTRAIN VERIFICATION TEST - VER 2.

No >> The condition that caused this DTC to set is currently not present. Inspect the related wiring harness for a possible intermittent condition.

(P0201) FUEL INJECTOR #1 CIRCUIT

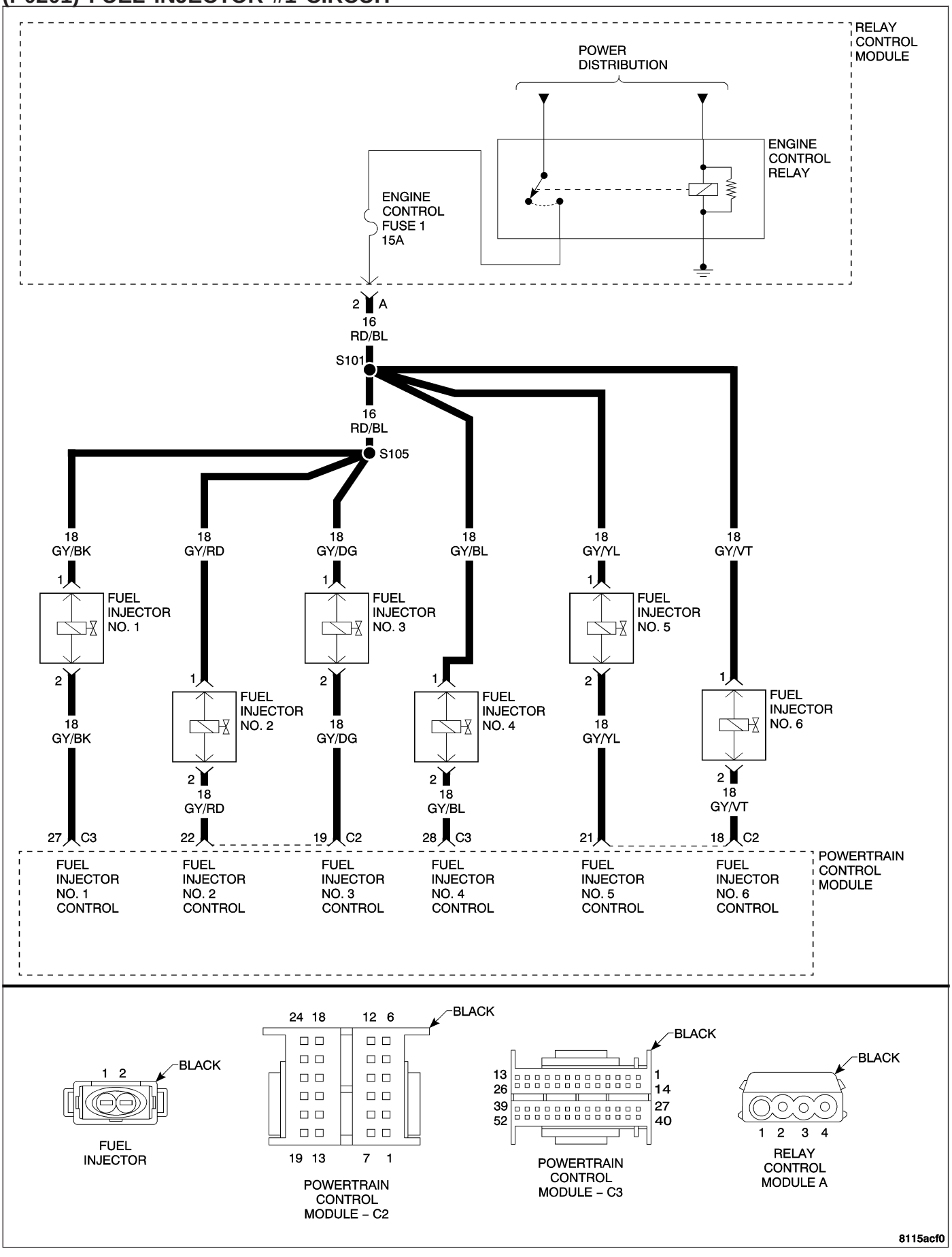

(P0201) FUEL INJECTOR #1 CIRCUIT — CONTINUED

When Monitored and Set Condition

- When Monitored: With battery voltage greater than 10 volts. Engine Control Relay energized. Engine speed less than 3000 RPM.
- Set Condition: No inductive spike is detected after injector turn off. One Trip Fault.

POSSIBLE CAUSES
INJECTOR CONTROL CIRCUIT OPEN
FUSED ENGINE CONTROL RELAY OUTPUT CIRCUIT OPEN
INJECTOR CONTROL CIRCUIT SHORTED TO GROUND
FUSED ENGINE CONTROL RELAY OUTPUT CIRCUIT SHORTED TO INJECTOR CONTROL CIRCUIT
FUEL INJECTOR
POWERTRAIN CONTROL MODULE

For a complete Powertrain Control Module Circuit Diagram **Refer to Page 9-574**.

Diagnostic Test

1. CHECK FOR CURRENT DTC

Note: If the PCM detects and stores a DTC, the PCM also stores the engine/vehicle operating conditions under which the DTC was set. Some of these conditions are displayed on the DRB III® at the same time the DTC is displayed.

Note: Before erasing stored DTCs, record these conditions. Attempting to duplicate these conditions may assist when checking for a DTC.

Turn the ignition on.

With the DRB III®, erase PCM DTCs.

Note: It maybe necessary to road test the vehicle for this DTC to set.
With the DRB III®, read the PCM DTCs.

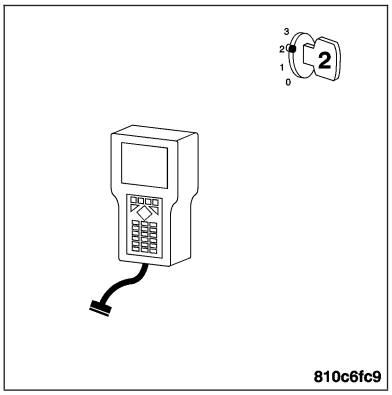

Did this DTC set again?

Yes >> Go To 2

No >> Go To 7

2. FUSED ENGINE CONTROL RELAY OUTPUT CIRCUIT OPEN

Turn the ignition off.

Disconnect the Fuel Injector harness connector.

Note: Check connectors — Clean/repair as necessary.

Turn the ignition on.

Measure the voltage of the Fused Engine Control Relay Output circuit at the Fuel Injector harness connector.

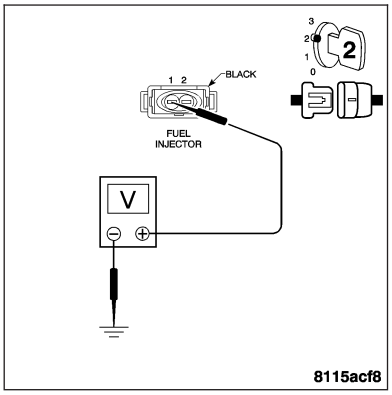

Is the voltage above 10 volts?

Yes >> Go To 3

No >> Repair the Fused Engine Control Relay Output circuit for an open.
Perform POWERTRAIN VERIFICATION TEST - VER 2.

(P0201) FUEL INJECTOR #1 CIRCUIT — CONTINUED

3. INJECTOR CONTROL CIRCUIT OPEN

Turn the ignition off.

Disconnect the PCM harness connectors.

Note: Check connectors — Clean/repair as necessary.

Measure the resistance of the Injector Control circuit from the Fuel Injector harness connector to the PCM harness connector.

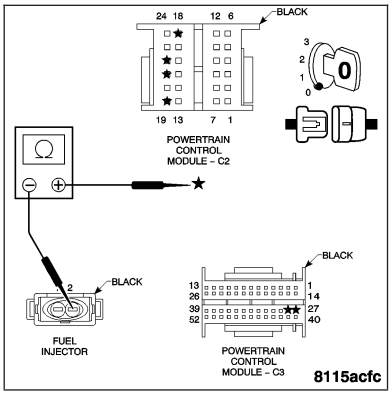

Is the resistance below 5.0 ohms?

Yes >> Go To 4

No >> Repair the Injector Control circuit for an open.
Perform POWERTRAIN VERIFICATION TEST - VER 2.

4. INJECTOR CONTROL CIRCUIT SHORTED TO GROUND

With the ignition off.

Measure the resistance between ground and the Injector Control circuit.

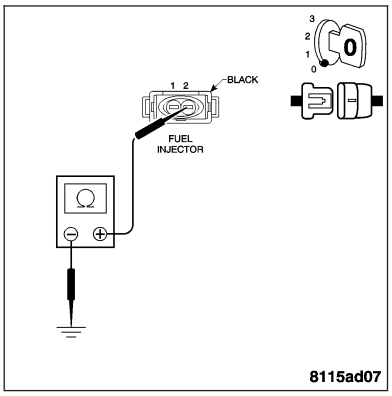

Is the resistance below 100 ohms?

Yes >> Repair the Injector Control circuit for a short to ground.
Perform POWERTRAIN VERIFICATION TEST - VER 2.

No >> Go To 5

5. FUSED ENGINE CONTROL RELAY OUTPUT CIRCUIT SHORTED TO INJECTOR CONTROL CIRCUIT

With the ignition off.

Measure the resistance between the Fused Engine Control Relay Output circuit and the Injector Control circuit at the Fuel Injector harness connector.

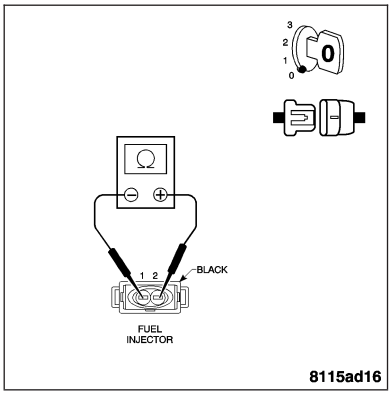

Is the resistance below 100 ohms?

Yes >> Repair the Injector Control circuit for a short to the Fused Engine Control Relay Output circuit.
Perform POWERTRAIN VERIFICATION TEST - VER 2.

No >> Go To 6

(P0201) FUEL INJECTOR #1 CIRCUIT — CONTINUED

6. FUEL INJECTOR

Note: The fuel injectors are polarity sensitive. If a reading is not obtained with the meter leads connected one way, reverse the test leads and take another reading.

With the ignition off.

Measure the resistance of the Fuel Injector.

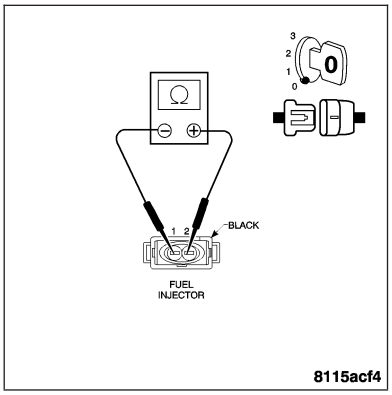

Is the resistance between 12 and 18 ohms?

Yes >> Replace and program the Powertrain Control Module. **Refer to Page 8E-56**.
Perform POWERTRAIN VERIFICATION TEST - VER 2.

No >> Replace the Fuel Injector. **Refer to Page 14-33**.
Perform POWERTRAIN VERIFICATION TEST - VER 2.

7. INTERMITTENT WIRING AND CONNECTORS

The condition that caused this DTC to set is currently not present. Inspect the related wiring harness for a possible intermittent condition.

Note: Check connectors — Clean/repair as necessary. Poor pin to terminal connections can set DTCs.Using the wiring diagram/schematic as a guide, inspect the wiring and connectors specific to this DTC. Wiggle the wires while checking for shorts and open circuits.

Note: Check for any Technical Service Bulletins that may apply.

Were there any problems found?

Yes >> Repair as necessary.
Perform POWERTRAIN VERIFICATION TEST - VER 2.

No >> The condition that caused this DTC to set is currently not present. Inspect the related wiring harness for a possible intermittent condition.

(P0202) FUEL INJECTOR #2 CIRCUIT

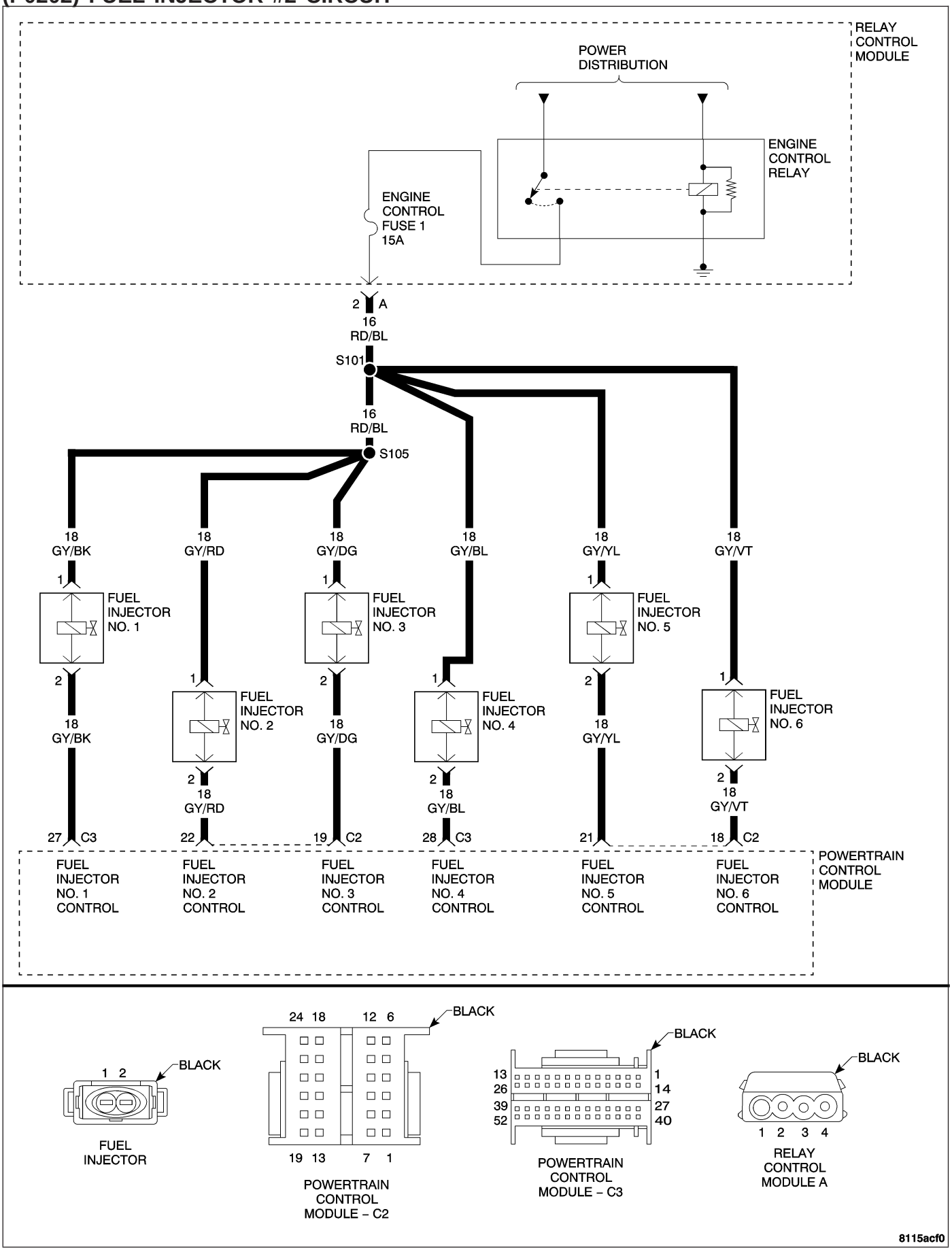

(P0202) FUEL INJECTOR #2 CIRCUIT — CONTINUED

When Monitored and Set Condition

- When Monitored: With battery voltage greater than 10 volts. Engine Control Relay energized. Engine speed less than 3000 RPM.
- Set Condition: No inductive spike is detected after injector turn off. One Trip Fault.

POSSIBLE CAUSES
INJECTOR CONTROL CIRCUIT OPEN
FUSED ENGINE CONTROL RELAY OUTPUT CIRCUIT OPEN
INJECTOR CONTROL CIRCUIT SHORTED TO GROUND
FUSED ENGINE CONTROL RELAY OUTPUT CIRCUIT SHORTED TO INJECTOR CONTROL CIRCUIT
FUEL INJECTOR
POWERTRAIN CONTROL MODULE

Diagnostic Test

1. CHECK FOR CURRENT DTC

Turn the ignition on.
With the DRB III®, read the PCM DTCs.

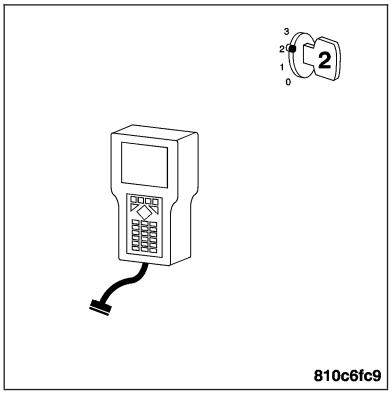

Is this DTC present?

Yes >> For complete diagnosis of this DTC, refer to (P0201) FUEL INJECTOR #1 CIRCUIT

No >> Go To 2

2. INTERMITTENT WIRING AND CONNECTORS

The conditions necessary to set this DTC are not present at this time.

Note: Check connectors — Clean/repair as necessary. Poor pin to terminal connections can set DTCs.Using the wiring diagram/schematic as a guide, inspect the wiring and connectors specific to this DTC. Wiggle the wires while checking for shorts and open circuits.

Note: Check for any Technical Service Bulletins that may apply.

Were there any problems found?

Yes >> Repair as necessary.
Perform POWERTRAIN VERIFICATION TEST - VER 2.

No >> The condition that caused this DTC to set is currently not present. Inspect the related wiring harness for a possible intermittent condition.

(P0203) FUEL INJECTOR #3 CIRCUIT

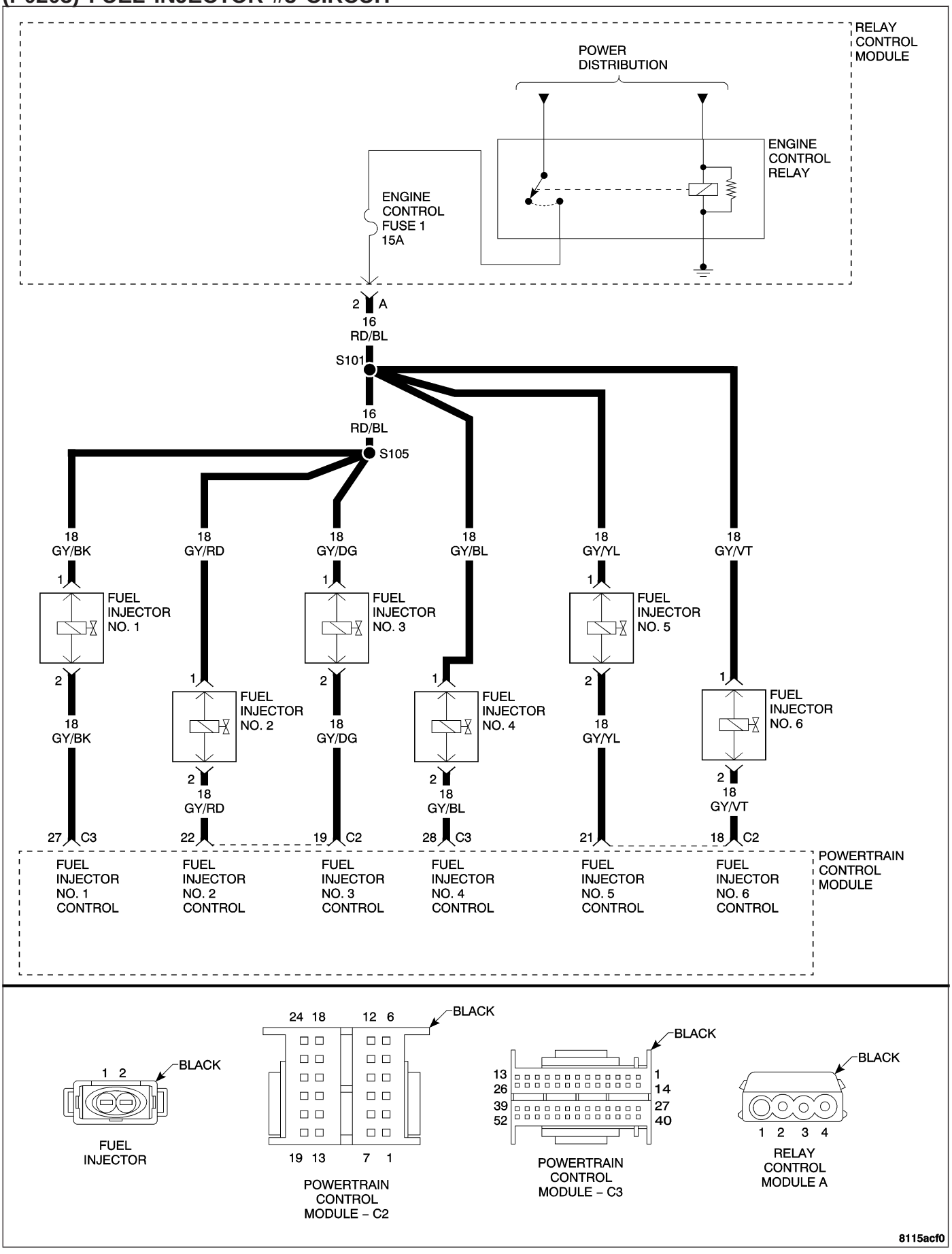

(P0203) FUEL INJECTOR #3 CIRCUIT — CONTINUED

When Monitored and Set Condition

- When Monitored: With battery voltage greater than 10 volts. Engine Control Relay energized. Engine speed less than 3000 RPM.
- Set Condition: No inductive spike is detected after injector turn off. One Trip Fault.

POSSIBLE CAUSES
INJECTOR CONTROL CIRCUIT OPEN
FUSED ENGINE CONTROL RELAY OUTPUT CIRCUIT OPEN
INJECTOR CONTROL CIRCUIT SHORTED TO GROUND
FUSED ENGINE CONTROL RELAY OUTPUT CIRCUIT SHORTED TO INJECTOR CONTROL CIRCUIT
FUEL INJECTOR
POWERTRAIN CONTROL MODULE

Diagnostic Test

1. CHECK FOR CURRENT DTC

Turn the ignition on.
With the DRB III®, read the PCM DTCs.

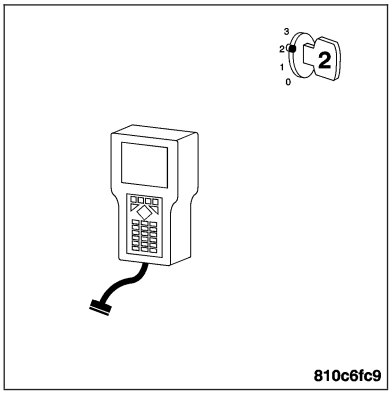

Is this DTC present?

Yes >> For complete diagnosis of this DTC, refer to (P0201) FUEL INJECTOR #1 CIRCUIT

No >> Go To 2

2. INTERMITTENT WIRING AND CONNECTORS

The conditions necessary to set this DTC are not present at this time.

Note: Check connectors — Clean/repair as necessary. Poor pin to terminal connections can set DTCs.Using the wiring diagram/schematic as a guide, inspect the wiring and connectors specific to this DTC. Wiggle the wires while checking for shorts and open circuits.

Note: Check for any Technical Service Bulletins that may apply.

Were there any problems found?

Yes >> Repair as necessary.
Perform POWERTRAIN VERIFICATION TEST - VER 2.

No >> The condition that caused this DTC to set is currently not present. Inspect the related wiring harness for a possible intermittent condition.

(P0204) FUEL INJECTOR #4 CIRCUIT

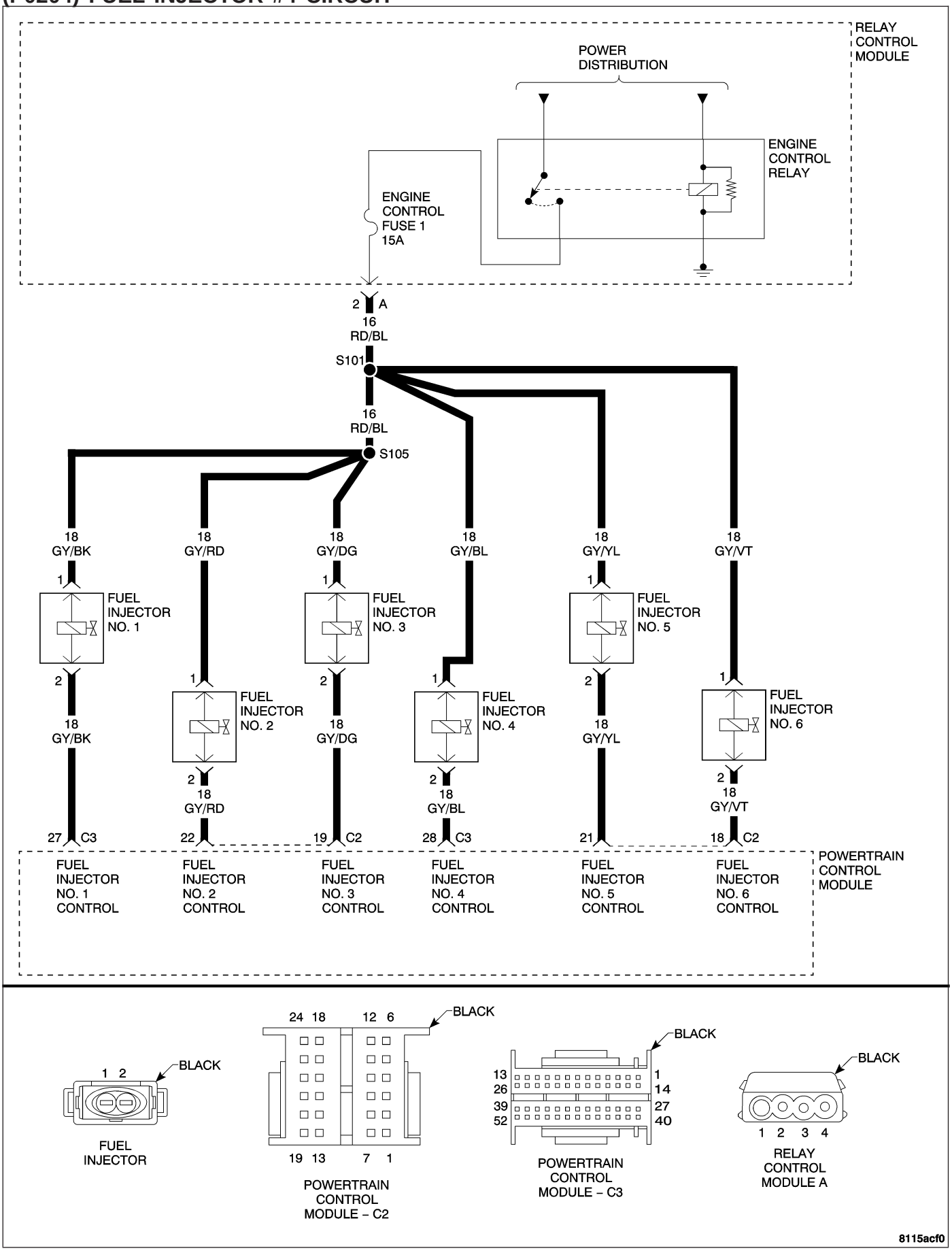

(P0204) FUEL INJECTOR #4 CIRCUIT — CONTINUED

When Monitored and Set Condition

- When Monitored: With battery voltage greater than 10 volts. Engine Control Relay energized. Engine speed less than 3000 RPM.
- Set Condition: No inductive spike is detected after injector turn off. One Trip Fault.

POSSIBLE CAUSES
INJECTOR CONTROL CIRCUIT OPEN
FUSED ENGINE CONTROL RELAY OUTPUT CIRCUIT OPEN
INJECTOR CONTROL CIRCUIT SHORTED TO GROUND
FUSED ENGINE CONTROL RELAY OUTPUT CIRCUIT SHORTED TO INJECTOR CONTROL CIRCUIT
FUEL INJECTOR
POWERTRAIN CONTROL MODULE

Diagnostic Test

1. CHECK FOR CURRENT DTC

Turn the ignition on.
With the DRB III®, read the PCM DTCs.

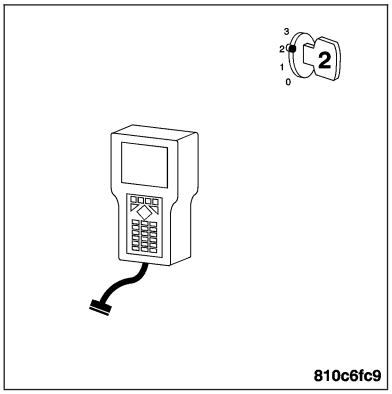

Is this DTC present?

Yes >> For complete diagnosis of this DTC, refer to (P0201) FUEL INJECTOR #1 CIRCUIT

No >> Go To 2

2. INTERMITTENT WIRING AND CONNECTORS

The conditions necessary to set this DTC are not present at this time.

Note: Check connectors — Clean/repair as necessary. Poor pin to terminal connections can set DTCs.Using the wiring diagram/schematic as a guide, inspect the wiring and connectors specific to this DTC. Wiggle the wires while checking for shorts and open circuits.

Note: Check for any Technical Service Bulletins that may apply.

Were there any problems found?

Yes >> Repair as necessary.
Perform POWERTRAIN VERIFICATION TEST - VER 2.

No >> The condition that caused this DTC to set is currently not present. Inspect the related wiring harness for a possible intermittent condition.

(P0205) FUEL INJECTOR #5 CIRCUIT

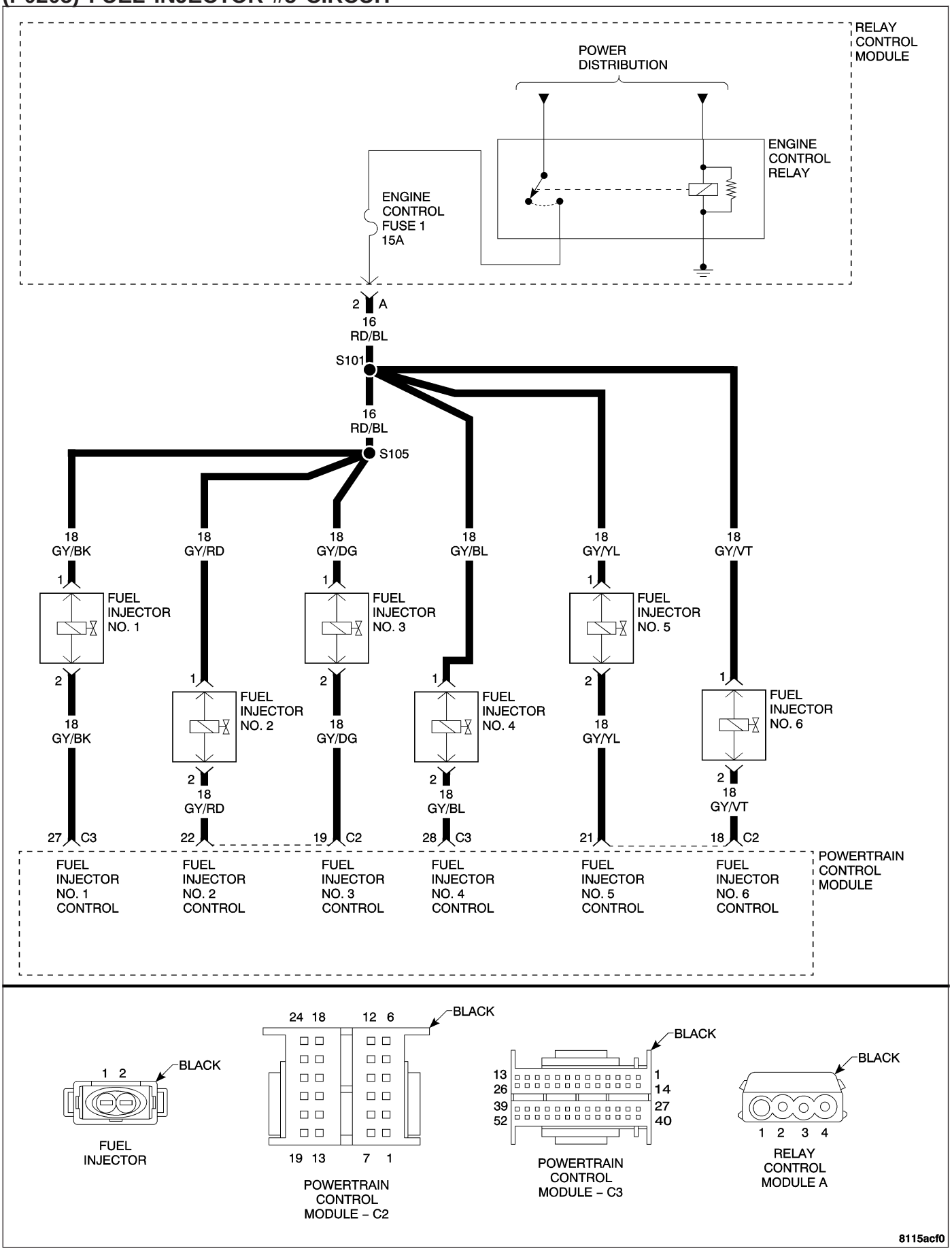

(P0205) FUEL INJECTOR #5 CIRCUIT — CONTINUED

When Monitored and Set Condition

- When Monitored: With battery voltage greater than 10 volts. Engine Control Relay energized. Engine speed less than 3000 RPM.
- Set Condition: No inductive spike is detected after injector turn off. One Trip Fault.

POSSIBLE CAUSES
INJECTOR CONTROL CIRCUIT OPEN
FUSED ENGINE CONTROL RELAY OUTPUT CIRCUIT OPEN
INJECTOR CONTROL CIRCUIT SHORTED TO GROUND
FUSED ENGINE CONTROL RELAY OUTPUT CIRCUIT SHORTED TO INJECTOR CONTROL CIRCUIT
FUEL INJECTOR
POWERTRAIN CONTROL MODULE

Diagnostic Test

1. CHECK FOR CURRENT DTC

Turn the ignition on.
With the DRB III®, read the PCM DTCs.

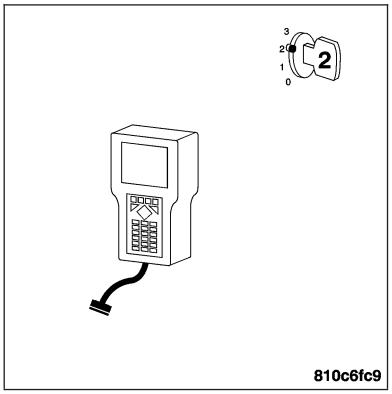

Is this DTC present?

Yes >> For complete diagnosis of this DTC, refer to (P0201) FUEL INJECTOR #1 CIRCUIT

No >> Go To 2

2. INTERMITTENT WIRING AND CONNECTORS

The conditions necessary to set this DTC are not present at this time.

Note: Check connectors — Clean/repair as necessary. Poor pin to terminal connections can set DTCs.Using the wiring diagram/schematic as a guide, inspect the wiring and connectors specific to this DTC. Wiggle the wires while checking for shorts and open circuits.

Note: Check for any Technical Service Bulletins that may apply.

Were there any problems found?

Yes >> Repair as necessary.
Perform POWERTRAIN VERIFICATION TEST - VER 2.

No >> The condition that caused this DTC to set is currently not present. Inspect the related wiring harness for a possible intermittent condition.

(P0206) FUEL INJECTOR #6 CIRCUIT

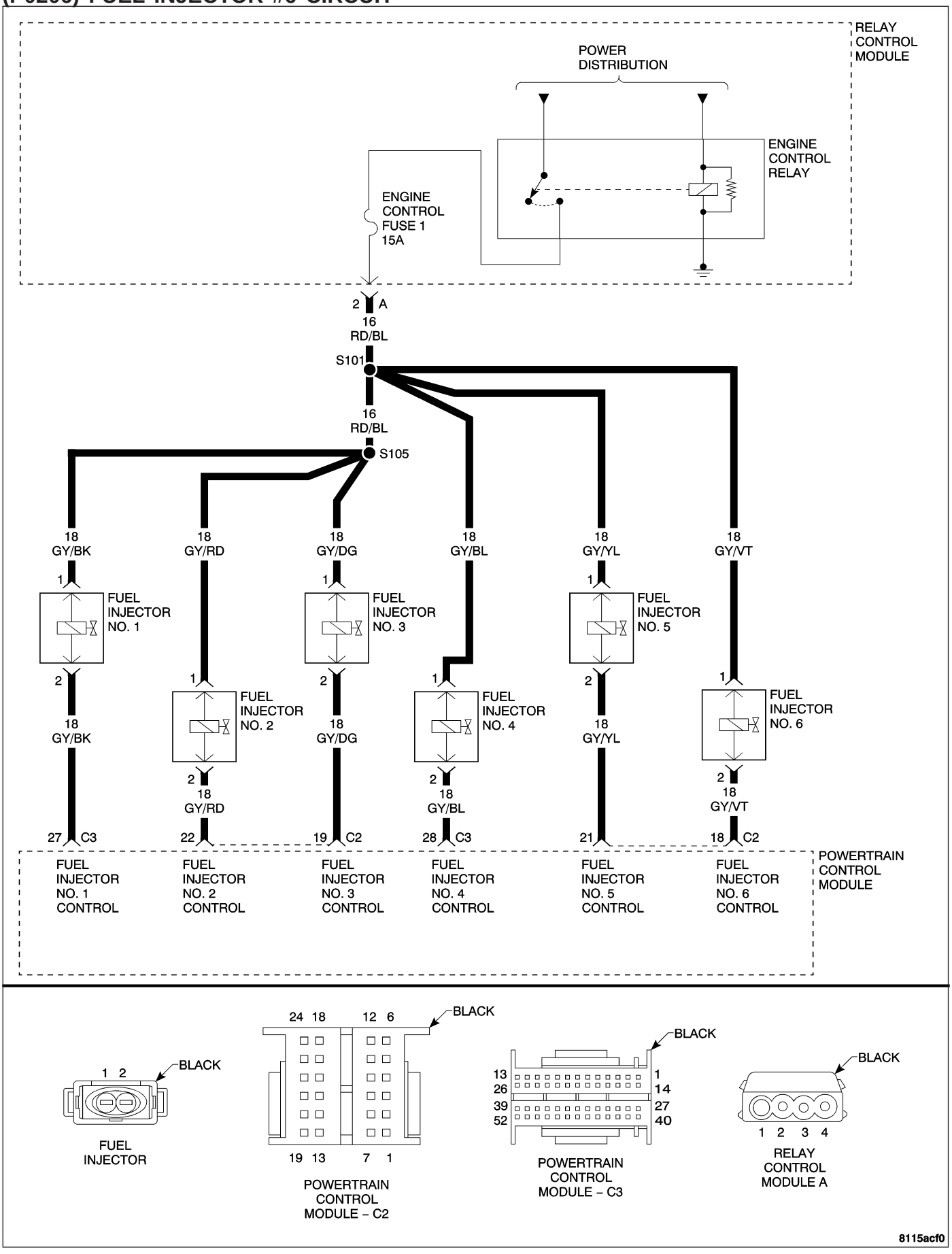

(P0206) FUEL INJECTOR #6 CIRCUIT — CONTINUED

When Monitored and Set Condition

- When Monitored: With battery voltage greater than 10 volts. Engine Control Relay energized. Engine speed less than 3000 RPM.
- Set Condition: No inductive spike is detected after injector turn off. One Trip Fault.

POSSIBLE CAUSES
INJECTOR CONTROL CIRCUIT OPEN
FUSED ENGINE CONTROL RELAY OUTPUT CIRCUIT OPEN
INJECTOR CONTROL CIRCUIT SHORTED TO GROUND
FUSED ENGINE CONTROL RELAY OUTPUT CIRCUIT SHORTED TO INJECTOR CONTROL CIRCUIT
FUEL INJECTOR
POWERTRAIN CONTROL MODULE

Diagnostic Test

1. CHECK FOR CURRENT DTC

Turn the ignition on.
With the DRB III®, read the PCM DTCs.

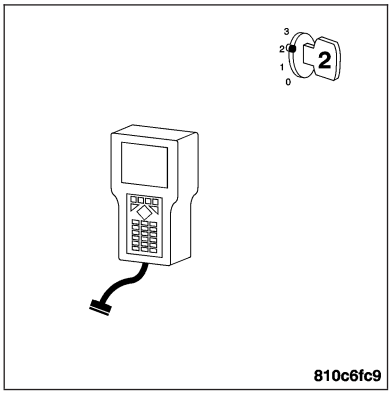

Is this DTC present?

Yes >> For complete diagnosis of this DTC, refer to (P0201) FUEL INJECTOR #1 CIRCUIT

No >> Go To 2

2. INTERMITTENT WIRING AND CONNECTORS

The conditions necessary to set this DTC are not present at this time.

Note: Check connectors — Clean/repair as necessary. Poor pin to terminal connections can set DTCs.Using the wiring diagram/schematic as a guide, inspect the wiring and connectors specific to this DTC. Wiggle the wires while checking for shorts and open circuits.

Note: Check for any Technical Service Bulletins that may apply.

Were there any problems found?

Yes >> Repair as necessary.
Perform POWERTRAIN VERIFICATION TEST - VER 2.

No >> The condition that caused this DTC to set is currently not present. Inspect the related wiring harness for a possible intermittent condition.

(P0211) THROTTLE ACTUATOR STUCK

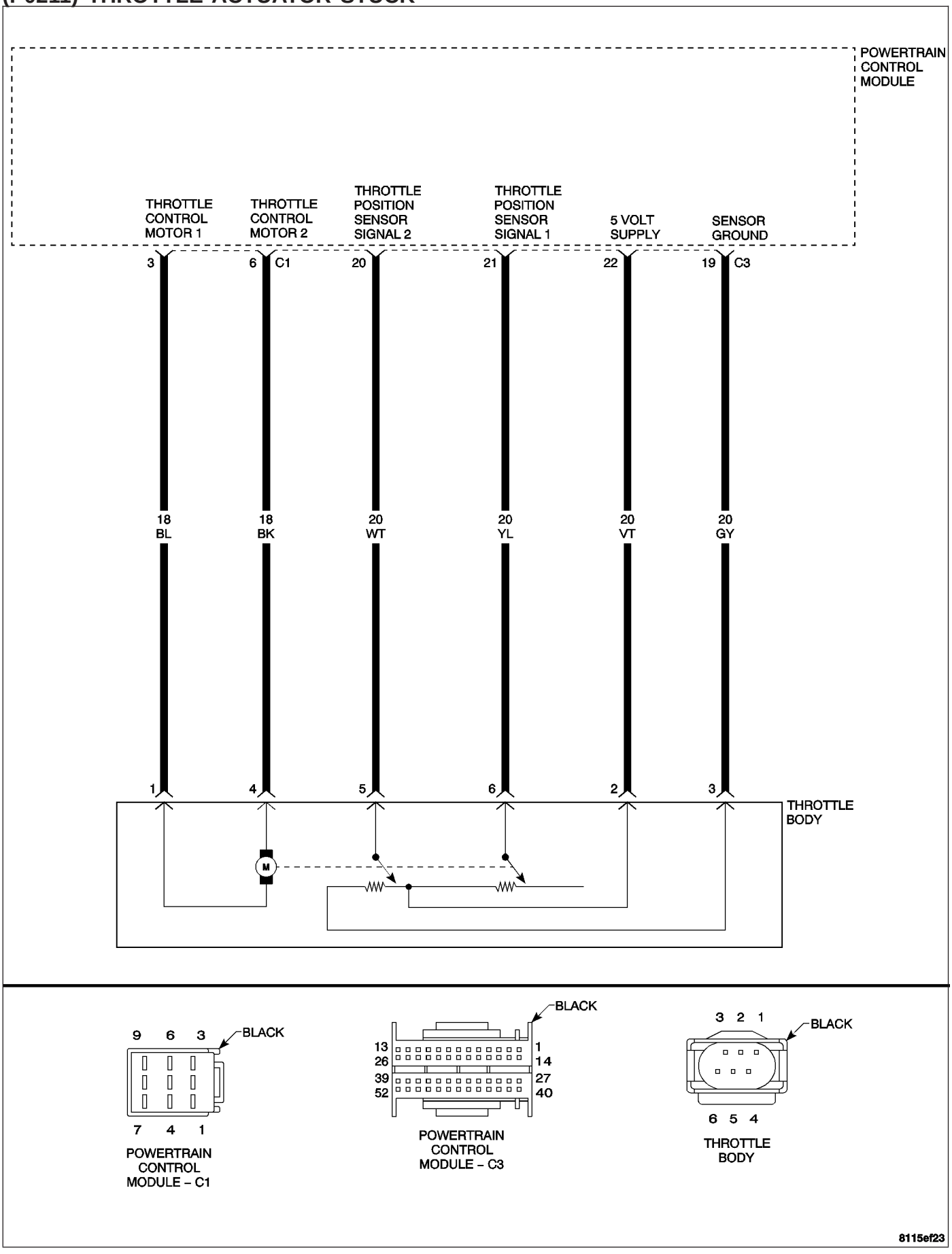

(P0211) THROTTLE ACTUATOR STUCK — CONTINUED

When Monitored and Set Condition

- When Monitored: Ignition on and battery voltage greater than 10 volts.
- Set Condition: Just after key on, the throttle is opened and closed to test the system. If the throttle plate does not return to Limp Home Position at the end of this test, this DTC will set. One trip fault.

POSSIBLE CAUSES
INTERMITTENT CONDITION
THROTTLE CONTROL MOTOR 1 CIRCUIT SHORTED TO VOLTAGE
THROTTLE CONTROL MOTOR 2 CIRCUIT OPEN
THROTTLE CONTROL MOTOR 1 CIRCUIT OPEN
THROTTLE CONTROL MOTOR 2 CIRCUIT SHORTED TO GROUND
THROTTLE CONTROL MOTOR 1 CIRCUIT SHORTED TO GROUND
THROTTLE PLATE - STUCK ABOVE LIMP HOME POSITION
POWERTRAIN CONTROL MODULE

For a complete Powertrain Control Module Circuit Diagram **Refer to Page 9-574**.

Diagnostic Test

1. CHECK FOR CURRENT DTC

Note: The PCM tests the Throttle Body Motor by opening and closing the Throttle Plate before starting the engine. If the Throttle plate does not return to the closed position during this test, this DTC will set.

Note: If the PCM detects and stores a DTC, the PCM also stores the engine/vehicle operating conditions under which the DTC was set. Some of these conditions are displayed on the DRB III® at the same time the DTC is displayed.

Note: Before erasing stored DTCs, record these conditions. Attempting to duplicate these conditions may assist when checking for a DTC.

Turn the ignition on.

With the DRB III®, erase PCM DTCs.

Note: It maybe necessary to road test the vehicle for this DTC to set.

With the DRB III®, read the PCM DTCs.

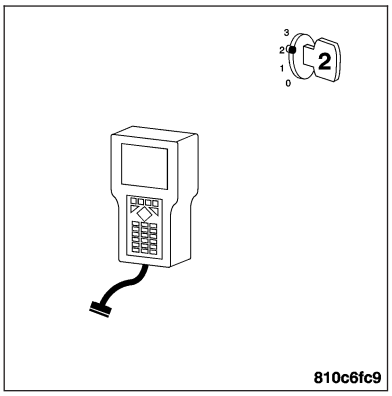

Did this DTC set again?

Yes >> Go To 2

No >> Go To 10

(P0211) THROTTLE ACTUATOR STUCK — CONTINUED

2. THROTTLE PLATE STUCK OPEN

Note: The PCM tests the Throttle Body Motor by opening and closing the Throttle Plate before starting the engine. If the Throttle plate does not return to the closed position during this test, this DTC will set.
Remove the Air Cleaner Housing **Refer to Page 9-608** and MAF **Refer to Page 14-37** from the Throttle Body.
Check for any signs of a foreign material causing the throttle plate to remain open.
Manually open and close the throttle plate using your hands.

Does the Throttle Plate move without sticking?

Yes >> Go To 3

No >> Remove the debris if possible or replace the Throttle Body Assembly. **Refer to Page 14-48**.
Perform POWERTRAIN VERIFICATION TEST - VER 2.

3. TP #1 AND TP #2 BOTH EQUAL 2.5 VOLTS

With the ignition on.
With the DRB III®, read both TP voltage readings.

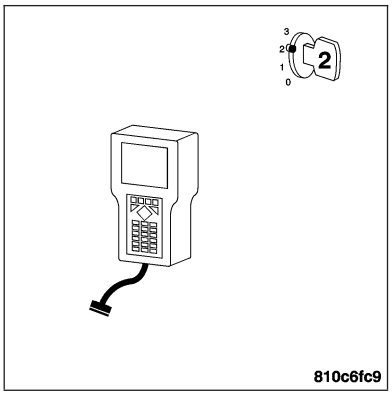

Are both TP readings stuck at 2.5 volts?

Yes >> Check the TP Signal circuits for excessive resistance, a short to each other, short to the Sensor Ground circuit.
Perform POWERTRAIN VERIFICATION TEST - VER 2.

No >> Go To 4

4. THROTTLE CONTROL MOTOR 1 CIRCUIT SHORTED TO VOLTAGE

Turn the ignition off.
Disconnect the Throttle Body harness connector.
Disconnect the PCM harness connectors.

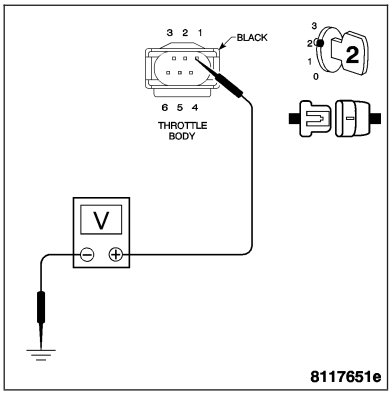

Note: Check connectors — Clean/repair as necessary.
Turn the ignition on.
Measure the voltage of the Throttle Control Motor 1 circuit at the Throttle Body harness connector.

Is the voltage above 1.0 volt?

Yes >> Repair the Throttle Control Motor 1 circuit for a short to voltage.
Perform POWERTRAIN VERIFICATION TEST - VER 2.

No >> Go To 5

(P0211) THROTTLE ACTUATOR STUCK — CONTINUED

5. THROTTLE CONTROL MOTOR 1 CKT OPEN

Turn the ignition off.

Measure the resistance of the Throttle Control Motor 1 circuit from the Throttle Body harness connector to the PCM harness connector.

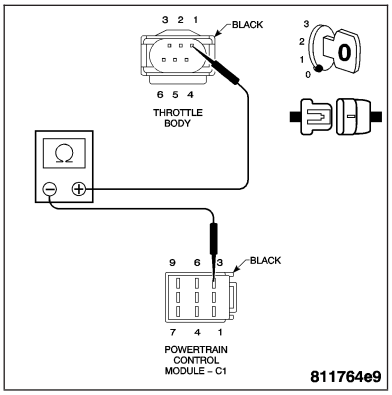

Is the resistance below 5.0 ohms?

Yes >> Go To 6

No >> Repair the Throttle Control Motor 1 circuit for an open.
Perform POWERTRAIN VERIFICATION TEST - VER 2.

6. THROTTLE CONTROL MOTOR 2 CIRCUIT OPEN

With the ignition off.

Measure the resistance of the Throttle Control Motor 2 circuit between the Throttle Body harness connector and the PCM harness connector.

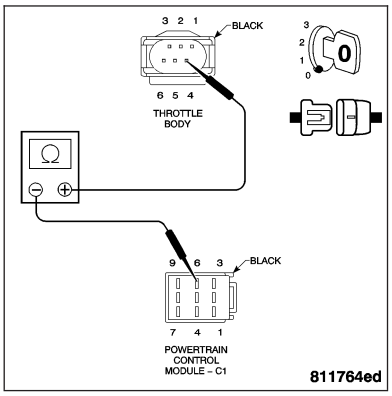

Is the resistance below 5.0 ohms?

Yes >> Go To 7

No >> Repair the Throttle Control Motor 2 circuit for an open.
Perform POWERTRAIN VERIFICATION TEST - VER 2.

7. THROTTLE CONTROL MOTOR 1 CIRCUIT SHORTED TO GROUND

With the ignition off.

Measure the resistance between ground and the Throttle Control Motor 1 circuit at the PCM harness connector.

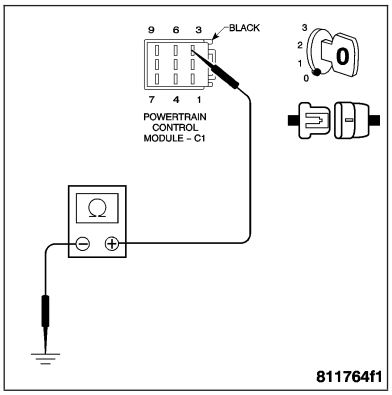

Is the resistance below 100 ohms?

Yes >> Repair the Throttle Control Motor 1 circuit for a short to ground.
Perform POWERTRAIN VERIFICATION TEST - VER 2.

No >> Go To 8

(P0211) THROTTLE ACTUATOR STUCK — CONTINUED

8. THROTTLE CONTROL MOTOR 2 CIRCUIT SHORTED TO GROUND

With the ignition off.

Measure the resistance between ground and the Throttle Control Motor 2 circuit at the PCM harness connector.

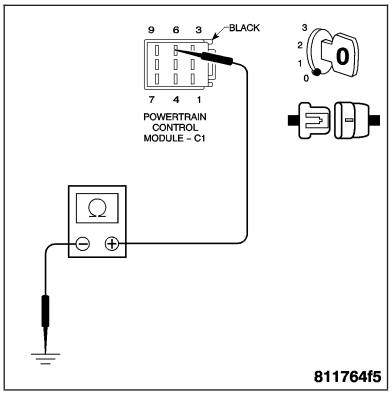

Is the resistance below 100 ohms?

Yes >> Repair the Throttle Control Motor 2 circuit for a short to ground.
Perform POWERTRAIN VERIFICATION TEST - VER 2.

No >> Go To 9

9. PCM

Note: Before continuing, check the PCM harness connector terminals for corrosion, damage, or terminal push out. Repair as necessary.
Using the schematics as a guide, inspect the wire harness and connectors. Pay particular attention to all Power and Ground circuits.

If there are no possible causes remaining, view repair.

Repair >> Replace and program the Powertrain Control Module. **Refer to Page 8E-56**.
Perform POWERTRAIN VERIFICATION TEST - VER 2.

10. INTERMITTENT WIRING AND CONNECTORS

The conditions necessary to set this DTC are not present at this time.

Note: Check connectors — Clean/repair as necessary. Poor pin to terminal connections can set DTCs.
Using the wiring diagram/schematic as a guide, inspect the wiring and connectors specific to this DTC. Wiggle the wires while checking for shorts and open circuits.

Note: Check for any Technical Service Bulletins that may apply.

Were there any problems found?

Yes >> Repair as necessary.
Perform POWERTRAIN VERIFICATION TEST - VER 2.

No >> The condition that caused this DTC to set is currently not present. Inspect the related wiring harness for a possible intermittent condition.

(P0211) THROTTLE ACTUATOR STUCK

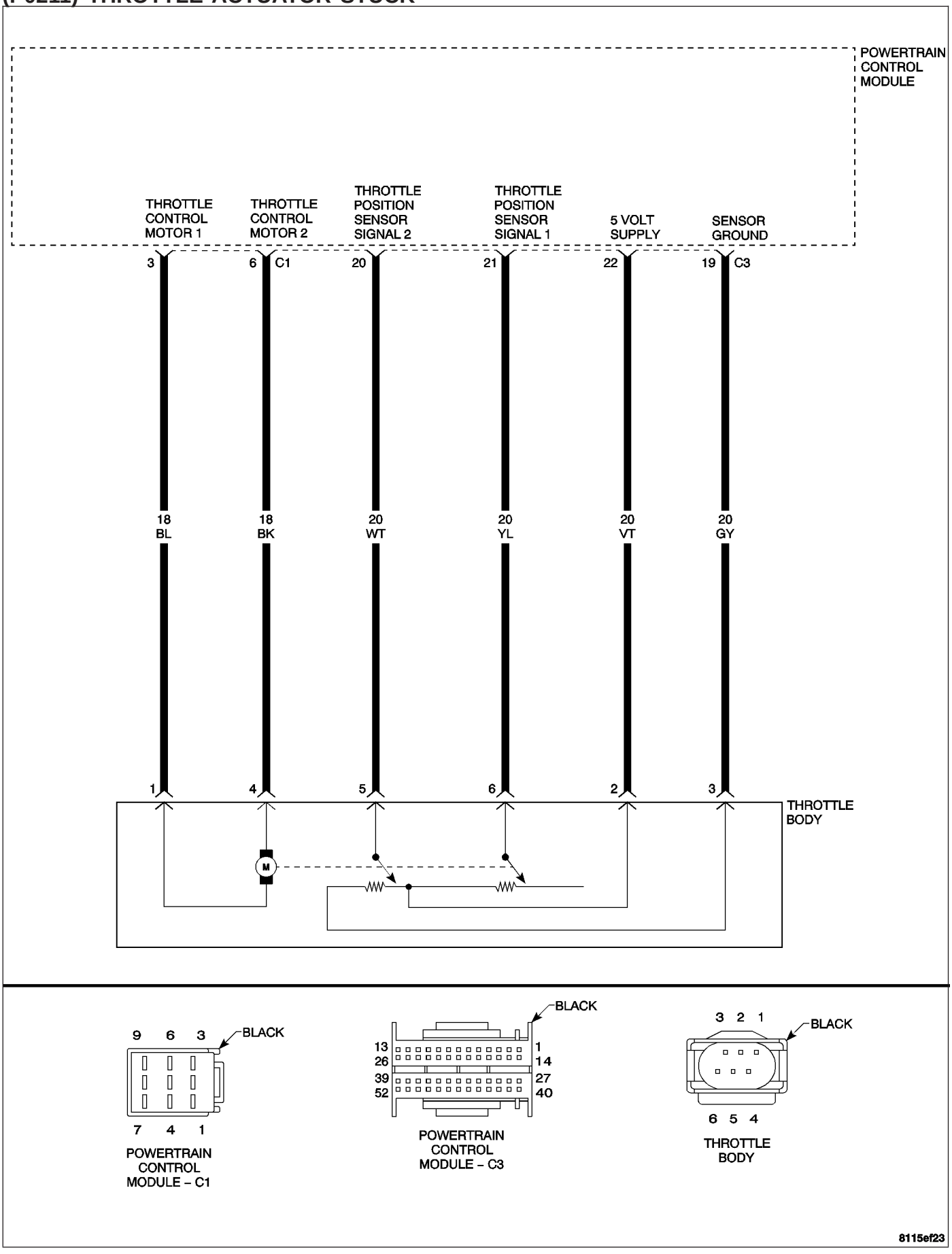

(P0211) THROTTLE ACTUATOR STUCK — CONTINUED

When Monitored and Set Condition

- When Monitored: Ignition on.
- Set Condition: Just after key on, the throttle is opened and closed to test the system. If the Throttle Position Sensor (TPS) does not quickly exceed a calibrated value this DTC will set. One trip fault.

POSSIBLE CAUSES
INTERMITTENT CONDITION
THROTTLE PLATE STUCK AT OR BELOW LIMP HOME POSITION
THROTTLE CONTROL MOTOR 2 CIRCUIT SHORTED TO VOLTAGE
THROTTLE CONTROL MOTOR 1 CIRCUIT OPEN
THROTTLE CONTROL MOTOR 2 CIRCUIT OPEN
THROTTLE CONTROL MOTOR 1 CIRCUIT SHORTED TO GROUND
THROTTLE CONTROL MOTOR 2 CIRCUIT SHORTED TO GROUND
POWERTRAIN CONTROL MODULE

For a complete Powertrain Control Module Circuit Diagram **Refer to Page 9-574**.

Diagnostic Test

1. CHECK FOR CURRENT DTC

Note: The PCM tests the Electronic Throttle Control (ETC) Motor by opening and closing the Throttle Plate before starting the engine. If the Throttle Plate does not open during this test, this DTC will set.

Note: If the PCM detects and stores a DTC, the PCM also stores the engine/vehicle operating conditions under which the DTC was set. Some of these conditions are displayed on the DRB III® at the same time the DTC is displayed.

Note: Before erasing stored DTCs, record these conditions. Attempting to duplicate these conditions may assist when checking for an active DTC.

Turn the ignition on.

With the DRB III®, erase PCM DTCs.

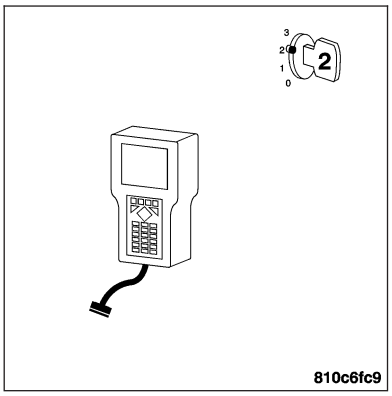

Note: It maybe necessary to road test the vehicle for this DTC to set.

With the DRB III®, read the PCM DTCs.

Did this DTC set again?

Yes >> Go To 2

No >> Go To 9

(P0211) THROTTLE ACTUATOR STUCK — CONTINUED

2. THROTTLE PLATE STUCK OPEN

Note: The PCM tests the ETC Motor by opening and closing the Throttle Plate before starting the engine. If the Throttle plate does not return to the closed position during this test, this DTC will set.
Turn the ignition off.

Remove the Air Cleaner Housing **Refer to Page 9-608** and MAF **Refer to Page 14-37** from the Throttle Body.

Check for any signs of a foreign material causing the Throttle to remain open.

Manually open and close the throttle plate using your hands.

Does the Throttle Plate move?

Yes >> Go To 3

No >> Remove the debris if possible or replace the Throttle Body Assembly. **Refer to Page 14-48**.
Perform POWERTRAIN VERIFICATION TEST - VER 2.

3. THROTTLE CONTROL MOTOR 2 CIRCUIT SHORT TO VOLTAGE

With the ignition off.

Disconnect the PCM harness connectors.

Disconnect the Throttle Body harness connector.

Note: Check connectors — Clean/repair as necessary.
Turn the ignition on.

Measure the voltage of the Throttle Control Motor 2 circuit at the Throttle Body harness connector.

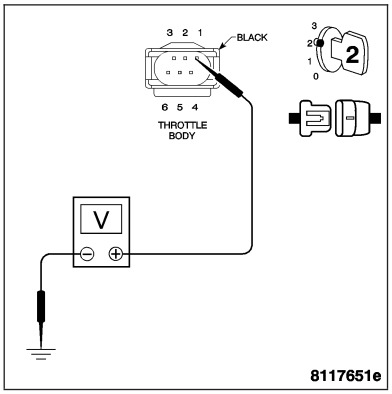

Is the voltage above 1.0 volt?

Yes >> Repair the Throttle Control Motor 2 circuit for a short to voltage.
Perform POWERTRAIN VERIFICATION TEST - VER 2.

No >> Go To 4

4. THROTTLE CONTROL MOTOR 1 CKT OPEN

Turn the ignition off.

Measure the resistance of the Throttle Control Motor 1 circuit from the Throttle Body harness connector to the PCM harness connector.

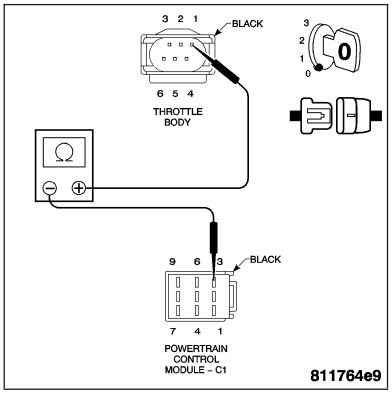

Is the resistance below 5.0 ohms?

Yes >> Go To 5

No >> Repair the Throttle Control Motor 1 circuit for an open.
Perform POWERTRAIN VERIFICATION TEST - VER 2.

(P0211) THROTTLE ACTUATOR STUCK — CONTINUED

5. THROTTLE CONTROL MOTOR 2 CIRCUIT OPEN

With the ignition off.

Measure the resistance of the Throttle Control Motor 2 circuit from the Throttle Body harness connector to the PCM harness connector.

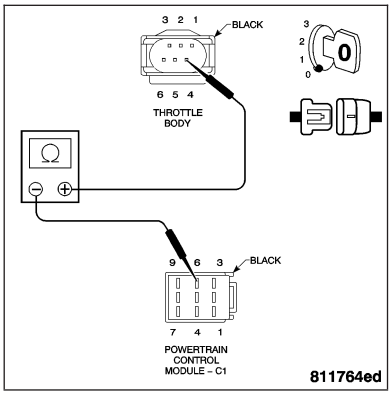

Is the resistance below 5.0 ohms?

Yes >> Go To 6

No >> Repair the Throttle Control Motor 2 circuit for an open.
Perform POWERTRAIN VERIFICATION TEST - VER 2.

6. THROTTLE CONTROL MOTOR 1 CIRCUIT SHORTED TO GROUND

With the ignition off.

Measure the resistance between ground and the Throttle Control Motor 1 circuit.

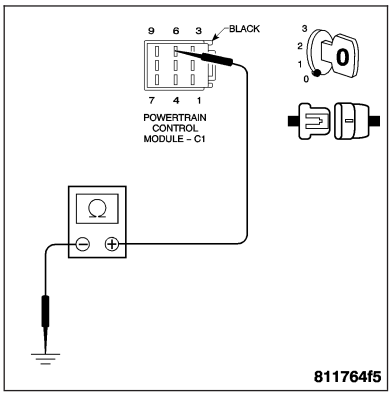

Is the resistance below 100 ohms?

Yes >> Repair the Throttle Control Motor 1 circuit for a short to ground.
Perform POWERTRAIN VERIFICATION TEST - VER 2.

No >> Go To 7

7. THROTTLE CONTROL MOTOR 2 CIRCUIT SHORTED TO GROUND

With the ignition off.

Measure the resistance between ground and the Throttle Control Motor 2 circuit.

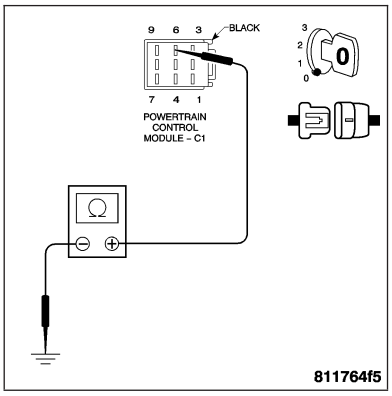

Is the resistance below 100 ohms?

Yes >> Repair the Throttle Control Motor 2 circuit for a short to ground.
Perform POWERTRAIN VERIFICATION TEST - VER 2.

No >> Go To 8

(P0211) THROTTLE ACTUATOR STUCK — CONTINUED

8. PCM

Note: Before continuing, check the PCM harness connector terminals for corrosion, damage, or terminal push out. Repair as necessary.
Using the schematics as a guide, inspect the wire harness and connectors. Pay particular attention to all Power and Ground circuits.

If there are no possible causes remaining, view repair.

Repair >> Replace and program the Powertrain Control Module. **Refer to Page 8E-56**.
Perform POWERTRAIN VERIFICATION TEST - VER 2.

9. INTERMITTENT WIRING AND CONNECTORS

The condition that caused this DTC to set is currently not present. Inspect the related wiring harness for a possible intermittent condition.

Note: Check connectors — Clean/repair as necessary. Poor pin to terminal connections can set DTCs.

Note: Check for any Technical Service Bulletins that may apply.
Using the wiring diagram/schematic as a guide, inspect the wiring and connectors specific to this DTC. Wiggle the wires while checking for shorts and open circuits.

Were there any problems found?

Yes >> Repair as necessary.
Perform POWERTRAIN VERIFICATION TEST - VER 2.

No >> The condition that caused this DTC to set is currently not present. Inspect the related wiring harness for a possible intermittent condition.

(P0221) APPS SENSOR #1 AND #2 VOLTAGE CORRELATION

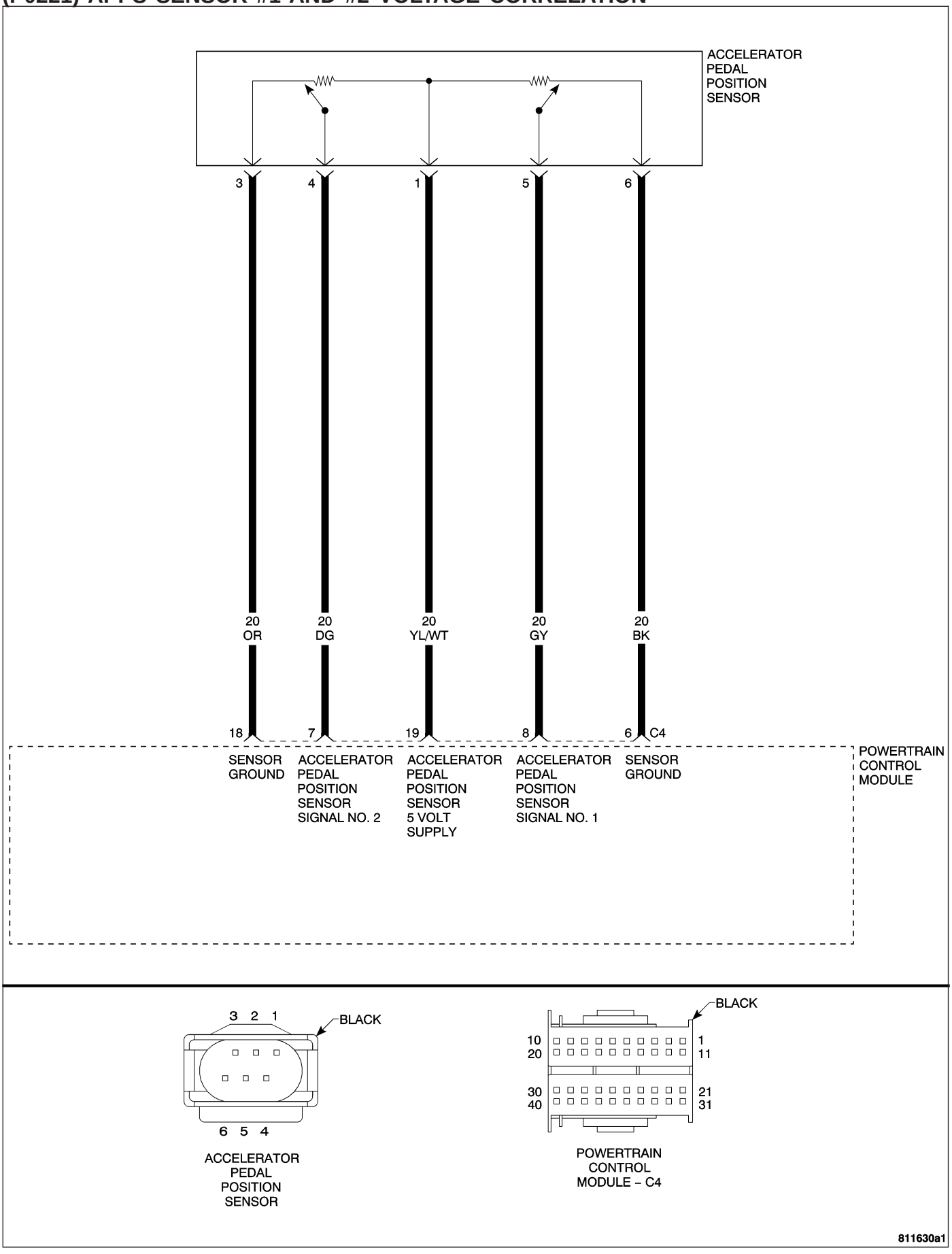

(P0221) APPS SENSOR #1 AND #2 VOLTAGE CORRELATION — CONTINUED

When Monitored and Set Condition

- When Monitored: With the ignition on and no APPS #1 and APPS #2 DTC present.
- Set Condition: APPS values #1 and #2 are not coherent. Engine will only idle if the Brake pedal is Pressed or failed. Acceleration rate and engine output are limited.

POSSIBLE CAUSES
5-VOLT SUPPLY CIRCUIT OPEN
ACCELERATOR PEDAL POSITION SENSOR GROUND CIRCUIT OPEN
ACCELERATOR PEDAL POSITION SENSOR SIGNAL CIRCUIT OPEN
POWERTRAIN CONTROL MODULE

For a complete Powertrain Control Module Circuit Diagram **Refer to Page 9-574**.

Diagnostic Test

1. CHECK FOR CURRENT DTC

Note: If the PCM detects and stores a DTC, the PCM also stores the engine/vehicle operating conditions under which the DTC was set. Some of these conditions are displayed on the DRB III® at the same time the DTC is displayed.

Note: Before erasing stored DTCs, record these conditions. Attempting to duplicate these conditions may assist when checking for a DTC.

Turn the ignition on.

With the DRB III®, erase PCM DTCs.

Note: It maybe necessary to road test the vehicle for this DTC to set.

With the DRB III®, read the PCM DTCs.

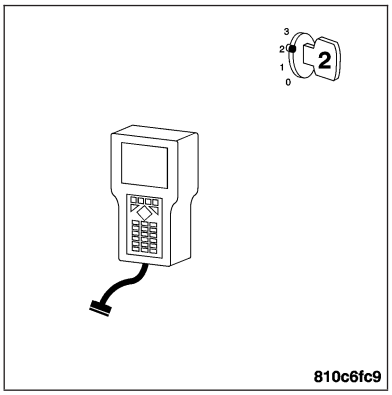

Did this DTC set again?

Yes >> Go To 2

No >> Go To 7

2. OPEN APPS SIGNAL CIRCUITS

Note: The following test must be performed on both APPS Signal circuits.

Turn the ignition off.

Disconnect the APPS harness connector.

Disconnect the PCM C4 harness connector.

Note: Check connectors — Clean/repair as necessary.

Measure the resistance of APPS #1 and #2 Signal circuits from the APPS harness connector to the PCM C4 harness connector.

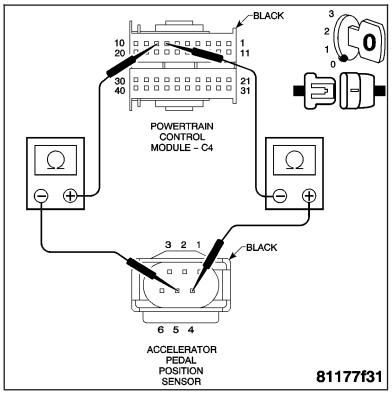

Is the resistance below 5.0 ohms?

Yes >> Go To 3

No >> Repair the faulty APPS Signal circuit for an open. Perform POWERTRAIN VERIFICATION TEST - VER 2.

(P0221) APPS SENSOR #1 AND #2 VOLTAGE CORRELATION — CONTINUED

3. OPEN 5-VOLT SUPPLY CIRCUIT

With the ignition off.

Measure the resistance of the 5-volt Supply circuit from the APPS harness connector to the PCM C4 harness connector.

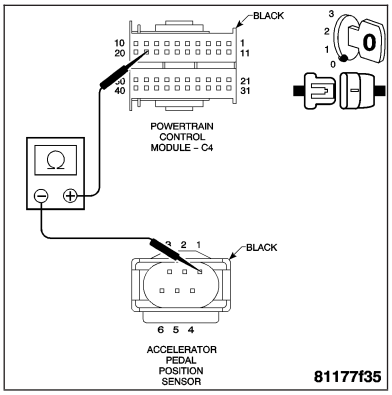

Is the resistance above 5.0 ohms?

Yes >> Repair the 5-volt Supply circuit for an open.
Perform POWERTRAIN VERIFICATION TEST - VER 2.

No >> Go To 4

4. OPEN APPS GROUND CIRCUITS

With the ignition off.

Measure the resistance of the APPS #1 Ground circuit from the APPS harness connector to the PCM C4 harness connector.

Measure the resistance of the APPS #2 Ground circuit from the APPS harness connector to the PCM C4 harness connector.

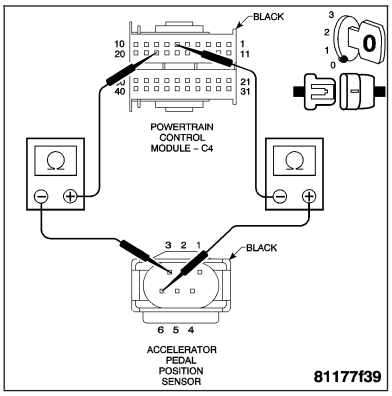

Is the resistance above 5.0 ohms?

Yes >> Repair the faulty Sensor Ground circuit for an open.
Perform POWERTRAIN VERIFICATION TEST - VER 2.

No >> Go To 5

5. CHECKING APPS #1 AND #2 W/ LAB SCOPE

Turn the ignition on.

With the DRB III®/PEP Module being used as a Dual Channel Lab Scope with Special Tool #6801:

Backprobe APPS #1 Signal circuit using Channel 1 at the APPS harness connector.

Backprobe APPS #2 Signal circuit using Channel 2 at the APPS harness connector.

Slowly press and release the Accelerator Pedal while monitoring the DRB III® screen.

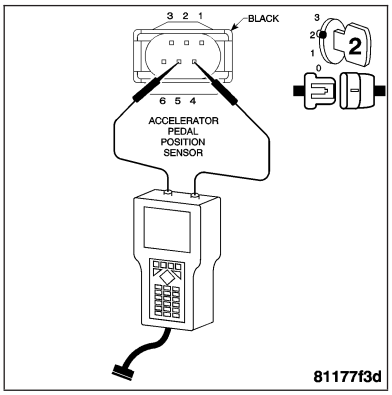

Do the scope patterns display a normal APPS Signal scope pattern?

Yes >> Go To 6

No >> Replace the Accelerator Pedal Position Sensor. **Refer to Page 14-26**.
Perform POWERTRAIN VERIFICATION TEST - VER 2.

(P0221) APPS SENSOR #1 AND #2 VOLTAGE CORRELATION — CONTINUED

6. PCM

Note: Before continuing, check the PCM harness connector terminals for corrosion, damage, or terminal push out. Repair as necessary.
Using the schematics as a guide, inspect the wire harness and connectors. Pay particular attention to all Power and ground circuits.

If there are no possible causes remaining, view repair.

Repair >> Replace and program the Powertrain Control Module. **Refer to Page 8E-56**.
Perform POWERTRAIN VERIFICATION TEST - VER 2.

7. INTERMITTENT WIRING AND CONNECTORS

The conditions necessary to set this DTC are not present at this time.

Note: Check connectors — Clean/repair as necessary. Poor pin to terminal connections can set DTCs.

Note: Check for any Technical Service Bulletins that may apply.
Using the wiring diagram/schematic as a guide, inspect the wiring and connectors specific to this DTC. Wiggle the wires while checking for shorts and open circuits.

Were there any problems found?

Yes >> Repair as necessary.
Perform POWERTRAIN VERIFICATION TEST - VER 2.

No >> The condition that caused this DTC to set is currently not present. Inspect the related wiring harness for a possible intermittent condition.

(P0221) IDLE SPEED PERFORMANCE

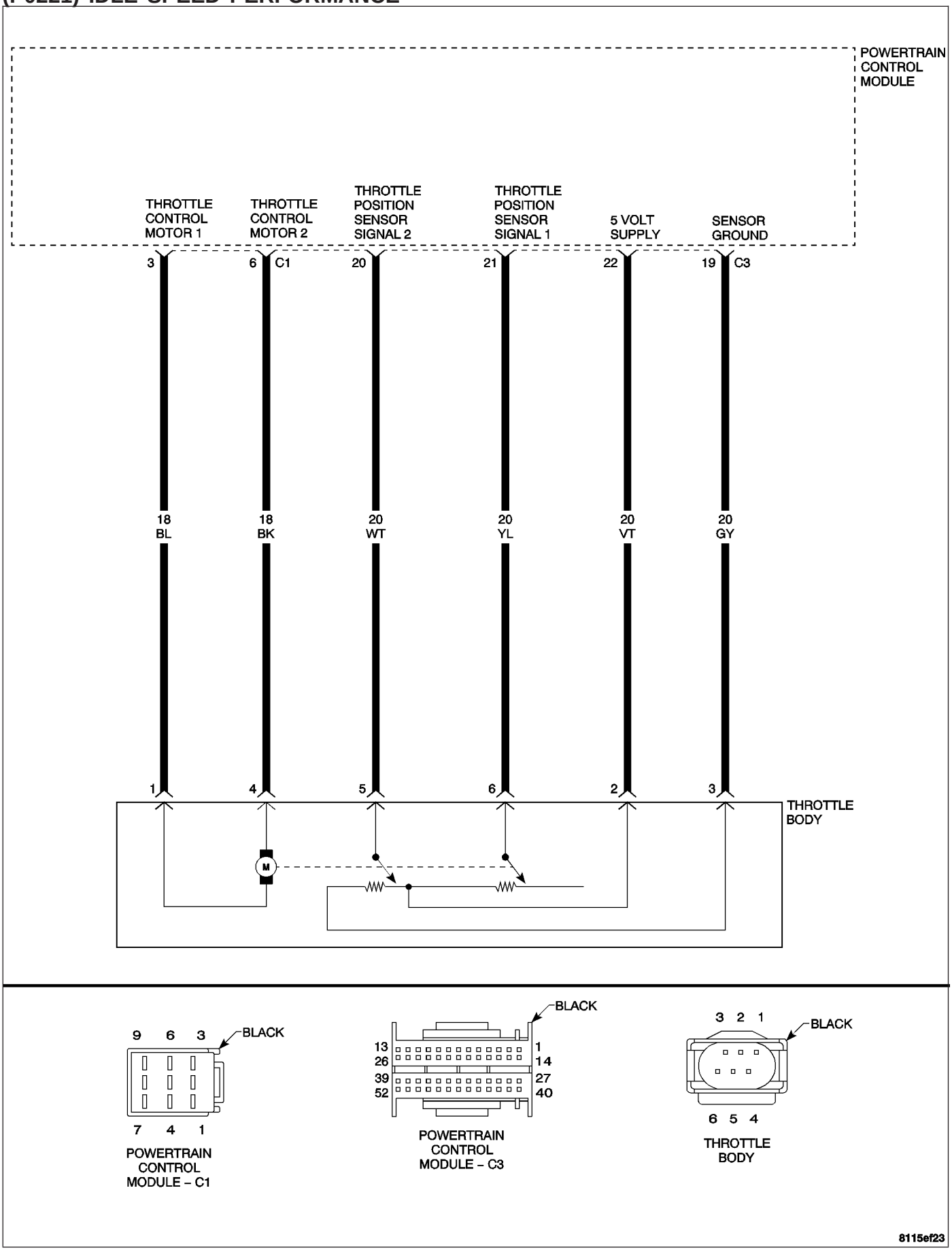

(P0221) IDLE SPEED PERFORMANCE — CONTINUED

When Monitored and Set Condition

- When Monitored: With the engine running.
- Set Condition: Low limit: The Powertrain Control Module (PCM) required engine RPM must be reached within 25 seconds. The fault is set if the engine RPM is less than the PCM required RPM by 100 RPM or more after 25 seconds. High limit: The PCM required engine RPM must be reached within 25 seconds. The fault is set if the engine RPM is greater than the PCM required RPM by 200 RPM or more after 25 seconds.

POSSIBLE CAUSES
AIR INTAKE SYSTEM
VACUUM LEAKS
THROTTLE BODY OPERATION
POWERTRAIN CONTROL MODULE

For a complete Powertrain Control Module Circuit Diagram **Refer to Page 9-574**.

Diagnostic Test

1. CHECK FOR CURRENT DTC

Note: Diagnose and repair any Throttle Body or Accelerator Pedal Position Sensor (APPS) DTC before diagnosing this DTC.

Note: Check connectors — Clean/repair as necessary. Poor pin to terminal connections can set DTCs.

Note: Check for any Technical Service Bulletins that may apply.

Note: If the PCM detects and stores a DTC, the PCM also stores the engine/vehicle operating conditions under which the DTC was set. Some of these conditions are displayed on the DRB III® at the same time the DTC is displayed.

Note: Before erasing stored DTCs, record these conditions. Attempting to duplicate these conditions may assist when checking for a DTC.

Turn the ignition on.

With the DRB III®, erase PCM DTCs.

Note: It maybe necessary to road test the vehicle for this DTC to set.

With the DRB III®, read the PCM DTCs.

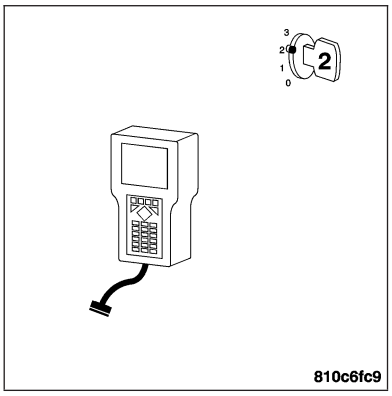

Did this DTC set again?

Yes >> Go To 2

No >> Go To 6

(P0221) IDLE SPEED PERFORMANCE — CONTINUED

2. AIR INTAKE SYSTEM

Turn the ignition off.

Inspect the Air Intake System for the following problems.

Restrictions: Dirty Air Cleaner, Foreign material trapped in the air intake tube, etc.

Leaks: Air Intake tube connection, Air Cleaner housing, etc.

Remove the Air Cleaner Housing **Refer to Page 9-608** and MAF Sensor **Refer to Page 14-37** from the Throttle Body.

Check for any signs of a foreign material causing the Throttle to remain open.

Were any problems found?

Yes >> Repair or replace as necessary.
Perform POWERTRAIN VERIFICATION TEST - VER 2.

No >> Go To 3

3. VACUUM LEAKS

Start the engine.

Inspect the vehicle for external vacuum leaks.

Inspect the engine for internal leaks.

Were any vacuum leaks found?

Yes >> Repair the vacuum leak as necessary.
Perform POWERTRAIN VERIFICATION TEST - VER 2.

No >> Go To 4

4. THROTTLE BODY OPERATION

Turn the ignition off.

Inspect the throttle body plate for carbon build up or other restrictions.

Verify that the Accelerator Pedal and APPS are not binding.

WARNING: WHEN THE ENGINE IS OPERATING, DO NOT STAND IN A DIRECT LINE WITH THE FAN. DO NOT PUT YOUR HANDS NEAR THE PULLEYS, BELTS OR FAN. DO NOT WEAR LOOSE CLOTHING.
While the vehicle is running, lightly tap on the ETC Motor with your hand and listen for the idle to raise.

Were any problems found?

Yes >> Repair or replace as necessary.
Perform POWERTRAIN VERIFICATION TEST - VER 2.

No >> Go To 5

(P0221) IDLE SPEED PERFORMANCE — CONTINUED

5. PCM

Note: Before continuing, check the PCM harness connector terminals for corrosion, damage, or terminal push out. Repair as necessary.
Using the schematics as a guide, inspect the wire harness and connectors. Pay particular attention to all Power and Ground circuits.

If there are no possible causes remaining, view repair.

Repair >> Replace and program the Powertrain Control Module. **Refer to Page 8E-56**.
Perform POWERTRAIN VERIFICATION TEST - VER 2.

6. INTERMITTENT WIRING AND CONNECTORS

The condition that caused this DTC to set is currently not present. Inspect the related wiring harness for a possible intermittent condition.

Note: Check connectors — Clean/repair as necessary. Poor pin to terminal connections can set DTCs.Using the wiring diagram/schematic as a guide, inspect the wiring and connectors specific to this DTC. Wiggle the wires while checking for shorts and open circuits.

Note: Check for any Technical Service Bulletins that may apply.

Were there any problems found?

Yes >> Repair as necessary.
Perform POWERTRAIN VERIFICATION TEST - VER 2.

No >> The condition that caused this DTC to set is currently not present. Inspect the related wiring harness for a possible intermittent condition.

(P0221) ELECTRONIC THROTTLE CONTROL MODULE PERFORMANCE

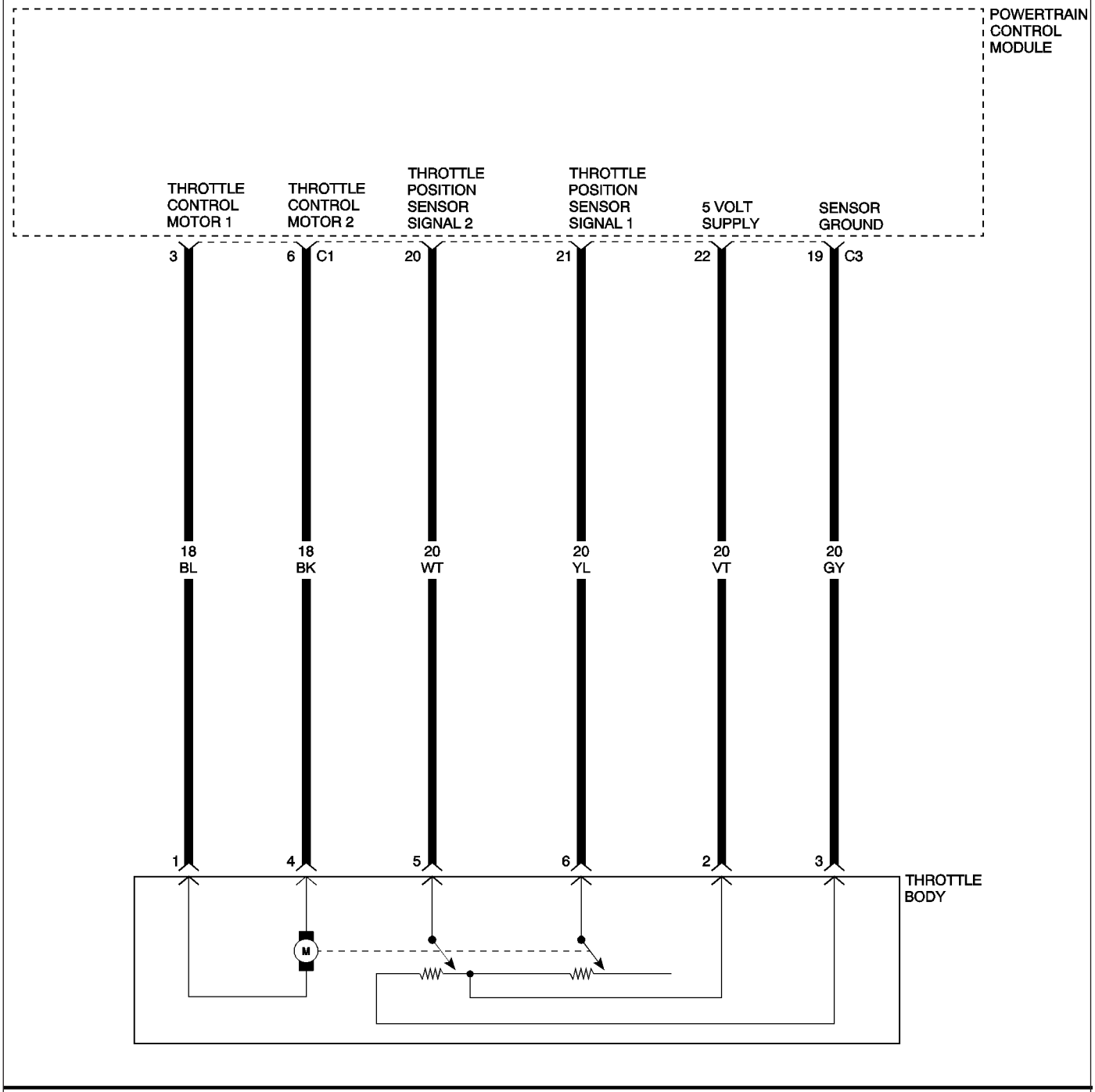

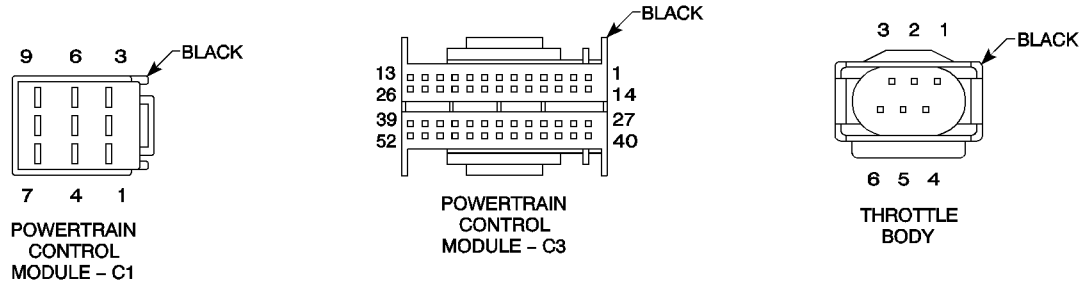

8115ef23

(P0221) ELECTRONIC THROTTLE CONTROL MODULE PERFORMANCE — CONTINUED

When Monitored and Set Condition

- When Monitored: Ignition on with no MAP Sensor DTCs set.
- Set Condition: TP Sensor signals in the Throttle Body Assembly do not correlate to the MAP Sensor signal.

POSSIBLE CAUSES
THROTTLE POSITION SENSOR SWEEP
THROTTLE POSITION SENSOR SIGNAL CIRCUIT SHORTED TO VOLTAGE
THROTTLE POSITION SENSOR SIGNAL CIRCUIT OPEN
THROTTLE POSITION SENSOR GROUND CIRCUIT OPEN
THROTTLE POSITION SENSOR #1 SIGNAL CIRCUIT SHORTED TO TP SENSOR #2 SIGNAL CIRCUIT
5-VOLT SUPPLY CIRCUIT SHORTED TO GROUND
5-VOLT SUPPLY CIRCUIT OPEN
THROTTLE BODY ASSEMBLY
POWERTRAIN CONTROL MODULE

Diagnostic Test

1. CHECK FOR CURRENT DTC

Turn the ignition on.
With the DRB III®, read the PCM DTCs.

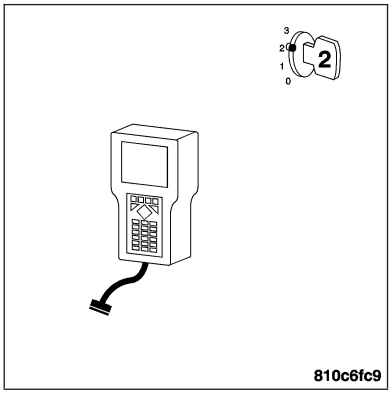

Is this DTC present?

Yes >> For complete diagnosis of this DTC, refer to (P0120) ELECTRONIC THROTTLE CONTROL MOTOR PERFORMANCE.

No >> Go To 2

2. INTERMITTENT WIRING AND CONNECTORS

The conditions necessary to set this DTC are not present at this time.

Note: Check connectors — Clean/repair as necessary. Poor pin to terminal connections can set DTCs.Using the wiring diagram/schematic as a guide, inspect the wiring and connectors specific to this DTC. Wiggle the wires while checking for shorts and open circuits.

Note: Check for any Technical Service Bulletins that may apply.

Were there any problems found?

Yes >> Repair as necessary.
Perform POWERTRAIN VERIFICATION TEST - VER 2.

No >> The condition that caused this DTC to set is currently not present. Inspect the related wiring harness for a possible intermittent condition.

(P0221) ELECTRONIC THROTTLE CONTROL MODULE PROCESSOR

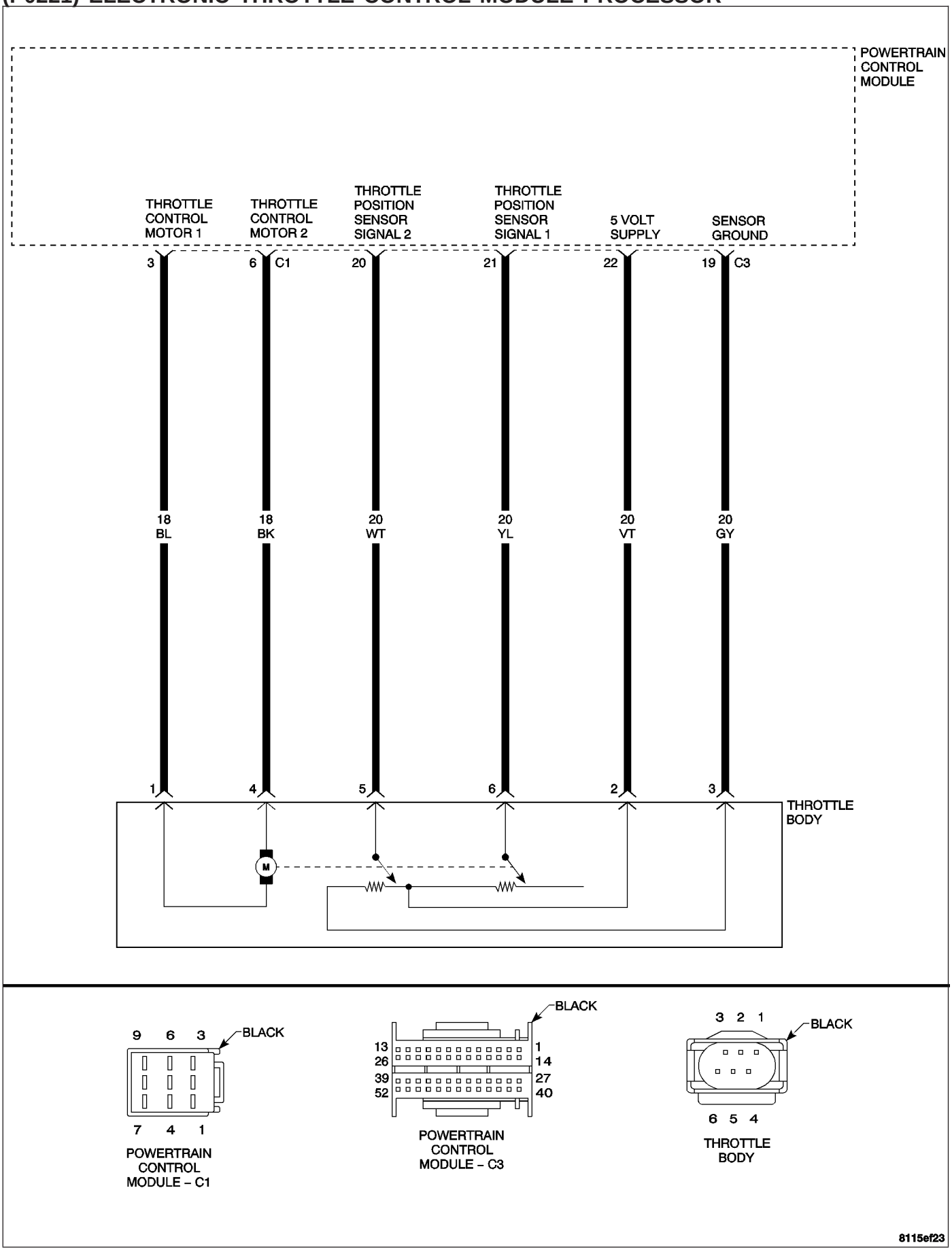

(P0221) ELECTRONIC THROTTLE CONTROL MODULE PROCESSOR — CONTINUED

When Monitored and Set Condition

- When Monitored: Ignition on with no MAP Sensor DTCs set.
- Set Condition: TP Sensor signals in the Throttle Body Assembly do not correlate to the MAP Sensor signal.

POSSIBLE CAUSES
THROTTLE POSITION SENSOR SWEEP
THROTTLE POSITION SENSOR SIGNAL CIRCUIT SHORTED TO VOLTAGE
THROTTLE POSITION SENSOR SIGNAL CIRCUIT OPEN
5-VOLT SUPPLY CIRCUIT OPEN
5-VOLT SUPPLY CIRCUIT SHORTED TO GROUND
THROTTLE POSITION SENSOR GROUND CIRCUIT OPEN
THROTTLE POSITION SENSOR #1 SIGNAL CIRCUIT SHORTED TO TP SENSOR #2 SIGNAL CIRCUIT
THROTTLE BODY ASSEMBLY
POWERTRAIN CONTROL MODULE

Diagnostic Test

1. CHECK FOR CURRENT DTC

Turn the ignition on.
With the DRB III®, read the PCM DTCs.

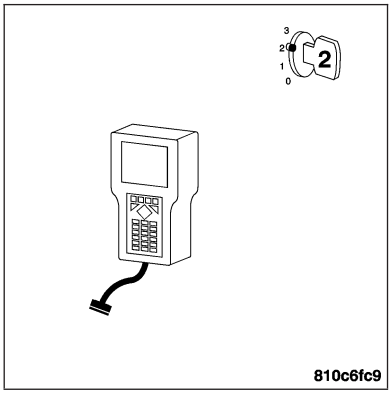

Is this DTC present?

Yes >> For complete diagnosis of this DTC, refer to (P0120) ELECTRONIC THROTTLE CONTROL MOTOR PERFORMANCE.

No >> Go To 2

2. INTERMITTENT WIRING AND CONNECTORS

The conditions necessary to set this DTC are not present at this time.

Note: Check connectors — Clean/repair as necessary. Poor pin to terminal connections can set DTCs.Using the wiring diagram/schematic as a guide, inspect the wiring and connectors specific to this DTC. Wiggle the wires while checking for shorts and open circuits.

Note: Check for any Technical Service Bulletins that may apply.

Were there any problems found?

Yes >> Repair as necessary.
Perform POWERTRAIN VERIFICATION TEST - VER 2.

No >> The condition that caused this DTC to set is currently not present. Inspect the related wiring harness for a possible intermittent condition.

(P0222) APPS SIGNAL #2 CIRCUIT LOW

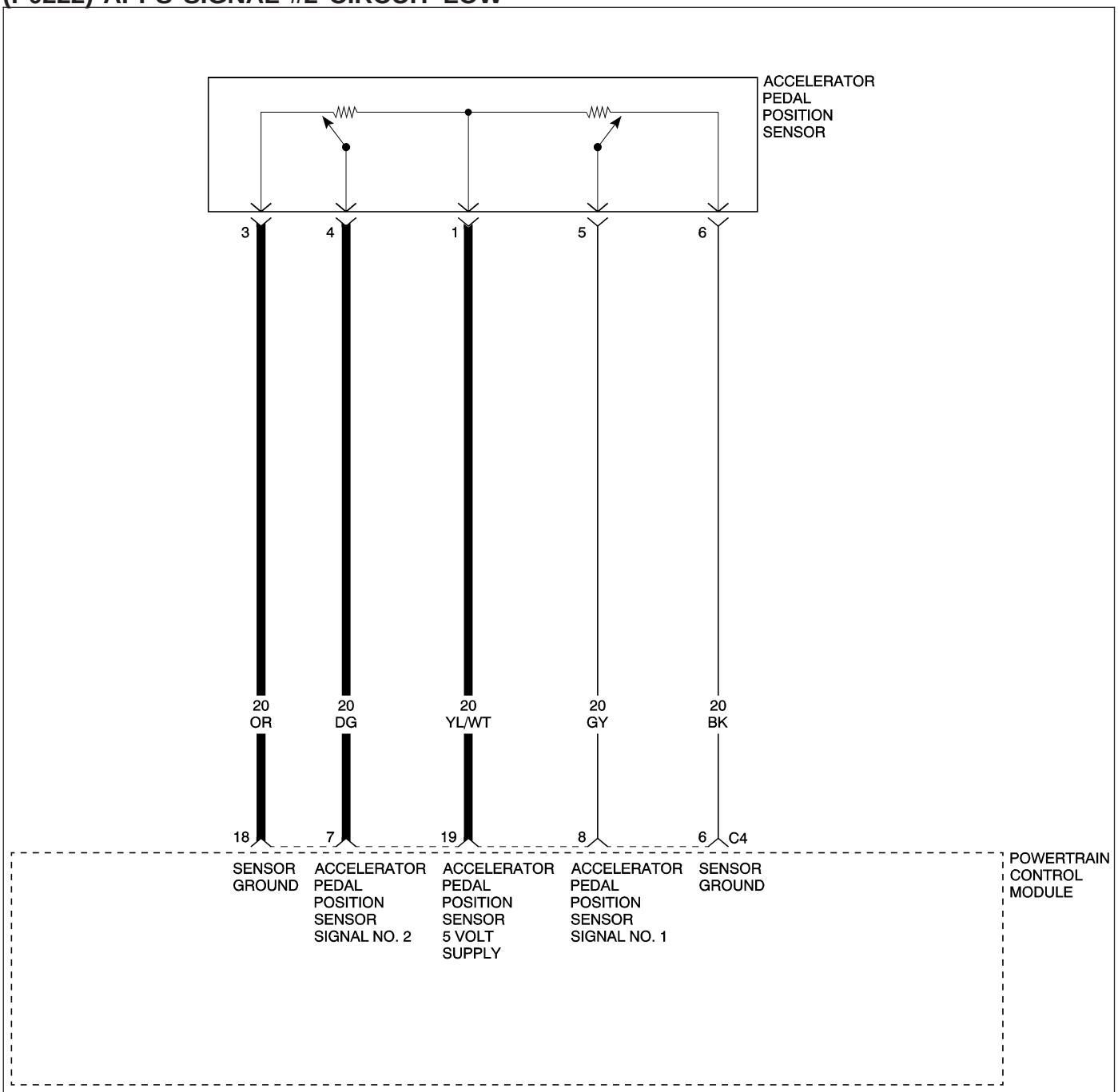

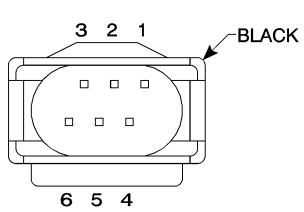

ACCELERATOR PEDAL POSITION SENSOR

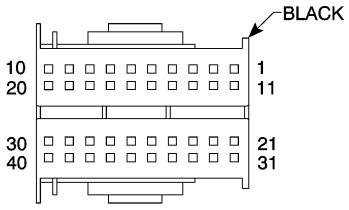

POWERTRAIN CONTROL MODULE – C4

8115f4eb

(P0222) APPS SIGNAL #2 CIRCUIT LOW — CONTINUED

When Monitored and Set Condition

- When Monitored: With the ignition on and no other Accelerator Pedal Position Sensor (APPS) #2 DTCs present.
- Set Condition: When the APPS #2 voltage is too low. Engine will only idle if the Brake pedal is pressed or has failed. Acceleration rate and Engine output are limited. One trip fault.

POSSIBLE CAUSES
ACCELERATOR PEDAL POSITION SENSOR (APPS) #2 SWEEP
INTERMITTENT CONDITION
5-VOLT SUPPLY CIRCUIT OPEN
5-VOLT SUPPLY CIRCUIT SHORTED TO GROUND
ACCELERATOR PEDAL POSITION SENSOR #2 SIGNAL CIRCUIT SHORTED TO SENSOR GROUND CIRCUIT
ACCELERATOR PEDAL POSITION SENSOR #2 SIGNAL CIRCUIT OPEN
ACCELERATOR PEDAL POSITION SENSOR #2 SIGNAL CIRCUIT SHORTED TO GROUND
ACCELERATOR PEDAL POSITION SENSOR
POWERTRAIN CONTROL MODULE

For a complete Powertrain Control Module Circuit Diagram **Refer to Page 9-574**.

Diagnostic Test

1. APPS BELOW 0.25 VOLT

Turn the ignition on.
With the DRB III®, read the APPS #2 voltage.

Is the voltage below 0.25 volt?

Yes >> Go To 2
No >> Go To 9

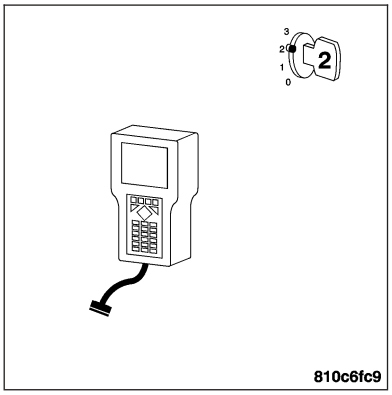

(P0222) APPS SIGNAL #2 CIRCUIT LOW — CONTINUED

2. 5-VOLT SUPPLY CIRCUIT

Turn the ignition off.

Disconnect the APPS harness connector.

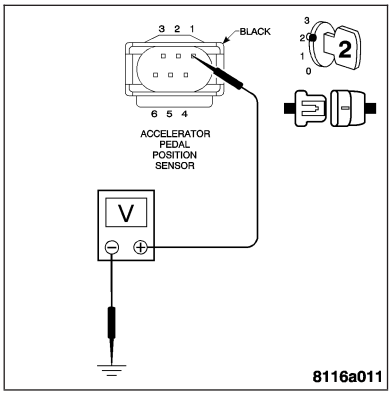

Note: Check connectors — Clean/repair as necessary.

Turn the ignition on.

Measure the voltage of the 5-Volt Supply circuit at the APPS harness connector.

Is the voltage between 4.5 and 5.2 volts?

Yes >> Go To 3

No >> Go To 6

3. APPS

With the ignition on.

Connect a jumper wire between the 5-Volt Supply circuit and the APPS #2 Signal circuit in the Sensor harness connector.

With the DRB III®, monitor the APPS #2 voltage.

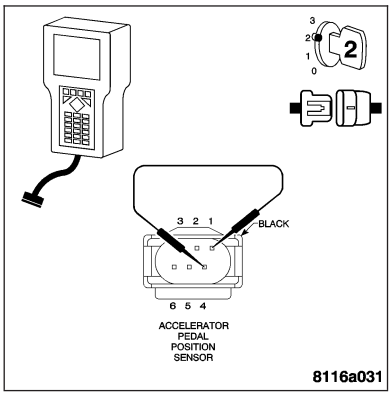

Note: Remove the jumper wire before continuing.

Is the voltage above 4.5 volts?

Yes >> Replace the Accelerator Pedal Position Sensor. **Refer to Page 14-26**.
Perform POWERTRAIN VERIFICATION TEST - VER 2.

No >> Go To 4

4. APPS #2 SIGNAL CIRCUIT OPEN

Turn the ignition off.

Disconnect the PCM C4 harness connectors.

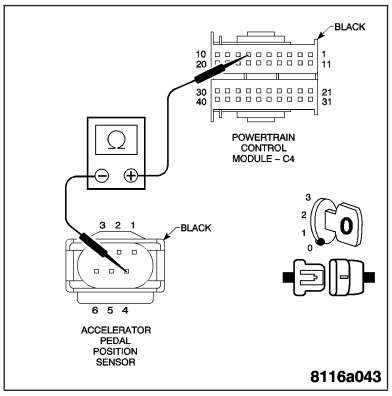

Note: Check connectors — Clean/repair as necessary.

Measure the resistance of the APPS #2 Signal circuit from the APPS harness connector to the PCM C4 harness connector.

Is the resistance below 5.0 ohms?

Yes >> Go To 5

No >> Repair the APPS #2 Signal circuit for an open.
Perform POWERTRAIN VERIFICATION TEST - VER 2.

(P0222) APPS SIGNAL #2 CIRCUIT LOW — CONTINUED

5. APPS SIGNAL CIRCUIT SHORTED TO GROUND

With the ignition off.
Measure the resistance between ground and the APPS #2 Signal circuit.

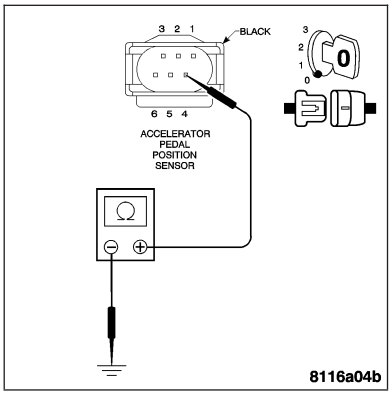

Is the resistance below 100 ohms?

Yes >> Repair the APPS #2 Signal circuit for a short to ground. Perform POWERTRAIN VERIFICATION TEST - VER 2.

No >> Go To 8

6. 5-VOLT SUPPLY CIRCUIT OPEN

Turn the ignition off.
Disconnect the PCM C4 harness connectors.

Note: Check connectors — Clean/repair as necessary.
Measure the resistance of the 5-Volt Supply circuit from the APPS harness connector to the PCM C4 harness connector.

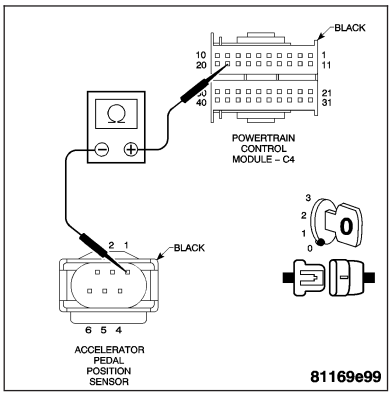

Is the resistance below 5.0 ohms?

Yes >> Go To 7

No >> Repair the 5-Volt Supply circuit for an open. Perform POWERTRAIN VERIFICATION TEST - VER 2.

7. 5-VOLT SUPPLY CIRCUIT SHORTED TO GROUND

With the ignition off.
Measure the resistance between ground and the 5-Volt Supply circuit.

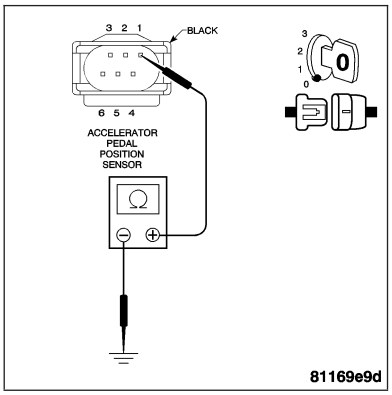

Is the resistance below 100 ohms?

Yes >> Repair the 5-Volt Supply circuit for a short to ground. Perform POWERTRAIN VERIFICATION TEST - VER 2.

No >> Go To 8

(P0222) APPS SIGNAL #2 CIRCUIT LOW — CONTINUED

8. PCM

Note: Before continuing, check the PCM harness connector terminals for corrosion, damage, or terminal push out. Repair as necessary.
Using the schematics as a guide, inspect the wire harness and connectors. Pay particular attention to all Power and Ground circuits.

If there are no possible causes remaining, view repair.

Repair >> Replace and program the Powertrain Control Module. **Refer to Page 8E-56**.
Perform POWERTRAIN VERIFICATION TEST - VER 2.

9. APPS SWEEP

With the ignition on.
With the DRB III®, monitor the APPS #2 voltage.
Slowly open the throttle from the idle position to the wide open throttle position.

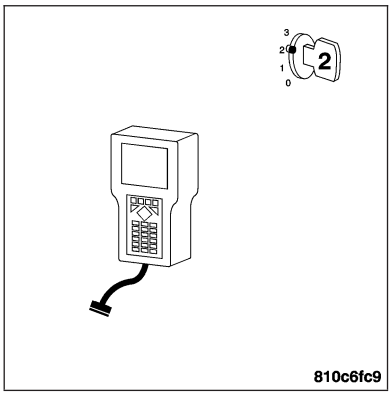

Does voltage start at approximately 0.45 of a volt and go above 2.1 volts with a smooth transition?

Yes >> Go To 10

No >> Replace the Accelerator Pedal Position Sensor. **Refer to Page 14-26**.
Perform POWERTRAIN VERIFICATION TEST - VER 2.

10. INTERMITTENT WIRING AND CONNECTORS

The conditions necessary to set this DTC are not present at this time.

Note: Check connectors — Clean/repair as necessary. Poor pin to terminal connections can set DTCs.

Note: Check for any Technical Service Bulletins that may apply.
Using the wiring diagram/schematic as a guide, inspect the wiring and connectors specific to this DTC. Wiggle the wires while checking for shorts and open circuits.

Were there any problems found?

Yes >> Repair as necessary.
Perform POWERTRAIN VERIFICATION TEST - VER 2.

No >> The condition that caused this DTC to set is currently not present. Inspect the related wiring harness for a possible intermittent condition.

(P0223) APPS SIGNAL #2 CIRCUIT HIGH

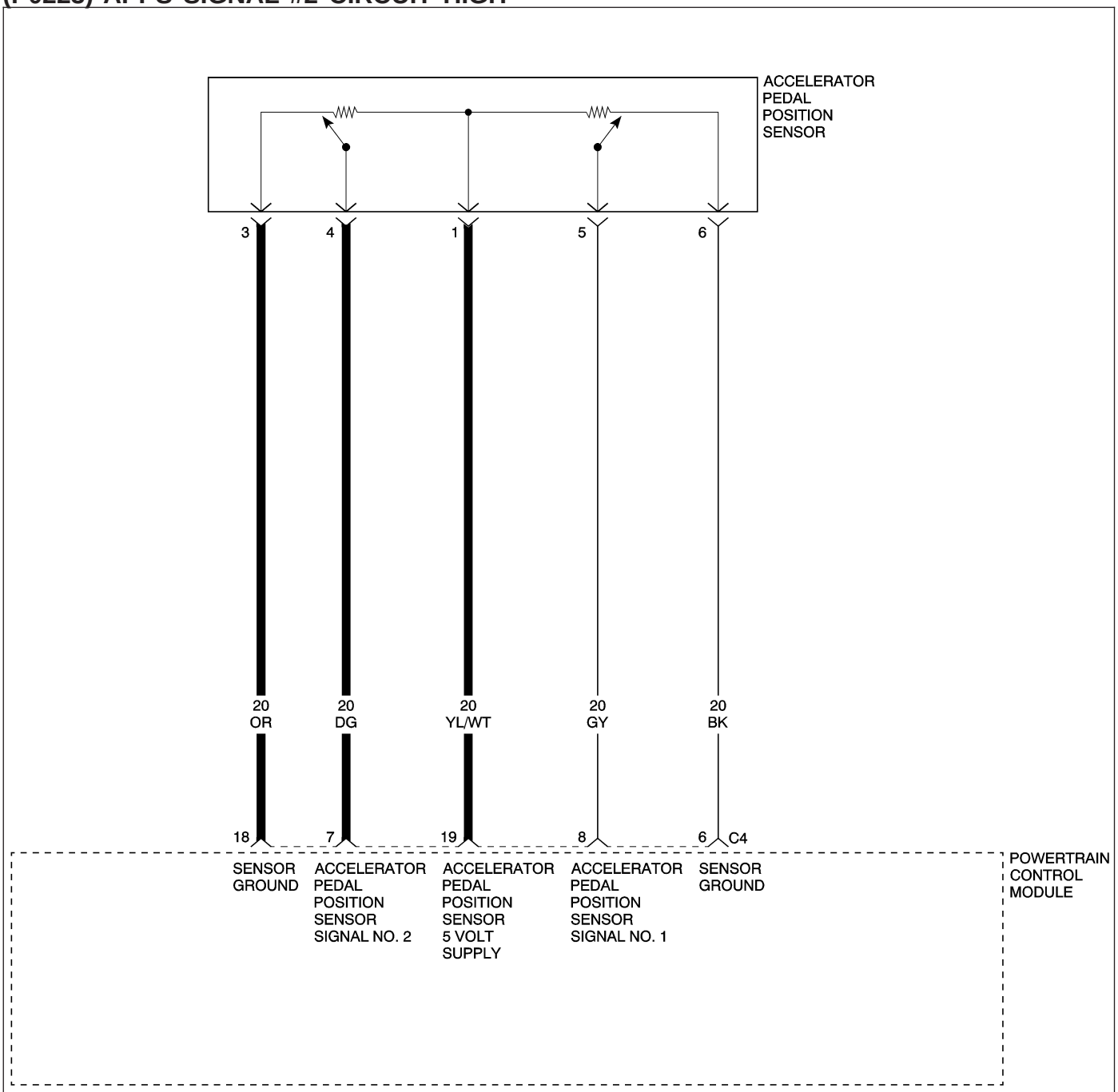

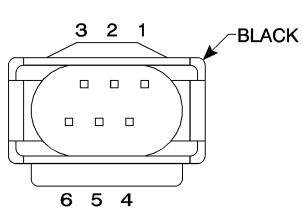

ACCELERATOR PEDAL POSITION SENSOR

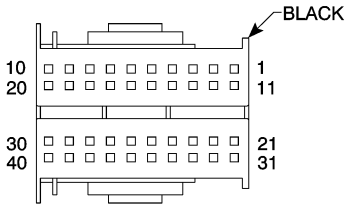

POWERTRAIN CONTROL MODULE – C4

8115f4eb

(P0223) APPS SIGNAL #2 CIRCUIT HIGH — CONTINUED

When Monitored and Set Condition

- When Monitored: With the ignition on and no other Accelerator Pedal Position Sensor (APPS) #2 DTCs present.
- Set Condition: When APPS #2 voltage is too high. Engine will only idle if the Brake pedal is Pressed or has failed. Acceleration rate and Engine output are limited. One trip fault.

POSSSIBLE CAUSES
INTERMITTENT CONDITION
ACCELERATOR PEDAL POSITION SENSOR #2 SWEEP
ACCELERATOR PEDAL POSITION SENSOR #2 SIGNAL CIRCUIT SHORTED TO VOLTAGE
ACCELERATOR PEDAL POSITION SENSOR #2 SIGNAL SHORTED TO 5-VOLT SUPPLY CIRCUIT
ACCELERATOR PEDAL POSITION SENSOR #2 GROUND CIRCUIT OPEN
ACCELERATOR PEDAL POSITION SENSOR #2
POWERTRAIN CONTROL MODULE

For a complete Powertrain Control Module Circuit Diagram **Refer to Page 9-574**.

Diagnostic Test

1. APPS #2 VOLTAGE ABOVE 5.0 VOLTS

Turn the ignition on.
With the DRB III® in Sensors, read the APPS voltage.

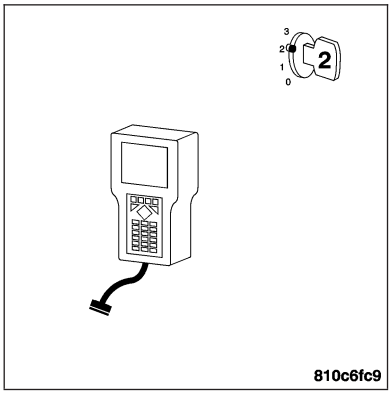

Is the voltage above 5.0 volts?

Yes >> Go To 2

No >> Go To 7

2. APPS

Turn the ignition off.
Disconnect the APPS harness connector.

Note: Check connectors — Clean/repair as necessary.
Turn the ignition on.
Connect a jumper wire between the APPS 5-Volt Supply circuit and the APPS Signal #2 circuit at the APPS harness connector.
With the DRB III®, monitor the APPS #1 voltage.

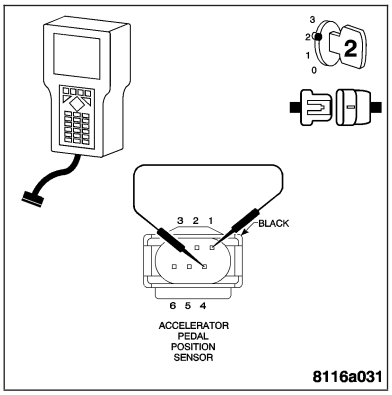

Is the voltage below 2.0 volts?

Yes >> Replace the Accelerator Pedal Position Sensor. **Refer to Page 14-26**.
Perform POWERTRAIN VERIFICATION TEST - VER 2.

No >> Go To 3

(P0223) APPS SIGNAL #2 CIRCUIT HIGH — CONTINUED

3. APPS #2 SIGNAL CIRCUIT SHORTED TO VOLTAGE

Turn the ignition off.

Disconnect the PCM harness connectors.

Note: Check connectors — Clean/repair as necessary.

Turn the ignition on.

Measure the voltage on the APPS #2 Signal circuit in the APPS harness connector.

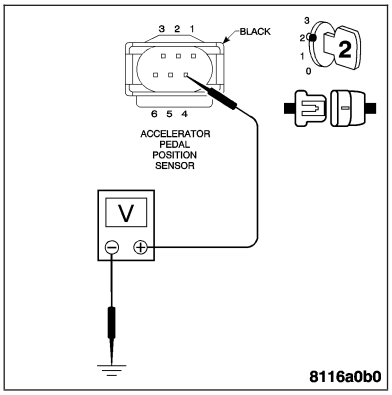

Is the voltage above 1.0 volt?

Yes >> Repair the APPS #2 Signal circuit for short to voltage.
Perform POWERTRAIN VERIFICATION TEST - VER 2.

No >> Go To 4

4. APPS #2 SIGNAL CIRCUIT SHORTED TO 5-VOLT SUPPLY CIRCUIT

Turn the ignition off.

Measure the resistance of the APPS #2 Signal circuit to the 5-Volt Supply circuit at the APPS harness connector.

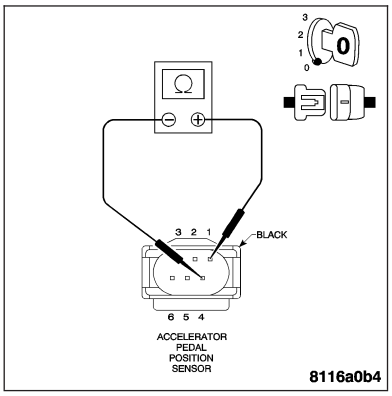

Is the resistance below 100 ohms?

Yes >> Repair the APPS #2 Signal circuit for a short to the 5-Volt Supply circuit.
Perform POWERTRAIN VERIFICATION TEST - VER 2.

No >> Go To 5

5. OPEN APPS #2 GROUND CIRCUIT

With the ignition off.

Measure the resistance of the APPS #2 Ground circuit from the APPS harness connector to the PCM connector.

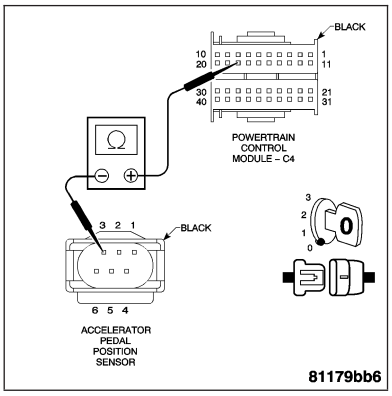

Is the resistance below 5.0 ohms?

Yes >> Go To 6

No >> Repair the APPS #2 Ground circuit for an open.
Perform POWERTRAIN VERIFICATION TEST - VER 2.

(P0223) APPS SIGNAL #2 CIRCUIT HIGH — CONTINUED

6. PCM

Note: Before continuing, check the PCM harness connector terminals for corrosion, damage, or terminal push out. Repair as necessary.
Using the schematics as a guide, inspect the wire harness and connectors. Pay particular attention to all Power and Ground circuits.

If there are no possible causes remaining, view repair.

Repair >> Replace and program the Powertrain Control Module. **Refer to Page 8E-56**.
Perform POWERTRAIN VERIFICATION TEST - VER 2.

7. APPS #2 SWEEP

With the ignition on.
With the DRB III®, monitor the APPS #2 voltage.
Slowly open the throttle from the idle position to the wide open throttle position.

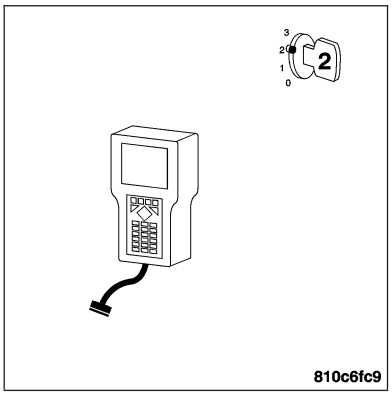

Does voltage start at approximately 0.2 volt and go above 4.3 volts with a smooth transition?

Yes >> Go To 8

No >> Replace the Accelerator Pedal Position Sensor. **Refer to Page 14-26**.
Perform POWERTRAIN VERIFICATION TEST - VER 2.

8. INTERMITTENT WIRING AND CONNECTORS

The condition that caused this DTC to set is currently not present. Inspect the related wiring harness for a possible intermittent condition.

Note: Check connectors — Clean/repair as necessary. Poor pin to terminal connections can set DTCs.Using the wiring diagram/schematic as a guide, inspect the wiring and connectors specific to this DTC. Wiggle the wires while checking for shorts and open circuits.

Note: Check for any Technical Service Bulletins that may apply.

Were there any problems found?

Yes >> Repair as necessary.
Perform POWERTRAIN VERIFICATION TEST - VER 2.

No >> The condition that caused this DTC to set is currently not present. Inspect the related wiring harness for a possible intermittent condition.

(P0300) MULTIPLE CYLINDER MISFIRE

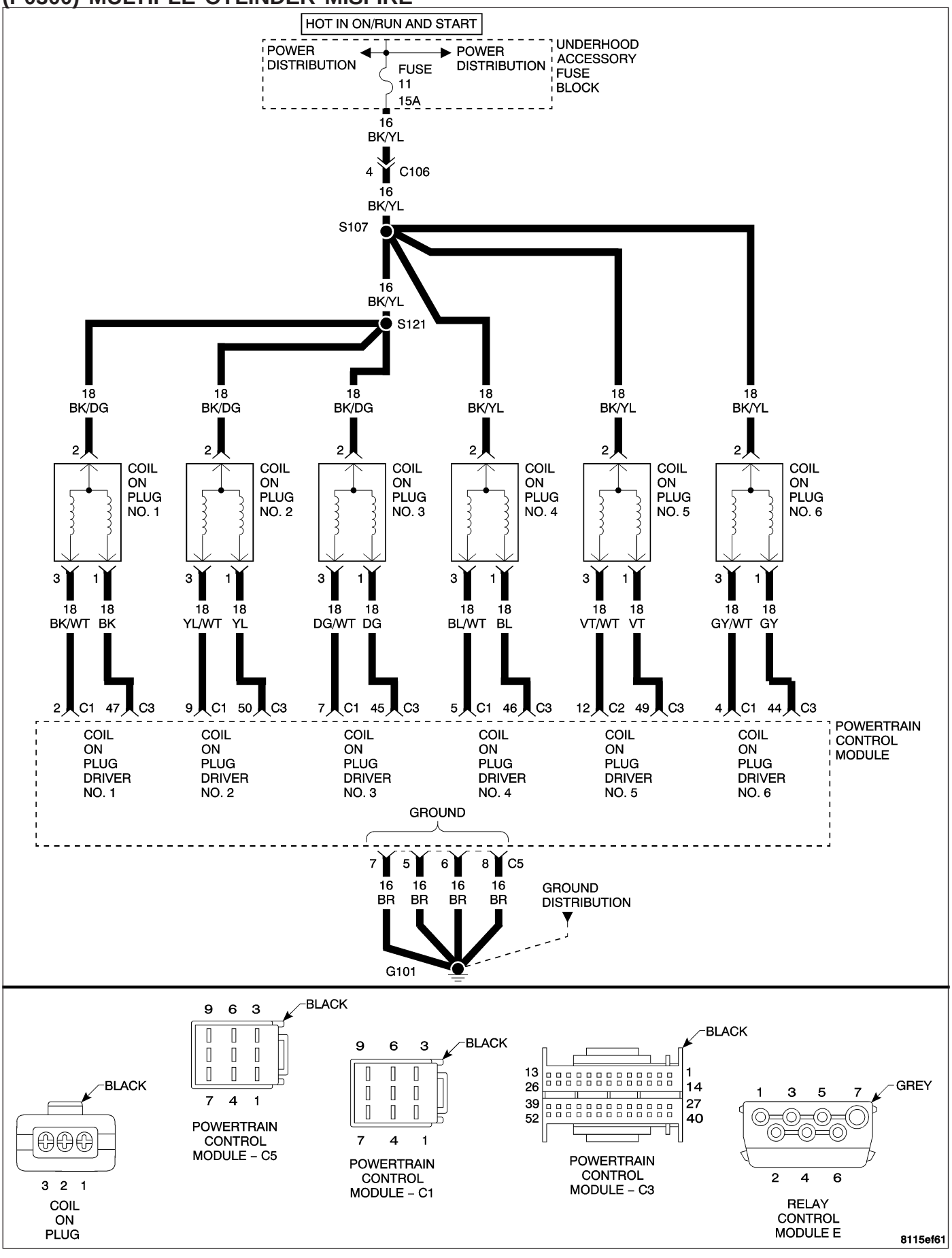

(P0300) MULTIPLE CYLINDER MISFIRE — CONTINUED

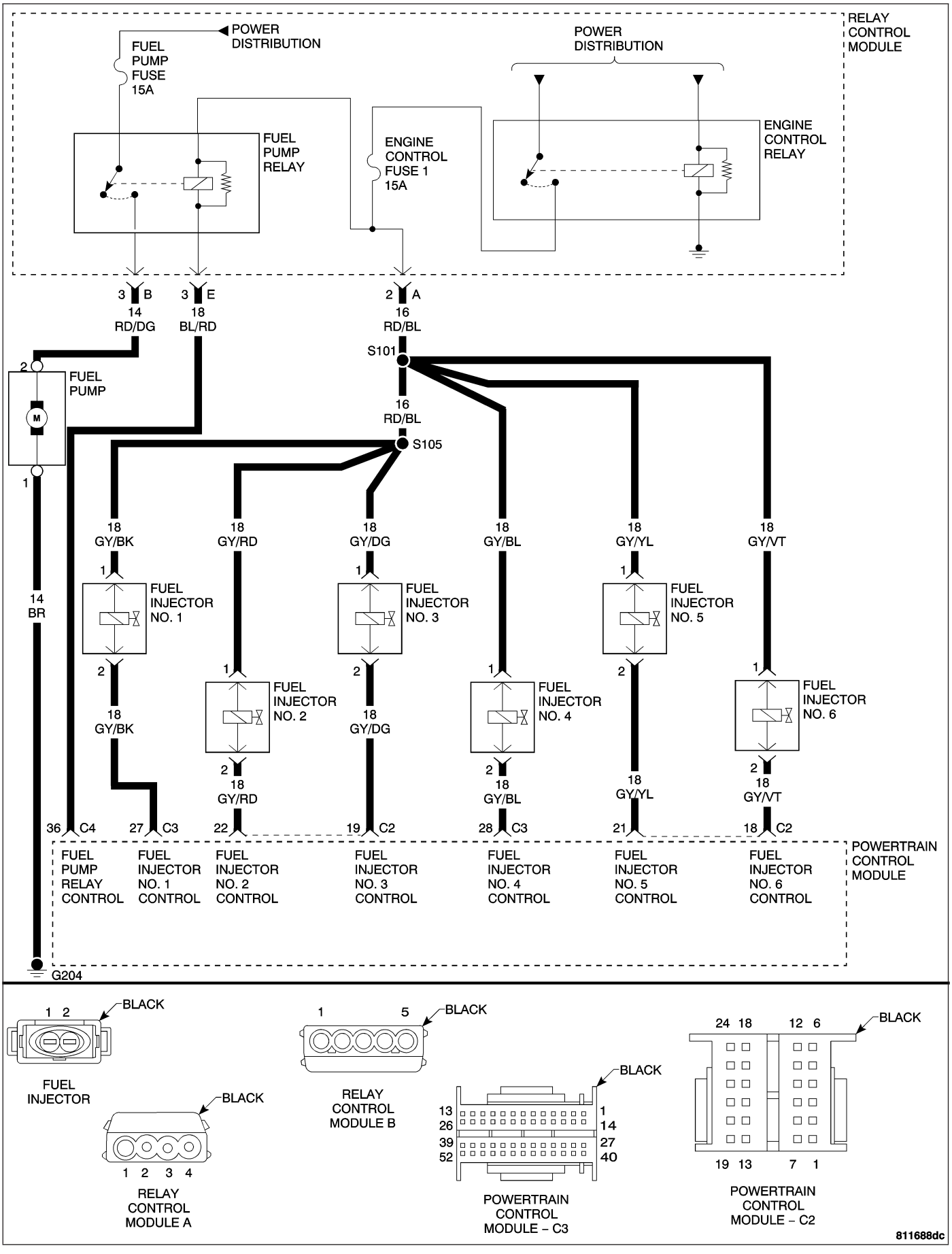

(P0300) MULTIPLE CYLINDER MISFIRE — CONTINUED

When Monitored and Set Condition

- When Monitored: Any time the engine is running, and the Target Learning Coefficient has been successfully updated.
- Set Condition: When more than a 1.0% misfire rate is measured during two trips.

POSSIBLE CAUSES
INTERMITTENT MISFIRE
ENGINE CONTROL RELAY OUTPUT CIRCUIT
INJECTOR DRIVER CIRCUIT
FUSED IGNITION OUTPUT CIRCUIT
ENGINE MECHANICAL PROBLEM
COIL ON PLUG
COIL ON PLUG DRIVER CIRCUIT
SPARK PLUG
FUEL STRAINER PLUGGED
RESTRICTED FUEL SUPPLY LINE
FUEL PUMP
FUEL INJECTOR
POWERTRAIN CONTROL MODULE

For a complete Powertrain Control Module Circuit Diagram **Refer to Page 9-574**.

Diagnostic Test

1. CHECK FOR CURRENT DTC

Note: If the PCM detects and stores a DTC, the PCM also stores the engine/vehicle operating conditions under which the DTC was set. Some of these conditions are displayed on the DRB III® at the same time the DTC is displayed.

Note: Before erasing stored DTCs, record these conditions. Attempting to duplicate these conditions may assist when checking for a DTC.

Turn the ignition on.

With the DRB III®, erase PCM DTCs.

Note: It maybe necessary to road test the vehicle for this DTC to set.

With the DRB III®, read the PCM DTCs.

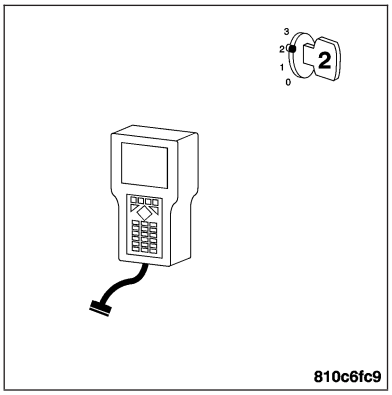

Did this DTC set again?

Yes >> Go To 2

No >> Go To 19

(P0300) MULTIPLE CYLINDER MISFIRE — CONTINUED

2. VISUAL AND PHYSICAL INSPECTION

Note: Reviewing the vehicle repair history may aid in the repair of the misfire condition.

Turn the ignition off.

Visually and physically inspect the engine for any of the following conditions:

- Worn serpentine belt
- Binding Engine-Driven accessories
- Misaligned water pump, P/S pump and A/C compressor pulleys
- Improper CKP Sensor mounting
- Poor connector/terminal to component connection, i.e., CKP Sensor, Fuel Injector, Coil On Plug, etc.
- Vacuum leaks
- Restricted Air Intake system

Note: Ensure the powers and grounds for the PCM are functioning properly.

Were any of the above conditions present?

Yes >> Repair as necessary.
Perform POWERTRAIN VERIFICATION TEST - VER 2.

No >> Go To 3

3. IGNITION SYSTEM OPERATION

With the ignition off.

Remove the Fuel Pump Fuse from the Relay Control Module.

Disconnect the suspect Coil On Plug harness connector.

Remove the Coil On Plug.

Note: Before continuing, inspect the Coil On Plug for the following conditions. Damage or Carbon Tracking on the Coil or the spark plug insulator boot. If a problem is found, replace the Coil On Plug. Refer to Page 8I-5.

Install spark testers to the Coil On Plug.

Reconnect the Coil On Plug harness connector to the Coil On Plug.

While cranking the engine, observe the spark coming from the spark testers.

Note: A crisp blue spark should be generated that is able to jump the gap of the spark testers.

Note: Before continuing with next Step, reinstall Fuel Pump Fuse in the Relay Control Module.

Is good spark present?

Yes >> Go To 4

No >> Go To 16

(P0300) MULTIPLE CYLINDER MISFIRE — CONTINUED

4. SPARK PLUG

With the ignition off.

Remove the Spark Plug.

Inspect the Spark Plug for the following conditions:

- Cracks
- Carbon Tracking
- Foreign Material
- Gap size out of specifications
- Loose or broken electrode

Note: Lightly tap the bottom of the spark plug on a solid surface. The electrode in the spark plug should not move.

Were any of the above conditions present?

Yes >> Replace the Spark Plug(s). **Refer to Page 8I-11**.
Perform POWERTRAIN VERIFICATION TEST - VER 2.

No >> Go To 5

5. CHECKING FUEL PRESSURE

WARNING: THE FUEL SYSTEM IS UNDER A CONSTANT PRESSURE (EVEN WITH THE ENGINE OFF). BEFORE TESTING OR SERVICING ANY FUEL SYSTEM HOSE, FITTING OR LINE, THE FUEL SYSTEM PRESSURE MUST BE RELEASED.

With the ignition off.

Install a fuel pressure test gauge to the fuel rail.

Start the engine and observe the fuel pressure reading.

Note: Fuel pressure specification is 3.7 to 4.2 bar (54 to 61 psi).

Choose a conclusion that best matches your fuel pressure reading.

Within Specification
Go To 6

Below Specification
Go To 14

Above Specification
Replace the fuel filter/pressure regulator. **Refer to Page 14-10**.
Perform POWERTRAIN VERIFICATION TEST - VER 2.

(P0300) MULTIPLE CYLINDER MISFIRE — CONTINUED

6. CHECKING FUEL LEAK DOWN

WARNING: THE FUEL SYSTEM IS UNDER A CONSTANT PRESSURE EVEN WITH THE ENGINE OFF. BEFORE TESTING OR SERVICING ANY FUEL SYSTEM HOSE, FITTING OR LINE, THE FUEL SYSTEM PRESSURE MUST BE RELEASED.

Note: Before continuing, visually and physically inspect the fuel delivery system for external leaks or damage. Repair/replace as necessary.

Note: Fuel specification is 3.7 to 4.2 bar (54 to 61 psi).

Turn the ignition off.

Install a substitute fuel pressure hose between the fuel pump and fuel filter.

Start the engine and allow the fuel system to reach maximum pressure.

Turn the ignition off.

Using Special Tool #C4390, Hose Clamp Pliers, slowly clamp off the substitute fuel pressure hose between the fuel pump and fuel filter.

Monitor the fuel pressure gauge for a minimum of 5 minutes.

Note: The pressure should not fall below 3.0 bar (44 psi) within 5 minutes and should not fall below 2.5 bar (36 psi) within 30 minutes.

Does the fuel pressure gauge fall below the above specification?

Yes >> Repair or replace the leaking component between the Fuel Pump and Injector(s).
Perform POWERTRAIN VERIFICATION TEST - VER 2.

No >> Go To 7

Note: Remove the hose clamp pliers before continuing with test.

7. FUEL INJECTOR OPERATION

WARNING: THE FUEL SYSTEM IS UNDER A CONSTANT PRESSURE (EVEN WITH THE ENGINE OFF). BEFORE TESTING OR SERVICING ANY FUEL SYSTEM HOSE, FITTING OR LINE, THE FUEL SYSTEM PRESSURE MUST BE RELEASED.

CAUTION: After each actuation of the Fuel Injector, start the engine to clear the cylinder of fuel. Failure to do so could cause engine damage.

Turn the ignition on.

Using the DRB III®, actuate the Fuel Injector for the cylinder that indicated the misfire.

Monitor the fuel pressure gauge.

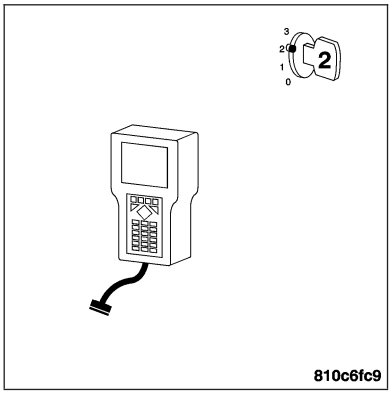

Does the fuel pressure gauge indicate a drop in fuel pressure?

Yes >> Go To 8

No >> Go To 9

(P0300) MULTIPLE CYLINDER MISFIRE — CONTINUED

8. CHECKING FOR POSSIBLE MECHANICAL PROBLEM

Turn the ignition off.
Check for any of the following conditions/mechanical problems:
ENGINE VACUUM - must be at least 13 inches in neutral
ENGINE VALVE TIMING - must be within specifications
ENGINE COMPRESSION - must be within specifications
ENGINE EXHAUST SYSTEM - must be free of any restrictions or leaks
ENGINE CRANKCASE VENT SYSTEM - must flow freely
TORQUE CONVERTER STALL SPEED - must be within specifications
POWER BRAKE BOOSTER - must not have internal vacuum leaks
FUEL - must be free of contamination

Are there any engine mechanical problems?

Yes >> Repair as necessary.
Perform POWERTRAIN VERIFICATION TEST - VER 2.

No >> Go To 19

9. ENGINE CONTROL RELAY OUTPUT CIRCUIT

Turn the ignition off.
Disconnect the Fuel Injector harness connector.

Note: Check connectors — Clean/repair as necessary.
Turn the ignition on.
Using a 12-volt test light connected to ground, probe the Engine Control Relay Output circuit at the Fuel Injector harness connector.

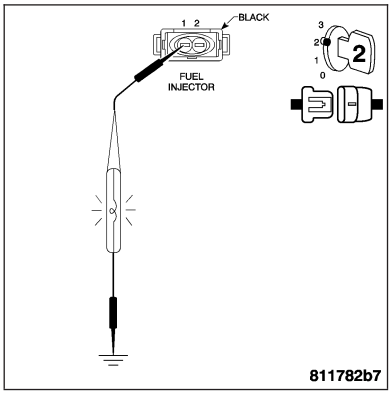

Does the test light illuminate brightly?

Yes >> Go To 10

No >> Repair the Engine Control Relay Output circuit for an open.
Perform POWERTRAIN VERIFICATION TEST - VER 2.

10. FUEL INJECTOR

With the ignition on.
Using a 12-volt test light connected to 12-volts, probe the Injector Driver circuit.
With the DRB III®, actuate the Fuel Injector.

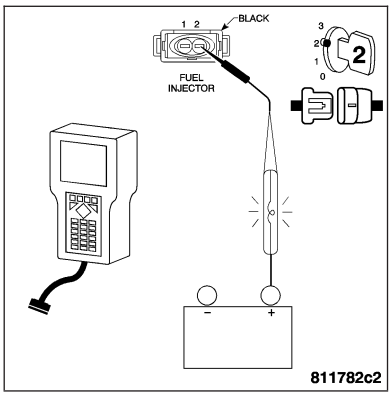

Does the test light blink/flicker?

Yes >> Replace the Fuel Injector. **Refer to Page 14-33**.
Perform POWERTRAIN VERIFICATION TEST - VER 2.

No >> Go To 11

(P0300) MULTIPLE CYLINDER MISFIRE — CONTINUED

11. FUEL INJECTOR CONTROL CIRCUIT SHORTED TO VOLTAGE

Turn the ignition off.

Disconnect the PCM harness connector.

Note: Check connectors — Clean/repair as necessary.

Turn the ignition on.

Measure the voltage of the Fuel Injector Control circuit at the Fuel Injector harness connector.

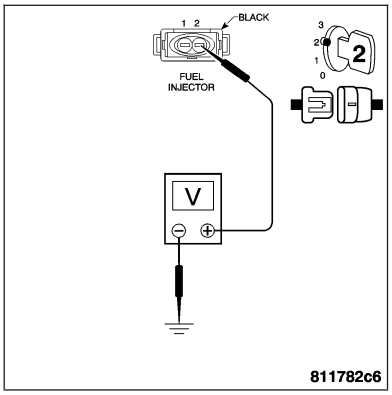

Is the voltage above 1.0 volts?

Yes >> Repair the Injector Control circuit for a short to voltage. Perform POWERTRAIN VERIFICATION TEST - VER 2.

No >> Go To 12

12. FUEL INJECTOR CONTROL CIRCUIT SHORTED TO GROUND

Turn the ignition off.

Measure the resistance between ground and the Fuel Injector Control circuit.

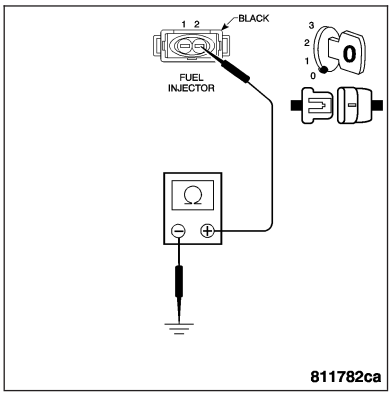

Is the resistance below 100 ohms?

Yes >> Repair the Fuel Injector Control circuit for a short to ground. Perform POWERTRAIN VERIFICATION TEST - VER 2.

No >> Go To 13

13. OPEN FUEL INJECTOR CONTROL CIRCUIT

With the ignition off.

Measure the resistance of the Fuel Injector Control circuit from the Fuel Injector harness connector and the PCM harness connector.

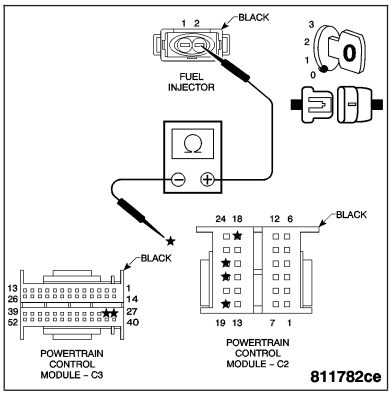

Is the resistance below 5.0 ohms?

Yes >> Repair the Injector Control circuit for an open. Perform POWERTRAIN VERIFICATION TEST - VER 2.

No >> NOTE: Before continuing, check the PCM harness connector terminals for corrosion, damage, or terminal push out. Repair as necessary. Replace and program the Powertrain Control Module. **Refer to Page 8E-56**. Perform POWERTRAIN VERIFICATION TEST - VER 2.

(P0300) MULTIPLE CYLINDER MISFIRE — CONTINUED

14. RESTRICTED FUEL SUPPLY LINE

WARNING: THE FUEL SYSTEM IS UNDER A CONSTANT PRESSURE (EVEN WITH THE ENGINE OFF). BEFORE TESTING OR SERVICING ANY FUEL SYSTEM HOSE, FITTING OR LINE, THE FUEL SYSTEM PRESSURE MUST BE RELEASED.

Turn the ignition off.

Raise vehicle on hoist and disconnect the fuel pressure line at the fuel pump.

Install a fuel pressure test gauge between the disconnected fuel line and the fuel pump.

Turn the ignition on.

With the DRB III®, actuate the Fuel Pump Relay and observe the fuel pressure gauge.

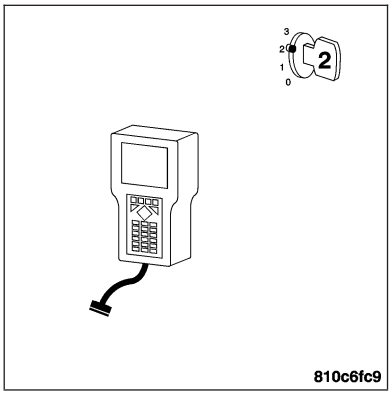

Note: Fuel pressure specification is 3.7 to 4.2 bar (54 to 61 psi).

Is the fuel pressure within specification?

Yes >> Repair or replace fuel supply line as necessary.
Perform POWERTRAIN VERIFICATION TEST - VER 2.

No >> Go To 15

15. FUEL STRAINER

WARNING: WARNING: THE FUEL SYSTEM IS UNDER A CONSTANT PRESSURE (EVEN WITH THE ENGINE OFF). BEFORE TESTING OR SERVICING ANY FUEL SYSTEM HOSE, FITTING OR LINE, THE FUEL SYSTEM PRESSURE MUST BE RELEASED

Turn the ignition off.

Remove and inspect the Fuel Strainer.

Is the Fuel Strainer plugged?

Yes >> Replace the Fuel Strainer. **Refer to Page 14-10**.
Perform POWERTRAIN VERIFICATION TEST - VER 2.

No >> NOTE: Before continuing, check the Fuel Pump harness connector terminals for corrosion, damage, or terminal push out. Ensure the ground circuit is operating properly. Repair as necessary. Replace the Fuel Pump. **Refer to Page 14-17**.
Perform POWERTRAIN VERIFICATION TEST - VER 2.

(P0300) MULTIPLE CYLINDER MISFIRE — CONTINUED

16. FUSED IGNITION SWITCH OUTPUT CIRCUIT

Turn the ignition off.

Disconnect the Coil On Plug harness connector.

Turn the ignition on.

Using a 12-volt test light connected to ground, probe the Fused Ignition Switch Output circuit at the Coil On Plug harness connector.

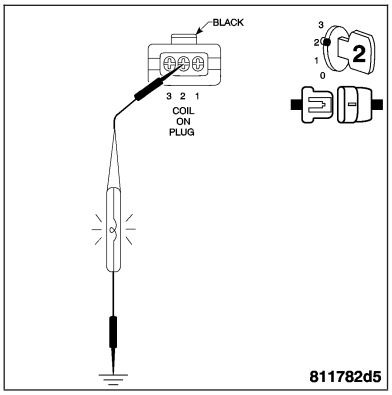

Does the test light illuminate brightly?

Yes >> Go To 17

No >> Repair the Fused Ignition Switch Output circuit for an open.
Perform POWERTRAIN VERIFICATION TEST - VER 2.

17. COIL ON PLUG

Turn the ignition off.

Remove the Fuel Pump Fuse from the Relay Control Module.

Using a 12-volt test light connected to 12-volts, probe the Coil On Plug Driver circuit.

Crank the engine for 5 second while observing the test light.

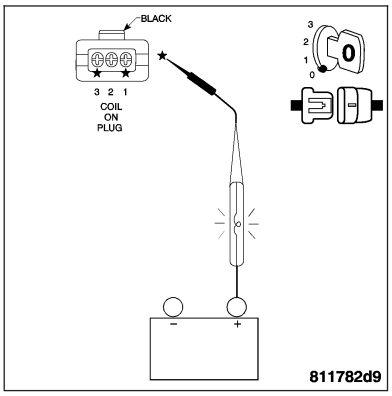

Does the test light blink/flicker?

Yes >> Replace the Coil On Plug. **Refer to Page 8I-5**.
Perform POWERTRAIN VERIFICATION TEST - VER 2.

No >> Go To 18

18. COIL ON PLUG DRIVER CIRCUIT

With the ignition off.

Disconnect the PCM C3 harness connector.

Note: Check connectors — Clean/repair as necessary.
Check the Coil On Plug Driver circuits for an open, short to ground, and short to voltage.

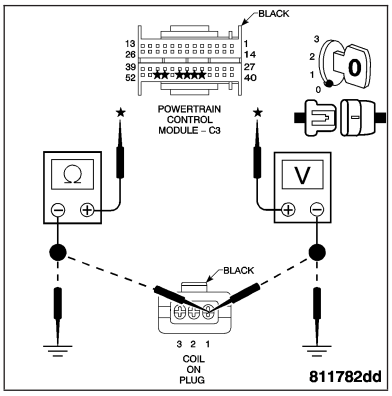

Was a problem found with the Coil On Plug Driver circuits?

Yes >> Repair the Coil On Plug Driver circuits for the problem found.
Perform POWERTRAIN VERIFICATION TEST - VER 2.

No >> NOTE: Before continuing, check the PCM harness connector terminals for corrosion, damage, or terminal push out. Repair as necessary. Replace and program the Powertrain Control Module. **Refer to Page 8E-56**.
Perform POWERTRAIN VERIFICATION TEST - VER 2.

(P0300) MULTIPLE CYLINDER MISFIRE — CONTINUED

19. INTERMITTENT MISFIRE

Note: The condition that caused this DTC to set is currently not present. Inspect the related wiring harness for a possible intermittent condition.

WARNING: WHEN THE ENGINE IS OPERATING, DO NOT STAND IN A DIRECT LINE WITH THE FAN. DO NOT PUT YOUR HANDS NEAR THE PULLEYS, BELTS OR FAN. DO NOT WEAR LOOSE CLOTHING.

Refer to any Technical Service Bulletins that may apply.

With the engine running at normal operating temperature, monitor the DRB III® parameters related to the DTC while wiggling the wire harness. Look for parameter values to change and/or a DTC to set.

Visually inspect the related wire harness. Look for any chafed, pierced, pinched, partially broken wires and broken, bent, pushed out, or corroded terminals.

Inspect and clean all PCM, engine, and chassis grounds.

Note: Reviewing the vehicle repair history may aid in the repair of the misfire condition.

Visually and physically inspect the engine for any of the following conditions:

- Worn serpentine belt
- Binding Engine-Driven accessories
- Misaligned water pump, P/S pump and A/C compressor pulleys
- Improper CKP Sensor mounting
- Poor connector/terminal to component connection. i.e., CKP Sensor, Fuel Injector, Coil On Plug, etc.
- Vacuum leaks
- Restricted Air Intake system

Were any of the above conditions present?

Yes >> Repair as necessary.
Perform POWERTRAIN VERIFICATION TEST - VER 2.

No >> The condition that caused this DTC to set is currently not present. Inspect the related wiring harness for a possible intermittent condition.

(P0301) CYLINDER #1 MISFIRE

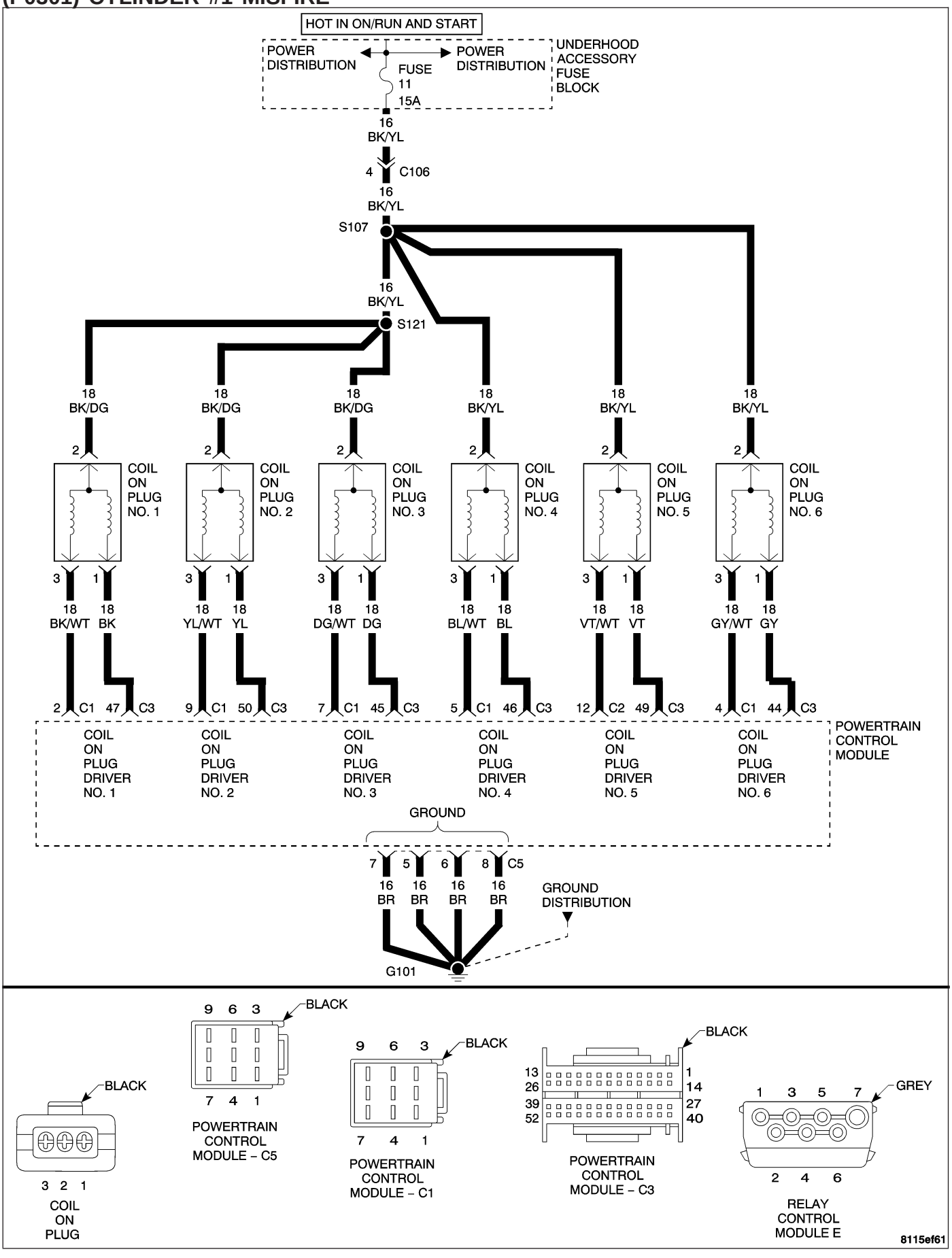

(P0301) CYLINDER #1 MISFIRE — CONTINUED

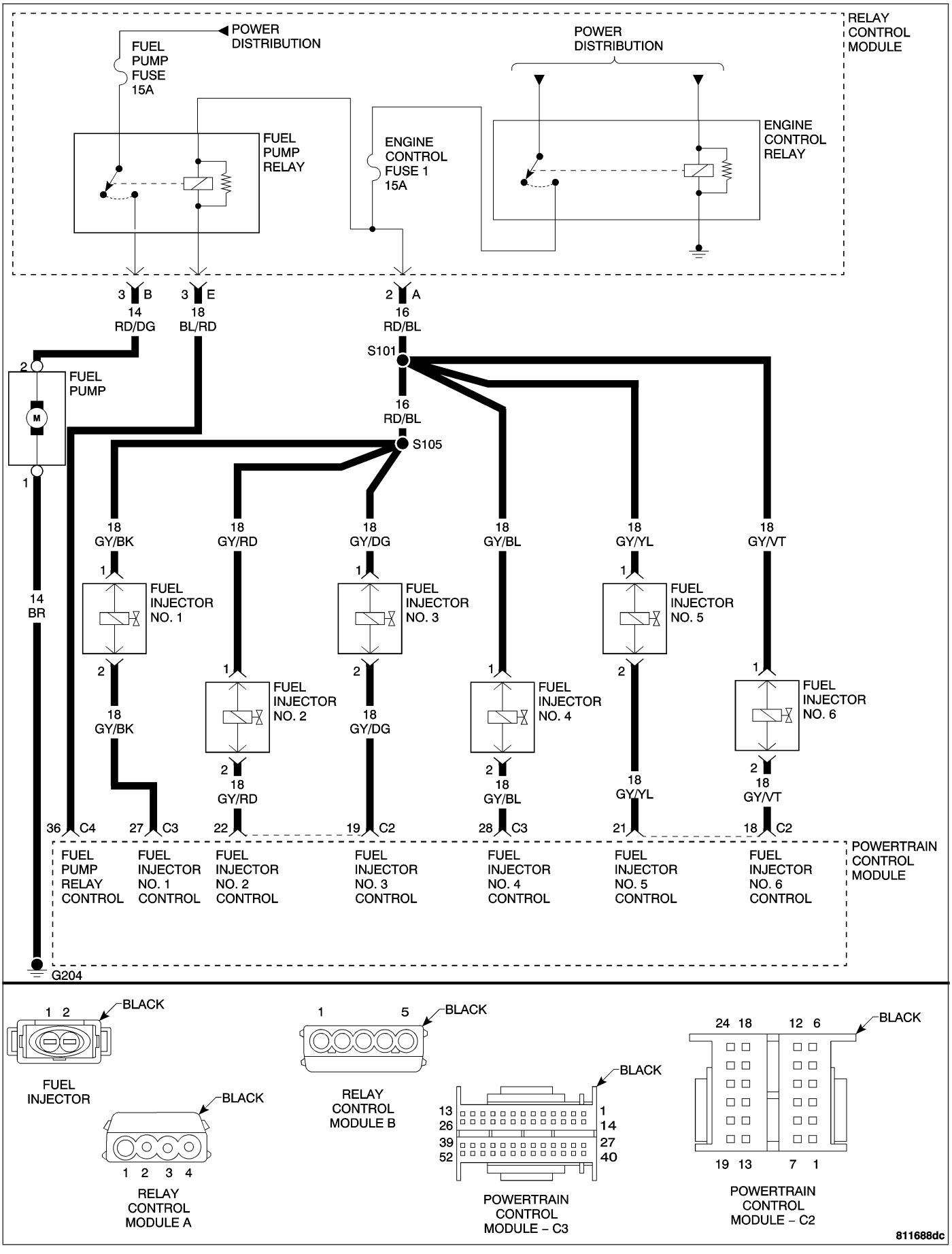

(P0301) CYLINDER #1 MISFIRE — CONTINUED

When Monitored and Set Condition

- When Monitored: Any time the engine is running, and the Target Learning Coefficient has been successfully updated.
- Set Condition: When more than a 1.0% misfire rate is measured during two trips.

POSSIBLE CAUSES
INTERMITTENT MISFIRE
ENGINE CONTROL RELAY OUTPUT CIRCUIT
INJECTOR DRIVER CIRCUIT
FUSED IGNITION SWITCH OUTPUT CIRCUIT
COIL ON PLUG DRIVER CIRCUIT
ENGINE MECHANICAL PROBLEM
COIL ON PLUG
SPARK PLUG
FUEL STRAINER PLUGGED
RESTRICTED FUEL SUPPLY LINE
FUEL PUMP
FUEL INJECTOR
POWERTRAIN CONTROL MODULE

For a complete Powertrain Control Module Circuit Diagram **Refer to Page 9-574**.

Diagnostic Test

1. VISUAL AND PHYSICAL INSPECTION

Note: Reviewing the vehicle repair history may aid in the repair of the misfire condition.
Visually and physically inspect the engine for any of the following conditions.

- Worn serpentine belt
- Binding Engine-Driven accessories.
- Misaligned water pump, P/S pump and A/C compressor pulleys
- Improper CKP Sensor mounting
- Poor connector/terminal to component connection, i.e., CKP Sensor, Fuel Injector, Coil On Plug, etc.
- Vacuum leaks
- Restricted Air Intake system

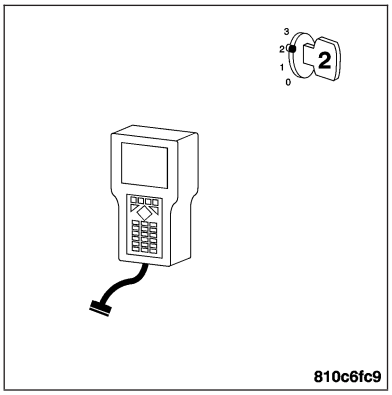

Note: Ensure the powers and grounds for the PCM are functioning properly.

Were any of the above conditions present?

Yes >> Repair as necessary.
Perform POWERTRAIN VERIFICATION TEST - VER 2.

No >> Go To 2

(P0301) CYLINDER #1 MISFIRE — CONTINUED

2. IGNITION SYSTEM OPERATION

Turn the ignition off.

Remove the Fuel Pump Fuse from the Relay Control Module.

Disconnect the Coil On Plug harness connector.

Remove the Coil On Plug.

Note: Before continuing, inspect the Coil On Plug for the following conditions. Damage or Carbon Tracking on the Coil On Plug or the spark plug insulator boot. If a problem is found, replace the Coil On Plug. Refer to Page 8I-5.

Install spark testers to one of the Coil On Plug wires.

Reconnect the Coil On Plug harness connector to the Coil On Plug.

While cranking the engine, observe the spark coming from the spark testers.

Note: A crisp blue spark should be generated that is able to jump the gap of the spark testers.

Note: Before continuing with next Step, reinstall Fuel Pump Fuse in the Relay Control Module.

Is good spark present?

Yes >> Go To 3

No >> Go To 13

3. SPARK PLUG

Turn the ignition off.

Remove the Spark Plug.

Inspect the Spark Plug for the following conditions.

- Cracks
- Carbon Tracking
- Foreign Material
- Gap size out of specifications
- Loose or broken electrode

Note: Lightly tap the bottom of the spark plug on a solid surface. The electrode in the spark plug should not move.

Were any of the above condition present?

Yes >> Replace the Spark Plug. **Refer to Page 8I-11.**
Perform POWERTRAIN VERIFICATION TEST - VER 2.

No >> Go To 4

(P0301) CYLINDER #1 MISFIRE — CONTINUED

4. CHECKING FUEL PRESSURE

WARNING: THE FUEL SYSTEM IS UNDER A CONSTANT PRESSURE (EVEN WITH THE ENGINE OFF). BEFORE TESTING OR SERVICING ANY FUEL SYSTEM HOSE, FITTING OR LINE, THE FUEL SYSTEM PRESSURE MUST BE RELEASED.

With the ignition off.

Install a fuel pressure gauge to the fuel rail.

Start the engine and observe the fuel pressure reading.

Note: Fuel pressure specification is 3.7 to 4.2 bar (54 to 61 psi).

Choose a conclusion that best matches your fuel pressure reading.

Within Specification

Go To 5

Below Specification

Go To 11

Above Specification

Replace the fuel filter/pressure regulator. **Refer to Page 14-10**.

Perform POWERTRAIN VERIFICATION TEST - VER 2.

5. CHECKING FUEL LEAK DOWN

WARNING: THE FUEL SYSTEM IS UNDER A CONSTANT PRESSURE (EVEN WITH THE ENGINE OFF). BEFORE TESTING OR SERVICING ANY FUEL SYSTEM HOSE, FITTING OR LINE, THE FUEL SYSTEM PRESSURE MUST BE RELEASED.

Note: Before continuing visually and physically inspect the fuel delivery system for external leaks or damage. Repair/replace as necessary.

Turn the ignition off.

Install a substitute fuel pressure hose between the fuel pump and fuel filter.

Start the engine and allow the fuel system to reach maximum pressure.

Turn the ignition off.

Using Special Tool #C4390, Hose Clamp Pliers, slowly clamp off the substitute fuel pressure hose between the fuel pump and the fuel filter.

Monitor the fuel pressure gauge for a minimum of 5 minutes.

Note: The pressure should not fall below 3.0 bar (44 psi) within 5 minutes and should not fall below 2.5 bar (36 psi) within 30 minutes.

Does the fuel pressure gauge fall below the above specification?

Yes >> Replace the leaking component between the Fuel Pump and Injector(s).

Perform POWERTRAIN VERIFICATION TEST - VER 2.

No >> Go To 6

Note: Remove the hose clamp pliers before continuing with test.

(P0301) CYLINDER #1 MISFIRE — CONTINUED

6. FUEL INJECTOR OPERATION

WARNING: THE FUEL SYSTEM IS UNDER A CONSTANT PRESSURE (EVEN WITH THE ENGINE OFF). BEFORE TESTING OR SERVICING ANY FUEL SYSTEM HOSE, FITTING OR LINE, THE FUEL SYSTEM PRESSURE MUST BE RELEASED.

CAUTION: After each actuation of the Fuel Injector, start the engine to clear the cylinder of fuel. Failure to do so could cause engine damage.

Turn the ignition on.

Using the DRB III®, actuate the Fuel Injector for the cylinder that indicated the misfire.

Monitor the fuel pressure gauge.

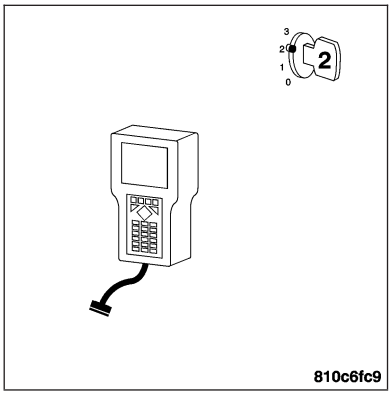

Does the fuel pressure gauge indicate a drop in fuel pressure?

Yes >> Go To 7

No >> Go To 8

7. CHECKING FOR POSSIBLE MECHANICAL PROBLEM

Turn the ignition off.

Check for any of the following conditions/mechanical problems.

ENGINE VACUUM - must be at least 13 inches in neutral

ENGINE VALVE TIMING - must be within specifications

ENGINE COMPRESSION - must be within specifications

ENGINE EXHAUST SYSTEM - must be free of any restrictions or leaks.

ENGINE PCV SYSTEM - must flow freely

TORQUE CONVERTER STALL SPEED - must be within specifications

POWER BRAKE BOOSTER - must not have internal vacuum leaks

FUEL - must be free of contamination

Are there any engine mechanical problems?

Yes >> Repair as necessary.
Perform POWERTRAIN VERIFICATION TEST - VER 2.

No >> Go To 16

8. ENGINE CONTROL RELAY OUTPUT CIRCUIT

Turn the ignition off.

Disconnect the Fuel Injector harness connector.

Note: Check connectors — Clean/repair as necessary.

Turn the ignition on.

Using a 12-volt test light connected to ground, probe the Engine Control Relay Output circuit at the Fuel Injector harness connector.

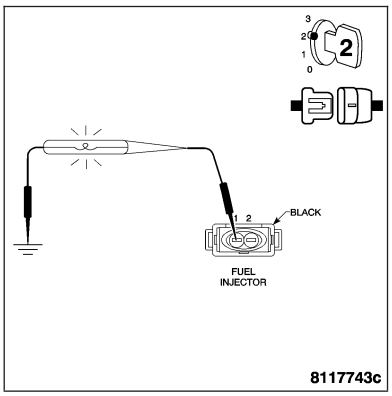

Does the test light illuminate brightly?

Yes >> Go To 9

No >> Repair the Engine Control Relay Output circuit for an open.
Perform POWERTRAIN VERIFICATION TEST - VER 2.

(P0301) CYLINDER #1 MISFIRE — CONTINUED

9. FUEL INJECTOR

With the ignition on.
Using a 12-volt test light connected to 12-volts, probe the Injector Control circuit.
With the DRB III®, actuate the Fuel Injector.

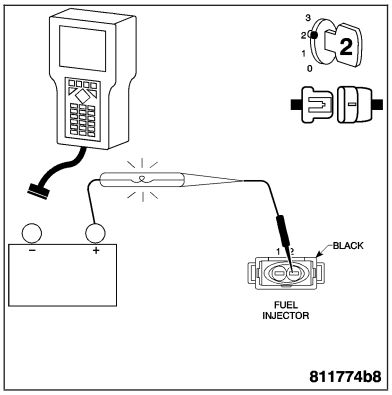

Does the test light blink/flicker?

Yes >> Replace the Fuel Injector. **Refer to Page 14-33**.
Perform POWERTRAIN VERIFICATION TEST - VER 2.

No >> Go To 10

10. INJECTOR DRIVER CIRCUIT

Turn the ignition off.
Disconnect the PCM harness connectors.

Note: Check connectors — Clean/repair as necessary.
Measure the resistance of the Injector Driver circuit from the Fuel Injector harness connector to the PCM harness connector.

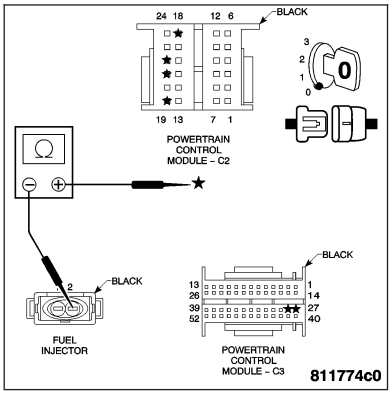

Is the resistance below 5.0 ohms?

Yes >> NOTE: Before continuing, check the PCM harness connector terminals for corrosion, damage, or terminal push out. Repair as necessary. Replace and program the Powertrain Control Module. **Refer to Page 8E-56**.
Perform POWERTRAIN VERIFICATION TEST - VER 2.

No >> Repair the Injector Driver circuit for an open.
Perform POWERTRAIN VERIFICATION TEST - VER 2.

(P0301) CYLINDER #1 MISFIRE — CONTINUED

11. RESTRICTED FUEL SUPPLY LINE

WARNING: THE FUEL SYSTEM IS UNDER A CONSTANT PRESSURE (EVEN WITH THE ENGINE OFF). BEFORE TESTING OR SERVICING ANY FUEL SYSTEM HOSE, FITTING OR LINE, THE FUEL SYSTEM PRESSURE MUST BE RELEASED.

Turn the ignition off.

Raise vehicle on hoist and disconnect the fuel pressure line at the fuel pump.

Attach a fuel pressure test gauge.

Turn the ignition on.

With the DRB III®, actuate the Fuel Pump Relay and observe the fuel pressure gauge.

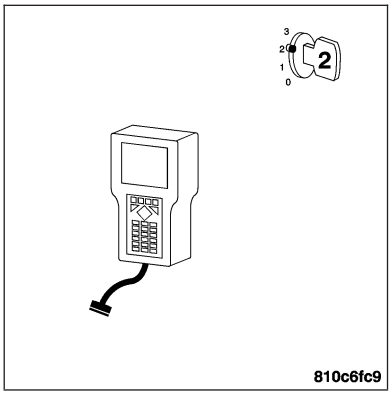

Note: Fuel pressure specification is 3.7 to 4.2 bar (54 to 61 psi).

Is the fuel pressure within specification?

Yes >> Repair or replace fuel supply line as necessary.
Perform POWERTRAIN VERIFICATION TEST - VER 2.

No >> Go To 12

12. FUEL STRAINER

WARNING: THE FUEL SYSTEM IS UNDER A CONSTANT PRESSURE (EVEN WITH THE ENGINE OFF). BEFORE TESTING OR SERVICING ANY FUEL SYSTEM HOSE, FITTING OR LINE, THE FUEL SYSTEM PRESSURE MUST BE RELEASED.

Turn the ignition off.

Remove the and inspect the Fuel Strainer.

Is the Fuel Strainer plugged?

Yes >> Replace the Fuel Strainer. **Refer to Page 14-10**.
Perform POWERTRAIN VERIFICATION TEST - VER 2.

No >> NOTE: Before continuing, check the Fuel Pump Module harness connector terminals for corrosion, damage, or terminal push out. Ensure the ground circuit is operating properly. Repair as necessary. Replace the Fuel Pump. **Refer to Page 14-17**.
Perform POWERTRAIN VERIFICATION TEST - VER 2.

(P0301) CYLINDER #1 MISFIRE — CONTINUED

13. FUSED IGNITION SWITCH OUTPUT CIRCUIT

Turn the ignition off.

Disconnect the Coil On Plug harness connector.

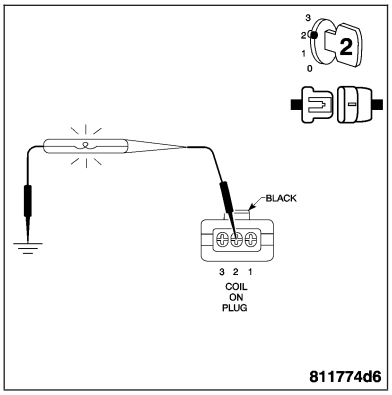

Note: Check connectors — Clean/repair as necessary.

Turn the ignition on.

Using a 12-volt test light connected to ground, probe the Fused Ignition Switch Output circuit at the Coil On Plug harness connector.

Does the test light illuminate brightly?

Yes >> Go To 14

No >> Repair the Fused Ignition Switch Output circuit for an open.
Perform POWERTRAIN VERIFICATION TEST - VER 2.

14. COIL ON PLUG

Turn the ignition off.

Remove the Fuel Pump Fuse from the Relay Control Module.

Using a 12-volt test light connected to 12-volts, probe the Coil On Plug Driver circuit.

Crank the engine for 5 second while observing the test light.

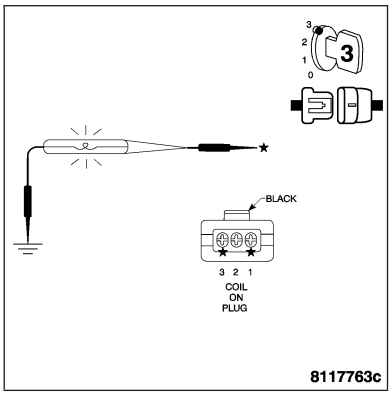

Does the test light blink/flicker?

Yes >> Replace the Coil On Plug. **Refer to Page 8I-5**.
Perform POWERTRAIN VERIFICATION TEST - VER 2.

No >> Go To 15

15. COIL ON PLUG DRIVER CIRCUIT

Turn the ignition off.

Disconnect the PCM C3 harness connector.

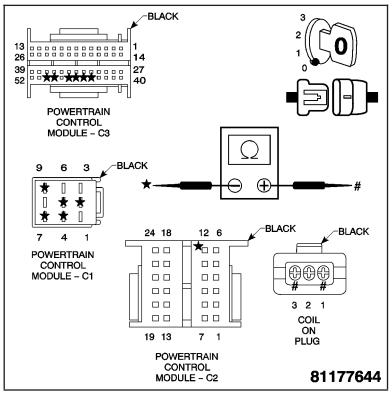

Note: Check connectors — Clean/repair as necessary.

Measure the resistance of both Coil On Plug Driver circuits from the PCM C3 harness connector to the Coil On Plug harness connector.

Was a problem found with the Coil On Plug Driver circuits?

Yes >> Repair the Coil On Plug Driver circuit for an open.
Perform POWERTRAIN VERIFICATION TEST - VER 2.

No >> NOTE: Before continuing, check the PCM harness connector terminals for corrosion, damage, or terminal push out. Repair as necessary. Replace and program the Powertrain Control Module. **Refer to Page 8E-56**.
Perform POWERTRAIN VERIFICATION TEST - VER 2.

(P0301) CYLINDER #1 MISFIRE — CONTINUED

16. INTERMITTENT MISFIRE

Note: The condition that caused this DTC to set is currently not present. Inspect the related wiring harness for a possible intermittent condition.

WARNING: WARNING: WHEN THE ENGINE IS OPERATING, DO NOT STAND IN A DIRECT LINE WITH THE FAN. DO NOT PUT YOUR HANDS NEAR THE PULLEYS, BELTS OR FAN. DO NOT WEAR LOOSE CLOTHING.

Refer to any Technical Service Bulletins (TSBs) that may apply.

With the engine running at normal operating temperature, monitor the DRB III® parameters related to the DTC while wiggling the wire harness. Look for parameter values to change and/or a DTC to set.

Visually inspect the related wire harness. Look for any chafed, pierced, pinched, partially broken wires and broken, bent, pushed out, or corroded terminals.

Inspect and clean all PCM, engine, and chassis grounds.

Note: Reviewing the vehicle repair history may aid in the repair of the misfire condition.

Visually and physically inspect the engine for any of the following conditions.

- Worn serpentine belt
- Binding Engine-Driven accessories.
- Misaligned water pump, P/S pump and A/C compressor pulleys
- Improper CKP Sensor mounting
- Poor connector/terminal to component connection. i.e., CKP Sensor, Fuel Injector, Ignition coil, etc.
- Vacuum leaks
- Restricted Air Intake system

Were any of the above conditions present?

Yes >> Repair as necessary.
Perform POWERTRAIN VERIFICATION TEST - VER 2.

No >> The condition that caused this DTC to set is currently not present. Inspect the related wiring harness for a possible intermittent condition.

(P0302) CYLINDER #2 MISFIRE

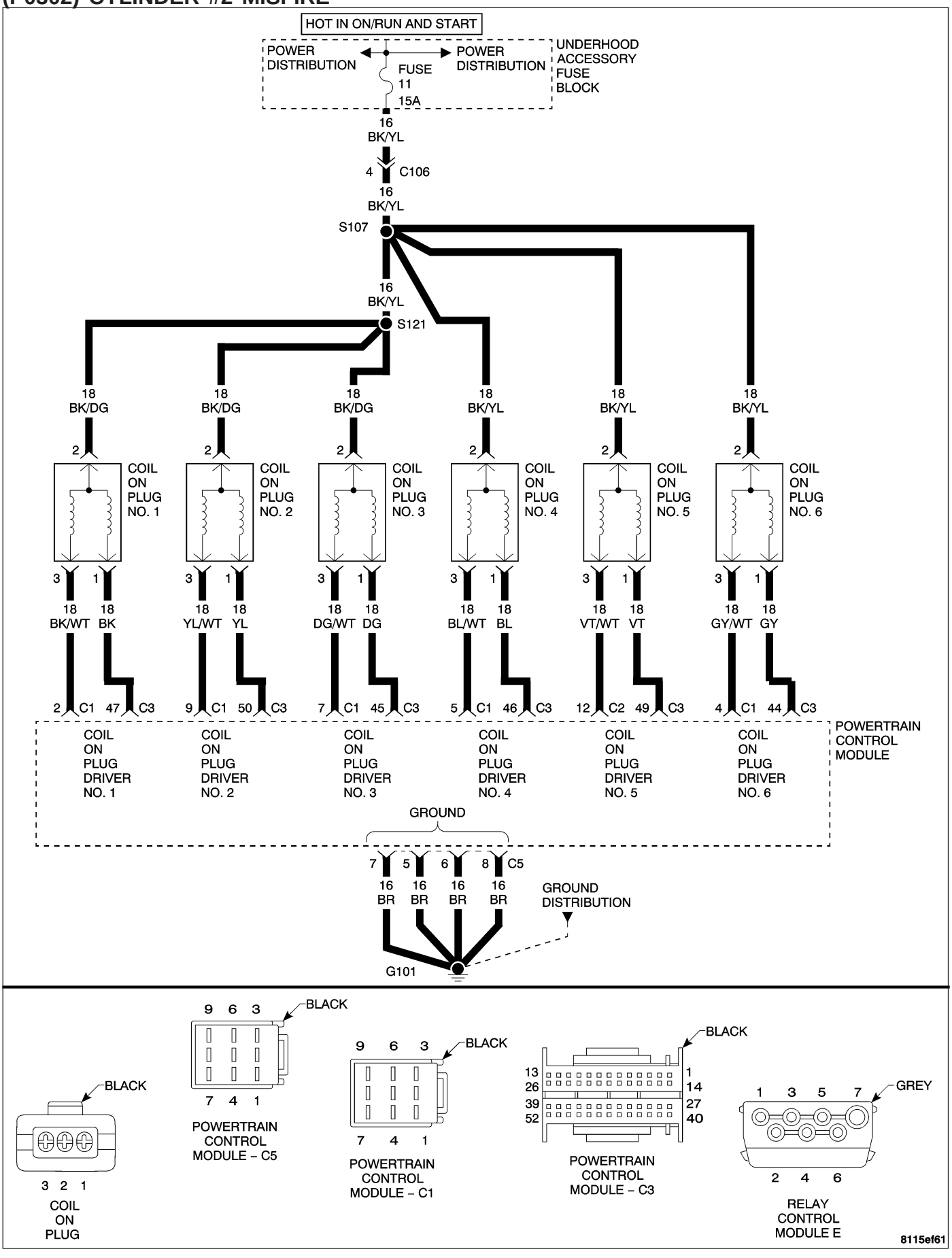

(P0302) CYLINDER #2 MISFIRE — CONTINUED

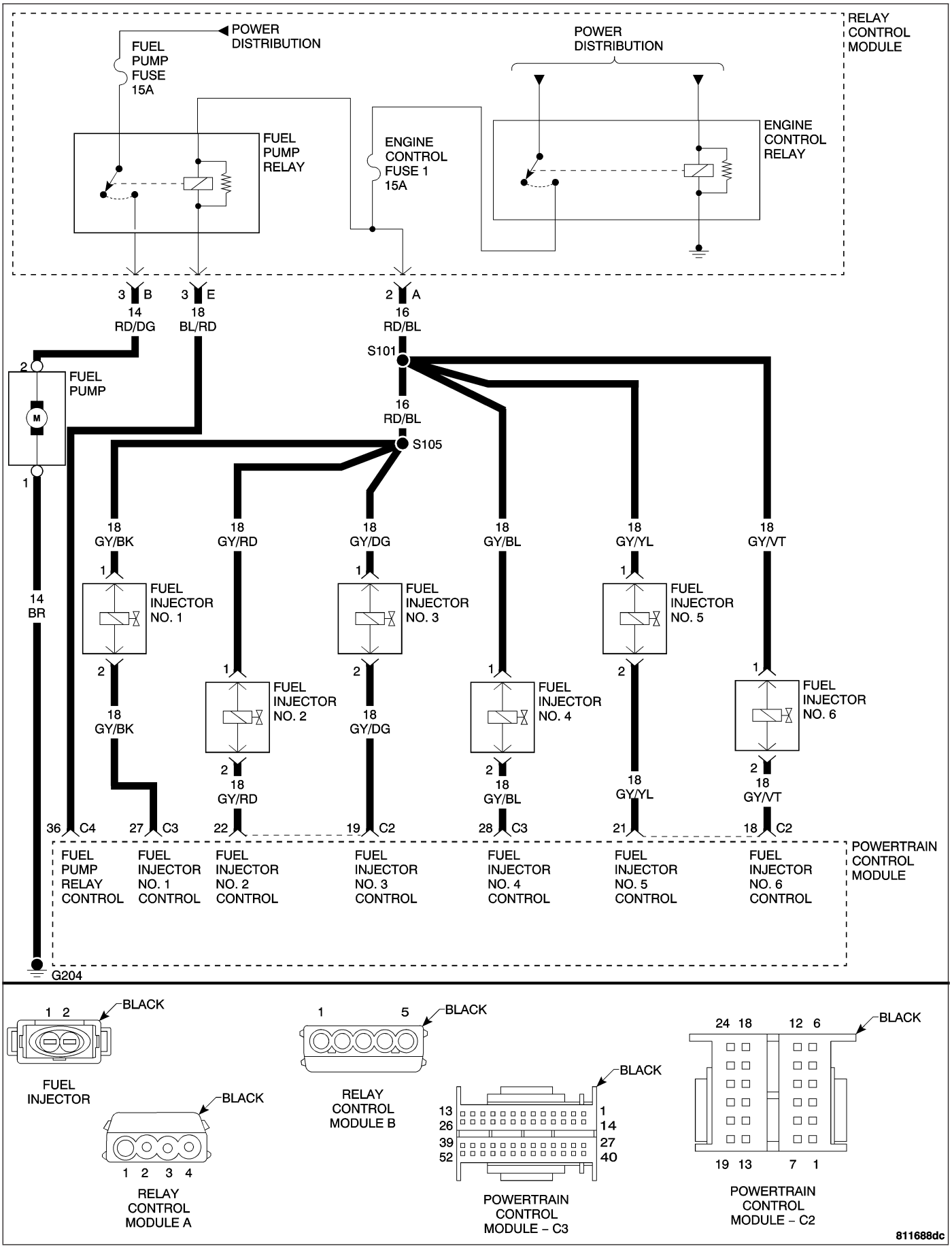

(P0302) CYLINDER #2 MISFIRE — CONTINUED

When Monitored and Set Condition

- When Monitored: Any time the engine is running, and the Target Learning Coefficient has been successfully updated.
- Set Condition: When more than a 1.0% misfire rate is measured during two trips.

POSSIBLE CAUSES
INTERMITTENT MISFIRE
ENGINE CONTROL RELAY OUTPUT CIRCUIT
INJECTOR DRIVER CIRCUIT
FUSED IGNITION SWITCH OUTPUT CIRCUIT
COIL ON PLUG DRIVER CIRCUIT
ENGINE MECHANICAL PROBLEM
COIL ON PLUG
SPARK PLUG
FUEL STRAINER PLUGGED
RESTRICTED FUEL SUPPLY LINE
FUEL PUMP
FUEL INJECTOR
POWERTRAIN CONTROL MODULE

Diagnostic Test

1. CHECK FOR CURRENT DTC

Turn the ignition on.
With the DRB III®, read the PCM DTCs.

Is this DTC preset?

Yes >> For complete diagnosis of this DTC, refer to (P0301) CYLINDER #1 MISFIRE.

No >> Go To 2

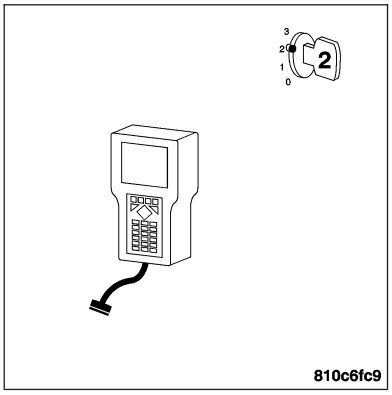

(P0302) CYLINDER #2 MISFIRE — CONTINUED

2. INTERMITTENT WIRING AND CONNECTORS

The conditions necessary to set this DTC are not present at this time.

Note: Check connectors — Clean/repair as necessary. Poor pin to terminal connections can set DTCs.Using the wiring diagram/schematic as a guide, inspect the wiring and connectors specific to this DTC. Wiggle the wires while checking for shorts and open circuits.

Note: Check for any Technical Service Bulletins that may apply.

Were there any problems found?

Yes >> Repair as necessary.
Perform POWERTRAIN VERIFICATION TEST - VER 2.

No >> The condition that caused this DTC to set is currently not present. Inspect the related wiring harness for a possible intermittent condition.

(P0303) CYLINDER #3 MISFIRE

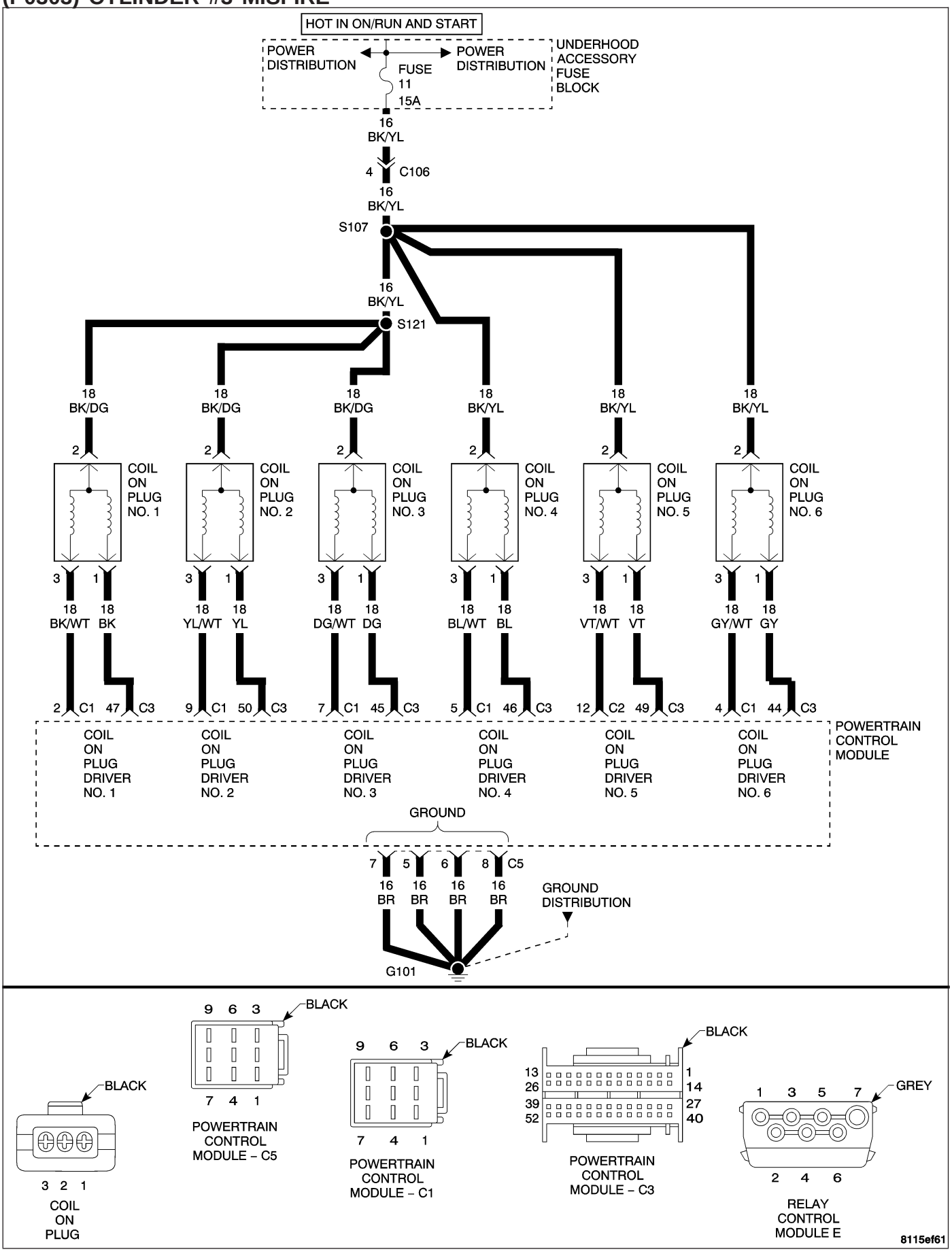

(P0303) CYLINDER #3 MISFIRE — CONTINUED

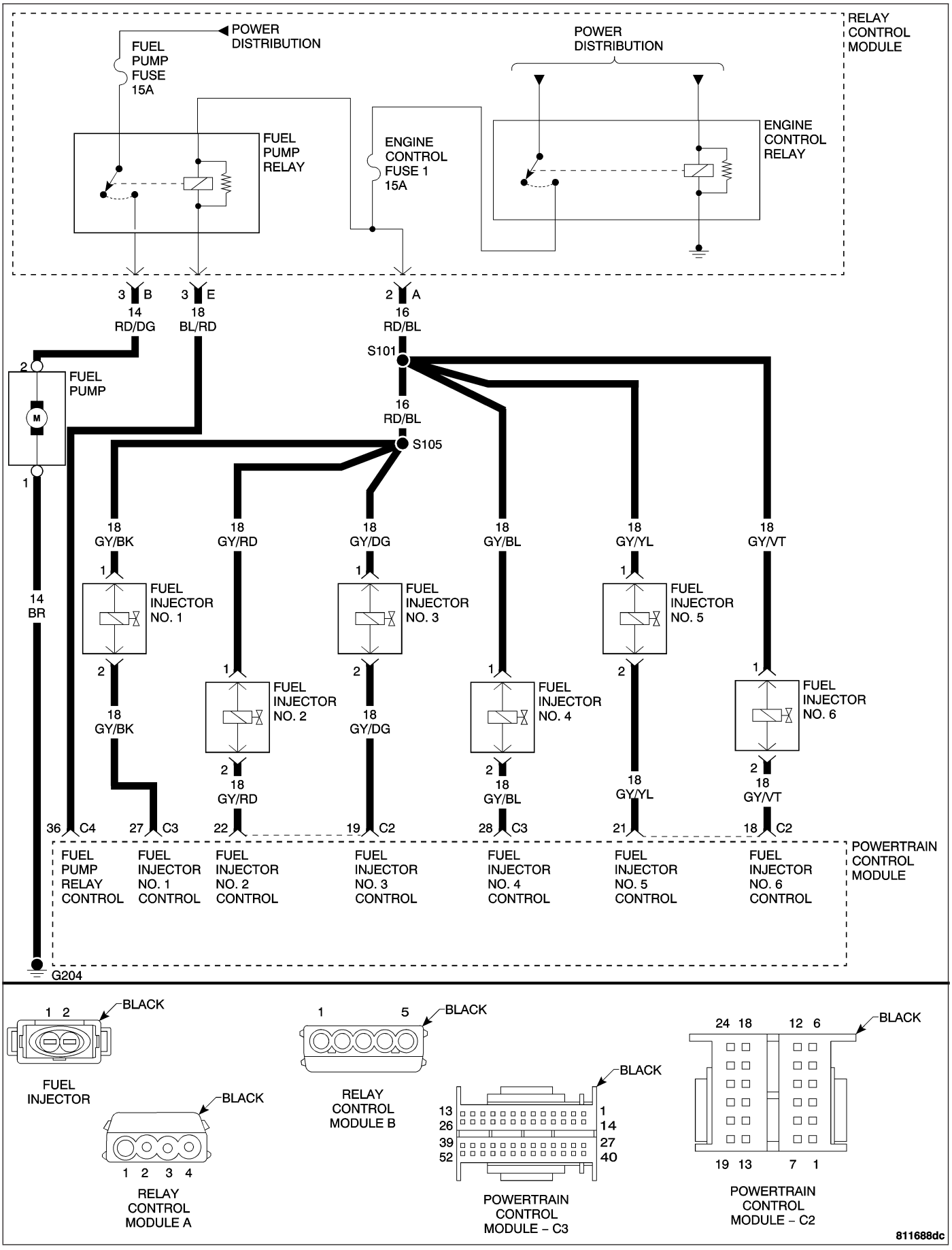

(P0303) CYLINDER #3 MISFIRE — CONTINUED

When Monitored and Set Condition

- When Monitored: Any time the engine is running, and the Target Learning Coefficient has been successfully updated.
- Set Condition: When more than a 1.0% misfire rate is measured during two trips.

POSSIBLE CAUSES
INTERMITTENT MISFIRE
ENGINE CONTROL RELAY OUTPUT CIRCUIT
INJECTOR DRIVER CIRCUIT
FUSED IGNITION SWITCH OUTPUT CIRCUIT
COIL ON PLUG DRIVER CIRCUIT
ENGINE MECHANICAL PROBLEM
COIL ON PLUG
SPARK PLUG
FUEL STRAINER PLUGGED
RESTRICTED FUEL SUPPLY LINE
FUEL PUMP
FUEL INJECTOR
POWERTRAIN CONTROL MODULE

Diagnostic Test

1. CHECK FOR CURRENT DTC

Turn the ignition on.
With the DRB III®, read the PCM DTCs.

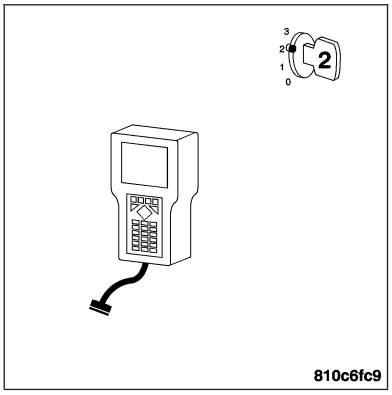

Is this DTC preset?

Yes >> For complete diagnosis of this DTC, refer to (P0301) CYLINDER #1 MISFIRE.

No >> Go To 2

(P0303) CYLINDER #3 MISFIRE — CONTINUED

2. INTERMITTENT WIRING AND CONNECTORS

The conditions necessary to set this DTC are not present at this time.

Note: Check connectors — Clean/repair as necessary. Poor pin to terminal connections can set DTCs.Using the wiring diagram/schematic as a guide, inspect the wiring and connectors specific to this DTC. Wiggle the wires while checking for shorts and open circuits.

Note: Check for any Technical Service Bulletins that may apply.

Were there any problems found?

Yes >> Repair as necessary.
Perform POWERTRAIN VERIFICATION TEST - VER 2.

No >> The condition that caused this DTC to set is currently not present. Inspect the related wiring harness for a possible intermittent condition.

(P0304) CYLINDER #4 MISFIRE

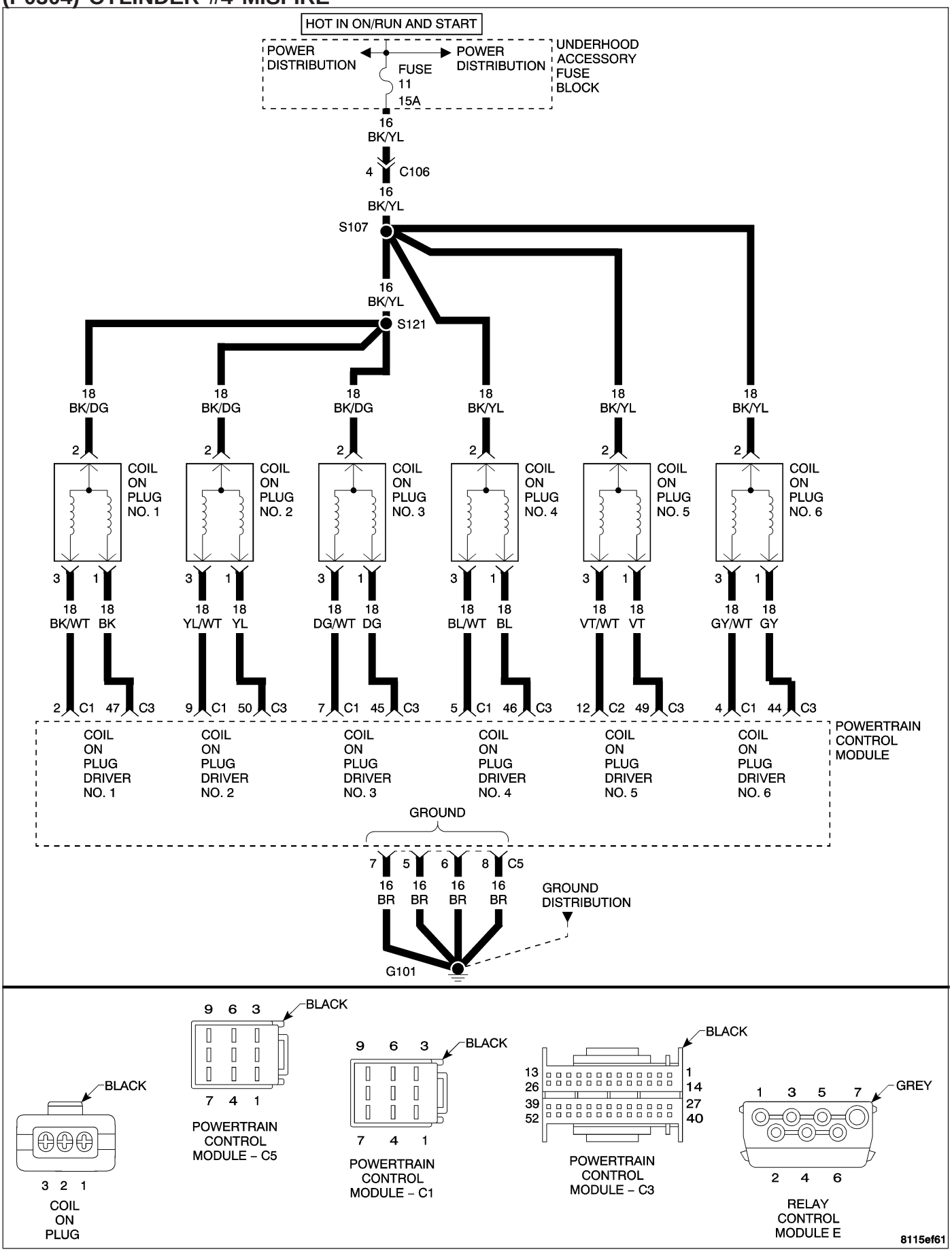

(P0304) CYLINDER #4 MISFIRE — CONTINUED

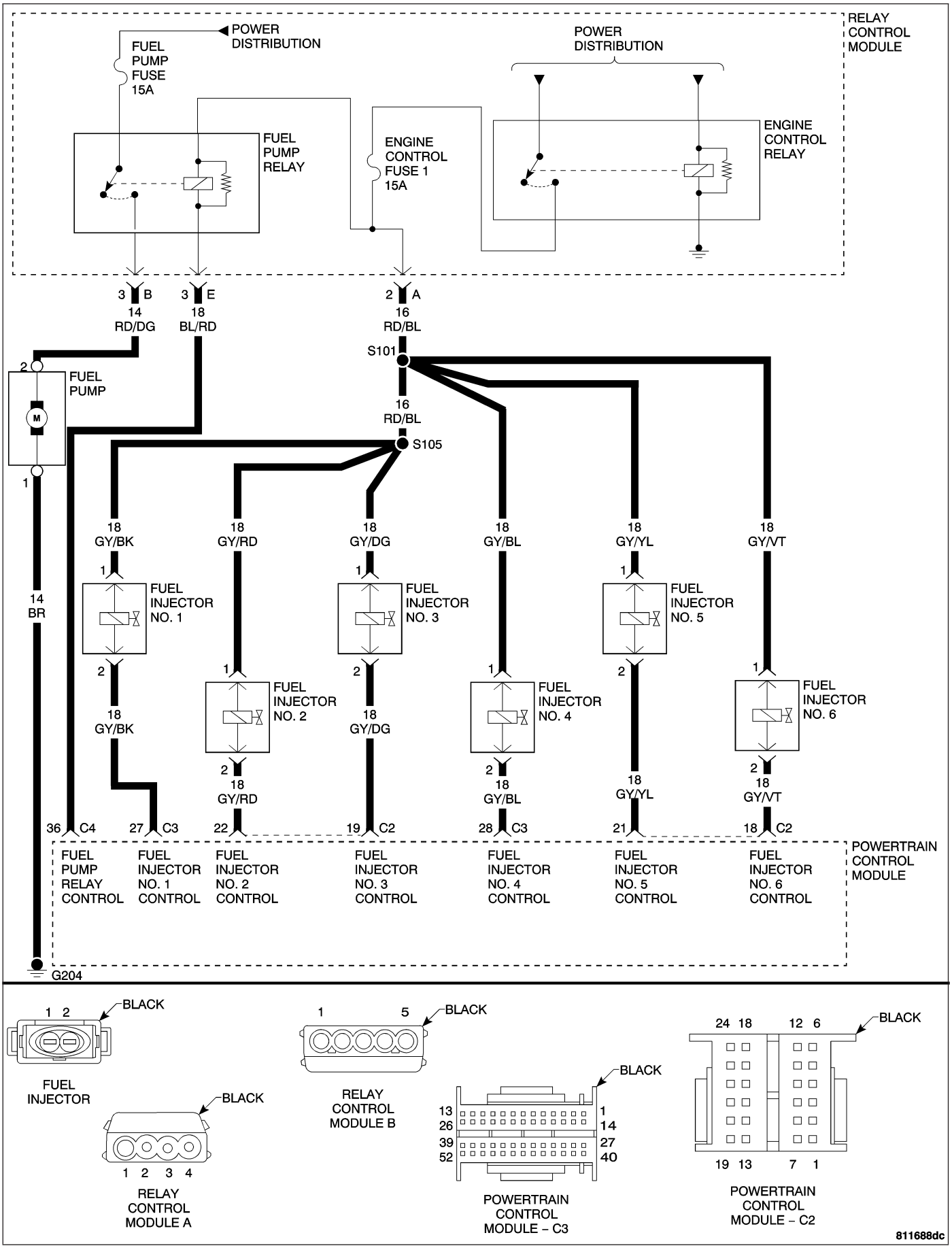

(P0304) CYLINDER #4 MISFIRE — CONTINUED

When Monitored and Set Condition

- When Monitored: Any time the engine is running, and the Target Learning Coefficient has been successfully updated.
- Set Condition: When more than a 1.0% misfire rate is measured during two trips.

POSSIBLE CAUSES
INTERMITTENT MISFIRE
ENGINE CONTROL RELAY OUTPUT CIRCUIT
INJECTOR DRIVER CIRCUIT
FUSED IGNITION SWITCH OUTPUT CIRCUIT
COIL ON PLUG DRIVER CIRCUIT
ENGINE MECHANICAL PROBLEM
COIL ON PLUG
SPARK PLUG
FUEL STRAINER PLUGGED
RESTRICTED FUEL SUPPLY LINE
FUEL PUMP
FUEL INJECTOR
POWERTRAIN CONTROL MODULE

Diagnostic Test

1. CHECK FOR CURRENT DTC

Turn the ignition on.
With the DRB III®, read the PCM DTCs.

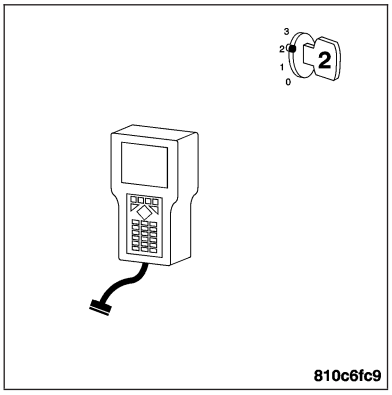

Is this DTC preset?

Yes >> For complete diagnosis of this DTC, refer to (P0301) CYLINDER #1 MISFIRE.

No >> Go To 2

(P0304) CYLINDER #4 MISFIRE — CONTINUED

2. INTERMITTENT WIRING AND CONNECTORS

The conditions necessary to set this DTC are not present at this time.

Note: Check connectors — Clean/repair as necessary. Poor pin to terminal connections can set DTCs.Using the wiring diagram/schematic as a guide, inspect the wiring and connectors specific to this DTC. Wiggle the wires while checking for shorts and open circuits.

Note: Check for any Technical Service Bulletins that may apply.

Were there any problems found?

Yes >> Repair as necessary.
Perform POWERTRAIN VERIFICATION TEST - VER 2.

No >> The condition that caused this DTC to set is currently not present. Inspect the related wiring harness for a possible intermittent condition.

(P0305) CYLINDER #5 MISFIRE

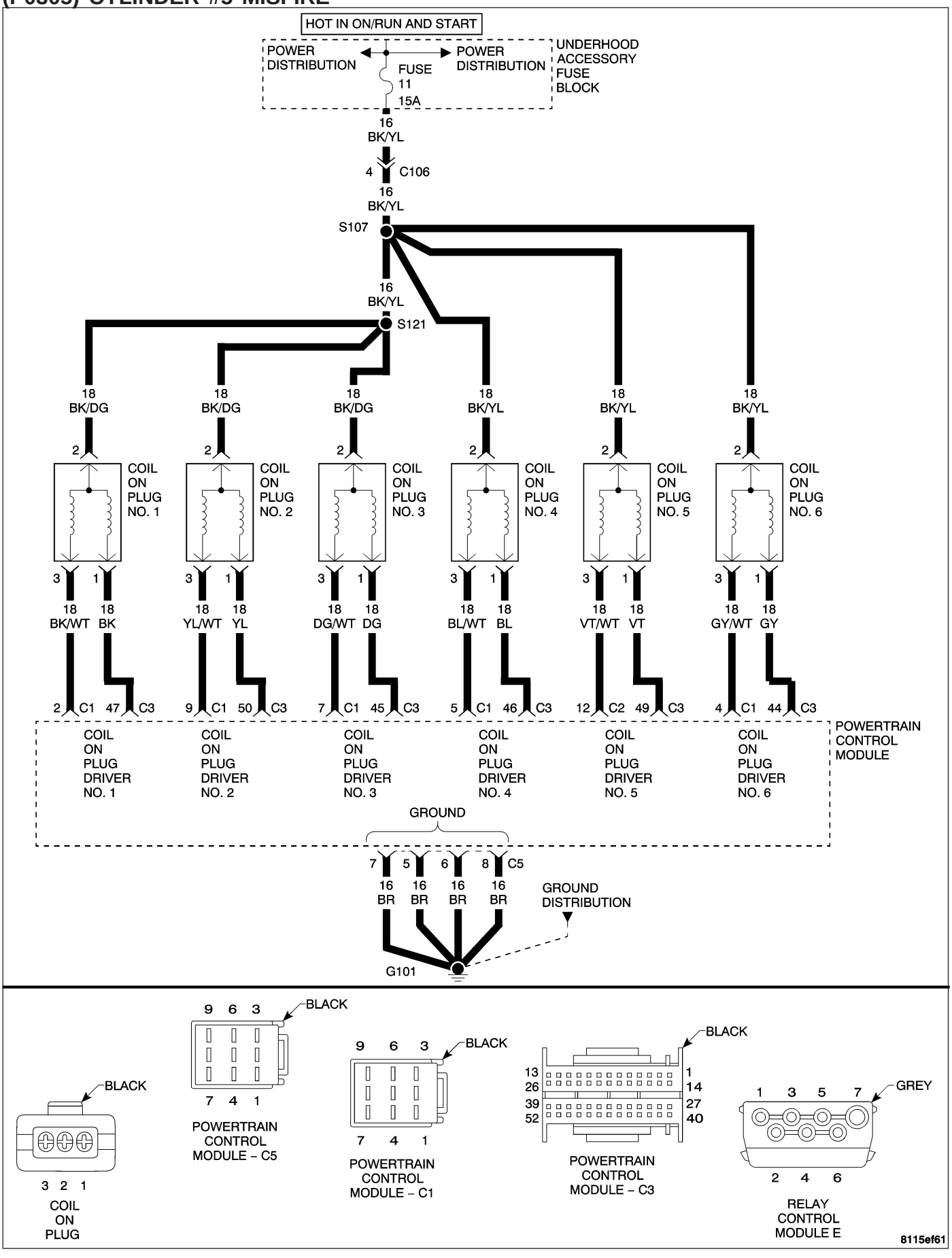

(P0305) CYLINDER #5 MISFIRE — CONTINUED

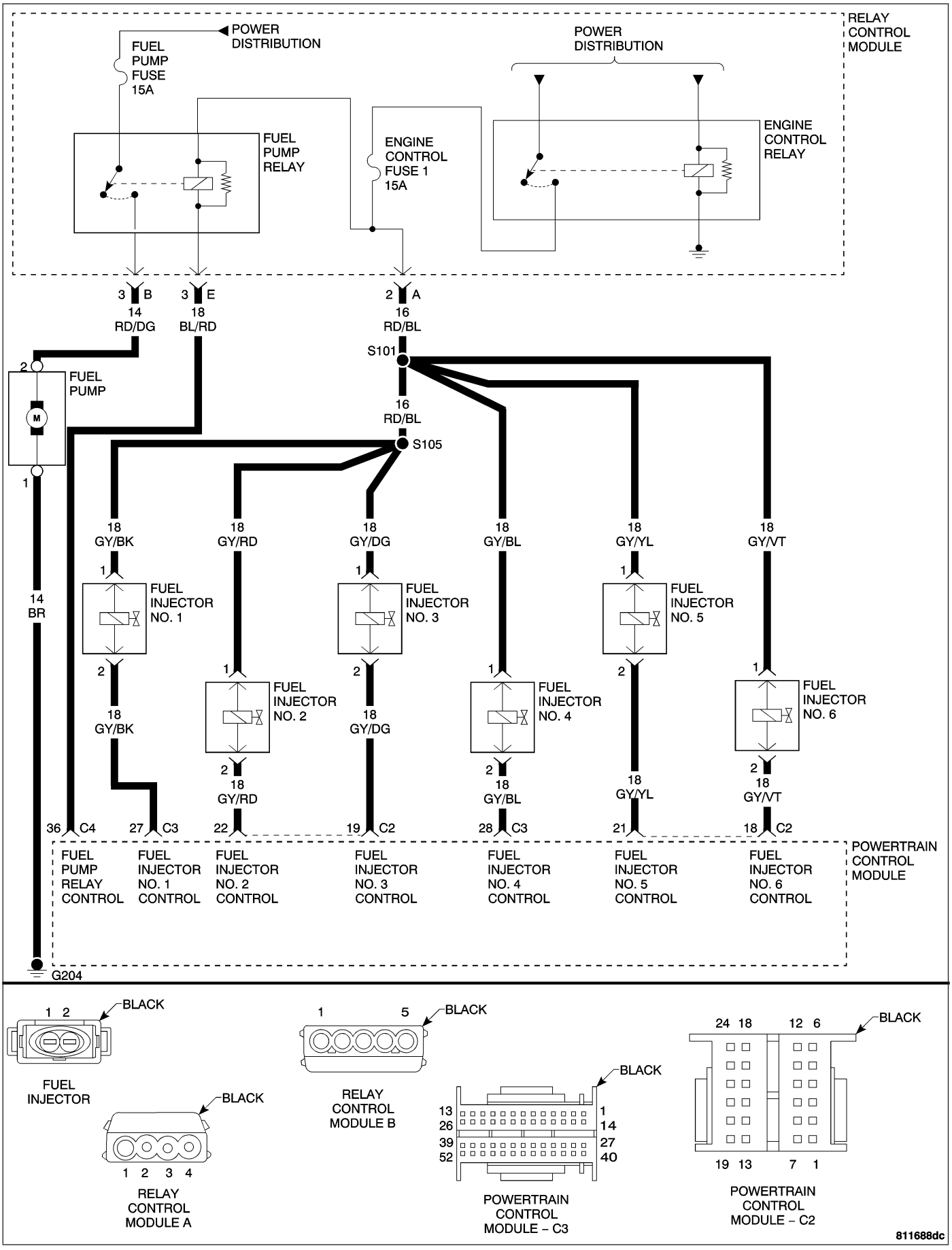

(P0305) CYLINDER #5 MISFIRE — CONTINUED

When Monitored and Set Condition

- When Monitored: Any time the engine is running, and the Target Learning Coefficient has been successfully updated.
- Set Condition: When more than a 1.0% misfire rate is measured during two trips.

POSSIBLE CAUSES
INTERMITTENT MISFIRE
ENGINE CONTROL RELAY OUTPUT CIRCUIT
INJECTOR DRIVER CIRCUIT
FUSED IGNITION SWITCH OUTPUT CIRCUIT
COIL ON PLUG DRIVER CIRCUIT
ENGINE MECHANICAL PROBLEM
COIL ON PLUG
SPARK PLUG
FUEL STRAINER PLUGGED
RESTRICTED FUEL SUPPLY LINE
FUEL PUMP
FUEL INJECTOR
POWERTRAIN CONTROL MODULE

Diagnostic Test

1. CHECK FOR CURRENT DTC

Turn the ignition on.
With the DRB III®, read the PCM DTCs.

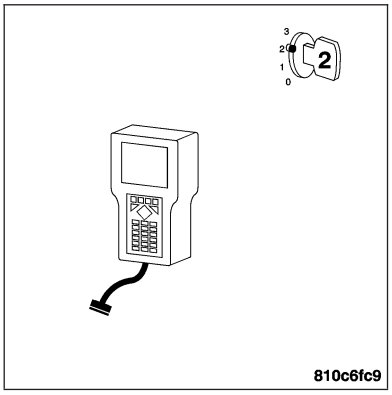

Is this DTC preset?

Yes >> For complete diagnosis of this DTC, refer to (P0301) CYLINDER #1 MISFIRE.

No >> Go To 2

(P0305) CYLINDER #5 MISFIRE — CONTINUED

2. INTERMITTENT WIRING AND CONNECTORS

The conditions necessary to set this DTC are not present at this time.

Note: Check connectors — Clean/repair as necessary. Poor pin to terminal connections can set DTCs.Using the wiring diagram/schematic as a guide, inspect the wiring and connectors specific to this DTC. Wiggle the wires while checking for shorts and open circuits.

Note: Check for any Technical Service Bulletins that may apply.

Were there any problems found?

Yes >> Repair as necessary.
Perform POWERTRAIN VERIFICATION TEST - VER 2.

No >> The condition that caused this DTC to set is currently not present. Inspect the related wiring harness for a possible intermittent condition.

(P0306) CYLINDER #6 MISFIRE

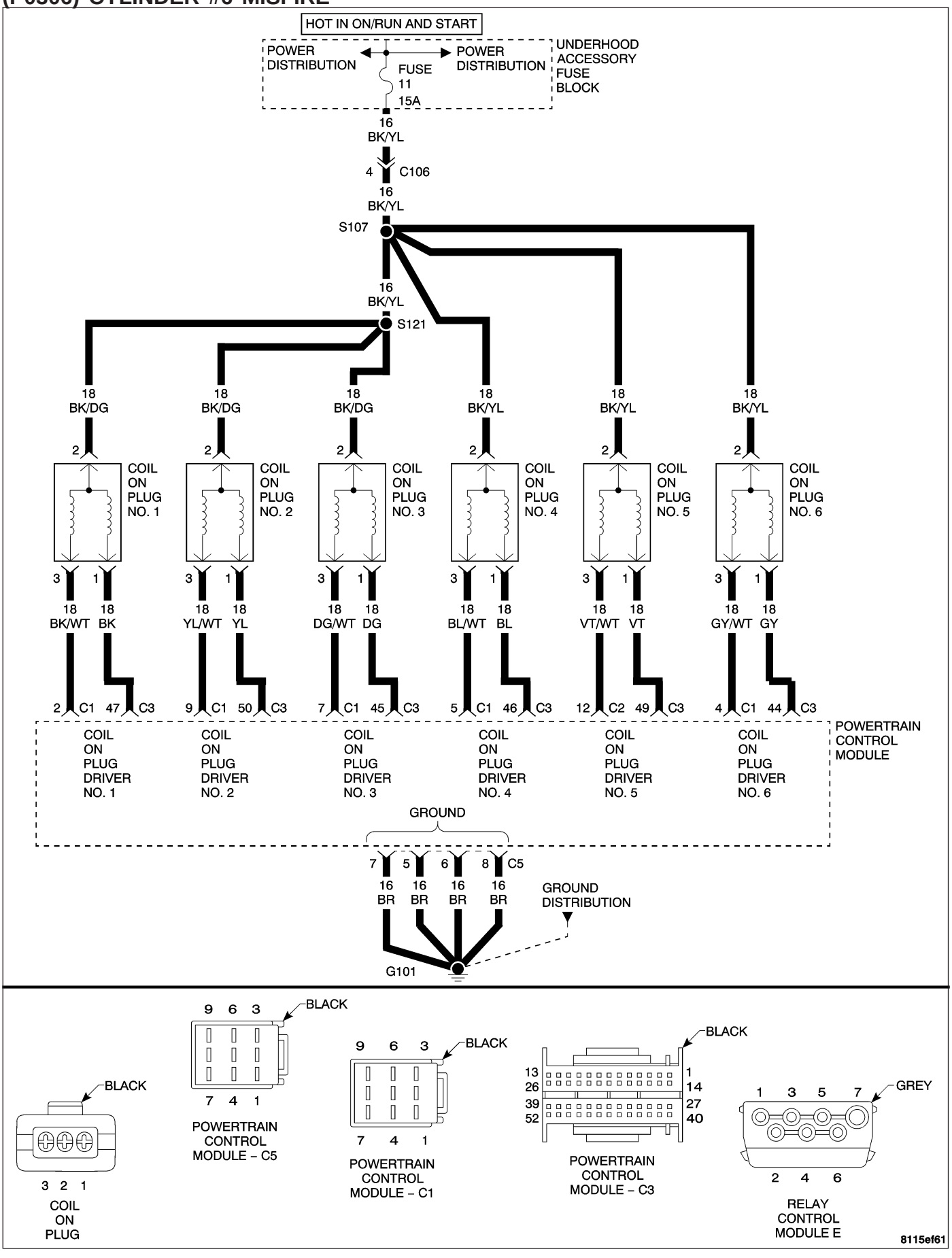

(P0306) CYLINDER #6 MISFIRE — CONTINUED

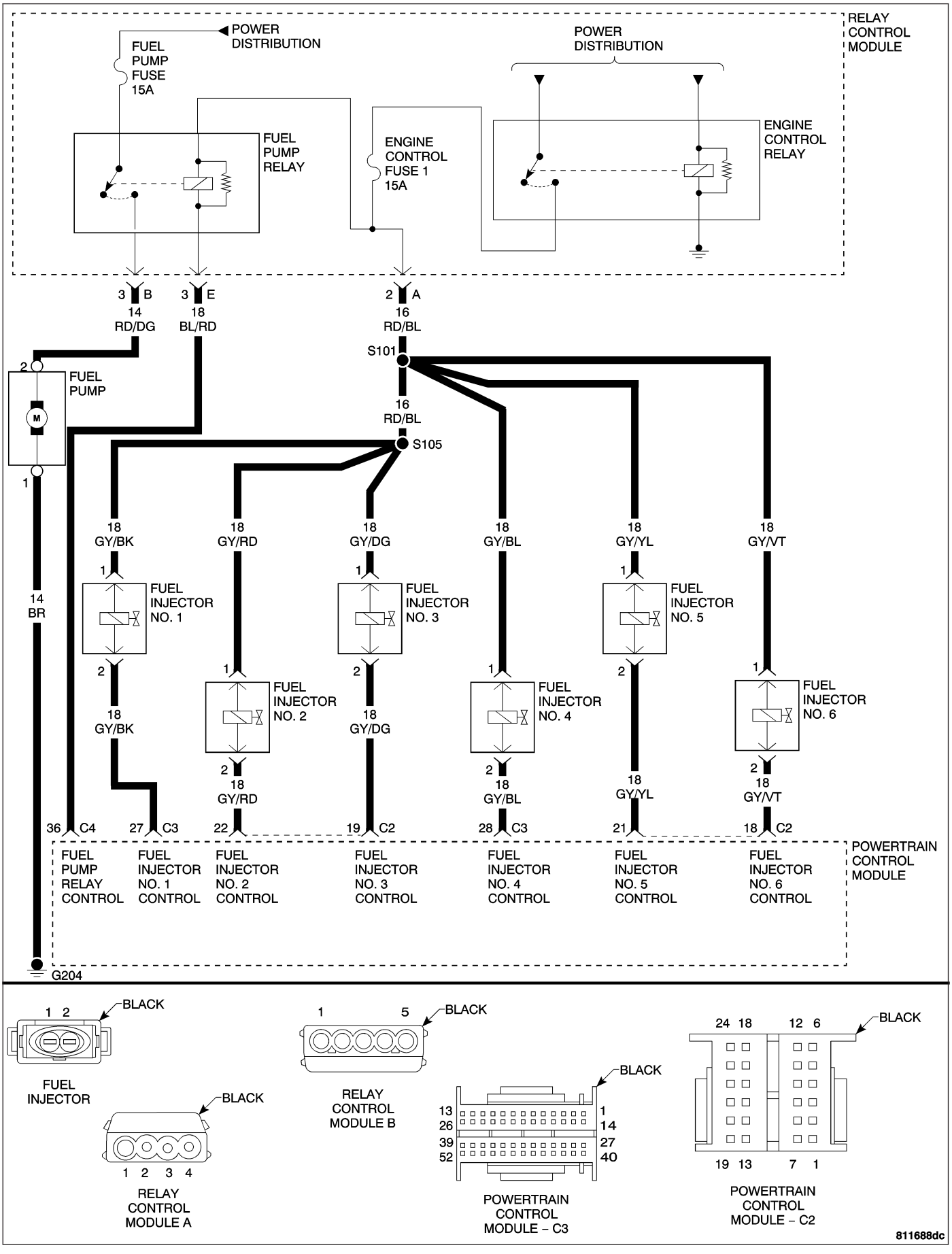

(P0306) CYLINDER #6 MISFIRE — CONTINUED

When Monitored and Set Condition

- When Monitored: Any time the engine is running, and the Target Learning Coefficient has been successfully updated.
- Set Condition: When more than a 1.0% misfire rate is measured during two trips.

POSSIBLE CAUSES
INTERMITTENT MISFIRE
ENGINE CONTROL RELAY OUTPUT CIRCUIT
INJECTOR DRIVER CIRCUIT
FUSED IGNITION SWITCH OUTPUT CIRCUIT
COIL ON PLUG DRIVER CIRCUIT
ENGINE MECHANICAL PROBLEM
COIL ON PLUG
SPARK PLUG
FUEL STRAINER PLUGGED
RESTRICTED FUEL SUPPLY LINE
FUEL PUMP
FUEL INJECTOR
POWERTRAIN CONTROL MODULE

Diagnostic Test

1. CHECK FOR CURRENT DTC

Turn the ignition on.
With the DRB III®, read the PCM DTCs.

Is this DTC preset?

Yes >> For complete diagnosis of this DTC, refer to (P0301) CYLINDER #1 MISFIRE

No >> Go To 2

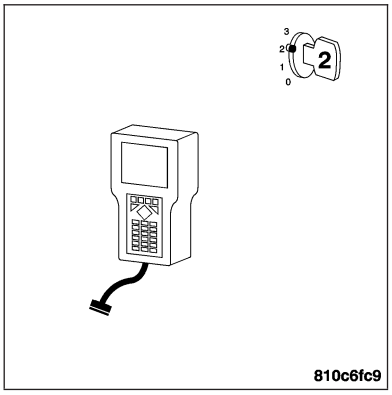

(P0306) CYLINDER #6 MISFIRE — CONTINUED

2. INTERMITTENT WIRING AND CONNECTORS

The conditions necessary to set this DTC are not present at this time.

Note: Check connectors — Clean/repair as necessary. Poor pin to terminal connections can set DTCs.Using the wiring diagram/schematic as a guide, inspect the wiring and connectors specific to this DTC. Wiggle the wires while checking for shorts and open circuits.

Note: Check for any Technical Service Bulletins that may apply.

Were there any problems found?

Yes >> Repair as necessary.
Perform POWERTRAIN VERIFICATION TEST - VER 2.

No >> The condition that caused this DTC to set is currently not present. Inspect the related wiring harness for a possible intermittent condition.

(P0325) KNOCK SENSOR #1 CIRCUIT LOW

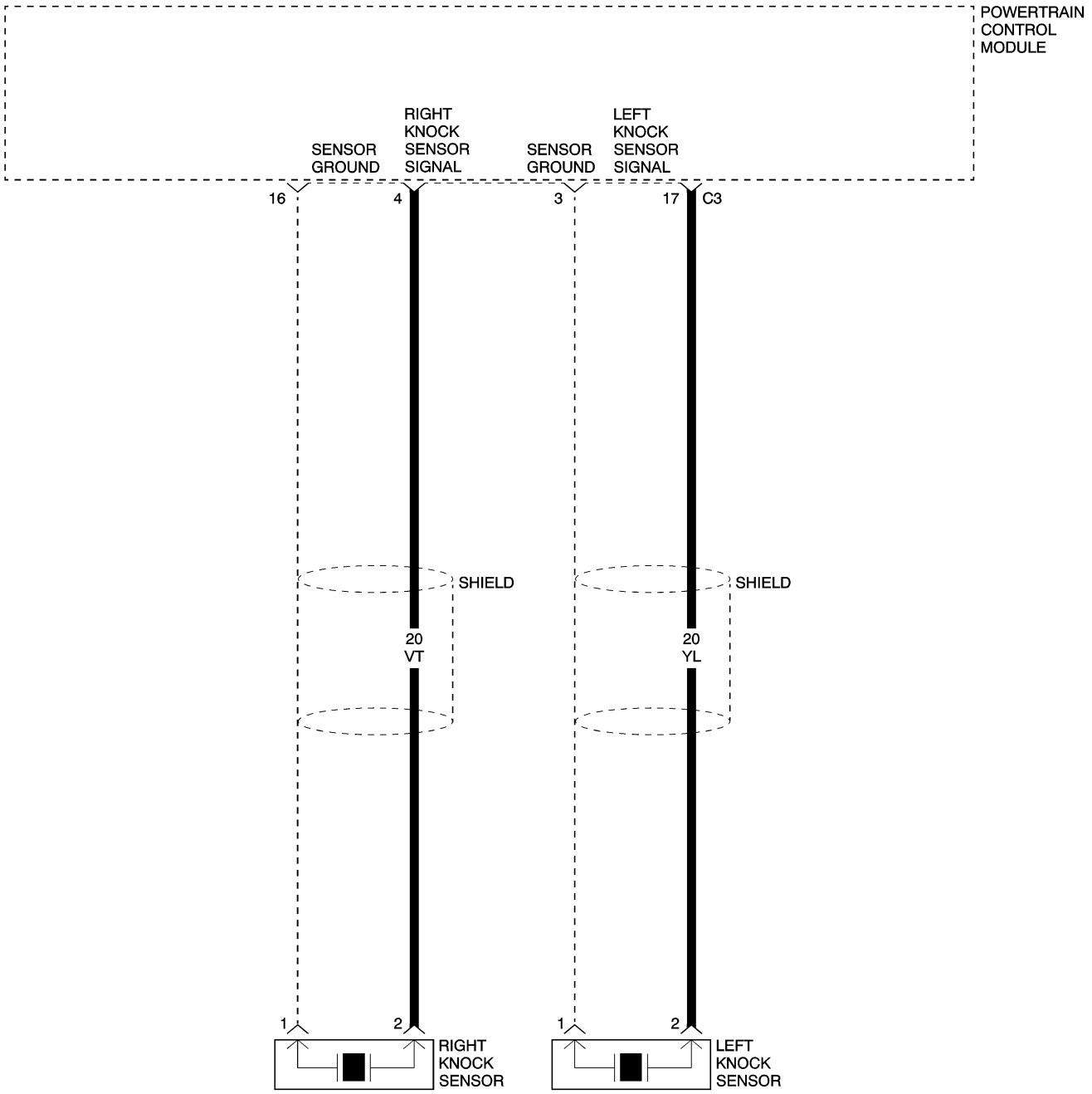

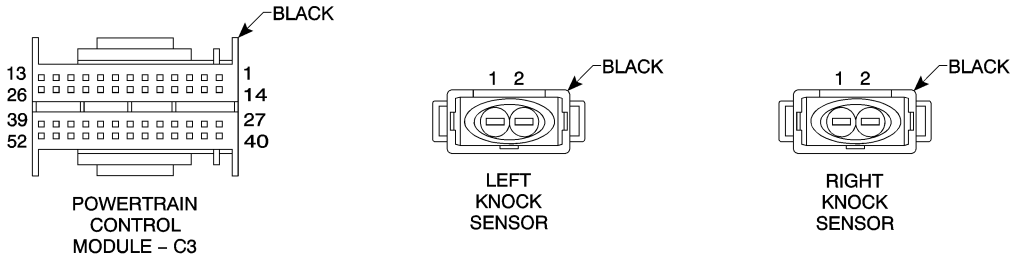

811594eb

(P0325) KNOCK SENSOR #1 CIRCUIT LOW — CONTINUED

When Monitored and Set Condition

- When Monitored: With the Engine at operating temperature, engine speed greater than 2000 RPM, load greater than 40%, and Anti-Knock control not active.
- Set Condition: Lower limit: Knock Sensor voltage is less than 0.10 volts. Upper limit: Knock Sensor voltage is greater than 4.98 volts.

POSSIBLE CAUSES
KNOCK SENSOR SIGNAL CIRCUIT OPEN
KNOCK SENSOR SIGNAL CIRCUIT SHORT TO GROUND
KNOCK SENSOR SIGNAL CIRCUIT SHORT TO VOLTAGE
SENSOR GROUND CIRCUIT OPEN
SENSOR GROUND CIRCUIT SHORTED TO GROUND
SENSOR GROUND CIRCUIT SHORTED TO VOLTAGE
KNOCK SENSOR
POWERTRAIN CONTROL MODULE

For a complete Powertrain Control Module Circuit Diagram **Refer to Page 9-574**.

1. KNOCK SENSOR RESISTANCE

Turn the ignition off.

Disconnect PCM C3 harness connector.

Note: Check connectors — Clean/repair as necessary.
Measure the resistance of the Knock Sensor.

Is the resistance between 4-5 mega ohms

Yes >> Replace and program the Powertrain Control Module. **Refer to Page 8E-56**.
Perform POWERTRAIN VERIFICATION TEST - VER 2.

No >> Go To 2

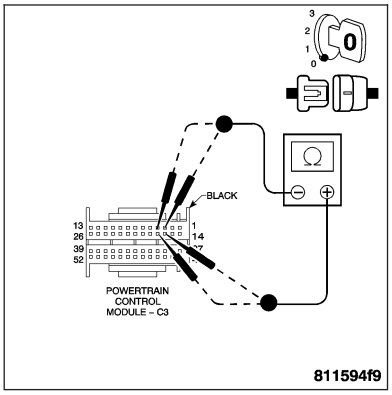

2. KNOCK SENSOR SIGNAL CIRCUIT SHORTED TO GROUND

With the ignition off.

Measure the resistance between ground and the Knock Sensor Signal circuit.

Is resistance below 100 ohms?

Yes >> Repair the Knock Sensor Signal circuit for a short to ground.
Perform POWERTRAIN VERIFICATION TEST - VER 2.

No >> Go To 3

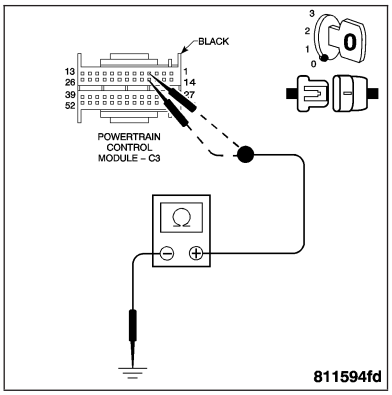

(P0325) KNOCK SENSOR #1 CIRCUIT LOW — CONTINUED

3. SENSOR GROUND CIRCUIT SHORTED TO GROUND

With the ignition off.
Measure the resistance between ground and the Sensor Ground circuit.

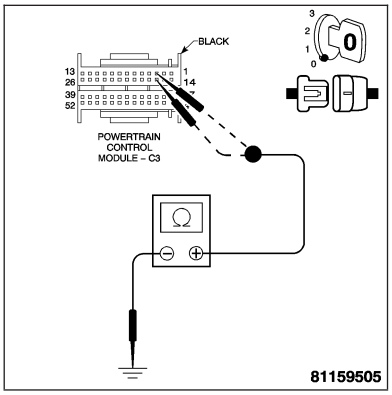

Is resistance below 100 ohms?

Yes >> Repair the Sensor Ground circuit for a short to ground.
Perform POWERTRAIN VERIFICATION TEST - VER 2.

No >> Go To 4

4. SENSOR GROUND CIRCUIT SHORTED TO VOLTAGE

Turn the ignition on.
Measure the voltage of the Sensor Ground circuit at the PCM C3 harness connector.

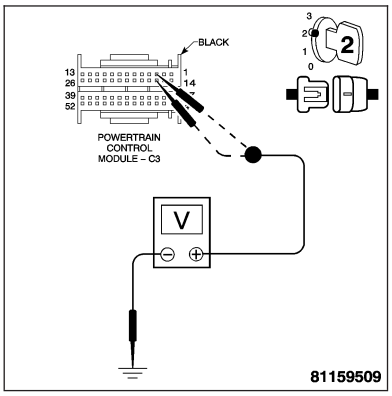

Is the voltage above 1.0 volt?

Yes >> Repair the Sensor Ground circuit for a short to voltage.
Perform POWERTRAIN VERIFICATION TEST - VER 2.

No >> Go To 5

5. KNOCK SENSOR SIGNAL CIRCUIT SHORTED TO VOLTAGE

With the ignition on.
Measure the voltage of the Knock Sensor Signal circuit at the PCM C3 harness connector.

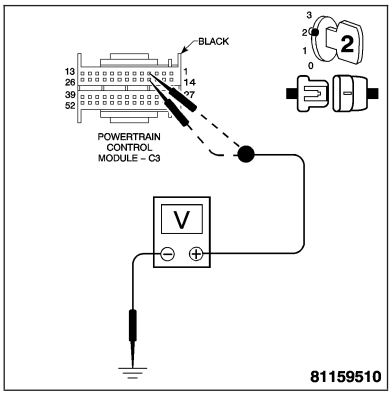

Is the voltage above 1.0 volt?

Yes >> Repair the Knock Sensor Signal circuit for a short to voltage.
Perform POWERTRAIN VERIFICATION TEST - VER 2.

No >> Go To 6

(P0325) KNOCK SENSOR #1 CIRCUIT LOW — CONTINUED

6. OPEN KNOCK SENSOR SIGNAL CIRCUIT

Turn the ignition off.

Disconnect Knock Sensor harness connector.

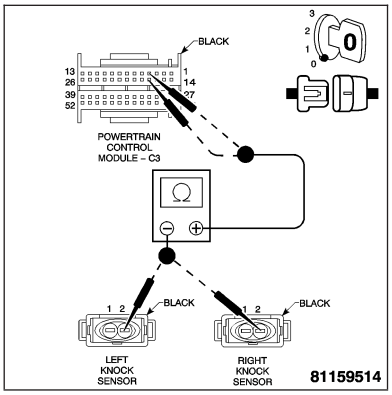

Note: Check connectors — Clean/repair as necessary.
Measure the resistance of the Knock Sensor Signal circuit from the Knock Sensor harness connector to the PCM C3 harness connector.

Is the resistance below 5.0 ohms?

Yes >> Go To 7

No >> Repair the Knock Sensor Signal circuit for an open.
Perform POWERTRAIN VERIFICATION TEST - VER 2.

7. OPEN SENSOR GROUND CIRCUIT

With the ignition off.

Measure the resistance of the Sensor Ground circuit from the Knock Sensor harness connector to the PCM C3 harness connector.

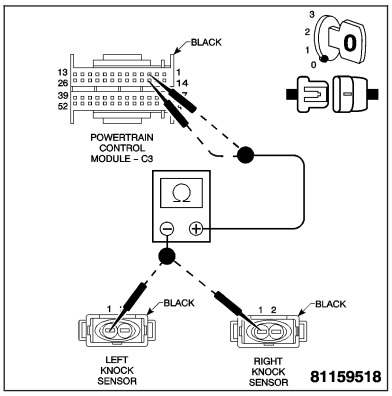

Is the resistance below 5.0 ohms?

Yes >> Replace the Knock Sensor. **Refer to Page 8I-6**.
Perform POWERTRAIN VERIFICATION TEST - VER 2.

No >> Repair the Sensor Ground circuit for an open.
Perform POWERTRAIN VERIFICATION TEST - VER 2.

(P0325) KNOCK SENSOR #1 CIRCUIT HIGH

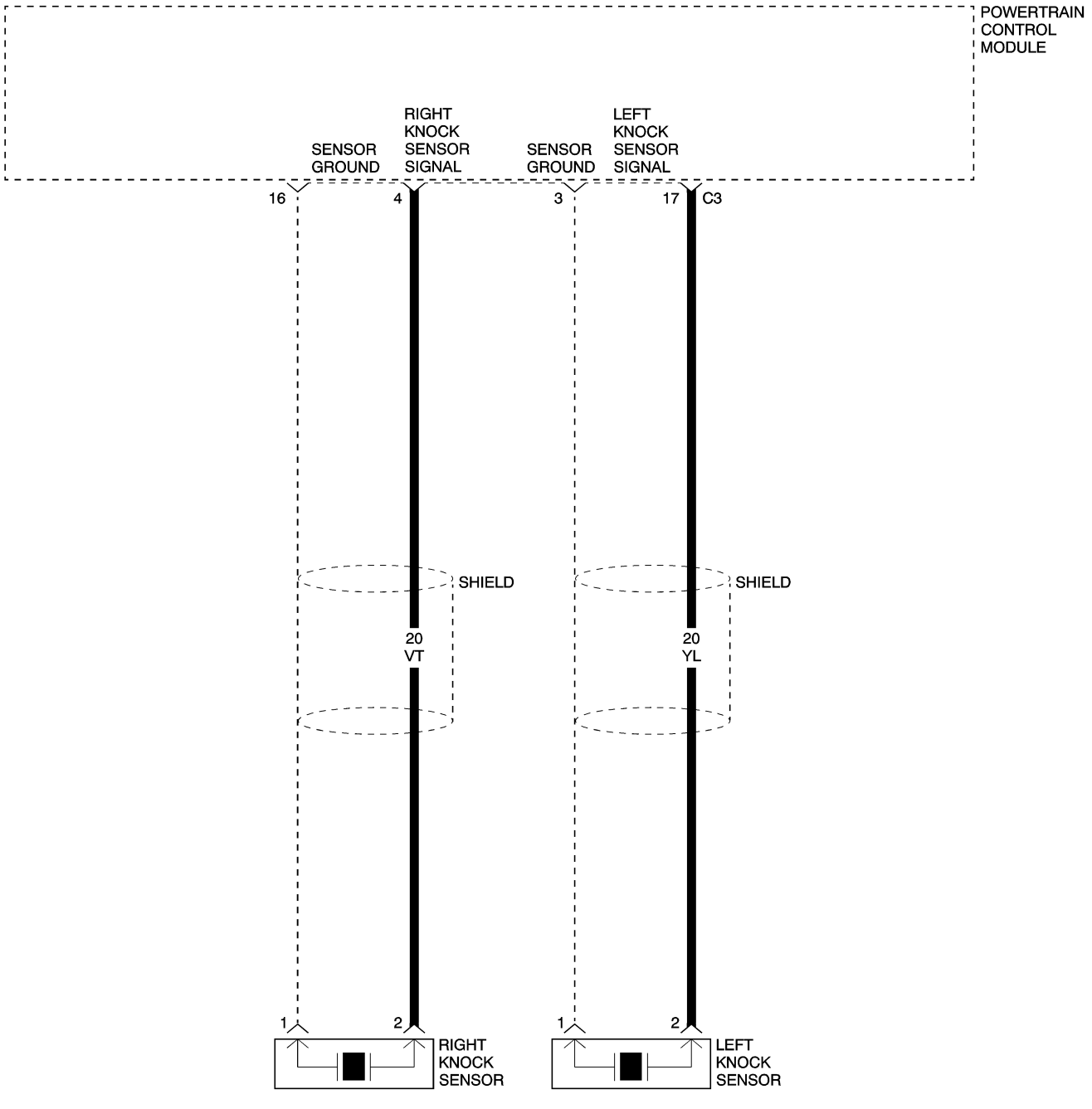

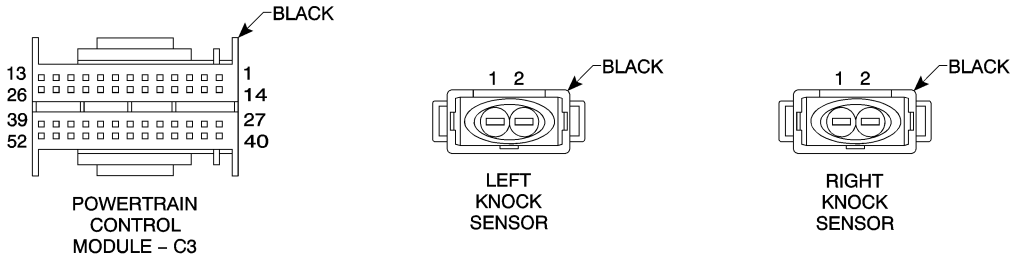

811594eb

(P0325) KNOCK SENSOR #1 CIRCUIT HIGH — CONTINUED

When Monitored and Set Condition

- When Monitored: With the Engine at operating temperature, engine speed greater than 2000 RPM, load greater than 40%, and Anti-Knock control not active.
- Set Condition: Knock Sensor voltage is greater than 4.98 volts.

POSSIBLE CAUSES
KNOCK SENSOR SIGNAL CIRCUIT SHORT TO VOLTAGE
SENSOR GROUND CIRCUIT SHORTED TO VOLTAGE
KNOCK SENSOR
POWERTRAIN CONTROL MODULE

Diagnostic Test

1. CHECK FOR CURRENT DTC

Turn the ignition on.

With the DRB III®, read the PCM DTCs.

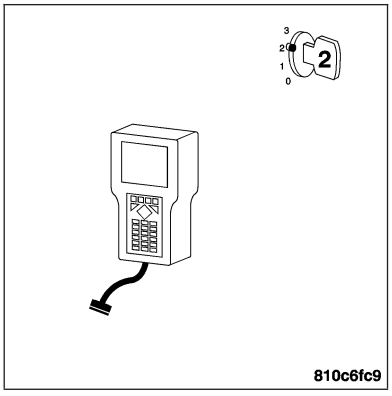

Is this DTC preset?

Yes >> For complete diagnosis of this DTC, refer to (P0325) KNOCK SENSOR #1 CIRCUIT LOW.

No >> Go To 2

2. INTERMITTENT WIRING AND CONNECTORS

The conditions necessary to set this DTC are not present at this time.

Note: Check connectors — Clean/repair as necessary. Poor pin to terminal connections can set DTCs.Using the wiring diagram/schematic as a guide, inspect the wiring and connectors specific to this DTC. Wiggle the wires while checking for shorts and open circuits.

Note: Check for any Technical Service Bulletins that may apply.

Were there any problems found?

Yes >> Repair as necessary.
Perform POWERTRAIN VERIFICATION TEST - VER 2.

No >> The condition that caused this DTC to set is currently not present. Inspect the related wiring harness for a possible intermittent condition.

(P0330) KNOCK SENSOR #2 CIRCUIT HIGH

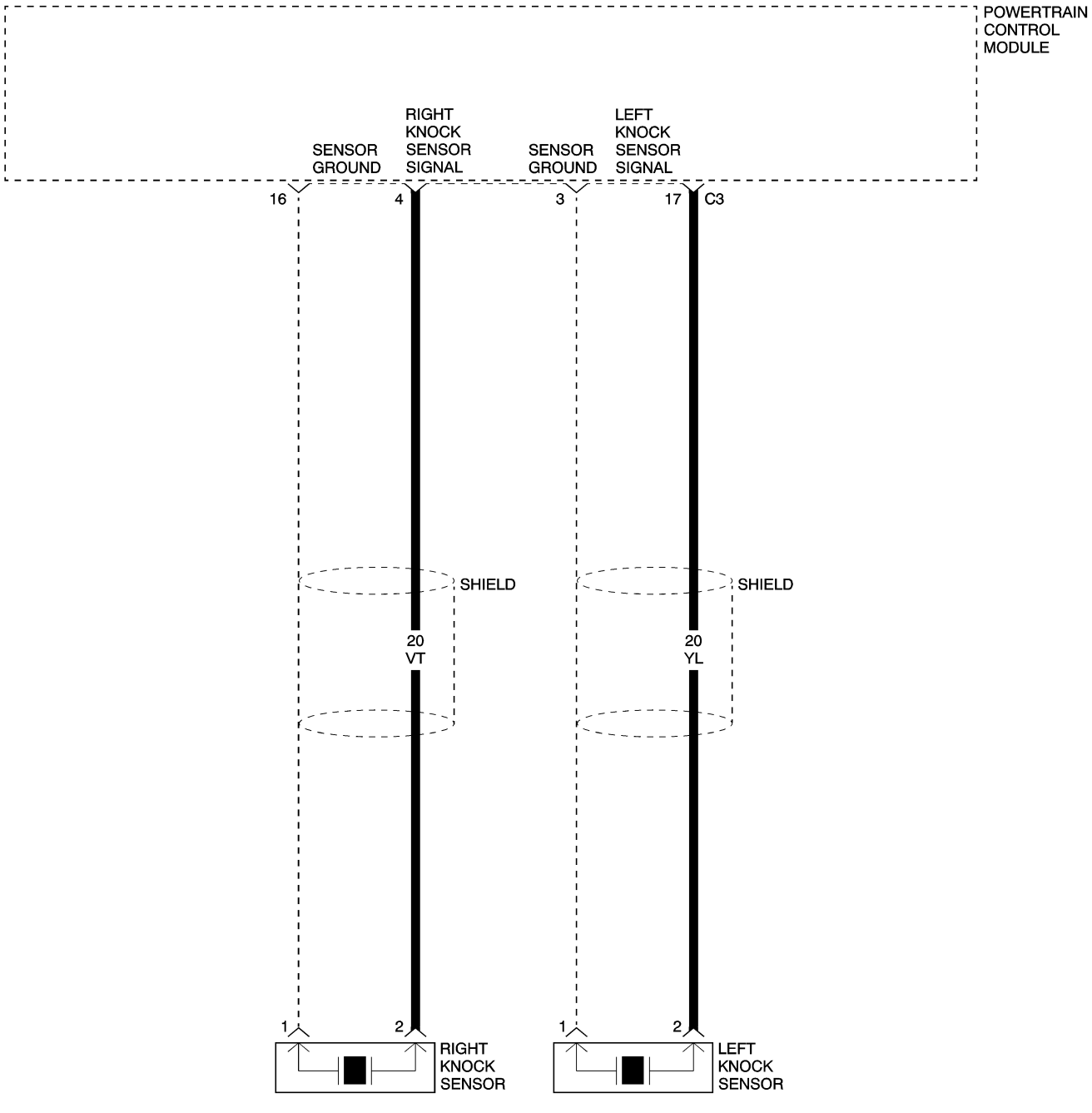

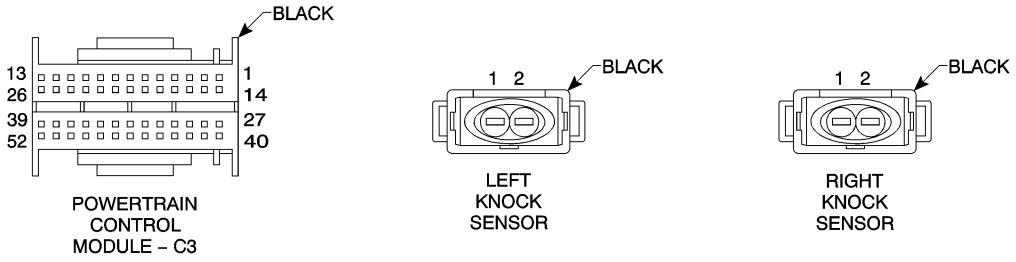

811594eb

(P0330) KNOCK SENSOR #2 CIRCUIT HIGH — CONTINUED

When Monitored and Set Condition

- When Monitored: With the Engine at operating temperature, engine speed greater than 2000 RPM, load greater than 40%, and Anti-Knock control not active.
- Set Condition: Knock Sensor voltage is greater than 4.98 volts.

POSSIBLE CAUSES
KNOCK SENSOR SIGNAL CIRCUIT SHORT TO VOLTAGE
SENSOR GROUND CIRCUIT SHORTED TO VOLTAGE
KNOCK SENSOR
POWERTRAIN CONTROL MODULE

Diagnostic Test

1. CHECK FOR CURRENT DTC

Turn the ignition on.

With the DRB III®, read the PCM DTCs.

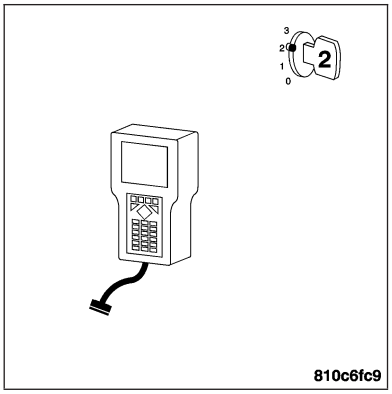

Is this DTC preset?

Yes >> For complete diagnosis of this DTC, refer to (P0325) KNOCK SENSOR #1 CIRCUIT LOW.

No >> Go To 2

2. INTERMITTENT WIRING AND CONNECTORS

The conditions necessary to set this DTC are not present at this time.

Note: Check connectors — Clean/repair as necessary. Poor pin to terminal connections can set DTCs.Using the wiring diagram/schematic as a guide, inspect the wiring and connectors specific to this DTC. Wiggle the wires while checking for shorts and open circuits.

Note: Check for any Technical Service Bulletins that may apply.

Were there any problems found?

Yes >> Repair as necessary.
Perform POWERTRAIN VERIFICATION TEST - VER 2.

No >> The condition that caused this DTC to set is currently not present. Inspect the related wiring harness for a possible intermittent condition.

(P0330) KNOCK SENSOR #2 CIRCUIT LOW

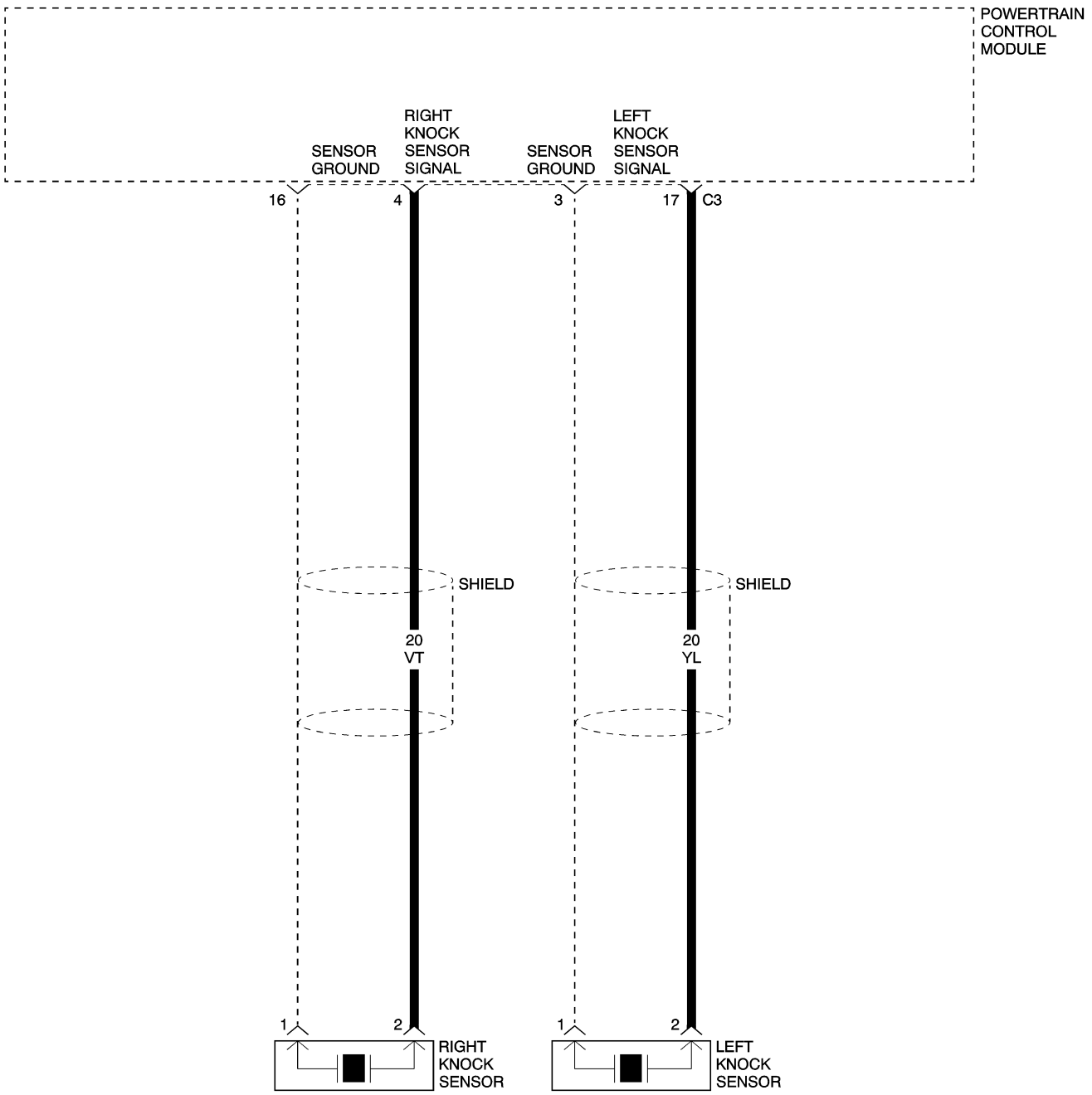

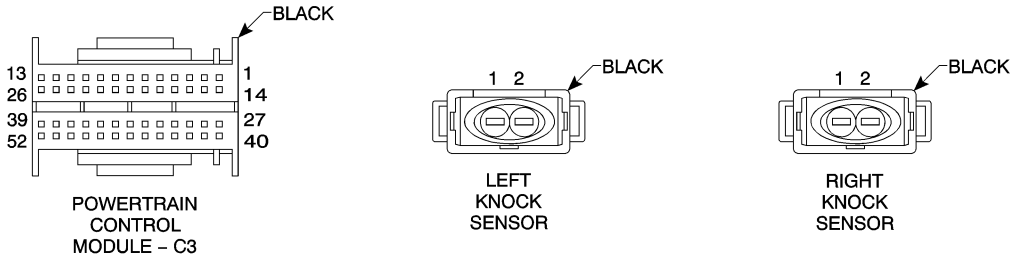

811594eb

(P0330) KNOCK SENSOR #2 CIRCUIT LOW — CONTINUED

When Monitored and Set Condition

- When Monitored: With the Engine at operating temperature, engine speed greater than 2000 RPM, load greater than 40%, and Anti-Knock control not active.
- Set Condition: Knock Sensor voltage is less than 0.10 volts.

POSSIBLE CAUSES
KNOCK SENSOR SIGNAL CIRCUIT OPEN
KNOCK SENSOR SIGNAL CIRCUIT SHORT TO GROUND
SENSOR GROUND CIRCUIT OPEN
SENSOR GROUND CIRCUIT SHORTED TO GROUND
KNOCK SENSOR
POWERTRAIN CONTROL MODULE

Diagnostic Test

1. CHECK FOR CURRENT DTC

Turn the ignition on.
With the DRB III®, read the PCM DTCs.

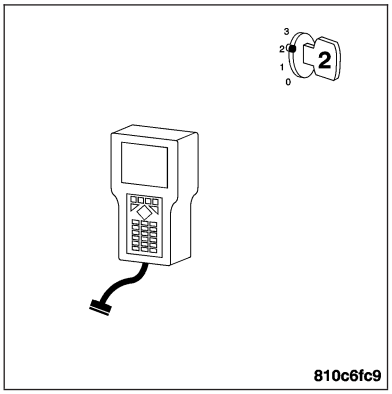

Is this DTC preset?

Yes >> For complete diagnosis of this DTC, refer to (P0325) KNOCK SENSOR #1 CIRCUIT LOW.

No >> Go To 2

2. INTERMITTENT WIRING AND CONNECTORS

The conditions necessary to set this DTC are not present at this time.

Note: Check connectors — Clean/repair as necessary. Poor pin to terminal connections can set DTCs.Using the wiring diagram/schematic as a guide, inspect the wiring and connectors specific to this DTC. Wiggle the wires while checking for shorts and open circuits.

Note: Check for any Technical Service Bulletins that may apply.

Were there any problems found?

Yes >> Repair as necessary.
Perform POWERTRAIN VERIFICATION TEST - VER 2.

No >> The condition that caused this DTC to set is currently not present. Inspect the related wiring harness for a possible intermittent condition.

(P0335) CRANKSHAFT POSITION SENSOR CIRCUIT

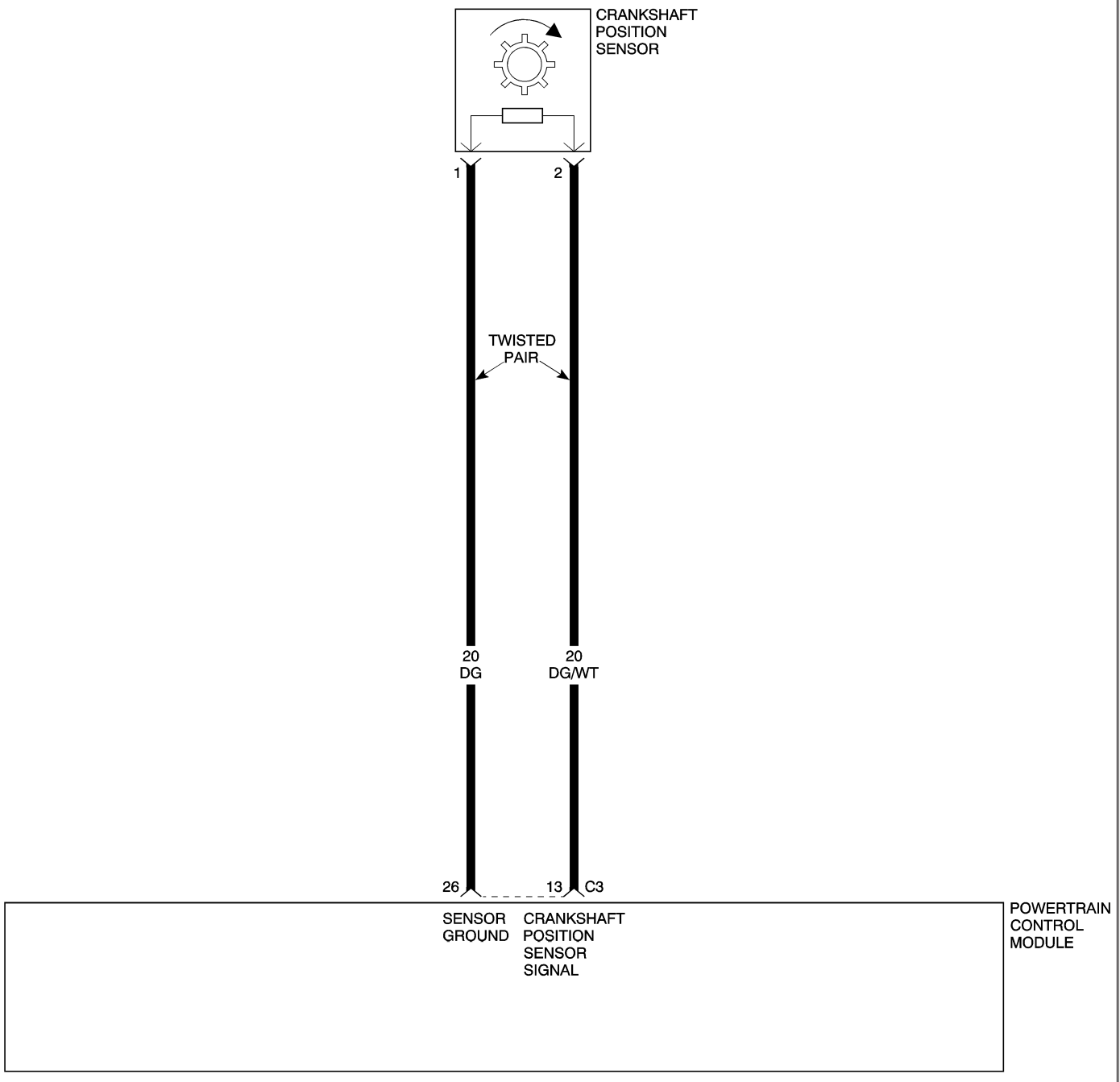

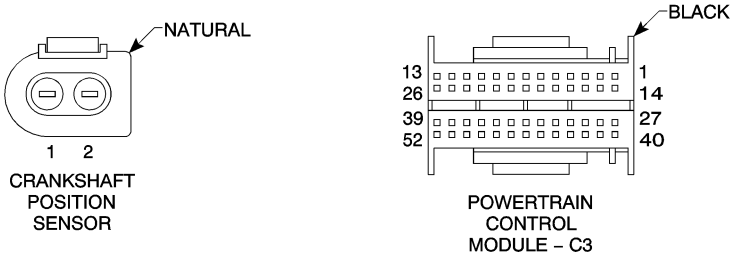

8115dfe6

(P0335) CRANKSHAFT POSITION SENSOR CIRCUIT — CONTINUED

When Monitored and Set Condition

- When Monitored: Engine cranking or running.
- Set Condition: No Crankshaft Position (CKP) signal is present during engine cranking and at least 8 Camshaft Position Sensor (CMP) signals have occurred.

POSSIBLE CAUSES
INTERMITTENT CKP SIGNAL
CRANKSHAFT POSITION SENSOR (CKP) SIGNAL CIRCUIT OPEN
CRANKSHAFT POSITION SENSOR SIGNAL CIRCUIT SHORTED VOLTAGE
CRANKSHAFT POSITION SENSOR SIGNAL CIRCUIT SHORTED GROUND
CRANKSHAFT POSITION SENSOR GROUND CIRCUIT OPEN
CRANKSHAFT POSITION SENSOR GROUND CIRCUIT SHORTED VOLTAGE
CRANKSHAFT POSITION SENSOR GROUND CIRCUIT SHORTED GROUND
CRANKSHAFT POSITION SENSOR
POWERTRAIN CONTROL MODULE

For a complete Powertrain Control Module Circuit Diagram **Refer to Page 9-574**.

Diagnostic Test

1. CHECK FOR CURRENT DTC

WARNING: WHEN THE ENGINE IS OPERATING, DO NOT STAND IN A DIRECT LINE WITH THE FAN. DO NOT PUT YOUR HANDS NEAR THE PULLEYS, BELTS OR FAN. DO NOT WEAR LOOSE CLOTHING.

Note: If the PCM detects and stores a DTC, the PCM also stores the engine/vehicle operating conditions under which the DTC was set. Some of these conditions are displayed on the DRB III® at the same time the DTC is displayed.

Note: Before erasing stored DTCs, record these conditions. Attempting to duplicate these conditions may assist when checking for a DTC.

Turn the ignition on.

With the DRB III®, erase PCM DTCs.

Note: It maybe necessary to road test the vehicle for this DTC to set.

With the DRB III®, read the PCM DTCs.

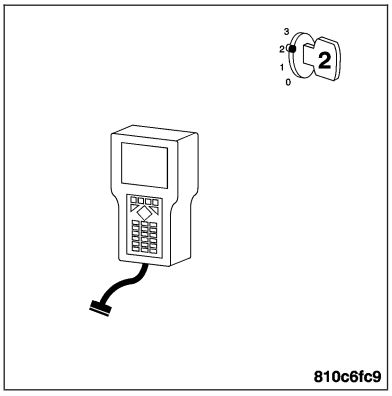

Did this DTC set again?

Yes >> Go To 2

No >> Go To 12

(P0335) CRANKSHAFT POSITION SENSOR CIRCUIT — CONTINUED

2. CKP WIRE HARNESS INSPECTION

Turn the ignition off.

Visually inspect the related wire harness. Look for any chafed, pierced, pinched, or partially broken wires.

Visually inspect the related wire harness connectors. Look for broken, bent, pushed out, or corroded terminals.

Ensure the Crankshaft Position (CKP) Sensor and the Camshaft Position Sensor are properly installed and the mounting bolt(s) are tight.

Refer to any Technical Service Bulletins that may apply.

Were any of the above conditions present?

Yes >> Repair as necessary.
Perform POWERTRAIN VERIFICATION TEST - VER 2.

No >> Go To 3

3. CKP SENSOR SIGNAL CIRCUIT

With the ignition off.

Disconnect the Crankshaft Position Sensor harness connector.

Note: Check connectors — Clean/repair as necessary.

Turn the ignition on.

Measure the voltage of the CKP Sensor Signal circuit at the CKP Sensor harness connector.

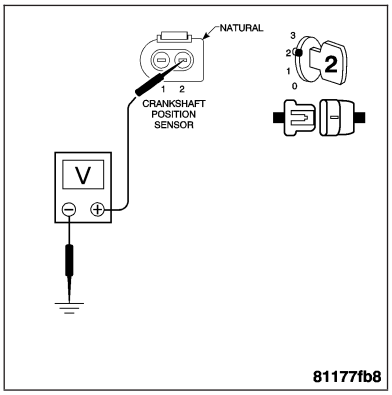

Is the voltage between 2.2 and 2.7 volts?

Yes >> Go To 4

No >> Go To 8

4. CKP SENSOR GROUND CIRCUIT

With the ignition on.

Measure the voltage of the CKP Sensor Ground circuit at the CKP Sensor harness connector.

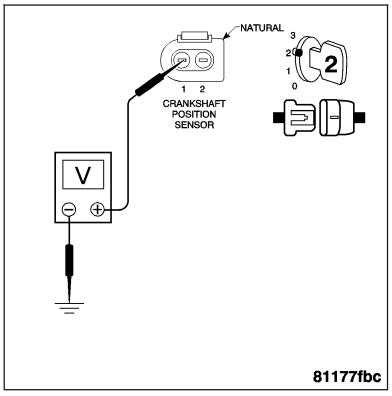

Is the voltage between 2.2 and 2.7 volts?

Yes >> Go To 11

No >> Go To 5

(P0335) CRANKSHAFT POSITION SENSOR CIRCUIT — CONTINUED

5. CKP SENSOR GROUND CIRCUIT SHORTED TO VOLTAGE

Turn the ignition off.

Disconnect the PCM C3 harness.

Note: Check connectors — Clean/repair as necessary.

Turn the ignition on.

Measure the voltage of the CKP Sensor Ground circuit at the CKP Sensor harness.

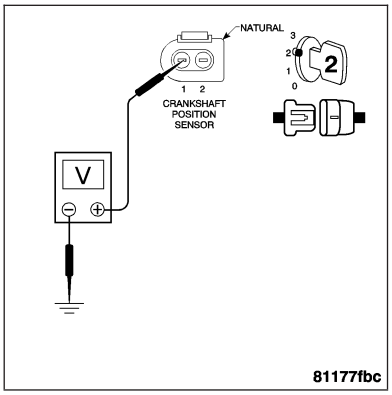

Is the voltage above 1.0 volt?

Yes >> Repair the CKP Sensor Ground circuit for a short to voltage.
Perform POWERTRAIN VERIFICATION TEST - VER 2.

No >> Go To 6

6. CKP SENSOR GROUND CIRCUIT SHORTED TO GROUND

Turn the ignition off.

Measure the resistance between ground and the CKP Sensor Ground circuit.

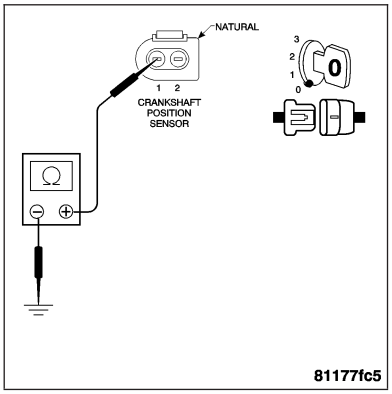

Is the resistance below 100 ohms?

Yes >> Repair the CKP Sensor Ground circuit for a short to ground.
Perform POWERTRAIN VERIFICATION TEST - VER 2.

No >> Go To 7

7. OPEN CKP SENSOR GROUND CIRCUIT

With the ignition off.

Measure the resistance of the CKP Sensor Ground circuit from the CKP harness connector to the PCM C3 harness connector.

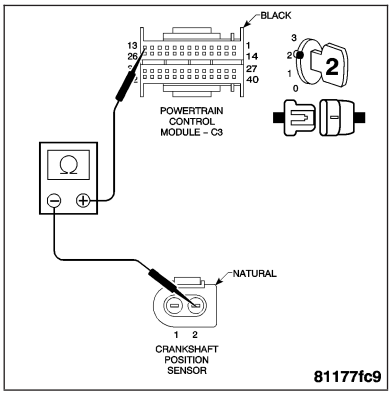

Is the resistance below 5.0 ohms?

Yes >> Repair the CKP Sensor Ground circuit for an open.
Perform POWERTRAIN VERIFICATION TEST - VER 2.

No >> Replace and program the Powertrain Control Module.
Refer to Page 8E-56.
Perform POWERTRAIN VERIFICATION TEST - VER 2.

(P0335) CRANKSHAFT POSITION SENSOR CIRCUIT — CONTINUED

8. CKP SENSOR SIGNAL CIRCUIT SHORTED TO VOLTAGE

Turn the ignition off.

Disconnect the PCM C3 harness connector.

Note: Check connectors — Clean/repair as necessary.

Turn the ignition on.

Measure the voltage of the CKP Sensor Signal circuit at the CKP Sensor harness connector.

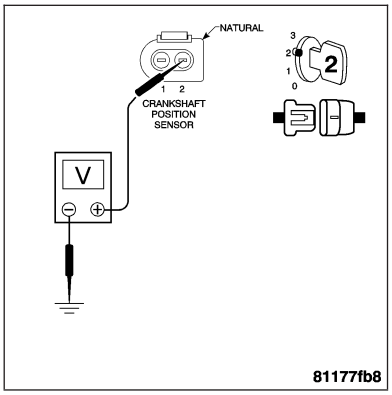

Is the voltage above 1.0 volt?

Yes >> Repair the CKP Sensor Signal circuit for a short to voltage. Perform POWERTRAIN VERIFICATION TEST - VER 2.

No >> Go To 9

9. CKP SENSOR SIGNAL CIRCUIT SHORTED TO GROUND

Turn the ignition off.

Measure the resistance between ground and the CKP Sensor Signal circuit.

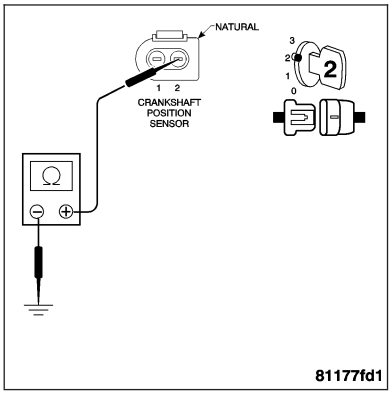

Is the resistance below 100 ohms?

Yes >> Repair the CKP Sensor Signal circuit for a short to ground. Perform POWERTRAIN VERIFICATION TEST - VER 2.

No >> Go To 10

10. OPEN CKP SENSOR SIGNAL CIRCUIT

With the ignition off.

Measure the resistance of the CKP Sensor Signal circuit from the CKP harness connector to the PCM C3 harness connector.

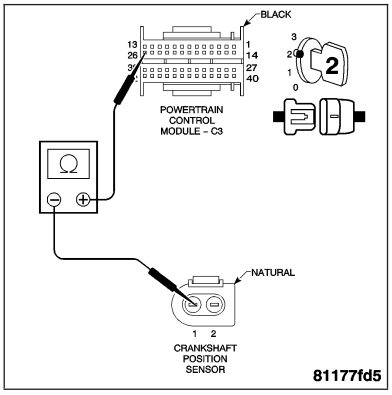

Is the resistance below 5.0 ohms?

Yes >> Repair the CKP Sensor Signal circuit for an open. Perform POWERTRAIN VERIFICATION TEST - VER 2.

No >> Replace and program the Powertrain Control Module. **Refer to Page 8E-56**. Perform POWERTRAIN VERIFICATION TEST - VER 2.

(P0335) CRANKSHAFT POSITION SENSOR CIRCUIT — CONTINUED

11. TONE WHEEL/PULSE RING INSPECTION

Turn the ignition off.

Remove the Crankshaft Position Sensor.

Inspect the Tone Wheel/Pulse Ring for damage, foreign material, or excessive movement.

Were any problems found?

Yes >> Repair or replace the Tone Wheel/Pulse Ring as necessary. **Refer to Page 9-653**.
Perform POWERTRAIN VERIFICATION TEST - VER 2.

No >> Replace the Crankshaft Position Sensor. **Refer to Page 14-31**.
Perform POWERTRAIN VERIFICATION TEST - VER 2.

12. INTERMITTENT WIRING AND CONNECTORS

The condition that caused this DTC to set is currently not present. Inspect the related wiring harness for a possible intermittent condition.

Note: Check connectors — Clean/repair as necessary. Poor pin to terminal connections can set DTCs.

Note: Check for any Technical Service Bulletins that may apply.
Using the wiring diagram/schematic as a guide, inspect the wiring and connectors specific to this DTC. Wiggle the wires while checking for shorts and/or open circuits.

Were there any problems found?

Yes >> Repair as necessary.
Perform POWERTRAIN VERIFICATION TEST - VER 2.

No >> The condition that caused this DTC to set is currently not present. Inspect the related wiring harness for a possible intermittent condition.

(P0341) CAMSHAFT POSITION TIMING OVER-RETARDED

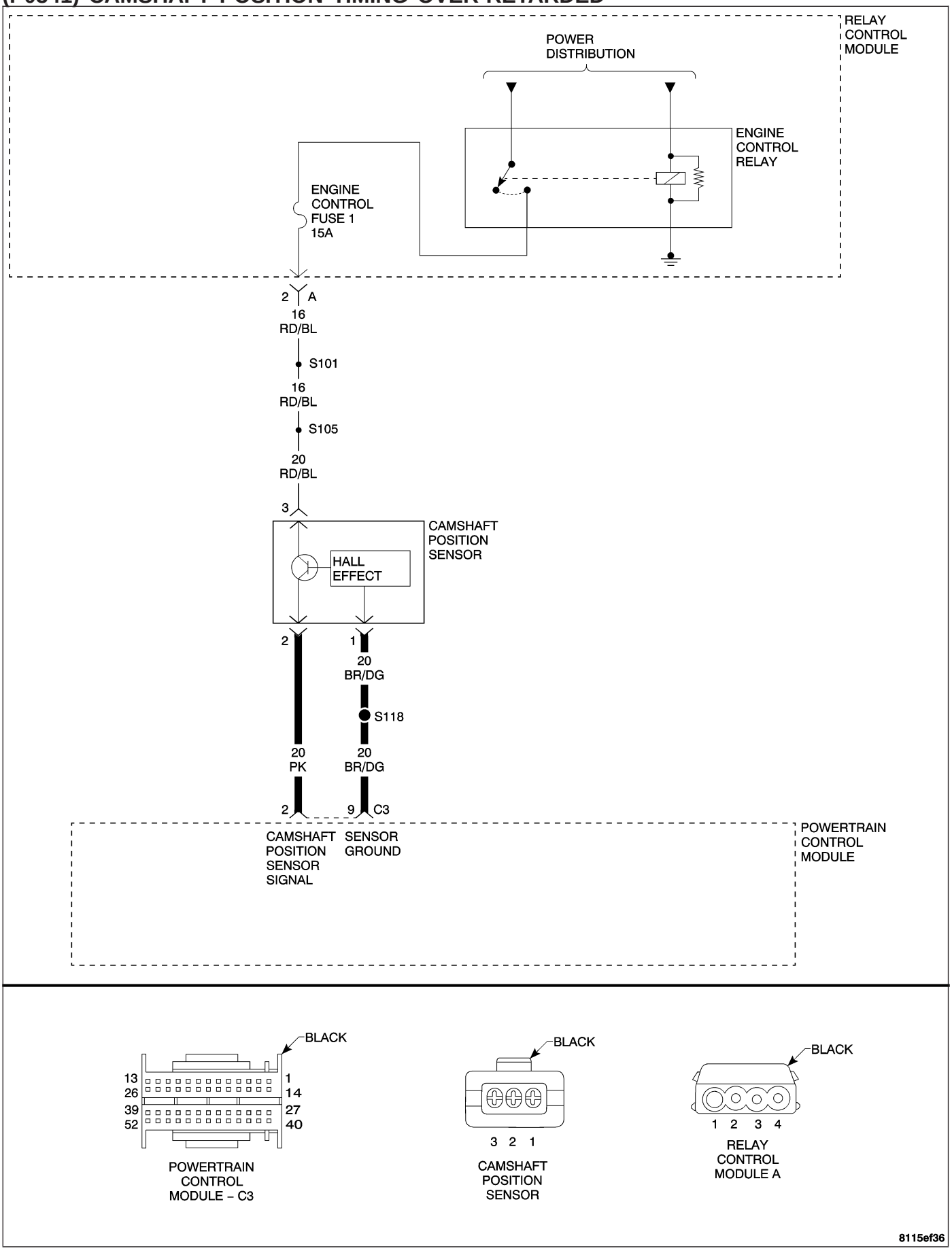

(P0341) CAMSHAFT POSITION TIMING OVER-RETARDED — CONTINUED

When Monitored and Set Condition

- When Monitored: Engine cranking and engine running
- Set Condition: If the Camshaft Signal (angular variation) is more or less than 15° of the Crankshaft Signal, the DTC is then set in memory.

POSSIBLE CAUSES
INTERMITTENT CAMSHAFT POSITION SENSOR SIGNAL
CAMSHAFT POSITION SENSOR WIRE HARNESS
TONE WHEEL/PULSE RING
CAMSHAFT POSITION SENSOR
TIMING CHAIN

For a complete Powertrain Control Module (PCM) Circuit Diagram **Refer to Page 9-574**.

Diagnostic Test

1. CHECK FOR CURRENT DTC

WARNING: WHEN THE ENGINE IS OPERATING, DO NOT STAND IN A DIRECT LINE WITH THE FAN. DO NOT PUT YOUR HANDS NEAR THE PULLEYS, BELTS OR FAN. DO NOT WEAR LOOSE CLOTHING.

Note: If the PCM detects and stores a DTC, the PCM also stores the engine/vehicle operating conditions under which the DTC was set. Some of these conditions are displayed on the DRB III® at the same time the DTC is displayed.

Note: Before erasing stored DTCs, record these conditions. Attempting to duplicate these conditions may assist when checking for a DTC.

Turn the ignition on.

With the DRB III®, erase PCM DTCs.

Note: It maybe necessary to road test the vehicle for this DTC to set.

With the DRB III®, read the PCM DTCs.

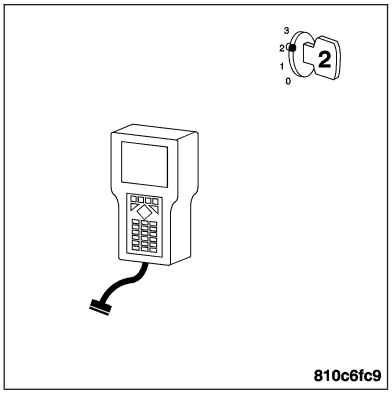

Did this DTC set again?

Yes >> Go To 2

No >> Go To 6

(P0341) CAMSHAFT POSITION TIMING OVER-RETARDED — CONTINUED

2. CHECKING CMP SIGNAL

Turn the ignition off.

With the DRB III® lab scope probe and the Special Tool #6801, backprobe the CMP Signal circuit at the CMP harness connector.

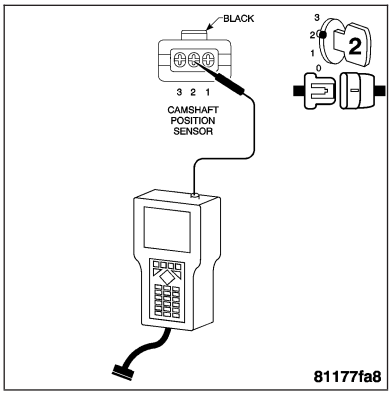

WARNING: WHEN THE ENGINE IS OPERATING, DO NOT STAND IN A DIRECT LINE WITH THE FAN. DO NOT PUT YOUR HANDS NEAR THE PULLEYS, BELTS OR FAN. DO NOT WEAR LOOSE CLOTHING.

Start the engine.

Observe the lab scope screen.

Are there any irregular or missing signals?

Yes >> Go To 3

No >> Go To 6

3. CMP WIRE HARNESS INSPECTION

Turn the ignition off.

Visually inspect the related wire harness. Look for any chafed, pierced, pinched, or partially broken wires.

Visually inspect the related wire harness connectors. Look for broken, bent, pushed out, or corroded terminals.

Ensure the Crankshaft Position Sensor and the Camshaft Position Sensor are properly installed and the mounting bolt(s) tight.

Refer to any Technical Service Bulletins that may apply.

Were any of the above conditions present?

Yes >> Repair as necessary.
Perform POWERTRAIN VERIFICATION TEST - VER 2.

No >> Go To 4

4. TONE WHEEL/PULSE RING INSPECTION

With the ignition off.

Remove the Camshaft Position Sensor.

Inspect the Tone Wheel/Pulse Ring for damage, foreign material, or excessive movement.

Were any problems found?

Yes >> Repair or replace the Tone Wheel/Pulse Ring as necessary. **Refer to Page 9-653**.
Perform POWERTRAIN VERIFICATION TEST - VER 2.

No >> Go To 5

(P0341) CAMSHAFT POSITION TIMING OVER-RETARDED — CONTINUED

5. CAMSHAFT POSITION SENSOR

If there are no possible causes remaining, view repair.

Repair >> Replace the Camshaft Position Sensor. **Refer to Page 8I-4**.
Perform POWERTRAIN VERIFICATION TEST - VER 2.

6. INTERMITTENT CMP SIGNAL

WARNING: WHEN THE ENGINE IS OPERATING, DO NOT STAND IN A DIRECT LINE WITH THE FAN. DO NOT PUT YOUR HANDS NEAR THE PULLEYS, BELTS OR FAN. DO NOT WEAR LOOSE CLOTHING.
Start the engine.

Monitor the DRB III® for DTCs.

Gently tap on the Camshaft Position Sensor and wiggle the Sensor harness connector.

Inspect the Sensor harness connector, PCM harness connector, Sensor connector, and PCM connector for loose, bent, corroded, or pushed out pins/terminals.

Inspect the related wire harness and the splices in the CMP circuits.

With the DRB III®, read engine DTCs.

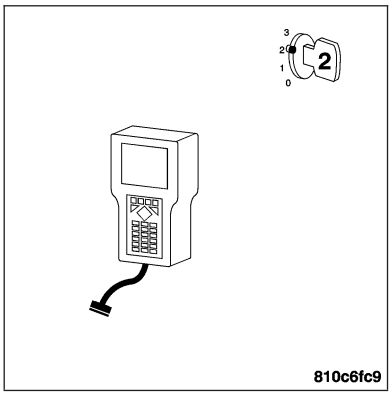

Did the DTC set again?

Yes >> Repair the wiring/connector concerns as needed or replace the Camshaft Position Sensor. **Refer to Page 8I-4**.
Perform POWERTRAIN VERIFICATION TEST - VER 2.

No >> Go To 7

7. INTERMITTENT WIRING AND CONNECTORS

The condition that caused this DTC to set is currently not present. Inspect the related wiring harness for a possible intermittent condition.

Note: Check connectors — Clean/repair as necessary. Poor pin to terminal connections can set DTCs.

Note: Check for any Technical Service Bulletins that may apply.
Using the wiring diagram/schematic as a guide, inspect the wiring and connectors specific to this DTC. Wiggle the wires while checking for shorts and open circuits.

Were there any problems found?

Yes >> Repair as necessary.
Perform POWERTRAIN VERIFICATION TEST - VER 2.

No >> The condition that caused this DTC to set is currently not present. Inspect the related wiring harness for a possible intermittent condition.

(P0341) CAMSHAFT POSITION TIMING OVER-ADVANCED

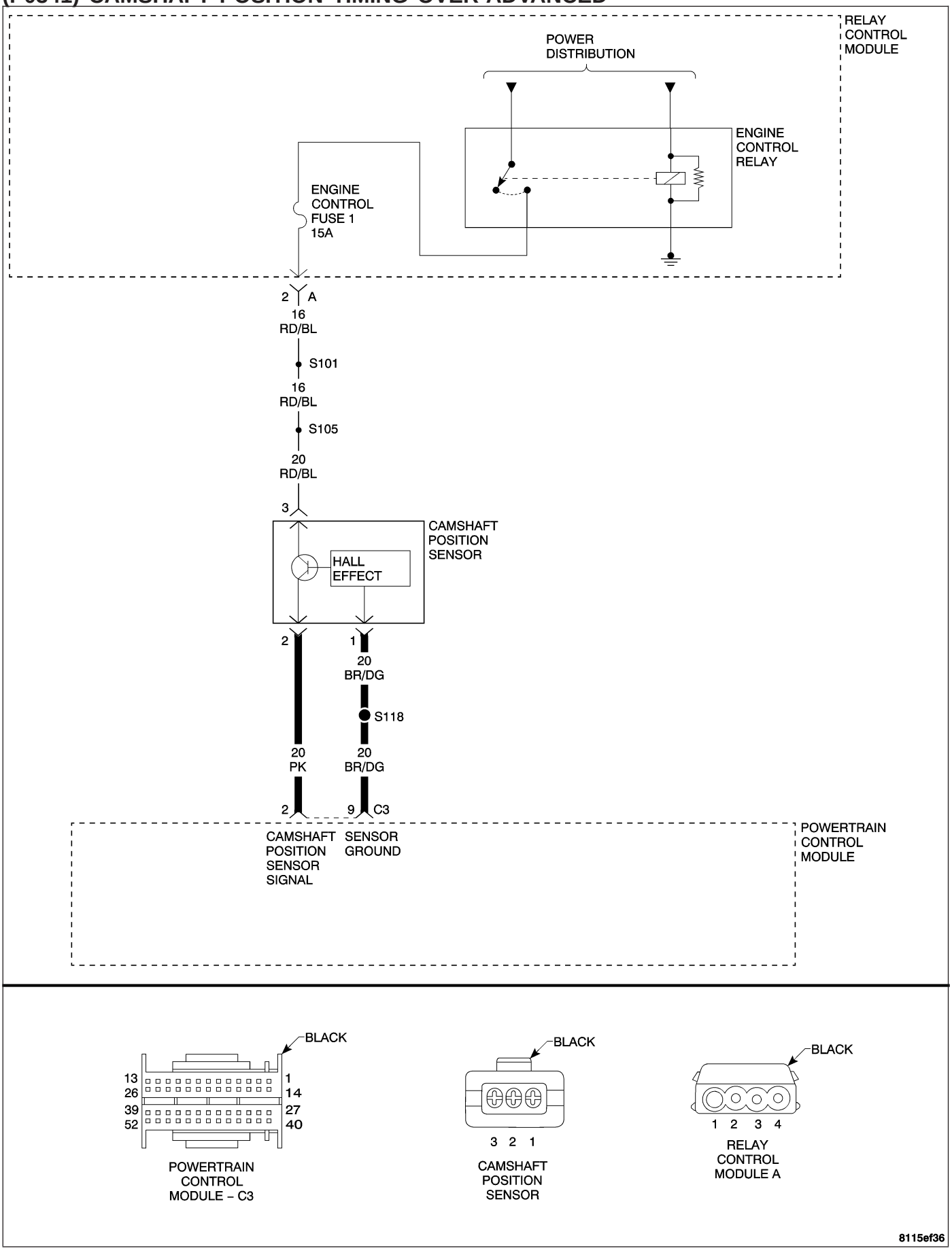

(P0341) CAMSHAFT POSITION TIMING OVER-ADVANCED — CONTINUED

When Monitored and Set Condition

- When Monitored: Engine cranking and engine running
- Set Condition: If the Camshaft Signal (angular variation) is more or less than 15° of the Crankshaft Signal, the DTC is then set in memory.

POSSIBLE CAUSES
INTERMITTENT CAMSHAFT POSITION SENSOR SIGNAL
CAMSHAFT POSITION SENSOR WIRE HARNESS
TONE WHEEL/PULSE RING
CAMSHAFT POSITION SENSOR
TIMING CHAIN

Diagnostic Test

1. CHECK FOR CURRENT DTC

Turn the ignition on.
With the DRB III®, read the PCM DTCs.

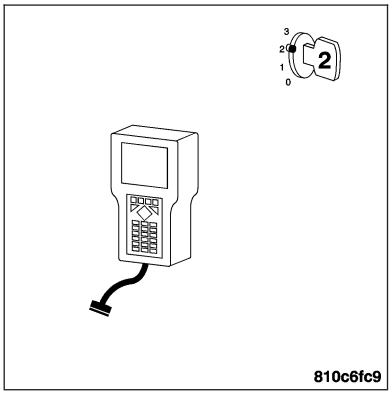

Is this DTC preset?

Yes >> For complete diagnosis of this DTC, refer to (P0341) CAMSHAFT POSITION TIMING OVER-RETARDED.

No >> Go To 2

2. INTERMITTENT WIRING AND CONNECTORS

The conditions necessary to set this DTC are not present at this time.

Note: Check connectors — Clean/repair as necessary. Poor pin to terminal connections can set DTCs.Using the wiring diagram/schematic as a guide, inspect the wiring and connectors specific to this DTC. Wiggle the wires while checking for shorts and open circuits.

Note: Check for any Technical Service Bulletins that may apply.

Were there any problems found?

Yes >> Repair as necessary.
Perform POWERTRAIN VERIFICATION TEST - VER 2.

No >> The condition that caused this DTC to set is currently not present. Inspect the related wiring harness for a possible intermittent condition.

(P0341) CAMSHAFT POSITION SENSOR PERFORMANCE

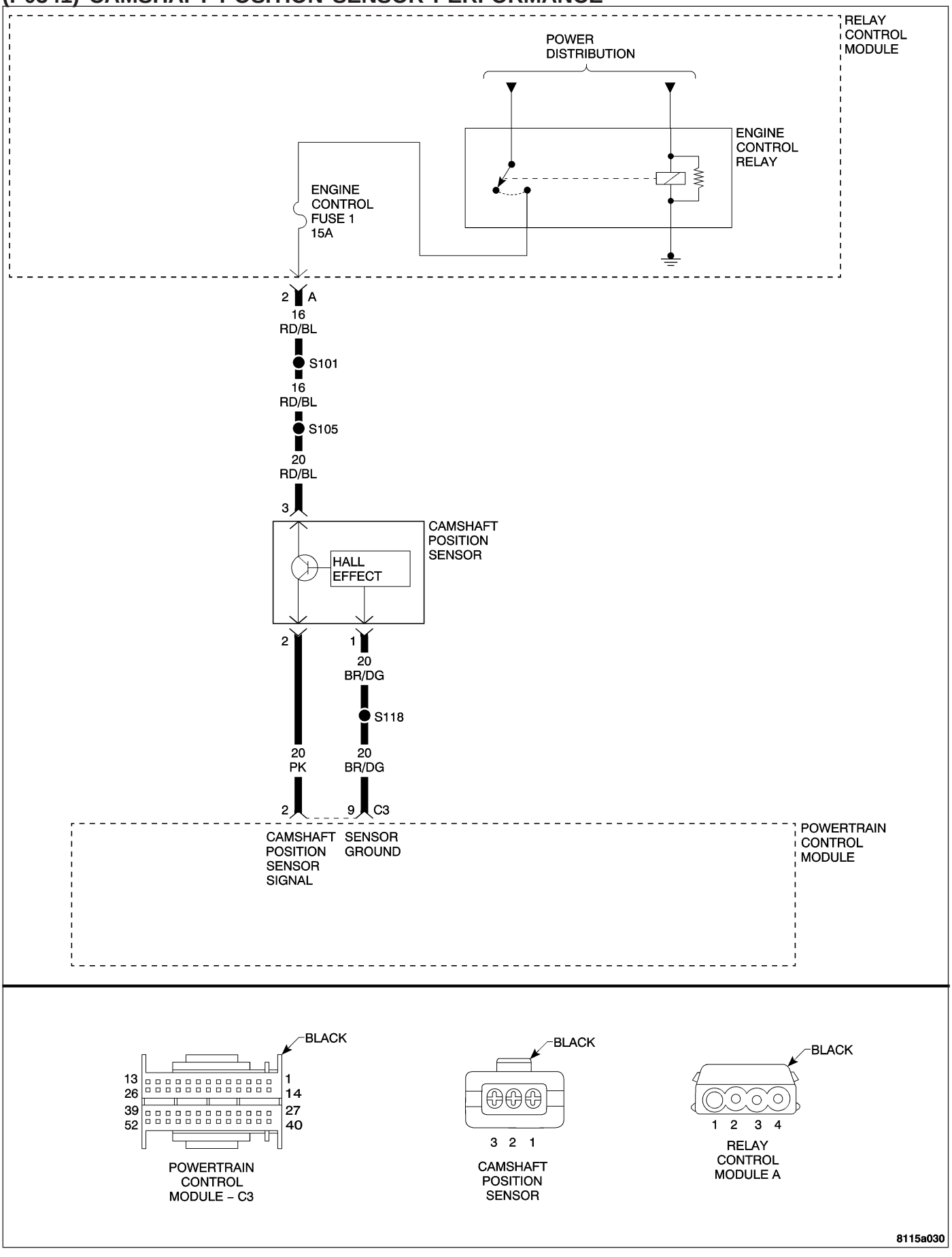

(P0341) CAMSHAFT POSITION SENSOR PERFORMANCE — CONTINUED

When Monitored and Set Condition

- When Monitored: Engine cranking/running. Battery voltage greater than 10 volts.
- Set Condition: At least 5 seconds or 2.5 engine revolutions have elapsed with Crankshaft Position Sensor (CKP) Signals present but no Camshaft Position (CMP) Sensor Signal. One Trip Fault.

POSSIBLE CAUSES
INTERMITTENT CRANKSHAFT POSITION (CKP) SENSOR SIGNAL
INTERMITTENT CAMSHAFT POSITION (CMP) SENSOR SIGNAL (CMP)
FUSED ENGINE CONTROL RELAY OUTPUT CIRCUIT OPEN
CAMSHAFT POSITION SENSOR SIGNAL CIRCUIT SHORTED TO GROUND
CAMSHAFT POSITION SENSOR SIGNAL CIRCUIT OPEN
CAMSHAFT POSITION SENSOR SIGNAL CIRCUIT SHORTED TO VOLTAGE
SENSOR GROUND CIRCUIT OPEN
CAMSHAFT POSITION SENSOR
POWERTRAIN CONTROL MODULE

For a complete Powertrain Control Module (PCM) Circuit Diagram **Refer to Page 9-574**.

Diagnostic Test

1. FUSED ENGINE CONTROL RELAY OUTPUT CIRCUIT OPEN

Turn the ignition off.

Disconnect the CMP Sensor harness connector.

Note: Check connectors — Clean/repair as necessary.

Turn the ignition on.

Measure the voltage of the Fused Engine Control Relay Output circuit at the CMP Sensor harness connector.

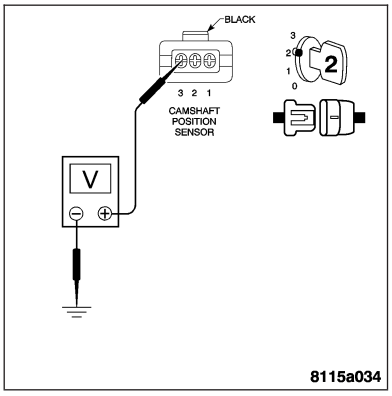

Is the voltage above 10 volts?

Yes >> Go To 2

No >> Repair the Fused Engine Control Relay Output circuit for an open.
Perform POWERTRAIN VERIFICATION TEST - VER 2.

(P0341) CAMSHAFT POSITION SENSOR PERFORMANCE — CONTINUED

2. SENSOR GROUND CIRCUIT OPEN

Turn the ignition off.
Disconnect the PCM harness connector.

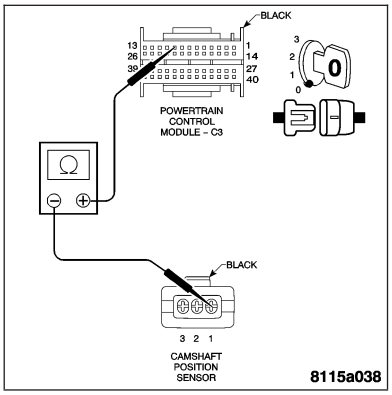

Note: Check connectors — Clean/repair as necessary.
Measure the resistance of the Sensor Ground circuit from the CMP Sensor harness connector to the PCM harness connector.

Is the resistance below 5.0 ohms?

Yes >> Go To 3

No >> Repair the Sensor Ground circuit for an open.
Perform POWERTRAIN VERIFICATION TEST - VER 2.

3. CMP SIGNAL CIRCUIT SHORTED TO VOLTAGE

Turn the ignition on.
Measure the voltage of the CMP Signal circuit at the CMP Sensor harness connector.

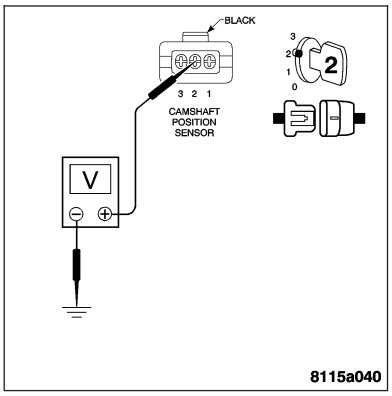

Is the voltage above 1.0 volt?

Yes >> Repair the CMP Signal circuit for a short to voltage.
Perform POWERTRAIN VERIFICATION TEST - VER 2.

No >> Go To 4

4. CMP SIGNAL CIRCUIT SHORTED TO GROUND

Turn the ignition off.
Measure the resistance between ground and the CMP Signal circuit.

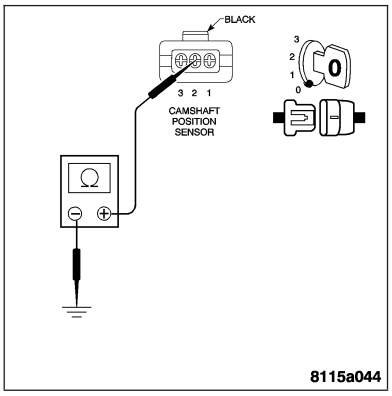

Is the resistance below 100 ohms?

Yes >> Repair the CMP Signal circuit for a short to ground.
Perform POWERTRAIN VERIFICATION TEST - VER 2.

No >> Go To 5

(P0341) CAMSHAFT POSITION SENSOR PERFORMANCE — CONTINUED

5. CMP SIGNAL CIRCUIT OPEN

With the ignition off.
Measure the resistance of the CMP Signal circuit from the CMP Sensor harness connector to the PCM harness connector.

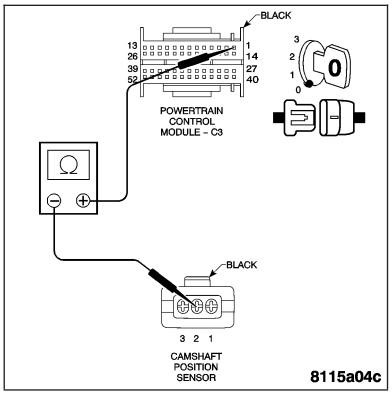

Is the resistance below 5.0 ohms?

Yes >> Go To 6
Perform POWERTRAIN VERIFICATION TEST - VER 2.

No >> Repair the CMP Signal circuit for an open.
Perform POWERTRAIN VERIFICATION TEST - VER 2.

6. CAMSHAFT POSITION SENSOR

With the ignition off.
Replace the Camshaft Position Sensor. **Refer to Page 8I-4**.
Attempt to start the engine.
With the DRB III®, read engine DTCs.

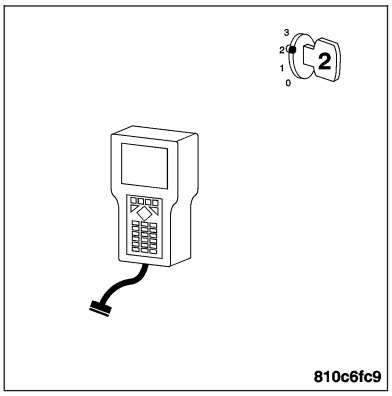

Did the DTC, (P0341) CAMSHAFT POSITION SENSOR PERFORMANCE, set again?

Yes >> Replace and program the Powertrain Control Module. **Refer to Page 8E-56**.
Perform POWERTRAIN VERIFICATION TEST - VER 2.

No >> Test Complete.

(P0400) EGR SYSTEM PERFORMANCE

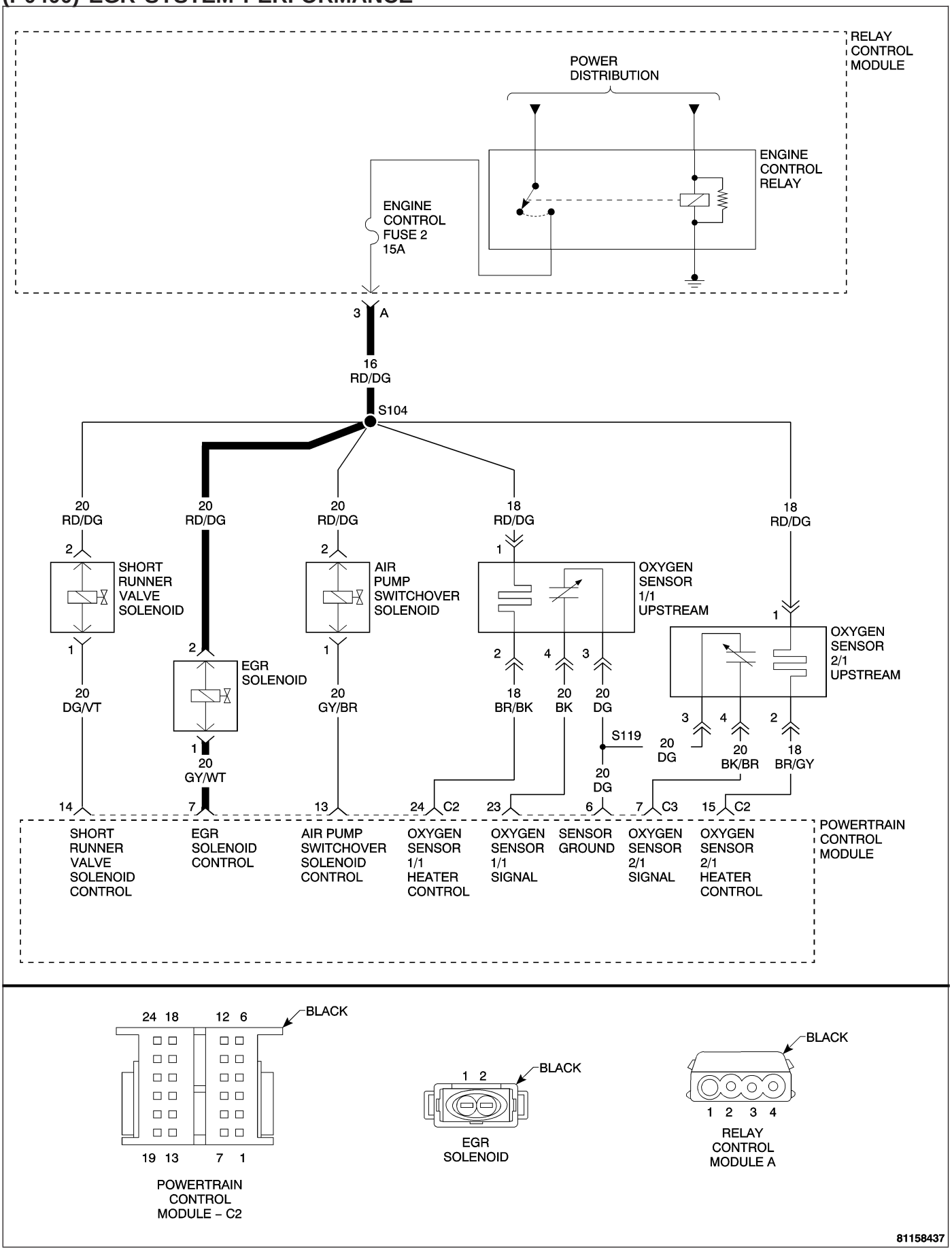

(P0400) EGR SYSTEM PERFORMANCE — CONTINUED

When Monitored and Set Condition

- When Monitored: A constant engine speed between 900 and 1700 RPM and no other EGR or MAP sensor faults.
- Set Condition: The PCM commands the EGR valve to open. The MAP sensor value must drop by a minimum of 54 mbar (1.6 in Hg) when EGR is commanded open or a fault is set.

POSSIBLE CAUSES
EGR SOLENOID CONTROL CIRCUIT OPEN
EGR SOLENOID CONTROL CIRCUIT SHORT TO GROUND
EGR SOLENOID CONTROL CIRCUIT SHORT TO VOLTAGE
FUSED ENGINE CONTROL RELAY OUTPUT CIRCUIT OPEN
EGR SOLENOID
EGR VALVE
POWERTRAIN CONTROL MODULE

For a complete Powertrain Control Module Circuit Diagram **Refer to Page 9-574**.

Diagnostic Test

1. EGR OPERATION

Turn the ignition on.
Turn all accessories off.
Start the engine.
Allow the engine to reach normal operating temperature.

Does the engine run rough or stall?

Yes >> Go To 2

No >> Go To 3

2. EGR VALVE OPEN AT IDLE

Turn the ignition off.
Disconnect the EGR Solenoid harness connector.

Note: Check connectors — Clean/repair as necessary.
Start engine. Attempt to allow the engine to idle.

Does the engine run rough or stall?

Yes >> Inspect the EGR tube assembly. If OK, replace the EGR valve. **Refer to Page 25-27**.
Perform POWERTRAIN VERIFICATION TEST VER - 2.

No >> Go To 3

(P0400) EGR SYSTEM PERFORMANCE — CONTINUED

3. EGR SOLENOID

Turn the ignition off.

Disconnect the EGR solenoid harness connector.

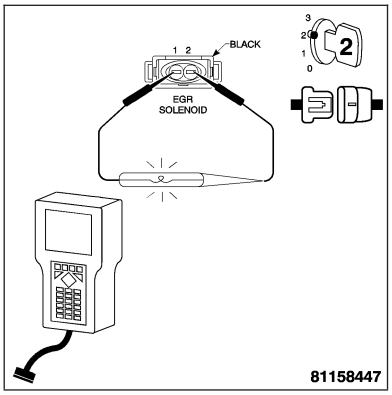

Note: Check connectors — Clean/repair as necessary.

Connect a 12-volt test lamp between the EGR Solenoid Control circuit and the EGR Solenoid Fused Engine Control Relay Output circuit.

Turn the ignition on.

With the DRB III®, actuate the EGR solenoid.

Does the test flash on and off?

Yes >> Replace the EGR Solenoid. **Refer to Page 25-24**.
Perform POWERTRAIN VERIFICATION TEST - VER 2.

No >> Go To 4

4. FUSED ENGINE CONTROL RELAY OUTPUT CIRCUIT OPEN

With the ignition on.

Measure the voltage of the Fused Engine Control Relay Output circuit at the EGR Solenoid harness connector.

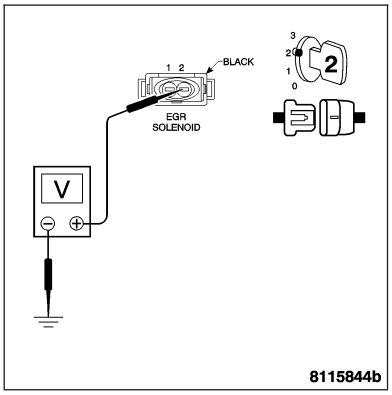

Is the voltage above 10 volts?

Yes >> Go To 6

No >> Repair the Engine Control Relay Output circuit for an open.
Perform POWERTRAIN VERIFICATION TEST - VER 2.

5. EGR SOLENOID CONTROL CIRCUIT SHORT TO GROUND

Turn the ignition off.

Disconnect PCM C2 harness connector.

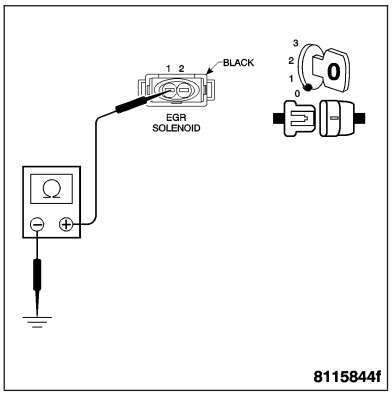

Note: Check connectors — Clean/repair as necessary.

Measure the resistance between ground and the EGR solenoid control circuit.

Is resistance below 100 ohms?

Yes >> Repair the EGR solenoid control circuit for a short to ground.
Perform POWERTRAIN VERIFICATION TEST - VER 2.

No >> Go To 6

(P0400) EGR SYSTEM PERFORMANCE — CONTINUED

6. EGR SOLENOID CONTROL CIRCUIT OPEN

With the ignition off.

Measure the resistance of the EGR Solenoid Control circuit from the EGR Solenoid harness connector to the PCM C2 harness connector.

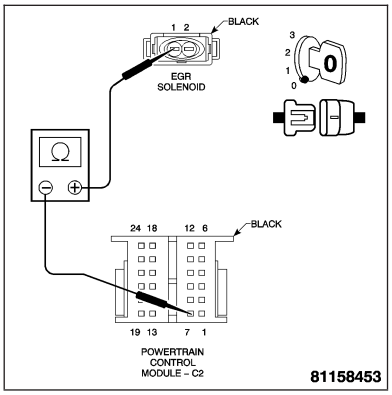

Is the resistance below 5.0 ohms?

Yes >> Go To 7

No >> Repair the EGR Solenoid Control circuit for an open.
Perform POWERTRAIN VERIFICATION TEST - VER 2.

7. EGR SOLENOID CONTROL CIRCUIT SHORTED TO VOLTAGE

Turn the ignition on.

Measure the voltage of the EGR Solenoid Control circuit at the EGR Solenoid connector.

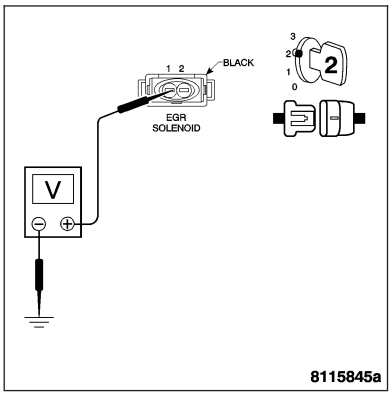

Is the voltage above 1.0 volt?

Yes >> Repair the EGR Solenoid Control circuit short to voltage.
Perform POWERTRAIN VERIFICATION TEST - VER 2.

No >> Replace and program the Powertrain Control Module.
Refer to Page 8E-56.
Perform POWERTRAIN VERIFICATION TEST - VER 2.

(P0403) EGR CONTROL CIRCUIT

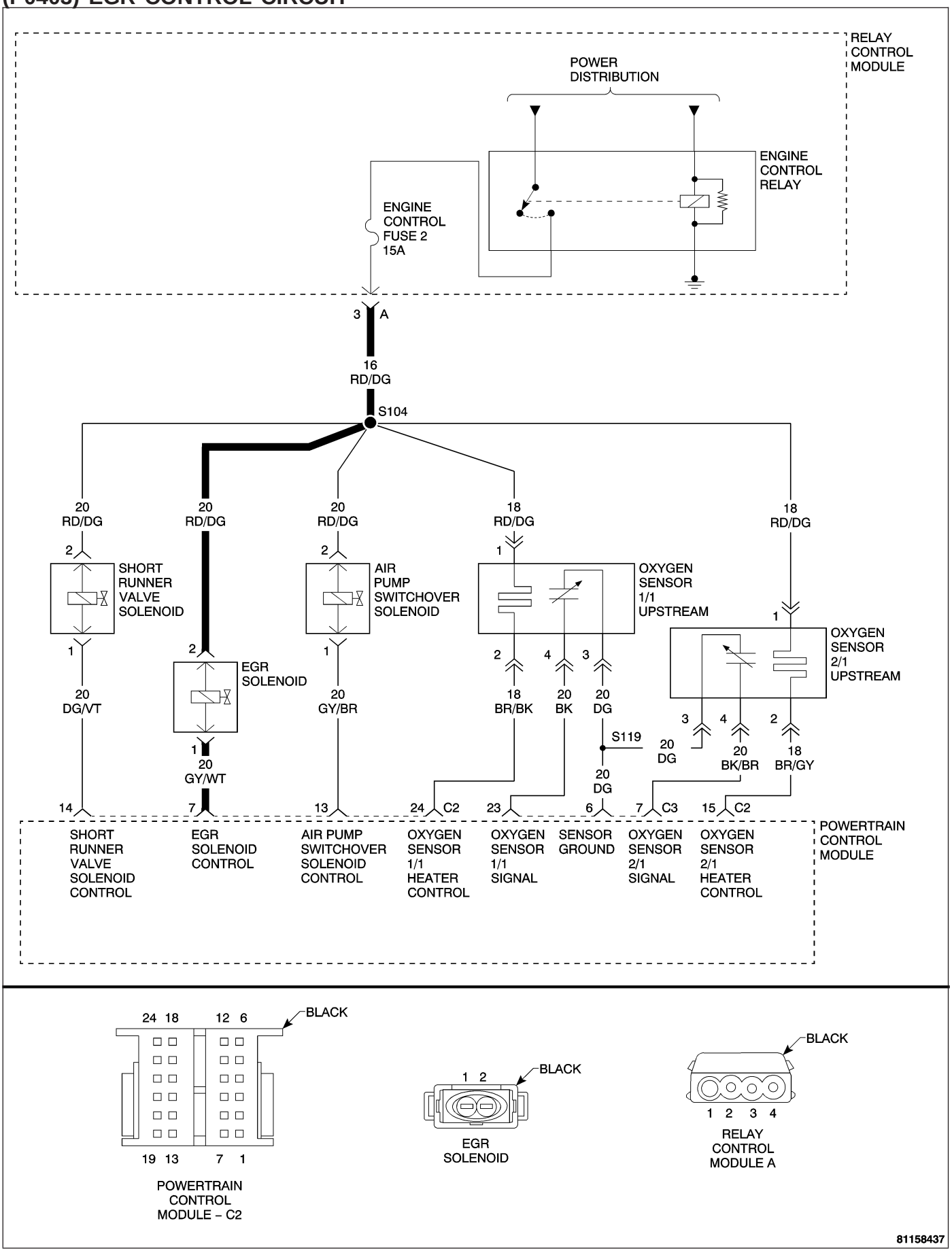

(P0403) EGR CONTROL CIRCUIT — CONTINUED

When Monitored and Set Condition

- When Monitored: A constant engine speed between 900 and 1700 RPM and no other EGR or MAP sensor faults.
- Set Condition: The PCM commands the EGR valve to open. The MAP sensor value must drop by a minimum of 54 mbar (1.6 in Hg) when EGR is commanded open or a fault is set.

POSSIBLE CAUSES
EGR SOLENOID CONTROL CIRCUIT OPEN
EGR SOLENOID CONTROL CIRCUIT SHORT TO GROUND
EGR SOLENOID CONTROL CIRCUIT SHORT TO VOLTAGE
FUSED ENGINE CONTROL RELAY OUTPUT CIRCUIT OPEN
EGR SOLENOID
EGR VALVE
POWERTRAIN CONTROL MODULE

Diagnostic Test

1. CHECK FOR CURRENT DTC

Turn the ignition on.
With the DRB III®, read the PCM DTCs.

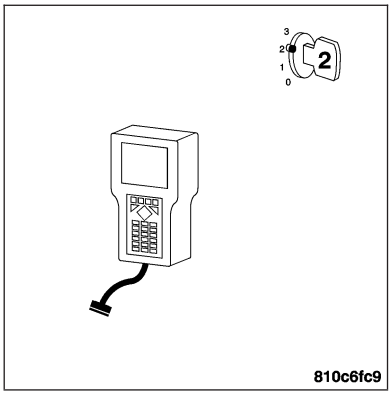

Is this DTC preset?

Yes >> For complete diagnosis of this DTC, refer to (P0400) EGR SYSTEM PERFORMANCE.

No >> Go To 2

2. INTERMITTENT WIRING AND CONNECTORS

The conditions necessary to set this DTC are not present at this time.

Note: Check connectors — Clean/repair as necessary. Poor pin to terminal connections can set DTCs.Using the wiring diagram/schematic as a guide, inspect the wiring and connectors specific to this DTC. Wiggle the wires while checking for shorts and open circuits.

Note: Check for any Technical Service Bulletins that may apply.

Were there any problems found?

Yes >> Repair as necessary.

(P0410) SECONDARY AIR INJECTION SYSTEM

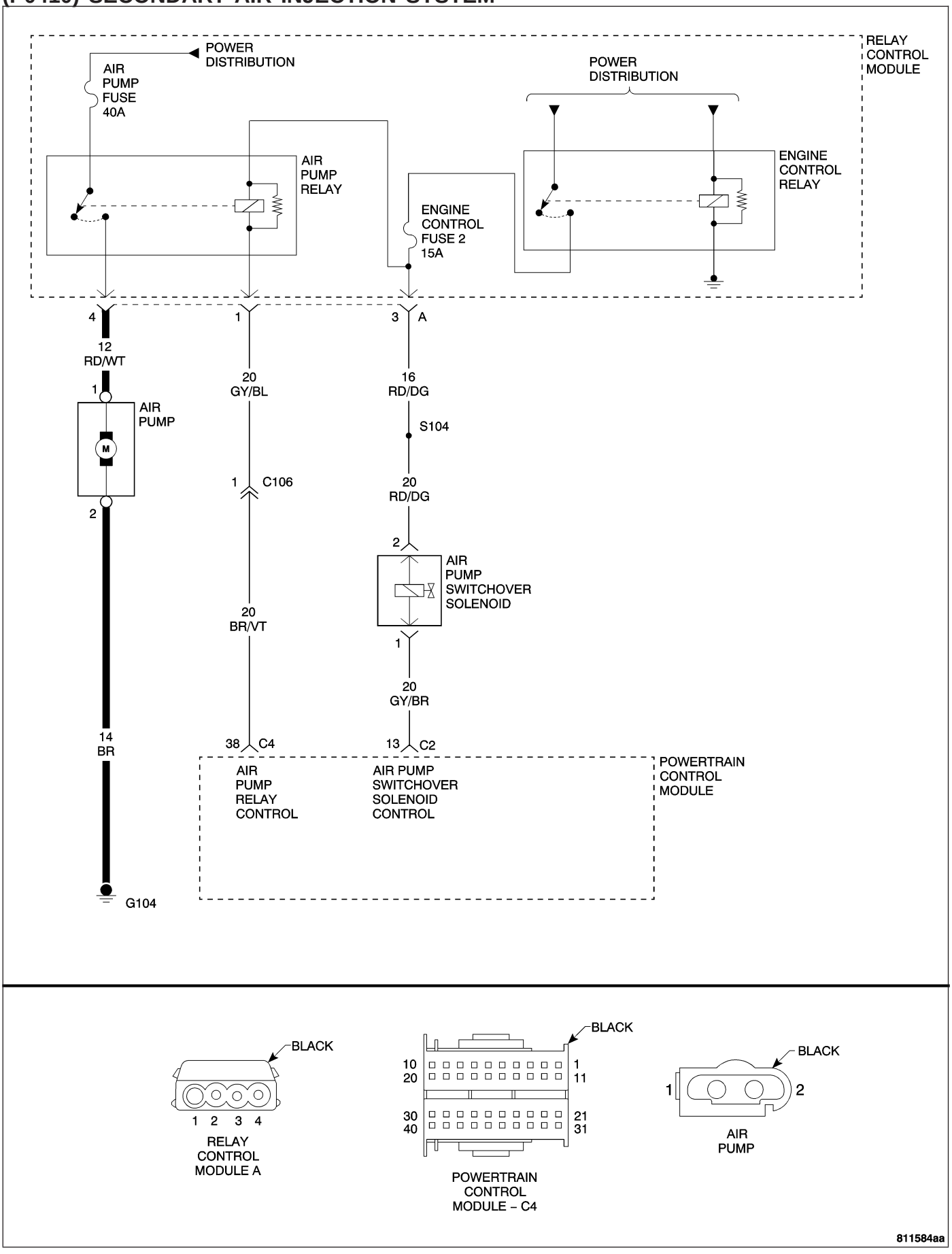

(P0410) SECONDARY AIR INJECTION SYSTEM — CONTINUED

When Monitored and Set Condition

- When Monitored: Once per driving cycle with the engine at idle, air conditioning is off, barometric pressure is greater than 78 kPa (11 psi), engine coolant temperature is greater than 50°C (122°F) and no other DTC set.
- Set Condition: When the test is enabled, the O2 Sensor must increase by at least 23% (rich).

POSSIBLE CAUSES
AIR PUMP VOLTAGE SUPPLY CIRCUIT OPEN
AIR PUMP VOLTAGE SUPPLY CIRCUIT SHORT TO GROUND
AIR PUMP GROUND CIRCUIT OPEN
CRACKING, MISSING, MISROUTED, OR PLUGGED VACUUM LINES.
AIR PUMP SWITCHOVER VALVES
AIR PUMP RELAY
AIR PUMP
POWERTRAIN CONTROL MODULE

For a complete Powertrain Control Module (PCM) Circuit Diagram, **Refer to Page 9-574**.

Diagnostic Test

1. CHECK FOR CURRENT DTC

Note: If the PCM detects and stores a DTC, the PCM also stores the engine/vehicle operating conditions under which the DTC was set. Some of these conditions are displayed on the DRB III® at the same time the DTC is displayed.

Note: Before erasing stored DTCs, record these conditions. Attempting to duplicate these conditions may assist when checking for a DTC.

Turn the ignition on.

With the DRB III®, erase PCM DTCs.

Note: It maybe necessary to road test the vehicle for this DTC to set.

With the DRB III®, read the PCM DTCs.

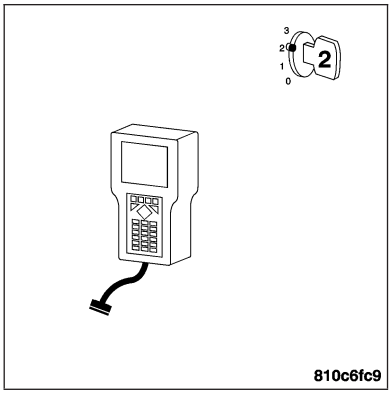

Did this DTC set again?

Yes >> Go To 2

No >> Go To 12

2. INSPECT THE SECONDARY AIR INJECTION SYSTEM

Turn the ignition off.

Inspect the Air Pump system for the following:

- Damage to any component.
- Cracked, missing, misrouted, or plugged vacuum lines.
- Damaged or misrouted electrical wires.

Did you find any of the above conditions?

Yes >> Repair as necessary.
Perform POWERTRAIN VERIFICATION TEST - VER 2.

No >> Go To 3

(P0410) SECONDARY AIR INJECTION SYSTEM — CONTINUED

3. OPERATE THE AIR PUMP

Turn the ignition on.
With the DRB III®, actuate the Air Pump Relay.

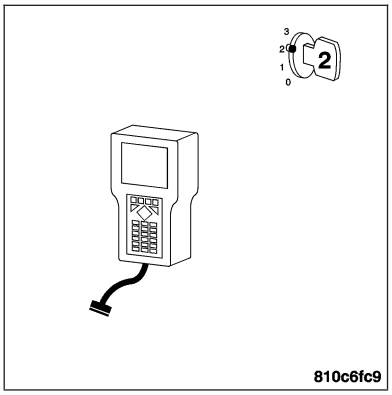

Does the Air Pump run?

Yes >> Go To 4

No >> Go To 7

4. AIR PUMP SWITCHOVER VALVE VACUUM CHECK

Turn the ignition off.
Disconnect the vacuum hose from the right Air Pump Switchover Valve.
Connect a vacuum gauge to the vacuum hose that was connected to the right Air Pump Switchover Valve.
Start the engine.
With the DRB III®, actuate the Air Pump Relay.
Repeat this procedure for the left Air Pump Switchover Valve.

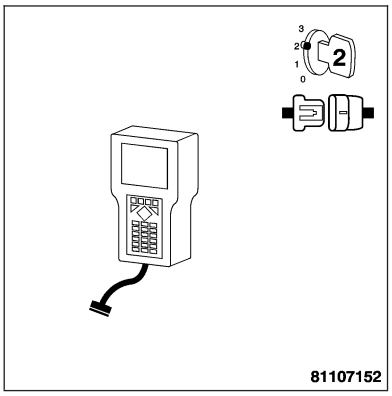

Does the vacuum gauge read greater than 10 in. Hg for both valves?

Yes >> Go To 6

No >> Go To 5

5. MONITOR THE O2 SENSORS

With the engine running.
With the DRB III®, actuate the Air Pump Relay.
Monitor the voltage on both front O2 sensors.

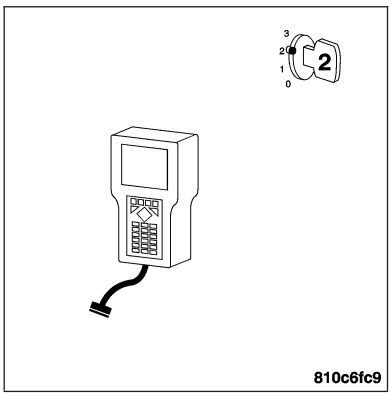

Does the O2 sensor voltage for both sensors drop to less than 0.1 volts?

Yes >> Go To 12

No >> Remove the Switchover Valve for the affected bank and inspect for damage or restrictions. If no problems are found, replace the Switchover Valve. **Refer to Page 25-36**.
Perform POWERTRAIN VERIFICATION TEST - VER 2.

(P0410) SECONDARY AIR INJECTION SYSTEM — CONTINUED

6. AIR PUMP SOLENOID VACUUM CHECK

Turn the ignition off.

Disconnect the Air Pump solenoid vacuum feed hose from the intake manifold to the Air Pump solenoid.

Connect a vacuum gauge to the vacuum hose that was connected to the Air Pump solenoid.

Start the engine.

Does the vacuum gauge read greater than 10 in. Hg?

Yes >> Replace the Air Pump Switchover Solenoid. **Refer to Page 25-34**
Perform POWERTRAIN VERIFICATION TEST - VER 2.

No >> Repair the cause of no vacuum at the Air Pump solenoid.
Perform POWERTRAIN VERIFICATION TEST - VER 2.

7. DISCONNECT THE AIR PUMP

Turn the ignition off.

Disconnect the Air Pump harness connector.

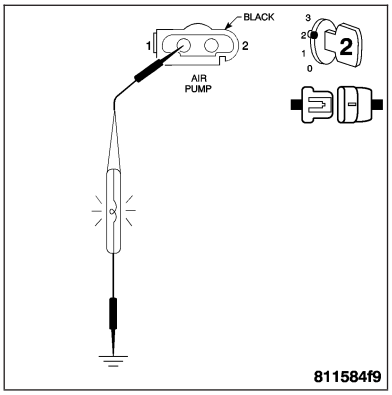

Note: Check connectors — Clean/repair as necessary.
Turn the ignition on.

With the DRB III®, actuate the Air Pump Relay.

With a 12-Volt test lamp connected to ground, probe the Fused Air Pump Relay Output circuit at the Air Pump harness connector. The lamp should be bright, compare to when connected across the battery.

Does the test lamp illuminate brightly?

Yes >> Go To 8

No >> Go To 9

8. AIR PUMP GROUND CIRCUIT OPEN

Turn the ignition off.

Measure the resistance between ground and the Air Pump Ground circuit.

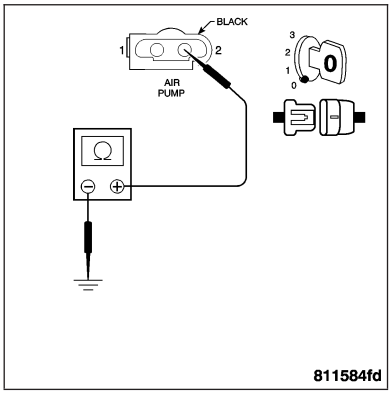

Is the resistance less than 5.0 ohms?

Yes >> Replace the Air Pump. **Refer to Page 25-32**.
Perform POWERTRAIN VERIFICATION TEST - VER 2.

No >> Repair the Air Pump Ground circuit for an open.
Perform POWERTRAIN VERIFICATION TEST - VER 2.

(P0410) SECONDARY AIR INJECTION SYSTEM — CONTINUED

9. INSPECT THE AIR PUMP FUSE

With the ignition on.

With a test lamp connected to ground, probe the 40 amp Air Pump Fuse. The lamp should be bright, compare to when connected across the battery.

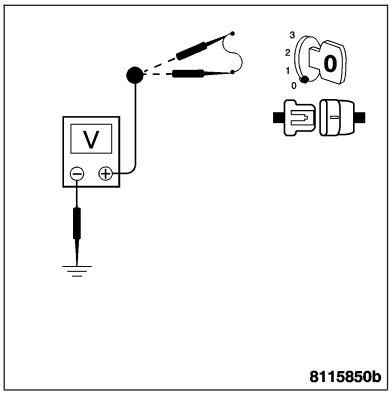

Does the test lamp illuminate brightly on at least one side of the fuse?

Yes >> Go To 10

No >> Repair the Fused B(+) circuit to the 40 amp Air Pump Fuse for an open.
Perform POWERTRAIN VERIFICATION TEST - VER 2.

10. AIR PUMP FUSE OPEN

Turn the ignition off.

Inspect the 40 amp Air Pump Fuse for an open or high resistance connection.

Is the 40 amp Air Pump Fuse open?

Yes >> Check the Air Pump Relay Output circuit, Relay Control Module, and Air Pump Relay for a short to ground. Repair as necessary. If OK, replace the Air Pump and Air Pump Fuse. **Refer to Page 25-32**.
Perform POWERTRAIN VERIFICATION TEST - VER 2.

No >> Go To 11

11. JUMPER THE AIR PUMP RELAY

With the ignition off.

Disconnect the Relay Control Module A and B harness connectors.

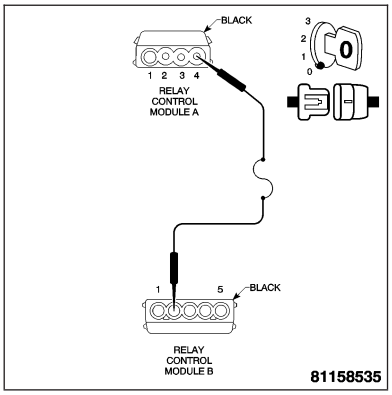

Note: Check connectors — Clean/repair as necessary.
Connect a fused jumper wire between pin 2 of the Relay Control Module B harness connector and pin 4 of the Relay control Module A harness connector.

Turn the ignition on.

Does the Air Pump run?

Yes >> Replace the Relay Control Module.
Perform POWERTRAIN VERIFICATION TEST - VER 2.

No >> Repair the Fused Air Pump Relay Output circuit for an open.
Perform POWERTRAIN VERIFICATION TEST - VER 2.

(P0410) SECONDARY AIR INJECTION SYSTEM — CONTINUED

12. INTERMITTENT WIRING AND CONNECTORS

The condition that caused this DTC to set is currently not present. Inspect the related wiring harness for a possible intermittent condition.

Note: Check connectors — Clean/repair as necessary. Poor pin to terminal connections can set DTCs.

Note: Check for any Technical Service Bulletins that may apply.
Using the wiring diagram/schematic as a guide, inspect the wiring and connectors specific to this DTC. Wiggle the wires while checking for shorts and open circuits.

Were there any problems found?

Yes >> Repair as necessary.
Perform POWERTRAIN VERIFICATION TEST - VER 2.

No >> The condition that caused this DTC to set is currently not present. Inspect the related wiring harness for a possible intermittent condition.

(P0410) SECONDARY AIR INJECTION RELAY CIRCUIT

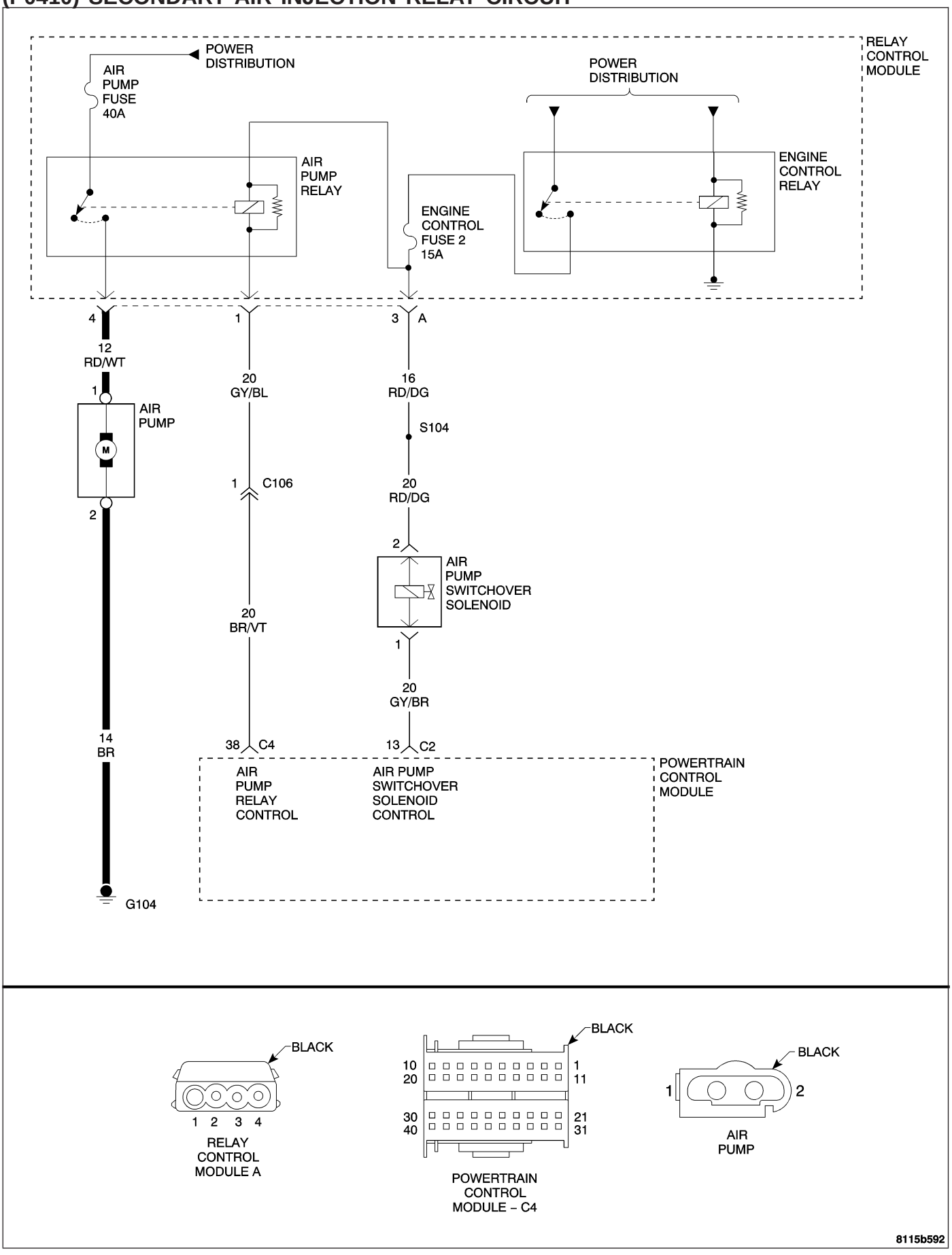

(P0410) SECONDARY AIR INJECTION RELAY CIRCUIT — CONTINUED

When Monitored and Set Condition

- When Monitored: Once per driving cycle when the Engine is at idle, Air Pump was activated at startup, Barometric Pressure greater than 78 kPa (11 psi), Engine Coolant Temperature is greater than 50°C (122°F), and no other DTCs
- Set Condition: When the test is enabled, the O2 Sensor must increase by at least 23% (rich).

POSSIBLE CAUSES
ENGINE CONTROL FUSE #2
AIR PUMP RELAY CONTROL CIRCUIT OPEN
AIR PUMP RELAY CONTROL CIRCUIT SHORT TO GROUND
AIR PUMP RELAY CONTROL CIRCUIT SHORTED TO VOLTAGE
RELAY CONTROL MODULE
POWERTRAIN CONTROL MODULE

For a complete Powertrain Control Module (PCM) Circuit Diagram **Refer to Page 9-574**.

1. OPERATE THE AIR PUMP RELAY

Turn the ignition on.
With the DRB III®, actuate the Air Pump Relay.

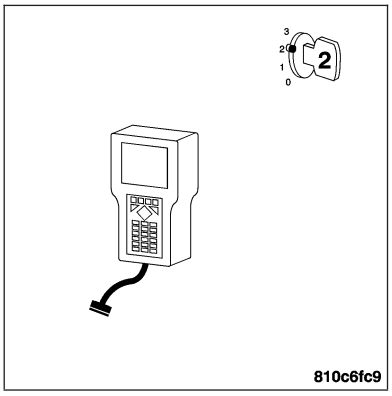

Does the Air Pump run?

Yes >> Go To 5

No >> Go To 2

2. POWERTRAIN CONTROL MODULE

Turn the ignition off.
Disconnect the PCM C4 harness connector.

Note: Check connectors — Clean/repair as necessary.
Turn the ignition on.
Measure the voltage of the Air Pump Relay Control circuit at the PCM harness connector.

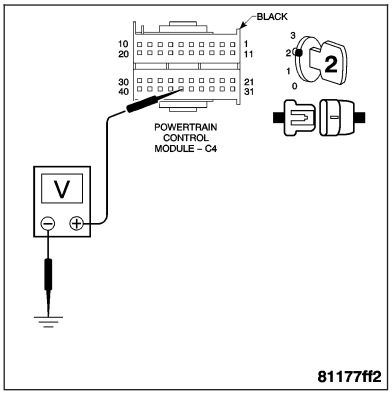

Is the voltage above 10 volts?

Yes >> Replace and program the Powertrain Control Module. **Refer to Page 8E-56**.
Perform POWERTRAIN VERIFICATION TEST - VER 2.

No >> Go To 3

(P0410) SECONDARY AIR INJECTION RELAY CIRCUIT — CONTINUED

3. AIR PUMP RELAY CONTROL CIRCUIT SHORT TO GROUND

Turn the ignition off.

Disconnect the Relay Control Module A harness connector.

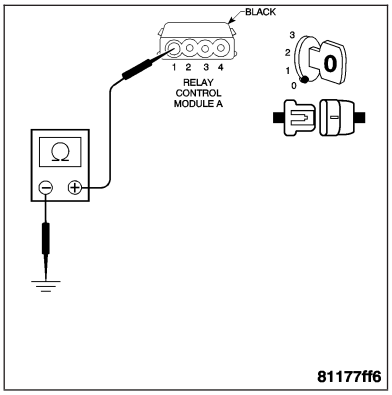

Note: Check connectors — Clean/repair as necessary.
Measure the resistance between ground and the Air Pump Relay Control circuit.

Is the resistance below 100 ohms?

Yes >> Repair the Air Pump Relay Control circuit for a short to ground.
Perform POWERTRAIN VERIFICATION TEST - VER 2.

No >> Go To 4

4. OPEN AIR PUMP RELAY CONTROL CIRCUIT

With the ignition off.

Measure the resistance of the Air Pump Relay Control circuit from the PCM C4 harness connector to the Relay Control Module A harness connector.

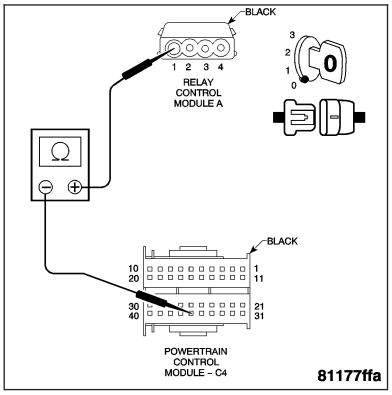

Is the resistance below 5.0 ohms?

Yes >> Replace the Relay Control Module.
Perform POWERTRAIN VERIFICATION TEST - VER 2.

No >> Repair the Air Pump Relay Control circuit for an open.
Perform POWERTRAIN VERIFICATION TEST - VER 2.

5. INTERMITTENT WIRING AND CONNECTORS

The condition that caused this DTC to set is currently not present. Inspect the related wiring harness for a possible intermittent condition.

Note: Check connectors — Clean/repair as necessary. Poor pin to terminal connections can set DTCs.

Note: Check for any Technical Service Bulletins that may apply.
Using the wiring diagram/schematic as a guide, inspect the wiring and connectors specific to this DTC. Wiggle the wires while checking for shorts and/or open circuits.

Were there any problems found?

Yes >> Repair as necessary.
Perform POWERTRAIN VERIFICATION TEST - VER 2.

No >> The condition that caused this DTC to set is currently not present. Inspect the related wiring harness for a possible intermittent condition.

(P0412) SECONDARY AIR INJECTION SWITCHOVER SOLENOID CIRCUIT

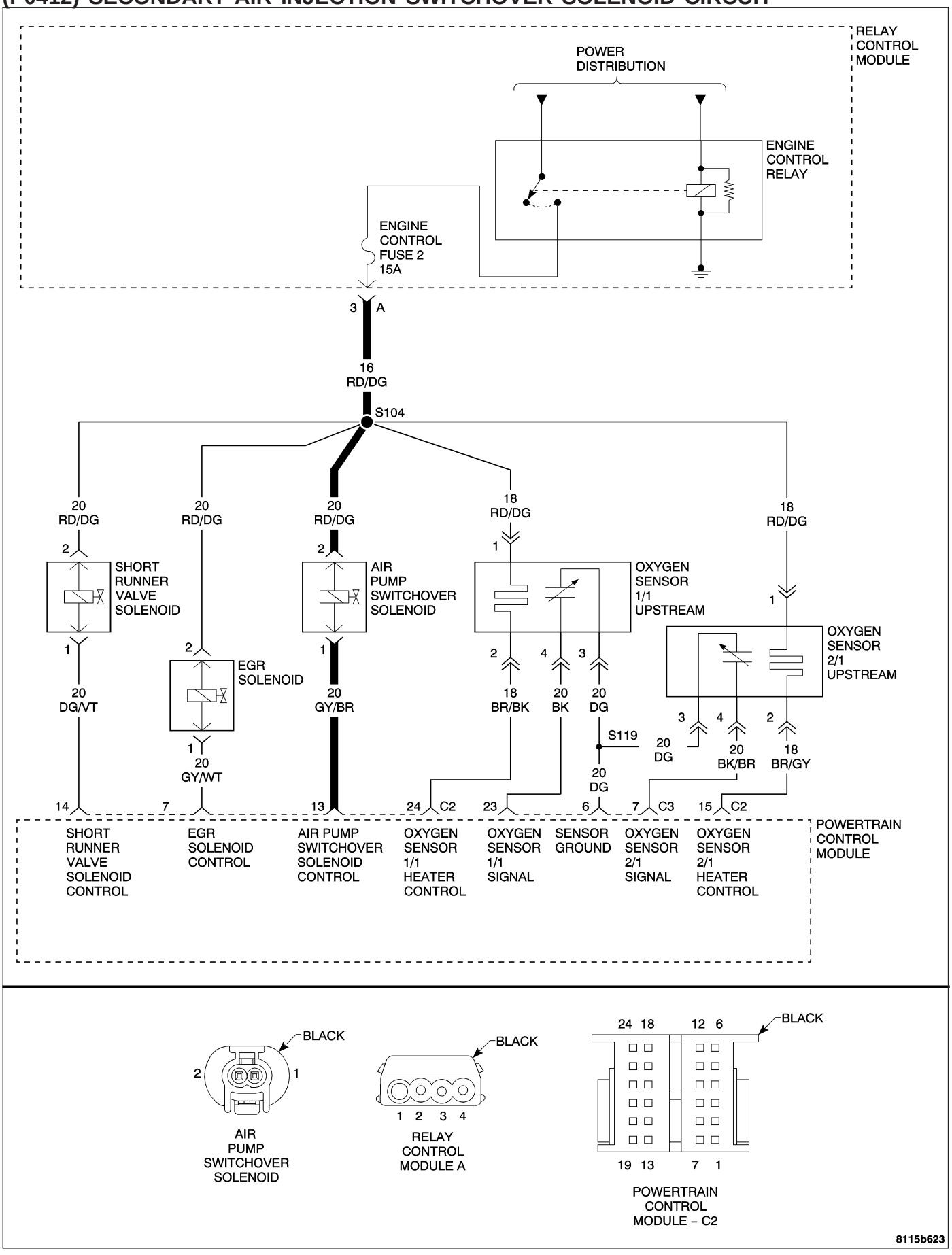

(P0412) SECONDARY AIR INJECTION SWITCHOVER SOLENOID CIRCUIT — CONTINUED

When Monitored and Set Condition

- When Monitored: Continuously with the ignition on.
- Set Condition: An improper voltage level has been detected by the Powertrain Control Module (PCM) on the air pump solenoid control circuit.

POSSIBLE CAUSES
FUSED ENGINE CONTROL RELAY OUTPUT CIRCUIT OPEN
GROUND CIRCUIT OPEN
FUSED ENGINE CONTROL RELAY OUTPUT CIRCUIT SHORTED
AIR PUMP SWITCHOVER SOLENOID
POWERTRAIN CONTROL MODULE

For a complete Powertrain Control Module Circuit Diagram, **Refer to Page 9-574**.

Diagnostic Test

1. ACTUATE THE SECONDARY AIR PUMP SWITCHOVER SOLENOID

Turn the ignition on.

With the DRB III®, actuate the Air Pump Switchover Solenoid.

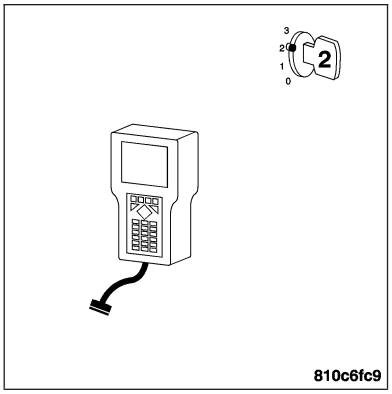

Does the Switchover Solenoid click on and off?

Yes >> Go To 5

No >> Go To 2

2. TESTING THE FUSED ENGINE CONTROL RELAY OUTPUT AND GROUND CIRCUIT OF THE SECONDARY AIR PUMP SWITCHOVER SOLENOID.

Turn the ignition off.

Disconnect the Air Pump Switchover Solenoid.

Note: Check connectors — Clean/repair as necessary.

Turn the ignition on.

With the DRB III®, actuate the Air Pump Switchover Solenoid.

Measure the voltage between the Fused Engine Control Relay Output circuit and the Air Pump Switchover Solenoid Control circuit at the Air Pump Switchover Solenoid harness connector.

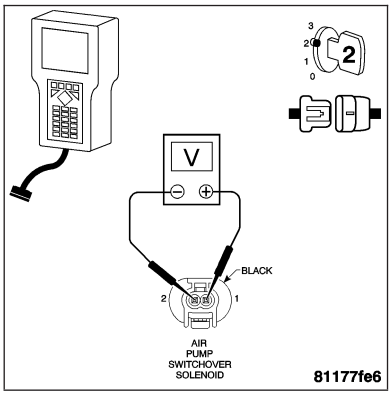

Does the voltage toggle between B(+) and 0 volts?

Yes >> Replace the Air Pump Switchover Solenoid. **Refer to Page 25-34**

Perform the POWERTRAIN VERIFICATION TEST - VER 2.

No >> Go To 3

(P0412) SECONDARY AIR INJECTION SWITCHOVER SOLENOID CIRCUIT — CONTINUED

3. CHECKING THE FUSED ENGINE CONTROL RELAY OUTPUT CIRCUIT AT THE AIR PUMP SWITCHOVER SOLENOID

With the ignition on.

Measure the voltage of the Fused Engine Control Relay Output circuit at the Air Pump Switchover Solenoid harness connector.

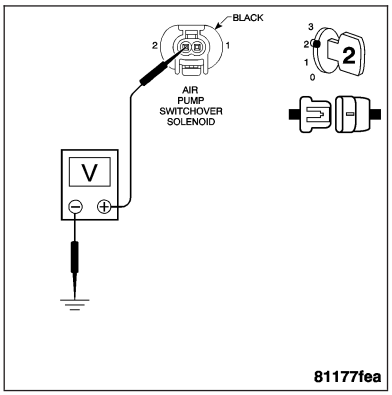

Is the voltage above 10 volts?

Yes >> Go To 4

No >> Repair the Fused Engine Control Relay Output circuit for an open.

Perform the POWERTRAIN VERIFICATION TEST - VER 2.

4. CHECKING THE AIR PUMP SWITCHOVER SOLENOID CONTROL CIRCUIT

Turn the ignition off.

Disconnect the PCM C2 harness connector.

Note: Check connectors — Clean/repair as necessary.

Measure the resistance of the Air Pump Switchover Solenoid Control circuit from the Air Pump Switchover Solenoid harness connector to the PCM C2 harness connector.

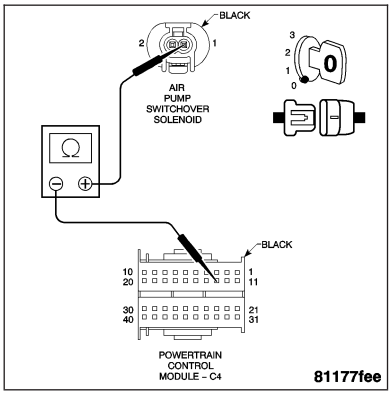

Is the resistance below 5.0 ohms?

Yes >> Replace and program the Powertrain Control Module. **Refer to Page 8E-56**.

Perform the POWERTRAIN VERIFICATION TEST - VER 2.

No >> Repair the Air Pump Switchover Solenoid Control circuit for an open.

Perform the POWERTRAIN VERIFICATION TEST - VER 2.

(P0412) SECONDARY AIR INJECTION SWITCHOVER SOLENOID CIRCUIT — CONTINUED

5. INTERMITTENT WIRING AND CONNECTORS

The condition that caused this DTC to set is currently not present. Inspect the related wiring harness for a possible intermittent condition.

Note: Check connectors — Clean/repair as necessary. Poor pin to terminal connections can set DTCs.

Note: Check for any Technical Service Bulletins that may apply.
Using the wiring diagram/schematic as a guide, inspect the wiring and connectors specific to this DTC. Wiggle the wires while checking for shorts and open circuits.

Were there any problems found?

Yes >> Repair as necessary.
Perform the POWERTRAIN VERIFICATION TEST - VER 2.

No >> The condition that caused this DTC to set is currently not present. Inspect the related wiring harness for a possible intermittent condition.

(P0422) CATALYTIC 1/1 EFFICIENCY

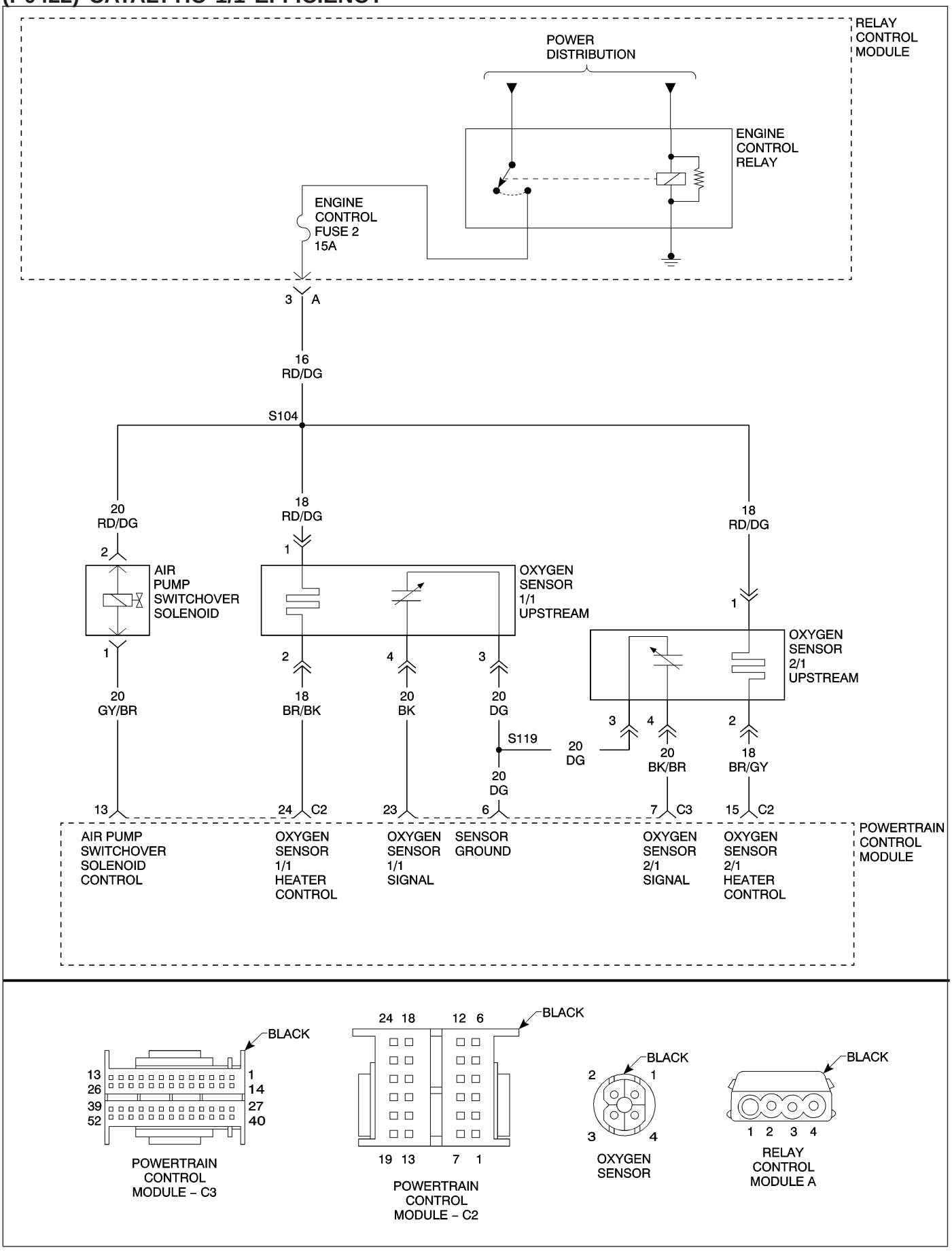

(P0422) CATALYTIC 1/1 EFFICIENCY — CONTINUED

When Monitored and Set Condition

- When Monitored: The Powertrain Control Module (PCM) monitors the engine at operating temperature, in closed loop, engine load between 22–52%, the Three Way Catalytic (TWC) converter temperature is greater than 380°C (716°F), and no O2 Sensor or engine misfire faults.
- Set Condition: The amplitude of the O2 Sensor Signal downstream of the TWC exceeds 75% of the amplitude of the O2 Sensor Signal upstream of the TWC for approximately 170 seconds.

POSSIBLE CAUSES
O2 SENSOR CONTAMINATION
ENGINE EXHAUST LEAKS OR DAMAGE
THREE WAY CATALYTIC CONVERTER
THREE WAY CATALYTIC CONVERTER DAMAGE

For a complete Powertrain Control Module Circuit Diagram **Refer to Page 9-574**.

Diagnostic Test

1. INSPECT THE TWC CONVERTER

Note: Diagnose any O2 Sensor DTC(s) before continuing with this diagnosis.

Note: Check for contaminants that may have damaged the O2 Sensor and three way catalytic converter: contaminated fuel, unapproved silicone products, oil or coolant and repair as necessary.

Note: Engine exhaust leaks can be the cause of this DTC. Inspect the exhaust system for leaks before diagnosing this DTC.

Note: Always perform diagnostics with a fully charged battery.

Note: Check connectors — Clean/repair as necessary. Poor pin to terminal connections can set DTCs.

Note: Check for any Technical Service Bulletins that may apply.

Turn the ignition off.

Inspect the TWC for the following damage:

- Dents or holes.
- Severe discoloration caused by overheating the TWC.
- TWC broken internally.
- Leaking TWC.

Did you find any of the above conditions?

Yes >> Repair the condition that caused the failure and replace the three way catalytic converter. **Refer to Page 11-5**.
Perform POWERTRAIN VERIFICATION TEST - VER 2.

No >> Go To 2

(P0422) CATALYTIC 1/1 EFFICIENCY — CONTINUED

2. INSPECT FOR EXHAUST LEAKS

Inspect the exhaust for any leak between the engine and the O2 Sensors.

Are there any exhaust leaks?

Yes >> Repair or replace the leaking exhaust parts as necessary.
Perform POWERTRAIN VERIFICATION TEST - VER 2.

No >> Replace the three way catalytic converter. **Refer to Page 11-5**.
Perform POWERTRAIN VERIFICATION TEST - VER 2.

(P0432) CATALYTIC 2/1 EFFICIENCY

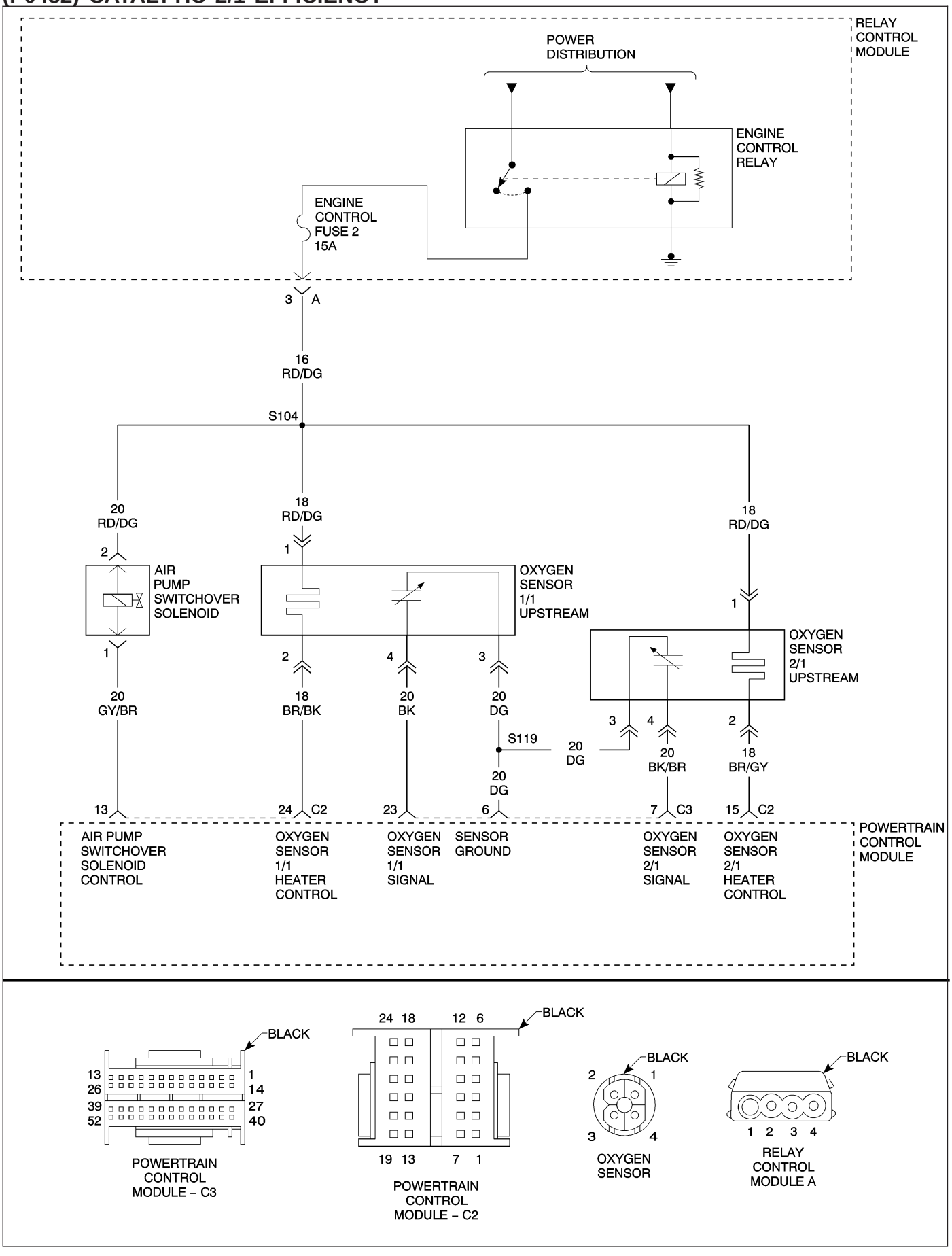

(P0432) CATALYTIC 2/1 EFFICIENCY — CONTINUED

When Monitored and Set Condition

- When Monitored: The Powertrain Control Module (PCM) monitors the engine at operating temperature, in closed loop, engine load between 22–52%, the Three Way Catalytic (TWC) converter temperature is greater than 380°C (716°F), and no O2 Sensor or engine misfire faults.
- Set Condition: The amplitude of the O2 Sensor Signal downstream of the TWC exceeds 75% of the amplitude of the O2 Sensor Signal upstream of the TWC for approximately 170 seconds.

POSSIBLE CAUSES
02 SENSOR CONTAMINATION
ENGINE EXHAUST LEAKS OR DAMAGE
THREE WAY CATALYTIC CONVERTER FAILURE
THREE WAY CATALYTIC CONVERTER DAMAGE

For a complete Powertrain Control Module Circuit Diagram **Refer to Page 9-574**.

Diagnostic Test

1. INSPECT THE THREE WAY CATALYTIC CONVERTER

Note: Diagnose any O2 Sensor DTC(s) before continuing with this diagnosis.

Note: Check for contaminants that may have damaged the O2 Sensor and TWC converter: contaminated fuel, unapproved silicone products, oil or coolant and repair as necessary.

Note: Engine exhaust leaks can be the cause of this DTC. Inspect the exhaust system for leaks before diagnosing this DTC.

Note: Always perform diagnostics with a fully charged battery.

Turn the ignition off.

Inspect the TWC for the following damage

- Dents or holes.
- Severe discoloration caused by overheating the TWC.
- TWC broken internally.
- Leaking TWC.

Did you find any of the above conditions?

Yes >> Repair the condition that caused the failure and replace the TWC converter. **Refer to Page 11-5**.
Perform POWERTRAIN VERIFICATION TEST - VER 2.

No >> Go To 2

2. INSPECT FOR EXHAUST LEAKS

Inspect the exhaust for any leak between the engine and the O2 Sensors.

Are there any exhaust leaks?

Yes >> Repair or replace the leaking exhaust parts as necessary.
Perform POWERTRAIN VERIFICATION TEST - VER 2.

No >> Replace the TWC converter. **Refer to Page 11-5**.
Perform POWERTRAIN VERIFICATION TEST - VER 2.

(P0440) GENERAL EVAP SYSTEM FAILURE

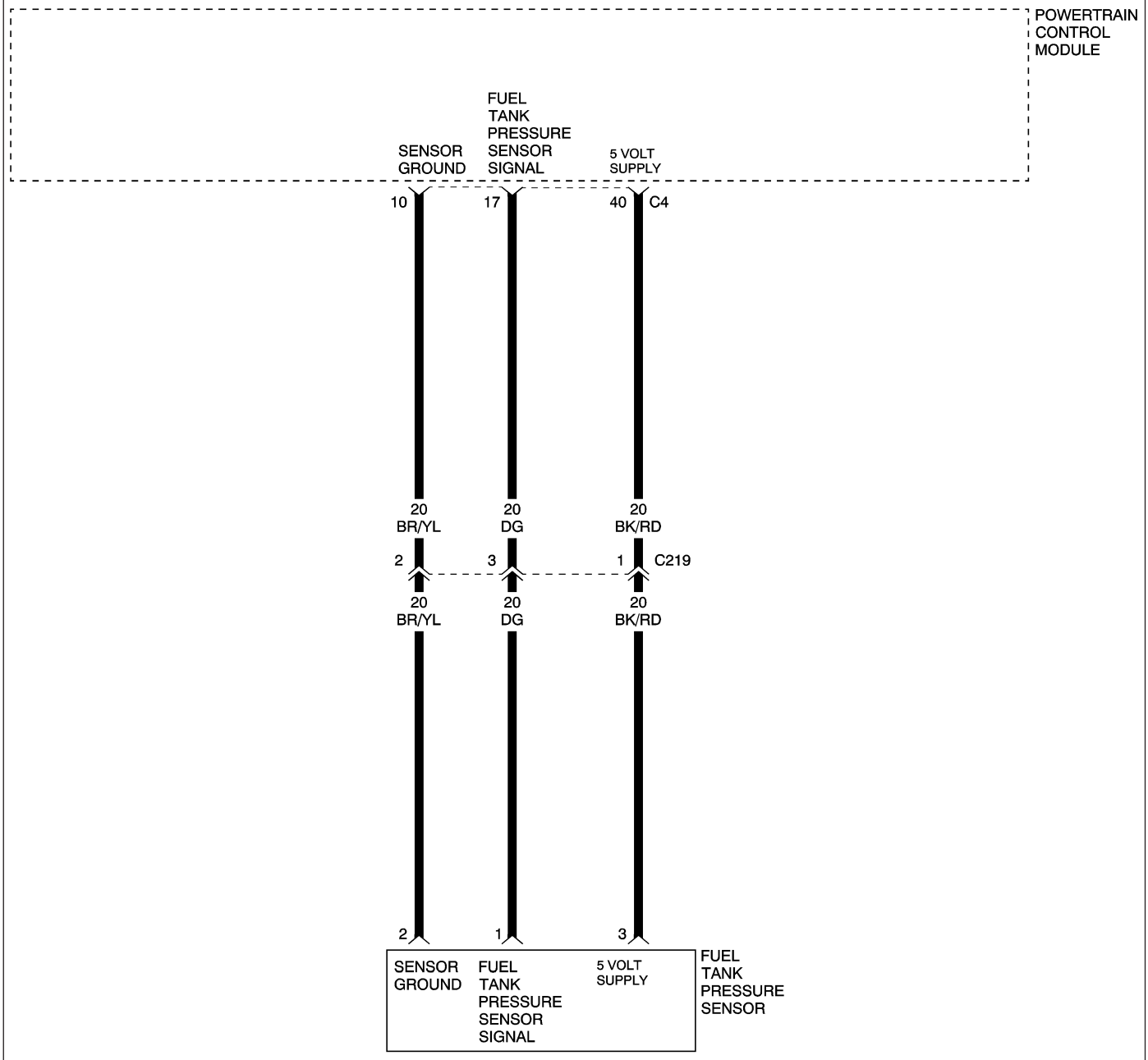

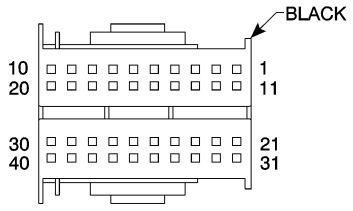

POWERTRAIN CONTROL MODULE – C4

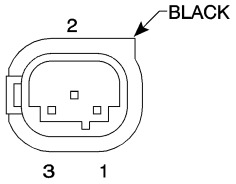

FUEL TANK PRESSURE SENSOR

8115aa4d

(P0440) GENERAL EVAP SYSTEM FAILURE — CONTINUED

When Monitored and Set Condition

- When Monitored: Engine Running. Cold start test. Fuel Level greater than 12%. Ambient Temperature between 4°C and 32°C (39°F and 89°F) Close Loop fuel system. Test runs when small leak test is maturing.
- Set Condition: The PCM activates the Evap Purge Solenoid to pull the Evap system into a vacuum. The PCM turns the Evap Purge solenoid off to seal the Evap system. If the Fuel Tank Pressure Sensor reads between –1.5 to +1.0 hPa before the calibrated amount of time for a Medium leak/Small leak an error is detected. Two Trip Fault.

POSSIBLE CAUSES
EVAPORATIVE EMISSION SYSTEM LEAK
FUEL TANK PRESSURE SENSOR

Diagnostic Test

1. CHECK FOR CURRENT DTC

Turn the ignition on.

With the DRB III®, read the PCM DTCs.

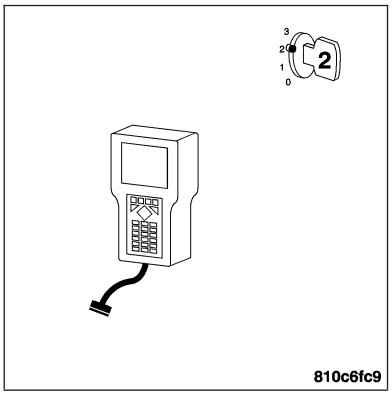

Is this DTC preset?

Yes >> For complete diagnosis of this DTC, refer to (P0455) EVAP SYSTEM LARGE LEAK.

No >> Go To 2

2. INTERMITTENT WIRING AND CONNECTORS

The conditions necessary to set this DTC are not present at this time.

Note: Check connectors — Clean/repair as necessary. Poor pin to terminal connections can set DTCs.Using the wiring diagram/schematic as a guide, inspect the wiring and connectors specific to this DTC. Wiggle the wires while checking for shorts and open circuits.

Note: Check for any Technical Service Bulletins that may apply.

Were there any problems found?

Yes >> Repair as necessary.
Perform POWERTRAIN VERIFICATION TEST - VER 2.

No >> The condition that caused this DTC to set is currently not present. Inspect the related wiring harness for a possible intermittent condition.

(P0441) EVAP PURGE VALVE

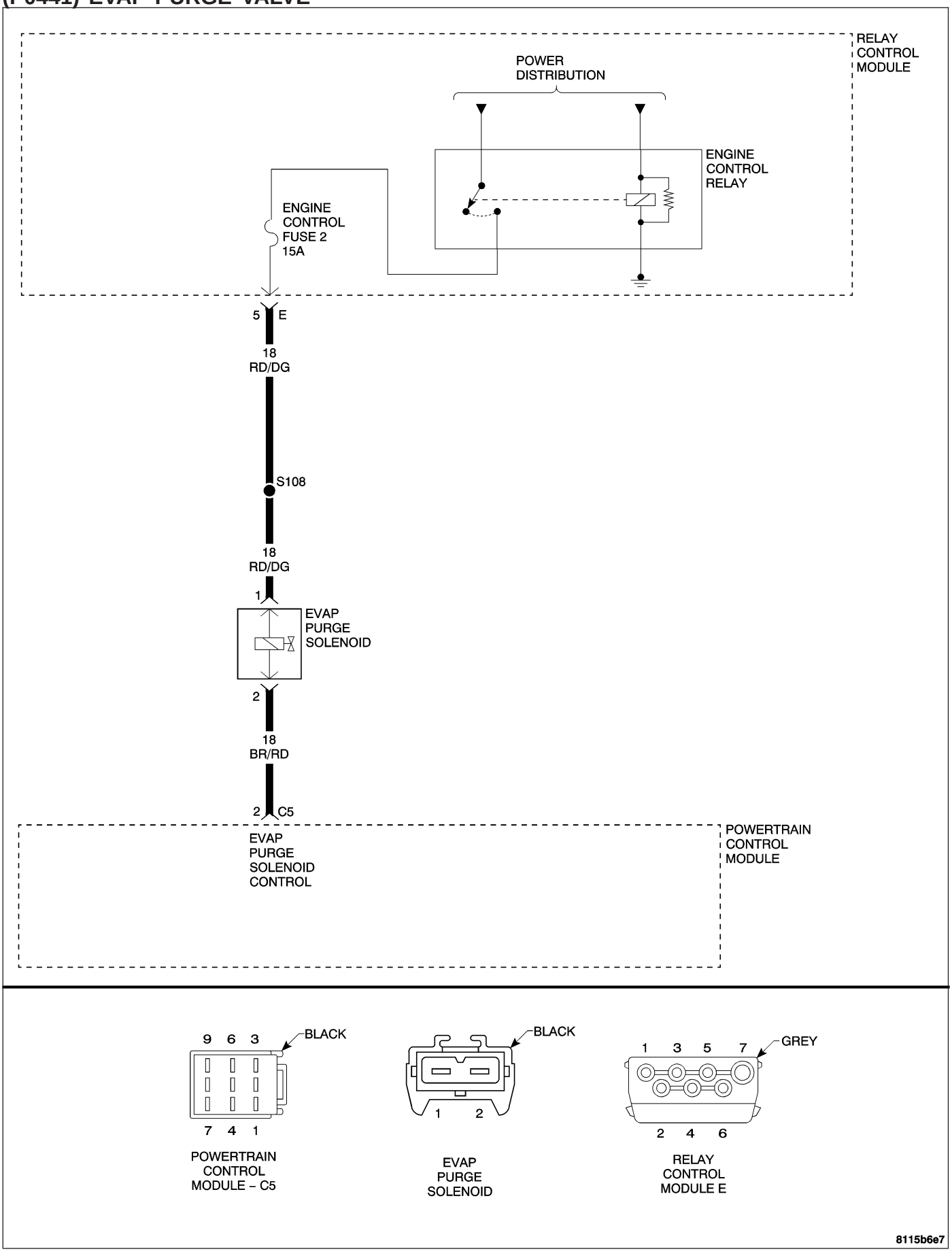

(P0441) EVAP PURGE VALVE — CONTINUED

When Monitored and Set Condition

- When Monitored: Continuously with the ignition on.
- Set Condition: An improper voltage level has been detected on the Evap Purge Solenoid Control circuit.

POSSIBLE CAUSES
EVAP PURGE SOLENOID VOLTAGE SUPPLY CIRCUIT OPEN
EVAP PURGE SOLENOID CONTROL CIRCUIT OPEN
EVAP PURGE SOLENOID CONTROL CIRCUIT SHORT TO GROUND
EVAP PURGE SOLENOID CONTROL CIRCUIT SHORT TO VOLTAGE
EVAP PURGE SOLENOID
POWERTRAIN CONTROL MODULE

Diagnostic Test

1. CHECK FOR CURRENT DTC

Turn the ignition on.

With the DRB III®, read the PCM DTCs.

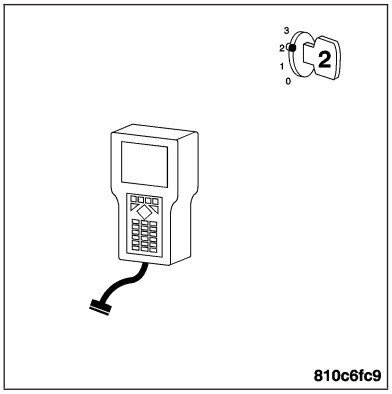

Is this DTC preset?

Yes >> For complete diagnosis of this DTC, refer to (P0445) EVAP PURGE SOLENOID CIRCUIT.

No >> Go To 2

2. INTERMITTENT WIRING AND CONNECTORS

The conditions necessary to set this DTC are not present at this time.

Note: Check connectors — Clean/repair as necessary. Poor pin to terminal connections can set DTCs.Using the wiring diagram/schematic as a guide, inspect the wiring and connectors specific to this DTC. Wiggle the wires while checking for shorts and open circuits.

Note: Check for any Technical Service Bulletins that may apply.

Were there any problems found?

Yes >> Repair as necessary.
Perform POWERTRAIN VERIFICATION TEST - VER 2.

No >> The condition that caused this DTC to set is currently not present. Inspect the related wiring harness for a possible intermittent condition.

(P0442) EVAP SYSTEM SMALL LEAK

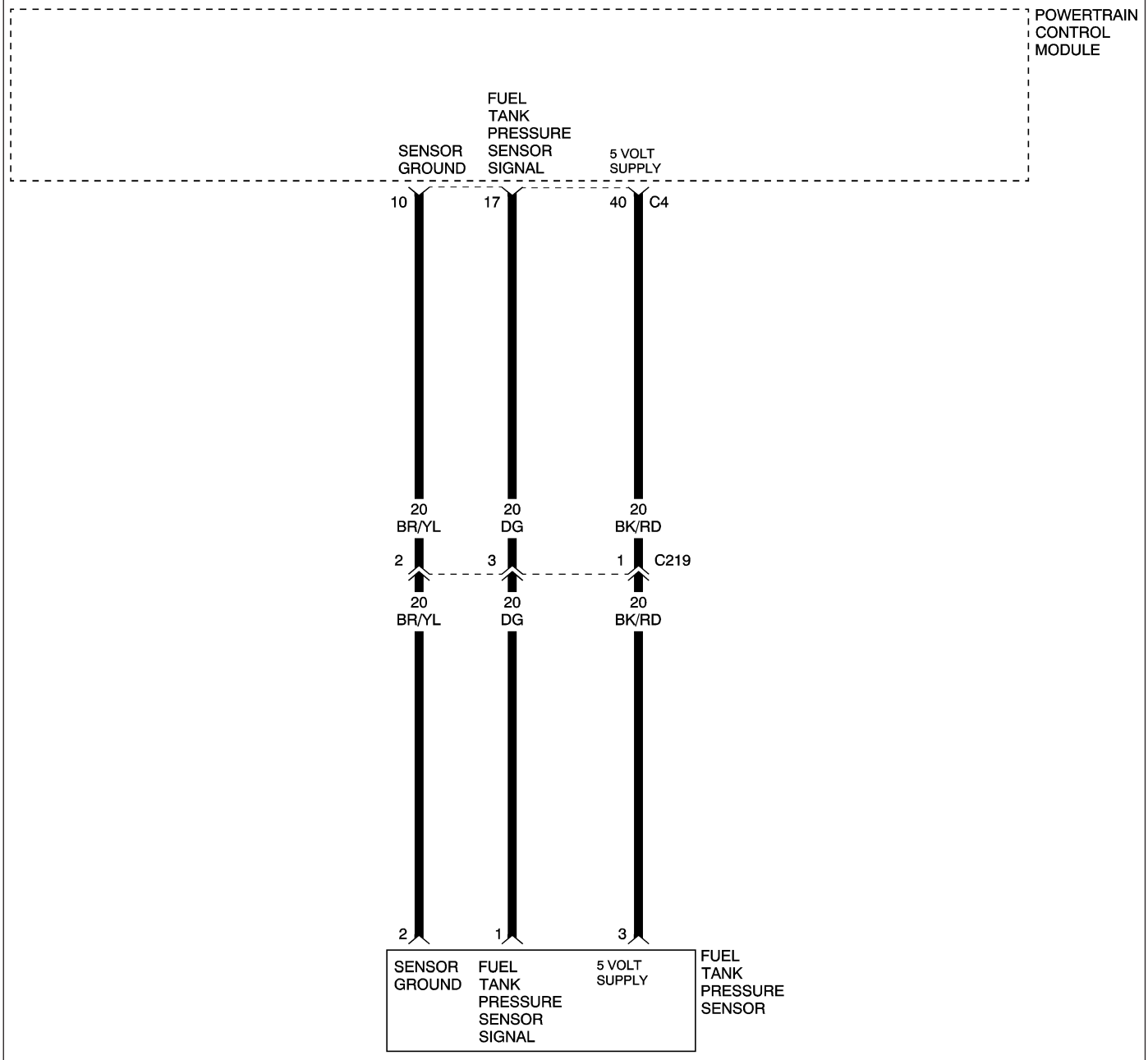

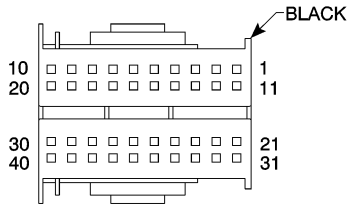

POWERTRAIN CONTROL MODULE – C4

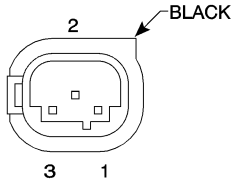

FUEL TANK PRESSURE SENSOR

8115aa4d

(P0442) EVAP SYSTEM SMALL LEAK — CONTINUED

When Monitored and Set Condition

- When Monitored: Engine Running. Cold start test. Fuel Level greater than 12%. Ambient Temperature between 4°C and 32°C (39°F and 89°F) Close Loop fuel system. Test runs when small leak test is maturing.
- Set Condition: The PCM activates the Evap Purge Solenoid to pull the Evap system into a vacuum. The PCM turns the Evap Purge solenoid off to seal the Evap system. If the Fuel Tank Pressure Sensor reads between –1.5 to +1.0 hPa before the calibrated amount of time for a Medium leak/Small leak an error is detected. Two Trip Fault.

POSSIBLE CAUSES
EVAPORATIVE EMISSION SYSTEM LEAK
FUEL TANK PRESSURE SENSOR

Diagnostic Test

1. CHECK FOR CURRENT DTC

Turn the ignition on.

With the DRB III®, read the PCM DTCs.

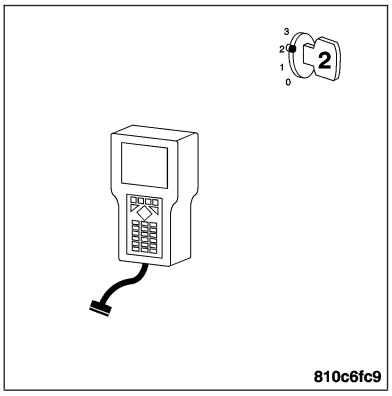

Is this DTC preset?

Yes >> For complete diagnosis of this DTC, refer to (P0455) EVAP SYSTEM LARGE LEAK.

No >> Go To 2

2. INTERMITTENT WIRING AND CONNECTORS

The conditions necessary to set this DTC are not present at this time.

Note: Check connectors — Clean/repair as necessary. Poor pin to terminal connections can set DTCs.Using the wiring diagram/schematic as a guide, inspect the wiring and connectors specific to this DTC. Wiggle the wires while checking for shorts and open circuits.

Note: Check for any Technical Service Bulletins that may apply.

Were there any problems found?

Yes >> Repair as necessary.
Perform POWERTRAIN VERIFICATION TEST - VER 2.

No >> The condition that caused this DTC to set is currently not present. Inspect the related wiring harness for a possible intermittent condition.

(P0445) EVAP PURGE SOLENOID CIRCUIT

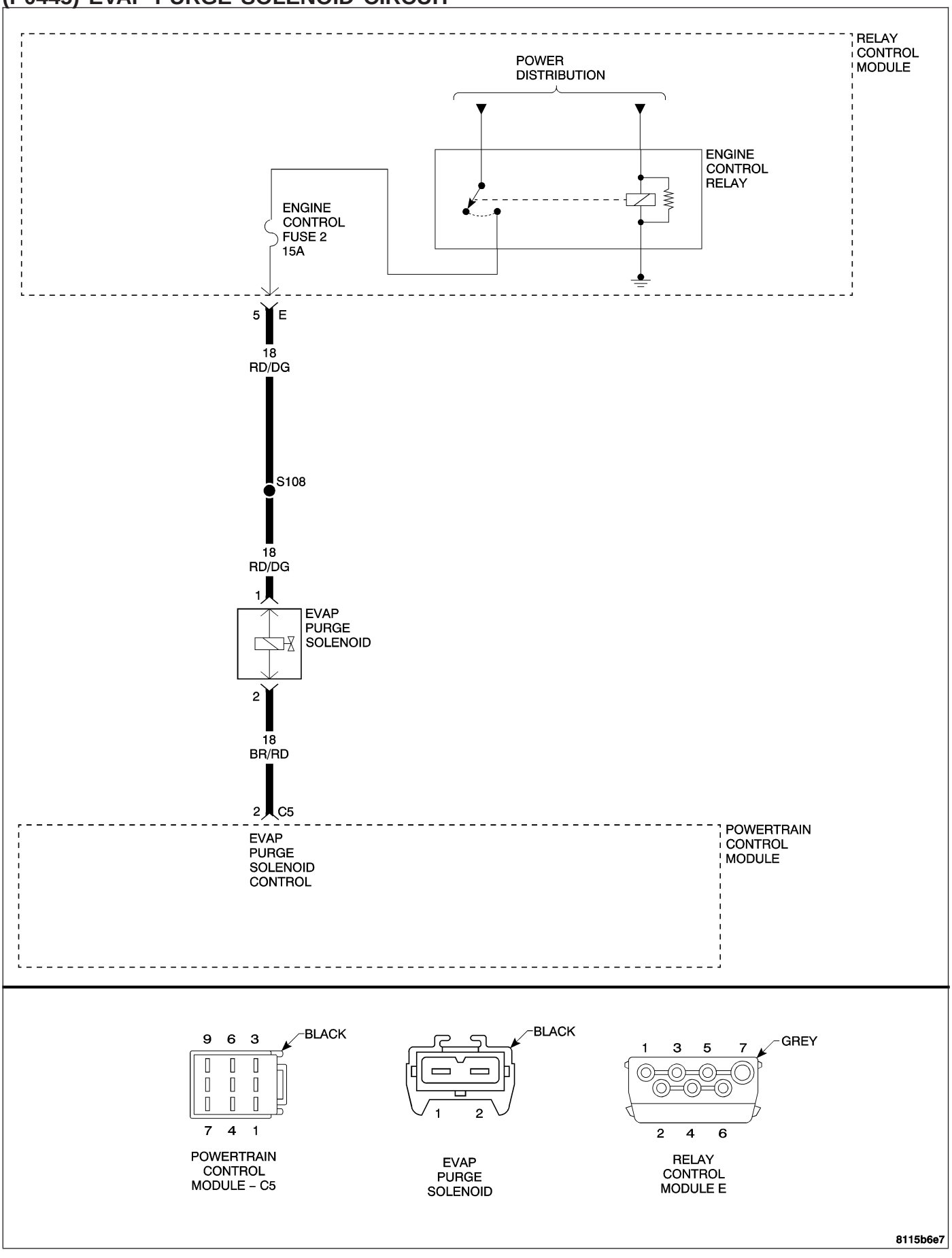

(P0445) EVAP PURGE SOLENOID CIRCUIT — CONTINUED

When Monitored and Set Condition

- When Monitored: Continuously with the ignition on.
- Set Condition: An improper voltage level has been detected on the Evap Purge Solenoid Control circuit.

POSSIBLE CAUSES
EVAP PURGE SOLENOID VOLTAGE SUPPLY CIRCUIT OPEN
EVAP PURGE SOLENOID CONTROL CIRCUIT OPEN
EVAP PURGE SOLENOID CONTROL CIRCUIT SHORT TO GROUND
EVAP PURGE SOLENOID CONTROL CIRCUIT SHORT TO VOLTAGE
EVAP PURGE SOLENOID
POWERTRAIN CONTROL MODULE

For a complete Powertrain Control Module Circuit Diagram, **Refer to Page 9-574**.

Diagnostic Test

1. CHECK FOR CURRENT DTC

Note: Check connectors — Clean/repair as necessary. Poor pin to terminal connections can set DTCs.

Note: Check for applicable TSBs.

Note: If the PCM detects and stores a DTC, the PCM also stores the engine/vehicle operating conditions under which the DTC was set. Some of these conditions are displayed on the DRB III® at the same time the DTC is displayed.

Note: Before erasing stored DTCs, record these conditions. Attempting to duplicate these conditions may assist when checking for a DTC.

Turn the ignition on.

With the DRB III®, erase PCM DTCs.

Note: It maybe necessary to road test the vehicle for this DTC to set.

With the DRB III®, read the PCM DTCs.

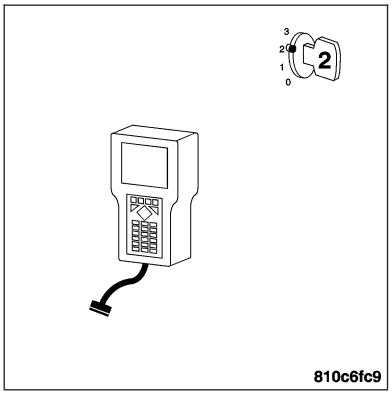

Did this DTC set again?

Yes >> Go To 2

No >> Go To 6

(P0445) EVAP PURGE SOLENOID CIRCUIT — CONTINUED

2. FUSED ENGINE CONTROL RELAY OUTPUT CIRCUIT OPEN

Turn the ignition off.

Disconnect the Evap Purge Solenoid harness connector.

Turn the ignition on.

Measure the voltage of the Fused Engine Control Relay Output circuit at the Evap Purge Solenoid harness connector.

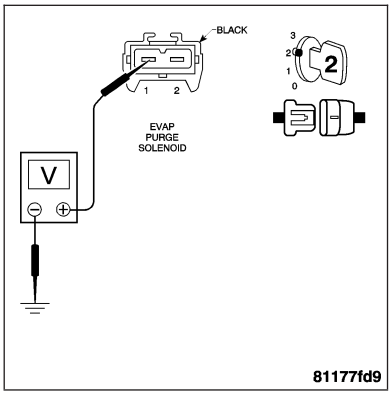

Is the voltage above 10 volts?

Yes >> Go To 3

No >> Repair the Fused Engine Control Relay Output circuit for an open.
Perform POWERTRAIN VERIFICATION TEST - VER 2.

3. DISCONNECT THE PCM

Turn the ignition off.

Reconnect the Evap Purge Solenoid harness connector.

Disconnect the PCM C5 harness connector.

Note: Check connectors — Clean/repair as necessary.

Turn the ignition on.

Connect a fused jumper wire between ground and the Evap Purge Solenoid Control circuit at the PCM C5 harness connector.

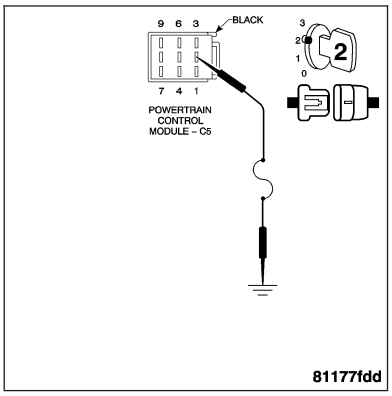

Does the Evap Purge Solenoid produce an audible click?

Yes >> Go To 4

No >> Go To 5

4. EVAP PURGE SOLENOID CONTROL CIRCUIT CURRENT FLOW

Turn the ignition off.

Replace the EVAP Purge Solenoid. **Refer to Page 25-17**.

Turn the ignition on.

With the DRB III®, erase PCM DTCs.

Note: It maybe necessary to road test the vehicle for this DTC to set.

Note: The engine controls must go into closed loop and purge control must be active for at least 2 minutes.

With the DRB III®, read the PCM DTCs.

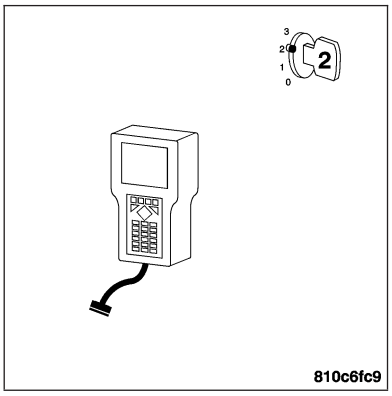

Did the DTC, (P0445) EVAP Purge Solenoid Circuit, set again?

Yes >> Replace and program the Powertrain Control Module. **Refer to Page 8E-56**.
Perform POWERTRAIN VERIFICATION TEST - VER 2.

No >> Test Complete.
Perform POWERTRAIN VERIFICATION TEST - VER 2.

(P0445) EVAP PURGE SOLENOID CIRCUIT — CONTINUED

5. EVAP PURGE SOLENOID CONTROL CIRCUIT FAULT

Turn the ignition off.

Disconnect the Evap Purge Solenoid harness connector.

Check the Evap Purge Solenoid Control circuit for any fault open; short to voltage, or a short to ground.

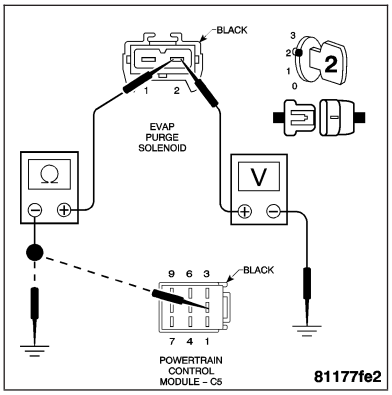

Was a circuit fault found?

Yes >> Repair the Evap Purge Solenoid Control circuit for the fault found.
Perform POWERTRAIN VERIFICATION TEST - VER 2.

No >> Replace the Evap Purge Solenoid. **Refer to Page 25-17**.
Perform POWERTRAIN VERIFICATION TEST - VER 2.

6. INTERMITTENT WIRING AND CONNECTORS

The condition that caused this DTC to set is currently not present. Inspect the related wiring harness for a possible intermittent condition.

Note: Check connectors — Clean/repair as necessary. Poor pin to terminal connections can set DTCs.Using the wiring diagram/schematic as a guide, inspect the wiring and connectors specific to this DTC. Wiggle the wires while checking for shorts and open circuits.

Note: Check for any Technical Service Bulletins that may apply.

Were there any problems found?

Yes >> Repair as necessary.
Perform POWERTRAIN VERIFICATION TEST - VER 2.

No >> The condition that caused this DTC to set is currently not present. Inspect the related wiring harness for a possible intermittent condition.

(P0446) CHARCOAL CANISTER SHUTOFF VALVE

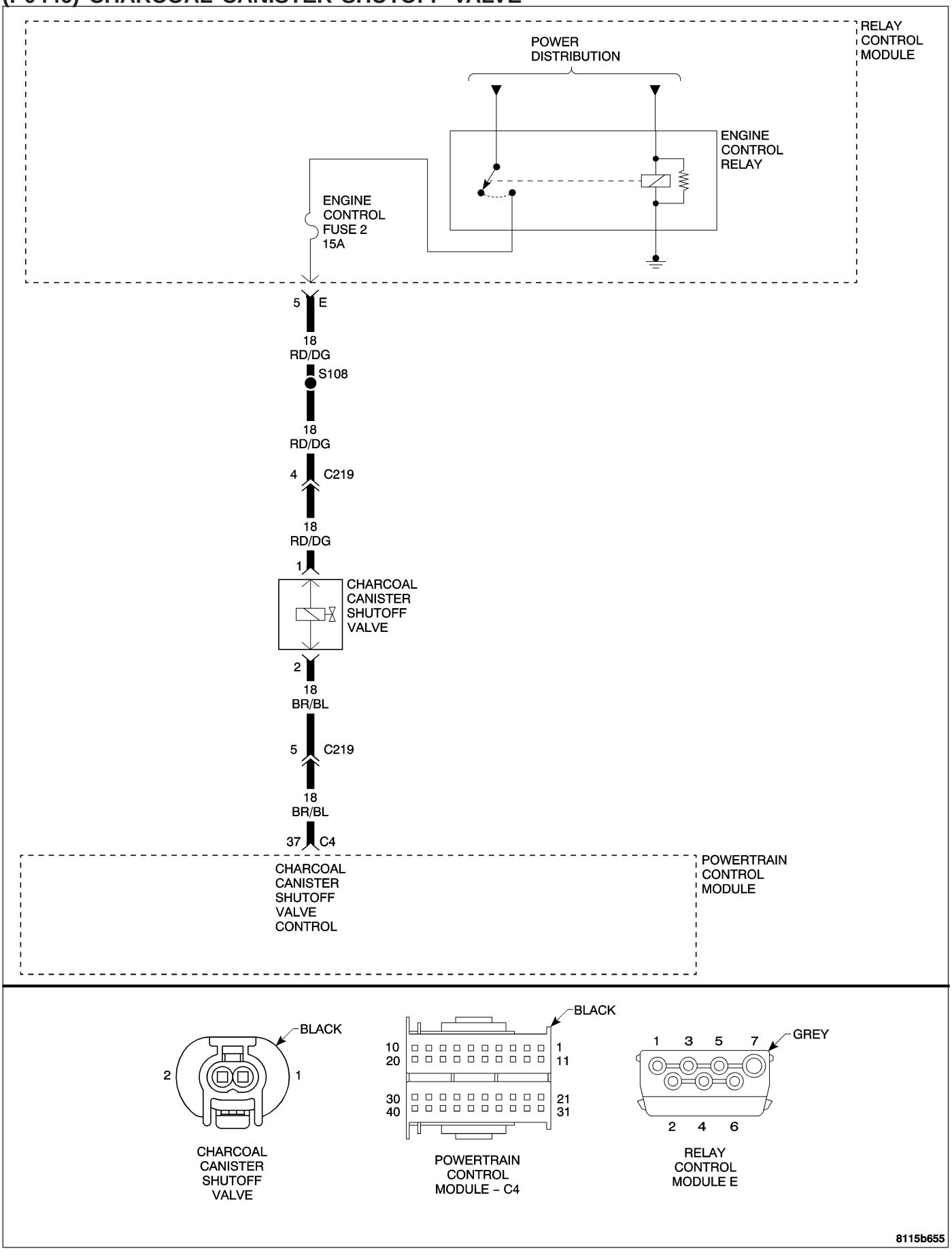

(P0446) CHARCOAL CANISTER SHUTOFF VALVE — CONTINUED

When Monitored and Set Condition

- When Monitored: The ignition on or engine running. Battery voltage greater than 10 volts.
- Set Condition:

POSSIBLE CAUSES
OPEN FUSED ENGINE CONTROL RELAY OUTPUT CIRCUIT
CHARCOAL CANISTER SHUTOFF VALVE CONTROL CIRCUIT SHORT TO GROUND
CHARCOAL CANISTER SHUTOFF VALVE CONTROL CIRCUIT OPEN
CHARCOAL CANISTER SHUTOFF VALVE CONTROL CIRCUIT SHORT TO VOLTAGE
CHARCOAL CANISTER SHUTOFF VALVE
POWERTRAIN CONTROL MODULE

For a complete Powertrain Control Module Circuit Diagram, **Refer to Page 9-574**.

Diagnostic Test

1. CHARCOAL CANISTER SHUTOFF VALVE

Turn the ignition off.

Disconnect the Charcoal Canister Shutoff Valve harness connector.

Note: Check connectors — Clean/repair as necessary.

Turn the ignition on.

Using a 12-volt test light, jumper across the Charcoal Canister Shutoff Valve harness connector.

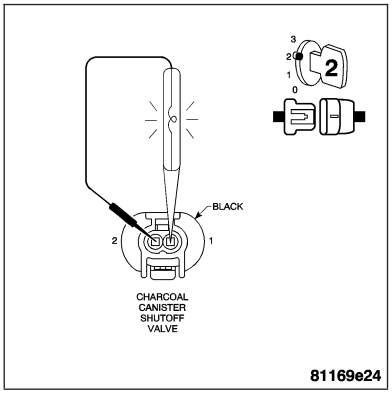

Does the test light illuminate?

Yes >> Replace the Charcoal Canister Shutoff Valve. **Refer to Page 25-16**.
Perform POWERTRAIN VERIFICATION TEST - VER 2.

No >> Go To 2

2. CHECKING THE FUSED ENGINE CONTROL RELAY OUTPUT CIRCUIT TO THE CHARCOAL CANISTER SHUTOFF VALVE

With the ignition on.

Connect a 12-volt test light between ground and the Fused Engine Control Relay Output circuit and a ground of the Charcoal Canister Shutoff Valve harness connector.

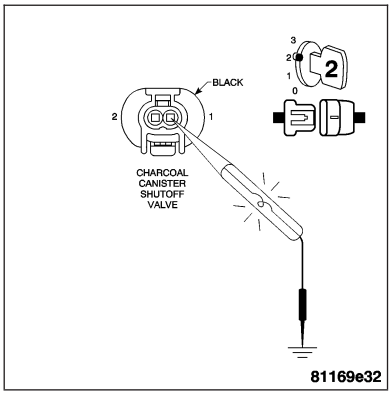

Does the test illuminate brightly?

Yes >> Go To 3

No >> Repair the Fused Engine Control Relay Output circuit for an open.
Perform POWERTRAIN VERIFICATION TEST - VER 2.

(P0446) CHARCOAL CANISTER SHUTOFF VALVE — CONTINUED

3. CHECKING THE CHARCOAL CANISTER SHUTOFF VALVE CONTROL CIRCUIT FOR AN OPEN

Turn the ignition off.

Disconnect the PCM C4 harness connectors.

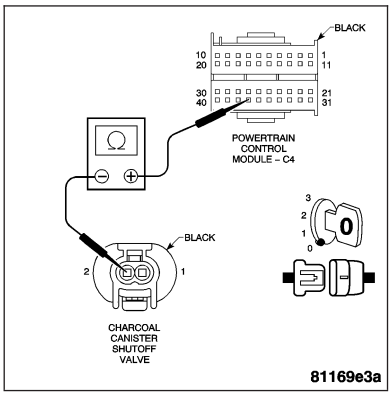

Note: Check connectors — Clean/repair as necessary.
Measure the resistance of the Charcoal Canister Shutoff Valve Control circuit from the Charcoal Canister Shutoff Valve harness connector to the PCM C4 harness connector.

Is the resistance below 5.0 ohms?

Yes >> Go To 4

No >> Repair the Charcoal Canister Shutoff Valve Control circuit for an open.
Perform POWERTRAIN VERIFICATION TEST - VER 2.

4. CHARCOAL CANISTER SHUTOFF VALVE CONTROL CIRCUIT SHORT TO GROUND.

With the ignition off.

Measure the resistance between ground and the Charcoal Canister Shutoff Valve Control circuit at the Charcoal Canister Shutoff Valve harness connector.

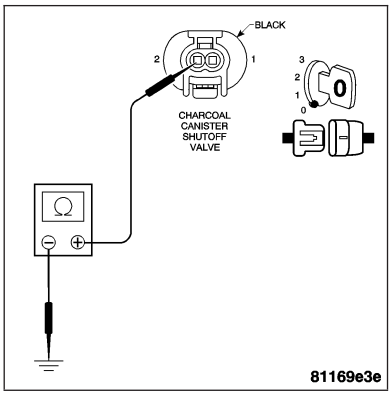

Is the resistance below 5.0 ohms?

Yes >> Repair the Charcoal Canister Shutoff Valve Control circuit for a short to ground.
Perform POWERTRAIN VERIFICATION TEST - VER 2.

No >> Replace and program the Powertrain Control Module. **Refer to Page 8E-56**.
Perform POWERTRAIN VERIFICATION TEST - VER 2.

(P0446) EVAP PURGE SOLENOID STUCK OPEN

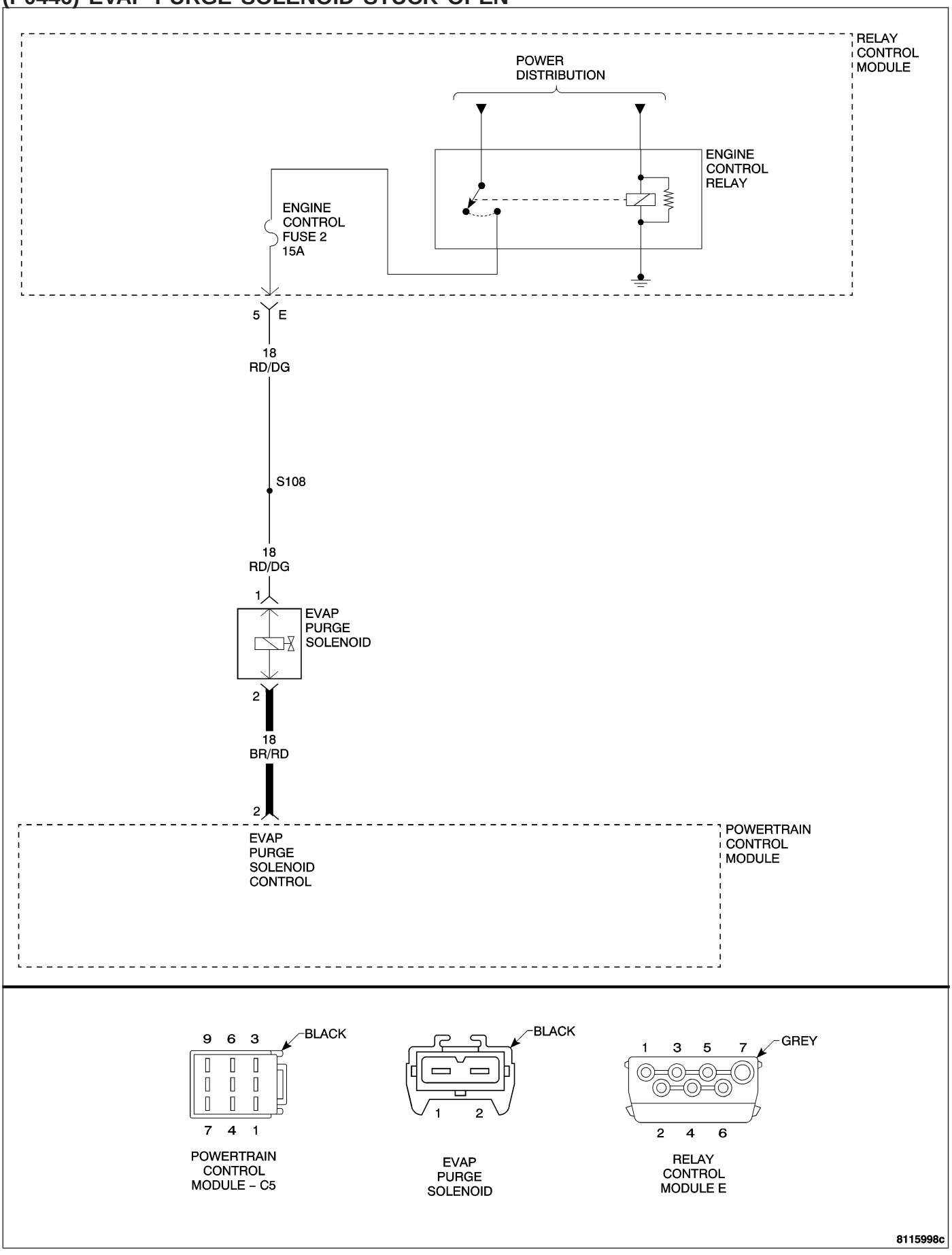

(P0446) EVAP PURGE SOLENOID STUCK OPEN — CONTINUED

When Monitored and Set Condition

- When Monitored: Cold start test. Engine Running.
- Set Condition: The Powertrain Control Module (PCM) activates the Evap Purge Solenoid gradually and increases to maximum flow. The PCM monitors the Fuel Tank Pressure Sensor and if the value falls below –40 hPa too soon, the error is detected.

POSSIBLE CAUSES
EVAP PURGE SOLENOID
EVAP PURGE SOLENOID VACUUM SUPPLY

For a complete Powertrain Control Module Circuit Diagram, **Refer to Page 9-574**.

Diagnostic Test

1. CHECK FOR CURRENT DTC

Note: If any EVAP/Charcoal Canister DTCs are set, diagnose them first before continuing with P0446.

Note: If the PCM detects and stores a DTC, the PCM also stores the engine/vehicle operating conditions under which the DTC was set. Some of these conditions are displayed on the DRB III® at the same time the DTC is displayed.

Note: Before erasing stored DTCs, record these conditions. Attempting to duplicate these conditions may assist when checking for an active DTC.

Turn the ignition on.

With the DRB III®, erase PCM DTCs.

Note: It maybe necessary to road test the vehicle for this DTC to set.

With the DRB III®, read the PCM DTCs.

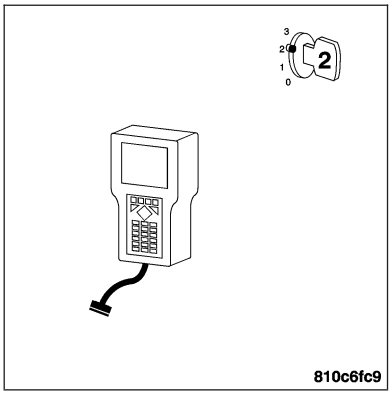

Did this DTC set again?

Yes >> Go To 2

No >> Go To 4

2. CHECKING EVAP PURGE SOLENOID FUNCTIONALITY

Note: After disconnecting the Evap Purge vacuum connections, inspect the lines and solenoid for any signs of contamination or foreign materials.

With the ignition on.

Using a hand vacuum pump, apply 10 in. Hg to the canister side of the EVAP Purge Solenoid.

Observe the vacuum gauge.

With the DRB III®, actuate the EVAP Purge Solenoid.

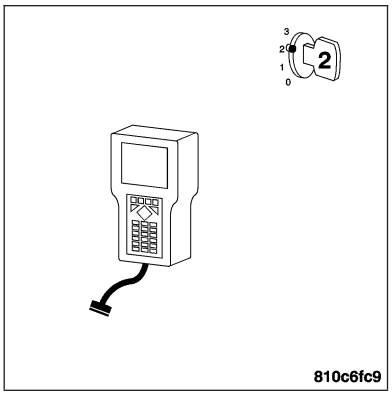

Does the vacuum drop when the solenoid is actuated?

Yes >> Go To 3

No >> Replace the Evap Purge Solenoid. **Refer to Page 25-17**. Perform POWERTRAIN VERIFICATION TEST - VER 2.

(P0446) EVAP PURGE SOLENOID STUCK OPEN — CONTINUED

3. EVAP VACUUM SUPPLY HOSE INSPECTION

Turn the ignition off.

Carefully inspect the Evap Purge Solenoid vacuum supply hose for proper routing.

Check for a pinched or plugged vacuum hose to the Purge Solenoid.

Inspect the vacuum port for any damage or restriction.

Were any problems found?

Yes >> Repair the vacuum supply hose/tube as necessary.
Perform POWERTRAIN VERIFICATION TEST - VER 2.

No >> Go To 4

4. INTERMITTENT WIRING AND CONNECTORS

The condition that caused this DTC to set is currently not present. Inspect the related wiring harness for a possible intermittent condition.

Note: Check connectors — Clean/repair as necessary. Poor pin to terminal connections can set DTCs.

Note: Check for any Technical Service Bulletins that may apply.
Using the wiring diagram/schematic as a guide, inspect the wiring and connectors specific to this DTC. Wiggle the wires while checking for shorts and open circuits.

Were there any problems found?

Yes >> Repair as necessary.
Perform POWERTRAIN VERIFICATION TEST - VER 2.

No >> The condition that caused this DTC to set is currently not present. Inspect the related wiring harness for a possible intermittent condition.

(P0451) FUEL TANK PRESSURE SENSOR PERFORMANCE

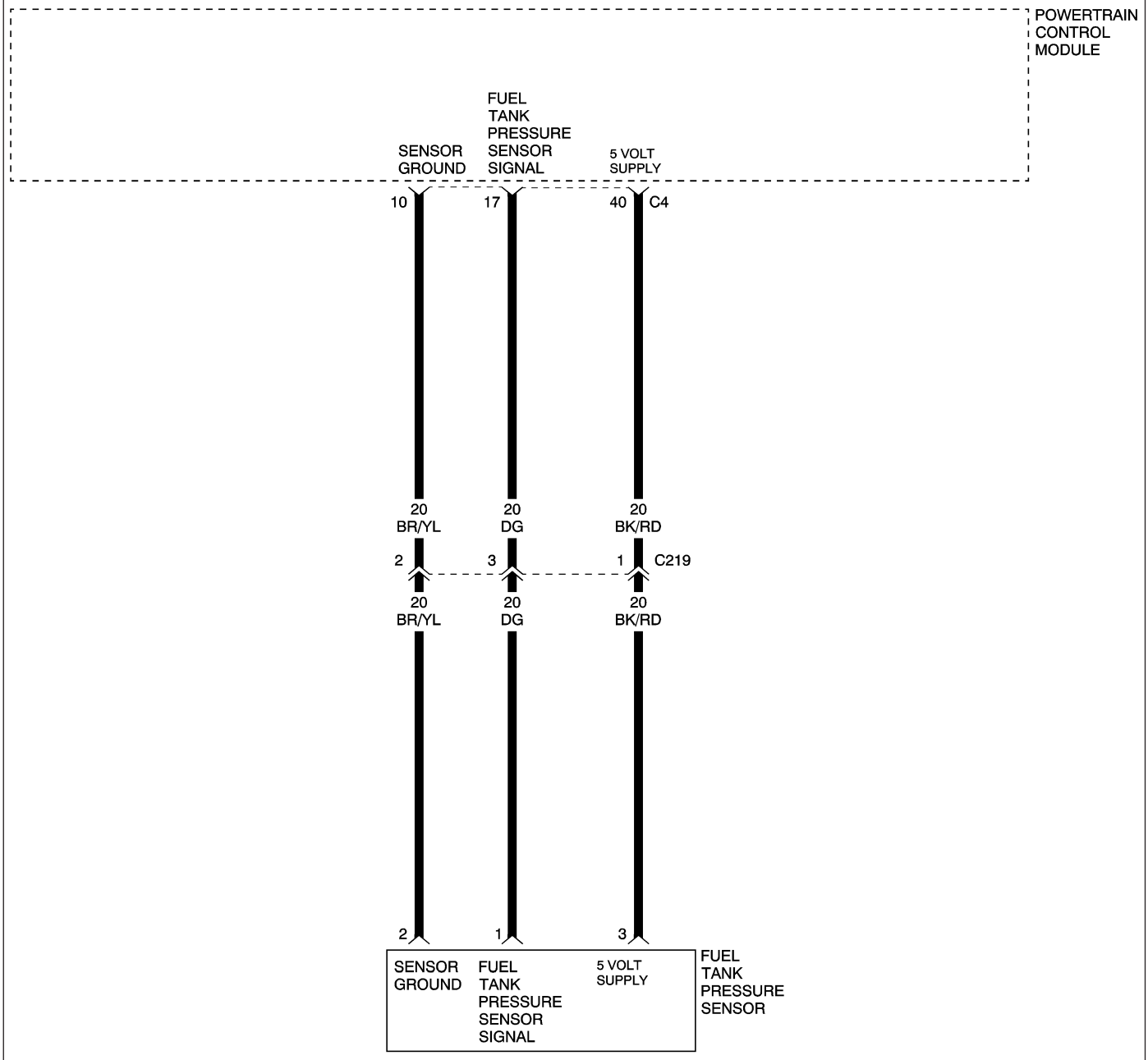

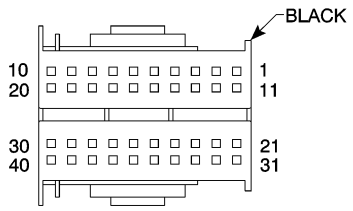

POWERTRAIN CONTROL MODULE – C4

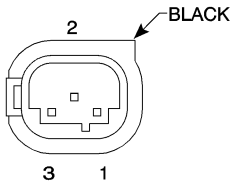

FUEL TANK PRESSURE SENSOR

8115aa4d

(P0451) FUEL TANK PRESSURE SENSOR PERFORMANCE — CONTINUED

When Monitored and Set Condition

- When Monitored: With the engine running at idle speed.
- Set Condition: Low limit: The Fuel Tank Pressure Sensor voltage is less than 0.1 volt for 10 seconds. High limit: The Fuel Tank Pressure Sensor voltage is greater than 4.7 volts for 10 seconds. Signal curve: The Fuel Tank Pressure Sensor Performance code will be set if the signal remains constant.

POSSIBLE CAUSES
OPEN FUEL TANK PRESSURE SENSOR SIGNAL CIRCUIT
OPEN FUEL TANK PRESSURE SENSOR GROUND CIRCUIT
FUEL TANK PRESSURE SENSOR SIGNAL CIRCUIT SHORTED TO GROUND
FUEL TANK PRESSURE SENSOR SIGNAL CIRCUIT SHORTED TO VOLTAGE
OPEN 5-VOLT SUPPLY
5-VOLT SUPPLY SHORTED TO VOLTAGE
5-VOLT SUPPLY SHORTED TO GROUND
FUEL TANK PRESSURE SENSOR
POWERTRAIN CONTROL MODULE

For a complete Powertrain Control Module Circuit Diagram, **Refer to Page 9-574**.

Diagnostic Test

1. READING FUEL TANK PRESSURE

Note: If an Evap System fault has been set, diagnose the Evap fault before continuing.
Turn the ignition on.
With the DRB III®, monitor the Fuel Tank Press Diff.

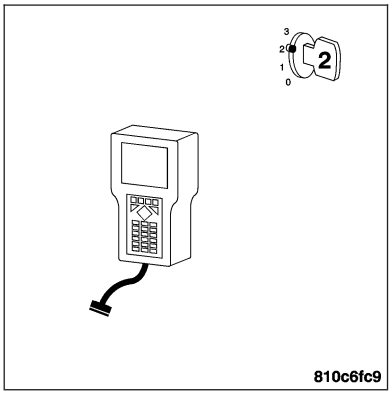

Is the Fuel Tank Pressure above +30 hPa?

Yes >> Go To 2

No >> Go To 4

(P0451) FUEL TANK PRESSURE SENSOR PERFORMANCE — CONTINUED

2. FUEL TANK PRESSURE SENSOR SIGNAL SHORTED TO VOLTAGE

Turn the ignition off.

Disconnect the PCM C4 harness connector.

Disconnect the Fuel Tank Pressure Sensor connector.

Note: Check connectors — Clean/repair as necessary.

Turn the ignition on.

Measure the voltage of the Fuel Tank Pressure Sensor Signal circuit at the Fuel Tank Pressure Sensor harness connector.

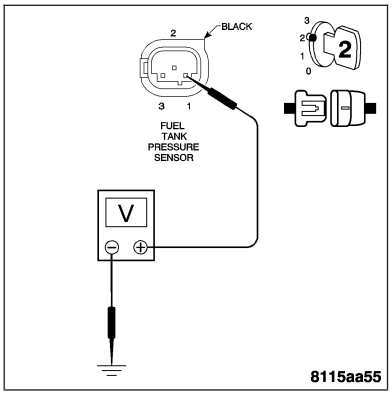

Is the voltage above 1.0 volt?

Yes >> Repair the Fuel Tank Pressure Sensor Signal for a short to voltage.
Perform POWERTRAIN VERIFICATION TEST - VER 2.

No >> Go To 3

3. OPEN FUEL TANK PRESSURE SENSOR GROUND CIRCUIT

Turn the ignition off.

Measure the resistance of the Fuel Tank Pressure Sensor Ground circuit from the Fuel Tank Pressure Sensor harness connector to the PCM harness connector.

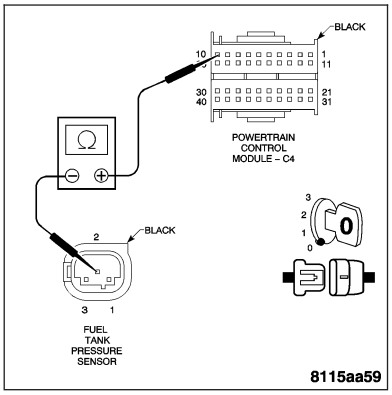

Is the resistance below 5.0 ohms?

Yes >> Replace the Fuel Tank Pressure Sensor. **Refer to Page 14-13**.
Perform POWERTRAIN VERIFICATION TEST - VER 2.

No >> Repair the Fuel Tank Pressure Sensor Ground circuit for an open.
Perform POWERTRAIN VERIFICATION TEST - VER 2.

4. FUEL TANK PRESSURE SENSOR

Turn the ignition off.

Disconnect the Fuel Tank Pressure Sensor harness connector.

Note: Check connectors — Clean/repair as necessary.

Turn the ignition on.

Connect a fused jumper between the Fuel Tank Pressure Sensor Signal circuit and the Fuel Tank Pressure Sensor 5-Volt Supply circuit.

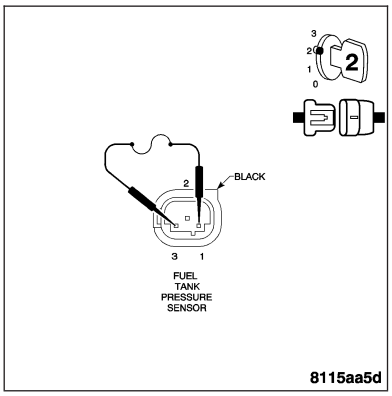

Is the Fuel Tank Pressure above +30 hPa?

Yes >> Replace the Fuel Tank Pressure Sensor. **Refer to Page 14-13**.
Perform POWERTRAIN VERIFICATION TEST - VER 2.

No >> Go To 5

(P0451) FUEL TANK PRESSURE SENSOR PERFORMANCE — CONTINUED

5. FUEL TANK PRESSURE SENSOR 5-VOLT SUPPLY

With the ignition on.

Measure the voltage of the Fuel Tank Pressure Sensor 5-Volt Supply circuit at the Fuel Tank Pressure Sensor harness connector.

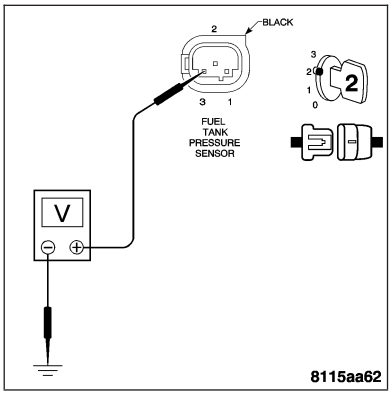

Is the voltage between 4.7 and 5.2 volts?

Yes >> Go To 8

No >> Go To 6

6. FUEL TANK PRESSURE SENSOR 5-VOLT SUPPLY SHORTED TO GROUND

Turn the ignition off.

Disconnect the PCM C4 harness connector.

Note: Check connectors — Clean/repair as necessary.

Measure the resistance between ground and the Fuel Tank Pressure Sensor 5-Volt Supply circuit.

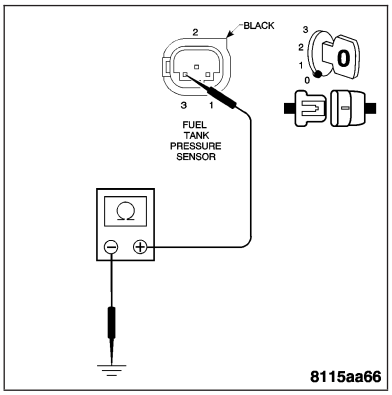

Is the resistance below 100 ohms?

Yes >> Repair the Fuel Tank Pressure Sensor 5-Volt Supply circuit for a short to ground.
Perform POWERTRAIN VERIFICATION TEST - VER 2.

No >> Go To 7

7. OPEN FUEL TANK PRESSURE SENSOR 5-VOLTS SUPPLY CIRCUIT

With the ignition off.

Measure the resistance of the Fuel Tank Pressure Sensor 5-Volt Supply circuit from the PCM harness connector and the Fuel Tank Pressure Sensor harness connector.

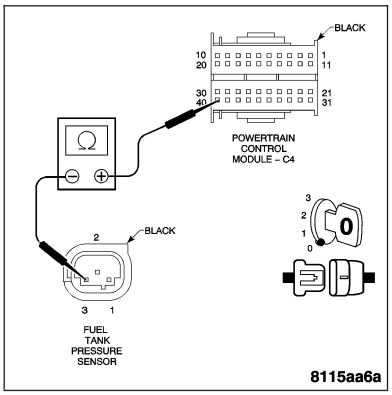

Is the resistance below 5.0 ohms?

Yes >> Repair the Fuel Tank Pressure 5-Volt Supply circuit for an open.
Perform POWERTRAIN VERIFICATION TEST - VER 2.

No >> Replace and program the Powertrain Control Module. **Refer to Page 8E-56**.
Perform POWERTRAIN VERIFICATION TEST - VER 2.

(P0451) FUEL TANK PRESSURE SENSOR PERFORMANCE — CONTINUED

8. OPEN FUEL TANK PRESSURE SENSOR SIGNAL

Turn the ignition off.

Disconnect the PCM C4 harness connector.

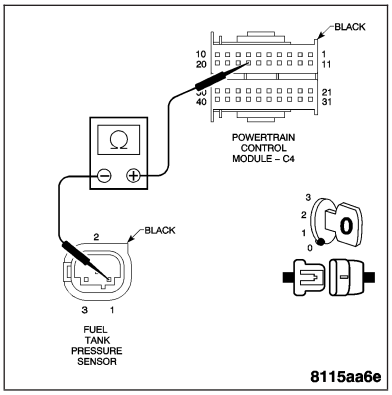

Note: Check connectors — Clean/repair as necessary.
Measure the resistance of the Fuel Tank Pressure Sensor Signal circuit from the PCM harness connector and the Fuel Tank Pressure Sensor harness connector.

Is the resistance below 5.0 ohms?

Yes >> Repair the Fuel Tank Pressure Sensor Signal circuit for an open.
Perform POWERTRAIN VERIFICATION TEST - VER 2.

No >> Go To 9

9. FUEL TANK PRESSURE SENSOR SIGNAL SHORTED TO GROUND

With the ignition off.

Measure the resistance between ground and the Fuel Tank Pressure Sensor Signal circuit.

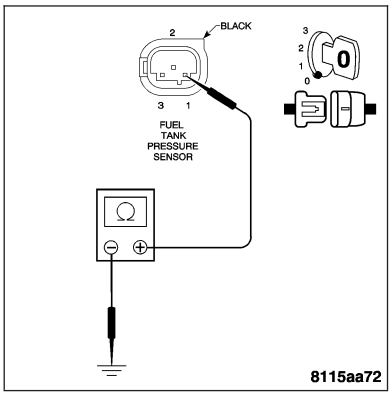

Is the resistance below 100 ohms?

Yes >> Repair the Fuel Tank Pressure Sensor Signal circuit for a short to ground.
Perform POWERTRAIN VERIFICATION TEST - VER 2.

No >> Replace and program the Powertrain Control Module. **Refer to Page 8E-56**.
Perform POWERTRAIN VERIFICATION TEST - VER 2.

(P0452) FUEL TANK PRESSURE SENSOR CIRCUIT LOW

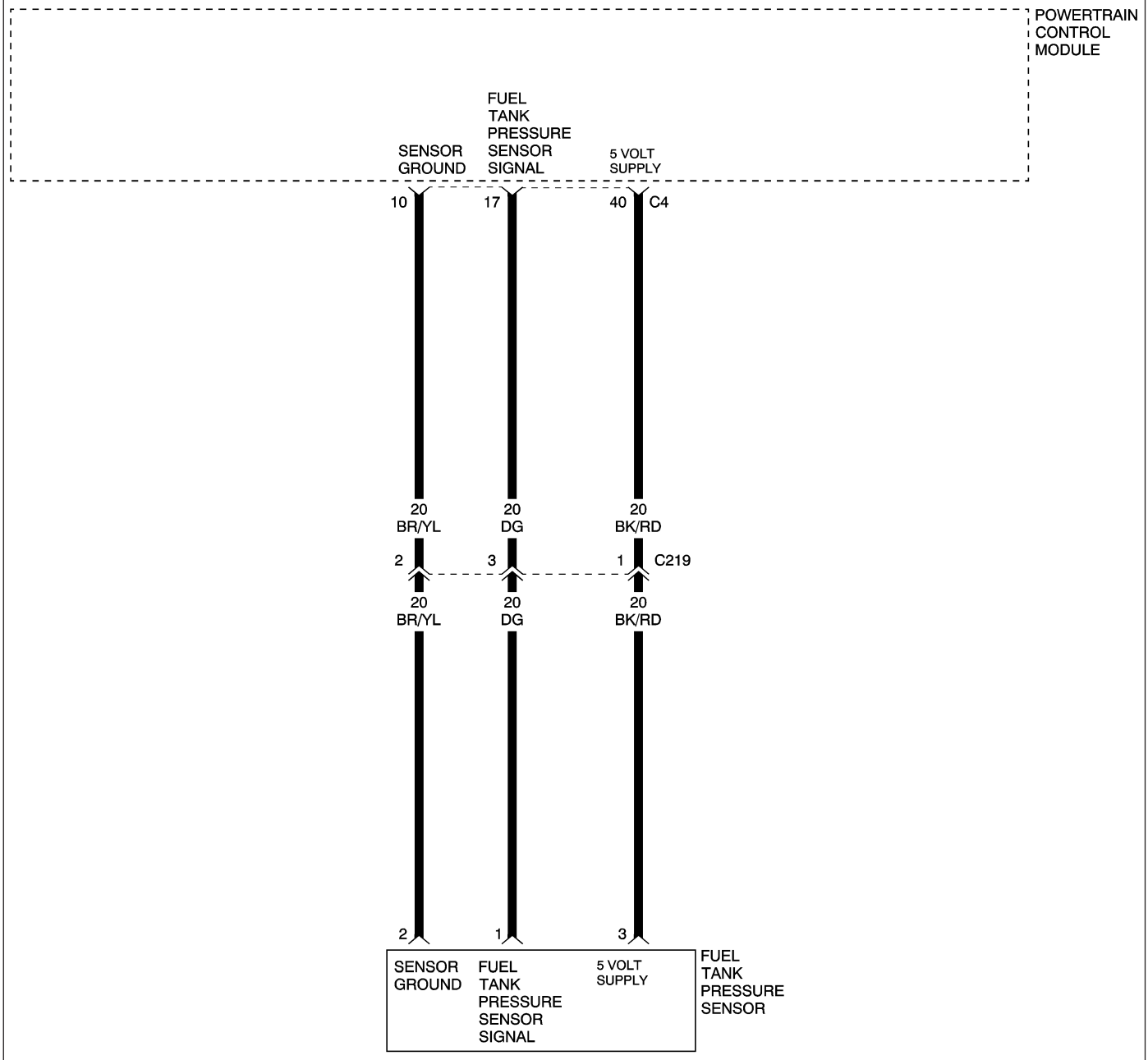

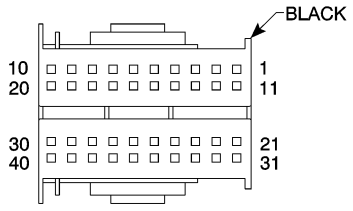

POWERTRAIN CONTROL MODULE – C4

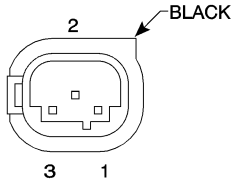

FUEL TANK PRESSURE SENSOR

8115aa4d

(P0452) FUEL TANK PRESSURE SENSOR CIRCUIT LOW — CONTINUED

When Monitored and Set Condition

- When Monitored: With the engine running at idle speed.
- Set Condition: Low limit: The Fuel Tank Pressure Sensor voltage is less than 0.1 volt for 10 seconds. High limit: The Fuel Tank Pressure Sensor voltage is greater than 4.7 volts for 10 seconds. Signal curve: The Fuel Tank Pressure Sensor Performance code will be set if the signal remains constant.

POSSIBLE CAUSES
OPEN FUEL TANK PRESSURE SENSOR SIGNAL CIRCUIT
OPEN FUEL TANK PRESSURE SENSOR GROUND CIRCUIT
FUEL TANK PRESSURE SENSOR SIGNAL CIRCUIT SHORTED TO GROUND
OPEN 5-VOLT SUPPLY
5-VOLT SUPPLY SHORTED TO GROUND
FUEL TANK PRESSURE SENSOR
POWERTRAIN CONTROL MODULE

Diagnostic Test

1. CHECK FOR CURRENT DTC

Turn the ignition on.
With the DRB III®, read the PCM DTCs.

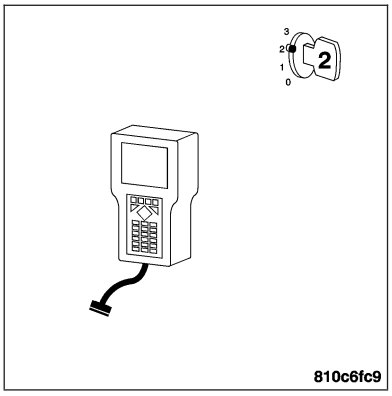

Is this DTC preset?

Yes >> For complete diagnosis of this DTC, refer to (P0451) FUEL TANK PRESSURE SENSOR PERFORMANCE.

No >> Go To 2

2. INTERMITTENT WIRING AND CONNECTORS

The conditions necessary to set this DTC are not present at this time.

Note: Check connectors — Clean/repair as necessary. Poor pin to terminal connections can set DTCs.Using the wiring diagram/schematic as a guide, inspect the wiring and connectors specific to this DTC. Wiggle the wires while checking for shorts and open circuits.

Note: Check for any Technical Service Bulletins that may apply.

Were there any problems found?

Yes >> Repair as necessary.
Perform POWERTRAIN VERIFICATION TEST - VER 2.

No >> The condition that caused this DTC to set is currently not present. Inspect the related wiring harness for a possible intermittent condition.

(P0453) FUEL TANK PRESSURE SENSOR CIRCUIT HIGH

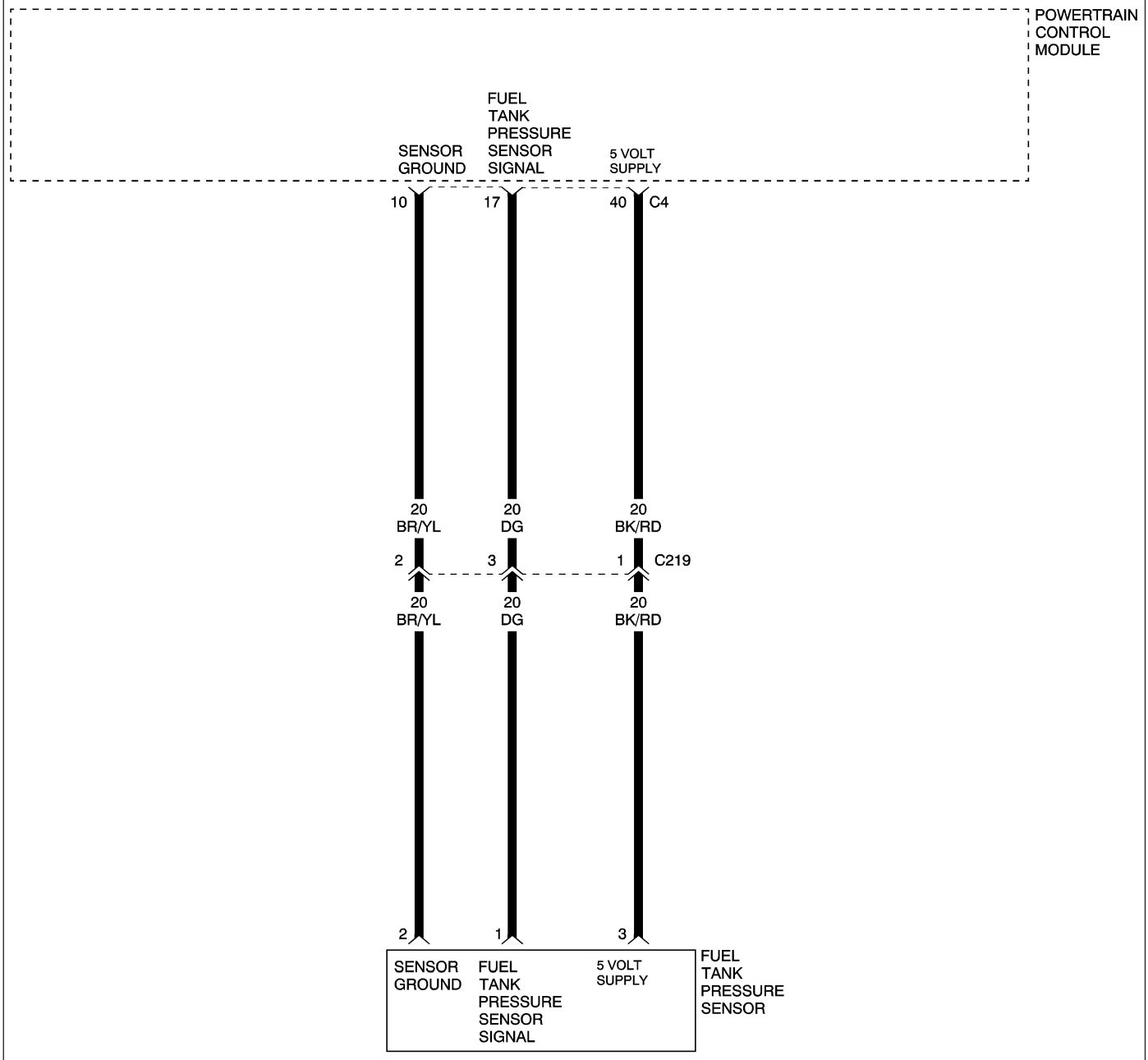

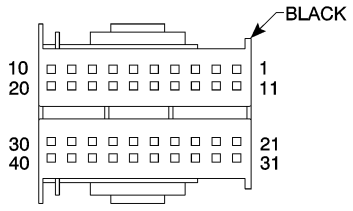

POWERTRAIN CONTROL MODULE – C4

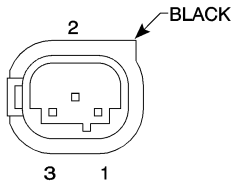

FUEL TANK PRESSURE SENSOR

8115aa4d

(P0453) FUEL TANK PRESSURE SENSOR CIRCUIT HIGH — CONTINUED

When Monitored and Set Condition

- When Monitored: With the engine running at idle speed.
- Set Condition: Low limit: The Fuel Tank Pressure Sensor voltage is less than 0.1 volt for 10 seconds. High limit: The Fuel Tank Pressure Sensor voltage is greater than 4.7 volts for 10 seconds. Signal curve: The Fuel Tank Pressure Sensor Performance code will be set if the signal remains constant.

POSSIBLE CAUSES
FUEL TANK PRESSURE SENSOR SIGNAL CIRCUIT SHORTED TO VOLTAGE
5-VOLT SUPPLY SHORTED TO VOLTAGE
FUEL TANK PRESSURE SENSOR
POWERTRAIN CONTROL MODULE

Diagnostic Test

1. CHECK FOR CURRENT DTC

Turn the ignition on.
With the DRB III®, read the PCM DTCs.

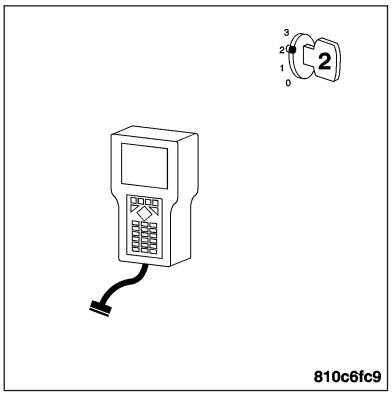

Is this DTC preset?

Yes >> For complete diagnosis of this DTC, refer to (P0451) FUEL TANK PRESSURE SENSOR PERFORMANCE.

No >> Go To 2

2. INTERMITTENT WIRING AND CONNECTORS

The conditions necessary to set this DTC are not present at this time.

Note: Check connectors — Clean/repair as necessary. Poor pin to terminal connections can set DTCs.Using the wiring diagram/schematic as a guide, inspect the wiring and connectors specific to this DTC. Wiggle the wires while checking for shorts and open circuits.

Note: Check for any Technical Service Bulletins that may apply.

Were there any problems found?

Yes >> Repair as necessary.
Perform POWERTRAIN VERIFICATION TEST - VER 2.

No >> The condition that caused this DTC to set is currently not present. Inspect the related wiring harness for a possible intermittent condition.

(P0455) EVAP SYSTEM LARGE LEAK

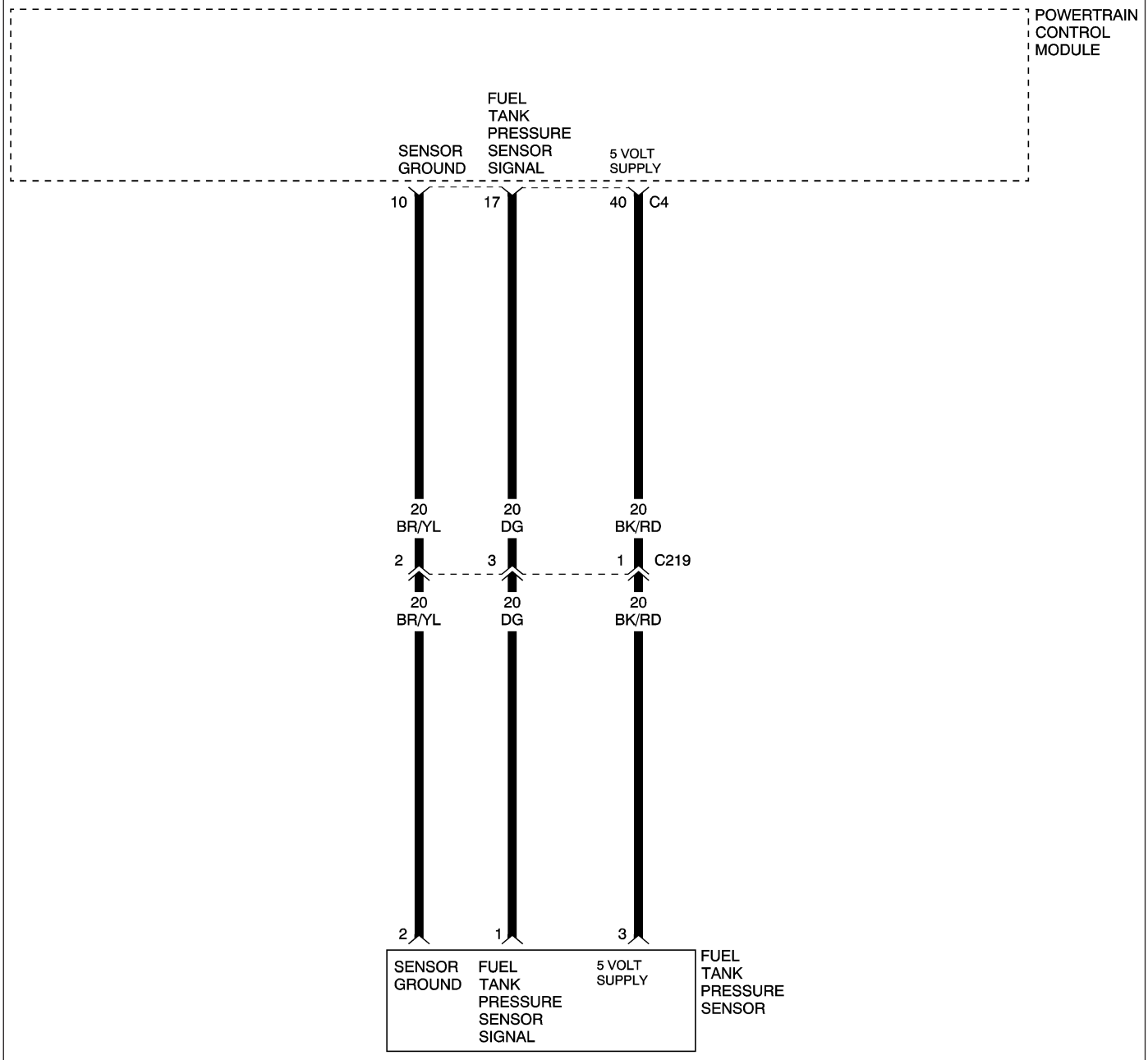

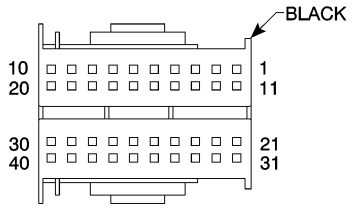

POWERTRAIN CONTROL MODULE – C4

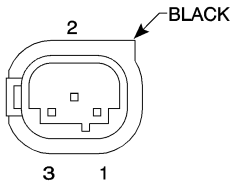

FUEL TANK PRESSURE SENSOR

8115aa4d

(P0455) EVAP SYSTEM LARGE LEAK — CONTINUED
When Monitored and Set Condition

(P0442) EVAP SYSTEM SMALL LEAK

- When Monitored: Engine Running. Cold start test. Fuel Level greater than 12%. Ambient Temperature between 4°C and 32°C (39°F and 89°F) Close Loop fuel system. Test runs when small leak test is maturing.
- Set Condition: The PCM activates the Evap Purge Solenoid to pull the Evap system into a vacuum. The PCM turns the Evap Purge solenoid off to seal the Evap system. If the Fuel Tank Pressure Sensor reads between –1.5 to +1.0 hPa before the calibrated amount of time for a Medium leak/Small leak an error is detected. Two Trip Fault.

(P0455) EVAP SYSTEM LARGE LEAK

- When Monitored: Engine Running. Cold start test. Fuel Level greater than 12%, ambient temperature between 4°C and 32°C (39°F and 89°F), closed loop system operation. Test runs when small leak test is maturing.
- Set Condition: The PCM activates the EVAP Purge Solenoid to pull the EVAP system into a vacuum. The PCM turns the EVAP Purge solenoid off to seal the EVAP system. If the fuel tank pressure sensor reads normal operating pressure sooner than expected, a Large Leak error is detected.

POSSIBLE CAUSES
EVAPORATIVE EMISSION SYSTEM LEAK
FUEL TANK PRESSURE SENSOR

For a complete Powertrain Control Module Circuit Diagram, **Refer to Page 9-574**.

Diagnostic Test

1. CHECK FOR CURRENT DTC

Note: Since a hot vehicle can conceal a leak, it is best to perform this test at room temperature.

Note: A loose fuel filler cap could have caused this DTC to set. Make sure fuel filler cap is tight and in good condition. Ensure the fuel filler cap meets OEM specifications.

Note: If the PCM detects and stores a DTC, the PCM also stores the engine/vehicle operating conditions under which the DTC was set. Some of these conditions are displayed on the DRB III® at the same time the DTC is displayed.

Note: Before erasing stored DTCs, record these conditions. Attempting to duplicate these conditions may assist when checking for an active DTC.

Turn the ignition on.

With the DRB III®, erase PCM DTCs.

Note: It maybe necessary to road test the vehicle for this DTC to set.

With the DRB III®, read the PCM DTCs.

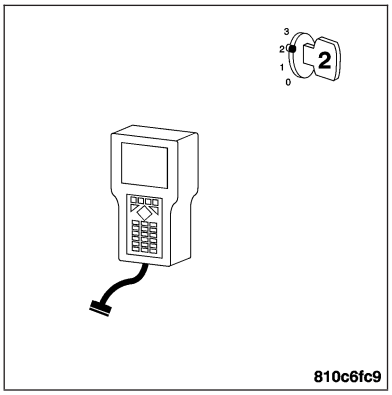

Did this DTC set again?

Yes >> Go To 2

No >> Go To 7

(P0455) EVAP SYSTEM LARGE LEAK — CONTINUED

2. VISUAL AND PHYSICAL INSPECTION

Turn the ignition off.

Perform a visual and physical inspection of the entire Evaporative Emission system.

Check for the follow conditions:

- Holes or cracks
- Loose seal points
- Evidence of damaged components
- Incorrect routing of hoses and tubes
- Fuel Filler Cap gasket seal

Were any of the above conditions found?

Yes >> Repair as necessary.
Perform POWERTRAIN VERIFICATION TEST - VER 2.

No >> Go To 3

(P0455) EVAP SYSTEM LARGE LEAK — CONTINUED

3. VERIFY EVAPORATIVE EMISSION LEAK

WARNING: KEEP LIGHTED CIGARETTES, SPARKS, FLAMES, AND OTHER IGNITION SOURCES AWAY FROM THE TEST AREA TO PREVENT THE IGNITION OF EXPLOSIVE GASES. KEEP THE TEST AREA WELL VENTILATED.

Note: The fuel tank should have between 20% and 80% of fuel tank capacity to properly test the Evap system.

To continue testing you will need Special Tool #8404 Evaporative Emission Leak Detector (EELD).

Connect the red power lead of the EELD to the battery positive terminal and the black ground lead to battery negative terminal.

Block the vent hose of the EVAP Canister.

Connect shop air to the EELD.

Set the smoke/air control switch to AIR.

Insert the tester's AIR supply tip (clear hose) into the appropriate calibration orifice on the tester's control panel (based on DTC leak size).

Press the remote smoke/air start button.

Position the red flag on the air flow meter so it is aligned with the indicator ball.

When the calibration is complete, release the remote button. The EELD is now calibrated the flow meter in liters per minute to the size leak indicated by the DTC set in the PCM.

Install the service port adapter (Special Tool #8404-14) on the vehicle's service port.

Connect the Air supply hose from the EELD to the service port.

Press the remote button to activate AIR flow.

Note: Larger volume fuel tanks, lower fuel levels or if the vehicle is equipped with a Flow Management Valve may indicate high flow and will require 4 to 5 minutes to fill.

Compare the flow meter indicator ball reading to the red flag.

ABOVE the red flag indicates a leak present.

BELOW the red flag indicates a sealed system.

Is the indicator ball above the red flag?

Yes >> Go To 4

No >> Go To 7

(P0455) EVAP SYSTEM LARGE LEAK — CONTINUED

4. EVAPORATIVE EMISSION LEAK DETECTION

Note: A thorough visual inspection of the Evap system hoses, tubes, and connections may save time in your diagnosis. Look for any physical damage or signs of wetness at connections. The strong smell of fuel vapors may aid diagnosis also.

Remove the Air supply hose from the vehicle's service port.

Connect the SMOKE supply tip (black hose) to the vehicle's service port.

Set the smoke/air control switch to SMOKE.

Note: The flow meter indicator ball will not move in the smoke mode.

Press the remote smoke/air start button.

Note: Ensure that smoke has filled the EVAP system by continuing to press the remote smoke/air start button, remove the vehicle's fuel filler cap and wait for the smoke to exit. Once smoke is indicated, reinstall the fuel filler cap.

Note: For optimal performance, introduce smoke into the system for an additional 60 seconds; continue introducing smoke at 15 second intervals as necessary.

While still holding the remote smoke/air start button, use the white light (Special Tool #8404-CLL) to follow the EVAP system path and look for the source of the leak indicated by exiting smoke.

If a leak is concealed from view (i.e., top of fuel tank), release the remote smoke/air start button and use the ultraviolet (UV) black light #8404-UVL and the yellow goggles #8404-20 to look for residual traces of dye that are left behind by the smoke.

The exiting smoke deposits a residual fluid that is either bright green or bright yellow in color when viewed with a UV light.

Note: Carefully inspect the vent side of the EVAP Canister. Due to the filtering system in the canister the smoke may not be as thick. Introducing smoke into the filtered side of the canister may assist in locating the leak.

Was a leak found?

Yes >> Repair or replace the leaking component as necessary. Perform POWERTRAIN VERIFICATION TEST - VER 2.

No >> Go To 5

(P0455) EVAP SYSTEM LARGE LEAK — CONTINUED

5. EVAP PURGE SOLENOID OPERATION

Note: After disconnecting the Evap Purge Solenoid vapor hose connections, inspect the lines and solenoid for any signs of contamination from the EVAP Canister. This may indicate a faulty rollover valve. Replace/repair as necessary.

With the ignition off.

Disconnect the vacuum hoses at the Evap Purge Solenoid.

Using a hand vacuum pump, apply 10 in. Hg to the canister side of the EVAP Purge Solenoid.

Note: Monitor the vacuum gauge for at least 15 seconds.

Does the EVAP Purge Solenoid hold vacuum?

Yes >> Go To 6

No >> Replace the Evap Purge Solenoid. **Refer to Page 25-17**. Perform POWERTRAIN VERIFICATION TEST - VER 2.

6. FUEL TANK PRESSURE SENSOR OPERATION

Note: The fuel level must be below 85%, or the Tank Vent/Rollover Valves and the Fuel Tank Overfill Check Valve will seal the tank.

Turn the ignition off.

Install the fuel filler cap adapter. Attach the fuel filler cap to the adapter.

Connect a hand-held vacuum pump to the fuel filler cap adapter.

Slowly apply vacuum while monitoring the fuel tank pressure sensor on the DRB III®. Do not exceed 2 in. Hg while performing this step.

Note: The fuel tank pressure sensor reads normally –1 hPa. When the vacuum is applied and 1 in. Hg is reached, the fuel tank pressure sensor should be approximately –5 hPa. Once the vacuum has been released, the fuel tank pressure sensor return to a normal reading.

Did the fuel tank pressure sensor operate as described above?

Yes >> Go To 7

No >> Replace the Fuel Level Sending Unit/Pressure Sensor. **Refer to Page 14-13**. Perform POWERTRAIN VERIFICATION TEST - VER 2.

(P0455) EVAP SYSTEM LARGE LEAK — CONTINUED

7. INTERMITTENT CONDITION

WARNING: WHEN THE ENGINE IS OPERATING, DO NOT STAND IN A DIRECT LINE WITH THE FAN. DO NOT PUT YOUR HANDS NEAR THE PULLEYS, BELTS OR FAN. DO NOT WEAR LOOSE CLOTHING.

Review the DRB III® Freeze Frame information. If possible, try to duplicate the conditions under which the DTC was set.

Refer to any Technical Service Bulletins (TSB) that may apply.

Note: A loose fuel filler cap could have caused this DTC to set. Make sure fuel filler cap is tight and in good condition. Ensure the fuel filler cap meets OEM specifications.

Perform a visual and physical inspection of the entire Evaporative Emission system.

Check for the following conditions:

- Holes or cracks
- Loose seal points
- Evidence of damaged components
- Incorrect routing of hoses and tubes
- Fuel filler cap gasket seal

Were any of the above conditions found?

Yes >> Repair as necessary.
Perform POWERTRAIN VERIFICATION TEST - VER 2.

No >> The condition that caused this symptom is currently not present. Inspect the related wiring harness for a possible intermittent condition.

(P0457) EVAP PURGE VALVE LEAKING

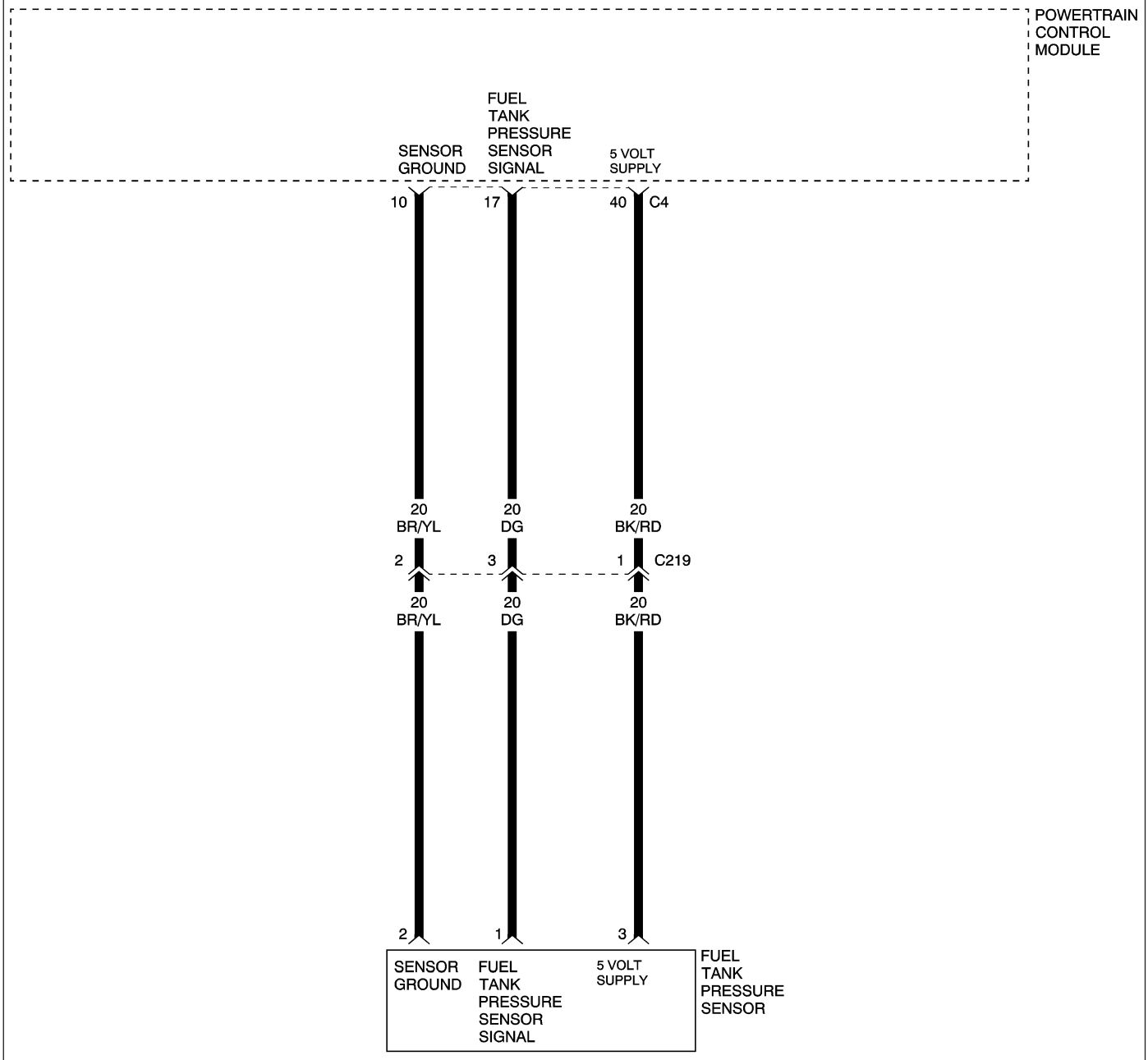

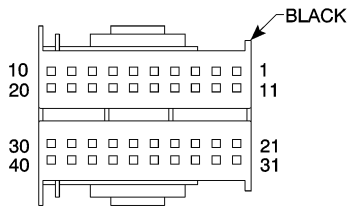

POWERTRAIN CONTROL MODULE – C4

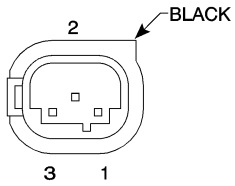

FUEL TANK PRESSURE SENSOR

8115aa4d

(P0457) EVAP PURGE VALVE LEAKING — CONTINUED

When Monitored and Set Condition

- When Monitored: Engine Running. Cold start test. Fuel Level greater than 12%. Ambient Temperature between 4°C and 32°C (39°F and 89°F) Close Loop fuel system. Test runs when small leak test is maturing.
- Set Condition: The PCM activates the Evap Purge Solenoid to pull the Evap system into a vacuum. The PCM turns the Evap Purge solenoid off to seal the Evap system. If the Fuel Tank Pressure Sensor reads between –1.5 to +1.0 hPa before the calibrated amount of time for a Medium leak/Small leak an error is detected. Two Trip Fault.

POSSIBLE CAUSES
EVAPORATIVE EMISSION SYSTEM LEAK
FUEL TANK PRESSURE SENSOR

Diagnostic Test

1. CHECK FOR CURRENT DTC

Turn the ignition on.

With the DRB III®, read the PCM DTCs.

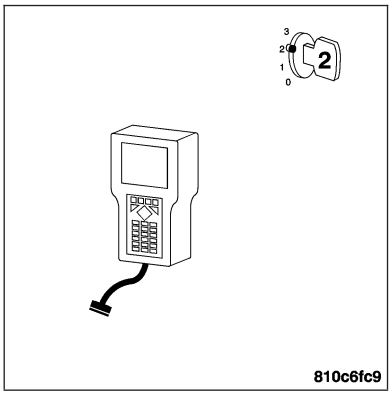

Is this DTC preset?

Yes >> For complete diagnosis of this DTC, refer to (P0455) EVAP SYSTEM LARGE LEAK.

No >> Go To 2

2. INTERMITTENT WIRING AND CONNECTORS

The conditions necessary to set this DTC are not present at this time.

Note: Check connectors — Clean/repair as necessary. Poor pin to terminal connections can set DTCs.Using the wiring diagram/schematic as a guide, inspect the wiring and connectors specific to this DTC. Wiggle the wires while checking for shorts and open circuits.

Note: Check for any Technical Service Bulletins that may apply.

Were there any problems found?

Yes >> Repair as necessary.
Perform POWERTRAIN VERIFICATION TEST - VER 2.

No >> The condition that caused this DTC to set is currently not present. Inspect the related wiring harness for a possible intermittent condition.

(P0460) FUEL LEVEL SENSOR CIRCUIT

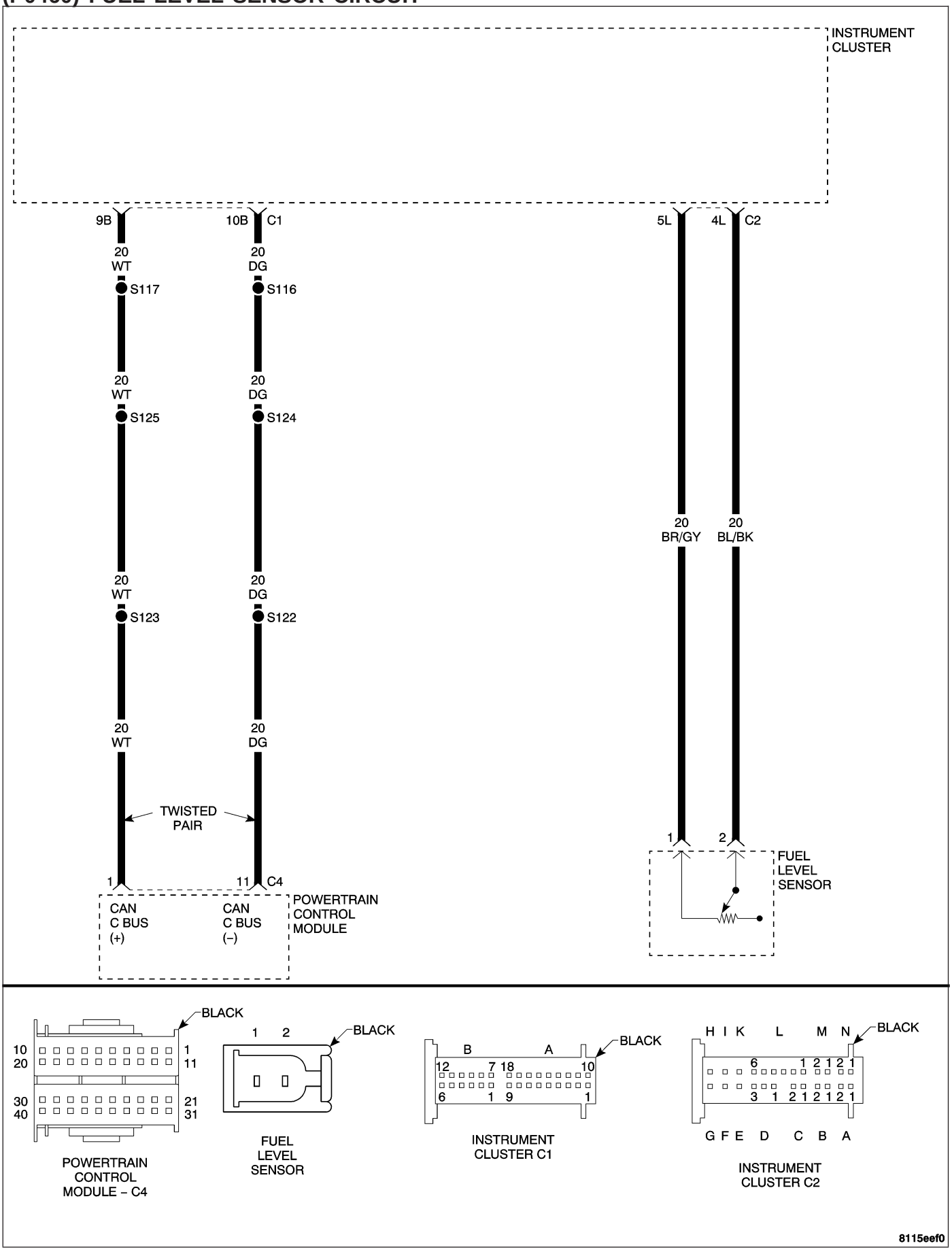

(P0460) FUEL LEVEL SENSOR CIRCUIT — CONTINUED

When Monitored and Set Condition

- When Monitored: The Powertrain Control Module (PCM) monitors the fuel level at ignition on.
- Set Condition: If the PCM does not see a change in the fuel level over a set amount of miles, the test will fail. Two Trip Fault.

For a complete Electronic Control Module Circuit Diagram, **Refer to Page 8E-45**.

Diagnostic Test

1. FUEL GAUGE OPERATION

Turn the ignition off.

Perform the *FUEL GAUGE INOPERATIVE diagnostic test located in Instrument Cluster 8J Category.

After performing the *FUEL GAUGE INOPERATIVE test, use the DRB III®, erase DTCs.

Turn the ignition off, then back on.

Monitor the DRB III® for this DTC.

With the DRB III®, read DTCs.

Note: It may be necessary to take the vehicle on a test drive.
It may be necessary to take the vehicle on a test drive.

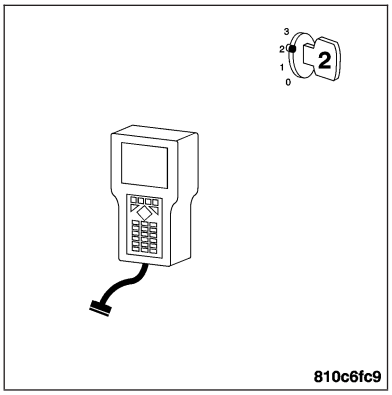

Does the DTC (P0460) set again?

Yes >> Replace and program the Powertrain Control Module. **Refer to Page 8E-56**.
Perform POWERTRAIN VERIFICATION TEST - VER 2.

No >> Test Complete.

(P0500) NO VEHICLE SPEED SIGNAL (CAB CAN MESSAGE)

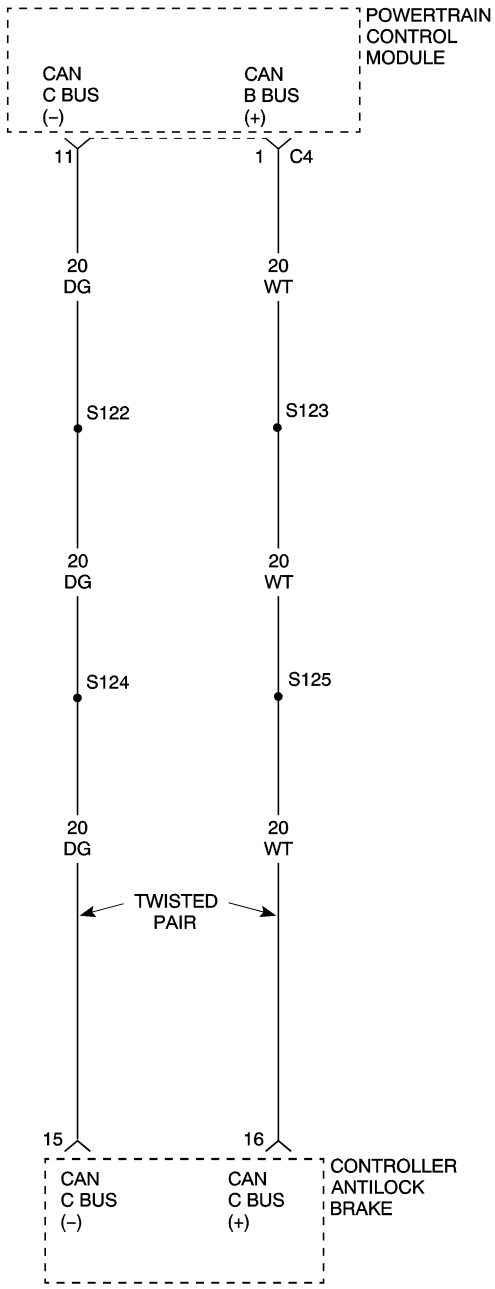

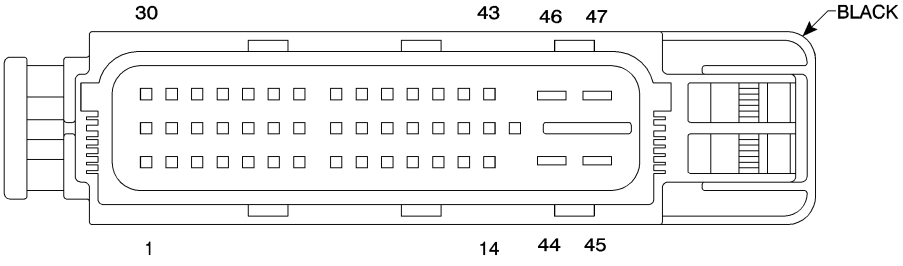

CONTROLLER
ANTILOCK
BRAKE

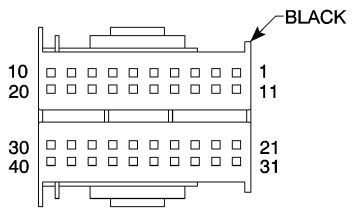

POWERTRAIN
CONTROL
MODULE – C4

8115f526

(P0500) NO VEHICLE SPEED SIGNAL (CAB CAN MESSAGE) — CONTINUED

For a complete Electronic Control Module Circuit Diagram, **Refer to Page 8E-45**.

Diagnostic Test

1. DTC PRESENT IN CONTROLLER ANTILOCK BRAKE (CAB).

This is an informational DTC letting you know that a DTC(s) is stored in the CAB.

Erase this DTC from the PCM after all ABS DTC(s) have been repaired.

Using the DRB III®, read the ABS DTC(s) and refer to the ABS Category to perform the appropriate symptom.

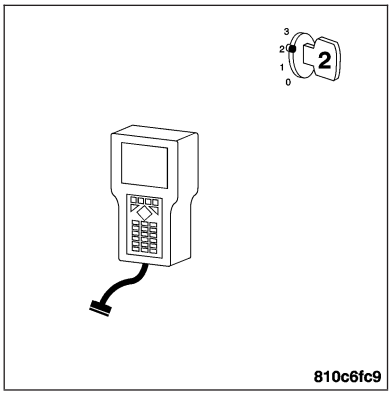

PCM Diagnostic Information complete.

Continue

Test Complete.

(P0500) VEHICLE SPEED PERFORMANCE ESP MIL REQUEST

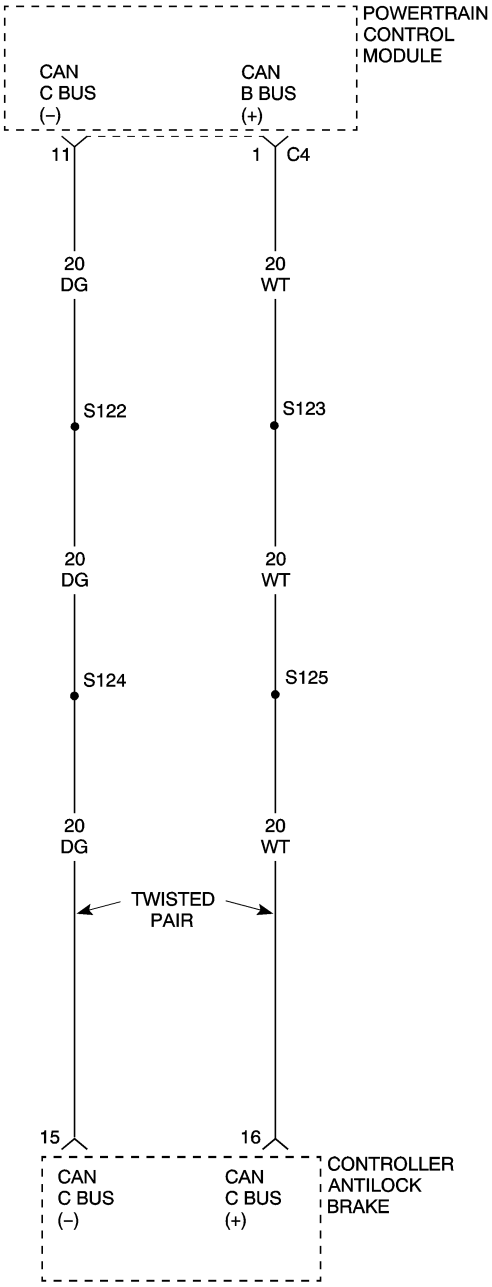

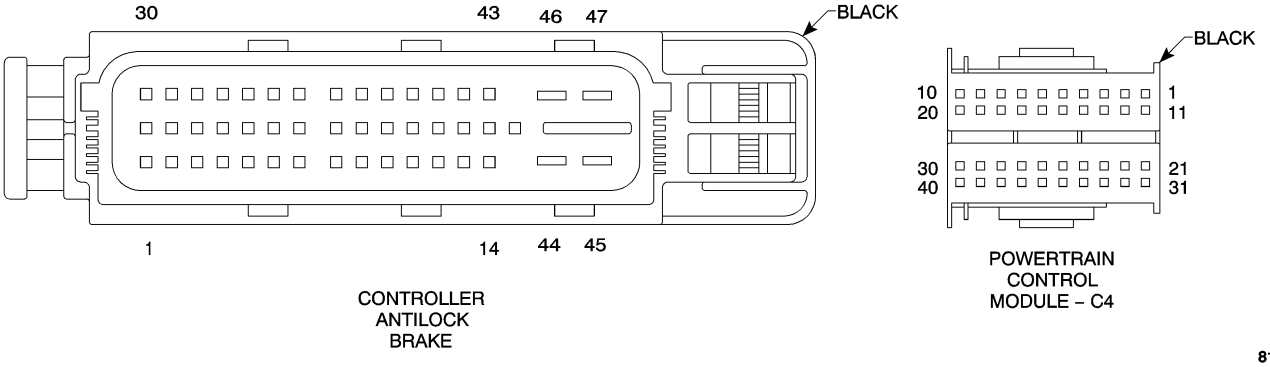

(P0500) VEHICLE SPEED PERFORMANCE ESP MIL REQUEST — CONTINUED

For a complete Electronic Control Module Circuit Diagram, **Refer to Page 8E-45**.

Diagnostic Test

1. DTC PRESENT IN CAB.

This is an informational DTC letting you know that a DTC(s) is stored in the CAB.

Erase this DTC from the PCM after all the ABS DTC(s) have been repaired.

Using the DRB III®, read the ABS DTC(s) and refer to the Brake-BAS Electrical Diagnostics Category to perform the appropriate symptom.

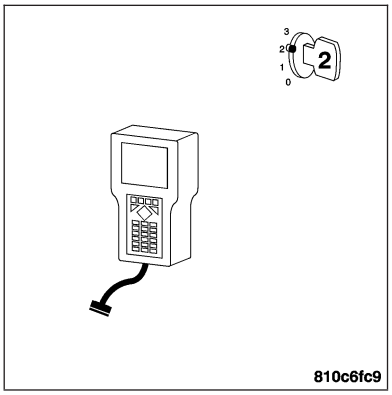

PCM Diagnostic Information complete.

Continue

Test Complete.

(P0561) BATTERY SYSTEM VOLTAGE

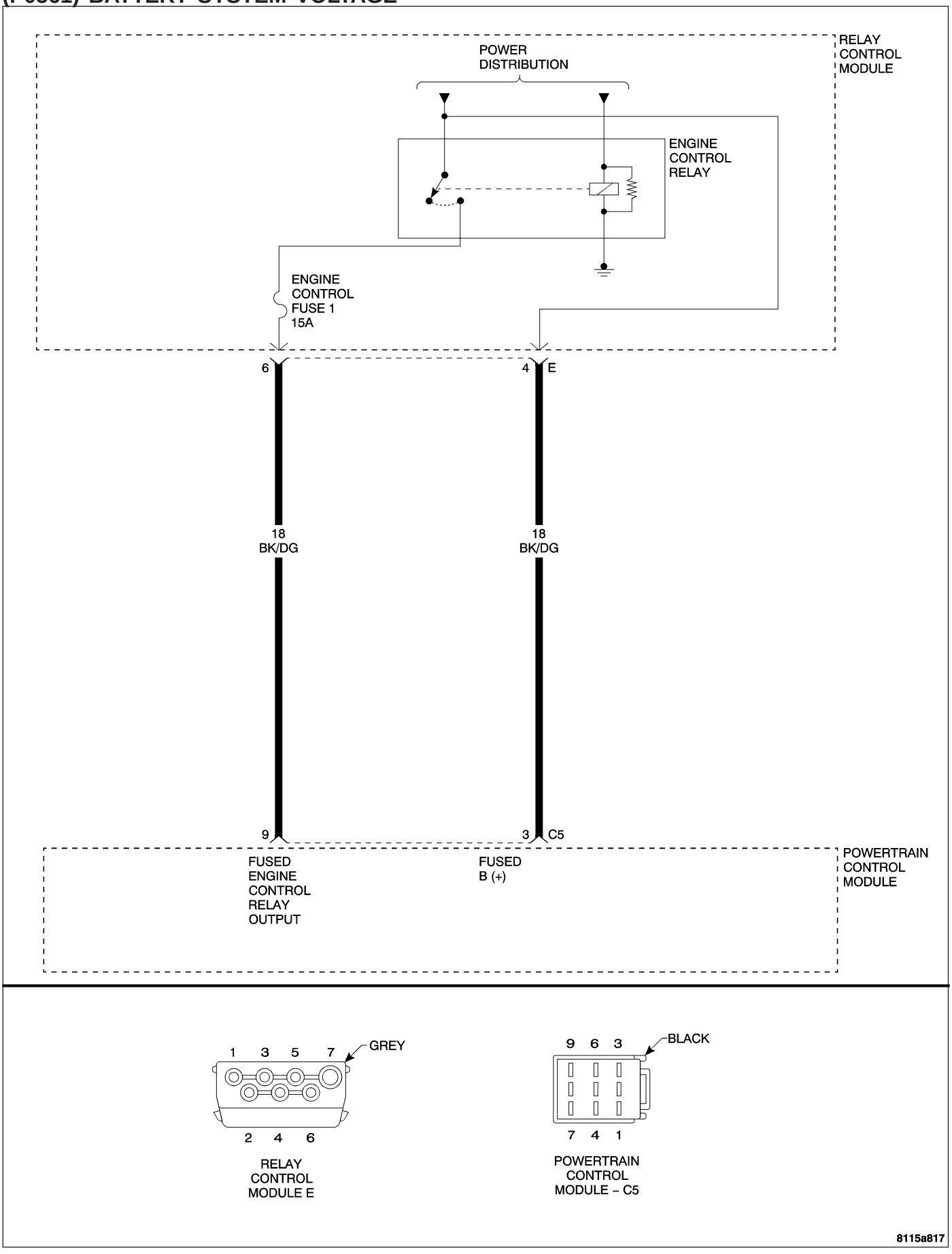

(P0561) BATTERY SYSTEM VOLTAGE — CONTINUED

When Monitored and Set Condition

- When Monitored: 180 seconds after the engine is started.
- Set Condition: The voltage supply at the Powertrain Control Module (PCM) is less than 8 volts or greater than 16.5 volts for at least 5 seconds.

POSSIBLE CAUSES
ENGINE CONTROL FUSE #1 OUTPUT CIRCUIT OPEN
ENGINE CONTROL FUSE #1 OUTPUT CIRCUIT SHORTED TO GROUND
ENGINE CONTROL RELAY OUTPUT CIRCUIT OPEN
ENGINE CONTROL RELAY OUTPUT CIRCUIT SHORTED TO GROUND
RELAY CONTROL MODULE
POWERTRAIN CONTROL MODULE

For a complete Powertrain Control Module Circuit Diagram, **Refer to Page 9-574**.

Diagnostic Test

1. CHECK TO SEE IF BATTERY VOLTAGE DTC IS CURRENT

Note: Perform DIAGNOSIS AND TESTING - CHARGING SYSTEM located in 8F-Engine Systems to verify the charging system is working properly before continuing.

Note: Check for any Technical Service Bulletins that may apply.

Turn the ignition on.

With the DRB III®, erase DTCs.

Turn the ignition off, then back on.

Monitor the DRB III® for this DTC.

With the DRB III®, read DTCs. If possible operate the vehicle within the conditions that set the DTC.

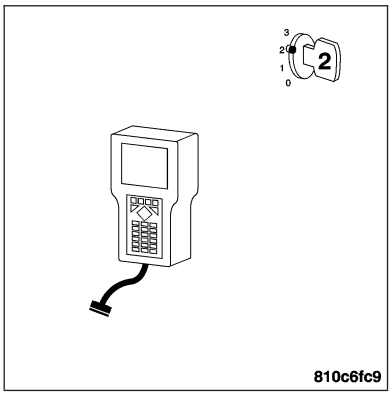

Is the Battery System Voltage DTC displayed as ACTIVE?

Yes >> Go To 2

a. No >> Go To 5

2. ENGINE CONTROL FUSE #1 OUTPUT CIRCUIT

Turn the ignition off.

Disconnect PCM C5 harness connector.

Note: Check connectors — Clean/repair as necessary.

Turn the ignition on.

With a 12-Volt test lamp connected to ground, probe the Fused Engine Control Relay Output circuit at the PCM C5 harness connector. The lamp should be bright, compare to when connected across the battery.

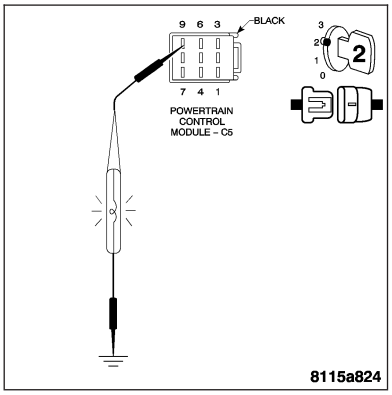

Does the test lamp illuminate brightly?

Yes >> Go To 3

No >> Go To 4

(P0561) BATTERY SYSTEM VOLTAGE — CONTINUED

3. PCM

With the ignition on.

With a test lamp connected to a ground, probe the Engine Control Relay Output circuit at PCM C5 harness connector. The lamp should be bright, compared to when connected across the battery.

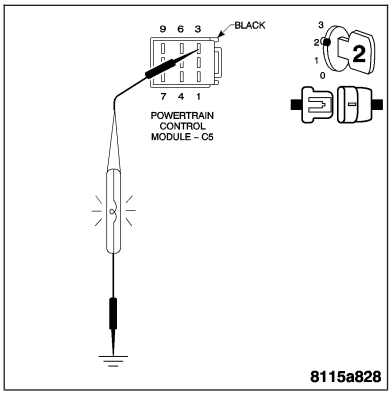

Does the test lamp illuminate brightly?

Yes >> Replace and program the Powertrain Control Module. **Refer to Page 8E-56**.
Perform POWERTRAIN VERIFICATION TEST - VER 2.

No >> Go To 4

4. ENGINE CONTROL RELAY OUTPUT CIRCUIT

Turn the ignition off.

Disconnect the Relay Control Module E harness connector.

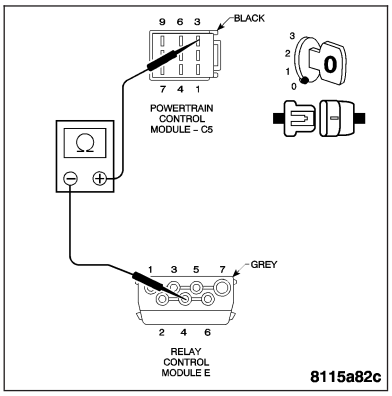

Note: Check connectors — Clean/repair as necessary.
Measure the resistance of the Engine Control Relay Output circuit from the PCM C5 harness connector to the Relay Control Module E harness connector.

Measure the resistance of the B(+) circuit from the PCM C5 harness connector to the Relay Control Module E harness connector.

Is the resistance below 5.0 ohms for both circuits?

Yes >> Replace Relay Control Module.
Perform POWERTRAIN VERIFICATION TEST - VER 2.

No >> Repair the faulty circuit for an open.
Perform POWERTRAIN VERIFICATION TEST - VER 2.

5. INTERMITTENT WIRING AND CONNECTORS

The condition that caused this DTC to set is currently not present. Inspect the related wiring harness for a possible intermittent condition.

Note: Check connectors — Clean/repair as necessary. Poor pin to terminal connections can set DTCs.
Using the wiring diagram/schematic as a guide, inspect the wiring and connectors specific to this DTC. Wiggle the wires while checking for shorts and/or open circuits.

Note: Check for any Technical Service Bulletins that may apply.

Were there any problems found?

Yes >> Repair as necessary.
Perform POWERTRAIN VERIFICATION TEST - VER 2.

No >> The condition that caused this DTC to set is currently not present. Inspect the related wiring harness for a possible intermittent condition.

(P0562) BATTERY SYSTEM LOW

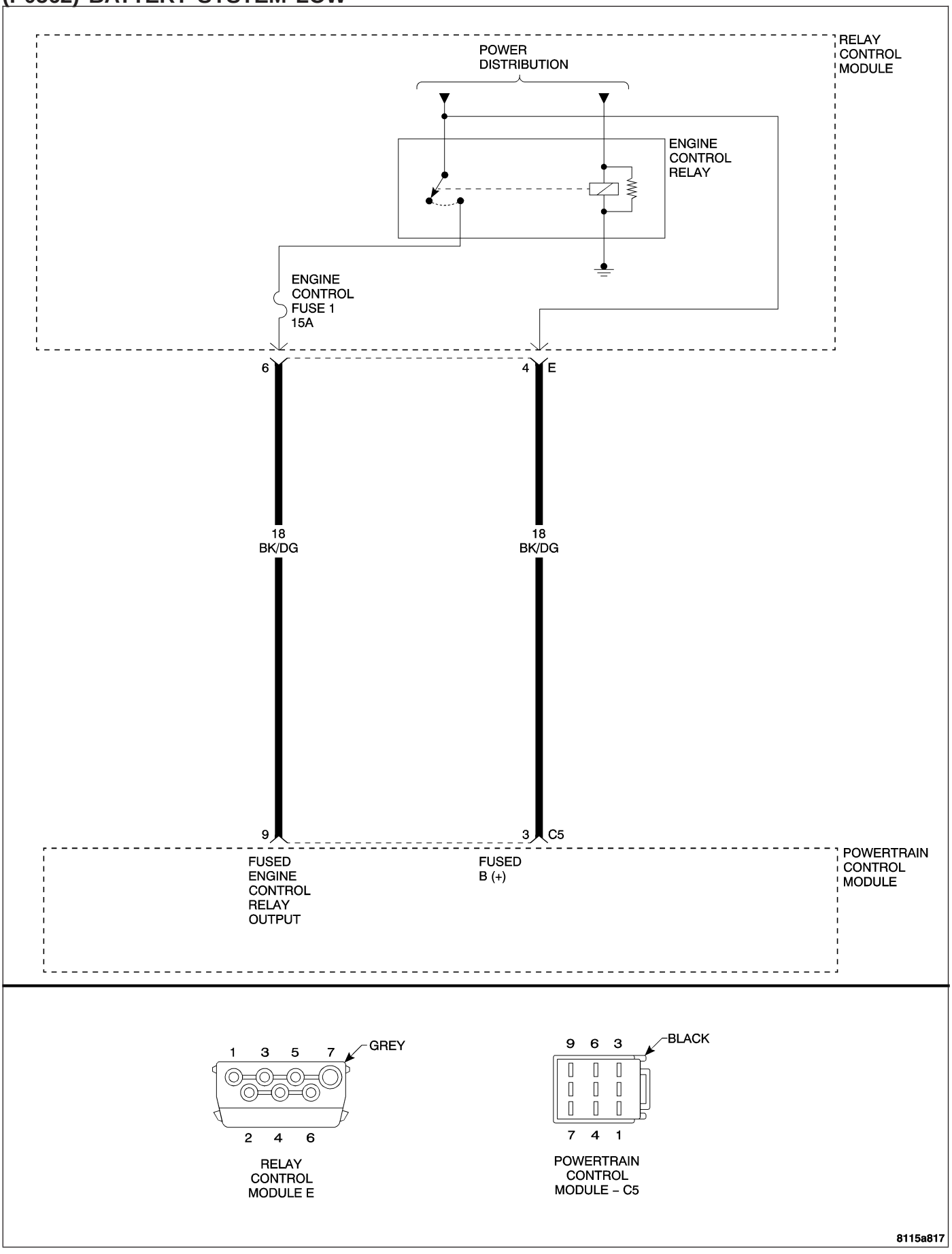

(P0562) BATTERY SYSTEM LOW — CONTINUED

When Monitored and Set Condition

- When Monitored: 180 seconds after the engine is started.
- Set Condition: The voltage supply at the Powertrain Control Module (PCM) is less than 8 volts for at least 5 seconds.

POSSIBLE CAUSES
ENGINE CONTROL FUSE #1 OUTPUT CIRCUIT OPEN
ENGINE CONTROL FUSE #1 OUTPUT CIRCUIT SHORTED TO GROUND
ENGINE CONTROL RELAY OUTPUT CIRCUIT OPEN
ENGINE CONTROL RELAY OUTPUT CIRCUIT SHORTED TO GROUND
RELAY CONTROL MODULE
POWERTRAIN CONTROL MODULE

Diagnostic Test

1. CHECK FOR CURRENT DTC

Turn the ignition on.
With the DRB III®, read the PCM DTCs.

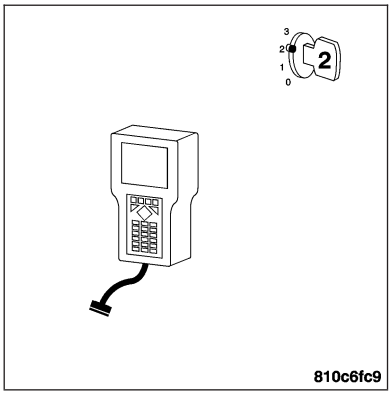

Is this DTC preset?

Yes >> For complete diagnosis of this DTC, refer to (P0561) BATTERY SYSTEM VOLTAGE.

No >> Go To 2

2. INTERMITTENT WIRING AND CONNECTORS

The conditions necessary to set this DTC are not present at this time.

Note: Check connectors — Clean/repair as necessary. Poor pin to terminal connections can set DTCs.Using the wiring diagram/schematic as a guide, inspect the wiring and connectors specific to this DTC. Wiggle the wires while checking for shorts and open circuits.

Note: Check for any Technical Service Bulletins that may apply.

Were there any problems found?

Yes >> Repair as necessary.
Perform POWERTRAIN VERIFICATION TEST - VER 2.

No >> The condition that caused this DTC to set is currently not present. Inspect the related wiring harness for a possible intermittent condition.

(P0563) BATTERY SYSTEM HIGH

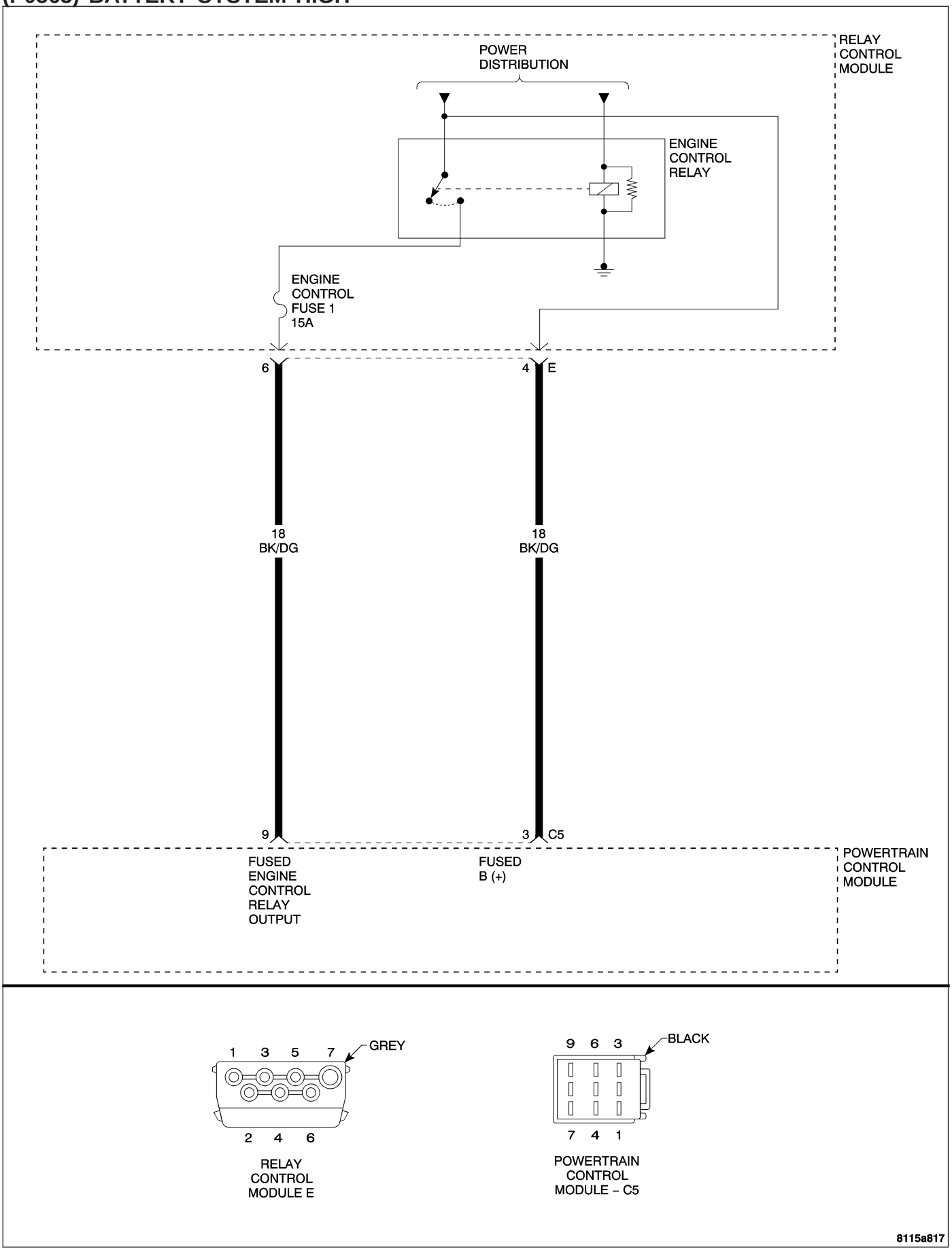

(P0563) BATTERY SYSTEM HIGH — CONTINUED

When Monitored and Set Condition

- When Monitored: 180 seconds after the engine is started.
- Set Condition: The voltage supply at the Powertrain Control Module (PCM) is greater than 16.5 volts for at least 5 seconds.

POSSIBLE CAUSES
RELAY CONTROL MODULE
POWERTRAIN CONTROL MODULE

Diagnostic Test

1. CHECK FOR CURRENT DTC

Turn the ignition on.

With the DRB III®, read the PCM DTCs.

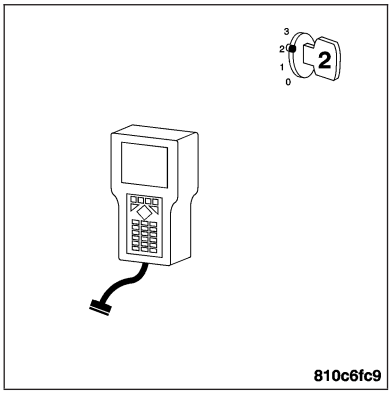

Is this DTC preset?

Yes >> For complete diagnosis of this DTC, refer to (P0561) BATTERY SYSTEM VOLTAGE.

No >> Go To 2

2. INTERMITTENT WIRING AND CONNECTORS

The conditions necessary to set this DTC are not present at this time.

Note: Check connectors — Clean/repair as necessary. Poor pin to terminal connections can set DTCs.Using the wiring diagram/schematic as a guide, inspect the wiring and connectors specific to this DTC. Wiggle the wires while checking for shorts and open circuits.

Note: Check for any Technical Service Bulletins that may apply.

Were there any problems found?

Yes >> Repair as necessary.
Perform POWERTRAIN VERIFICATION TEST - VER 2.

No >> The condition that caused this DTC to set is currently not present. Inspect the related wiring harness for a possible intermittent condition.

(P0571) STOP LAMP SWITCH CAN SIGNAL LOST TO TRANS PERFORMANCE

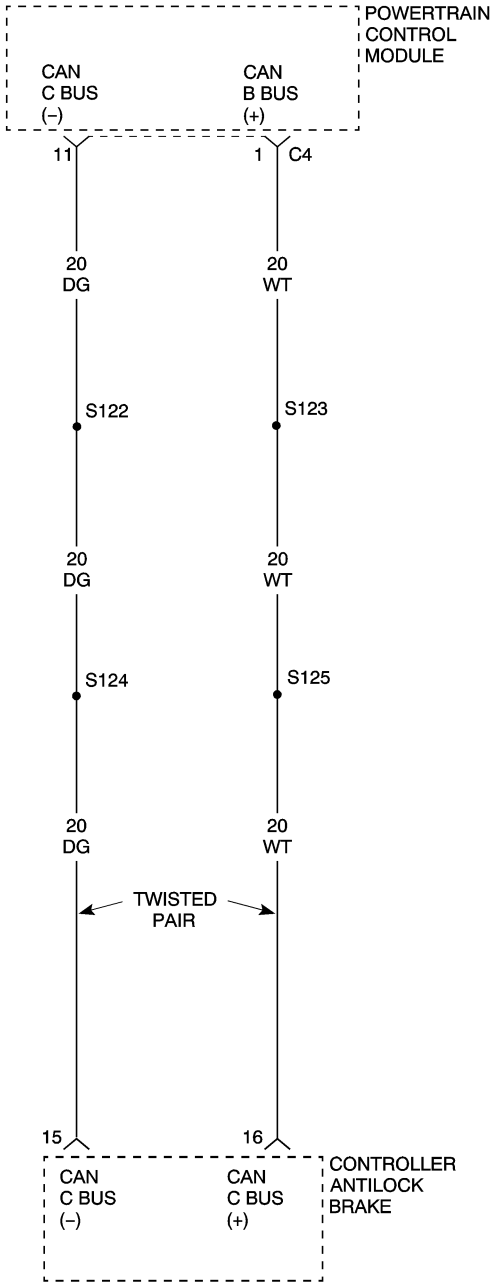

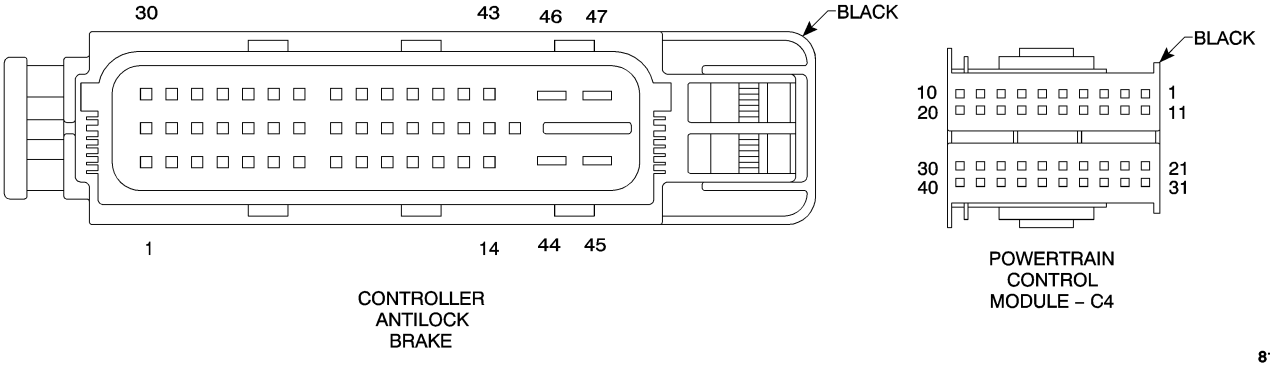

(P0571) STOP LAMP SWITCH CAN SIGNAL LOST TO TRANS PERFORMANCE — CONTINUED

For a complete Electronic Control Module Circuit Diagram, **Refer to Page 8E-45**.

Diagnostic Test

1. DTC PRESENT IN CONTROLLER ANTILOCK BRAKE (CAB)

This is an informational DTC letting you know that a DTC(s) is stored in the CAB.

Erase this DTC from the PCM after all ABS DTC(s) have been repaired.

Using the DRB III®, read the ABS DTC(s) and refer to the ABS Category to perform the appropriate symptom.

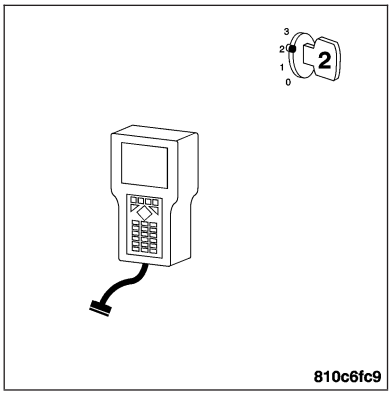

PCM Diagnostic Information complete.

Continue

Test Complete.

(P0571) STOP LAMP SWITCH SIGNAL PERFORMANCE

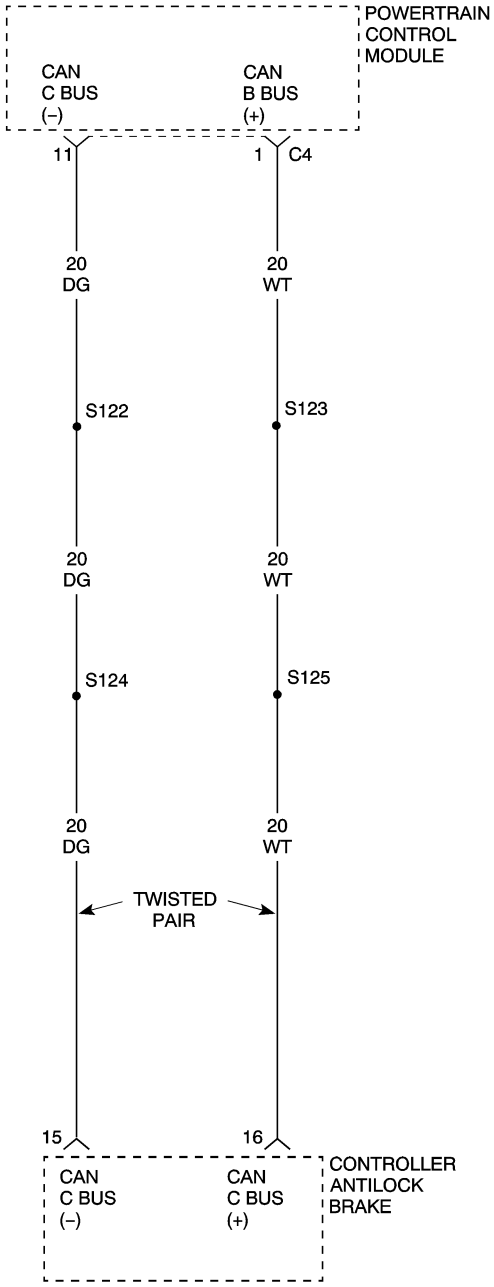

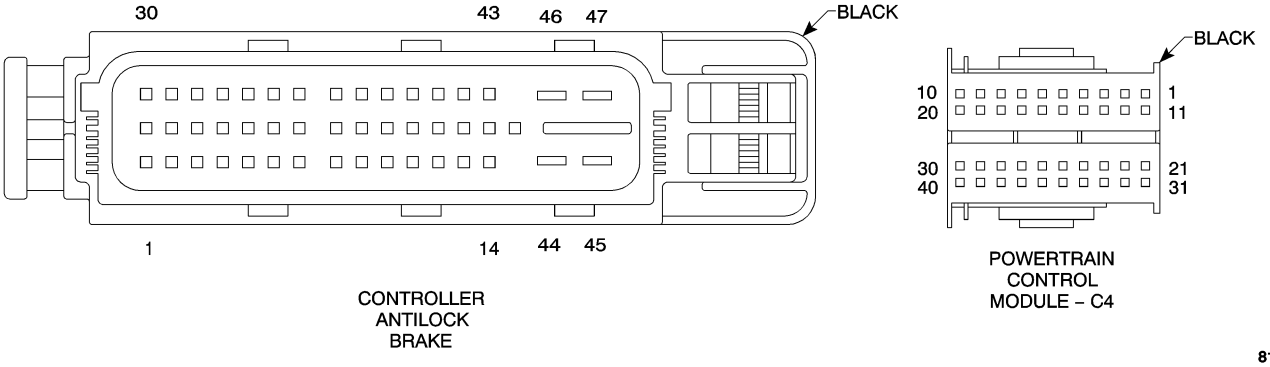

(P0571) STOP LAMP SWITCH SIGNAL PERFORMANCE — CONTINUED

For a complete Electronic Control Module Circuit Diagram, **Refer to Page 8E-45**.

Diagnostic Test

1. DTC PRESENT IN CONTROLLER ANTILOCK BRAKE (CAB)

This is an informational DTC letting you know that a DTC(s) is stored in the CAB.

Erase this DTC from the PCM after all CAB DTC(s) have been repaired.

Using the DRB III®, read the ABS DTC(s) and refer to the ABS Category to perform the appropriate symptom.

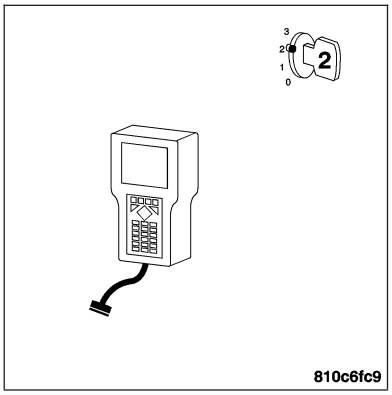

PCM Diagnostic Information complete.

Continue

Test Complete.

(P0600) INCORRECT CAN MESSAGE FROM EIS CONTROL MODULE

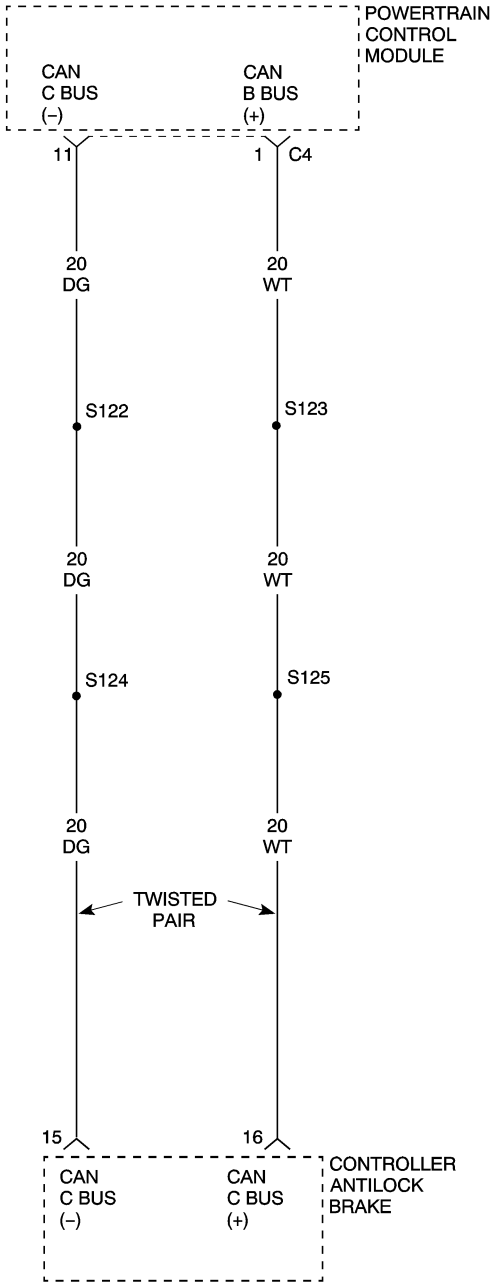

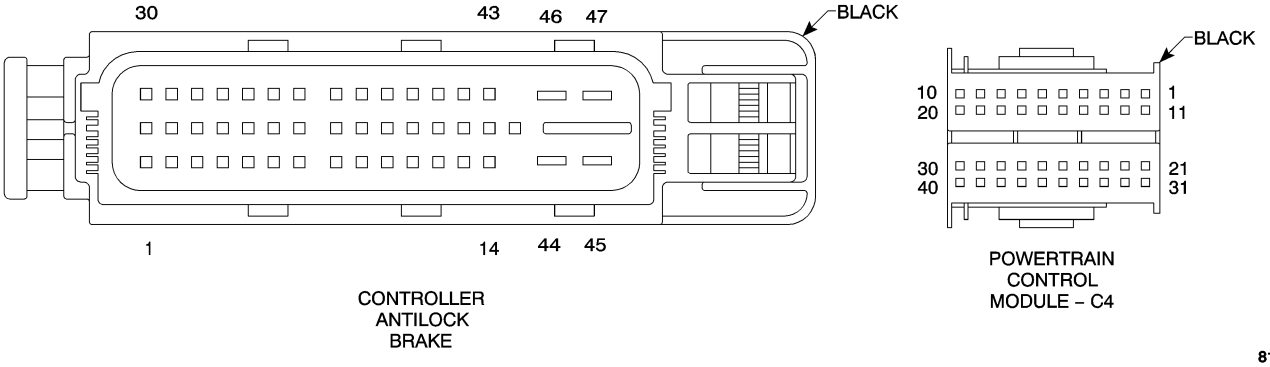

(P0600) INCORRECT CAN MESSAGE FROM EIS CONTROL MODULE — CONTINUED

For a complete Electronic Control Module Circuit Diagram, **Refer to Page 8E-45**.

Diagnostic Test

1. DTC PRESENT IN EIS MODULE.

This is an informational DTC letting you know that a DTC(s) is stored in the EIS MODULE.

Erase this DTC from the PCM after all EIS DTC(s) have been repaired.

Using the DRB III®, read the EIS DTC(s) and refer to the Instrument Cluster Category to perform the appropriate symptom.

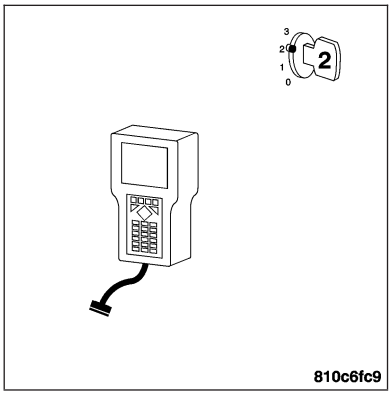

PCM Diagnostic Information complete.

Continue

Test Complete.

(P0600) NO CAN MESSAGE FROM CAB MODULE

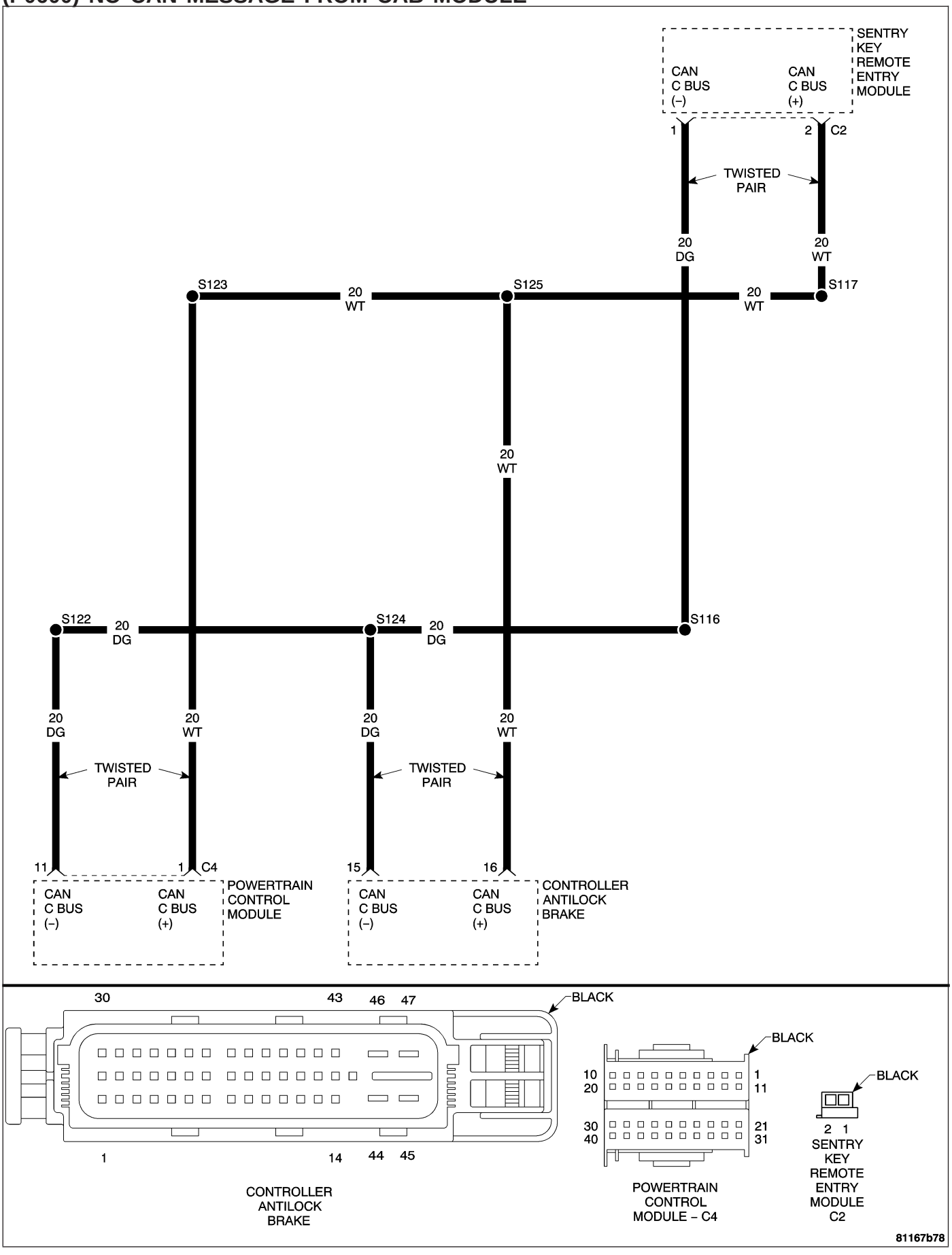

(P0600) NO CAN MESSAGE FROM CAB MODULE — CONTINUED

When Monitored and Set Condition

- When Monitored: With the ignition on.
- Set Condition: This DTC is set when a CAN ID was not received in the required time from Controller Antilock Brake (CAB).

POSSIBLE CAUSES
CAN C BUS (+)/(-) CIRCUIT OPEN
CAN C BUS (+)/(-) CIRCUIT SHORTED TO GROUND
CAN C BUS (+)/(-) LOW CIRCUIT SHORTED TO VOLTAGE
SENTRY KEY REMOTE ENTRY MODULE
CONTROLLER ANTILOCK BRAKE
POWERTRAIN CONTROL MODULE

For a complete Electronic Control Module Circuit Diagram, **Refer to Page 8E-45**.

Diagnostic Test

1. CHECK TO SEE IF CAB DTCS ARE PRESENT

Turn ignition on.
With the DRB III®, read CAB DTCs.

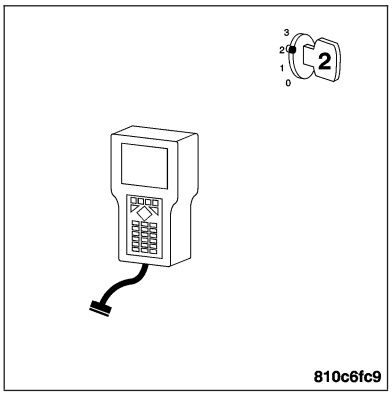

Are any performance or Bus related DTCs present?

Yes >> Repair all CAB DTCs before proceeding.
Perform POWERTRAIN VERIFICATION TEST - VER 2.

No >> Go To 2

2. VERIFY DTCS

With the ignition on.
With the DRB III®, erase DTCs.
Turn the ignition off, then back on.
Monitor the DRB III® for this DTC.

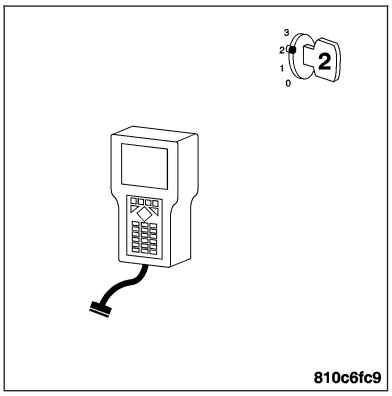

Did the DTC, (P0600) NO CAN MESSAGE FROM CAB MODULE, set again?

Yes >> Go To 3

No >> Go To 12

(P0600) NO CAN MESSAGE FROM CAB MODULE — CONTINUED

3. PCM AND SKREEM CAN C BUS TERMINATION

Turn the ignition off.

Measure the resistance of the PCM CAN C BUS termination by backprobing the CAN C BUS (+) circuit to the CAN C BUS (-) circuit at the PCM C4 harness connector.

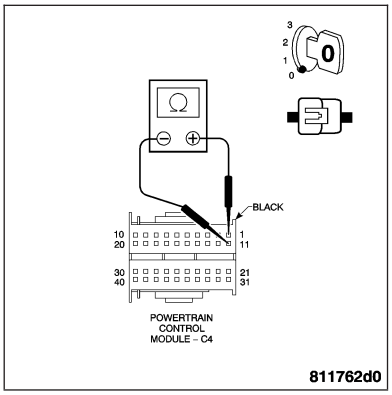

Is the resistance between 50 and 70 ohms?

Yes >> Go To 11

No >> Go To 4

4. PCM CAN C BUS TERMINATION

With the ignition off.

Disconnect the PCM C4 harness connector.

Note: Check connectors — Clean/repair as necessary.

Measure the resistance of the SKREEM CAN C BUS termination by backprobing the CAN C BUS (+) circuit to the CAN C BUS (-) circuit at the PCM C4 harness connector.

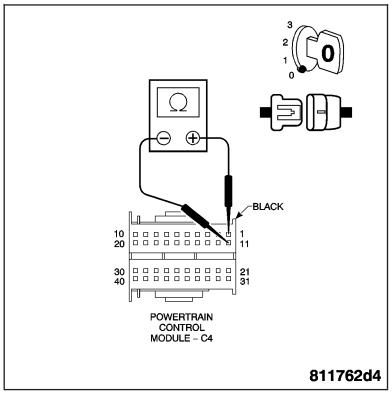

Is the SKREEM CAN C BUS termination resistance between 110 and 130 ohms?

Yes >> Replace and program the Powertrain Control Module. **Refer to Page 8E-56**.
Perform POWERTRAIN VERIFICATION TEST - VER 2.

No >> Go To 5

5. SKREEM TERMINATION

With the ignition off.

Measure the resistance of the SKREEM CAN C BUS termination by backprobing the CAN C BUS (+) circuit to the CAN C BUS (-) circuit at the SKREEM C2 harness connector.

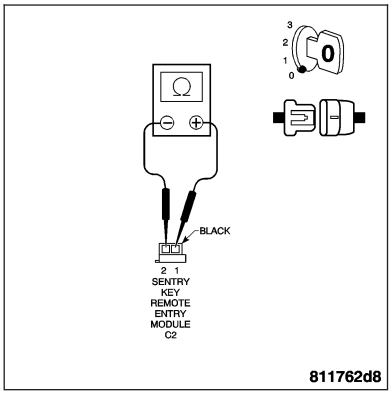

Is the resistance between 110 and 130 ohms?

Yes >> Go To 6

No >> Replace the SKREEM. **Refer to Page 8E-70**.
Perform POWERTRAIN VERIFICATION TEST - VER 2.

(P0600) NO CAN MESSAGE FROM CAB MODULE — CONTINUED

6. CAN C BUS (-) CIRCUIT OPEN

With the ignition off.

Measure the resistance of the CAN C BUS (-) circuit from the SKREEM C2 harness connector to the PCM C4 harness connector.

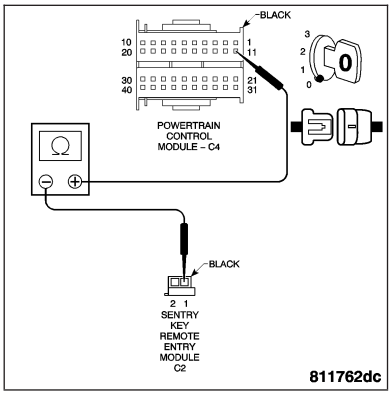

Is the resistance below 5.0 ohms?

Yes >> Go To 7

No >> Repair the CAN C BUS (-) circuit for an open.
Perform POWERTRAIN VERIFICATION TEST - VER 2.

7. CAN C BUS (+) CIRCUIT OPEN

With the ignition off.

Measure the resistance of the CAN C BUS (+) circuit from the PCM C4 harness connector to the SKREEM C2 harness connector.

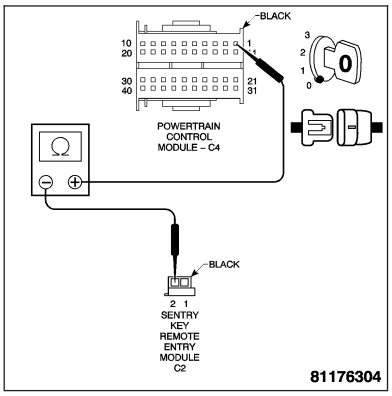

Is the resistance below 5.0 ohms?

Yes >> Go To 8

No >> Repair the CAN C BUS (+) circuit for an open.
Perform POWERTRAIN VERIFICATION TEST - VER 2.

8. CAN C BUS (+) CIRCUIT SHORTED TO VOLTAGE

Turn the ignition on.

Measure the voltage of the CAN C BUS (+) circuit at the PCM C4 harness connector.

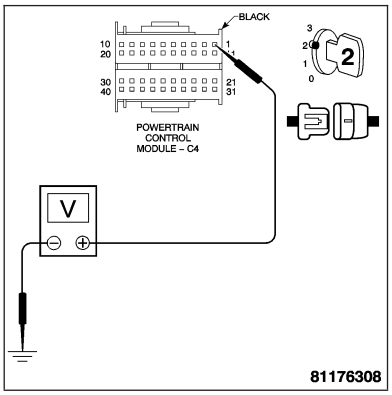

Is the voltage above 1.0 volt?

Yes >> Repair the CAN C BUS (+) circuit for a short to voltage.
Perform POWERTRAIN VERIFICATION TEST - VER 2.

No >> Go To 9

(P0600) NO CAN MESSAGE FROM CAB MODULE — CONTINUED

9. CAN C BUS (-) CIRCUIT SHORTED TO VOLTAGE

With the ignition on.
Measure the voltage of the CAN C BUS (-) circuit at the PCM C4 harness connector.

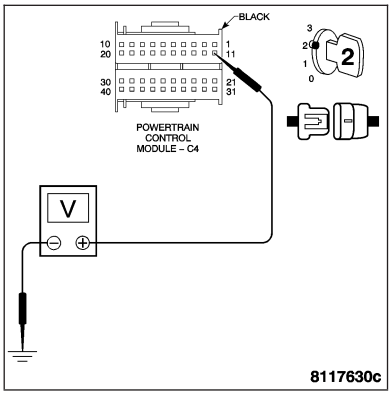

Is the voltage above 1.0 volt?

Yes >> Repair the CAN C BUS (-) circuit for a short to voltage.
Perform POWERTRAIN VERIFICATION TEST - VER 2.

No >> Go To 10

10. CAN C BUS (-) CIRCUIT SHORT TO GROUND

Turn the ignition off.
Measure the resistance between ground and the CAN C BUS (-) circuit.

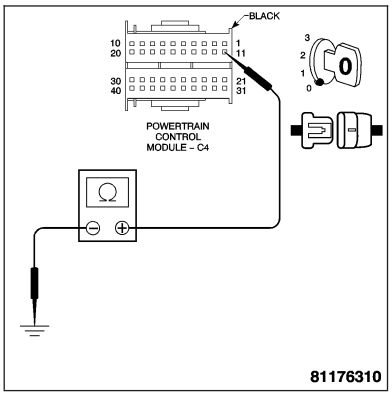

Is the resistance below 100 ohms?

Yes >> Repair the CAN C BUS (-) circuit for a short to ground.
Perform POWERTRAIN VERIFICATION TEST - VER 2.

No >> Repair the CAN C BUS (+) circuit for a short to ground.
Perform POWERTRAIN VERIFICATION TEST - VER 2.

11. CAN C BUS (-) CIRCUIT OPEN FROM CAB TO PCM

With the ignition off.
Disconnect the CAB harness connector.

Note: Check connectors — Clean/repair as necessary.
Measure the resistance of the CAN C BUS (-) circuit from the CAB harness connector to the PCM C4 harness connector.

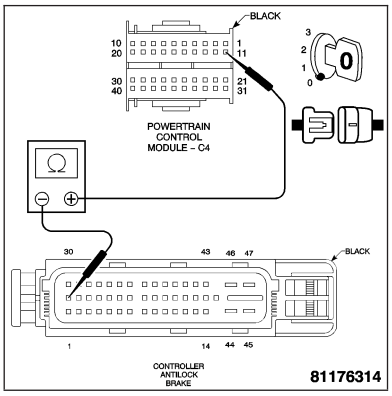

Is the resistance below 5.0 ohms?

Yes >> Repair the CAN C BUS (+) circuit for an open between the PCM C4 harness and the CAB harness connector.
Perform POWERTRAIN VERIFICATION TEST - VER 2.

No >> Repair the CAN C BUS (-) circuit for an open between the PCM C4 harness and the CAB harness connector.
Perform POWERTRAIN VERIFICATION TEST - VER 2.

(P0600) NO CAN MESSAGE FROM CAB MODULE — CONTINUED

12. INTERMITTENT WIRING AND CONNECTORS

The condition that caused this DTC to set is currently not present. Inspect the related wiring harness for a possible intermittent condition.

Note: Check connectors — Clean/repair as necessary. Poor pin to terminal connections can set DTCs.

Note: Check for any Technical Service Bulletins that may apply.
Using the wiring diagram/schematic as a guide, inspect the wiring and connectors specific to this DTC. Wiggle the wires while checking for shorts and/or open circuits.

Were there any problems found?

Yes >> Repair as necessary.
Perform POWERTRAIN VERIFICATION TEST VER.

No >> The condition that caused this DTC to set is currently not present. Inspect the related wiring harness for a possible intermittent condition.

(P0600) NO TRANSMISSION BUS MESSAGE

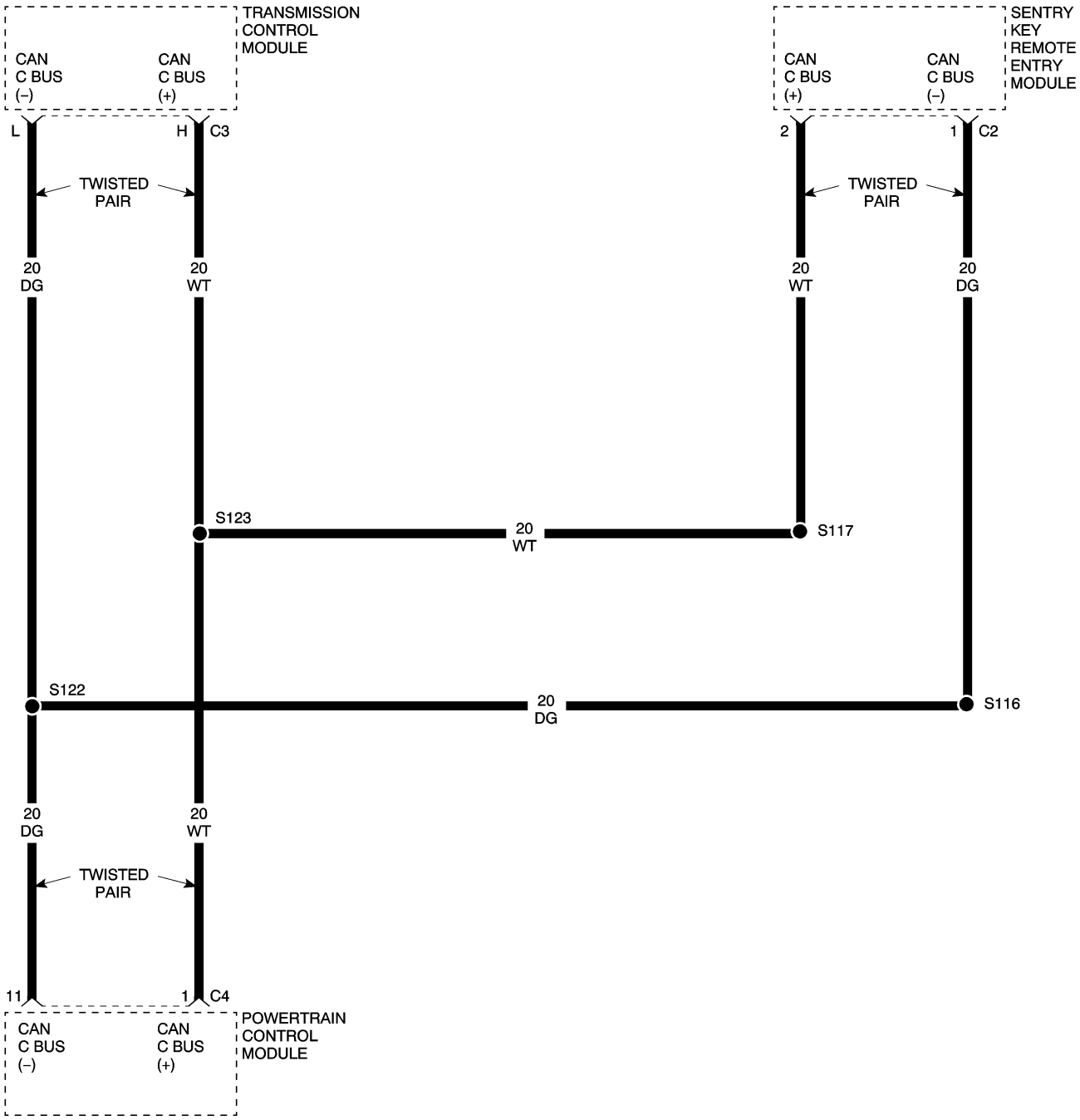

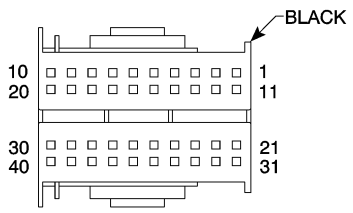

POWERTRAIN CONTROL MODULE – C4

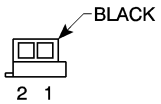

SENTRY KEY REMOTE ENTRY MODULE C2

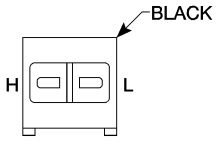

TRANSMISSION CONTROL MODULE C3

8115e46d

(P0600) NO TRANSMISSION BUS MESSAGE — CONTINUED

When Monitored and Set Condition

- When Monitored: With the ignition on.
- Set Condition: This DTC is set when a CAN ID was not received in the required time from the Transmission Control Module (TCM).

POSSIBLE CAUSES
OPEN CAN C BUS (+)/(-) CIRCUIT
CAN C BUS (+)/(-) CIRCUIT SHORTED TO GROUND
CAN C BUS (+)/(-) CIRCUIT SHORTED TO VOLTAGE
TRANSMISSION CONTROL MODULE
SENTRY KEY REMOTE ENTRY MODULE
POWERTRAIN CONTROL MODULE

For a complete Electronic Control Module Circuit Diagram, **Refer to Page 8E-45**.

Diagnostic Test

1. CHECK TO SEE IF TCM DTCS ARE PRESENT

Turn ignition on.
With the DRB III®, read TCM DTCs.

Are any performance or Bus related DTCs present?

Yes >> Repair all TCM DTCs before proceeding.
Perform POWERTRAIN VERIFICATION TEST - VER 2.

No >> Go To 2

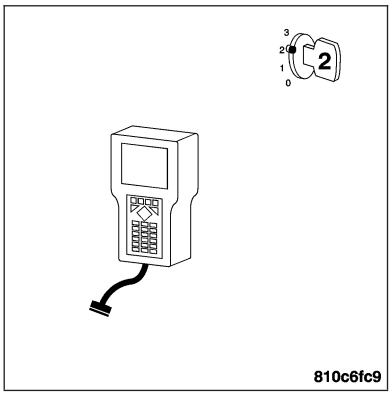

2. VERIFY DTCS

With the ignition on.
With the DRB III®, erase DTCs.
Turn the ignition off, then back on.
Monitor the DRB III® for this DTC.

Did the DTC, (P0600) NO TRANSMISSION BUS MESSAGE set again?

Yes >> Go To 3

No >> Go To 12

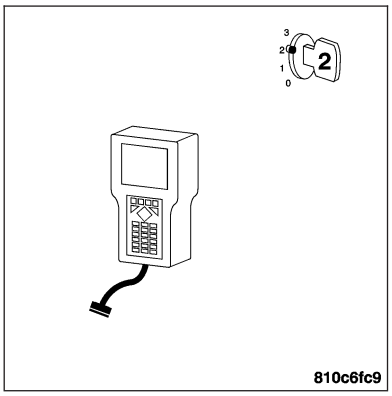

(P0600) NO TRANSMISSION BUS MESSAGE — CONTINUED

3. PCM AND SKREEM CAN C BUS TERMINATION

Turn the ignition off.

Measure the resistance of the PCM CAN C Bus termination by back probing the CAN C Bus (+) circuit to the CAN C Bus (-) circuit at the PCM C4 harness connector.

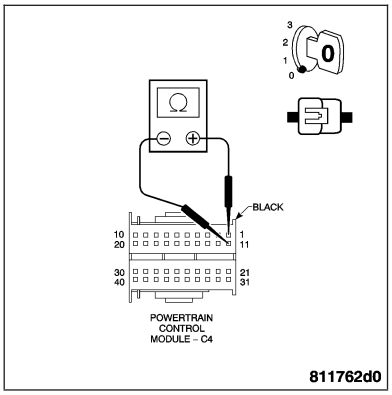

Is the resistance between 50 and 70 ohms?

Yes >> Go To 11

No >> Go To 4

4. PCM CAN C BUS TERMINATION

With the ignition off.

Disconnect the PCM C4 harness connector.

Note: Check connectors — Clean/repair as necessary.

Measure the resistance of the SKREEM CAN C Bus termination by back probing the CAN C Bus (+) circuit to the CAN C Bus (-) circuit at the PCM C4 harness connector.

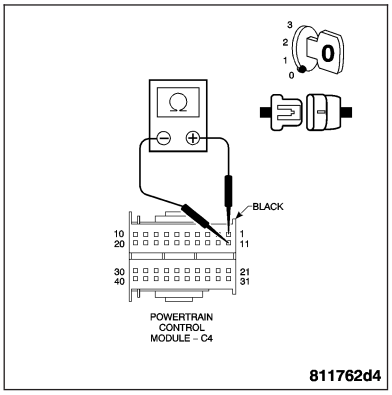

Is the SKREEM CAN C Bus termination resistance between 110 and 130 ohms?

Yes >> Replace and program the Powertrain Control Module. **Refer to Page 8E-56**.
Perform POWERTRAIN VERIFICATION TEST - VER 2.

No >> Go To 5

5. SKREEM TERMINATION

With the ignition off.

Measure the resistance of the SKREEM CAN C Bus termination by back probing the CAN C Bus (+) circuit to the CAN C Bus (-) circuit at the SKREEM C2 harness connector.

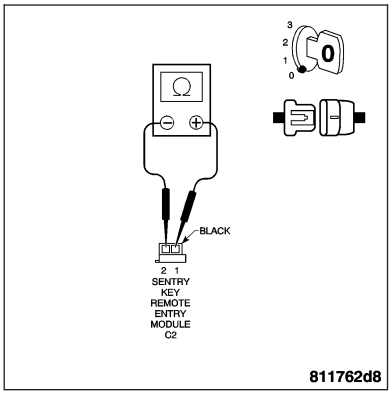

Is the resistance between 110 and 130 ohms?

Yes >> Go To 6

No >> Replace the SKREEM. **Refer to Page 8E-70**.
Perform POWERTRAIN VERIFICATION TEST - VER 2.

(P0600) NO TRANSMISSION BUS MESSAGE — CONTINUED

6. CAN C BUS (-) CIRCUIT OPEN

With the ignition off.

Measure the resistance of the CAN C Bus (-) circuit from the SKREEM C2 harness connector to the PCM C4 harness connector.

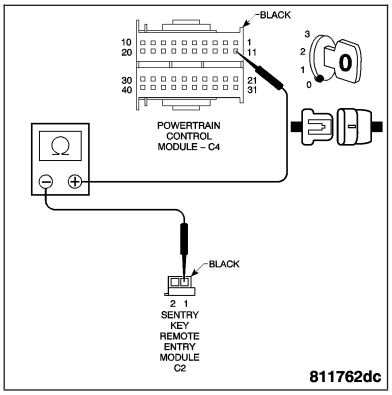

Is the resistance below 5.0 ohms?

Yes >> Go To 7

No >> Repair the CAN C Bus (-) circuit for an open.
Perform POWERTRAIN VERIFICATION TEST - VER 2.

7. CAN C BUS (+) CIRCUIT OPEN

With the ignition off.

Measure the resistance of the CAN C Bus (+) circuit from the PCM C4 harness connector to the SKREEM C2 harness connector.

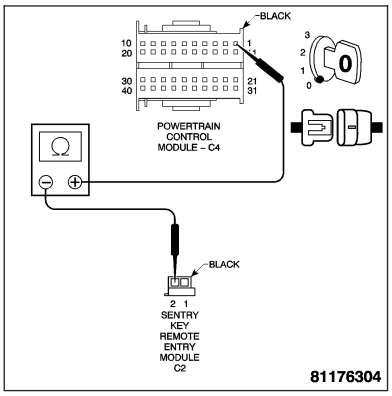

Is the resistance below 5.0 ohms?

Yes >> Go To 8

No >> Repair the CAN C Bus (+) circuit for an open.
Perform POWERTRAIN VERIFICATION TEST - VER 2.

8. CAN C BUS (+) CIRCUIT SHORTED TO VOLTAGE

Turn the ignition on.

Measure the voltage of the CAN C Bus (+) circuit at the PCM C4 harness connector.

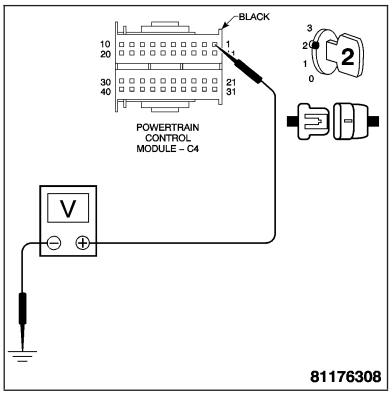

Is the voltage above 1.0 volt?

Yes >> Repair the CAN C Bus (+) circuit for a short to voltage.
Perform POWERTRAIN VERIFICATION TEST - VER 2.

No >> Go To 9

(P0600) NO TRANSMISSION BUS MESSAGE — CONTINUED

9. CAN C BUS (-) CIRCUIT SHORTED TO VOLTAGE

With the ignition on.
Measure the voltage of the CAN C Bus (-) circuit at the PCM C4 harness connector.

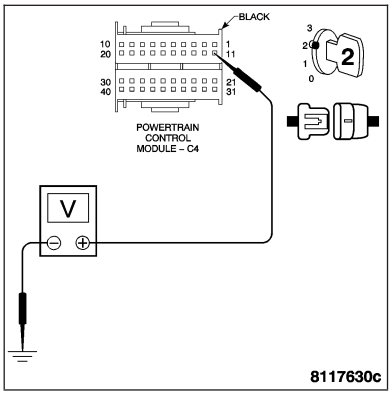

Is the voltage above 1.0 volt?

Yes >> Repair the CAN C Bus (-) circuit for a short to voltage.
Perform POWERTRAIN VERIFICATION TEST - VER 2.

No >> Go To 10

10. CAN C BUS (-) CIRCUIT SHORT TO GROUND

Turn the ignition off.
Measure the resistance between ground and the CAN C Bus (-) circuit.

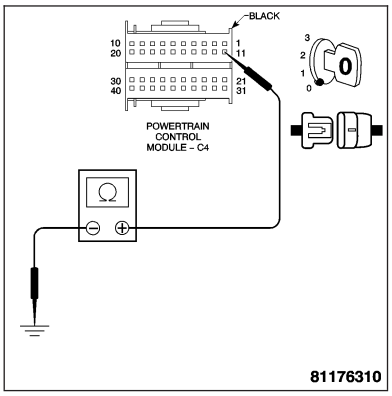

Is the resistance below 100 ohms?

Yes >> Repair the CAN C Bus (-) circuit for a short to ground.
Perform POWERTRAIN VERIFICATION TEST - VER 2.

No >> Repair the CAN C Bus (+) circuit for a short to ground.
Perform POWERTRAIN VERIFICATION TEST - VER 2.

11. CAN C BUS (-) CIRCUIT OPEN FROM TCM TO PCM

With the ignition off.
Disconnect the TCM C3 harness connector.

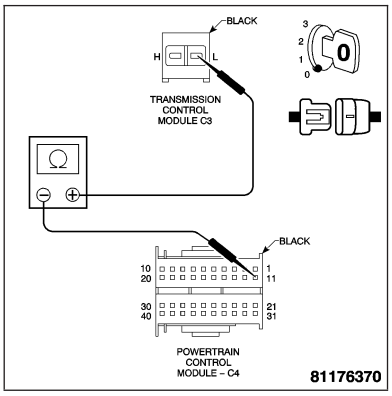

Note: Check connectors — Clean/repair as necessary.
Measure the resistance of the CAN C Bus (-) circuit from the TCM C3 harness connector to the PCM C4 harness connector.

Is the resistance below 5.0 ohms?

Yes >> Repair the CAN C Bus (+) circuit for an open between the PCM C4 harness and the TCM C3 harness connector.
Perform POWERTRAIN VERIFICATION TEST - VER 2.

No >> Repair the CAN C Bus (-) circuit for an open between the PCM C4 harness and the TCM C3 harness connector.
Perform POWERTRAIN VERIFICATION TEST - VER 2.

(P0600) NO TRANSMISSION BUS MESSAGE — CONTINUED

12. INTERMITTENT WIRING AND CONNECTORS

The conditions necessary to set this DTC are not present at this time.

Note: Check connectors — Clean/repair as necessary. Poor pin to terminal connections can set DTCs.

Note: Check for any Technical Service Bulletins that may apply.
Using the wiring diagram/schematic as a guide, inspect the wiring and connectors specific to this DTC. Wiggle the wires while checking for shorts and/or open circuits.

Were there any problems found?

Yes >> Repair as necessary.
Perform POWERTRAIN VERIFICATION TEST VER.

No >> The condition that caused this DTC to set is currently not present. Inspect the related wiring harness for a possible intermittent condition.

(P0600) LOST COMM WITH ELECTRIC GEAR SHIFT MODULE (SLA)

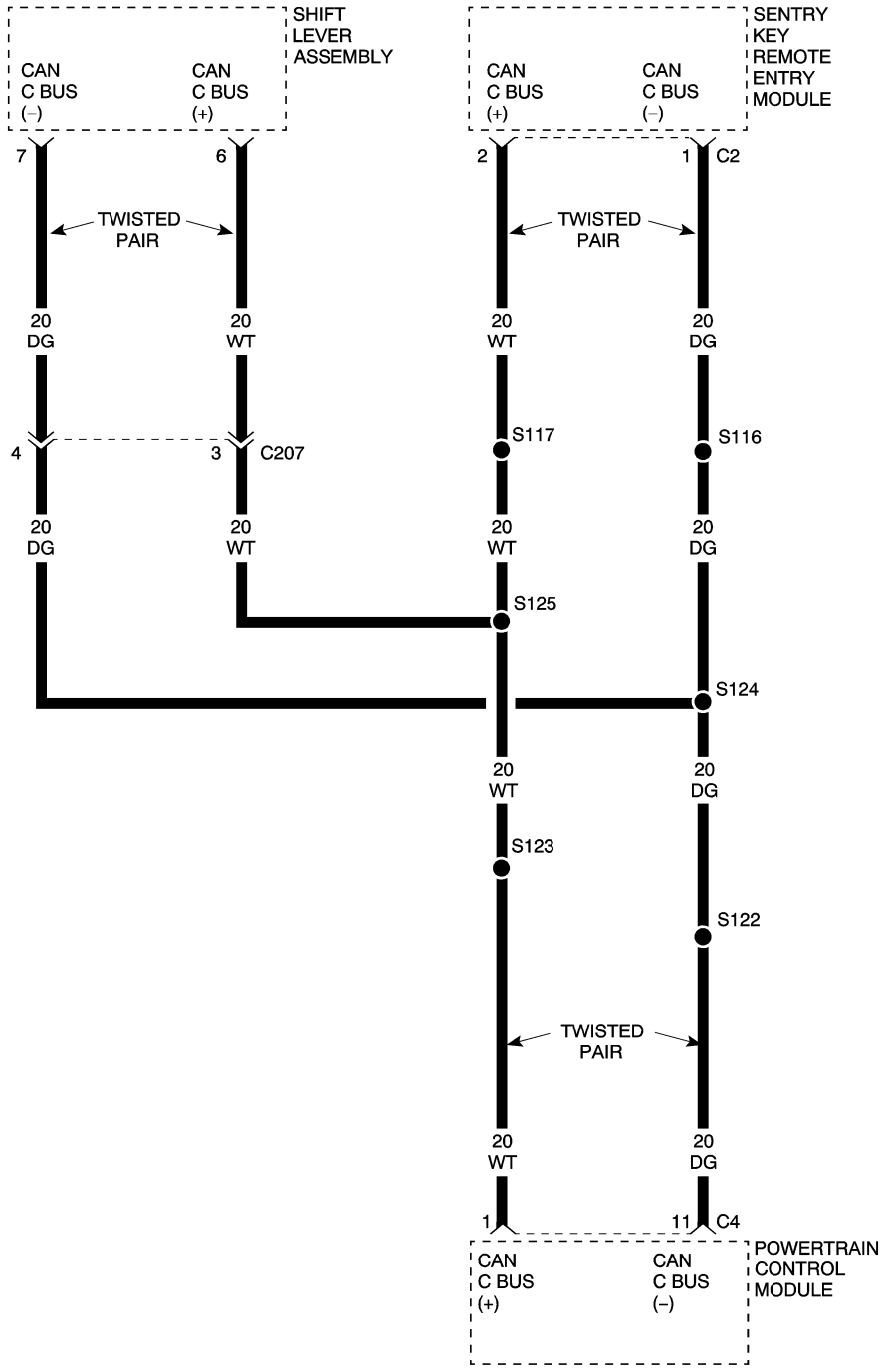

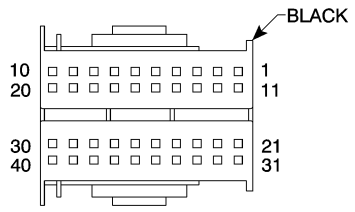

POWERTRAIN CONTROL MODULE – C4

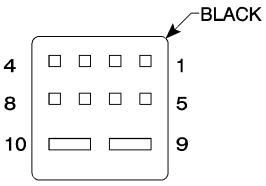

SHIFT LEVER ASSEMBLY

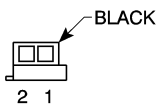

SENTRY KEY REMOTE ENTRY MODULE C2

(P0600) LOST COMM WITH ELECTRIC GEAR SHIFT MODULE (SLA) — CONTINUED

When Monitored and Set Condition

- When Monitored: With the ignition on.
- Set Condition: This DTC is set when a CAN ID was not received in the required time from the Shift Lever Assembly (SLA).

POSSIBLE CAUSES
OPEN CAN C BUS (+)/(-) CIRCUIT
CAN C BUS (+)/(-) CIRCUIT SHORTED TO GROUND
CAN C BUS HIGH/LOW CIRCUIT SHORTED TO VOLTAGE
SHIFT LEVER ASSEMBLY (SLA)
SENTRY KEY REMOTE ENTRY MODULE
POWERTRAIN CONTROL MODULE

For a complete Electrical Control Module Circuit Diagram, **Refer to Page 8E-45**.

Diagnostic Test

1. CHECK TO SEE IF SLA DTCS ARE PRESENT

Turn ignition on.
With the DRB III®, read SLA DTCs.

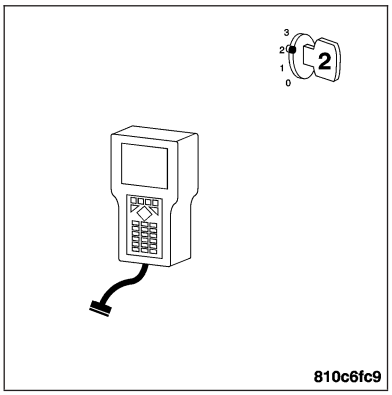

Are any performance or Bus related DTCs present?

Yes >> Repair all SLA DTCs before proceeding.
Perform POWERTRAIN VERIFICATION TEST - VER 2.

No >> Go To 2

2. VERIFY DTCS

With the ignition on.
With the DRB III®, erase DTCs.
Turn the ignition off, then back on.
Monitor the DRB III® for this DTC.

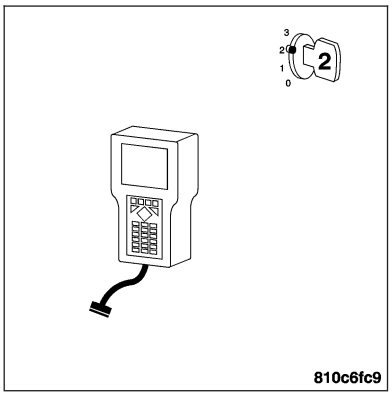

Did the DTC, (P0600) LOST COMM WITH ELECTRIC GEAR SHIFT MODULE (SLA), set again?

Yes >> Go To 3

No >> Go To 12

(P0600) LOST COMM WITH ELECTRIC GEAR SHIFT MODULE (SLA) — CONTINUED

3. PCM AND SKREEM CAN C BUS TERMINATION

Turn the ignition off.

Measure the resistance of the PCM CAN C Bus termination by backprobing the CAN C Bus (+) circuit to the CAN C Bus (-) circuit at the PCM C4 harness connector.

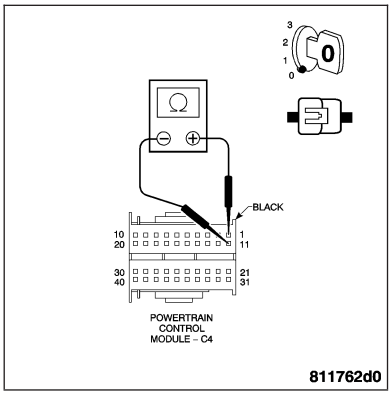

Is the resistance between 50 and 70 ohms?

Yes >> Go To 11

No >> Go To 4

4. PCM CAN C BUS TERMINATION

With the ignition off.

Disconnect the PCM C4 harness connector.

Note: Check connectors — Clean/repair as necessary.

Measure the resistance of the SKREEM CAN C Bus termination by backprobing the CAN C Bus (+) circuit to the CAN C Bus (-) circuit at the PCM C4 harness connector.

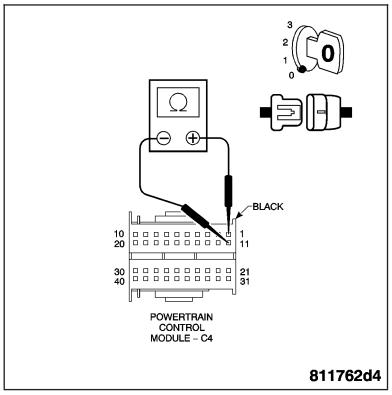

Is the SKREEM CAN C Bus termination resistance between 110 and 130 ohms?

Yes >> Replace and program the Powertrain Control Module. **Refer to Page 8E-56**.
Perform POWERTRAIN VERIFICATION TEST - VER 2.

No >> Go To 5

5. SKREEM TERMINATION

With the ignition off.

Measure the resistance of the SKREEM CAN C Bus termination by backprobing the CAN C Bus (+) circuit to the CAN C Bus (-) circuit at the SKREEM C2 harness connector.

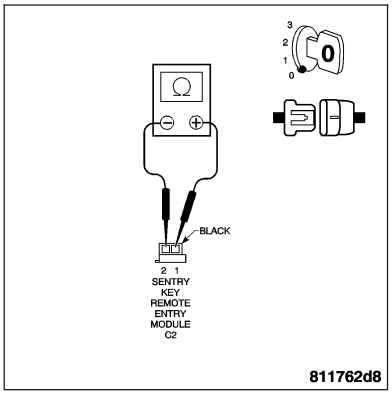

Is the resistance between 110 and 130 ohms?

Yes >> Go To 6

No >> Replace the SKREEM. **Refer to Page 8E-70**.
Perform POWERTRAIN VERIFICATION TEST - VER 2.

(P0600) LOST COMM WITH ELECTRIC GEAR SHIFT MODULE (SLA) — CONTINUED

6. CAN C BUS (-) CIRCUIT OPEN

With the ignition off.

Measure the resistance of the CAN C Bus (-) circuit from the SKREEM C2 harness connector to the PCM C4 harness connector.

Is the resistance below 5.0 ohms?

Yes >> Go To 7

No >> Repair the CAN C Bus (-) circuit for an open.
Perform POWERTRAIN VERIFICATION TEST - VER 2.

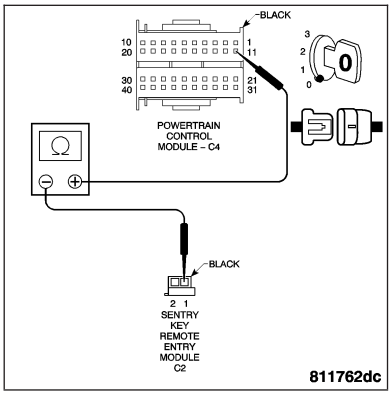

7. CAN C Bus (+) CIRCUIT OPEN

With the ignition off.

Measure the resistance of the CAN C Bus (+) circuit from the PCM C4 harness connector to the SKREEM C2 harness connector.

Is the resistance below 5.0 ohms?

Yes >> Go To 8

No >> Repair the CAN C Bus (+) circuit for an open.
Perform POWERTRAIN VERIFICATION TEST - VER 2.

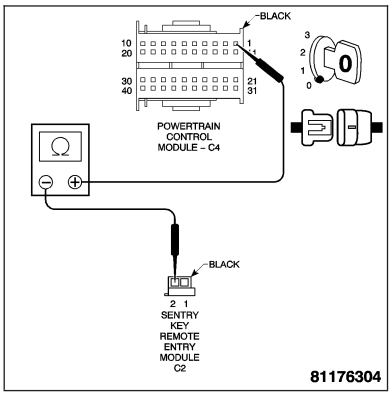

8. CAN C BUS (+) CIRCUIT SHORTED TO VOLTAGE

Turn the ignition on.

Measure the voltage of the CAN C Bus (+) circuit at the PCM C4 harness connector.

Is the voltage above 1.0 volt?

Yes >> Repair the CAN C Bus (+) circuit for a short to voltage.
Perform POWERTRAIN VERIFICATION TEST - VER 2.

No >> Go To 9

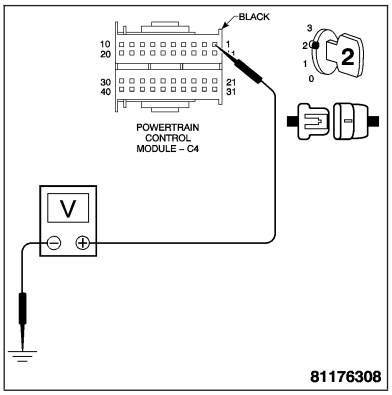

(P0600) LOST COMM WITH ELECTRIC GEAR SHIFT MODULE (SLA) — CONTINUED

9. CAN C BUS (-) CIRCUIT SHORTED TO VOLTAGE

With the ignition on.
Measure the voltage of the CAN C Bus (-) circuit at the PCM C4 harness connector.

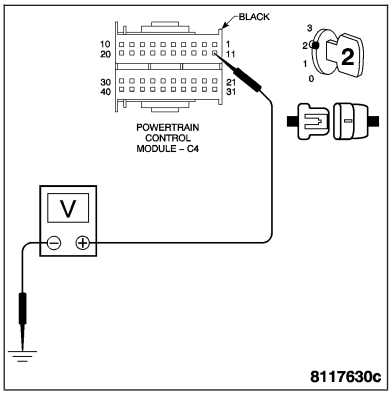

Is the voltage above 1.0 volt?

Yes >> Repair the CAN C Bus (-) circuit for a short to voltage. Perform POWERTRAIN VERIFICATION TEST - VER 2.

No >> Go To 10

10. CAN C BUS (-) CIRCUIT SHORT TO GROUND

Turn the ignition off.
Measure the resistance between ground and the CAN C Bus (-) circuit.

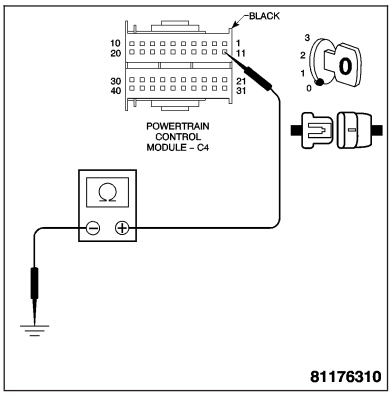

Is the resistance below 100 ohms?

Yes >> Repair the CAN C Bus (-) circuit for a short to ground. Perform POWERTRAIN VERIFICATION TEST - VER 2.

No >> Repair the CAN C Bus (+) circuit for a short to ground. Perform POWERTRAIN VERIFICATION TEST - VER 2.

11. CAN C BUS (-) CIRCUIT OPEN FROM SLA TO PCM

With the ignition off.
Disconnect the SLA harness connector.

Note: Check connectors — Clean/repair as necessary.
Measure the resistance of the CAN C Bus (-) circuit from the SLA harness connector to the PCM C4 harness connector.

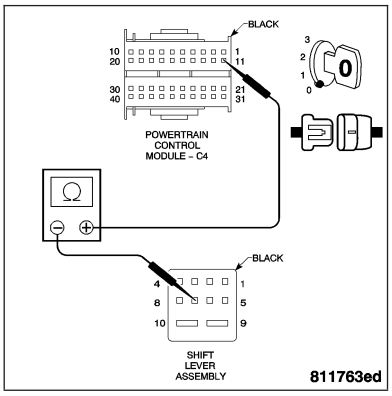

Is the resistance below 5.0 ohms?

Yes >> Repair the CAN C Bus (+) circuit for an open between the PCM C4 harness and the SLA harness connector. Perform POWERTRAIN VERIFICATION TEST - VER 2.

No >> Repair the CAN C Bus (-) circuit for an open between the PCM C4 harness and the SLA harness connector. Perform POWERTRAIN VERIFICATION TEST - VER 2.

(P0600) LOST COMM WITH ELECTRIC GEAR SHIFT MODULE (SLA) — CONTINUED

12. INTERMITTENT WIRING AND CONNECTORS

The condition that caused this DTC to set is currently not present. Inspect the related wiring harness for a possible intermittent condition.

Note: Check connectors — Clean/repair as necessary. Poor pin to terminal connections can set DTCs.

Note: Check for any Technical Service Bulletins that may apply.
Using the wiring diagram/schematic as a guide, inspect the wiring and connectors specific to this DTC. Wiggle the wires while checking for shorts and/or open circuits.

Were there any problems found?

Yes >> Repair as necessary.
Perform POWERTRAIN VERIFICATION TEST - VER 2.

No >> The condition that caused this DTC to set is currently not present. Inspect the related wiring harness for a possible intermittent condition.

(P0600) NO CLUSTER BUS MESSAGE

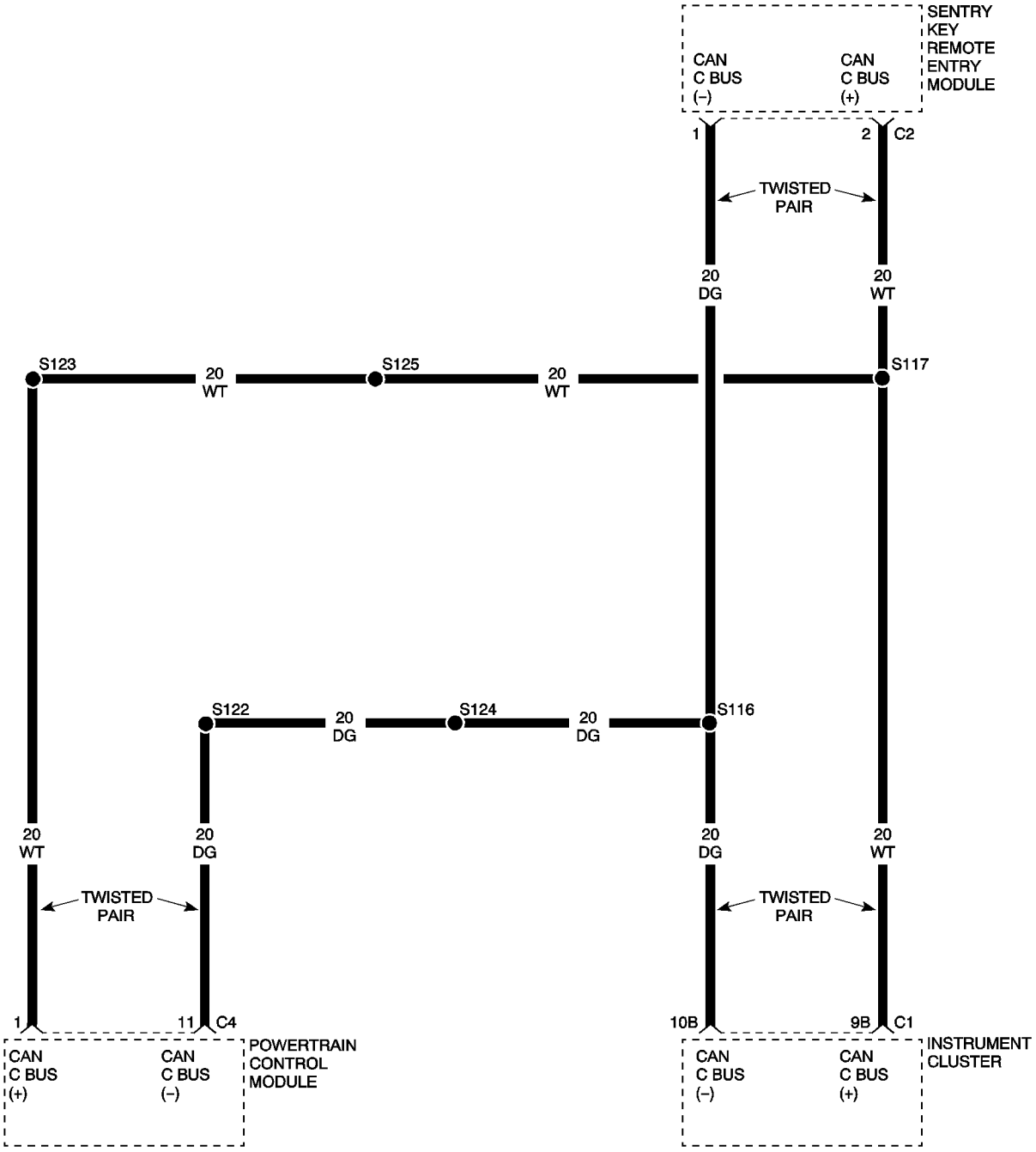

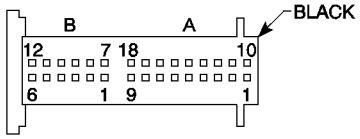

INSTRUMENT CLUSTER C1

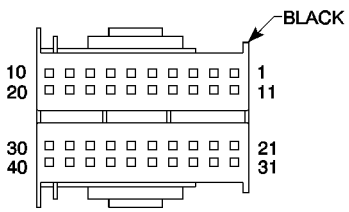

POWERTRAIN CONTROL MODULE – C4

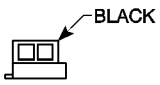

SENTRY KEY REMOTE ENTRY MODULE C2

(P0600) NO CLUSTER BUS MESSAGE — CONTINUED

When Monitored and Set Condition

- When Monitored: With the ignition on.
- Set Condition: This DTC is set when a CAN ID was not received in the required time from the Instrument Cluster.

POSSIBLE CAUSES
CAN C BUS (+)/(-) CIRCUIT OPEN
CAN C BUS (+)/(-) CIRCUIT SHORTED TO GROUND
CAN C BUS (+)/(-) CIRCUIT SHORTED TO VOLTAGE
INSTRUMENT CLUSTER
SENTRY KEY REMOTE ENTRY MODULE
POWERTRAIN CONTROL MODULE

For a complete Electronic Control Module Circuit Diagram, **Refer to Page 8E-45**.

Diagnostic Test

1. CHECK TO SEE IF INSTRUMENT CLUSTER DTCS ARE PRESENT

Turn ignition on.
With the DRB III®, read Instrument Cluster DTCs.

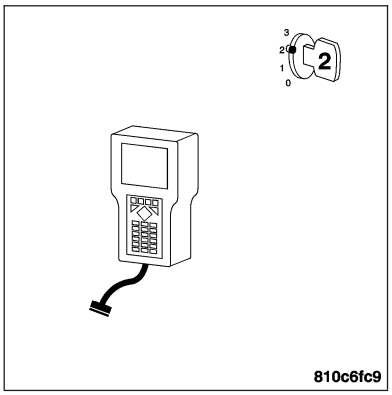

Are any performance or BUS related DTCs present?

Yes >> Repair all Instrument Cluster DTCs before proceeding. Perform POWERTRAIN VERIFICATION TEST - VER 2.

No >> Go To 2

2. VERIFY DTCS

With the ignition on.
With the DRB III®, erase DTCs.
Turn the ignition off, then back on.
Monitor the DRB III® for this DTC.

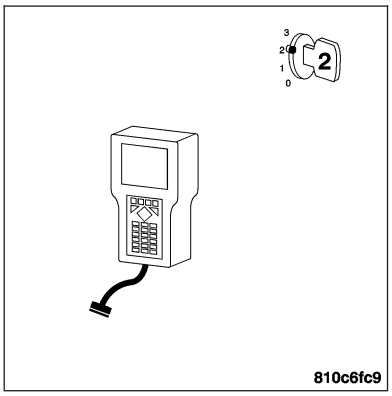

Did the DTC, (P0600) NO CLUSTER BUS MESSAGE, set again?

Yes >> Go To 3

No >> Go To 12

(P0600) NO CLUSTER BUS MESSAGE — CONTINUED

3. PCM AND SKREEM CAN C BUS TERMINATION

Turn the ignition off.

Measure the resistance of the PCM CAN C Bus termination by backprobing the CAN C Bus (+) circuit to the CAN C Bus (-) circuit at the PCM C4 harness connector.

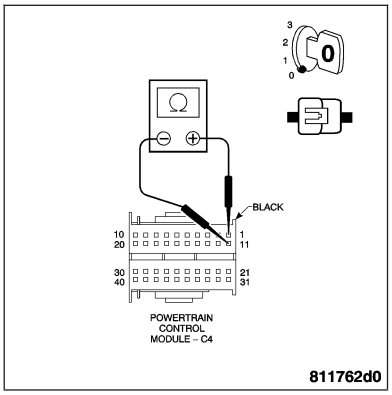

Is the resistance between 50 and 70 ohms?

Yes >> Go To 11

No >> Go To 4

4. PCM CAN C BUS TERMINATION

With the ignition off.

Disconnect the PCM C4 harness connector.

Note: Check connectors — Clean/repair as necessary.

Measure the resistance of the SKREEM CAN C Bus termination by backprobing the CAN C Bus (+) circuit to the CAN C Bus (-) circuit at the PCM C4 harness connector.

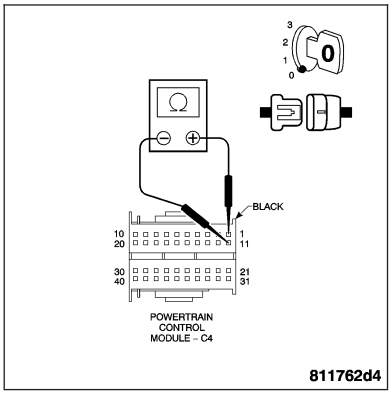

Is the SKREEM CAN C Bus termination resistance between 110 and 130 ohms?

Yes >> Replace and program the Powertrain Control Module. **Refer to Page 8E-56**.
Perform POWERTRAIN VERIFICATION TEST - VER 2.

No >> Go To 5

5. SKREEM TERMINATION

With the ignition off.

Measure the resistance of the SKREEM CAN C Bus termination by backprobing the CAN C Bus (+) circuit to the CAN C Bus (-) circuit at the SKREEM C2 harness connector.

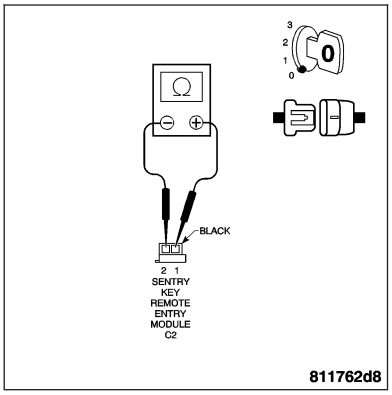

Is the resistance between 110 and 130 ohms?

Yes >> Go To 6

No >> Replace the SKREEM. **Refer to Page 8E-70**.
Perform POWERTRAIN VERIFICATION TEST - VER 2.

(P0600) NO CLUSTER BUS MESSAGE — CONTINUED

6. CAN C BUS (-) CIRCUIT OPEN

With the ignition off.

Measure the resistance of the CAN C Bus (-) circuit from the SKREEM C2 harness connector to the PCM C4 harness connector.

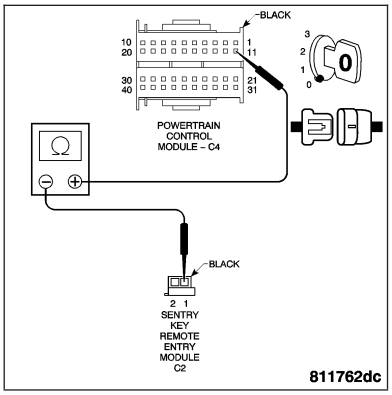

Is the resistance below 5.0 ohms?

Yes >> Go To 7

No >> Repair the CAN C Bus (-) circuit for an open.
Perform POWERTRAIN VERIFICATION TEST - VER 2.

7. CAN C BUS (+) CIRCUIT OPEN

With the ignition off.

Measure the resistance of the CAN C Bus (+) circuit from the PCM C4 harness connector to the SKREEM C2 harness connector.

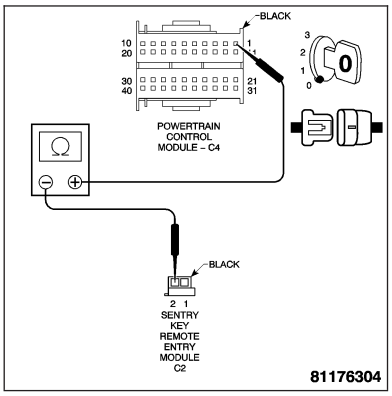

Is the resistance below 5.0 ohms?

Yes >> Go To 8

No >> Repair the CAN C Bus (+) circuit for an open.
Perform POWERTRAIN VERIFICATION TEST - VER 2.

8. CAN C BUS (+) CIRCUIT SHORTED TO VOLTAGE

Turn the ignition on.

Measure the voltage of the CAN C Bus (+) circuit at the PCM C4 harness connector.

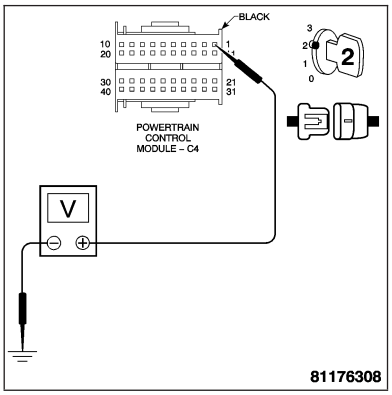

Is the voltage above 1.0 volt?

Yes >> Repair the CAN C Bus (+) circuit for a short to voltage.
Perform POWERTRAIN VERIFICATION TEST - VER 2.

No >> Go To 9

(P0600) NO CLUSTER BUS MESSAGE — CONTINUED

9. CAN C BUS (-) CIRCUIT SHORTED TO VOLTAGE

With the ignition on.
Measure the voltage of the CAN C Bus (-) circuit at the PCM C4 harness connector.

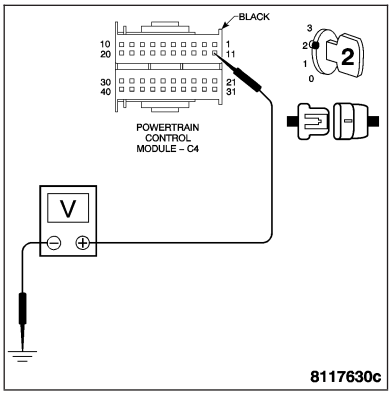

Is the voltage above 1.0 volt?

Yes >> Repair the CAN C Bus (-) circuit for a short to voltage.
Perform POWERTRAIN VERIFICATION TEST - VER 2.

No >> Go To 10

10. CAN C BUS (-) CIRCUIT SHORT TO GROUND

Turn the ignition off.
Measure the resistance between ground and the CAN C Bus (-) circuit.

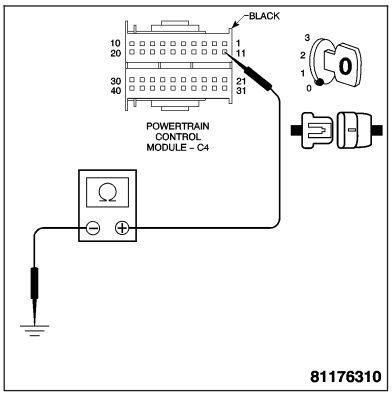

Is the resistance below 100 ohms?

Yes >> Repair the CAN C Bus (-) circuit for a short to ground.
Perform POWERTRAIN VERIFICATION TEST - VER 2.

No >> Repair the CAN C Bus (+) circuit for a short to ground.
Perform POWERTRAIN VERIFICATION TEST - VER 2.

11. CAN C BUS (-) CIRCUIT OPEN FROM INSTRUMENT CLUSTER TO PCM

With the ignition off.
Disconnect the Instrument Cluster C1 harness connector.

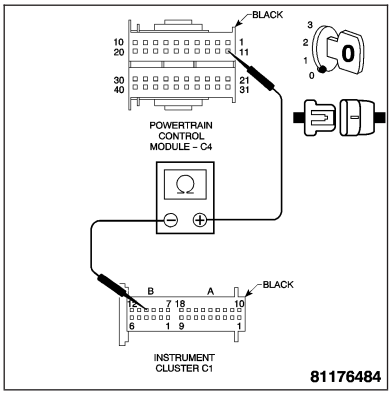

Note: Check connectors — Clean/repair as necessary.
Measure the resistance of the CAN C Bus (-) circuit from the Instrument Cluster C1 harness connector to the PCM C4 harness connector.

Is the resistance below 5.0 ohms?

Yes >> Repair the CAN C Bus (+) circuit for an open between the PCM C4 harness and the Instrument Cluster C1 harness connector.
Perform POWERTRAIN VERIFICATION TEST - VER 2.

No >> Repair the CAN C Bus (-) circuit for an open between the PCM C4 harness and the Instrument Cluster C1 harness connector.
Perform POWERTRAIN VERIFICATION TEST - VER 2.

(P0600) NO CLUSTER BUS MESSAGE — CONTINUED

12. INTERMITTENT WIRING AND CONNECTORS

The condition that caused this DTC to set is currently not present. Inspect the related wiring harness for a possible intermittent condition.

Note: Check connectors — Clean/repair as necessary. Poor pin to terminal connections can set DTCs.

Note: Check for any Technical Service Bulletins that may apply.
Using the wiring diagram/schematic as a guide, inspect the wiring and connectors specific to this DTC. Wiggle the wires while checking for shorts and/or open circuits.

Were there any problems found?

Yes >> Repair as necessary.
Perform POWERTRAIN VERIFICATION TEST VER.

No >> The condition that caused this DTC to set is currently not present. Inspect the related wiring harness for a possible intermittent condition.

(P0602) PCM PROGRAMMED INCORRECT TRANS/NO COMM FROM TCM

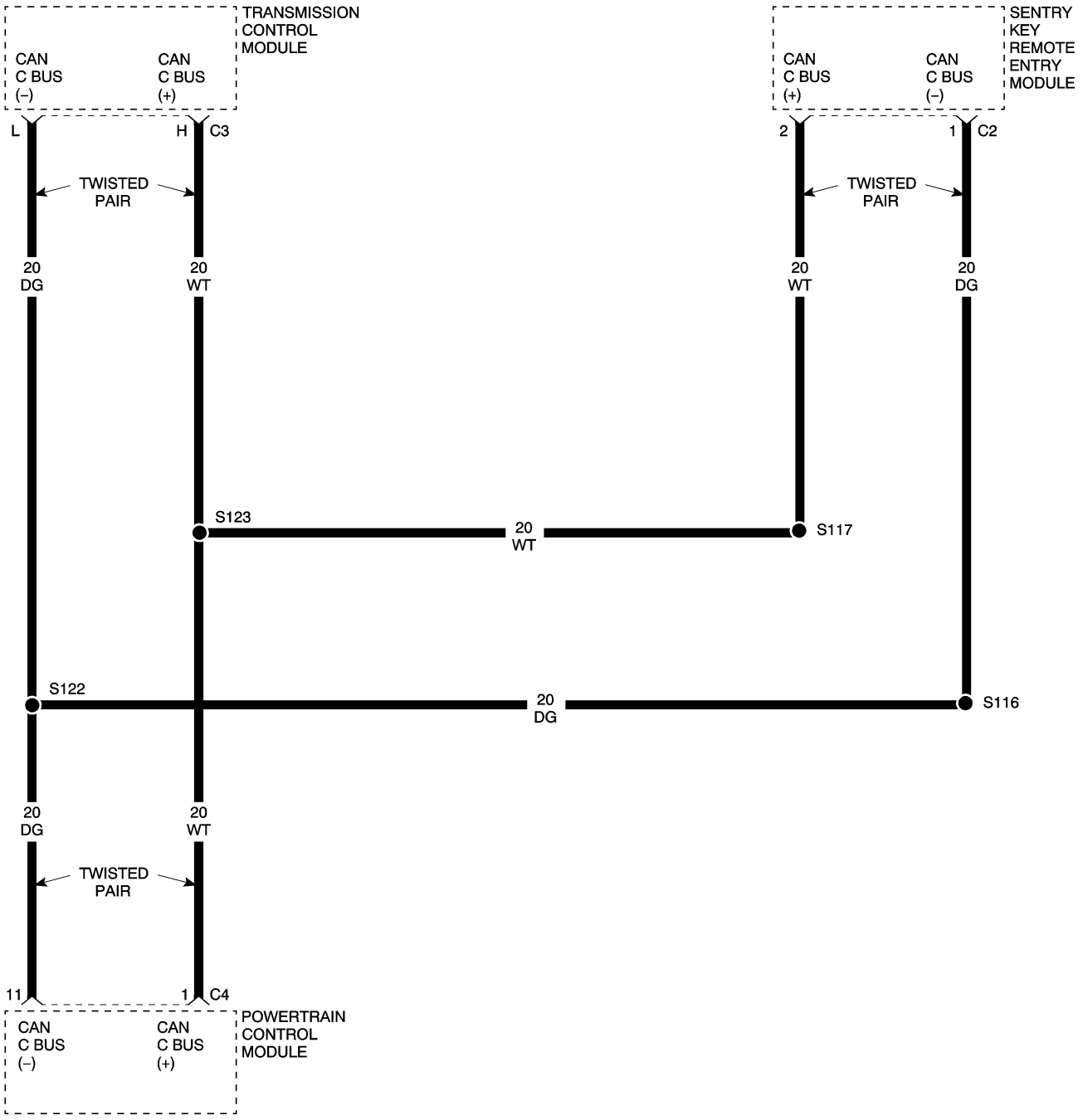

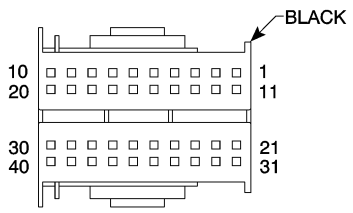

POWERTRAIN CONTROL MODULE – C4

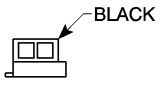

SENTRY KEY REMOTE ENTRY MODULE C2

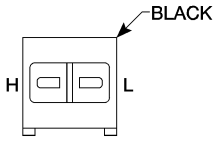

TRANSMISSION CONTROL MODULE C3

8115e46d

(P0602) PCM PROGRAMMED INCORRECT TRANS/NO COMM FROM TCM — CONTINUED

When Monitored and Set Condition

- When Monitored: With the ignition on.
- Set Condition: This DTC is set when a CAN ID was not received in the required time from the Transmission Control Module (TCM).

POSSIBLE CAUSES
OPEN CAN C BUS (+)/(-) CIRCUIT
CAN C BUS (+)/(-) CIRCUIT SHORTED TO GROUND
CAN C BUS (+)/(-) CIRCUIT SHORTED TO VOLTAGE
TRANSMISSION CONTROL MODULE
SENTRY KEY REMOTE ENTRY MODULE
POWERTRAIN CONTROL MODULE

Diagnostic Test

1. CHECK FOR CURRENT DTC

Turn the ignition on.
With the DRB III®, read the PCM DTCs.

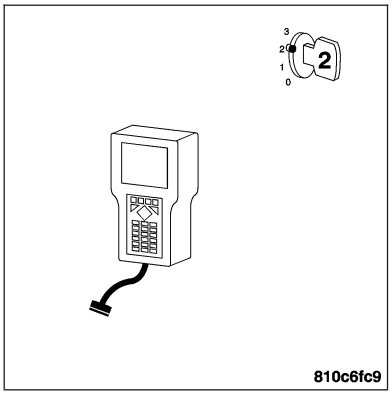

Is this DTC preset?

Yes >> For complete diagnosis of this DTC, refer to (P0600) NO TRANSMISSION BUS MESSAGE.

No >> Go To 2

2. INTERMITTENT WIRING AND CONNECTORS

The conditions necessary to set this DTC are not present at this time.

Note: Check connectors — Clean/repair as necessary. Poor pin to terminal connections can set DTCs.Using the wiring diagram/schematic as a guide, inspect the wiring and connectors specific to this DTC. Wiggle the wires while checking for shorts and open circuits.

Note: Check for any Technical Service Bulletins that may apply.

Were there any problems found?

Yes >> Repair as necessary.
Perform POWERTRAIN VERIFICATION TEST - VER 2.

No >> The condition that caused this DTC to set is currently not present. Inspect the related wiring harness for a possible intermittent condition.

(P0700) TRANSMISSION CONTROL SYSTEM (MIL REQUEST)

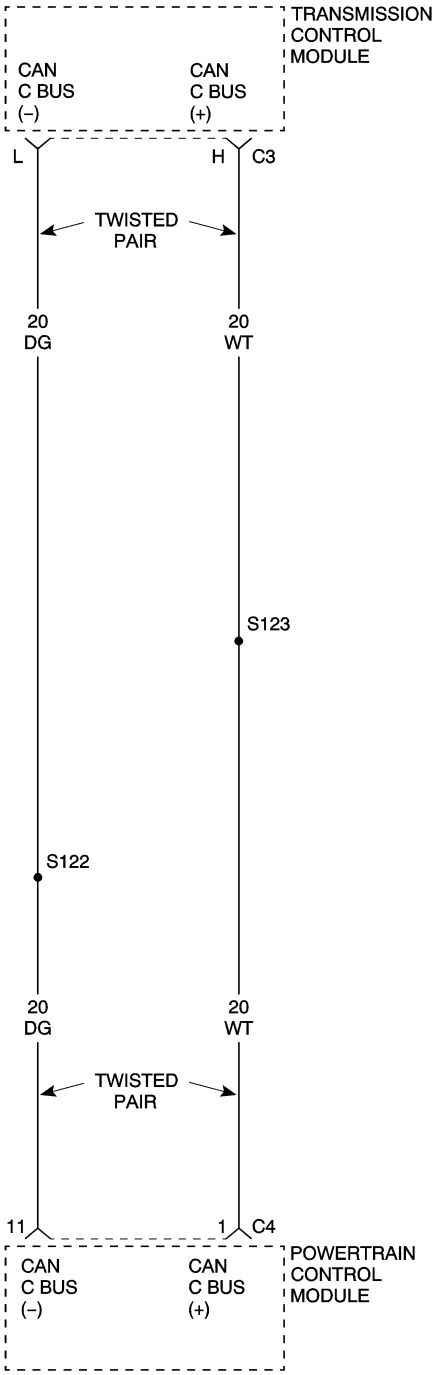

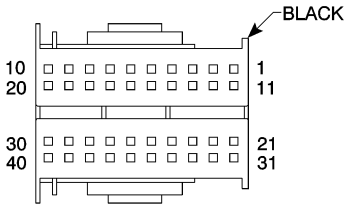

POWERTRAIN CONTROL MODULE – C4

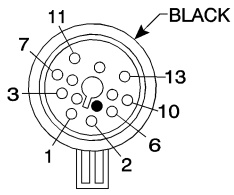

TRANSMISSION SOLENOID ASSEMBLY

8115f541

(P0700) TRANSMISSION CONTROL SYSTEM (MIL REQUEST) — CONTINUED

For a complete Electronic Control Module Circuit Diagram, **Refer to Page 8E-45**.

Diagnostic Test

1. DTC PRESENT IN TRANSMISSION CONTROL MODULE (TCM)

This is an informational DTC letting you know that a DTC(s) is stored in the Transmission Control Module.

Erase this DTC from the PCM after all Transmission DTC(s) have been repaired.

Using the DRB III®, read the Transmission Controller DTC and refer to the Transmission Category and perform the appropriate symptom.

PCM Diagnostic Information complete.

Continue

Test Complete.

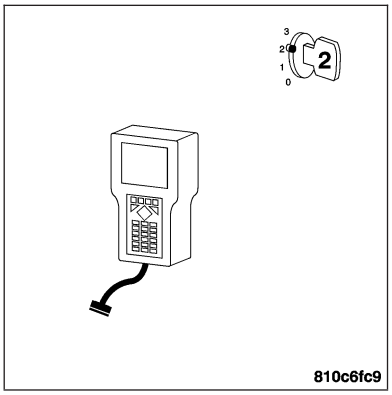

(P0702) TRANSMISSION CONTROL MODULE LOW VOLTAGE

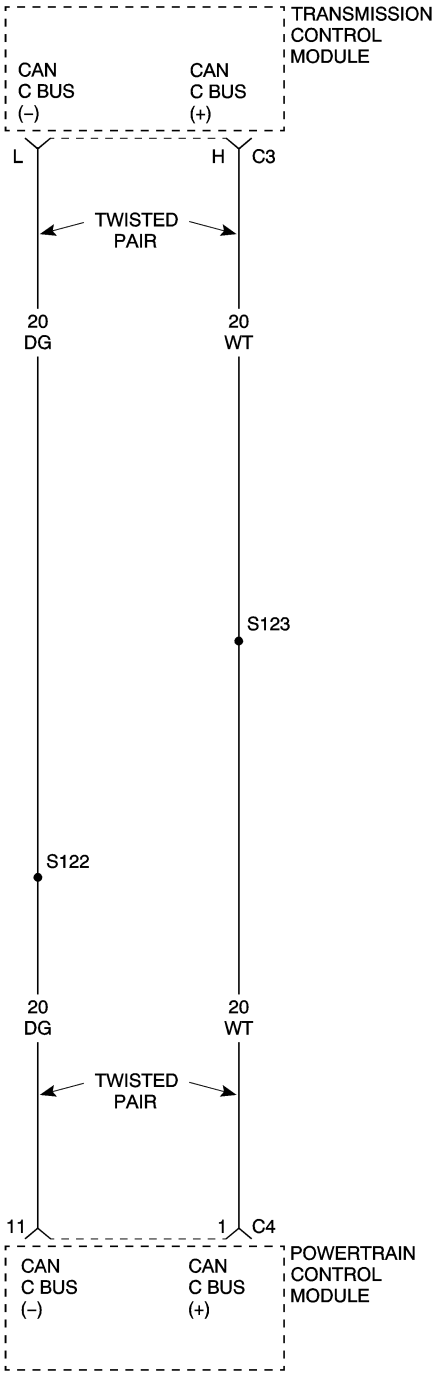

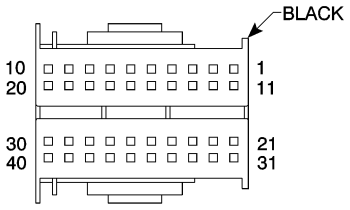

POWERTRAIN CONTROL MODULE – C4

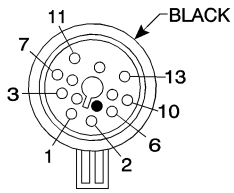

TRANSMISSION SOLENOID ASSEMBLY

8115f541

(P0702) TRANSMISSION CONTROL MODULE LOW VOLTAGE — CONTINUED

For a complete Electronic Control Module Circuit Diagram, **Refer to Page 8E-45**.

Diagnostic Test

1. DTC PRESENT IN TRANSMISSION CONTROL MODULE (TCM)

This is an informational DTC letting you know that a DTC(s) is stored in the Transmission Control Module.

Erase this DTC from the PCM after all Transmission DTC(s) have been repaired.

Using the DRB III®, read the Transmission Controller DTC and refer to the Transmission Category and perform the appropriate symptom.

PCM Diagnostic Information complete.

Continue

Test Complete.

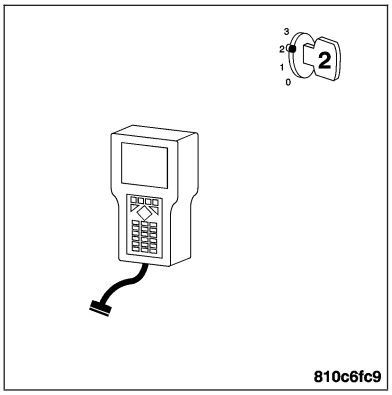

(P0702) TRANSMISSION CONTROL SYSTEM (MIL REQUEST)

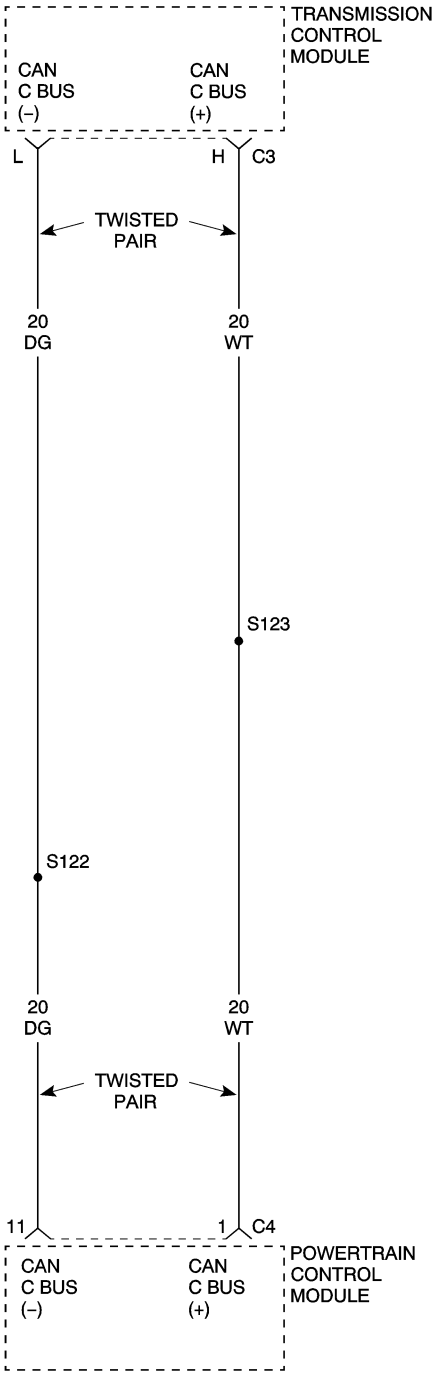

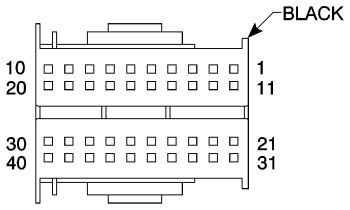

POWERTRAIN CONTROL MODULE – C4

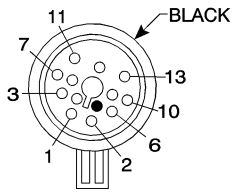

TRANSMISSION SOLENOID ASSEMBLY

8115f541

(P0702) TRANSMISSION CONTROL SYSTEM (MIL REQUEST) — CONTINUED

For a complete Electronic Control Module Circuit Diagram, **Refer to Page 8E-45**.

Diagnostic Test

1. DTC PRESENT IN TRANSMISSION CONTROL MODULE (TCM)

This is an informational DTC letting you know that a DTC(s) is stored in the Transmission Control Module.

Erase this DTC from the PCM after all Transmission DTC(s) have been repaired.

Using the DRB III®, read the Transmission Controller DTC and refer to the Transmission Category and perform the appropriate symptom.

PCM Diagnostic Information complete.

Continue

Test Complete.

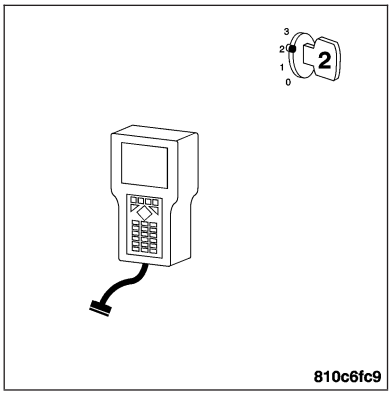

(P0702) LOSS OF TORQUE MANAGEMENT SIGNAL

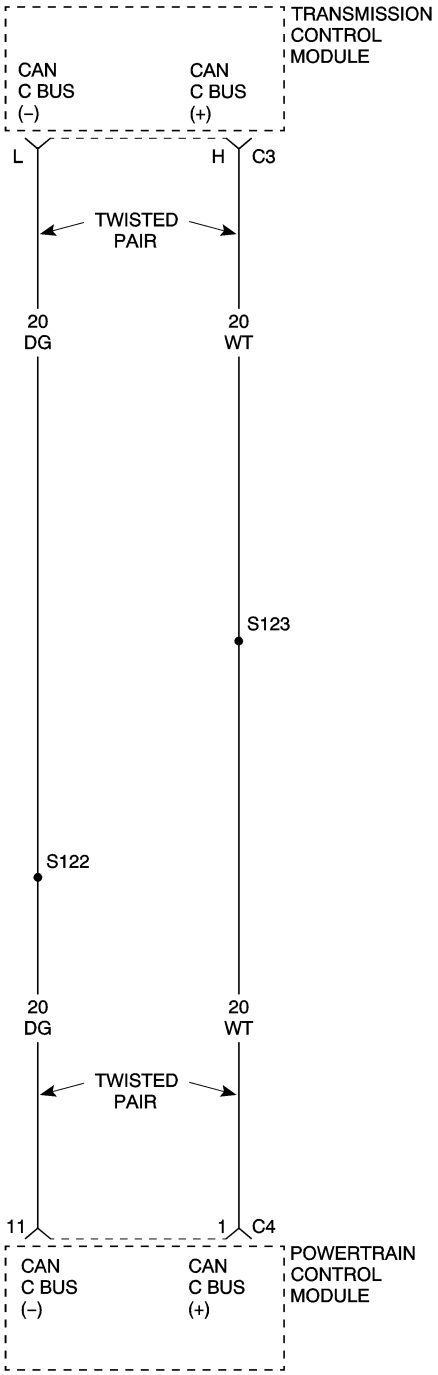

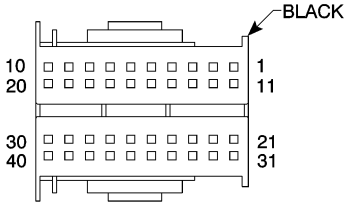

POWERTRAIN CONTROL MODULE – C4

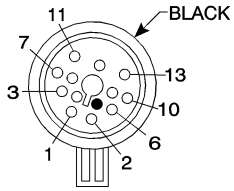

TRANSMISSION SOLENOID ASSEMBLY

8115f541

(P0702) LOSS OF TORQUE MANAGEMENT SIGNAL — CONTINUED

For a complete Electronic Control Module Circuit Diagram, **Refer to Page 8E-45**.

Diagnostic Test

1. DTC PRESENT IN TRANSMISSION CONTROL MODULE (TCM)

This is an informational DTC letting you know that a DTC(s) is stored in the Transmission Control Module.

Erase this DTC from the PCM after all Transmission DTC(s) have been repaired.

Using the DRB III®, read the Transmission Controller DTC and refer to the Transmission Category and perform the appropriate symptom.

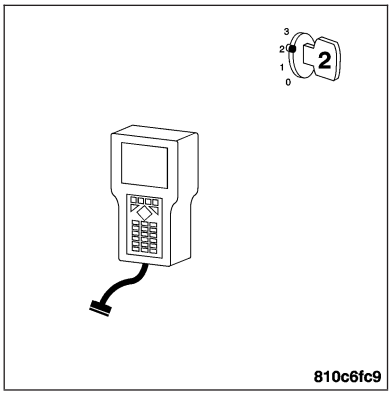

PCM Diagnostic Information complete.

Continue

Test Complete.

(P0702) TCM TORQUE MANAGEMENT REQUEST PERFORMANCE

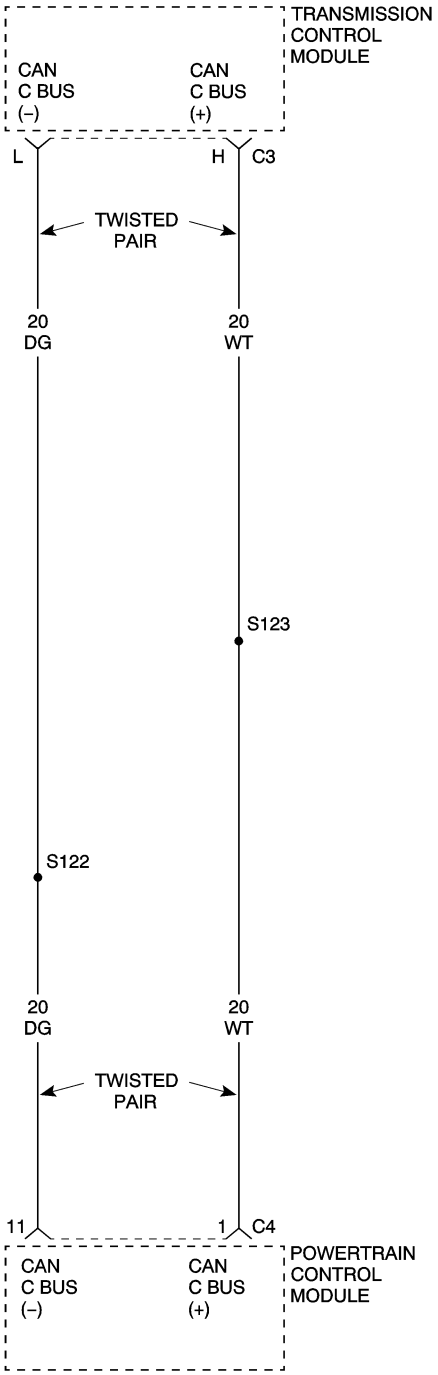

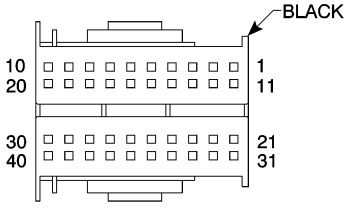

POWERTRAIN CONTROL MODULE – C4

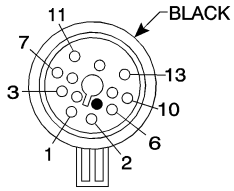

TRANSMISSION SOLENOID ASSEMBLY

8115f541

(P0702) TCM TORQUE MANAGEMENT REQUEST PERFORMANCE — CONTINUED

For a complete Electronic Control Module Circuit Diagram, **Refer to Page 8E-45**.

Diagnostic Test

1. DTC PRESENT IN TRANSMISSION CONTROL MODULE (TCM)

This is an informational DTC letting you know that a DTC(s) is stored in the Transmission Control Module.

Erase this DTC from the PCM after all Transmission DTC(s) have been repaired.

Using the DRB III®, read the Transmission Controller DTC and refer to the Transmission Category and perform the appropriate symptom.

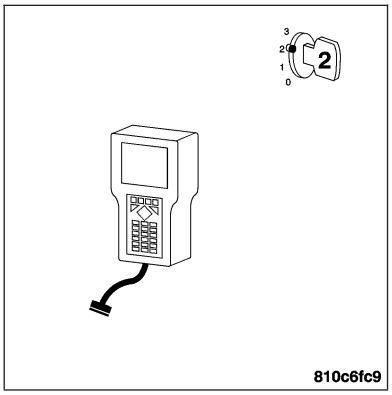

PCM Diagnostic Information complete.

Continue

Test Complete.

(P0705) SLA CONTROL SYSTEM (MIL REQUEST)



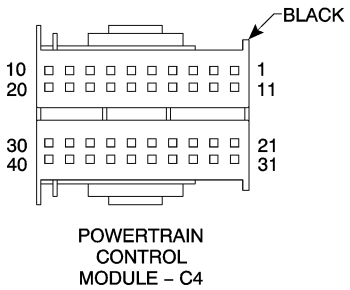

POWERTRAIN
CONTROL
MODULE – C4

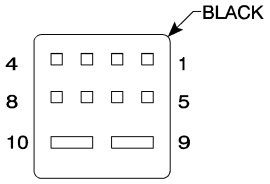

SHIFT
LEVER
ASSEMBLY

8115f52a

(P0705) SLA CONTROL SYSTEM (MIL REQUEST) — CONTINUED

For a complete Electronic Control Module Circuit Diagram, **Refer to Page 8E-45**.

Diagnostic Test

1. DTC PRESENT IN SHIFT LEVER ASSEMBLY (SLA).

This is an informational DTC letting you know that a DTC(s) is stored in the SLA.

Erase this DTC from the PCM after all SLA DTC(s) have been repaired.

Using the DRB III®, read the SLA DTC(s) and refer to the Shift Lever Assembly Category to perform the appropriate symptom.

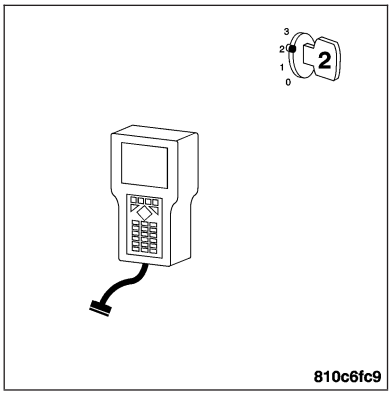

PCM Diagnostic Information complete.

Continue

Test Complete.

(P0705) TRANSMISSION CONTROL SYSTEM (MIL REQUEST)

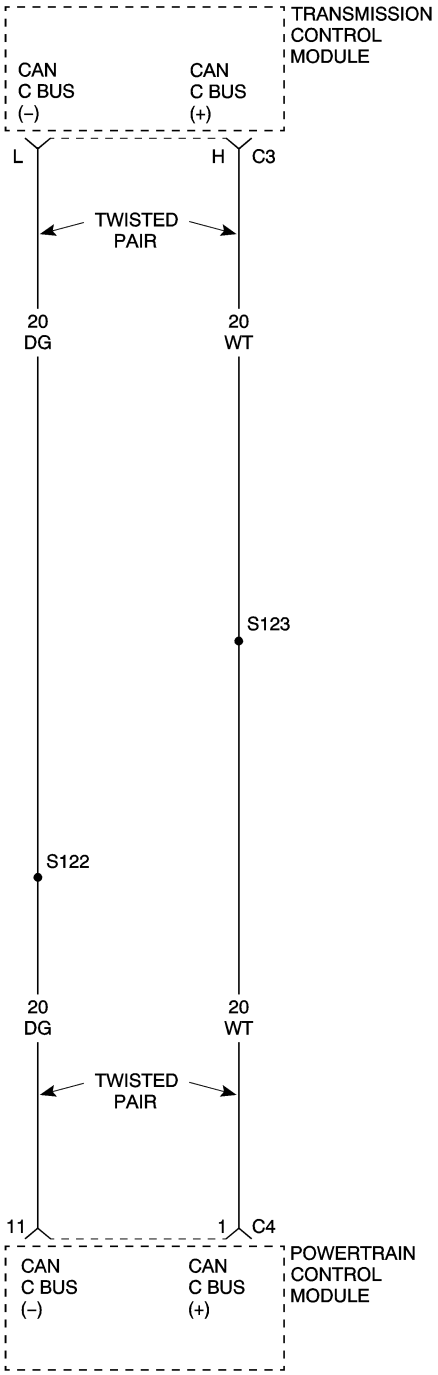

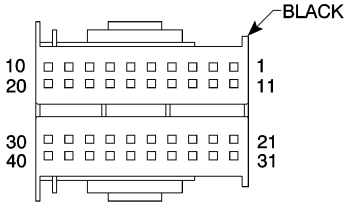

POWERTRAIN CONTROL MODULE – C4

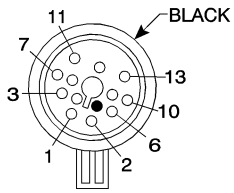

TRANSMISSION SOLENOID ASSEMBLY

8115f541

(P0705) TRANSMISSION CONTROL SYSTEM (MIL REQUEST) — CONTINUED

For a complete Electronic Control Module Circuit Diagram, **Refer to Page 8E-45**.

Diagnostic Test

1. DTC PRESENT IN TRANSMISSION CONTROL MODULE (TCM)

This is an informational DTC letting you know that a DTC(s) is stored in the Transmission Control Module.

Erase this DTC from the PCM after all Transmission DTC(s) have been repaired.

Using the DRB III®, read the Transmission Controller DTC and refer to the Transmission Category and perform the appropriate symptom.

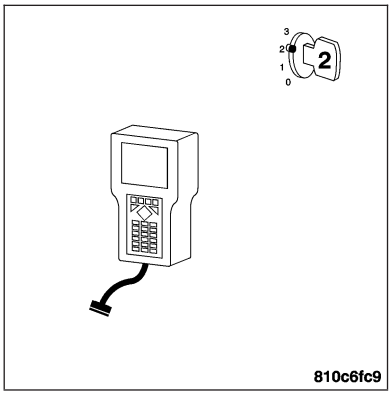

PCM Diagnostic Information complete.

Continue

Test Complete.

(P0715) TRANSMISSION CONTROL SYSTEM (MIL REQUEST)

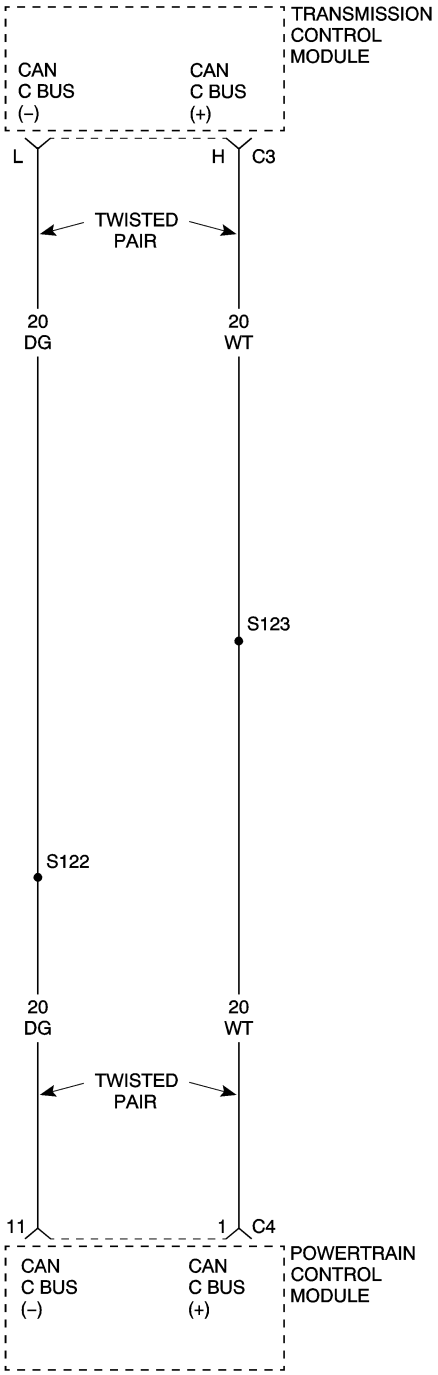

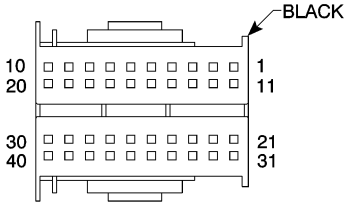

POWERTRAIN CONTROL MODULE – C4

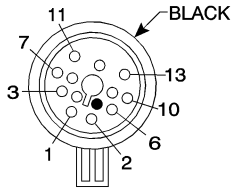

TRANSMISSION SOLENOID ASSEMBLY

8115f541

(P0715) TRANSMISSION CONTROL SYSTEM (MIL REQUEST) — CONTINUED

For a complete Electronic Control Module Circuit Diagram, **Refer to Page 8E-45**.

Diagnostic Test

1. DTC PRESENT IN TRANSMISSION CONTROL MODULE (TCM)

This is an informational DTC letting you know that a DTC(s) is stored in the Transmission Control Module.

Erase this DTC from the PCM after all Transmission DTC(s) have been repaired.

Using the DRB III®, read the Transmission Controller DTC and refer to the Transmission Category and perform the appropriate symptom.

PCM Diagnostic Information complete.

Continue

Test Complete.

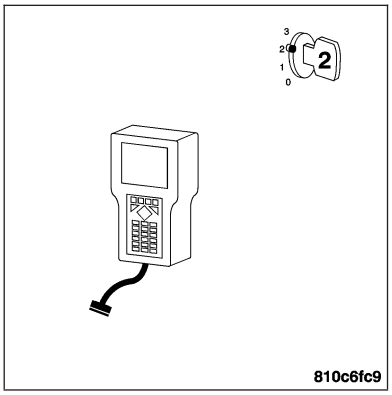

(P0720) TRANSMISSION INCORRECT TORQUE REQUEST FROM ESP

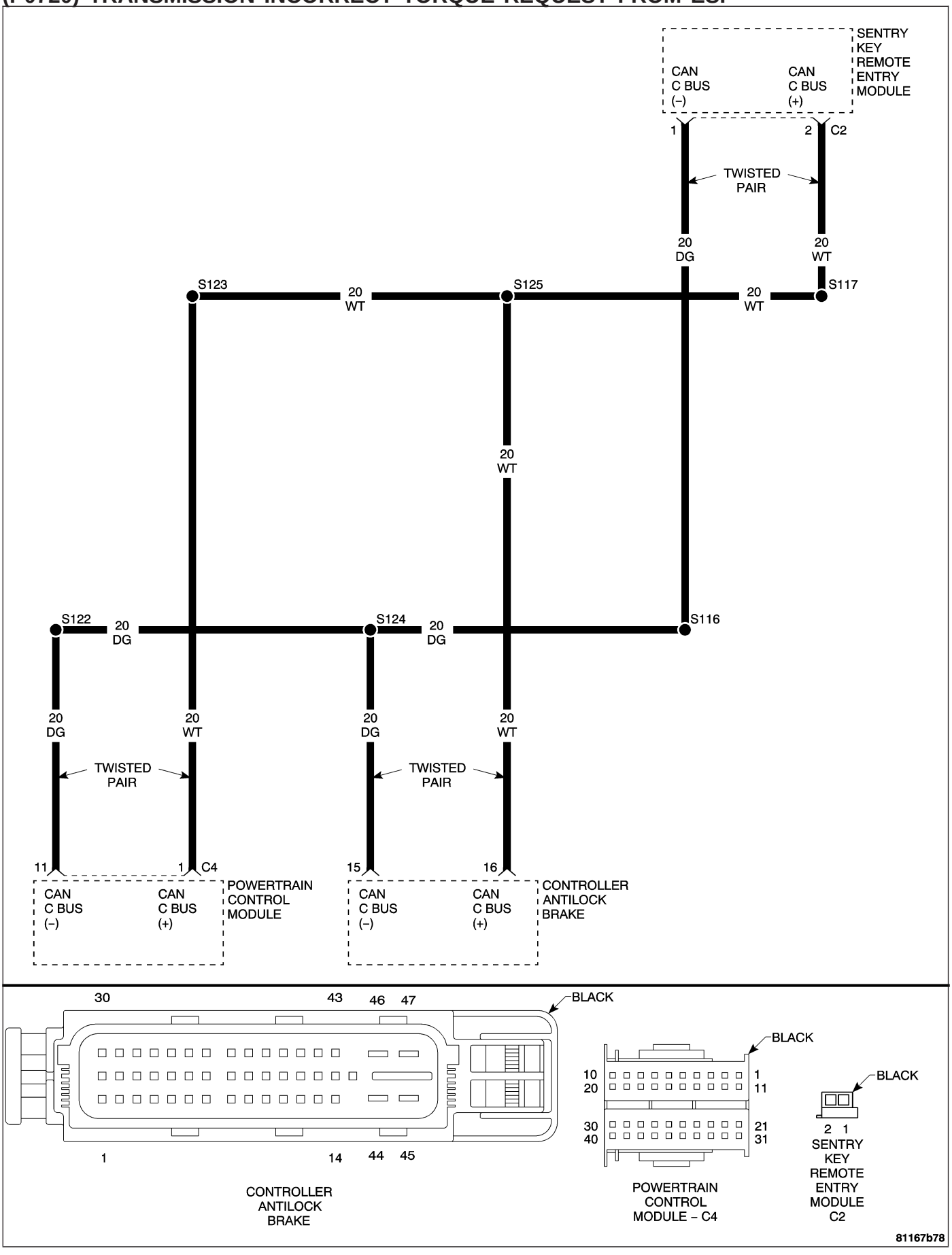

(P0720) TRANSMISSION INCORRECT TORQUE REQUEST FROM ESP — CONTINUED

When Monitored and Set Condition

- When Monitored: With the ignition on.
- Set Condition: This DTC is set when a CAN ID was not received in the required time from the Controller Antilock Brake (CAB).

POSSIBLE CAUSES
OPEN CAN C BUS (+)/(-) CIRCUIT
CAN C BUS (+)/(-) CIRCUIT SHORTED TO GROUND
CAN C BUS (+)/(-) CIRCUIT SHORTED TO VOLTAGE
SENTRY KEY REMOTE ENTRY MODULE
CONTROLLER ANTILOCK BRAKE
POWERTRAIN CONTROL MODULE

For a complete Electronic Control Module Circuit Diagram, **Refer to Page 8E-45**.

Diagnostic Test

1. CHECK TO SEE IF TCM DTCS ARE PRESENT

Turn ignition on.
With the DRB III®, read TCM DTCs.

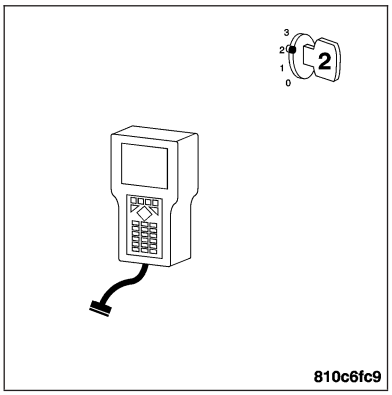

Are any performance or BUS related DTCs present?

Yes >> Repair all TCM DTCs before proceeding.
Perform POWERTRAIN VERIFICATION TEST - VER 2.

No >> Go To 2

2. VERIFY DTCS

With the ignition on.
With the DRB III®, erase DTCs.
Turn the ignition off, then back on.
Monitor the DRB III® for this DTC.

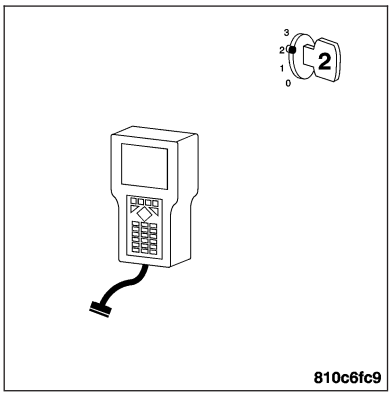

Did the DTC (P0720) TRANSMISSION INCORRECT TORQUE REQUEST FROM ESP set again?

Yes >> Go To 3

No >> Go To 12

(P0720) TRANSMISSION INCORRECT TORQUE REQUEST FROM ESP — CONTINUED

3. PCM AND SKREEM CAN C BUS TERMINATION

Turn the ignition off.

Measure the resistance of the PCM CAN C Bus termination by backprobing the CAN C Bus (+) circuit to the CAN C Bus (-) circuit at the PCM C4 harness connector.

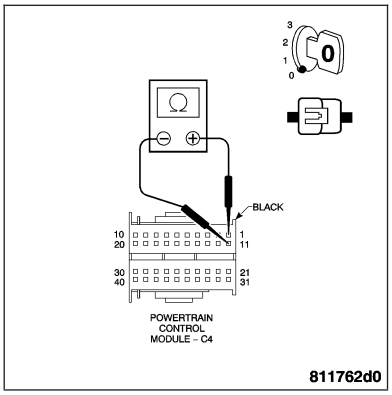

Is the resistance between 50 and 70 ohms?

Yes >> Go To 11

No >> Go To 4

4. PCM CAN C BUS TERMINATION

With the ignition off.

Disconnect the PCM C4 harness connector.

Note: Check connectors — Clean/repair as necessary.

Measure the resistance of the SKREEM CAN C Bus termination by backprobing the CAN C Bus (+) circuit to the CAN C Bus (-) circuit at the PCM C4 harness connector.

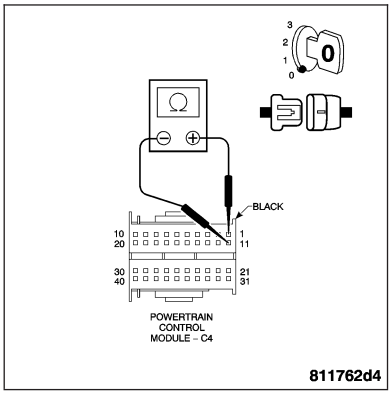

Is the SKREEM CAN C Bus termination resistance between 110 and 130 ohms?

Yes >> Replace and program the Powertrain Control Module. **Refer to Page 8E-56**.
Perform POWERTRAIN VERIFICATION TEST - VER 2.

No >> Go To 5

5. SKREEM TERMINATION

With the ignition off.

Measure the resistance of the SKREEM CAN C Bus termination by backprobing the CAN C Bus (+) circuit to the CAN C Bus (-) circuit at the SKREEM C2 harness connector.

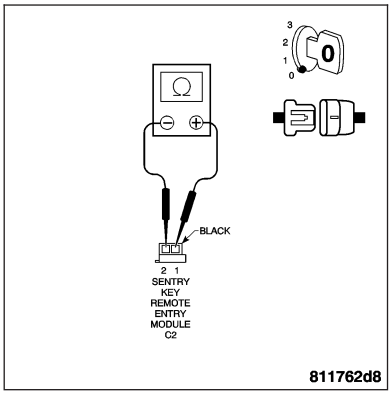

Is the resistance between 110 and 130 ohms?

Yes >> Go To 6

No >> Replace the SKREEM. **Refer to Page 8E-70**.
Perform POWERTRAIN VERIFICATION TEST - VER 2.

(P0720) TRANSMISSION INCORRECT TORQUE REQUEST FROM ESP — CONTINUED

6. CAN C BUS (-) CIRCUIT OPEN

With the ignition off.

Measure the resistance of the CAN C Bus (-) circuit from the SKREEM C2 harness connector to the PCM C4 harness connector.

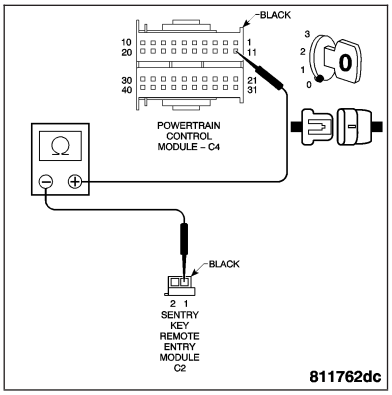

Is the resistance below 5.0 ohms?

Yes >> Go To 7

No >> Repair the CAN C Bus (-) circuit for an open.
Perform POWERTRAIN VERIFICATION TEST - VER 2.

7. CAN C BUS (+) CIRCUIT OPEN

With the ignition off.

Measure the resistance of the CAN C Bus (+) circuit from the PCM C4 harness connector to the SKREEM C2 harness connector.

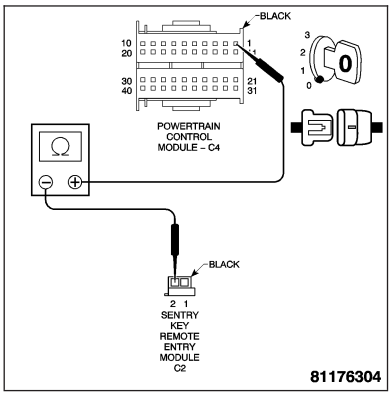

Is the resistance below 5.0 ohms?

Yes >> Go To 8

No >> Repair the CAN C Bus (+) circuit for an open.
Perform POWERTRAIN VERIFICATION TEST - VER 2.

8. CAN C BUS (+) CIRCUIT SHORTED TO VOLTAGE

Turn the ignition on.

Measure the voltage of the CAN C Bus (+) circuit at the PCM C4 harness connector.

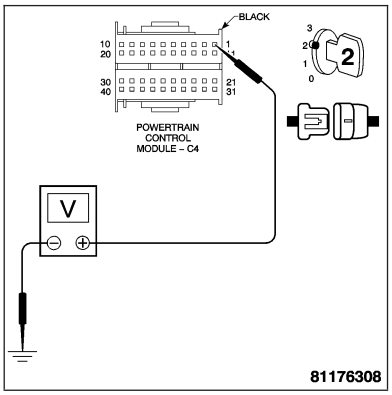

Is the voltage above 1.0 volt?

Yes >> Repair the CAN C Bus (+) circuit for a short to voltage.
Perform POWERTRAIN VERIFICATION TEST - VER 2.

No >> Go To 9

(P0720) TRANSMISSION INCORRECT TORQUE REQUEST FROM ESP — CONTINUED

9. CAN C BUS (-) CIRCUIT SHORTED TO VOLTAGE

With the ignition on.
Measure the voltage of the CAN C Bus (-) circuit at the PCM C4 harness connector.

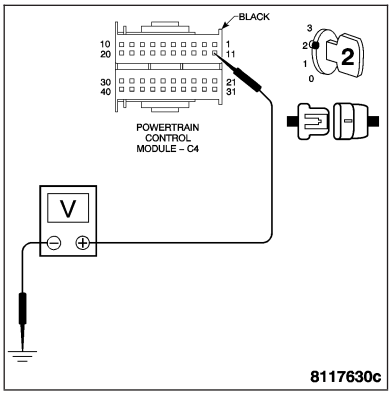

Is the voltage above 1.0 volt?

Yes >> Repair the CAN C Bus (-) circuit for a short to voltage.
Perform POWERTRAIN VERIFICATION TEST - VER 2.

No >> Go To 10

10. CAN C BUS (-) CIRCUIT SHORT TO GROUND

Turn the ignition off.
Measure the resistance between ground and the CAN C Bus (-) circuit.

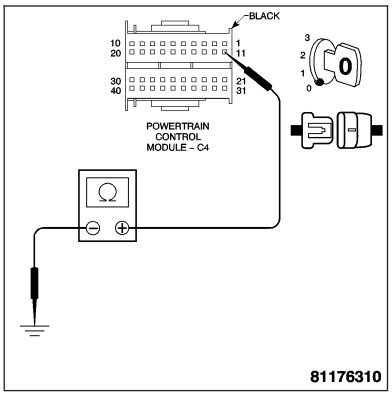

Is the resistance below 100 ohms?

Yes >> Repair the CAN C Bus (-) circuit for a short to ground.
Perform POWERTRAIN VERIFICATION TEST - VER 2.

No >> Repair the CAN C Bus (+) circuit for a short to ground.
Perform POWERTRAIN VERIFICATION TEST - VER 2.

11. CAN C BUS (-) CIRCUIT OPEN FROM TCM TO PCM

With the ignition off.
Disconnect the TCM C3 harness connector.

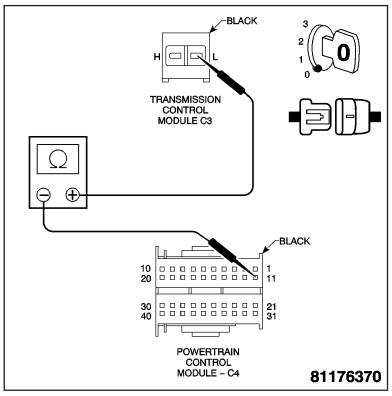

Note: Check connectors — Clean/repair as necessary.
Measure the resistance of the CAN C Bus (-) circuit from the TCM C3 harness connector to the PCM C4 harness connector.

Is the resistance below 5.0 ohms?

Yes >> Repair the CAN C Bus (+) circuit for an open between the PCM C4 harness and the TCM C3 harness connector.
Perform POWERTRAIN VERIFICATION TEST - VER 2.

No >> Repair the CAN C Bus (-) circuit for an open between the PCM C4 harness and the TCM C3 harness connector.
Perform POWERTRAIN VERIFICATION TEST - VER 2.

(P0720) TRANSMISSION INCORRECT TORQUE REQUEST FROM ESP — CONTINUED

12. INTERMITTENT WIRING AND CONNECTORS

The condition that caused this DTC to set is currently not present. Inspect the related wiring harness for a possible intermittent condition.

Note: Check connectors — Clean/repair as necessary. Poor pin to terminal connections can set DTCs.

Note: Check for any Technical Service Bulletins that may apply.
Using the wiring diagram/schematic as a guide, inspect the wiring and connectors specific to this DTC. Wiggle the wires while checking for shorts and/or open circuits.

Were there any problems found?

Yes >> Repair as necessary.
Perform POWERTRAIN VERIFICATION TEST VER.

No >> The condition that caused this DTC to set is currently not present. Inspect the related wiring harness for a possible intermittent condition.

(P0720) TRANSMISSION CONTROL SYSTEM (MIL REQUEST)

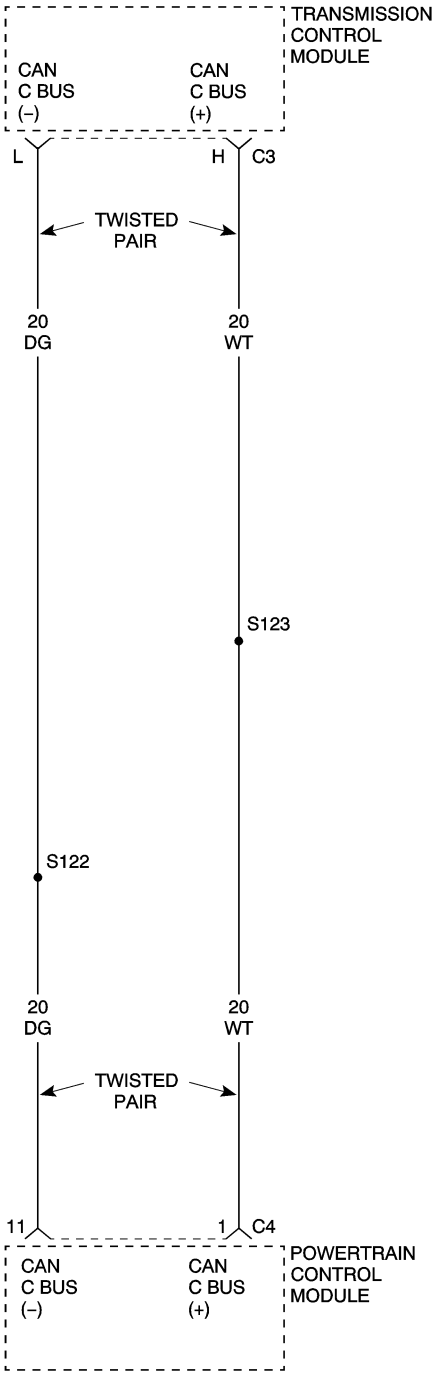

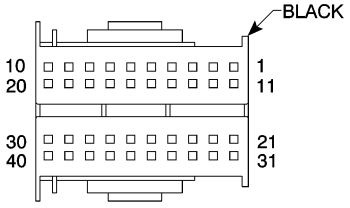

POWERTRAIN CONTROL MODULE – C4

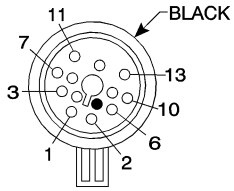

TRANSMISSION SOLENOID ASSEMBLY

8115f541

(P0720) TRANSMISSION CONTROL SYSTEM (MIL REQUEST) — CONTINUED

For a complete Electronic Control Module Circuit Diagram, **Refer to Page 8E-45**.

Diagnostic Test

1. DTC PRESENT IN TRANSMISSION CONTROL MODULE (TCM)

This is an informational DTC letting you know that a DTC(s) is stored in the Transmission Control Module.

Erase this DTC from the PCM after all Transmission DTC(s) have been repaired.

Using the DRB III®, read the Transmission Controller DTC and refer to the Transmission Category and perform the appropriate symptom.

PCM Diagnostic Information complete.

Continue

Test Complete.

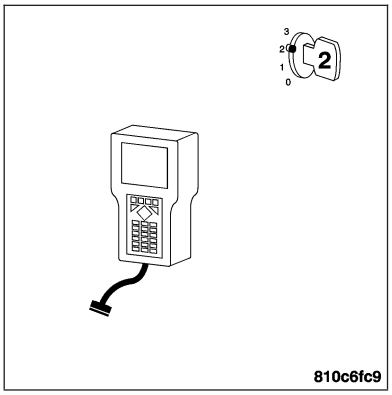

(P0730) TRANSMISSION CONTROL SYSTEM (MIL REQUEST)

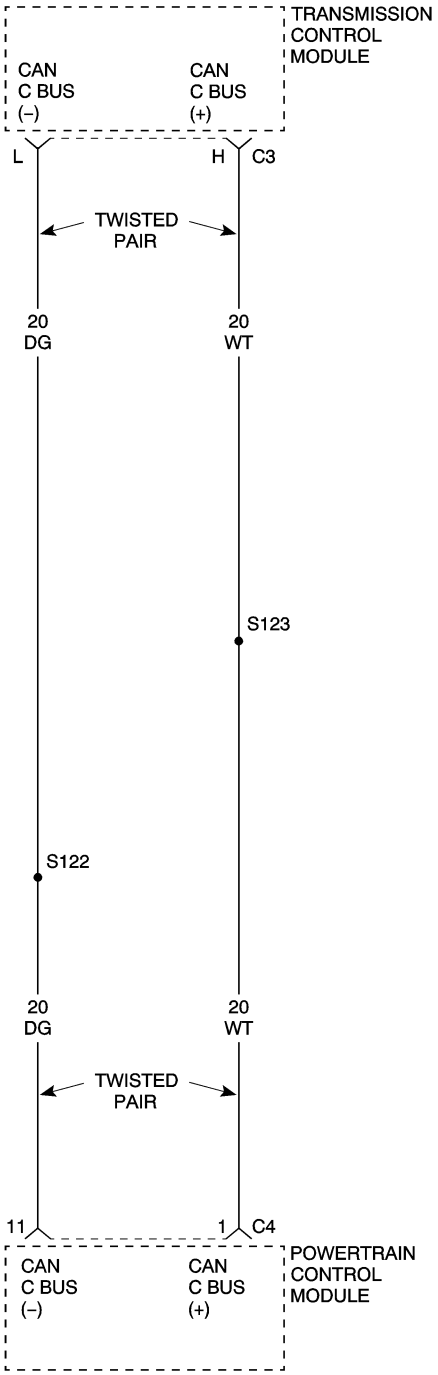

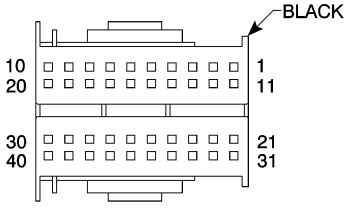

POWERTRAIN CONTROL MODULE – C4

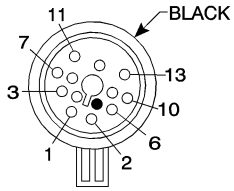

TRANSMISSION SOLENOID ASSEMBLY

8115f541

(P0730) TRANSMISSION CONTROL SYSTEM (MIL REQUEST) — CONTINUED

For a complete Electronic Control Module Circuit Diagram, **Refer to Page 8E-45**.

Diagnostic Test

1. DTC PRESENT IN TRANSMISSION CONTROL MODULE (TCM)

This is an informational DTC letting you know that a DTC(s) is stored in the Transmission Control Module.

Erase this DTC from the PCM after all Transmission DTC(s) have been repaired.

Using the DRB III®, read the Transmission Controller DTC and refer to the Transmission Category and perform the appropriate symptom.

PCM Diagnostic Information complete.

Continue

Test Complete.

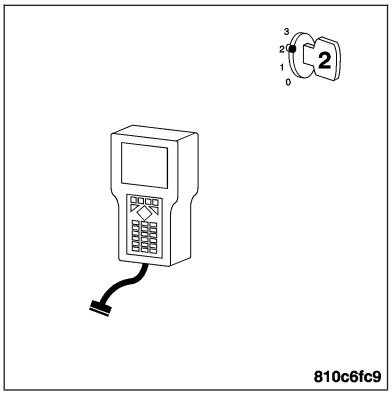

(P0740) TRANSMISSION CONTROL SYSTEM (MIL REQUEST)

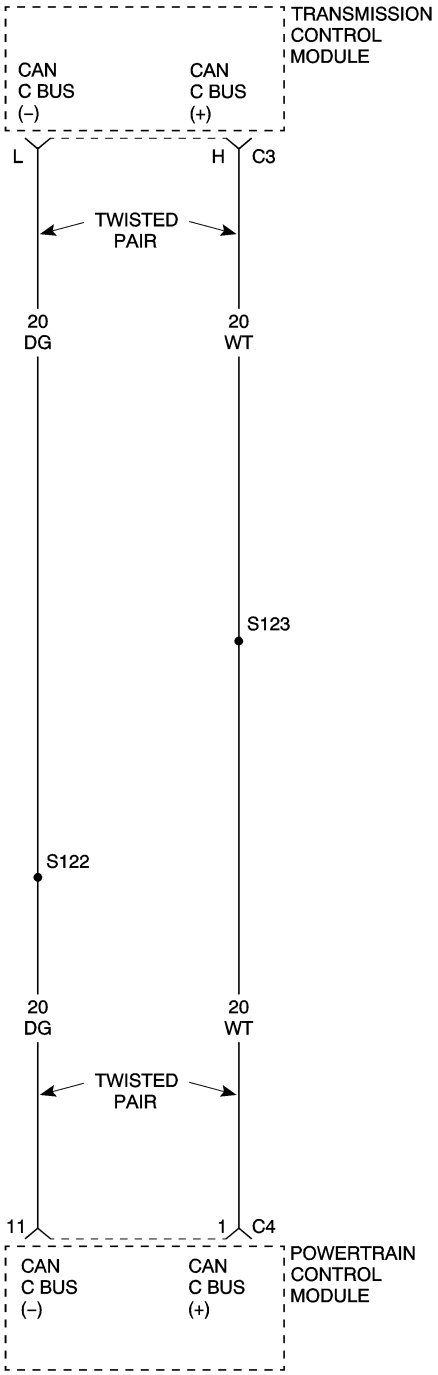

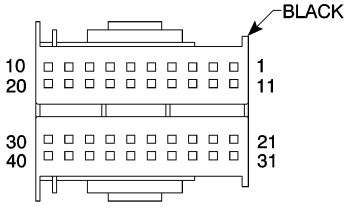

POWERTRAIN CONTROL MODULE – C4

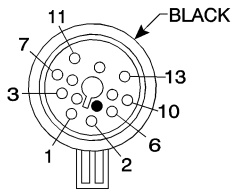

TRANSMISSION SOLENOID ASSEMBLY

8115f541

(P0740) TRANSMISSION CONTROL SYSTEM (MIL REQUEST) — CONTINUED

For a complete Electronic Control Module Circuit Diagram, **Refer to Page 8E-45**.

Diagnostic Test

1. DTC PRESENT IN TRANSMISSION CONTROL MODULE (TCM)

This is an informational DTC letting you know that a DTC(s) is stored in the Transmission Control Module.

Erase this DTC from the PCM after all Transmission DTC(s) have been repaired.

Using the DRB III®, read the Transmission Controller DTC and refer to the Transmission Category and perform the appropriate symptom.

PCM Diagnostic Information complete.

Continue

Test Complete.

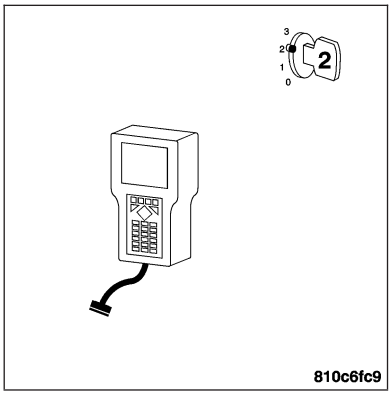

(P0743) TRANSMISSION CONTROL SYSTEM (MIL REQUEST)

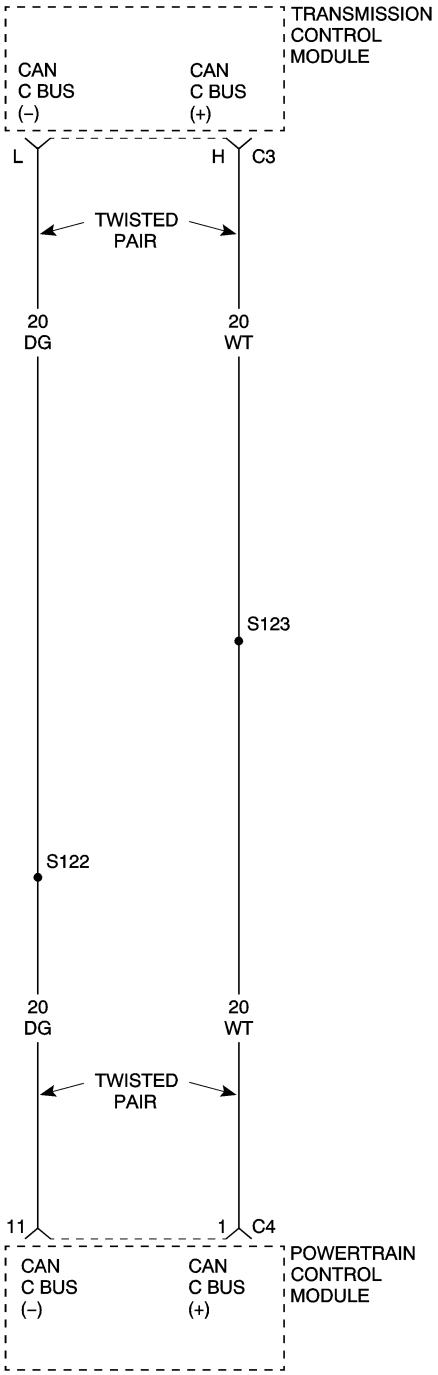

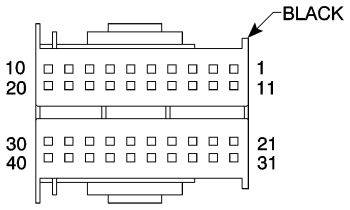

POWERTRAIN CONTROL MODULE – C4

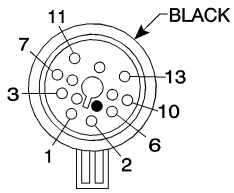

TRANSMISSION SOLENOID ASSEMBLY

8115f541

(P0743) TRANSMISSION CONTROL SYSTEM (MIL REQUEST) — CONTINUED

For a complete Electronic Control Module Circuit Diagram, **Refer to Page 8E-45**.

Diagnostic Test

1. DTC PRESENT IN TRANSMISSION CONTROL MODULE (TCM)

This is an informational DTC letting you know that a DTC(s) is stored in the Transmission Control Module.

Erase this DTC from the PCM after all Transmission DTC(s) have been repaired.

Using the DRB III®, read the Transmission Controller DTC and refer to the Transmission Category and perform the appropriate symptom.

PCM Diagnostic Information complete.

Continue

Test Complete.

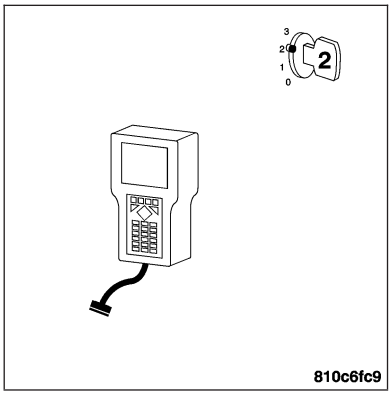

(P0748) TRANSMISSION CONTROL SYSTEM (MIL REQUEST)

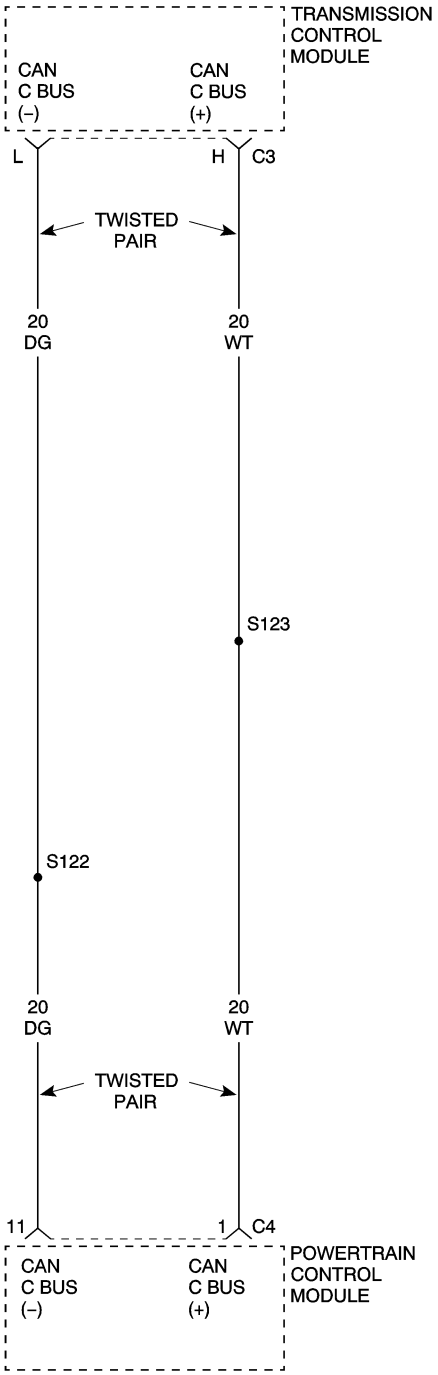

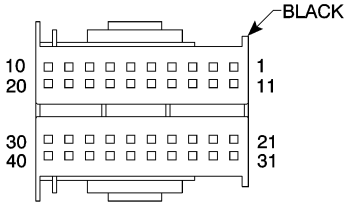

POWERTRAIN CONTROL MODULE – C4

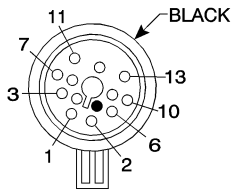

TRANSMISSION SOLENOID ASSEMBLY

8115f541

(P0748) TRANSMISSION CONTROL SYSTEM (MIL REQUEST) — CONTINUED

For a complete Electronic Control Module Circuit Diagram, **Refer to Page 8E-45**.

Diagnostic Test

1. DTC PRESENT IN TRANSMISSION CONTROL MODULE (TCM)

This is an informational DTC letting you know that a DTC(s) is stored in the Transmission Control Module.

Erase this DTC from the PCM after all Transmission DTC(s) have been repaired.

Using the DRB III®, read the Transmission Controller DTC and refer to the Transmission Category and perform the appropriate symptom.

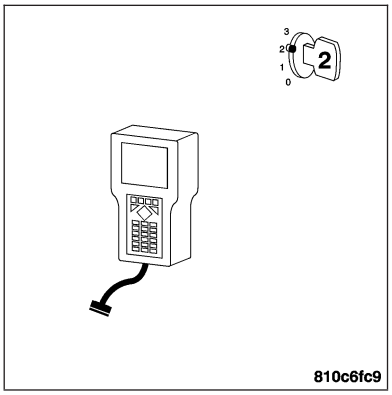

PCM Diagnostic Information complete.

Continue

Test Complete.

(P0753) TRANSMISSION CONTROL SYSTEM (MIL REQUEST)

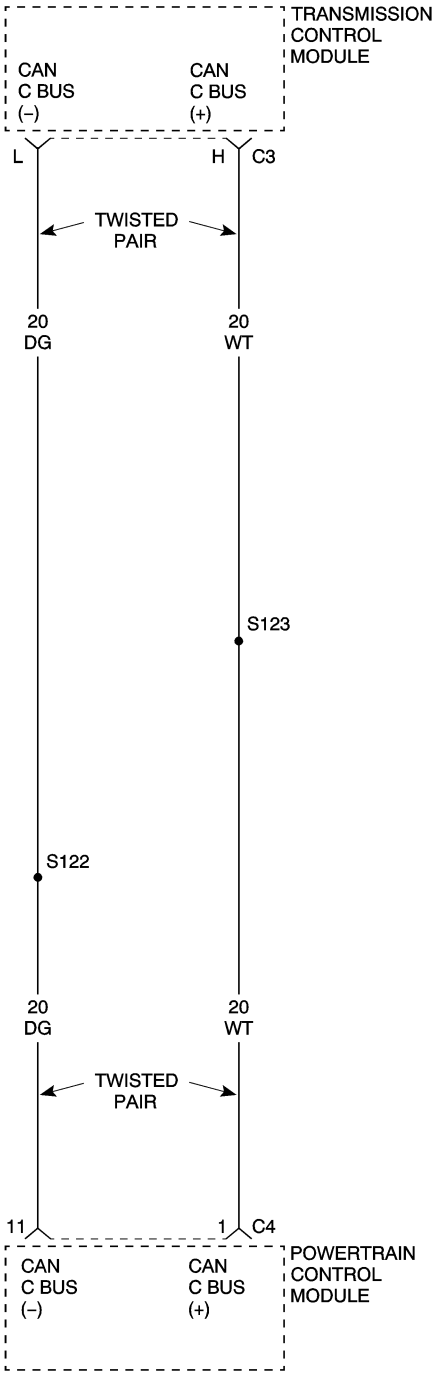

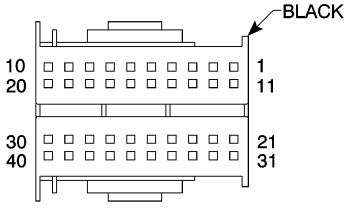

POWERTRAIN CONTROL MODULE – C4

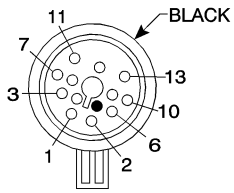

TRANSMISSION SOLENOID ASSEMBLY

8115f541

(P0753) TRANSMISSION CONTROL SYSTEM (MIL REQUEST) — CONTINUED

For a complete Electronic Control Module Circuit Diagram, **Refer to Page 8E-45**.

Diagnostic Test

1. DTC PRESENT IN TRANSMISSION CONTROL MODULE (TCM)

This is an informational DTC letting you know that a DTC(s) is stored in the Transmission Control Module.

Erase this DTC from the PCM after all Transmission DTC(s) have been repaired.

Using the DRB III®, read the Transmission Controller DTC and refer to the Transmission Category and perform the appropriate symptom.

PCM Diagnostic Information complete.

Continue

Test Complete.

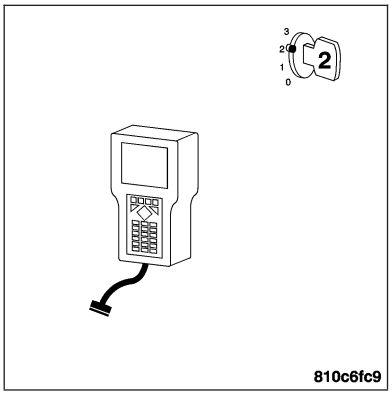

(P0758) TRANSMISSION CONTROL SYSTEM (MIL REQUEST)

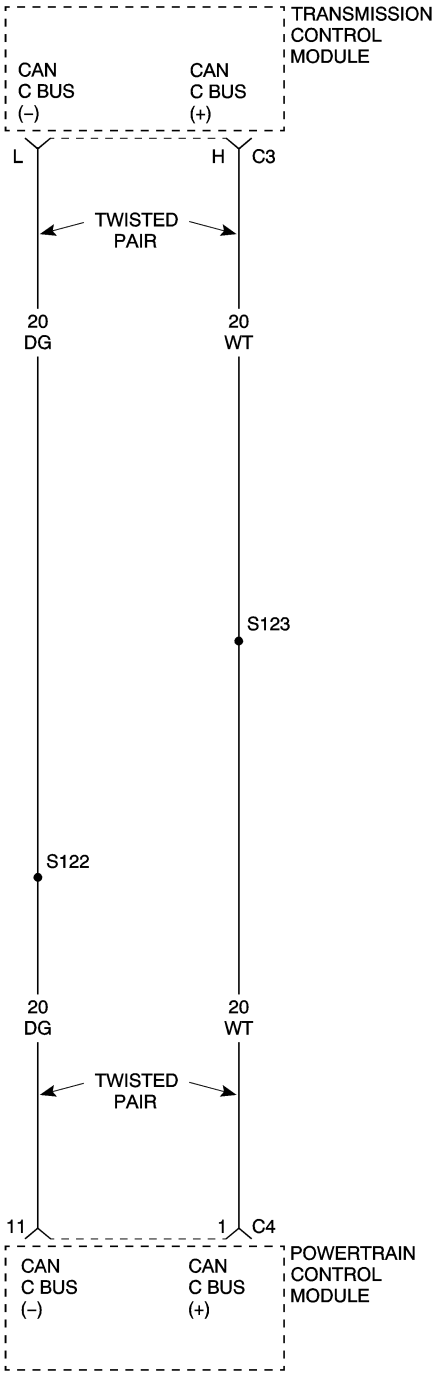

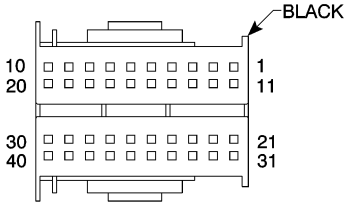

POWERTRAIN CONTROL MODULE – C4

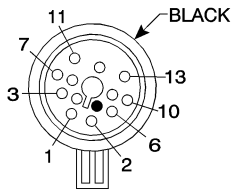

TRANSMISSION SOLENOID ASSEMBLY

8115f541

(P0758) TRANSMISSION CONTROL SYSTEM (MIL REQUEST) — CONTINUED

For a complete Electronic Control Module Circuit Diagram, **Refer to Page 8E-45**.

Diagnostic Test

1. DTC PRESENT IN TRANSMISSION CONTROL MODULE (TCM)

This is an informational DTC letting you know that a DTC(s) is stored in the Transmission Control Module.

Erase this DTC from the PCM after all Transmission DTC(s) have been repaired.

Using the DRB III®, read the Transmission Controller DTC and refer to the Transmission Category and perform the appropriate symptom.

PCM Diagnostic Information complete.

Continue

Test Complete.

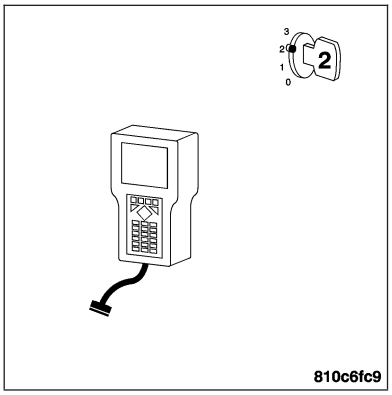

(P0763) TRANSMISSION CONTROL SYSTEM (MIL REQUEST)

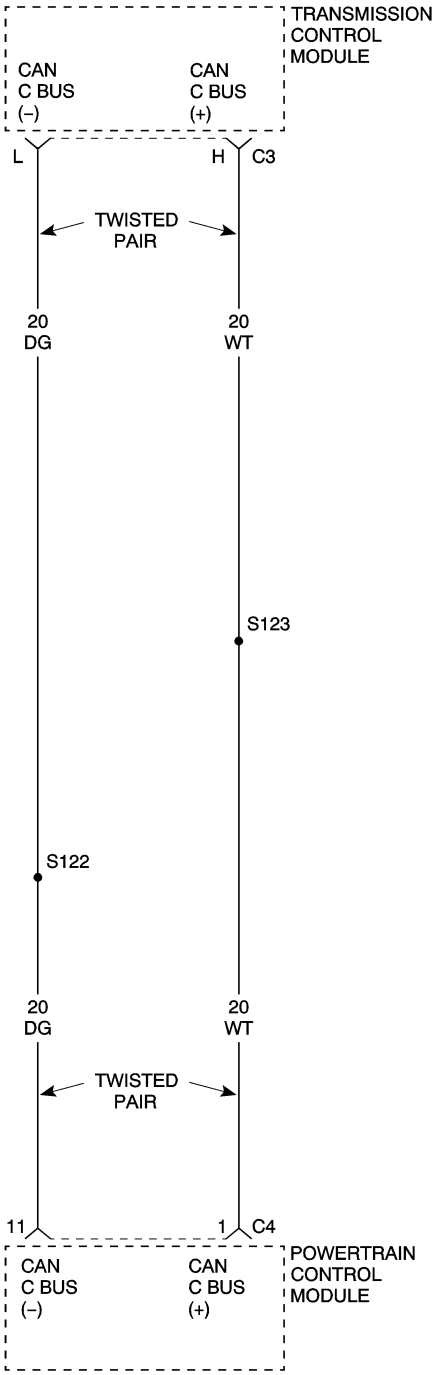

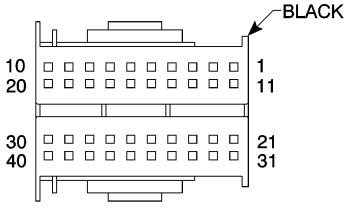

POWERTRAIN CONTROL MODULE – C4

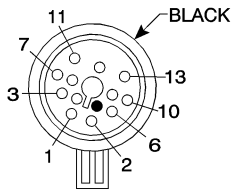

TRANSMISSION SOLENOID ASSEMBLY

8115f541

(P0763) TRANSMISSION CONTROL SYSTEM (MIL REQUEST) — CONTINUED

For a complete Electronic Control Module Circuit Diagram, **Refer to Page 8E-45**.

Diagnostic Test

1. DTC PRESENT IN TRANSMISSION CONTROL MODULE (TCM)

This is an informational DTC letting you know that a DTC(s) is stored in the Transmission Control Module.

Erase this DTC from the PCM after all Transmission DTC(s) have been repaired.

Using the DRB III®, read the Transmission Controller DTC and refer to the Transmission Category and perform the appropriate symptom.

PCM Diagnostic Information complete.

Continue

Test Complete.

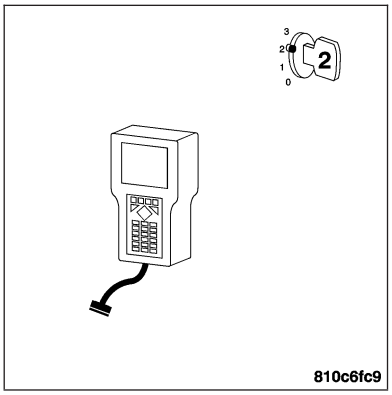

(P1386) KNOCK SENSOR SYSTEM FAILURE

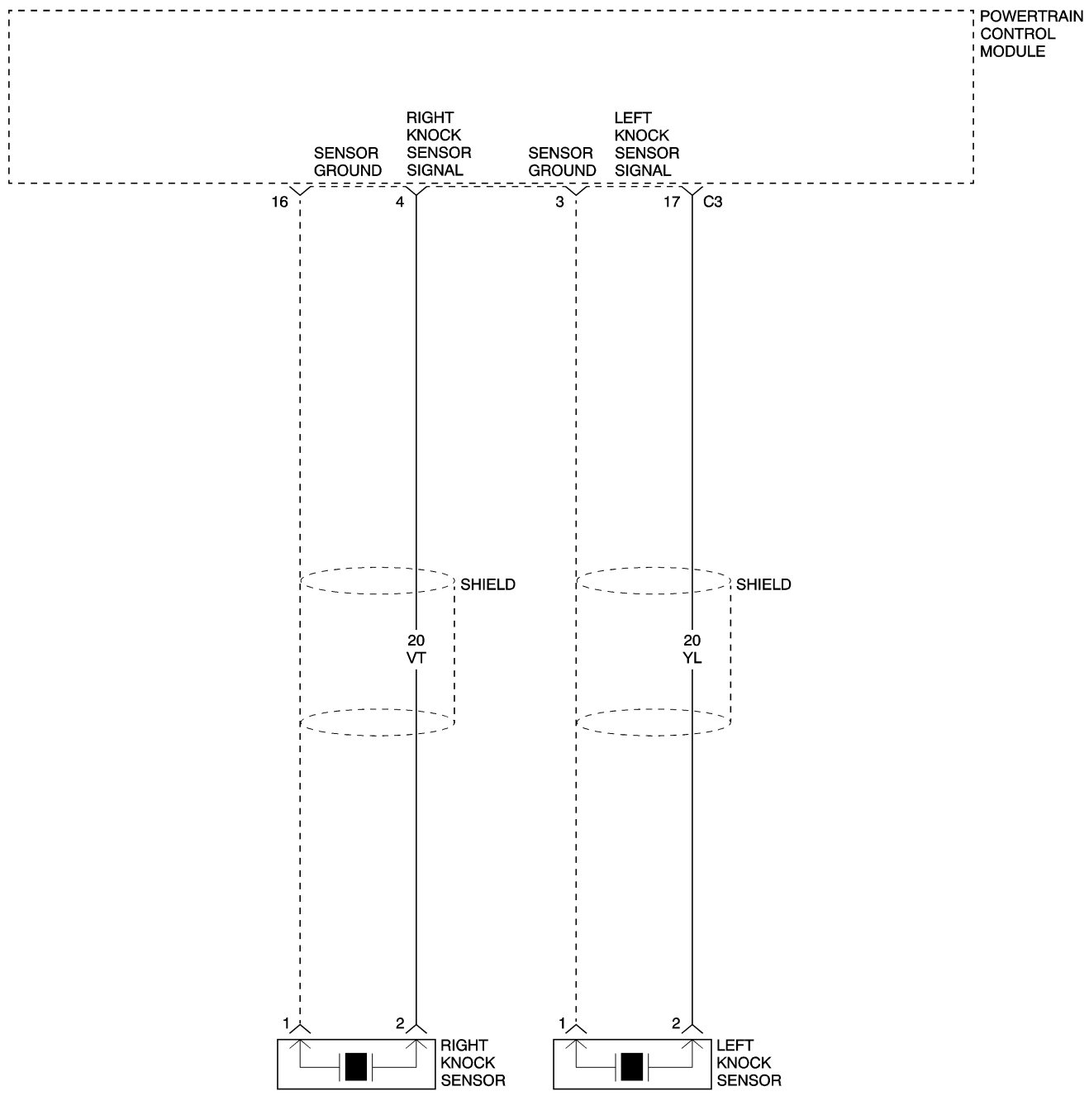

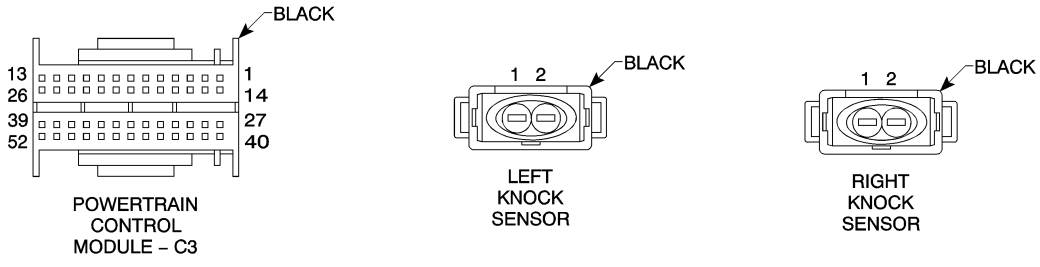

8115926c

(P1386) KNOCK SENSOR SYSTEM FAILURE — CONTINUED

When Monitored and Set Condition

- When Monitored: After the Anti-knock control is shut off and the engine is at operating temperature.
- Set Condition: The Anti-knock control test has failed Ten consecutive times in a row.

POSSIBLE CAUSES
POWERTRAIN CONTROL MODULE

For a complete Powertrain Control Module Circuit Diagram, **Refer to Page 9-574**.

Diagnostic Test

1. CHECK PCM FOR INTERNAL FAILURE DTC

Note: This DTC will not turn on the Check Engine light.
Turn the ignition on.
With the DRB III®, erase DTCs.
Turn the ignition off, then back on.
Monitor the DRB III® for this DTC.
With the DRB III®, read DTCs.

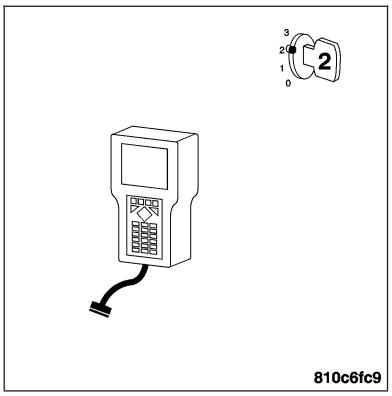

Did the DTC (P1386) KNOCK SENSOR SYSTEM FAILURE set again?

Yes >> Replace and program the Powertrain Control Module. **Refer to Page 8E-56**.
Perform POWERTRAIN VERIFICATION TEST - VER 2.

No >> Go To 2

2. INTERMITTENT WIRING AND CONNECTORS

The condition that caused this DTC to set is currently not present. Inspect the related wiring harness for a possible intermittent condition.

Note: Check connectors — Clean/repair as necessary. Poor pin to terminal connections can set DTCs.

Note: Check for any Technical Service Bulletins that may apply.
Using the wiring diagram/schematic as a guide, inspect the wiring and connectors specific to this DTC. Wiggle the wires while checking for shorts and/or open circuits.

Were there any problems found?

Yes >> Repair as necessary.
Perform POWERTRAIN VERIFICATION TEST VER.

No >> The condition that caused this DTC to set is currently not present. Inspect the related wiring harness for a possible intermittent condition.

(P1600) ROUGH ROAD DETECTED

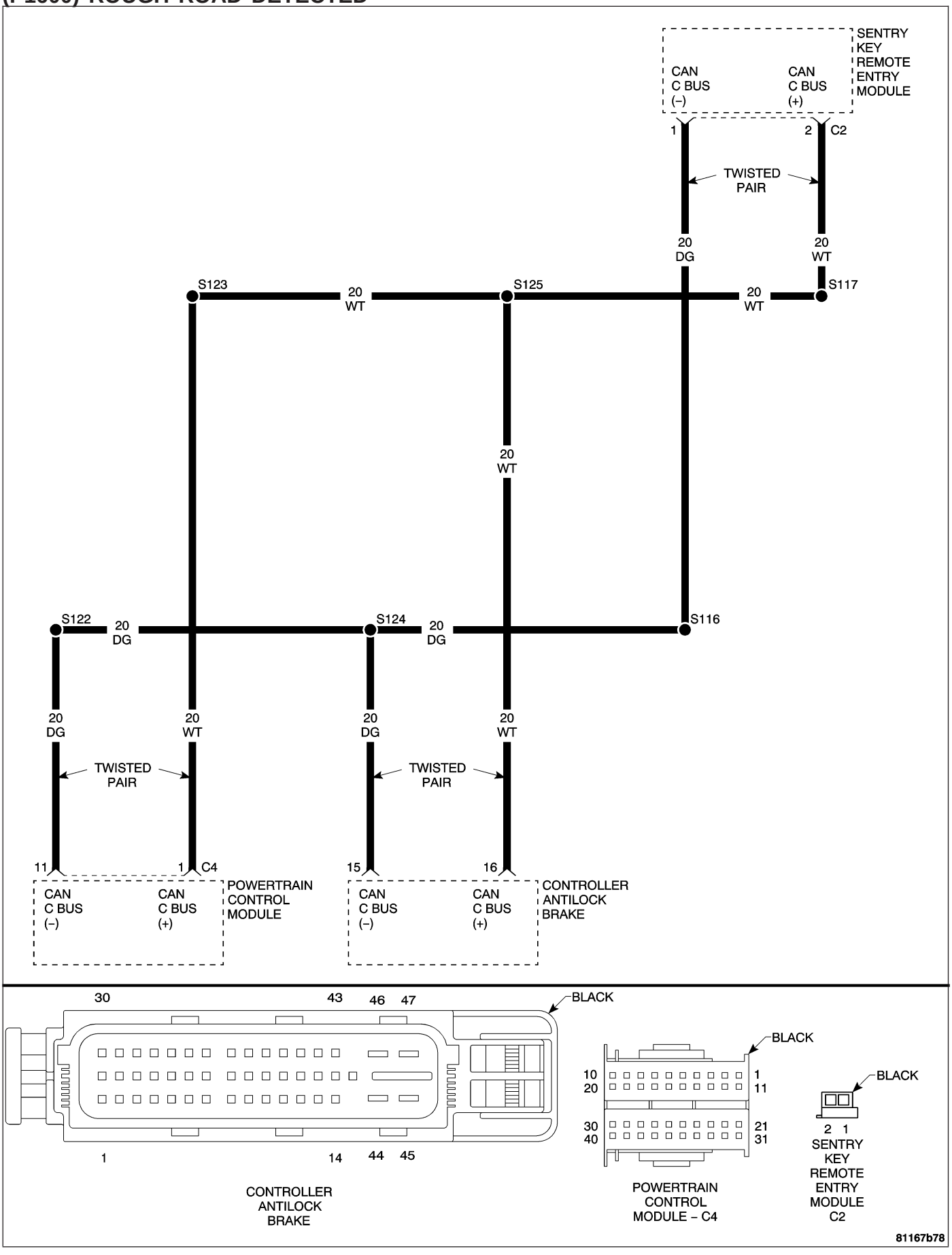

(P1600) ROUGH ROAD DETECTED — CONTINUED

When Monitored and Set Condition

- When Monitored: With the ignition on.
- Set Condition: This DTC is set when a CAN ID was not received in the required time from the CAB.

POSSIBLE CAUSES
CAN C BUS (+)/(-) CIRCUIT OPEN
CAN C BUS (+)/(-) CIRCUIT SHORTED TO GROUND
CAN C BUS (+)/(-) CIRCUIT SHORTED TO VOLTAGE
SENTRY KEY REMOTE ENTRY MODULE (SKREEM)
CONTROLLER ANTILOCK BRAKE
POWERTRAIN CONTROL MODULE

For a complete Electronic Control Module Circuit Diagram, **Refer to Page 8E-45**.

Diagnostic Test

1. CHECK TO SEE IF CAB DTCS ARE PRESENT

Turn ignition on.
With the DRB III®, read CAB DTCs.

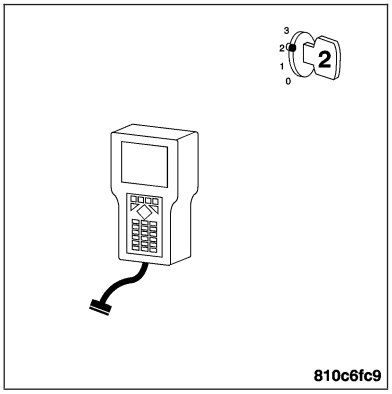

Are any performance or BUS related DTCs present?

Yes >> Repair all CAB DTCs before proceeding.
Perform POWERTRAIN VERIFICATION TEST - VER 2.

No >> Go To 2

2. VERIFY DTCS

With the ignition on.
With the DRB III®, erase DTCs.
Turn the ignition off, then back on.
Monitor the DRB III® for this DTC.

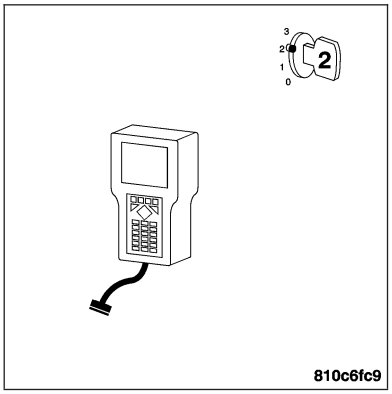

Did the DTC (P1600) ROUGH ROAD DETECTED set again?

Yes >> Go To 3

No >> Go To 12

(P1600) ROUGH ROAD DETECTED — CONTINUED

3. PCM AND SKREEM CAN BUS TERMINATION

Turn the ignition off.

Measure the resistance of the PCM CAN C Bus termination by backprobing the CAN C Bus (+) circuit to the CAN C Bus (-) circuit at the PCM C4 harness connector.

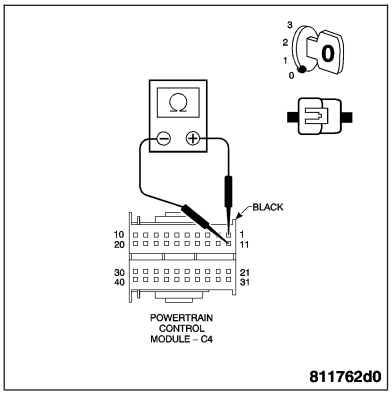

Is the resistance between 50 and 70 ohms?

Yes >> Go To 11

No >> Go To 4

4. PCM CAN BUS TERMINATION

With the ignition off.

Disconnect the PCM C4 harness connector.

Note: Check connectors — Clean/repair as necessary.

Measure the resistance of the SKREEM CAN C Bus termination by backprobing the CAN C Bus (+) circuit to the CAN C Bus (-) circuit at the PCM C4 harness connector.

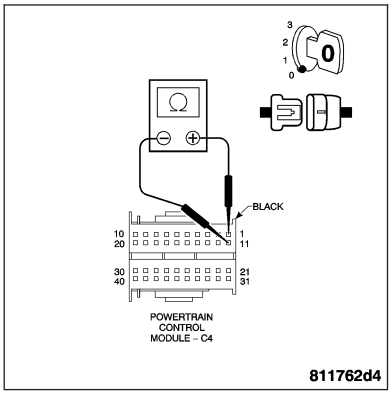

Is the SKREEM CAN C Bus termination resistance between 110 and 130 ohms?

Yes >> Replace and program the Powertrain Control Module. **Refer to Page 8E-56**.
Perform POWERTRAIN VERIFICATION TEST - VER 2.

No >> Go To 5

5. SKREEM TERMINATION

With the ignition off.

Measure the resistance of the SKREEM CAN C Bus termination by backprobing the CAN C Bus (+) circuit to the CAN C Bus (-) circuit at the SKREEM C2 harness connector.

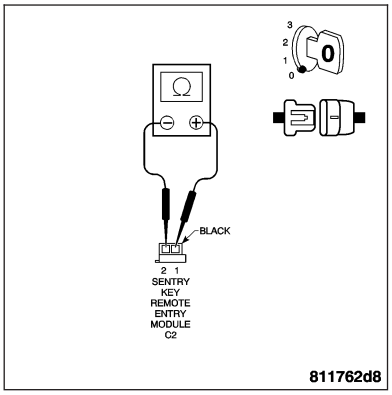

Is the resistance between 110 and 130 ohms?

Yes >> Go To 6

No >> Replace the SKREEM. **Refer to Page 8E-70**.
Perform POWERTRAIN VERIFICATION TEST - VER 2.

(P1600) ROUGH ROAD DETECTED — CONTINUED

6. CAN BUS (-) CIRCUIT OPEN

With the ignition off.

Measure the resistance of the CAN C Bus (-) circuit from the SKREEM C2 harness connector to the PCM C4 harness connector.

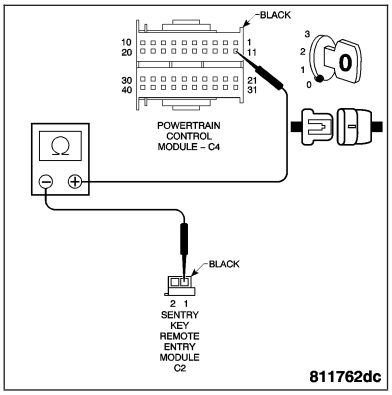

Is the resistance below 5.0 ohms?

Yes >> Go To 7

No >> Repair the CAN C Bus (-) circuit for an open. Perform POWERTRAIN VERIFICATION TEST - VER 2.

7. CAN C BUS (+) CIRCUIT OPEN

With the ignition off.

Measure the resistance of the CAN C Bus (+) circuit from the PCM C4 harness connector to the SKREEM C2 harness connector.

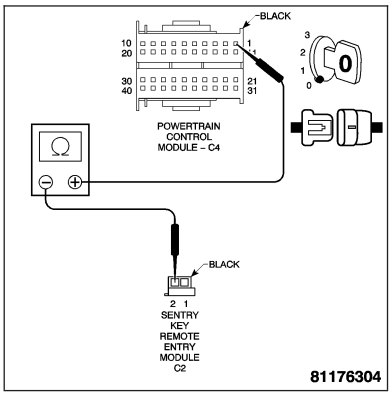

Is the resistance below 5.0 ohms?

Yes >> Go To 8

No >> Repair the CAN C Bus (+) circuit for an open. Perform POWERTRAIN VERIFICATION TEST - VER 2.

8. CAN C BUS (+) CIRCUIT SHORTED TO VOLTAGE

Turn the ignition on.

Measure the voltage of the CAN C Bus (+) circuit at the PCM C4 harness connector.

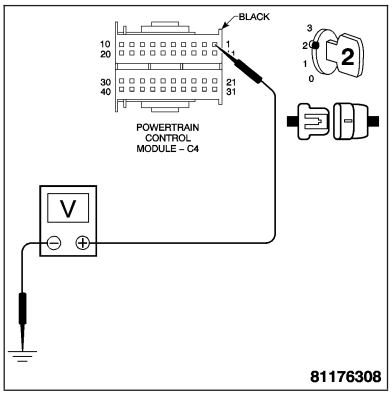

Is the voltage above 1.0 volt?

Yes >> Repair the CAN C Bus (+) circuit for a short to voltage. Perform POWERTRAIN VERIFICATION TEST - VER 2.

No >> Go To 9

(P1600) ROUGH ROAD DETECTED — CONTINUED

9. CAN C BUS (-) CIRCUIT SHORTED TO VOLTAGE

With the ignition on.
Measure the voltage of the CAN C Bus (-) circuit at the PCM C4 harness connector.

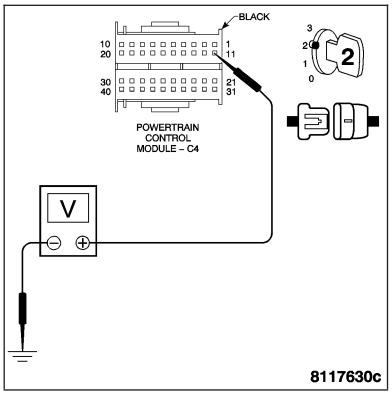

Is the voltage above 1.0 volt?

Yes >> Repair the CAN C Bus (-) circuit for a short to voltage. Perform POWERTRAIN VERIFICATION TEST - VER 2.

No >> Go To 10

10. CAN C BUS (-) CIRCUIT SHORT TO GROUND

Turn the ignition off.
Measure the resistance between ground and the CAN C Bus (-) circuit.

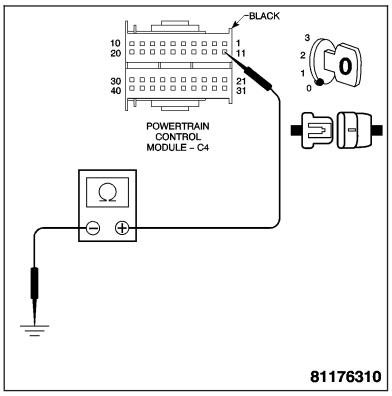

Is the resistance below 100 ohms?

Yes >> Repair the CAN C Bus (-) circuit for a short to ground. Perform POWERTRAIN VERIFICATION TEST - VER 2.

No >> Repair the CAN C Bus (+) circuit for a short to ground. Perform POWERTRAIN VERIFICATION TEST - VER 2.

11. CAN C BUS (-) CIRCUIT OPEN FROM CAB TO PCM

With the ignition off.
Disconnect the CAB harness connector.

Note: Check connectors — Clean/repair as necessary.
Measure the resistance of the CAN C Bus (-) circuit from the CAB harness connector to the PCM C4 harness connector.

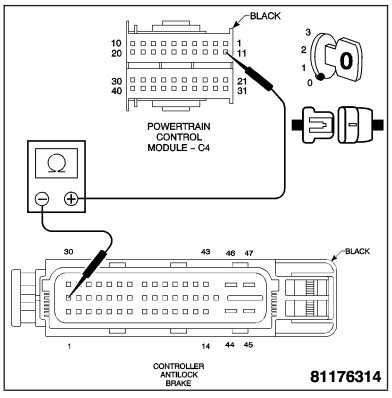

Is the resistance below 5.0 ohms?

Yes >> Repair the CAN C Bus (+) circuit for an open between the PCM C4 harness and the CAB harness connector. Perform POWERTRAIN VERIFICATION TEST - VER 2.

No >> Repair the CAN C Bus (-) circuit for an open between the PCM C4 harness and the CAB harness connector. Perform POWERTRAIN VERIFICATION TEST - VER 2.

(P1600) ROUGH ROAD DETECTED — CONTINUED

12. INTERMITTENT WIRING AND CONNECTORS

The condition that caused this DTC to set is currently not present. Inspect the related wiring harness for a possible intermittent condition.

Note: Check connectors — Clean/repair as necessary. Poor pin to terminal connections can set DTCs.

Note: Check for any Technical Service Bulletins that may apply.
Using the wiring diagram/schematic as a guide, inspect the wiring and connectors specific to this DTC. Wiggle the wires while checking for shorts and/or open circuits.

Were there any problems found?

Yes >> Repair as necessary.
Perform POWERTRAIN VERIFICATION TEST - VER 2.

No >> The condition that caused this DTC to set is currently not present. Inspect the related wiring harness for a possible intermittent condition.

(P2513) ENHANCED ACCIDENT REPORT DRIVER CIRCUIT HIGH

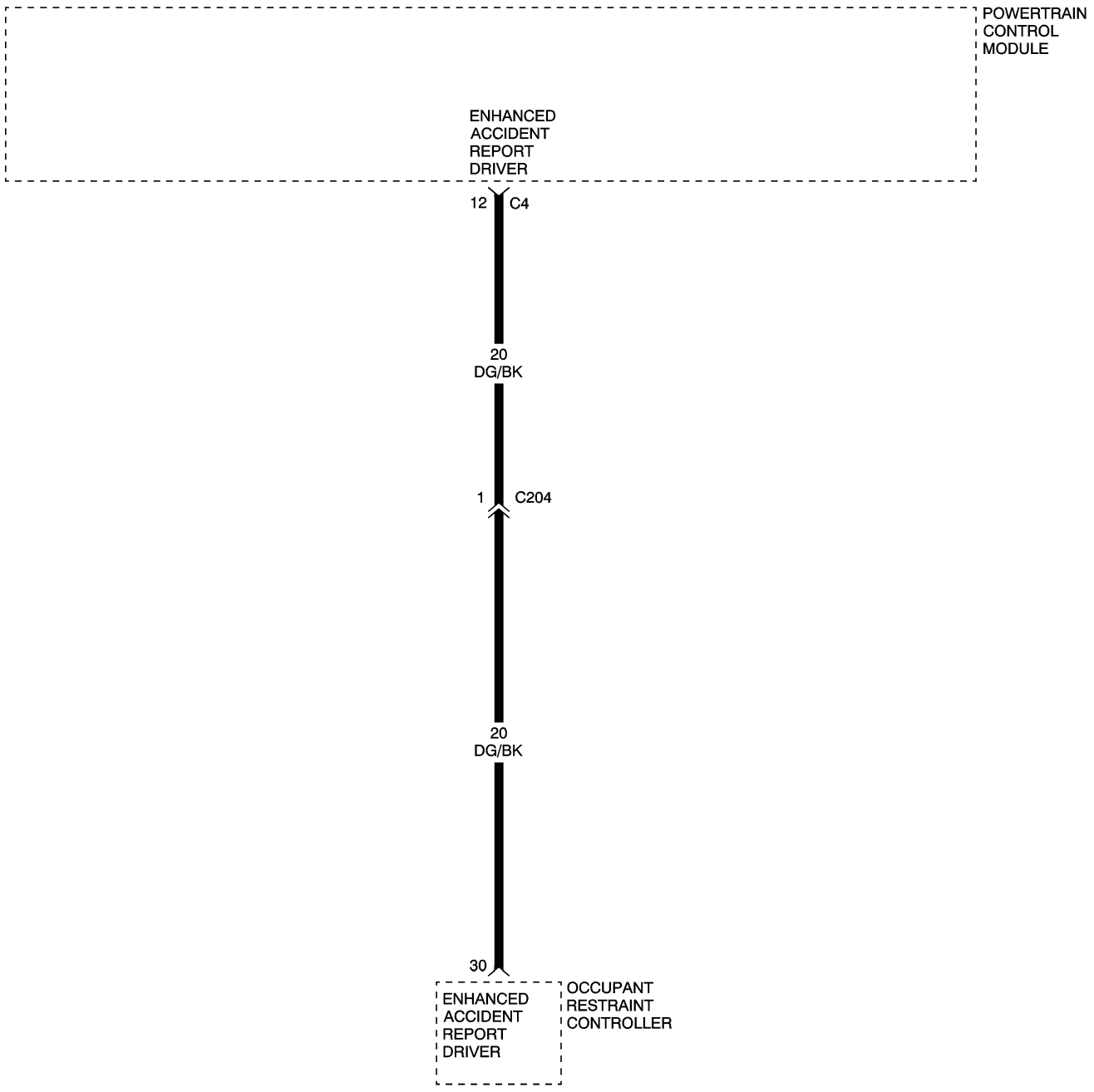

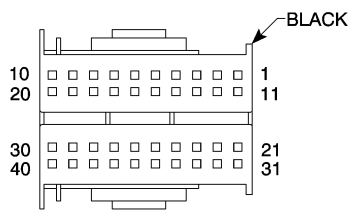

POWERTRAIN CONTROL MODULE – C4

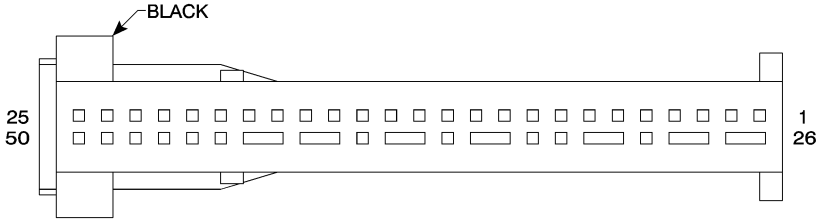

OCCUPANT RESTRAINT CONTROLLER

81178080

(P2513) ENHANCED ACCIDENT REPORT DRIVER CIRCUIT HIGH — CONTINUED

When Monitored and Set Condition

- When Monitored: Ignition on.
- Set Condition: The Occupant Restraint Controller (ORC) periodically sends out a signal to the Powertrain Control Module (PCM). If the PCM does not receive the signal from the ORC, the PCM will set the fault code.

POSSIBLE CAUSES
ENHANCED ACCIDENT REPORT DRIVER CIRCUIT SHORTED TO VOLTAGE
ENHANCED ACCIDENT REPORT DRIVER SIGNAL CIRCUIT SHORTED TO GROUND
ENHANCED ACCIDENT REPORT DRIVER SIGNAL CIRCUIT OPEN
OCCUPANT RESTRAINT CONTROLLER
POWERTRAIN CONTROL MODULE

For a complete Powertrain Control Module Circuit Diagram, **Refer to Page 9-574**.

Diagnostic Test

1. CHECK FOR ACTIVE DTC

Note: If the PCM detects and stores a DTC, the PCM also stores the engine/vehicle operating conditions under which the DTC was set. Some of these conditions are displayed on the DRB III® at the same time the DTC is displayed.

Note: Before erasing stored DTCs, record these conditions. Attempting to duplicate these conditions may assist when checking for an active DTC.

With the DRB III®, check the ORC for proper communication and DTCs. If there are any Occupant Restraint Controller (ORC) DTCs, repair them before continuing this test.

Turn the ignition on.

With the DRB III®, erase PCM DTCs.

Cycle the ignition switch on and off several times, pausing for at least 10 seconds at each key off and key on.

Turn the ignition on.

With the DRB III®, read PCM DTCs.

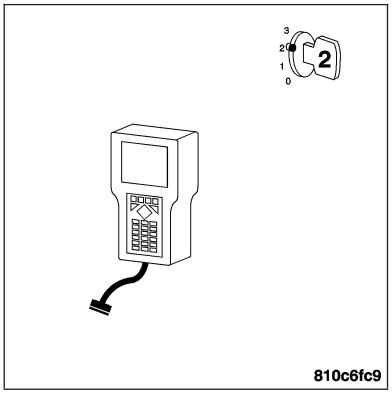

Did this DTC set again?

Yes >> Go To 2

No >> Go To 6

(P2513) ENHANCED ACCIDENT REPORT DRIVER CIRCUIT HIGH — CONTINUED

2. ENHANCED ACCIDENT REPORT DRIVER SIGNAL CIRCUIT SHORTED TO VOLTAGE

WARNING: TURN THE IGNITION OFF, DISCONNECT THE BATTERY AND WAIT TWO MINUTES BEFORE PROCEEDING.

WARNING: WHEN RECONNECTING AIRBAG SYSTEM COMPONENTS, THE IGNITION MUST BE TURNED OFF AND THE BATTERY MUST BE DISCONNECTED.

Turn the ignition off.

Disconnect the Occupant Restraint Controller harness connector in accordance with the Service Information.

Disconnect the PCM C4 harness connectors.

Note: Check connectors — Clean/repair as necessary.

Turn the ignition on.

Measure the voltage of the Enhanced Accident Report Driver Signal circuit.

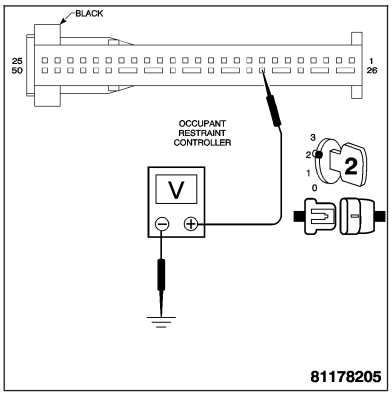

Is the voltage below 1.0 volt?

Yes >> Go To 3

No >> Repair the Enhanced Accident Report Driver circuit for a short to voltage.
Perform POWERTRAIN VERIFICATION TEST - VER 2.

3. ENHANCED ACCIDENT REPORT DRIVER SIGNAL CIRCUIT SHORTED TO GROUND

Turn the ignition off.

Measure the resistance between ground and the Enhanced Accident Report Driver Signal circuit.

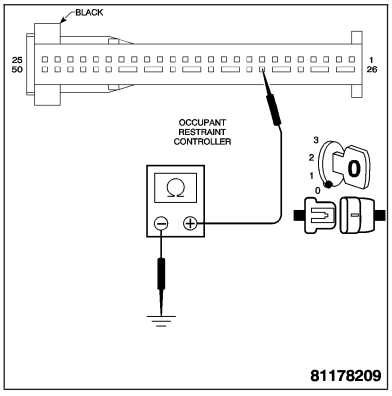

Is the resistance below 100 ohms?

Yes >> Repair the Enhanced Accident Report Driver circuit for a short to ground.
Perform POWERTRAIN VERIFICATION TEST - VER 2.

No >> Go To 4

(P2513) ENHANCED ACCIDENT REPORT DRIVER CIRCUIT HIGH — CONTINUED

4. ENHANCED ACCIDENT REPORT DRIVER SIGNAL CIRCUIT OPEN

With the ignition off.

Measure the resistance of the Enhanced Accident Report Driver Signal circuit from the PCM C4 harness connector to the ORC harness connector.

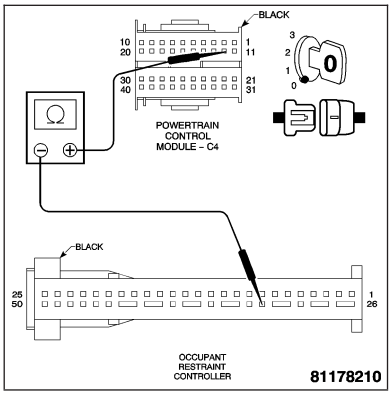

Is the resistance below 5.0 ohms?

Yes >> Go To 5

No >> Repair the Enhanced Accident Report Driver Signal circuit for an open.
Perform POWERTRAIN VERIFICATION TEST - VER 2.

5. ORC

WARNING: TURN THE IGNITION OFF, DISCONNECT THE BATTERY AND WAIT TWO MINUTES BEFORE PROCEEDING.

WARNING: WHEN RECONNECTING AIRBAG SYSTEM COMPONENTS, THE IGNITION MUST BE TURNED OFF AND THE BATTERY MUST BE DISCONNECTED.

With the ignition off.

Replace the Occupant Restraint Controller. **Refer to Page 8O-89**

Turn the ignition on.

With the DRB III®, erase PCM DTCs.

Perform several engine run cycles, turning the ignition off for at least 20 seconds between each engine run cycle.

With the DRB III®, read the PCM DTCs.

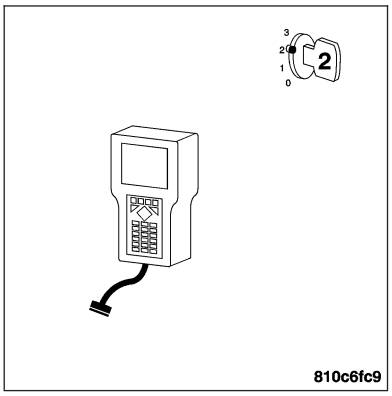

Did this DTC set again?

Yes >> Replace and program the Powertrain Control Module. **Refer to Page 8E-56**.
Perform POWERTRAIN VERIFICATION TEST - VER 2.

No >> Test Complete.

(P2513) ENHANCED ACCIDENT REPORT DRIVER CIRCUIT HIGH — CONTINUED

6. INTERMITTENT WIRING AND CONNECTORS

The condition that caused this DTC to set is currently not present. Inspect the related wiring harness for a possible intermittent condition.

Note: Check connectors - Clean/repair as necessary. Poor pin to terminal connections can set DTCs.

Note: Check for any Technical Service Bulletins that may apply.
Using the wiring diagram/schematic as a guide, inspect the wiring and connectors specific to this DTC. Wiggle the wires while checking for shorts and/or open circuits.

Were there any problems found?

Yes >> Repair as necessary.
Perform POWERTRAIN VERIFICATION TEST VER - 2.

No >> The condition that caused this DTC to set is currently not present. Inspect the related wiring harness for a possible intermittent condition.

(P2513) ENHANCED ACCIDENT REPORT DRIVER CIRCUIT LOW

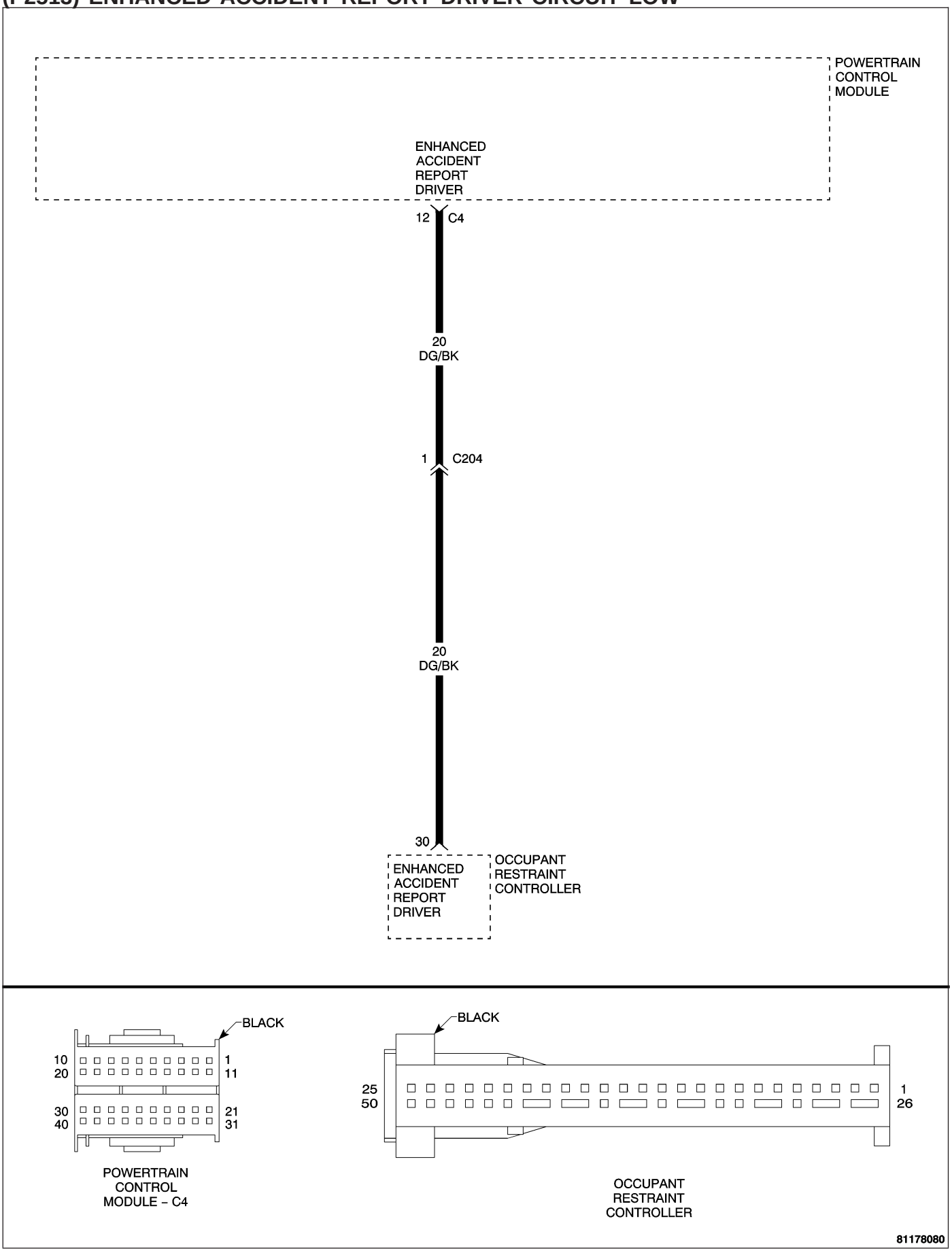

(P2513) ENHANCED ACCIDENT REPORT DRIVER CIRCUIT LOW — CONTINUED

When Monitored and Set Condition

- When Monitored: Ignition on.
- Set Condition: The Occupant Restraint Controller (ORC) periodically sends out a signal to the Powertrain Control Module (PCM). If the PCM does not receive the signal from the ORC, the PCM will set the fault code.

POSSIBLE CAUSES
ENHANCED ACCIDENT REPORT DRIVER SIGNAL CIRCUIT SHORTED TO GROUND
ENHANCED ACCIDENT REPORT DRIVER SIGNAL CIRCUIT OPEN
OCCUPANT RESTRAINT CONTROLLER
POWERTRAIN CONTROL MODULE

Diagnostic Test

1. CHECK FOR CURRENT DTC

Turn the ignition on.
With the DRB III®, read the PCM DTCs.

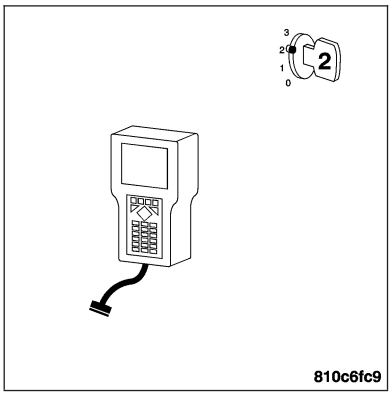

Is this DTC preset?

Yes >> For complete diagnosis of this DTC, refer to (P2513) ENHANCED ACCIDENT REPORT DRIVER CIRCUIT LOW.

No >> Go To 2

2. INTERMITTENT WIRING AND CONNECTORS

The conditions necessary to set this DTC are not present at this time.

Note: Check connectors — Clean/repair as necessary. Poor pin to terminal connections can set DTCs.Using the wiring diagram/schematic as a guide, inspect the wiring and connectors specific to this DTC. Wiggle the wires while checking for shorts and open circuits.

Note: Check for any Technical Service Bulletins that may apply.

Were there any problems found?

Yes >> Repair as necessary.
Perform POWERTRAIN VERIFICATION TEST - VER 2.

No >> The condition that caused this DTC to set is currently not present. Inspect the related wiring harness for a possible intermittent condition.

(P2545) ESP TORQUE MANAGEMENT REQUEST PERFORMANCE

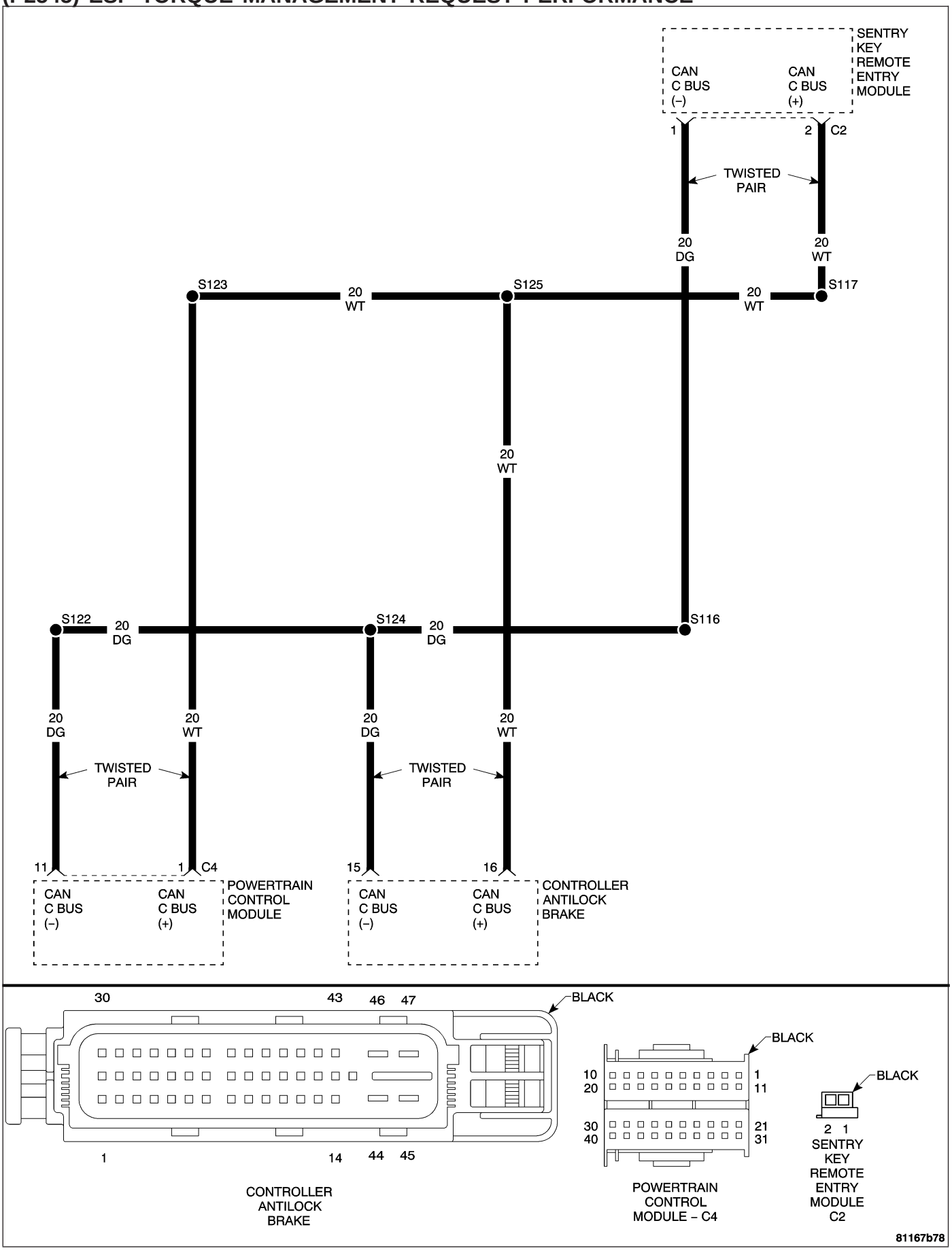

(P2545) ESP TORQUE MANAGEMENT REQUEST PERFORMANCE — CONTINUED

When Monitored and Set Condition

- When Monitored: With the ignition on.
- Set Condition: This DTC is set when a CAN ID was not received in the required time from the CAB.

POSSIBLE CAUSES
CAN C BUS (+)/(-) CIRCUIT OPEN
CAN C BUS (+)/(-) CIRCUIT SHORTED TO GROUND
CAN C BUS (+)/(-) CIRCUIT SHORTED TO VOLTAGE
SENTRY KEY REMOTE ENTRY MODULE (SKREEM) INTERNAL FAILURE
CONTROLLER ANTILOCK BRAKE MODULE
POWERTRAIN CONTROL MODULE

For a complete Electronic Control Module Circuit Diagram, **Refer to Page 8E-45**.

Diagnostic Test

1. CHECK TO SEE IF CAB DTCS ARE PRESENT

Turn ignition on.
With the DRB III®, read CAB DTCs.

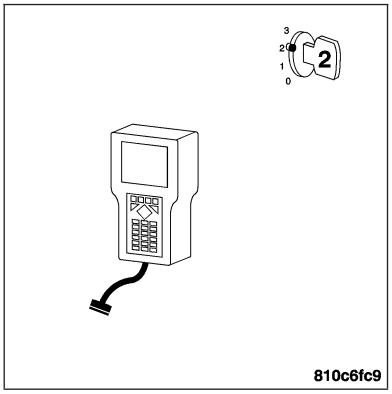

Are there any performance or BUS related DTCs present?

Yes >> Repair all CAB DTCs before proceeding.
Perform POWERTRAIN VERIFICATION TEST - VER 2.

No >> Go To 2

2. VERIFY DTCS

With the ignition on.
With the DRB III®, erase DTCs.
Turn the ignition off, then back on.
Monitor the DRB III® for this DTC.

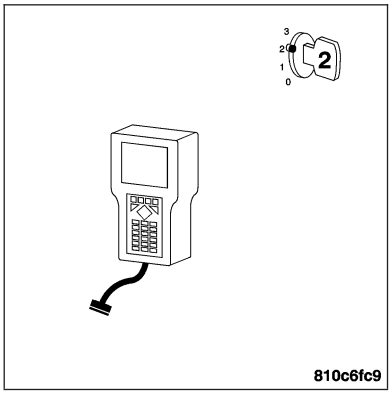

Did the DTC (P2545) ESP TORQUE MANAGEMENT REQUEST PERFORMANCE set again?

Yes >> Go To 3

No >> Go To 12

(P2545) ESP TORQUE MANAGEMENT REQUEST PERFORMANCE — CONTINUED

3. PCM AND SKREEM CAN C BUS TERMINATION

Turn the ignition off.

Measure the resistance of the PCM CAN C Bus termination by backprobing the CAN C Bus (+) circuit to the CAN C Bus (-) circuit at the PCM C4 harness connector.

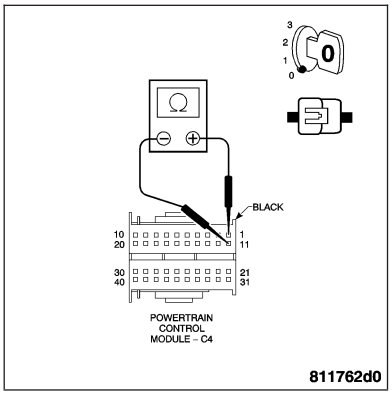

Is the resistance between 50 and 70 ohms?

Yes >> Go To 11

No >> Go To 4

4. PCM CAN C BUS TERMINATION

With the ignition off.

Disconnect the PCM C4 harness connector.

Note: Check connectors — Clean/repair as necessary.

Measure the resistance of the SKREEM CAN C Bus termination by backprobing the CAN C Bus (+) circuit to the CAN C Bus (-) circuit at the PCM C4 harness connector.

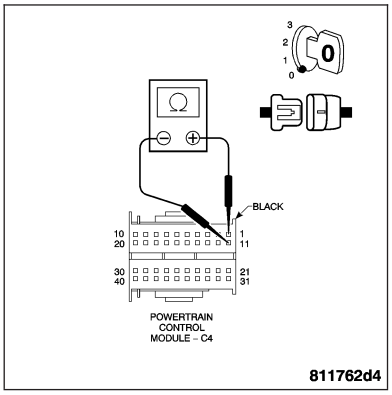

Is the SKREEM CAN C Bus termination resistance between 110 and 130 ohms?

Yes >> Replace and program the Powertrain Control Module. **Refer to Page 8E-56**.
Perform POWERTRAIN VERIFICATION TEST - VER 2.

No >> Go To 5

5. SKREEM TERMINATION

With the ignition off.

Measure the resistance of the SKREEM CAN C Bus termination by backprobing the CAN C Bus (+) circuit to the CAN C Bus (-) circuit at the SKREEM C2 harness connector.

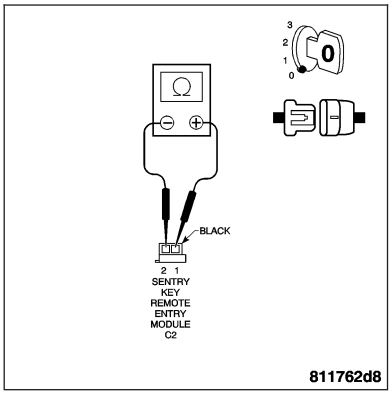

Is the resistance between 110 and 130 ohms?

Yes >> Go To 6

No >> Replace the Sentry Key Remote Entry Module. **Refer to Page 8E-70**.
Perform POWERTRAIN VERIFICATION TEST - VER 2.

(P2545) ESP TORQUE MANAGEMENT REQUEST PERFORMANCE — CONTINUED

6. CAN C BUS (-) CIRCUIT OPEN

With the ignition off.

Measure the resistance of the CAN C Bus (-) circuit from the SKREEM C2 harness connector to the PCM C4 harness connector.

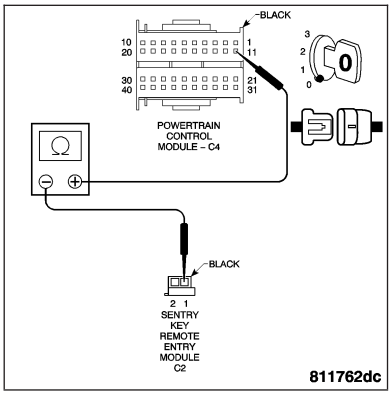

Is the resistance below 5.0 ohms?

Yes >> Go To 7

No >> Repair the CAN C Bus (-) circuit for an open.
Perform POWERTRAIN VERIFICATION TEST - VER 2.

7. CAN C BUS (+) CIRCUIT OPEN

With the ignition off.

Measure the resistance of the CAN C Bus (+) circuit from the PCM C4 harness connector to the SKREEM C2 harness connector.

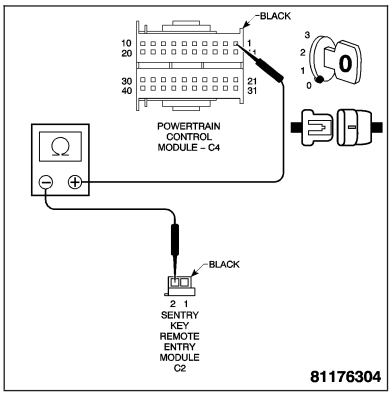

Is the resistance below 5.0 ohms?

Yes >> Go To 8

No >> Repair the CAN C Bus (+) circuit for an open.
Perform POWERTRAIN VERIFICATION TEST - VER 2.

8. CAN C BUS (+) CIRCUIT SHORTED TO VOLTAGE

Turn the ignition on.

Measure the voltage of the CAN C Bus (+) circuit at the PCM C4 harness connector.

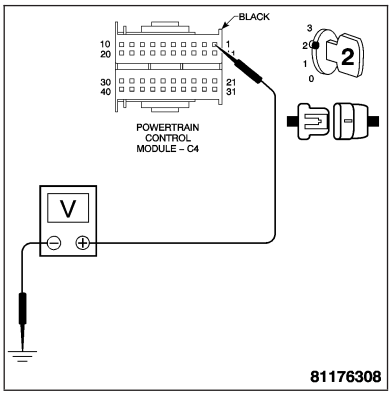

Is the voltage above 1.0 volt?

Yes >> Repair the CAN C Bus (+) circuit for a short to voltage.
Perform POWERTRAIN VERIFICATION TEST - VER 2.

No >> Go To 9

(P2545) ESP TORQUE MANAGEMENT REQUEST PERFORMANCE — CONTINUED

9. CAN C BUS (-) CIRCUIT SHORTED TO VOLTAGE

With the ignition on.
Measure the voltage of the CAN C Bus (-) circuit at the PCM C4 harness connector.

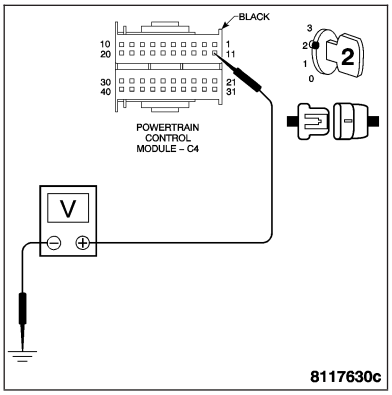

Is the voltage above 1.0 volt?

Yes >> Repair the CAN C Bus (-) circuit for a short to voltage. Perform POWERTRAIN VERIFICATION TEST - VER 2.

No >> Go To 10

10. CAN C BUS (-) CIRCUIT SHORT TO GROUND

Turn the ignition off.
Measure the resistance between ground and the CAN C Bus (-) circuit.

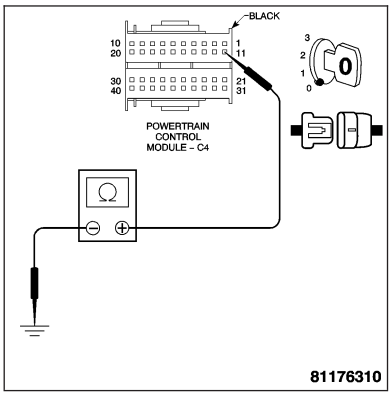

Is the resistance below 100 ohms?

Yes >> Repair the CAN C Bus (-) circuit for a short to ground. Perform POWERTRAIN VERIFICATION TEST - VER 2.

No >> Repair the CAN C Bus (+) circuit for a short to ground. Perform POWERTRAIN VERIFICATION TEST - VER 2.

11. CAN C BUS (-) CIRCUIT OPEN FROM CAB TO PCM

With the ignition off.
Disconnect the CAB harness connector.

Note: Check connectors — Clean/repair as necessary.
Measure the resistance of the CAN C Bus (-) circuit from the CAB harness connector to the PCM C4 harness connector.

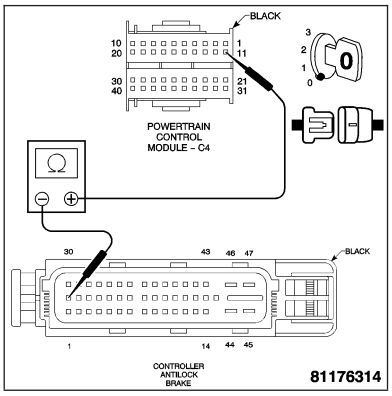

Is the resistance below 5.0 ohms?

Yes >> Repair the CAN C Bus (+) circuit for an open between the PCM C4 harness and the CAB harness connector. Perform POWERTRAIN VERIFICATION TEST - VER 2.

No >> Repair the CAN C Bus (-) circuit for an open between the PCM C4 harness and the CAB harness connector. Perform POWERTRAIN VERIFICATION TEST - VER 2.

(P2545) ESP TORQUE MANAGEMENT REQUEST PERFORMANCE — CONTINUED

12. INTERMITTENT WIRING AND CONNECTORS

The condition that caused this DTC to set is currently not present. Inspect the related wiring harness for a possible intermittent condition.

Note: Check connectors — Clean/repair as necessary. Poor pin to terminal connections can set DTCs.

Note: Check for any Technical Service Bulletins that may apply.
Using the wiring diagram/schematic as a guide, inspect the wiring and connectors specific to this DTC. Wiggle the wires while checking for shorts and/or open circuits.

Were there any problems found?

Yes >> Repair as necessary.
Perform POWERTRAIN VERIFICATION TEST VER.

No >> The condition that caused this DTC to set is currently not present. Inspect the related wiring harness for a possible intermittent condition.

(P2561) HVAC CONTROL MODULE REQUESTED MIL ILLUMINATION

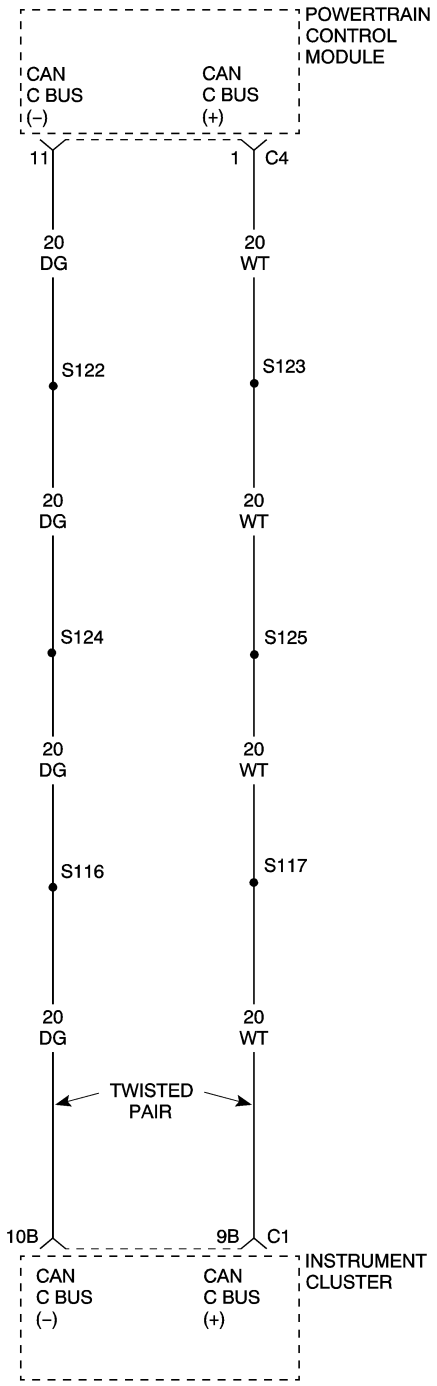

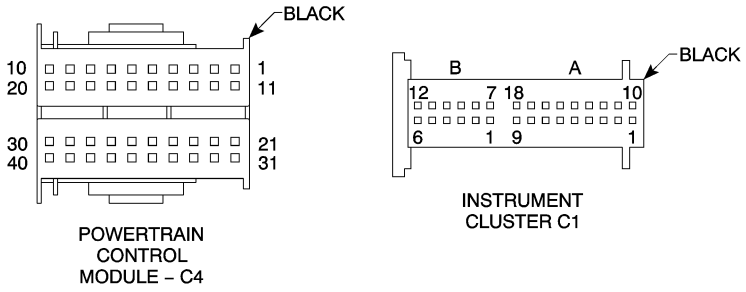

8115f4f6

(P2561) HVAC CONTROL MODULE REQUESTED MIL ILLUMINATION — CONTINUED

For a complete Electronic Control Module Circuit Diagram, **Refer to Page 8E-45**.

Diagnostic Test

1. DTC PRESENT IN A/C HEATER CONTROL MODULE.

This is an informational DTC letting you know that a DTC(s) is stored in the A/C Heater Control Module.

Erase this DTC from the PCM after all A/C-Heater Control Module DTC(s) have been repaired.

Using the DRB III®, read the A/C-Heater Control Module DTC(s) and refer to the A/C Heater Control Module Category to perform the appropriate symptom.

PCM Diagnostic Information complete.

Continue

Test Complete.

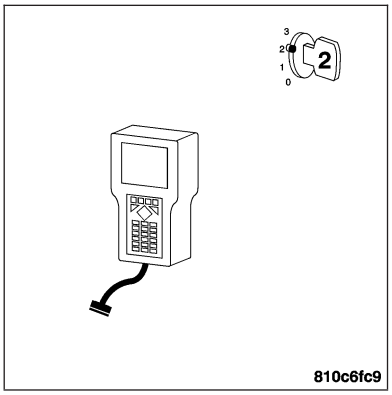

COOLING FAN CONTROL CIRCUIT OPEN

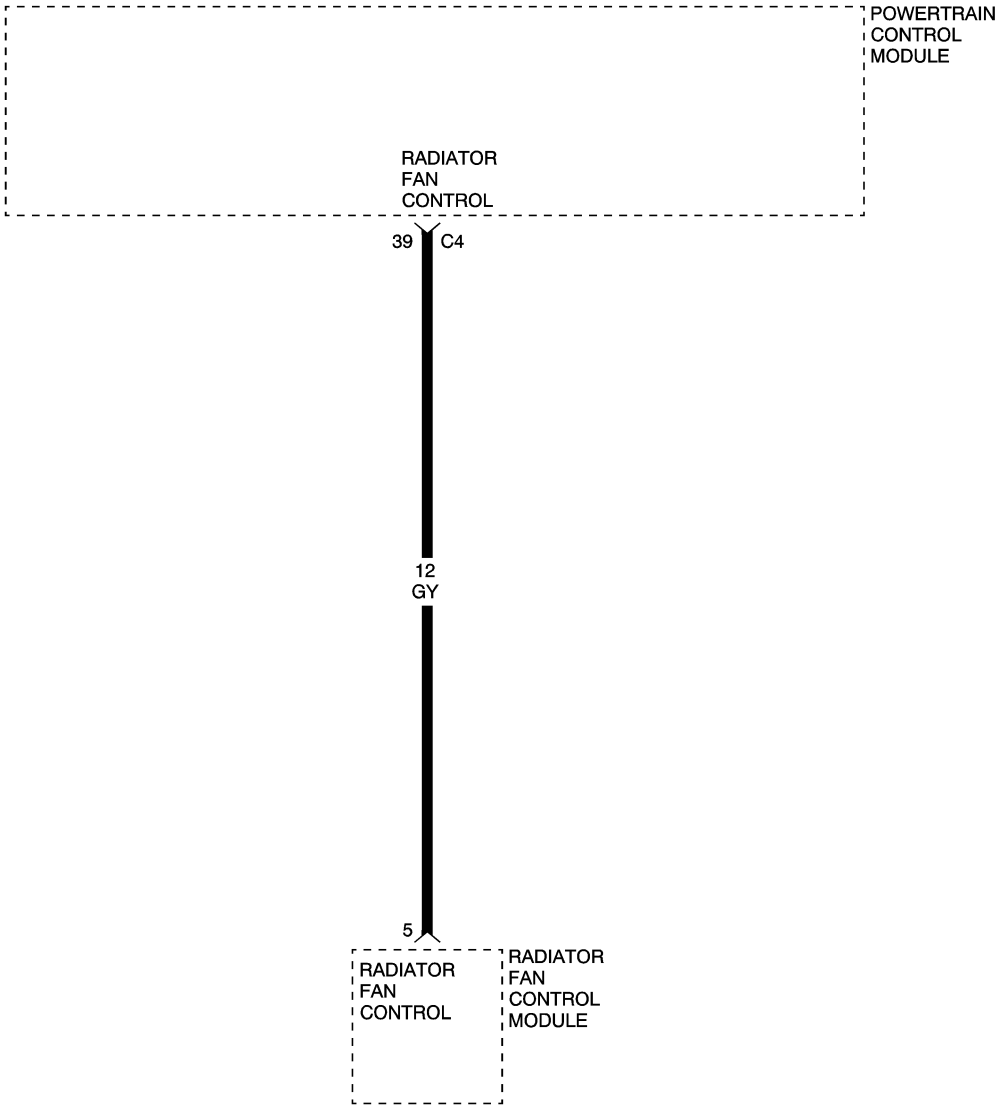

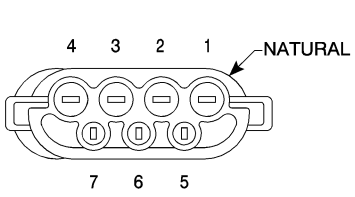

RADIATOR
FAN
CONTROL
MODULE

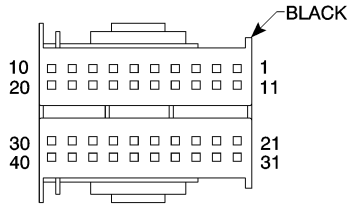

POWERTRAIN
CONTROL
MODULE – C4

8115f53c

COOLING FAN CONTROL CIRCUIT OPEN — CONTINUED

When Monitored and Set Condition

- When Monitored: With the ignition on.
- Set Condition: When Engine Coolant temperature is less than 70°C (158°F) and the Powertrain Control Module (PCM) senses voltage greater than 2.5 volts on the Radiator Fan Control circuit or less than 2.0 volts above 85°C (185°F).

POSSIBLE CAUSES
RADIATOR FAN CONTROL CIRCUIT OPEN
RADIATOR FAN CONTROL CIRCUIT SHORTED TO GROUND
RADIATOR FAN CONTROL CIRCUIT SHORTED TO VOLTAGE
RADIATOR FAN CONTROL MODULE
POWERTRAIN CONTROL MODULE

For a complete Powertrain Control Module Circuit Diagram, **Refer to Page 9-574**.

Diagnostic Test

1. RADIATOR FAN CONTROL MODULE

WARNING: WHILE MONITORING ENGINE COOLANT TEMPERATURE WITH THE DRB III®, DO NOT ALLOW THE ENGINE COOLANT TEMPERATURE TO RISE ABOVE 102°C (215°F) WITH THE RADIATOR FAN CONTROL MODULE DISCONNECTED.

Note: If an Engine Coolant Temperature (ECT) Sensor fault has been set, diagnose the Engine Coolant Temperature Sensor faults before continuing.

Turn the ignition off.

Disconnect the PCM C4 harness connector.

Note: Check connectors — Clean/repair as necessary.

Turn the ignition on.

Measure the voltage of the Radiator Fan Control circuit at the Radiator Fan Control Module harness connector.

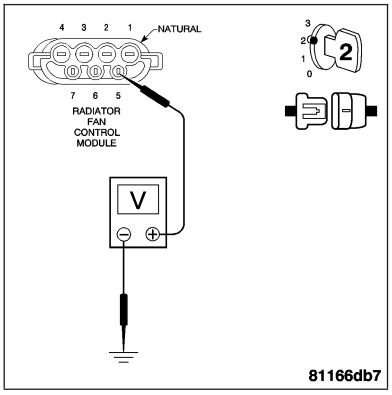

Is the voltage above 10 volts?

Yes >> 2

No >> Replace the Radiator Fan Control Module. **Refer to Page 7-29**.
Perform POWERTRAIN VERIFICATION TEST - VER 2.

COOLING FAN CONTROL CIRCUIT OPEN — CONTINUED

2. RADIATOR FAN CONTROL CIRCUIT OPEN

Turn the ignition off.

Disconnect the Radiator Fan Control Module harness connector.

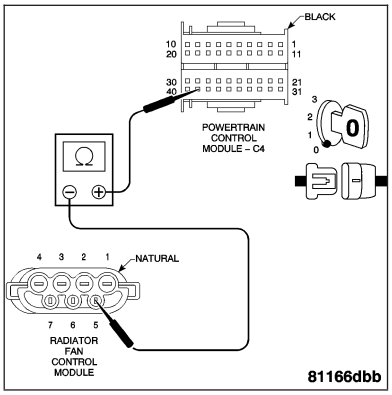

Note: Check connectors — Clean/repair as necessary.
Measure the resistance of the Radiator Fan Control circuit from the PCM C4 harness connector to the Radiator Fan Control Module harness connector.

Is the resistance below 5.0 ohms?

Yes >> Go To 3

No >> Repair the Radiator Fan Control circuit for an open.
Perform POWERTRAIN VERIFICATION TEST - VER 2.

3. RADIATOR FAN CONTROL CIRCUIT SHORTED TO GROUND

With the ignition off.

Measure the resistance between ground and the Radiator Fan Control circuit.

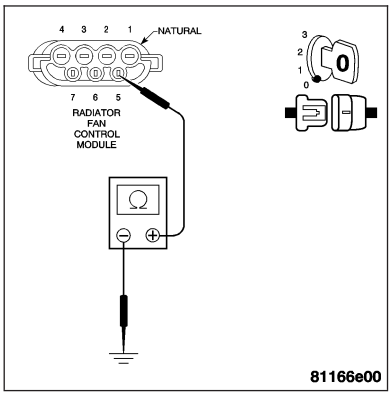

Is the resistance below 100 ohms?

Yes >> Repair the Radiator Fan Control circuit for a short to ground.
Perform POWERTRAIN VERIFICATION TEST - VER 2.

No >> Go To 4

4. RADIATOR FAN CONTROL CIRCUIT SHORTED TO VOLTAGE

Turn the ignition on.

Measure the voltage of the Radiator Fan Control circuit at the PCM C4 harness connector.

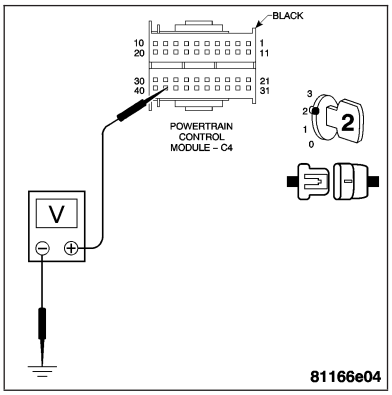

Is the voltage above 1.0 volt?

Yes >> Repair the Radiator Fan Control circuit for a short to voltage.
Perform POWERTRAIN VERIFICATION TEST - VER 2.

No >> Replace and program the Powertrain Control Module.
Refer to Page 8E-56.
Perform POWERTRAIN VERIFICATION TEST - VER 2.

COOLING FAN CONTROL CIRCUIT HIGH

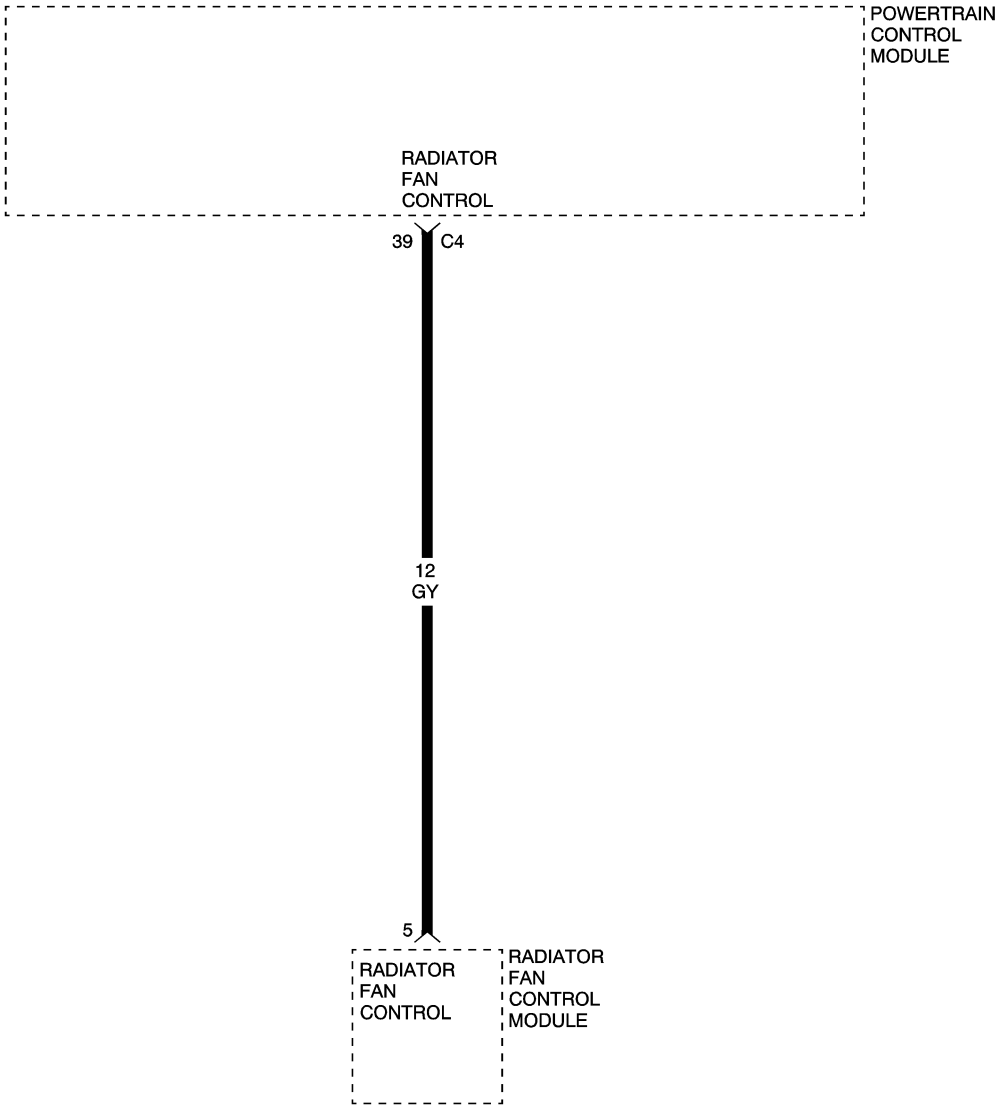

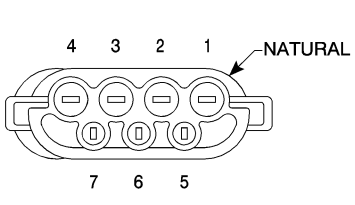

RADIATOR
FAN
CONTROL
MODULE

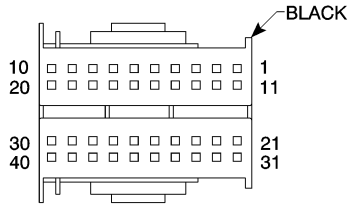

POWERTRAIN
CONTROL
MODULE – C4

8115f53c

COOLING FAN CONTROL CIRCUIT HIGH — CONTINUED

When Monitored and Set Condition

- When Monitored: With the ignition on.
- Set Condition: When Engine Coolant temperature is less than 70°C (158°F) and the Powertrain Control Module (PCM) senses voltage greater than 2.5 volts on the Radiator Fan Control circuit.

POSSIBLE CAUSES
RADIATOR FAN CONTROL CIRCUIT SHORTED TO VOLTAGE
RADIATOR FAN CONTROL MODULE
POWERTRAIN CONTROL MODULE

Diagnostic Test

1. CHECK FOR CURRENT DTC

Turn the ignition on.
With the DRB III®, read the PCM DTCs.

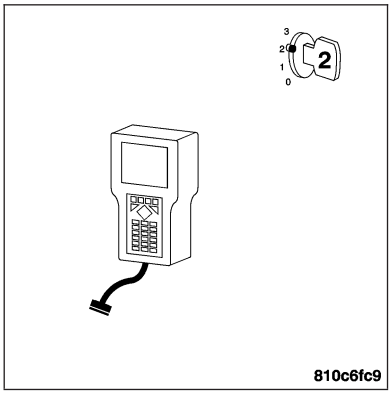

Is this DTC preset?

Yes >> For complete diagnosis of this DTC, refer to COOLING FAN CONTROL CIRCUIT OPEN.

No >> Go To 2

2. INTERMITTENT WIRING AND CONNECTORS

The conditions necessary to set this DTC are not present at this time.

Note: Check connectors — Clean/repair as necessary. Poor pin to terminal connections can set DTCs.Using the wiring diagram/schematic as a guide, inspect the wiring and connectors specific to this DTC. Wiggle the wires while checking for shorts and open circuits.

Note: Check for any Technical Service Bulletins that may apply.

Were there any problems found?

Yes >> Repair as necessary.
Perform POWERTRAIN VERIFICATION TEST - VER 2.

No >> The condition that caused this DTC to set is currently not present. Inspect the related wiring harness for a possible intermittent condition.

COOLING FAN CONTROL CIRCUIT LOW

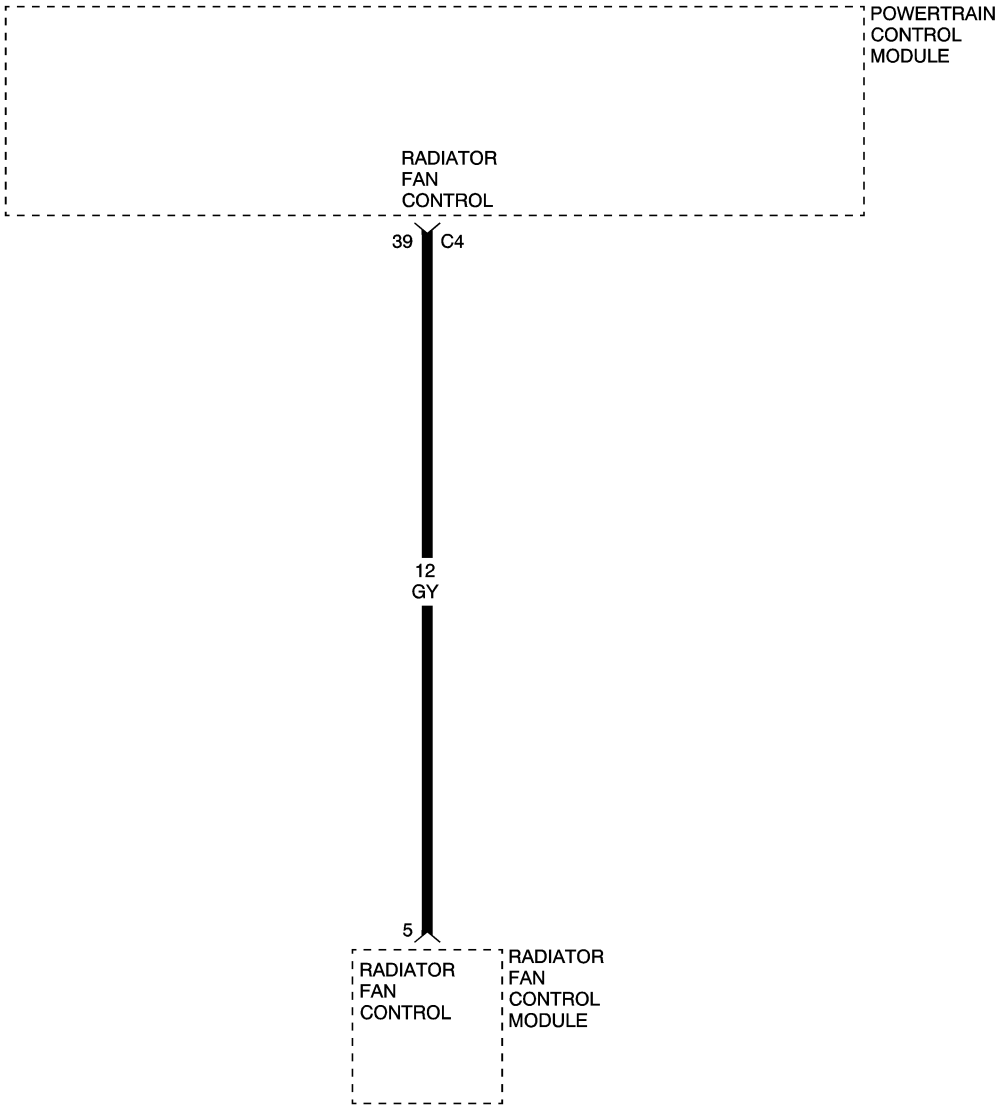

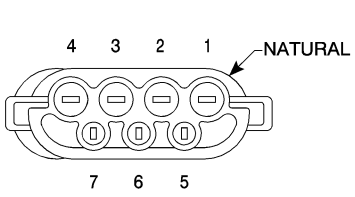

RADIATOR
FAN
CONTROL
MODULE

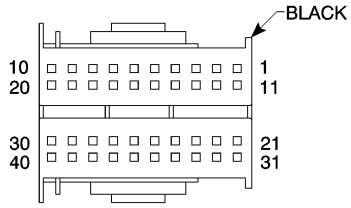

POWERTRAIN
CONTROL
MODULE – C4

8115f53c

COOLING FAN CONTROL CIRCUIT LOW — CONTINUED

When Monitored and Set Condition

- When Monitored: With the ignition on.
- Set Condition: When Engine Coolant temperature is less than 70°C (158°F) and the Powertrain Control Module (PCM) senses voltage less than 2.0 volts above 85°C (185°F).

POSSIBLE CAUSES
RADIATOR FAN CONTROL CIRCUIT OPEN
RADIATOR FAN CONTROL CIRCUIT SHORTED TO GROUND
RADIATOR FAN CONTROL MODULE
POWERTRAIN CONTROL MODULE

Diagnostic Test

1. CHECK FOR CURRENT DTC

Turn the ignition on.
With the DRB III®, read the PCM DTCs.

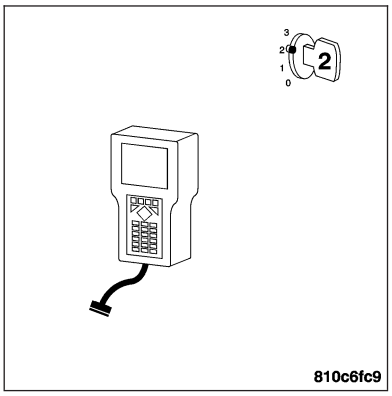

Is this DTC preset?

Yes >> For complete diagnosis of this DTC, refer to COOLING FAN CONTROL CIRCUIT OPEN.

No >> Go To 2

2. INTERMITTENT WIRING AND CONNECTORS

The conditions necessary to set this DTC are not present at this time.

Note: Check connectors — Clean/repair as necessary. Poor pin to terminal connections can set DTCs.Using the wiring diagram/schematic as a guide, inspect the wiring and connectors specific to this DTC. Wiggle the wires while checking for shorts and open circuits.

Note: Check for any Technical Service Bulletins that may apply.

Were there any problems found?

Yes >> Repair as necessary.
Perform POWERTRAIN VERIFICATION TEST - VER 2.

No >> The condition that caused this DTC to set is currently not present. Inspect the related wiring harness for a possible intermittent condition.

ENGINE OIL SENSOR LEVEL PERFORMANCE

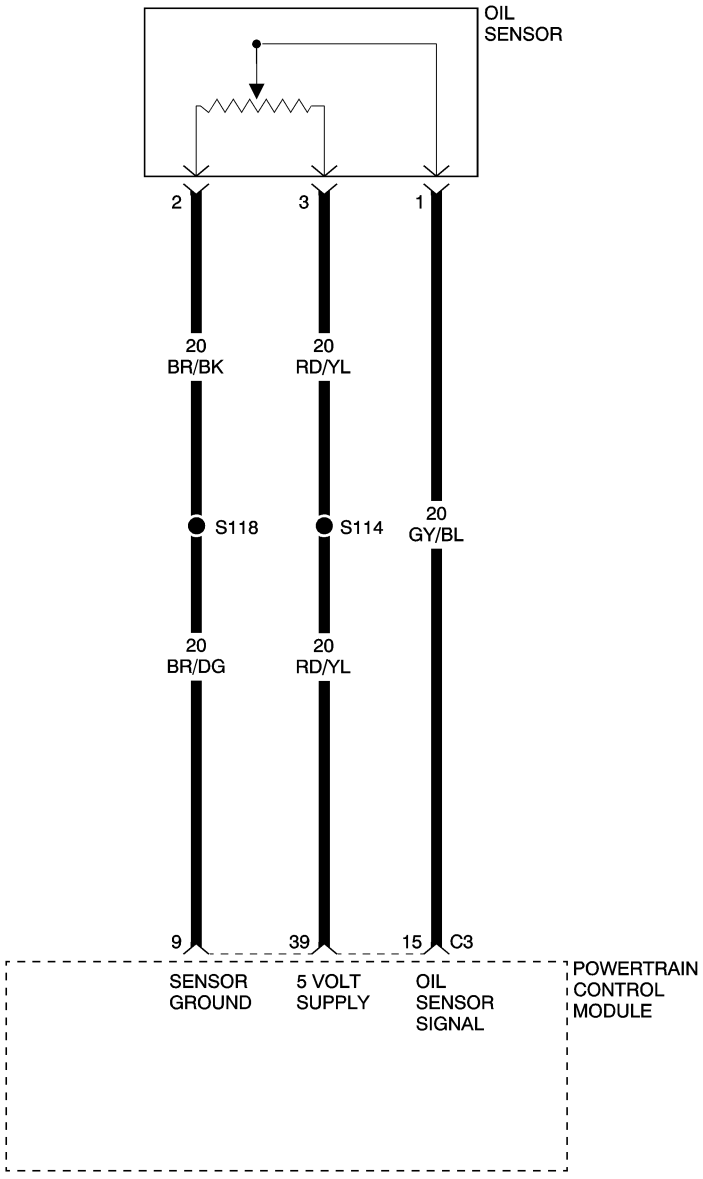

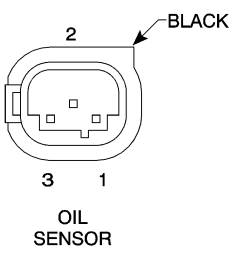

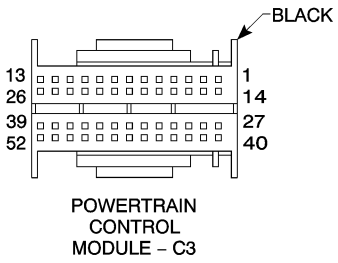

81162c16

ENGINE OIL SENSOR LEVEL PERFORMANCE — CONTINUED

When Monitored and Set Condition

- When Monitored: With the ignition on, engine running.
- Set Condition: Anytime the Powertrain Control Module (PCM) senses the Oil Level with the engine off is outside the values of 34 - 62 mm and with the engine running, the values of 15 - 45 mm.

Note: Check and verify that the engine oil level is at the appropriate level.

POSSIBLE CAUSES
5-VOLT SUPPLY CIRCUIT SHORTED TO GROUND
5-VOLT SUPPLY CIRCUIT SHORTED TO B(+)
5-VOLT SUPPLY CIRCUIT OPEN
OIL SENSOR GROUND CIRCUIT OPEN
OIL SENSOR SIGNAL CIRCUIT SHORTED TO GROUND
OIL SENSOR SIGNAL CIRCUIT SHORTED VOLTAGE
OIL SENSOR SIGNAL CIRCUIT OPEN
LOW OIL LEVEL
OIL SENSOR
POWERTRAIN CONTROL MODULE

For a complete Powertrain Control Module Circuit Diagram, **Refer to Page 9-574**.

Diagnostic Test

1. CHECKING FOR OIL SENSOR DTCS

Note: Normal Oil Level readings with the Engine not running is 34–62 mm and with the Engine running is 15–45 mm.

With the engine oil level at the proper level.

Turn the ignition on.

Note: Before erasing stored DTCs, record these conditions. Attempting to duplicate these conditions may assist when checking for a DTC.

With the DRB III®, erase DTCs.

Start the engine and run until operating temp is reached. (Closed Loop)

Note: It may be necessary to road test the vehicle.

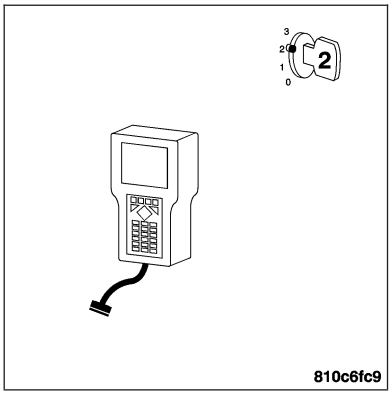

Are there any Oil Sensors DTCs set?

Yes >> Go To 2

No >> Go To 10

ENGINE OIL SENSOR LEVEL PERFORMANCE — CONTINUED

2. CHECKING FOR OIL SENSOR LEVEL DTC

Turn the engine off.
Turn the ignition on.
With the DRB III®, read DTCs.

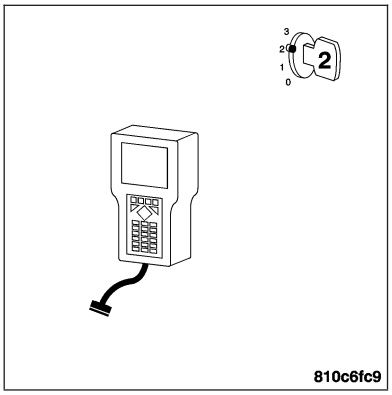

Is the Oil Level DTC the only Engine Oil Sensor DTC set?

Yes >> Replace the Oil Sensor. **Refer to Page 9-672**.
Perform POWERTRAIN VERIFICATION TEST - VER 2.

No >> Go To 3

3. 5-VOLT SUPPLY CIRCUIT

Turn the ignition off.
Disconnect the Oil Sensor harness connector.

Note: Check connectors — Clean/repair as necessary.
Turn the ignition on.
Measure the voltage of the 5-Volt Supply circuit at the Oil Sensor harness connector.

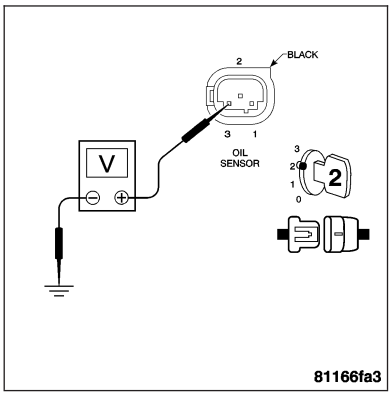

Is the voltage between 4.5 to 5.0 volts?

Yes >> Go To 7

No >> Go To 4

4. 5-VOLT SUPPLY CIRCUIT SHORTED TO VOLTAGE

Turn the ignition off.
Disconnect the PCM C3 harness connector.

Note: Check connectors — Clean/repair as necessary.
Turn the ignition on.
Measure the voltage of the 5-Volt Supply circuit at the PCM C3 harness connector.

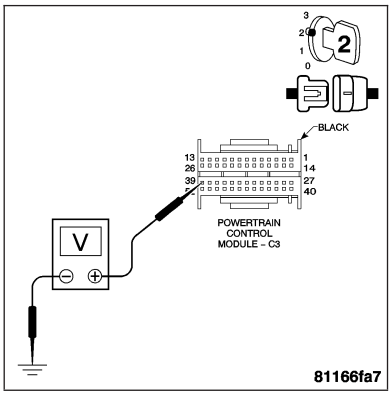

Is the voltage above 1.0 volt?

Yes >> Repair the Oil Sensor 5-Volt Signal circuit for short to voltage.
Perform POWERTRAIN VERIFICATION TEST - VER 2.

No >> Go To 5

ENGINE OIL SENSOR LEVEL PERFORMANCE — CONTINUED

5. 5-VOLT SUPPLY CIRCUIT SHORTED TO GROUND

Turn the ignition off.

Measure the resistance between ground and the 5-Volt Supply circuit.

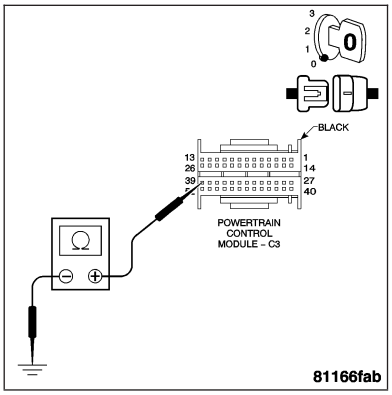

Is the resistance below 100 ohms?

Yes >> Repair the Oil Sensor 5-Volt Signal circuit for short to ground.
Perform POWERTRAIN VERIFICATION TEST - VER 2.

No >> Go To 6

6. 5-VOLT SUPPLY CIRCUIT OPEN

With the ignition off.

Measure the resistance of the 5-Volt Supply circuit from the Oil Sensor harness connector to the PCM C3 harness connector.

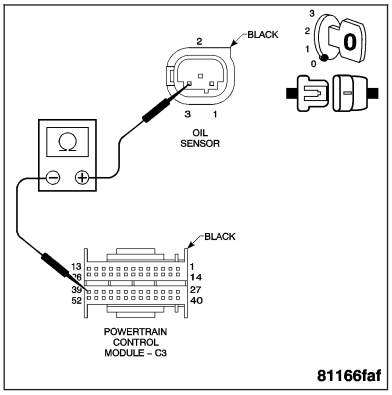

Is the resistance below 5.0 ohms?

Yes >> Replace and program the Powertrain Control Module. **Refer to Page 8E-56**.
Perform POWERTRAIN VERIFICATION TEST - VER 2.

No >> Repair the 5-Volt Supply circuit for an open.
Perform POWERTRAIN VERIFICATION TEST - VER 2.

7. OPEN OIL SENSOR GROUND CIRCUIT

Turn the ignition off.

Disconnect the PCM C3 harness connector.

Note: Check connectors — Clean/repair as necessary.

Measure the resistance of the Oil Sensor Ground circuit from the PCM C3 harness connector to the Oil Sensor harness connector.

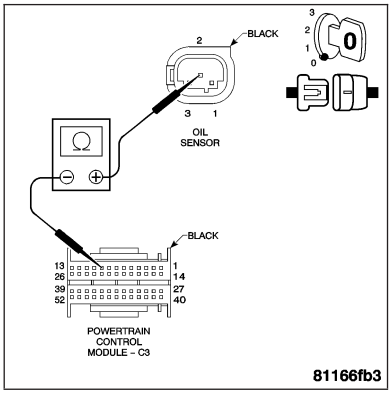

Is the resistance below 5.0 ohms?

Yes >> Go To 8

No >> Repair the Oil Sensor Ground circuit for an open
Perform POWERTRAIN VERIFICATION TEST - VER 2.

ENGINE OIL SENSOR LEVEL PERFORMANCE — CONTINUED

8. OIL SENSOR SIGNAL CIRCUIT OPEN

With the ignition off.
Measure the resistance of the Oil Sensor Signal circuit from the Oil Sensor harness connector to the PCM C3 harness connector.

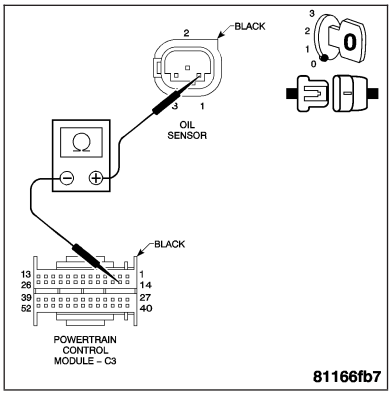

Is the resistance below 5.0 ohms?

Yes >> Go To 9

No >> Repair the Oil Sensor Signal circuit for an open.
Perform POWERTRAIN VERIFICATION TEST - VER 2.

9. OIL SENSOR SIGNAL CIRCUIT SHORTED TO GROUND.

With the ignition off.
Measure the resistance between ground and the Oil Sensor Signal circuit.

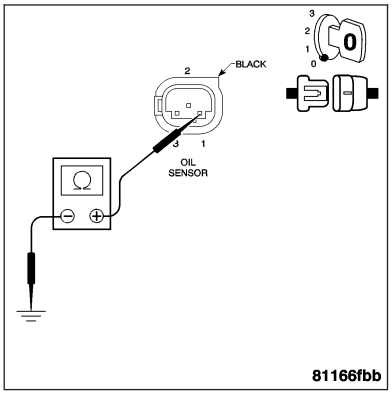

Is the resistance below 100 ohms?

Yes >> Repair the Oil Sensor Signal Circuit for a short to ground.
Perform POWERTRAIN VERIFICATION TEST - VER 2.

No >> Replace and program the Powertrain Control Module.
Refer to Page 8E-56.
Perform POWERTRAIN VERIFICATION TEST - VER 2.

10. INTERMITTENT WIRING AND CONNECTORS

The condition that caused this DTC to set are currently not present. Inspect the related wiring harness for a possible intermittent condition.

Note: Check connectors — Clean/repair as necessary. Poor pin to terminal connections can set DTCs.

Note: Check for any Technical Service Bulletins that may apply.
Using the wiring diagram/schematic as a guide, inspect the wiring and connectors specific to this DTC. Wiggle the wires while checking for shorts and open circuits.

Were there any problems found?

Yes >> Repair as necessary.
Perform POWERTRAIN VERIFICATION TEST - VER 2.

No >> The condition that caused this DTC to set is currently not present. Inspect the related wiring harness for a possible intermittent condition.

ENGINE OIL SENSOR OVER TEMPERATURE

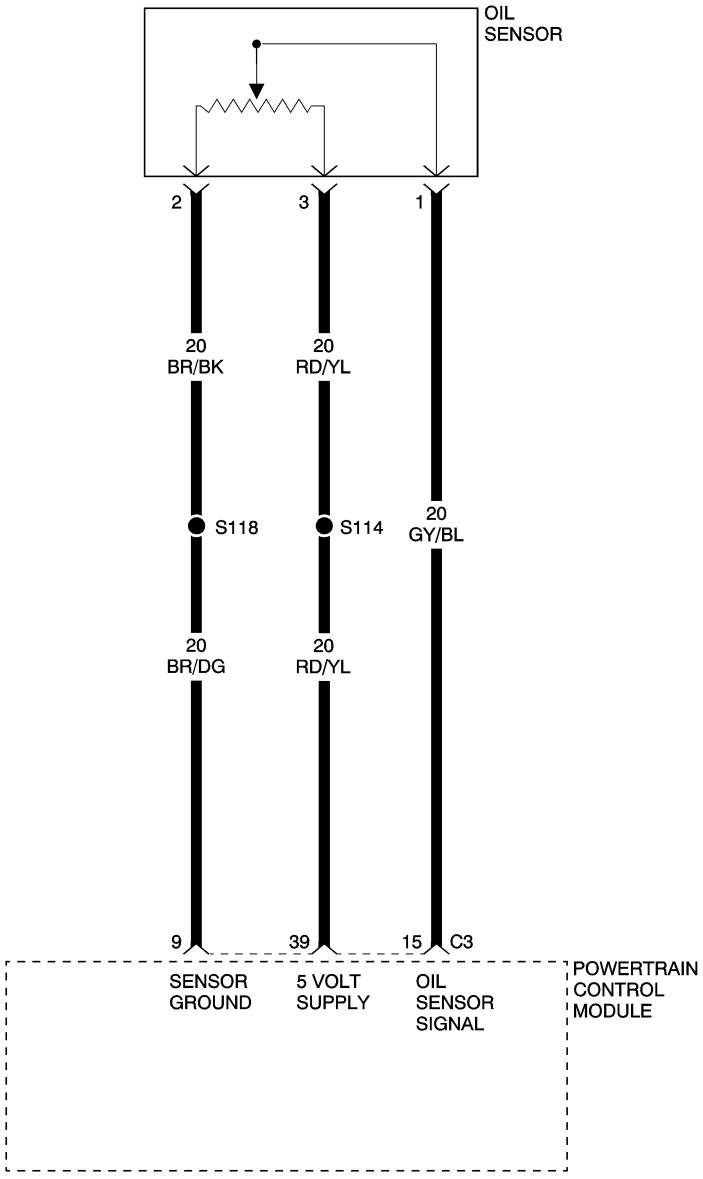

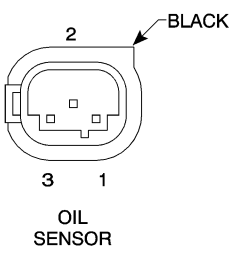

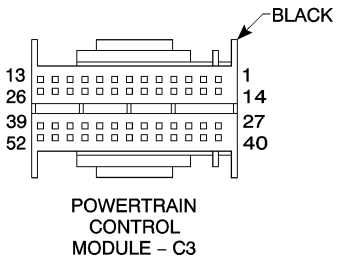

81162c16

ENGINE OIL SENSOR OVER TEMPERATURE — CONTINUED

When Monitored and Set Condition

- When Monitored: With the engine running.
- Set Condition: Anytime the Powertrain Control Module (PCM) senses the Oil Temperature rises above 121° C (250° F).
- **Note: Check and verify that the engine oil level is at the appropriate level.**

POSSIBLE CAUSES
LOW COOLANT LEVEL
THERMOSTAT OPERATION
5-VOLT SUPPLY CIRCUIT SHORTED TO VOLTAGE
5-VOLT SUPPLY CIRCUIT OPEN
OIL SENSOR SIGNAL CIRCUIT SHORTED TO GROUND
OIL SENSOR SIGNAL CIRCUIT SHORTED TO VOLTAGE
OPEN OIL SENSOR SIGNAL CIRCUIT
OIL SENSOR
POWERTRAIN CONTROL MODULE

For a complete Powertrain Control Module Circuit Diagram **Refer to Page 9-574**.

Diagnostic Test

1. CHECKING FOR OIL SENSOR DTCS

Note: If an Engine Coolant Temperature DTC is set along with this DTC, diagnose the Engine Coolant Temperature DTC before continuing.

With the engine cooling system work correctly.

Turn the ignition on.

Note: Before erasing stored DTCs, record these conditions. Attempting to duplicate these conditions may assist when checking for a DTC.

With the DRB III®, erase DTCs.

Start the engine and run until operating temp is reached. (Closed Loop)

Note: It may be necessary to road test the vehicle.

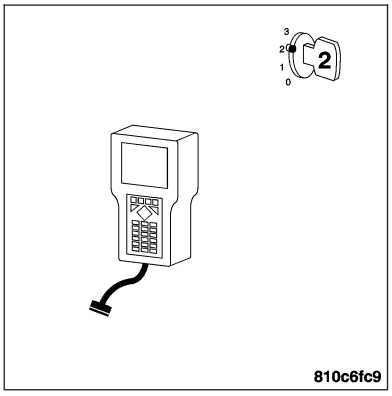

Are any Oil Sensors DTCs set?

Yes >> Go To 2

No >> Go To 10

ENGINE OIL SENSOR OVER TEMPERATURE — CONTINUED

2. CHECKING FOR OIL SENSOR LEVEL DTC

With the ignition on.
With the DRB III®, read DTCs.

Is the Oil Over Temperature DTC the only Engine Oil Sensor DTC set?

Yes >> Replace the Oil Sensor. **Refer to Page 9-672**.
Perform POWERTRAIN VERIFICATION TEST - VER 2.

No >> Go To 3

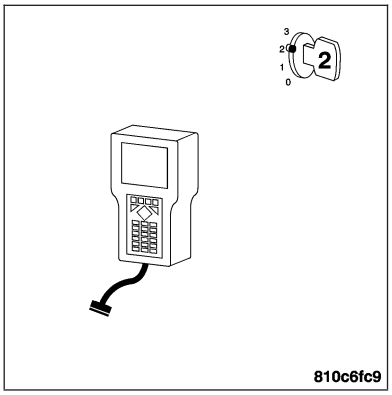

3. 5-VOLT SUPPLY CIRCUIT

Turn the ignition off.
Disconnect the Oil Sensor harness connector.

Note: Check connectors — Clean/repair as necessary.
Turn the ignition on.
Measure the voltage of the 5-Volt Supply circuit at the Oil Sensor harness connector.

Is the voltage between 4.5 to 5.0 volts?

Yes >> Go To 7

No >> Go To 4

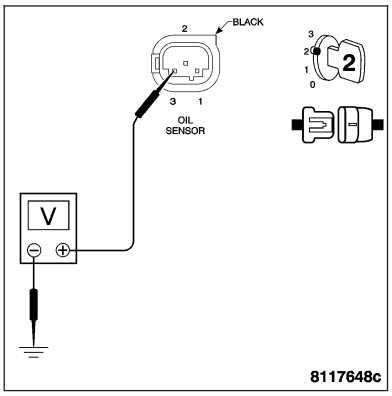

4. 5-VOLT SUPPLY CIRCUIT SHORTED TO VOLTAGE

Turn the ignition off.
Disconnect the PCM C3 harness connector.

Note: Check connectors — Clean/repair as necessary.
Turn the ignition on.
Measure the voltage of the 5-Volt Supply circuit at the PCM C3 harness connector.

Is the voltage above 5.2 volts?

Yes >> Repair the Oil Sensor 5-Volt Signal circuit for short to voltage.
Perform POWERTRAIN VERIFICATION TEST - VER 2.

No >> Go To 5

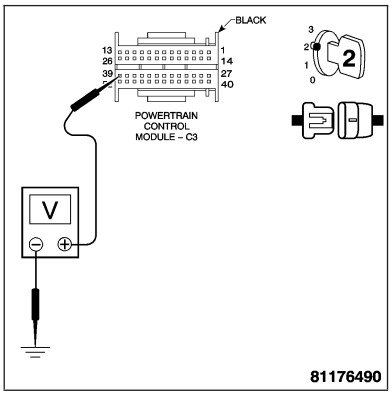

ENGINE OIL SENSOR OVER TEMPERATURE — CONTINUED

5. 5-VOLT SUPPLY CIRCUIT SHORTED TO GROUND

Turn the ignition off.

Measure the resistance between ground and the 5-Volt Supply circuit.

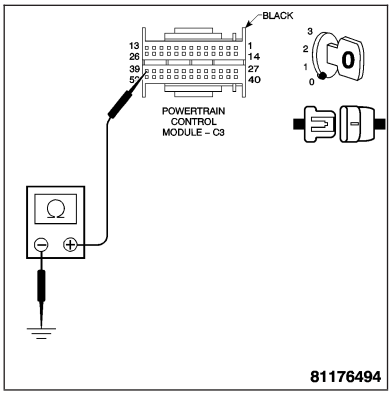

Is the resistance below 100 ohms?

Yes >> Repair the Oil Sensor 5-Volt Signal circuit for short to ground.
Perform POWERTRAIN VERIFICATION TEST - VER 2.

No >> Go To 6

6. 5-VOLT SUPPLY CIRCUIT OPEN

With the ignition off.

Measure the resistance of the 5-Volt Supply circuit from the Oil Sensor harness connector to the PCM C3 harness connector.

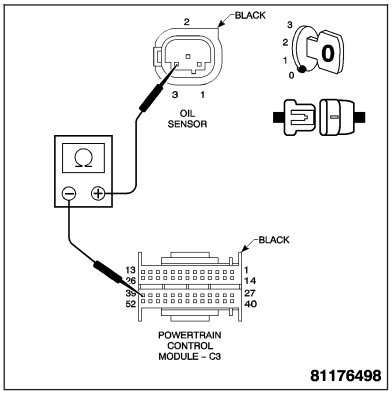

Is the resistance below 5.0 ohms?

Yes >> Replace and program the Powertrain Control Module. **Refer to Page 8E-56**.
Perform POWERTRAIN VERIFICATION TEST - VER 2.

No >> Repair the in the 5-Volt Supply circuit for an open.
Perform POWERTRAIN VERIFICATION TEST - VER 2.

7. OPEN OIL SENSOR GROUND CIRCUIT

Turn the ignition off.

Disconnect the PCM C3 harness connector.

Note: Check connectors — Clean/repair as necessary.

Measure the resistance of the Oil Sensor Ground circuit from the PCM C3 harness connector to the Oil Sensor harness connector.

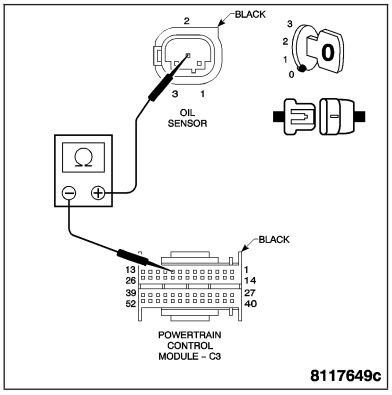

Is the resistance below 5.0 ohms?

Yes >> Go To 8

No >> Repair the Oil Sensor Ground circuit for an open.
Perform POWERTRAIN VERIFICATION TEST - VER 2.

ENGINE OIL SENSOR OVER TEMPERATURE — CONTINUED

8. OPEN OIL SENSOR SIGNAL CIRCUIT

With the ignition off.
Measure the resistance of the Oil Sensor Signal Circuit from the Oil Sensor harness connector and the PCM C3 harness connector.

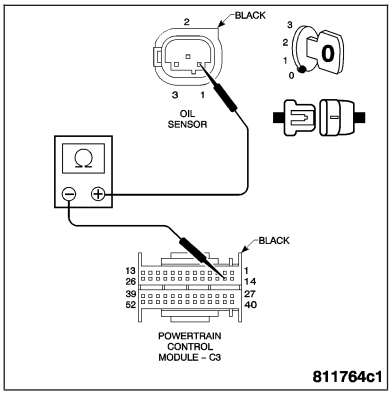

Is the resistance below 5.0 ohms?

Yes >> Go To 9

No >> Repair the in the Oil Sensor Signal circuit for an open. Perform POWERTRAIN VERIFICATION TEST - VER 2.

9. OIL SENSOR SIGNAL CIRCUIT SHORTED TO GROUND.

With the ignition off.
Measure the resistance between ground and the Oil Sensor Signal Circuit.

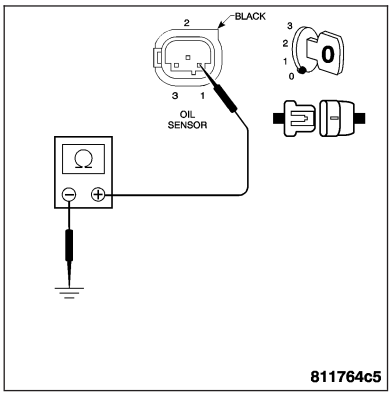

Is the resistance below 100 ohms?

Yes >> Repair the Oil Sensor Signal Circuit for a short to ground. Perform POWERTRAIN VERIFICATION TEST - VER 2.

No >> Replace and program the Powertrain Control Module. **Refer to Page 8E-56**. Perform POWERTRAIN VERIFICATION TEST - VER 2.

10. INTERMITTENT WIRING AND CONNECTORS

The condition that caused this DTC to set are currently not present. Inspect the related wiring harness for a possible intermittent condition.

Note: Check connectors — Clean/repair as necessary. Poor pin to terminal connections can set DTCs.

Note: Check for any Technical Service Bulletins that may apply.
Using the wiring diagram/schematic as a guide, inspect the wiring and connectors specific to this DTC. Wiggle the wires while checking for shorts and open circuits.

Were there any problems found?

Yes >> Repair as necessary. Perform POWERTRAIN VERIFICATION TEST - VER 2.

No >> The condition that caused this DTC to set is currently not present. Inspect the related wiring harness for a possible intermittent condition.

ENGINE OIL SENSOR PERFORMANCE

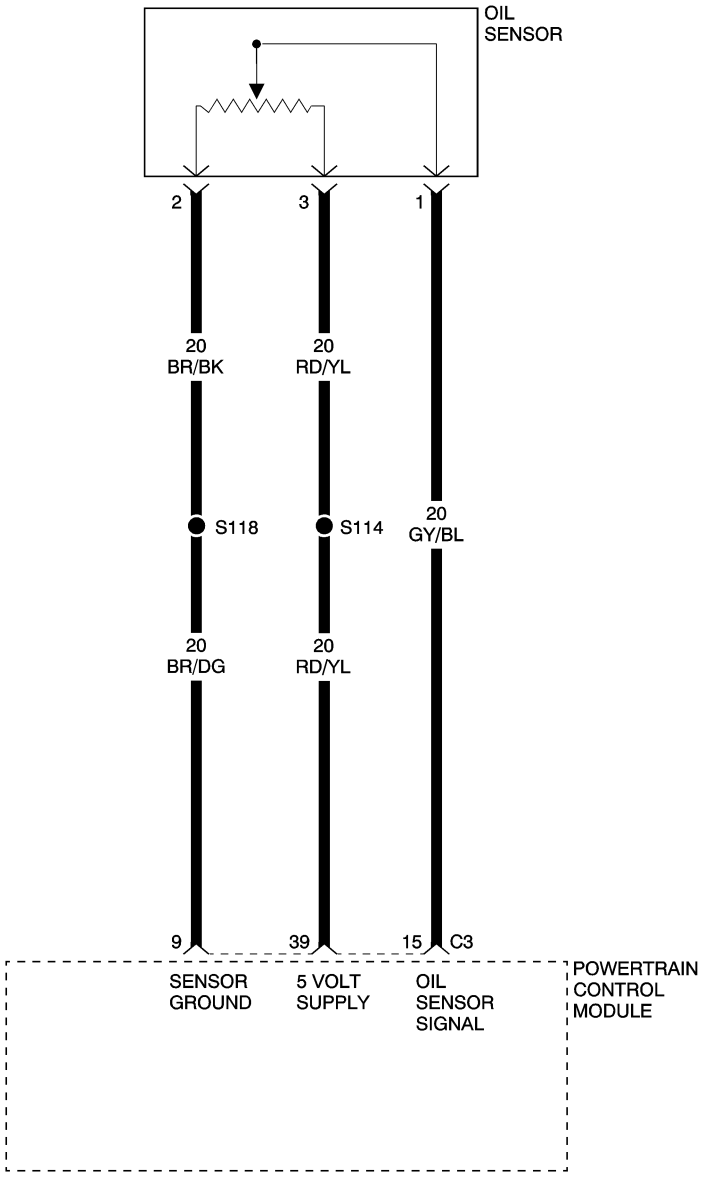

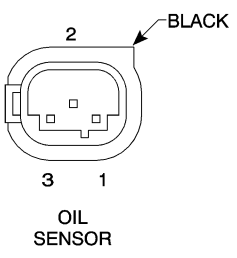

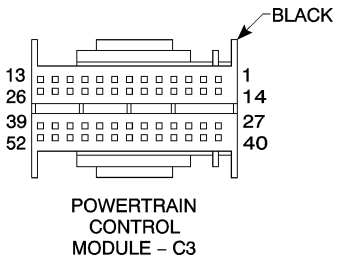

81162c16

ENGINE OIL SENSOR PERFORMANCE — CONTINUED

When Monitored and Set Condition

- When Monitored: With the engine running.
- Set Condition: Anytime the Powertrain Control Module (PCM) senses the Oil Quality value is above 4.0 mm.
- **Note: The engine oil must be changed before this test can be accurately conducted.**

POSSIBLE CAUSES
5-VOLT SUPPLY CIRCUIT SHORTED TO GROUND
5-VOLT SUPPLY CIRCUIT OPEN
OIL SENSOR SIGNAL CIRCUIT SHORTED TO GROUND
OIL SENSOR SIGNAL CIRCUIT OPEN
OIL SENSOR GROUND CIRCUIT OPEN
WATER IN THE OIL
OIL SENSOR
POWERTRAIN CONTROL MODULE

Diagnostic Test

1. CHECK FOR CURRENT DTC

Turn the ignition on.
With the DRB III®, read the PCM DTCs.

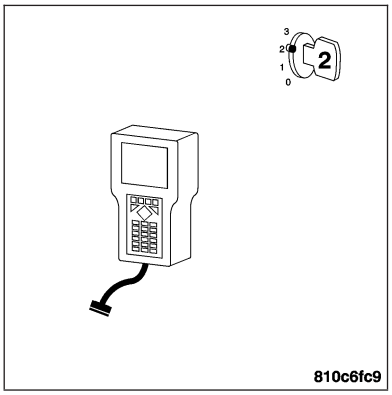

Is this DTC preset?

Yes >> For complete diagnosis of this DTC, refer to ENGINE OIL SENSOR QUALITY PERFORMANCE.

No >> Go To 2

2. INTERMITTENT WIRING AND CONNECTORS

The conditions necessary to set this DTC are not present at this time.

Note: Check connectors — Clean/repair as necessary. Poor pin to terminal connections can set DTCs.Using the wiring diagram/schematic as a guide, inspect the wiring and connectors specific to this DTC. Wiggle the wires while checking for shorts and open circuits.

Note: Check for any Technical Service Bulletins that may apply.

Were there any problems found?

Yes >> Repair as necessary.
Perform POWERTRAIN VERIFICATION TEST - VER 2.

No >> The condition that caused this DTC to set is currently not present. Inspect the related wiring harness for a possible intermittent condition.

ENGINE OIL SENSOR QUALITY PERFORMANCE

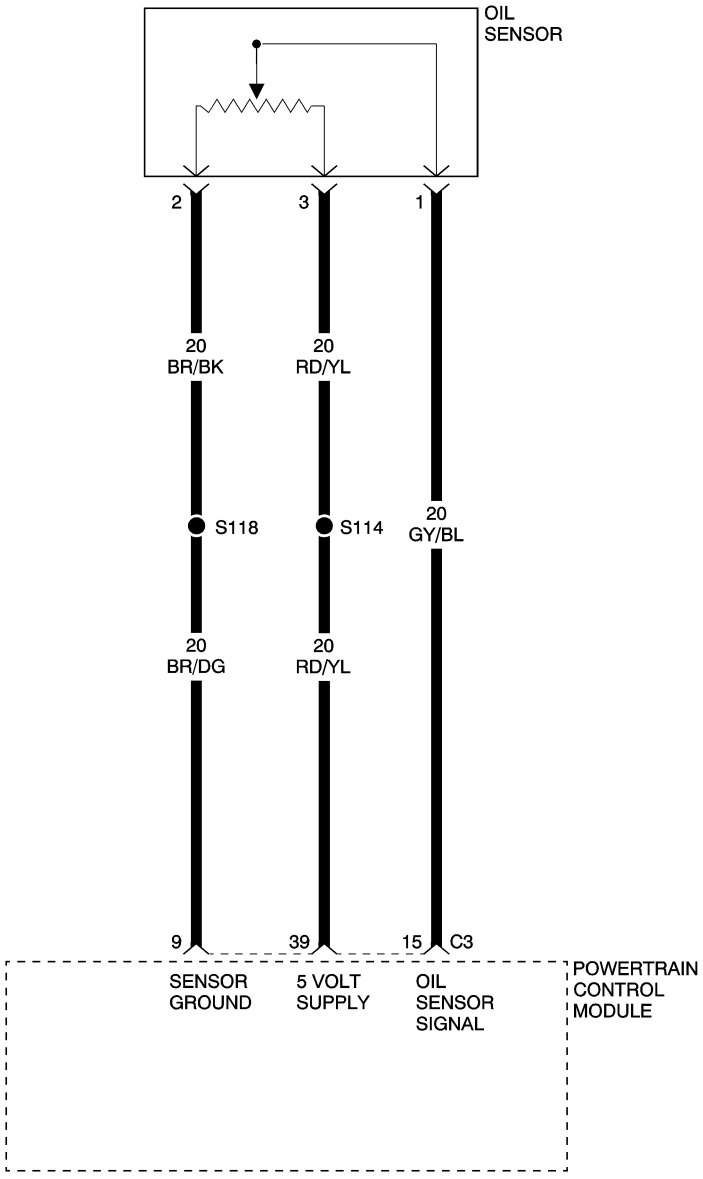

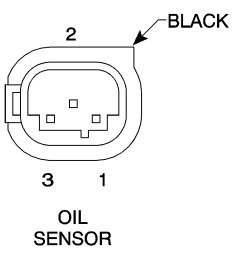

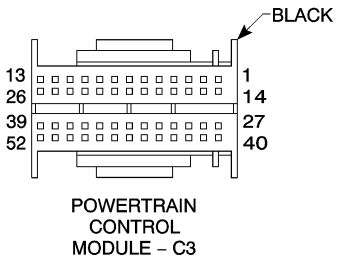

81162c16

ENGINE OIL SENSOR QUALITY PERFORMANCE — CONTINUED

When Monitored and Set Condition

- When Monitored: With the engine running.
- Set Condition: Anytime the Powertrain Control Module (PCM) senses the Oil Quality value is above 4.0 mm.
- **Note: The engine oil must be changed before this test can be accurately conducted.**

POSSIBLE CAUSES
5-VOLT SUPPLY CIRCUIT SHORTED TO GROUND
5-VOLT SUPPLY CIRCUIT OPEN
OIL SENSOR SIGNAL CIRCUIT SHORTED TO GROUND
OIL SENSOR SIGNAL CIRCUIT OPEN
OIL SENSOR GROUND CIRCUIT OPEN
WATER IN THE OIL
OIL SENSOR
POWERTRAIN CONTROL MODULE

For a complete Powertrain Control Module Circuit Diagram **Refer to Page 9-574**.

Diagnostic Test

1. CHECKING FOR OIL SENSOR DTCS

Note: Normal Oil quality reading will range from +1.0 to +4.0 mm
With the fresh engine oil, turn the ignition on.

Note: Before erasing stored DTCs, record these conditions. Attempting to duplicate these conditions may assist when checking for a DTC.
With the DRB III®, erase DTCs.
Start the engine and run until operating temp is reached. (Closed Loop)
If the DTC does not reset it may be necessary to take the vehicle on a test drive.

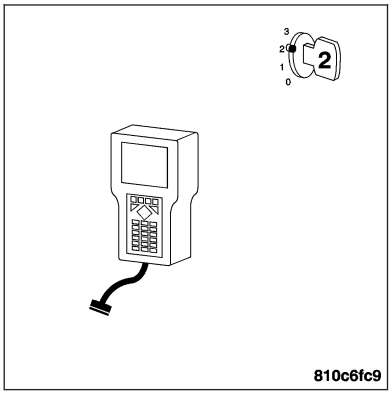

Are any Oil Sensor DTCs set?

Yes >> Go To 2
No >> Go To 10

ENGINE OIL SENSOR QUALITY PERFORMANCE — CONTINUED

2. CHECKING FOR OIL SENSOR QUALITY DTCS

Turn the engine off.
Turn the ignition on.
With the DRB III®, read DTCs.

Is there only one Oil Sensor Quality/Performance DTC set?

Yes >> Replace the Oil Sensor. **Refer to Page 9-672**.
Perform POWERTRAIN VERIFICATION TEST - VER 2.

No >> Go To 3

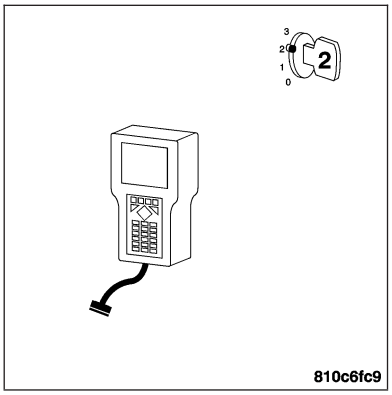

3. 5-VOLT SUPPLY CIRCUIT

Turn the ignition off.
Disconnect the Oil Sensor harness connector.

Note: Check connectors — Clean/repair as necessary.
Turn the ignition on.
Measure the voltage of the 5-Volt Supply circuit at the Oil Sensor harness connector.

Is the voltage between 4.5 to 5.0 volts?

Yes >> Go To 7

No >> Go To 4

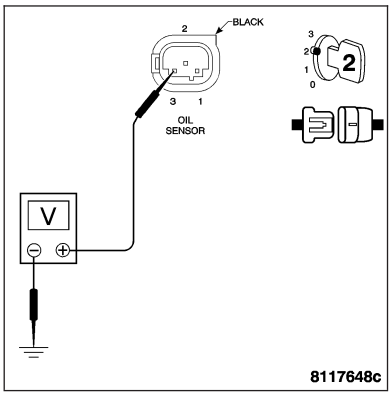

4. 5-VOLT SUPPLY CIRCUIT SHORTED TO VOLTAGE

Turn the ignition off.
Disconnect the PCM C3 harness connector.

Note: Check connectors — Clean/repair as necessary.
Turn the ignition on.
Measure the voltage of the 5-Volt Supply circuit at the PCM C3 harness connector.

Is the voltage above 5.2 volts?

Yes >> Repair the Oil Sensor 5-Volt Signal circuit for short to voltage.
Perform POWERTRAIN VERIFICATION TEST - VER 2.

No >> Go To 5

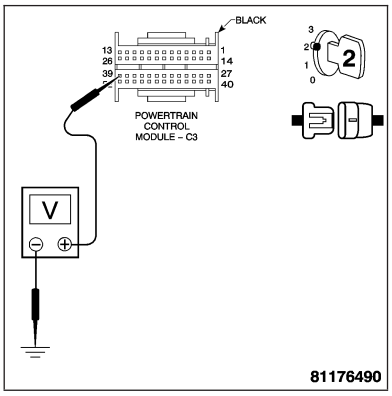

ENGINE OIL SENSOR QUALITY PERFORMANCE — CONTINUED

5. 5-VOLT SUPPLY CIRCUIT SHORTED TO GROUND

Turn the ignition off.

Measure the resistance between ground and the 5-Volt Supply circuit.

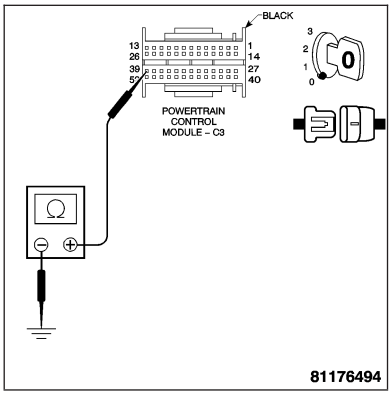

Is the resistance below 100 ohms?

Yes >> Repair the Oil Sensor 5-Volt Signal circuit for short to ground.
Perform POWERTRAIN VERIFICATION TEST - VER 2.

No >> Go To 6

6. 5-VOLT SUPPLY CIRCUIT OPEN

With the ignition off.

Measure the resistance of the 5-Volt Supply circuit from the Oil Sensor harness connector to the PCM C3 harness connector.

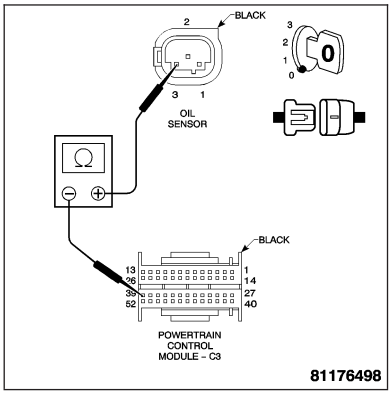

Is the resistance below 5.0 ohms?

Yes >> Replace and program the Powertrain Control Module. **Refer to Page 8E-56**.
Perform POWERTRAIN VERIFICATION TEST - VER 2.

No >> Repair the in the 5-Volt Supply circuit for an open.
Perform POWERTRAIN VERIFICATION TEST - VER 2.

7. OPEN OIL SENSOR GROUND CIRCUIT

Turn the ignition off.

Disconnect the PCM C3 harness connector.

Note: Check connectors — Clean/repair as necessary.

Measure the resistance of the Oil Sensor Ground circuit from the PCM C3 harness connector to the Oil Sensor harness connector.

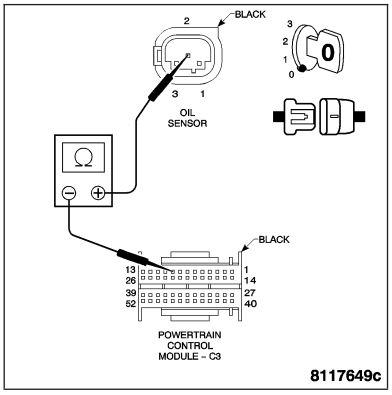

Is the resistance below 5.0 ohms?

Yes >> Go To 8

No >> Repair the Oil Sensor Ground circuit for an Open
Perform POWERTRAIN VERIFICATION TEST - VER 2.

ENGINE OIL SENSOR QUALITY PERFORMANCE — CONTINUED

8. OIL SENSOR SIGNAL CIRCUIT OPEN

Turn the ignition off.

Measure the resistance of the Oil Sensor Signal circuit from the Oil Sensor harness connector to the PCM C3 harness connector.

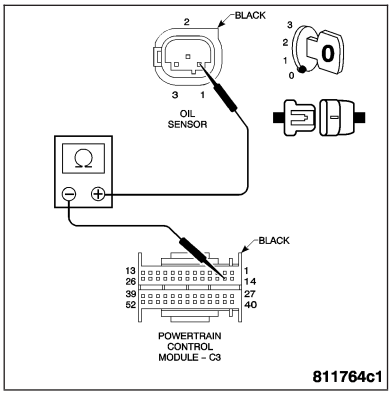

Is the resistance below 5.0 ohms?

Yes >> Go To 9

No >> Repair the in the Oil Sensor Signal circuit open.
Perform POWERTRAIN VERIFICATION TEST - VER 2.

9. OIL SENSOR SIGNAL CIRCUIT SHORTED TO GROUND.

Turn the ignition off.

Measure the resistance between ground and the Oil Sensor Signal circuit.

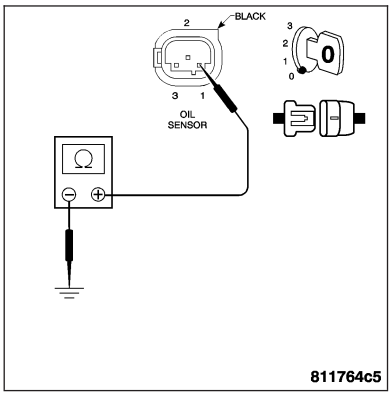

Is the resistance below 100 ohms?

Yes >> Repair the Oil Sensor Signal circuit for a short to ground.
Perform POWERTRAIN VERIFICATION TEST - VER 2.

No >> Replace and program the Powertrain Control Module.
Refer to Page 8E-56.
Perform POWERTRAIN VERIFICATION TEST - VER 2.

10. INTERMITTENT WIRING AND CONNECTORS

The conditions necessary to set this DTC are not present at this time.

Note: Check connectors — Clean/repair as necessary. Poor pin to terminal connections can set DTCs.Using the wiring diagram/schematic as a guide, inspect the wiring and connectors specific to this DTC. Wiggle the wires while checking for shorts and open circuits.

Note: Check for any Technical Service Bulletins that may apply.

Were there any problems found?

Yes >> Repair as necessary.
Perform POWERTRAIN VERIFICATION TEST - VER 2.

No >> The condition that caused this DTC to set is currently not present. Inspect the related wiring harness for a possible intermittent condition.

ENGINE OIL SENSOR WATER CONTAMINATION

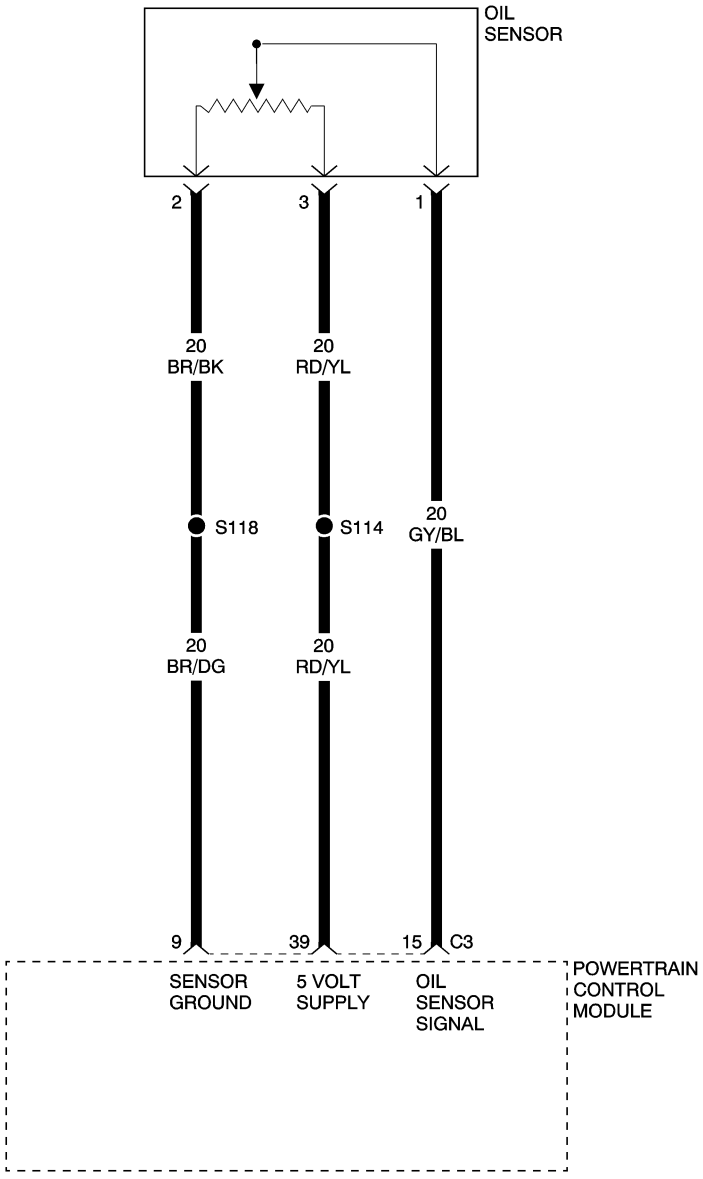

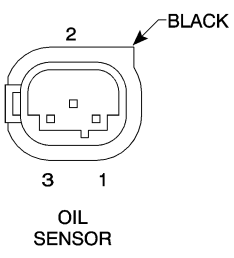

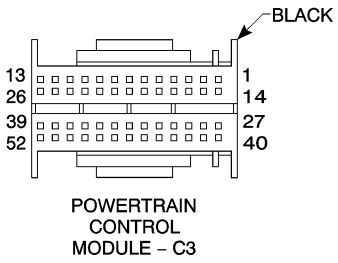

81162c16

ENGINE OIL SENSOR WATER CONTAMINATION — CONTINUED

When Monitored and Set Condition

- When Monitored: With the engine running.
- Set Condition: Anytime the Powertrain Control Module (PCM) senses the Oil Quality value is above 4.0 mm.
- **Note: The engine oil must be changed before this test can be accurately conducted.**

POSSIBLE CAUSES
5-VOLT SUPPLY CIRCUIT SHORTED TO GROUND
5-VOLT SUPPLY CIRCUIT OPEN
OIL SENSOR SIGNAL CIRCUIT SHORTED TO GROUND
OIL SENSOR SIGNAL CIRCUIT OPEN
OIL SENSOR GROUND CIRCUIT OPEN
WATER IN THE OIL
OIL SENSOR
POWERTRAIN CONTROL MODULE

Diagnostic Test

1. CHECK FOR CURRENT DTC

Turn the ignition on.
With the DRB III®, read the PCM DTCs.

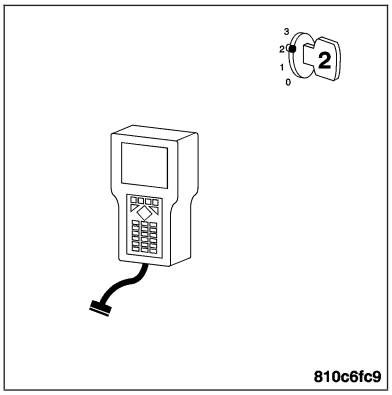

Is this DTC preset?

Yes >> For complete diagnosis of this DTC, refer to ENGINE OIL SENSOR QUALITY PERFORMANCE.

No >> Go To 2

2. INTERMITTENT WIRING AND CONNECTORS

The conditions necessary to set this DTC are not present at this time.

Note: Check connectors — Clean/repair as necessary. Poor pin to terminal connections can set DTCs.Using the wiring diagram/schematic as a guide, inspect the wiring and connectors specific to this DTC. Wiggle the wires while checking for shorts and open circuits.

Note: Check for any Technical Service Bulletins that may apply.

Were there any problems found?

Yes >> Repair as necessary.
Perform POWERTRAIN VERIFICATION TEST - VER 2.

No >> The condition that caused this DTC to set is currently not present. Inspect the related wiring harness for a possible intermittent condition.

SAFETY FUEL SHUT OFF DETECTED

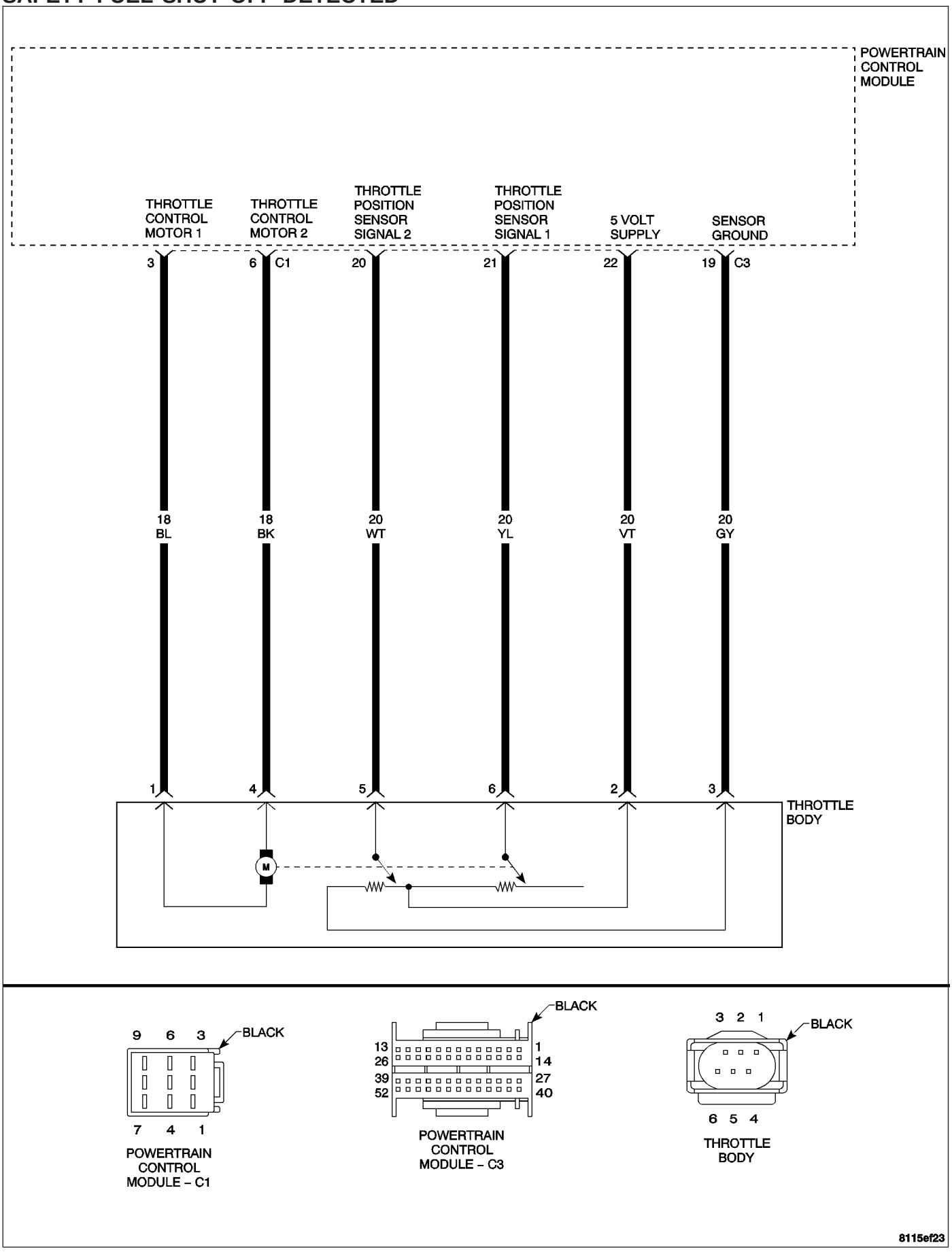

SAFETY FUEL SHUT OFF DETECTED — CONTINUED

When Monitored and Set Condition

- When Monitored: Ignition on.
- Set Condition: Just after key on, the throttle is opened and closed to test the system. If the Throttle Position Sensor (TPS) does not quickly exceed a calibrated value this DTC will set. One trip fault.

POSSIBLE CAUSES
THROTTLE PLATE STUCK AT OR BELOW LIMP HOME POSITION
THROTTLE CONTROL MOTOR 2 CIRCUIT SHORTED TO VOLTAGE
THROTTLE CONTROL MOTOR 1 CIRCUIT OPEN
THROTTLE CONTROL MOTOR 2 CIRCUIT OPEN
THROTTLE CONTROL MOTOR 1 CIRCUIT SHORTED TO GROUND
THROTTLE CONTROL MOTOR 2 CIRCUIT SHORTED TO GROUND
POWERTRAIN CONTROL MODULE

For a complete Powertrain Control Module Circuit Diagram **Refer to Page 9-574**.

Diagnostic Test

1. CHECK FOR CURRENT DTC

Note: If the PCM detects and stores a DTC, the PCM also stores the engine/vehicle operating conditions under which the DTC was set. Some of these conditions are displayed on the DRB III® at the same time the DTC is displayed.

Note: Before erasing stored DTCs, record these conditions. Attempting to duplicate these conditions may assist when checking for an active DTC.

Turn the ignition on.

With the DRB III®, erase PCM DTCs.

Note: It maybe necessary to road test the vehicle for this DTC to set.

With the DRB III®, read the PCM DTCs.

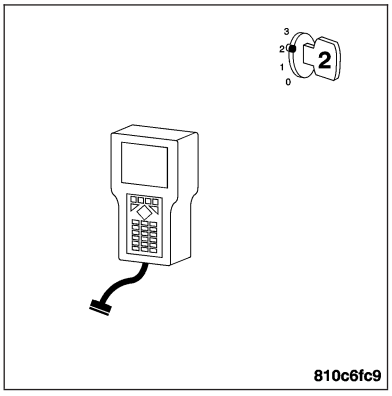

Did this DTC set again?

Yes >> Go To 2

No >> Go To 9

SAFETY FUEL SHUT OFF DETECTED — CONTINUED

2. THROTTLE PLATE STUCK OPEN

Turn the ignition off.

Remove the Air Cleaner Housing **Refer to Page 9-608** and the MAF Sensor **Refer to Page 14-37** from the Throttle Body.

Check for any signs of a foreign material causing the Throttle to remain open.

Manually open and close the throttle plate using your hands.

Does the Throttle Plate move?

Yes >> Go To 3

No >> Remove the debris if possible or replace the Throttle Body Assembly. **Refer to Page 14-48**. Disconnect the Battery when replacing the Throttle Body Assembly.
Perform POWERTRAIN VERIFICATION TEST - VER 2.

3. THROTTLE CONTROL MOTOR 2 CIRCUIT SHORT TO VOLTAGE

With the ignition off.

Disconnect the PCM C1 harness connectors and the Throttle Body harness connector.

Note: Check connectors — Clean/repair as necessary.

Turn the ignition on.

Measure the voltage of the Throttle Control Motor 2 circuit at the Throttle Body harness connector.

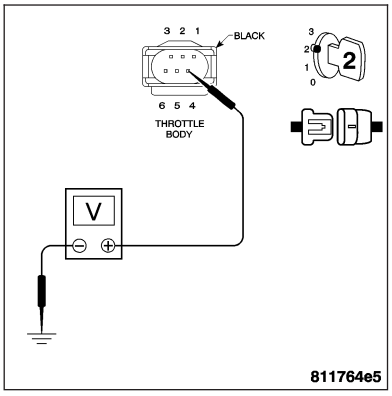

Is the voltage above 1.0 volt?

Yes >> Repair the Throttle Control Motor 2 circuit for a short to voltage.
Perform POWERTRAIN VERIFICATION TEST - VER 2.

No >> Go To 4

4. THROTTLE CONTROL MOTOR 1 CIRCUIT OPEN

Turn the ignition off.

Measure the resistance of the Throttle Control Motor 1 circuit from the Throttle Body harness connector to the PCM C1 harness connector.

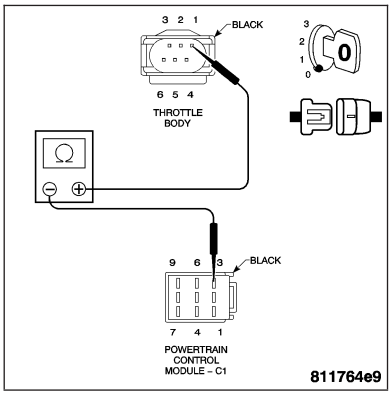

Is the resistance below 5.0 ohms?

Yes >> Go To 5

No >> Repair the Throttle Control Motor 1 circuit for an open.
Perform POWERTRAIN VERIFICATION TEST - VER 2.

SAFETY FUEL SHUT OFF DETECTED — CONTINUED

5. THROTTLE CONTROL MOTOR 2 CIRCUIT OPEN

With the ignition off.

Measure the resistance of the Throttle Control Motor 2 circuit from the Throttle Body harness connector to the PCM C1 harness connector.

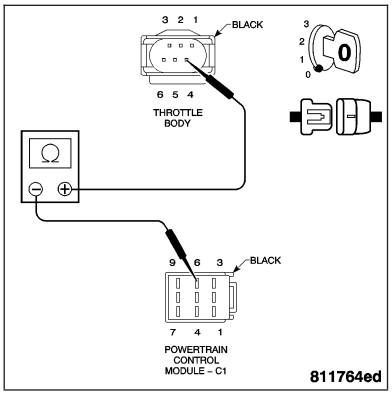

Is the resistance below 5.0 ohms?

Yes >> Go To 6

No >> Repair the Throttle Control Motor 2 circuit for an open.
Perform POWERTRAIN VERIFICATION TEST - VER 2.

6. THROTTLE CONTROL MOTOR 1 CIRCUIT SHORTED TO GROUND

With the ignition off.

Measure the resistance between ground and the Throttle Control Motor 1 circuit at the PCM C1 harness connector.

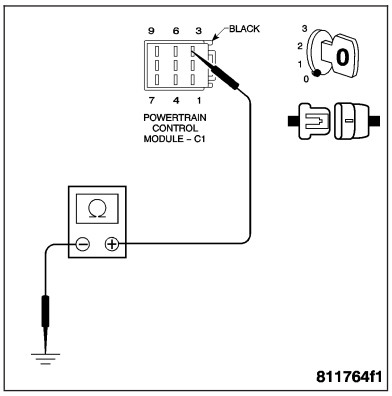

Is the resistance below 100 ohms?

Yes >> Repair the Throttle Control Motor 1 circuit for a short to ground.
Perform POWERTRAIN VERIFICATION TEST - VER 2.

No >> Go To 7

7. THROTTLE CONTROL MOTOR 2 CIRCUIT SHORTED TO GROUND

With the ignition off.

Measure the resistance between ground and the Throttle Control Motor 2 circuit at the PCM C1 harness connector.

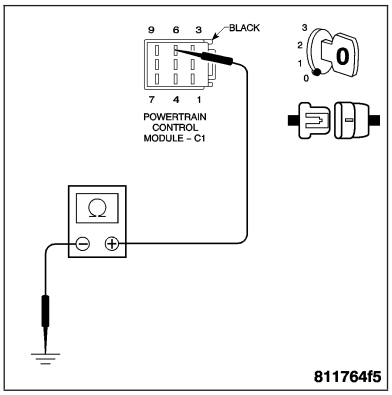

Is the resistance below 100 ohms?

Yes >> Repair the Throttle Control Motor 2 circuit for a short to ground.
Perform POWERTRAIN VERIFICATION TEST - VER 2.

No >> Go To 8

SAFETY FUEL SHUT OFF DETECTED — CONTINUED

8. PCM

Note: Before continuing, check the PCM C1 harness connector terminals for corrosion, damage, or terminal push out. Repair as necessary.

Using the schematics as a guide, inspect the wire harness and connectors. Pay particular attention to all Power and Ground circuits.

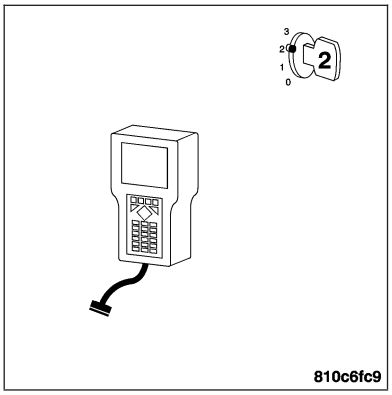

If there are no possible causes remaining, view repair.

Repair >> Replace and program the Powertrain Control Module. **Refer to Page 8E-56**.
Perform POWERTRAIN VERIFICATION TEST - VER 2.

9. INTERMITTENT WIRING AND CONNECTORS

The conditions necessary to set this DTC are not present at this time.

Note: Check connectors — Clean/repair as necessary. Poor pin to terminal connections can set DTCs.Using the wiring diagram/schematic as a guide, inspect the wiring and connectors specific to this DTC. Wiggle the wires while checking for shorts and open circuits.

Note: Check for any Technical Service Bulletins that may apply.

Were there any problems found?

Yes >> Repair as necessary.
Perform POWERTRAIN VERIFICATION TEST - VER 2.

No >> The condition that caused this DTC to set is currently not present. Inspect the related wiring harness for a possible intermittent condition.

SHORT RUNNER SOLENOID CIRCUIT HIGH

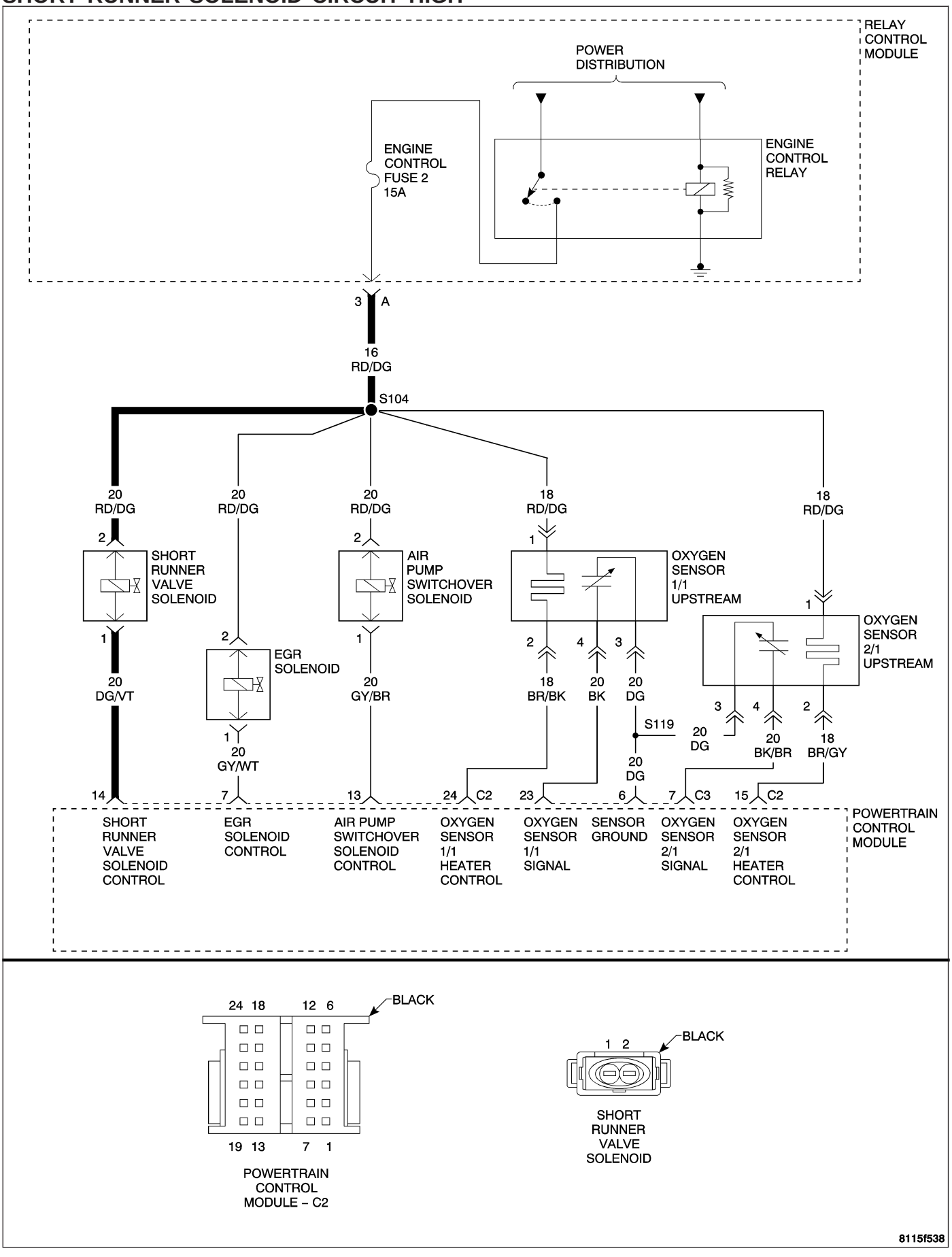

SHORT RUNNER SOLENOID CIRCUIT HIGH — CONTINUED

When Monitored and Set Condition

- When Monitored: Engine running
- Set Condition: When the PCM is not commanding the Short Runner Valve Solenoid on and doesn't detect voltage at the control circuit.

POSSIBLE CAUSES
SHORT RUNNER VALVE SOLENOID CONTROL CIRCUIT OPEN
SHORT RUNNER VALVE SOLENOID CONTROL CIRCUIT SHORTED VOLTAGE
SHORT RUNNER VALVE SOLENOID CONTROL CIRCUIT SHORTED GROUND
ENGINE CONTROL RELAY OUTPUT CIRCUIT OPEN
SHORT RUNNER VALVE SOLENOID
POWERTRAIN CONTROL MODULE

For a complete Powertrain Control Module Circuit Diagram **Refer to Page 9-574**.

Diagnostic Test

1. CHECKING SHORT RUNNER VALVE SOLENOID OPERATION WITH THE DRB III®

Turn the ignition on.
With the DRB III®, actuate the Short Runner Valve Solenoid.

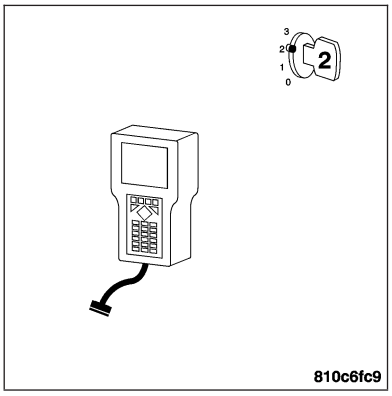

Does the Short Runner Value Solenoid rod move back and forth?

Yes >> Go To 7

No >> Go To 2

2. FUSED ENGINE CONTROL RELAY OUTPUT CIRCUIT

Turn the ignition off.
Disconnect the Short Runner Value Solenoid harness connector.

Note: Check connectors — Clean/repair as necessary.
Turn the ignition on.
Measure the voltage of the Fused Engine Control Relay Output circuit at the Short Runner Valve Solenoid harness connector.

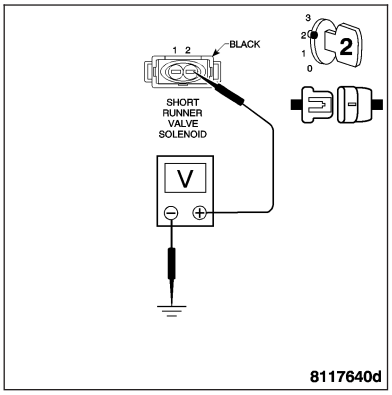

Is the voltage above 10 volts?

Yes >> Go To 3

No >> Repair the Fused Engine Control Relay Output circuit for an open.
Perform POWERTRAIN VERIFICATION TEST - VER 2.

SHORT RUNNER SOLENOID CIRCUIT HIGH — CONTINUED

3. CHECKING THE SHORT RUNNER VALUE SOLENOID

With the ignition on.

With the DRB III®, actuate the Short Runner Valve Solenoid.

Using a 12-volt test light connected across the Short Runner Valve Solenoid harness connector.

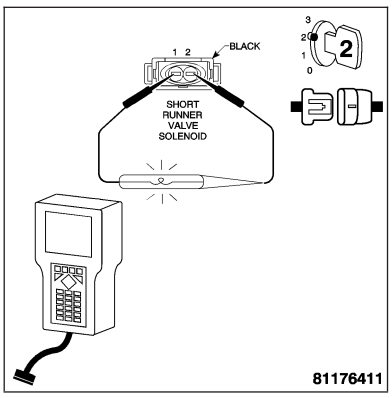

Does the 12-volt test light flash on and off?

Yes >> Replace the Short Runner Valve Solenoid. **Refer to Page 14-41**.
Perform POWERTRAIN VERIFICATION TEST - VER 2.

No >> Go To 4

4. CHECKING THE SHORT RUNNER VALUE SOLENOID CONTROL CIRCUIT FOR A SHORT TO VOLTAGE

Turn the ignition off.

Disconnect the PCM C2 harness connector.

Note: Check connectors — Clean/repair as necessary.

Turn the ignition on.

Measure the voltage of the Short Runner Valve Solenoid control circuit at the Short Runner Valve Solenoid harness connector.

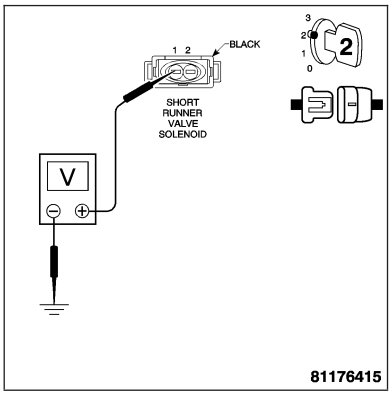

Is the voltage above 1.0 volt?

Yes >> Repair the Short Runner Valve Solenoid control circuit for a short to voltage.
Perform POWERTRAIN VERIFICATION TEST - VER 2.

No >> Go To 5

5. CHECKING THE SHORT RUNNER VALUE SOLENOID CONTROL CIRCUIT FOR A SHORT TO GROUND

Turn the ignition off.

Measure the resistance between ground and the Short Runner Valve Solenoid Control circuit.

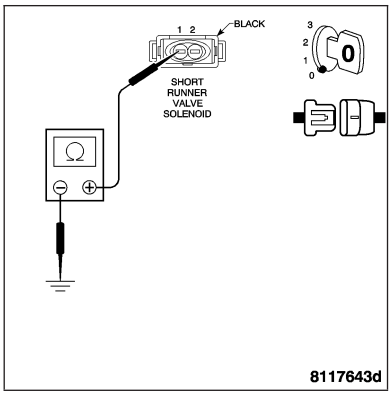

Is the resistance below 100 ohms?

Yes >> Repair the Short Runner Valve Solenoid Control circuit for a short to ground.
Perform POWERTRAIN VERIFICATION TEST - VER 2.

No >> Go To 6

SHORT RUNNER SOLENOID CIRCUIT HIGH — CONTINUED

6. CHECKING SHORT RUNNER VALUE SOLENOID CONTROL CIRCUIT FOR AN OPEN

With the ignition off.

Measure the resistance of the Short Runner Valve Solenoid Control circuit from the Short Runner Valve Solenoid harness connector to the PCM C2 harness connector.

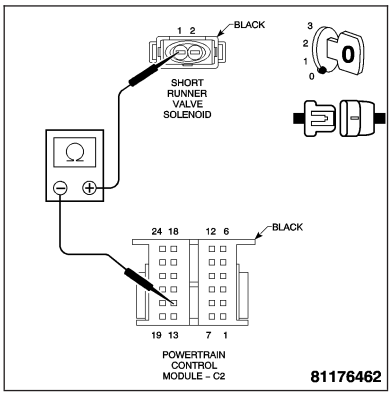

Is the resistance below 5.0 ohms?

Yes >> Replace and program the Powertrain Control Module. **Refer to Page 8E-56**.
Perform POWERTRAIN VERIFICATION TEST - VER 2.

No >> Repair the Short Runner Valve Solenoid Control circuit for an open.
Perform POWERTRAIN VERIFICATION TEST - VER 2.

7. INTERMITTENT WIRING AND CONNECTORS

The conditions necessary to set this DTC are not present at this time.

Note: Check connectors — Clean/repair as necessary. Poor pin to terminal connections can set DTCs.Using the wiring diagram/schematic as a guide, inspect the wiring and connectors specific to this DTC. Wiggle the wires while checking for shorts and/or open circuits.

Note: Check for any Technical Service Bulletins that may apply.

Were there any problems found?

Yes >> Repair as necessary.
Perform POWERTRAIN VERIFICATION TEST - VER 2.

No >> The condition that caused this DTC to set is currently not present. Inspect the related wiring harness for a possible intermittent condition.

SHORT RUNNER SOLENOID CIRCUIT LOW

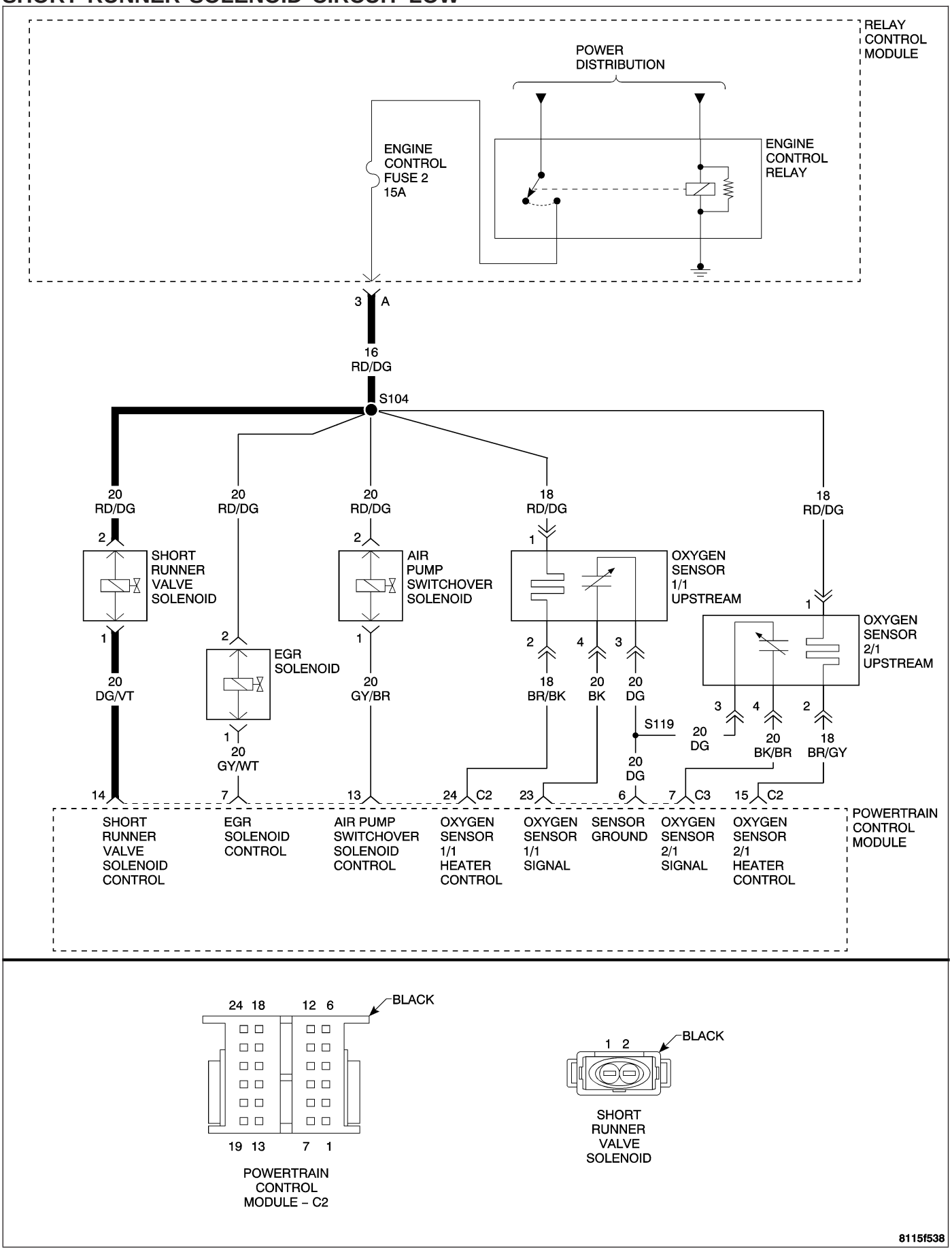

SHORT RUNNER SOLENOID CIRCUIT LOW — CONTINUED

When Monitored and Set Condition

- When Monitored: Engine running
- Set Condition: When the PCM is not commanding the Short Runner Valve Solenoid on and doesn't detect voltage at the control circuit.

POSSIBLE CAUSES
SHORT RUNNER VALVE SOLENOID CONTROL CIRCUIT OPEN
SHORT RUNNER VALVE SOLENOID CONTROL CIRCUIT SHORTED GROUND
ENGINE CONTROL RELAY OUTPUT CIRCUIT OPEN
SHORT RUNNER VALVE SOLENOID
POWERTRAIN CONTROL MODULE

Diagnostic Test

1. CHECK FOR CURRENT DTC

Turn the ignition on.
With the DRB III®, read the PCM DTCs.

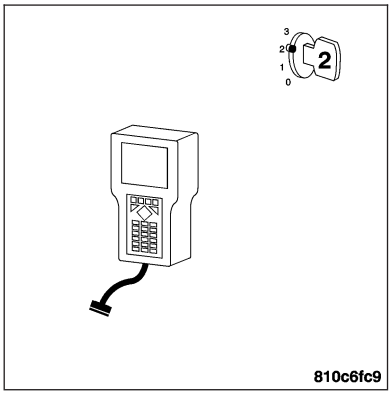

Is this DTC preset?

Yes >> For complete diagnosis of this DTC, refer to SHORT RUNNER SOLENOID CIRCUIT HIGH.

No >> Go To 2

2. INTERMITTENT WIRING AND CONNECTORS

The conditions necessary to set this DTC are not present at this time.

Note: Check connectors — Clean/repair as necessary. Poor pin to terminal connections can set DTCs.Using the wiring diagram/schematic as a guide, inspect the wiring and connectors specific to this DTC. Wiggle the wires while checking for shorts and open circuits.

Note: Check for any Technical Service Bulletins that may apply.

Were there any problems found?

Yes >> Repair as necessary.
Perform POWERTRAIN VERIFICATION TEST - VER 2.

No >> The condition that caused this DTC to set is currently not present. Inspect the related wiring harness for a possible intermittent condition.

SHORT RUNNER SOLENOID CIRCUIT

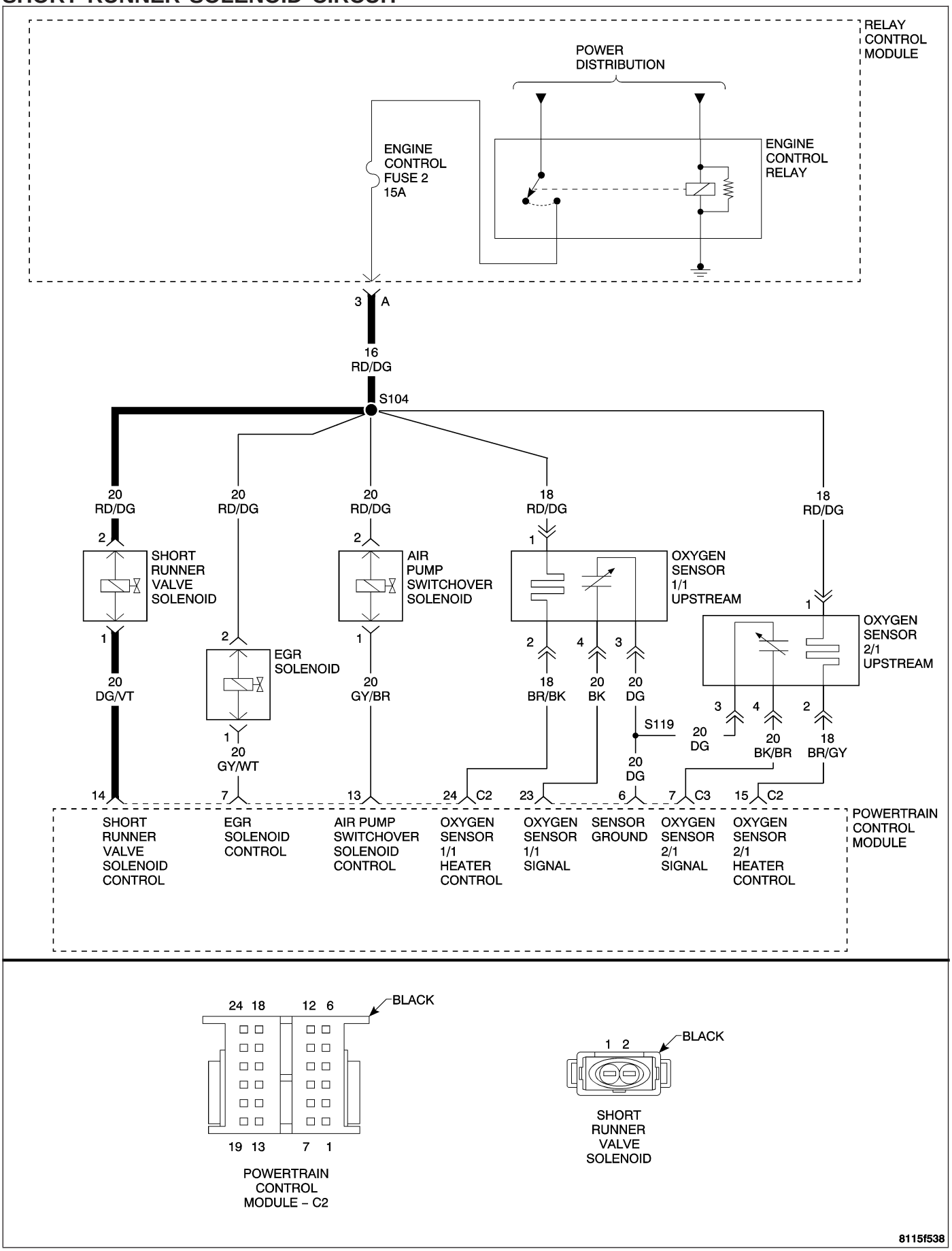

SHORT RUNNER SOLENOID CIRCUIT — CONTINUED

When Monitored and Set Condition

- When Monitored: Engine running
- Set Condition: When the PCM is not commanding the Short Runner Valve Solenoid on and doesn't detect voltage at the control circuit.

POSSIBLE CAUSES
SHORT RUNNER VALVE SOLENOID CONTROL CIRCUIT OPEN
SHORT RUNNER VALVE SOLENOID CONTROL CIRCUIT SHORTED VOLTAGE
SHORT RUNNER VALVE SOLENOID CONTROL CIRCUIT SHORTED GROUND
ENGINE CONTROL RELAY OUTPUT CIRCUIT OPEN
SHORT RUNNER VALVE SOLENOID
POWERTRAIN CONTROL MODULE

Diagnostic Test

1. CHECK FOR CURRENT DTC

Turn the ignition on.
With the DRB III®, read the PCM DTCs.

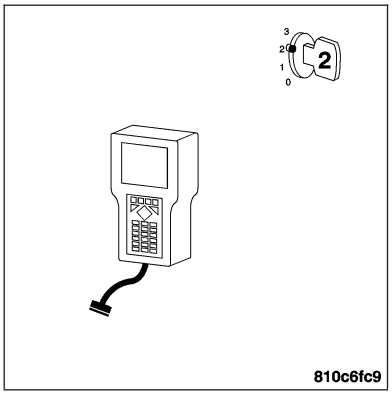

Is this DTC preset?

Yes >> For complete diagnosis of this DTC, refer to SHORT RUNNER SOLENOID CIRCUIT HIGH.

No >> Go To 2

2. INTERMITTENT WIRING AND CONNECTORS

The conditions necessary to set this DTC are not present at this time.

Note: Check connectors — Clean/repair as necessary. Poor pin to terminal connections can set DTCs.Using the wiring diagram/schematic as a guide, inspect the wiring and connectors specific to this DTC. Wiggle the wires while checking for shorts and open circuits.

Note: Check for any Technical Service Bulletins that may apply.

Were there any problems found?

Yes >> Repair as necessary.
Perform POWERTRAIN VERIFICATION TEST - VER 2.

No >> The condition that caused this DTC to set is currently not present. Inspect the related wiring harness for a possible intermittent condition.

SPEED CONTROL SWITCH INPUT CIRCUIT

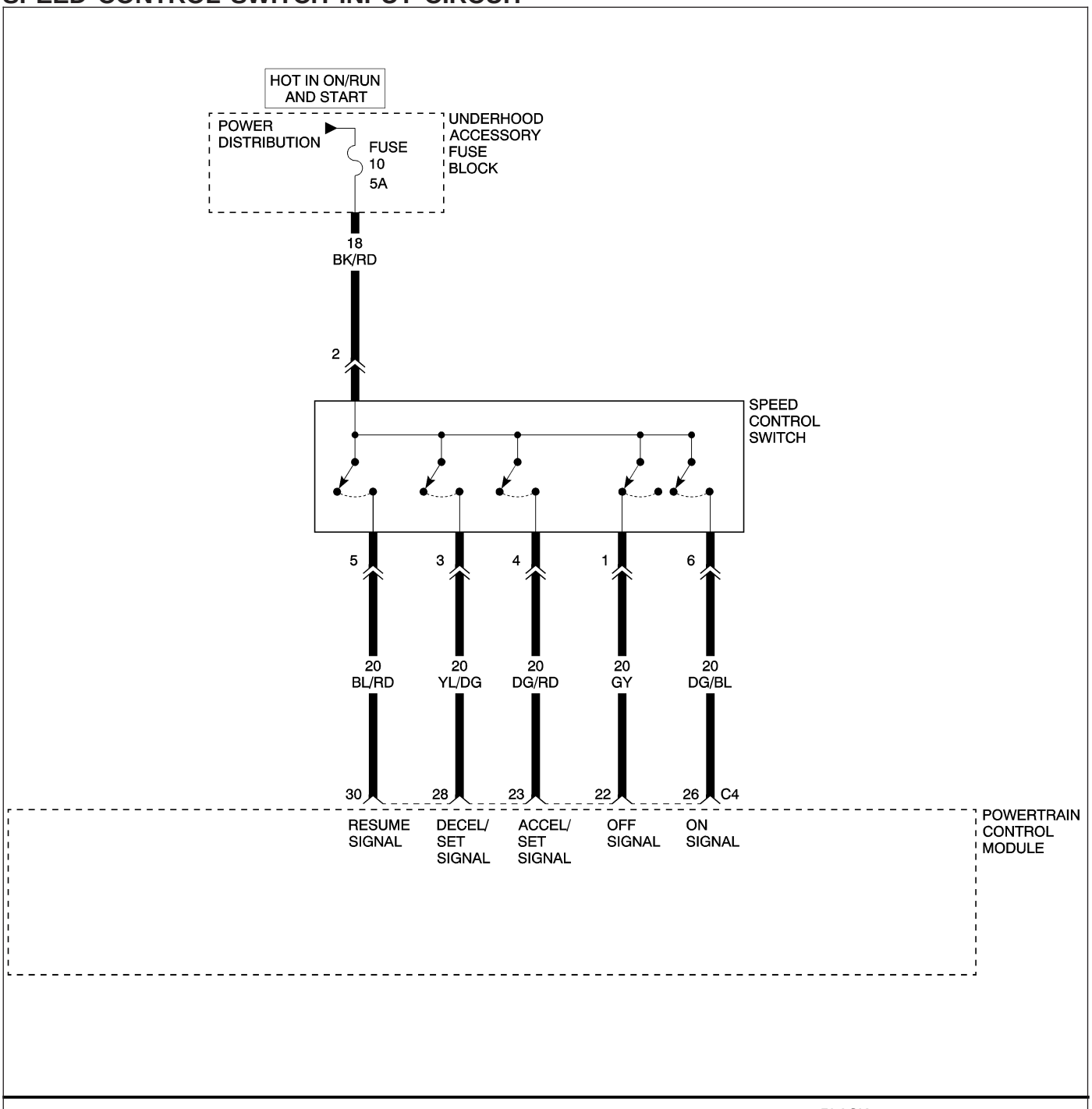

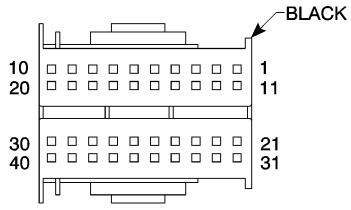

POWERTRAIN CONTROL MODULE – C4

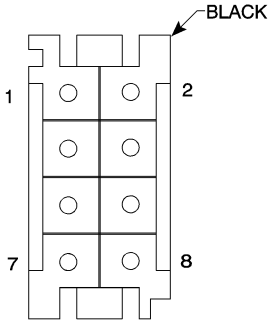

SPEED CONTROL SWITCH

8115dcc0

SPEED CONTROL SWITCH INPUT CIRCUIT — CONTINUED

When Monitored and Set Condition

- When Monitored: With the ignition on.
- Set Condition: Anytime the Powertrain Control Module (PCM) doesn't sense the proper voltage on the Speed Control Switch Off Signal circuit.

POSSIBLE CAUSES
OPEN FUSE #10
FUSED IGNITION SWITCH OUTPUT CIRCUIT OPEN
SPEED CONTROL SWITCH
OPEN SPEED CONTROL SWITCH OFF SIGNAL CIRCUIT
SPEED CONTROL SWITCH SIGNAL CIRCUIT SHORTED TO GROUND
POWERTRAIN CONTROL MODULE

For a complete Powertrain Control Module Circuit Diagram **Refer to Page 9-574**.

Diagnostic Test

1. PCM

Turn the ignition off.

Disconnect the PCM C4 harness connector.

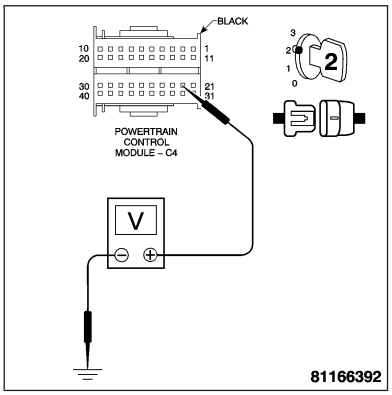

Note: Check connectors — Clean/repair as necessary.

Turn the ignition on.

Measure the voltage of the Speed Control Off Signal circuit at the PCM C4 harness connector.

Is the voltage above 10 volts?

Yes >> Replace and program the Powertrain Control Module. **Refer to Page 8E-56**.
Perform POWERTRAIN VERIFICATION TEST - VER 5.

No >> Go To 2

2. SPEED CONTROL OFF SIGNAL CIRCUIT SHORT TO GROUND

Turn the ignition off.

Disconnect the Speed Control Switch harness connector.

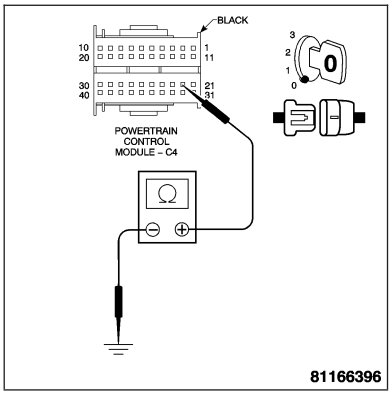

Note: Check connectors — Clean/repair as necessary.

Measure the resistance between ground and the Speed Control Off Signal circuit.

Is the resistance below 100 ohms?

Yes >> Repair the Speed Control Off Signal circuit for a short to ground.
Perform POWERTRAIN VERIFICATION TEST - VER 5.

No >> Go To 3

SPEED CONTROL SWITCH INPUT CIRCUIT — CONTINUED

3. SPEED CONTROL OFF SIGNAL CIRCUIT OPEN

With the ignition off.

Measure the resistance of the Speed Control Off Signal circuit from the PCM C4 harness connector to the Speed Control Switch harness connector.

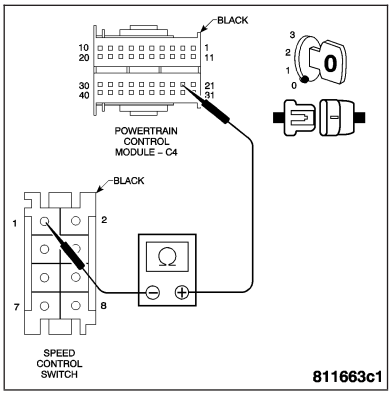

Is the resistance below 5.0 ohms?

Yes >> Go To 4

No >> Repair the Speed Control Off Signal circuit open.
Perform POWERTRAIN VERIFICATION TEST - VER 5.

4. OPEN FUSED IGNITION SWITCH OUTPUT CIRCUIT

Turn the ignition on.

Measure the voltage of the Fused Ignition Switch Output circuit at the Speed Control Switch harness connector.

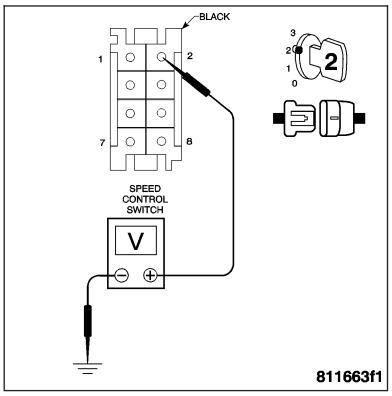

Is the voltage above 10 volts?

Yes >> Replace the Speed Control Switch. **Refer to Page 8P-4**.
Perform POWERTRAIN VERIFICATION TEST - VER 5.

No >> Repair the Fused Ignition Switch Output circuit for an open.
Perform POWERTRAIN VERIFICATION TEST - VER 5.

*CHECKING FUEL DELIVERY

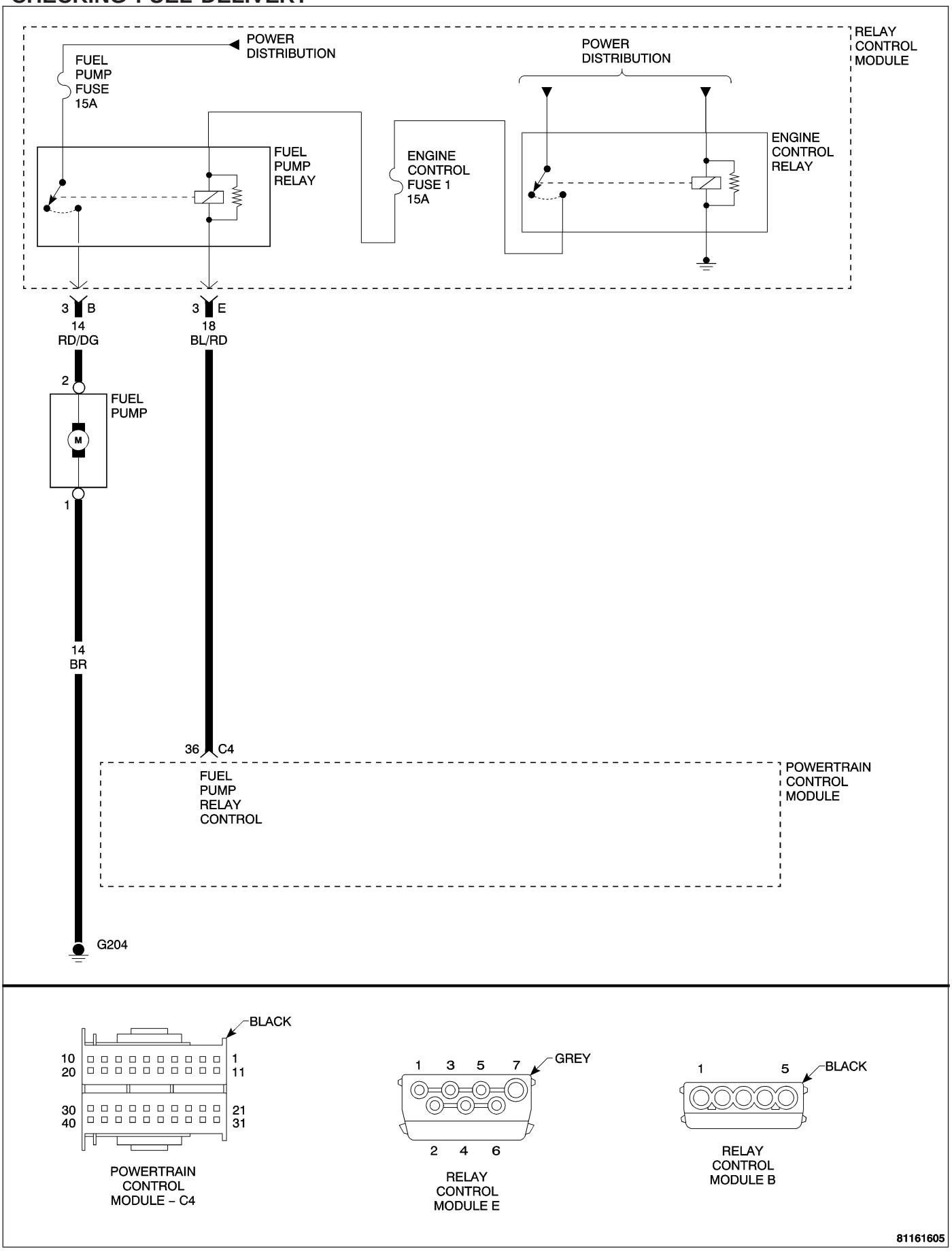

*CHECKING FUEL DELIVERY — CONTINUED

POSSIBLE CAUSES
FUEL PUMP RELAY OUTPUT CIRCUIT OPEN
FUEL PUMP RELAY
FUEL PRESSURE OUT OF SPECIFICATION
RESTRICTED FUEL SUPPLY LINE
FUEL PUMP INLET STRAINER PLUGGED
FUEL PUMP

For a complete Powertrain Control Module Circuit Diagram **Refer to Page 9-574**.

Diagnostic Test

1. FUEL PUMP OPERATION

WARNING: THE FUEL SYSTEM IS UNDER A CONSTANT PRESSURE EVEN WITH THE ENGINE OFF. BEFORE TESTING OR SERVICING ANY FUEL SYSTEM HOSE, FITTING OR LINE, THE FUEL SYSTEM PRESSURE MUST BE RELEASED.

Turn the ignition on.

With the DRB III®, actuate the Fuel Pump Relay.

Listen for fuel pump operation.

Stop All Actuations.

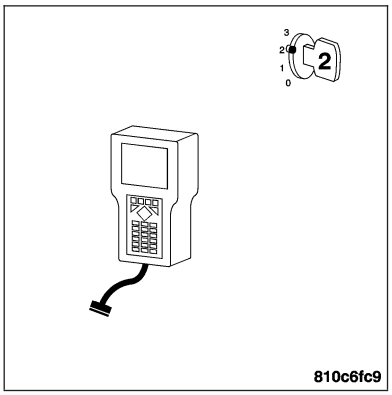

Does the Fuel Pump operate?

Yes >> Go To 2

No >> Go To 4

*CHECKING FUEL DELIVERY — CONTINUED

2. FUEL PRESSURE

WARNING: THE FUEL SYSTEM IS UNDER A CONSTANT PRESSURE EVEN WITH THE ENGINE OFF. BEFORE TESTING OR SERVICING ANY FUEL SYSTEM HOSE, FITTING OR LINE, THE FUEL SYSTEM PRESSURE MUST BE RELEASED.

Turn the ignition off.

Install a fuel pressure gauge at the engine.

Turn the ignition on.

With the DRB III®, actuate the Fuel Pump Relay and observe the fuel pressure gauge.

Note: Fuel pressure specification is 3.7 to 4.2 bar (54 to 61 psi).

Stop All Actuations.

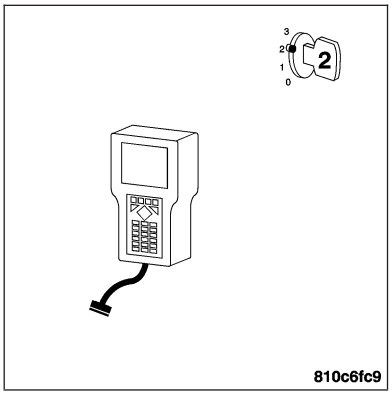

Choose a conclusion that best matches your fuel pressure reading.

Below Specification
Go To 3

Within Specification
Test Complete.

Above Specification
Replace the fuel filter/fuel pressure regulator. **Refer to Page 14-10**.
Perform POWERTRAIN VERIFICATION TEST - VER 3.

3. CHECKING FUEL STRAINER

WARNING: THE FUEL SYSTEM IS UNDER A CONSTANT PRESSURE EVEN WITH THE ENGINE OFF. BEFORE TESTING OR SERVICING ANY FUEL SYSTEM HOSE, FITTING OR LINE, THE FUEL SYSTEM PRESSURE MUST BE RELEASED.

Turn the ignition off.

Remove and inspect the Fuel Strainer.

Is the Fuel Strainer plugged?

Yes >> Replace the Fuel Strainer. **Refer to Page 14-10**.
Perform POWERTRAIN VERIFICATION TEST - VER 3.

No >> Replace the Fuel Pump. **Refer to Page 14-17**.
Perform POWERTRAIN VERIFICATION TEST - VER 3.

*CHECKING FUEL DELIVERY — CONTINUED

4. FUEL PUMP RELAY OUTPUT CIRCUIT OPEN

Turn the ignition off.

Disconnect the Fuel Pump harness connector.

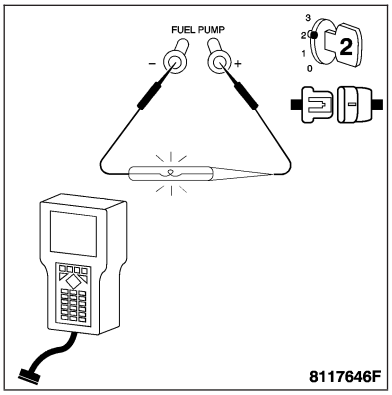

Note: Check connectors — Clean/repair as necessary.

Turn the ignition on.

With the DRB III®, actuate the Fuel Pump Relay.

Using a 12-volt test light connected to ground, probe the Fuel Pump Relay Output circuit at the Fuel Pump harness connector.

Does the test light illuminate brightly?

Yes >> Go To 5

No >> Check for an open Fuel Pump fuse in the Relay Control Module. Repair the Fuel Pump Relay Output circuit for an open.
Perform POWERTRAIN VERIFICATION TEST - VER 3.

5. FUEL PUMP

Note: Check connectors - It is critical that the connector is free from any signs of corrosion or deformities. Clean/repair as necessary.

With the ignition on.

Using a 12-volt test light connected across the Fuel Pump harness connector.

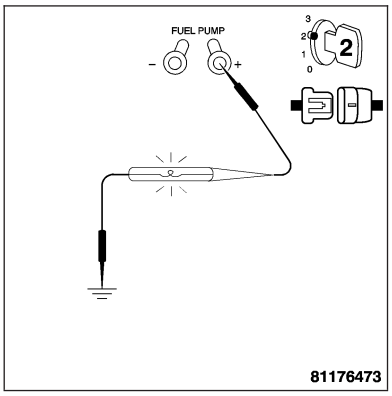

With the DRB III®, actuate the Fuel Pump Relay.

Does the test light illuminate brightly?

Yes >> Replace the Fuel Pump. **Refer to Page 14-17**.
Perform POWERTRAIN VERIFICATION TEST - VER 3.

No >> Repair the fuel pump ground circuit for an open.
Perform POWERTRAIN VERIFICATION TEST - VER 3.

*CHECKING HARD START (FUEL SYSTEM)

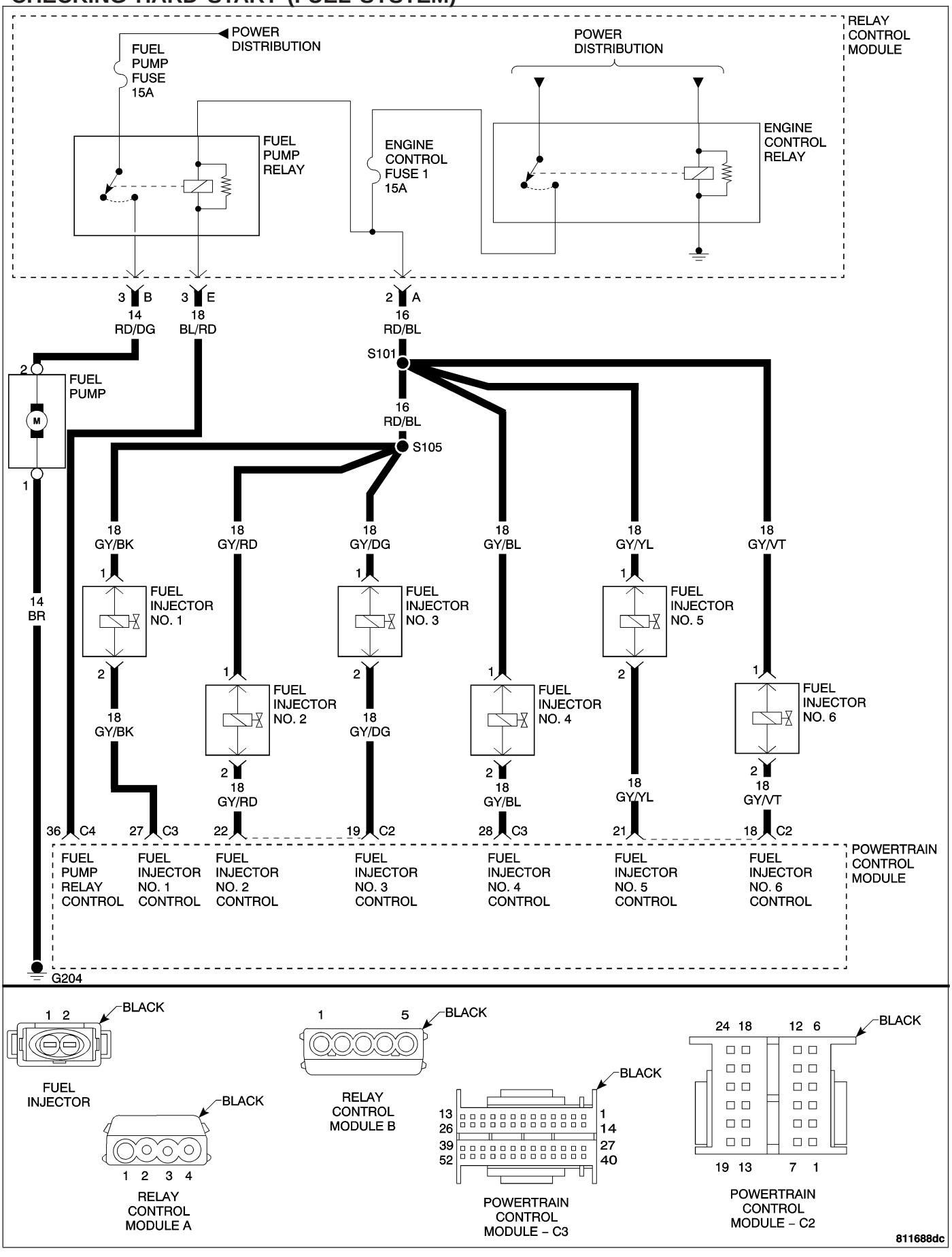

*CHECKING HARD START (FUEL SYSTEM) — CONTINUED

POSSIBLE CAUSES
RESTRICTED FUEL SUPPLY LINE
FUEL PUMP INLET STRAINER PLUGGED
FUEL PUMP MODULE
FAULTY FUEL PUMP MODULE
FUEL INJECTOR(S)
FUEL CONTAMINATION

For a complete Powertrain Control Module Circuit Diagram **Refer to Page 9-574**.

Diagnostic Test

1. CHECKING FUEL PRESSURE

WARNING: THE FUEL SYSTEM IS UNDER A CONSTANT PRESSURE EVEN WITH THE ENGINE OFF. BEFORE TESTING OR SERVICING ANY FUEL SYSTEM HOSE, FITTING OR LINE, THE FUEL SYSTEM PRESSURE MUST BE RELEASED.

Turn the ignition off.

Install a fuel pressure gauge at the engine.

Turn the ignition on.

With the DRB III®, actuate the Fuel Pump and observe the fuel pressure gauge.

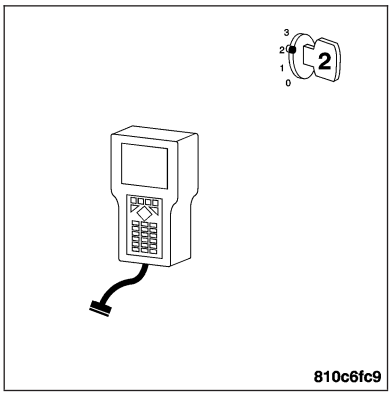

Note: Fuel pressure specification is 3.7 to 4.2 bar (54 to 61 psi).

Choose a conclusion that best matches your fuel pressure reading.

Below Specification
Go To 2

Within Specification
Go To 4

2. RESTRICTED FUEL FILTER

WARNING: THE FUEL SYSTEM IS UNDER A CONSTANT PRESSURE EVEN WITH THE ENGINE OFF. BEFORE TESTING OR SERVICING ANY FUEL SYSTEM HOSE, FITTING OR LINE, THE FUEL SYSTEM PRESSURE MUST BE RELEASED.

Turn the ignition off.

Remove the Fuel Filter and inspect for a plugged filter. **Refer to Page 14-10**.

Is the fuel filter plugged?

Yes >> Replace the Fuel Filter. **Refer to Page 14-10**.
Perform POWERTRAIN VERIFICATION TEST - VER 1.

No >> Go To 3

*CHECKING HARD START (FUEL SYSTEM) — CONTINUED

3. CHECKING FUEL STRAINER

WARNING: THE FUEL SYSTEM IS UNDER A CONSTANT PRESSURE EVEN WITH THE ENGINE OFF. BEFORE TESTING OR SERVICING ANY FUEL SYSTEM HOSE, FITTING OR LINE, THE FUEL SYSTEM PRESSURE MUST BE RELEASED.

With the ignition off.

Remove and inspect the Fuel Strainer.

Is the Fuel Strainer plugged?

Yes >> Replace the Fuel Strainer. **Refer to Page 14-10**.
Perform POWERTRAIN VERIFICATION TEST - VER 1.

No >> Replace the Fuel Pump. **Refer to Page 14-17**.
Perform POWERTRAIN VERIFICATION TEST - VER 1.

4. FUEL INJECTOR(S)

WARNING: THE FUEL SYSTEM IS UNDER A CONSTANT PRESSURE EVEN WITH THE ENGINE OFF. BEFORE TESTING OR SERVICING ANY FUEL SYSTEM HOSE, FITTING OR LINE, THE FUEL SYSTEM PRESSURE MUST BE RELEASED.

Start the engine and allow the fuel system to reach maximum pressure.

Turn the ignition off.

Note: Fuel pressure specification is 3.7 to 4.2 bar (54 to 61 psi).

Apply special tool #C-4390, Hose Clamp Pliers, between the fuel pressure gauge and the fuel pump.

Monitor the fuel pressure gauge for a minimum of 5 minutes.

Note: The pressure should not fall below 3.0 bar (44 psi).

Does the fuel pressure drop?

Yes >> Replace the leaking fuel injectors. **Refer to Page 14-33**.
Perform POWERTRAIN VERIFICATION TEST - VER 1.

No >> Check the fuel for contaminants.
Perform POWERTRAIN VERIFICATION TEST - VER 1.

*ENGINE CRANKS BUT DOES NOT START

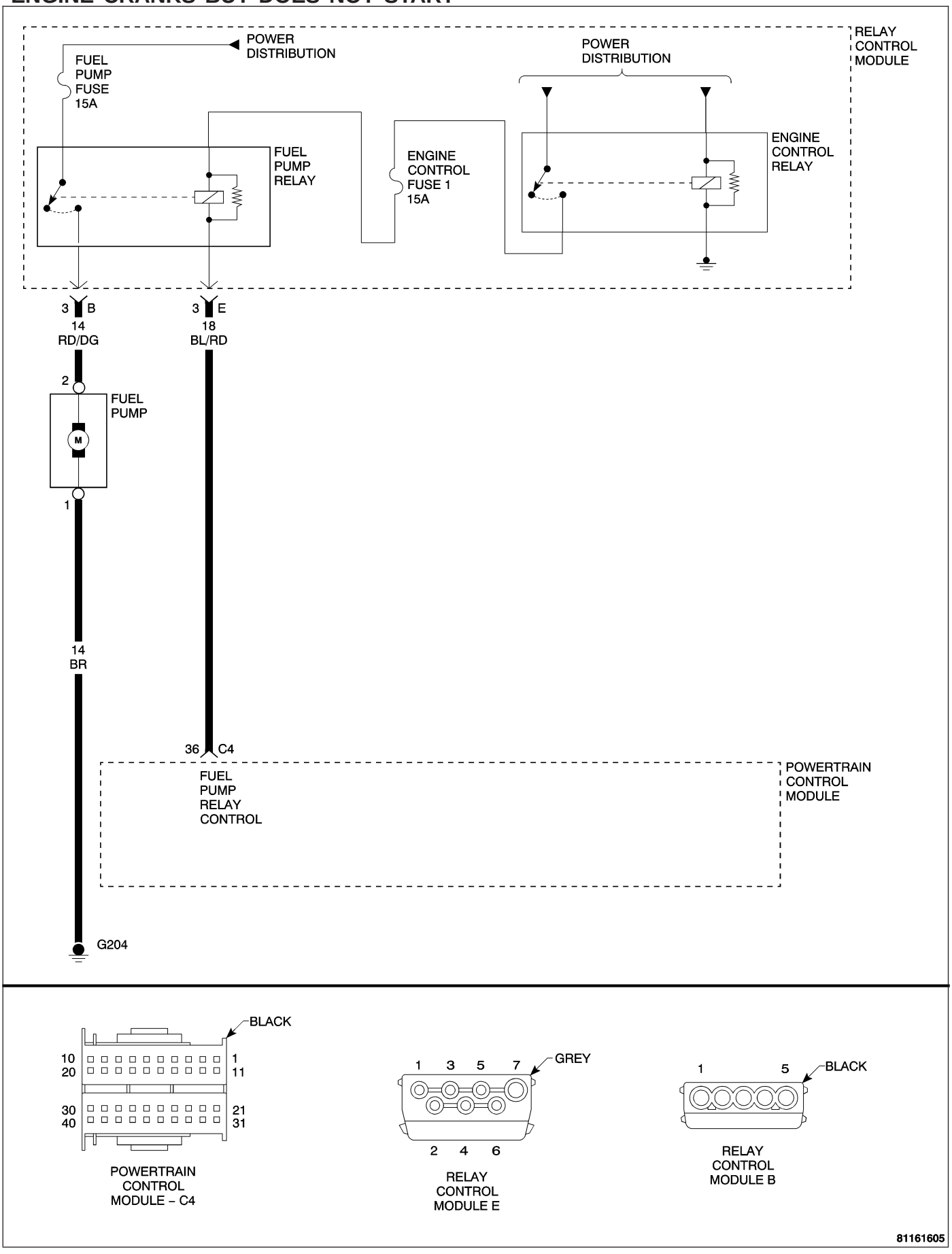

*ENGINE CRANKS BUT DOES NOT START — CONTINUED

POSSIBLE CAUSES
NO START PRE-TEST
POWERTRAIN FUSES OPEN
SECONDARY INDICATORS PRESENT
ENGINE MECHANICAL PROBLEM
FUEL PUMP RELAY OUTPUT CIRCUIT OPEN
FUEL CONTAMINATION

For a complete Powertrain Control Module Circuit Diagram **Refer to Page 9-574**.

Diagnostic Test

1. NO START PRE-TEST

Note: The following list of items must be checked before continuing with any no start tests.

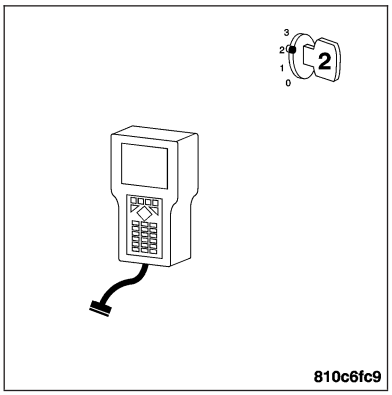

The battery must be fully charged and in good condition. A low charged battery may produce invalid test results. If the battery is low, charge the battery and then attempt to start the vehicle by cranking the engine for 15 seconds, 3 consecutive times.

This will allow any DTCs to set that may have been erased due to a dead battery.

Try to communicate with PCM if not able to communicate check fuses.

Ensure the Power and Ground to the PCM are OK.

Make sure the PCM communicates with the DRB III® and that there are no DTCs stored in the PCM memory. If the PCM reports a No Response condition, refer to the Section 8E Electronic Control Module category for the proper tests.

Read the PCM DTCs with the DRB III®. If any DTCs are present, they must be repaired before continuing with any other No Start diagnostic tests. Refer to the Section 9 Engine Diagnostics for a list of the related P-codes that are reported by the PCM.

Ensure that the Bus is functional. Attempt to communicate with the Instrument Cluster and SKREEM. If you are unable to establish communications, refer to the 8E Electronic Control Module category for the proper symptoms.

The Sentry Key Remote Entry Module (SKREEM) System must be operating properly. Check for proper communication with the DRB III® and check for DTCs that may be stored in the SKREEM. Repair the DTC(s) before continuing.

Crank the engine several times. Using the DRB III®, read DTCs. If a DTC is present perform the DTC diagnostics before continuing.

Were any problems found?

Yes >> Repair as necessary.
Perform POWERTRAIN VERIFICATION TEST - VER 1.

No >> Go To 2

*ENGINE CRANKS BUT DOES NOT START — CONTINUED

2. OPEN FUSE

Turn the ignition off.

Check for open fuses.

Are there any open fuses?

Yes >> Replace the open fuse and check the related circuit(s) for a short to ground.
Perform POWERTRAIN VERIFICATION TEST - VER 1.

No >> Go To 3

3. CHECKING FOR SECONDARY INDICATORS

Turn the ignition on.

With the DRB III®, under DTCs & Related Functions, read the Secondary Indicators while cranking the engine.

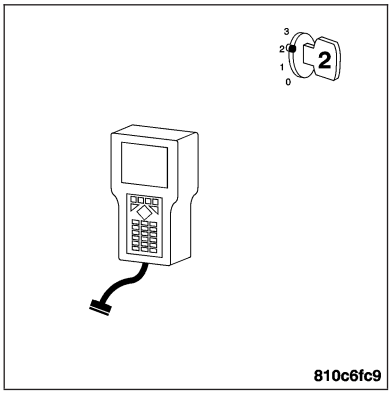

Are there any Secondary Indicators present while cranking the engine?

Yes >> Refer to symptom list and perform tests related to the secondary indicator that is reported by the DRB III®.
Perform POWERTRAIN VERIFICATION TEST - VER 1.

No >> Go To 4

4. POSSIBLE MECHANICAL PROBLEMS

Turn the ignition off.

Check for any of the following conditions/mechanical problems.

ENGINE VALVE TIMING - must be within specifications, check for broken timing components

ENGINE COMPRESSION - must be within specifications

ENGINE EXHAUST SYSTEM - must be free of any restrictions or leaks.

Are there any engine mechanical problems?

Yes >> Repair as necessary.
Perform POWERTRAIN VERIFICATION TEST - VER 1.

No >> Go To 5

*ENGINE CRANKS BUT DOES NOT START — CONTINUED

5. FUEL PUMP RELAY OUTPUT CKT OPEN

With the ignition off.

Disconnect the Fuel Pump harness connectors.

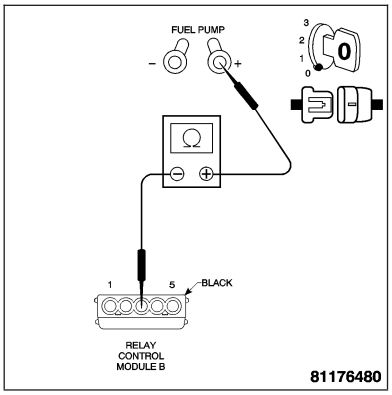

Note: Check connectors — Clean/repair as necessary.
Verify the Fuel Pump Relay is getting voltage on the Fused Engine Control Relay Output circuit and Fused B(+) circuit before continuing.

Measure the resistance of the Fuel Pump Relay Output circuit from the Fuel Pump Relay Control Module B harness connector to the Fuel Pump harness connector.

Is the resistance below 5.0 ohms?

Yes >> Go To 6

No >> Repair the Fuel Pump Relay Output circuit for an open.
Perform POWERTRAIN VERIFICATION TEST - VER 1.

6. FUEL PUMP DELIVERY

With the ignition off.

Verify that the Fuel tank is not empty before continuing.

Follow the diagnostics for Checking Fuel Delivery in this section of this manual.

Was the No Start condition solved after following the above diagnostic test?

Yes >> Test Complete.

No >> Check for contamination/water in the fuel. Ensure the fuel being used in this vehicle meets manufacturer's Fuel Requirement. Refer to the Service Information.
Perform POWERTRAIN VERIFICATION TEST - VER 1.

*INTERMITTENT NO CRANK

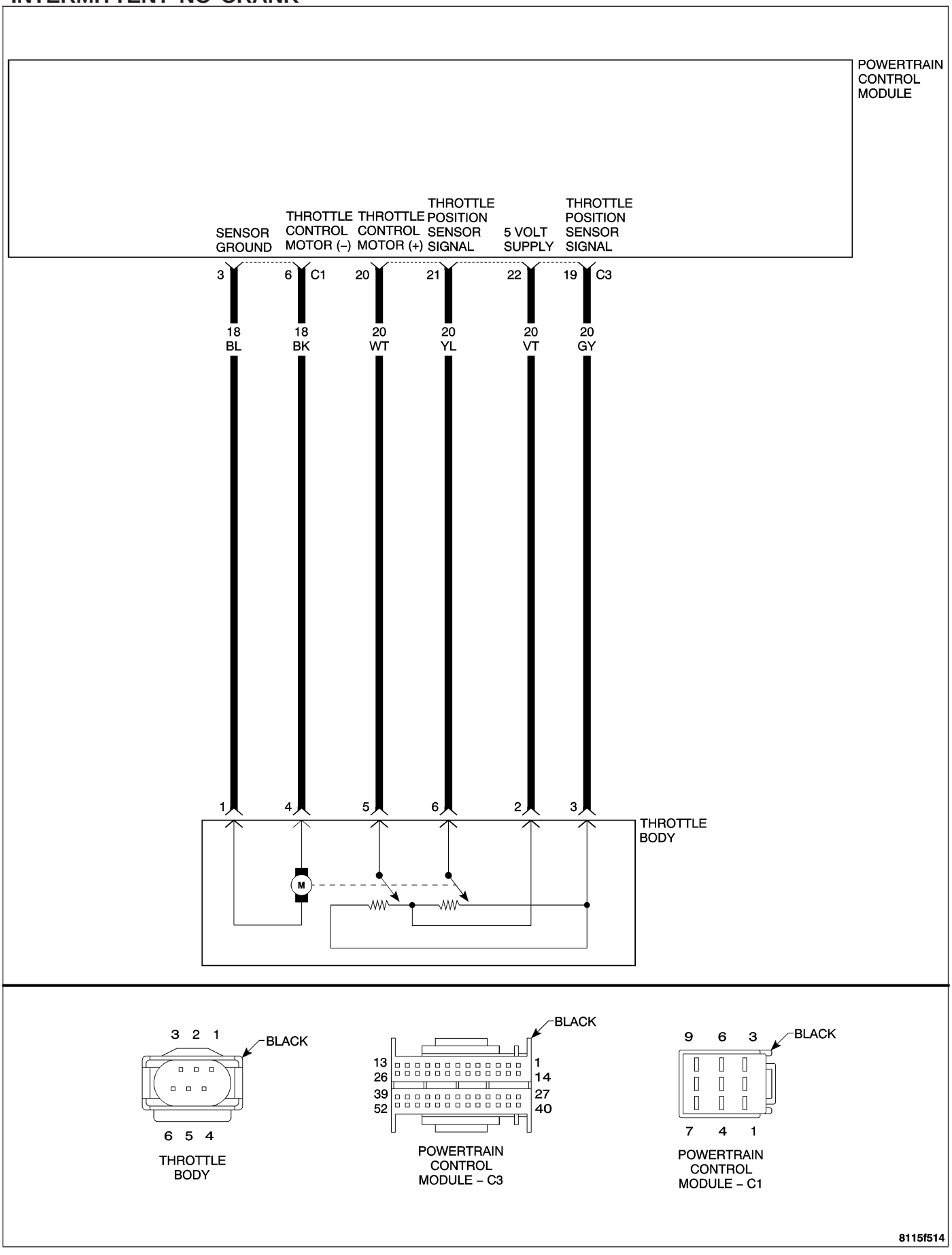

*INTERMITTENT NO CRANK — CONTINUED

POSSIBLE CAUSES
ELECTRONIC THROTTLE CONTROL (ETC) STARTER INHIBIT

For a complete Powertrain Control Module Circuit Diagram **Refer to Page 9-574**.

Diagnostic Test

1. ETC STARTER INHIBIT

Note: This engine will try to relearn ETC position when the key is left in the on position for an extended period of time and will not allow the starter to crank during this procedure. This procedure can take up to 2.5 seconds.

To verify the cause of the no crank condition or delayed crank use the DRB III®, and read the ETC Starter Inhibit mileage.

The controller will store the mileage at which the no start condition occurred because of the ETC testing procedure.

This is considered normal operation for this vehicle and no repairs are necessary.

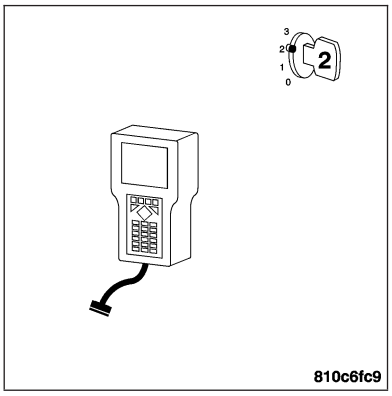

Is a mileage stored under the ETC Starter Inhibit?

Yes >> Test Complete.

No >> Refer to the appropriate symptom (diagnostic procedure) in the Starting section of the Service Information for further assistance.

Perform POWERTRAIN VERIFICATION TEST - VER 1.

POWERTRAIN VERIFICATION TEST – VER 1

1.

Note: If the PCM has been replaced, the PCM version coding must be updated with the DRB III®.

Inspect the vehicle to ensure that all components related to the repair are connected properly.

Inspect the engine oil for fuel contamination. Replace the oil and filter as necessary.

Attempt to start the engine.

If the No Start condition is still present, refer to the symptom list and perform the diagnostic testing as necessary. Refer to any technical service bulletins that may apply.

Run the engine for one warm-up cycle to verify operation.

With the DRB III®, confirm that no DTCs are present and that all components are functioning properly.

If a DTC is present, refer to the appropriate category and select the corresponding symptom.

Are any DTCs present?

YES >> Repair is not complete, refer to appropriate symptom.

NO >> Repair is complete.

POWERTRAIN VERIFICATION TEST – VER 2

1.

Note: If the PCM has been replaced, the PCM version coding must be updated with the DRB III®.
Inspect the vehicle to ensure that all components related to the repair are connected properly.

Connect the DRB III® to the data link connector.

Ensure the fuel tank has at least a quarter tank of fuel. Turn off all accessories.

If the repaired DTC has reset, the repair is not complete. Check for any related TSBs and return to the symptom list.

If another DTC has set, return to the symptom list and follow the path specified for that DTC.

With the DRB III®, monitor the appropriate pre-test enabling conditions until all conditions have been met. Once the conditions have been met, switch screen to the appropriate OBD II monitor.

IF the monitor ran, and the Good Trip counter changed to one or more, the repair was successful and is now complete.

Note: It may be necessary to drive the vehicle for the monitors for the repaired DTC to set run.
If there are no DTCs present and all components are functioning properly, the repair is complete.

Are any DTCs present?

YES >> Repair is not complete, refer to appropriate symptom.

NO >> Repair is complete.

POWERTRAIN VERIFICATION TEST – VER 3

1.

Note: If the PCM has been replaced, the PCM version coding must be updated with the DRB III®.

Inspect the vehicle to ensure that all components related to the repair are connected properly.

With the DRB III®, clear DTCs and Reset Memory for all engine values.

Run the engine for one warm-up cycle to verify operation.

Road test the vehicle. Use all accessories that may be related to this repair.

With the DRB III®, confirm that no DTCs are present and that all components are functioning properly.

If this test is being performed after a No Trouble Code test, verify the symptom is no longer present.

If the symptom is still present, or any other symptom or DTC is present refer to the appropriate category and perform the corresponding symptom.

Refer to any Technical Service Bulletins that may apply.

If there are no DTCs present and all components are functioning properly, the repair is complete.

Are any DTCs present?

YES >> Repair is not complete, refer to appropriate symptom.

NO >> Repair is complete.

POWERTRAIN VERIFICATION TEST – VER 4

1.

Note: If the PCM has been replaced, the PCM version coding must be updated with the DRB III®.

Inspect the vehicle to ensure that all components related to the repair are connected properly.

With the DRB III®, clear DTCs.

Perform the generator output test. Refer to the appropriate service information as necessary.

Start the engine and set engine speed to 2000 RPM for at least thirty seconds.

Cycle the key off and on.

With the DRB III®, confirm that no DTCs are present and that all components are functioning properly.

If there are no DTCs present and all components are functioning properly, the repair is complete.

Are any DTCs present?

YES >> Repair is not complete, refer to appropriate symptom.

NO >> Repair is complete.

POWERTRAIN VERIFICATION TEST – VER 5

1.

Note: If the PCM has been replaced, the PCM version coding must be updated with the DRB III®.

Inspect the vehicle to ensure that all components related to the repair are connected properly.

Connect the DRBIII® to the data link connector and erase all codes.

Turn the speed control ON.

Press and release the ACCEL/SET switch. If the speed control did not engage, the repair is not complete. Check for TSBs that pertain to speed control problems and then return to the symptom list.

Momentarily press the ACCEL/SET switch. If the vehicle speed did not increase by at least 2 mph, the repair is not complete. Check for TSBs that pertain to speed control problems and then return to the symptom list.

Press and hold the DECEL/SET switch. The vehicle speed should decrease. If it did not decrease, the repair is not complete. Check for TSBs that pertain to speed control problems and then return to the symptom list.

Momentarily press the DECEL/SET switch. If the vehicle speed did not decrease by at least 1 mph, the repair is not complete. Check for TSBs that pertain to speed control problems and then return to the symptom list.

Using caution, press and release the brake pedal. If the speed control did not disengage, the repair is not complete. Check for TSBs that pertain to speed control problems and then return to the symptom list.

Bring the vehicle speed back up to 35 mph

Press the RESUME switch. If the speed control did not resume the previously set speed, the repair is not complete. Check for TSBs that pertain to speed control problems and then return to the symptom list.

Ensure vehicle speed is greater than 35 mph and release the SET switch. If vehicle did not adjust and set a new vehicle speed, the repair is not complete. Check for TSBs that pertain to speed control problems and then return to the symptom list.

Bring the vehicle speed back up above 35 mph and engage speed control.

Press the OFF switch to turn OFF, (cruise light will be off). If the speed control did not disengage, the repair is not complete. Check for TSBs that pertain to speed control problems and then return to the symptom list.

If the vehicle successfully passed all of the previous tests, the speed control system is now functioning as designed. The repair is now complete.

Did the speed control pass the above test?

YES >> Repair is complete.

NO >> Repair is not complete, refer to appropriate symptom.

SCHEMATICS AND DIAGRAMS

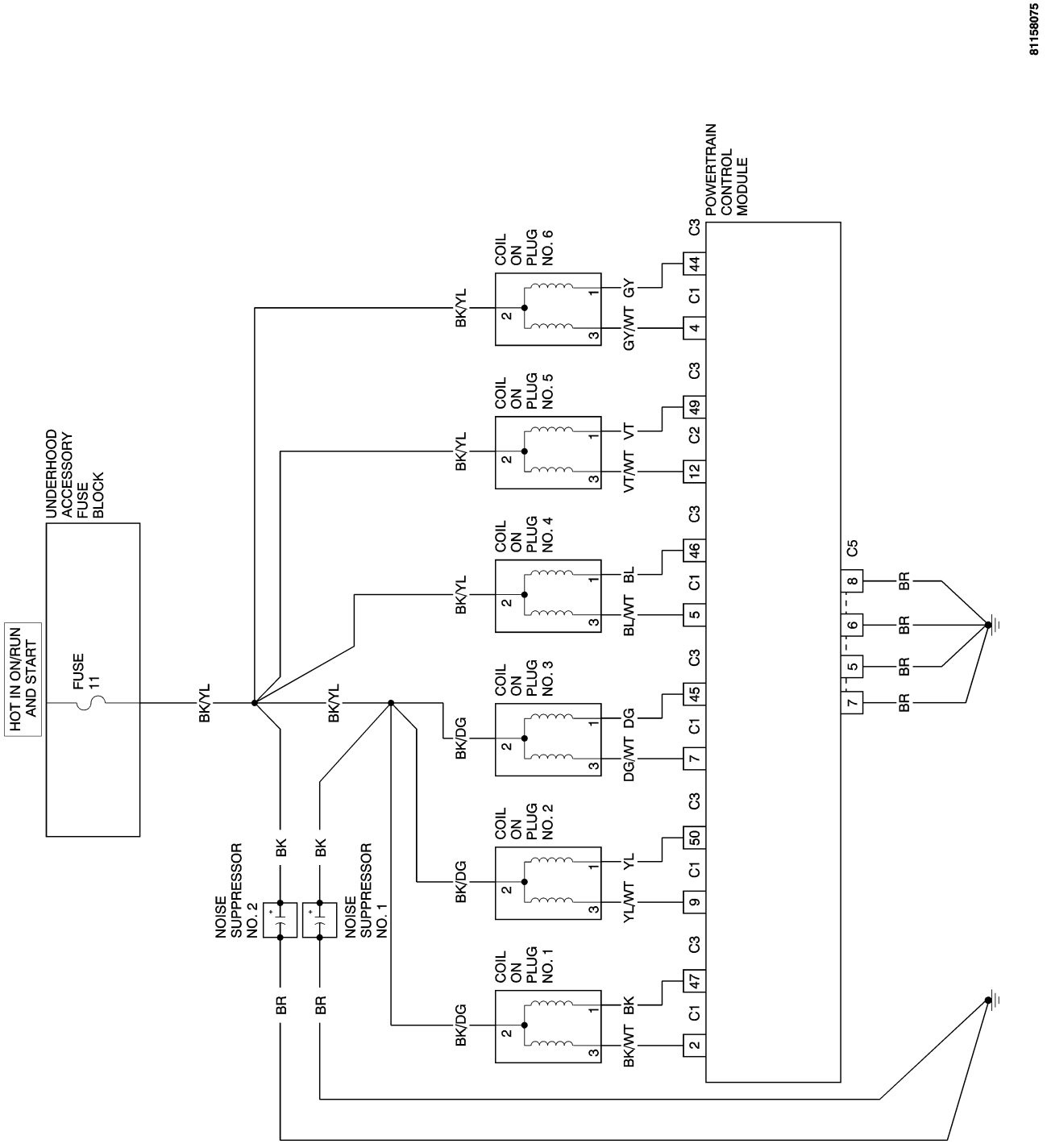

POWERTRAIN CONTROL MODULE CIRCUIT DIAGRAM (1 OF 7)

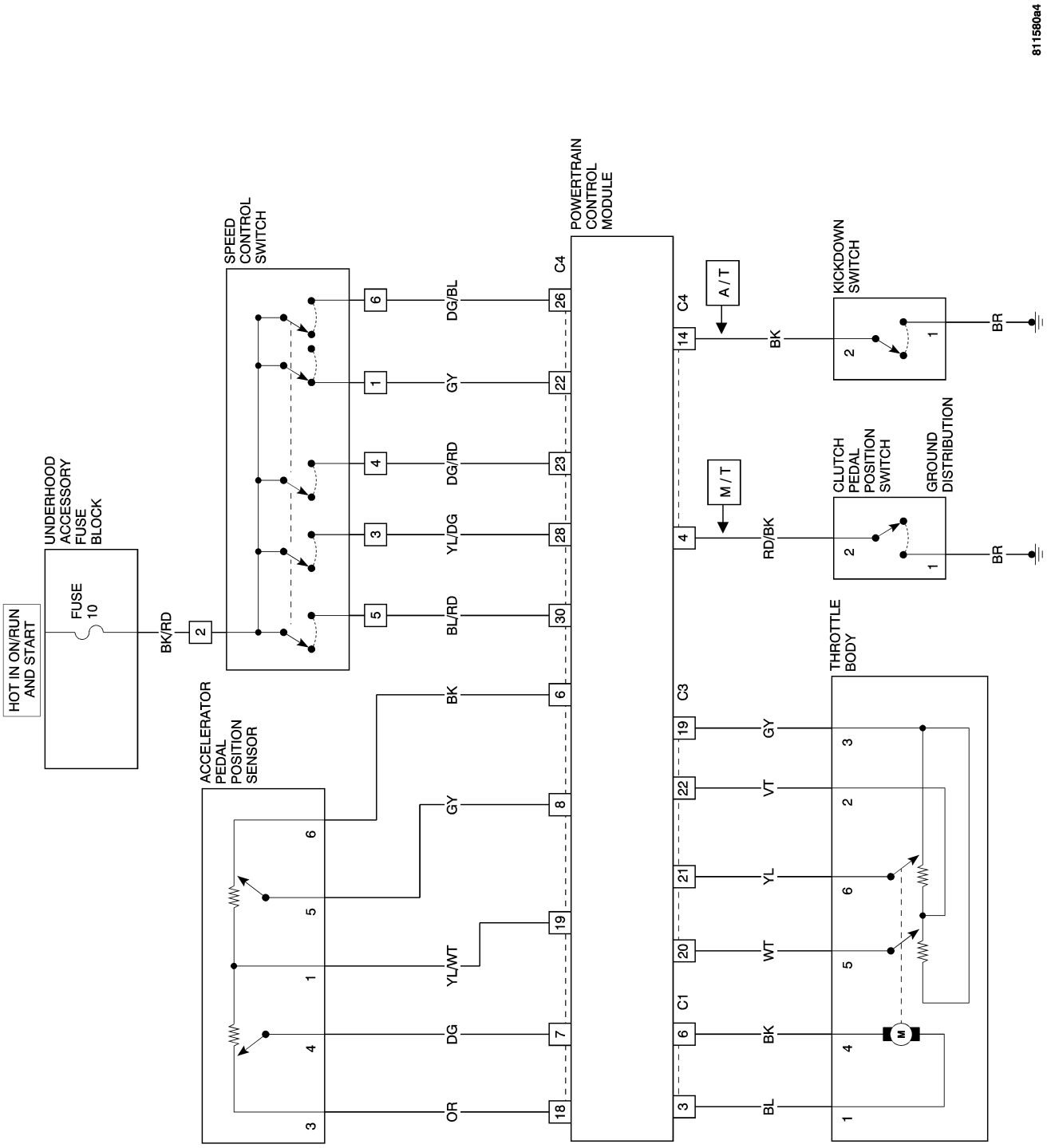

POWERTRAIN CONTROL MODULE CIRCUIT DIAGRAM (2 OF 7)

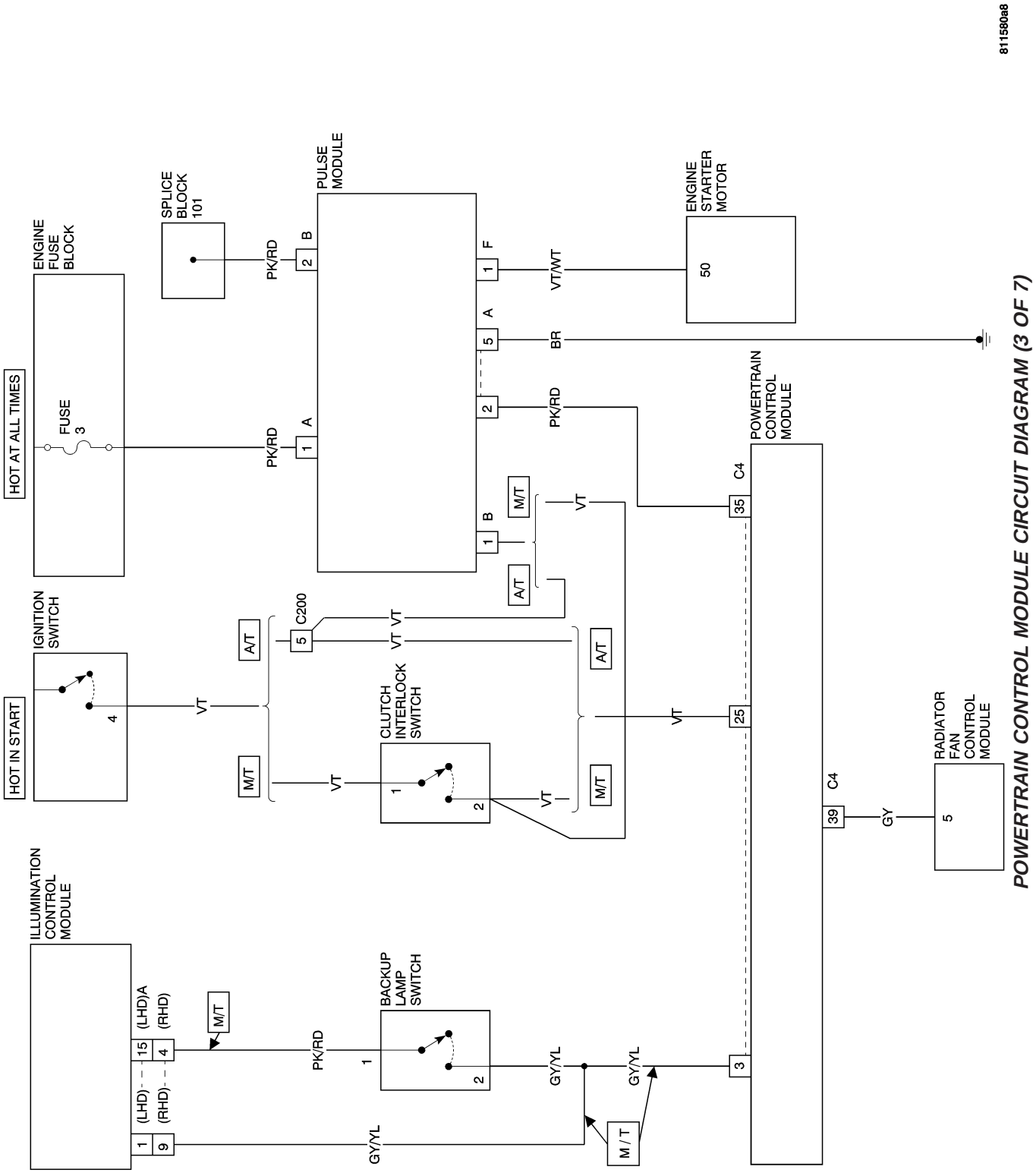

POWERTRAIN CONTROL MODULE CIRCUIT DIAGRAM (3 OF 7)

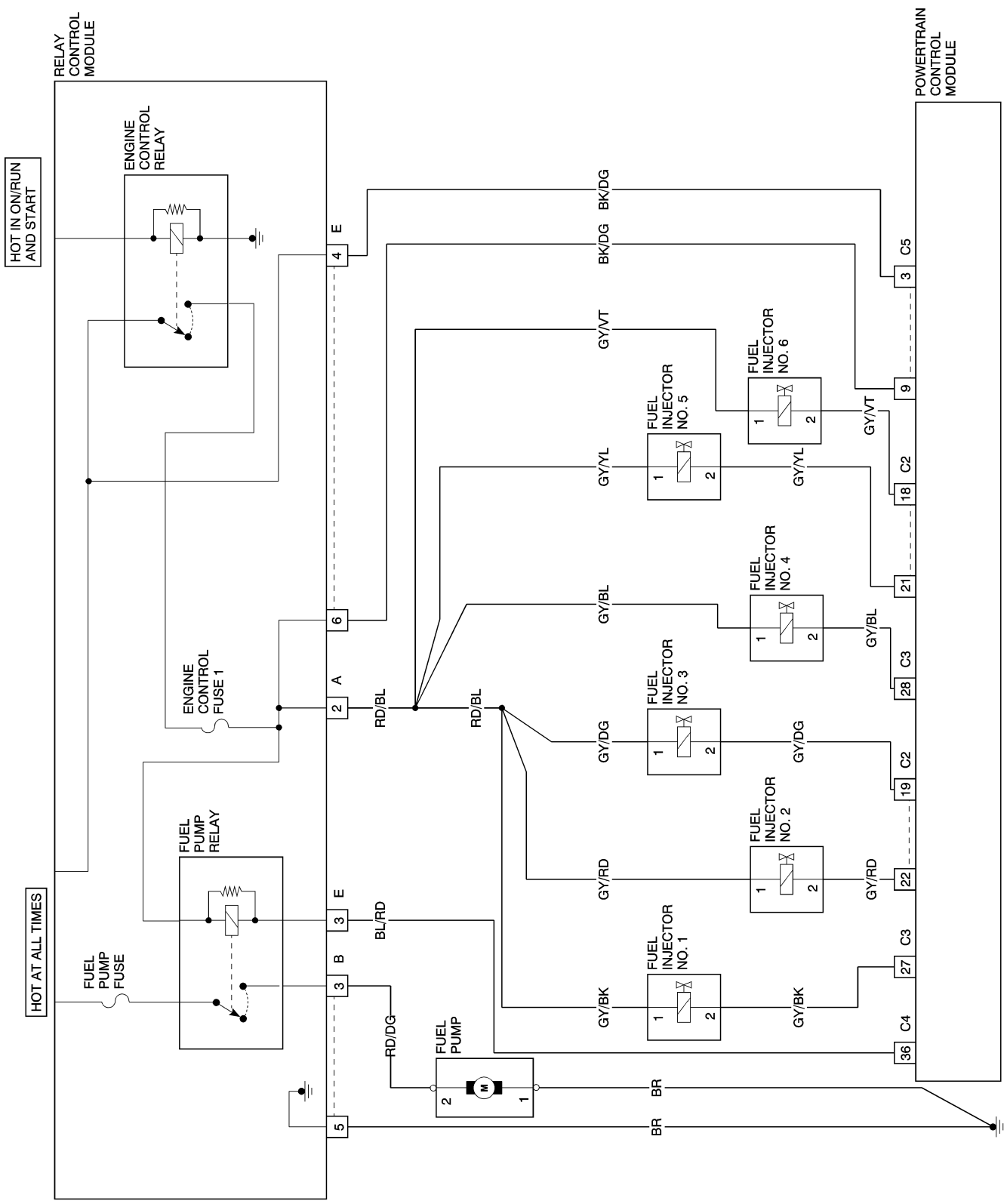

POWERTRAIN CONTROL MODULE CIRCUIT DIAGRAM (4 OF 7)

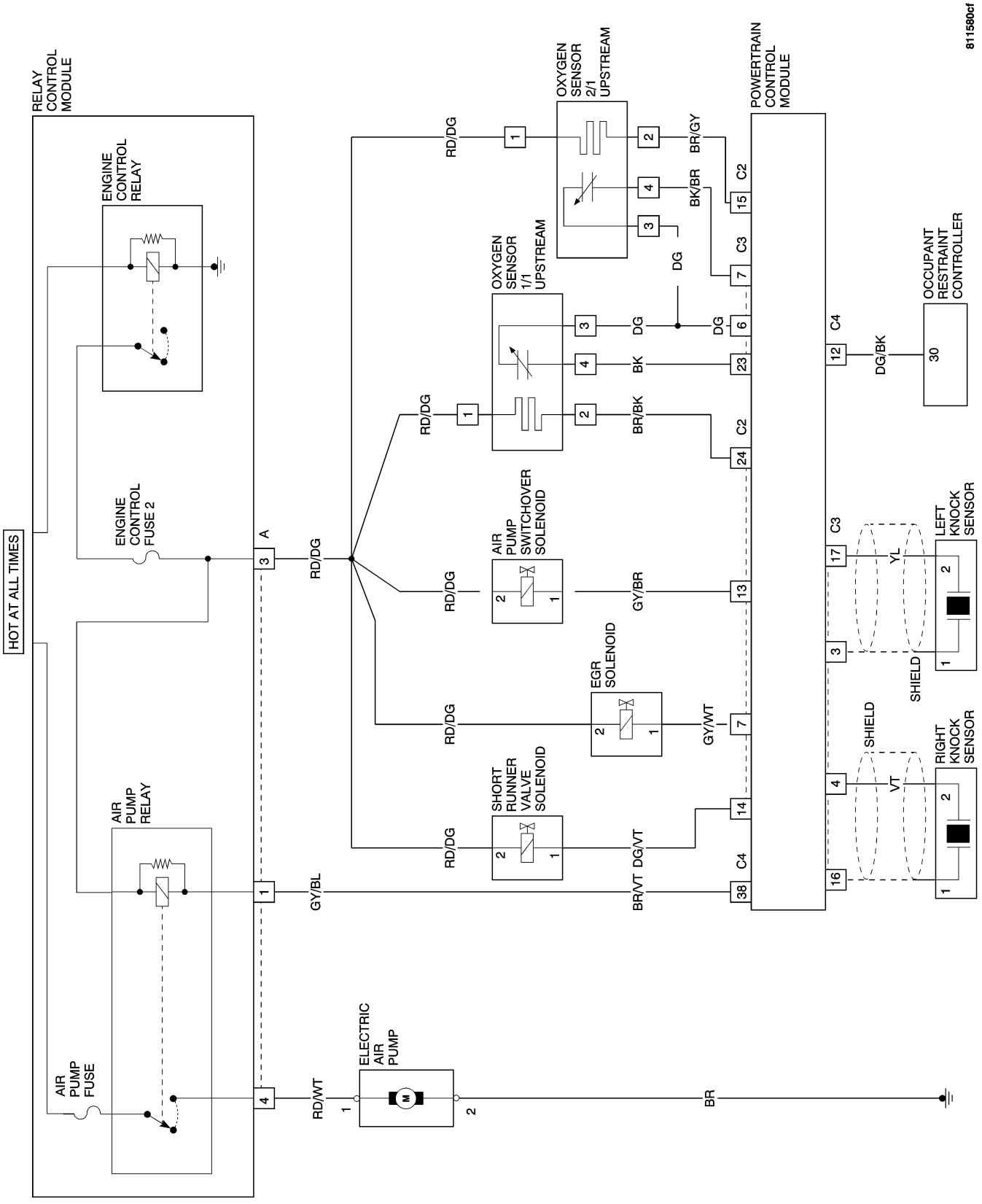

POWERTRAIN CONTROL MODULE CIRCUIT DIAGRAM (5 OF 7)

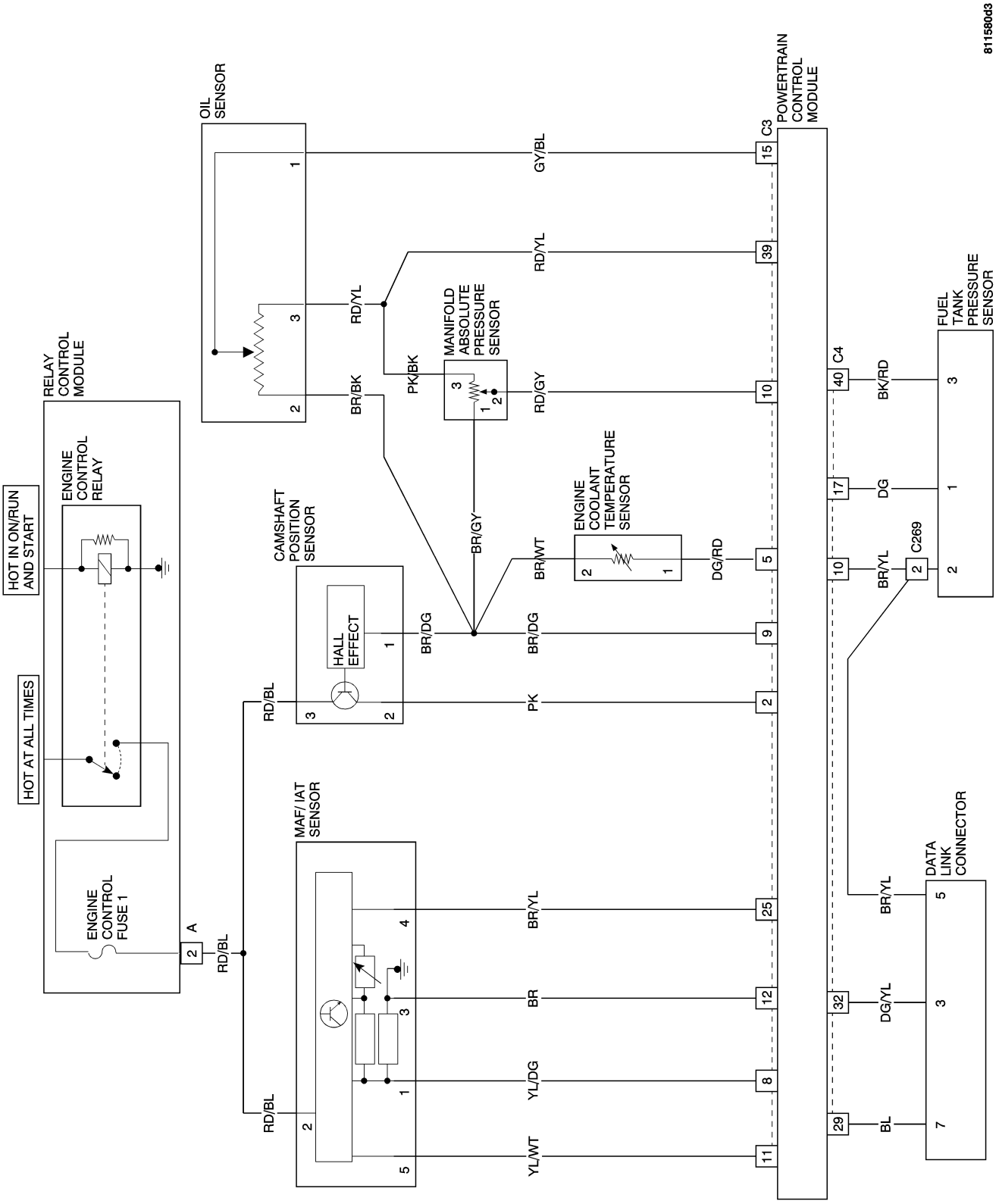

POWERTRAIN CONTROL MODULE CIRCUIT DIAGRAM (6 OF 7)

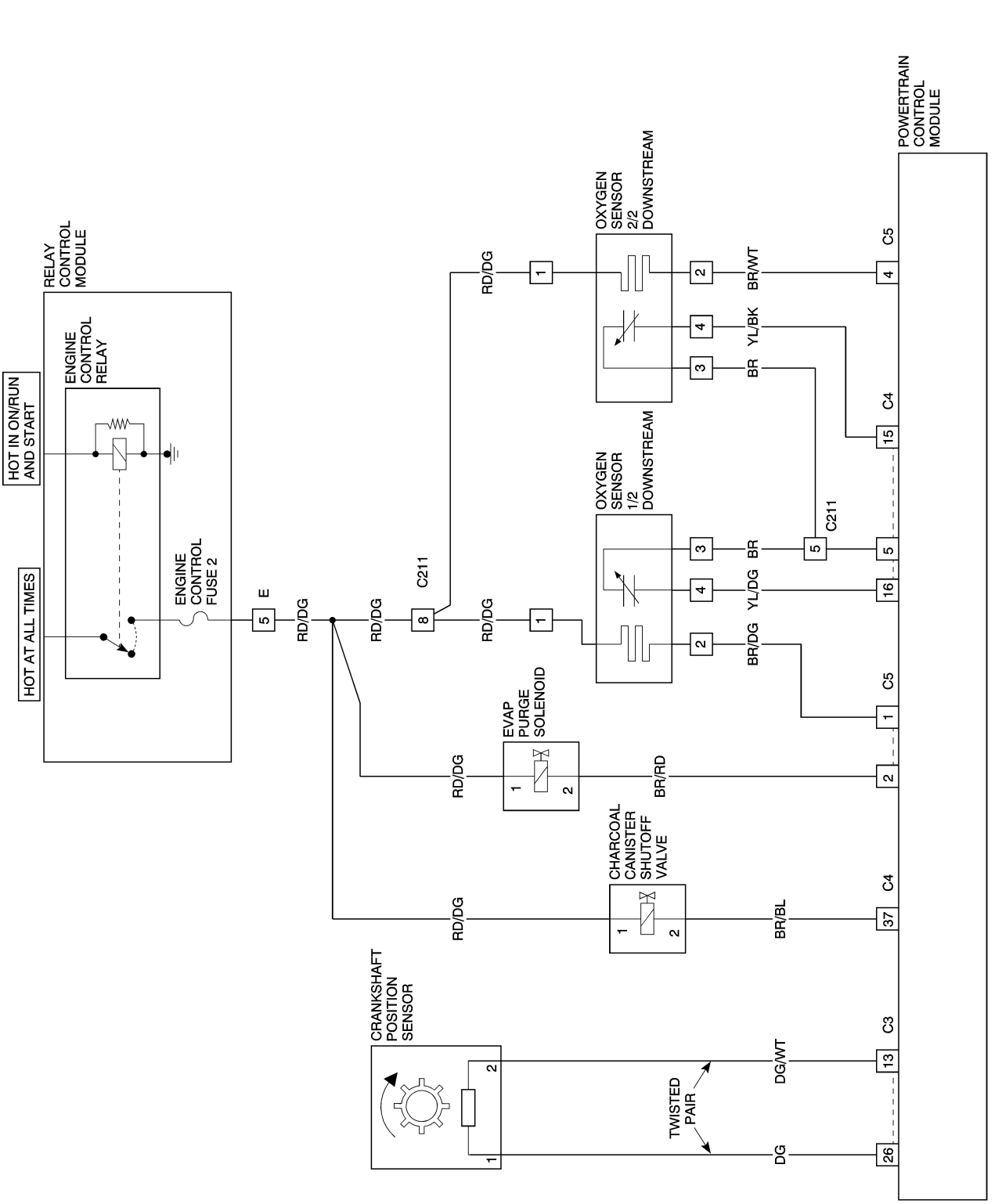

POWERTRAIN CONTROL MODULE CIRCUIT DIAGRAM (7 OF 7)

ENGINE - SERVICE INFORMATION

TABLE OF CONTENTS

page

ENGINE - SERVICE INFORMATION
DESCRIPTION 583
OPERATION 583
DIAGNOSIS AND TESTING
ENGINE DIAGNOSIS - INTRODUCTION . . . 583
DIAGNOSIS AND TESTING - ENGINE DIAGNOSIS - MECHANICAL 584
ENGINE DIAGNOSIS - PERFORMANCE . . . 586
DIAGNOSIS AND TESTING - CYLINDER COMPRESSION PRESSURE TEST 587
DIAGNOSIS AND TESTING - CYLINDER COMBUSTION PRESSURE LEAKAGE TEST 588
STANDARD PROCEDURE
HYDROSTATIC LOCKED ENGINE 588
STANDARD PROCEDURE - REPAIR OF DAMAGED OR WORN THREADS 589
STANDARD PROCEDURE - FORM-IN-PLACE GASKETS AND SEALERS 589
STANDARD PROCEDURE - ENGINE GASKET SURFACE PREPARATION 590
STANDARD PROCEDURE - ENGINE CORE AND OIL GALLERY PLUGS 591
STANDARD PROCEDURE - MEASURING BEARING CLEARANCE USING PLASTIGAGE® 591
REMOVAL 592
INSTALLATION 597
SPECIFICATIONS
SPECIFICATIONS - ENGINE 602
SPECIFICATIONS - TORQUE 603
SPECIAL TOOLS 605
AIR CLEANER HOUSING
REMOVAL 608
INSTALLATION 608
AIR CLEANER ELEMENT
REMOVAL 609
INSTALLATION 609
CYLINDER HEAD
DESCRIPTION 610
OPERATION 610
DIAGNOSIS AND TESTING - CYLINDER HEAD GASKET 610
REMOVAL 611
CLEANING 614
INSPECTION 614
INSTALLATION 614
CYLINDER HEAD COVER
DESCRIPTION 617
REMOVAL 617
INSTALLATION 618
CAMSHAFT BEARING BRIDGE
REMOVAL 619
INSTALLATION 622
ROCKER ARM / ADJUSTER ASSY
DISASSEMBLY
REMOVAL 624
ASSEMBLY
INSTALLATION 625
CAMSHAFT
DESCRIPTION 625
OPERATION 625
REMOVAL 626
CLEANING 626
INSPECTION 626
INSTALLATION 626
VALVE STEM SEAL
REMOVAL 627
INSTALLATION 628
INTAKE/EXHAUST VALVES AND SEALS
DESCRIPTION 630
OPERATION 630
REMOVAL 630
CLEANING 632
INSTALLATION 632
VALVE SPRINGS
DESCRIPTION 633
OPERATION 633
ENGINE BLOCK
DESCRIPTION 633
CLEANING 633
INSPECTION 633
CRANKSHAFT OIL SEAL - REAR
REMOVAL 634
INSTALLATION 635
CRANKSHAFT OIL SEAL - FRONT
REMOVAL 636
INSTALLATION 636
CONNECTING ROD BEARINGS
DESCRIPTION 638
STANDARD PROCEDURE - CONNECTING RODS AND BEARINGS 638
PISTON AND CONNECTING ROD
DESCRIPTION 639
STANDARD PROCEDURE
PISTON FITTING 640
REMOVAL 640
INSPECTION 642

INSTALLATION 643
PISTON RINGS
REMOVAL 645
INSTALLATION 645
CRANKSHAFT AND MAIN BEARINGS
DESCRIPTION 647
OPERATION 647
REMOVAL 647
INSTALLATION 650
VIBRATION DAMPER
REMOVAL 651
INSTALLATION 652
FLEX PLATE / FLYWHEEL
REMOVAL 653
INSTALLATION 654
ENGINE MOUNT BRACKETS
REMOVAL 655
INSTALLATION 656
FRONT MOUNT
REMOVAL 657
INSTALLATION 658
REAR MOUNT
REMOVAL 659
INSTALLATION 660
LUBRICATION
DESCRIPTION 660
DIAGNOSIS AND TESTING
ENGINE OIL LEAK INSPECTION 660
DIAGNOSIS AND TESTING - CHECKING ENGINE OIL PRESSURE 662
OIL LEVEL INDICATOR TUBE
REMOVAL 663
INSTALLATION 663
OIL
DESCRIPTION 664
STANDARD PROCEDURE
ENGINE OIL LEVEL CHECK 664
STANDARD PROCEDURE - ENGINE OIL AND FILTER CHANGE 664
OIL FILTER
DESCRIPTION 666
REMOVAL 666
INSTALLATION 666
OIL PAN
REMOVAL
LOWER OIL PAN 667
REMOVAL - UPPER OIL PAN 669
INSTALLATION
LOWER OIL PAN 669
INSTALLATION - UPPER OIL PAN 671
OIL LEVEL/TEMPERATURE SENSOR
REMOVAL 672
INSTALLATION 673
OIL SPRAY NOZZLES
REMOVAL 674
INSTALLATION 674
OIL PUMP
DESCRIPTION 674
REMOVAL 674
CLEANING 675
INSTALLATION 676
OIL PUMP DRIVE CHAIN
REMOVAL 677
INSTALLATION 677
OIL PRESSURE RELIEF VALVE
DESCRIPTION 677
INTAKE MANIFOLD
DESCRIPTION 678
OPERATION 678
DIAGNOSIS AND TESTING - INTAKE MANIFOLD LEAKS 678
REMOVAL 678
INSTALLATION 680
EXHAUST MANIFOLD
DESCRIPTION 680
REMOVAL
LEFT SIDE 681
REMOVAL- RIGHT SIDE 682
INSTALLATION
LEFT SIDE 683
INSTALLATION - RIGHT SIDE 684
TIMING CHAIN TENSIONER
REMOVAL 684
INSTALLATION 685
TIMING CHAIN COVER
REMOVAL 685
INSTALLATION 688
TIMING CHAIN
REMOVAL 693
INSTALLATION 695
BALANCE SHAFT
DESCRIPTION 698
REMOVAL 698
INSTALLATION 701
TIMING CHAIN GUIDES
REMOVAL 703
INSTALLATION 703
ENGINE TIMING
OPERATION 704

ENGINE - SERVICE INFORMATION

DESCRIPTION

The engine is a modular design. The engine uses a 90-degree V-angle rotating assembly which provides space for long intake manifold runners which provide high torque across a broad range of engine speeds for driving ease. The engine uses a split-pin crankshaft to provide even firing, and a balance shaft to compensate for the rocking motion which occurs with a 90-degree V-6.

OPERATION

The engine produces 215 bhp @ 5700 rpm and 230 lb.-ft. of torque @ 3000 rpm. Its 6000 rpm maximum operating speed is electronically limited by interrupting the fuel supply. The engine is tuned to provide high torque over a broad range of engine speed for optimum driveability. 90% of max torque is available from about 2300-5300 rpm, 98% of max torque is available from 3000-4500 rpm.

DIAGNOSIS AND TESTING

ENGINE DIAGNOSIS - INTRODUCTION

Engine diagnosis is helpful in determining the causes of malfunctions not detected and remedied by routine maintenance.

These malfunctions may be classified as either mechanical (e.g., a strange noise), or performance (e.g., engine idles rough and stalls).

Additional tests and diagnostic procedures may be necessary for specific engine malfunctions that cannot be isolated with the Service Diagnosis charts. Information concerning additional tests and diagnosis is provided within the following:

- Cylinder Combustion Pressure Leakage Test
- Cylinder Compression Pressure Test
- Engine Cylinder Head Gasket Failure Diagnosis
- Engine Oil Leak Inspection
- Intake Manifold Leakage Diagnosis

DIAGNOSIS AND TESTING - ENGINE DIAGNOSIS - MECHANICAL

CONDITION	POSSIBLE CAUSES	CORRECTION
NOISY VALVES	1. High or low oil level in crankcase.	1. Check and correct engine oil level.
	2. Thin or diluted oil.	2. Change oil to correct viscosity.
	3. Thick oil	3. (a.) Change oil and filter. (b.) Run engine to operating temperature. (c.) Change oil and filter again.
	4. Low oil pressure.	4. Check and correct engine oil level.
	5. Dirt in tappets/lash adjusters.	5. Replace rocker arm/adjuster assembly.
	6. Worn rocker arms.	6. Inspect oil supply to rocker arms.
	7. Worn tappets/lash adjusters.	7. Install new rocker arm/adjuster assembly.
	8. Worn valve guides.	8. Ream guides and install new valves with oversize stems.
	9. Excessive runout of valve seats on valve faces.	9. Grind valve seats and valves.
	10. Missing adjuster pivot.	10. Replace rocker arm/adjuster assembly.
CONNECTING ROD NOISE	1. Insufficient oil supply.	1. Check engine oil level.
	2. Low oil pressure.	2. Check engine oil level. Inspect oil pump.
	3. Thin or diluted oil.	3. Change oil to correct viscosity.
	4. Thick oil	3. (a.) Change oil and filter. (b.) Run engine to operating temperature. (c.) Change oil and filter again.
	5. Excessive bearing clearance.	5. Measure bearings for correct clearance. Repair as necessary.
	6. Connecting rod journal out-of-round.	6. Replace crankshaft or grind surface.
	7. Misaligned connecting rods.	7. Replace bent connecting rods.

CONDITION	POSSIBLE CAUSES	CORRECTION
MAIN BEARING NOISE	1. Insufficient oil supply.	1. Check engine oil level.
	2. Low oil pressure.	2. Check engine oil level. Inspect oil pump relief valve and spring.
	3. Thin or diluted oil.	3. Change oil to correct viscosity.
	4. Thick oil	3. (a.) Change oil and filter. (b.) Run engine to operating temperature. (c.) Change oil and filter again.
	4. Excessive bearing clearance.	4. Measure bearings for correct clearance. Repair as necessary.
	5. Excessive end play.	5. Check thrust bearing for wear on flanges.
	6. Crankshaft journal out-of-round or worn.	6. Replace crankshaft or grind journals.
	7. Loose flywheel or torque converter.	7. Tighten to correct torque.
OIL PRESSURE DROP	1. Low oil level.	1. Check engine oil level.
	2. Faulty oil pressure sending unit.	2. Install new sending unit.
	3. Low oil pressure.	3. Check sending unit and main bearing oil clearance.
	4. Clogged oil filter.	4. Install new oil filter.
	5. Worn parts in oil pump.	5. Replace oil pump.
	6. Thin or diluted oil.	6. Change oil to correct viscosity.
	7. Oil pump relief valve stuck.	7. Replace the oil pump.
	8. Oil pump suction tube loose.	8. Remove oil pan and install new tube or clean, if necessary.
	9. Oil pump warped or cracked.	9. Install new oil pump.
	10. Excessive bearing clearance.	10. Measure bearings for correct clearance.
OIL LEAKS	1. Misaligned or deteriorated gaskets.	1. Replace gasket(s).
	2. Loose fastener, broken or porous metal part.	2. Tighten, repair or replace the part.
	3. Misaligned or deteriorated cup or threaded plug.	3. Replace as necessary.

CONDITION	POSSIBLE CAUSES	CORRECTION
OIL CONSUMPTION OR SPARK PLUGS FOULED	1. PCV system malfunction.	1. Check system and repair as necessary. (Refer to Appropriate Diagnostic Manual.)
	2. Worn, scuffed or broken rings.	2. Hone cylinder bores. Install new rings.
	3. Carbon in oil ring slots.	3. Clean pistons and install new rings.
	4. Rings fitted too tightly in grooves.	4. Remove rings and check grooves. If groove is not proper width, replace piston.
	5. Worn valve guide(s).	5. Replace cylinder head(s).
	6. Valve stem seal(s) worn or damaged.	6. Replace seal(s).

ENGINE DIAGNOSIS - PERFORMANCE

CONDITION	POSSIBLE CAUSES	CORRECTION
ENGINE WILL NOT CRANK	1. Weak or discharged battery.	1. Charge or replace battery as necessary. Check charging system.
	2. Corroded or loose battery connections.	2. Clean/tighten battery/starter connections.
	3. Faulty starter or related circuits.	3. Check starting system.
	4. Seized accessory drive component.	4. Remove accessory drive belt and attempt to start engine. If engine cranks, repair/replace seized component.
	5. Engine internal mechanical failure or hydrostatic lock.	5. Refer to standard procedure - hydrostatic locked engine.
ENGINE CRANKS BUT WILL NOT START	1. No spark.	1. Check for spark.
	2. No fuel.	2. Perform fuel pressure test.
	3. Low or no engine compression.	3. Perform cylinder compression test.
ENGINE LOSS OF POWER	1. Worn or incorrect gapped spark plugs.	1. Replace spark plugs or set gap.
	2. Dirt or water in fuel system.	2. Clean system and replace fuel filter.
	3. Faulty fuel pump.	3. Replace fuel pump.
	4. Incorrect valve timing.	4. Correct valve timing.
	5. Blown cylinder head gasket(s).	5. Replace cylinder head gasket(s).
	6. Low compression.	6. Test cylinder compression.
	7. Burned, warped, or pitted valves.	7. Install new or reface valves as necessary.
	8. Plugged or restricted exhaust.	8. Replace parts as necessary.
	9. Faulty ignition cables.	9. Replace ignition cables as necessary.
	10. Faulty coil(s).	10. Test and replace as necessary.

CONDITION	POSSIBLE CAUSES	CORRECTION
ENGINE STALLS OR ROUGH IDLE	1. Carbon build-up on throttle plate(s).	1. Remove throttle body(s) and de-carbon.
	2. Engine idle speed too low.	2. Check Idle Air Control circuit.
	3. Worn or incorrectly gapped spark plugs.	3. Replace spark plugs or set gap.
	4. Faulty or crossed ignition cables.	4. Check for correct firing order or replace ignition cables as necessary.
	5. Faulty coil(s).	5. Test and replace as necessary.
	6. Intake manifold vacuum leak.	6. Inspect intake manifold gasket and vacuum hoses. Replace as necessary.
ENGINE MISSES ON ACCELERATION	1. Worn or incorrectly gapped spark plugs.	1. Replace spark plugs or set gap.
	2. Faulty ignition cables.	2. Replace ignition cables as necessary.
	3. Dirt or water in fuel system.	3. Clean system and replace fuel filter.
	4. Burned, warped, or pitted valves.	4. Install new or reface valves as necessary.
	5. Faulty coil(s).	5. Test and replace as necessary.

DIAGNOSIS AND TESTING - CYLINDER COMPRESSION PRESSURE TEST

The results of a cylinder compression pressure test can be utilized to diagnose several engine malfunctions.

Ensure the battery is completely charged and the engine starter motor is in good operating condition. Otherwise the indicated compression pressures may not be valid for diagnosis purposes.

1. Check the engine oil level and add oil if necessary.
2. Drive the vehicle until engine reaches normal operating temperature. Select a route free from traffic and other forms of congestion, observe all traffic laws, and accelerate through the gears several times briskly.
3. Disconnect all of the ignition coils from the spark plugs.
4. Remove one spark plug from each cylinder of the engine. As the spark plugs are being removed, check electrodes for abnormal firing indicators; fouled, hot, oily, etc. Record cylinder number of spark plug for future reference.
5. Make sure the throttle blade is fully open during the compression check.
6. Insert compression gauge into the #1 spark plug hole in the cylinder head.
7. Crank the engine until maximum pressure is reached on the gauge. Record this pressure as #1 cylinder pressure.
8. Repeat the previous step for all of the remaining cylinders.
9. Compression should not be less than 689 kPa (100 psi) and not vary more than 25 percent from cylinder to cylinder.
10. If one or more cylinders have an abnormally low compression pressure, repeat the compression test.

Note: The recommended compression pressures are to be used only as a guide to diagnosing engine problems. An engine should not be disassembled to determine the cause of low compression unless some form of malfunction is present.

11. If the same cylinder or cylinders repeat an abnormally low reading on the second compression test, it could indicate the existence of a problem in the cylinder in question.

DIAGNOSIS AND TESTING - CYLINDER COMBUSTION PRESSURE LEAKAGE TEST

The combustion pressure leakage test provides an accurate means for determining engine condition.

Combustion pressure leakage testing will detect:

- Exhaust and intake valve leaks (improper seating).
- Leaks between adjacent cylinders or into water jacket.
- Any causes for combustion/compression pressure loss.

WARNING: DO NOT REMOVE THE PRESSURE CAP WITH THE SYSTEM HOT AND UNDER PRESSURE BECAUSE SERIOUS BURNS FROM COOLANT CAN OCCUR.

1. Check the coolant level and fill as required. **DO NOT** install the pressure cap.
2. Start and operate the engine until it attains normal operating temperature, then turn the engine **OFF**.
3. Clean spark plug recesses with compressed air.
4. Remove one spark plug from each cylinder.
5. Remove the oil filler cap.
6. Remove the air cleaner.
7. Calibrate the tester according to the manufacturer's instructions. The shop air source for testing should maintain 483 kPa (70 psi) minimum, 1,379 kPa (200 psi) maximum, with 552 kPa (80 psi) recommended.

Perform the test procedures on each cylinder according to the tester manufacturer's instructions. While testing, listen for pressurized air escaping through the throttle body, tailpipe and oil filler cap opening. Check for bubbles in the coolant.

All gauge pressure indications should be equal, with no more than 25% leakage per cylinder.

FOR EXAMPLE: At 552 kPa (80 psi) input pressure, a minimum of 414 kPa (60 psi) should be maintained in the cylinder.

STANDARD PROCEDURE

HYDROSTATIC LOCKED ENGINE

When an engine is suspected to be hydrostatically locked, regardless of what caused the problem, the following steps should be used.

CAUTION: DO NOT use starter motor to rotate the engine, severe damage may occur.

1. Inspect the air cleaner, induction system and intake manifold to insure system is dry and clear of foreign material.
2. Disconnect the negative battery cable.
3. Place a shop towel around the spark plugs when removing them from the engine. This will catch any fluid that may possibly be in the cylinder under pressure.
4. With all the spark plugs removed, rotate the engine crankshaft using a breaker bar and socket.
5. Identify the fluid in the cylinder(s) (i.e., coolant, fuel, oil or other).
6. Make sure all fluid has been removed from the cylinders. Inspect engine for damage (i.e., connecting rods, pistons, valves, etc.)
7. Repair engine or components as necessary to prevent this problem from re-occurring.

CAUTION: Squirt approximately one teaspoon of oil into the cylinders, rotate engine to lubricate the cylinder walls to prevent damage on restart.

8. Install new spark plugs.
9. Drain the engine oil and remove the oil filter.
10. Install a new oil filter.

11. Fill the engine with the specified amount of approved oil.
12. Connect the negative battery cable.
13. Start the engine and check for any leaks.

STANDARD PROCEDURE - REPAIR OF DAMAGED OR WORN THREADS

CAUTION: Be sure that the tapped holes maintain the original center line.

Damaged or worn threads (excluding spark plug and camshaft bearing cap attaching threads) can be repaired. Essentially, this repair consists of drilling out worn or damaged threads, tapping the hole with a special Heli-Coil® Tap, (or equivalent) and installing an insert into the tapped hole. This brings the hole back to its original thread size.

Heli-Coil® tools and inserts are readily available from automotive parts jobbers.

STANDARD PROCEDURE - FORM-IN-PLACE GASKETS AND SEALERS

There are numerous places where form-in-place gaskets are used on the engine. Care must be taken when applying form-in-place gaskets to assure obtaining the desired results. **Do not use form-in-place gasket material unless specified.** Bead size, continuity, and location are of great importance. Too thin a bead can result in leakage while too much can result in spill-over which can break off and obstruct fluid feed lines. A continuous bead of the proper width is essential to obtain a leak-free gasket.

There are numerous types of form-in-place gasket materials that are used in the engine area. Mopar® Engine RTV GEN II, Mopar® ATF-RTV, Mopar® Gasket Maker gasket materials, and Mopar® Gasket Sealant each have different properties and can not be used in place of the other.

MOPAR® ENGINE RTV GEN II is used to seal components exposed to engine oil. This material is a specially designed black silicone rubber RTV that retains adhesion and sealing properties when exposed to engine oil. Moisture in the air causes the material to cure. This material is available in three ounce tubes and has a shelf life of one year. After one year this material will not properly cure. Always inspect the package for the expiration date before use.

MOPAR® ATF RTV is a specifically designed black silicone rubber RTV that retains adhesion and sealing properties to seal components exposed to automatic transmission fluid, engine coolants, and moisture. This material is available in three ounce tubes and has a shelf life of one year. After one year this material will not properly cure. Always inspect the package for the expiration date before use.

MOPAR® GASKET MAKER is an anaerobic type gasket material. The material cures in the absence of air when squeezed between two metallic surfaces. It will not cure if left in the uncovered tube. The anaerobic material is for use between two machined surfaces. Do not use on flexible metal flanges.

MOPAR® GASKET SEALANT is a slow drying, permanently soft sealer. This material is recommended for sealing threaded fittings and gaskets against leakage of oil and coolant. Can be used on threaded and machined parts under all temperatures. This material is used on engines with multi-layer steel (MLS) cylinder head gaskets. This material also will prevent corrosion. Mopar® Gasket Sealant is available in a 13 oz. aerosol can or 4oz./16 oz. can w/applicator.

SEALER APPLICATION

Mopar® Gasket Maker material should be applied sparingly, 0.040 in. (1 mm) diameter or less of sealant to one gasket surface. Be certain the material surrounds each mounting hole. Excess material can easily be wiped off. Components should be torqued in place within 15 minutes. The use of a locating dowel is recommended during assembly to prevent smearing material off the location.

Mopar® Engine RTV GEN II or ATF RTV gasket material should be applied in a continuous bead approximately 0.120 in. (3 mm) in diameter. All mounting holes must be circled. For corner sealing, a 1/8 or 1/4 in. (3.17 or 6.35 mm) drop is placed in the center of the gasket contact area. Uncured sealant may be removed with a shop towel. Components should be torqued in place while the sealant is still wet to the touch (within 10 minutes). The usage of a locating dowel is recommended during assembly to prevent smearing material off the location.

Mopar® Gasket Sealant in an aerosol can should be applied using a thin, even coat sprayed completely over both surfaces to be joined, and both sides of a gasket. Then proceed with assembly. Material in a can w/applicator can be brushed on evenly over the sealing surfaces. Material in an aerosol can should be used on engines with multi-layer steel gaskets.

STANDARD PROCEDURE - ENGINE GASKET SURFACE PREPARATION

To ensure a good gasket seal, proper surface preparation must be performed, especially with the use of aluminum engine components and multi-layer steel cylinder head gaskets.

Never use the following to clean gasket surfaces:

- Metal scraper (1)
- Abrasive pad or paper to clean cylinder block and head (2).
- High speed power tool with an abrasive pad or a wire brush.

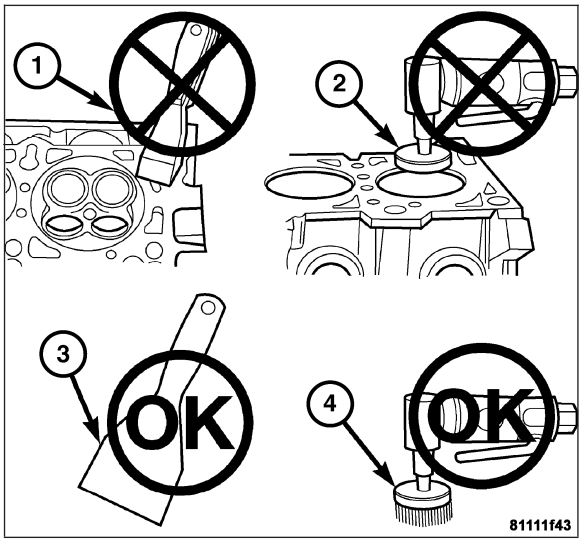

Note: Multi-Layer Steel (MLS) head gaskets require a scratch free sealing surface.

CAUTION: Excessive pressure or high RPM (beyond the recommended speed), can damage the sealing surfaces. The mild (white, 120 grit) bristle disc is recommended. If necessary, the medium (yellow, 80 grit) bristle disc may be used on cast iron surfaces with care.

Only use the following for cleaning gasket surfaces:

- Solvent or a commercially available gasket remover.
- Plastic or wood scraper (3).
- Drill motor with 3M Roloc™ Bristle Disc (4) (white or yellow).

STANDARD PROCEDURE - ENGINE CORE AND OIL GALLERY PLUGS

Using a blunt tool such as a drift (2) and a hammer, strike the bottom edge of the cup plug (3). With the cup plug rotated, grasp firmly with pliers (1) or other suitable tool and remove plug.

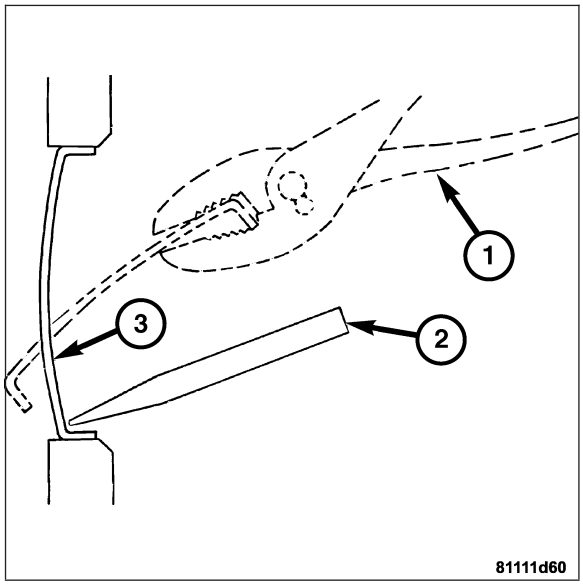

CAUTION: Do not drive cup plug into the casting as restricted cooling can result and cause serious engine problems.

Thoroughly clean the inside of the cup plug hole in the cylinder block or head. Be sure to remove any old sealer. Lightly coat the inside of the cup plug hole with Mopar® Stud and Bearing Mount. Make certain the new plug is cleaned of all oil or grease. Using the proper drive plug, drive the plug into the hole so that the sharp edge of the plug is at least 0.020 in. (0.5 mm) inside the lead-in chamfer.

It is not necessary to wait for the curing of the sealant. The cooling system can be refilled and the vehicle placed in service immediately.

STANDARD PROCEDURE - MEASURING BEARING CLEARANCE USING PLASTIGAGE®

The engine crankshaft bearing clearances can be determined by the use of a Plastigage® or equivalent. The following is the recommended procedure for the use of the Plastigage®:

1. Remove any oil film from the surface to be checked. The plastigage will dissolve in oil.
2. Place a piece of the Plastigage® (1) across the entire width of the bearing shell in the cap approximately 1/4 in. (6.35 mm) off center, and away from the oil holes (In addition, suspected areas can be checked by placing the Plastigage in the suspected area). Torque the bearing cap bolts of the bearing being checked to the proper torque specifications.
3. Remove the bearing cap and compare the width of the flattened Plastigage® with the metric scale provided on the package of the Plastigage®. Locate the band closest to the same width. This band shows the amount of clearance in thousandths of a millimeter. Differences in readings between the ends indicate the amount of taper present. Record all the readings taken. Compare the clearance measurements to the specifications found in the engine specifications. **Refer to Page 9-602**. **Plastigage® generally is accompanied by two scales. One scale is in inches, the other is a metric scale.**

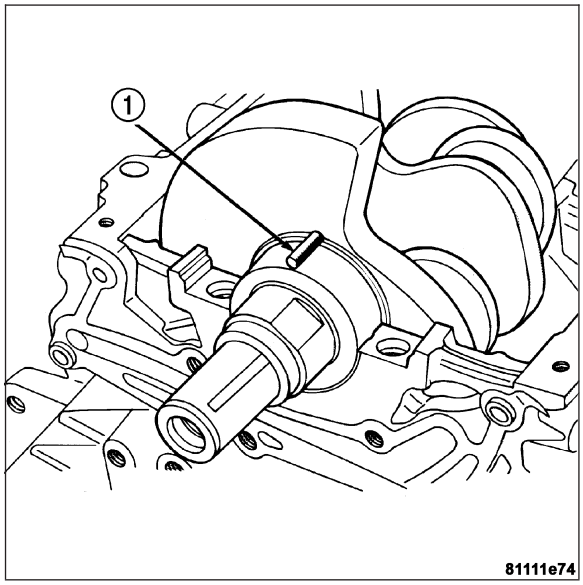

Note: Plastigage is available in a variety of clearance ranges. Use the most appropriate range for the specifications you are checking.

4. Install the proper crankshaft bearings to achieve the specified bearing clearances.

REMOVAL

1. Disconnect the negative battery cable.
2. Remove the air cleaner housing assembly. **Refer to Page 9-608**.
3. Drain the cooling system. **Refer to Page 7-18**.
4. Remove the radiator with the radiator fan. **Refer to Page 7-33**.
5. Remove the accessory drive belt.
6. Remove the mass air flow sensor.
7. Disconnect the vacuum hoses at the vacuum booster, the intake manifold, and the purge valve.
8. Remove the oil from the power steering pump reservoir.
9. Disconnect the ground lead at the power steering pump.

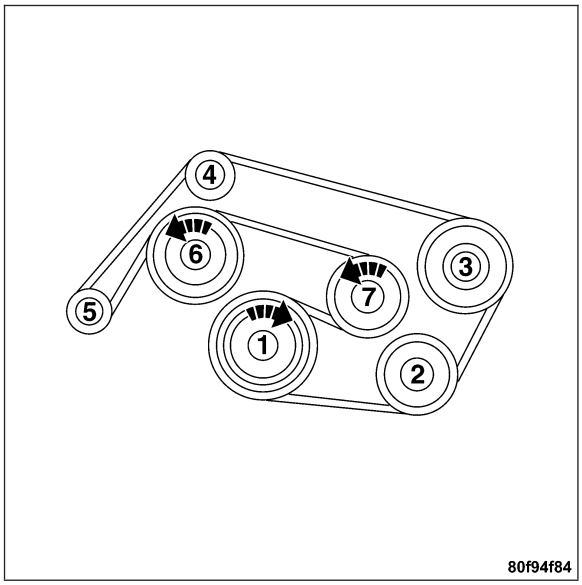

10. Disconnect the pressure (2) and return (1) lines from the power steering pump.

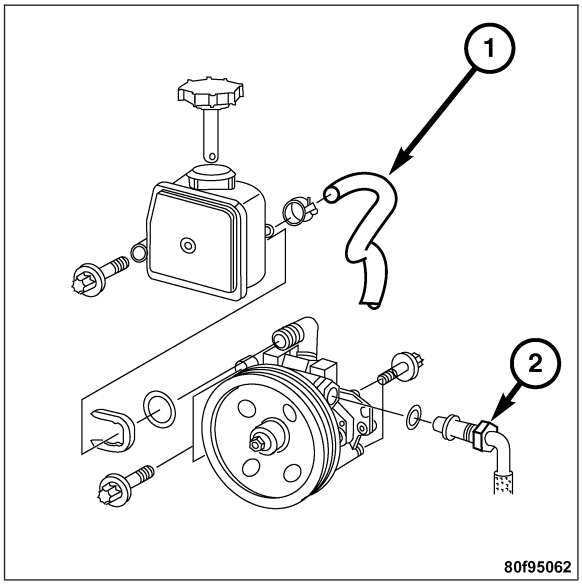

11. Relieve the fuel pressure at the service valve (1) on the fuel rail. **Refer to Page 14-5**.

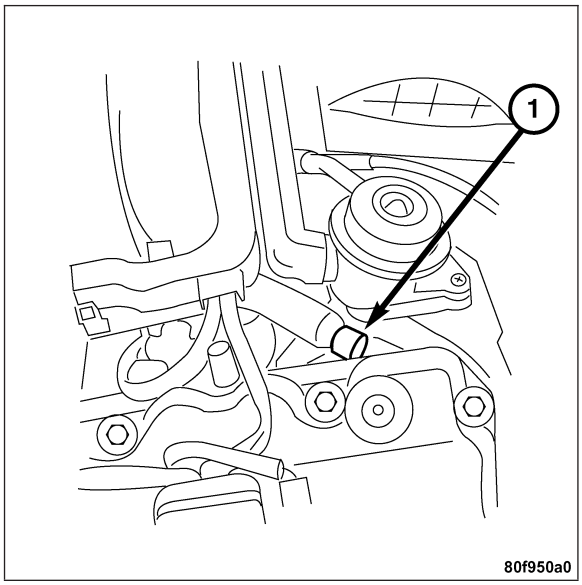

12. Disconnect the fuel supply line (1) at the fuel rail.
13. Disconnect the engine wire harness.
14. Raise and support the vehicle.

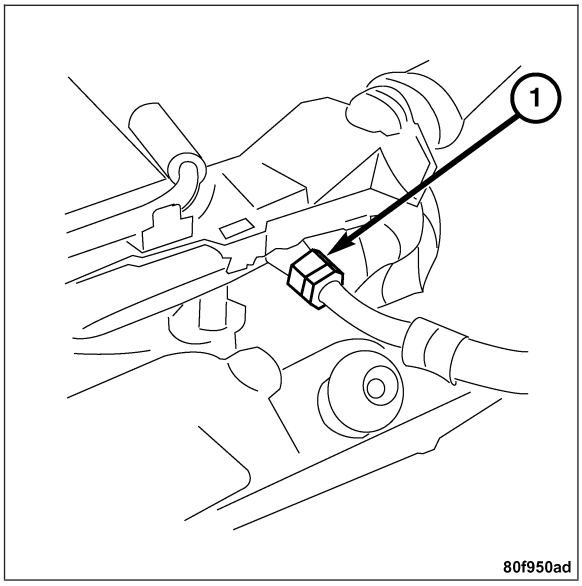

15. Remove the lower splash shield screws (1) and the splash shield.
16. Drain the engine oil. **Refer to Page 9-664**.
17. Remove the propeller shaft. **Refer to Page 3-26**.

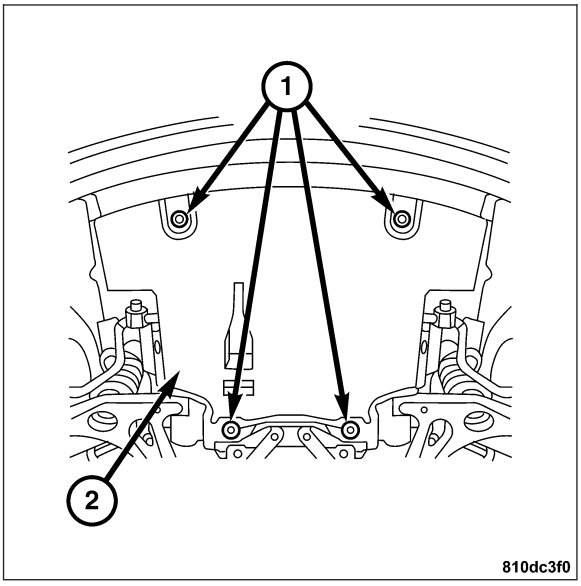

18. Disconnect the ground cable (1) at the transmission.

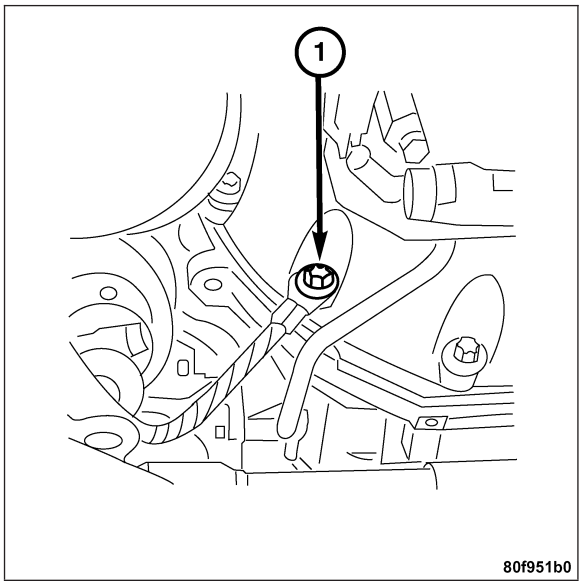

19. Disconnect the backup lamp switch harness connector (1) (with manual transmission).
20. Disconnect the transmission wire harness connector and the shift selector cable (with automatic transmission).

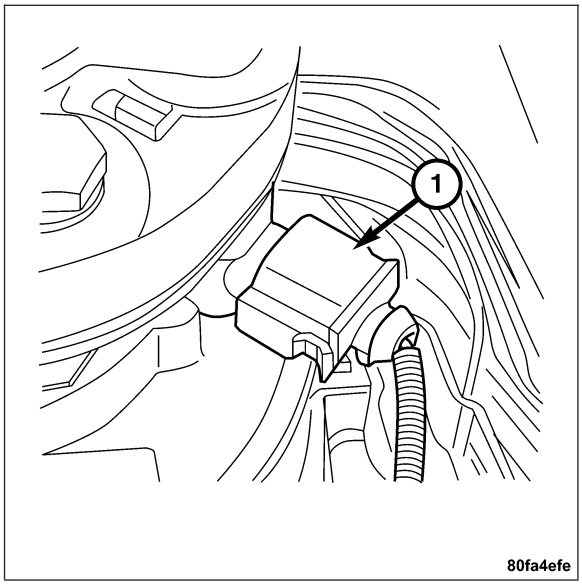

21. Disconnect the pressure line (1) from the clutch slave cylinder (manual transmission only).
22. Remove the pressure line retaining bolt (2) and position the pressure line aside.
23. Disconnect the reverse lockout cable.

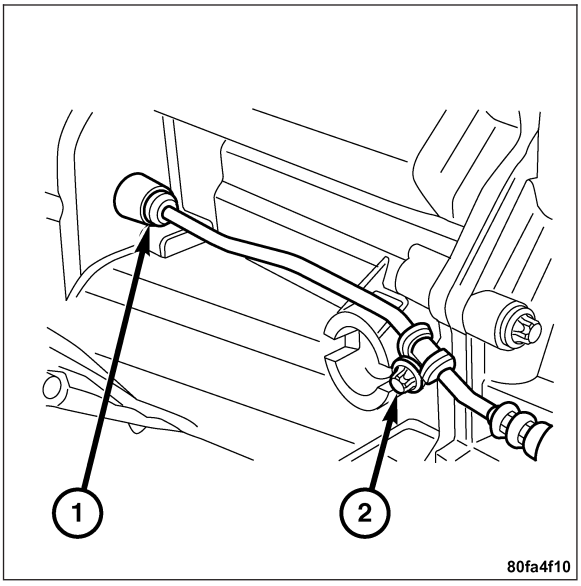

24. Disconnect the shift rod (1) from the ball stud (2) (manual transmission only).
25. Disconnect the starter harness connectors. **Refer to Page 8F-43**.

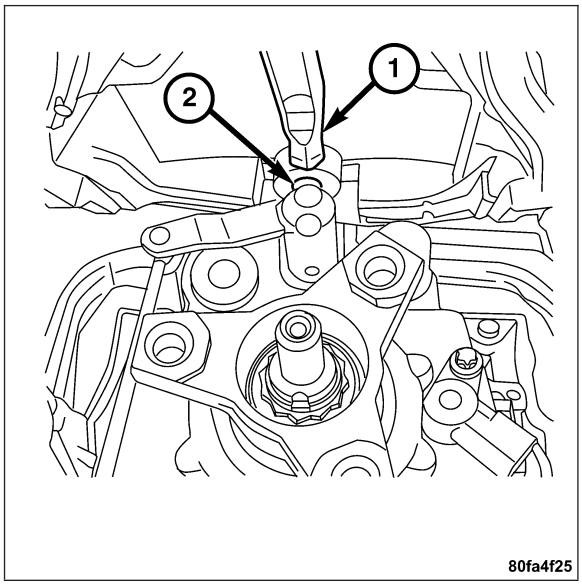

26. Remove the front engine mount bolt (1).

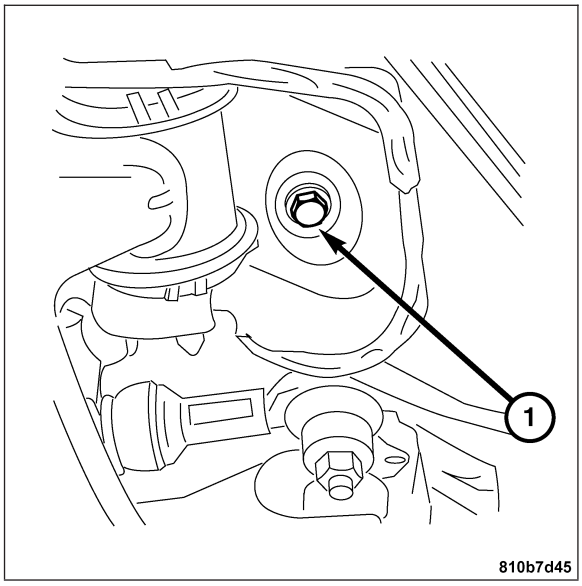

27. Remove the lower radiator hose (1) and the coolant bypass hose (2) from the water pump.
28. Lower the vehicle.

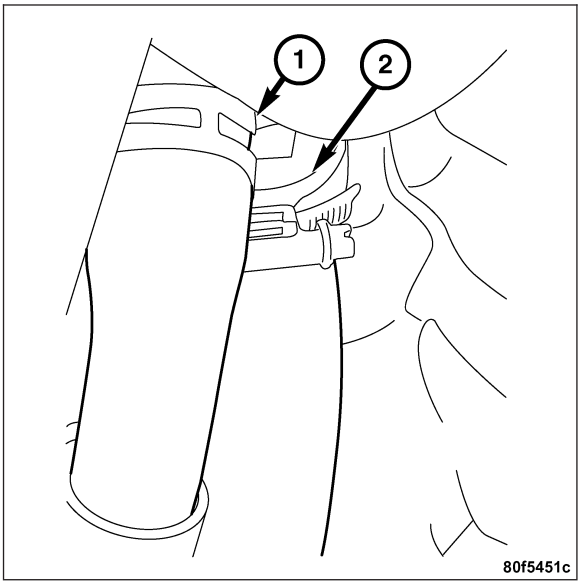

29. Remove the upper radiator hose (1) from the thermostat housing.
30. Disconnect the heater hoses at the intake manifold and the engine block.
31. Remove the A/C compressor mounting bolts. **Refer to Page 24-121**.
32. Position the A/C compressor aside with lines attached.

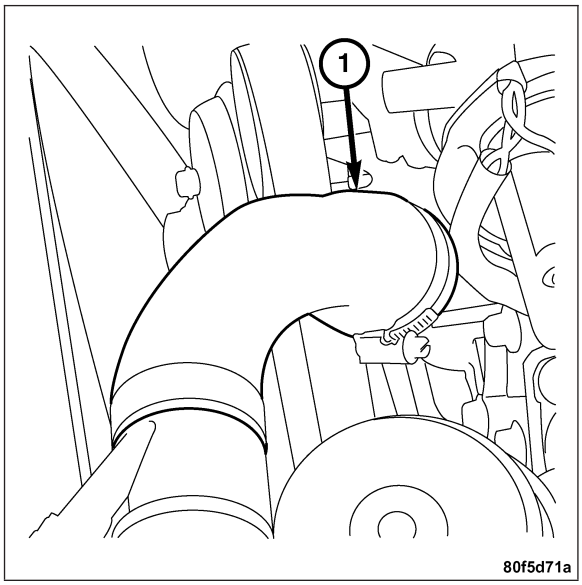

33. Position a floor jack under the transmission and raise the transmission slightly.
34. Remove the transmission mount bolts (1), the crossmember bolts (2) and the transmission mount with crossmember.

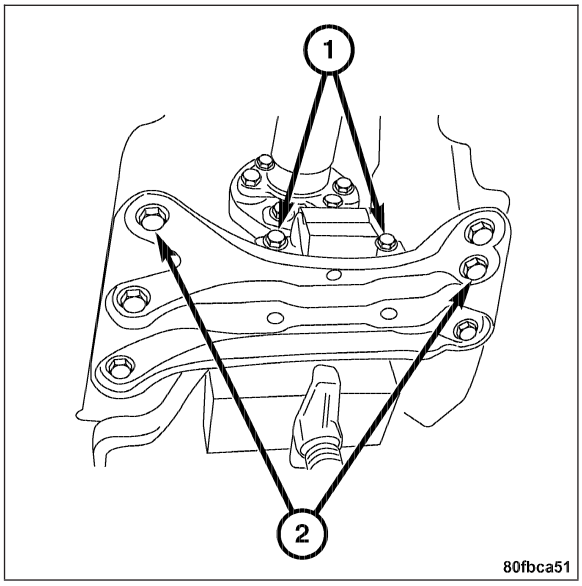

35. Attach the engine lifting device to the engine lifting eyes.
36. Lower the rear of the transmission with the floor jack.
37. Remove the engine and transmission assembly from the vehicle.
38. Separate the engine and transmission. For automatic **Refer to Page 21-210**, for manual **Refer to Page 21-344**.

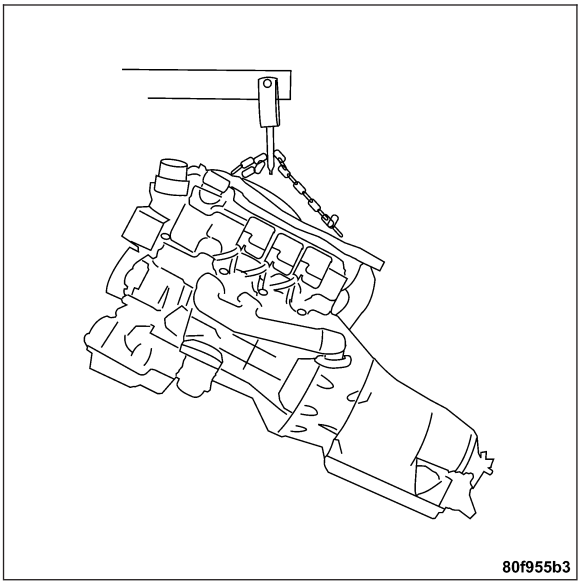

39. Remove the clutch if equipped. **Refer to Page 6-9**.
40. Remove the flywheel bolts (1), the spacer (2) and the flywheel (3).
41. Mount the engine on an engine stand.

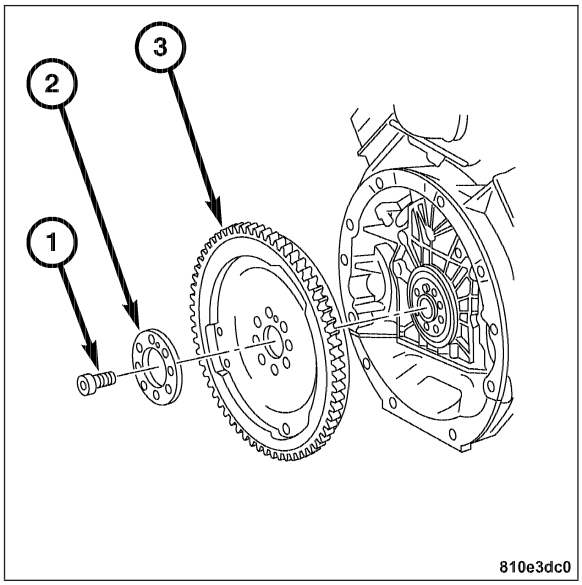

INSTALLATION

1. Attach the lifting device to the engine lifting eyes.
2. Remove the engine from the engine stand.
3. Install the flywheel. **Refer to Page 9-654**.
4. Install the clutch if equipped. **Refer to Page 6-10**.
5. Install the transmission to the engine. **Refer to Page 21-227**. **Refer to Page 21-347**.
6. Install the starter. **Refer to Page 8F-44**.
7. Position the engine and transmission in the vehicle on the front axle carrier with the transmission resting on the floor jack.
8. Raise the transmission with the floor jack.
9. Install the transmission mount with crossmember. Install the transmission mount bolts (1) and the crossmember bolts (2)
10. Raise and support the vehicle.

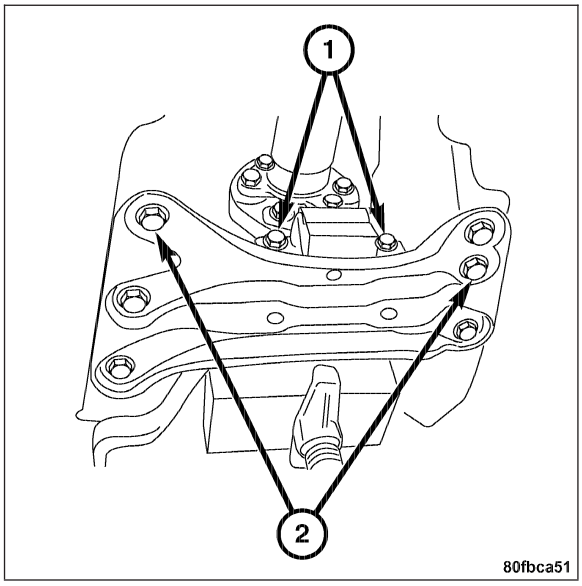

11. Install the front engine mount bolt (1).
12. Tighten the crossmember to body bolts to 40 N·m (30 ft. lbs.).
13. Tighten the transmission mount to transmission bolts to 50 N·m (36 ft. lbs.).
14. Tighten the engine mount to front axle carrier bolts to 55 N·m (41 ft. lbs.)
15. Bolt on the A/C compressor. **Refer to Page 24-122**.

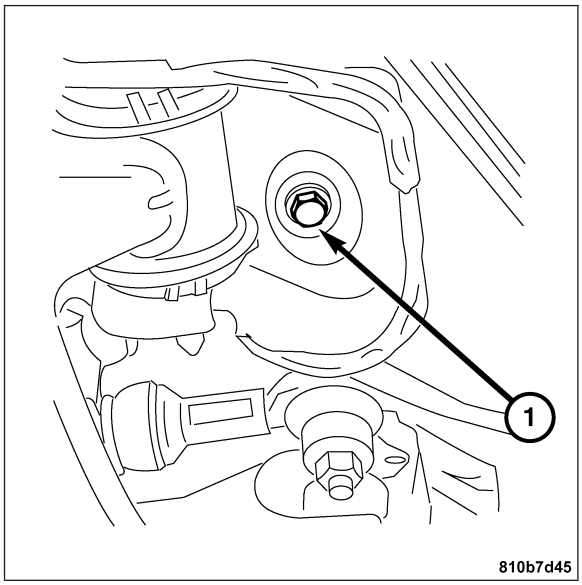

16. Connect the shift rod (1) to the ball stud (2). Connect the reverse lockout cable. (manual transmission).

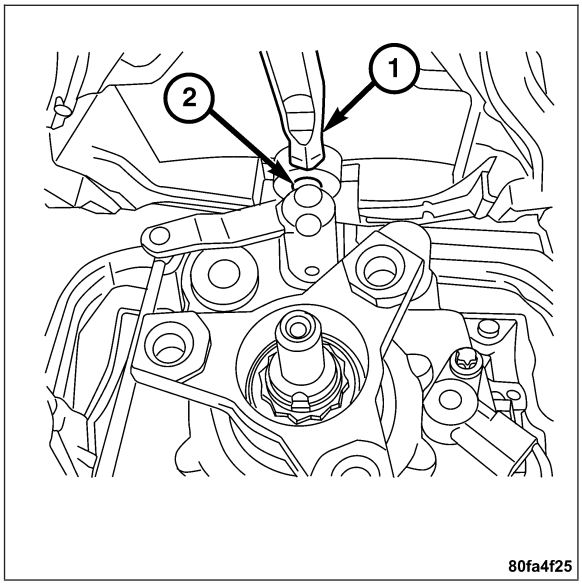

17. Connect the pressure line (1) to the clutch slave cylinder. Install the pressure line retainer bolt (2) and tighten to 15 N·m (11 ft. lbs.) (manual transmission).

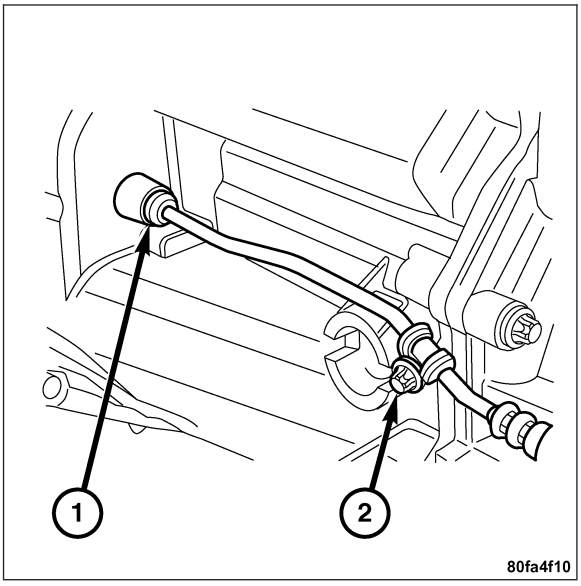

18. Connect the backup lamp switch harness connector (1) (manual transmission). Connect the transmission wire harness connector and the shift selector cable (automatic transmission).

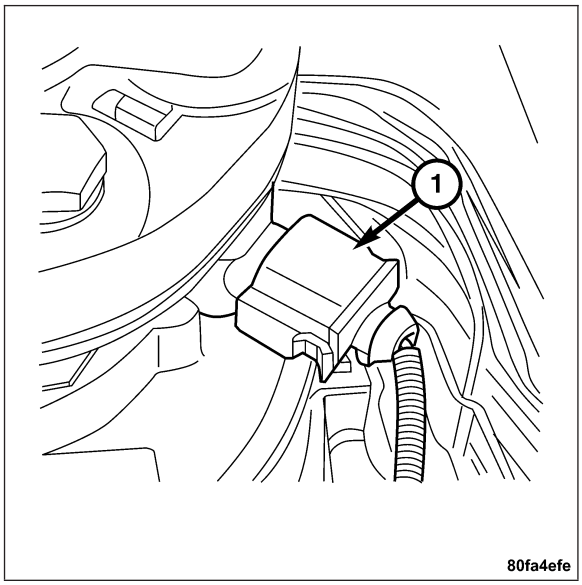

19. Bolt on the ground cable at the transmission and tighten to 40 N·m (30 ft. lbs.).
20. Install the propeller shaft. **Refer to Page 3-28**.

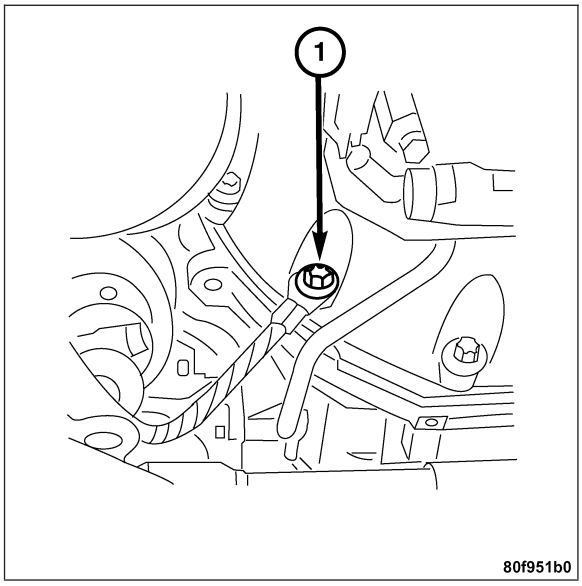

21. Connect the lower radiator hose (1) and the coolant bypass hose (2) at the water pump.

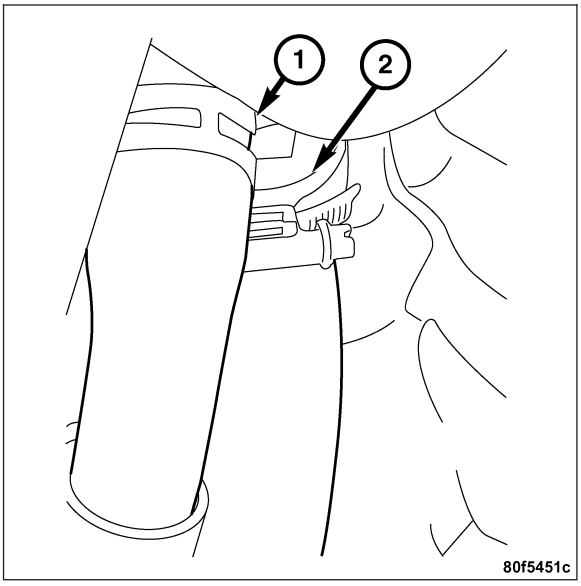

22. Install the lower splash shield (2). Tighten the screws (1) to 5 N·m (44 in. lbs.).

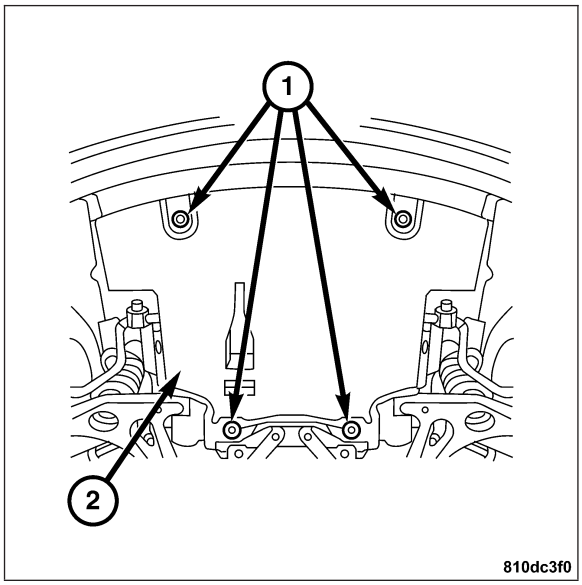

23. Lower the vehicle.
24. Connect the heater hoses at the engine block and the intake manifold.
25. Connect the upper radiator hose (1) at the thermostat housing.
26. Connect the engine wire harness.

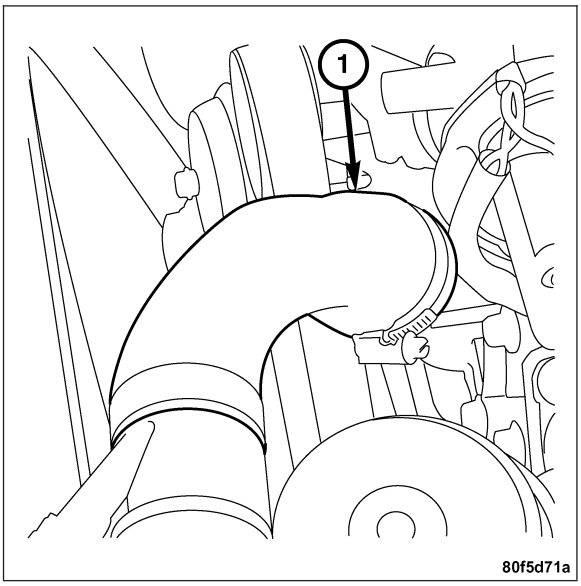

27. Connect the fuel supply line (1) at the fuel rail. Tighten the fitting to 38 N·m (28 ft. lbs.).

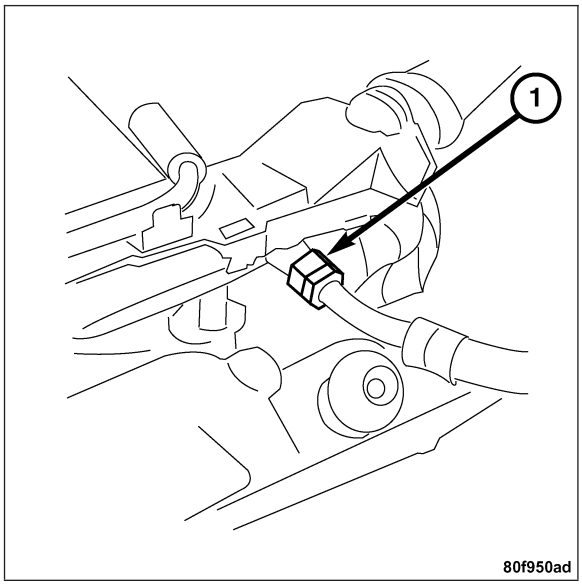

28. Connect the power steering pressure (2) and return line (1) to the power steering pump. Tighten the high pressure fitting to 45 N·m (33 ft. lbs.).
29. Connect the ground lead at the power steering pump. Tighten the bolt to 25 N·m (18 ft. lbs.).
30. Refill the power steering pump fluid reservoir.
31. Connect the vacuum hoses at the purge valve, brake booster and intake manifold.
32. Install and connect the mass air flow sensor.

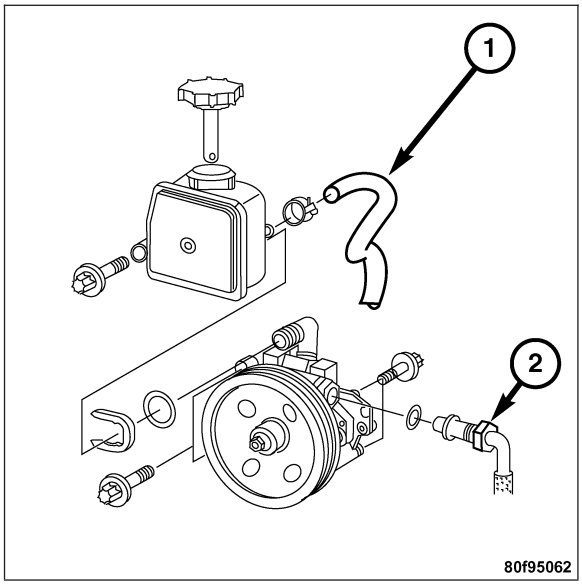

33. Install the accessory drive belt.
34. Install and connect the radiator with the radiator fan. **Refer to Page 7-35**.
35. Install the air cleaner. **Refer to Page 9-608**.
36. Connect the negative battery cable.
37. Fill the cooling system. **Refer to Page 7-18**.
38. Fill the engine with engine oil. **Refer to Page 9-664**.
39. Start the engine and check for leaks.
40. Recheck all fluid levels.

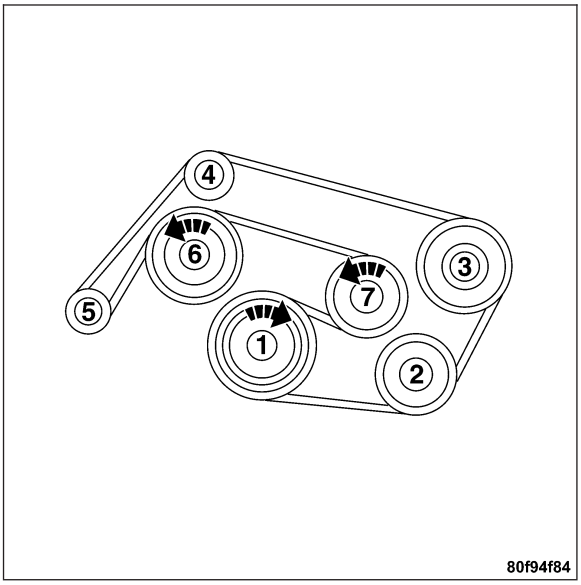

SPECIFICATIONS

SPECIFICATIONS - ENGINE

ENGINE SPECIFICATIONS

DESCRIPTION	SPECIFICATION
GENERAL SPECIFICATIONS	
Engine Type	90 ° Bank Angle Liquid Cooled with Dual Tuned Intake Manifold and Twin Ignition
Displacement	3.2 L (195.2 cu. in.)
Bore	89.9 mm (3.54 in.)
Stroke	84 mm (3.31 in.)
Valve System	SOHC 2 Intake and 1 Exhaust Valve per Cylinder Roller Rocker Arms
Compression Ratio	10.0:1
Brake Horsepower	215 (160 KW) @ 5700 rpm (67.2 bhp/liter)
Torque	230 lb. ft. (312 N·m) @ 3000 rpm
Firing Order	1-4-3-6-2-5
Lubrication	Pressure Feed – Full Flow Filtration
Cooling System	Reverse Flow – Forced Circulation
Cylinder Block	Cast Aluminum Alloy with Siltec Bore Liners
Crankshaft	Forged Steel
Connecting Rods	Forged Steel
Pistons	Aluminum Alloy – Flat Topped
Compression Pressure	689 kPa (100 psi)
Max. Variation Between Cylinders	172 kPa (25 psi)
CYLINDER BLOCK	
Cylinder Bore Diameter	
Standard	89.900 – 89.915 mm (3.539 – 3.540 in.)
Repair Max.	90.150 – 90.165 mm (3.549 – 3.550 in.)
Out of Round	0.014 mm (.0005 in.)
Taper	0.03 mm (.0011 in.)
PISTONS	
Piston Diameter	89.87 – 89.90 mm (3.538 –3.539 in.)
Piston Ring Groove Depth No. 1	3.1 mm (0.122 in.)
Piston Ring Groove Depth No. 2	3.1 mm (0.122 in.)
Piston Ring Groove Depth No. 3	3.5 mm (0.137 in.)
PISTON RING GAP	
Compression Ring No. 1	0.20 – 0.35 mm (0.007 – 0.013 in.)
Compression Ring No. 2	0.20 – 0.40 mm (0.007 – 0.015 in.)
PISTON RING WIDTH	
Compression Rings	1.5 mm (0.059 in.)
Oil Ring (Steel Rails)	3.5 mm (0.137 in.)
CONNECTING RODS	
Bearing Clearance	0.026 – 0.054 mm (0.001 – 0.002 in.)

DESCRIPTION	SPECIFICATION
CRANKSHAFT	
Main Bearing Clearance	
Radial	0.030 – 0.052 mm (0.001 – 0.002 in.)
Axial	0.100 – 0.266 mm (0.003 – 0.010 in.)
CYLINDER HEAD VALVE SEAT	
Valve Seat Width	
Intake	31.000 – 31.016 mm (1.220 – 1.221 in.)
Exhaust	35.000 – 35.016 mm (1.378 – 1.379 in.)
VALVES	
Face Angle	45° ± 15’
Stem Diameter	
Intake	6.975 mm (0.274 in.)
Exhaust	6.974 mm (0.274 in.)
Head Diameter	
Intake	36 ± 0.4 mm (1.417 in.)
Exhaust	41 ± 0.1 mm (1.614 in.)
Length	
Intake	119.4 ± 0.2 mm (4.700 in.)
Exhaust	122.2 ± 0.2 mm (4.811 in.)
Valve Margin	
Intake	1.2 mm (0.047 in.)
Exhaust	1.6 mm (0.062 in.)

SPECIFICATIONS - TORQUE

TORQUE SPECIFICATIONS

DESCRIPTION	N·m	Ft. Lbs.	In. Lbs.
A/C Compressor Bolts	20	15	177
Balance Shaft Bolts	20	15	177
Body Bolts	40	30	354
Camshaft Bearing Bridge			
Stage One	15	11	133
Stage Two	90° Clockwise		
Camshaft Sprocket Bolts			
Stage One	50	37	443
Stage Two	90° Clockwise		
Connecting Rod Bolts			
Stage One	5	4	44
Stage Two	25	18	159
Stage Three	90° Clockwise		
Cooler Line Bolts	10	7	89

DESCRIPTION	N·m	Ft. Lbs.	In. Lbs.
Crossmember to Body Bolts	40	30	354
Cylinder Head Cover Bolts	10	7	89
Damper Bolt			
Stage One	200	148	1770
Stage Two	90° Clockwise		
EGR Fitting	40	30	354
End Cover Bolts	10		89
Engine Mount Bolts	30	22	266
Front Engine Mount to Front Axle Carrier Bolts	55	41	487
Engine Mount to Transmission Bolts	50	37	443
Engine Upper Mount Bolt	55	41	487
Engine Lower Mount Bolt	35	26	310
Engine Support Bolts	20	15	177
Exhaust Flange Bolts	20	15	177
Exhaust Manifold to Cylinder Head Bolts	35	26	310
Flywheel Bolts			
Stage One	45	33	398
Stage Two	90° Clockwise		
Fuel Supply Line to Rail	38	28	336
Cylinder Head Bolts			
Stage One	20	15	177
Stage Two	50	37	443
Stage Three	60° - 70° Clockwise		
Stage Four	60° - 70° Clockwise		
Intake Manifold Bolts	20	15	177
Lower Splash Shield Screws	-	5	44
Main Bearing Journal Cap Bolts			
Stage One M8	20	15	177
Stage Two M8	90° Clockwise		
Stage One M10	30	22	266
Stage Two M10	90° Clockwise		
Manifold Bolts	16	12	142
Oil Cooler Bolts	11	8	97
Oil Filter Adaptor Center Bolt	70	52	620
Oil Filter Cap	25	18	97
Oil Indicator Tube Bolt	10	7	89
Oil Pan Bolts Lower	14	10	124

DESCRIPTION	N·m	Ft. Lbs.	In. Lbs.
Oil Pan Bolts Upper			
M6	10	7	89
M8	20	15	177
Oil Pan Drain Plug	30	22	266
Oil Pressure/Level Sensor Screws	10	7	89
Oil Spray Nozzle Bolts	15	11	133
Power Steering Pump Ground Bolt	25	18	97
Power Steering Pump High Pressure Line	45	33	398
Timing Chain Cover Bolts	20	15	177
Timing Chain Tensioner Bolt	80	59	708
Transmission Mount Bolts	40	30	354

SPECIAL TOOLS

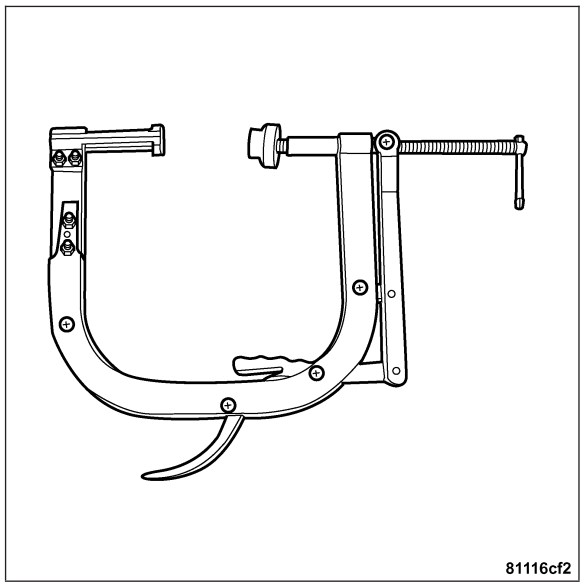

VALVE SPRING COMPRESSOR C-3422-CF

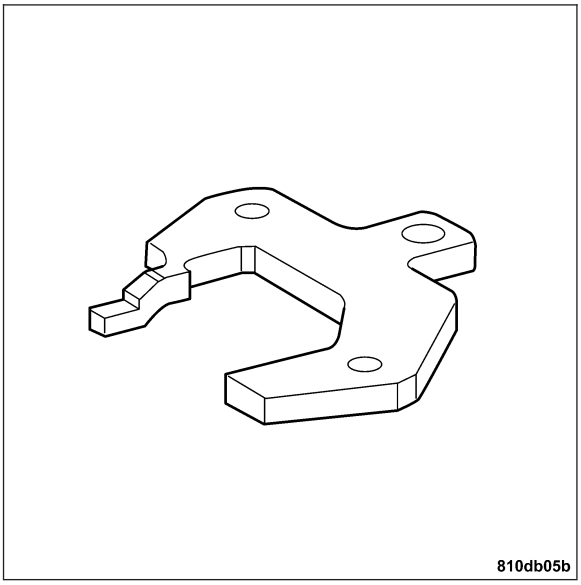

RIGHT CAMSHAFT LOCATING PLATE 9104

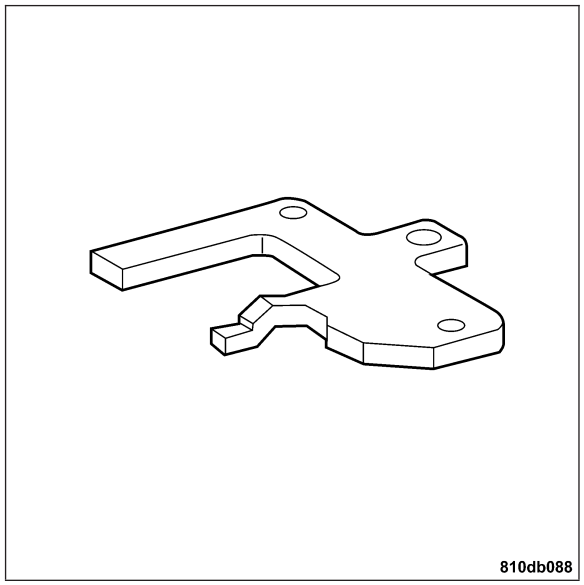

LEFT CAMSHAFT LOCATING PLATE 9105

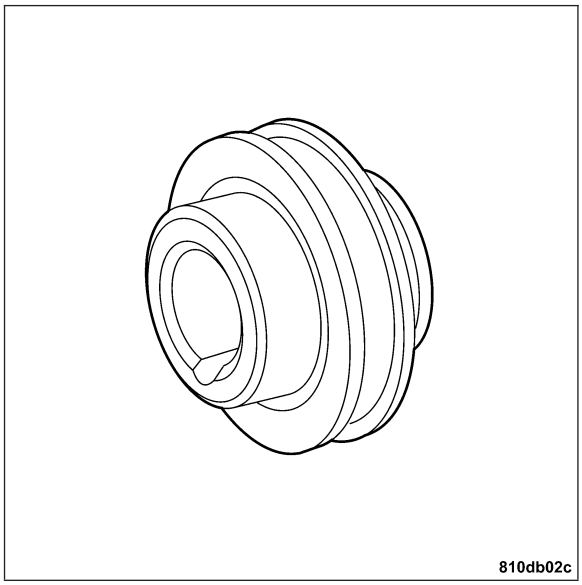

SLEEVE 9101

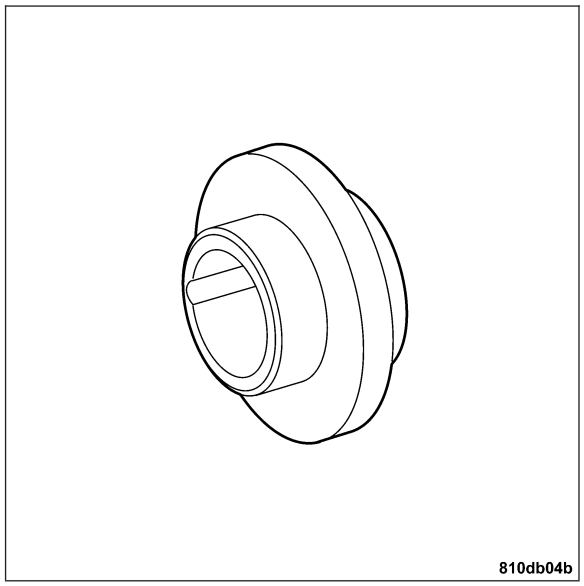

INSERTION TOOL 9103

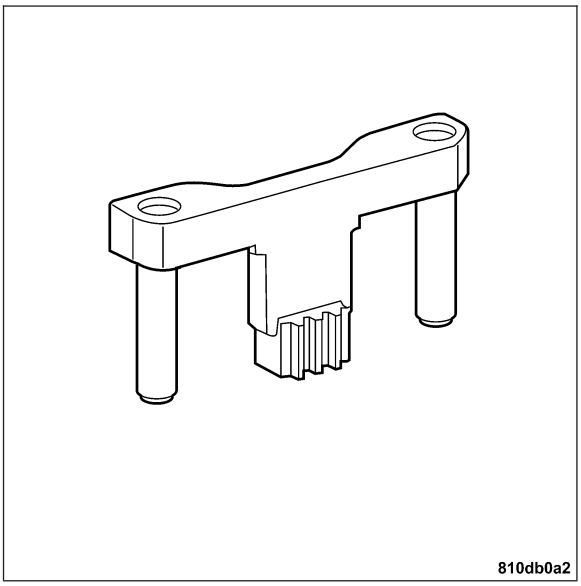

FLYWHEEL LOCKING TOOL 9102

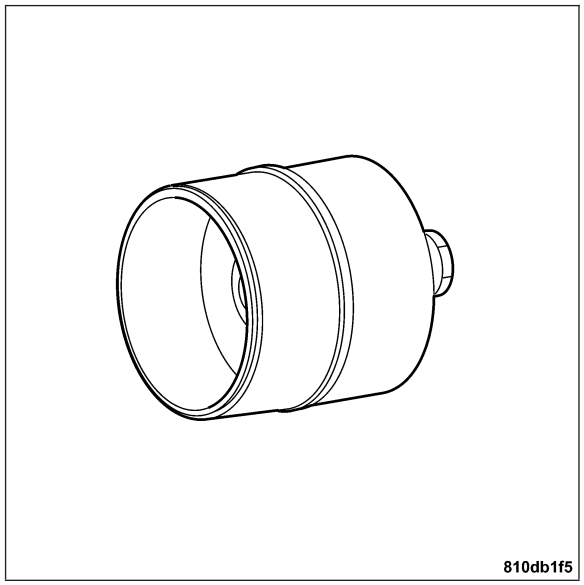

REAR SEAL INSTALLER 9100

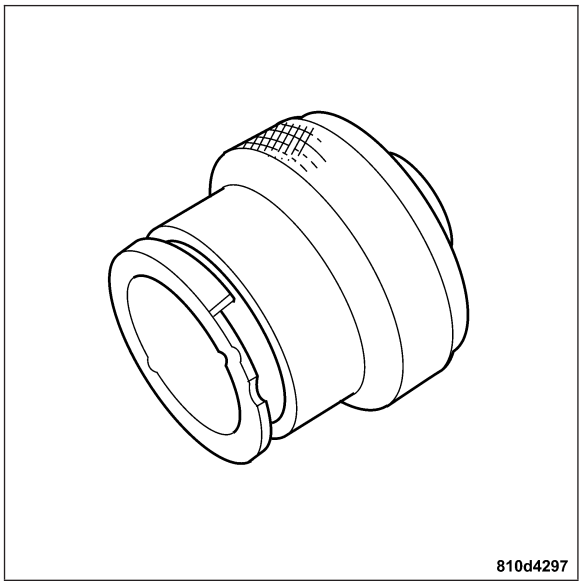

PRESSURE TESTER ADAPTOR 9107

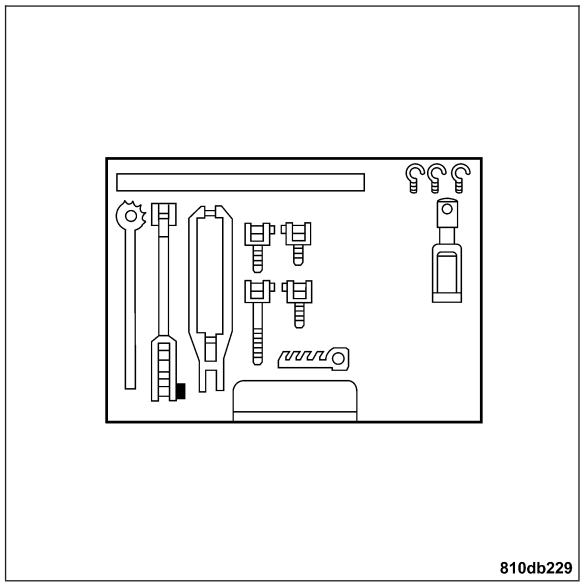

VALVE ASSEMBLY TOOL CASE 9106

AIR CLEANER HOUSING

REMOVAL

Note: The air cleaner is held in place by two rubber grommets and two spring clips.

1. Remove the air inlet tubes (2).
2. Lift the air cleaner housing (1) from the rear first, then from the front and remove it.

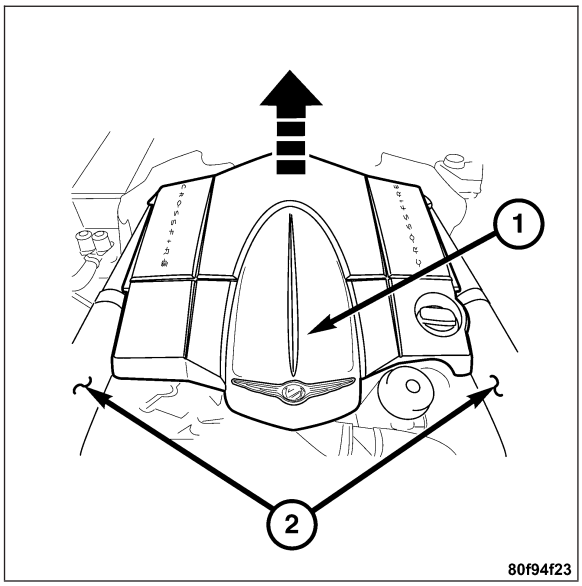

INSTALLATION

1. Position the air cleaner housing (1) on the mounting tabs and push down.
2. Install the air inlet tubes (2).

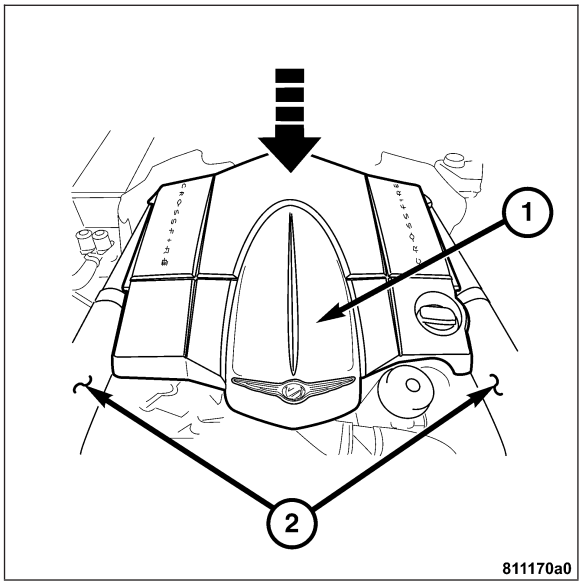

AIR CLEANER ELEMENT

REMOVAL

1. Remove the air cleaner housing. **Refer to Page 9-608**.
2. Remove the screws (1) and the air cleaner element covers. (1 cover on each side of housing.)

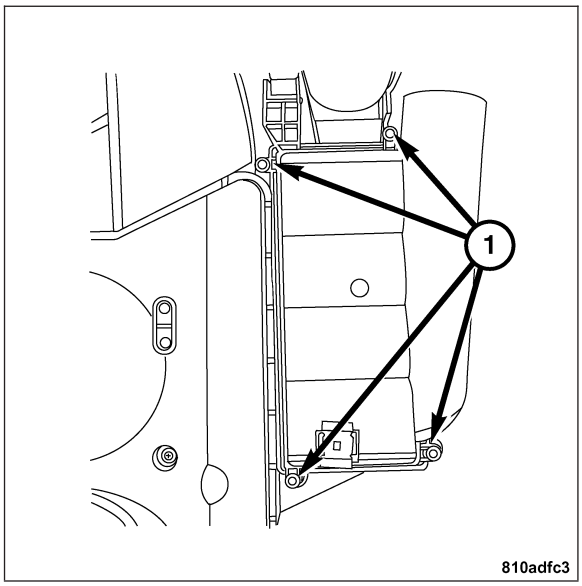

3. Remove the air cleaner elements (2) from the air cleaner housing (1).

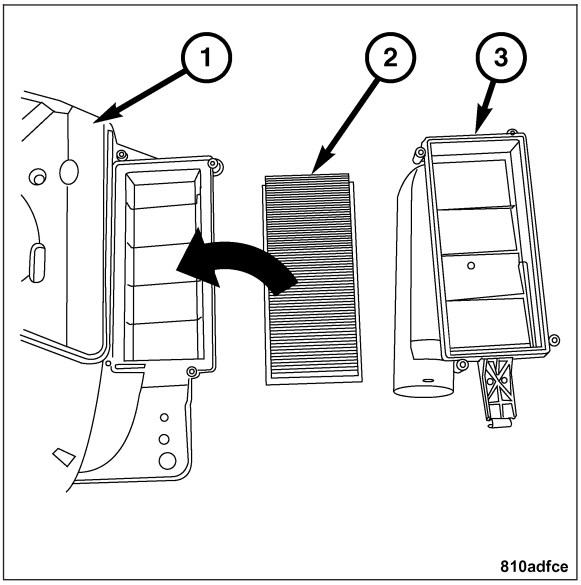

INSTALLATION

1. Position the new air cleaner elements (2) in the air cleaner housing (1).
2. Install the screws in the air cleaner element covers (3).
3. Install the air cleaner housing and air inlet tubes.

CYLINDER HEAD

DESCRIPTION

Extremely compact, single overhead camshaft aluminum alloy cylinder heads have two intake and one exhaust valve per cylinder.

OPERATION

The cylinder heads, having three valves per cylinder minimizes exhaust port surface area, keeping more heat in the exhaust stream to provide fast catalytic converter heating for low emissions and to reduce cooling load. A three-valve configuration also simplifies the engine by allowing use of one cam per bank rather than two and provides room in the combustion chamber for two spark plugs that provide more complete combustion. Valves are set at an included angle of 35.5 degrees, forming a shallow combustion chamber. A central passage in each head that connects with each cylinder delivers either assist air or recirculated exhaust if needed to reduce exhaust emissions. The camshafts turn directly in the head; no bearing inserts are used. Transverse coolant flow within the head provides optimal cooling of the exhaust valve seats while minimizing heat extraction from the exhaust ports to enhance catalytic converter warm up.

DIAGNOSIS AND TESTING - CYLINDER HEAD GASKET

A cylinder head gasket leak can be located between adjacent cylinders or between a cylinder and the adjacent water jacket.

Possible indications of the cylinder head gasket leaking between adjacent cylinders are:

- Loss of engine power
- Engine misfiring
- Poor fuel economy

Possible indications of the cylinder head gasket leaking between a cylinder and an adjacent water jacket are:

- Engine overheating
- Loss of coolant
- Excessive steam (white smoke) emitting from exhaust
- Coolant foaming

CYLINDER-TO-CYLINDER LEAKAGE TEST

To determine if an engine cylinder head gasket is leaking between adjacent cylinders, follow the Cylinder Compression Pressure Test. **Refer to Page 9-4**. An engine cylinder head gasket leaking between adjacent cylinders will result in approximately a 50–70% reduction in compression pressure.

CYLINDER-TO-WATER JACKET LEAKAGE TEST

WARNING: USE EXTREME CAUTION WHEN THE ENGINE IS OPERATING WITH COOLANT PRESSURE CAP REMOVED.

VISUAL TEST METHOD

With the engine cool, remove the coolant pressure cap. Start the engine and allow it to warm up until thermostat opens.

If a large combustion/compression pressure leak exists, bubbles will be visible in the coolant.

COOLING SYSTEM TESTER METHOD

WARNING: WITH COOLING SYSTEM TESTER IN PLACE, PRESSURE WILL BUILD UP FAST. EXCESSIVE PRESSURE BUILT UP, BY CONTINUOUS ENGINE OPERATION, MUST BE RELEASED TO A SAFE PRESSURE POINT. NEVER PERMIT PRESSURE TO EXCEED 138 kPa (20 psi).

Install cooling system tester 7700 or equivalent and the pressure tester adapter Special Tool 9107 to pressure cap neck. Start the engine and observe the tester's pressure gauge. If gauge pulsates with every power stroke of a cylinder, a combustion pressure leak is evident.

CHEMICAL TEST METHOD

Combustion leaks into the cooling system can also be checked by using the Bloc-Chek® Kit C-3685-A or equivalent. Perform test following the procedures supplied with the tool kit.

REMOVAL

1. Remove the engine air cleaner housing. **Refer to Page 9-608**.
2. Remove the mass air flow sensor.
3. Drain the engine coolant. **Refer to Page 7-18**.
4. Remove the radiator with radiator fan. **Refer to Page 7-26**.
5. Disconnect the camshaft position sensor harness connector (1) and remove the bolt (2) and the sensor. (right side only).

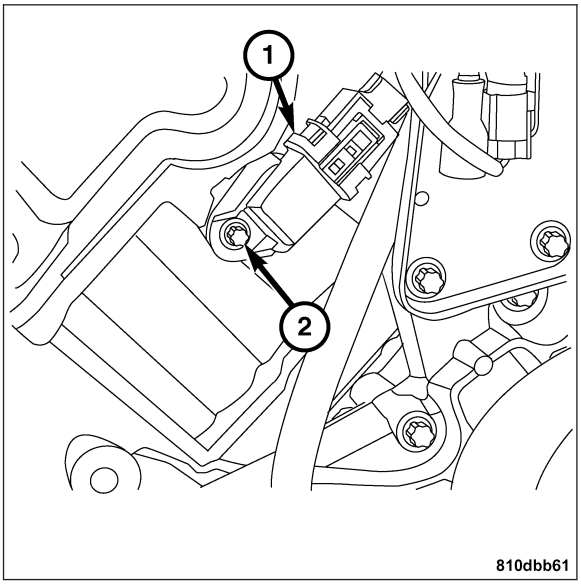

6. Remove the accessory drive belt.
7. Drain the engine oil. **Refer to Page 9-664**.
8. Remove the intake manifold. **Refer to Page 9-678**.
9. Remove the cylinder head cover. **Refer to Page 9-617**
10. Disconnect the exhaust system at the exhaust manifolds. **Refer to Page 11-5**.
11. Position the crankshaft 40° ATDC. **Refer to Page 9-704**.

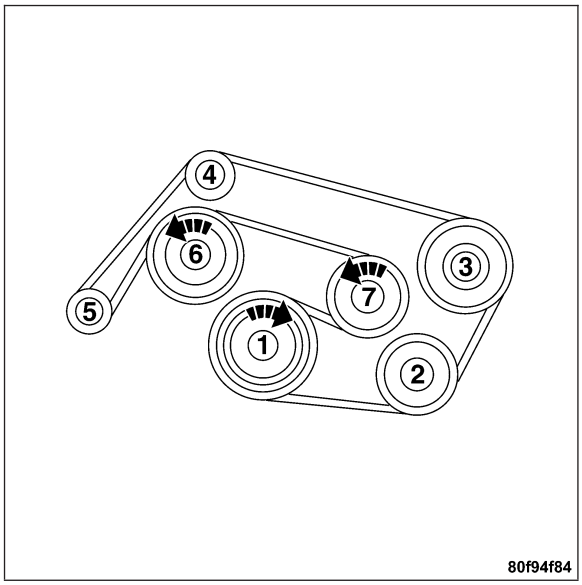

12. Using Special Tools 9104 (1) and 9105 Camshaft Locating Plates, lock the camshafts by placing the tool flush on the cylinder head, and inserting it into the groove in the camshaft.
13. Remove the timing chain tensioner (1).

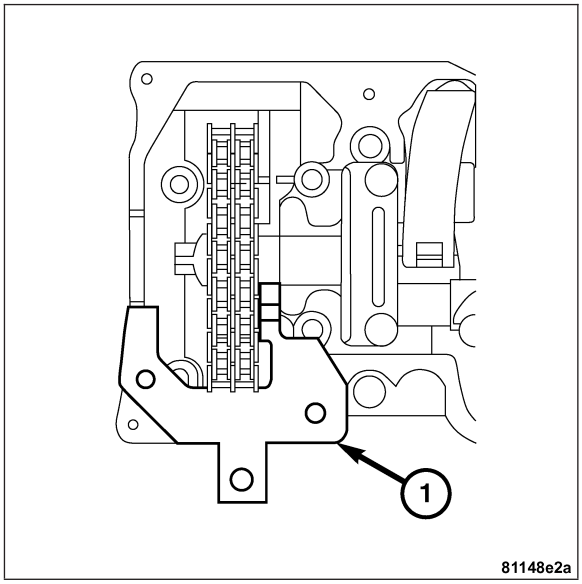

14. Use a cable tie (1) to secure the timing chain to the right hand camshaft sprocket.

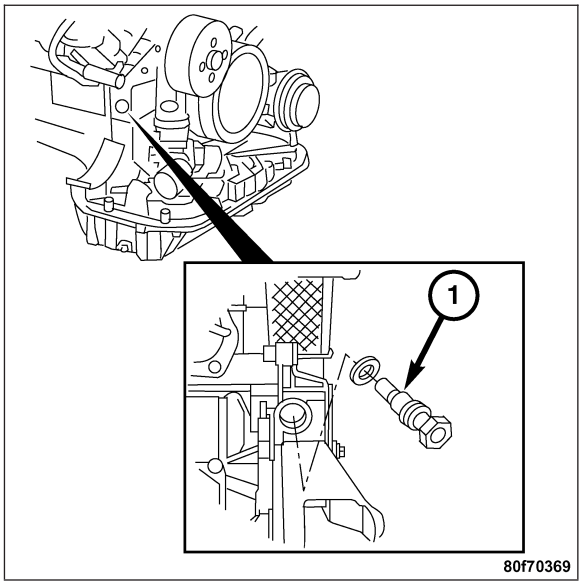

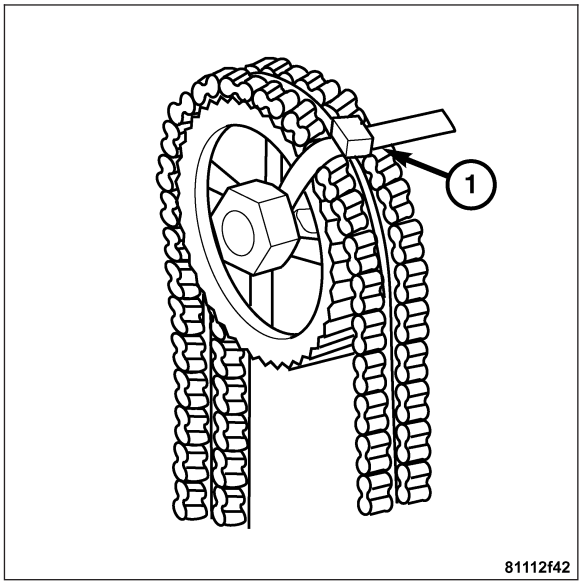

15. Remove the camshaft sprocket bolts (1) and the sprockets.
16. Remove Special Tools 9104 and 9105 Camshaft Locating Plates.
17. Remove the camshafts. **Refer to Page 9-626**.

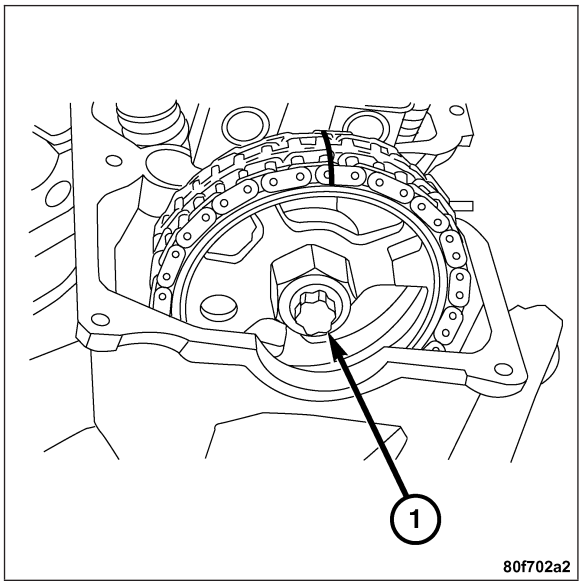

18. Loosen the cylinder head bolts using the sequence diagram.

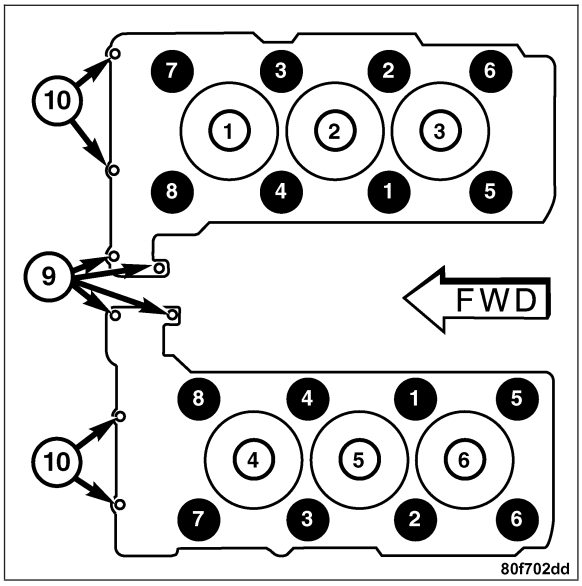

19. Remove the cylinder head bolts (1), the cylinder heads, and the gaskets.

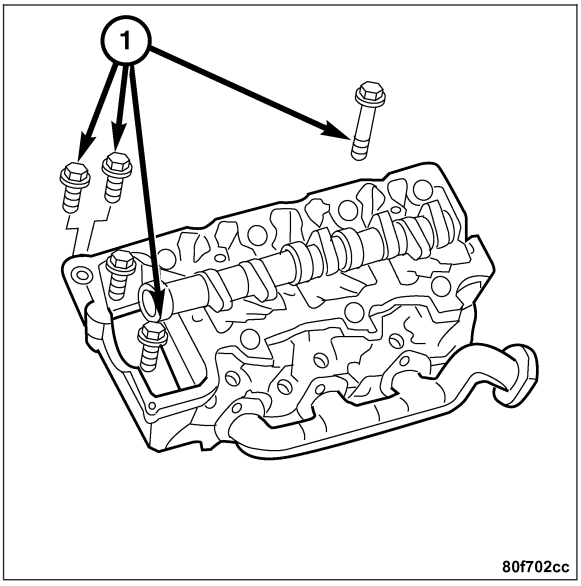

CLEANING

To ensure engine gasket sealing, proper surface preparation must be performed, especially with the use of aluminum engine components and multi-layer steel cylinder head gaskets.

Note: Multi-Layer Steel (MLS) head gaskets require a scratch free sealing surface.

Remove all gasket material from cylinder head and block. **Refer to Page 9-588**. Be careful not to gouge or scratch the aluminum head sealing surface.

Clean all engine oil passages.

INSPECTION

1. Before cleaning, check for leaks, damage and cracks.
2. Clean the cylinder head coolant and oil passages.
3. Check the cylinder head for flatness.

CAUTION: 0.20 mm (0.008 in.) MAX is a combined total dimension of the stock removal limit from cylinder head and block top surface (Deck) together.

4. The cylinder head must be flat within:
   - Standard dimension = less than 0.002 inch. (0.05 mm)
   - Service Limit = 0.008 inch. (0.2 mm)
   - Grinding Limit = Maximum of 0.008 inch. (0.2 mm) is permitted.

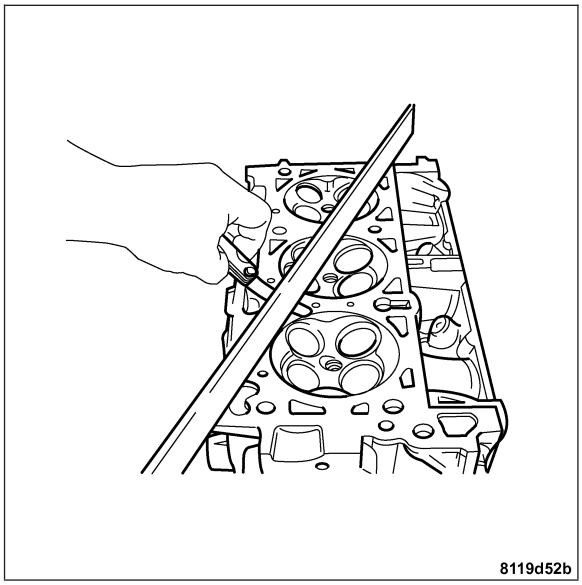

INSTALLATION

1. Position the cylinder head gasket and the cylinder head on the engine block dowels.

Note: Measure and inspect cylinder head bolts before reuse. Do not reuse bolts that exceed 144 mm (1) in length.

Note: Apply a thin coat of lubricant to head bolt threads before installing.

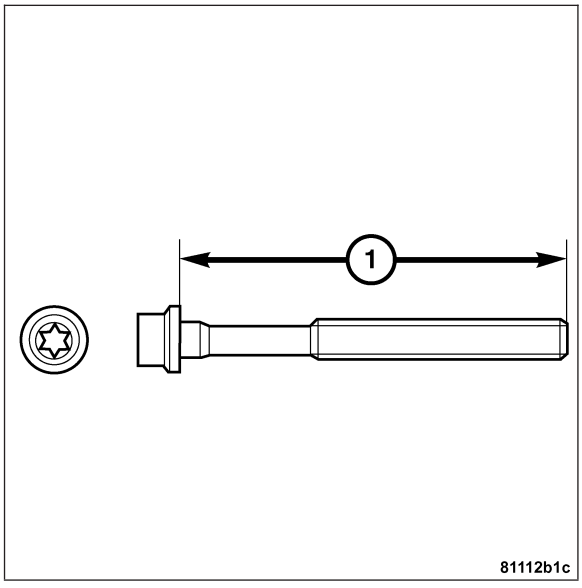

2. Install, but do not tighten the cylinder head bolts (1).

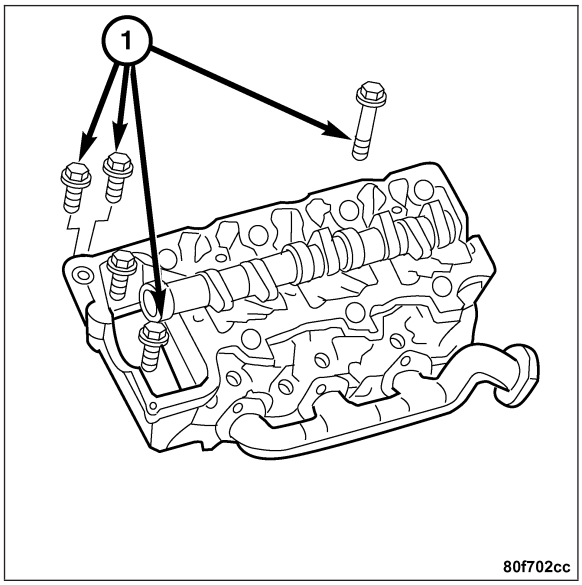

3. Use the tightening sequence chart to tighten the cylinder head bolts.

Note: Bolts numbered 9 and 10 are timing chain cover bolts. They should be tightened after the cylinder head bolts are tightened.

4. Tighten the cylinder head bolts in four stages.
   - Stage one, 20 N·m (15 ft. lbs.)
   - Stage two, 50 N·m (37 ft. lbs.)
   - Stage three, Rotate bolts 60°–70° clockwise.
   - Stage four Rotate bolts 60°–70° clockwise.
   - Tighten bolts 9 and 10 to 25 N·m (18 ft. lbs.).
5. Using Special Tools 9104 and 9105 Camshaft Locating Plates, lock the camshafts.

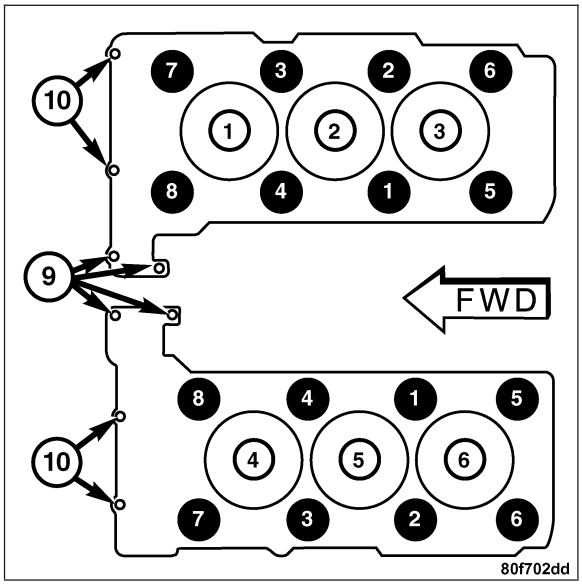

6. Install the camshaft sprockets and bolts (1).
7. Tighten the camshaft sprocket bolts in two stages.
   - Stage one, 50 N·m (37 ft. lbs).
   - Stage two, Rotate bolts 90° clockwise.

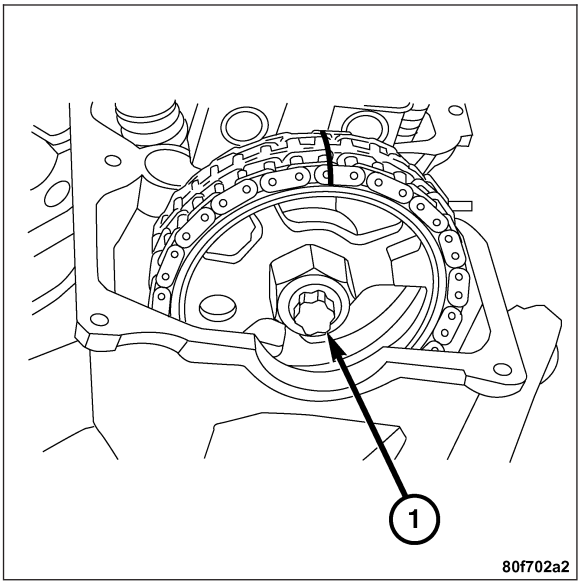

8. Remove the cable tie (1).

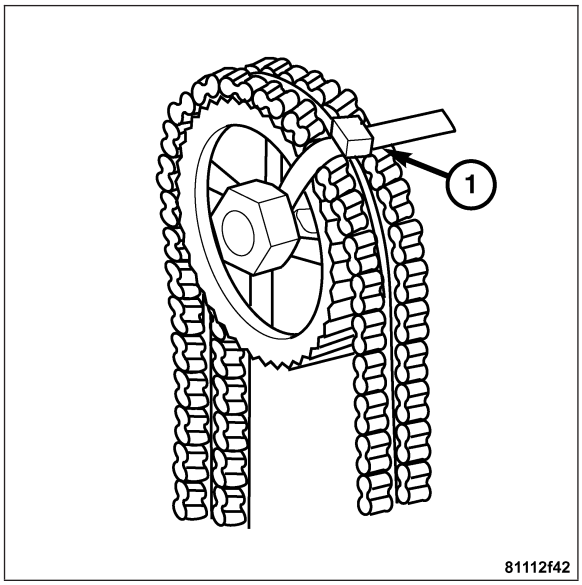

9. Install the timing chain tensioner (1). Tighten the timing chain tensioner to 80 N·m (60 ft. lbs.).
10. Remove Special Tools 9104 and 9105 Camshaft Locating Plates.
11. Check for a crankshaft position of 40° ATDC. **Refer to Page 9-704**.
12. Connect the exhaust system at the manifold flanges and tighten the exhaust flange bolts to 20 N·m (15 ft. lbs.).
13. Install the cylinder head covers. **Refer to Page 9-618**.
14. Install the intake manifold. **Refer to Page 9-680**.
15. Install and connect the ignition coils. **Refer to Page 8I-5**.

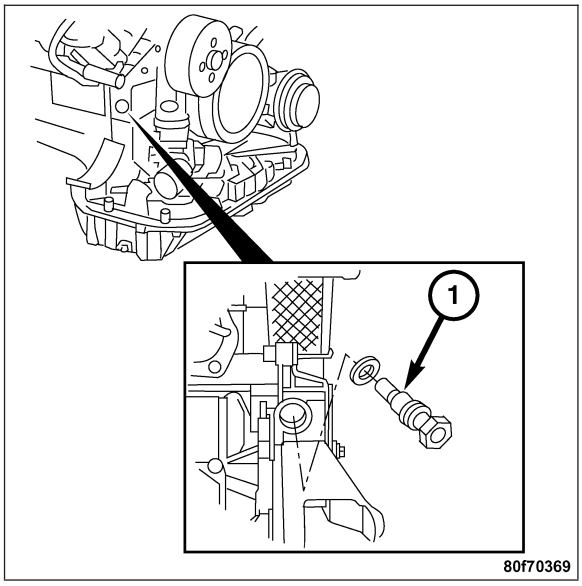

16. Install the accessory drive belt.
17. Install and connect the radiator fan with the radiator. **Refer to Page 7-35**.

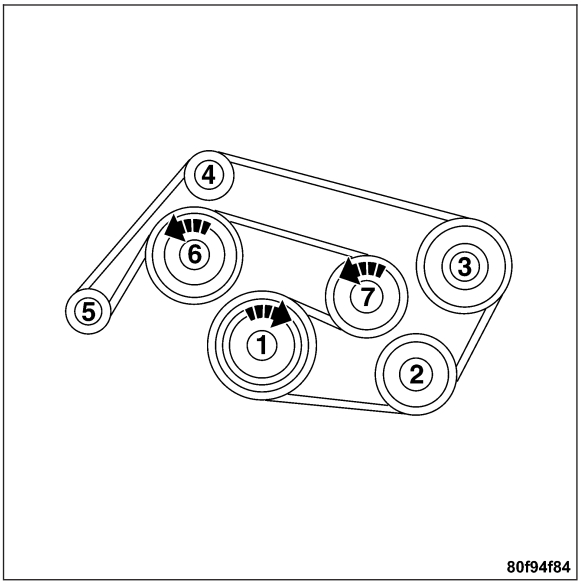

18. Install the camshaft position sensor and bolt (2). Connect the camshaft position sensor harness connector (1). Tighten the bolt to 10 N·m (7 ft. lbs.).
19. Install the engine air cleaner housing.
20. Fill the cooling system. **Refer to Page 7-18**.
21. Fill the engine oil. **Refer to Page 9-664**.
22. Start the engine and check for leaks during warm up.
23. Recheck all fluid levels.

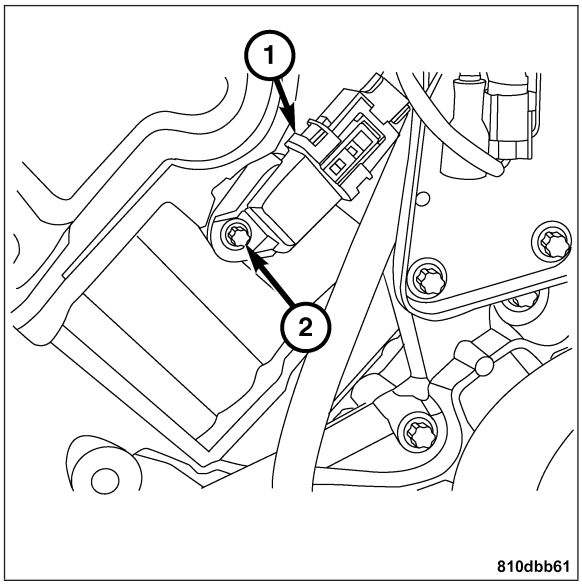

CYLINDER HEAD COVER

DESCRIPTION

Magnesium cylinder head covers provide trouble-free sealing, are lighter than aluminum and dampen valve noise. They are cast in two pieces to create internal ventilation passages with oil separators for crankcase vapor ventilation. This ventilation system virtually prevents the possibility of oil sludge formation due to the retention of water vapor in the engine.

REMOVAL

1. Remove the air cleaner housing. **Refer to Page 9-608**
2. Disconnect the ignition coil harness connectors (2).
3. Disconnect the spark plug wires (1) at the spark plugs.
4. Position aside the vacuum hoses at the cylinder head cover retainers (3).
5. Disconnect the crankcase ventilation hose from the left cylinder head cover.

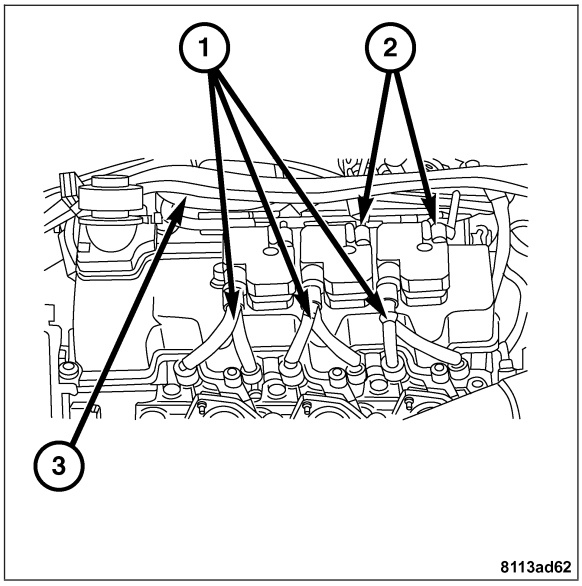

6. Remove the cylinder head cover bolts (1) and the cylinder head covers (2).

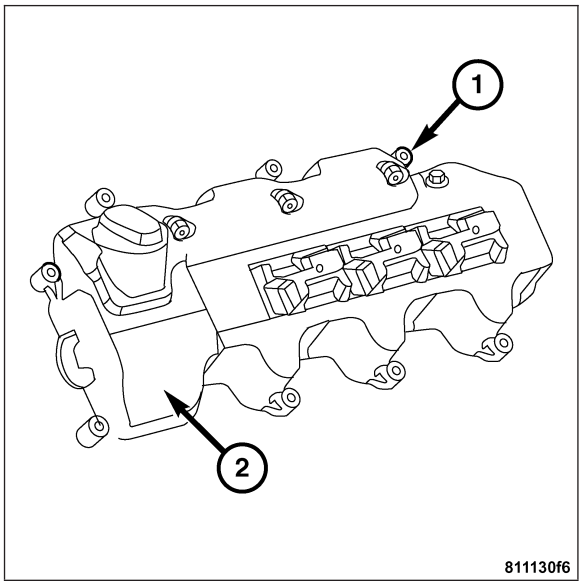

INSTALLATION

1. Check the gasket for tearing and breakage. If damage is evident, replace the gasket.
2. Position the cylinder head covers (2) on the cylinder head. Install the cylinder head cover bolts (1) and tighten to 10 N·m (7 ft. lbs.).

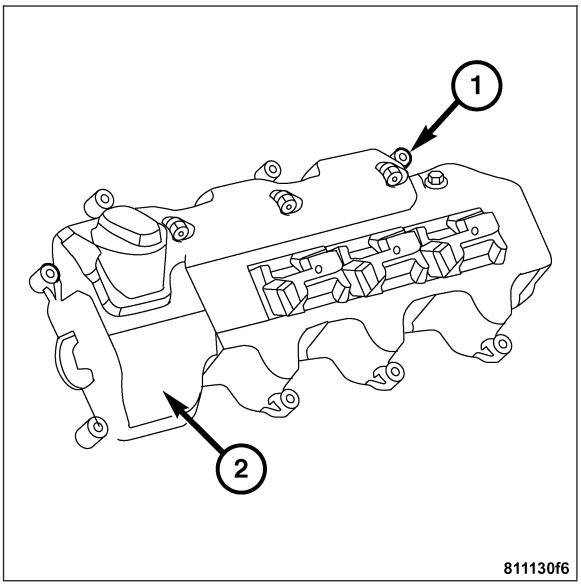

3. Route the engine vacuum hoses on the cylinder head cover retainiers (3).
4. Connect the crankcase ventilator hose to the left cylinder head cover, the ignition coils (2), and the spark plug wires (1).
5. Install the air cleaner housing. **Refer to Page 9-608**.

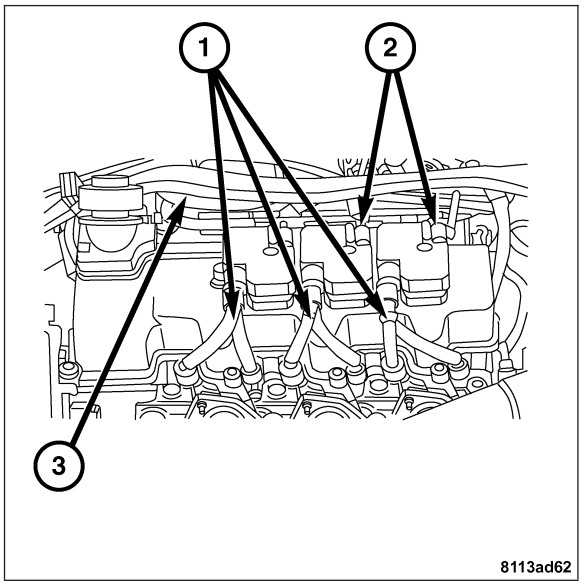

CAMSHAFT BEARING BRIDGE

REMOVAL

1. Remove the cylinder head covers. **Refer to Page 9-617**.

Note: Rotate engine at the crankshaft in running direction until scribe mark 40° on pulley/vibration damper corresponds with scribe mark on timing chain cover. Grooves in the camshafts must be toward the inside of the wedge.

2. Positon the engine timing at 40° ATDC. **Refer to Page 9-704**.
3. Using Special Tools 9104 (1) and 9105 Camshaft Locating Plates, lock the camshafts by placing the tool flush on the cylinder head, and inserting it into the groove in the camshaft.

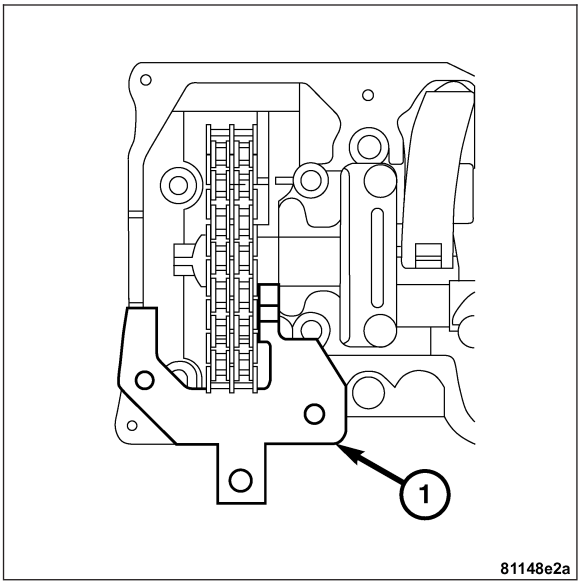

4. Remove the timing chain tensioner (1).

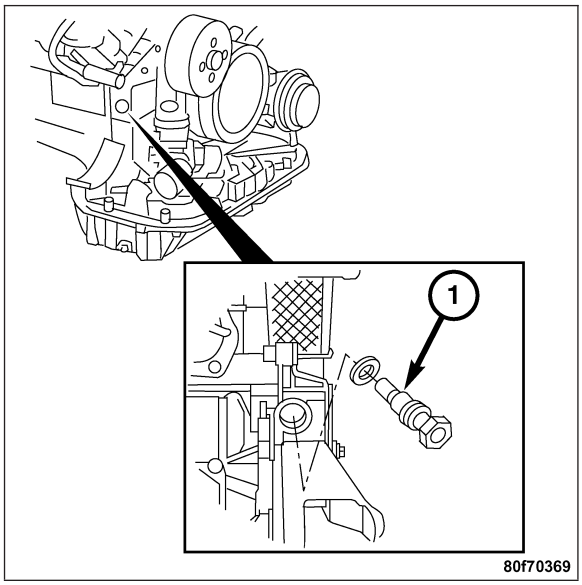

5. Use a cable tie (1) to secure the timing chains to the camshaft sprockets.

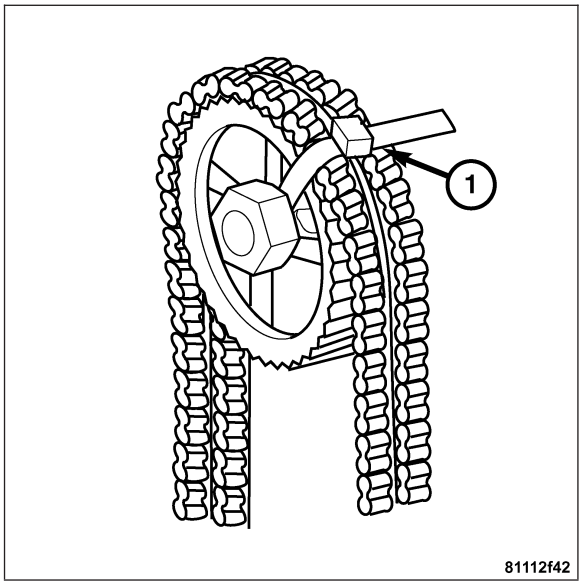

6. Remove the camshaft sprocket bolt (1) and sprocket.

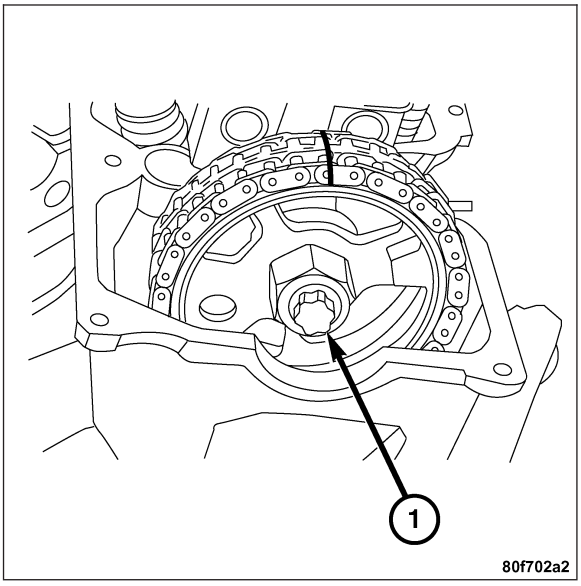

7. Partially loosen the bolts in the sequence shown. (See diagram).

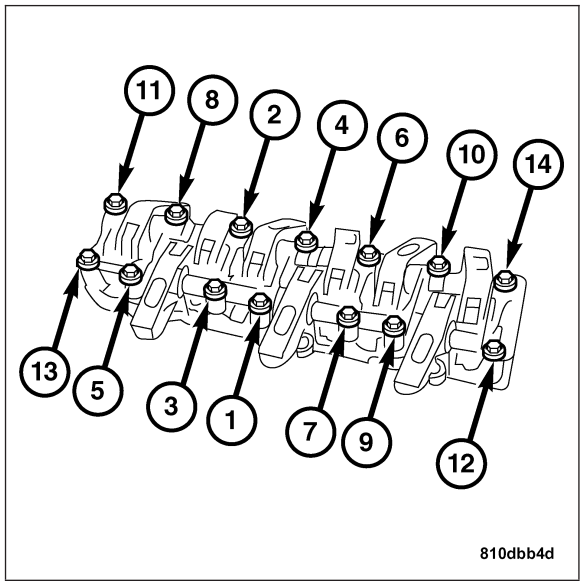

8. Loosen and remove the bearing bridge bolts in the sequence shown. Remove the camshaft bearing bridges.

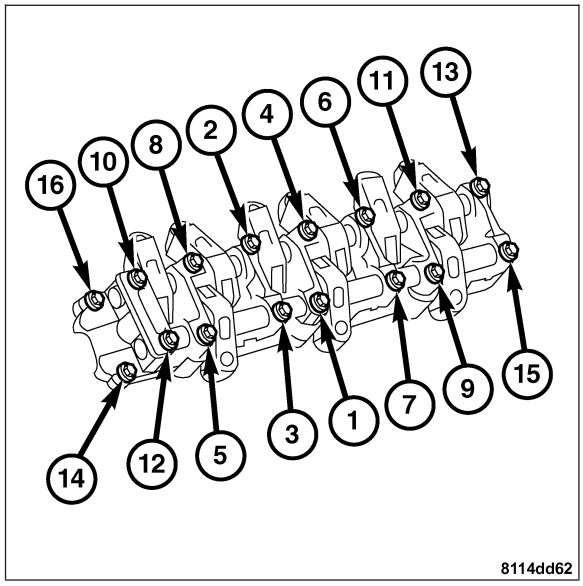

INSTALLATION

1. Make sure the engine is at 40° ATDC.
2. Position the camshaft bearing bridge on the camshaft.
3. Using Special Tools 9104 (1) and 9105 Camshaft Locating Plates, lock the camshafts by placing the tool flush on the cylinder head, and inserting it into the groove in the camshaft.

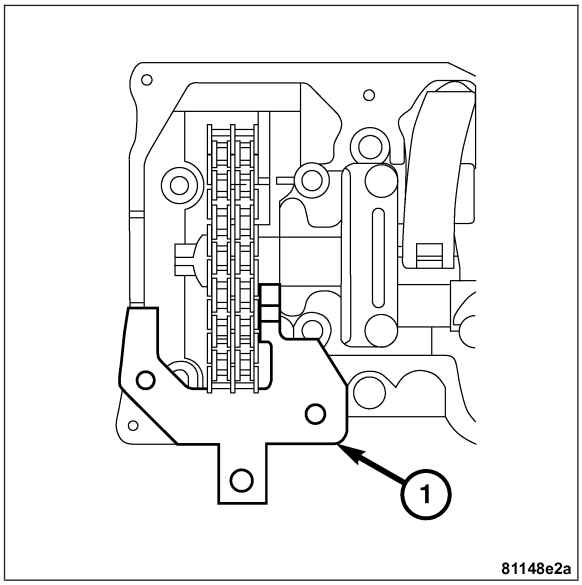

4. Install, but do not tighten the bearing bridge bolts.
5. Tighten the bolts in the sequence shown to 15 N·m (11 ft. lbs.).

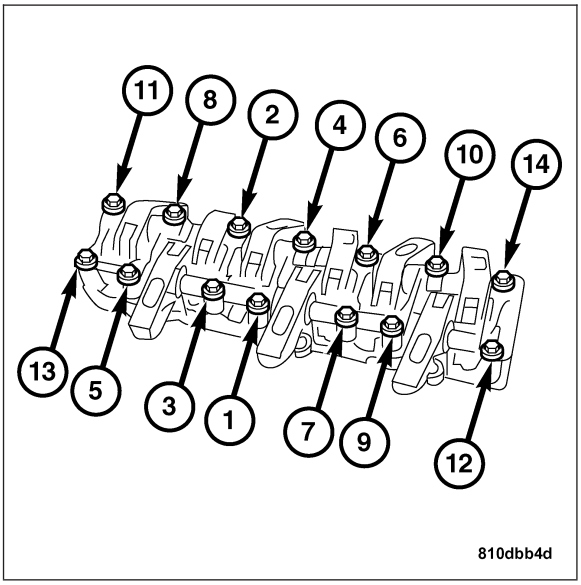

6. Tighten the bolts in the sequence shown an additional 90° clockwise.

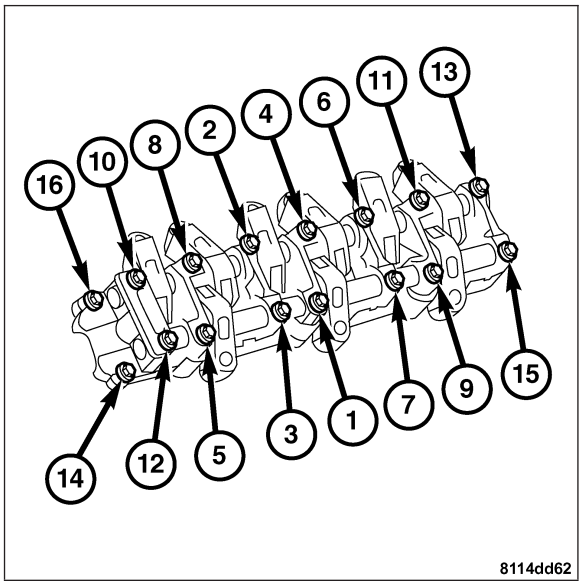

7. Install the camshaft sprockets and bolts (1). Tighten the bolts to 50 N·m (37 ft. lbs.).
8. Tighten the camshaft sprocket bolts and additional 90° clockwise.

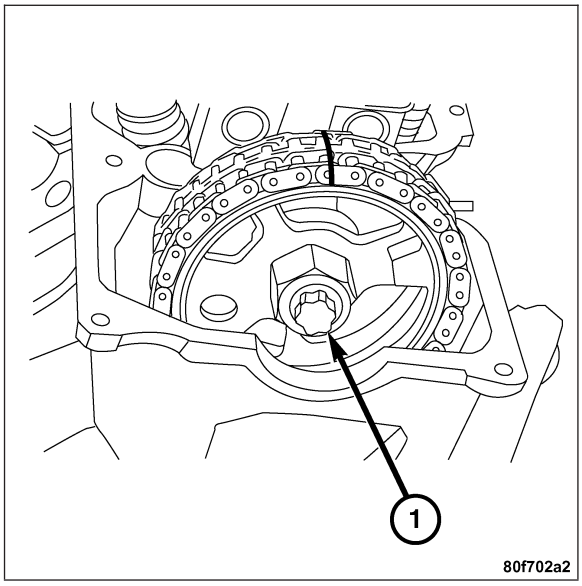

9. Install the timing chain tensioner (1). Tighten the tensioner to 80 N·m (59 ft. lbs.).

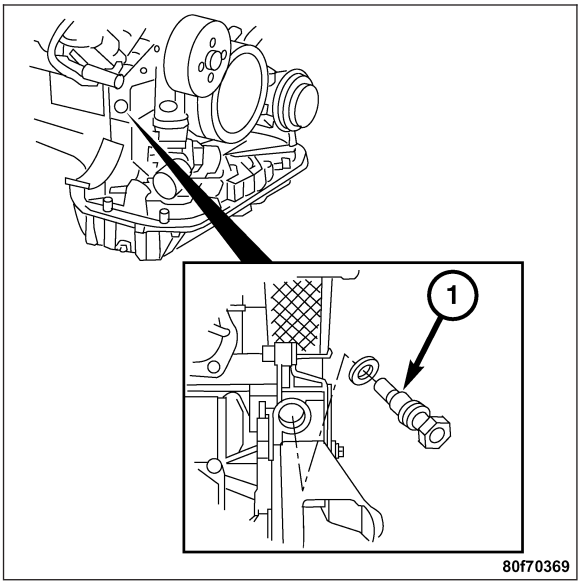

10. Remove the cable tie.
11. Remove the Special Tools 9104 and 9105 Camshaft Locating Plates.
12. Install the cylinder head covers. **Refer to Page 9-618**.
13. Install the air cleaner housing. **Refer to Page 9-608**.

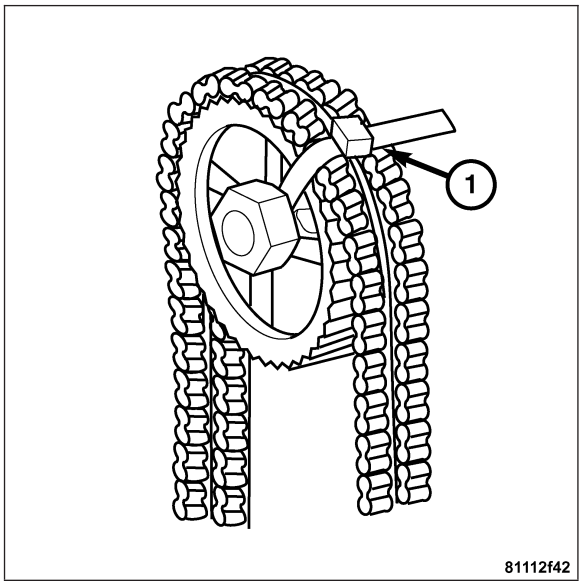

ROCKER ARM / ADJUSTER ASSY

DISASSEMBLY

REMOVAL

1. Remove the camshaft bearing bridge. **Refer to Page 9-619**.

Note: Wear protective gloves, protective clothing, and eye protection.

Note: If shaft is tapped too hard there is a risk of distorting the camshaft bearing bridge and damaging the hollow rocker arm shaft.

2. Use a 16 mm drift (1) to drive out the rocker shaft (2).

Note: If resistance is encountered while driving rocker shaft out of the camshaft bearing bridge, the bearing must be heated. Do not exceed 160° C.

3. Remove the rocker arms and inspect the bearing surfaces.
4. If longitudal scoring is present on rocker arm bearing, replace the rocker arm.
5. Clean all the parts thoroughly.

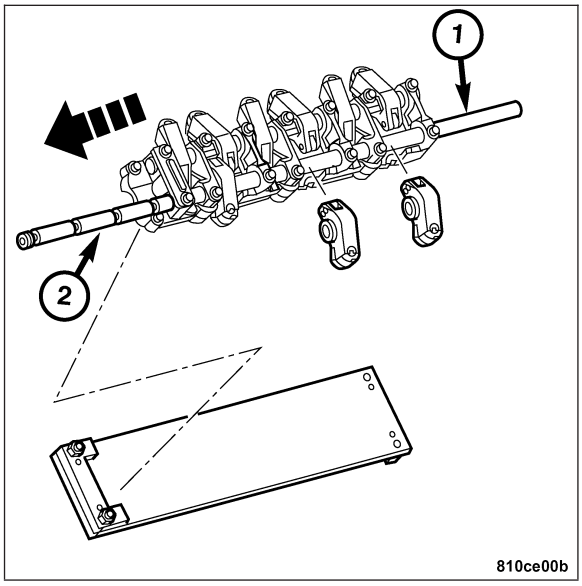

ASSEMBLY

INSTALLATION

CAUTION: Risk of injury to skin and eyes from handling hot or glowing objects.

Note: Wear protective gloves, protective clothing, and eye protection.

Note: If resistance is encountered while driving rocker shaft out of the camshaft bearing bridge, the bearing must be heated. Do not exceed 160° C.

1. Cool the rocker arm shaft.
2. Insert the rocker arm shaft (1) into the camshaft bearing bridge (2) and through the rocker arms by tapping it gently with a mallet. Ensure that the rocker arms are not crooked.
3. Insert two camshaft bearing bridge bolts through the attachment holes in the camshaft bearing bridge to align and secure the rocker arm shaft. The oil supply holes in the rocker arm shaft points downward (toward the cylinder head).
4. Install the camshaft bearing bridge. **Refer to Page 9-622**.

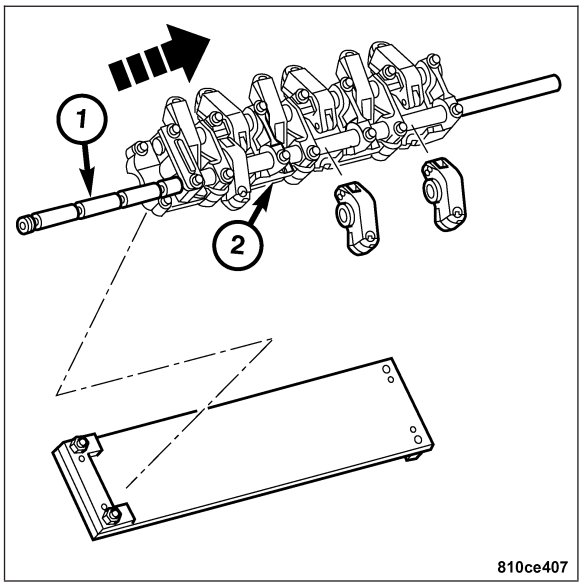

CAMSHAFT

DESCRIPTION

The induction-hardened, forged-steel camshafts are hollow to minimize weight. The camshaft and crankshaft sprocket teeth are rubber coated, making chain noise indiscernible from other engine noise.

OPERATION

The camshaft is driven by the crankshaft via drive sprockets and a chain. The camshaft has precisely machined lobes to provide accurate valve timing and duration.

REMOVAL

1. Remove the camshaft bearing bridges. **Refer to Page 9-622**.
2. Remove the camshaft (1).

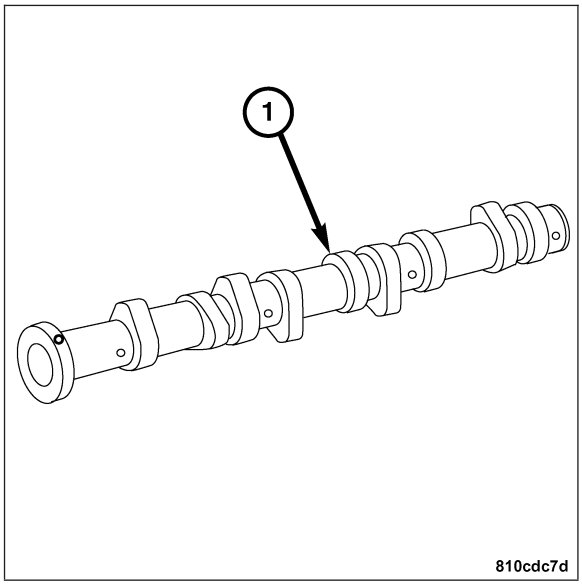

CLEANING

Clean the camshaft with a suitable solvent.

INSPECTION

1. Inspect the camshaft bearing journals for damage or binding. If the journals are binding, check the cylinder head for damage. Also check the cylinder head oil holes for clogging.
2. Check the camshaft lobe and the bearing surfaces for abnormal wear and damage. Replace the camshaft if it is defective.
3. Measure the lobe actual wear and replace the camshaft if it is out of limit. The standard value is 0.001 in. (0.0254 mm). The wear **limit** is 0.010 in. (0.254 mm).

INSTALLATION

1. Position the camshaft (1) on the cylinder head.
2. Install the camshaft bearing bridges. **Refer to Page 9-622**

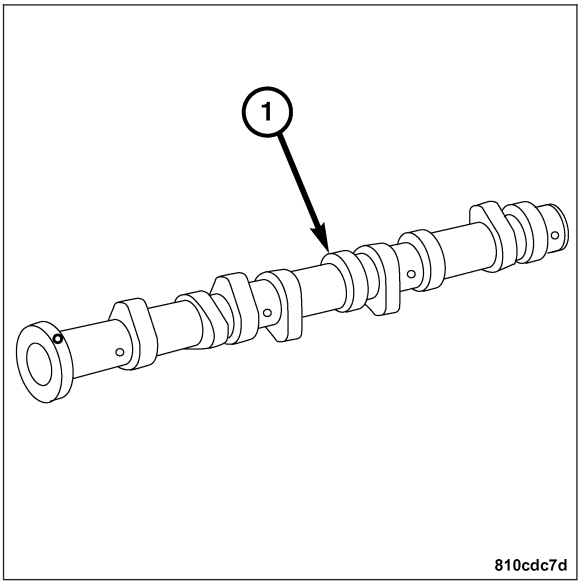

VALVE STEM SEAL

REMOVAL

Note: The tools used in these valve stem seal procedures are part of Special Tool 9106 Valve Assembly Tool Case.

1. Remove the starter. **Refer to Page 8F-43**
2. Remove the camshafts. **Refer to Page 9-626**.
3. Remove one spark plug from the cylinder to be repaired.
4. Position the cylinder to be repaired to TDC.
5. Using Special Tool 9102 Flywheel Locking Tool, lock the flywheel by inserting the tool into the starter opening.
6. Pressurize the combustion chamber. **Refer to Page 9-4**.

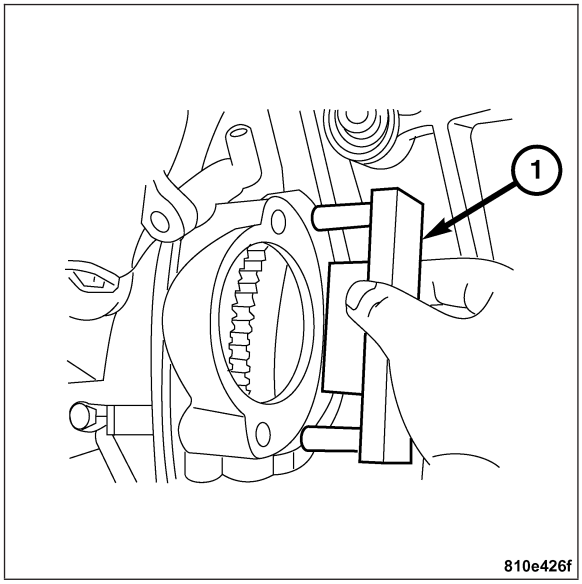

7. Install the assembly tool (1). Compress the valve spring.

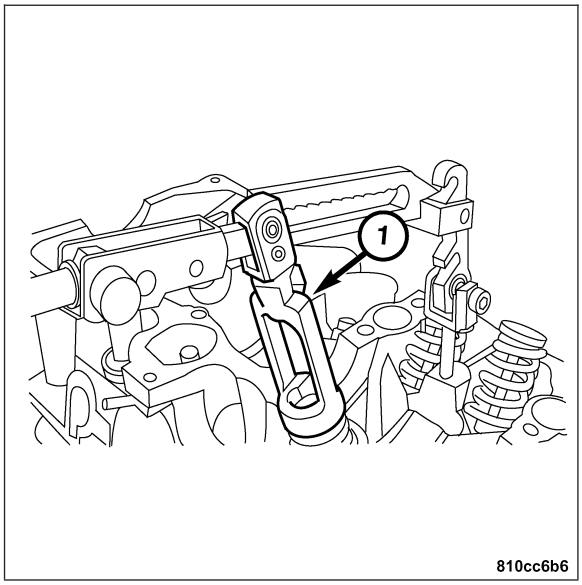

8. With the valve spring compressed, remove the collets (1).
9. Release the valve spring and remove the valve spring retainer (2), the spring (3) and spring seat (4).

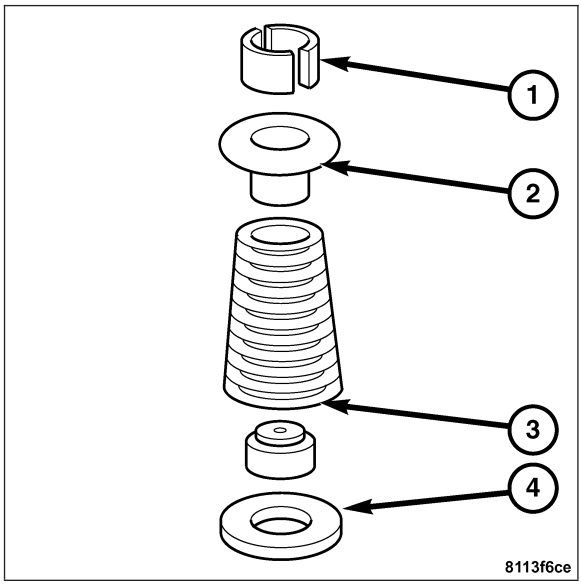

10. Remove the valve stem seal (2) using the seal pliers (1).

Note: Assemble the valves completely before removing the air pressure from the cylinder.

11. Repeat these steps for each cylinder required.
12. Inspect all of the valve stems. Damaged valves must be replaced.

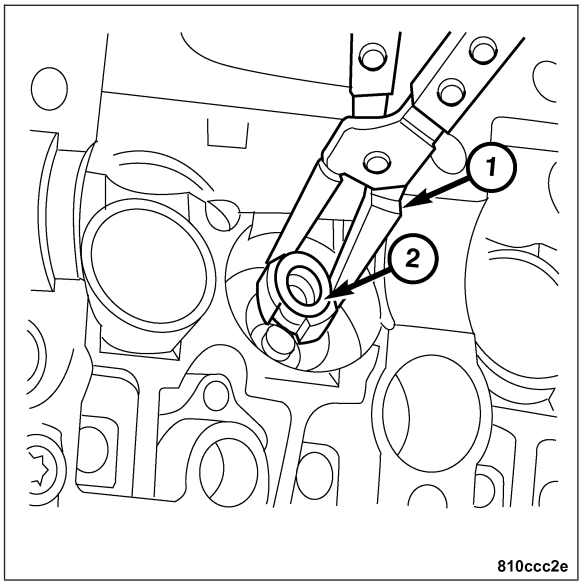

INSTALLATION

Note: Valves with nicked or burred stems must be replaced.

Note: The tools used in these valve stem seal procedures are part of Special Tool 9106 Valve Assembly Tool Case.

1. Lubricate the new seal (3) with clean engine oil.
2. Install the protective sleeve (2) over the valve stem.
3. Press the new seal over the sleeve on to the valve stem using the seal pliers (1).
4. Remove the protective sleeve (2).

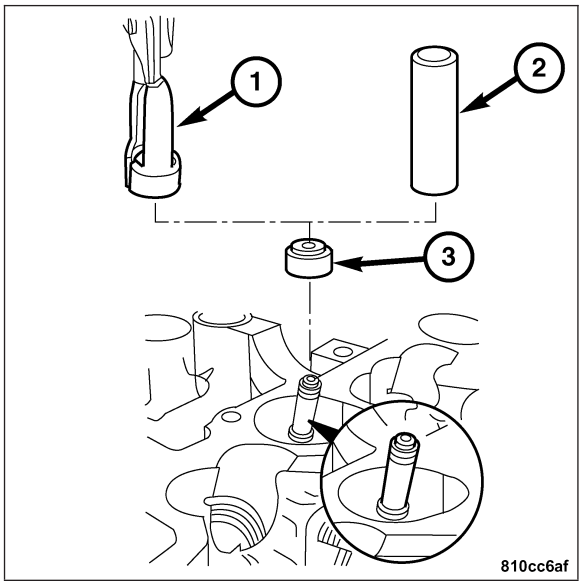

5. Install the valve spring seat (4), valve spring (3), and the valve spring retainer (2).

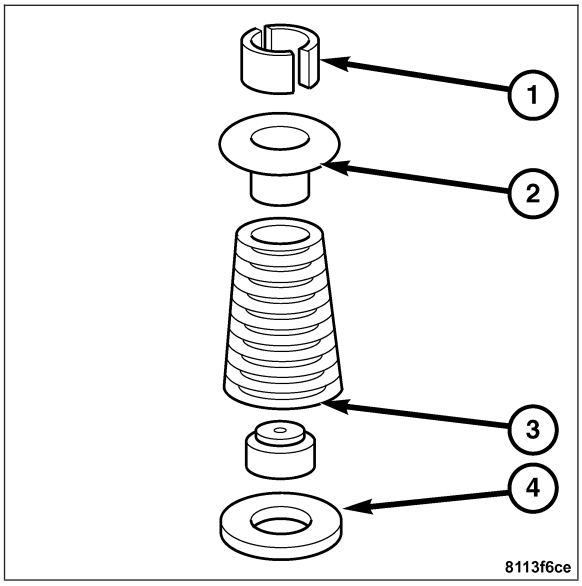

6. Compress the valve spring using the assembly tool (1).
7. Install the valve stem collets with the valve spring compressed.
8. Release the valve spring slowly.
9. Be sure that the collets are seated in the valve spring retainer.
10. Remove the assembly tool.

Note: Perform this procedure on one cylinder at a time.

11. Repeat the procedure for each valve that is to be serviced.

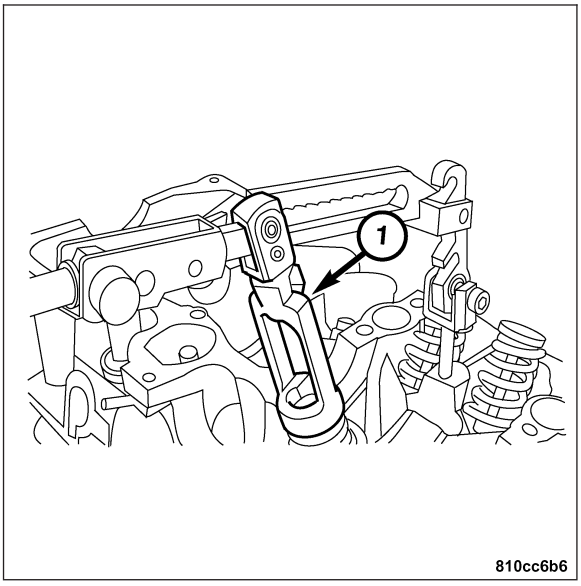

12. Remove Special Tool 9102 Flywheel Locking Tool (1).
13. Install the starter. **Refer to Page 8F-44**.
14. Install the camshafts. **Refer to Page 9-626**.

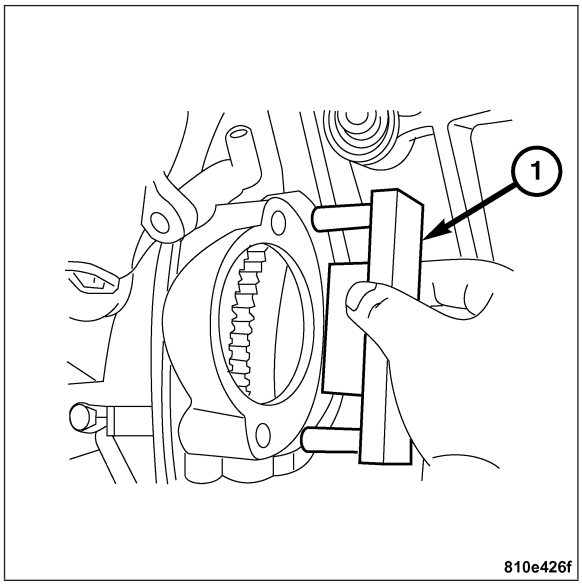

INTAKE/EXHAUST VALVES AND SEALS

DESCRIPTION

Two 1.42-in. (36-mm) intake valves and a single 1.61-in. (41-mm) exhaust valve per cylinder are operated by a double-width roller chain-driven camshaft per bank using roller rocker arms. Lightweight hydraulic adjusters in the rocker arms at the valves take up valve clearance for quiet operation. For minimum weight and maximum rigidity the compact rocker arms are pressure-cast aluminum. They pivot through roller bearings on rocker shafts bolted to the heads. Using computer-aided measurement and calculation techniques, valve dynamics are equivalent to that achieved by direct valve actuation through in-line tappets, but with far less friction.

OPERATION

The intake valve allows the air/fuel mixture to enter the combustion chamber. The exhaust valve allows the burned air/fuel mixture to exit the combustion chamber. Also, the intake and exhaust valves seal the combustion chamber during the compression and power strokes.

REMOVAL

1. Remove the cylinder head and place on a suitable work bench. **Refer to Page 9-611**.

2. Using Special Tool C-3422–CF Valve Spring Compressor, compress the valve spring.

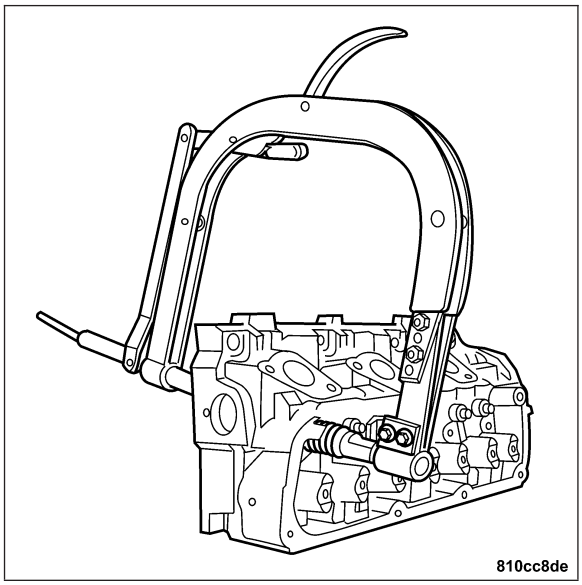

3. Remove the collets (1). Release the valve spring compressor and remove the valve retainer (2) and the valve spring (3) with spacer.

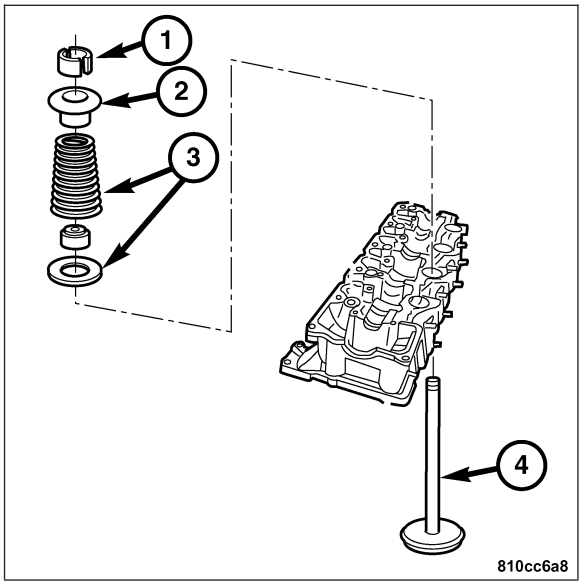

4. Using Special Tool 9106 (1) Valve Assembly Tool Case, remove the valve stem seal (2).
5. Remove the valve (4) from the cylinder head.
6. Inspect the valve face and the stem for any wear or nicks. Replace damaged valves as required.

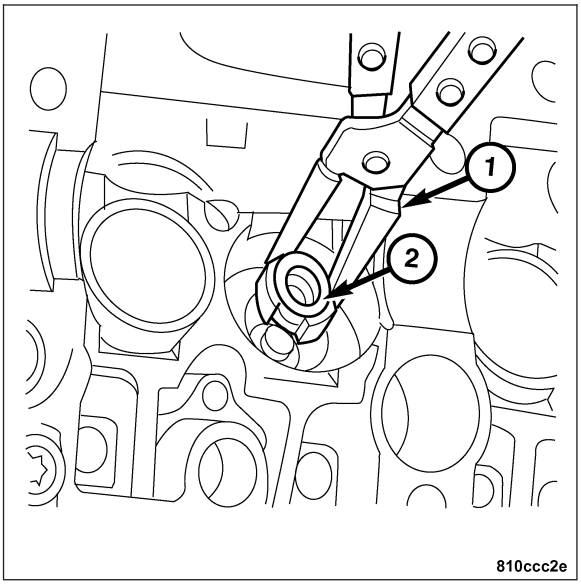

CLEANING

1. Clean all valves thoroughly and discard burned, warped and cracked valves.

INSTALLATION

1. Install the valve into the cylinder head.
2. Install the protective sleeve (2) over valve stem.
3. Lubricate the valve stem seal before installing.
4. Using Special Tool 9106 (1) Valve Assembly Tool Case, press the valve stem seal (3) onto valve stem.
5. Remove the protective sleeve (2).

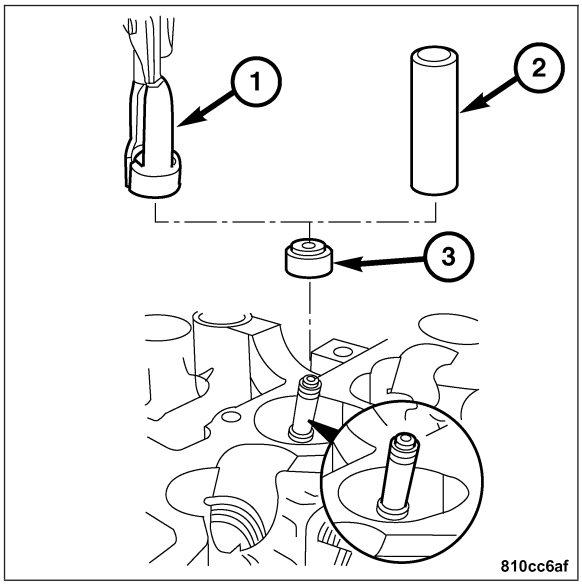

6. Install the valve spring spacer, the spring (3), and the valve spring retainer (2), over the valve stem (4).

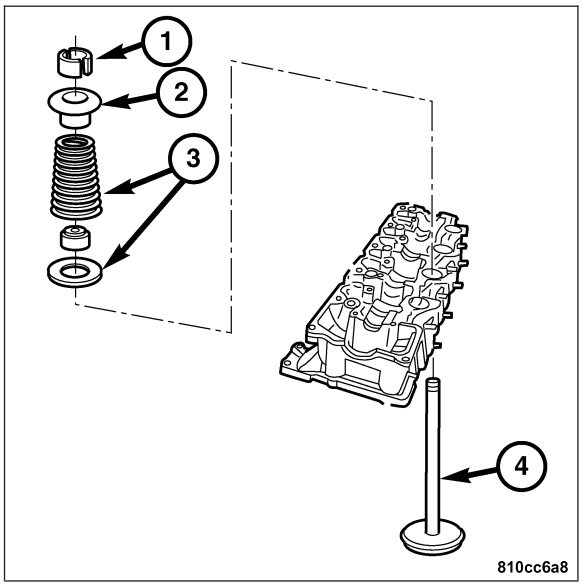

7. Using Special Tool C–3422–CF Valve Spring Compressor, compress the valve spring and install the collets (1).
8. Repeat the process for each valve.
9. Install the cylinder head. **Refer to Page 9-614**.

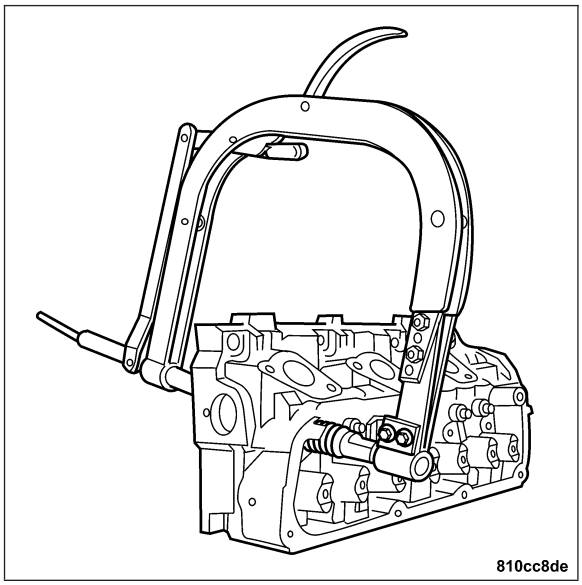

VALVE SPRINGS

DESCRIPTION

Valve springs are conical to reduce spring and retainer weight, and the exhaust valve heads are sodium filled to keep them cool for long life.

OPERATION

The valve spring returns the valve against its seat for a positive seal of the combustion chamber.

ENGINE BLOCK

DESCRIPTION

A high-pressure die-cast aluminum alloy block uses cast-in-place cylinder bore liners made of a proprietary ″Silitec″ material for wear resistance. These aluminum-silicon alloy liners reduce block weight relative to cast iron liners while providing the necessary wear resistance. Block construction features side walls extended below the centerline of the crankshaft, cross-bolted main bearing caps, and a structural cast aluminum oil pan for additional rigidity.

CLEANING

Clean cylinder block thoroughly using a suitable cleaning solvent.

INSPECTION

ENGINE BLOCK

1. Clean cylinder block thoroughly and check all core hole plugs for evidence of leaking.
2. If new core plugs are to be installed, **Refer to Page 9-588**.
3. Examine block and cylinder bores for cracks or fractures.
4. Check block deck surfaces for flatness. Deck surface must be within service limit of 0.004 in. (0.1 mm).

CYLINDER BORE

Note: The cylinder bores should be measured at normal room temperature, 21°C (70°F).

The cylinder walls should be checked for out-of-round and taper. **Refer to Page 9-602**.

CRANKSHAFT OIL SEAL - REAR

REMOVAL

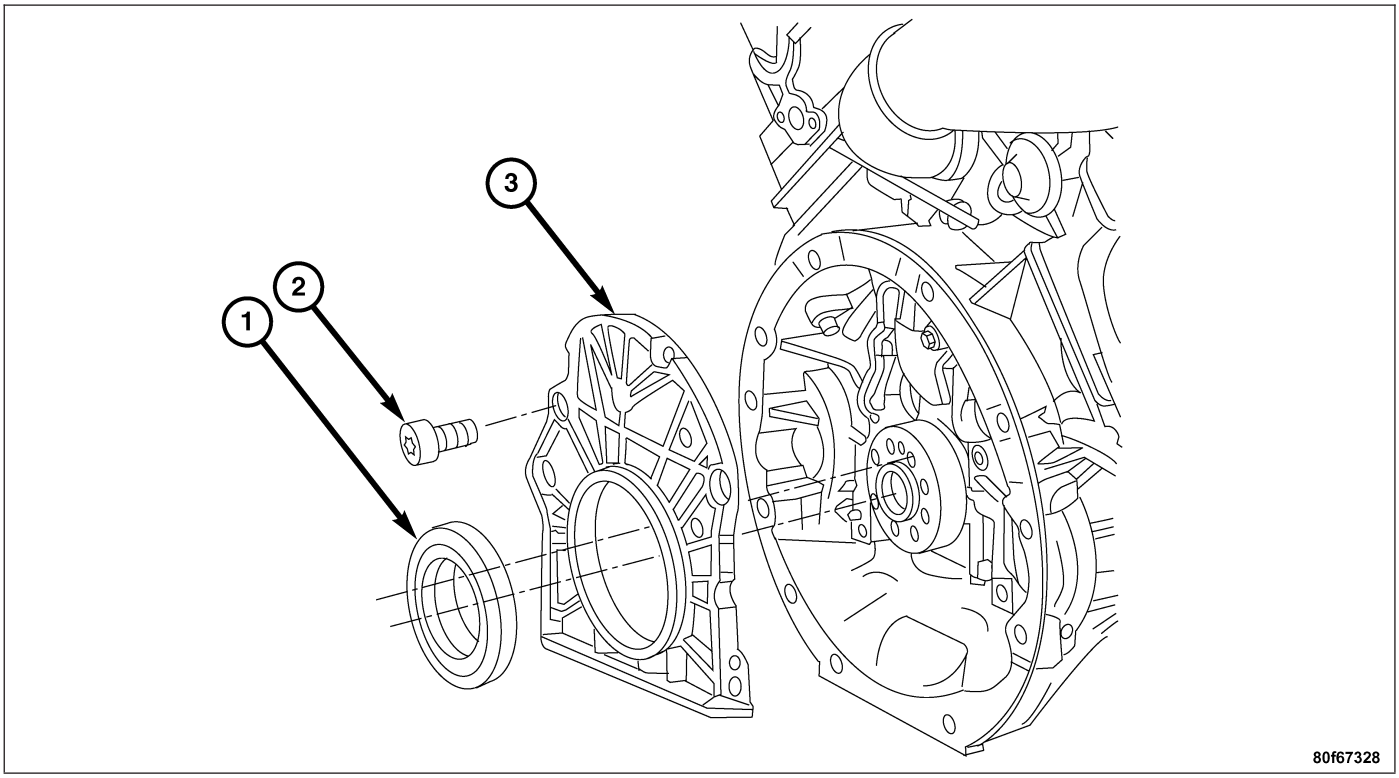

1 - REAR CRANKSHAFT OIL SEAL
2 - BOLT
3 - END COVER

Note: The rear crankshaft oil seal cannot be replaced separately. The end cover and seal are assembled at the factory and must be replaced as a set.

1. Remove the flywheel. **Refer to Page 9-653**.
2. Remove the crankshaft end cover bolts (2).
3. Remove the end cover (3).
4. Discard the end cover (3) and the rear crankshaft oil seal (1)
5. Clean the engine block and the oil pan gasket surfaces.

INSTALLATION

Note: The rear crankshaft oil seal cannot be replaced separately. The end cover and seal are assembled at the factory and must be replaced as a set.

Note: Parts requiring sealer must be assembled within ten minutes after applying sealer.

1. Apply a 1.5 mm to 2 mm bead of Loctite 5203 sealer only where shown (1) on the new end cover.
2. Install the new end cover (without seal installed) and the end cover retaining bolts. Tighten the bolts to 10 N·m (89 in. lbs.).

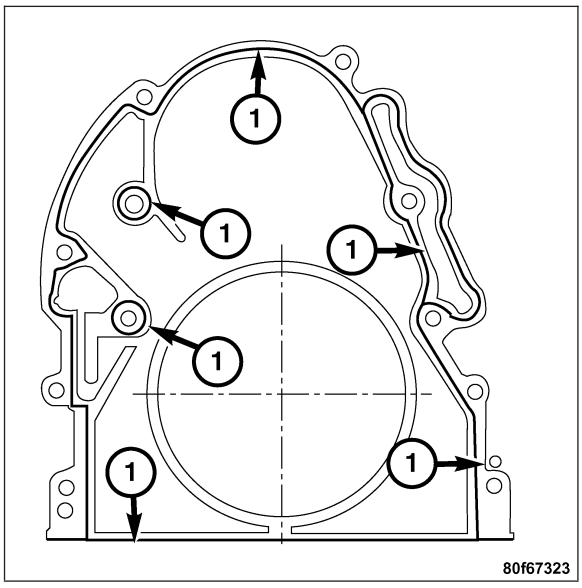

Note: Ensure the edge of the mounting hole around the entire circumference for the rear crankshaft oil seal is clean and free of burrs.

Note: Ensure that the sealing lip of the rear crankshaft oil seal is not damaged or compressed.

Note: The circumference and the sealing lip of the rear crankshaft oil seal, as well as the mating contact surface MUST be free of oil and grease.

Note: The rear crankshaft oil seal must be positioned at right angles to the crankshaft to assure proper sealing.

3. Using Special Tool 9100 Rear Seal Installer (1), install the rear crankshaft oil seal into the new end cover.

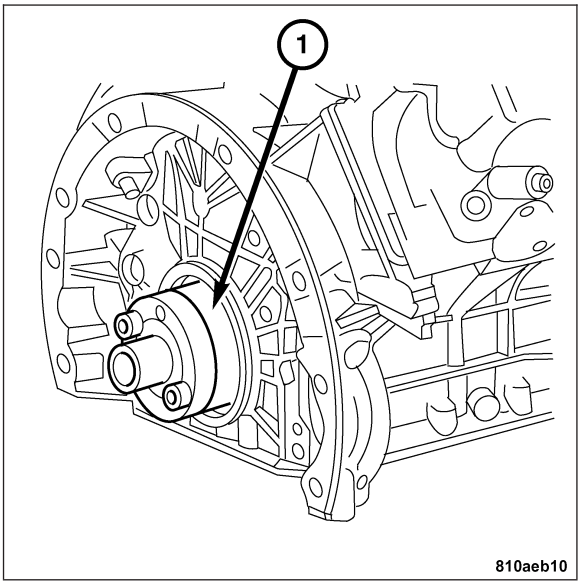

Note: The distance between the edge of the end cover and the rear crankshaft oil seal must be approximately 1 mm. (.039 in.) around the entire circumference.

4. Remove Special Tool 9100 Rear Seal Installer.
5. Install the flywheel. **Refer to Page 9-654**.

CRANKSHAFT OIL SEAL - FRONT

REMOVAL

1. Disconnect the negative battery cable.
2. Remove the engine cooling fan and shroud. **Refer to Page 7-26**.
3. Remove the accessory drive belt. **Refer to Page 7-45**.
4. Remove the vibration damper. **Refer to Page 9-651**.

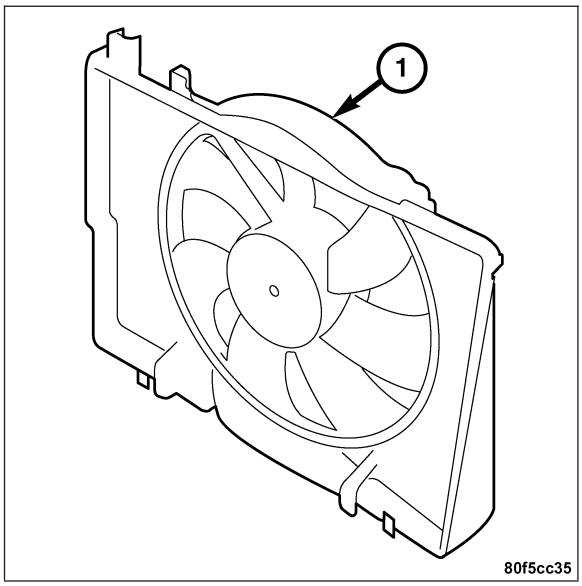

5. Protect the crankshaft with a rag, then pry out the front crankshaft oil seal (1) with a suitable tool.

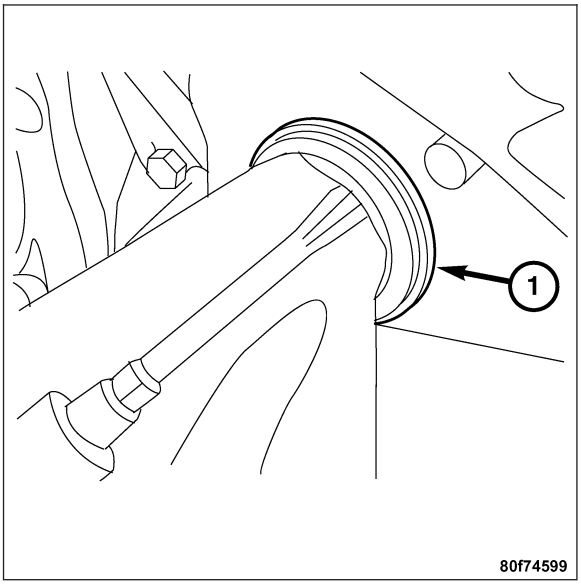

INSTALLATION

1. Remove any burrs from the seal's mounting surface.

Note: The circumference and the sealing lip of the front crankshaft oil seal, as well as the mating contact surface MUST be free of oil and grease.

2. Fit the front crankshaft oil seal onto the Special Tool 9103 Insertion Tool (2) as shown.
3. Align the slot of the tool with the crankshaft key.
4. Using a suitable tool, tap the insertion tool until the vibration damper bolt can be installed through the insertion tool.
5. Use the vibration damper bolt to push the seal into the timing chain cover until tight.
6. Remove the Special Tools.
7. Install the vibration damper. **Refer to Page 9-652**.

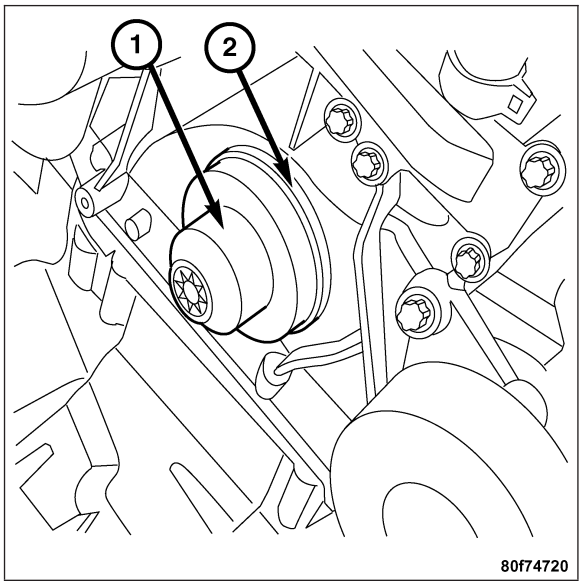

8. Install the accessory drive belt.

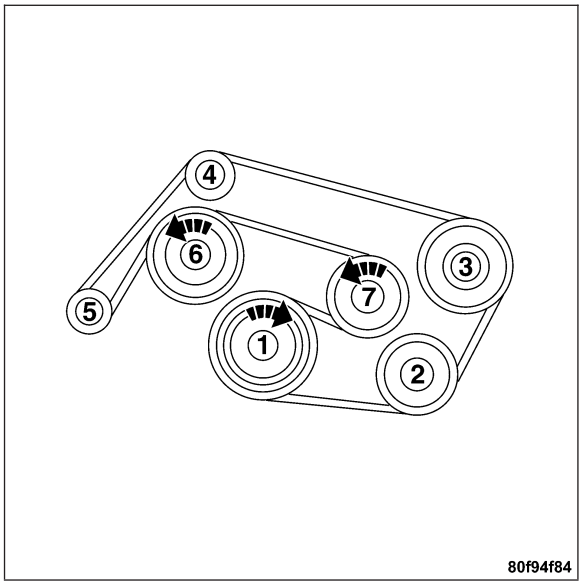

9. Install the engine cooling fan and shroud (1). **Refer to Page 7-27**.
10. Connect the negative battery cable.

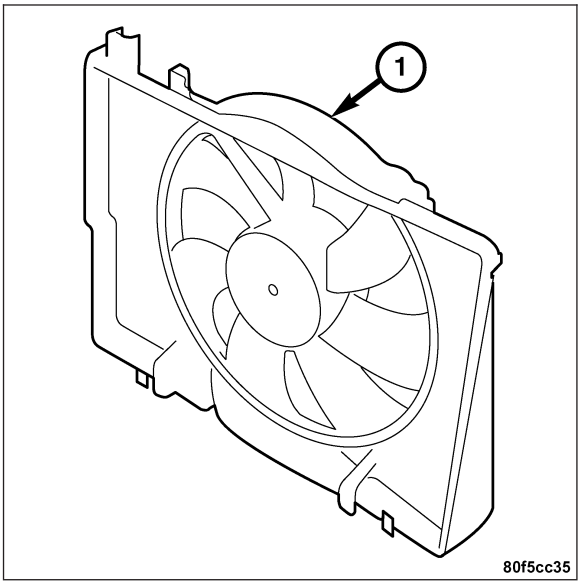

CONNECTING ROD BEARINGS

DESCRIPTION

Connecting rods are forged in one piece from steel, and cracked rather than machined along the split line, providing a perfect fit for the two halves and reducing weight by 20 percent compared to a fully machined rod and cap while also greatly reducing machining. The rods are drilled longitudinally to deliver oil under pressure to the wrist pins, minimizing wear for long life. Thirty-degree offset crank pins on the crankshaft provide even, 120-degree, firing intervals for smooth operation. The crankshaft with these split pins has ample strength without adding material between the pins, keeping the engine compact and reducing weight.

STANDARD PROCEDURE - CONNECTING RODS AND BEARINGS

CONNECTING ROD BEARINGS

The bearing caps are not interchangeable and should be marked at removal to insure correct assembly.

The bearing shells must be installed with the tangs (1) inserted into the machined grooves in the rods and caps. Install cap with the tangs on the same side as the rod.

Fit all rods on one bank until complete.

Limits of taper or out-of-round on any crankshaft journals should be held to 0.0006 in.(0.015 mm). Bearings are available in standard, 0.001 in. (0.025 mm), and 0.010 in. (0.254 mm) undersizes. **Install the bearings in pairs. Do not use a new bearing half with an old bearing half. Do not file the rods or bearing caps.**

For measuring main bearing clearance and connecting rod bearing clearance, use plastigage for bearing clearance specifications. **Refer to Page 9-588**.

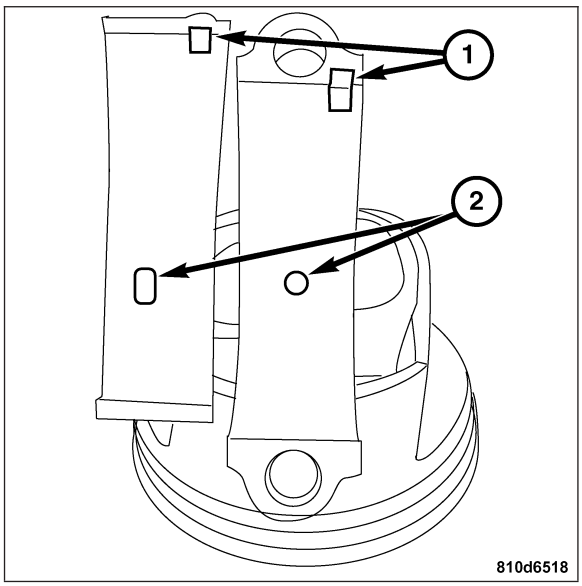

CONNECTING ROD BOLTS

Note: The connecting rod bolts should be examined before reuse. If the threads are necked down, the bolts must be replaced.

1. Examine connecting rod bolts for stretching. Stretching can be checked by holding a scale or straight edge (2) against the threads. If all the threads do not contact the scale (1) the bolt must be replaced.
2. Tighten the connecting rod bolts to specifications.

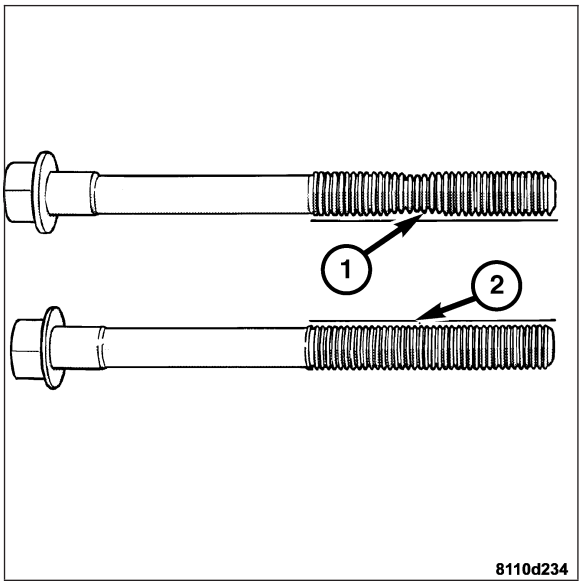

PISTON AND CONNECTING ROD

DESCRIPTION

Flat-topped aluminum pistons (3 and 6) have machined pockets for valve clearance and asymmetrical skirts for low-temperature noise control. The pistons are formed from a special aluminum alloy to cope with the high temperatures created by dual ignition. In addition, the upper portions are hard anodized to protect the top ring. For optimal wear protection, the piston skirts receive an iron coating. Three, low-tension piston rings provide compression control with low oil consumption. Forged steel connecting rods (8) and crankshaft provide requisite strength with light weight. Connecting rods are forged in one piece from steel, and cracked rather than machined along the split line, providing a perfect fit for the two halves and reducing weight by 20 percent compared to a fully machined rod and cap while also greatly reducing machining. The rods are drilled longitudinally to deliver oil under pressure to the wrist pins (2 and 5), minimizing wear for long life.

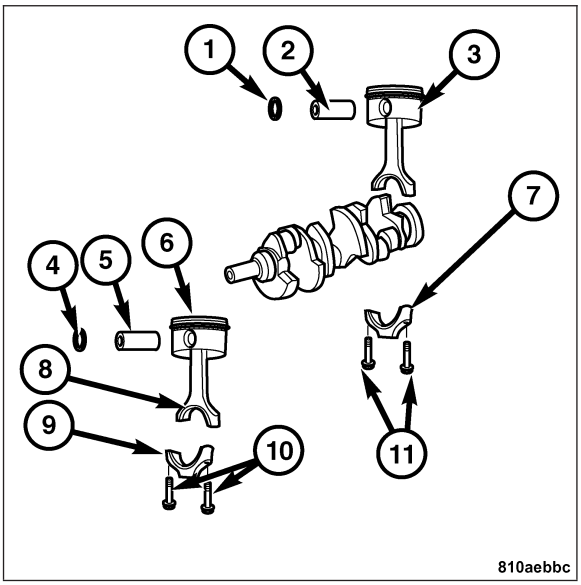

STANDARD PROCEDURE

PISTON FITTING

All pistons are machined to the same weight in grams, to maintain piston balance.

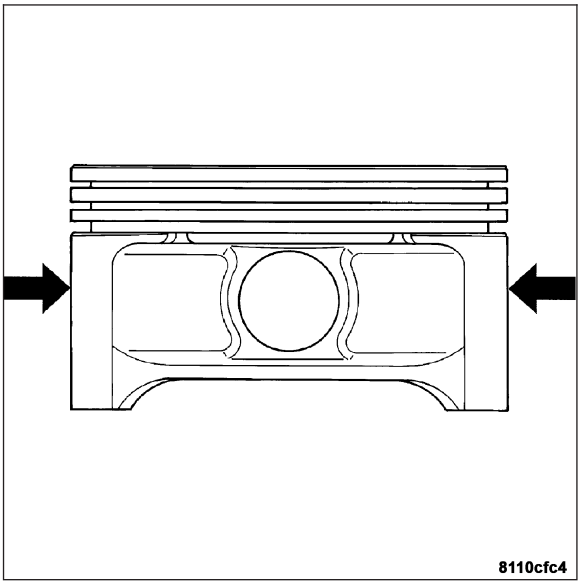

Note: Pistons and cylinder bores should be measured at normal room temperature, 70°F (21°C).

The piston and cylinder walls must be clean and dry. Piston diameter should be measured 90 degrees to piston pin axis. Cylinder bores should be measured halfway down the cylinder bore (2) and transverse to the engine crankshaft center line.

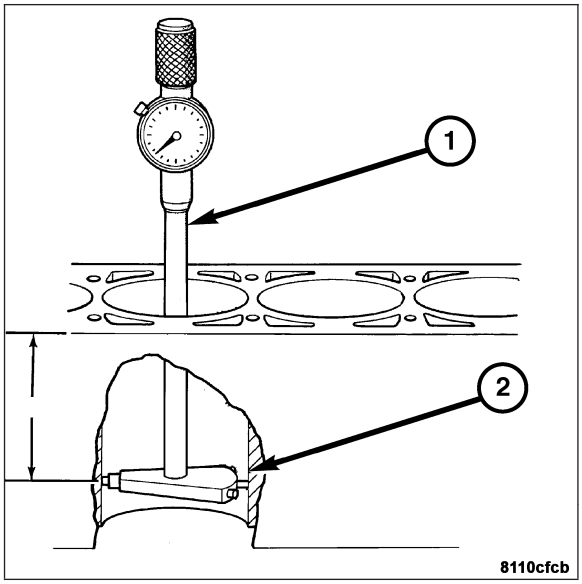

REMOVAL

1. Remove the timing chain. **Refer to Page 9-693**.

2. Mark the connecting rods and rod caps (1) for reassembly.
3. Mark the pistons facing direction if arrows are not visible.

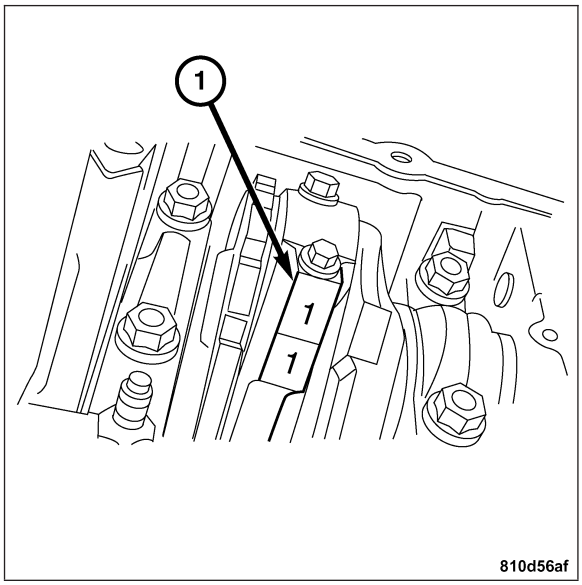

4. Remove the connecting rod bolts (1) and the connecting rod caps.

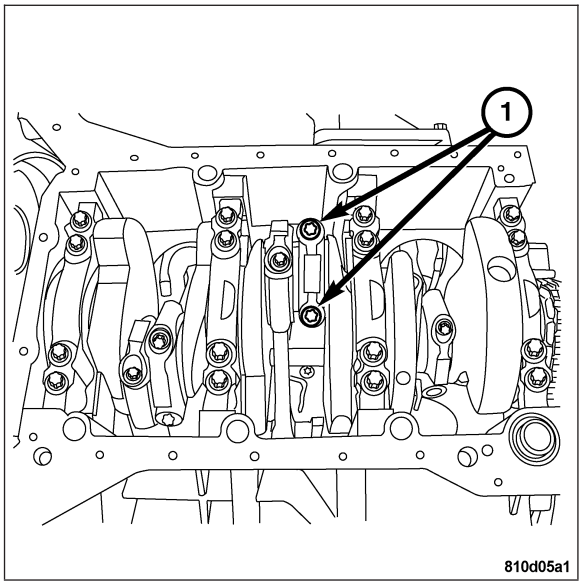

5. Remove the pistons and connecting rods from top of the engine.

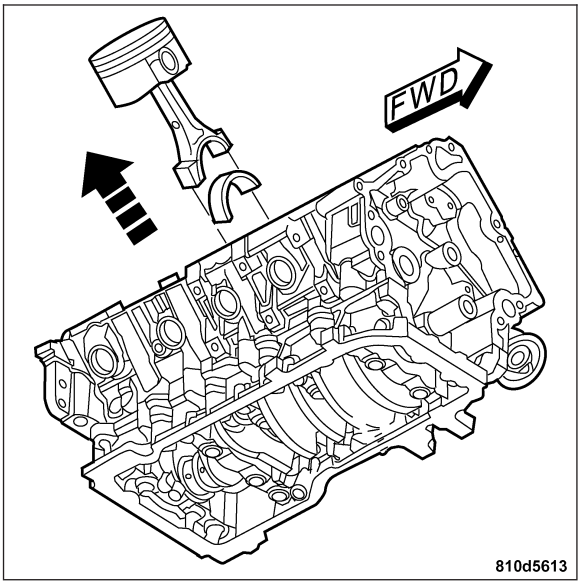

6. Perform work on a suitable surface to prevent damage to parts.
7. Keep the piston pins matched to the pistons.
8. Remove the snap rings from the pistons (2).
9. Press out the piston pins (1).
10. Remove the piston from the connecting rod (3).
11. Inspect all parts to be reused for damage. Replace as required.

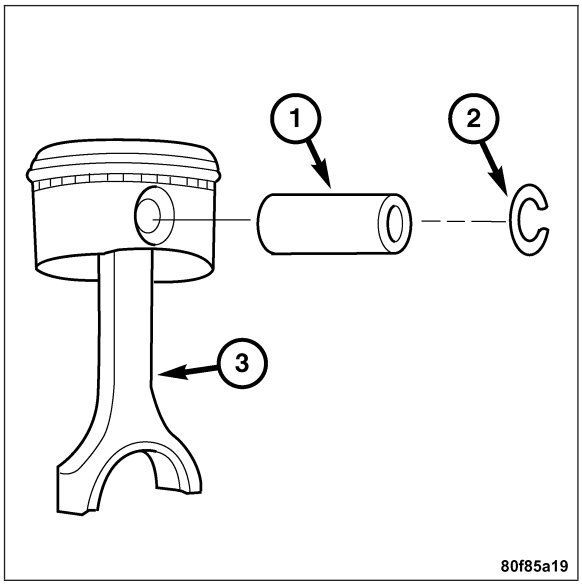

INSPECTION

CONNECTING ROD

1. Check the connecting rods for any twisting or bending.
2. Check the condition of the large end. Use an oil stone to remove any nicks and burrs.
3. Check the condition of the pin bore in the small end of the connecting rod. Use an oil stone to remove all nicks and burrs.

PISTON PIN

1. Inspect for free rotation of the wrist pin in the piston.

PISTON

1. Inspect all piston surfaces for nicks and scuffs.
2. Inspect piston and ring grooves for wear.

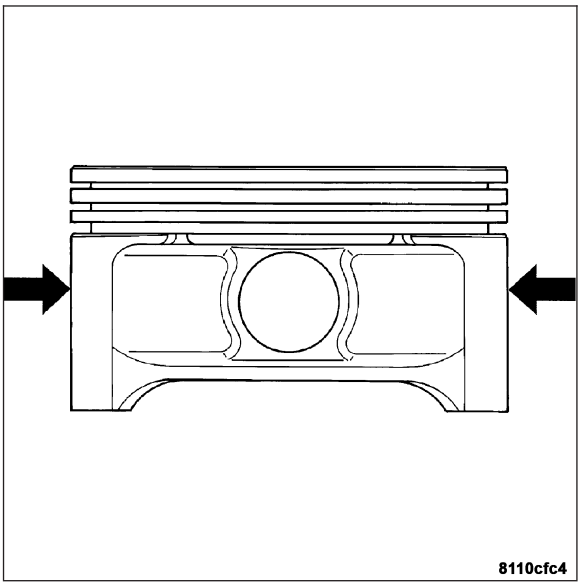

INSTALLATION

1. Fit the piston onto the connecting rod (3).
2. Press in the piston pin (1).
3. Install the snap rings (2).
4. Replace the piston rings as required. **Refer to Page 9-645**.

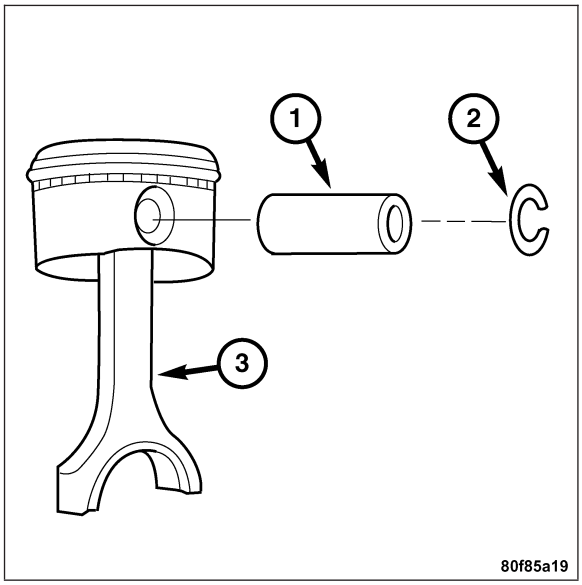

5. Load the piston/connecting rod assembly (1) into a ring compressor (2) with light oil lubrication.

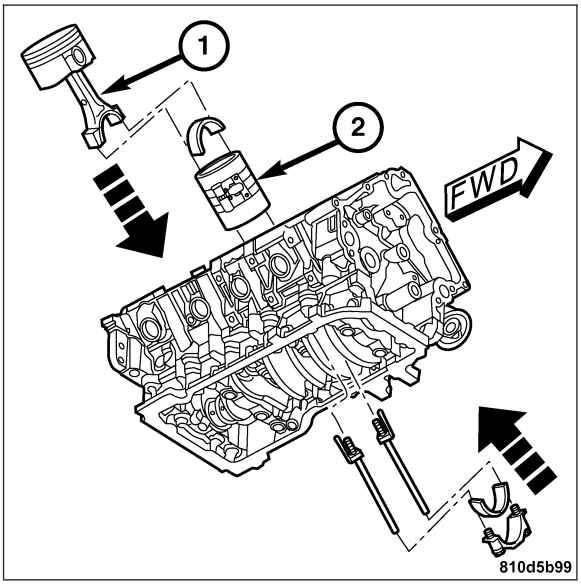

6. Drive the piston into the cylinder using a wooden drift and a mallot.

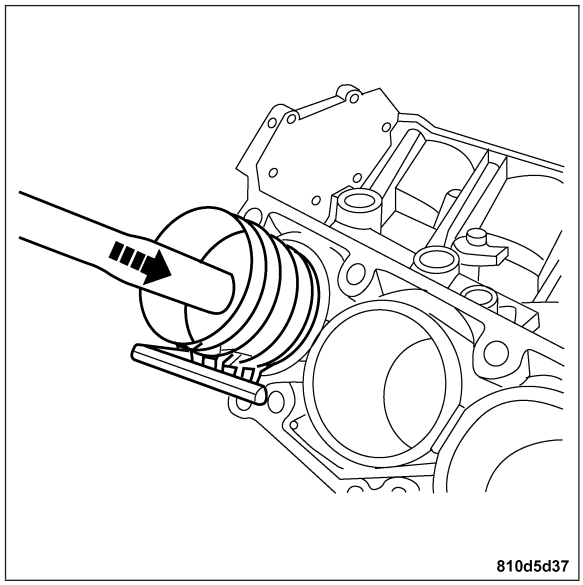

Note: The connecting rod bearing shell with the oil drilling (2) must be installed in the connecting rod, otherwise the connecting rod bearings will not be lubricated. The anti-twist locks of the connecting rod bearing shells must be located in the slots (1) of the connecting rods and the connecting rod bearing caps.

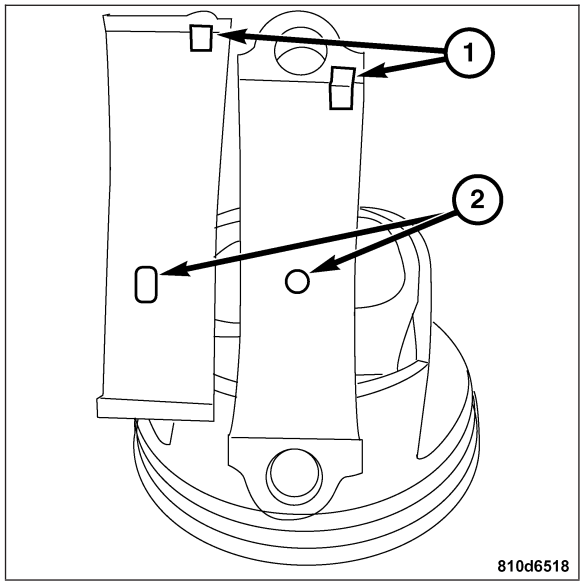

7. Align the connecting rod caps with the marks (1).
8. Install the connecting rod bolts.
9. Tighten the connecting rod bolts in three stages.
   - Stage one, 5 N·m (44 in. lbs.)
   - Stage two, 25 N·m (18 ft. lbs.)
   - Stage three, rotate bolts 90° clockwise.
10. Test the engine for ease of rotation.
11. Install the timing chain. **Refer to Page 9-695**.

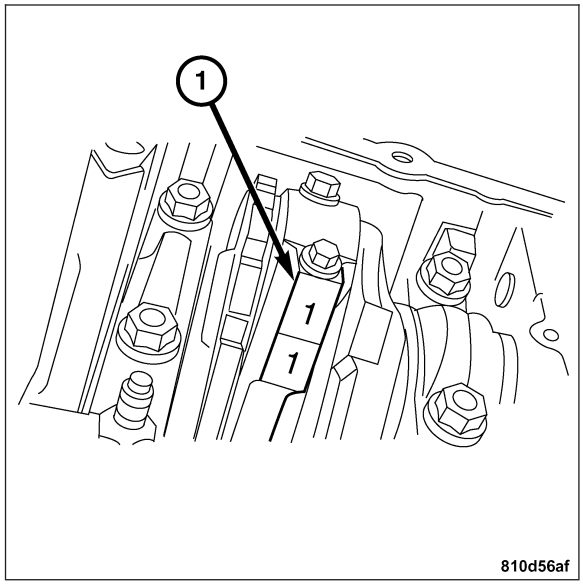

PISTON RINGS

REMOVAL

1. Remove the pistons and connecting rods. **Refer to Page 9-640**

CAUTION: Do not remove the oil scraper ring with the pliers. The oil scraper ring must be removed and installed by hand.

2. Using piston ring pliers, remove the piston rings.

CAUTION: Do not cut or scratch pistons while cleaning.

3. Use a ring grove cleaner or a broken ring to remove deposits in the ring grooves.
4. Inspect the pistons for heat scoring and distortion at the piston pin openings and piston skirts. Replace as required.

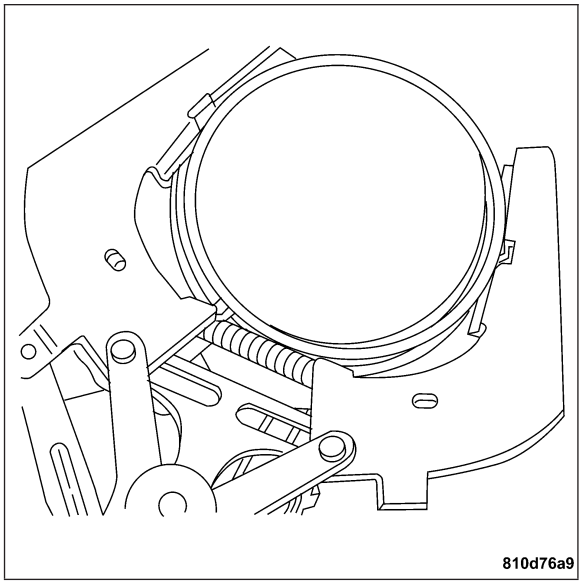

INSTALLATION

1. Measure the end gap (1) with rings at the bottom of the cylinder.
   - Ring # 1 clearance is .20 mm to .35 mm.
   - Ring # 2 clearance is .20 mm to .40 mm.

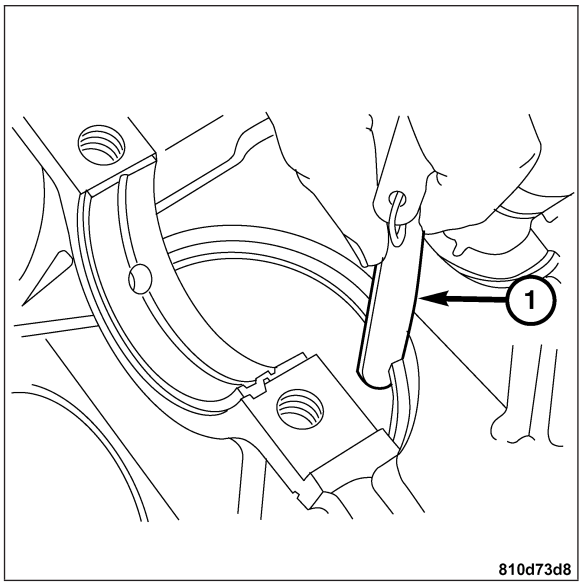

2. Measure the vertical clearance (2) of the piston rings (1).
3. Ring # 1 clearance is .012 mm to .060 mm.
4. Ring # 2 clearance is .010 mm to .030 mm.

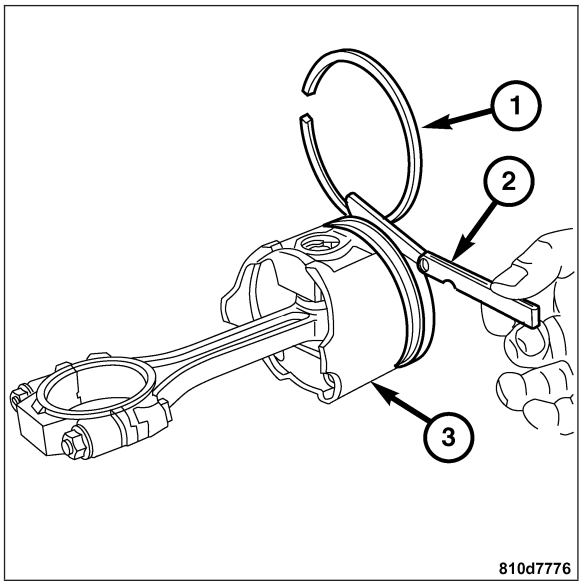

5. Install the rings on the pistons as shown.
   - Compression ring (1)
   - Sealing ring (2)
   - Oil Ring Rail (3)
   - Oil Ring Expander (4)

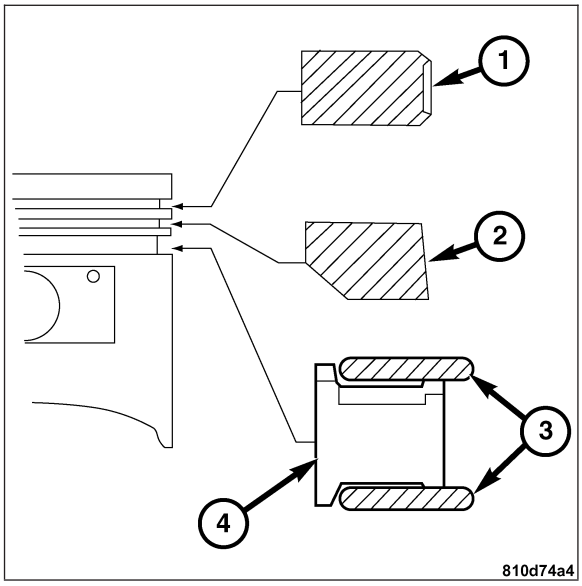

6. The ring gaps when installed must be positioned as shown.
   - Ring one (1)
   - Upper side rail (2)
   - Ring two and spacer expander (3)
   - Lower side rail (4)
7. Install the pistons and connecting rods. **Refer to Page 9-643**.

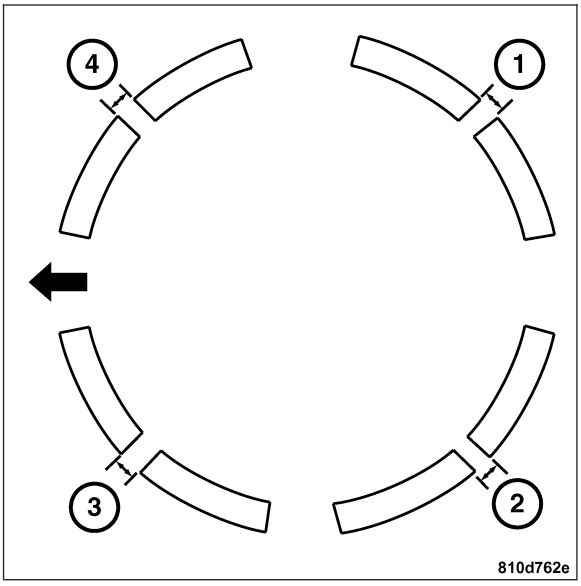

CRANKSHAFT AND MAIN BEARINGS

DESCRIPTION

Thirty-degree offset crank pins on the crankshaft provide even, 120-degree, firing intervals for smooth operation. The crankshaft with these split pins has ample strength without adding material between the pins, keeping the engine compact and reducing weight.

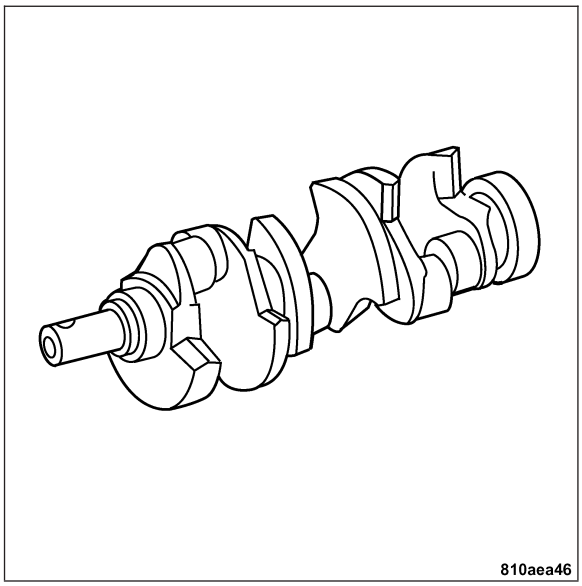

OPERATION

The crankshaft transfers force generated by combustion within the cylinder to the flywheel or flexplate.

REMOVAL

1. Remove the upper oil pan. **Refer to Page 9-663**.
2. Remove the oil pump. **Refer to Page 9-674**.
3. Remove the rear crankshaft radial seal. **Refer to Page 9-634**.
4. Remove the timing chain. **Refer to Page 9-693**.

Note: When rotating the crankshaft, ensure that the connecting rods are not twisted.

Note: Mark the connecting rod and the connecting rod bearing cap (1) on one side next to each other for this step.

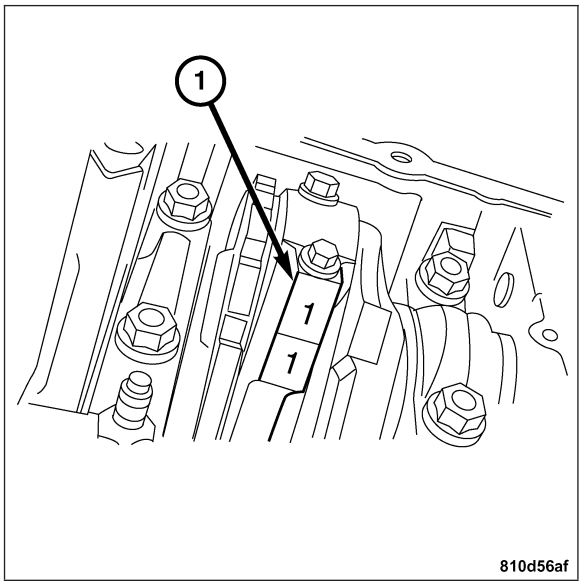

5. Remove the connecting rod bolts (1).

Note: Do not dislodge the connecting rod bearings from the connecting rods.

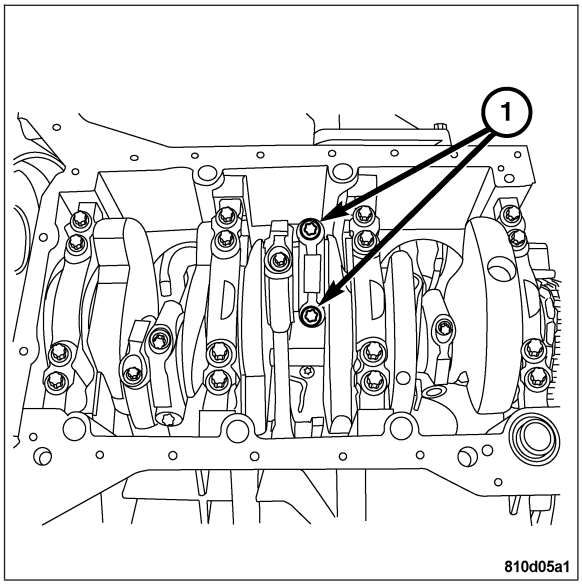

6. Remove the connecting rod caps (1) with the bearings in place.
7. Relocate the connecting rods away from the crankshaft.

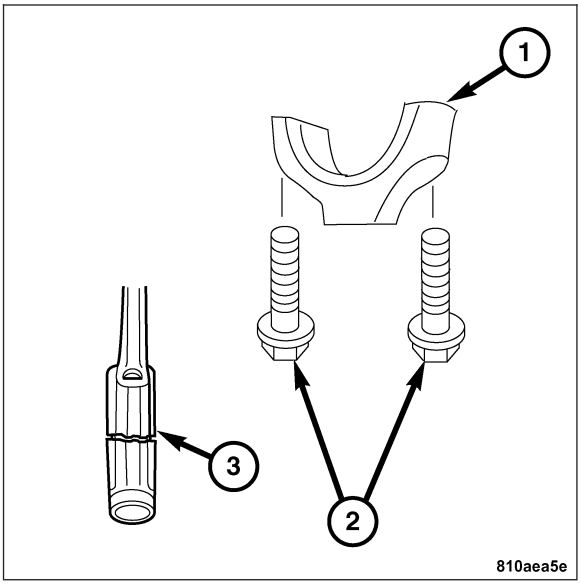

Note: Mark the crankshaft bearing caps before removing.

CAUTION: Carefully pry out the crankshaft bearing caps.

8. Remove the crankshaft main bearing journal cap side bolts (2).
9. Remove and discard the crankshaft main bearing journal cap bolts (1).
10. Remove the crankshaft main bearing journal cap bolts (3).

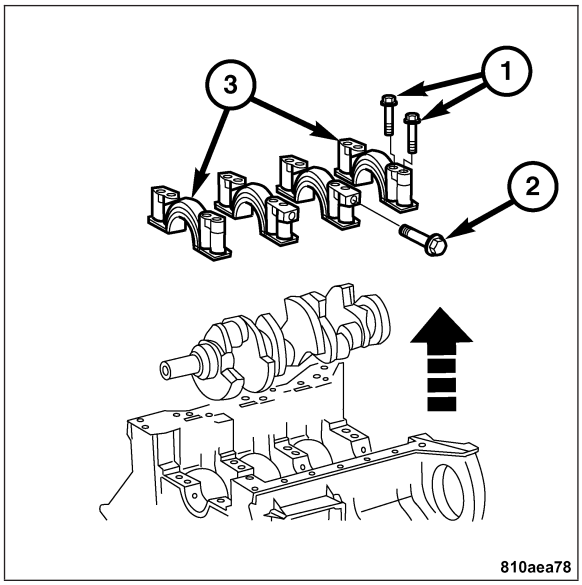

11. Remove the crankshaft (1) from the engine block.

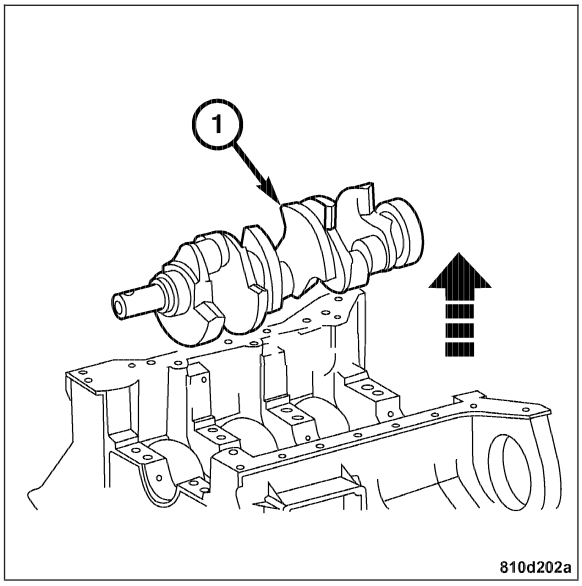

12. Remove the crankshaft main bearing shells (1) and thrust washers (2) from the crankcase.
13. Remove the crankshaft main bearing shells from the crankshaft main bearing journal caps.

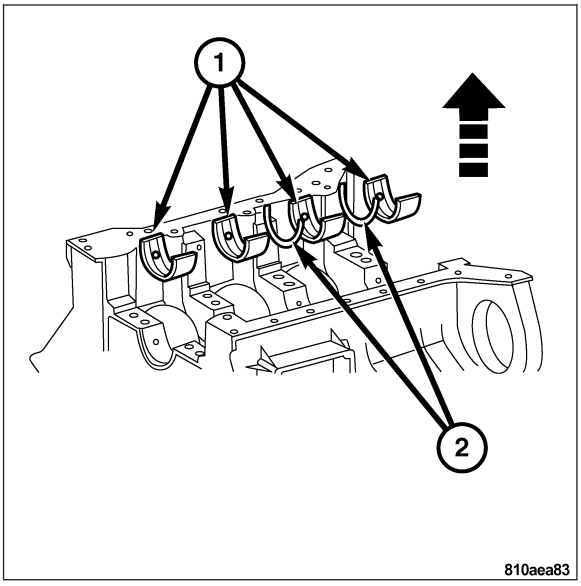

INSTALLATION

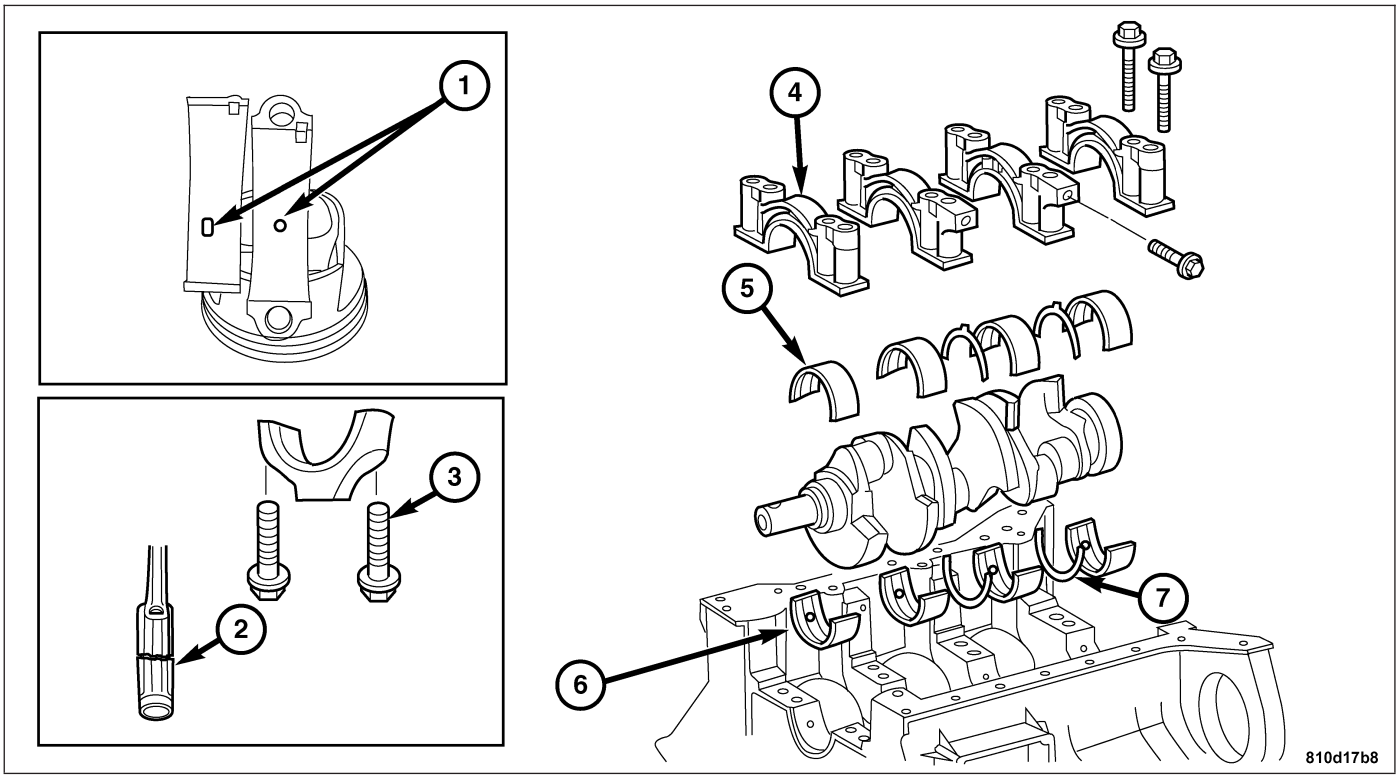

1 - CONNECTING ROD OIL PORT
2 - CONNECTING ROD BEARING CAP
3 - CONNECTING ROD BOLT
4 - MAIN BEARING JOURNAL CAP
5 - LOWER MAIN BEARING SHELL
6 - UPPER MAIN BEARING SHELL
7 - THRUST WASHER

Note: Clean all the journals with solvent and dry throughly before installing bearings.

1. Fit the upper main bearing shells (6) to the engine block's main journals.
2. Fit the thrust washers (7) into the engine block.
3. Coat the surface of bearings lightly with engine oil.
4. Position the crankshaft in the engine block.
5. Fit the lower main bearing shells (5) into the main bearing journal caps (4).

CAUTION: The crankshaft main bearing journal cap bolts M8X75 and M10X90 must always be replaced otherwise there is a risk of fracture.

6. Install the main bearing journal caps (4).

7. Follow the torque sequence shown for the crankshaft main bearing journal cap bolts.
8. Main bearing journal caps must be tightened in two stages.
   - Stage one for m8 bolts, 20 N·m (15 ft. lbs.).
   - Stage two for m8 bolts, rotate 90° clockwise.
   - Stage one for m10 bolts, 30 N·m (22 ft. lbs.).
   - Stage two for m10 bolts, rotate 90° clockwise.

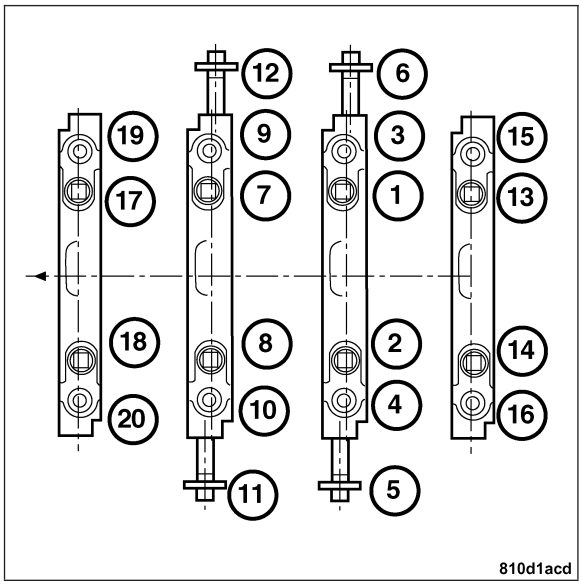

CAUTION: Connecting rod bolts exceeding 47.6 mm in length must be replaced.

9. Install the connecting rod caps and the bolts to the connecting rod as marked. **Refer to Page 9-643**.
10. Install the oil pump. **Refer to Page 9-676**.
11. Install the upper oil pan. **Refer to Page 9-663**.
12. Install the timing chain. **Refer to Page 9-695**.
13. Install a new crankshaft rear radial seal. **Refer to Page 9-635**.

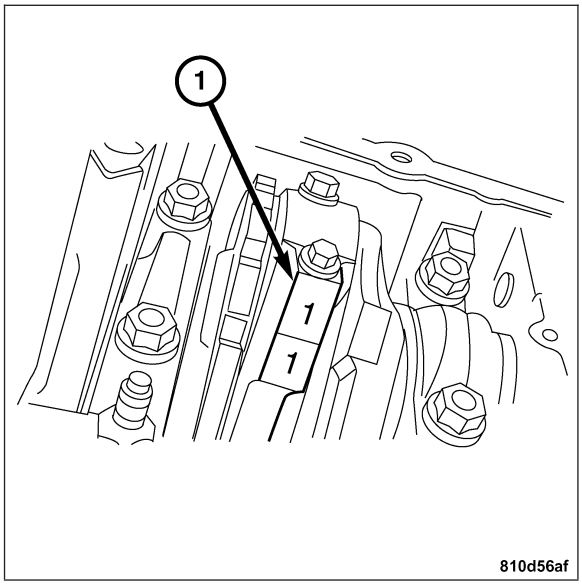

VIBRATION DAMPER

REMOVAL

1. Disconnect the negative battery cable.
2. Drain the cooling system into a suitable container.
3. Remove the radiator fan with the radiator. **Refer to Page 7-33**.
4. Remove the accessory drive belt.
5. Remove the starter. **Refer to Page 8F-43**.

6. Using Special Tool 9102 Flywheel Locking Tool (1), lock the flywheel by inserting the tool into the starter opening.

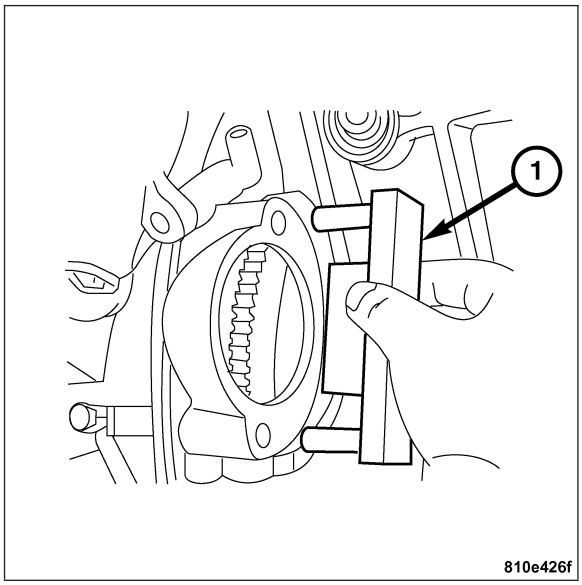

7. Remove the vibration damper bolt (1) and the vibration damper (2) from the crankshaft.

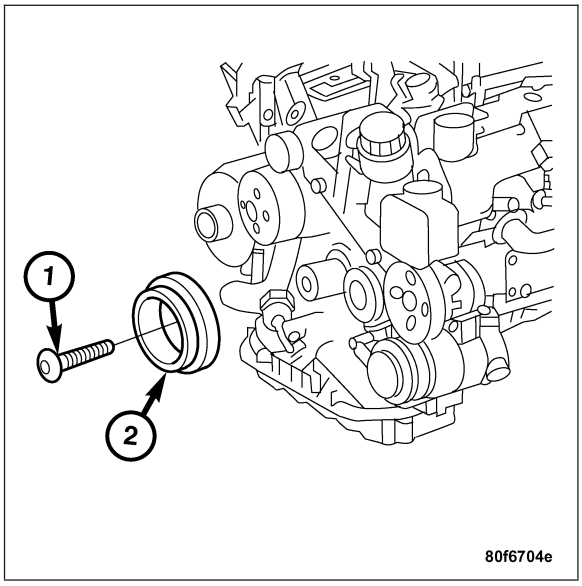

INSTALLATION

1. Inspect for oil leaks at the front crankshaft oil seal.
2. Replace the front crankshaft oil seal if signs of leakage are present.
3. Inspect the sealing surface of the vibration damper. Smooth any roughness with emery paper or an oil stone.
4. Measure the vibration damper bolt. Replace the bolt if length exceeds 78 mm.
5. Position the vibration damper on the front of the crankshaft.
6. Lubricate the bolt threads with engine oil before installing.
7. Install the vibration damper bolt and tighten:
   - 1st to 200 N·m (148 ft. lbs.),
   - Then retighten the bolt an additional 90° clockwise.

8. Install the accessory drive belt.
9. Install the radiator with the radiator fan. **Refer to Page 7-35**.
10. Remove the Special Tool 9102 Flywheel Locking Tool.
11. Install the starter. **Refer to Page 8F-44**.
12. Connect the negative battery cable.
13. Start the engine and check for leaks.

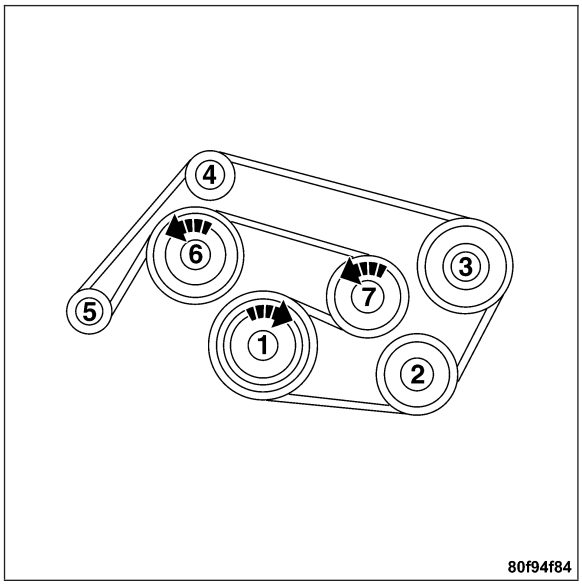

FLEX PLATE / FLYWHEEL

REMOVAL

1. Remove the transmission. For manual **Refer to Page 21-344**, for automatic **Refer to Page 21-210**.
2. Remove the starter. **Refer to Page 8F-43**.
3. Using Special Tool 9102 Flywheel Locking Tool (1), lock the flywheel by inserting the tool in the starter opening.
4. Remove the clutch if equipped. **Refer to Page 6-9**.

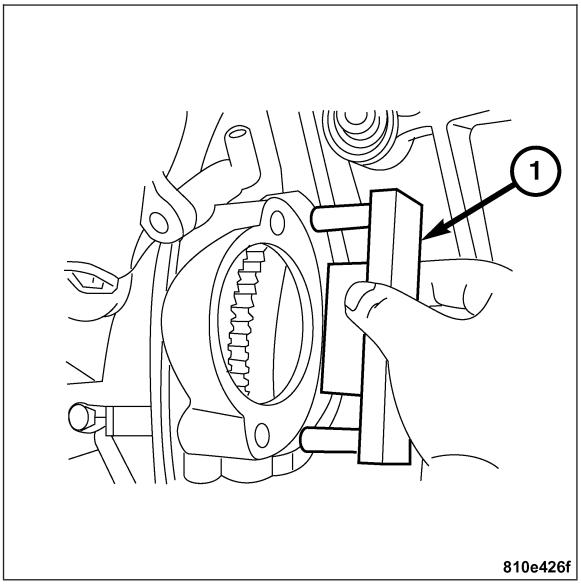

5. Remove and discard the flywheel bolts (1).
6. Remove the spacer (2) and the flywheel/flexplate (3).
7. Inspect the rear crankshaft oil seal for leakage. Replace if required.

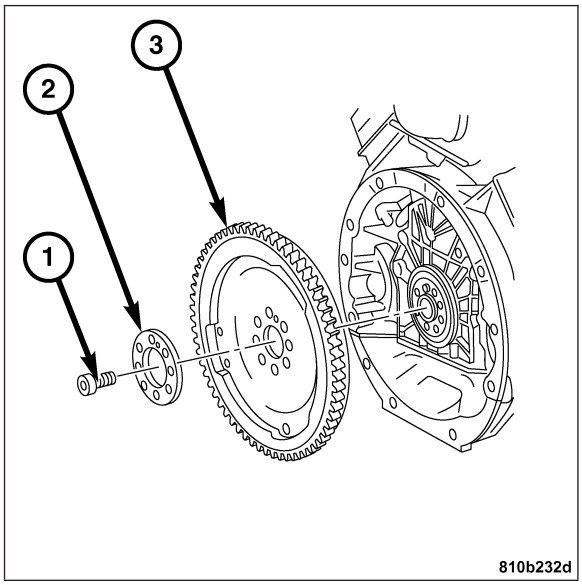

INSTALLATION

Note: New flywheel/flexplate bolts must be used.

1. Position the flywheel/flexplate (3) and align on the cranshaft pin.
2. Install the spacer and new flywheel/flexplate bolts (1). Tighten bolts to 45 N·m (33 ft. lbs.)
3. Rotate the flywheel/flexplate bolts an additional 90° clockwise.
4. Install the clutch if equipped. **Refer to Page 6-10**.

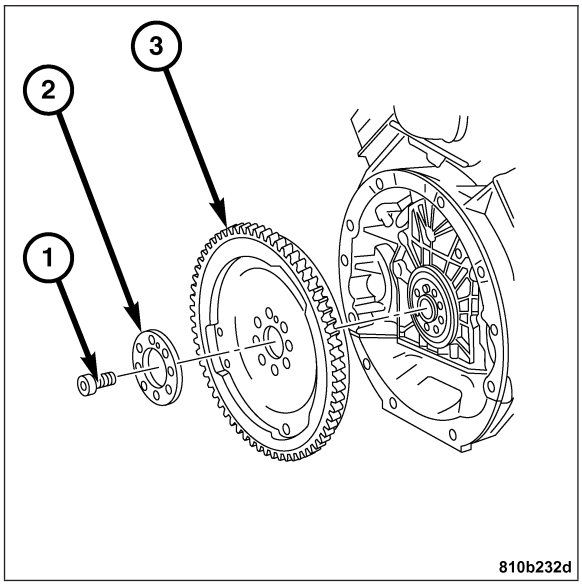

5. Remove Special Tool 9102 Flywheel Locking Tool (1).
6. Install the starter. **Refer to Page 8F-44**.
7. Install the transmission. **Refer to Page 21-227** or **Refer to Page 21-347**.

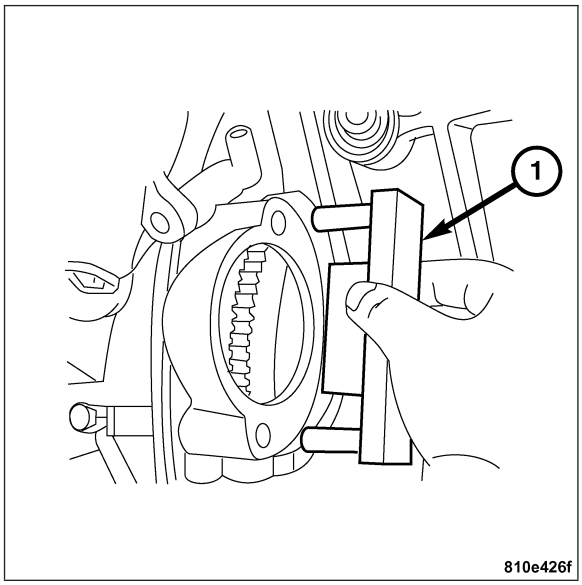

ENGINE MOUNT BRACKETS

REMOVAL

1. Remove the engine mount. **Refer to Page 9-657**.
2. Remove and discard the engine mount bracket bolts (1).
3. Remove the engine mount bracket.

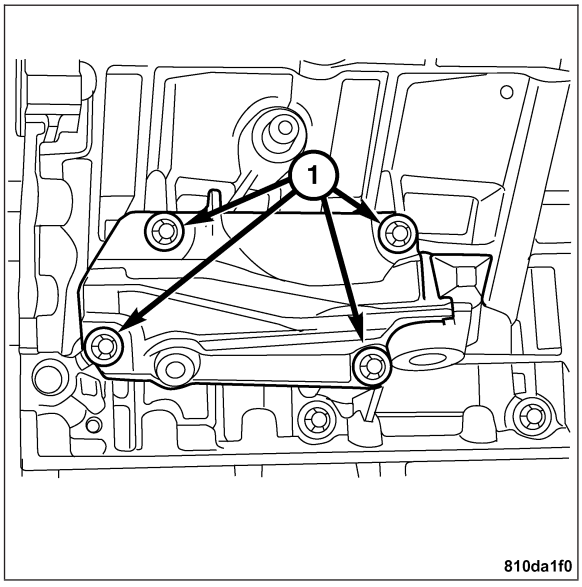

INSTALLATION

1. Position the engine mount brackets on the engine block.
2. Install the new bolts (1) and tighten to 20 N·m (15 ft. lbs.)
3. Rotate the bolts an additional 90° clockwise.
4. Install the engine mounts. **Refer to Page 9-658**.

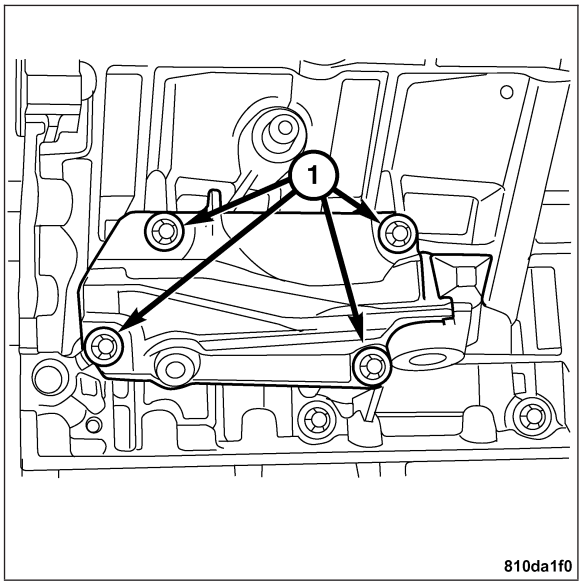

FRONT MOUNT

REMOVAL

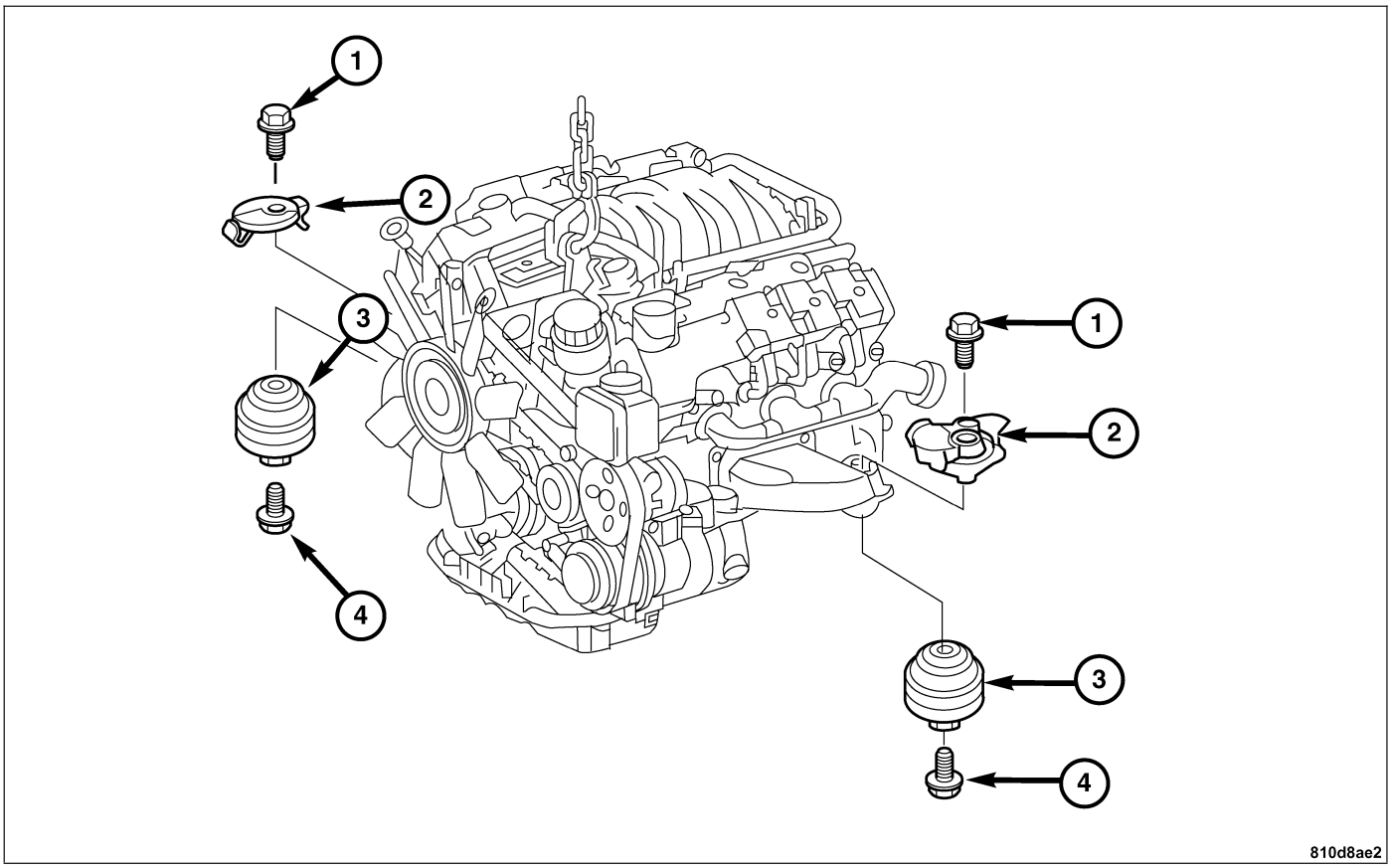

1 - ENGINE MOUNT UPPER BOLT
2 - HEAT SHIELD
3 - ENGINE MOUNT
4 - ENGINE MOUNT LOWER BOLT

1. Disconnect the negative battery cable.
2. Remove the air cleaner housing. **Refer to Page 9-608**.
3. Attach the engine support frame.
4. Remove the engine mount upper bolt (1) and the heat shield (2).

CAUTION: Do not stretch lines and hoses while lifting engine.

5. Raise the engine slightly.
6. Raise and support the vehicle.

7. Remove the lower splash shield screws (1) and the splash shield.
8. Remove the engine mount lower bolt.
9. Remove the engine mount.

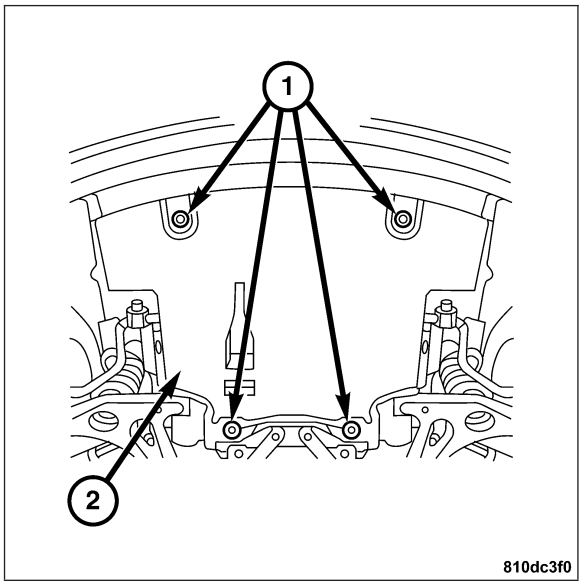

INSTALLATION

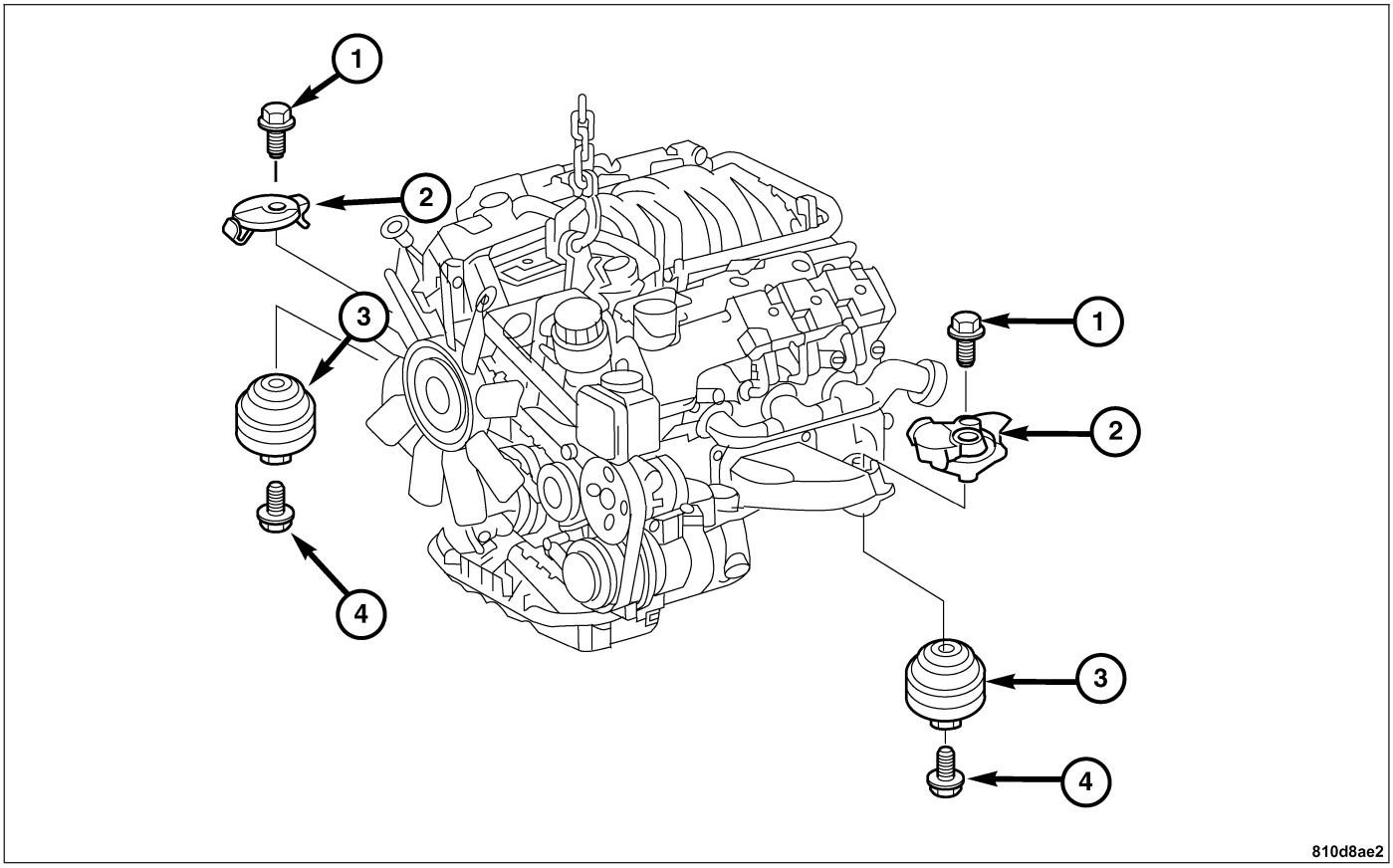

1 - ENGINE MOUNT UPPER BOLT
2 - HEAT SHIELD
3 - ENGINE MOUNT
4 - ENGINE MOUNT LOWER BOLT

Note: The arrows on the engine mounts must be located in the retaining slots on the engine bracket.

1. Position the engine mount (3) on the crossmember.
2. Install the engine mount lower bolt (4). Tighten the bolt to 35 N·m (26 ft. lbs.).

Note: The recesses of the heat shield must be located in the anti twist slots of the engine bracket.

3. Lower the engine onto the engine mount. Install the heat shield (2) and the engine mount upper bolt (1).
4. Tighten the engine mount upper bolt (1) to 55 N·m (41 ft. lbs.).
5. Install the lower splash shield and screws (1). Tighten to 7 N·m (5 ft. lbs.).
6. Lower the vehicle.
7. Remove the engine support frame from the engine.
8. Install the air cleaner housing. **Refer to Page 9-608**.
9. Connect the negative battery cable.

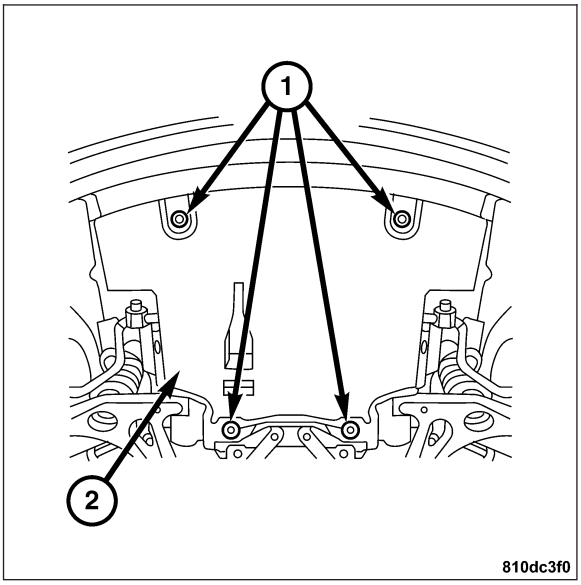

REAR MOUNT

REMOVAL

1. Raise and support the vehicle.
2. Support the transmission with a transmission jack.
3. Remove the rear mount lower bolts (3).
4. Raise the transmission slightly off of the rear crossmember.
5. Remove the rear mount upper bolts (1).
6. Remove the rear mount.

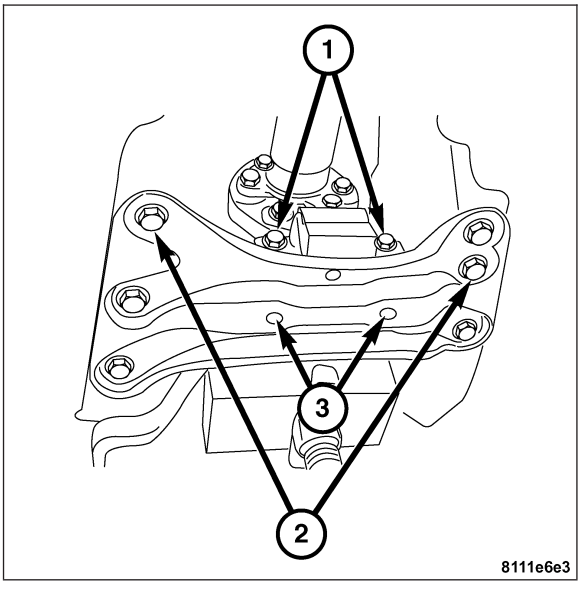

INSTALLATION

1. Position the rear mount on the transmission.
2. Install the rear mount upper bolts (1). Tighten the bolts to 40 N·m (30 ft. lbs.).
3. Lower the transmission on to the rear crossmember.
4. Install the rear mount lower bolts (3). Tighten the bolts to 40 N·m (30 ft. lbs.).
5. Remove the transmission jack.
6. Lower the vehicle.

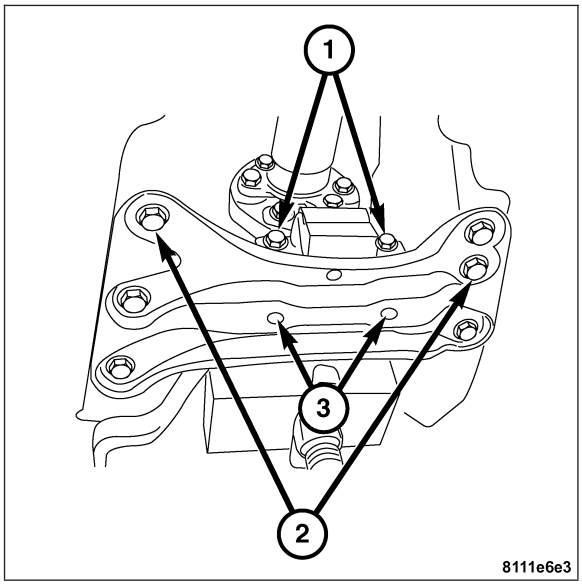

LUBRICATION

DESCRIPTION

The engine lubrication system is a full-flow filtration, pressure feed type. The oil pump body is mounted to the engine block. The pump inner rotor is driven by the crankshaft.

DIAGNOSIS AND TESTING

ENGINE OIL LEAK INSPECTION

Begin with a thorough visual inspection of the engine, particularly at the area of the suspected leak. If an oil leak source is not readily identifiable, the following steps should be followed:

1. Do not clean or degrease the engine at this time because some solvents may cause rubber to swell, temporarily stopping the leak.
2. Add an oil soluble dye (use as recommended by manufacturer). Start the engine and let idle for approximately 15 minutes. Check the oil dipstick to make sure the dye is thoroughly mixed as indicated with a bright yellow color under a black light.
3. Using a black light, inspect the entire engine for fluorescent dye, particularly at the suspected area of oil leak. If the oil leak is found and identified, repair as necessary.
4. If dye is not observed, drive the vehicle at various speeds for approximately 24 km (15 miles), and repeat inspection.
5. **If the oil leak source is not positively identified at this time**, proceed with the air leak detection test method as follows:
   - Disconnect the fresh air hose (make-up air) at the cylinder head cover and plug or cap the nipple on the cover.
   - Remove the vent hose from the cylinder head cover. Cap or plug the nipple on the cover.
   - Attach an air hose with pressure gauge and regulator to the oil level indicator tube.

CAUTION: Do not subject the crankcase to more than 20.6 kpa (3 PSI) of test pressure.

- Gradually apply air pressure from 1 psi to 2.5 psi maximum while applying soapy water at the suspected source. Adjust the regulator to the suitable test pressure that provides the best bubbles which will pinpoint the leak source. If the oil leak is detected and identified, repair per service manual procedures.
- If the leakage occurs at the crankshaft rear seal area, refer to inspection for rear seal area below.

6. If no leaks are detected, turn off the air supply. Remove the air hose, all plugs, and caps. Install the vent hose and proceed to next step.
7. Clean the oil off the suspect oil leak area using a suitable solvent. Drive the vehicle at various speeds approximately 24 km (15 miles). Inspect the engine for signs of an oil leak by using a black light.

INSPECTION FOR REAR SEAL AREA LEAKS

Since it is sometimes difficult to determine the source of an oil leak in the radial seal area of the engine, a more involved inspection is necessary. The following steps should be followed to help pinpoint the source of the leak.

If the leakage occurs at the crankshaft radial oil seal area:

1. Disconnect the battery.
2. Raise the vehicle.
3. Remove torque converter or clutch housing cover and inspect rear of block for evidence of oil. Use a black light to check for the oil leak. If a leak is present in this area, remove transmission for further inspection.
   a. Circular spray pattern generally indicates seal leakage or crankshaft damage.
   b. Where leakage tends to run straight down, possible causes are a porous block, oil gallery cup plug, bedplate to cylinder block mating surfaces and seal bore. See proper repair procedures for these items.
4. If no leaks are detected, pressurize the crankcase as previously described.

CAUTION: Do not exceed 20.6 kPa (3 psi).

5. If the leak is not detected, very slowly turn the crankshaft and watch for leakage. If a leak is detected between the crankshaft and seal while slowly turning the crankshaft, it is possible the crankshaft seal surface is damaged. The seal area on the crankshaft could have minor nicks or scratches that can be polished out with emery cloth.

CAUTION: Use extreme caution when crankshaft polishing is necessary to remove minor nicks and scratches. The crankshaft radial seal flange is especially machined to complement the function of the rear oil seal.

6. For bubbles that remain steady with shaft rotation, no further inspection can be done until disassembled.
7. After the oil leak root cause and appropriate corrective action have been identified, replace component(s) as necessary.

DIAGNOSIS AND TESTING - CHECKING ENGINE OIL PRESSURE

1. Remove the oil pressure testing plug (1) at the base of the oil filter housing.
2. Install oil pressure test gauge assembly.
3. Start the engine and monitor the gauge readings.

CAUTION: If oil pressure is 0 at idle, Do Not Run engine at 3000 RPM

4. Oil pressure (engine at operating temperature): **Curb Idle** 34.5 kPa (5 psi) minimum **3000 RPM** 300–724 kPa (45–105 psi).
5. If the oil pressure is 0 psi at idle, shut the off engine and check the pressure relief valve; it may be stuck open or have a clogged oil pickup screen.
6. Install the oil pressure test plug and tighten to 10 N·m (89 in. lbs.) after testing is completed.

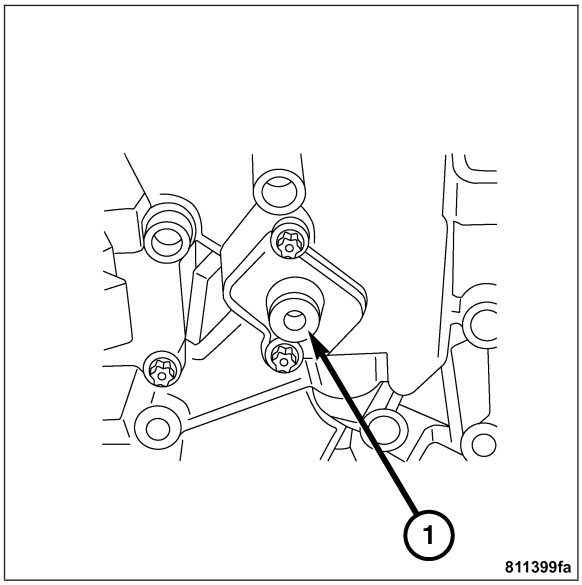

OIL LEVEL INDICATOR TUBE

REMOVAL

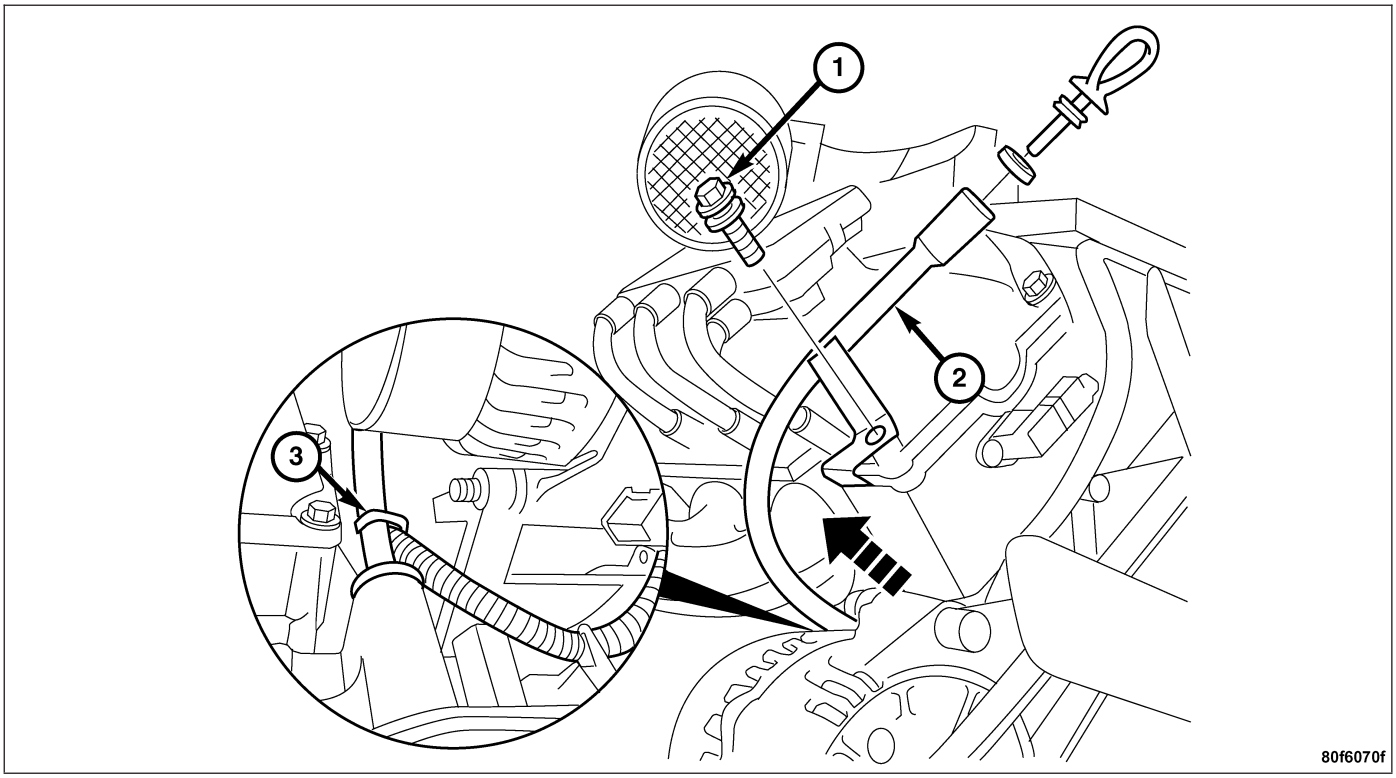

1 - BOLT
2 - OIL LEVEL INDICATOR TUBE
3 - CABLE TIE STRAP

1. Remove the air cleaner housing. **Refer to Page 9-608**.
2. Remove the bolt (1) in the cylinder head cover for the oil level indicator tube (2).
3. Remove the cable tie strap (3) holding the wire loom on the oil level indicator tube.
4. Pull up and remove the oil level indicator tube (2) from the engine.

INSTALLATION

1. Replace the oil level indicator tube seal and lubricate with engine oil.

Note: The oil level indicator tube must be fully seated or oil leaks can occur.

2. Position the oil level indicator tube (2) and install it in the crankcase.
3. Install the bolt (1) in the cylinder head cover and tighten to 10 N·m (89 in. lbs.).
4. Position the wire harness loom at the oil level indicator tube and fasten with new cable tie (3).
5. Install the air cleaner housing. **Refer to Page 9-608**.
6. Start the engine and check for leaks.

OIL

DESCRIPTION

For complete engine oil type and capacity specifications, see fluid types in the lubrication and maintenance section.

STANDARD PROCEDURE

ENGINE OIL LEVEL CHECK

The best time to check engine oil level is after it has sat overnight. Or if the engine has been running, allow the engine to be shut off for at least 5 minutes before checking the oil level.

Checking the oil while the vehicle is on level ground will improve the accuracy of the oil level reading. Add only when the level is at or below the ADD mark.

STANDARD PROCEDURE - ENGINE OIL AND FILTER CHANGE

Change the engine oil at the mileage and time intervals described in the maintenance section of the Owners Manual.

WARNING: NEW OR USED ENGINE OIL CAN BE IRRITATING TO THE SKIN. AVOID PROLONGED OR REPEATED SKIN CONTACT WITH ENGINE OIL. CONTAMINANTS IN USED ENGINE OIL, CAUSED BY INTERNAL COMBUSTION, CAN BE HAZARDOUS TO YOUR HEALTH. THOROUGHLY WASH EXPOSED SKIN WITH SOAP AND WATER. DO NOT WASH SKIN WITH GASOLINE, DIESEL FUEL, THINNER, OR SOLVENTS, HEALTH PROBLEMS CAN RESULT. DO NOT POLLUTE, DISPOSE OF USED ENGINE OIL PROPERLY. CONTACT YOUR DEALER OR GOVERNMENT AGENCY FOR LOCATION OF COLLECTION CENTER IN YOUR AREA.

TO CHANGE ENGINE OIL

1. Run the engine until achieving normal operating temperature.
2. Position the vehicle on a level surface and turn the engine off.
3. Remove the oil filler cap (1).
4. Raise and support the vehicle.

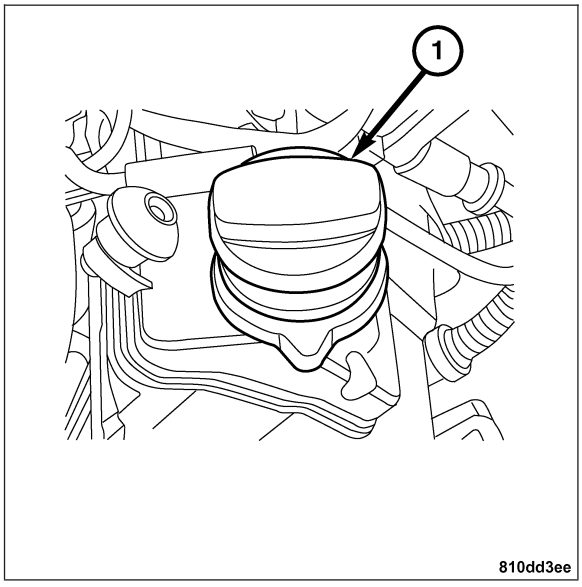

5. Remove the lower splash shield screws (1) and the shield.
6. Place a suitable drain pan under the crankcase drain.

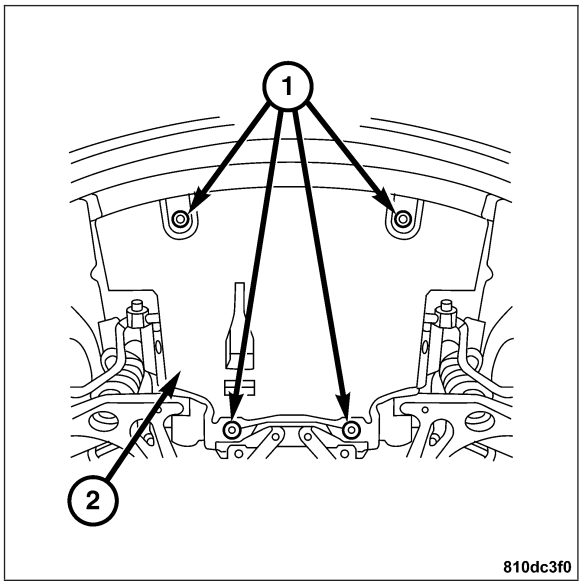

7. Remove the drain plug from the crankcase and allow the oil to drain into the pan. Inspect the drain plug threads for stretching or other damage. Replace the drain plug and gasket if damaged.
8. Remove the oil filter. **Refer to Page 9-666**.
9. Install the drain plug (1) and tighten to 30 N·m (22 ft. lbs.).
10. Install the lower splash shield. Tighten to 7 N·m (5 ft. lbs.).
11. Lower the vehicle and fill the crankcase with specified type and amount of engine oil.
12. Install a new oil filter. **Refer to Page 9-666**.
13. Install the oil filler cap.
14. Start the engine and inspect for leaks.
15. Turn off the engine and inspect the oil level.

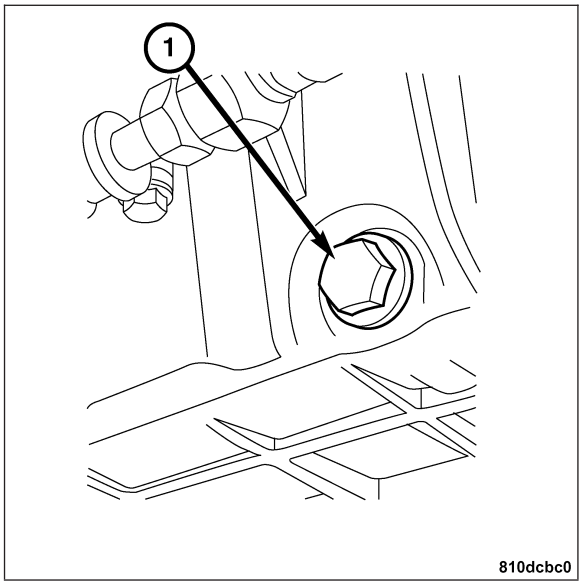

USED ENGINE OIL DISPOSAL

Care should be exercised when disposing used engine oil after it has been drained from a vehicle engine. See the warning above for common practices and recommendations.

OIL FILTER

DESCRIPTION

The oil filter is mounted on the upper side of the front of the engine. It uses a replaceable element that can be incinerated.

REMOVAL

1. Use an oil filter wrench if necessary to remove the oil filter cap (1).

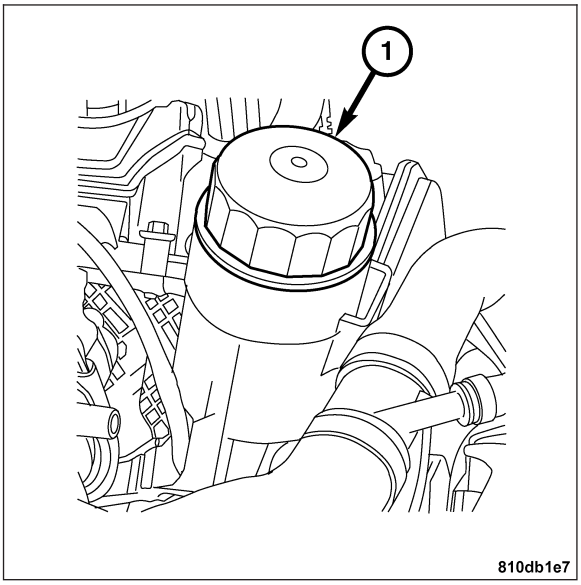

2. Remove oil filter cap with the filter.
3. Remove the oil filter.

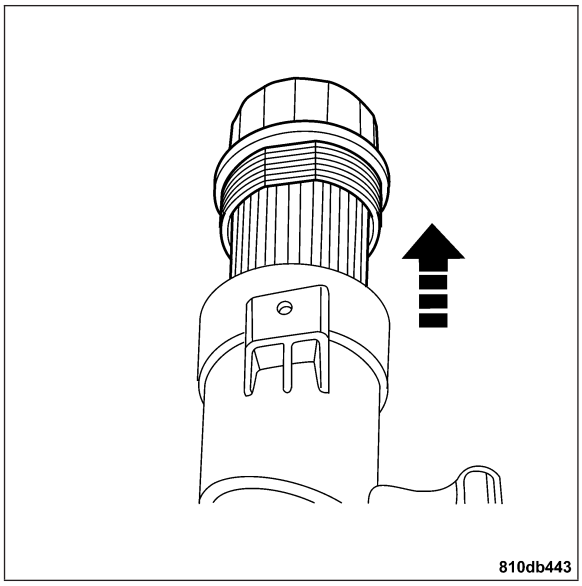

INSTALLATION

1. Replace the oil filter cap seal.

2. Install a new filter (1) in the cap.

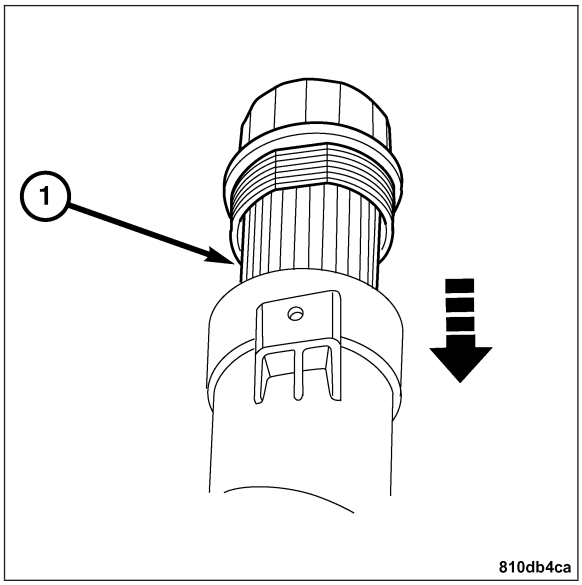

3. Install the filter and cap (1) and tighten to 25 N·m (18 ft. lbs.).

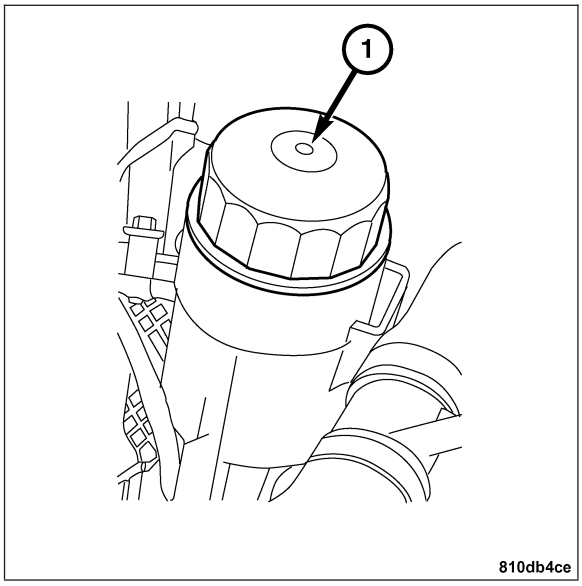

OIL PAN

REMOVAL

LOWER OIL PAN

1. Drain the engine oil. **Refer to Page 9-664**.

2. Remove the lower splash shield screws (1) and the splash shield.

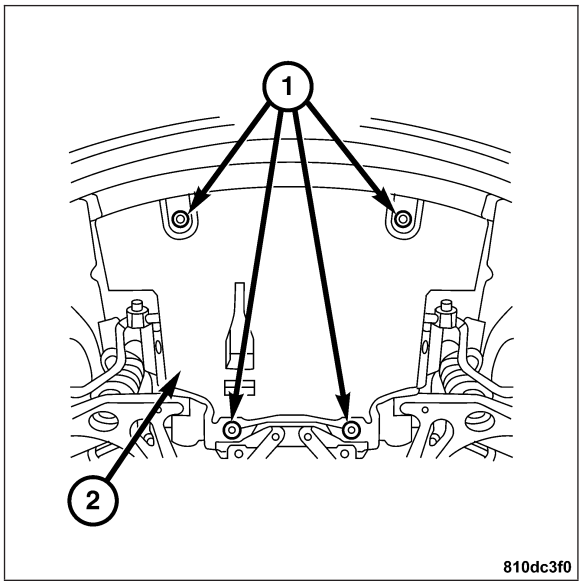

3. Remove the transmission oil cooler line retainer bolts (1). Position the cooler lines aside.

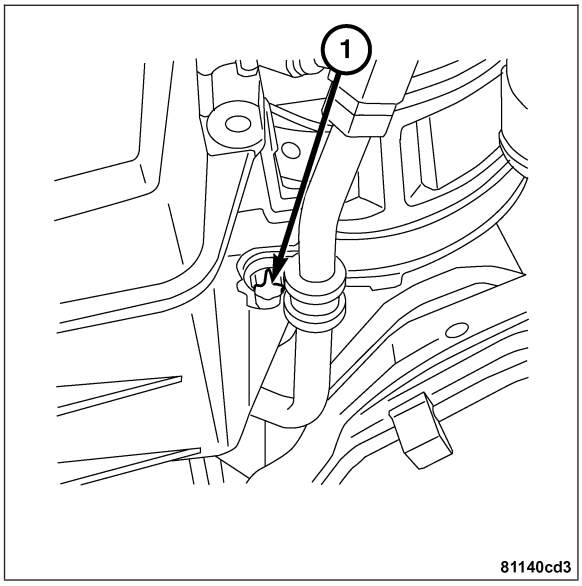

4. Remove the lower oil pan retaining bolts and the lower oil pan (1).

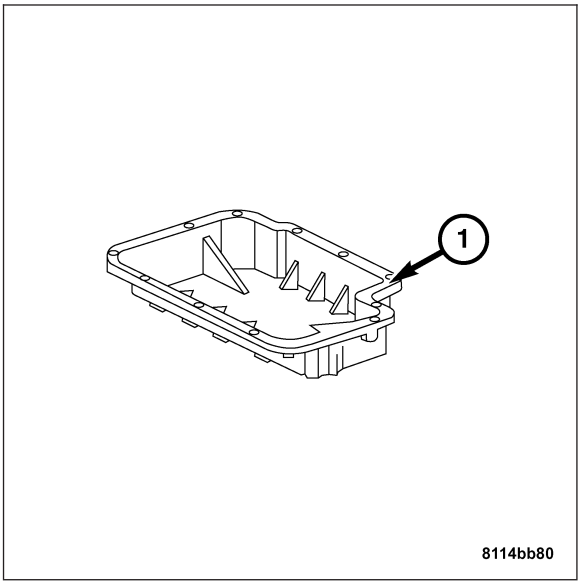

REMOVAL - UPPER OIL PAN

1. Remove the engine. **Refer to Page 9-592**.
2. Separate the transmission from the engine. **Refer to Page 21-210** or **Refer to Page 21-344**.
3. Remove the clutch if equipped. **Refer to Page 6-9**.
4. Mount the engine on an engine stand.
5. Remove the lower oil pan. **Refer to Page 9-663**.
6. Remove the 24 upper oil pan bolts (1).
7. Separate the upper oil pan from the engine block.

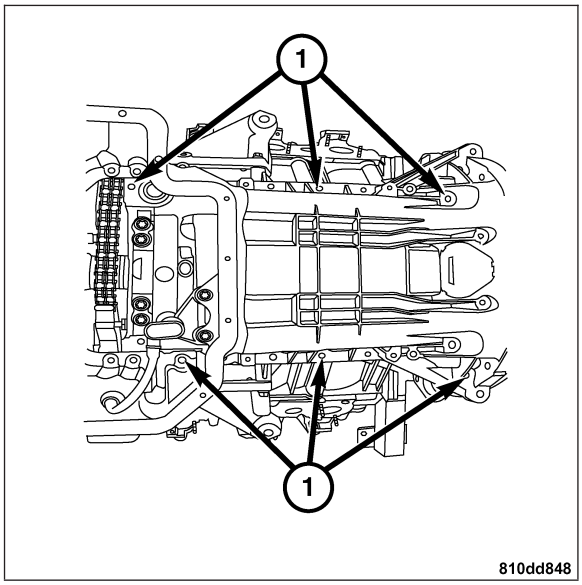

INSTALLATION

LOWER OIL PAN

Note: The components using sealant must be assembled within ten minutes of sealant application.

1. Clean the lower oil pan and the lower portion of the upper oil pan gasket surfaces thoroughly.
2. Apply a 1.5 mm to 2 mm bead of Loctite 5203 sealant or equivalent to the lower oil pan sealing surface (1) as shown.
3. Install the lower oil pan and oil pan bolts. Tighten the lower oil pan bolts to 14 N·m (10 ft. lbs.).

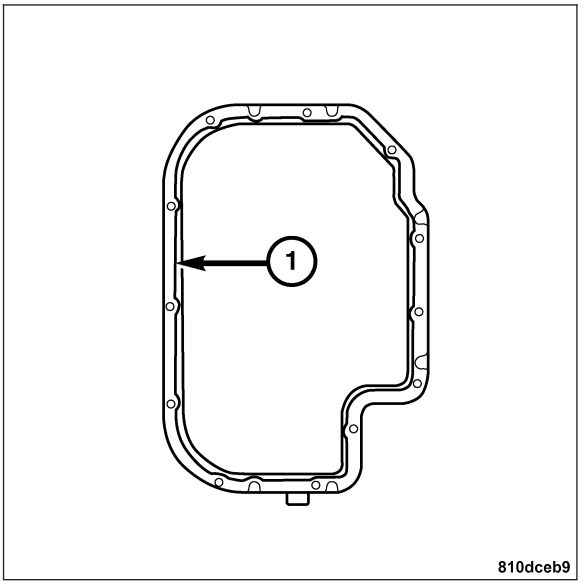

4. Position and install the transmission cooler lines and retainers (1). Tighten the bolts to 10 N·m (7 ft. lbs.).

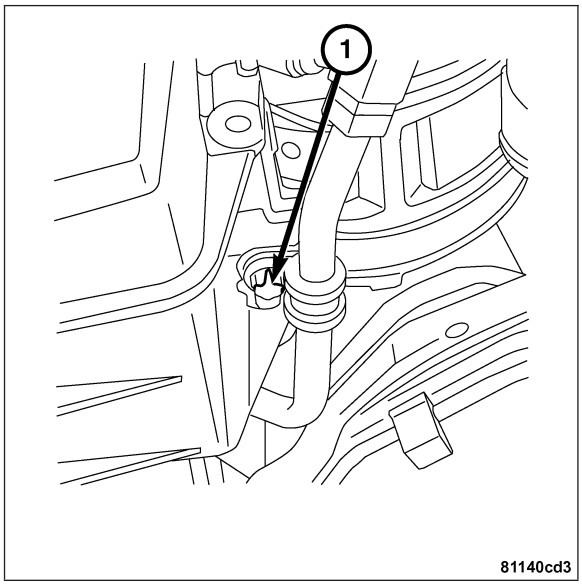

5. Install and tighten the oil pan drain plug to 30 N·m (22 ft lbs.).
6. Install the lower splash shield and screws (1). Tighten the screws to 5 N·m (44 in. lbs.).
7. Lower the vehicle.
8. Fill the crankcase to the specified oil level.
9. Start the engine and check for leaks.

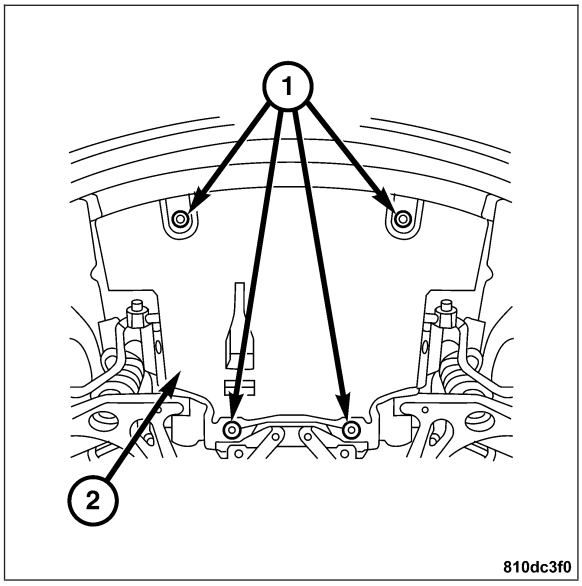

INSTALLATION - UPPER OIL PAN

1. Clean the gasket surfaces thoroughly.

Note: The components using sealant must be assembled within ten minutes of sealant application.

2. Apply a 1.5 to 2 mm. bead of Loctite 5203 sealant (1) or equivalent to the oil pan sealing surface as shown.

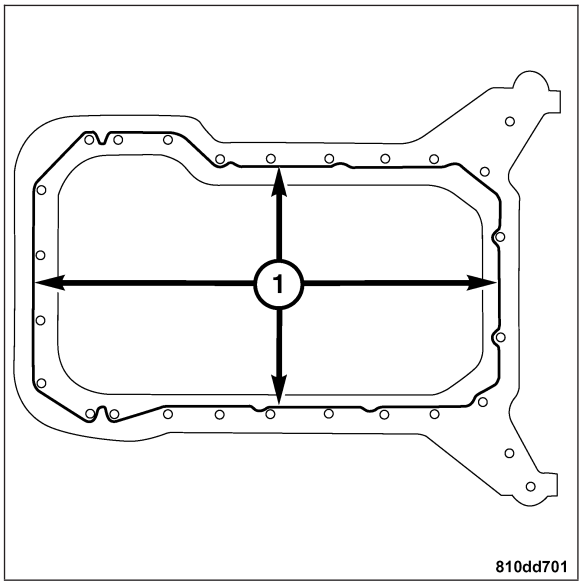

3. Position the upper oil pan on the engine block.
4. Install the oil pan bolts with the proper size and length bolt in the correct bolt hole.
   - (1) M6 X 20
   - (2) M6 X 40
   - (3) M6 X 90
   - (4) M8 X 30
5. Tighten the M6 size bolts to 10 N·m (89 in. lbs). Follow the tightening sequence diagram.
6. Tighten the M8 size bolts to 20 N·m (15 ft. lbs.). Follow the tightening sequence diagram.
7. Install the lower oil pan. **Refer to Page 9-663**.
8. Install the clutch if equipped. **Refer to Page 6-10**.
9. Install the transmission to the engine. **Refer to Page 21-227** or **Refer to Page 21-347**.
10. Install the engine. **Refer to Page 9-597**.

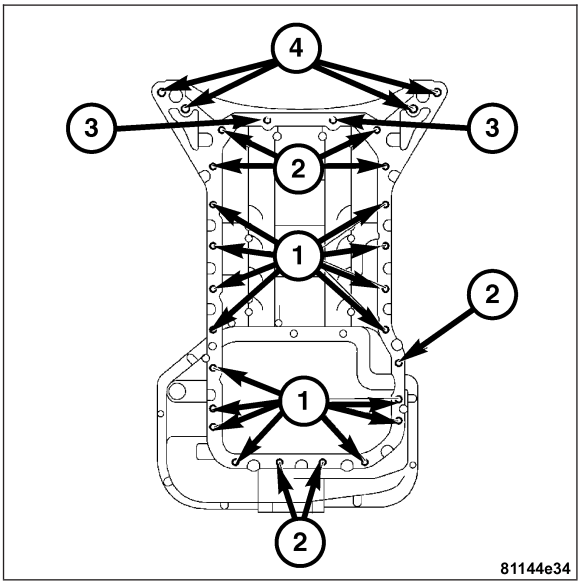

OIL LEVEL/TEMPERATURE SENSOR

REMOVAL

1. Remove the lower oil pan. **Refer to Page 9-663**.
2. Disconnect the oil level/temperature sensor harness connector (1).

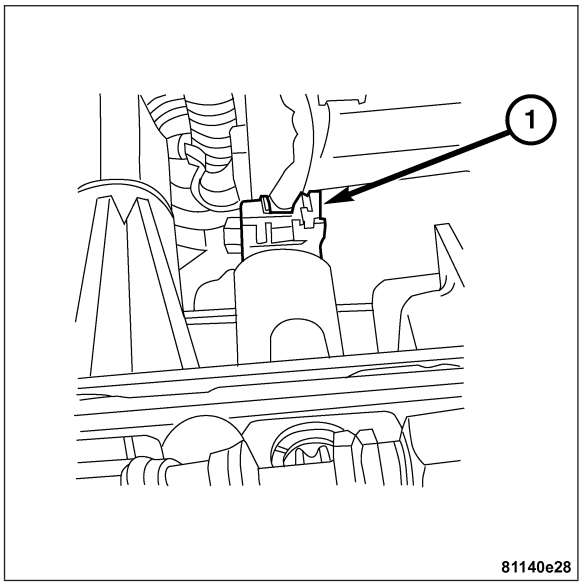

3. Remove the two oil level/temperature sensor screws (1).
4. Remove the two harness retainer screws (2) and the oil level/temperature sensor.

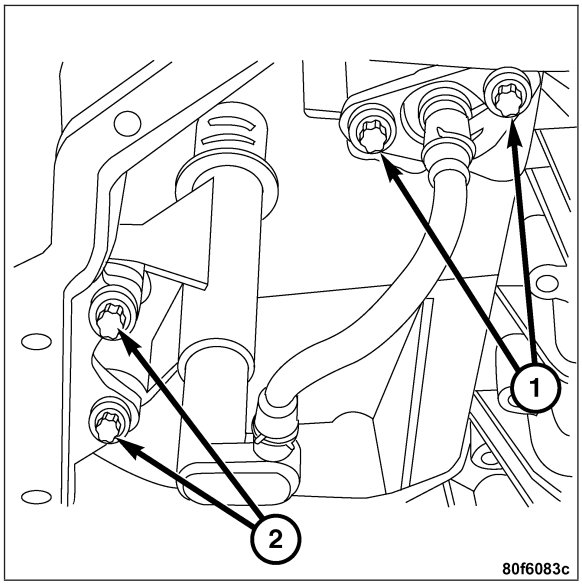

INSTALLATION

1. Position the oil level/temperature sensor in the upper oil pan with the screws (1).
2. Position the harness retainer in the upper oil pan with the screws (2).
3. Tighten all screws for the oil level/temperature sensor to 10 N·m (89 in. lbs.).

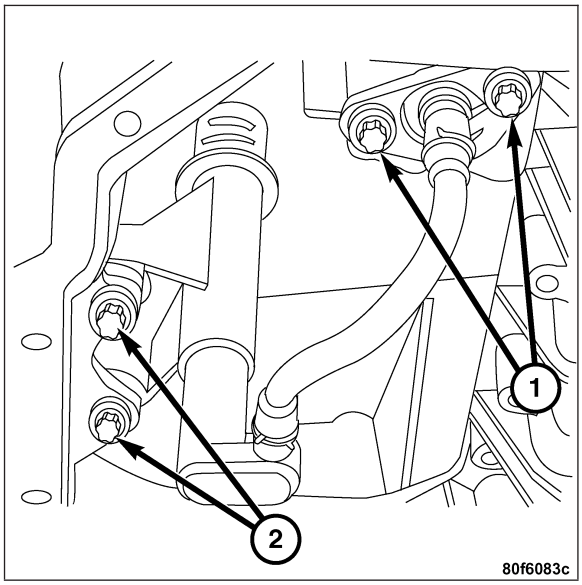

4. Connect the oil level/temperature sensor harness connector (1).
5. Install the lower oil pan. **Refer to Page 9-663**.

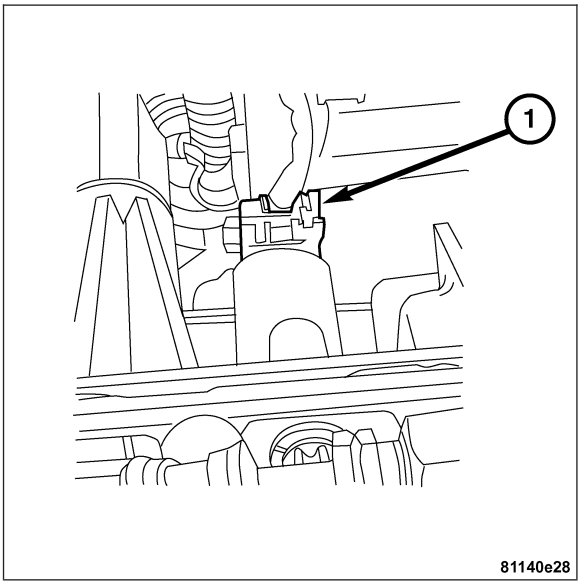

OIL SPRAY NOZZLES

REMOVAL

1. Remove the upper oil pan. **Refer to Page 9-663**.
2. If necessary, rotate the crankshaft slightly at the vibration damper.
3. Remove the oil spray nozzle bolts (1) and the oil spray nozzles.

Note: Do not use hard objects to clean the oil spray nozzles. Replace the oil spray nozzles if they are blocked.

4. Use compressed air only in the oil flow direction to clean the oil spray nozzles.

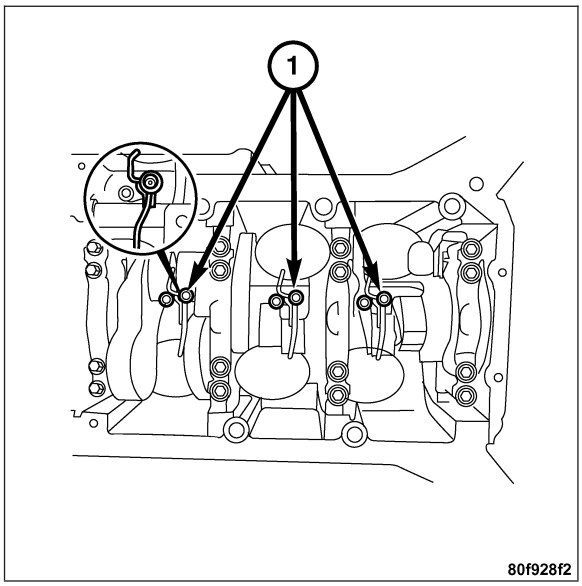

INSTALLATION

Note: Ensure the jet pipes of the oil spray nozzles are not damaged or bent during installation.

1. Position the oil spray nozzles and bolts in the engine block.
2. Tighten the oil spray nozzle bolts to 15 N·m (11 ft. lbs.).
3. Install the upper oil pan. **Refer to Page 9-663**.

OIL PUMP

DESCRIPTION

The gear-type oil pump is located below the crankshaft and is driven from the crankshaft by a separate roller chain.

REMOVAL

1. Remove the lower oil pan. **Refer to Page 9-663**.

2. Remove the oil pump bolts (1).

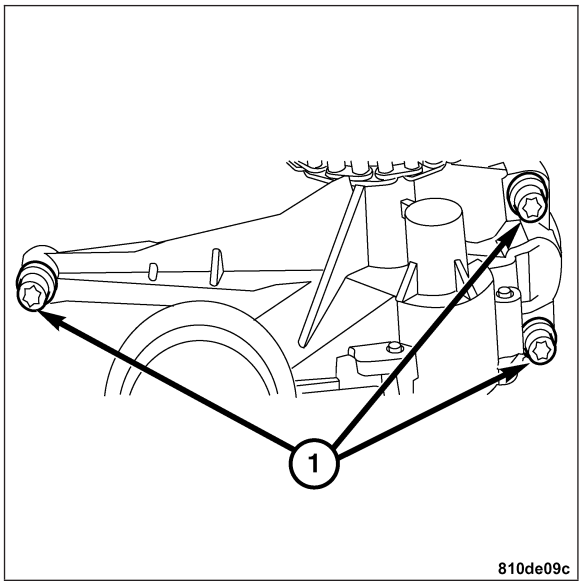

3. Release the oil pump chain tensioner (1) and remove the oil pump from the oil pump drive chain (2).

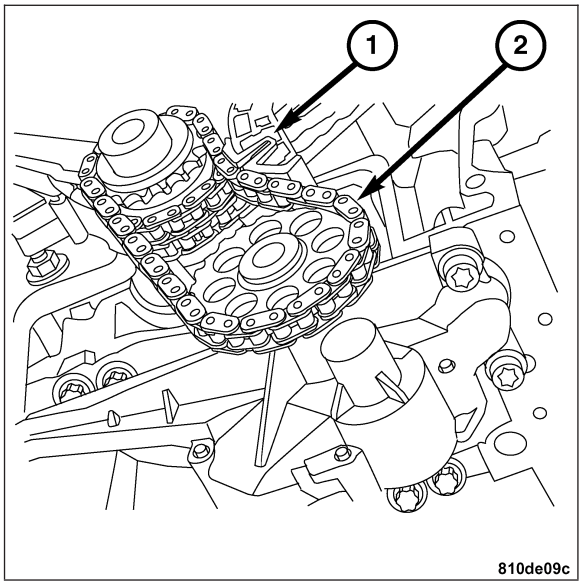

CLEANING

1. Clean all of the parts thoroughly in a suitable solvent.

INSTALLATION

1. Inspect the oil pump check valve. Remove any debris or sealant. Check the operation of the check valve by pressing and releasing the plunger (1).

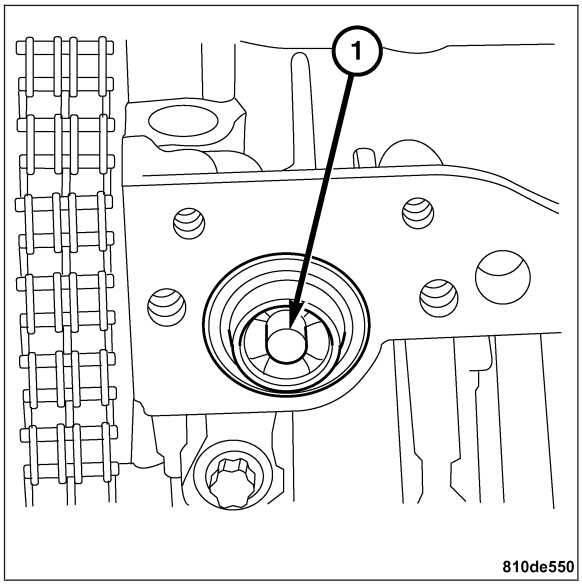

2. Fill the oil pump with engine oil.
3. Check the oil pump drive chain for wear. Replace any worn or damaged parts.
4. Position the oil pump driven sprocket in the drive chain. Position and install the oil pump and bolts. Tighten the bolts to 20 N·m (15 ft. lbs.).
5. Install the lower oil pan. **Refer to Page 9-663**.
6. Refill the engine with motor oil to specified level.
7. Start the engine and check for leaks.

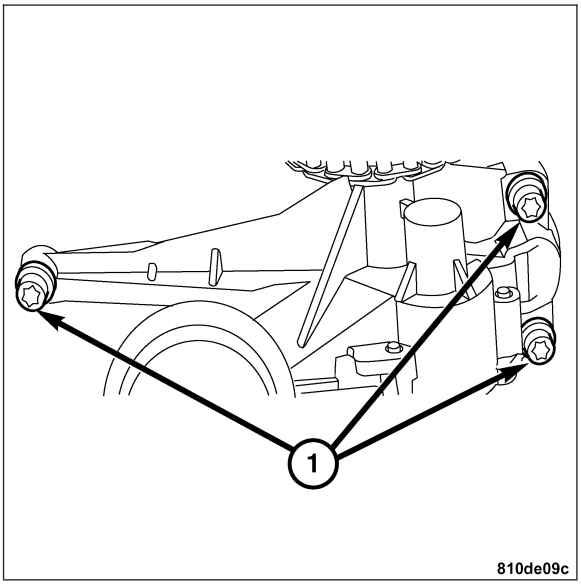

OIL PUMP DRIVE CHAIN

REMOVAL

1. Remove the timing chain cover. **Refer to Page 9-685**.
2. Remove the oil pump. **Refer to Page 9-674**.
3. Remove the oil pump drive chain (2) and disgard. Inspect the oil pump drive chain tensioner spring for wear and replace as necessary.

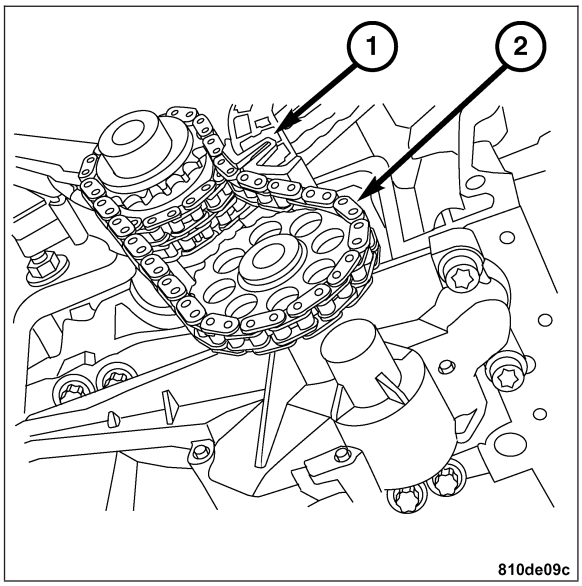

INSTALLATION

1. Check the oil pump drive chain guide for wear and replace as necessary.
2. Install the new oil pump drive chain and the oil pump. **Refer to Page 9-676**.
3. Install the timing chain cover. **Refer to Page 9-688**.

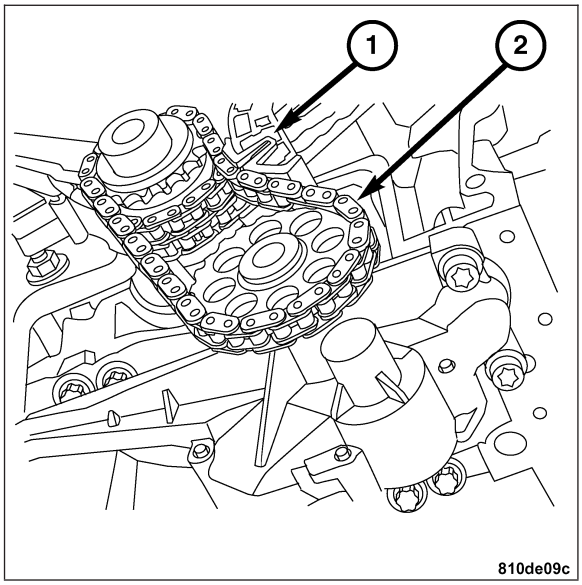

OIL PRESSURE RELIEF VALVE

DESCRIPTION

The oil pressure relief valve cannot be adjusted or repaired. If faulty, worn, or damaged, the entire oil pump assembly must be replaced.

INTAKE MANIFOLD

DESCRIPTION

A magnesium two-stage resonance intake manifold has long runners to enhance low-speed torque and shorter runners for added horsepower. The runners, and the plenum chamber that feeds them, nest between the cylinder banks. Complex components of the multi-piece die-cast manifold are adhesive bonded together.

OPERATION

A variable intake manifold provides a marked supercharging effect to air flow entering the cylinders as the intake valve closes. Long individual tubes for each cylinder that enhance low-speed torque have a tuned length of 32.9 inches (835 mm). This length is achieved by coiling the tubes in the valley of the cylinder block. In these tubes, the air rotates 450 degrees from entry to cylinder head. To achieve a similar effect at higher speeds, a tube length of 18.3 inches (465 mm) is used. Butterfly valves in the walls of the long tubes, operated by the engine control computer, switch the flow between long and short flow paths at approximately 3700 rpm. The engine speed for switchover to the short tubes provides an imperceptible change in engine torque, because the maximum supercharging effect is consistent throughout the 2000 to 5000-rpm speed range.

DIAGNOSIS AND TESTING - INTAKE MANIFOLD LEAKS

An intake manifold air leak is characterized by lower than normal manifold vacuum. Also, one or more cylinders may not be functioning.

WARNING: USE EXTREME CAUTION WHEN THE ENGINE IS OPERATING. DO NOT STAND IN A DIRECT LINE WITH THE FAN. DO NOT PUT YOUR HANDS NEAR THE PULLEYS, BELTS OR THE FAN. DO NOT WEAR LOOSE CLOTHING.

1. Start the engine.
2. Spray a small stream of water (Spray Bottle) at the suspected leak area.
3. If engine RPM'S change, the area of the suspected leak has been found.
4. Repair as required.

REMOVAL

1. Disconnect the negative battery cable.
2. Remove the air cleaner housing. **Refer to Page 9-608**.
3. Remove the mass air flow sensor. **Refer to Page 14-37**.
4. Remove the fuel rail with fuel injectors. **Refer to Page 14-33**.
5. Disconnect the vacuum lines to the EGR valve, brake booster, crankcase ventilator and purge valve from the intake manifold.
6. Disconnect the engine harness connectors.

7. Disconnect the EGR pipe (1) at the EGR valve (2).

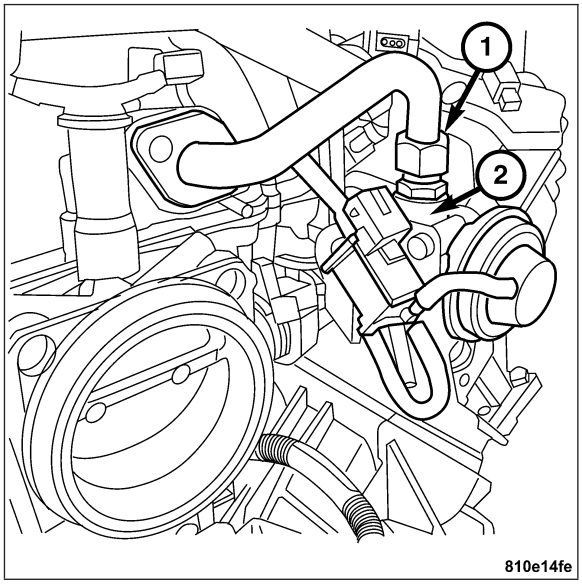

8. Remove the air pump switchover valves (4).
9. Remove the bolts, the intake manifold (1) and the gaskets (2).

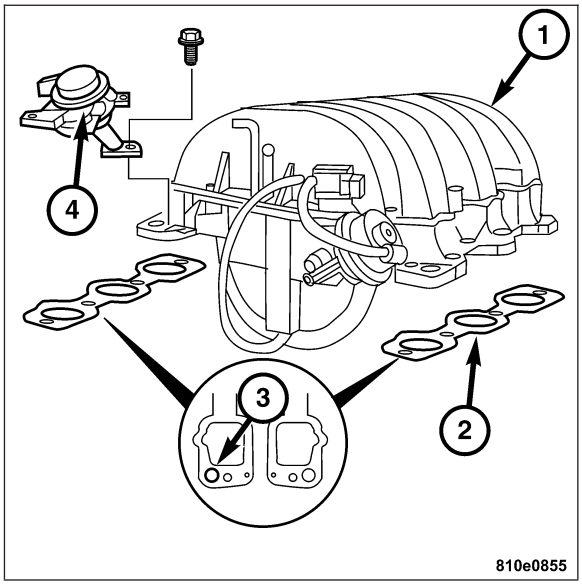

INSTALLATION

1. Clean the gasket surfaces of the cylinder heads and the intake manifold.
2. Position the intake manifold (1) on the cylinder heads with new gaskets (2) in place.
3. Install the intake manifold bolts and tighten to 20 N·m (15 ft. lbs.).
4. Install the air pump switchover valves (4). Tighten the bolts to 20 N·m (15 ft. lbs.).

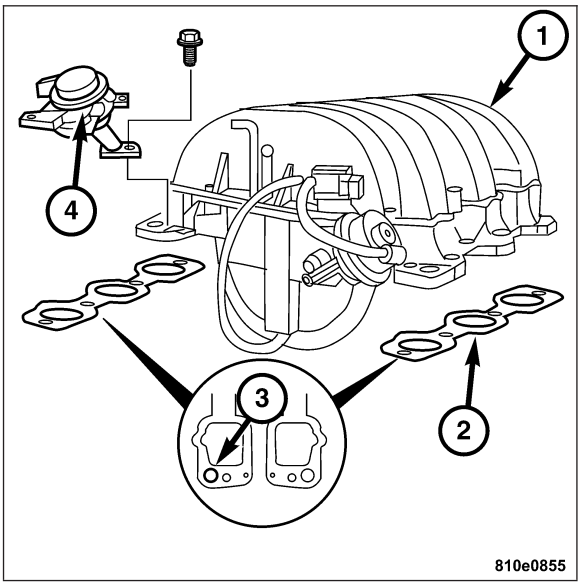

5. Connect the EGR pipe fitting (1) to the EGR valve (2). Tighten the EGR pipe fitting to 40 N·m (30 ft. lbs.).
6. Install the mass air flow sensor. **Refer to Page 14-39**.
7. Connect the engine harness connectors.
8. Connect the vacuum lines at the crankcase ventilator, purge valve, EGR valve, and the brake booster.
9. Install the fuel rail with fuel injectors. **Refer to Page 14-34**.
10. Install the air cleaner housing. **Refer to Page 9-608**.
11. Connect the negative battery cable.
12. Start the engine and check for leaks.

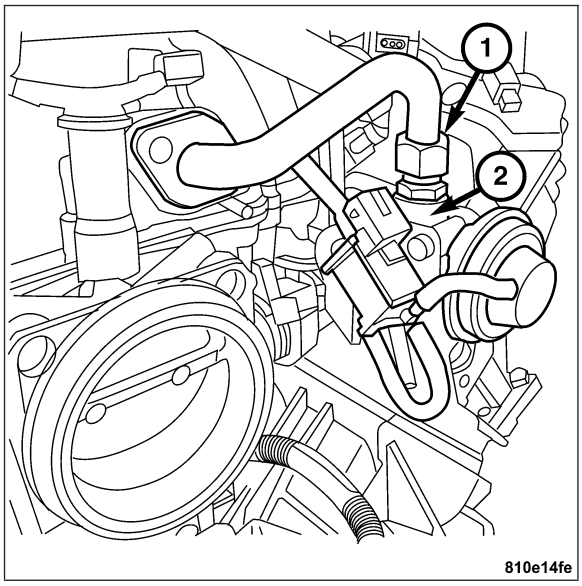

EXHAUST MANIFOLD

DESCRIPTION

Thin-wall air-gap construction for the exhaust manifolds reduces underhood temperature by keeping heat in the exhaust stream. This also allows the catalytic converter to be mounted in a more advantageous position for packaging, under the floor instead of close to the engine. Stainless steel inner manifolds, separated by an air space from two-piece stainless steel outer shells, reduce heat loss to the air in much the same way thermo-pane glass reduces heat loss through windows. Hydro-formed inner manifolds, through which the exhaust flows, provide precise dimensional control. They are assembled to the cylinder head flanges, exhaust pipe flanges and the outer shells by laser welding.

REMOVAL

LEFT SIDE

1. Disconnect the negative battery cable.
2. Remove the air cleaner housing. **Refer to Page 9-608**.
3. Raise and support the vehicle.
4. Remove the lower splash shield screws (1) and the splash shield.

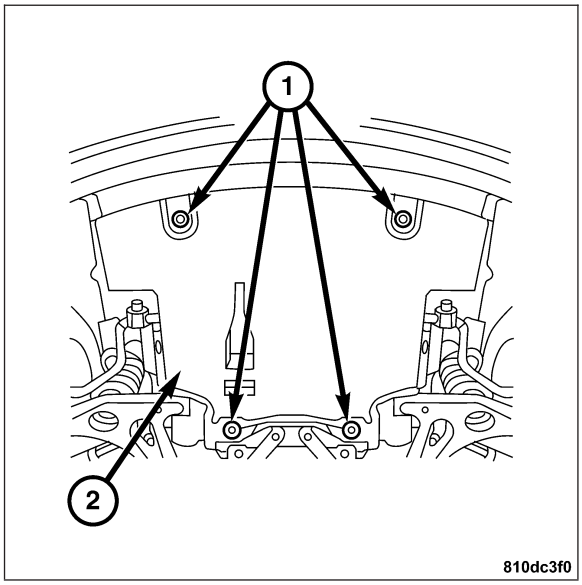

5. Remove the left side catalytic converter. **Refer to Page 11-7**.
6. Remove the exhaust manifold nuts (3).
7. Lower the vehicle.
8. Remove the left side exhaust manifold (1) and gaskets (2) from the engine compartment.

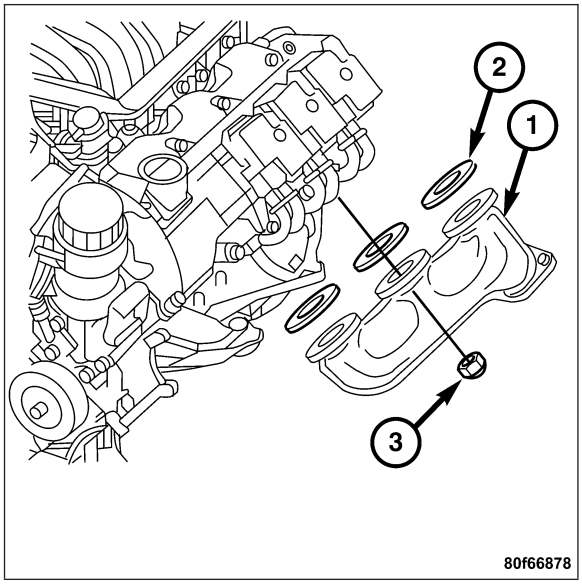

REMOVAL- RIGHT SIDE

1. Disconnect the negative battery cable.
2. Remove the air cleaner housing. **Refer to Page 9-608**.
3. Raise and support the vehicle.
4. Remove the lower splash shield screws (1) and the splash shield.

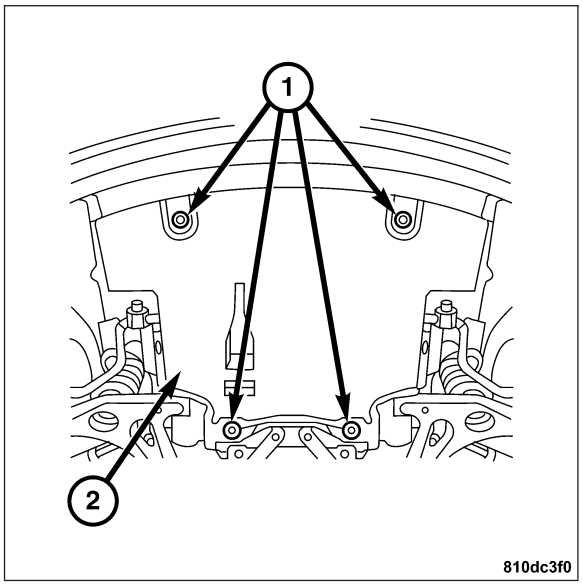

5. Remove the right side catalytic converter. **Refer to Page 11-5**.
6. Remove exhaust manifold nuts (3), the exhaust manifold (2), and the gaskets (1) from below the vehicle.

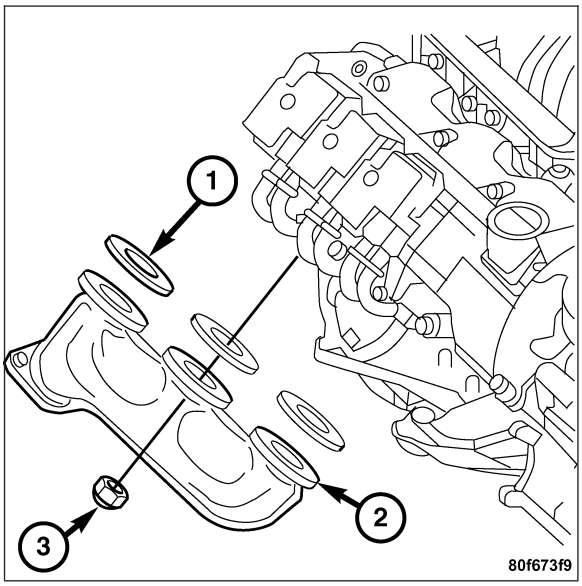

INSTALLATION

LEFT SIDE

1. Position the manifold (1) and gaskets (2) on the cylinder head. Install the manifold nuts (3) and tighten to 35 N·m (26 ft. lbs.).
2. Install the left side catalytic converter. **Refer to Page 11-7**.

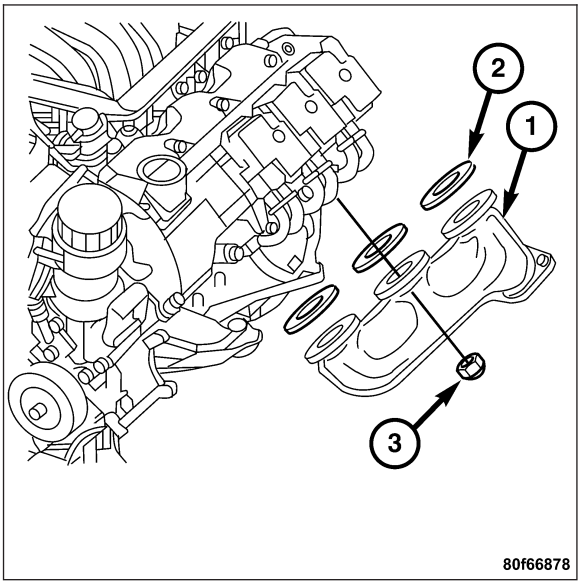

3. Install the lower splash shield and screws (1). Tighten the screws to 5 N·m (44 in. lbs).
4. Lower the vehicle.
5. Install the air cleaner. **Refer to Page 9-608**.
6. Connect the negative battery cable.
7. Start the engine and check for exhaust leaks.

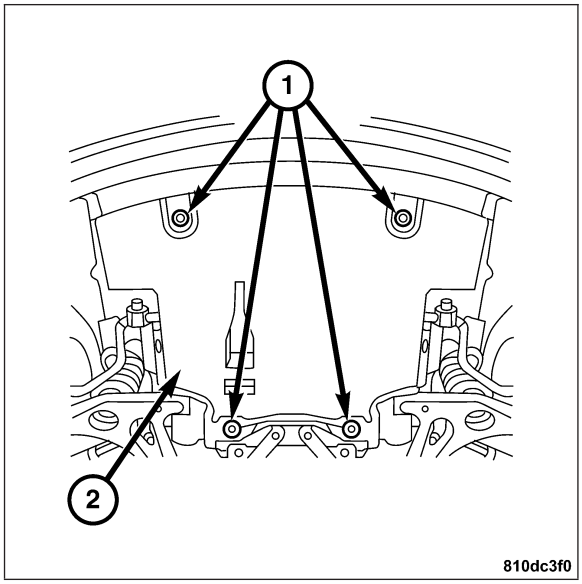

INSTALLATION - RIGHT SIDE

1. Position the manifold (2) and gaskets (1) on the cylinder head.
2. Install the manifold nuts (3) and tighten to 35 N·m (26 ft. lbs.).
3. Install the right side catalytic converter. **Refer to Page 11-7**.

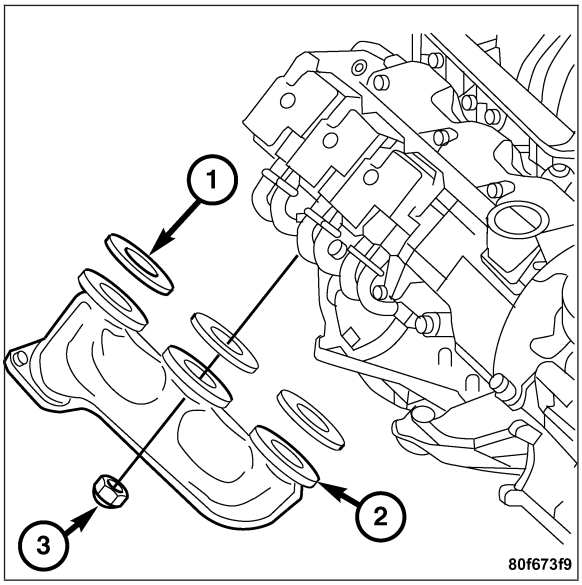

4. Install the lower splash shield and screws (1). Tighten the screws to 5 N·m (44 in. lbs.).
5. Lower the vehicle.
6. Install the air cleaner. **Refer to Page 9-608**.
7. Connect the negative battery cable.
8. Start the engine and check for exhaust leaks.

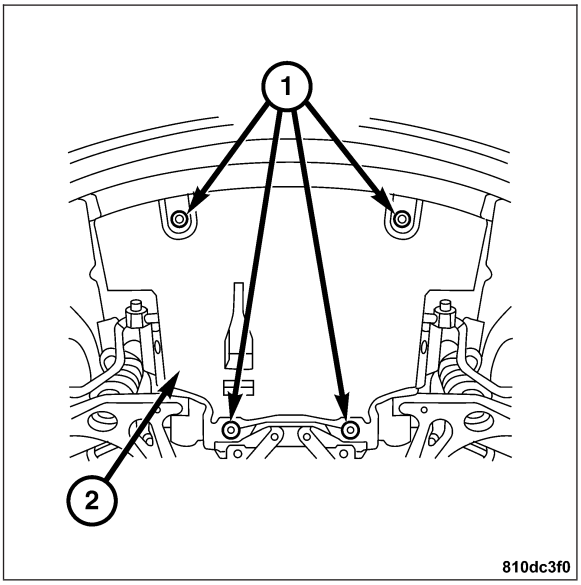

TIMING CHAIN TENSIONER

REMOVAL

1. Remove the generator. **Refer to Page 8F-28**.

2. Remove the timing chain tensioner (1).

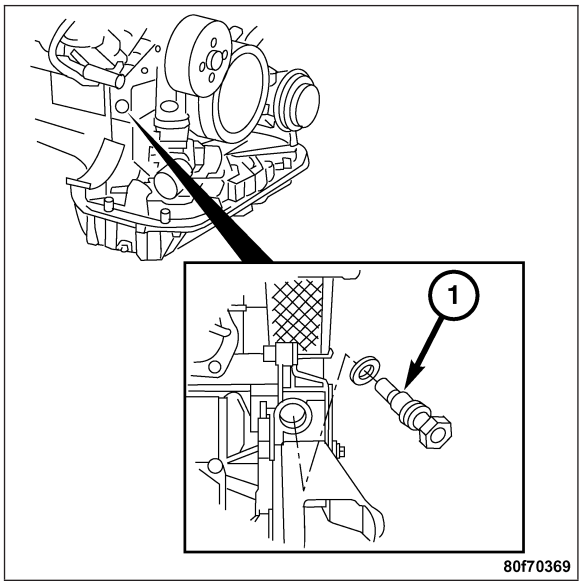

INSTALLATION

1. Install the timing chain tensioner. Tighten the timing chain tensioner to 80 N·m (59 ft. lbs.).
2. Install the generator. **Refer to Page 8F-29**.

TIMING CHAIN COVER

REMOVAL

1. Remove the engine from the vehicle. **Refer to Page 9-592**.
2. Separate the engine from the transmission. For manual **Refer to Page 21-344**, for automatic **Refer to Page 21-210**.

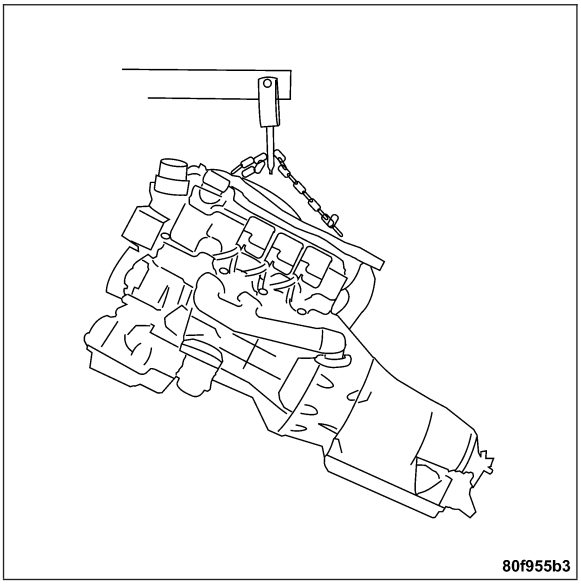

3. Remove the clutch cover (1) and the clutch (2) if equipped. **Refer to Page 6-9**.
4. Mount the engine on a stand.

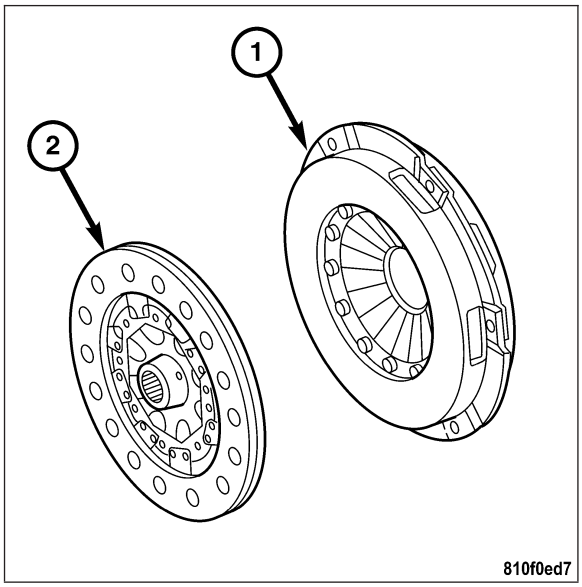

5. Remove the accessory drive belt. **Refer to Page 7-45**.

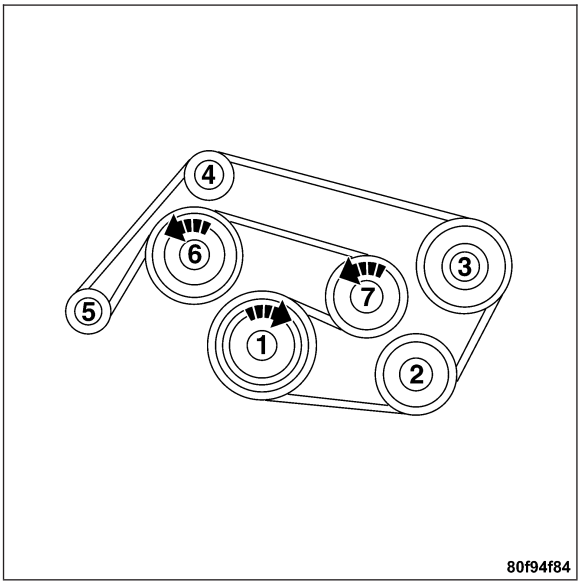

6. Remove the lower oil pan. Remove the bolts (1) and remove the upper oil pan. **Refer to Page 9-663**.
7. Remove the power steering pump. **Refer to Page 19-52**.
8. Remove the idler pulley.

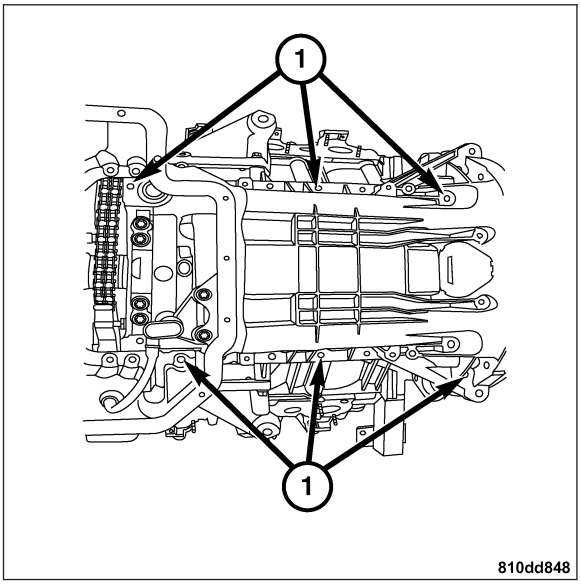

9. Remove the bolt (1) and remove the vibration damper (2). **Refer to Page 9-651**.
10. Remove the generator. **Refer to Page 8F-28**.

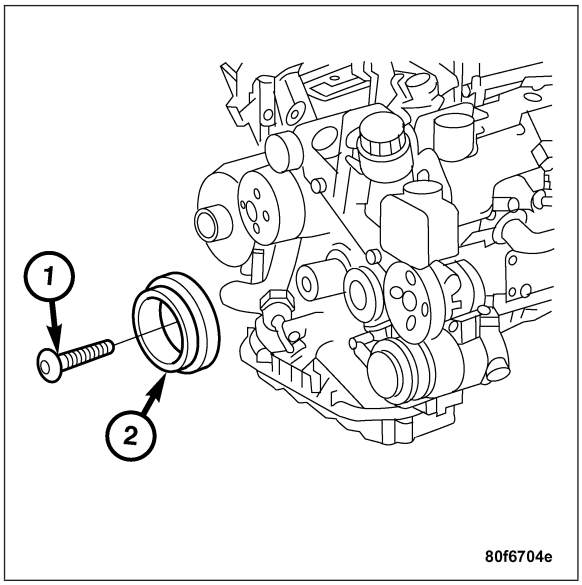

11. Rotate the crankshaft to 40° ATDC.

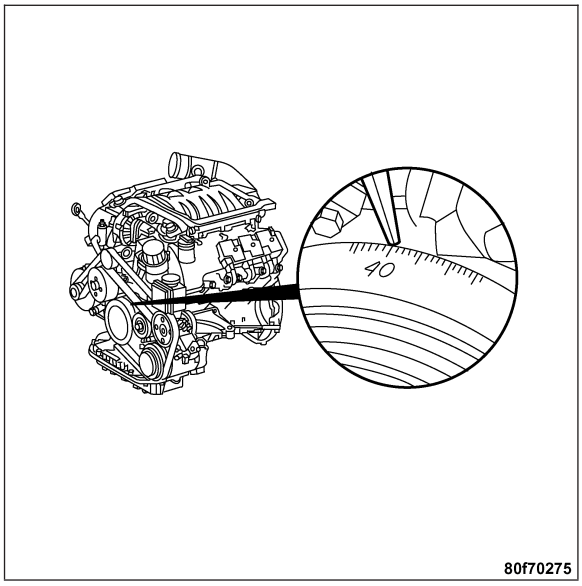

12. Remove the starter. **Refer to Page 8F-43**.
13. Using Special Tool 9102 (1) Flywheel Locking Tool, lock the flywheel by inserting the tool into the starter opening.

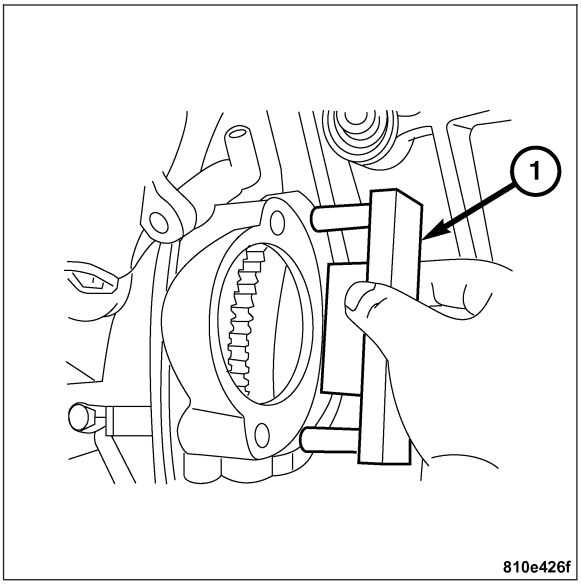

14. Remove the cylinder head bolts (1) and remove the cylinder heads. **Refer to Page 9-611**.
15. Remove the timing chain tensioner. **Refer to Page 9-684**.

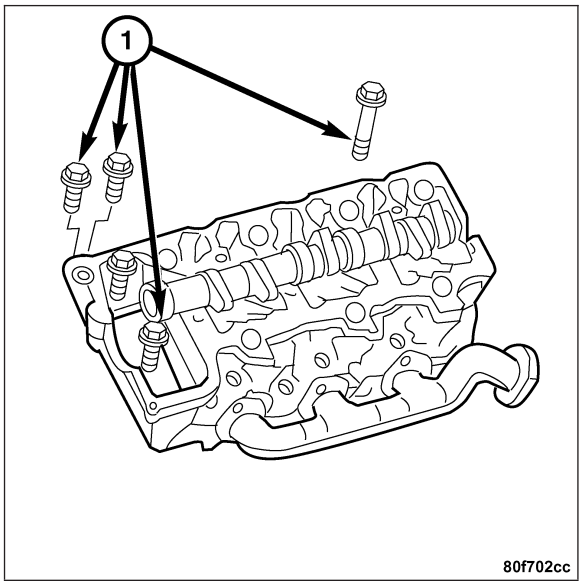

16. Remove the timing chain cover bolts as shown. Remove the timing chain cover.

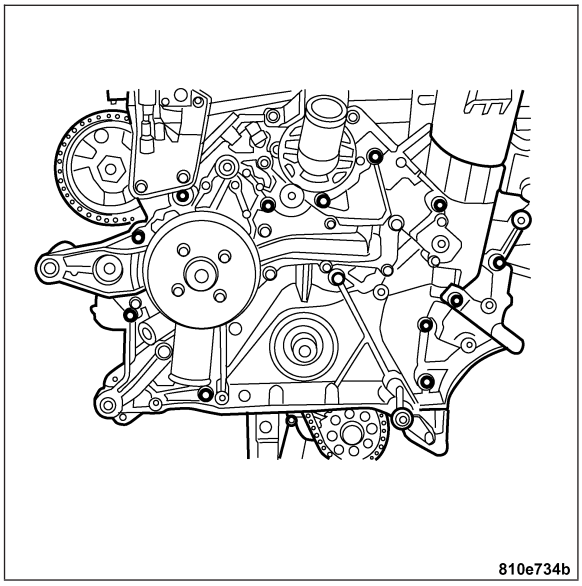

INSTALLATION

Note: Ensure all sealing surfaces have been cleaned and prepared properly for effective repair. Multi-Layer Steel (MLS) gaskets require a scratch free sealing surface.

1. Install the cylinder heads, and install the bolts (1). **Refer to Page 9-614**.

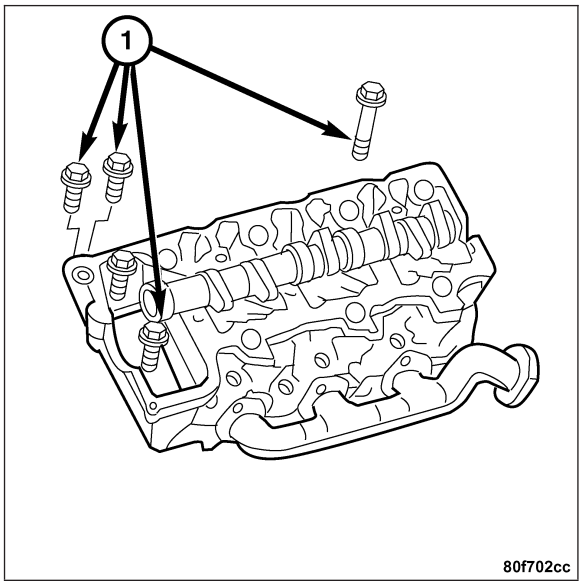

2. Align the basic valve timing to 40 deg. ATDC. **Refer to Page 9-695**.

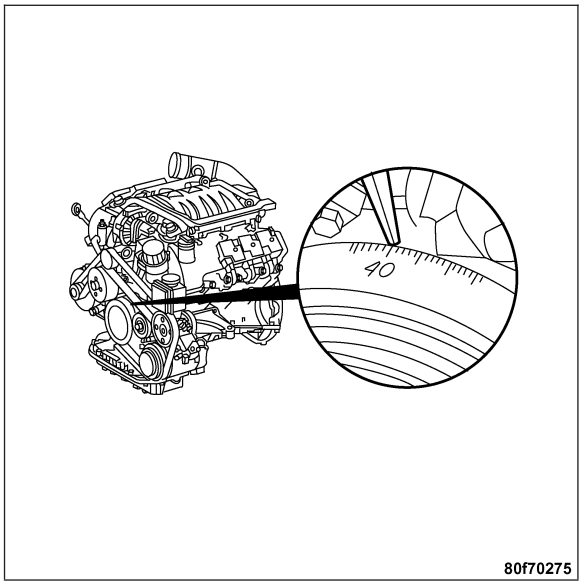

Note: Apply sealer ONLY to the area marked (1) as shown. If porous points are visible at the cylinder heads or at the rear of the engine near the sealing surface of the cylinder head gasket, apply sealant at these points. The sealant must be applied only as a 2.0 mm ± 0.5 mm bead, assembled within 10 minutes, and not be flattened or spread.

Note:

3. Apply a 1.5 to 2.0 mm bead of Loctite 5203 or equivalent sealer to the area marked (1) as shown.
4. Position the timing chain cover on the front of the engine.

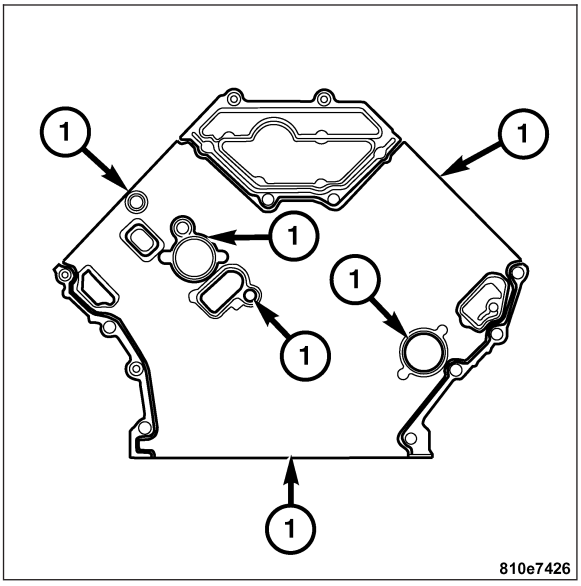

Note: Ensure that the bolts indicated by the arrows are installed with thread sealer prior to assembly.

5. Install the timing chain cover bolts and tighten to 20 N·m (15 ft. lbs.).

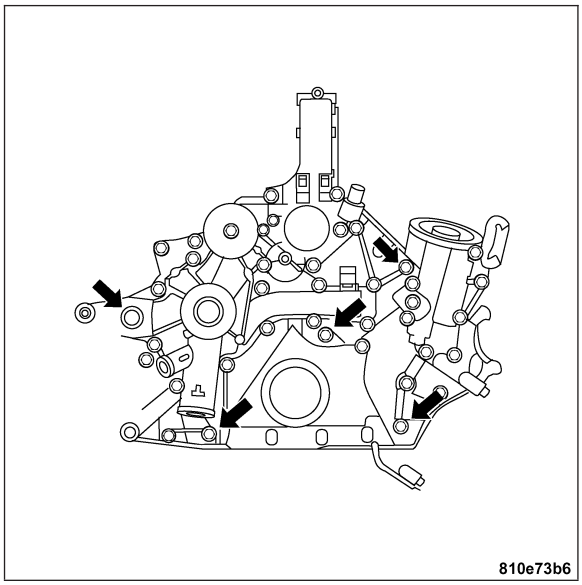

6. Install the timing chain tensioner (1), tighten to 80 N·m (59 ft. lbs.). **Refer to Page 9-685**.

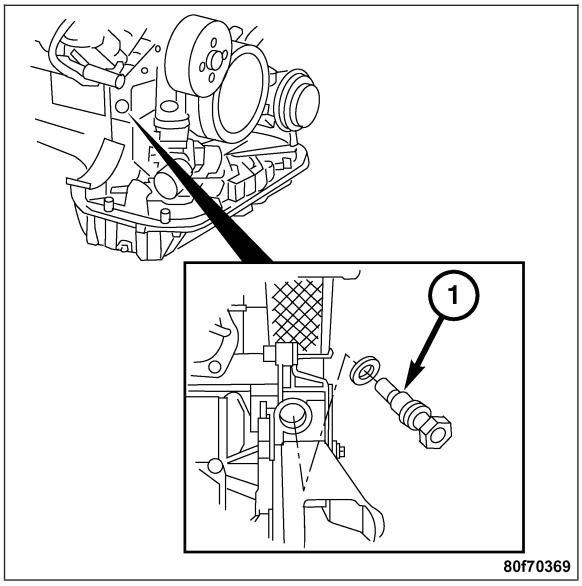

7. Remove Special Tool 9102 Flywheel Locking Tool (1) from the engine.
8. Install the starter. **Refer to Page 8F-44**.
9. Install a new front crankshaft radial oil seal. **Refer to Page 9-636**.
10. Install the generator. **Refer to Page 8F-29**.

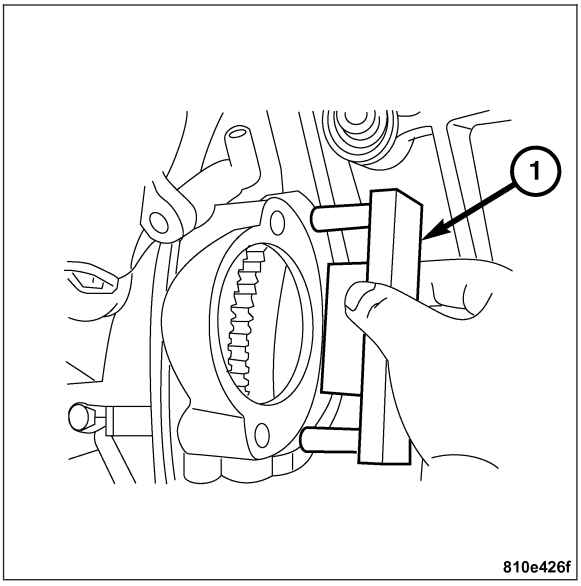

11. Install the vibration damper. **Refer to Page 9-652**.
12. Install the idler pulley. **Refer to Page 7-48**.

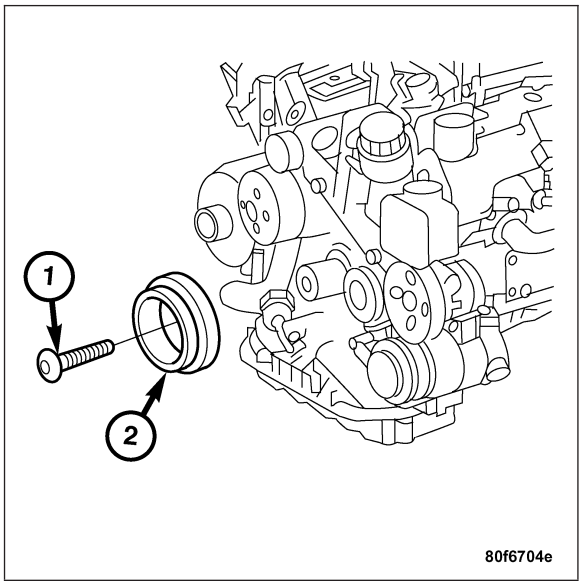

13. Install the power steering pump, return hose (1), and pressure hose (2). **Refer to Page 19-53**.

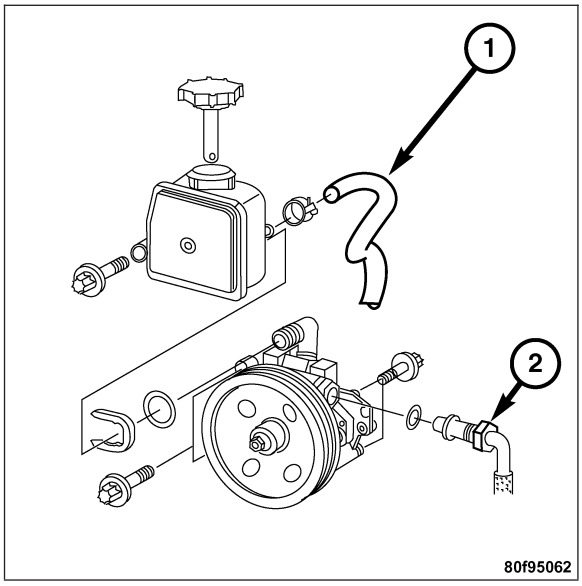

14. Install the upper and lower (1) oil pan. **Refer to Page 9-663**.

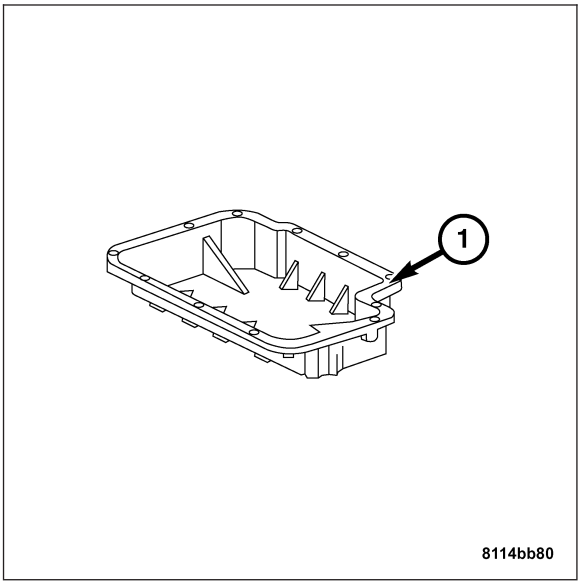

15. Install the accesory drive belt. **Refer to Page 7-46**.

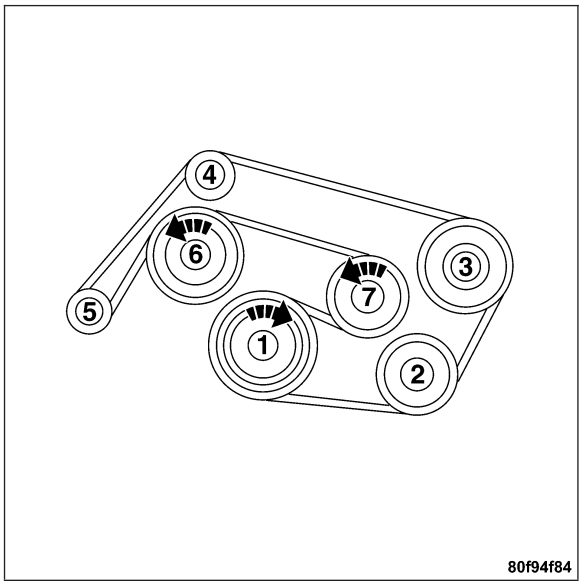

16. Remove the engine from the stand.

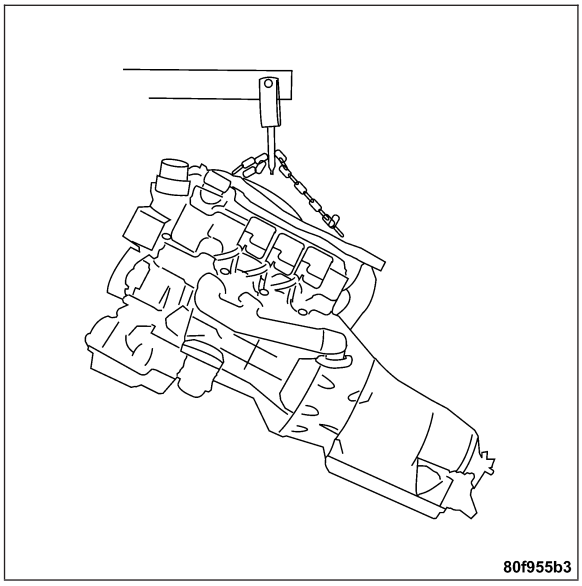

17. Install the clutch if equipped. **Refer to Page 6-10**.
18. Install the transmission on the engine. **Refer to Page 21-347** or **Refer to Page 21-227**.
19. Install the engine in the vehicle. **Refer to Page 9-597**.

TIMING CHAIN

REMOVAL

1. Remove the timing chain cover. **Refer to Page 9-685**.

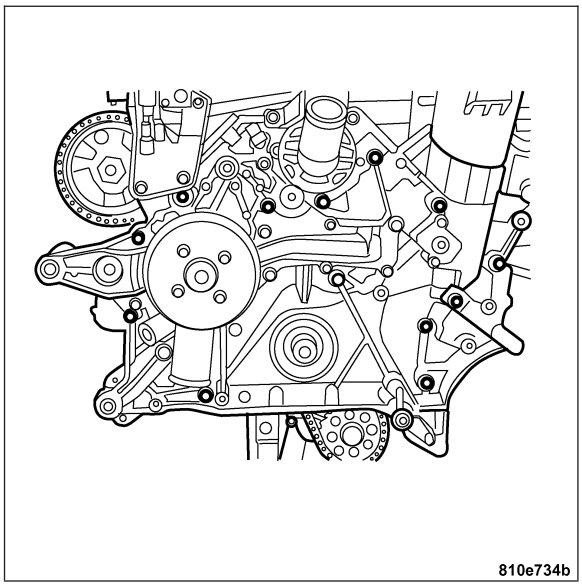

2. Remove the oil pump drive chain (2) and tensioner (1). **Refer to Page 9-674**.

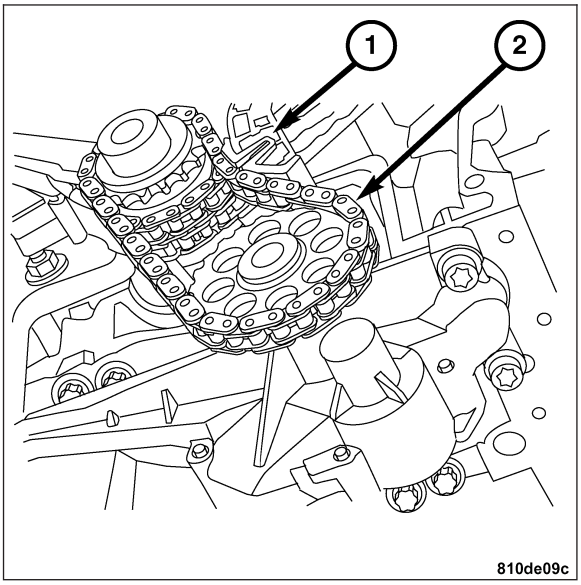

3. Remove the left and right camshaft sprocket bolts (1).
4. Remove the timing chain and camshaft sprockets.

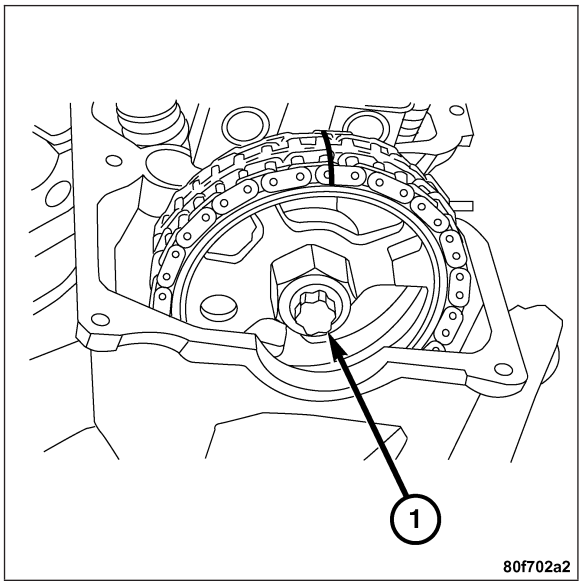

5. Remove the timing chain crankshaft sprocket (2).
6. Clean and inspect all gasket surfaces, chain guides, and sprockets for wear or damage. Repair or replace as necessary.

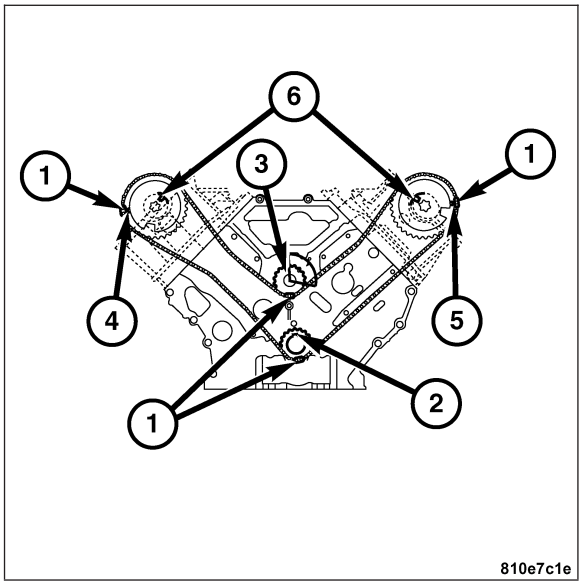

INSTALLATION

1. Invert the engine on the engine stand.
2. Install the crankshaft sprocket (2).

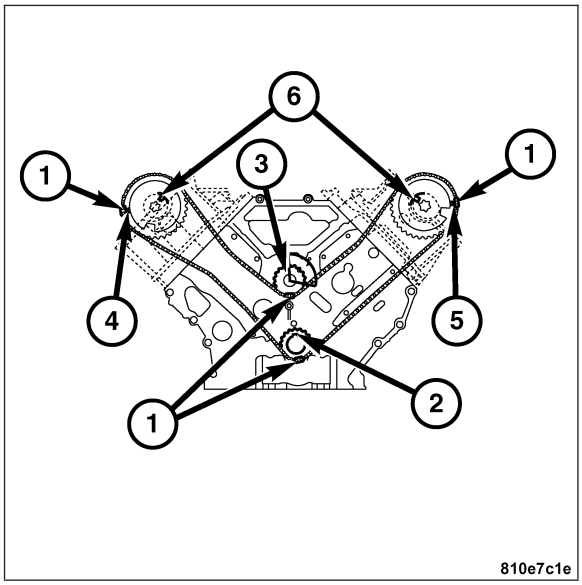

3. Ensure the crankshaft has maintained 40 degrees ATDC. If not, rotate until aligned with 40 degree marking.

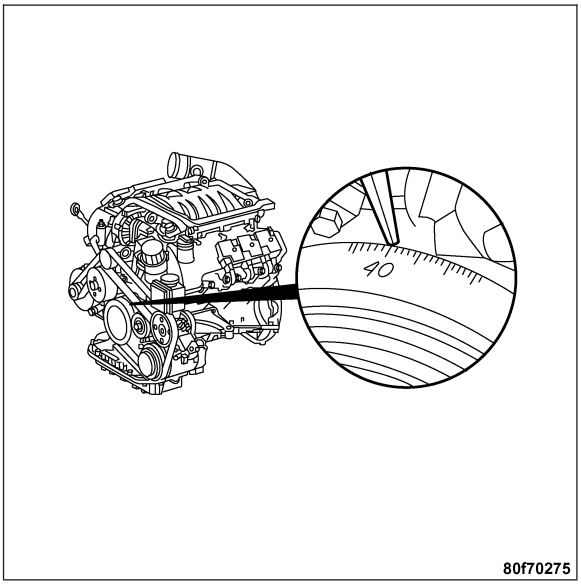

4. Align the balance shaft sprocket with the timing mark (3) and the copper teeth (1) of the timing chain.
5. Insert the camshaft sprockets (6) into the timing chain and align the camshaft sprocket timing marks (4) and (5) with the copper teeth (1) of the timing chain.

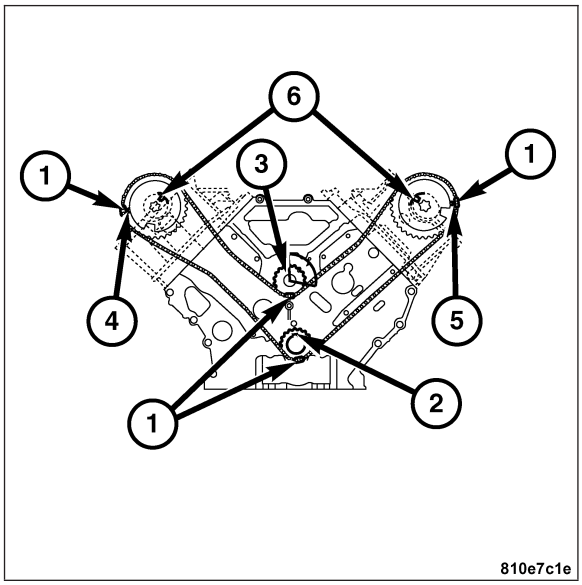

6. Install the timing chain with the sprockets and route within in the timing chain guides (1).

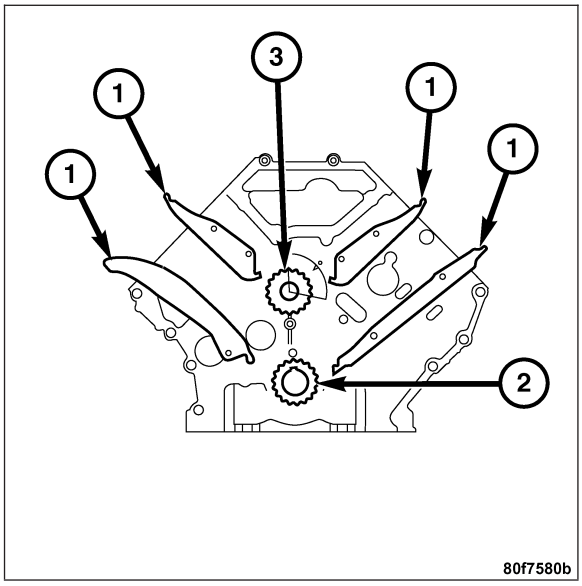

7. Using Special Tools 9104 (1) and 9105 Camshaft Locating Plates, lock the camshaft sprockets.

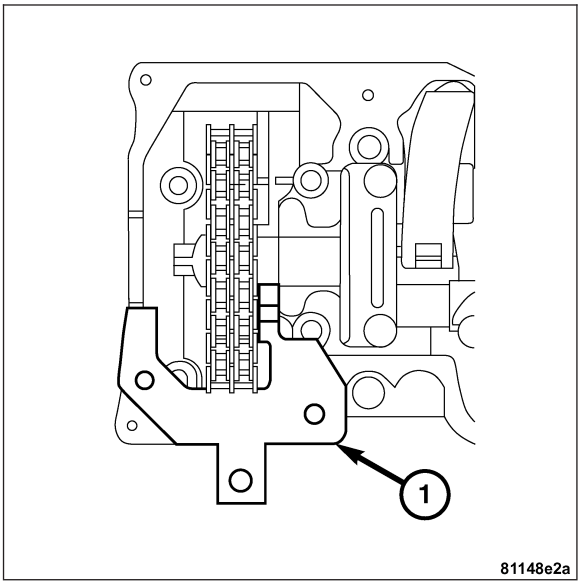

8. Install the oil pump, the oil pump drive chain (2) and the oil pump drive chain tensioner (1). **Refer to Page 9-676**.

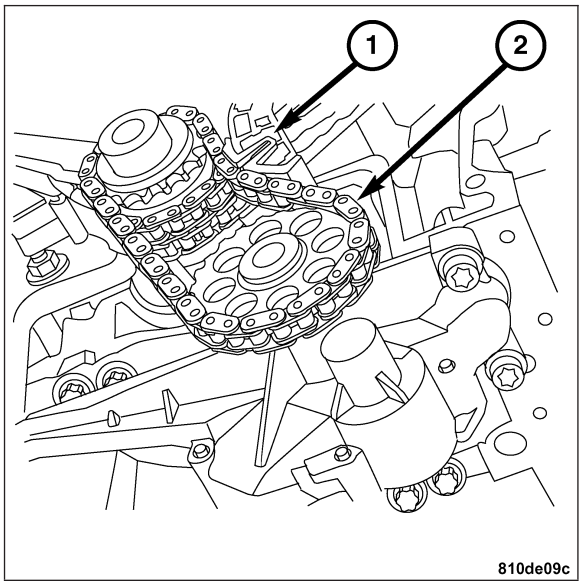

9. Rotate the engine to the upright position.
10. Install the timing chain cover. Tighten the bolts to 20 N·m (15 ft. lbs.). **Refer to Page 9-688**.
11. Remove Special Tools 9104 and 9105 Camshaft Locating Plates from the camshaft sprockets.

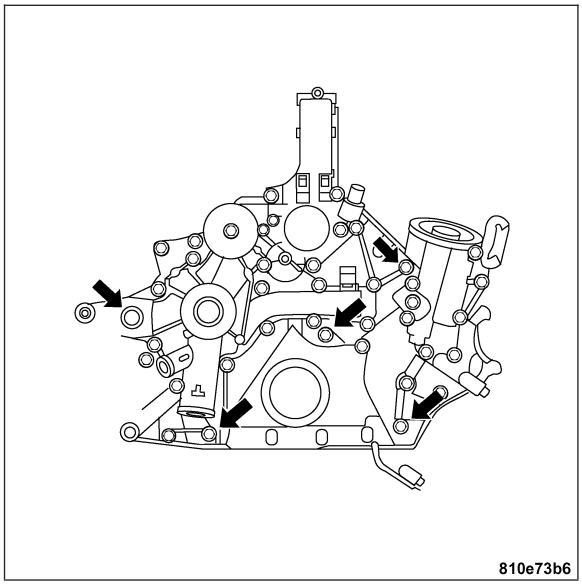

BALANCE SHAFT

DESCRIPTION

A balance shaft is used to compensate for the rocking motion inherent in a 90-degree V-6 engine. It rotates at engine speed in the opposite direction. Mounted above the crankshaft in the cylinder block, it is driven by the timing chain.

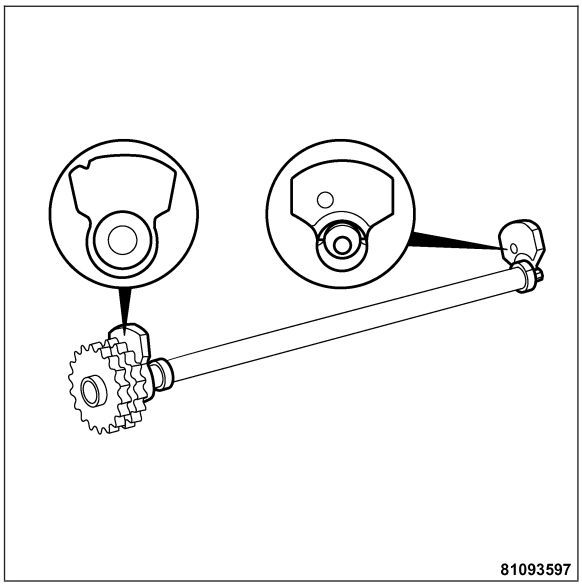

REMOVAL

1. Remove the timing chain cover. **Refer to Page 9-685**.

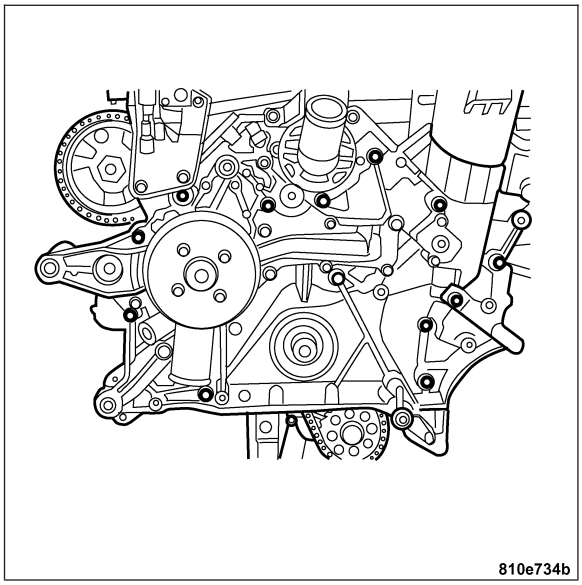

2. Rotate the crankshaft and align the basic valve timing to 40 degrees ATDC.

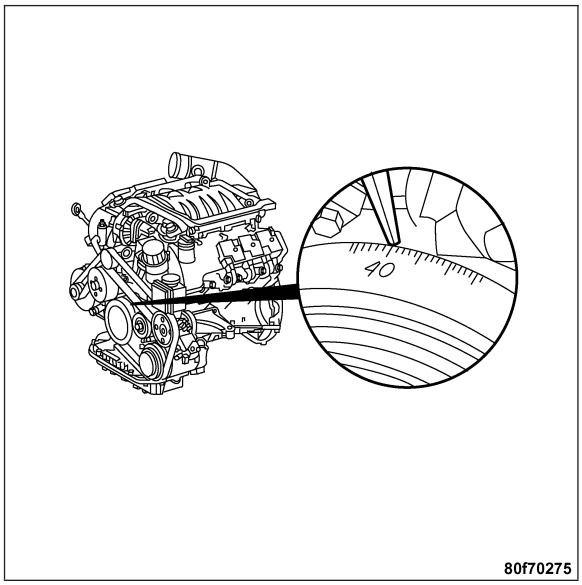

3. Remove the starter. **Refer to Page 8F-43**.
4. Using Special Tool 9102 Flywheel Locking Tool (1), lock the flywheel.

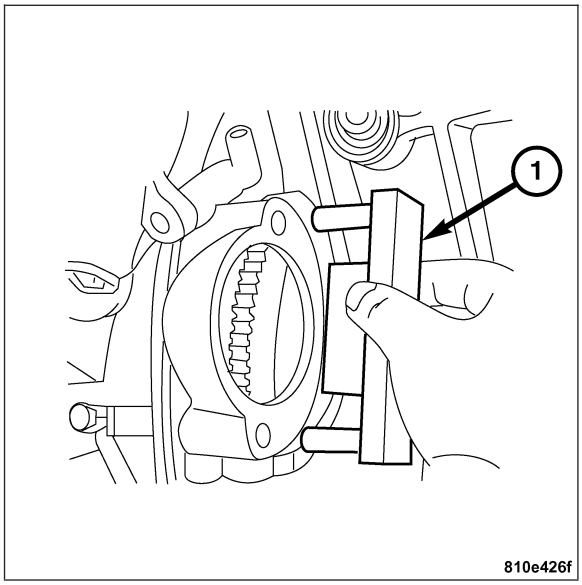

5. Remove the timing chain. **Refer to Page 9-693**.
6. Remove the rear crankshaft oil seal. **Refer to Page 9-634**.

7. Hold the balance shaft rear counter weight (1) with a drift, remove the rear retaining bolt (2).
8. Remove the balance shaft rear counter weight (1) from the balance shaft.

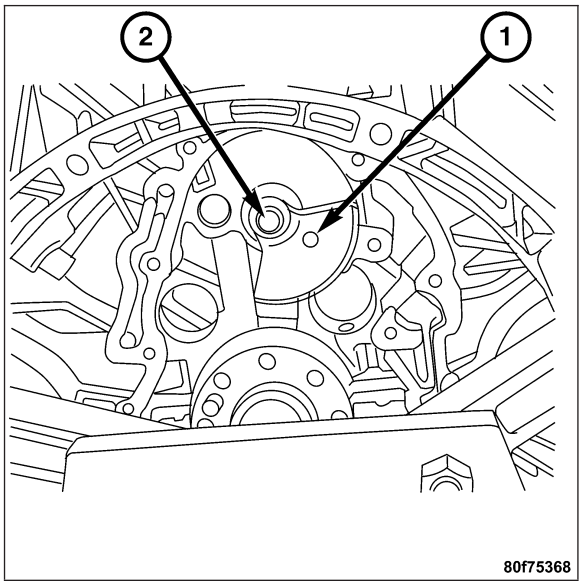

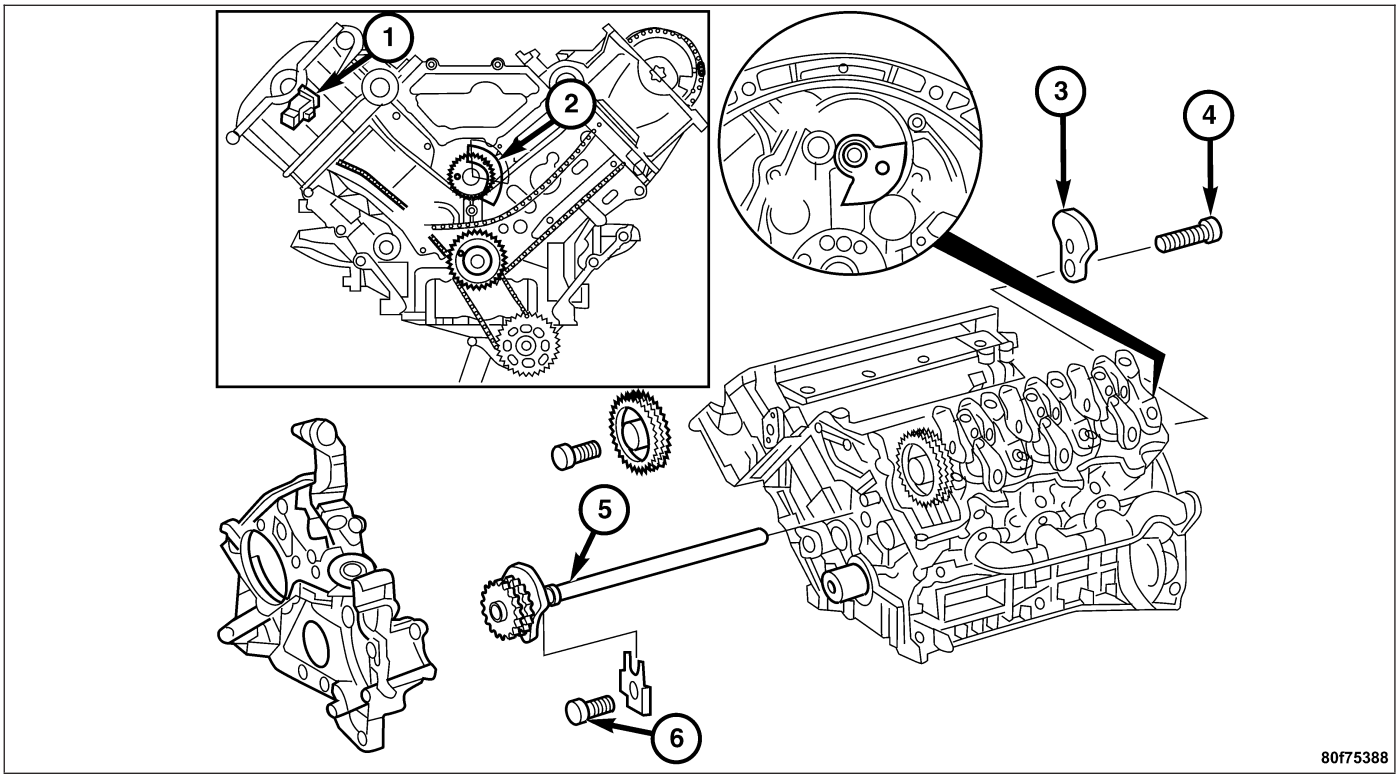

1 - CAMSHAFT POSITION SENSOR
2 - BALANCE SHAFT FRONT COUNTER WEIGHT
3 - BALANCE SHAFT REAR COUNTER WEIGHT
4 - REAR RETAINING BOLT
5 - BALANCE SHAFT
6 - LOCKING PLATE BOLT

9. Remove the balance shaft locking plate bolt (6) and locking plate at the front of the engine block.
10. Remove the balance shaft (5) from the front of the engine.

INSTALLATION

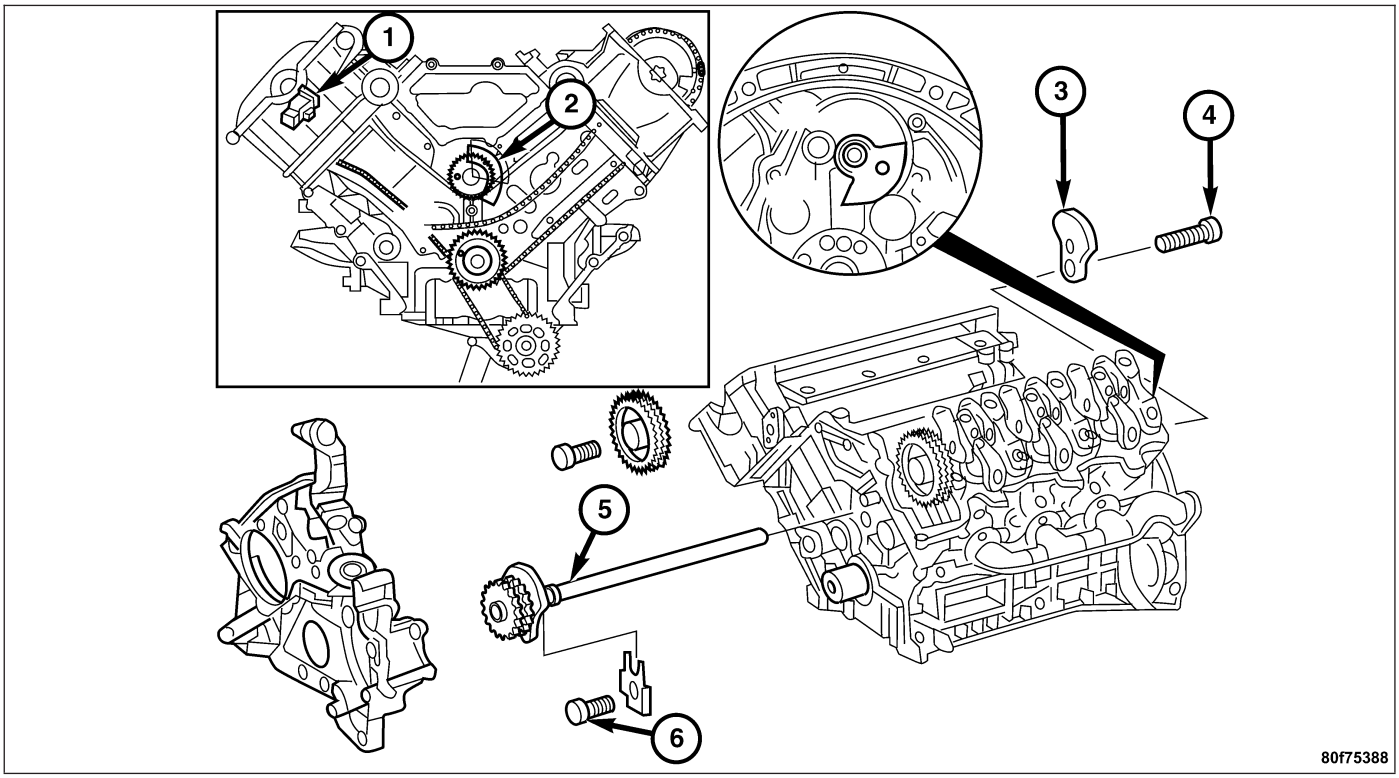

1 - CAMSHAFT POSITION SENSOR
2 - BALANCE SHAFT FRONT COUNTER WEIGHT
3 - BALANCE SHAFT REAR COUNTER WEIGHT
4 - REAR RETAINING BOLT
5 - BALANCE SHAFT
6 - LOCKING PLATE BOLT

1. Position the balance shaft (5) into the engine balance shaft bore from the front.

Note: Balance shaft rear retaining bolt (4) must be replaced if length exceeds 50 mm.

2. Install the balance shaft rear counter weight (3) onto the balance shaft (5) and install the rear retaining bolt (4). Tighten the bolt to 20 N·m (15 ft. lbs.). Rotate the bolt (4) an additional 90°.
3. Install the balance shaft locking plate and locking plate bolt (6). Tighten the balance shaft locking plate bolt to 20 N·m (15 ft. lbs.).
4. Install the crankshaft rear radial oil seal. **Refer to Page 9-634**.

5. Install the timing chain. **Refer to Page 9-695**.

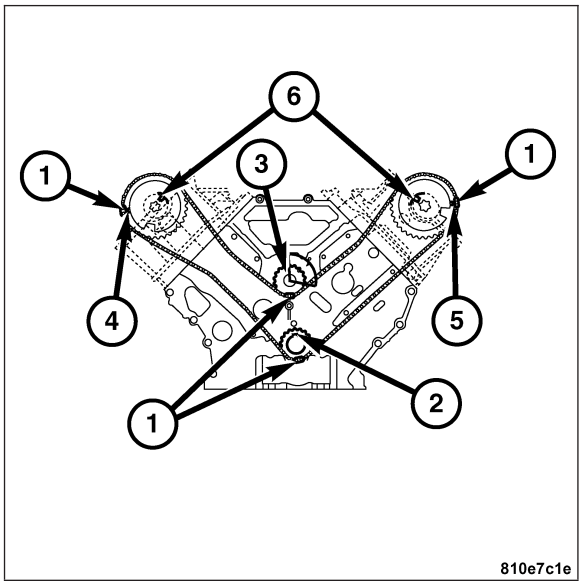

6. Install the timing chain cover. **Refer to Page 9-688**.

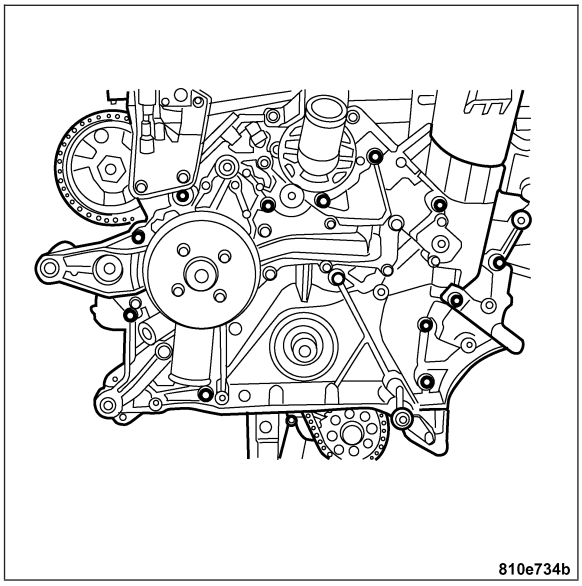

7. Remove the Special Tool 9102 Flywheel Locking Tool (1) from the engine and install the starter. **Refer to Page 8F-44**.

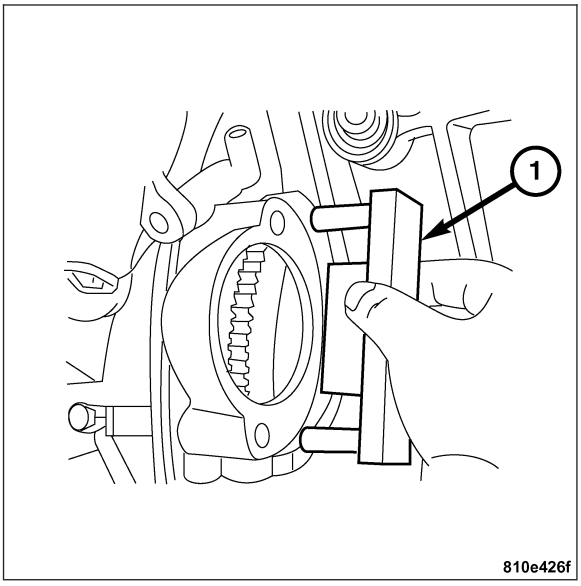

TIMING CHAIN GUIDES

REMOVAL

1. Remove the timing chain (1). **Refer to Page 9-693**.

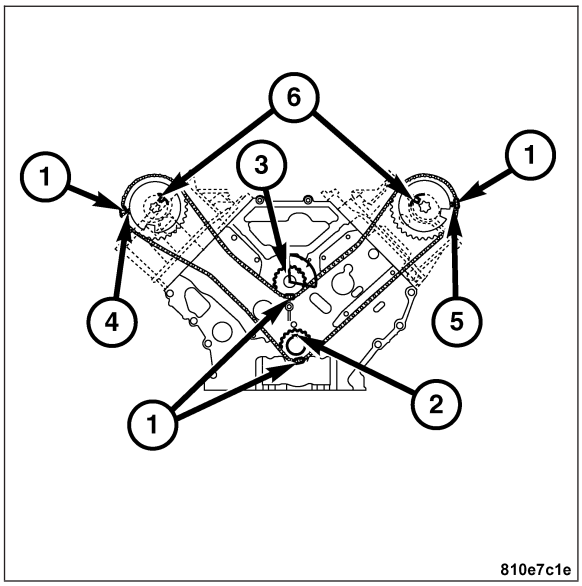

2. Remove the timing chain guides (1) off of the mounting pins. Inspect and replace worn or damaged guides as required.

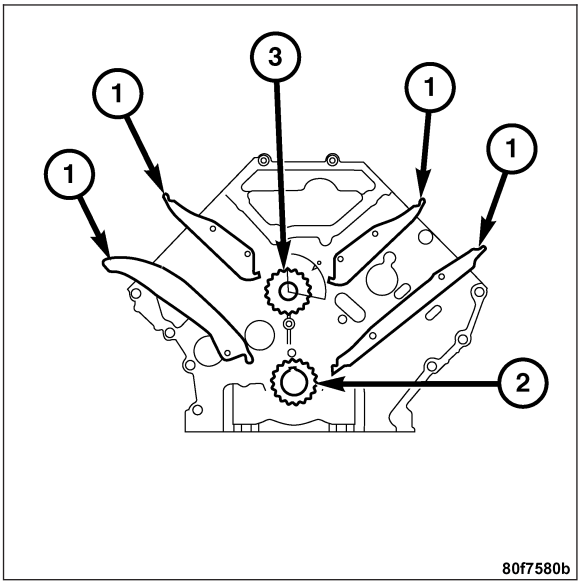

INSTALLATION

1. Install the timing chain guides on the mounting pins. Lubricate surface with engine oil.
2. Install the timing chain. **Refer to Page 9-695**.

ENGINE TIMING

OPERATION

The crankshaft driven timing chain maintains camshaft (6) and balance shaft (3) operation and timing. Timing marks on the crankshaft (2) , balance shaft (3) and camshafts (5) are aligned with copper links (1) in the timing chain to keep symetrical valve and ignition performance.

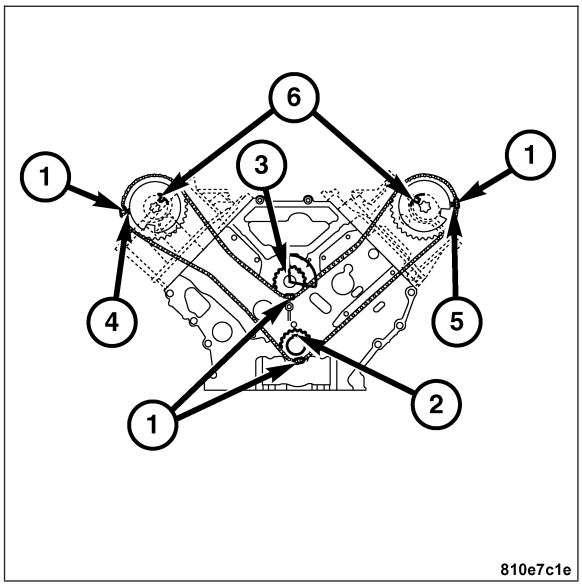

EXHAUST SYSTEM

TABLE OF CONTENTS

page

EXHAUST SYSTEM
DESCRIPTION 2
OPERATION 2
DIAGNOSIS AND TESTING - EXHAUST SYSTEM 3
INSPECTION 3
ADJUSTMENTS
EXHAUST SYSTEM ALIGNMENT 4
SPECIFICATIONS - TORQUE 4
CATALYTIC CONVERTER
REMOVAL - FRONT EXHAUST PIPES 5
INSTALLATION - FRONT EXHAUST PIPES 7
HEAT SHIELDS
REMOVAL
REMOVAL - FRONT HEAT SHIELD 8
REMOVAL - REAR HEAT SHIELD 8
INSTALLATION
INSTALLATION - FRONT HEAT SHIELD 9
INSTALLATION - REAR HEAT SHIELD 9
MUFFLER
REMOVAL 10
INSTALLATION 12
SUPPORT BRACKET AND ISOLATOR
REMOVAL 13
INSTALLATION 14

EXHAUST SYSTEM

DESCRIPTION

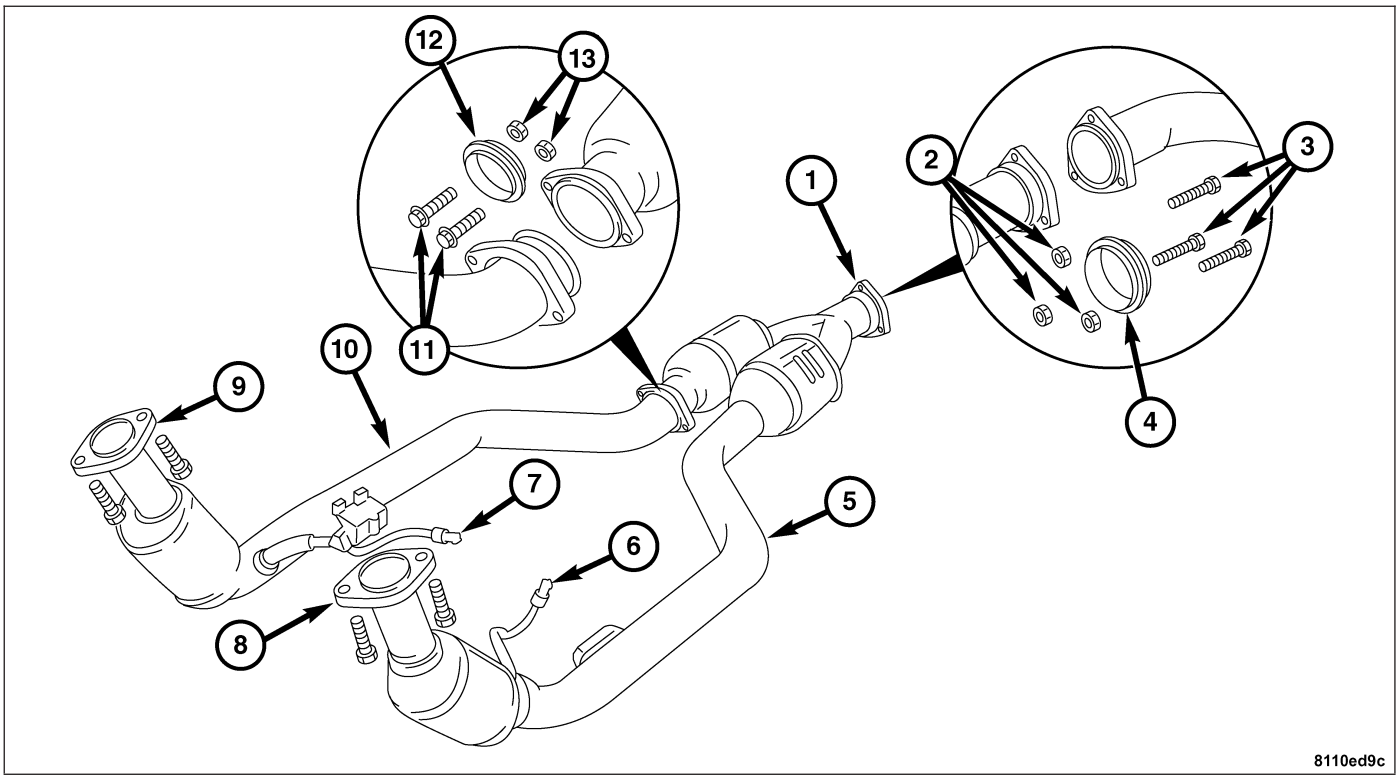

1 - CENTER EXHAUST FLANGE
2 - NUTS
3 - RETAINING BOLTS
4 - EXHAUST SEAL
5 - LEFT EXHAUST PIPE
6 - LEFT SIDE O2 SENSOR CONNECTOR
7 - RIGHT SIDE O2 SENSOR CONNECTOR
8 - LEFT SIDE MANIFOLD FLANGE
9 - RIGHT SIDE MANIFOLD FLANGE
10 - RIGHT EXHAUST PIPE
11 - RETAINING BOLTS
12 - EXHAUST SEAL
13 - NUTS

CAUTION: Avoid application of rust prevention compounds or undercoating materials to exhaust system floor pan exhaust heat shields. Light overspray near the edges is permitted. Application of coating will result in excessive floor pan temperatures and objectionable fumes.

A thin-wall air-gap insulated exhaust pipe leads to the three-way catalytic converter, which has an air-gap insulated housing. The air-gap insulation, whereby a steel shell is wrapped around the component, limits heat loss to hasten the catalytic converter action. The insulation also minimizes the need for insulation to protect the passenger compartment from excessive temperatures. A large - 812 cu. in., (13.3 L) - muffler is tuned to produce a sporty tone that meets pass-by noise levels in all markets. The rear-mounted muffler terminates in dual bright exhaust tips.

OPERATION

The exhaust emission control system is calibrated to meet ULEV I emission standards in California, Tier 2, BIN 8 emission standards in other U.S. states and Stage IV emission standards in Europe. The engine control computer and other hardware are the same for all markets, but there is some difference in the software depending on local emissions requirements. Dual ignition reduces hydrocarbon emissions (unburned fuel) released by the engine to the catalytic converter by 20 percent compared to single ignition systems. This reduction is especially beneficial during the cold start and warm up phases of operation, which is when a majority of the tailpipe emissions occur on today's cars because the catalytic converter has not yet reached its operating temperature. The exhaust system channels exhaust gases from the engine and away from the vehicle.

DIAGNOSIS AND TESTING - EXHAUST SYSTEM

EXHAUST SYSTEM DIAGNOSIS CHART

CONDITION	POSSIBLE CAUSE	CORRECTION
EXCESSIVE EXHAUST NOISE	1. Leaks at pipe joints.	1. Tighten clamps to specified torque at leaking joints.
	2. Burned or blown out muffler.	2. Replace muffler assembly..
	3. Burned or rusted-out exhaust pipe.	3. Replace exhaust pipe.
	4. Exhaust pipe leaking at manifold flange.	4. Tighten connection attaching nuts.
	5. Exhaust manifold cracked or broken.	5. Replace exhaust manifold.
	6. Leak between exhaust manifold and cylinder head.	6. Tighten exhaust manifold to cylinder head stud nuts or bolts.
	7. Restriction in muffler or tailpipe.	7. Remove restriction, if possible. Replace muffler or tailpipe, as necessary.
	8. Exhaust system contacting body or chassis.	8. Re-align exhaust system to clear surrounding components.
LEAKING EXHAUST GASES	1. Leaks at pipe joints.	1. Tighten/replace clamps at leaking joints.

INSPECTION

Inspect the exhaust pipes, catalytic converters, muffler, and resonators for cracked joints, broken welds and corrosion damage that would result in a leaking exhaust system. Inspect the clamps, support brackets, and insulators for cracks and corrosion damage.

ADJUSTMENTS

EXHAUST SYSTEM ALIGNMENT

A misaligned exhaust system is usually indicated by a vibration, rattling noise, or binding of exhaust system components. These noises are sometimes hard to distinguish from other chassis noises. Inspect exhaust system for broken or loose clamps, heat shields, insulators, and brackets. Replace or tighten as necessary. It is important that exhaust system clearances and alignment be maintained.

Perform the following procedures to align the exhaust system.

1. Loosen clamps and support brackets.
2. Align the exhaust system starting at the front, working rearward.
3. Tighten all clamps and brackets once alignment and clearances are achieved.

SPECIFICATIONS - TORQUE

DESCRIPTION	N·m	Ft. Lbs.	In. Lbs.
Exhaust Flanges - Bolts(All)	20	15	—
Muffler Hanger - Bolts	20	15	—
Muffler Ground - Bolt	10	—	89
Heat Shield - Nuts (All)	10	—	89
Stiffener - Bolts	20	15	—

CATALYTIC CONVERTER

REMOVAL - FRONT EXHAUST PIPES

WARNING: THE NORMAL OPERATING TEMPERATURE OF THE EXHAUST SYSTEM IS VERY HIGH. THEREFORE, NEVER ATTEMPT TO SERVICE ANY PART OF THE EXHAUST SYSTEM UNTIL IT IS COOLED. SPECIAL CARE SHOULD BE TAKEN WHEN WORKING NEAR THE CATALYTIC CONVERTER. THE TEMPERATURE OF THE CONVERTER RISES TO A HIGH LEVEL AFTER A SHORT PERIOD OF ENGINE OPERATION TIME.

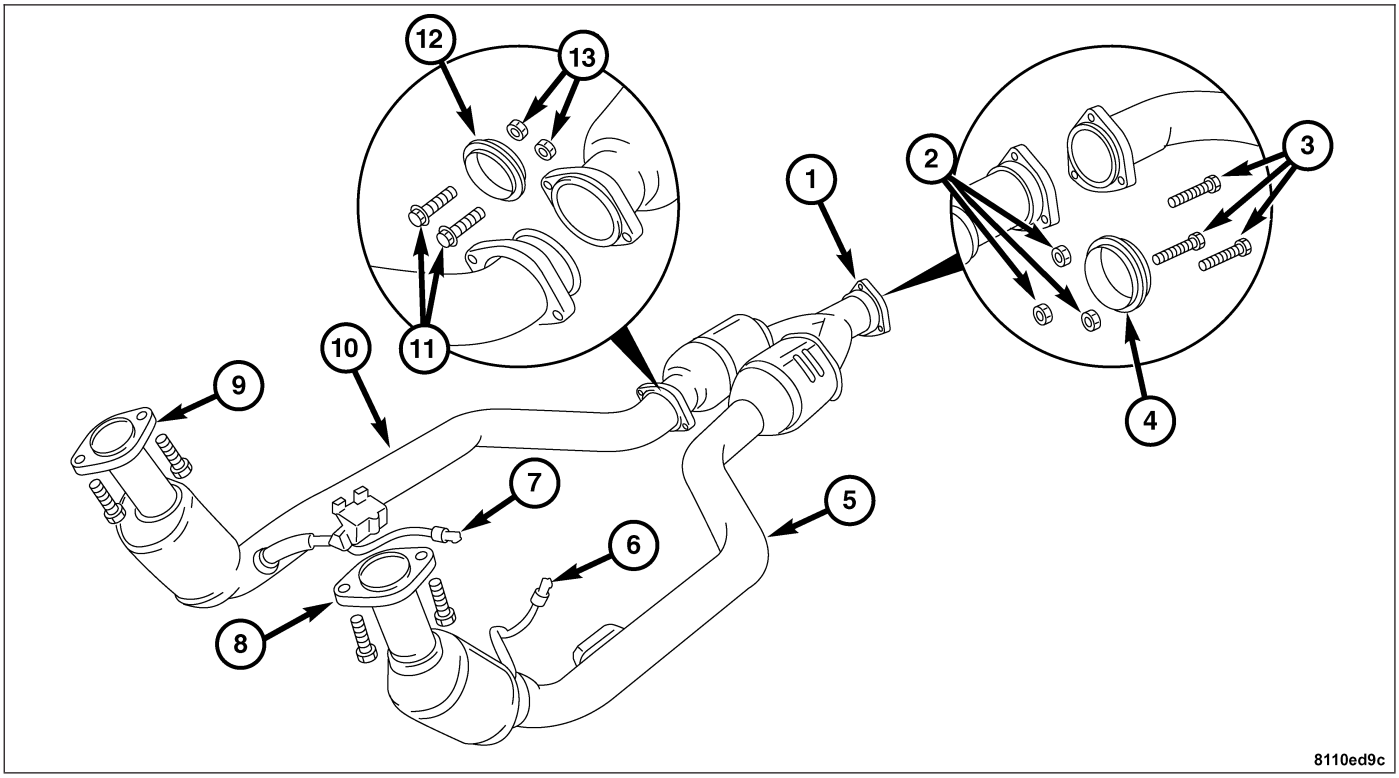

1 - CENTER EXHAUST FLANGE
2 - NUTS
3 - RETAINING BOLTS
4 - EXHAUST SEAL
5 - LEFT EXHAUST PIPE
6 - LEFT SIDE O2 SENSOR CONNECTOR
7 - RIGHT SIDE O2 SENSOR CONNECTOR
8 - LEFT SIDE MANIFOLD FLANGE
9 - RIGHT SIDE MANIFOLD FLANGE
10 - RIGHT EXHAUST PIPE
11 - RETAINING BOLTS
12 - EXHAUST SEAL
13 - NUTS

1. Raise and support the vehicle.
2. Disconnect the oxygen sensor harness connectors (6 and 7).
3. Support the exhaust system.
4. Remove the bolts at the left and right side exhaust manifold flanges (8 and 9).
5. Remove the center exhaust flange bolts (3).
6. Remove the left and right side exhaust pipes from the vehicle (5 and 10).

7. Remove the bolts (1) at the right side exhaust pipe flange.

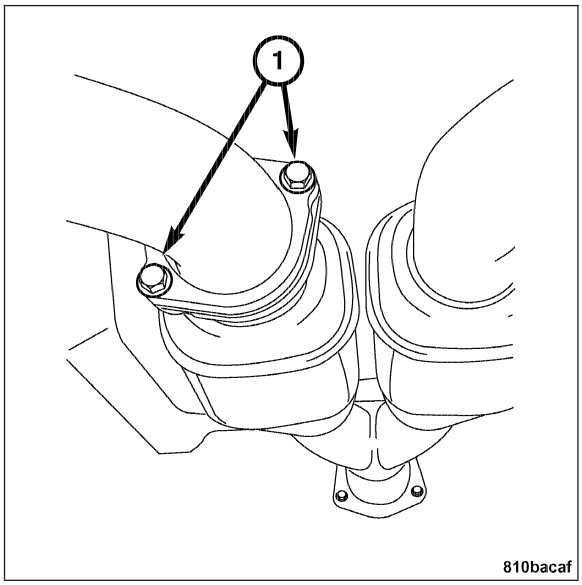

INSTALLATION - FRONT EXHAUST PIPES

Note: Inspect the exhaust manifold flange surface. Replace as required.

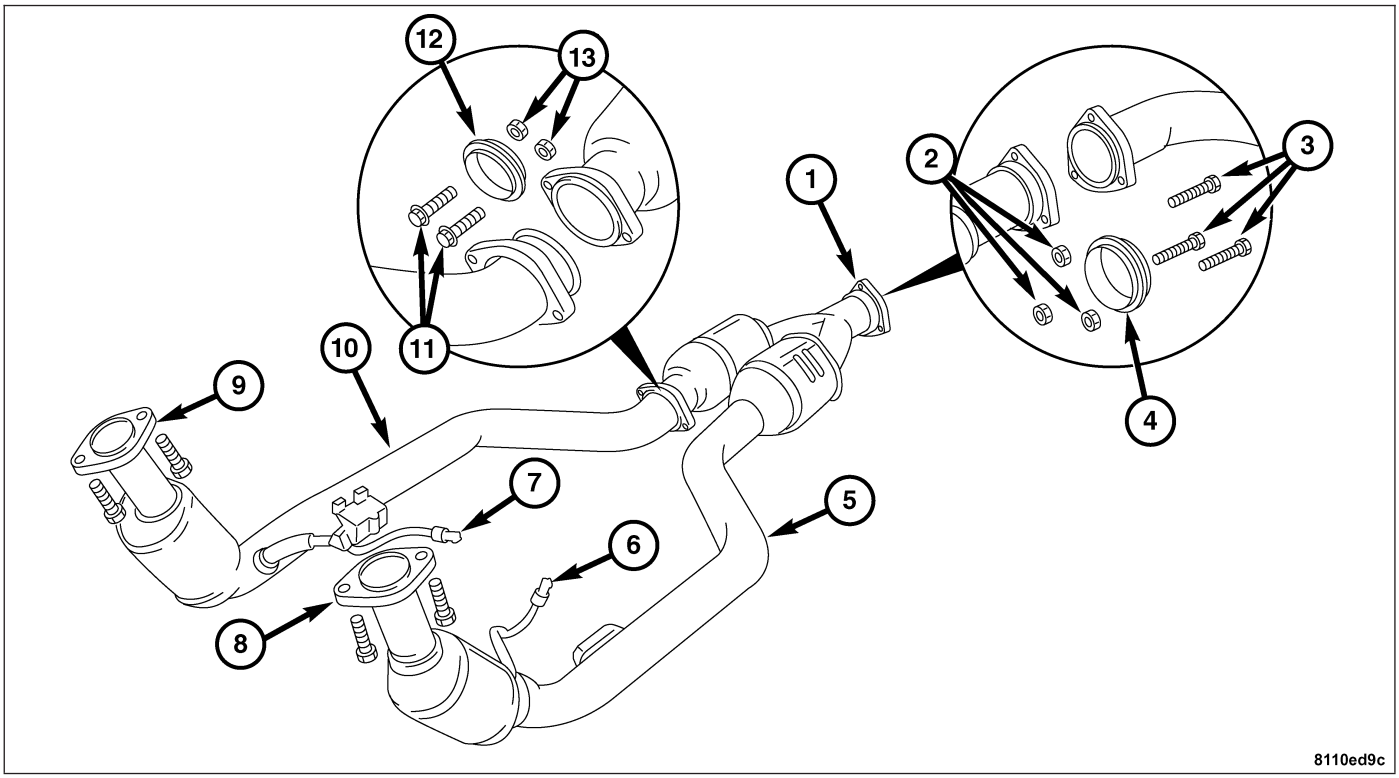

EXHAUST

1 - CENTER EXHAUST FLANGE
2 - NUTS
3 - RETAINING BOLTS
4 - EXHAUST SEAL
5 - LEFT EXHAUST PIPE
6 - LEFT SIDE O2 SENSOR CONNECTOR
7 - RIGHT SIDE O2 SENSOR CONNECTOR
8 - LEFT SIDE MANIFOLD FLANGE
9 - RIGHT SIDE MANIFOLD FLANGE
10 - RIGHT EXHAUST PIPE
11 - RETAINING BOLTS
12 - EXHAUST SEAL
13 - NUTS

1. Install bolts at right side exhaust pipe flange (11). Tighten to 20 N·m (15 ft. lbs.).
2. Position and support the front exhaust pipes in the vehicle.
3. Install bolts at the left and right exhaust manifold (8 and 9) flanges.
4. Install bolts at the center exhaust manifold flange (3).
5. Tighten exhaust manifold flange bolts to 20 N·m (15 ft. lbs.).
6. Tighten bolts at the center exhaust pipe flange to 20 N·m (15 ft. lbs.).
7. Connect oxygen sensor wiring harness connectors (6 and 7).
8. Route oxygen sensor wire harness in harness retainer.
9. Remove exhaust system support.
10. Lower the vehicle.

HEAT SHIELDS

REMOVAL

REMOVAL - FRONT HEAT SHIELD

1. Remove front exhaust section. **Refer to Page 11-5**.
2. Remove the heat shield nuts (1) and the heat shield.

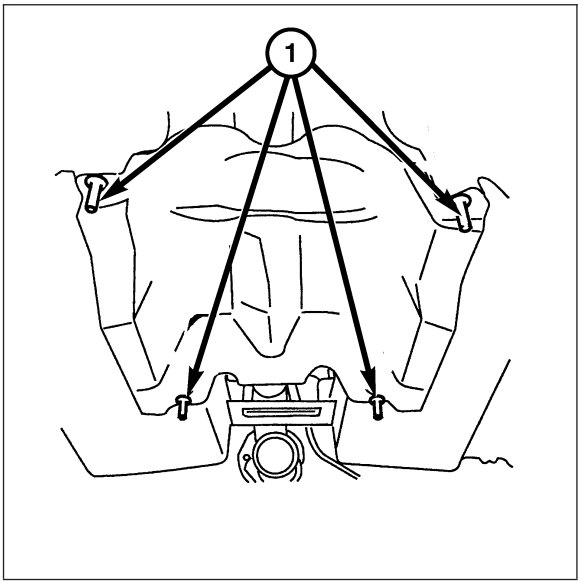

REMOVAL - REAR HEAT SHIELD

1. Remove the muffler. **Refer to Page 11-10**.
2. Remove the heat shield nuts (1) and the heat shield.

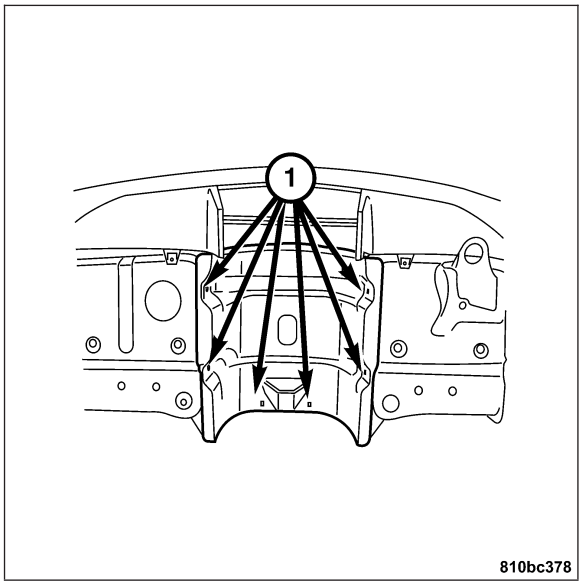

INSTALLATION

INSTALLATION - FRONT HEAT SHIELD

1. Position the heat shield on the floor pan.
2. Install the heat shield nuts (1). Tighten the nuts to 10 N·m (89 in. lbs.).
3. Install the front exhaust section. **Refer to Page 11-7**.
4. Start the engine and check for exhaust leaks.

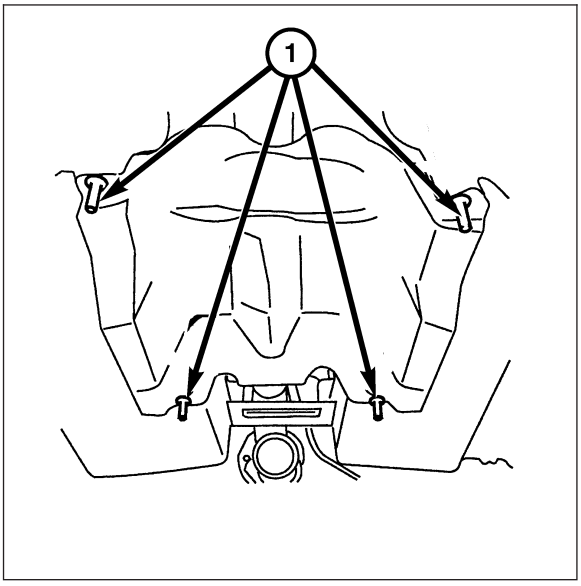

INSTALLATION - REAR HEAT SHIELD

1. Install the heat shield and the nuts (1). Tighten the nuts to 10 N·m (89 in. lbs.).
2.
3. Install the muffler. **Refer to Page 11-12**.

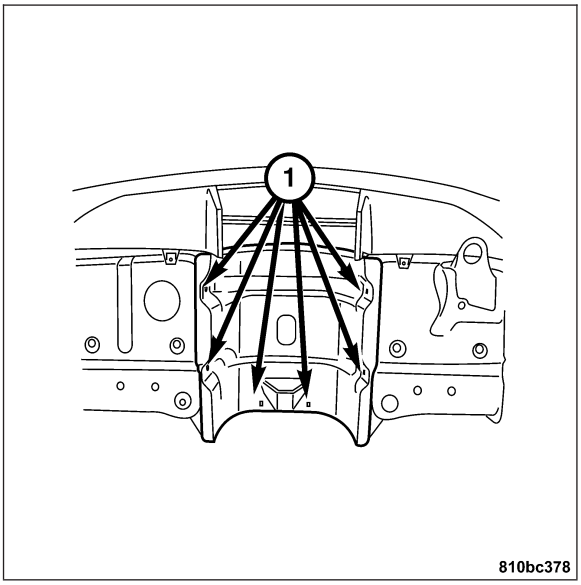

MUFFLER

REMOVAL

WARNING: THE NORMAL OPERATING TEMPERATURE OF THE EXHAUST SYSTEM IS VERY HIGH. THEREFORE, NEVER ATTEMPT TO SERVICE ANY PART OF THE EXHAUST SYSTEM UNTIL IT IS COOLED. SPECIAL CARE SHOULD BE TAKEN WHEN WORKING NEAR THE CATALYTIC CONVERTER. THE TEMPERATURE OF THE CONVERTER RISES TO A HIGH LEVEL AFTER A SHORT PERIOD OF ENGINE OPERATION TIME.

1. Raise and support vehicle.
2. Support the rear section of the exhaust system.
3. Remove bolts (1) from the center connection flange.

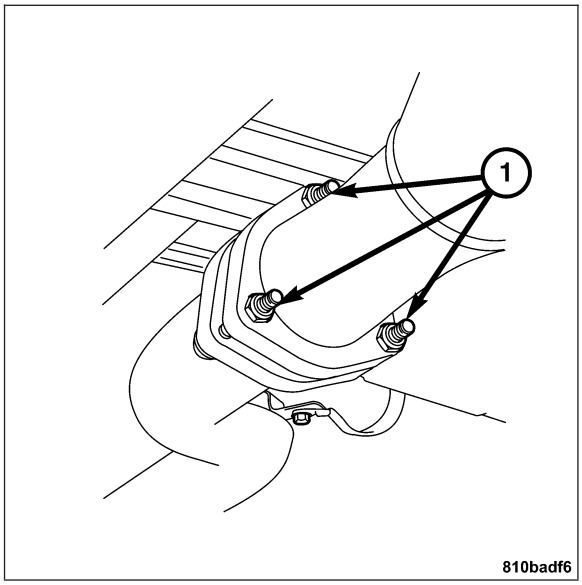

4. Disconnect the ground (1) strap at the muffler.

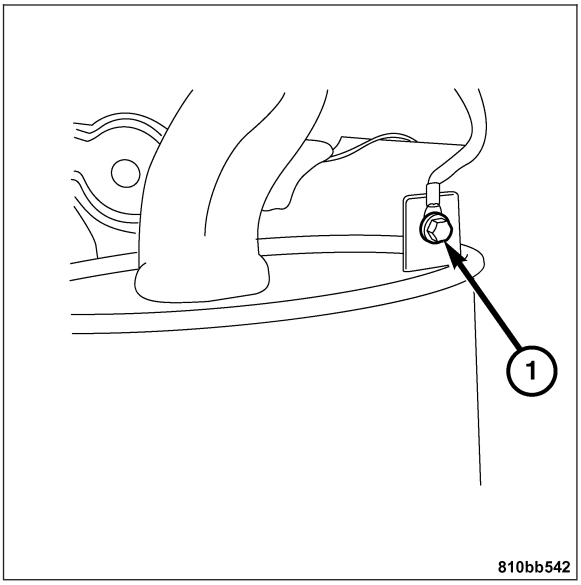

5. Remove the pipe (1) from the exhaust hanger (2).

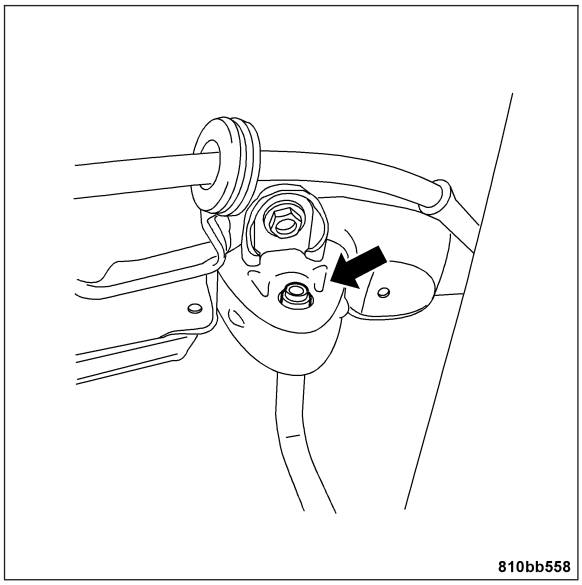

6. Pry off rubber the exhaust hangers (1) and remove the muffler with the pipe.

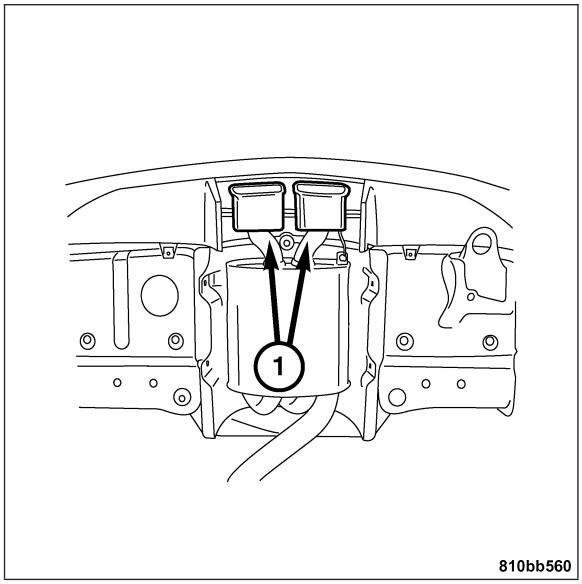

INSTALLATION

1. Position the muffler section in rubber exhaust hangers.

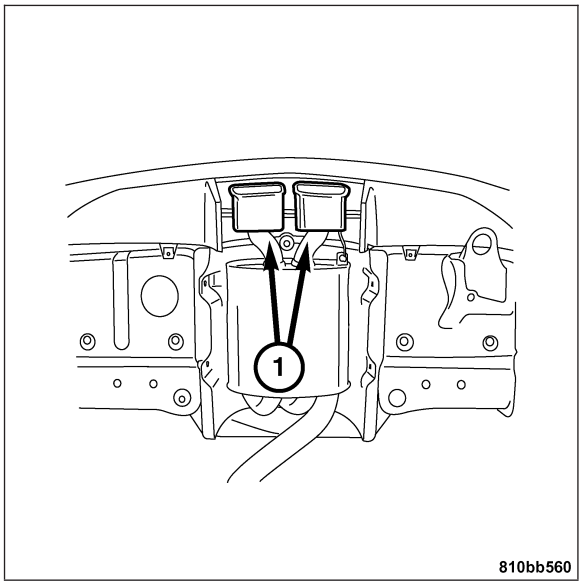

2. Install the bolts in the center exhaust flange (2). Tighten the bolts to 20 N·m (15 ft. lbs.).

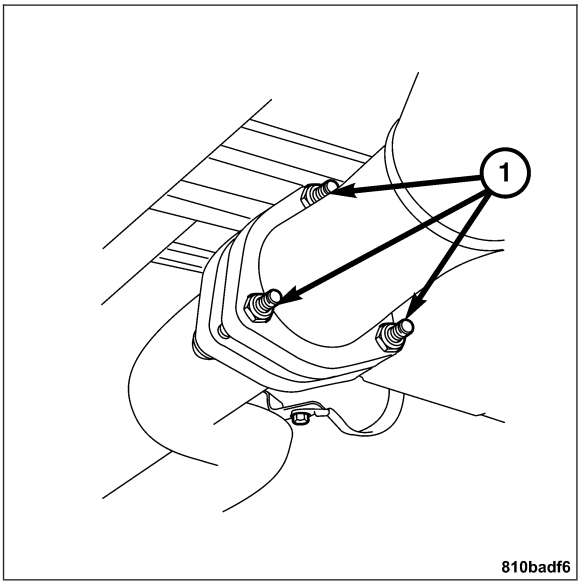

3. Connect the ground strap (1) at the muffler and tail pipe. Tighten the ground strap bolt to 10 N·m (89 in. lbs.).

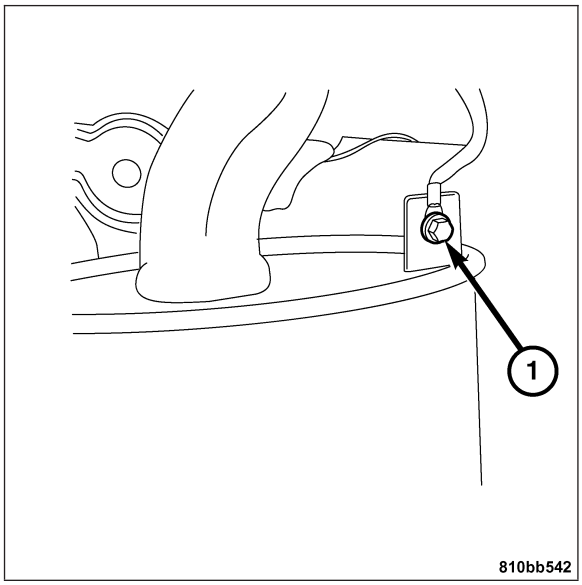

4. Remove the support.
5. Lower the vehicle.

SUPPORT BRACKET AND ISOLATOR

REMOVAL

1. Raise and support the vehicle.
2. Remove the bracket bolt (1).
3. Remove the bracket and the isolator (2) from the exhaust hanger.
4. Remove the isolator from the bracket.

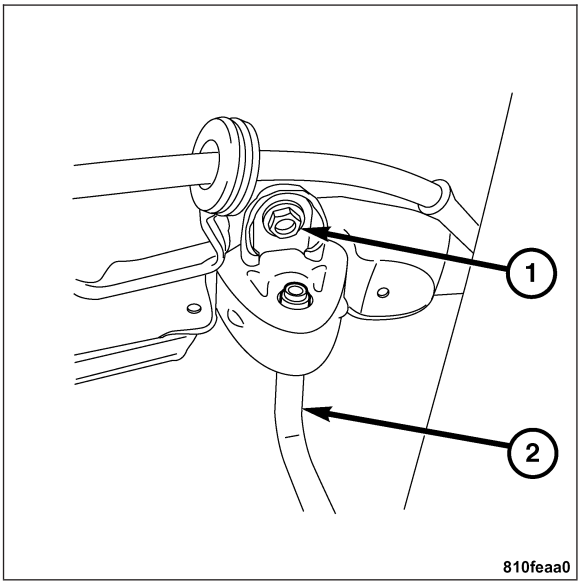

INSTALLATION

1. Position the bracket and bolt on the vehicle.
2. Tighten the bolt to 20 N·m (15 ft. lbs.).
3. Install the isolator and hanger.
4. Lower the vehicle.

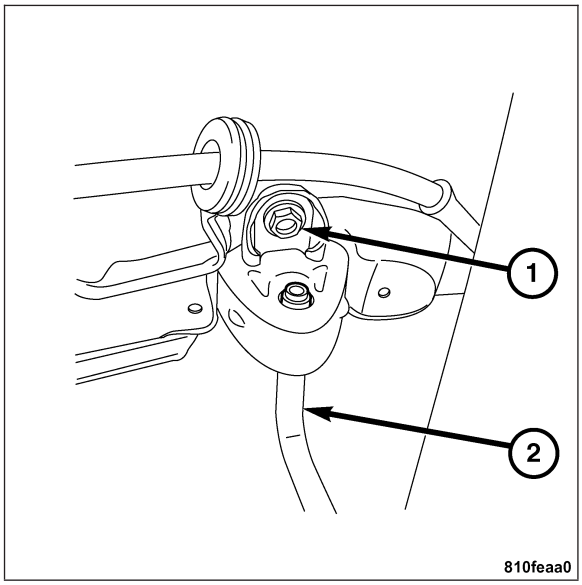

FRAME & BUMPERS

TABLE OF CONTENTS

page

FRONT FASCIA
REMOVAL 1
INSTALLATION 4
REAR FASCIA
REMOVAL 7
INSTALLATION 8
FRAME
SPECIFICATIONS - FRAME DIMENSIONS 9

FRONT FASCIA

REMOVAL

1. Raise and support the vehicle.
2. Remove the lower splash shield retaining screws (1) and the lower splash shield (2).

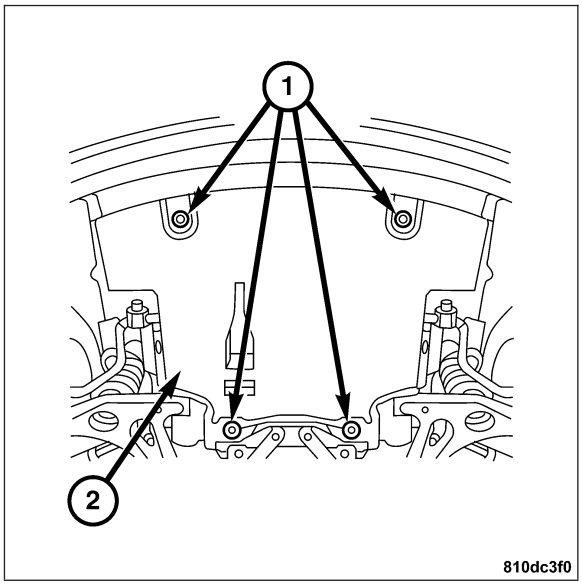

Note: Left side shown, right side similar.

3. Remove the left and right front fascia access panel retaining nuts and screws (1).
4. Remove access panels from the vehicle.

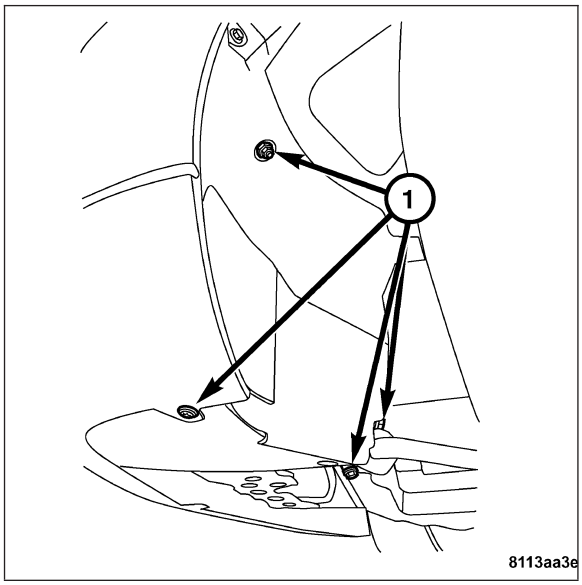

5. Disconnect the fog lamp wire harness connectors (1).

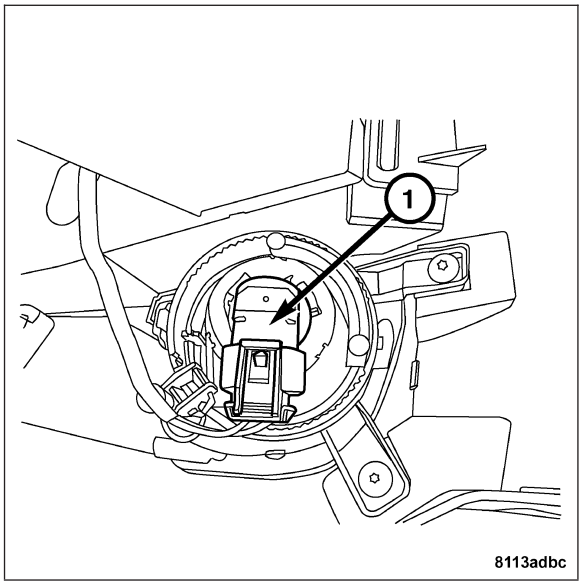

6. Disconnect the ambient air temperature sensor wire harness connector (2).

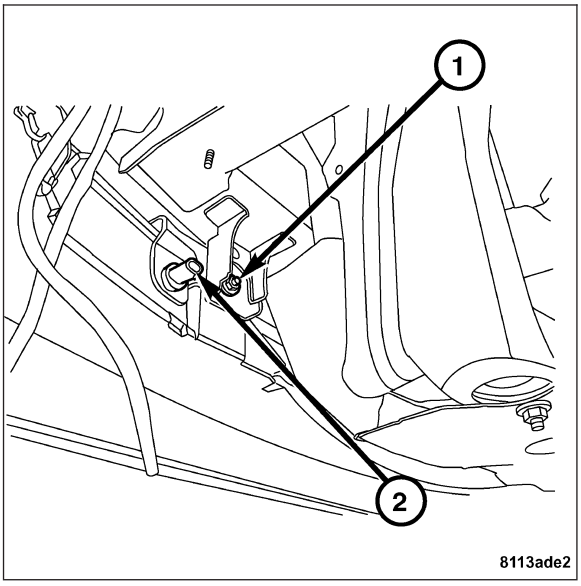

Note: The front marker lamp harness connector can be reached through the access hole in the inner fender well.

7. Disconnect the front marker lamp wire harness connectors (1).

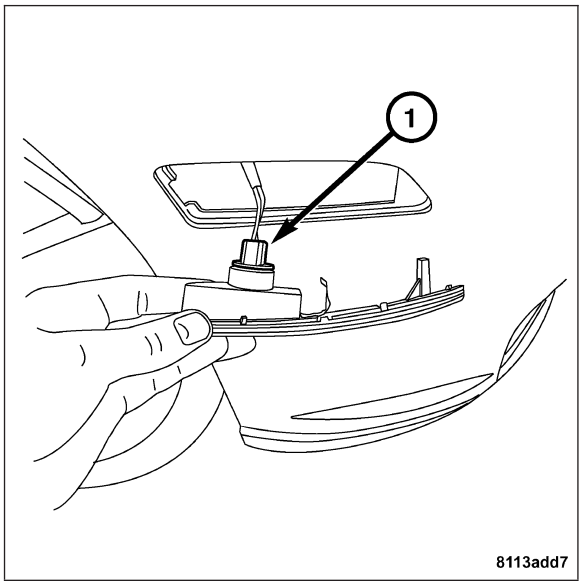

8. Remove the lower fascia retaining nuts (1).
9. Remove the left and right front fender to fascia retaining nuts and bolts. **Refer to Page 23-112**.
10. Lower the vehicle.

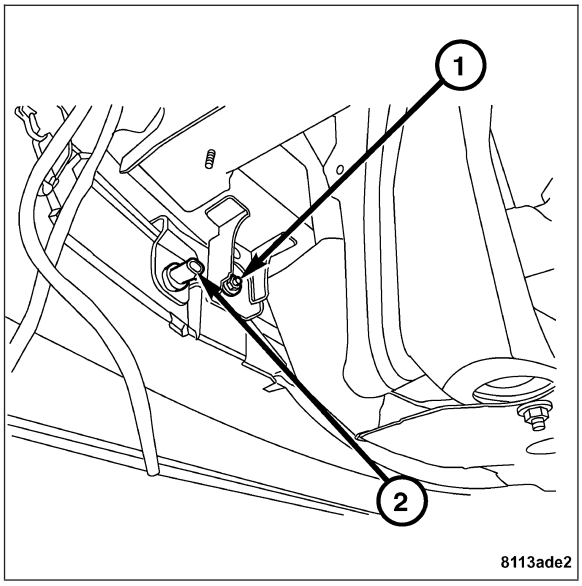

11. Remove the front grille assembly retaining bolts (1).

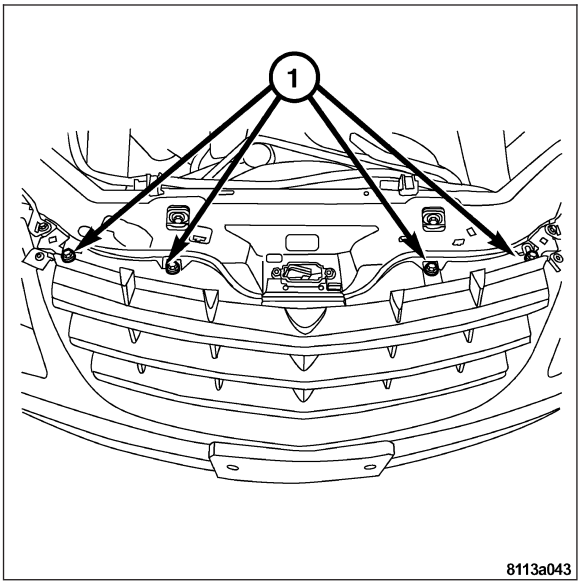

12. Remove the upper fascia retaining bolts (1).
13. Remove the fascia from the vehicle.

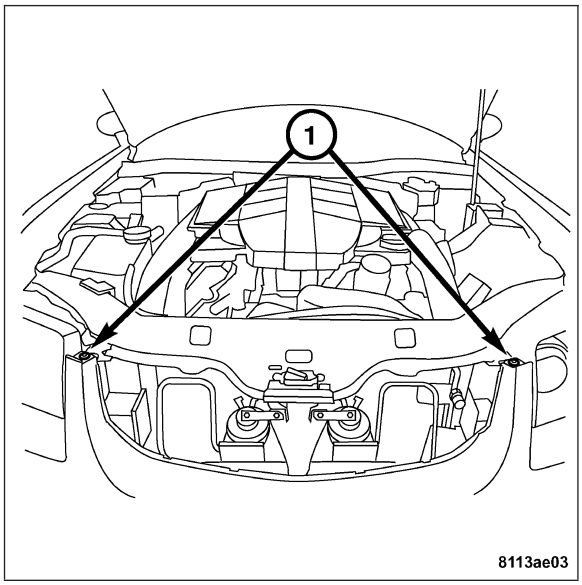

INSTALLATION

1. Position the fascia on the vehicle and install the upper facia retaining bolts (1).

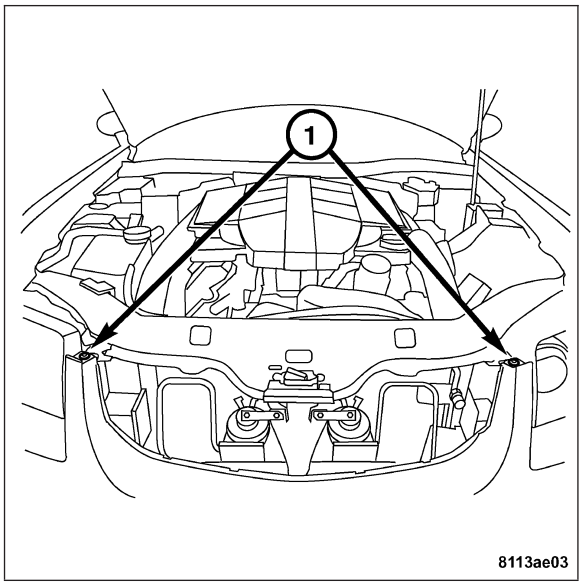

2. Position the front grille assembly and install the retaining bolts (1).
3. Raise and support the vehicle.
4. Install the left and right front fender to fascia retaining nuts and bolts. **Refer to Page 23-113**.

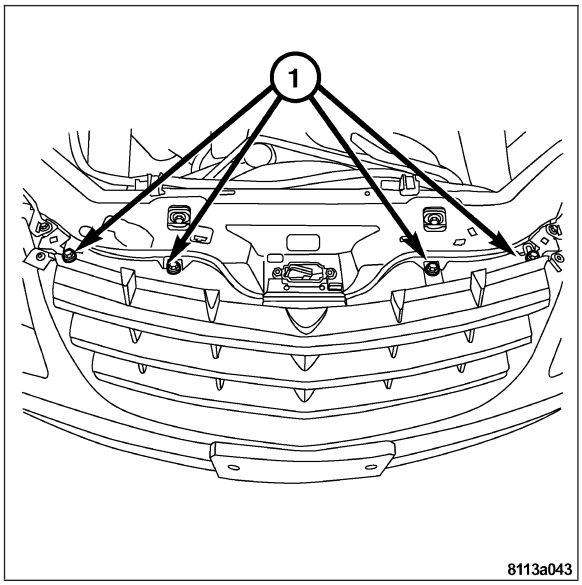

5. Install the lower fascia retaining nuts (1).
6. Connect the ambient air temp sensor wire harness connector (2).

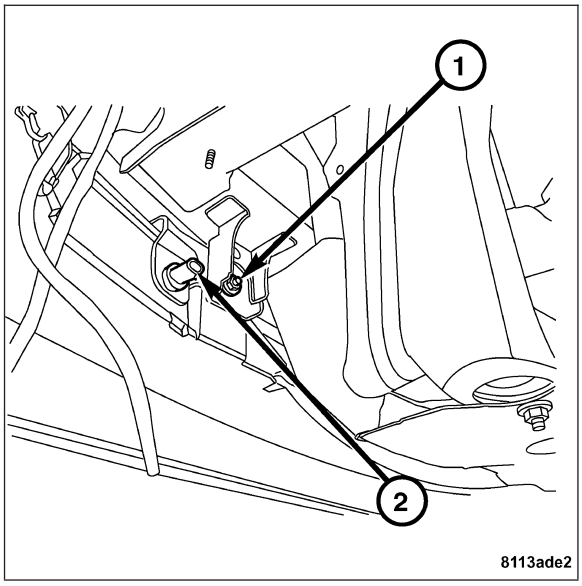

7. Connect the front marker lamp wire harness connector (1).

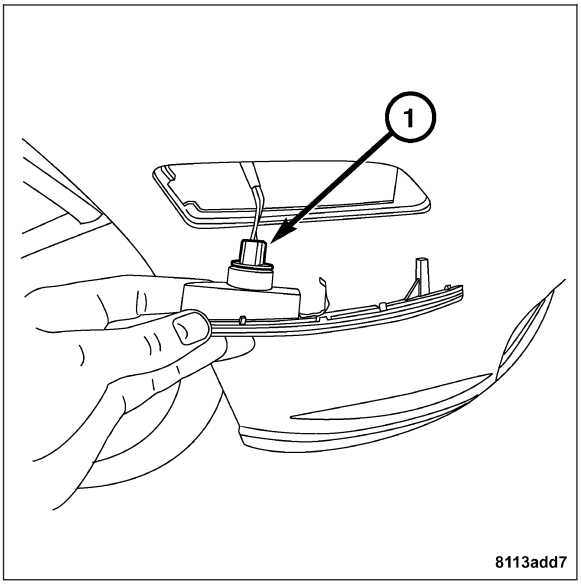

8. Connect the fog lamp wire harness connectors (1).

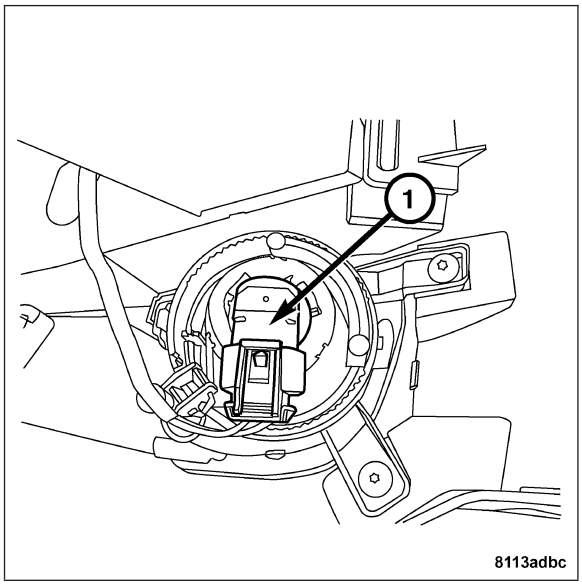

9. Install the left and right front fascia access panel retaining nuts and screws (1).

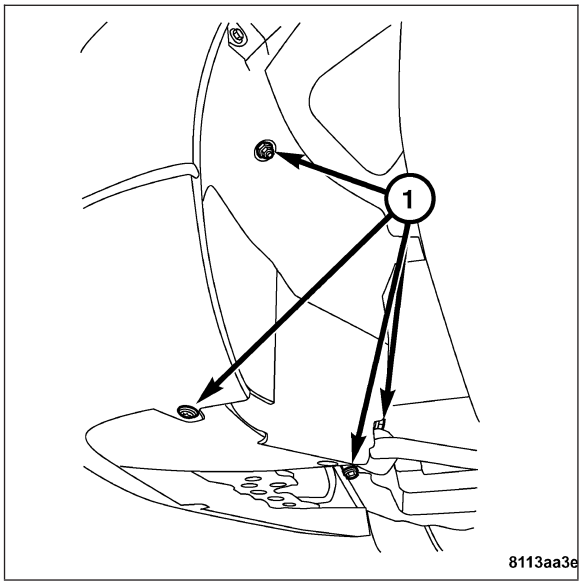

10. Install the lower splash shield and the retaining screws (1).

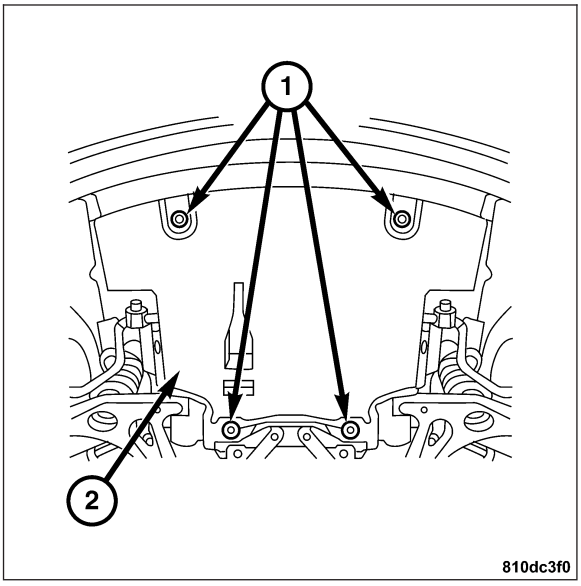

REAR FASCIA

REMOVAL

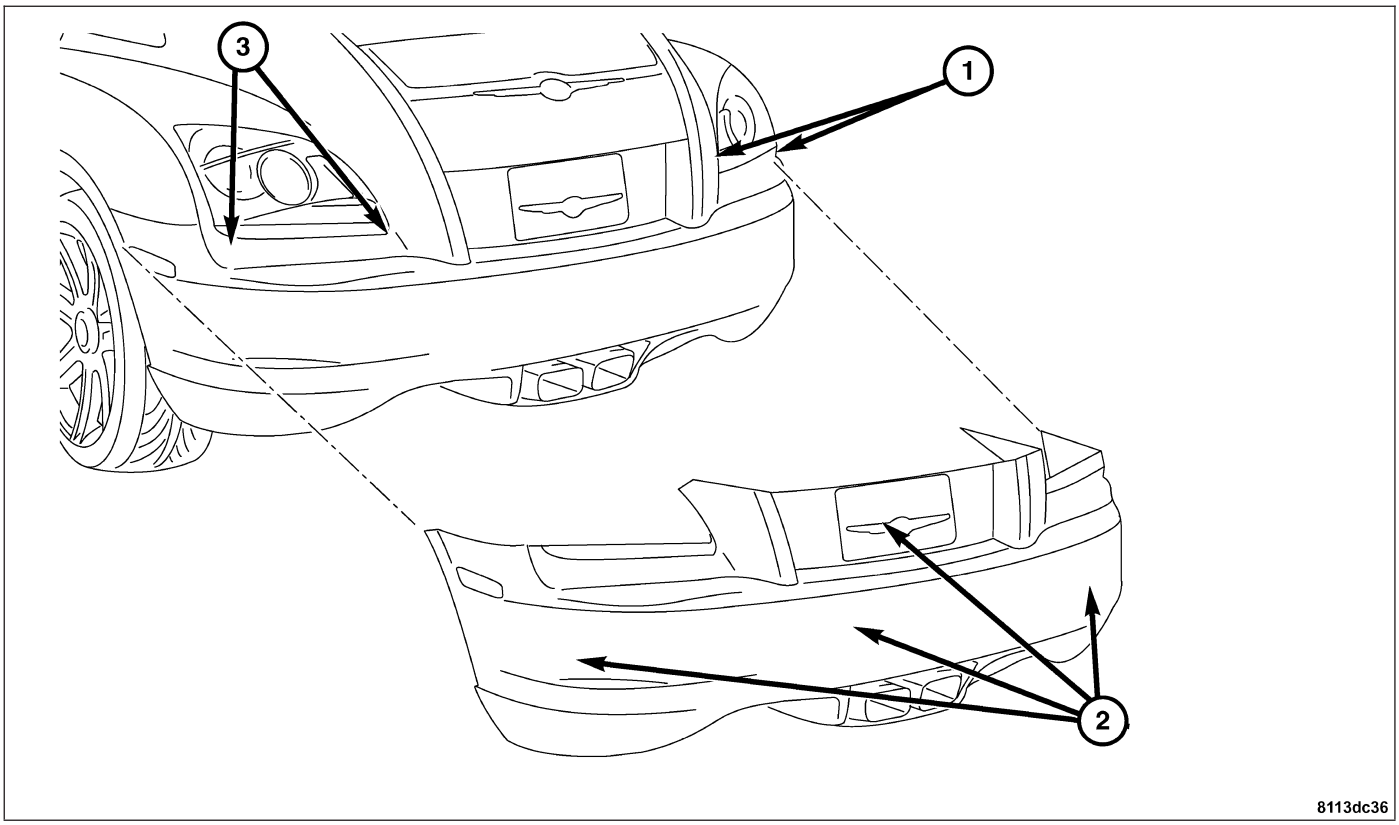

1. Remove the rear fascia assembly retaining screws (1, 2, and 3).
2. Raise and support the vehicle.
3. Remove the right and left lower fascia trim retaining screws (1).
4. Remove the rear fascia from the vehicle.

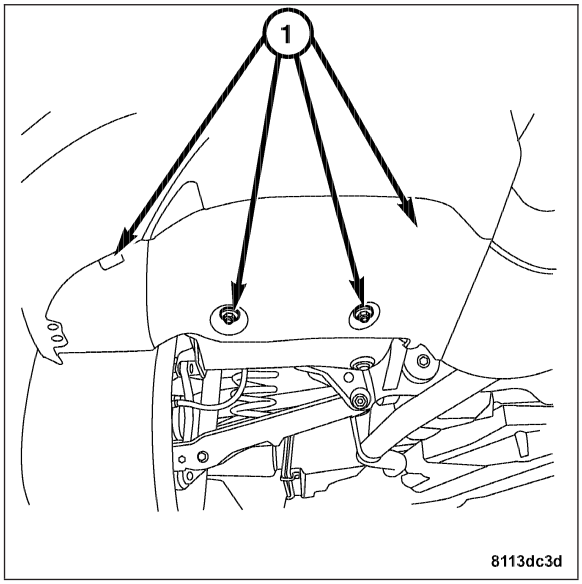

INSTALLATION

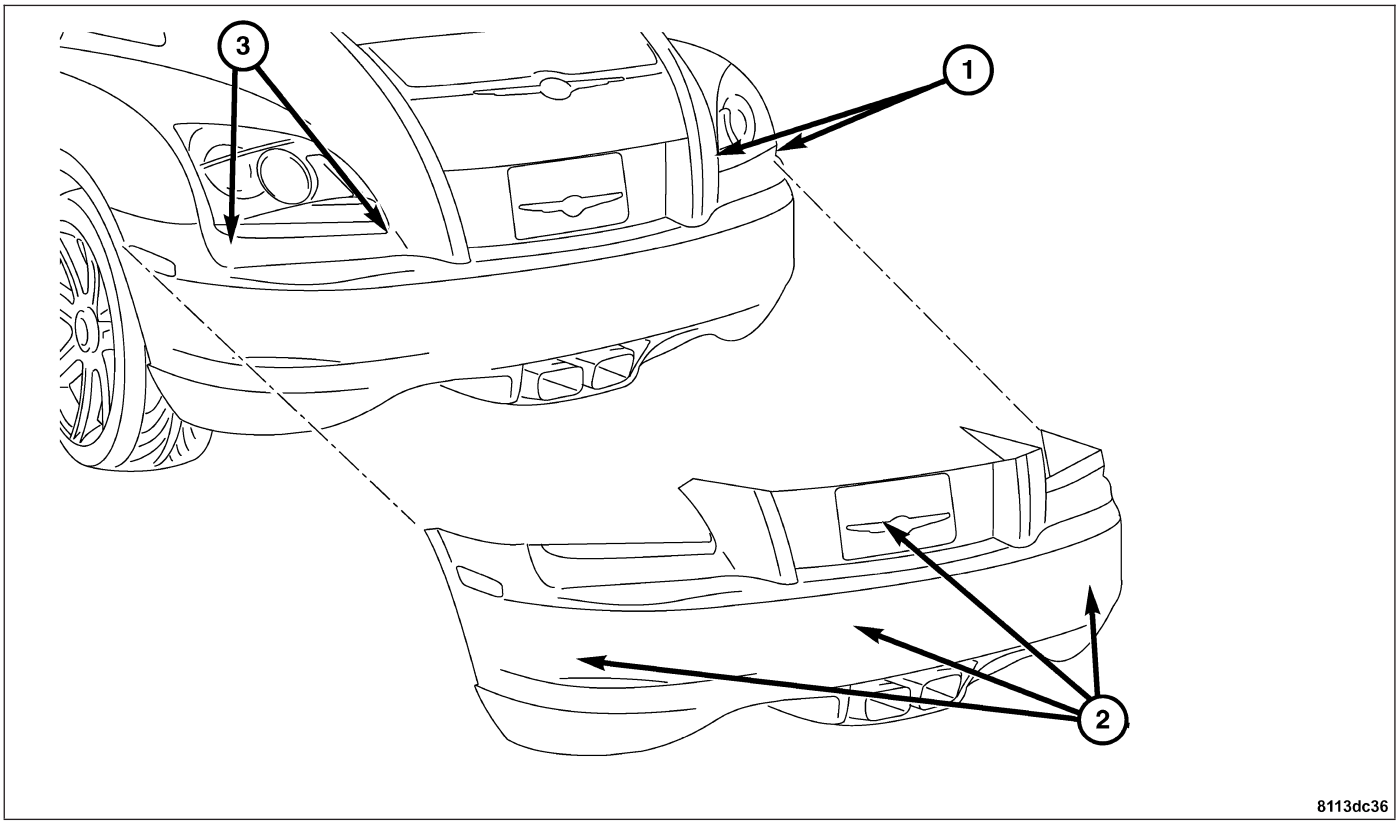

1. Position the rear fascia on the vehicle and install the retaining screws (1, 2, and 3).
2. Install the lower fascia trim and the retaining screws (1).
3. Lower the vehicle.

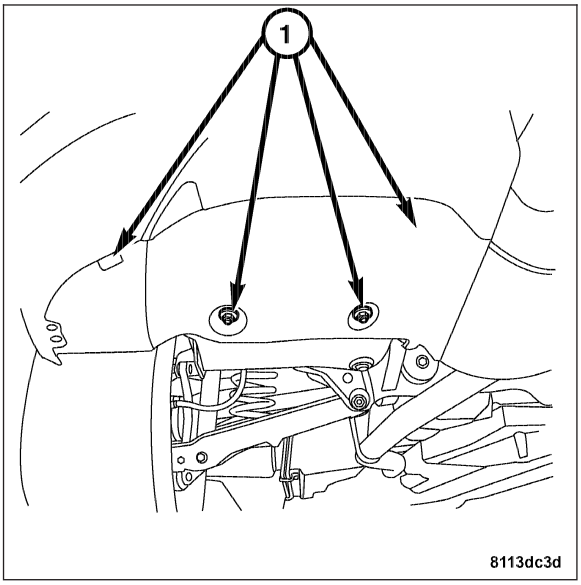

FRAME

SPECIFICATIONS - FRAME DIMENSIONS

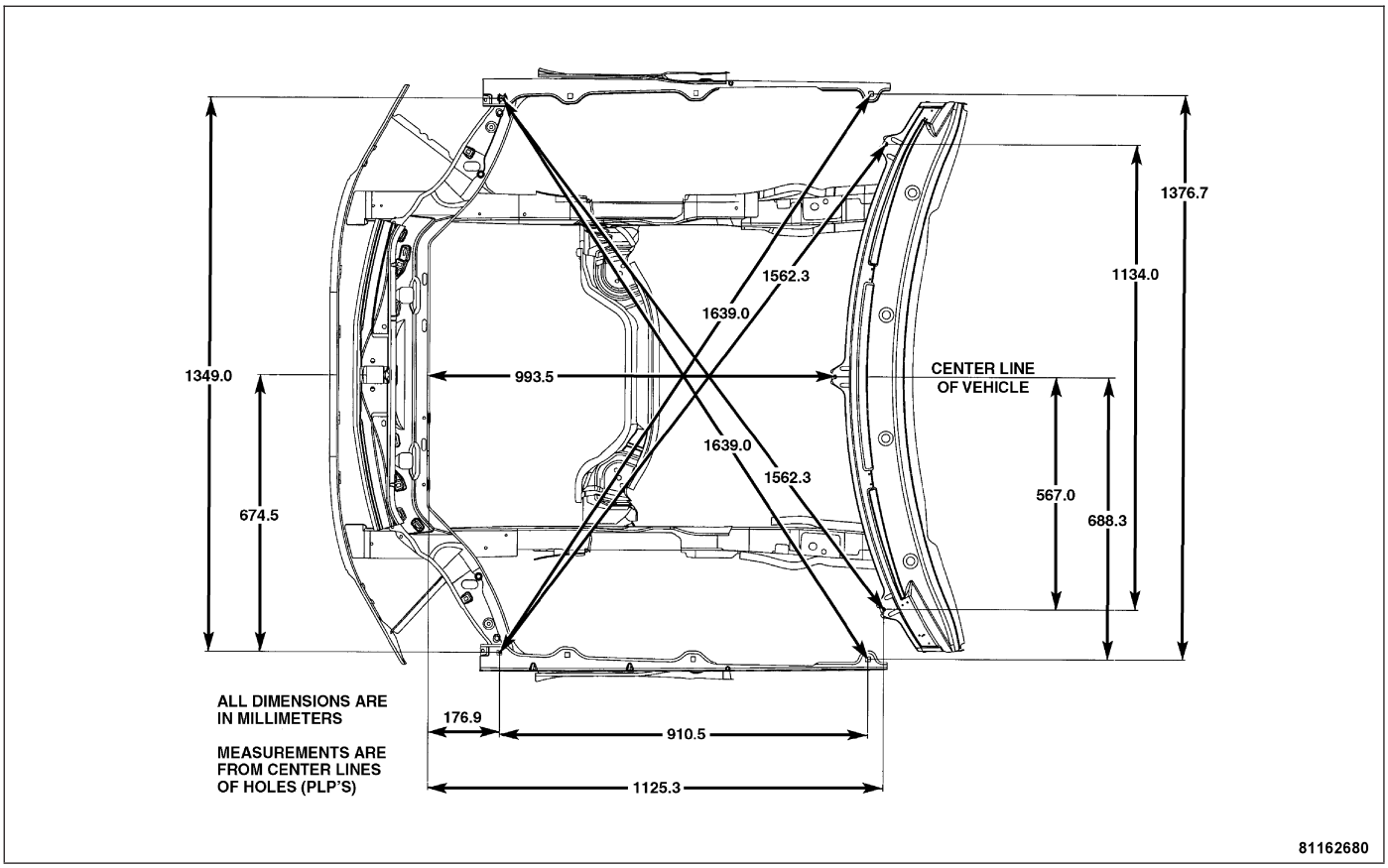

ENGINE COMPARTMENT DIMENSIONS

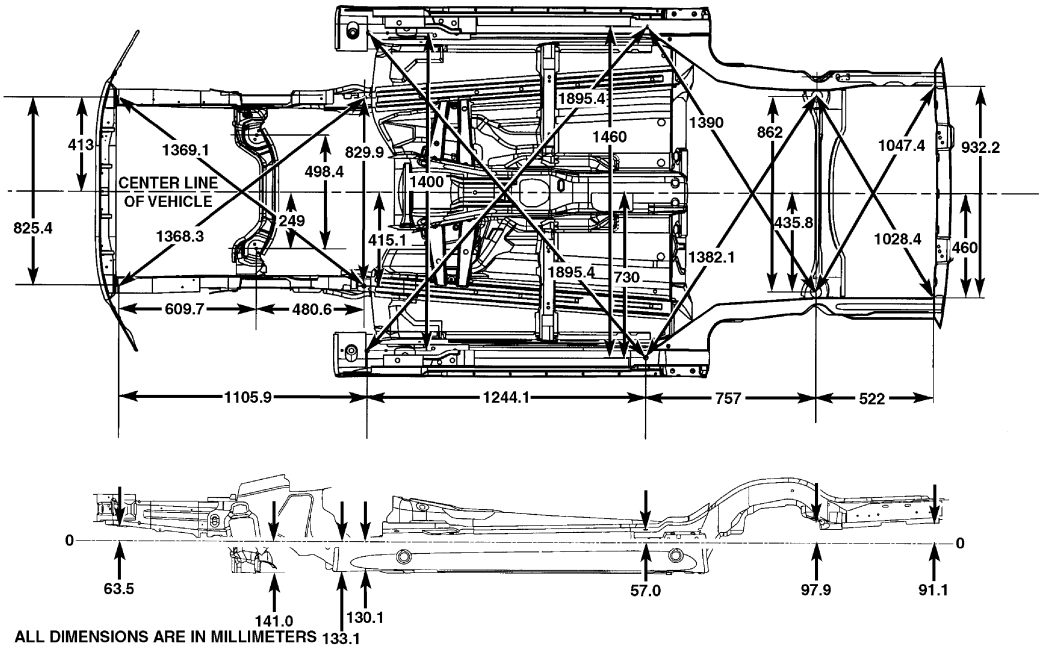

FRAME DIMENSIONS

FUEL SYSTEM

TABLE OF CONTENTS

page

FUEL DELIVERY 1

FUEL INJECTION 25

FUEL DELIVERY

TABLE OF CONTENTS

page

FUEL DELIVERY
- DESCRIPTION 2
- OPERATION 3
- DIAGNOSIS AND TESTING - FUEL PRESSURE LEAK DOWN TEST 4
- STANDARD PROCEDURE
  - STANDARD PROCEDURE - FUEL SYSTEM PRESSURE RELEASE PROCEDURE 5
  - STANDARD PROCEDURE - DRAINING FUEL TANK 5
- SPECIFICATIONS 6
- SPECIAL TOOLS 7

FUEL FILL CHECK VALVE
- DESCRIPTION 7
- OPERATION 7

FUEL FILTER/PRESSURE REGULATOR
- DESCRIPTION 8
- OPERATION 9
- REMOVAL 10
- INSTALLATION 10

FUEL LEVEL SENDING UNIT / SENSOR
- DESCRIPTION
  - FUEL LEVEL SENDING UNIT/SENSOR 11
- OPERATION
  - FUEL LEVEL SENDING UNIT/SENSOR 11
- DIAGNOSIS AND TESTING - FUEL LEVEL SENDING UNIT 12
- REMOVAL 13
- INSTALLATION 13

FUEL LINES
- DESCRIPTION 14

FUEL PUMP
- DESCRIPTION 15
- OPERATION 15
- DIAGNOSIS AND TESTING
  - FUEL PUMP TEST 15
- REMOVAL 17
- INSTALLATION 18

FUEL RAIL
- DESCRIPTION 18
- OPERATION 18
- REMOVAL 19
- INSTALLATION 20

FUEL TANK
- DESCRIPTION 20
- OPERATION 20
- REMOVAL 21
- INSTALLATION 22

FUEL TANK FILLER TUBE
- DESCRIPTION 24

FUEL DELIVERY

DESCRIPTION

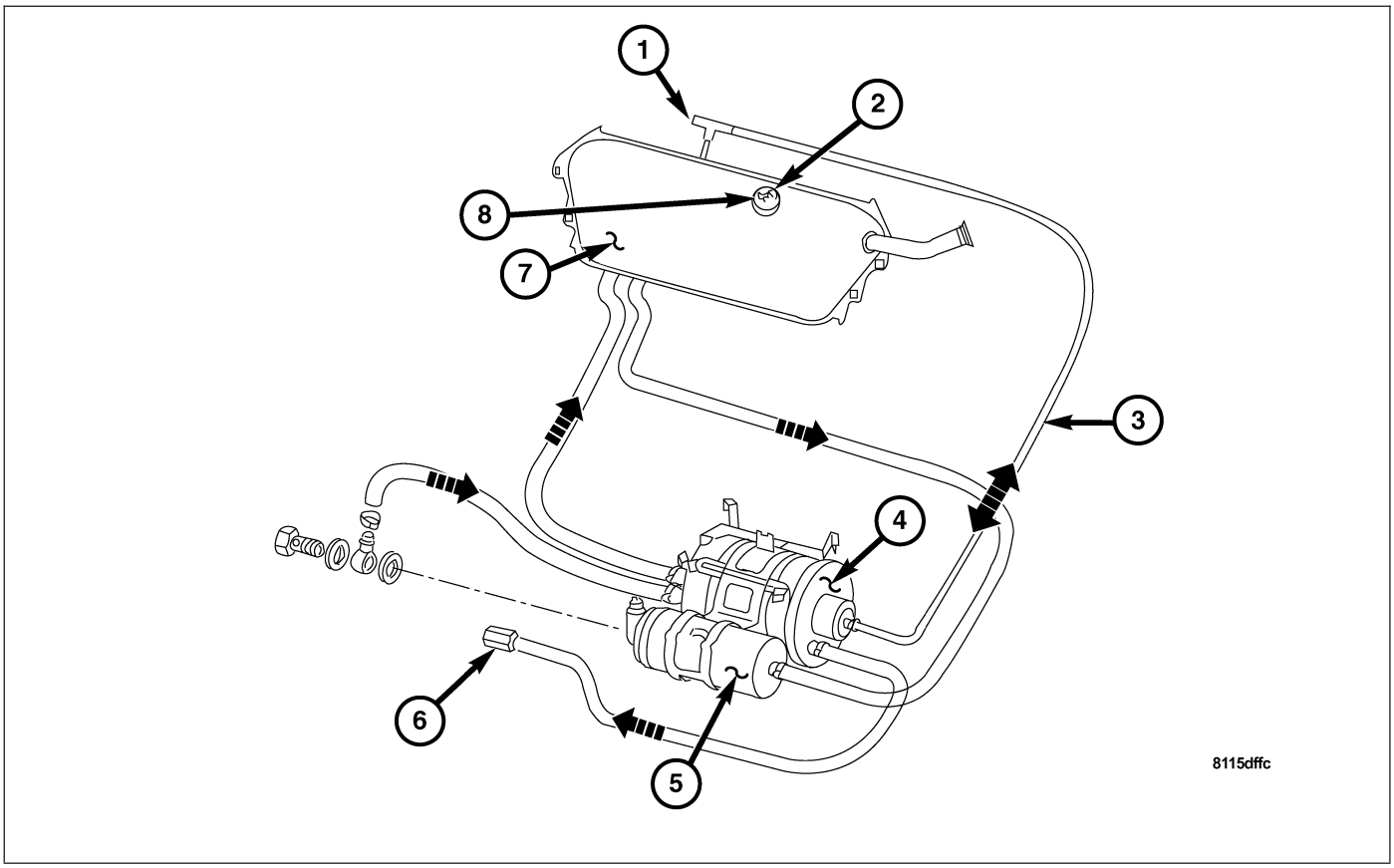

The aluminum fuel tank (7) is located in the cargo area behind a metal partition.

The fuel delivery system consists of the following items:

- Fuel injector rail
- Fuel tank filler tube cap
- Fuel tank/filler vent tube assembly
- Fuel tubes/lines/hoses (3)
- In-line electric fuel pump (5)
- In-line fuel filter/pressure regulator (4)
- In-tank fuel strainer

OPERATION

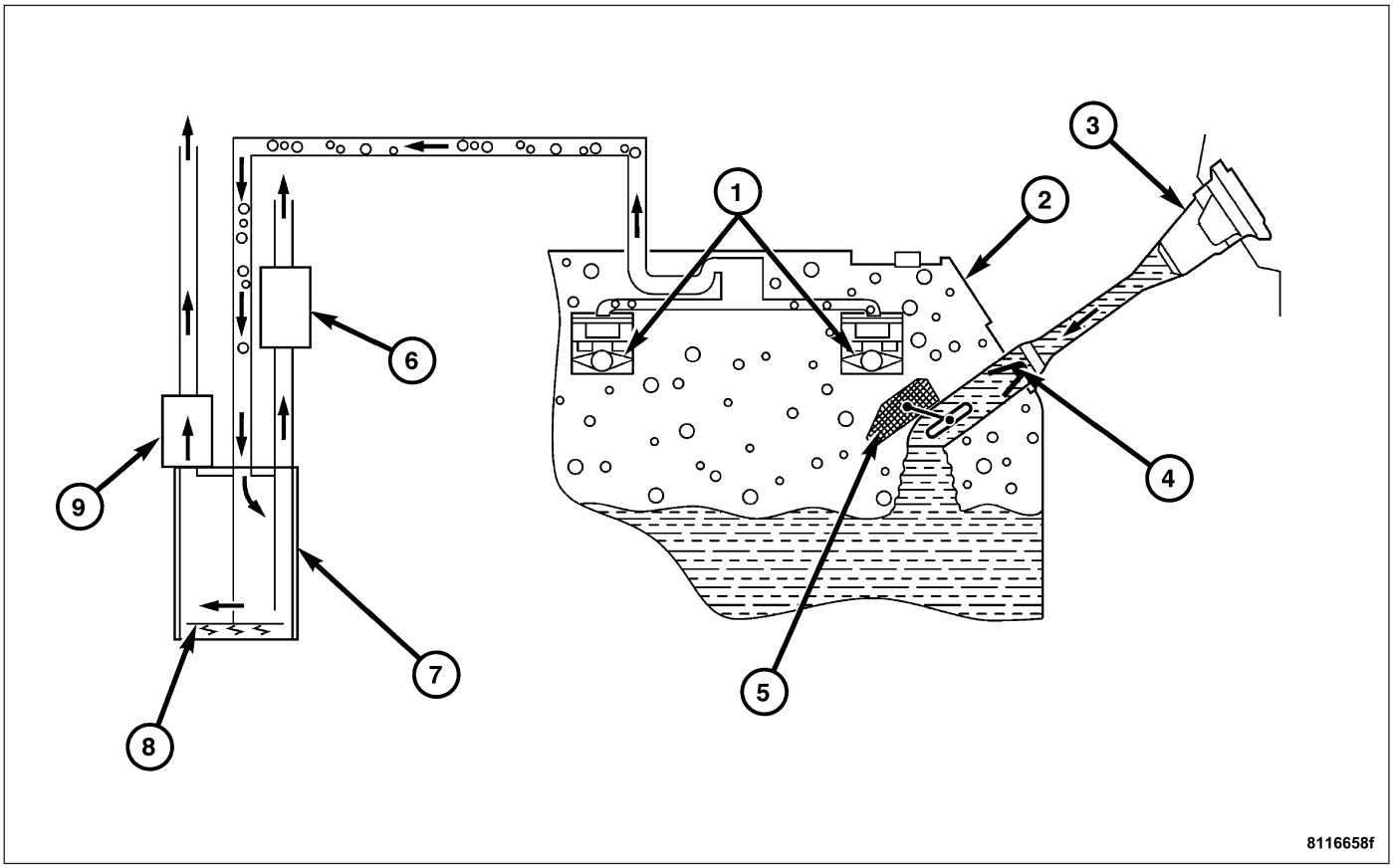

1 - TANK VENT/ROLLOVER VALVES
2 - FUEL TANK
3 - FUEL FILLER TUBE
4 - FUEL FILLER TUBE CHECK VALVE
5 - FUEL TANK OVERFILL CHECK VALVE
6 - EVAP PURGE SOLENOID
7 - EVAP CANISTER
8 - FUEL VAPOR PRESSURE RELIEF VALVE
9 - CHARCOAL CANISTER SHUTOFF VALVE

The fuel system provides fuel pressure by an external fuel pump mounted under the vehicle near the fuel tank outlet. The PCM controls the operation of the fuel system by providing battery voltage to the fuel pump through the fuel pump relay. The PCM requires only three inputs and a good ground to operate the fuel pump relay. The three inputs are:

- Ignition voltage
- Crankshaft Position (CKP) sensor
- Camshaft Position (CMP) sensor

The fuel pressure regulator and main fuel filter are combined into a single unit. A strainer inside the fuel tank also provides a means of preliminary filtering of the fuel before it leaves the bottom of the fuel tank.

The fuel tank filler tube assembly, which is permanently fixed to the fuel tank, uses a pressure/vacuum 1/4 turn fuel filler cap.

The evaporation control and Onboard Refueling Vapor Recovery (ORVR) systems should also be considered part of the fuel system. They are designed to reduce the emission of the fuel vapors into the atmosphere. For complete operation and function of these systems, see operation in the emissions control section. **Refer to Page 25-12**.

There are a total of four check-type valves within the fuel tank/fuel filler tube assembly. Two tank vent/rollover valves (1) are inside and near the top of the fuel tank. They provide a means for vapors to vent, yet can close to prevent fuel from entering the evaporative system in the event of a rollover. The fuel tank overfill check valve (5) uses a float and closes the opening at the bottom of the fuel filler tube (3) as the level of the fuel reaches capacity to prevent an overfill condition. The fuel filler tube check valve (4), located below the narrow portion of the tube, has a dual purpose. It also prevents fuel from exiting the fuel tank through the fuel filler tube in the event of a rollover and eliminates fuel from splashing back on the customer during refueling.

DIAGNOSIS AND TESTING - FUEL PRESSURE LEAK DOWN TEST

Use this test in conjunction with the Fuel Pump Pressure Test and the Fuel Pump Capacity Test.

CHECK VALVE OPERATION

The electric fuel pump outlet contains a one-way check valve to prevent fuel flow back into the tank, and to maintain fuel supply line pressure (engine warm) when the pump is not operational. It also is used to keep the fuel supply line full of gasoline when the pump is not operational. After 30 minutes the fuel pressure may drop to 2.5 bar (36 psi), but the liquid gasoline will remain in the fuel supply line between the check valve and fuel injectors. When the fuel pump is activated, the fuel pressure should immediately (1-2 seconds) rise to specification.

Abnormally long periods of cranking to restart a hot engine that has been shut down for a shout period of time may be caused by either fuel pressure bleeding past a fuel injector(s), or fuel pressure bleeding past the check valve in the fuel pump. To determine the cause of this condition:

1. Remove the engine cover for access and disconnect the fuel inlet line at the fuel rail.
2. Connect the correct fuel line pressure test adapter tool between the disconnected fuel inlet line and fuel rail.
3. Connect Special Tool C-4799-B or equivalent to the test port on the test adapter tool.
4. Start the engine and bring to normal operating temperature.
5. Observe the test gauge. Normal operating pressure should be 3.7 - 4.2 bar (54 - 61 psi).
6. Shut engine off.
7. Pressure should not fall below 2.5 bar (36 psi) after 30 minutes.
8. If pressure falls below 2.5 bar (36 psi) within 30 minutes, it must be determined if a fuel injector, the check valve within the fuel pump, or a fuel tube/line is leaking.
9. Again, start the engine. After bringing to normal operating temperature, shut engine off.

TESTING FOR FUEL INJECTOR OR FUEL RAIL LEAKAGE

Clamp off the rubber hose portion of the adaptor tool between the fuel rail and the test port “T”. If the pressure now holds at or above 2.5 bar (36 psi) for 30 minutes, a fuel injector or the fuel rail is leaking.

TESTING FOR FUEL PUMP CHECK VALVE, FILTER/REGULATOR CHECK VALVE, OR FUEL TUBE/LINE LEAKAGE

Clamp off the rubber hose portion of the adaptor tool between the vehicle fuel line and the test port “T”. If the pressure now holds at or above 2.5 bar (36 psi) for 30 minutes, a leak may be found in the fuel tubes or lines or one of the check valves. Note: A quick loss of pressure usually indicates a defective check valve in the pressure regulator. A slow loss of pressure usually indicates a defective check valve in the fuel pump. These valves are not serviced separately. If found defective, the entire component that the valve is a part of must be replaced as an assembly.

STANDARD PROCEDURE

STANDARD PROCEDURE - FUEL SYSTEM PRESSURE RELEASE PROCEDURE

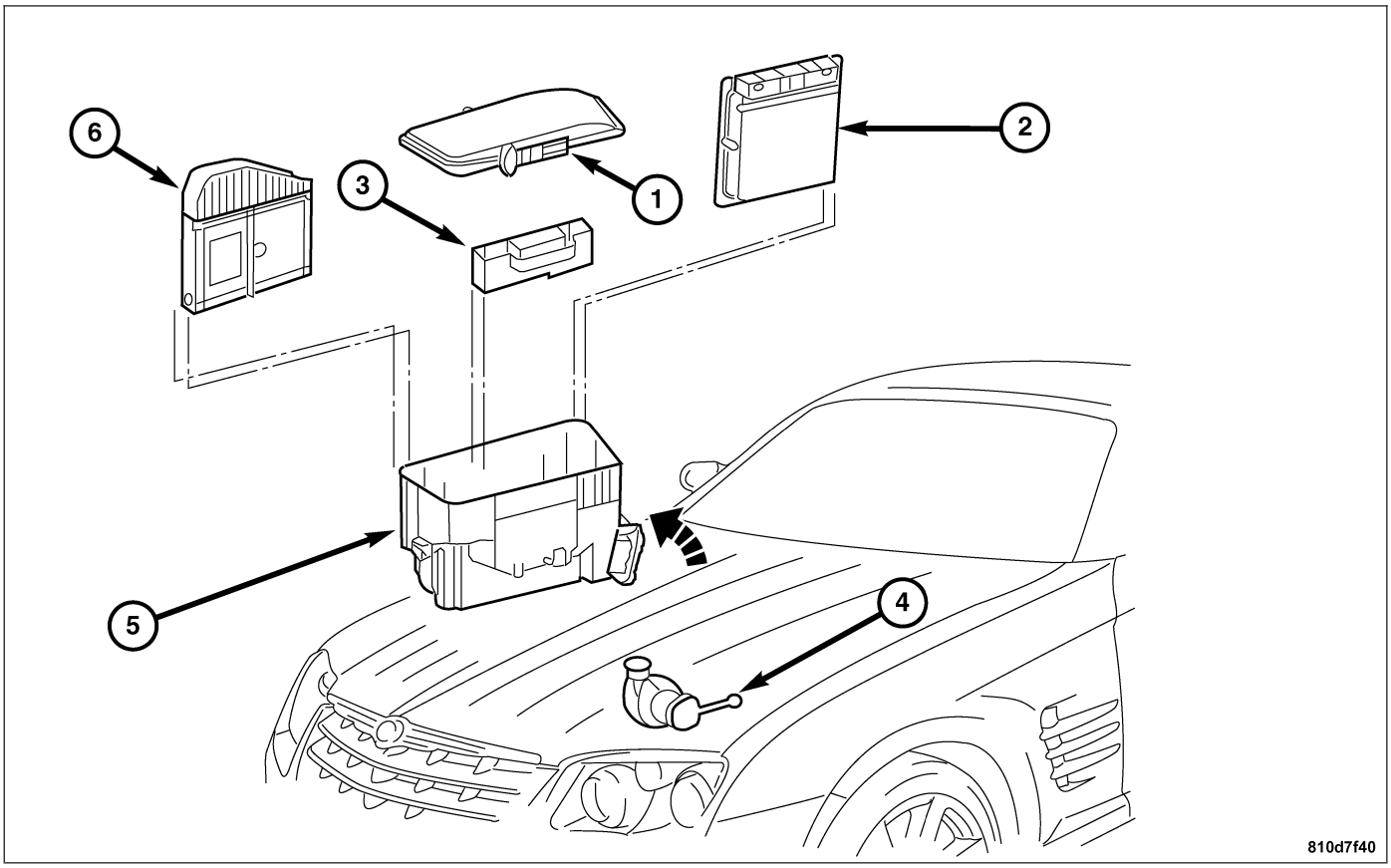

1 - CONTROL MODULE BOX COVER
2 - POWERTRAIN CONTROL MODULE
3 - RELAY CONTROL MODULE
4 - CONTROL MODULE BOX COOLING FAN
5 - CONTROL MODULE BOX
6 - BODY CONTROL MODULE

1. Remove the fuel filler tube cap.
2. Remove the fuel pump fuse from the relay control module (3) located next to the PCM.
3. Start and run engine until it stalls.
4. Attempt restarting engine until it will no longer run.
5. Turn ignition key to OFF position.
6. Return the fuel pump fuse to the relay control module.
7. One or more Diagnostic Trouble Codes may have been stored in PCM memory due to fuel pump fuse removal. The DRB III® scan tool must be used to erase a DTC.

STANDARD PROCEDURE - DRAINING FUEL TANK

Two different procedures may be used to drain fuel tank (lowering tank or using DRB scan tool).

The quickest draining procedure involves lowering the fuel tank.

WARNING: RELEASE FUEL SYSTEM PRESSURE BEFORE SERVICING FUEL SYSTEM COMPONENTS. SERVICE VEHICLES IN WELL VENTILATED AREAS AND AVOID IGNITION SOURCES. NEVER SMOKE WHILE SERVICING THE VEHICLE.

As an alternative procedure, the electric fuel pump may be activated allowing tank to be drained at fuel rail connection. Refer to DRBIII® scan tool for fuel pump activation procedures. Before disconnecting fuel line at fuel rail, release fuel pressure. Refer to the Fuel System Pressure Release Procedure in this group for procedures. Disconnect the fuel line at the fuel rail and remove the plastic retainer from the fuel rail. Take plastic retainer and install it back into the fuel line from body. Attach end of special test hose tool number 6539 at fuel line connection from the body line. Position opposite end of this hose tool to an approved gasoline draining station. Activate fuel pump and drain tank until empty. When done, remove the special test hose tool number 6539 from the body line. Remove the plastic retainer from the special test hose tool number 6539 and reinstall it into the fuel line from the body. Install the fuel line to the fuel rail.

If electric fuel pump is not operating, tank must be lowered for fuel draining. Refer to following procedures.

1. Remove fuel filler cap.
2. Perform the Fuel System Pressure Release procedure. **Refer to Page 14-5**.
3. Disconnect negative cable from battery.
4. Raise vehicle and support.
5. Certain models are equipped with a separate grounding wire (strap) connecting the fuel fill tube assembly to the body. Disconnect wire by removing screw.
6. Open fuel fill door and remove screws mounting fuel filler tube assembly to body. Do not disconnect rubber fuel fill or vent hoses from tank at this time.
7. Place a transmission jack under center of fuel tank. Apply a slight amount of pressure to fuel tank with transmission jack.

Note: Lower the tank just enough so that the filler tube fitting is the highest point of the fuel tank.

8. Remove fuel tank mounting strap nuts from mounting strap studs.
9. Remove filler tube from fuel tank. Tank will be drained through this fitting.

WARNING: WRAP SHOP TOWELS AROUND HOSES TO CATCH ANY GASOLINE SPILLAGE.

10. Drain fuel tank into holding tank or a properly labeled **Gasoline** safety container.

CAUTION: Gasoline or gasoline vapors are highly flammable. A fire could occur if an ignition source is present. Never drain or store gasoline or diesel fuel in an open container, due to the possibility of fire or explosion.

11. If fuel pump module removal is necessary. **Refer to Page 14-17**.

SPECIFICATIONS

FUEL DELIVERY

TORQUE

DESCRIPTION	N·m	Ft. Lbs.	In. Lbs.
Fuel strainer to fuel tank	40	30	—
Fuel tank retaining nuts	10	7	89
Fuel feed hose to fuel strainer	30	22	—
Fuel tank partition retaining bolts	10	7	89
Fuel rail to intake manifold bolts	9	—	80
Fuel feed line to fuel rail	38	28	—

FUEL SYSTEM

Nominal working pressure is 3.7 - 4.2 bar (54 - 61 psi).

Allowable leak down (engine off) pressure after 30 minutes is 2.5 bar (36 psi).

Minimum fuel delivery rate is 1 liter (1.05 qt.) in a maximum of 35 seconds.

Fuel pump amperage draw range is 4 - 9 amps.

FUEL CAPACITY

CAPACITY	LITERS	U.S. GALLONS
Total	60	15.8
Reserve	8	2.1
Nominal refill capacities are shown. A variation may be observed from vehicle to vehicle due to manufacturing tolerance and refill procedures.		

SPECIAL TOOLS

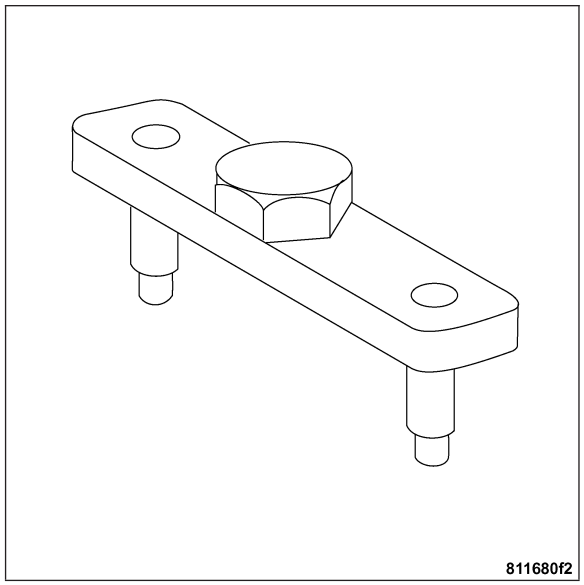

9240 PIN WRENCH

FUEL FILL CHECK VALVE

DESCRIPTION

All vehicles are equipped with an inlet check valve on the inside of the fuel tank at the filler tube.

The check valve prevents fuel from splashing back during vehicle refueling. The valve cannot be adjusted or repaired. If faulty, worn, or damaged, the entire fuel tank must be replaced as an assembly.

OPERATION

When the fuel tank is full, a float closes a flap at the bottom insert. The fuel filler neck is filled rapidly and the gasoline pump nozzle switches off.

FUEL FILTER/PRESSURE REGULATOR

DESCRIPTION

FUEL FILTER

The combination fuel filter/fuel pressure regulator (4) consists of a housing with an integrated filter element. The fuel flows through the filter from the outside to the inside. As a result, any impurities are trapped inside the filter.

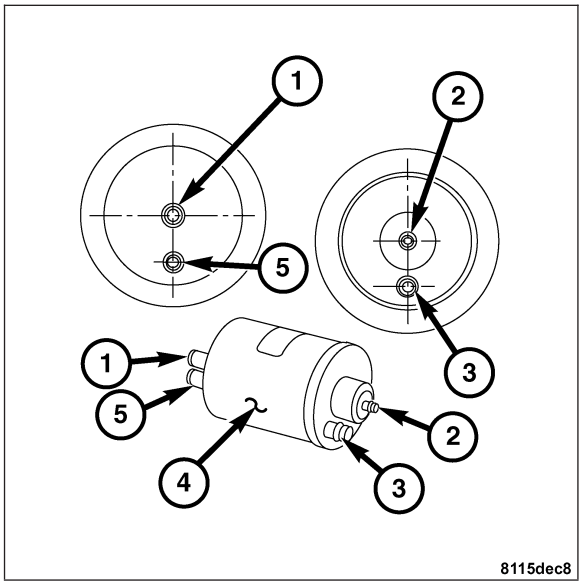

FUEL PRESSURE REGULATOR

The combination fuel filter/fuel pressure regulator (2) is located along side of the fuel pump as part of the fuel filter assembly. It is transversely mounted to a chassis crossmember (left-to-right).

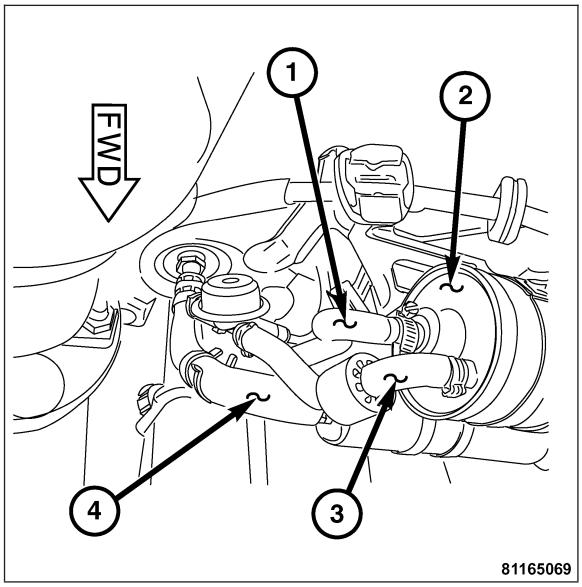

OPERATION

FUEL PRESSURE REGULATOR

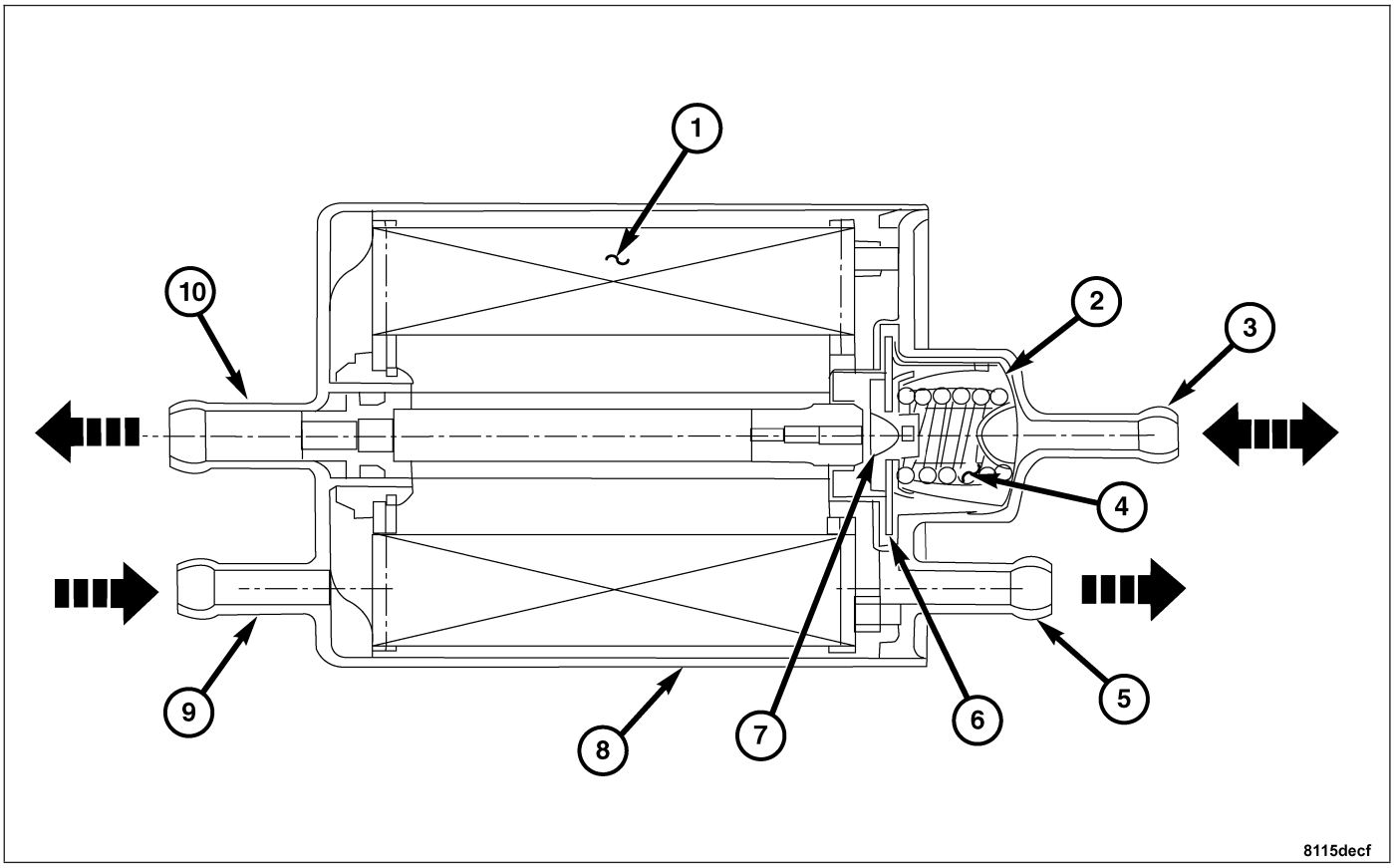

1 - FILTER
2 - DIAPHRAGM PRESSURE REGULATOR
3 - AIR LINE
4 - COMPRESSION SPRING
5 - TO ENGINE
6 - DIAPHRAGM
7 - VALVE
8 - FUEL FILTER / PRESSURE REGULATOR
9 - FEED FROM FUEL PUMP
10 - RETURN FLOW TO FUEL TANK

The pressure regulator is a mechanical device that is calibrated to maintain fuel system operating pressure of between 3.7 - 4.2 bar (54 - 61 psi) at the fuel injectors.

Fuel is supplied to the fuel filter/fuel pressure regulator by the electric fuel pump directly.

The fuel pump assembly contains a check valve to maintain some fuel pressure in the system when the engine is not operating.

If fuel pressure at the pressure regulator exceeds a set amount, an internal diaphragm closes and excess fuel pressure is routed back into the tank through the pressure regulator.

The diaphragm pressure regulator (2) regulates the fuel pressure by means of the return flow (10) quantity to the fuel tank.

If the pressure rises above the set pressure, the diaphragm (6) is pressed further against the compression spring (4).

The valve (7) attached to the diaphragm opens the passage for the return flow further. If the pressure drops below the set pressure, the valve is closed again by the compression spring (4).

FUEL FILTER

The fuel flows through the filter (1) trapping any fuel impurities that may lie in the bottom of the tank.

The fuel filter can not be serviced separately from the pressure regulator, the entire fuel filter/fuel pressure regulator must be replaced as an assembly. For complete fuel filter/fuel pressure regulator removal procedures, see fuel filter/ fuel pressure regulator removal in this section.

REMOVAL

1. Raise and support the vehicle.
2. Remove the splash shield.

WARNING: THE FUEL SYSTEM IS UNDER CONSTANT FUEL PRESSURE EVEN WITH THE ENGINE OFF. BEFORE DISCONNECTING ANY FUEL LINES, THIS PRESSURE MUST BE RELEASED.

3. Release the fuel system pressure. **Refer to Page 14-5**.

Note: Place a shop towel around fuel lines to catch any excess fuel during disassembly.

4. Remove the fuel filter/pressure regulator degassing line (1).
5. Remove the fuel rail supply line (3) at the fuel filter/pressure regulator.
6. Remove the fuel delivery hose.
7. Remove the fuel return hose at the fuel filter/pressure regulator.
8. Remove the clamp retaining screw and remove the fuel filter/pressure regulator.

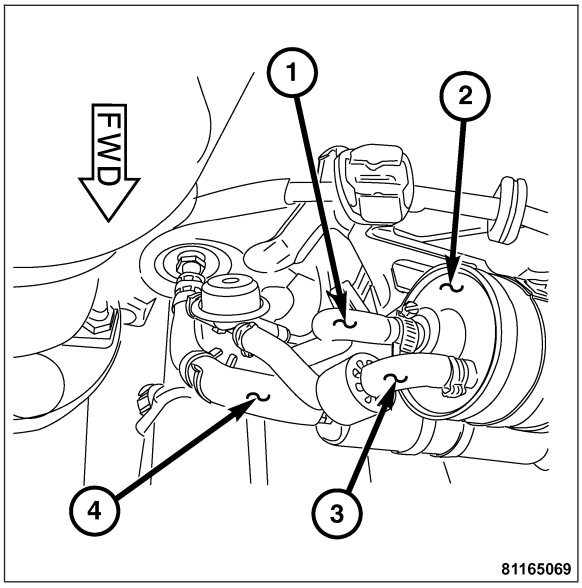

INSTALLATION

1. Position the fuel filter/pressure regulator into the clamp, install the retaining screw and tighten.
2. Install the following hoses/lines in order:
   1. The fuel return hose.
   2. The fuel delivery hose.
   3. The fuel rail supply line (3).
   4. The degaussing line (1).
3. Tighten the hoses/lines to the fuel filter/pressure regulator.
4. Install the splash shield.
5. Lower the vehicle.

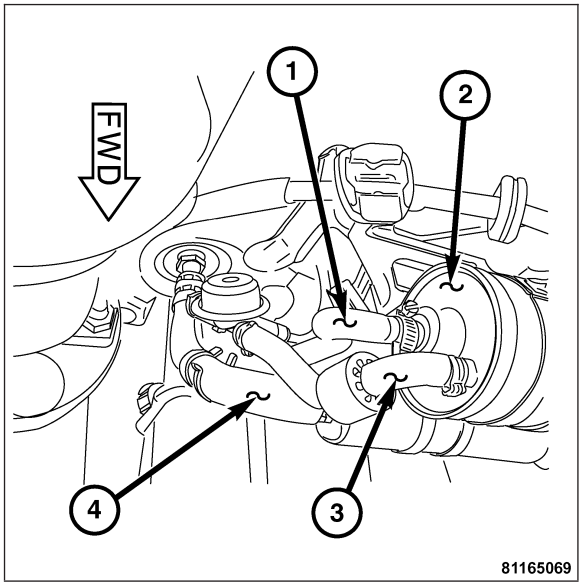

FUEL LEVEL SENDING UNIT / SENSOR

DESCRIPTION

FUEL LEVEL SENDING UNIT/SENSOR

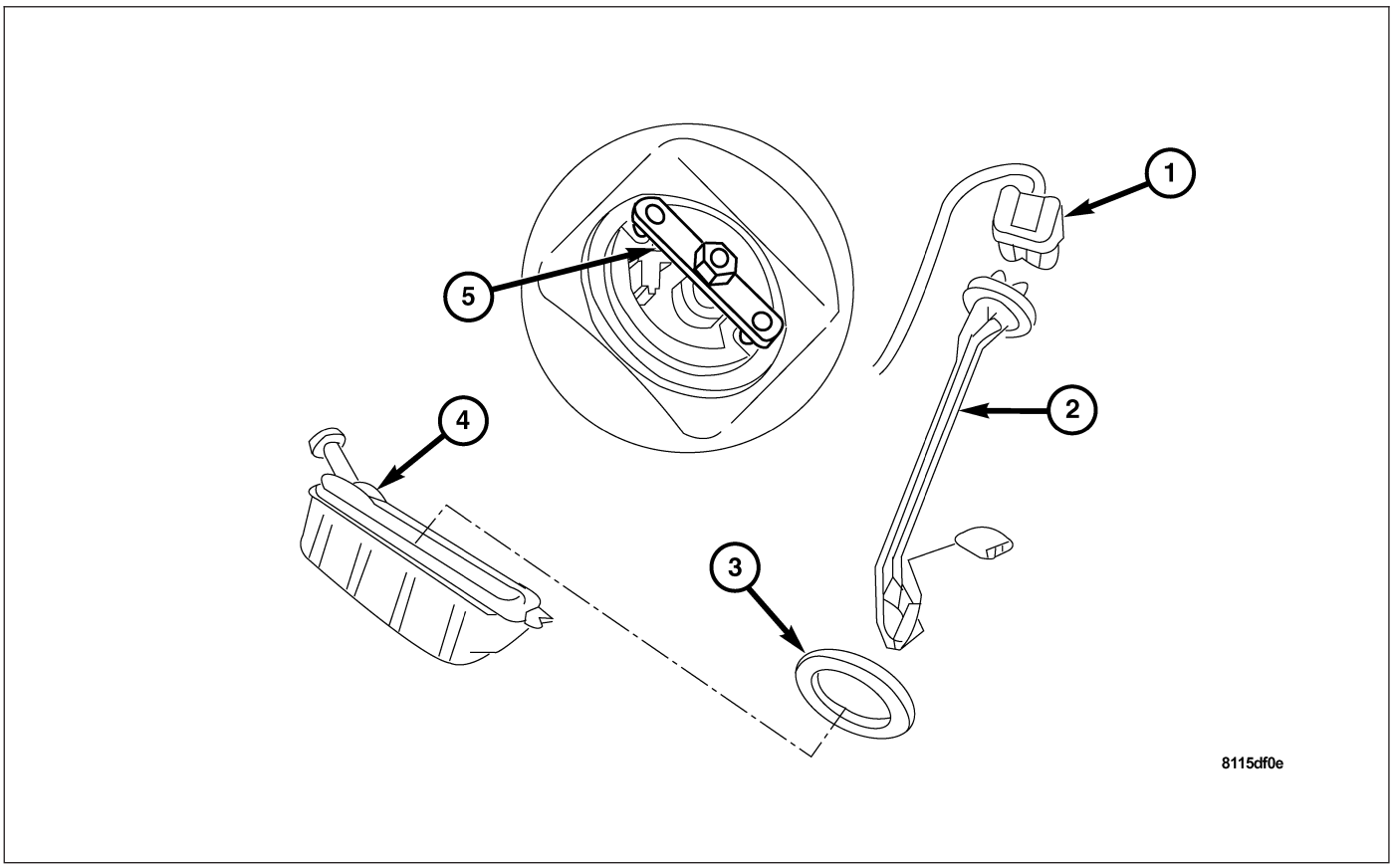

1 - ELECTRICAL CONNECTOR
2 - FUEL LEVEL SENDING UNIT
3 - SEAL
4 - FUEL TANK
5 - SPECIAL TOOL 9240

The fuel level sending unit (2) is combined with a fuel tank pressure sensor and is mounted at the top of the fuel tank (4) extending downward inside. The sending unit is a lever-type sensor with sliding contacts (potentiometer).

OPERATION

FUEL LEVEL SENDING UNIT/SENSOR

The fuel level sender produces a resistance value and changes it with the amount of fuel in the fuel tank. The float arm attached to the sender moves as the fuel level changes. The fuel pressure sensor uses a transducer to determine a resistance value for the emission control system.

DIAGNOSIS AND TESTING - FUEL LEVEL SENDING UNIT

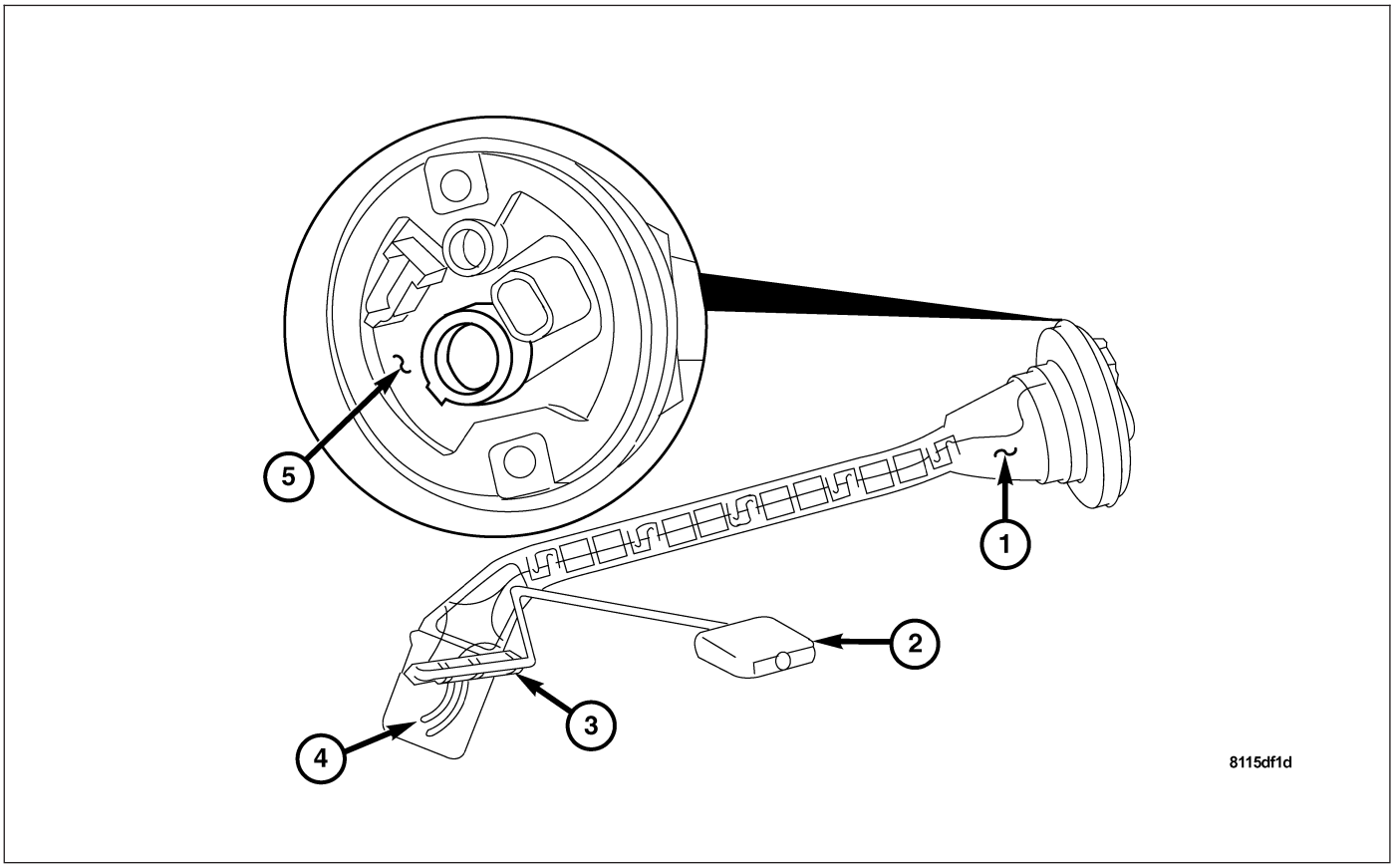

1 - FUEL LEVEL SENDER
2 - LEVEL SENSOR
3 - CONTACTS
4 - POTENTIOMETER
5 - PRESSURE SENSOR

The fuel level sending unit (1) contains a variable resistor (3) (track). As the float (2) moves up or down, electrical resistance will change. Refer to Instrument Panel and Gauges for Fuel Gauge testing. To test the gauge sending unit only, it must be removed from vehicle. The sending unit is a part of the fuel level sending unit/sensor, located and accessible at the top of the fuel tank. Measure the resistance across the sending unit terminals. With float (2) in up position, resistance should be 20 ohms (+/- 5%). With float (2) in down position, resistance should be 270 ohms (+/- 5%).

REMOVAL

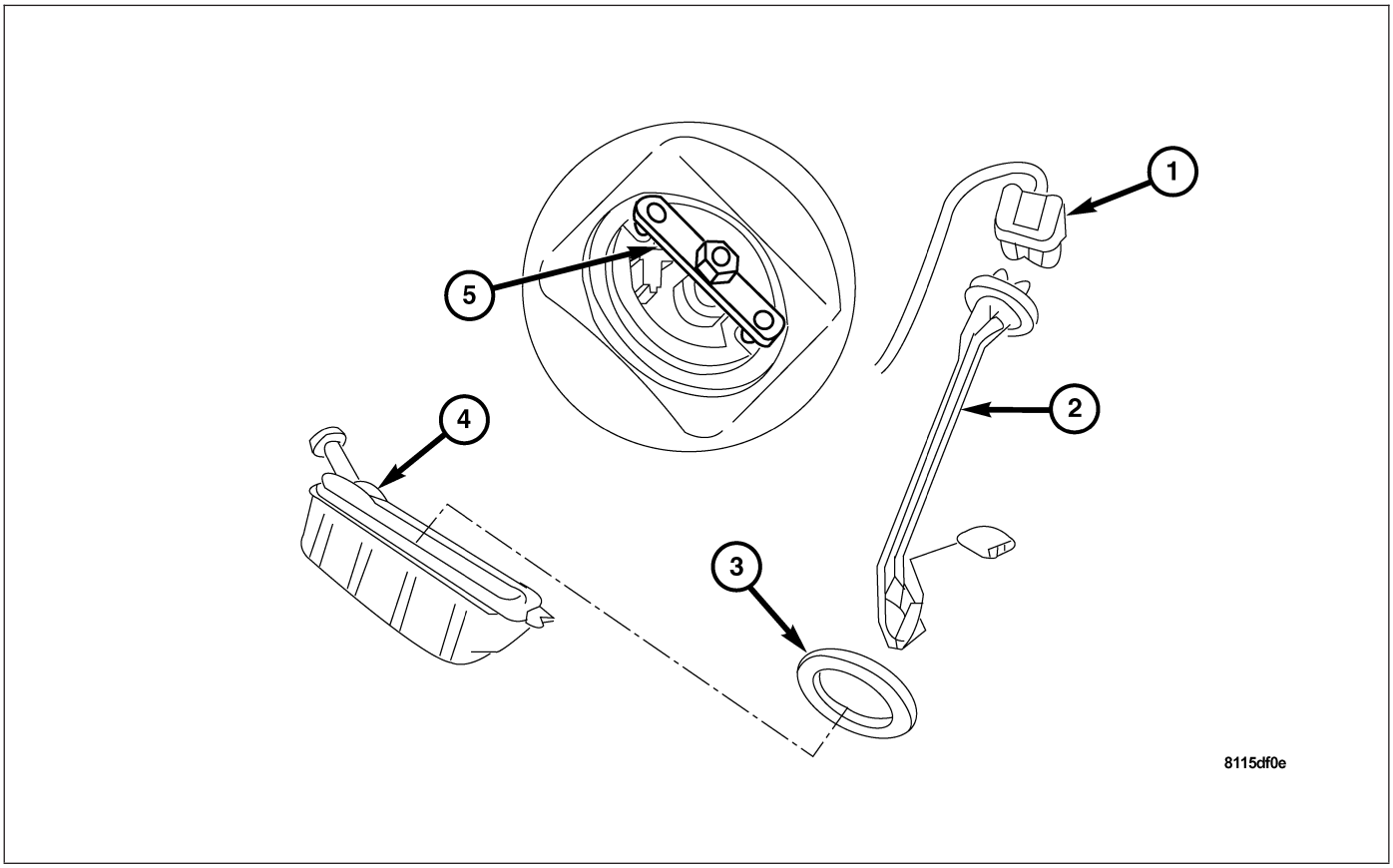

1 - ELECTRICAL CONNECTOR
2 - FUEL LEVEL SENDING UNIT
3 - SEAL
4 - FUEL TANK
5 - SPECIAL TOOL 9240

1. Disconnect the negative battery cable.
2. Drain the fuel tank. **Refer to Page 14-5**.
3. Remove the cargo area interior trim panels.
4. Remove the fuel tank partition retaining bolts and remove the fuel tank partition.
5. Disconnect the fuel level sending unit/sensor harness connector (1).

Note: Place a shop towel around the fuel level sending unit/sensor to catch any excess fuel during disassembly.

6. Install Special Tool 9240 (5) and rotate the fuel level sending unit/sensor (2) counterclockwise.
7. Remove the fuel level sending unit/sensor (2) from the fuel tank (4).

INSTALLATION

1. Install the fuel level sending unit/sensor into the fuel tank.
2. Install Special Tool 9240 and rotate the fuel level sending unit/sensor clockwise fully to stop. Remove the Special Tool.
3. Connect the fuel level sending unit/sensor harness connector.
4. Install the fuel tank partition into the cargo area, then install the retaining bolts and torque to 10 N·m (7 ft. lbs.).
5. Install the cargo area interior trim panels.
6. Restore the fuel level.
7. Connect the negative battery cable.

FUEL LINES

DESCRIPTION

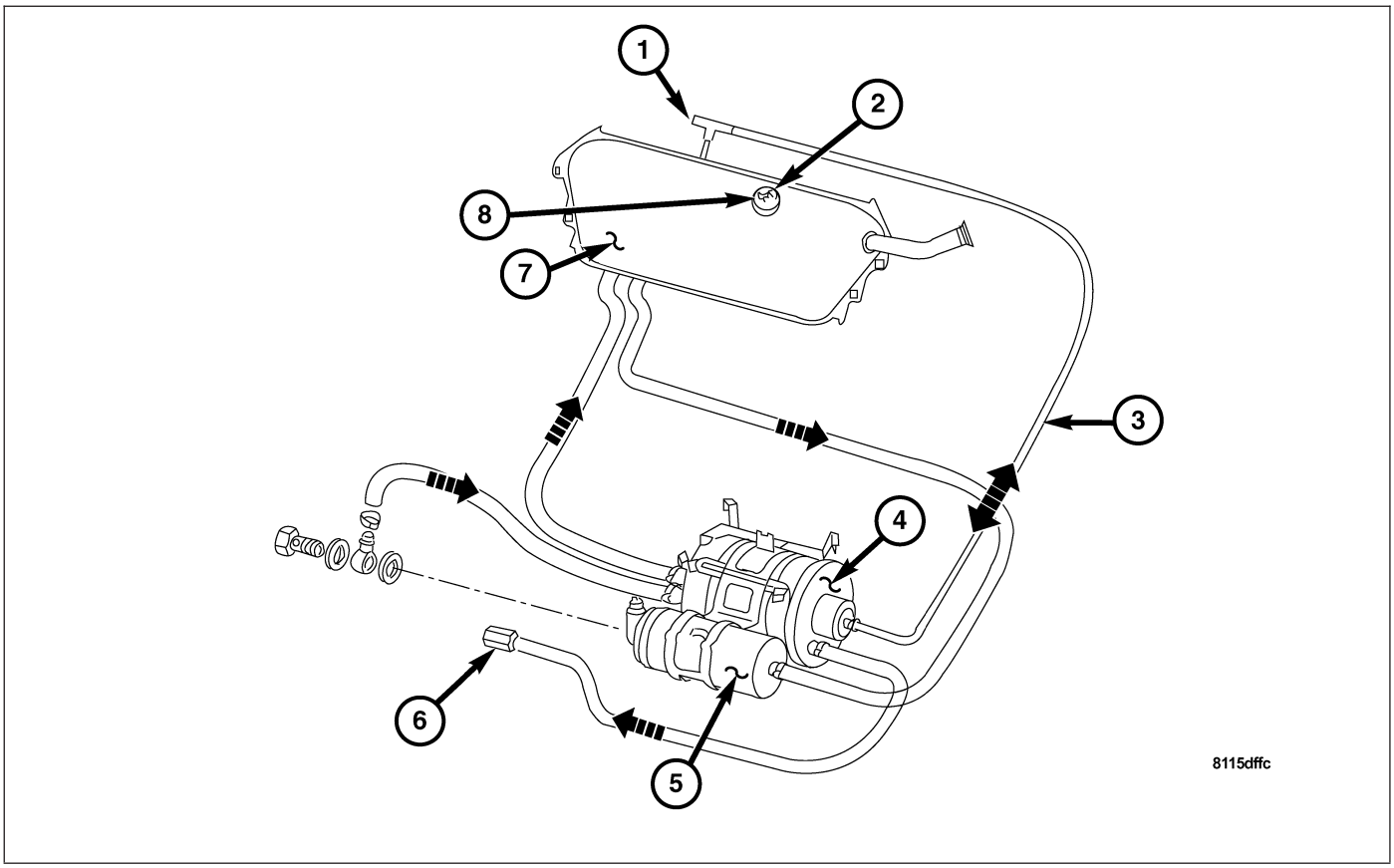

1 - TO CHARCOAL CANISTER
2 - FUEL LEVEL SENDER
3 - AIR LINE FROM FOR PRESSURE REGULATOR
4 - FUEL FILTER
5 - FUEL PUMP
6 - TO FUEL RAIL
7 - FUEL TANK
8 - FUEL TANK PRESSURE SENSOR

WARNING: THE FUEL SYSTEM MAY BE UNDER A CONSTANT PRESSURE (EVEN WITH THE ENGINE OFF). BEFORE SERVICING ANY FUEL SYSTEM HOSES, FITTINGS, LINES, OR MOST COMPONENTS, FUEL SYSTEM PRESSURE MUST BE RELEASED. REFER TO THE FUEL SYSTEM PRESSURE RELEASE PROCEDURE.

The lines/tubes/hoses used on fuel injected vehicles are of a special construction. This is due to the higher fuel pressures and the possibility of contamination in the fuel system. If it is necessary to replace these lines/tubes/hoses, only those designed for this vehicle may be used.

The hose clamps used to secure rubber hoses on fuel injected vehicles are of a special rolled edge construction. This construction is used to prevent the edge of the clamp from cutting into the hose. Only these rolled edge type clamps may be used in this system. All other types of clamps may cut into the hoses and cause high-pressure fuel leaks. Use new, original equipment type hose clamps as replacements when necessary.

FUEL PUMP

DESCRIPTION

The fuel pump is a rotating spindle-type pump. The fuel pump moves fuel from the fuel tank through the fuel filter to the engine's fuel injectors.

OPERATION

Note: Check valve maintains volume of fuel in the rail and lines, not pressure.

The pump draws fuel through a strainer and pushes it through the motor to the outlet. The pump contains a check valve. The valve in the pump outlet maintains the volume of fuel during engine off conditions for a short while. It is normal for fuel pressure to drop to zero after cool down. The fuel pump relay provides voltage to the fuel pump. The fuel pump has a maximum deadheaded pressure output of approximately 9.0 kPa (130 psi). The regulator adjusts fuel system pressure to approximately 3.7 - 4.2 bar (54 - 61 psi).

DIAGNOSIS AND TESTING

FUEL PUMP TEST

FUEL PUMP PRESSURE TEST

Use this test in conjunction with the Fuel Pump Capacity Test, Fuel Pressure Leak Down Test and Fuel Pump Amperage Test.

The fuel pump contains a one-way check valve to prevent fuel flow back into the tank and to maintain fuel supply line pressure (engine warm) when pump is not operational. It is also used to keep the fuel supply line full of gasoline when pump is not operational. After the vehicle has cooled down, fuel pressure may drop (cold fluid contracts), but liquid gasoline will remain in fuel supply line between the check valve and fuel injectors. When the electric fuel pump is activated, fuel pressure should immediately (1–2 seconds) rise to specification.

The fuel system is equipped with a separate fuel pump mounted to the chassis along side of the fuel filter/pressure regulator. The fuel filter/pressure regulator is not controlled by engine vacuum.

WARNING: THE FUEL SYSTEM IS UNDER CONSTANT FUEL PRESSURE EVEN WITH THE ENGINE OFF. BEFORE DISCONNECTING FUEL LINE AT FUEL RAIL, THIS PRESSURE MUST BE RELEASED. REFER TO THE FUEL SYSTEM PRESSURE RELEASE PROCEDURE.

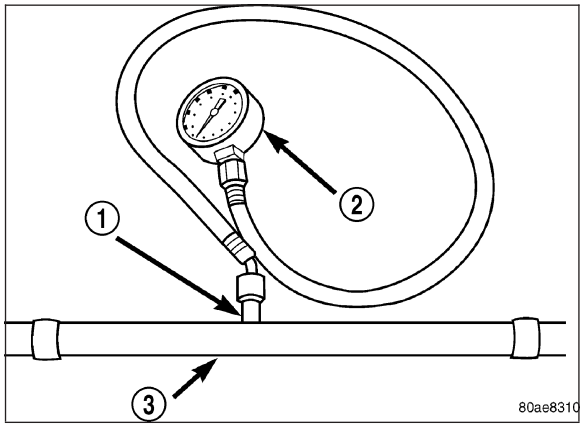

1. Remove the protective cap and connect the 0–6.9 bar fuel pressure gauge (2) to the fuel rail service test port pressure fitting (1) on the fuel rail (3). **The DRB® III Scan Tool along with the PEP module, the 34.4 bar pressure transducer, and the transducer-to-test port adapter may also be used in place of the fuel pressure gauge.**
2. Start and warm engine and note pressure gauge reading. Fuel pressure should be 3.7 - 4.2 bar (54 - 61 psi) at idle.
3. If engine runs, but pressure is below 3.7 bar (54 psi), check for a kinked fuel supply line somewhere between fuel rail (3) and fuel pump. If line is not kinked, but specifications for either the Fuel Pump Capacity, Fuel Pump Amperage or Fuel Pressure Leak Down Tests were not met, replace the fuel pump. Refer to Fuel Pump Removal/Installation.
4. If operating pressure is above 3.7 bar (54 psi), electric fuel pump is OK, but fuel filter/pressure regulator is defective. Replace fuel filter/pressure regulator. Refer to Fuel Filter/Pressure Regulator Removal/Installation.
5. Install the protective cap to the service test port pressure fitting (1) on the fuel rail.

FUEL PUMP CAPACITY TEST

Before performing this test, verify fuel pump pressure. Refer to Fuel Pump Pressure Test. Use this test in conjunction with the Fuel Pressure Leak Down Test.

1. Release fuel system pressure. **Refer to Page 14-5**.
2. Disconnect fuel supply line at fuel rail.
3. Obtain the correct Fuel Line Pressure Test Adapter Tool Hose.
4. Connect the correct Fuel Line Pressure Test Adapter Tool Hose into disconnected fuel supply line. Insert other end of Adaptor Tool Hose into a graduated container.
5. Remove fuel tank filler tube cap.
6. Turn the ignition switch to the ON/RUN position.
7. A good fuel pump will deliver 1 liter (1.05 qt.) of fuel in a maximum of 35 seconds.
   a. If capacity is lower than specification, but fuel pump can be heard operating, check for a kinked/damaged fuel supply line somewhere between fuel rail and fuel pump.
   b. If line is not kinked/damaged, and fuel pressure is OK, but capacity is low, replace fuel filter/pressure regulator assembly. **Refer to Page 14-10**.
   c. If both fuel pressure and capacity are low, replace both fuel pump **Refer to Page 14-17**, and fuel filter/pressure regulator assemblies **Refer to Page 14-10**.

FUEL PUMP AMPERAGE TEST

This amperage (current draw) test is to be done in conjunction with the Fuel Pump Pressure Test, Fuel Pump Capacity Test and Fuel Pressure Leak Down Test. Before performing the amperage test, be sure the temperature of the fuel tank is above 10° C (50° F).

The DRB® Scan Tool along with the DRB Low Current Shunt (LCS) adapter, and its test leads, will be used to check fuel pump amperage specifications.

1. Be sure fuel tank contains fuel before starting test. If tank is empty or near empty, amperage readings will be incorrect.
2. Obtain LCS adapter (1).
3. Plug cable from LCS adapter (2) into DRB scan tool at SET 1 receptacle.
4. Plug DRB into vehicle 16–way connector (data link connector).
5. Connect (-) and (+) test cable leads into LCS adapter receptacles (3). Use **10 amp (10A +)** receptacle and common (-) receptacles.

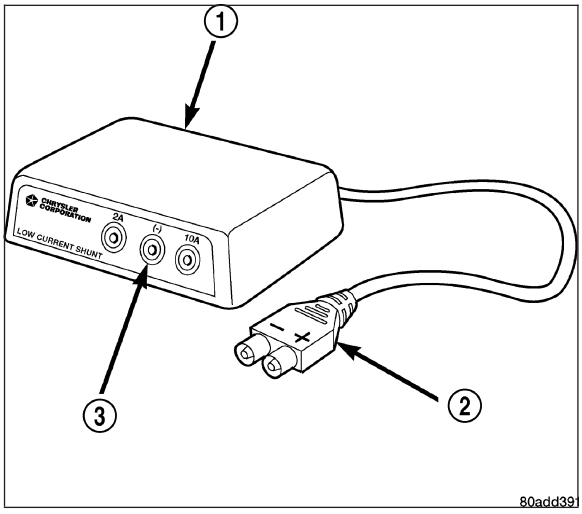

6. Gain access to MAIN MENU on DRB screen.
7. Press DVOM button on DRB.
8. Using left/right arrow keys, highlight CHANNEL 1 function on DRB screen.
9. Press ENTER three times.
10. Using up/down arrow keys, highlight RANGE on DRB screen (screen will default to 2 amp scale).
11. Press ENTER to change 2 amp scale to 10 amp scale. **This step must be done to prevent damage to DRB scan tool or LCS adapter (blown fuse).**
12. Remove cover from Control Module Box and remove the fuel pump relay fuse (Refer to label on Control Module Box cover for fuse location).

WARNING: BEFORE PROCEEDING TO NEXT STEP, NOTE THE FUEL PUMP WILL BE ACTIVATED AND SYSTEM PRESSURE WILL BE PRESENT. THIS WILL OCCUR AFTER CONNECTING TEST LEADS FROM LCS ADAPTER INTO FUEL PUMP FUSE CAVITIES. THE FUEL PUMP WILL OPERATE EVEN WITH IGNITION KEY IN OFF POSITION. BEFORE ATTACHING TEST LEADS, BE SURE ALL FUEL LINES AND FUEL SYSTEM COMPONENTS ARE CONNECTED.

CAUTION: To prevent possible damage to the vehicle electrical system and LCS adapter, the test leads must be connected into fuse cavities.

13. Attach the test leads from LCS adapter into the fuel relay fuse cavities. For location of these cavities, refer to component locator views.
14. When the LCS adapter test leads are attached to the fuel pump relay fuse cavities, the fuel pump **will be activated.** Determine fuel pump amperage on DRB screen. Amperage should be below 9.0 amps. If amperage is below 9.0 amps, and specifications for the Fuel Pump Pressure, Fuel Pump Capacity and Fuel Pressure Leak Down tests were met, the fuel pump is OK.
15. If amperage is more than 9.0 amps, replace the fuel pump assembly. The electric fuel pump is serviced separately.
16. Disconnect test leads from relay fuse cavities immediately after testing.

REMOVAL

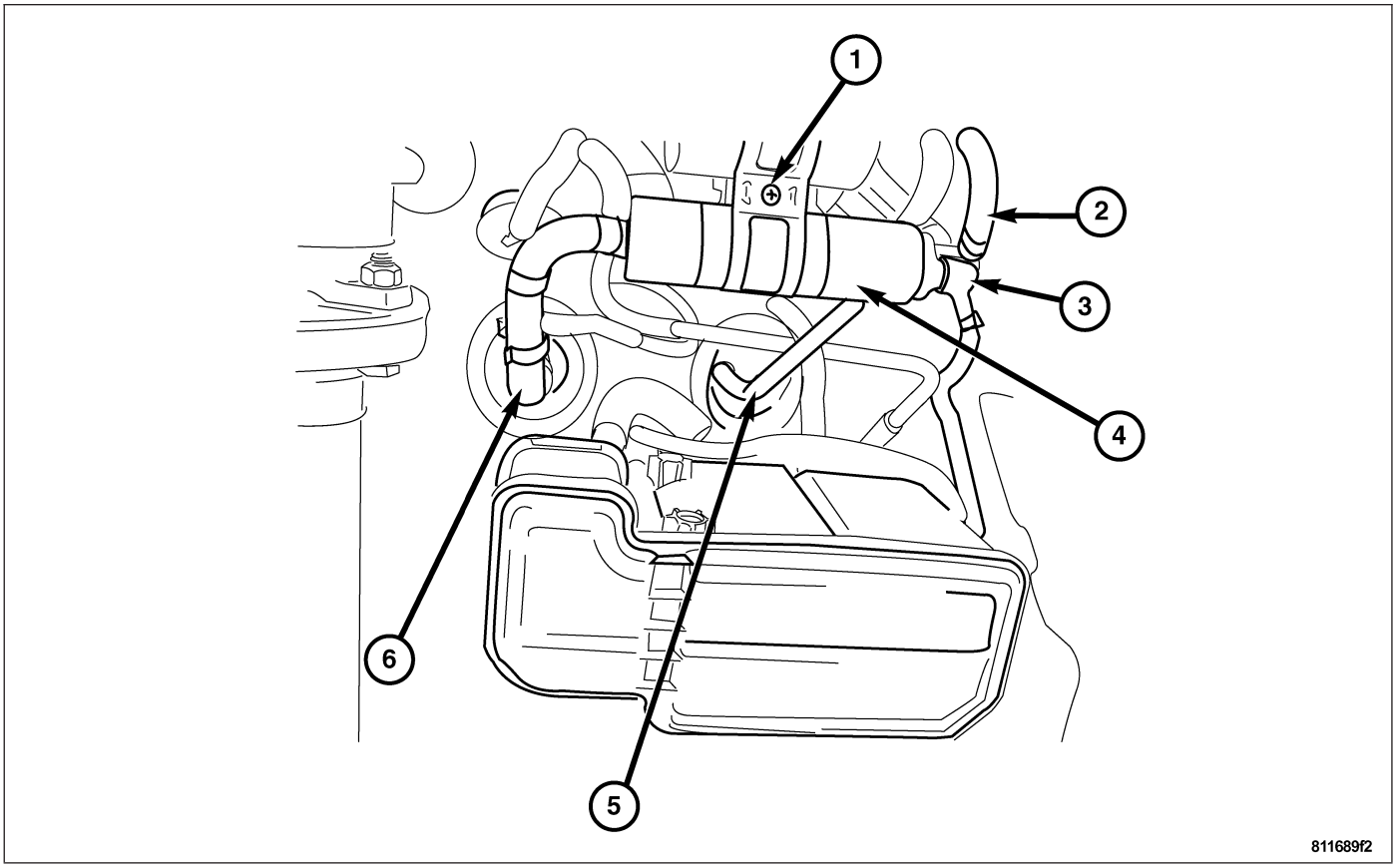

1. Disconnect the negative battery cable.
2. Lift the vehicle and support.
3. Remove the splash shield.

WARNING: PLACE A SHOP TOWEL AROUND THE FUEL LINES TO CATCH ANY EXCESS FUEL DURING DISASSEMBLY.

4. Pinch off the fuel suction hose (6) and the fuel delivery hose (2), then disconnect the hoses from the fuel pump (4).
5. Disconnect the fuel pump harness connectors (3).
6. Remove the clamp retaining screw (1) and remove the fuel pump from the vehicle.

INSTALLATION

1. Install the fuel pump into the clamp, install the clamp retaining screw and tighten.
2. Install the fuel pump harness connectors.
3. Install both the fuel suction hose (4) and the fuel delivery hose to the fuel pump and tighten.
4. Install the splash shield.
5. Lower the vehicle.
6. Connect the negative battery cable.

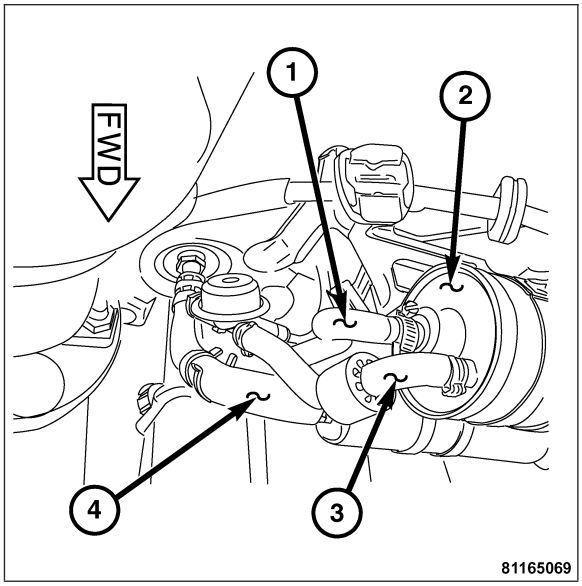

FUEL RAIL

DESCRIPTION

The fuel rail is used to mount the fuel injectors to the engine and is itself mounted to the intake manifold. It also supplies the necessary fuel to each individual fuel injector and is located above the intake manifold and fuel injectors.

OPERATION

The fuel pressure regulator is no longer mounted to the fuel rail on any engine. It is now located on the fuel tank mounted fuel pump module. Refer to Fuel Filter/Fuel Pressure Regulator in the Fuel Delivery System section of this group for information. The fuel rail is not repairable.

REMOVAL

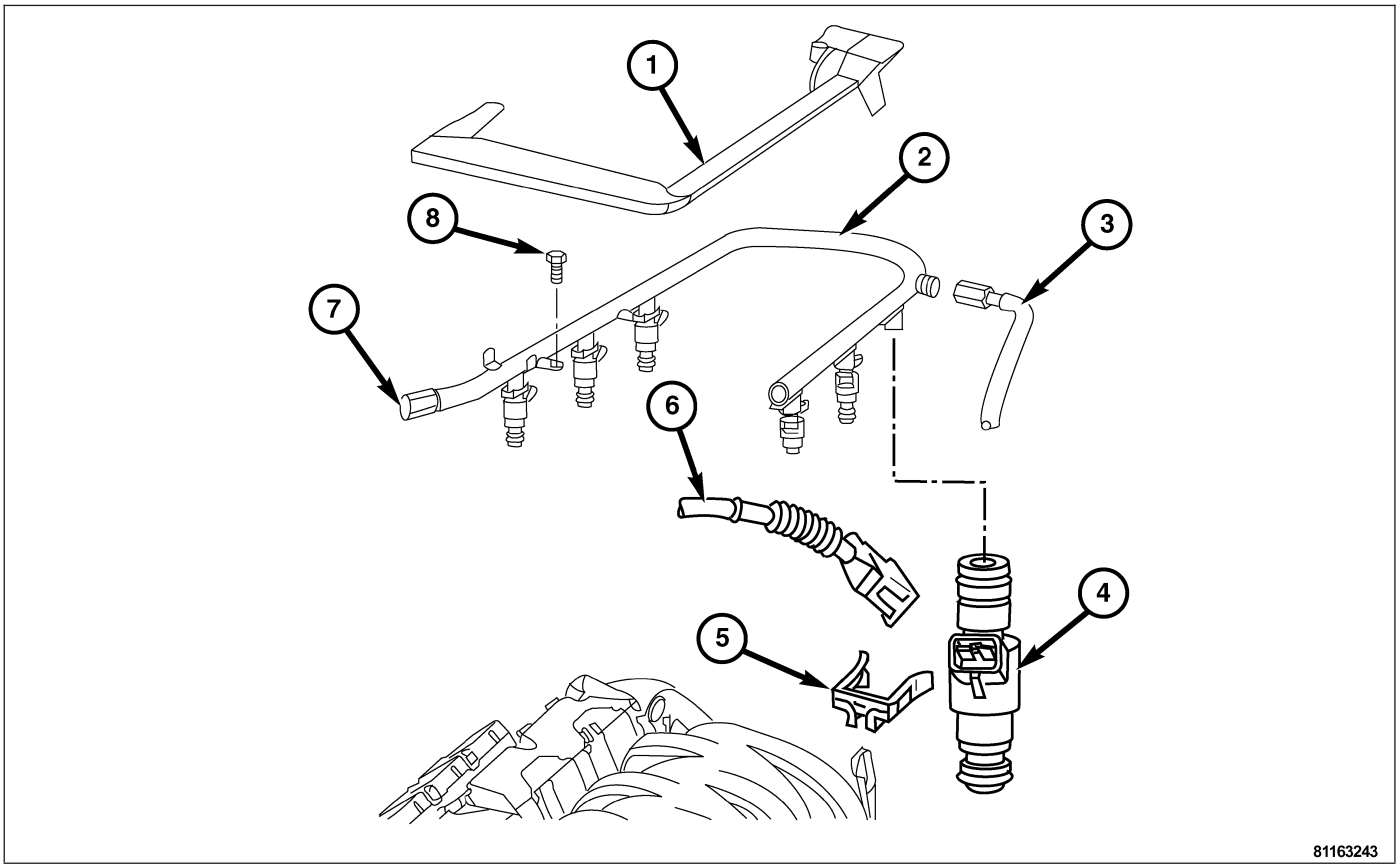

1 - FUEL RAIL TRIM PANEL
2 - FUEL RAIL
3 - FUEL LINE
4 - FUEL INJECTOR
5 - FUEL INJECTOR RETAINING CLIP
6 - FUEL INJECTOR HARNESS CONNECTOR
7 - FUEL RAIL SERVICE VALVE
8 - FUEL RAIL BOLT

WARNING: THE FUEL SYSTEM IS UNDER CONSTANT FUEL PRESSURE EVEN WITH ENGINE OFF. THIS PRESSURE MUST BE RELEASED BEFORE SERVICING THE FUEL RAIL.

1. Remove the air cleaner housing. **Refer to Page 9-608**.
2. Remove the fuel rail trim panel screw and then remove the fuel rail trim panel (1).

WARNING: PLACE A SHOP TOWEL AROUND FUEL LINES TO CATCH ANY EXCESS FUEL.

3. Release the fuel pressure through the fuel rail service valve (7).
4. Disconnect the fuel feed line (3) at the fuel rail.
5. Remove the fuel injector harness connector retaining clips (5), then disconnect the fuel injector harness connectors (6) from the fuel injectors (4).
6. Remove the fuel rail bolts (8) attaching the fuel rail (2) to the intake manifold.
7. Remove the fuel rail (2) with the fuel injectors (4) by moving the fuel rail (2) side to side and lifting gently upward.

INSTALLATION

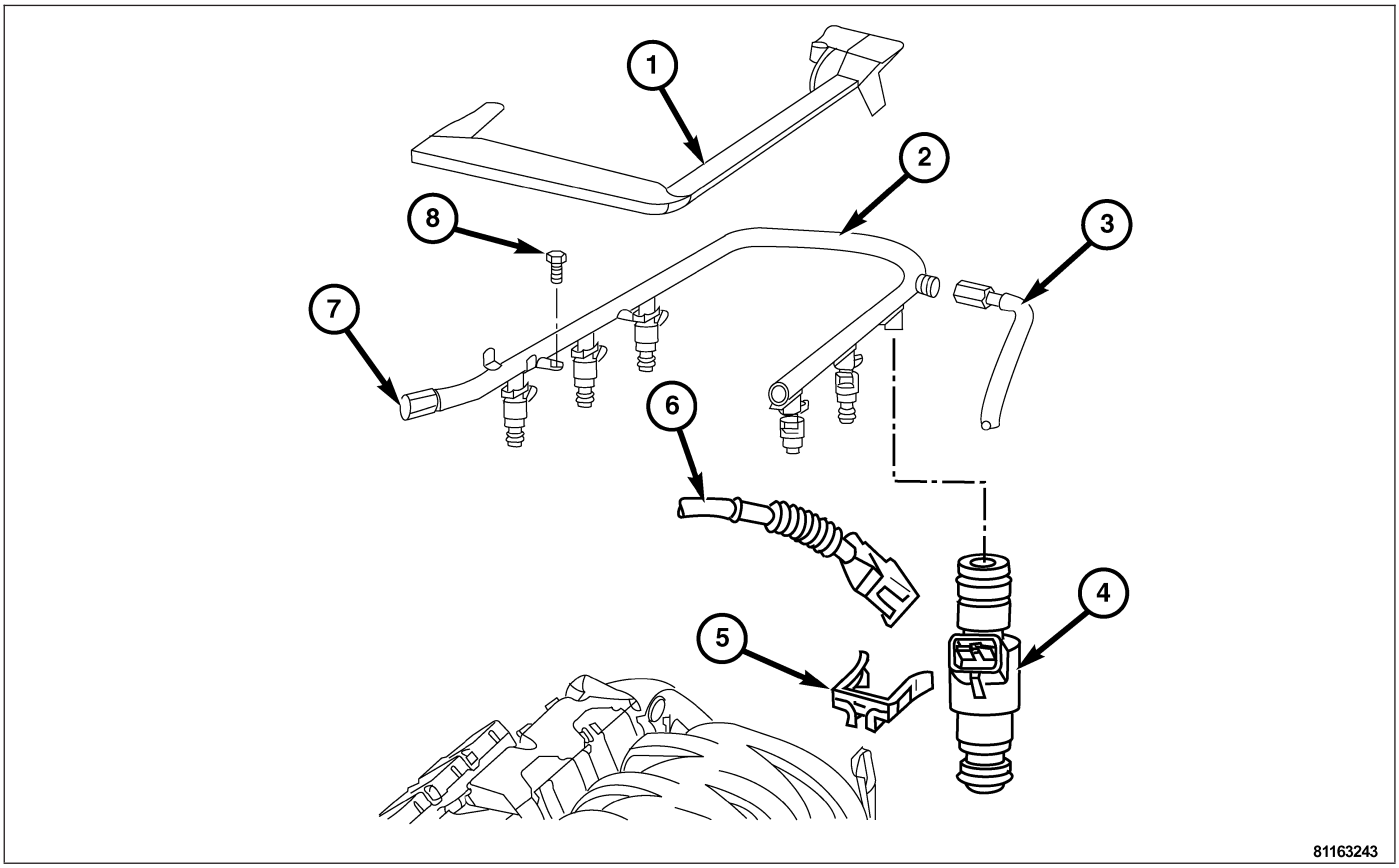

1 - FUEL RAIL TRIM PANEL
2 - FUEL RAIL
3 - FUEL LINE
4 - FUEL INJECTOR
5 - FUEL INJECTOR RETAINING CLIP
6 - FUEL INJECTOR HARNESS CONNECTOR
7 - FUEL RAIL SERVICE VALVE
8 - FUEL RAIL BOLT

1. Install the fuel rail (2) with the fuel injectors (4) by moving the fuel rail (2) side to side and pushing gently inward towards the intake.
2. Install the fuel rail bolts (8) attaching the fuel rail (2) to the intake. Tighten to 9 N·m (80 in. lbs.).
3. Install the fuel injector harness (6) to the fuel injectors (4) then install the fuel injector harness connector retaining clips (5).
4. Connect the fuel feed line (3) to the fuel rail and torque to 38 N·m (28 ft. lbs.).
5. Install the fuel rail trim panel (1), then install the fuel rail trim panel screw.
6. Install the air cleaner housing. **Refer to Page 9-608**.

FUEL TANK

DESCRIPTION

The fuel tank is constructed of sheet steel. Its main functions are for fuel storage. The tank is made from steel. It is equipped with a ORVR (Onboard Refueling Vapor Recovery) this is used to control refueling vapor emissions.

OPERATION

This model passes a full 360 degree roll over test without fuel leakage. To accomplish this, fuel and vapor flow controls are required for all fuel tank connections.

An evaporation control system is connected to the roll over valve(s)/control valve to reduce emissions of fuel vapors into the atmosphere, when the tank is vented due to vapor expansion in the tank. When fuel evaporates from the fuel tank, vapors pass through vent hoses or tubes to a charcoal canister where they are temporarily held. When the engine is running, the vapors are drawn into the intake manifold. In addition, fuel vapors produced during vehicle refueling are allowed to pass through the vent hoses/tubes to the charcoal canister(s) for temporary storage (prior to being drawn into the intake manifold). This is equipped with a self-diagnosing system using a Natural Vacuum Leak Detection (NVLD). Refer to the Emission Control System for additional information.

REMOVAL

1. Disconnect the negative battery cable.
2. Raise the vehicle and support.
3. Remove the splash shield.
4. Drain the fuel tank. **Refer to Page 14-5**.
5. Disconnect the fuel feed hose (4) from the bottom of the fuel tank.
6. Disconnect the fuel return hose from the bottom of the fuel tank.
7. Remove the cargo area trim panels.

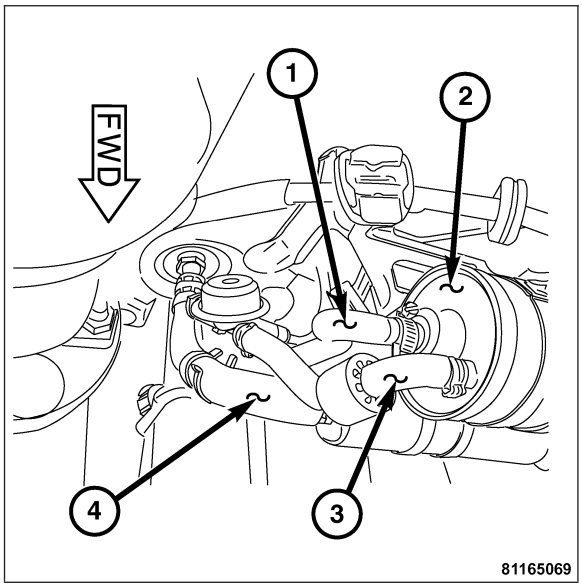

8. Remove the fuel tank partition retaining bolts (2) and remove the fuel tank partition.
9. Disconnect the fuel tank level and pressure sensor connectors (1) from the fuel sending unit.

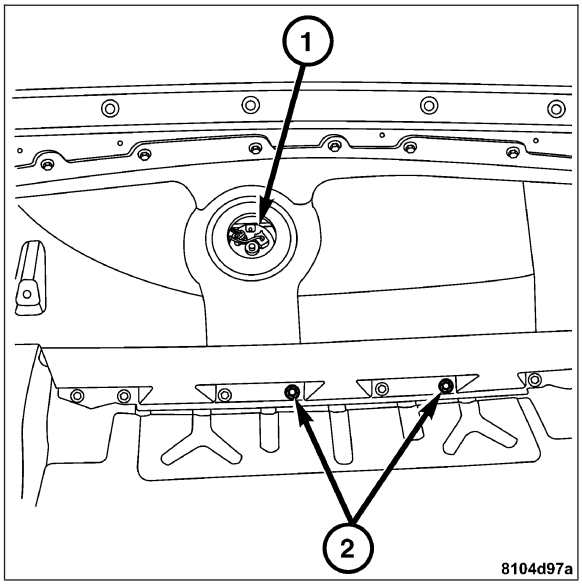

10. Disconnect the fuel tank filler neck cup seals from the body.
11. Remove the fuel tank.

Note: Inspect the strainer and o-ring for damage and replace as necessary.

12. Remove the fuel strainer from the bottom of the fuel tank and inspect.

INSTALLATION

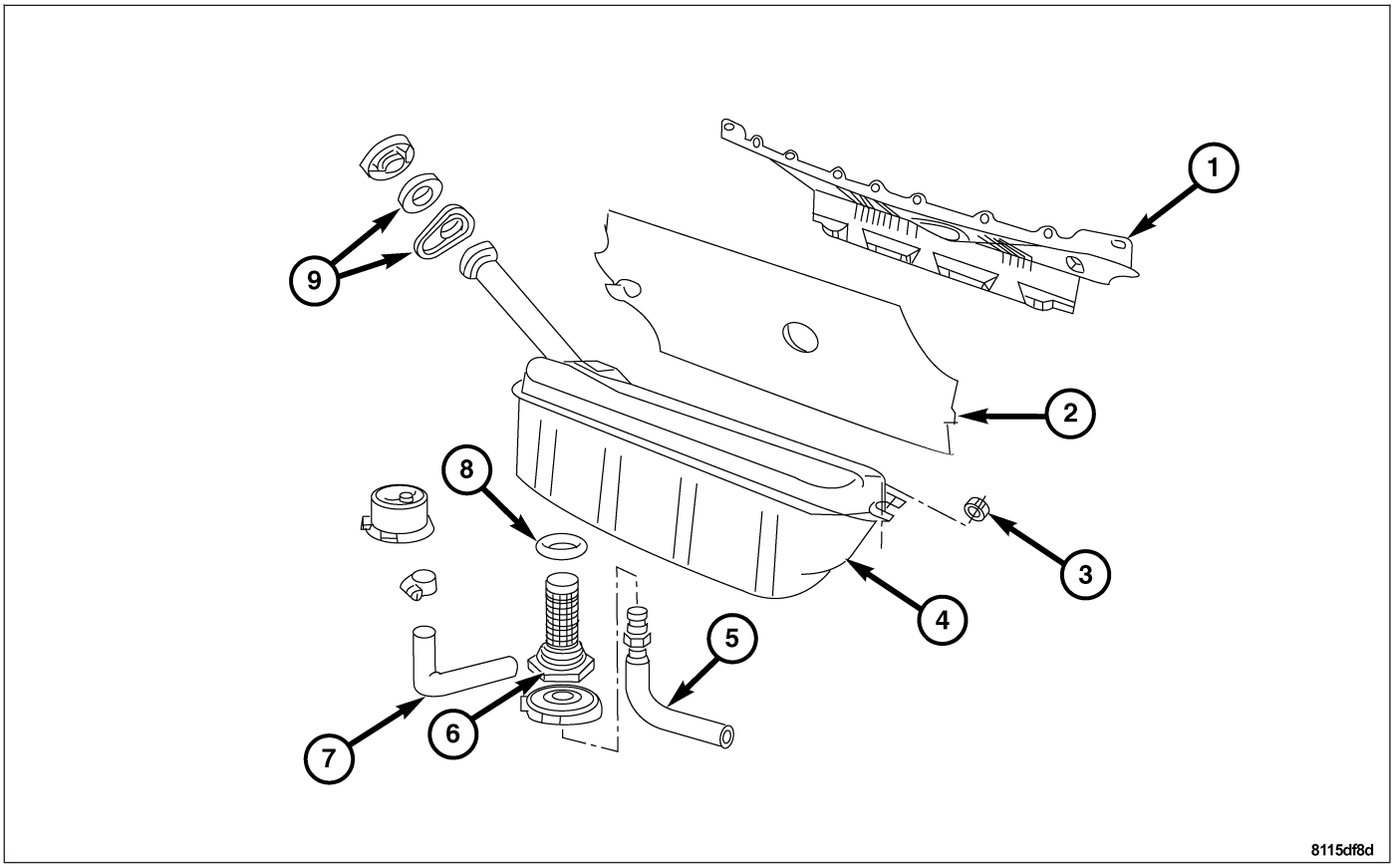

1. Install the fuel strainer (6) into the bottom of the fuel tank (4) and torque to 40 N·m (30 ft. lbs.).

Note: Be sure to position the splash bowl inside the tank when installing the fuel strainer. The fuel strainer holds the splash bowl in place.

2. Install the fuel tank (4) into the cargo area. Install the fuel tank retaining nuts (3) and torque to 10 N·m (7 ft. lbs.).
3. Position the fuel tank filler neck cup seal (9) around the filler neck.

4. Connect the fuel tank level and pressure sensor connectors (1) to the fuel tank sending unit.
5. Install the fuel tank partition into the cargo area. Install the fuel tank partition retaining bolts (2) and torque to 10 N·m (7 ft. lbs.).
6. Install the cargo area trim panels.

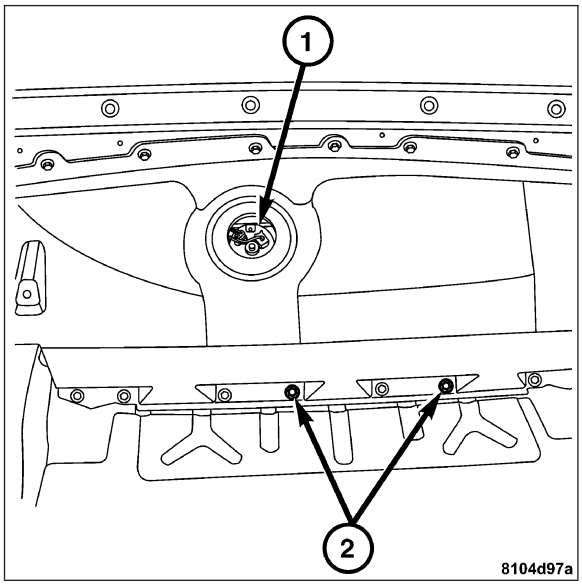

7. Connect the fuel feed hose (4) to the fuel strainer at the bottom of the fuel tank. Tighten the hose to 30 N·m (22 ft. lbs.)
8. Connect the fuel return hose to the fuel tank.
9. Install the splash shield.
10. Lower the vehicle.
11. Connect the negative battery cable.

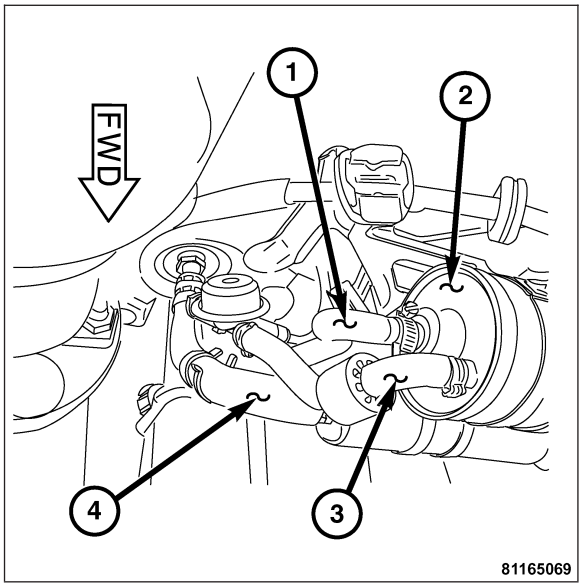

FUEL TANK FILLER TUBE

DESCRIPTION

The fuel tank filler tube (1) is an integral part of the fuel tank assembly and cannot be adjusted or repaired. If faulty, worn, or damaged, the entire fuel tank assembly must be replaced as a complete unit.

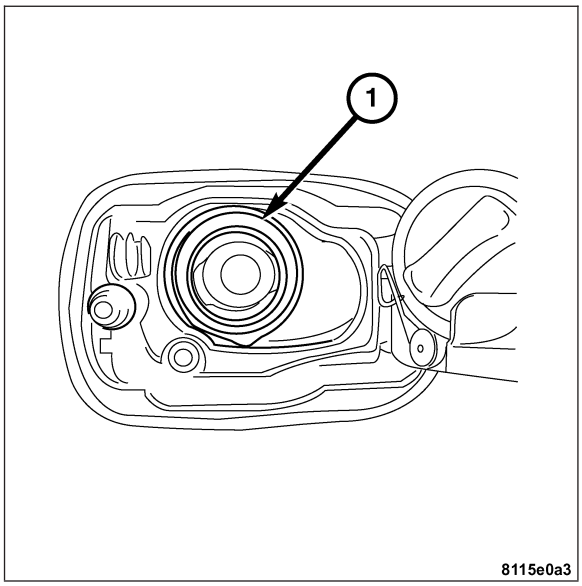

FUEL INJECTION

TABLE OF CONTENTS

page

FUEL INJECTION
SPECIFICATIONS 25
ACCELERATOR PEDAL
DESCRIPTION 26
REMOVAL 26
INSTALLATION 27
ACCELERATOR PEDAL POSITION SENSOR
DESCRIPTION 28
OPERATION 29
CRANKSHAFT POSITION SENSOR
DESCRIPTION 30
OPERATION 30
REMOVAL 31
INSTALLATION 31
FUEL INJECTOR
DESCRIPTION 31
OPERATION 32
REMOVAL 33
INSTALLATION 34
FUEL PUMP RELAY
DESCRIPTION 35
OPERATION 35
INTAKE AIR TEMPERATURE SENSOR
DESCRIPTION 36
OPERATION 36
MANIFOLD AIR FLOW (MAF) SENSOR
DESCRIPTION 37
OPERATION 37
REMOVAL 37

page

INSTALLATION 39
MANIFOLD TUNE VALVE
DESCRIPTION 40
OPERATION 40
REMOVAL 41
INSTALLATION 41
MAP SENSOR
DESCRIPTION 42
OPERATION 42
REMOVAL 42
INSTALLATION 43
O2 SENSOR
DESCRIPTION 43
OPERATION 44
REMOVAL
UPSTREAM O2 SENSOR 45
REMOVAL - DOWNSTREAM O2 46
INSTALLATION
UPSTREAM O2 46
INSTALLATION - DOWNSTREAM O2 47
THROTTLE BODY
DESCRIPTION 47
OPERATION 47
REMOVAL 48
INSTALLATION 48
THROTTLE POSITION SENSOR
DESCRIPTION 49
OPERATION 50

FUEL INJECTION

SPECIFICATIONS

TORQUE SPECIFICATIONS

DESCRIPTION	N·m	Ft. Lbs.	In. Lbs.
Accelerator Pedal Nut	15	11	133
Crankshaft Position Sensor Bolt	8	6	71
Fuel Rail Bolt	9	7	80
Oxygen Sensor	55	41	487
Throttle Body Bolts	20	15	177
Tune Valve Rod Nut	6	4	44

ACCELERATOR PEDAL

DESCRIPTION

The accelerator pedal houses the accelerator pedal position sensor. The accelerator pedal is replaced as a unit.

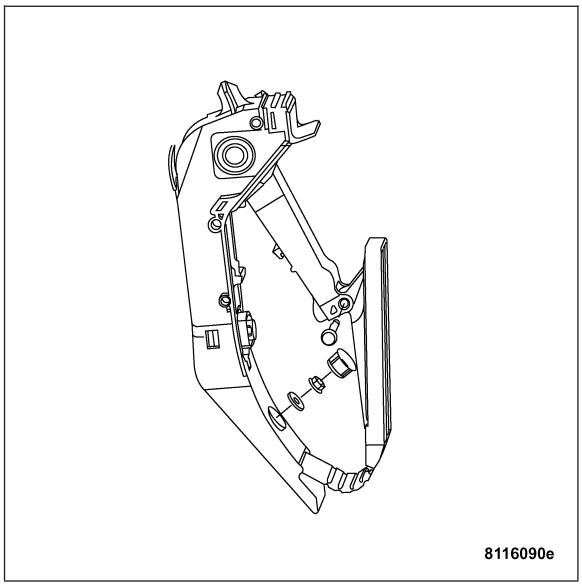

REMOVAL

1. Disconnect the negative battery cable.
2. Remove the accelerator pedal upper nut (1).

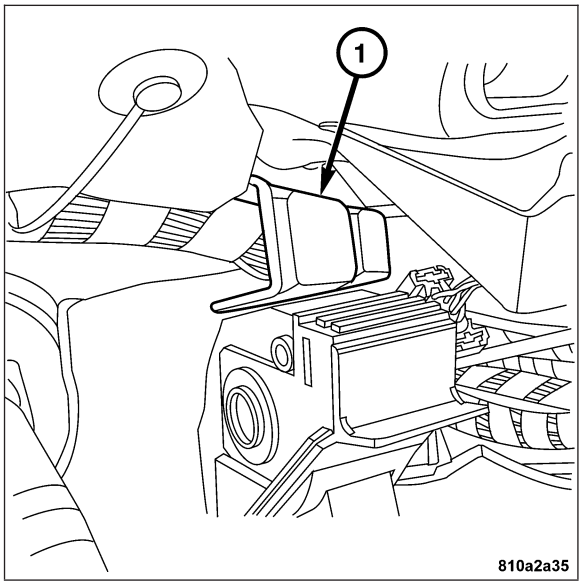

3. Remove the lower accelerator nut cover (1) and the nut.
4. Lift the accelerator pedal off of the welded stud and out of the bracket.
5. Disconnect the accelerator pedal harness connector from the accelerator pedal.

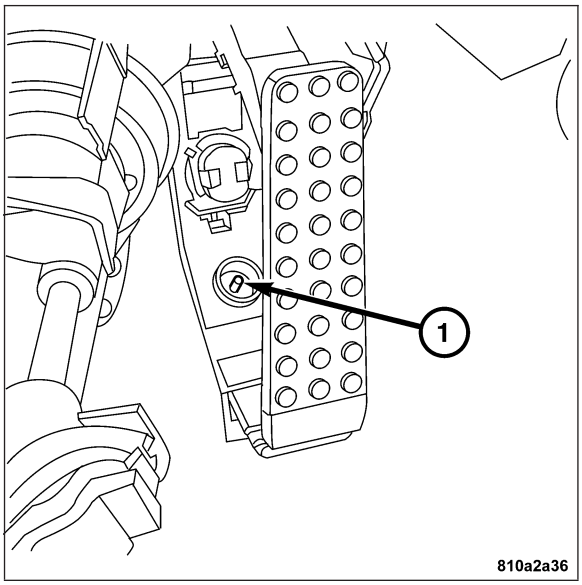

INSTALLATION

1. Connect the accelerator pedal harness connector.
2. Slide the accelerator pedal into the bracket and onto the welded stud.
3. Install the accelerator pedal lower nut (1). Tighten to 15 N·m (11 ft. lbs.).
4. Install the plastic nut cover.

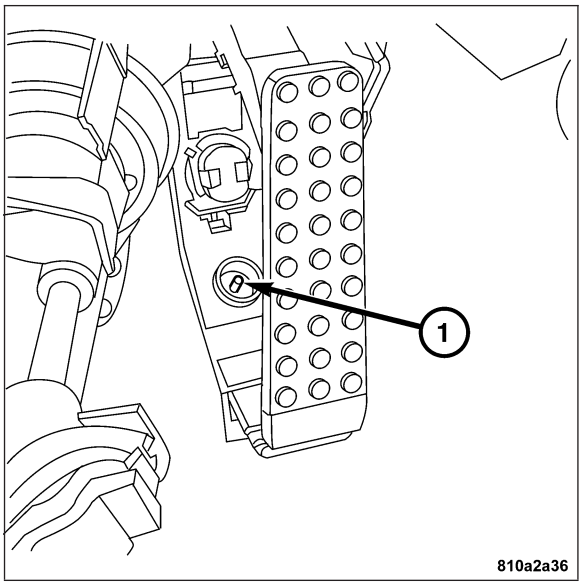

5. Install the accelerator pedal upper nut (1). Tighten to 15 N·m (11 ft. lbs.).
6. Connect the negative battery cable.

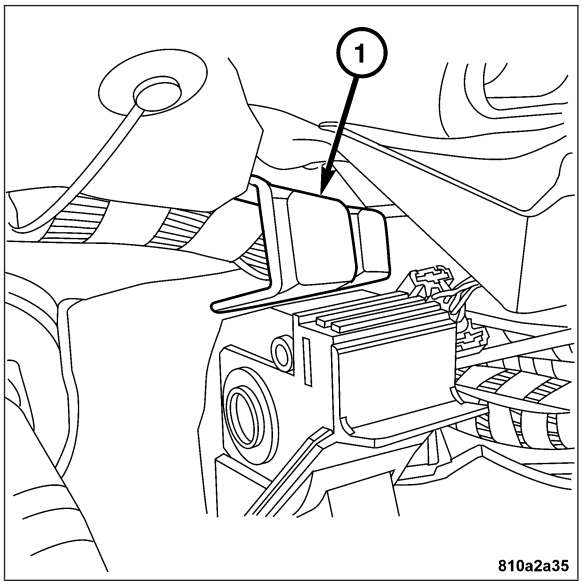

ACCELERATOR PEDAL POSITION SENSOR

DESCRIPTION

The accelerator pedal position sensor (1) is located inside the accelerator pedal. The accelerator pedal position sensor (1) can not be serviced by itself. The accelerator pedal must be replaced as a unit. **Refer to Page 14-26**.

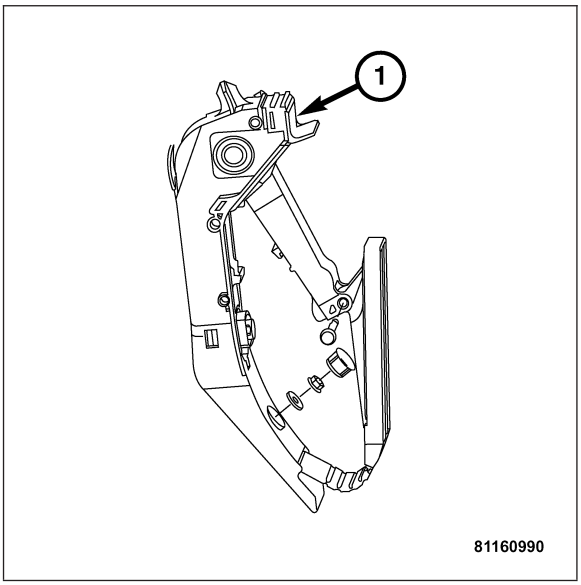

OPERATION

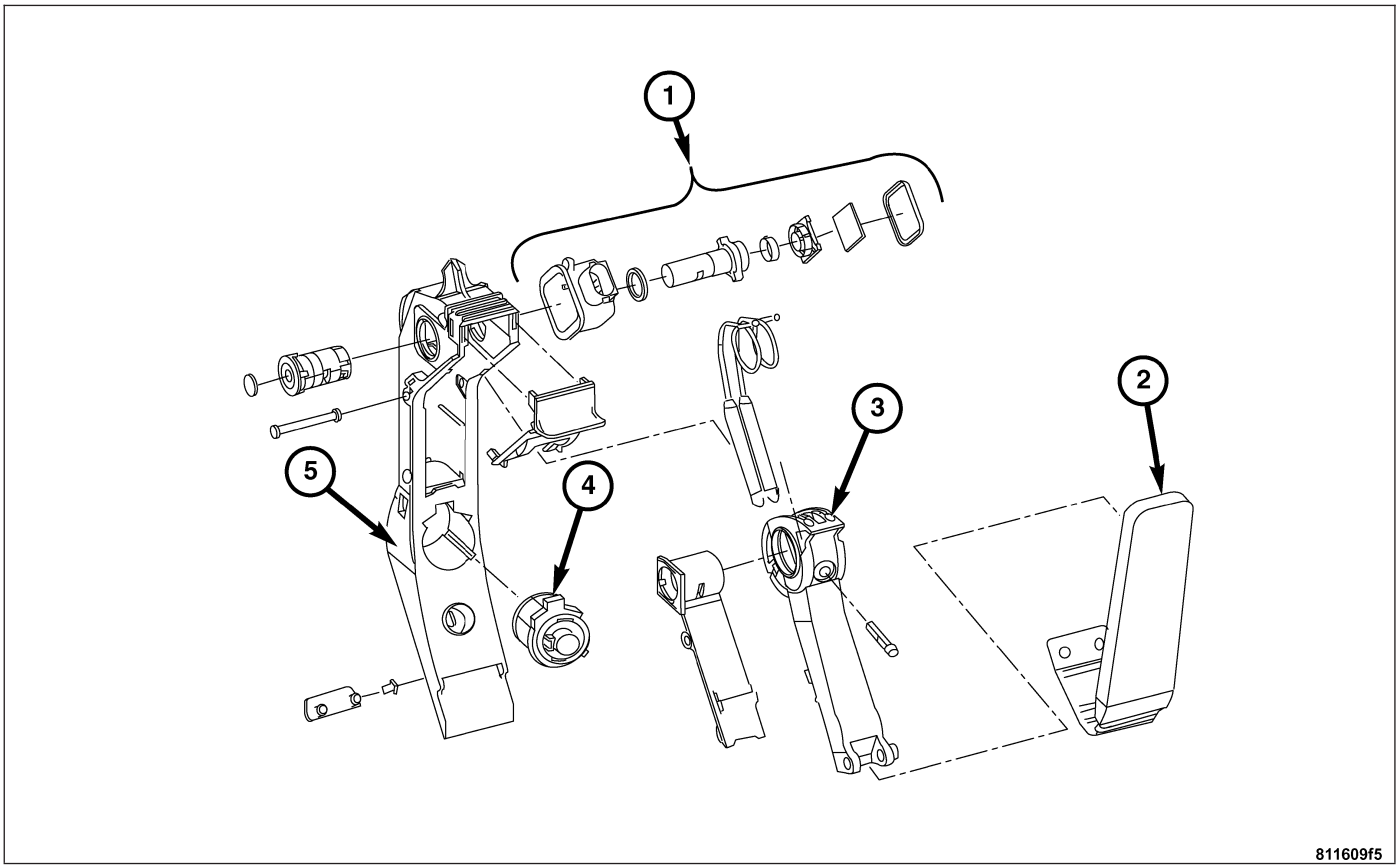

1 - ACCELERATOR PEDAL POSITION SENSOR
2 - ACCELERATOR PEDAL
3 - PEDAL LEVER
4 - KICKDOWN SIMULATOR
5 - BASE PLATE

The PCM recognizes how the accelerator pedal is being pressed and switches between a few characteristic curves. Eighty percent of the engine's power is achieved for a pedal travel of about 50% for an aggressive driver and about 40% for a conservative driver. There is no further difference felt above a pedal travel of about 90%.

The characteristic curve for a conservative driver is active after a long drive. Then the accelerator pedal must be pressed down unusually hard to obtain a higher acceleration level.

The accelerator pedal position sensor in the accelerator pedal determines the opening angle of the throttle valve in the throttle body. The data transfers over the CAN data bus.

Further functions are: Idle speed control, cruise control, engine torque for ESP operation and short performance limitation; for example, for a higher coolant temperature.

The opening angle of the throttle valve will only be determined by the accelerator pedal signal when no limiting functions are active.

The accelerator pedal position sensor is detected by the nominal value potentiometer or hall sensor in the pedal value sensor and information is released to the PCM. The PCM determines the position of the throttle valve and actuates the throttle valve motor.

The actual value potentiometer in the actuator signals the throttle valve position back to the PCM.

The second potentiometer in the actuator and the second signal from the pedal value sensor (potentiometer or hall sensor) supplies a reference value for the plausibility check. The system switches over to the second potentiometer or the hall sensor if the first potentiometer or hall sensor fails (emergency mode).

The accelerator pedal position sensor on the accelerator pedal works according to the hall principal. the sensor is integrated into the pedal lever axis. It consists of a shaft with a ring magnet. This rotates in a printed circuit board with a stator in the fixed hall elements. This produces a change in the voltage.

The accelerator pedal position sensor is supplied with 5 volts from the PCM. The information regarding accelerator position is supplied to the PCM by means of two voltages (pin 4: approximately 0 up to 2.25 volts and pin 5: approximately 0 up to 4.5 volts).

The kickdown simulator is not used as a “kickdown switch”. Wide Open Throttle (WOT) recognition takes place over the signal from the accelerator pedal position sensors pressure point, which is located in the pedal assembly. WOT position is simulated before achieving the full load position.

CRANKSHAFT POSITION SENSOR

DESCRIPTION

The crankshaft position sensor (1) is located on the left side of the engine just forward of the transmission housing. The bottom of the sensor is positioned above the flywheel.

The sensor is a hall effect device combined with an internal magnet.

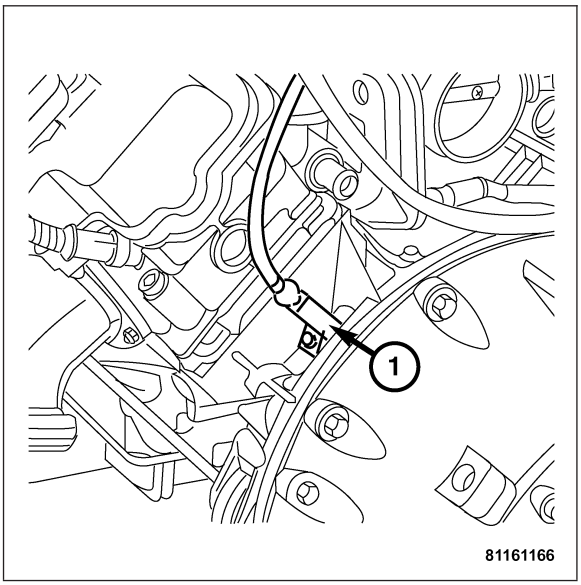

OPERATION

The crankshaft position sensor generates pulses that are the signal sent to the powertrain control module (PCM). The PCM interprets the sensor signal to determine the crankshaft position. The PCM then uses this position, along with other inputs, to determine injector sequence and ignition timing.

The crankshaft position sensor detects slots cut into the transmission driveplate extension. There are 3 sets of slots. Two sets contain 4 slots and one set contains 5 slots, for a total of 13 slots. Basic timing is set by the position of the last slot in each group. Once the Powertrain Control Module (PCM) senses the last slot, it determines which piston will be next at TDC from the camshaft position sensor input. It may take the PCM one engine revolution to determine crankshaft position.

The PCM uses crankshaft position reference to determine injector sequence and ignition timing. Once the PCM determines crankshaft position, it begins energizing the injectors and coils in sequence.

The PCM uses the crankshaft position sensor to calculate the following:

- Engine rpm
- TDC
- Ignition coil synchronization
- Injector synchronization
- Camshaft-to-crankshaft misalignment

REMOVAL

1. Disconnect the negative battery cable.
2. Remove the air cleaner housing. **Refer to Page 9-608**.
3. Disconnect the crankshaft position sensor harness connector.
4. Remove the retaining bolt and the crankshaft position sensor (1).

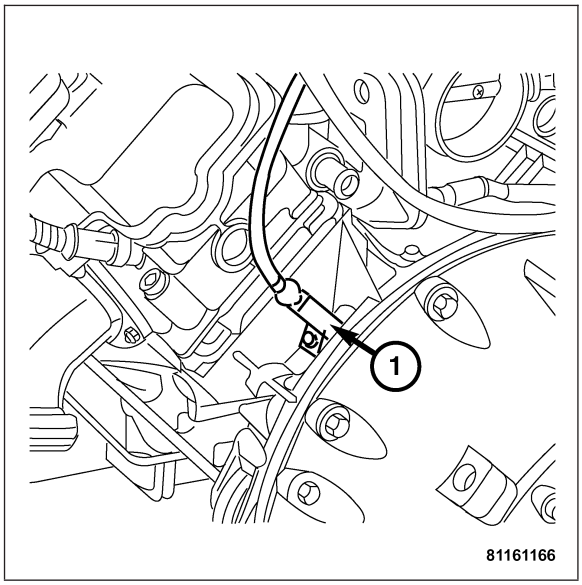

INSTALLATION

1. Install the crankshaft position sensor to the engine tighten to 8 N·m (71 in. lbs.).
2. Connect the crankshaft position sensor harness connector.
3. Install the air cleaner housing. **Refer to Page 9-608**.
4. Connect the negative battery cable.

FUEL INJECTOR

DESCRIPTION

The injectors are positioned in the cylinder heads with the nozzle ends directly above the intake valve port. The fuel injectors are electrical solenoids.

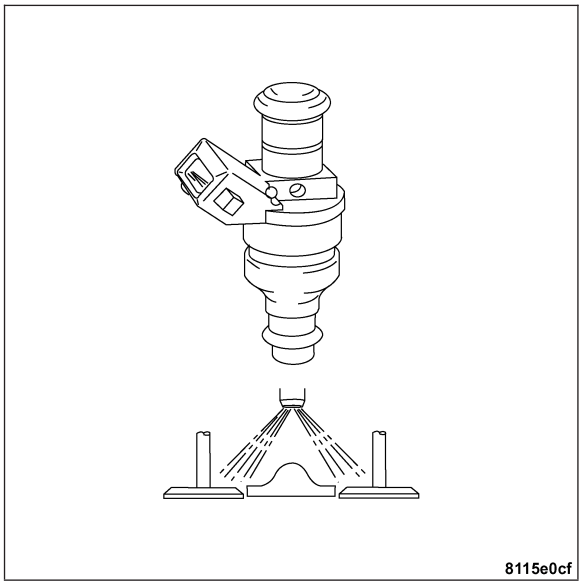

OPERATION

The fuel injector employs the following devices.

- Fuel distribution pipe (1)
- Sealing ring (2)
- Retaining clip (3)
- Magnetic coil (4)
- Sealing ring (5)
- Nozzle needle (6)
- Magnetic anchor (7)

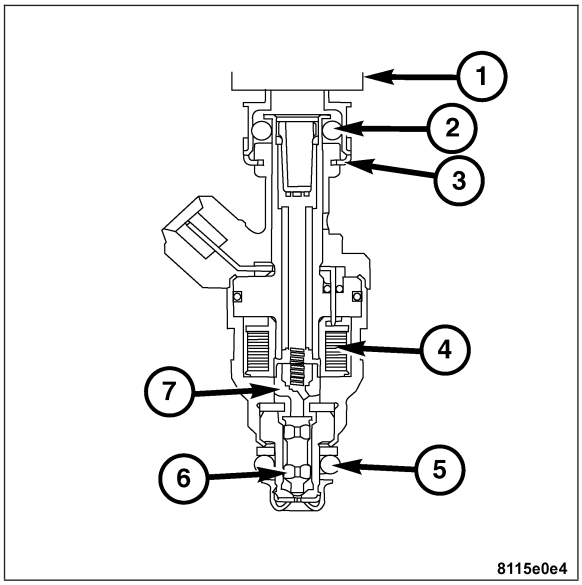

The fuel injectors are 12 volt electrical solenoids. The injector contains a pintle that closes off an orifice at the nozzle end. When electric current is supplied to the injector, the armature and needle move a short distance against a spring, allowing fuel to flow out the orifice. Because the fuel is under high pressure, a fine spray is developed in the shape of a hollow cone or two streams. The spraying action atomizes the fuel, adding it to the air entering the combustion chamber.

The engine control relay which is contained in the relay control module provides battery voltage to each injector. Injector operation is controlled by a ground path provided for each injector by the PCM. Injector on-time (pulse-width) is variable, and is determined by the PCM processing all the data previously discussed to obtain the optimum injector pulse width for each operating condition. The pulse width is controlled by the duration of the ground path provided.

REMOVAL

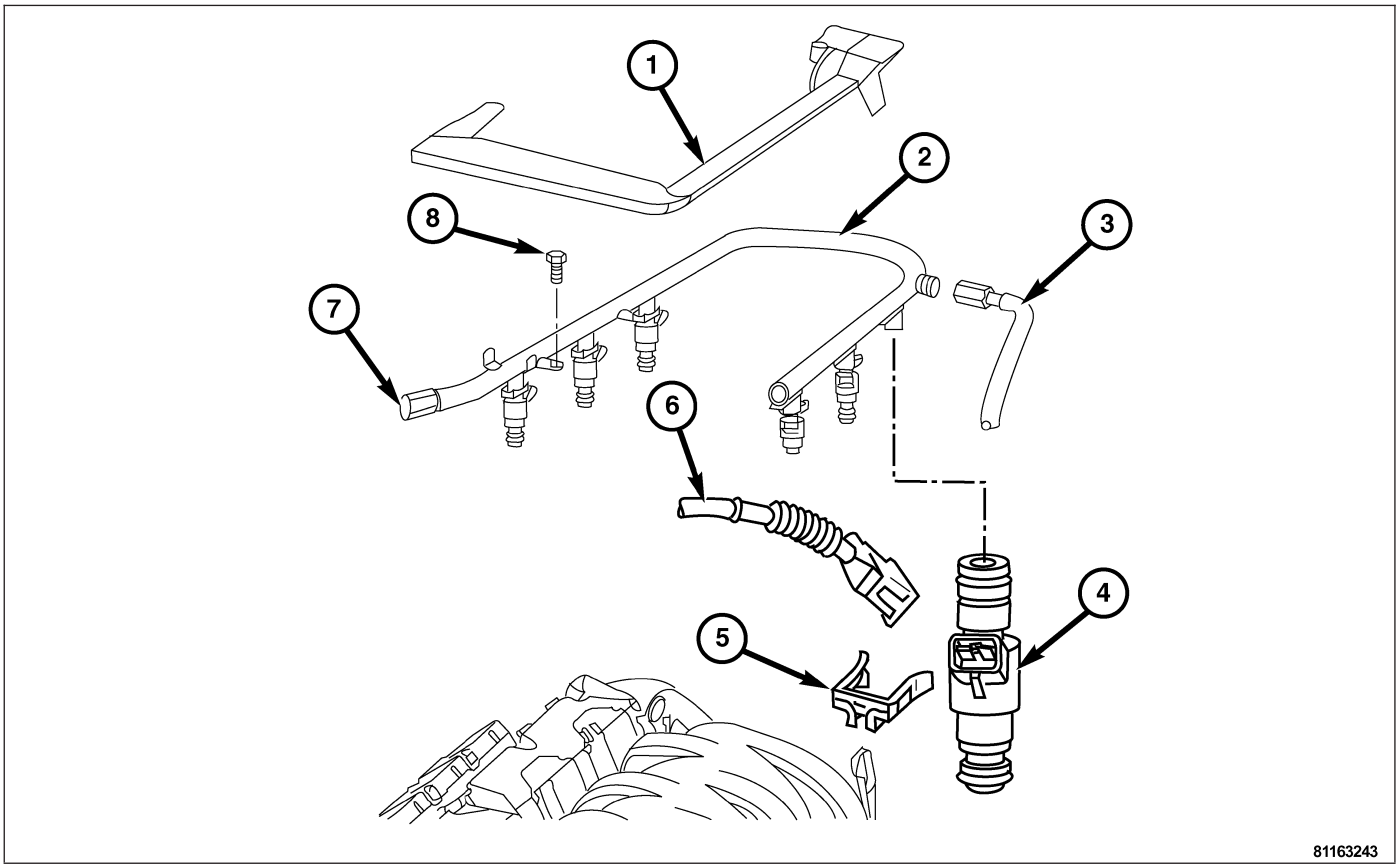

1 - FUEL RAIL TRIM PANEL
2 - FUEL RAIL
3 - FUEL LINE
4 - FUEL INJECTOR
5 - FUEL INJECTOR RETAINING CLIP
6 - FUEL INJECTOR HARNESS CONNECTOR
7 - FUEL RAIL SERVICE VALVE
8 - FUEL RAIL BOLT

1. Disconnect the negative battery cable.
2. Remove the air cleaner housing. **Refer to Page 9-608**.
3. Remove the fuel rail trim panel screw and then remove the fuel rail trim panel (1).
4. Release the fuel pressure through the fuel rail service valve (7) using a fuel pressure tester. Collect the fuel in a suitable container.
5. Disconnect the fuel feed line (3).
6. Remove the fuel injector wire harness connector retaining clips and then disconnect the fuel injector harness (6) from the fuel injectors (4).
7. Remove the fuel rail retaining bolts (8).
8. Remove the fuel rail (2) with the fuel injectors (4) by moving the fuel rail (2) side to side while lifting upward.
9. Remove the fuel injector retaining clips and the fuel injectors (4) from the fuel rail (2).

INSTALLATION

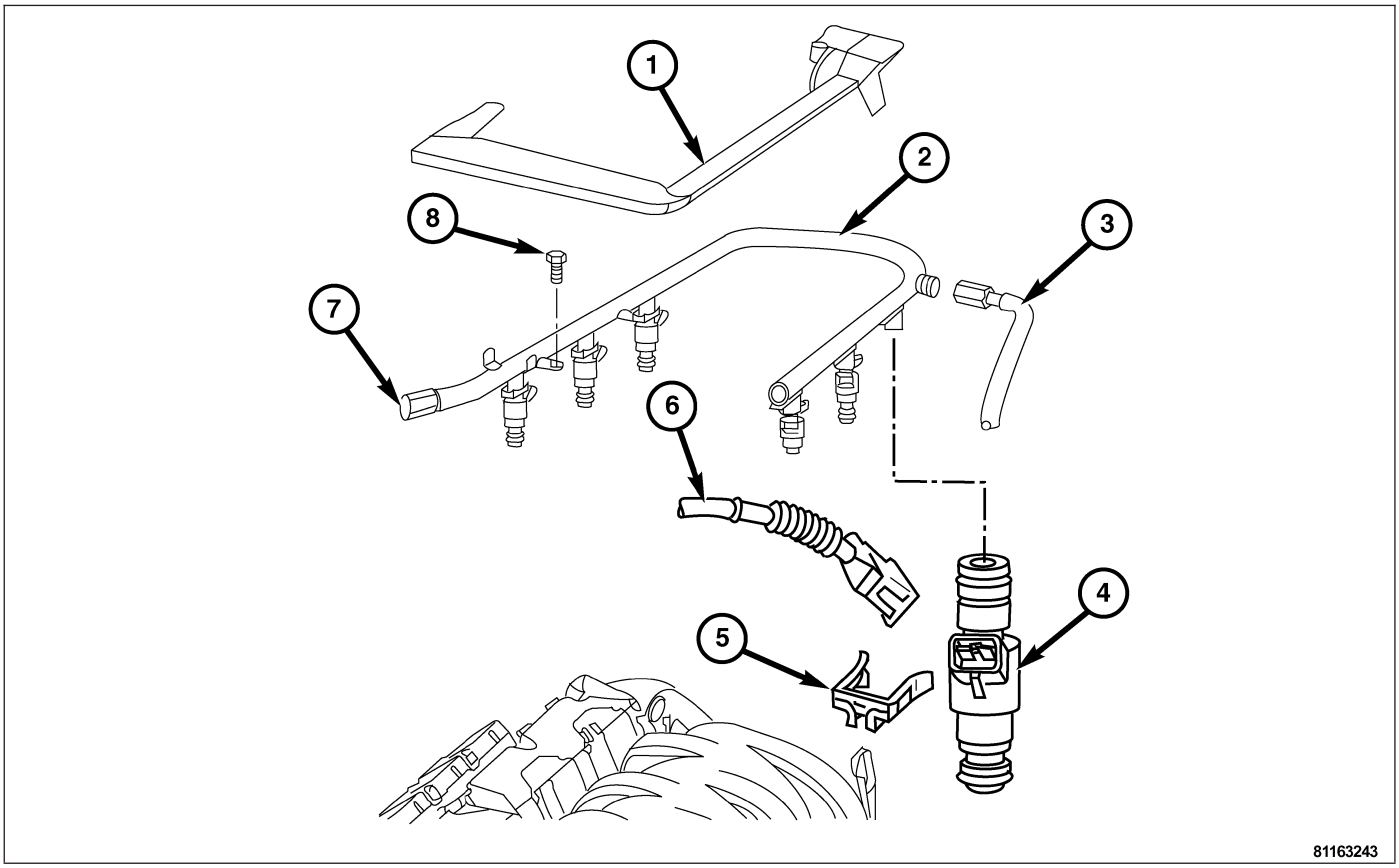

1 - FUEL RAIL TRIM PANEL
2 - FUEL RAIL
3 - FUEL LINE
4 - FUEL INJECTOR
5 - FUEL INJECTOR RETAINING CLIP
6 - FUEL INJECTOR HARNESS CONNECTOR
7 - FUEL RAIL SERVICE VALVE
8 - FUEL RAIL BOLT

1. Install the fuel injectors (4) to the fuel rail (2) by gently pushing the fuel injector into the fuel rail (2). Install the retaining clips.
2. Install the fuel rail (2) with the fuel injectors (4) by moving the fuel rail (2) side to side and pushing downward towards the intake manifold.
3. Install the fuel rail retaining bolts. Tighten to 9 N·m (80 in. lbs.).
4. Install the fuel injector harness (6) to the fuel injectors (4) then install the fuel injector electrical connector retaining clips (5).
5. Connect the fuel feed line (3). Tighten to 38 N·m (28 ft. lbs.).
6. Install the fuel rail trim panel (1) and screw.
7. Install the air cleaner housing. **Refer to Page 9-608**.
8. Connect the negative battery cable.

FUEL PUMP RELAY

DESCRIPTION

The fuel pump relay is housed within the relay control module (1) located inside the control module box (3) in the engine compartment. The relay control module also contains the fuses (2) for the fuel pump relay circuitry. The relays in the relay control module cannot be adjusted or repaired. If faulty or damaged, the entire module unit must be replaced as an assembly.

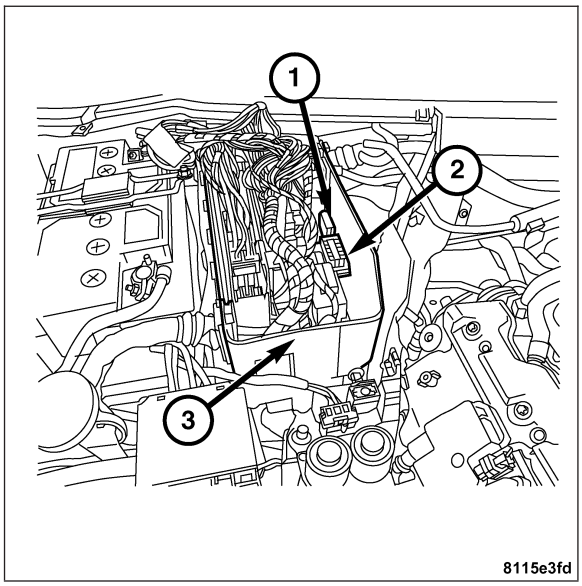

OPERATION

The fuel pump relay supplies battery voltage to the fuel pump. The fuel pump relay power circuit contains a fuse. The fuse is located in the relay control module. Refer to the Wiring Diagrams for circuit information.

The PCM controls the fuel pump relay by switching the ground path for the coil side of the relay on and off. The PCM turns the ground path off when the ignition switch is in the Off position. When the ignition switch is in the On position, the PCM energizes the fuel pump. If the crankshaft position sensor does not detect engine rotation, the PCM de-energizes the relay.

INTAKE AIR TEMPERATURE SENSOR

DESCRIPTION

The Intake Air Temperature sensor (IAT) (1,6,2) is integrated into the Mass Air Flow sensor (MAF). The IAT cannot be serviced separately. Refer to the MAF service procedures for removal. **Refer to Page 14-37**.

The IAT senses the inlet air temperature to the engine. The IAT then sends a signal to the Powertrain Control Module (PCM).

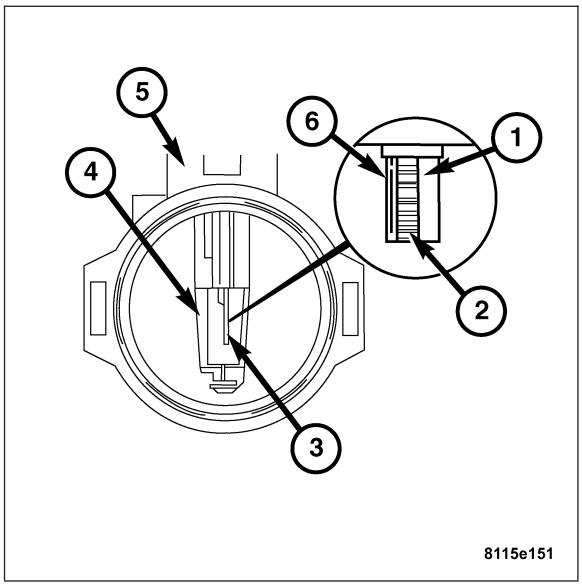

OPERATION

The Intake Air Temperature sensor (IAT) has a Negative Temperature Coefficient (NTC) integrated into the IAT. The IAT alters its electrical resistance in line with the intake air temperature. When the temperature increases, the resistance reading drops. As the temperature drops the resistance increases. The IAT sends this resistance reading to the PCM to help calculate the amount of fuel that is needed. The IAT is integrated into the Mass Air Flow sensor (MAF) and cannot be serviced individually. Refer to the MAF service procedures for removal and installation of the IAT/MAF.

MANIFOLD AIR FLOW (MAF) SENSOR

DESCRIPTION

The Mass Air Flow sensor (MAF) is located on the rear of the engine attached to the throttle body, under the air cleaner housing. The MAF is constructed from plastic and also houses the Intake Air Temperature sensor (IAT).

OPERATION

The Mass Air Flow sensor (MAF) employs the following:

- (1) Temperature resistor
- (2) Sensor resistor
- (3) Hot film resistor
- (4) Electronics housing
- (5) MAF housing
- (6) Heating resistor

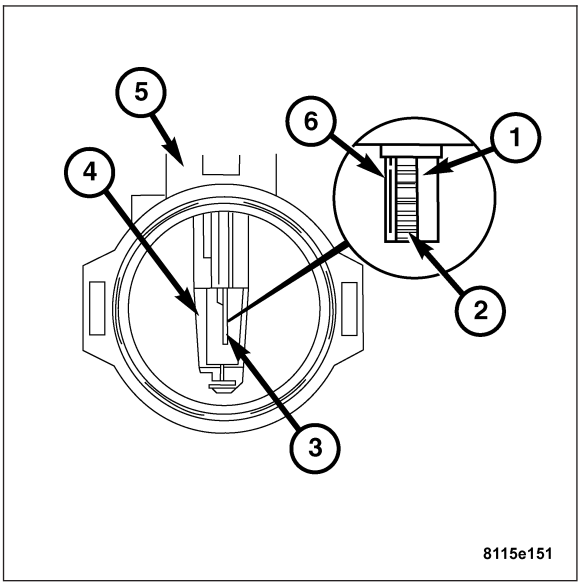

The MAF controls the temperature of the heating resistor (6) by means of a variable voltage so its temperature is 160°C (320°F) above the intake air temperature detected by the temperature resistor (1).

The temperature of the heating resistor (6) is detected by the sensor resistor (2). If a temperature change occurs as a result of an increased or reduced air flow, the PCM adapts the voltage at the heating resistor (6) until the temperature difference is again achieved.

This control voltage is used by the PCM as a measure for the metered air mass. The intake air temperature is detected by an additional Negative Temperature Coefficient (NTC) resistor.

REMOVAL

1. Disconnect the negative battery cable.
2. Remove the air cleaner housing.
3. Disconnect the MAF/IAT harness connector (1).
4. Remove the vent hose (2).

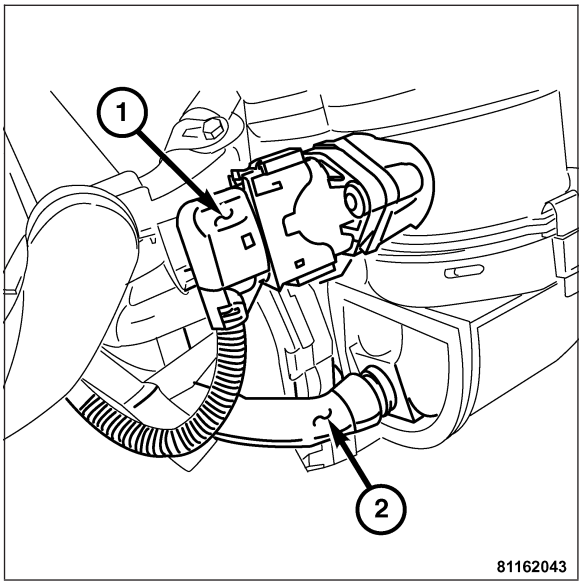

5. Disengage the lock ring (1) that attaches the MAF to the intake by inserting a suitable tool into the locking ring (1) and moving the tabs on the intake (2) away from their locked position.

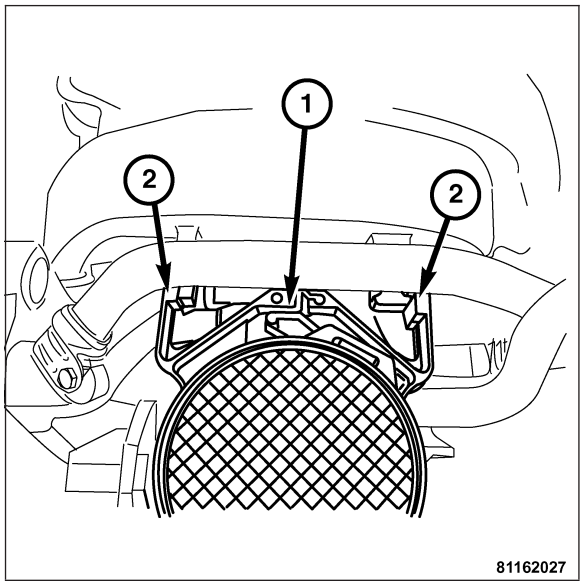

6. Press the locking tab (1) on the bottom right of the MAF down with a suitable tool unlocking it from the intake. Press the locking tab on the upper left of the MAF upward with a suitable tool, unlocking it from the intake manifold.
7. Remove the MAF from the intake manifold.
8. Inspect the sealing ring and replace if necessary.
9. Inspect the sealing ring between the air inlet and the MAF and replace if necessary.
10. Inspect the locking tabs on the MAF and replace if necessary.

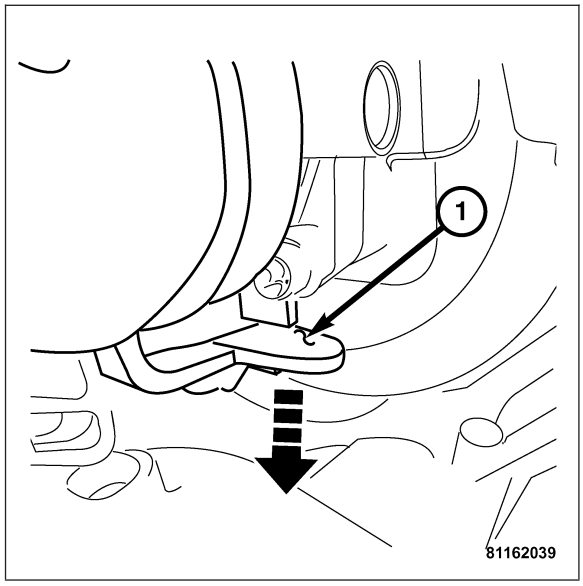

INSTALLATION

1. Install the MAF onto the intake by securely pushing the MAF onto the throttle body.
2. Lock the lower locking tab (1) to the intake manifold. Lock the upper locking tab to the intake manifold.

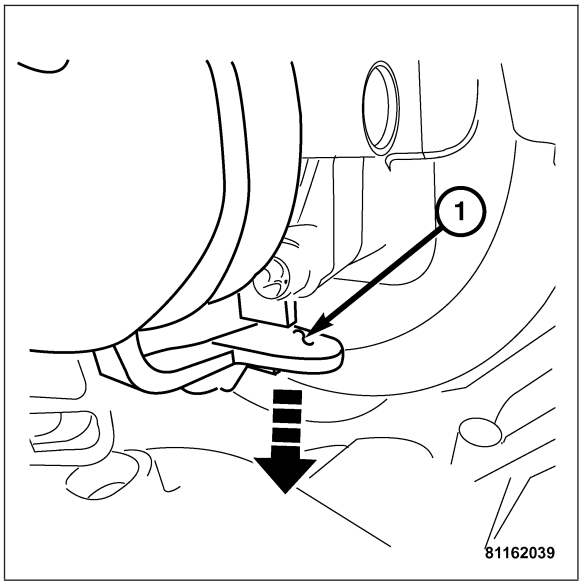

3. Push the MAF so the upper locking ring (1) and tabs (2) are inline with the tabs on the intake, then squeeze the locking ring (1) to lock the MAF onto the intake.

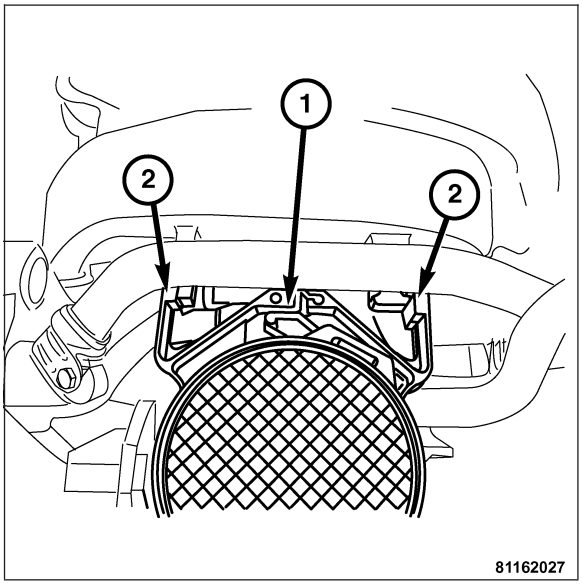

4. Install the vent hose (2) to the MAF sensor.
5. Connect the MAF/IAT harness connector (1).
6. Install the air cleaner housing. **Refer to Page 9-608**.
7. Connect the negative battery cable.

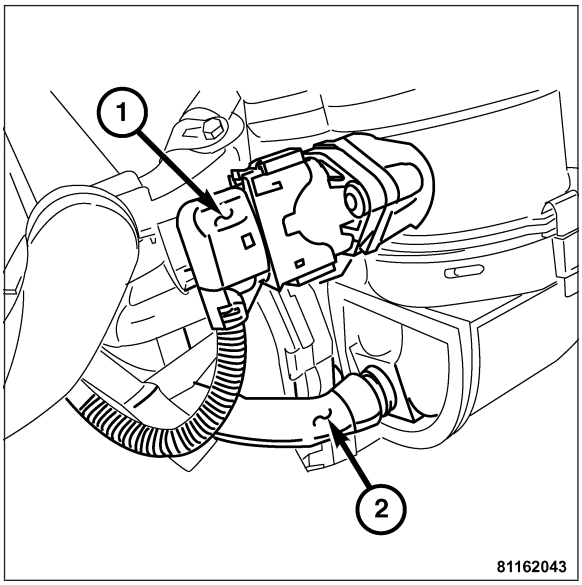

MANIFOLD TUNE VALVE

DESCRIPTION

The manifold tune valve (2) opens a crossover passage in that it connects both sides of the intake manifold plenum. It is controlled by a vacuum solenoid (1).

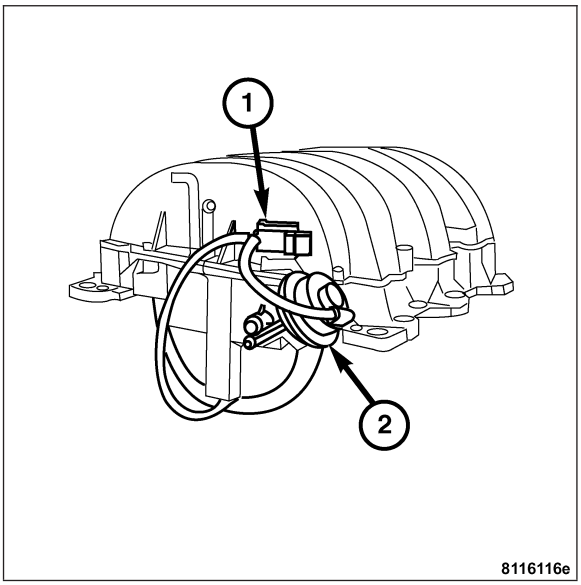

OPERATION

The PCM controls the MTV solenoid. The manifold tune valve optimizes acoustical tuning of the intake system during wide open throttle operation throughout the RPM range to increase torque.

REMOVAL

1. Disconnect the negative battery cable.
2. Remove the air cleaner housing. **Refer to Page 9-608**.
3. Remove the air injection pump. **Refer to Page 25-32**.
4. Disconnect the manifold tune valve harness connector at the manifold tune valve solenoid.
5. Disconnect the vacuum line.
6. Remove the left hand air pump switch over valve. **Refer to Page 25-36**.
7. Remove the nut retaining the manifold tune valve to the valve rod.
8. Remove the manifold tune valve (2) and the solenoid (1) from the intake.

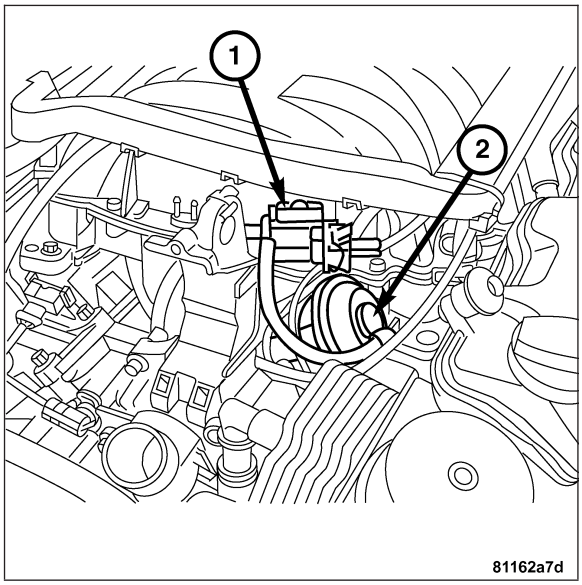

INSTALLATION

1. Install the intake manifold tune valve (2) to the intake manifold.
2. Install the tune valve arm retaining nut the valve rod. Tighten the nut to 5 N·m (44 in. lbs.).
3. Install the left hand air pump switch over valve and bolts. Tighten the bolts to 20 N·m (15 lb. ft.).
4. Connect the vacuum line and the manifold tune valve harness connector at the manifold tune valve solenoid.
5. Install the air injection pump. **Refer to Page 25-33**.
6. Install the air cleaner housing. **Refer to Page 9-608**.
7. Connect the negative battery cable.

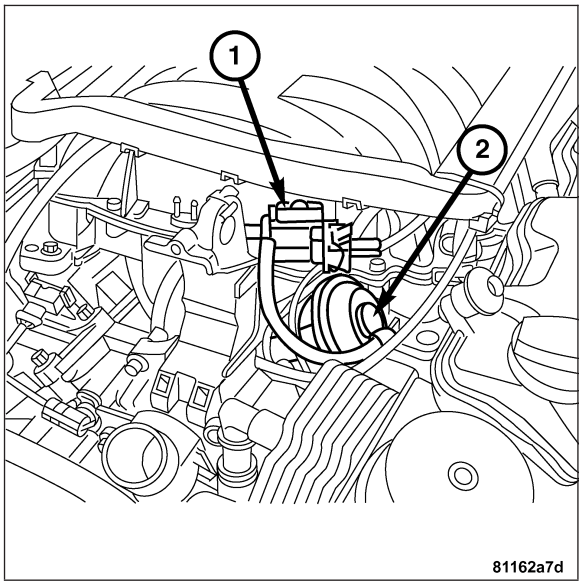

MAP SENSOR

DESCRIPTION

The Manifold Absolute Pressure (MAP) sensor, is mounted to the front of the engine on the right side next to the air pump.

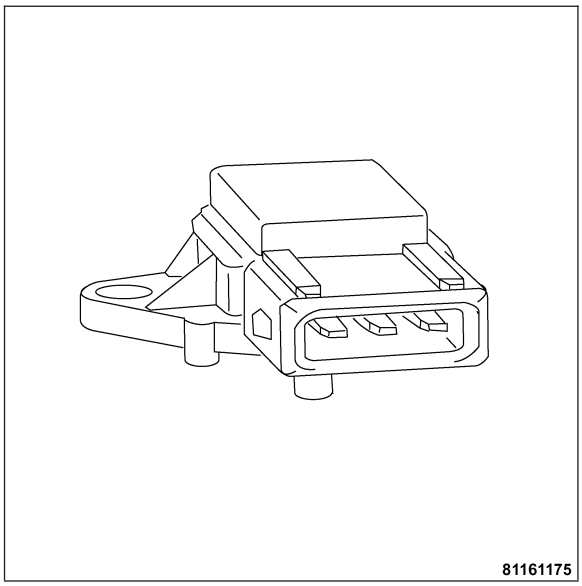

OPERATION

The MAP sensor monitors the pressure in the intake manifold. The pressure in the manifold moves a diaphragm connected to piezo resistors which alter their resistance values. The output voltage of the resistors serves as information to the PCM about the pressure in the intake manifold.

REMOVAL

1. Disconnect the negative battery cable.
2. Remove the air cleaner housing. **Refer to Page 9-608**.
3. Disconnect the Manifold Absolute Pressure (MAP) harness connector.
4. Remove the retaining bolt (1).
5. Remove the (MAP) sensor.

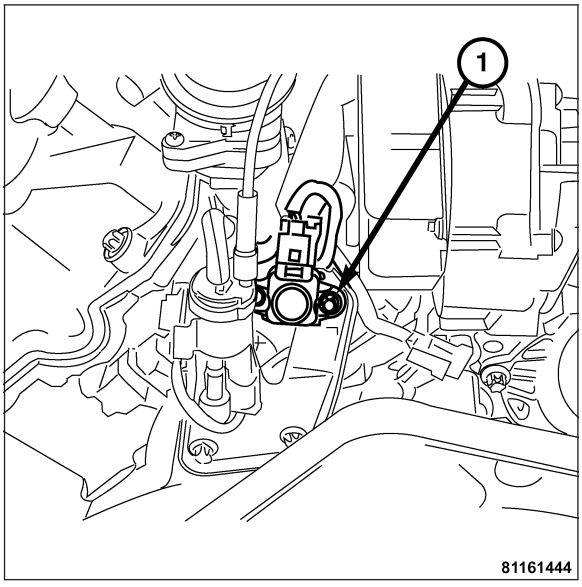

INSTALLATION

1. Install the MAP sensor.
2. Install the bolt (1).
3. Connect the Manifold Absolute Pressure (MAP) harness connector.
4. Install the air cleaner housing. **Refer to Page 9-608**.
5. Connect the negative battery cable.

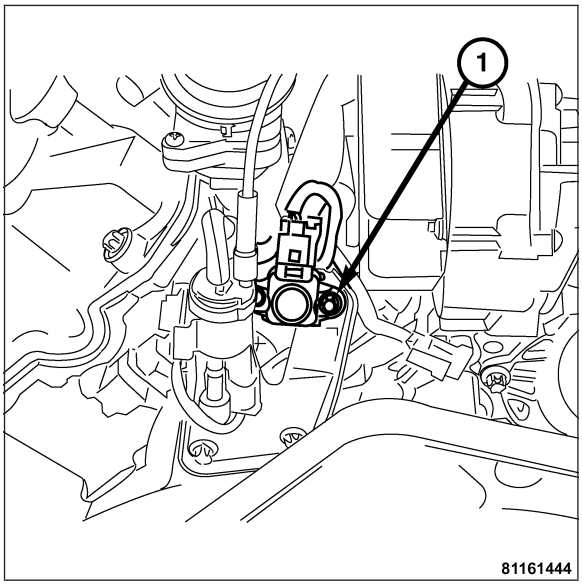

O2 SENSOR

DESCRIPTION

The oxygen sensor threads into the outlet flange of the exhaust manifold.

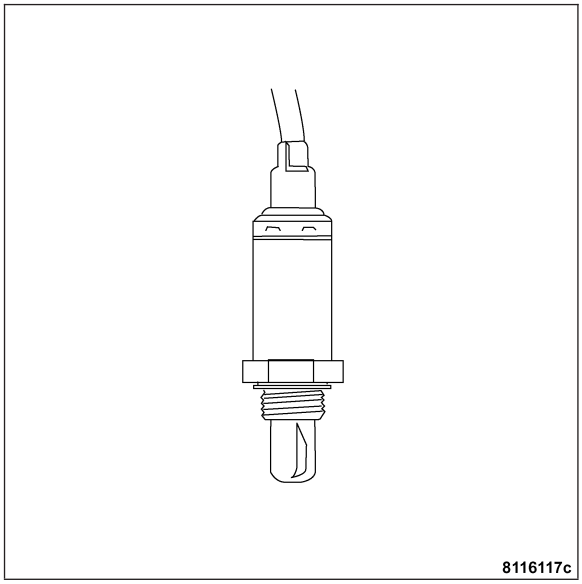

OPERATION

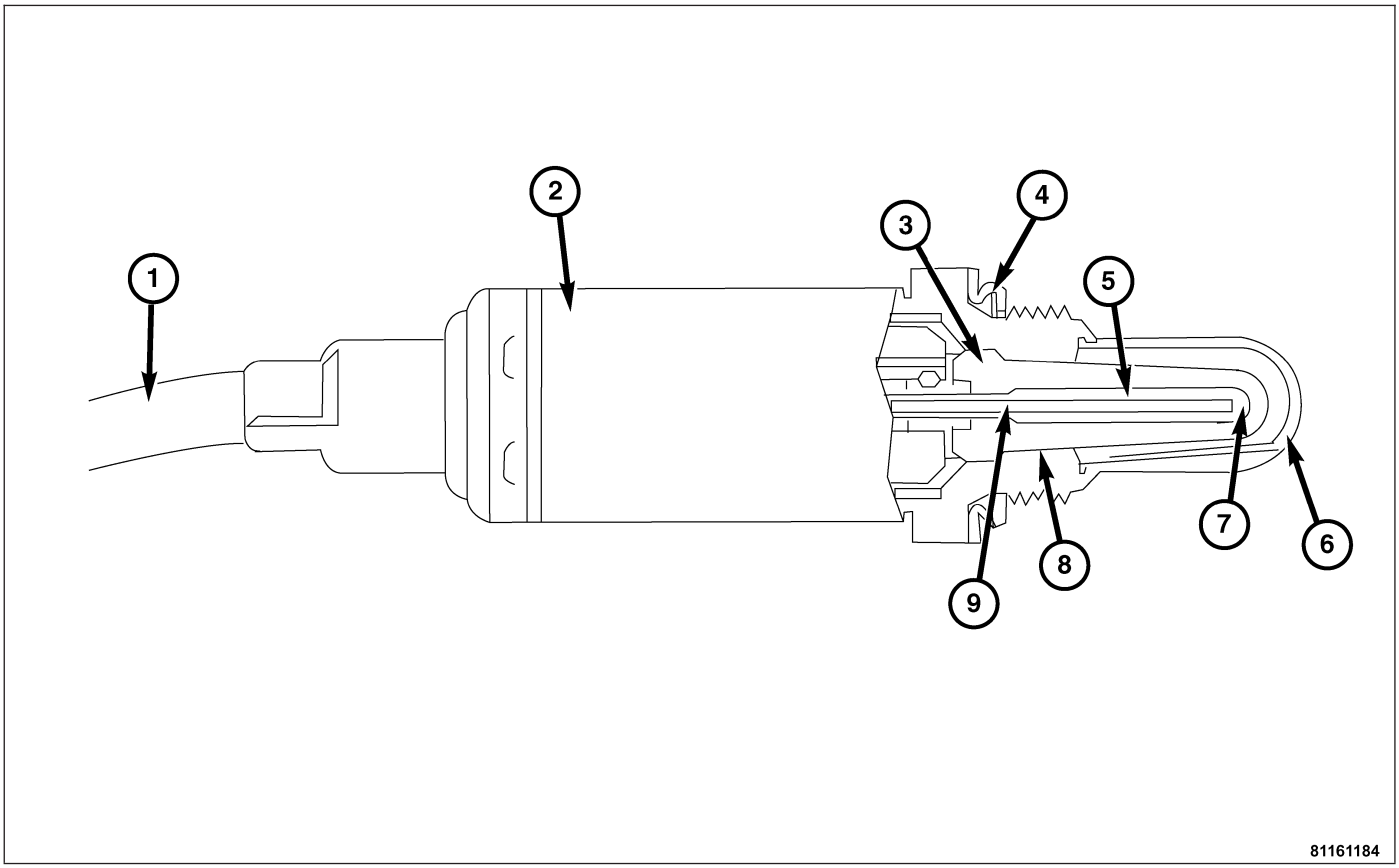

1 - ELECTRICAL CONNECTION
2 - SENSOR HOUSING
3 - ACTIVE CERAMIC PROBE BODY
4 - MATING SURFACE
5 - HEATING ELEMENT
6 - PROTECTIVE TUBE
7 - INNER, OPEN COMBUSTION CHAMBER
8 - ELECTRODE (OUTER)
9 - ELECTRODE (INNER)

A single sensor ground is used for all O2 sensors.

As vehicles accumulate mileage, the catalytic convertor deteriorates. The deterioration results in a less efficient catalyst. To monitor catalytic convertor deterioration, the fuel injection system uses two heated oxygen sensors. One sensor upstream of the catalytic convertor, one downstream of the convertor. The PCM compares the reading from the sensors to calculate the catalytic convertor oxygen storage capacity and converter efficiency. Also, the PCM uses the upstream heated oxygen sensor input when adjusting injector pulse width.

When the catalytic converter efficiency drops below emission standards, the PCM stores a diagnostic trouble code and illuminates the malfunction indicator lamp (MIL).

The O2 sensors produce voltages from 0 to 1 volt, depending upon the oxygen content of the exhaust gas. When a large amount of oxygen is present (caused by a lean air/fuel mixture, can be caused by misfire and exhaust leaks), the sensors produces a low voltage. When there is a lesser amount of oxygen present (caused by a rich air/fuel mixture, can be caused by internal engine problems) it produces a higher voltage. By monitoring the oxygen content and converting it to electrical voltage, the sensors act as a rich-lean switch.

The oxygen sensors are equipped with a heating element that keeps the sensors at proper operating temperature during all operating modes. Maintaining correct sensor temperature at all times allows the system to enter into closed loop operation sooner. Also, it allows the system to remain in closed loop operation during periods of extended idle.

In Closed Loop operation the PCM monitors the O2 sensors input (along with other inputs) and adjusts the injector pulse width accordingly. During Open Loop operation the PCM ignores the O2 sensor input. The PCM adjusts injector pulse width based on preprogrammed (fixed) values and inputs from other sensors.

The engine control relay located in the relay control module supplies battery voltage to both the upstream and downstream heated oxygen sensors. The oxygen sensors are equipped with a heating element. The heating elements reduce the time required for the sensors to reach operating temperature. The PCM uses pulse width modulation to control the ground side of the heater to regulate the temperature.

UPSTREAM OXYGEN SENSOR

The input from the upstream heated oxygen sensor tells the PCM the oxygen content of the exhaust gas. Based on this input, the PCM fine tunes the air-fuel ratio by adjusting injector pulse width.

The sensor output varies from 0 to 1 volt, depending upon the oxygen content of the exhaust gas in the exhaust manifold. When a large amount of oxygen is present (caused by a lean air-fuel mixture), the sensor produces voltage as low as 0.1 volt. When there is a lesser amount of oxygen present (rich air-fuel mixture) the sensor produces a voltage as high as 1.0 volt. By monitoring the oxygen content in the exhaust gases and comparing that to the oxygen content in ambient air and converting it to electrical voltage, the sensor acts as a rich-lean switch.

The heating element in the sensor provides heat to the sensor ceramic element. Heating the sensor allows the system to enter into closed loop operation sooner. Also, it allows the system to remain in closed loop operation during periods of extended idle.

In Closed Loop, the PCM adjusts injector pulse width based on the upstream heated oxygen sensor input along with other signals. In Open Loop, the PCM adjusts injector pulse width based on preprogrammed (fixed) values and inputs from other sensors.

DOWNSTREAM OXYGEN SENSOR

The downstream heated oxygen sensor signal is used to detect catalytic convertor deterioration. As the convertor deteriorates, the signal from the downstream sensor begins to match the upstream sensor signal except for a slight time delay. By comparing the downstream heated oxygen sensor signal to the signal from the upstream sensor, the PCM calculates catalytic convertor efficiency. This calculation is also used to establish the upstream O2 goal voltage (switching point).

REMOVAL

UPSTREAM O2 SENSOR

Note: The left side O2 sensor is shown. The right side is similar.

1. Disconnect the negative battery cable.
2. Remove the air cleaner housing. **Refer to Page 9-608**.
3. Disconnect the O2 sensor harness connector.
4. Remove the O2 sensor (1).

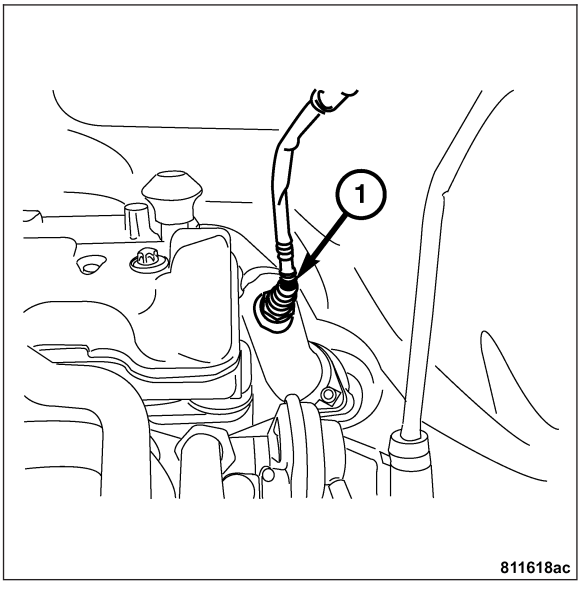

REMOVAL - DOWNSTREAM O2

1. Disconnect the negative battery cable.

Note: The left side O2 sensor is shown. The right side is similar.

2. Raise and support the vehicle.
3. Disconnect the O2 sensor harness connector.
4. Remove the O2 sensor (1).

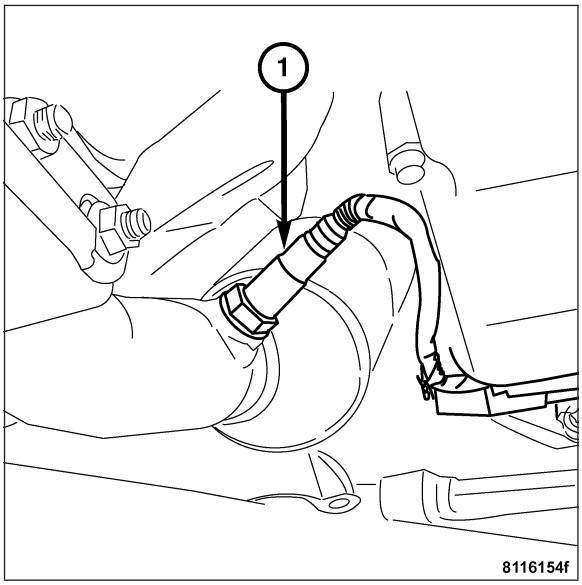

INSTALLATION

UPSTREAM O2

1. Apply anti-sieze compound to the threaded portion of the O2 sensor.
2. Install the O2 sensor (1). Tighten to 50 N·m (37 ft. lbs.).
3. Connect the O2 sensor harness connector.
4. Install the air cleaner housing. **Refer to Page 9-608**.
5. Connect the negative battery cable.

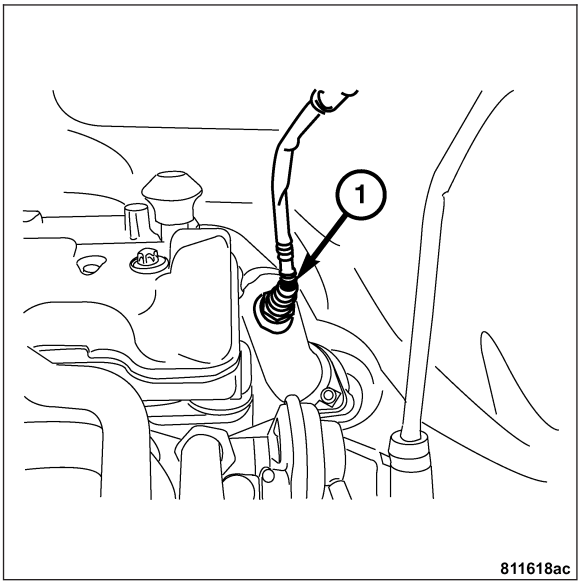

INSTALLATION - DOWNSTREAM O2

1. Apply anti-sieze compound to the threaded portion of the O2 sensor.
2. Install the O2 sensor (1). Tighten to 50 N·m (37 ft. lbs.).
3. Connect the O2 sensor harness connector.
4. Lower the vehicle.
5. Connect the negative battery cable.

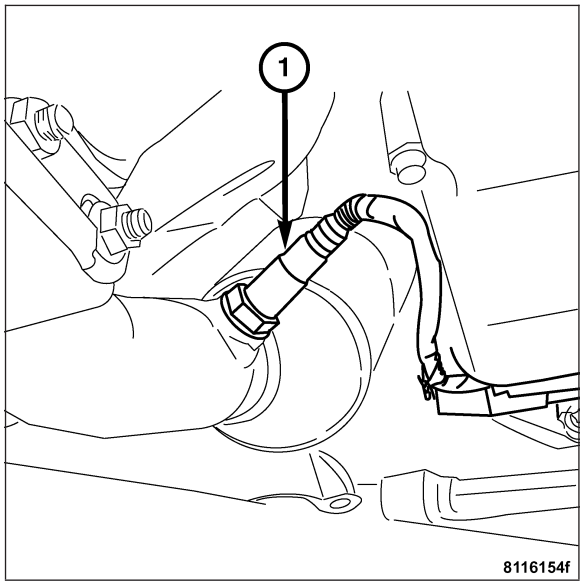

THROTTLE BODY

DESCRIPTION

The throttle body is located on the intake manifold. The throttle body meters air into the intake manifold. Fuel does not enter the intake manifold through the throttle body. Fuel is sprayed into the manifold by the fuel injectors.

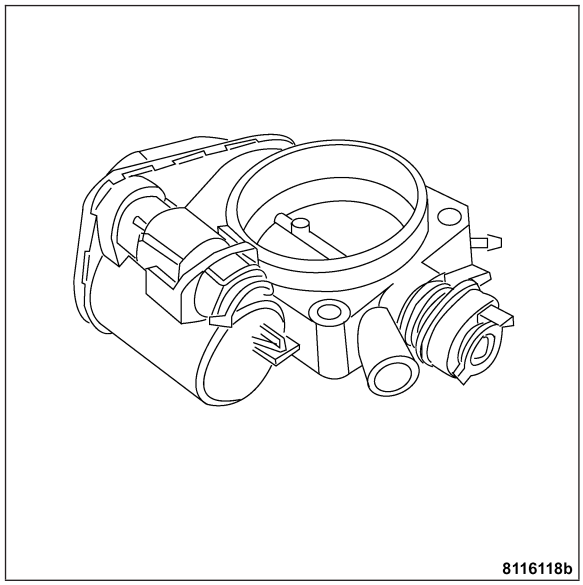

OPERATION

Filtered air from the air cleaner enters the intake manifold through the throttle body. A throttle valve (plate) is used to supply air for idle and driving conditions.

The throttle position sensor is part the throttle body. The throttle position sensor signal is used by the PCM to determine throttle position. The PCM controls the electronic throttle control to meter air into the engine. This regulates engine power. The vehicle is in sense a “Drive by Wire” system.

REMOVAL

1. Disconnect the negative battery cable.
2. Remove the air cleaner housing. **Refer to Page 9-608**.
3. Remove the Mass Air Flow sensor with the intake tube. **Refer to Page 14-37**.
4. Remove the crankcase vent tube (1) from the intake.
5. Disconnect the throttle body harness conector (3).
6. Remove the four bolts (4) attaching the throttle body (5) to the intake.
7. Remove the O-ring (2) from the throttle body (5) and discard.

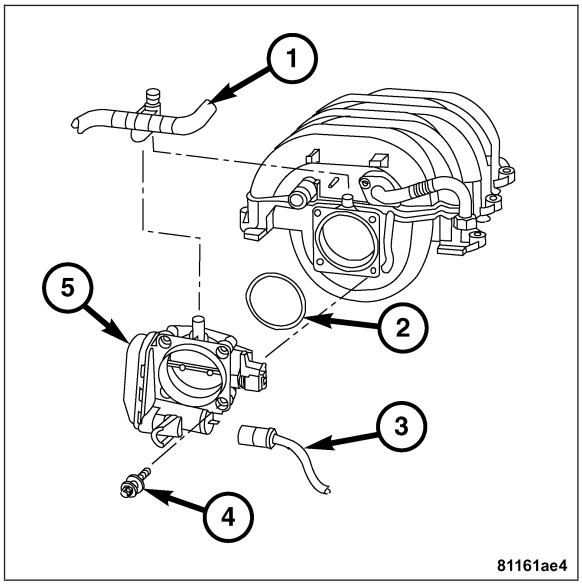

INSTALLATION

1. Install the new O-ring (2) to the throttle body (5).
2. Install the throttle body (5) to the intake. Tighten to 9 N·m (80 in lbs.).
3. Connect the throttle body harness connector (3).
4. Install the crankcase vent tube (1) to the intake.
5. Install the MAF sensor. **Refer to Page 14-39**.
6. Install the air cleaner housing. **Refer to Page 9-608**.
7. Connect the negative battery cable.

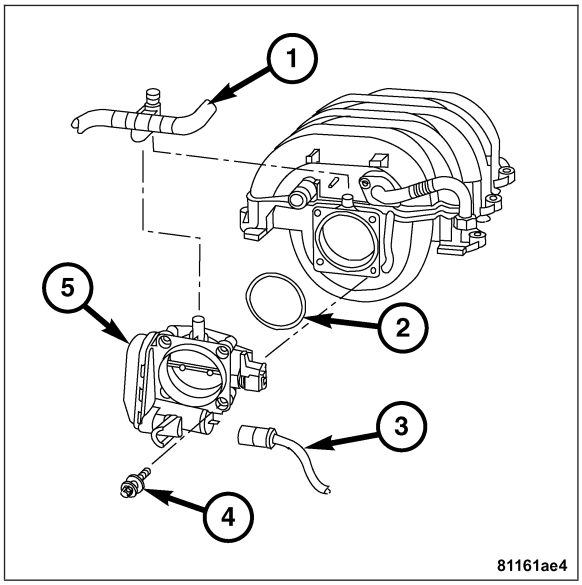

THROTTLE POSITION SENSOR

DESCRIPTION

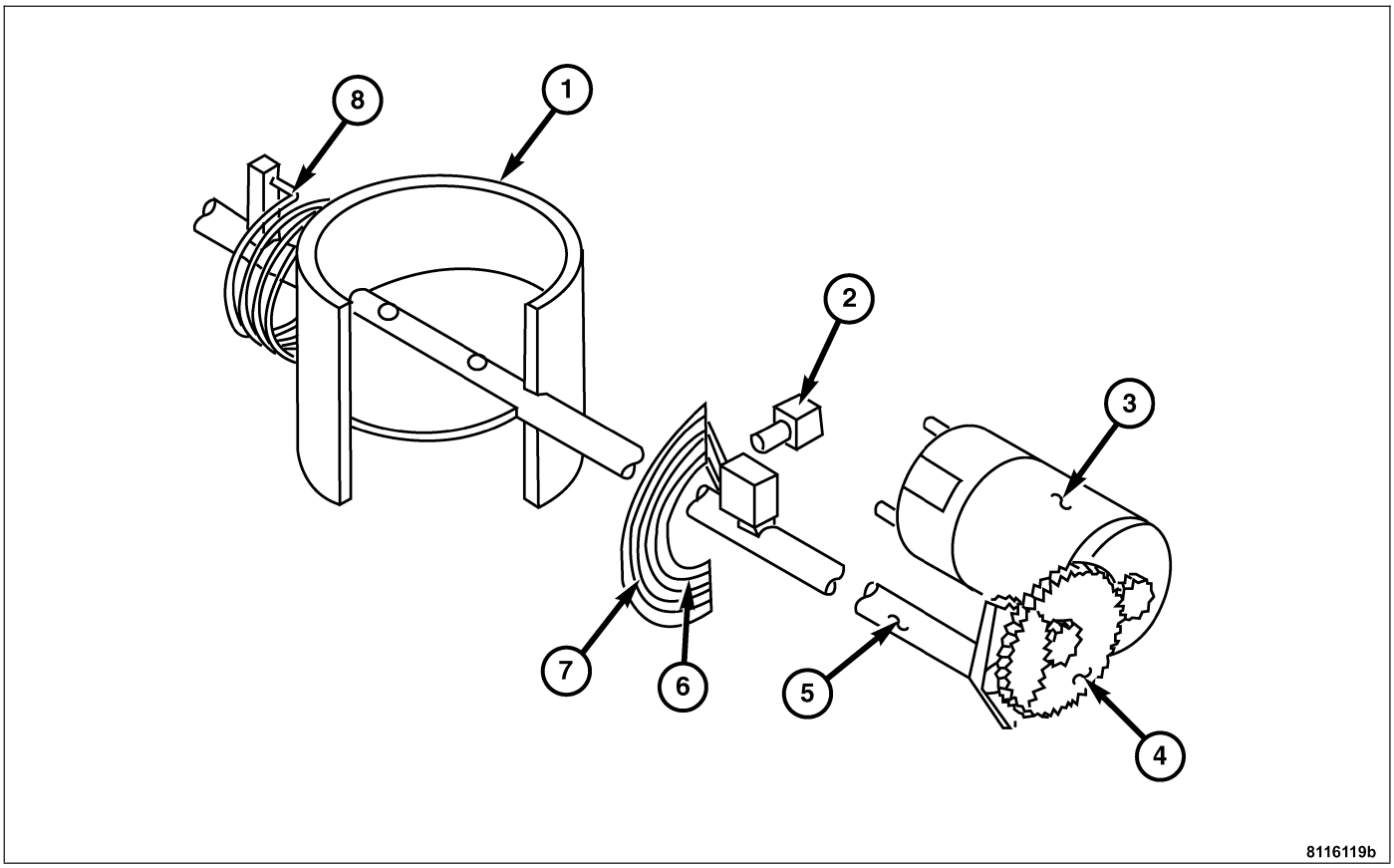

1 - THROTTLE VALVE
2 - MECHANICAL STOP SPRING CAPSULE
3 - ELECTRONIC THROTTLE CONTROL
4 - GEAR
5 - THROTTLE VALVE DRIVE SHAFT
6 - THROTTLE VALVE ACTUAL VALUE (POTENTIOMETER 1)
7 - THROTTLE VALVE ACTUAL VALUE (POTENTIOMETER 2)
8 - SPRING

The throttle position sensor (TPS) is a part of the throttle body.

The TPS cannot be removed separately. Refer to the throttle body removal and installation procedures. **Refer to Page 14-48**.

OPERATION

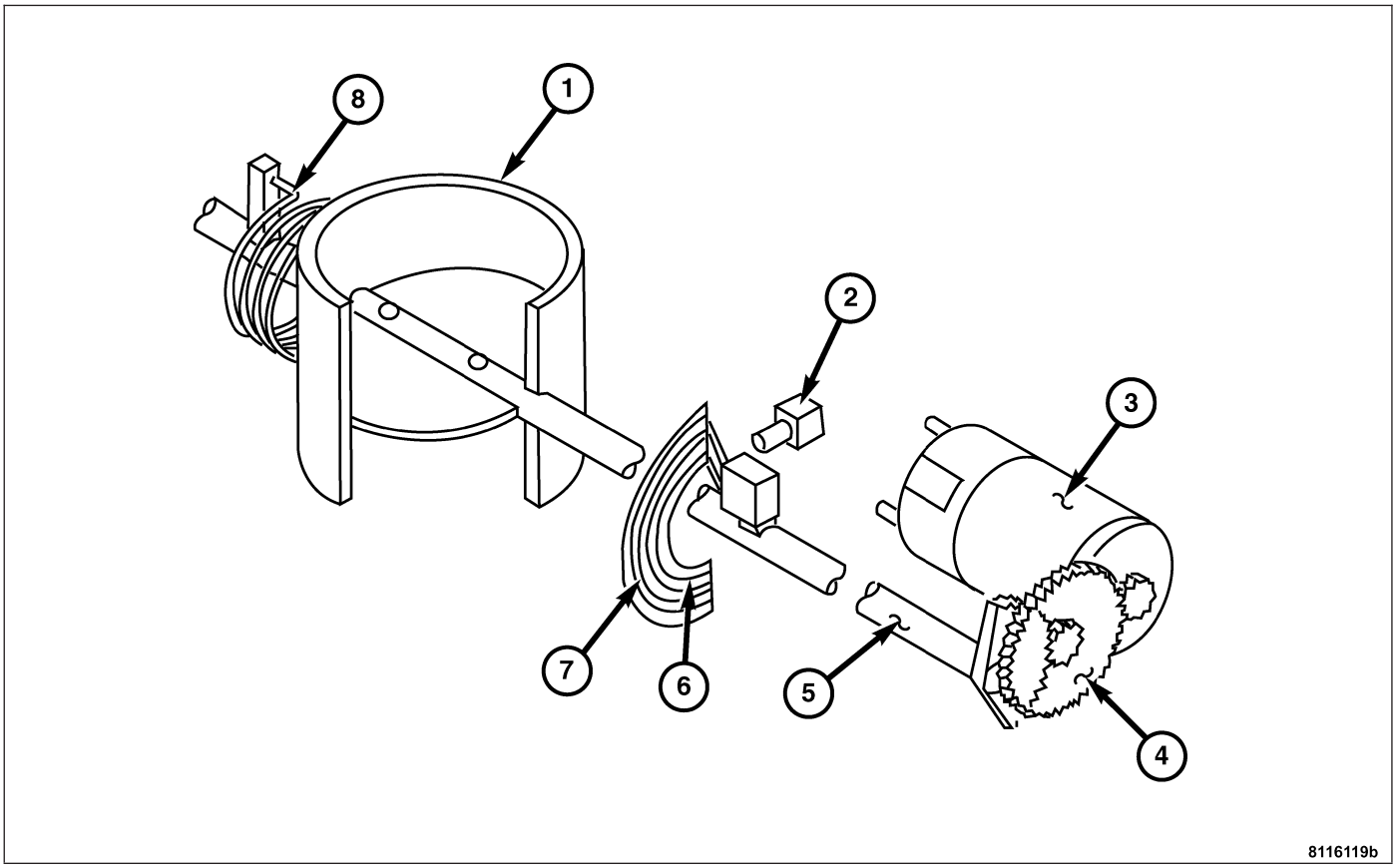

1 - THROTTLE VALVE
2 - MECHANICAL STOP SPRING CAPSULE
3 - ELECTRONIC THROTTLE CONTROL
4 - GEAR
5 - THROTTLE VALVE DRIVE SHAFT
6 - THROTTLE VALVE ACTUAL VALUE (POTENTIOMETER 1)
7 - THROTTLE VALVE ACTUAL VALUE (POTENTIOMETER 2)
8 - SPRING

The Throttle Position Sensor (TPS) contains two actual value potentiometers for detecting the position of the throttle valve. The second potentiometer is designed to form a reference value. The system will switch over to the second potentiometer if the first one fails. The TPS cannot be serviced separately. If the TPS fails, the throttle body must be replaced. Refer to the throttle body service procedures. **Refer to Page 14-48**.

STEERING

TABLE OF CONTENTS

page

STEERING
DESCRIPTION
STEERING SYSTEM 1
OPERATION 2
DIAGNOSIS AND TESTING
POWER STEERING SYSTEM 2
DIAGNOSIS AND TESTING - STEERING
FLOW AND PRESSURE 5
SPECIFICATIONS - TORQUE 6
SPECIAL TOOLS
STEERING 7
COLUMN 8
GEAR 32
LINKAGE 41
PUMP 51

STEERING

DESCRIPTION

STEERING SYSTEM

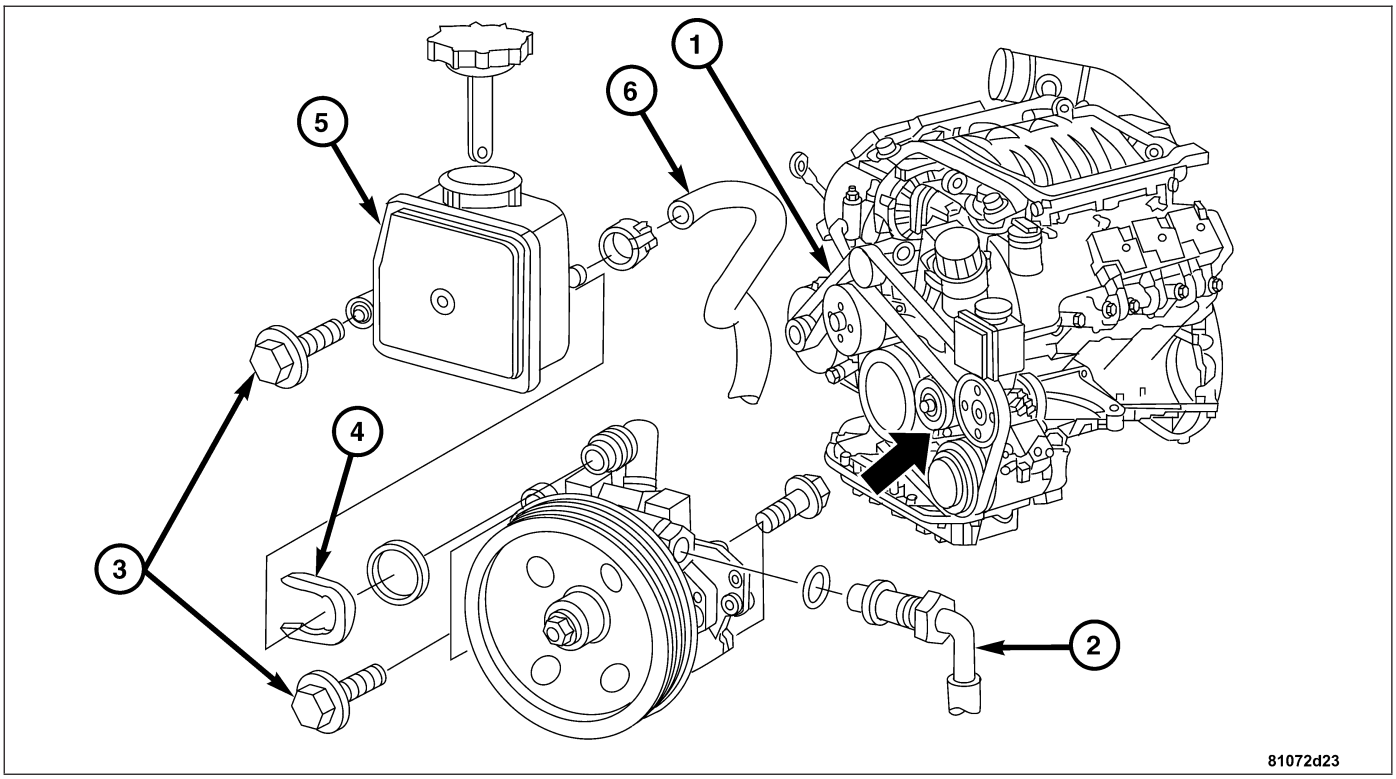

1 - ACCESSORY DRIVE BELT
2 - HIGH PRESSURE HOSE
3 - POWER STEERING PUMP BOLTS
4 - C-CLIP
5 - RESERVOIR
6 - SUPPLY LINE

The power steering pump is a constant flow rate and displacement vane type pump. The pump reservoir is attached to the pump body. The pump is connected to the steering by the pressure and return hoses. The steering gear used is a recirculating ball type gear. A column provides steering input.

The power steering system consists of the following: Steering gear, Pressure hose, Pump, Return hose and Reservoir.

OPERATION

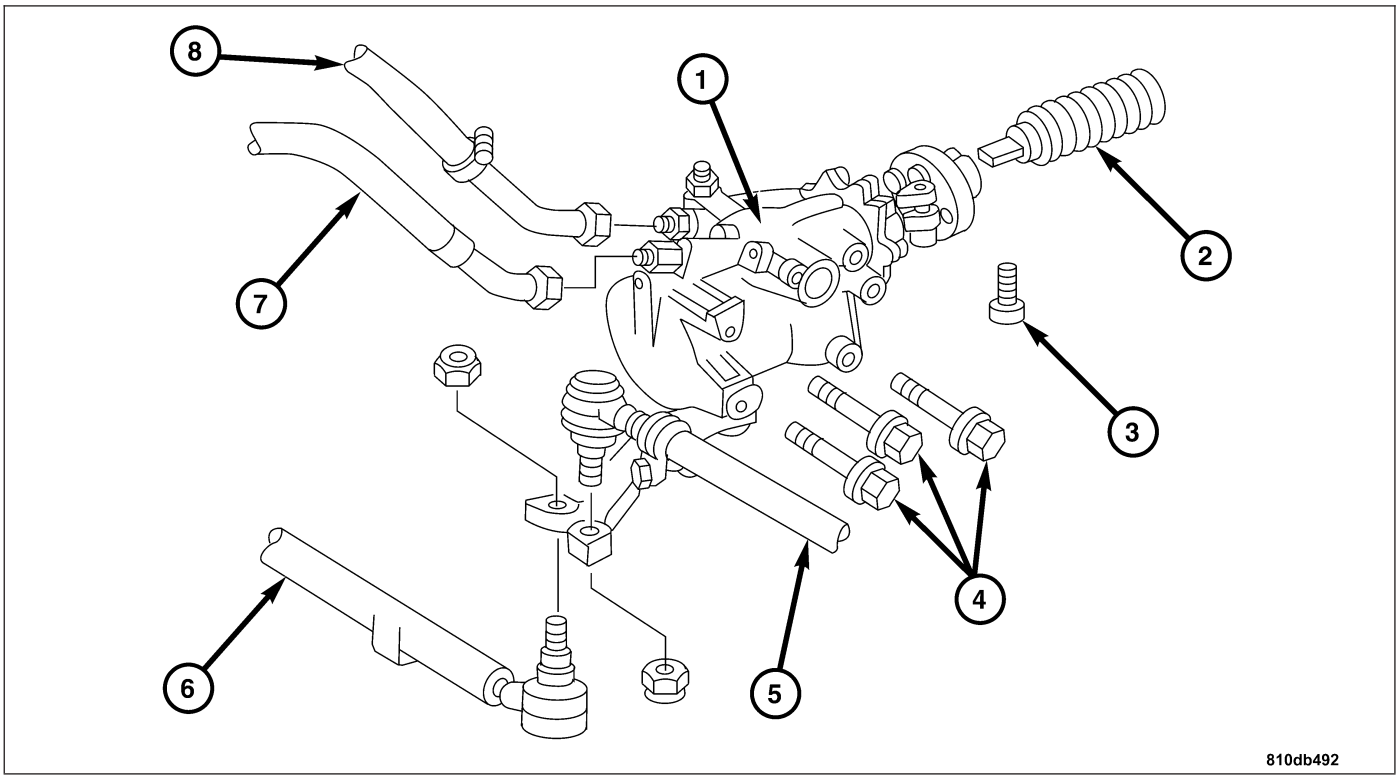

1 - STEERING GEAR
2 - STEERING SHAFT
3 - PINCH BOLT
4 - STEERING GEAR MOUNTING BOLTS
5 - TIE ROD
6 - DRAG LINK
7 - PRESSURE HOSE
8 - RETURN HOSE

The rack piston balls act as a rolling thread between the worm shaft and rack piston. The worm shaft is supported by a thrust bearing at the lower end and a bearing assembly at the upper end. When the worm shaft is turned from the steering column the rack piston moves. The rack piston teeth mesh with the pitman shaft. Turning the worm shaft turns the pitman shaft, which moves the steering linkage.

DIAGNOSIS AND TESTING

POWER STEERING SYSTEM

There is some noise in all power steering systems. One of the most common is a hissing sound evident at a standstill or at park with the engine running. Or when the steering wheel is at the end of its travel. Hiss is a high frequency noise similar to that of a water tap being closed slowly. The noise is present in all valves that have a high velocity fluid passing through an orifice. There is no relationship between this noise and steering performance.

STEERING NOISE

CONDITION	POSSIBLE CAUSES	CORRECTION
HISS OR WHISTLE	1. Steering intermediate shaft to dash panel seal.	1. Check and repair seal at dash panel.
	2. Noisy valve in power steering gear.	2. Replace steering gear.
RATTLE OR CLUNK	1. Gear mounting bolts loose.	1. Tighten bolts to specification.
	2. Loose or damaged suspension components.	2. Inspect and repair suspension.
	3. Loose or damaged steering linkage.	3. Inspect and repair steering linkage.
	4. Internal gear noise.	4. Replace gear.
	5. Pressure hose in contact with other components.	5. Reposition hose.
CHIRP OR SQUEAL	1. Loose belt.	1. Adjust or replace.
	2. Belt routing.	2. Verify belt routing is correct.
WHINE OR GROWL	1. Low fluid level.	1. Fill to proper level.
	2. Pressure hose in contact with other components.	2. Reposition hose.
	3. Internal pump noise.	3. Replace pump.
	4. Air in the system.	4. Perform pump initial operation.
SUCKING AIR SOUND	1. Loose return line clamp.	1. Replace clamp.
	2. O-ring missing or damaged on hose fitting.	2. Replace o-ring.
	3. Low fluid level.	3. Fill to proper level.
	4. Air leak between pump and reservoir.	4. Repair as necessary.
SCRUBBING OR KNOCKING	1. Wrong tire size.	1. Verify tire size.
	2. Wrong gear.	2. Verify gear.

BINDING AND STICKING

CONDITION	POSSIBLE CAUSE	CORRECTION
DIFFICULT TO TURN WHEEL STICKS OR BINDS	1. Low fluid level.	1. Fill to proper level.
	2. Tire pressure.	2. Adjust tire pressure.
	3. Steering component.	3. Inspect and lube.
	4. Loose belt.	4. Adjust or replace.
	5. Low pump pressure.	5. Pressure test and replace if necessary.
	6. Column shaft coupler binding.	6. Replace coupler.
	7. Steering gear worn or out of adjustment.	7. Repair or replace gear.
	8. Ball joints binding.	8. Inspect and repair as necessary.
	9. Belt routing.	9. Verify belt routing is correct.

INSUFFICIENT ASSISTANCE. OR POOR RETURN TO CENTER

CONDITION	POSSIBLE CAUSE	CORRECTION
HARD TURNING OR MOMENTARY INCREASE IN TURNING EFFORT	1. Tire pressure.	1. Adjust tire pressure.
	2. Low fluid level.	2. Fill to proper level.
	3. Loose belt.	3. Adjust or replace.
	4. Lack of lubrication.	4. Inspect and lubricate steering and suspension components.
	5. Low pump pressure or flow.	5. Pressure and flow test and repair as necessary.
	6. Internal gear leak.	6. Pressure and flow test, and repair as necessary.
	7. Belt routing.	7. Verify belt routing is correct.
STEERING WHEEL DOES NOT WANT TO RETURN TO CENTER POSITION	1. Tire pressure.	1. Adjust tire pressure.
	2. Wheel alignment.	2. Align front end.
	3. Lack of lubrication.	3. Inspect and lubricate steering and suspension components.
	4. High friction in steering gear.	4. Test and adjust as necessary.
	5. Ball joints binding.	5. Inspect and repair as necessary.

Note:
Some roads will cause a vehicle to drift, due to the crown in the road.

LOOSE STEERING AND VEHICLE LEADS/DRIFTS

CONDITION	POSSIBLE CAUSE	CORRECTION
EXCESSIVE PLAY IN STEERING WHEEL	1. Worn or loose suspension or steering components.	1. Repair as necessary.
	2. Worn or loose wheel bearings.	2. Repair as necessary.
	3. Steering gear mounting.	3. Tighten gear mounting bolts to specification.
	4. Gear out of adjustment.	4. Adjust gear to specification.
	5. Worn or loose steering coupler.	5. Repair as necessary.
VEHICLE PULLS TO ONE SIDE DURING BRAKING	1. Tire Pressure.	1. Adjust tire pressure.
	2. Air in brake hydraulics system.	2. Bleed brake system.
	3. Worn brake components.	3. Repair as necessary.
VEHICLE LEADS OR DRIFTS FROM STRAIGHT AHEAD DIRECTION ON UNCROWNED ROAD.	1. Tire pressure.	1. Adjust tire pressure.
	2. Radial tire lead.	2. Cross front tires.
	3. Brakes dragging.	3. Repair as necessary.
	4. Wheel alignment.	4. Align vehicle.
	5. Weak or broken spring.	5. Replace spring.
	6. Loose or worn steering/ suspension components.	6. Repair as necessary.

DIAGNOSIS AND TESTING - STEERING FLOW AND PRESSURE

The following procedure is used to test the operation of the power steering system on the vehicle. This test will provide the gallons per minute (GPM) or flow rate of the power steering pump along with the maximum relief pressure. Perform the test any time a power steering system problem is present. This test will determine if the power steering pump or the power steering gear is functioning properly. The following pressure and flow test is performed using the standard shop tool “Power Steering Analyzer Tool Kit #6815” and the “Adapter Kit #6893”.

FLOW AND PRESSURE TEST

1. Check the accessory drive belt to ensure it is in good condition and adjusted properly.
2. Connect the pressure gauge hose (4) from the “Power Steering Analyzer” to the Tube 6865.
3. Connect the Adapter (1) 6826 to the Power Steering Analyzer test valve end.
4. Disconnect the high pressure hose from the power steering pump.
5. Connect the Tube 6865 onto the pump hose fitting.
6. Connect the power steering hose from the steering gear to the Adapter 6826.
7. Open the test valve completely.
8. Start the engine and let it idle long enough to circulate power steering fluid through the flow/pressure test gauge.
9. Shut the engine off and check the fluid level, add fluid as necessary. Start the engine again and let it idle.

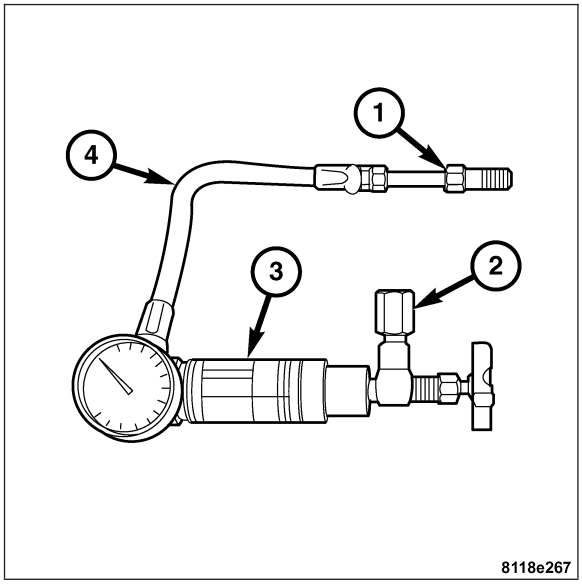

10. The initial pressure reading should be 345-552 kPa (50-80 psi). If the pressure is higher inspect the hoses for restrictions and repair as necessary.
11. Increase the engine speed to 1500 RPM and read the flow meter. The reading should be 2.4 - 2.8 GPM. If the reading is below this specification, the pump should be replaced.

CAUTION: This next step involves testing maximum pump pressure output and flow control valve operation. Do not leave the valve closed for more than three seconds as the pump could be damaged.

12. Close the valve fully three times for three seconds and record the highest pressure indicated each time. **All three readings must be at pump relief pressure specifications and within 345 kPa (50 psi) of each other.**
    - If pressure is above the specifications but not within 345 kPa (50 psi) of each other, replace the pump.
    - If pressure is within 345 kPa (50 psi) of each other but below the specifications, replace the pump.

CAUTION: Do not force the pump to operate against the stops for more than 2 to 4 seconds at a time. Pump damage could result.

13. Open the test valve and turn the steering wheel to the extreme left and right positions against the stops. Record the highest pressure reading at each position. Compare readings to the pump specifications chart. If the pressure readings are not within 50 psi. of each other, the gear is leaking internally and must be repaired.

PUMP FLOW SPECIFICATIONS

DESRIPTION	SPECIFICATION
FLOW RATE (GPM)	107-115

SPECIFICATIONS - TORQUE

TORQUE SPECIFICATIONS

DESCRIPTION	N·m	Ft. Lbs.	In. Lbs.
Drag Link to Idler Arm Nut	50	37	444
Drag Link to Pittman Arm Nut	50	37	444
Engine Mount Bolts	25	18	216
Idler Arm Mounting Nut and Bolt	50	37	444
Idler Arm Pinch Bolt	30	22	264
Outer Tie Rod to Steering Knuckle Nut	50	37	444
Pittman Arm Pinch Bolt	55	41	492
Power Steering High Pressure Hose	30	22	264
Power Steering Pump Mounting Bolts	20	15	180
Power Steering Return Hose	40	30	360
Steering Column Lower Nuts	8	5.9	71
Steering Column Pinch Bolt	30	22	264
Steering Column Upper Bolts	20	15	180
Steering Coupling Pinch Bolt	30	22	264
Steering Damper Bracket Nut and Bolt	40	29	348
Steering Damper to Drag Link Nut and Bolt	40	29	348
Steering Gear Lock Nut	60	44	528
Steering Gear Mounting Bolts	60	44	528

SPECIAL TOOLS

STEER

ING

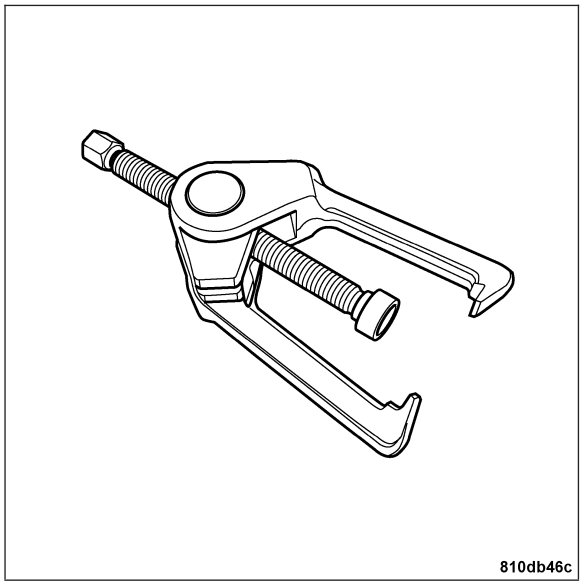

C-3894-A Tie Rod Puller

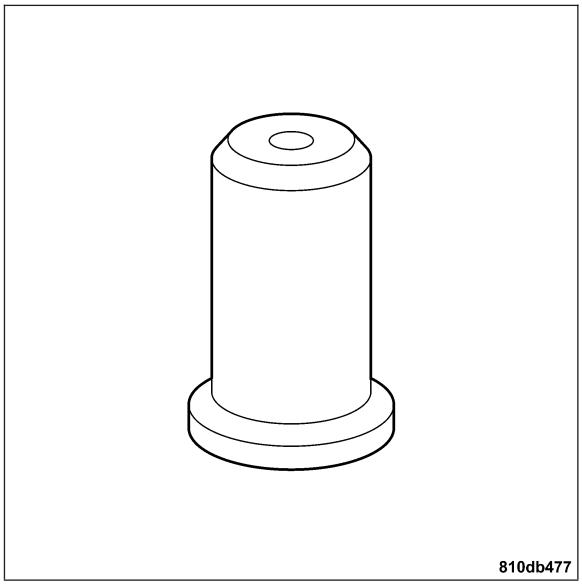

9159 Steering Seal Installer

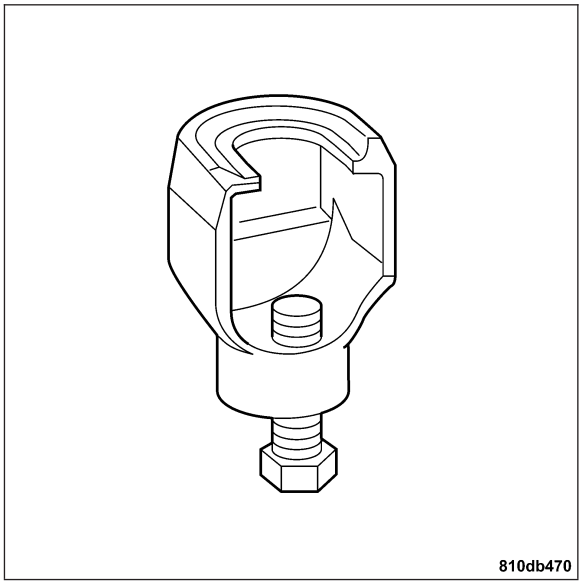

9168 Ball Joint Puller

COLUMN

TABLE OF CONTENTS

	page
COLUMN	
DESCRIPTION	8
REMOVAL	9
DISASSEMBLY	13
ASSEMBLY	14
INSTALLATION	
STEERING COLUMN	15
IGNITION LOCK CABLE	
REMOVAL	19
INSTALLATION	21
IGNITION SWITCH	
REMOVAL	23
INSTALLATION	24
STEERING WHEEL	
REMOVAL	25
INSTALLATION	26
KEY/LOCK CYLINDER	
REMOVAL	28
INSTALLATION	30

COLUMN

DESCRIPTION

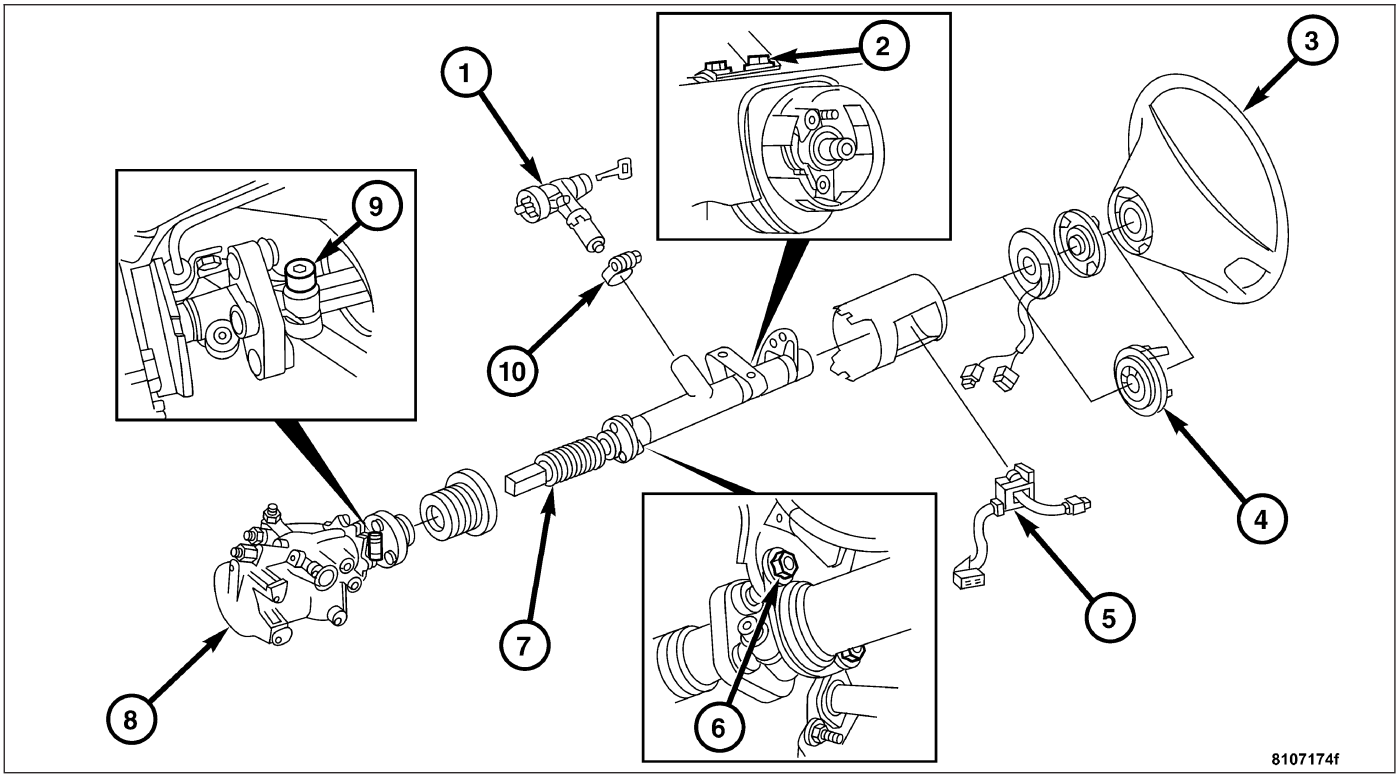

1 - STEERING LOCK
2 - UPPER STEERING COLUMN BOLTS
3 - STEERING WHEEL
4 - CLOCKSPRING
5 - MULTIFUNCTION/SPEED CONTROL SWITCH
6 - LOWER STEERING COLUMN NUTS
7 - STEERING SHAFT
8 - STEERING GEAR
9 - PINCH BOLT
10 - RETAINING CLAMP

WARNING: THE AIRBAG SYSTEM IS A SENSITIVE, COMPLEX ELECTRO-MECHANICAL UNIT. BEFORE ATTEMPTING TO DIAGNOSE, REMOVE OR INSTALL THE AIRBAG SYSTEM COMPONENTS YOU MUST FIRST DISCONNECT AND ISOLATE THE BATTERY NEGATIVE (GROUND) CABLE. THEN WAIT TWO MINUTES FOR THE SYSTEM CAPACITOR TO DISCHARGE. FAILURE TO DO SO COULD RESULT IN ACCIDENTAL DEPLOYMENT OF THE AIRBAG AND POSSIBLE PERSONAL INJURY. THE FASTENERS, SCREWS, AND BOLTS, ORIGINALLY USED FOR THE AIRBAG COMPONENTS, HAVE SPECIAL COATINGS AND ARE SPECIFICALLY DESIGNED FOR THE AIRBAG SYSTEM. THEY MUST NEVER BE REPLACED WITH ANY SUBSTITUTES. ANYTIME A NEW FASTENER IS NEEDED, REPLACE WITH THE CORRECT FASTENERS PROVIDED IN THE SERVICE PACKAGE OR FASTENERS LISTED IN THE PARTS BOOKS.

CAUTION: Safety goggles should be worn at all times when working on steering columns.

The steering column has been designed so that the wiring, switches, shrouds and steering wheel can be serviced without removing the steering column from the vehicle.

To service the steering wheel, switches or airbag refer to the appropriate procedure.

REMOVAL

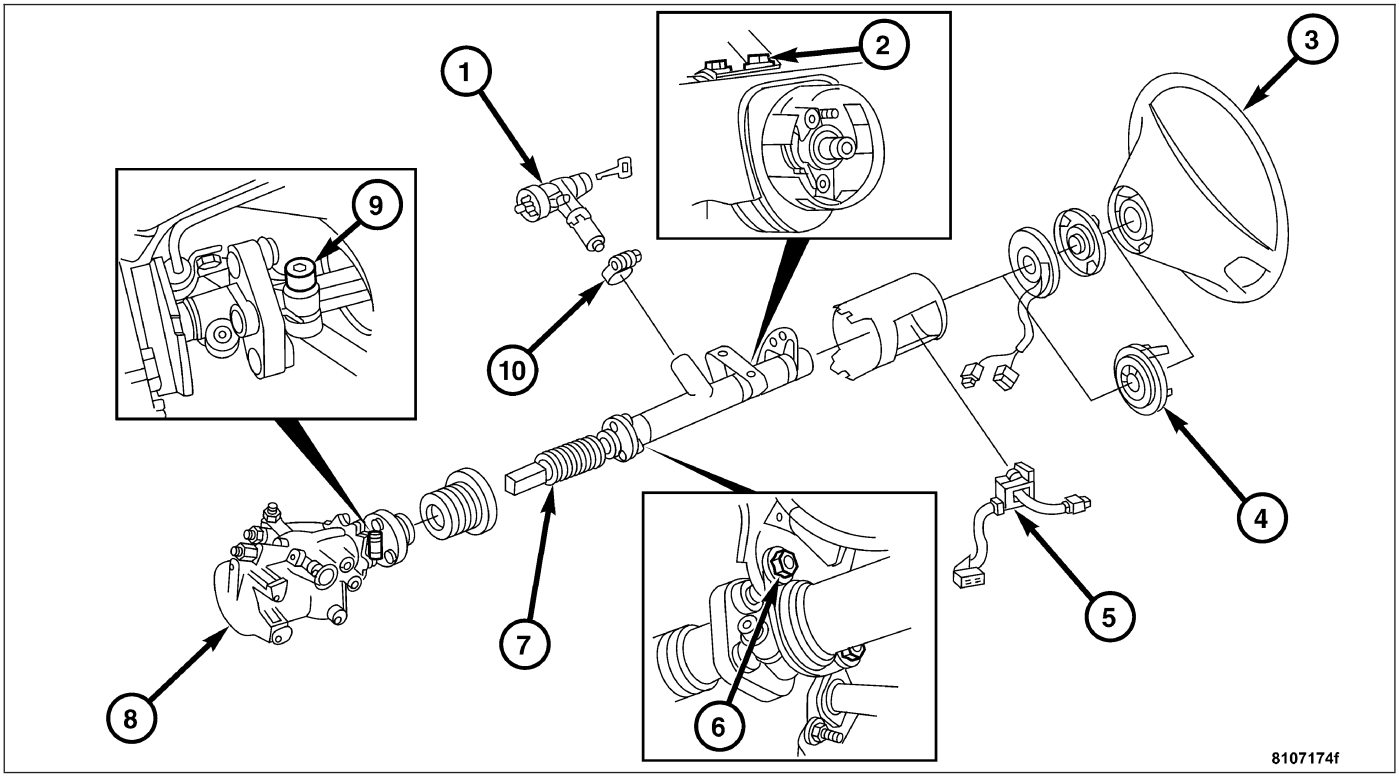

1 - STEERING LOCK
2 - UPPER STEERING COLUMN BOLTS
3 - STEERING WHEEL
4 - CLOCKSPRING
5 - MULTIFUNCTION/SPEED CONTROL SWITCH
6 - LOWER STEERING COLUMN NUTS
7 - STEERING SHAFT
8 - STEERING GEAR
9 - PINCH BOLT
10 - RETAINING CLAMP

WARNING: BEFORE SERVICING THE STEERING COLUMN THE AIRBAG SYSTEM MUST BE DISARMED. FAILURE TO DO SO MAY RESULT IN ACCIDENTAL DEPLOYMENT OF THE AIRBAG AND POSSIBLE PERSONAL INJURY.

1. Disconnect the negative battery cable.
2. Remove the left lower instrument panel (2) from under the steering column. **Refer to Page 23-149**.

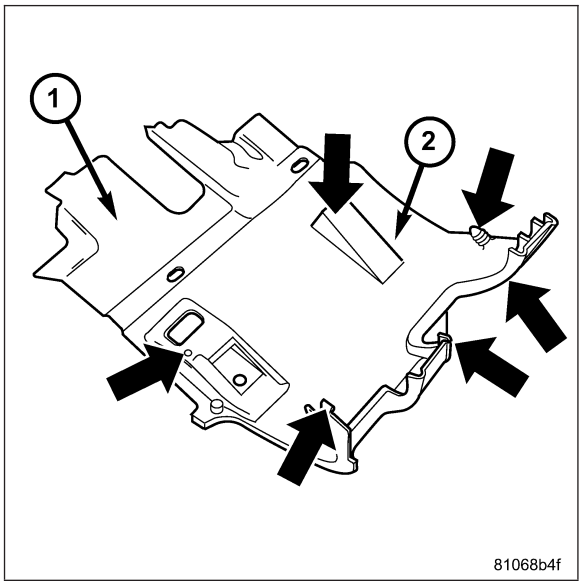

3. Remove the driver airbag screws (1). **Refer to Page 8O-100**.
4. Position the front wheels in the straight-ahead position.

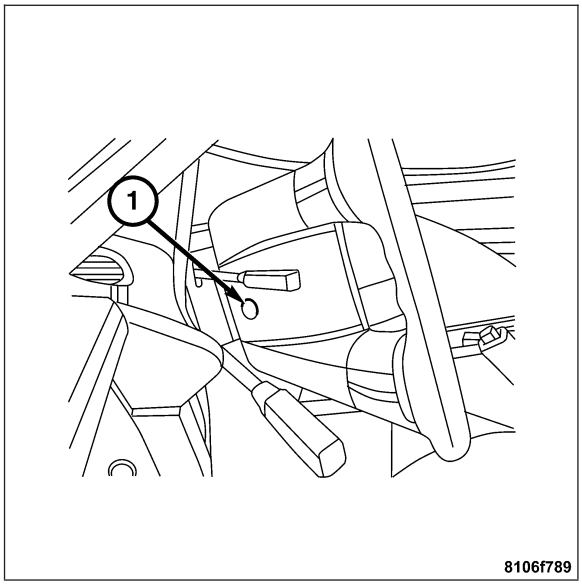

5. Remove the steering wheel bolt (1) and remove the steering wheel. **Refer to Page 19-25**.

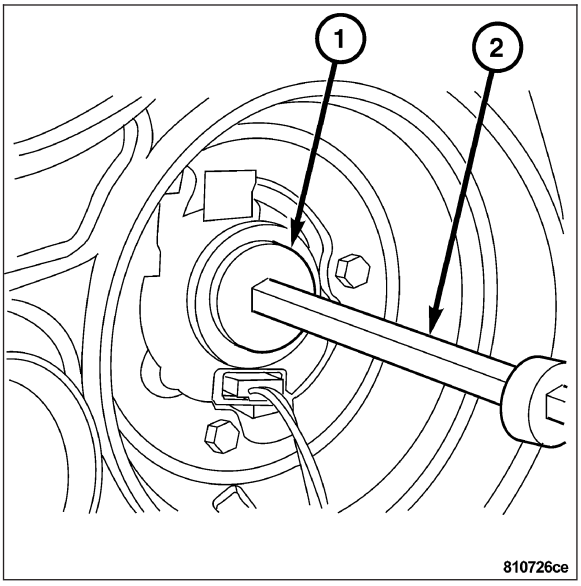

6. Remove the clockspring screws (1). **Refer to Page 8O-94**.

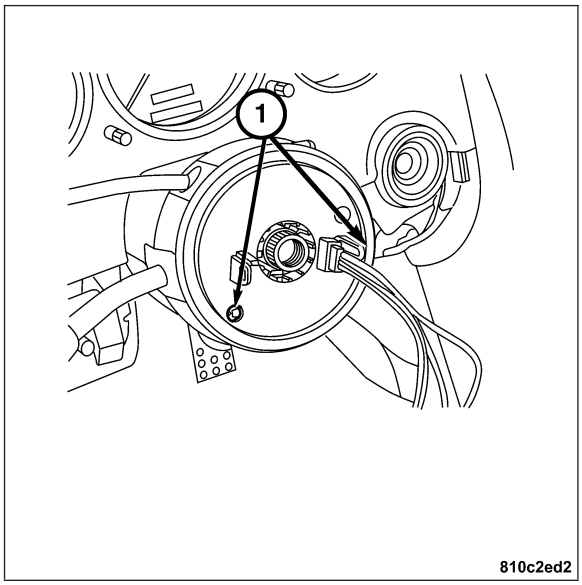

7. Remove the instrument cluster (1). **Refer to Page 8J-83**.
8. Remove the steering lock. **Refer to Page 19-19**.

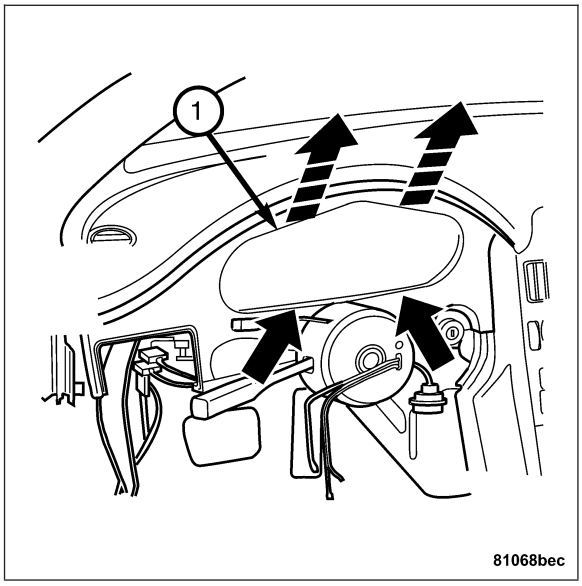

9. Remove the speed control switch (1). **Refer to Page 8P-4**.

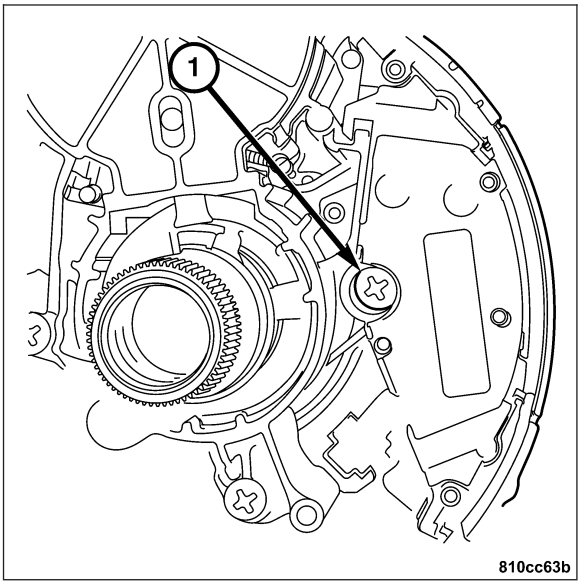

10. Remove the multi-function switch screws (1-2). **Refer to Page 8L-112**.
11. Remove the column trim ring.

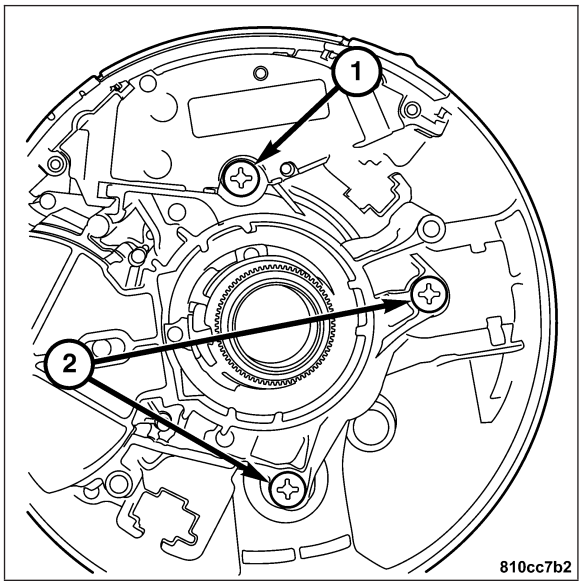

12. Remove the pinch bolt (1) attaching the steering column to the steering gear.
13. Remove the lower nuts on the steering column attaching the steering column to the lower mounting surface.

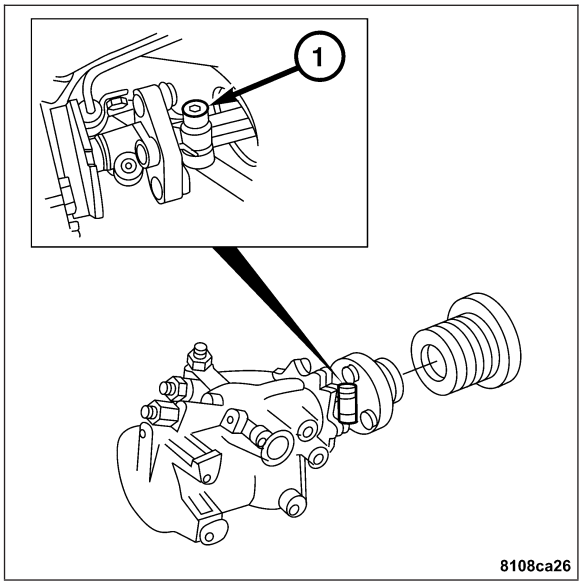

14. Remove the upper bolts (1) on the steering column attaching it to the instrument panel support.

CAUTION: DO NOT use force as the intermediate shaft is sensitive to the effects of side force.

15. Pull the steering column out away from the instrument panel.

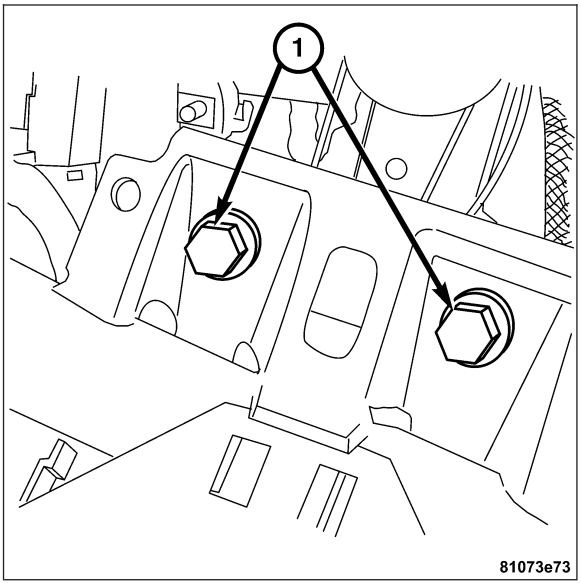

DISASSEMBLY

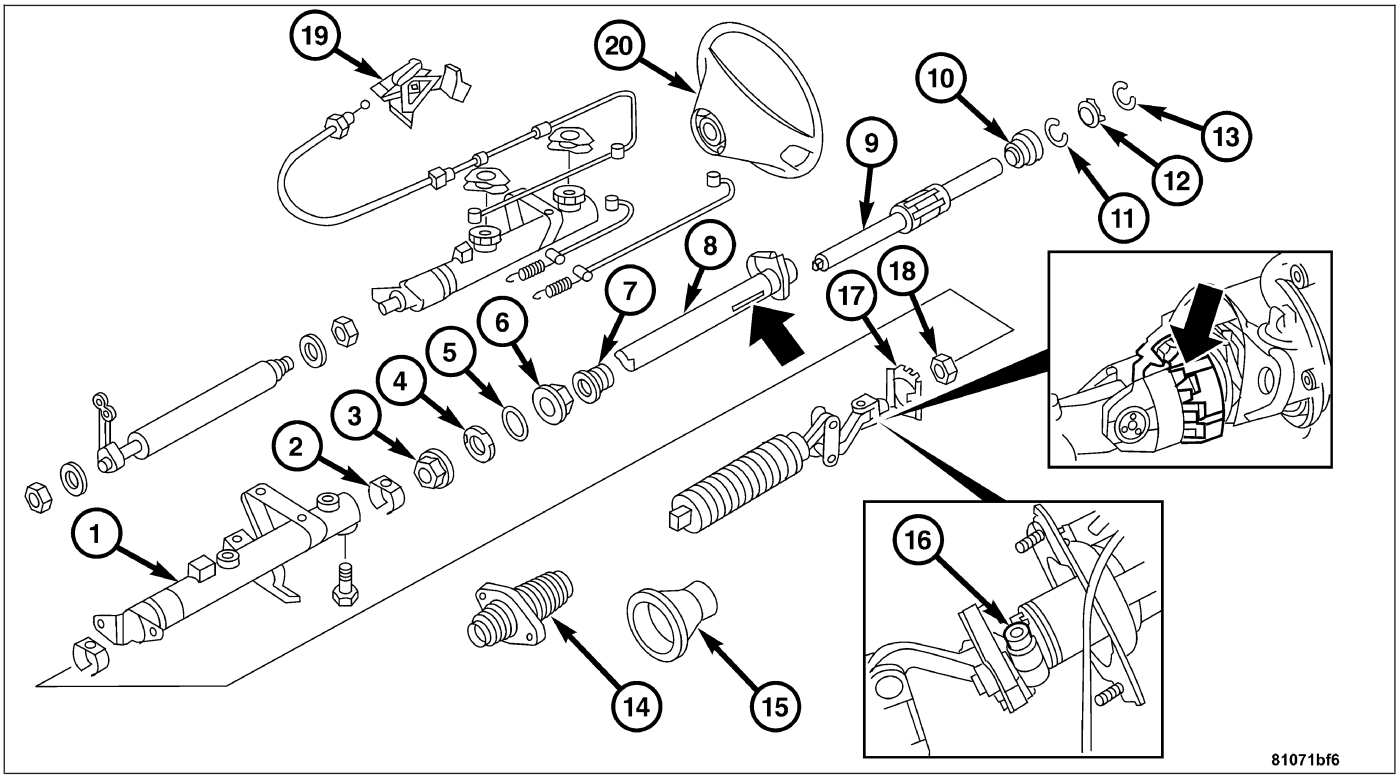

1 - OUTER COLUMN TUBE
2 - PLASTIC BEARING
3 - STEERING SHAFT NUT
4 - DISK SPRING
5 - THRUST RING
6 - RETAINING RING
7 - PLASTIC BEARING
8 - INNER COLUMN TUBE
9 - INTERMEDIATE SHAFT
10 - THRUST RING
11 - LOCKING RING
12 - DISK SPRING
13 - LOCKING RING
14 - COUPLER FLANGE SEAL
15 - CUP SEAL
16 - PINCH BOLT
17 - FLANGE
18 - INTERMEDIATE SHAFT NUT
19 - ADJUSTING LEVER
20 - STEERING WHEEL

1. Remove the pinch bolt (16) from the intermediate shaft (9), remove intermediate shaft (9).
2. Remove the retaining ring (6), disk spring (4) and the thrust ring (5).
3. Push the intermediate shaft (9) out slightly, remove the locking ring (13) and the thrust ring (10).
4. Press the ball bearing out of the steering column using the intermediate shaft (9).

ASSEMBLY

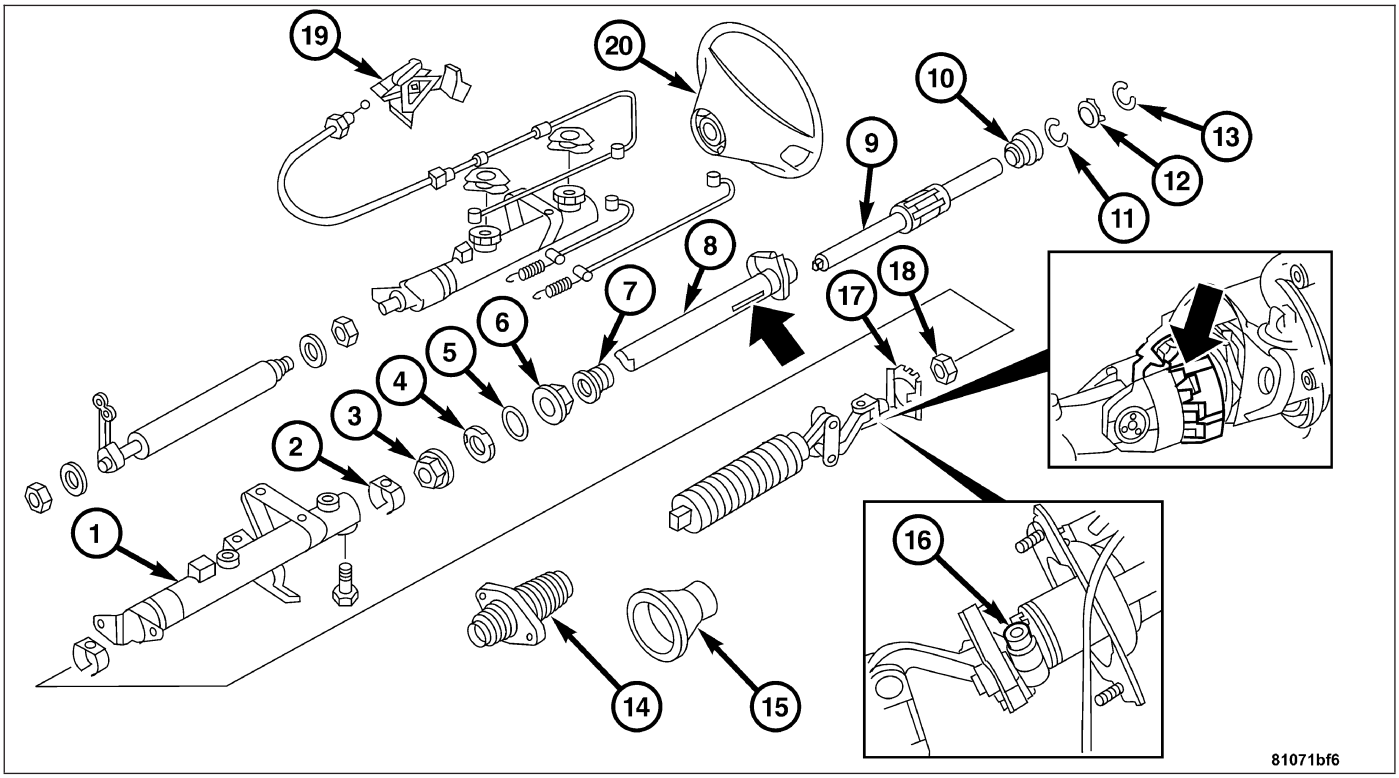

1 - OUTER COLUMN TUBE
2 - PLASTIC BEARING
3 - STEERING SHAFT NUT
4 - DISK SPRING
5 - THRUST RING
6 - RETAINING RING
7 - PLASTIC BEARING
8 - INNER COLUMN TUBE
9 - INTERMEDIATE SHAFT
10 - THRUST RING
11 - LOCKING RING
12 - DISK SPRING
13 - LOCKING RING
14 - COUPLER FLANGE SEAL
15 - CUP SEAL
16 - PINCH BOLT
17 - FLANGE
18 - INTERMEDIATE SHAFT NUT
19 - ADJUSTING LEVER
20 - STEERING WHEEL

1. Using a suitable tool, press the new bearing (7) in up to the stop in the steering column.
2. Slide the intermediate shaft in and press the second bearing in.

Note: Ensure that the locking ring locks in position correctly in the groove of the upper steering shaft. Two locking rings are fitted on vehicles with contact spirals.

3. Push the thrust ring and locking ring (13) together onto the intermediate shaft (9).
4. Slide on the thrust ring (5) and the disk spring (4).

Note: The disk spring must be preloaded fully; preload fully using the lower steering shaft, if necessary.

Note: If the preload is too high, the upper steering shaft can only be turned very unevenly or it sticks. The ball bearings are pressed into the bearing shells excessively.

Note: If the preload is too low, play is detectable at the steering wheel when the jacket tube is installed.

5. Mount the retaining ring (6) on the intermediate shaft (9) and, using a suitable tool, push on until the disk spring (4) is fully preloaded.

6. Attach the lower tube (1) to the upper tube by screwing in the countersunk screw to protect the splines.
7. Slide the lower intermediate shaft onto the upper intermediate shaft and install bolt and nut.
8. Use a suitable tool to protect the lower intermediate shaft.
9. Using a press, slide the lower intermediate shaft onto the upper intermediate shaft until the disc spring is fully preloaded. Check the steering column for ease of movement by turning it at the same time, tighten the nut and bolt in this position.

INSTALLATION

STEERING COLUMN

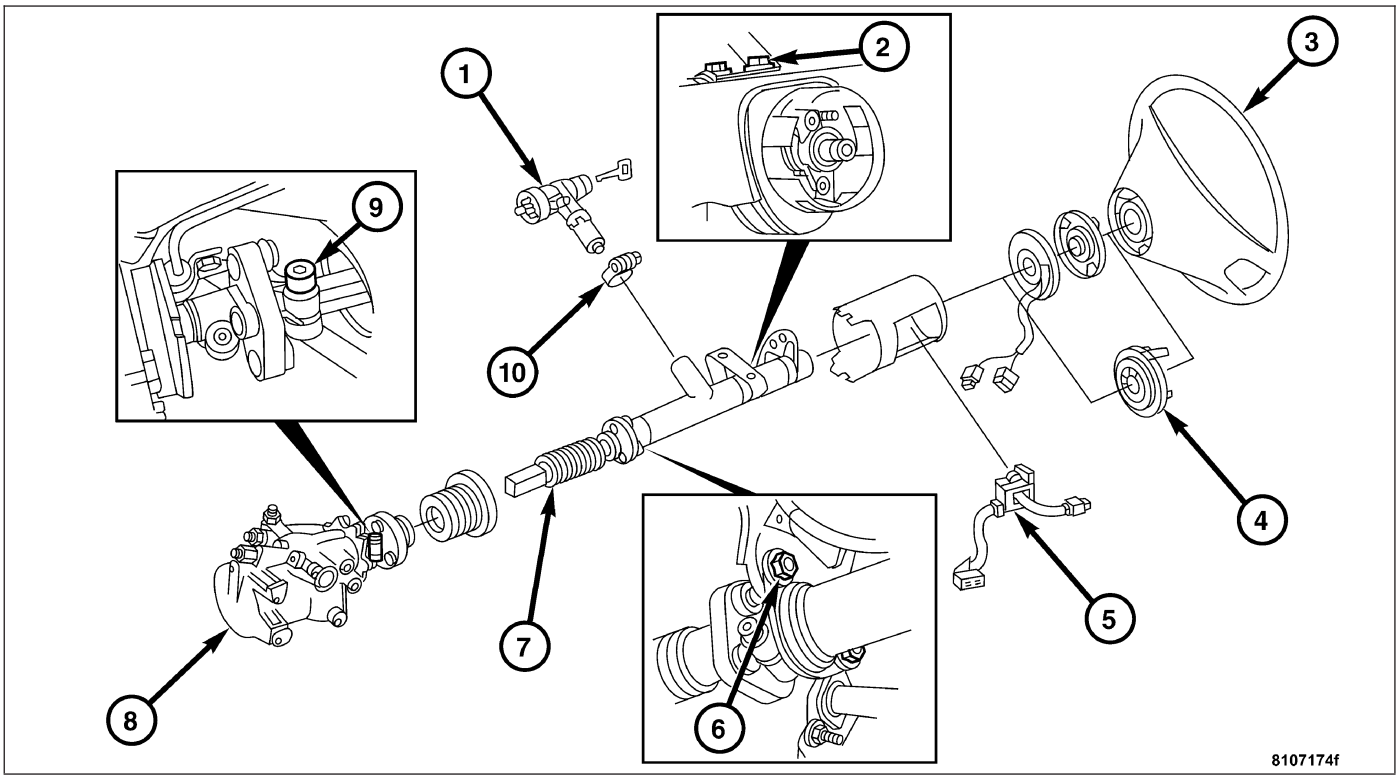

1 - STEERING LOCK
2 - UPPER STEERING COLUMN BOLTS
3 - STEERING WHEEL
4 - CLOCKSPRING
5 - MULTIFUNCTION/SPEED CONTROL SWITCH
6 - LOWER STEERING COLUMN NUTS
7 - STEERING SHAFT
8 - STEERING GEAR
9 - PINCH BOLT
10 - RETAINING CLAMP

WARNING: BEFORE SERVICING THE STEERING COLUMN THE AIRBAG SYSTEM MUST BE DISARMED. FAILURE TO DO SO MAY RESULT IN ACCIDENTAL DEPLOYMENT OF THE AIRBAG AND POSSIBLE PERSONAL INJURY.

CAUTION: DO NOT use force as the intermediate shaft is sensitive to the effects of side force.

1. Install the steering column.
2. Install the lower nuts on the steering column attaching the steering column to the lower mounting surface. Tighten to 8 N·m (71 in. lbs.).
3. Install the upper bolts (1) on the steering column attaching it to the instrument panel support. Tighten to 20 N·m (15 ft. lbs.).

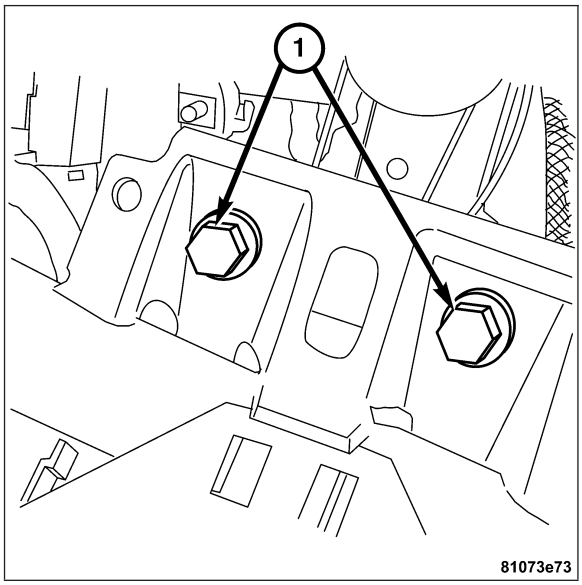

4. Install the pinch bolt (1) attaching the upper steering column to the steering gear. Tighten to 30 N·m (22 ft. lbs.).
5. Connect the clockspring electrical connector.
6. Install the column trim ring.

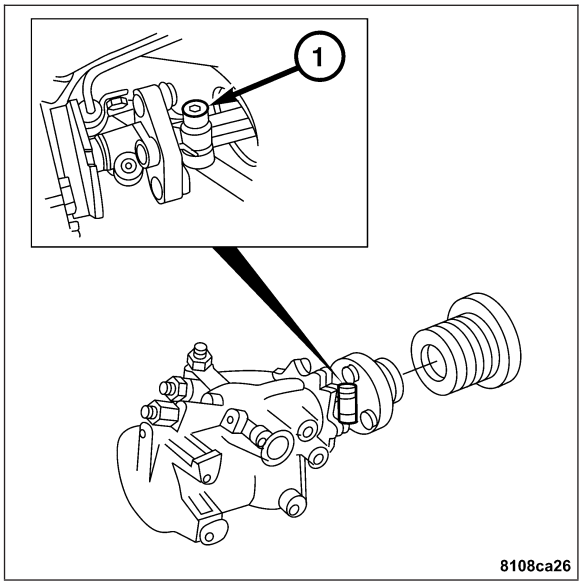

7. Install the speed control switch screws (1).

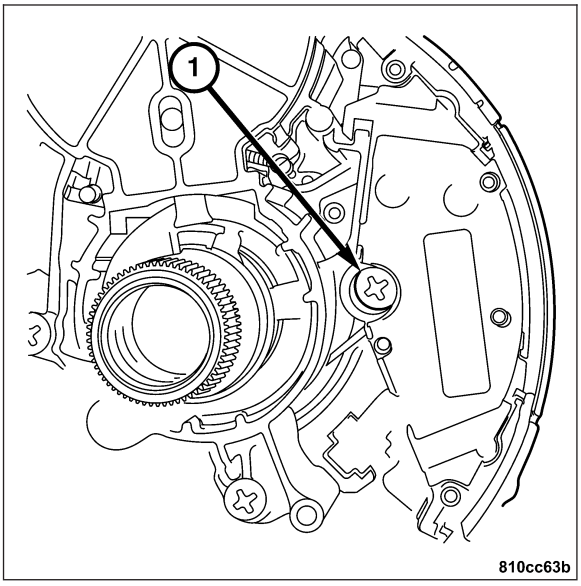

8. Install the multi-function switch screws (1-2).
9. Reconnect the ignition switch connector.

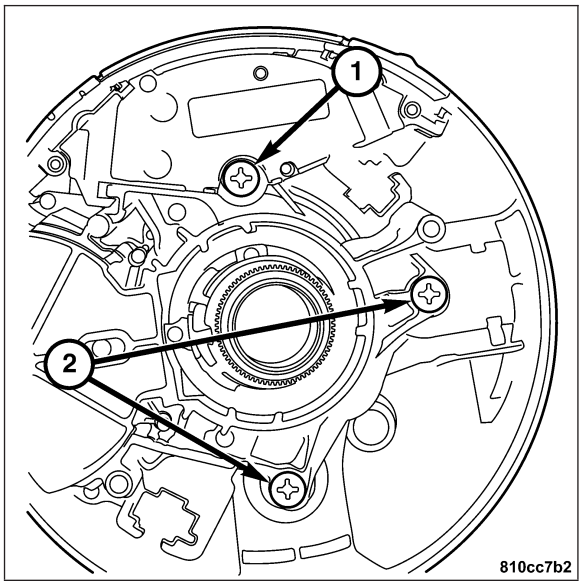

10. Install the instrument cluster (1). **Refer to Page 8J-84**.

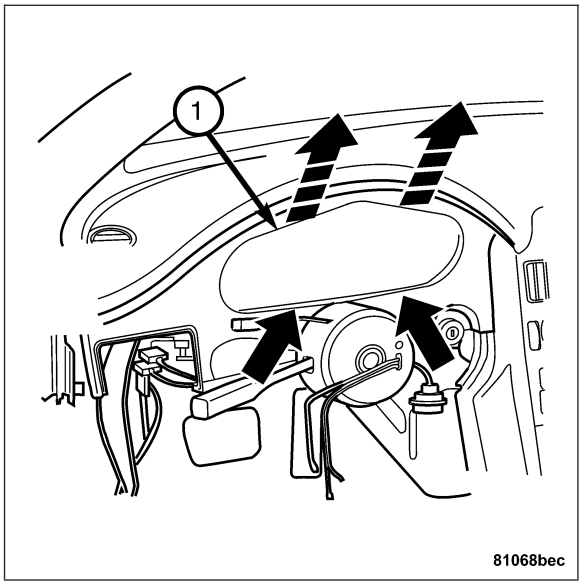

11. Install the clockspring screws (1). **Refer to Page 8O-96**.

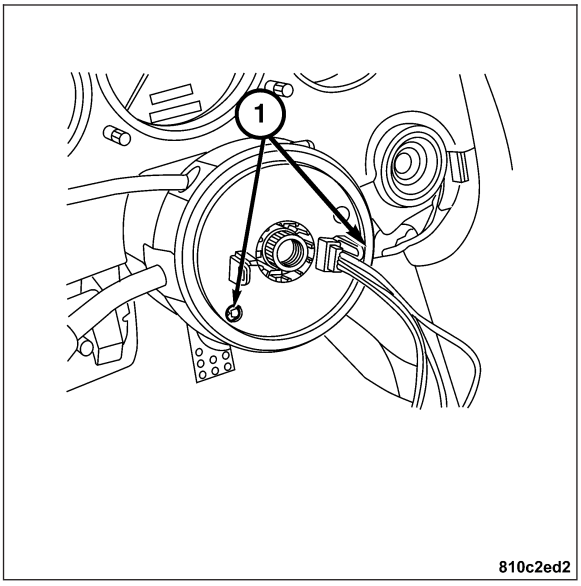

12. Install the steering wheel bolt (1). **Refer to Page 19-26**.

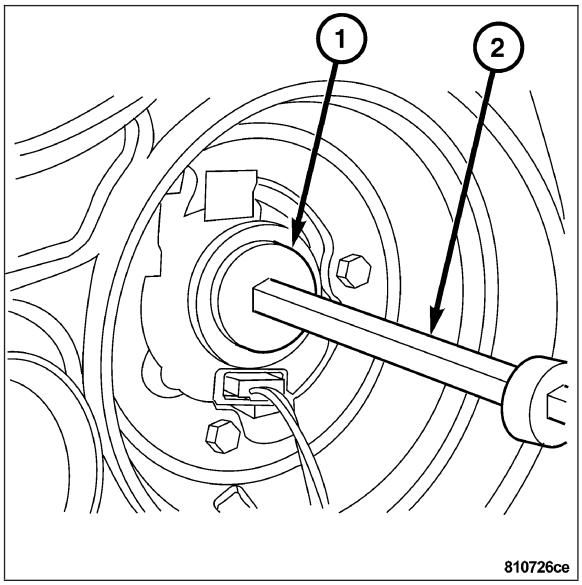

13. Install the driver airbag screws (1). **Refer to Page 8O-100**.

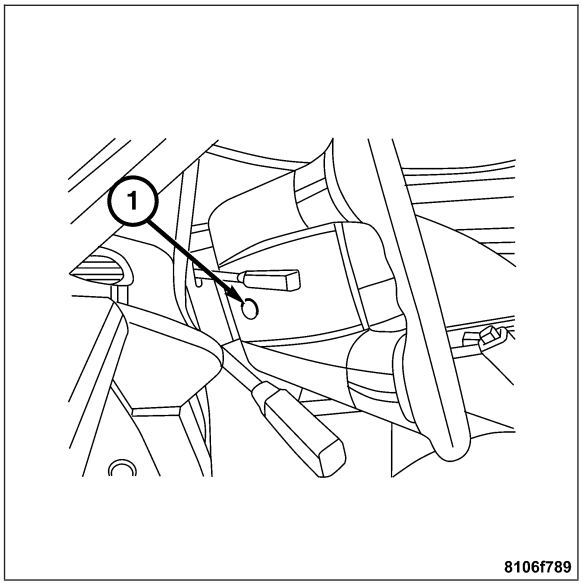

14. Install the left lower instrument panel (2) under the steering column. **Refer to Page 23-155**.
15. Connect the negative battery cable.

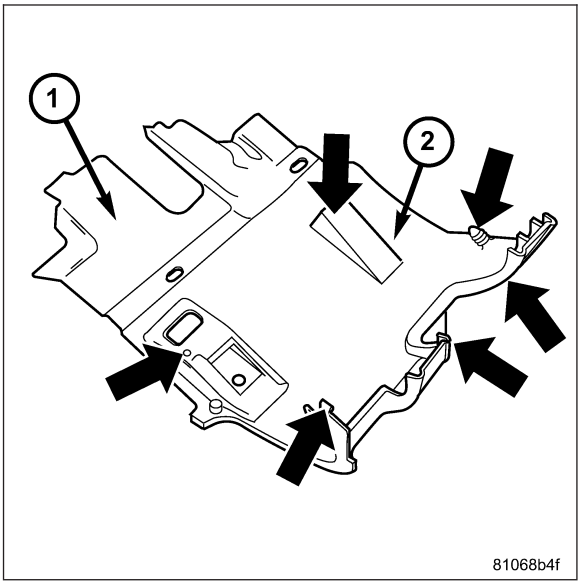

IGNITION LOCK CABLE

REMOVAL

1. Disconnect the negative battery cable.
2. Remove the ashtray (2) at front of center console. **Refer to Page 23-173**.

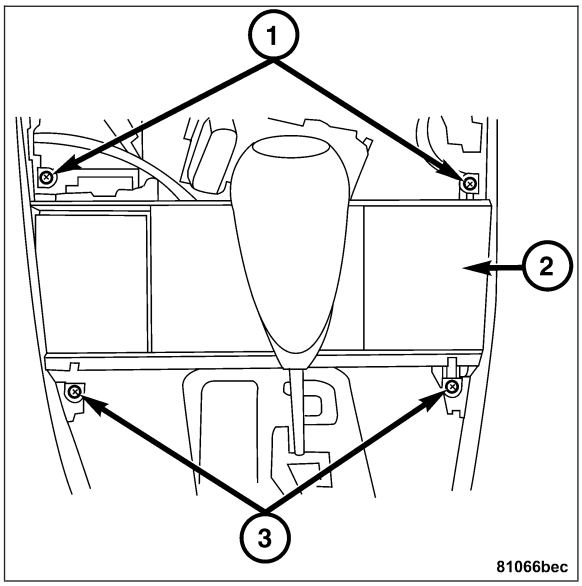

3. Remove the lower instrument panel (2). **Refer to Page 23-149**.

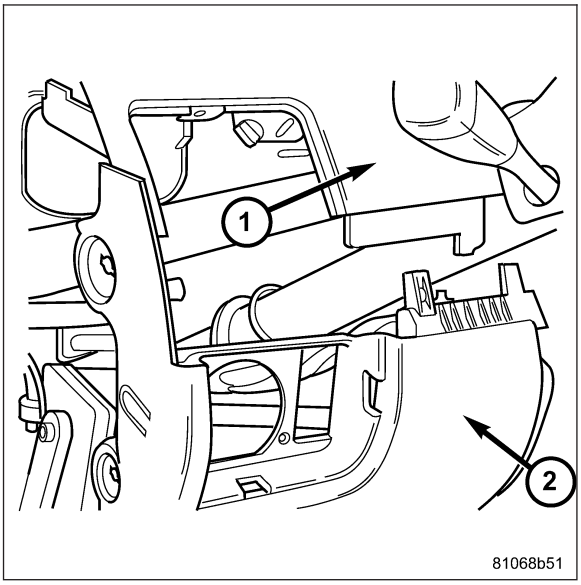

4. Press the locking tabs together and push the ignition lock cable (1) out of ignition / starter switch in the direction of the arrows.

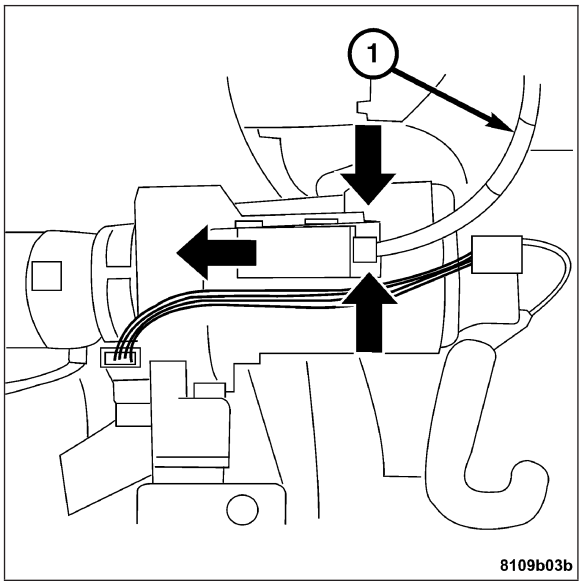

5. Remove the shifter bezel (1). **Refer to Page 23-173**.

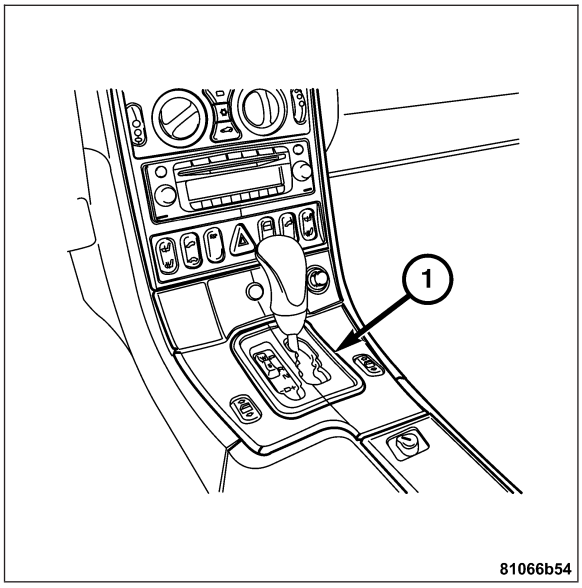

6. Remove the ignition lock cable (1) from electronic selector lever module by turning it 90° to the left and then pulling it straight out.

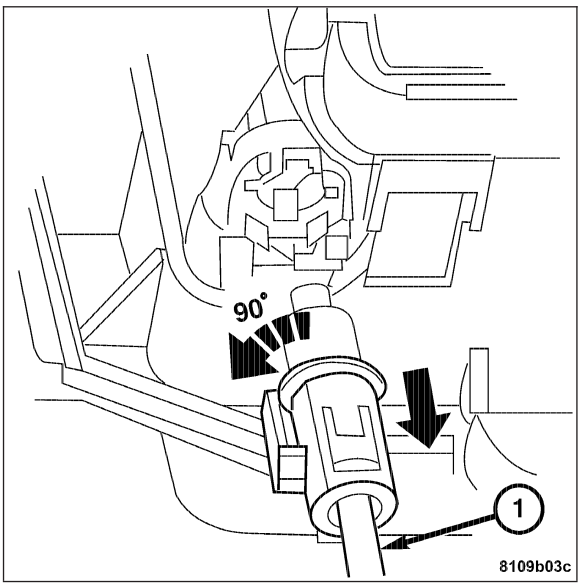

INSTALLATION

1. Install the ignition lock cable (1) to the ignition / starter switch by sliding it into the retaining slot until the tabs click.

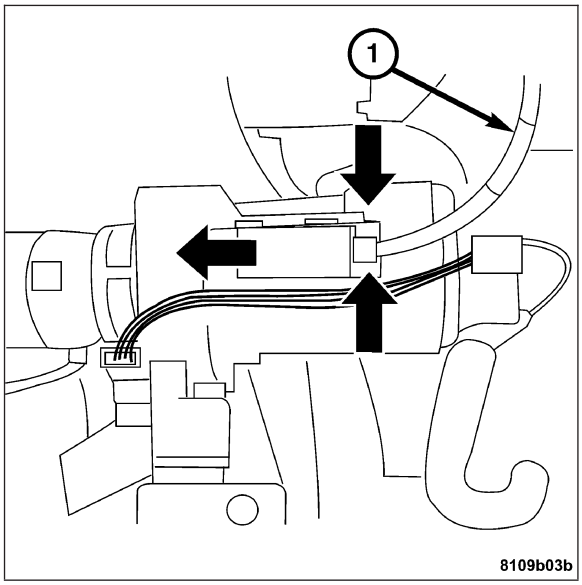

2. Install the ignition lock cable (1) to the shift lever assembly by inserting it into the mounting hole and then turning it 90° to the right.
3. Turn the ignition switch to the off/lock position. It should only be possible to move the shift lever out of the Park position when the ignition switch is in the on/run position and the brake pedal is depressed. It should only be possible to remove the ignition key when the shift lever is in the Park position and the ignition switch is in the off/lock position.

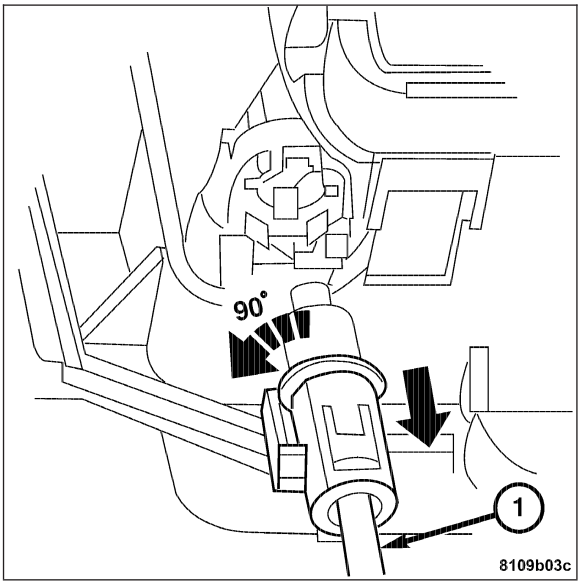

4. Install the lower instrument panel (2). **Refer to Page 23-155**.

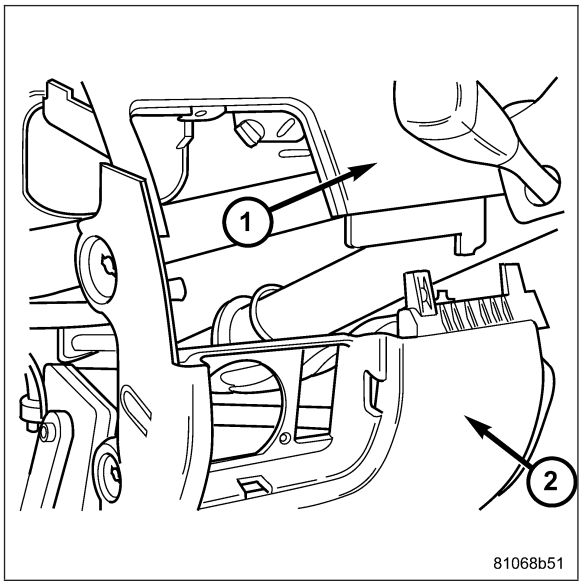

5. Install the ash tray (2) in the front center console.

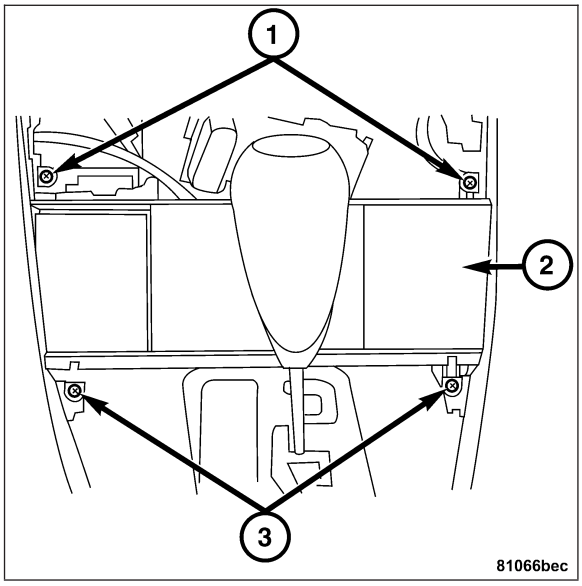

6. Install the shifter cover (1). **Refer to Page 23-183**.

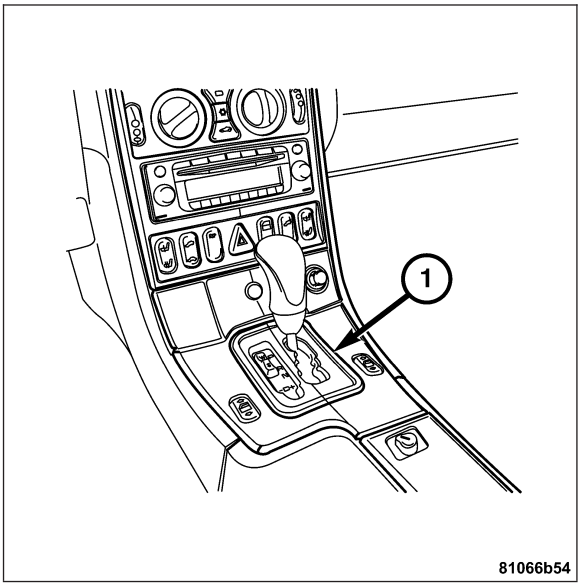

IGNITION SWITCH

REMOVAL

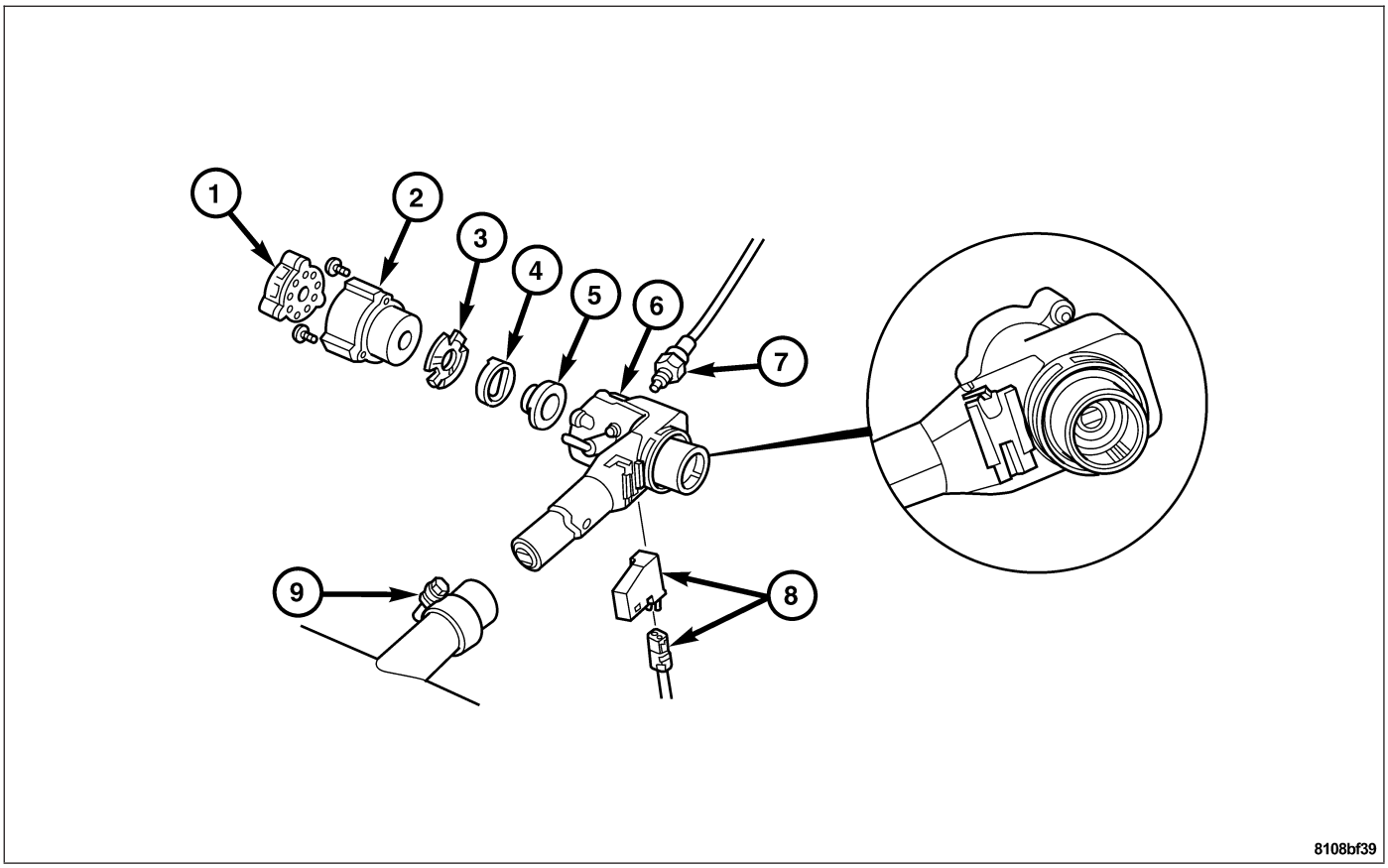

1 - IGNITION SWITCH CONNECTOR
2 - IGNITION SWITCH
3 - WASHER
4 - PARKING LOCK VALVE
5 - CAM
6 - STEERING LOCK
7 - PARK/BRAKE INTERLOCK CABLE
8 - BUZZER
9 - RELEASE CLAMP

1. Remove the lower instrument panel cover. **Refer to Page 23-149**.
2. Remove the instrument cluster. **Refer to Page 8J-83**.
3. Remove the transponder coil from the lock cylinder by removing the top section of the instrument panel. **Refer to Page 23-149**.
4. Insert a plastic wedge directly between the ignition switch cover sleeve and the transponder coil. Press the transponder coil off of the ignition switch cover sleeve with a plastic wedge.
5. Disconnect the 2-pin connector for the transponder coil from the RKE control module.

CAUTION: The steering lock and lock cylinder can only be fitted in lock cylinder position ″1″. NEVER turn the steering lock when the ignition/starter switch is not fitted.

6. Remove the key cylinder. **Refer to Page 19-23**.
7. Disconnect the connector (8) from the warning buzzer contact.
8. Disconnect the connector (1) from the ignition/starter switch.

Note: Vehicles with automatic transmission

9. Remove the parking lock interlock cable (7).
10. Release the clamp (9), press in locking pin and pull the steering lock (6) out of the steering column.

Note: The ignition switch must not be turned out of position ″1″ when the ignition/starter switch is not fitted, otherwise the steering lock is locked permanently

11. Remove the ignition switch (2).
12. Remove the washer (3) and parking lock valve (4).
13. Remove the warning buzzer (8) contact and switch.

INSTALLATION

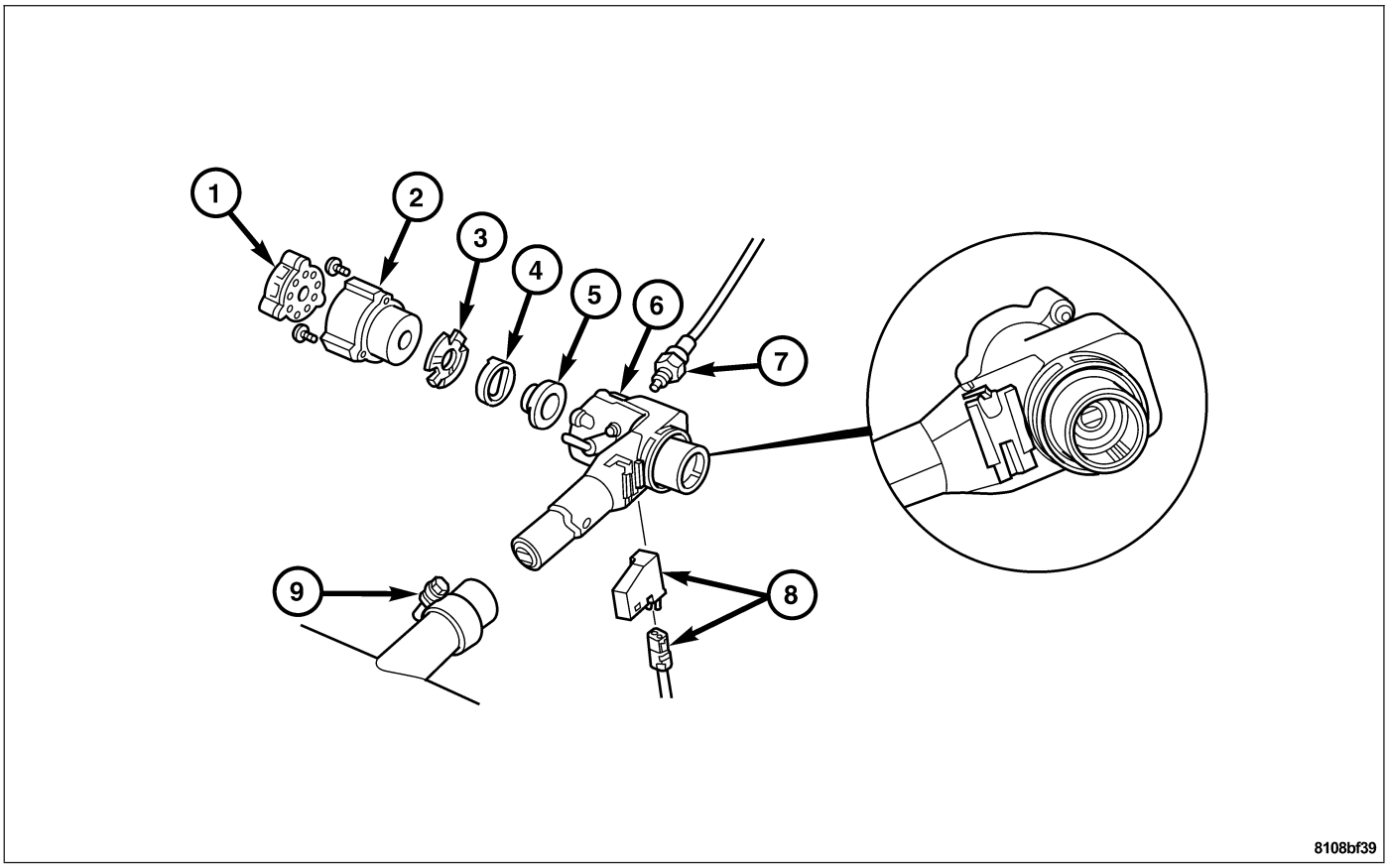

1 - IGNITION SWITCH CONNECTOR
2 - IGNITION SWITCH
3 - WASHER
4 - PARKING LOCK VALVE
5 - CAM
6 - STEERING LOCK
7 - PARK/BRAKE INTERLOCK CABLE
8 - BUZZER
9 - RELEASE CLAMP

1. Install the warning buzzer contact switch (8).

CAUTION: The steering lock and lock cylinder can only be fitted in lock cylinder position ″1″. Never turn the steering lock when the ignition/starter switch is not fitted.

2. Install the washer (3) and the parking lock valve (4).

Note: The ignition switch must not be turned out of position ″1″ when the ignition/starter switch is not fitted, otherwise the steering lock is locked permanently.

3. Install the ignition switch (2).

4. Install the clamp (9), press in locking pin to install the steering lock (6) to the steering column.
5. Install the parking lock interlock cable (7).
6. Install the connector from the ignition/starter switch (1).
7. Install the connector from the warning buzzer contact (10).
8. Install the key cylinder. **Refer to Page 19-21**.
9. Install the transponder coil.
10. Install the instrument cluster. **Refer to Page 8J-84**.
11. Install the lower instrument panel cover. **Refer to Page 23-149**.

STEERING WHEEL

REMOVAL

WARNING: ON VEHICLES EQUIPPED WITH AIRBAGS, DISABLE THE SUPPLEMENTAL RESTRAINT SYSTEM BEFORE ATTEMPTING ANY STEERING WHEEL, STEERING COLUMN, DRIVER AIRBAG, PASSENGER AIRBAG, FRONT IMPACT SENSOR, SIDE IMPACT SENSOR, SIDE CURTAIN AIRBAG, OR INSTRUMENT PANEL COMPONENT DIAGNOSIS OR SERVICE. DISCONNECT AND ISOLATE THE BATTERY NEGATIVE (GROUND) CABLE, THEN WAIT TWO MINUTES FOR THE SYSTEM CAPACITOR TO DISCHARGE BEFORE PERFORMING FURTHER DIAGNOSIS OR SERVICE. THIS IS THE ONLY SURE WAY TO DISABLE THE SUPPLEMENTAL RESTRAINT SYSTEM. FAILURE TO TAKE THE PROPER PRECAUTIONS COULD RESULT IN ACCIDENTAL AIRBAG DEPLOYMENT AND POSSIBLE PERSONAL INJURY.

WARNING: WHEN REMOVING A DEPLOYED AIRBAG, RUBBER GLOVES, EYE PROTECTION, AND A LONG-SLEEVED SHIRT SHOULD BE WORN. THERE MAY BE DEPOSITS ON THE AIRBAG CUSHION AND OTHER INTERIOR SURFACES. IN LARGE DOSES, THESE DEPOSITS MAY CAUSE IRRITATION TO THE SKIN AND EYES.

1. Disconnect the negative battery cable.
2. Push in the adjustable steering column fully.
3. Position the steering wheel so that the front wheels are in the straight-ahead position.
4. Remove the ignition key and allow the steering to lock into position.
5. Remove the airbag screws (1) on the steering wheel. **Refer to Page 8O-100**.

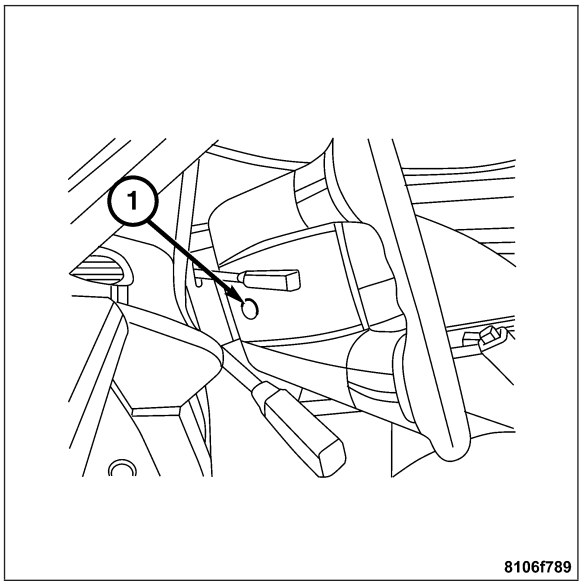

6. Using a long hex tool (2), remove the countersunk screw (1) while steadying the steering wheel.
7. Carefully pass the connector from the airbag through the hole in the steering wheel. Remove the steering wheel from the vehicle.
8. Check the horn/airbag and clock spring contacts for any damage. Replace if necessary. **Refer to Page 8O-94**.

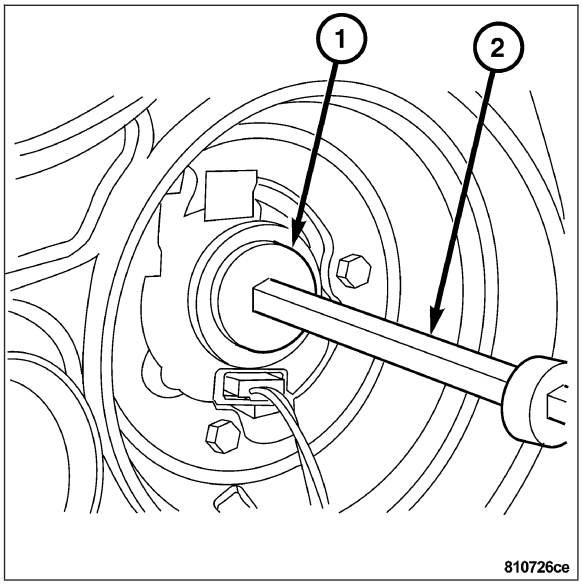

INSTALLATION

WARNING: ON VEHICLES EQUIPPED WITH AIRBAGS, DISABLE THE SUPPLEMENTAL RESTRAINT SYSTEM BEFORE ATTEMPTING ANY STEERING WHEEL, STEERING COLUMN, DRIVER AIRBAG, PASSENGER AIRBAG, FRONT IMPACT SENSOR, SIDE IMPACT SENSOR, SIDE CURTAIN AIRBAG, OR INSTRUMENT PANEL COMPONENT DIAGNOSIS OR SERVICE. DISCONNECT AND ISOLATE THE BATTERY NEGATIVE (GROUND) CABLE, THEN WAIT TWO MINUTES FOR THE SYSTEM CAPACITOR TO DISCHARGE BEFORE PERFORMING FURTHER DIAGNOSIS OR SERVICE. THIS IS THE ONLY SURE WAY TO DISABLE THE SUPPLEMENTAL RESTRAINT SYSTEM. FAILURE TO TAKE THE PROPER PRECAUTIONS COULD RESULT IN ACCIDENTAL AIRBAG DEPLOYMENT AND POSSIBLE PERSONAL INJURY.

WARNING: WHEN REMOVING A DEPLOYED AIRBAG, RUBBER GLOVES, EYE PROTECTION, AND A LONG-SLEEVED SHIRT SHOULD BE WORN. THERE MAY BE DEPOSITS ON THE AIRBAG CUSHION AND OTHER INTERIOR SURFACES. IN LARGE DOSES, THESE DEPOSITS MAY CAUSE IRRITATION TO THE SKIN AND EYES.

CAUTION: If the steering wheel is offset by more than 1 tooth, the turn signal indicator is no longer properly aligned.

CAUTION: The SRS malfunction indicator lamp must not come on at full steering lock in either direction.

CAUTION: If the steering wheel is not on straight, offset it by a maximum of 1 tooth, if the difference is greater, check and adjust the front wheel toe-in. **Refer to Page 2-13**.

1. Align the recesses of the splines in the steering wheel with the markings on the steering shaft.
2. Install the countersunk bolt (1). Tighten to 80 N·m (60 ft. lbs.).

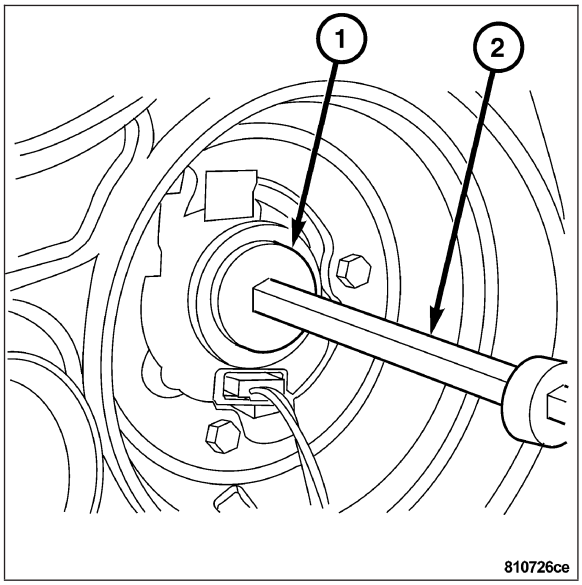

3. Install the airbag screws (1) on the steering wheel. **Refer to Page 8O-100**.

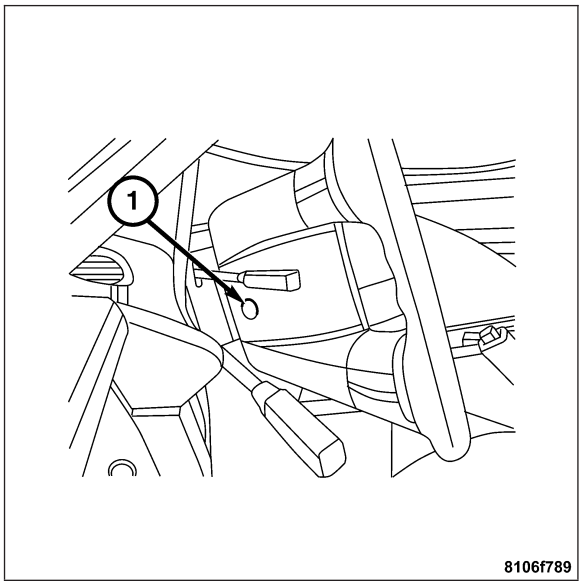

KEY/LOCK CYLINDER

REMOVAL

Note: If the lock cylinder/key is notched or jamming, spray the lock cylinder with lock cylinder grease. If it is not possible to eliminate the complaint, replace the lock cylinder and key.

1. Press out the escutcheon (2) with a suitable tool.

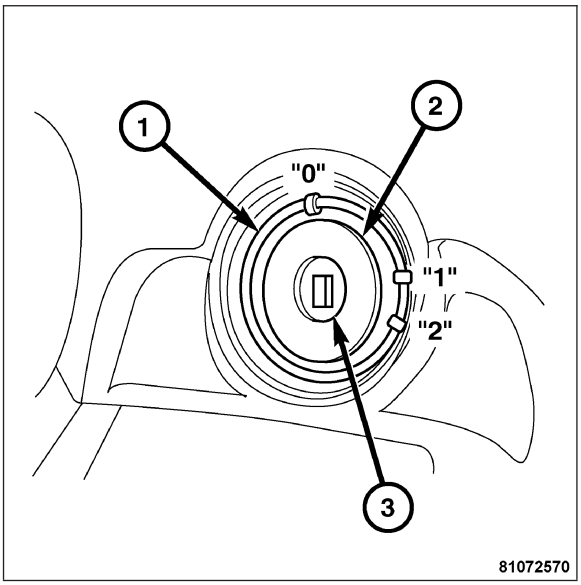

2. Pull the transponder coil (3) off the lock cylinder (2) with a plastic wedge (1).
3. Push the sleeve onto the cap and turn the lock cylinder to position ″1″ with the key.

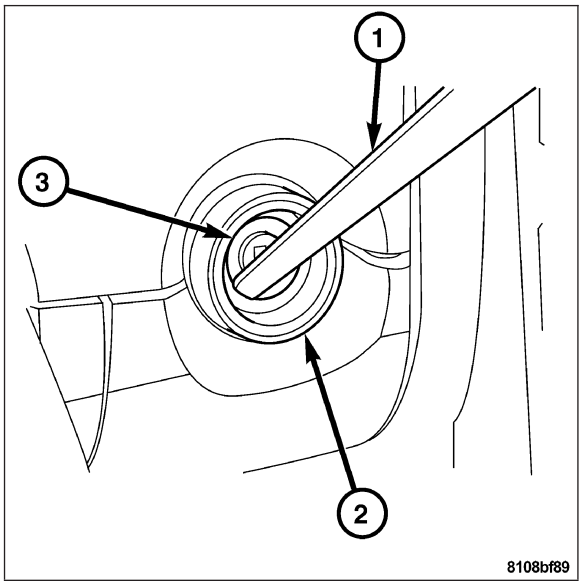

4. Unlock the lock cylinder (1) by turning the cap counter-clockwise through 90° and then remove.

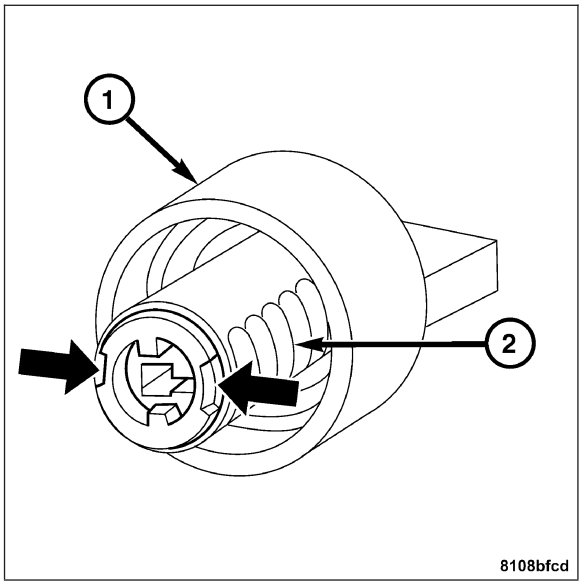

INSTALLATION

1. Spray the outside of the lock cylinder (1) with lock cylinder grease and insert it into the cap.
2. Push the key through the cap as far as the stop in the lock cylinder (1).
3. Turn the cap clockwise approx. 90° until it can be felt or heard “lock” into position.

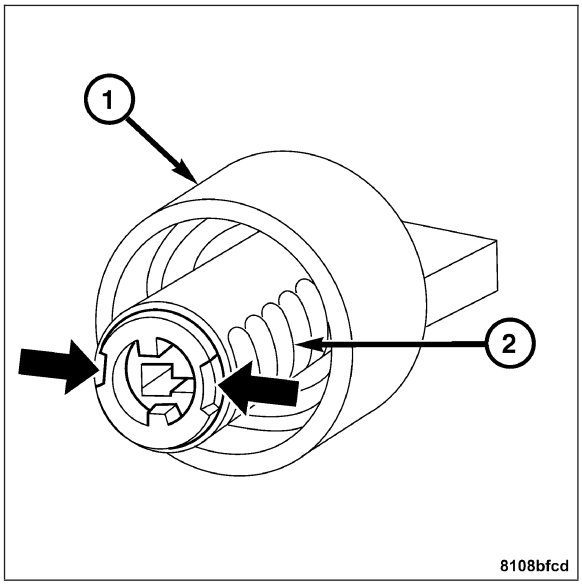

4. Turn the key to position ″0″.
5. Press in the escutcheon (2).

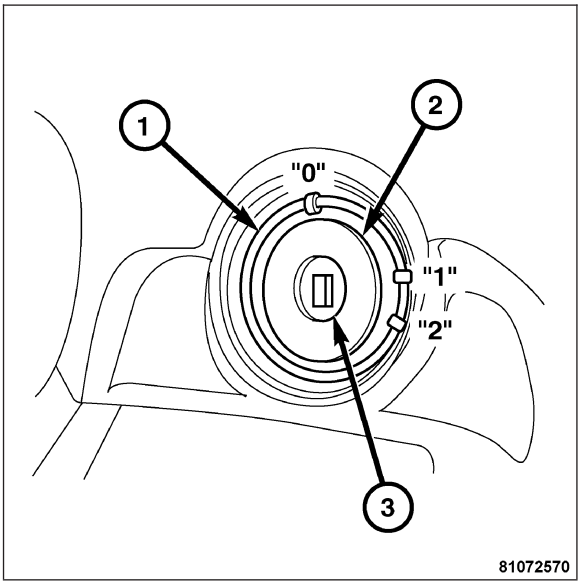

6. Install the transponder coil (3) on the lock cylinder.

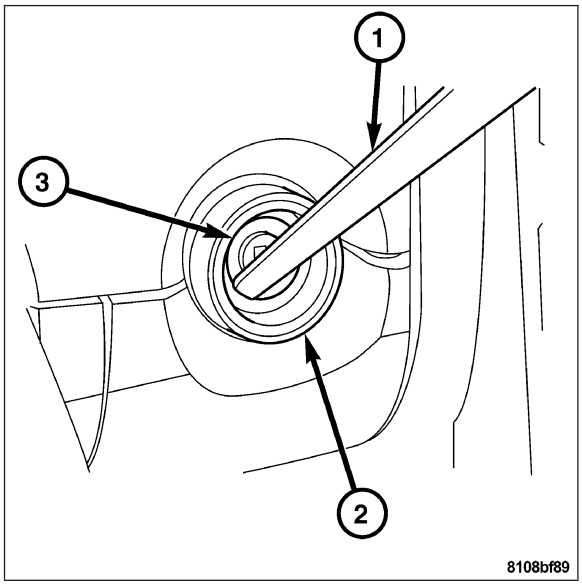

GEAR

TABLE OF CONTENTS

	page		page
GEAR		ADJUSTMENTS	
DESCRIPTION	32	STEERING GEAR	38
OPERATION	32	**PITMAN SHAFT SEAL**	
REMOVAL	33	REMOVAL	38
INSTALLATION	36	INSTALLATION	39

GEAR

DESCRIPTION

The power steering gear is a recirculating ball type gear. The steering gear is securely mounted to the driver's side of the vehicle. The steering linkage is attached to the pitman arm then attached to the idler arm.

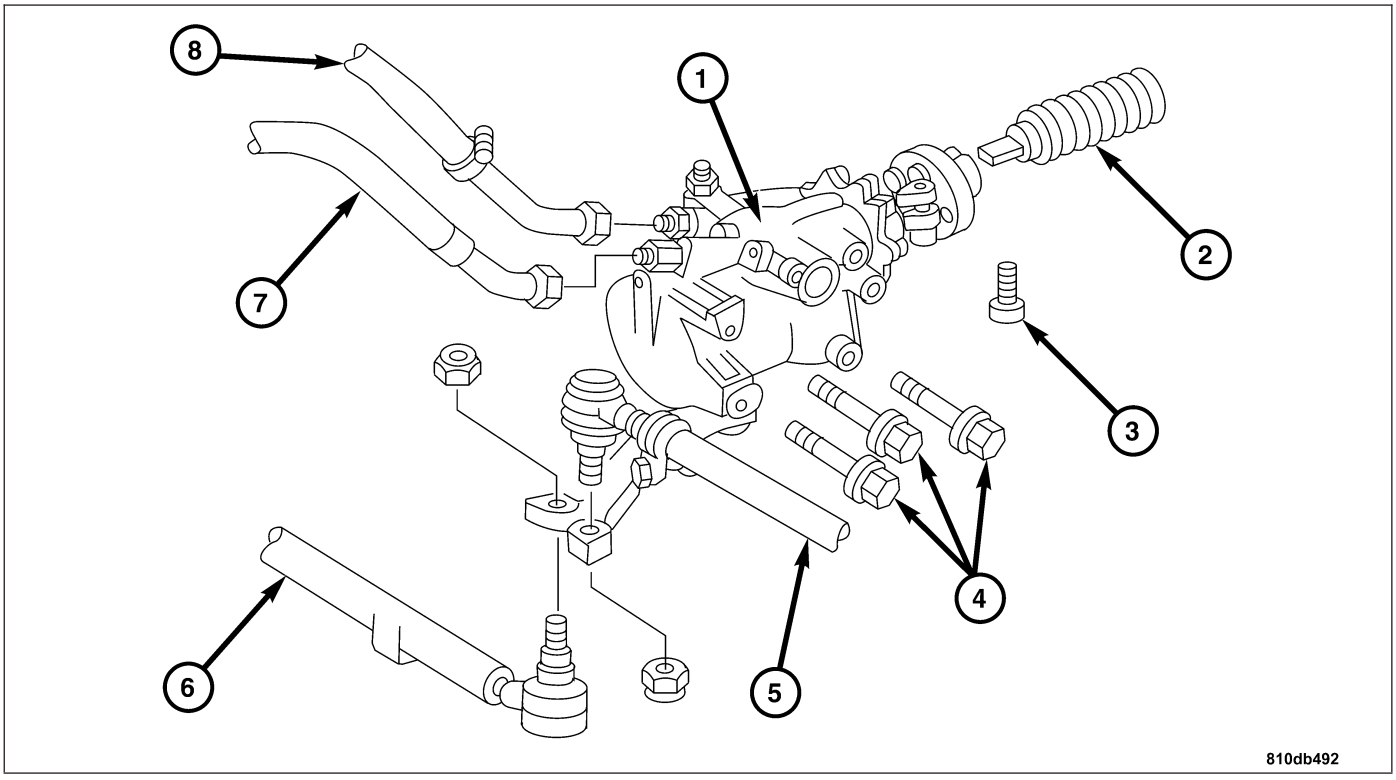

1 - STEERING GEAR
2 - STEERING SHAFT
3 - PINCH BOLT
4 - STEERING GEAR MOUNTING BOLTS
5 - TIE ROD
6 - DRAG LINK
7 - PRESSURE HOSE
8 - RETURN HOSE

OPERATION

The steering gear acts as a rolling thread between the worm shaft and rack piston. The worm shaft is supported by a thrust bearing at the lower end and a bearing assembly at the upper end. When the worm shaft is turned the rack piston moves. The rack piston teeth mesh with the pitman shaft. Turning the worm shaft turns the pitman shaft, which turns the steering linkage.

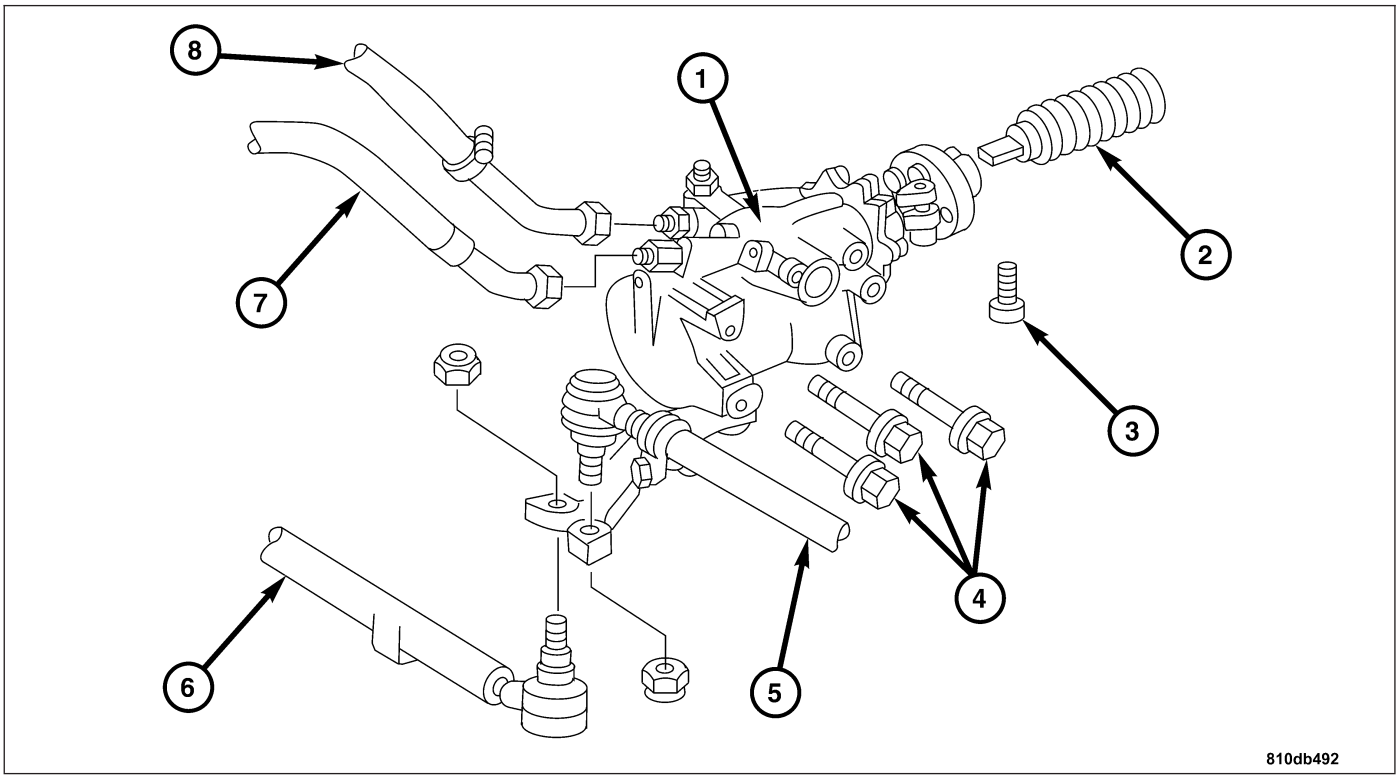

1 - STEERING GEAR
2 - STEERING SHAFT
3 - PINCH BOLT
4 - STEERING GEAR MOUNTING BOLTS
5 - TIE ROD
6 - DRAG LINK
7 - PRESSURE HOSE
8 - RETURN HOSE

REMOVAL

1. Draw off the fluid from the power steering pump reservoir.
2. Raise and support the vehicle.
3. Remove the drag link / tie rod (1) from the pitman arm. **Refer to Page 19-47**.
4. Remove the left front cross brace.

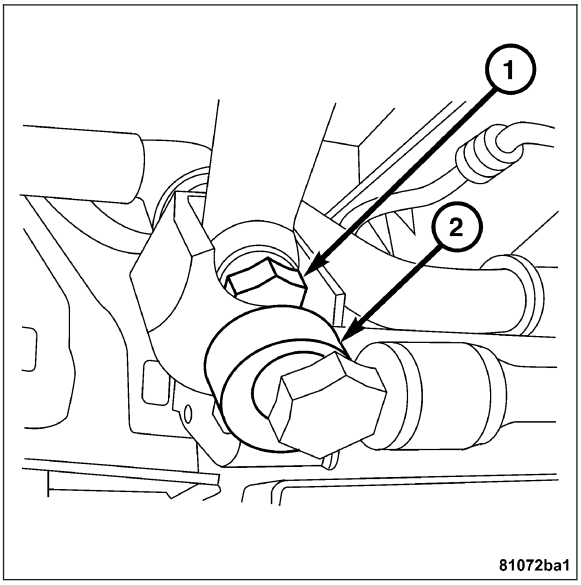

5. Remove the power steering return line (3) and the high-pressure line (2).

WARNING: ON VEHICLES WITH HORN/AIRBAG CLOCK SPRING CONTACT, THE STEERING WHEEL MUST NOT BE TURNED WHEN THE STEERING GEAR IS REMOVED, OTHERWISE THE CLOCK SPRING CONTACT WILL BE DAMAGED BEYOND REPAIR.

6. Remove the ignition key and allow the steering wheel to lock.

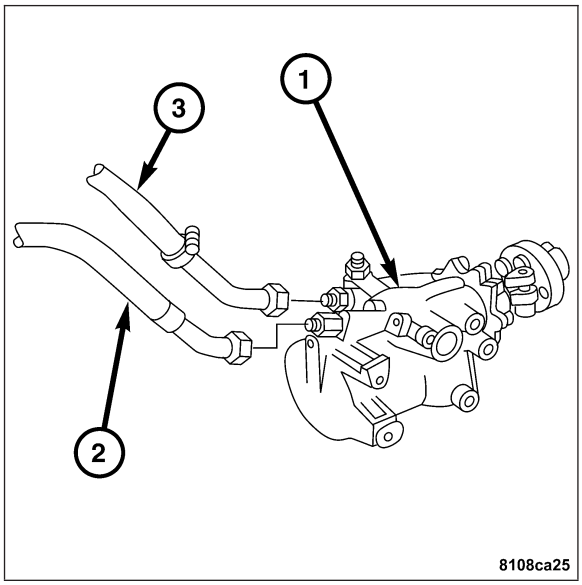

7. Remove the pinch bolt (1) from the steering coupling.
8. Remove the steering shaft from the steering gear.
9. Remove the engine ground strap from the frame member.

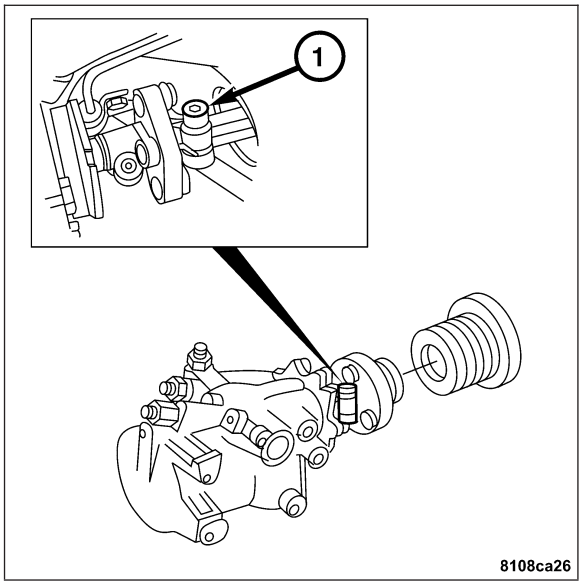

10. Remove the lower engine mounting bolts (1) on the left and right of the engine mounts.

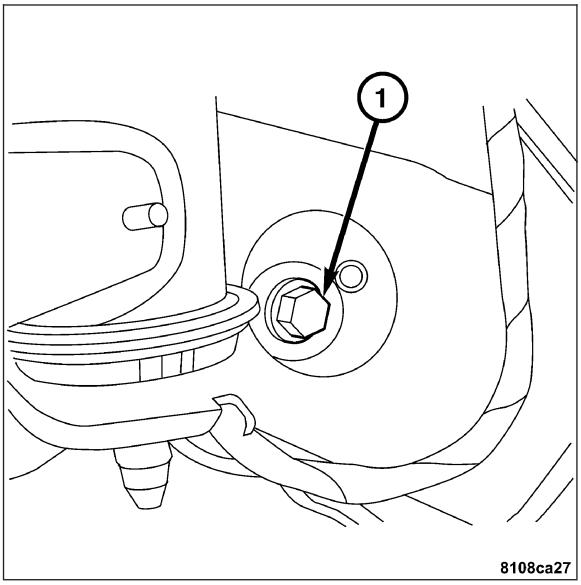

11. Safely install a support jack (1), under the left side of the engine. Raise the engine (2) approx. 40 mm (2 in.).

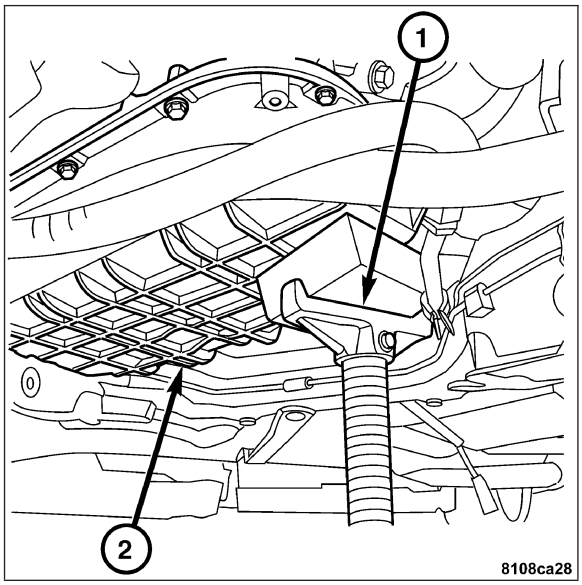

CAUTION: DO NOT use force, otherwise the lower steering shaft will be damaged on vehicles with a rigid steering column.

12. Remove the three bolts (1) attaching the steering gear to the body of the vehicle, carefully move steering gear out of the steering shaft then remove the steering gear from the vehicle.

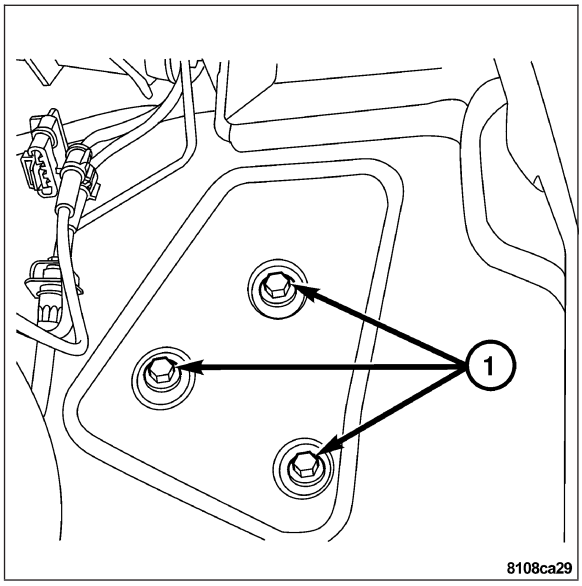

INSTALLATION

1. Turn the steering gear to the center position by aligning the marking lines on the steering shaft and the housing cover.

CAUTION: DO NOT use force, otherwise the lower steering shaft (collapsible tubing) will be damaged. Ensure that the connection is assembled correctly.

2. Carefully install the steering gear coupling onto the steering shaft.
3. Push the lower steering shaft into the steering coupling then bolt steering gear onto the vehicle. Tighten to 60 N·m (44 ft. lbs.).

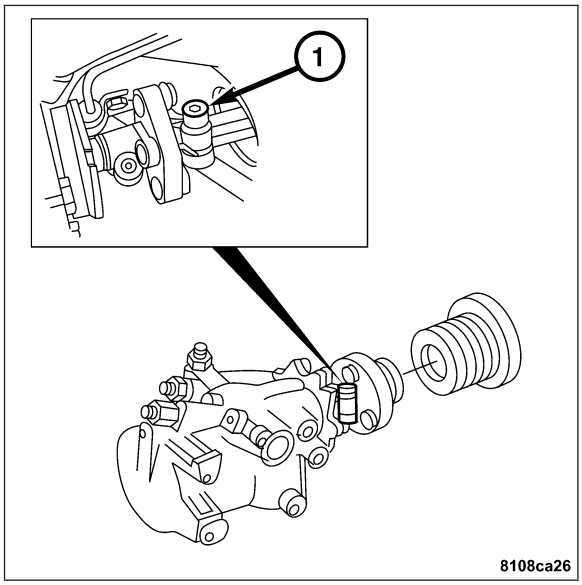

4. Lower the engine and tighten the engine mounts (1). Tighten to 25 N·m (18 ft. lbs.).
5. Install the ground strap to the frame.

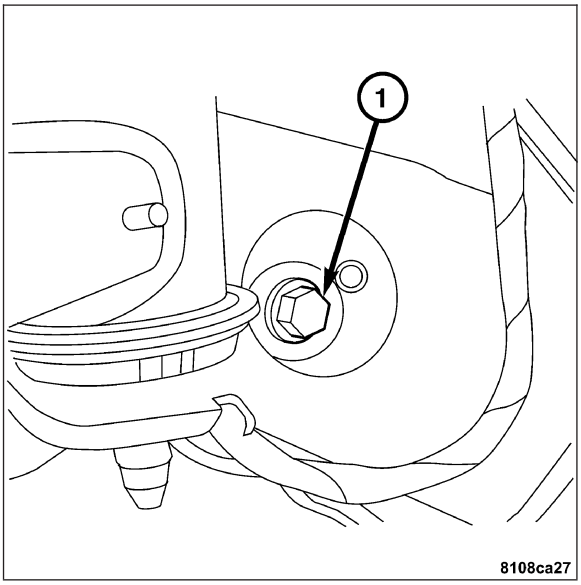

6. Install the pinch bolt (1) to the steering coupling. Tighten to 30 N·m (22 ft. lbs.).

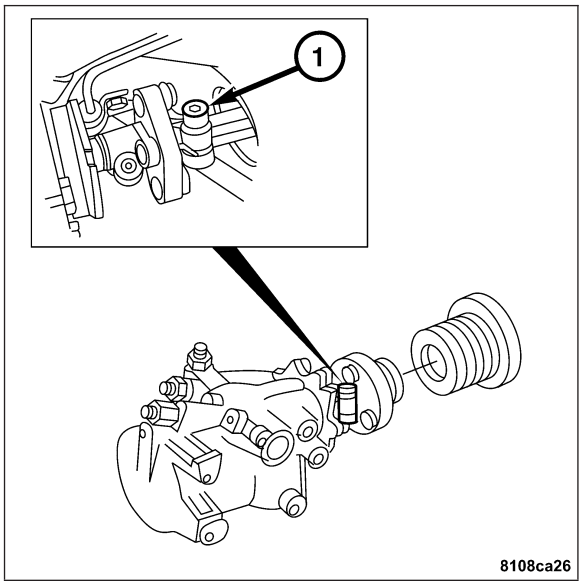

7. Install the high-pressure hose (2). Tighten to 30 N·m (22 ft. lbs.).
8. Install the return line (3). Tighten to 40 N·m (30 ft. lbs.).
9. Install the drag link / tie rod. **Refer to Page 19-49**.
10. Install the left front cross brace.
11. Fill and bleed the power steering pump. **Refer to Page 19-51**.

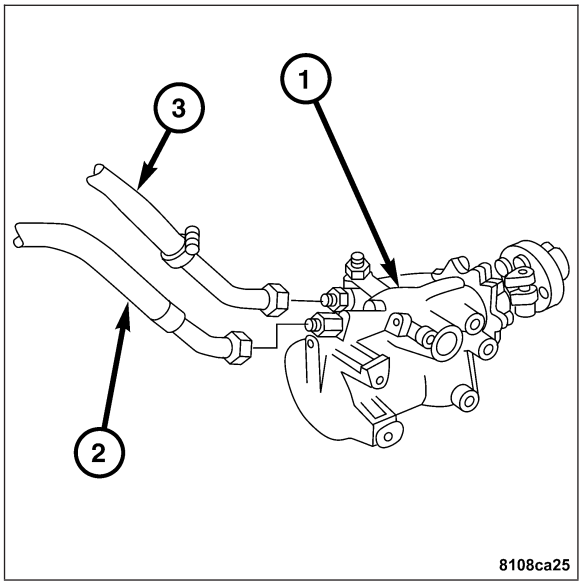

ADJUSTMENTS

STEERING GEAR

1. Using Special Tool 9168 Ball Joint Puller (2) remove the tie rod / drag link at the pitman arm (1). **Refer to Page 19-47**.
2. Determine the friction torque of the steering gear by slowly turning the steering wheel from stop to stop several times.
3. Adjust the steering gear by loosening the lock nut.
4. Turn the adjusting screw 1/4 revolutions in stages.
   - Counterclockwise = less play = increased coefficient of friction.
   - Clockwise = more play = reduced coefficient of friction.
5. Tighten the lock nut to 60 N·m (44 ft. lbs.).
6. Check the adjustment after tightening the lock nut, repeat adjustment, if necessary.

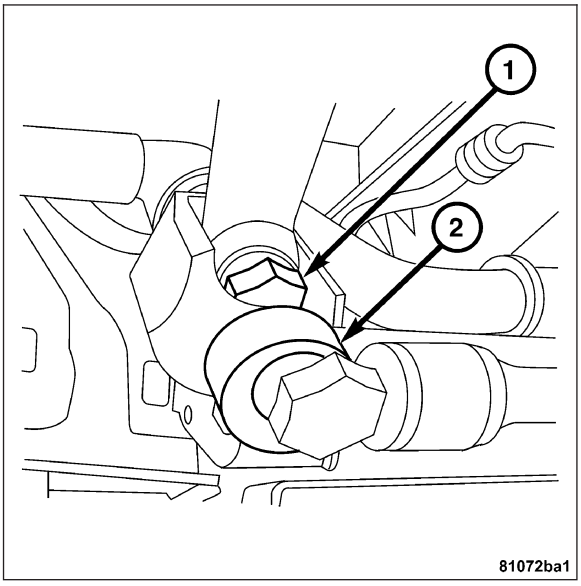

PITMAN SHAFT SEAL

REMOVAL

1. Measure the distance of point “A” between the pitman arm (2) and the steering gear (1) using a caliper gauge.

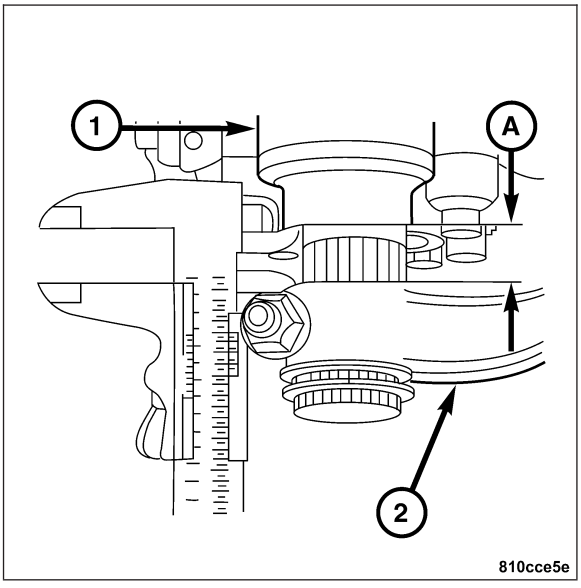

2. Remove the lower snap ring (4) from the pitman shaft.
3. Remove the pitman arm (3) from the pitman shaft.
4. Remove the upper locking ring (2).
5. Remove the pitman shaft seal (1) from the steering gear housing using a suitable prying tool.

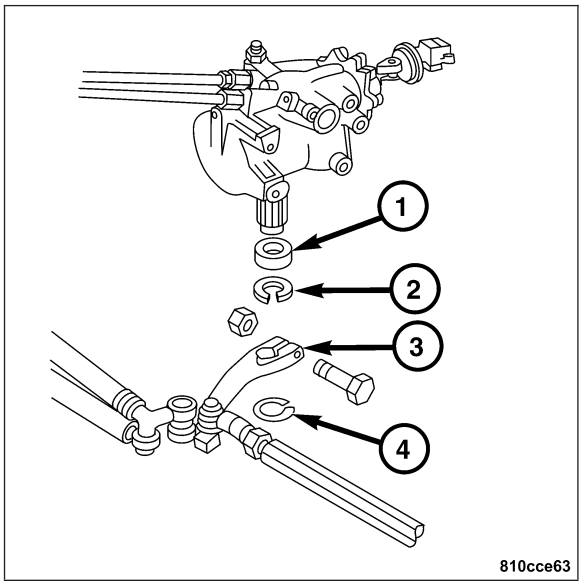

INSTALLATION

CAUTION: DO NOT damage the sealing lip of the pitman shaft seal when sliding it on over the pitman shaft splines.

1. Using Special Tool 9159 Steering Seal Installer (1) install a new pitman shaft seal into the steering gear.

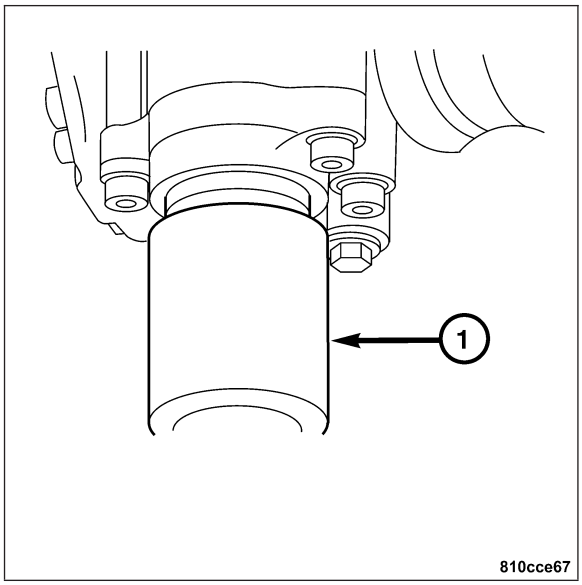

2. Install the upper snap ring (2).
3. Remove any oil and grease from the splined section of the pitman arm, and the pitman arm shaft.
4. Install the lower snap ring (4).

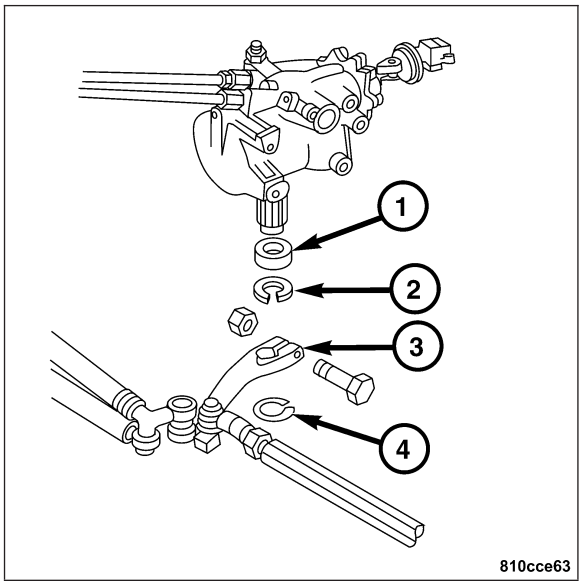

5. Install the pitman arm to the previously measured depth of measurement ″A″. Tighten the pinch bolt to 55 N·m (41 ft. lbs.).
6. Check the steering gear for any leaks.
7. Check for correct power steering fluid level.

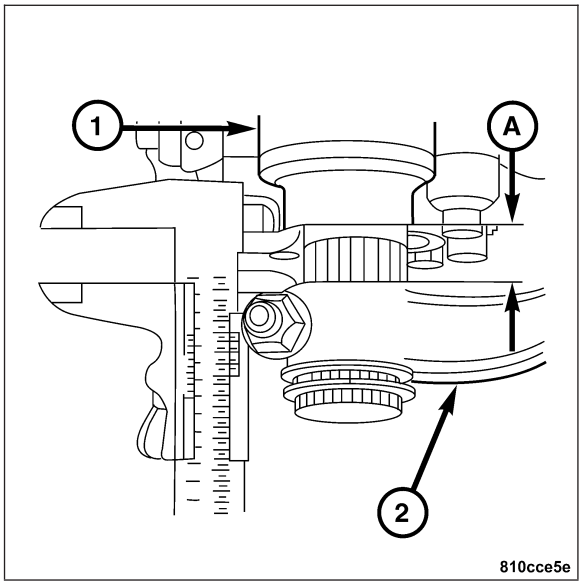

LINKAGE

TABLE OF CONTENTS

page

IDLER ARM
REMOVAL 41
INSTALLATION 42
PITMAN ARM
REMOVAL 43
INSTALLATION 45
DAMPER
REMOVAL 46
INSTALLATION 47
DRAG LINK
REMOVAL 47
INSTALLATION 49
TIE ROD END
REMOVAL 49
INSTALLATION 50

IDLER ARM

REMOVAL

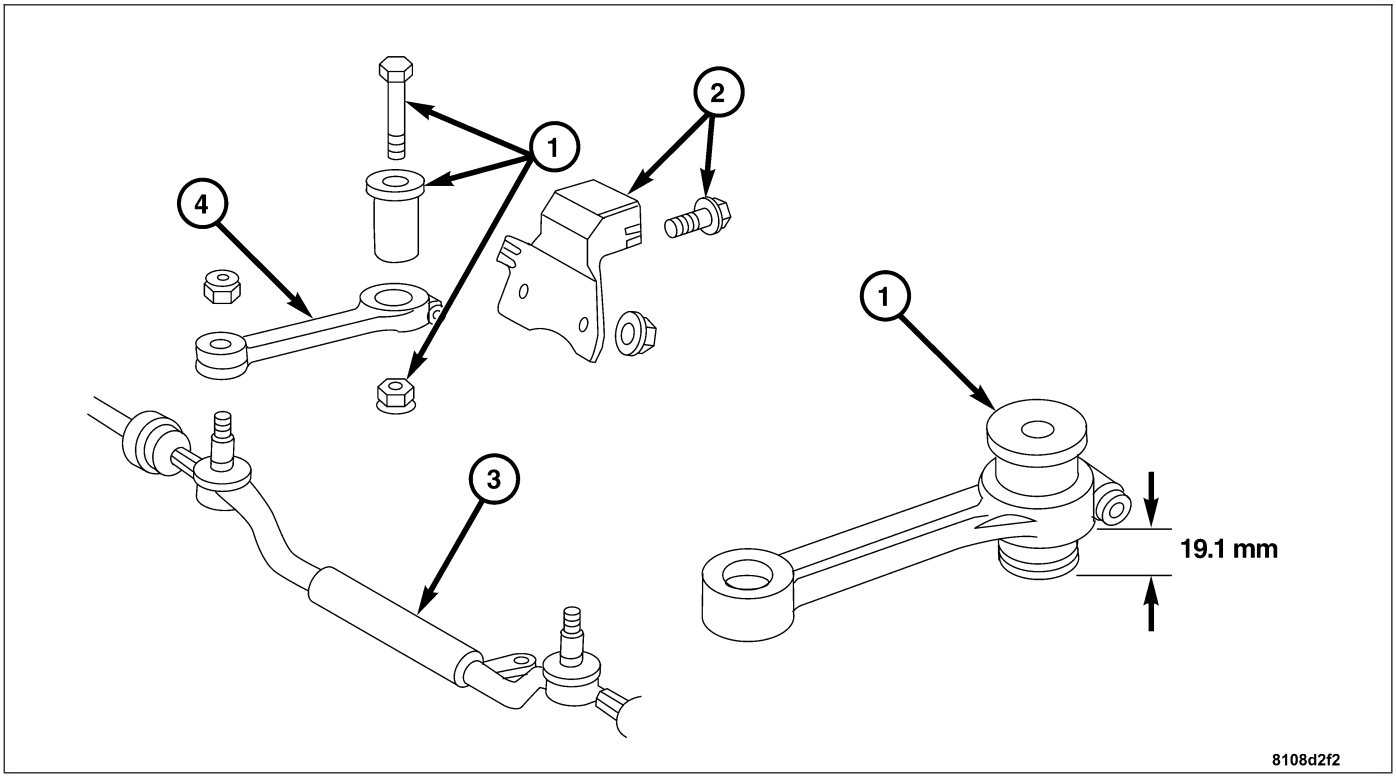

1 - BEARING BUSHING, NUT, AND BOLT
2 - HEAT SHIELD, NUT, AND BOLT
3 - DRAG LINK
4 - IDLER ARM

1. Remove drag link (3) from the idler arm (4) by removing the idler arm nut.
2. Remove the heat shield (2).
3. Remove the nut and bolt and remove the idler arm (4) from the vehicle.
4. Loosen the pinch-bolt on the idler arm (4).
5. Remove the idler arm bushing from the idler arm (4).
6. Inspect the idler arm bushing. Replace as necessary.

INSTALLATION

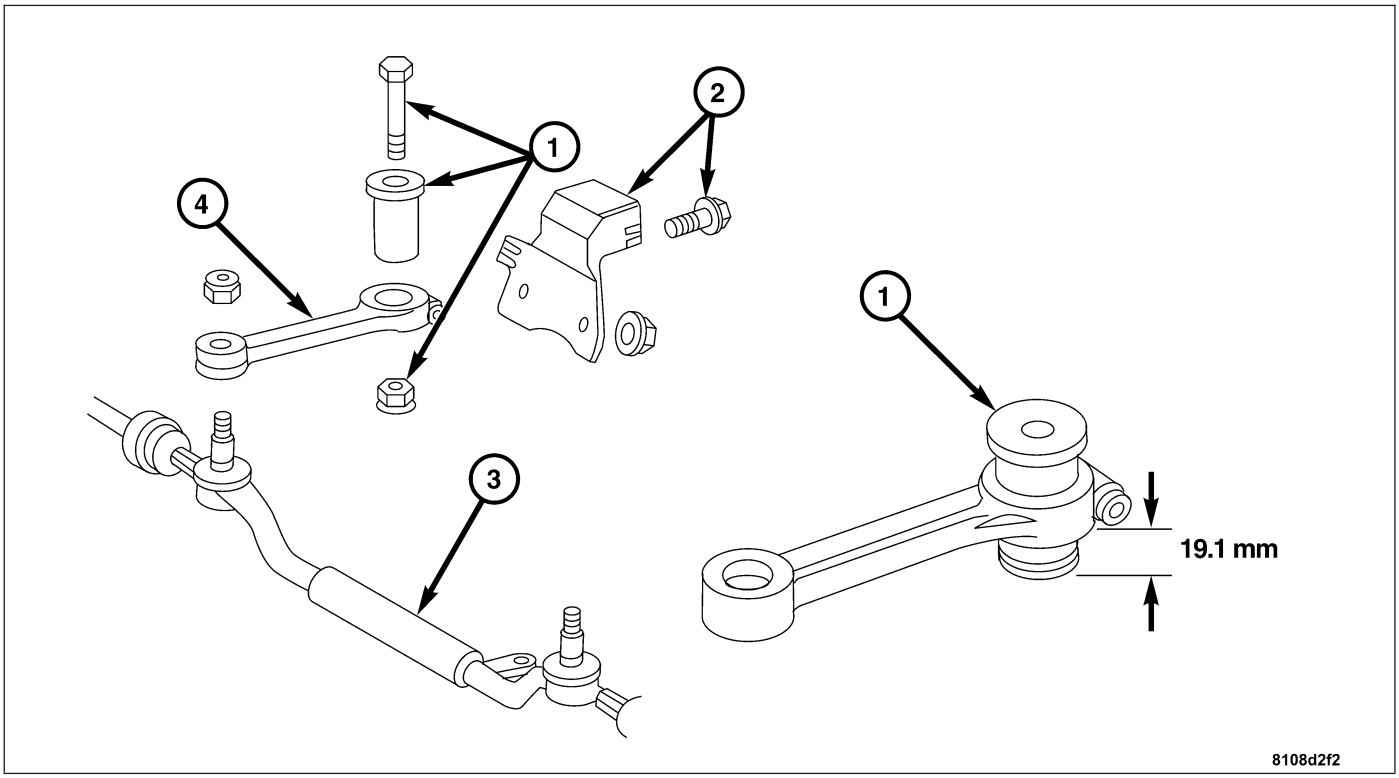

1 - BEARING BUSHING, NUT, AND BOLT
2 - HEAT SHIELD, NUT, AND BOLT
3 - DRAG LINK
4 - IDLER ARM

1. Install the idler arm bushing to the idler arm (4).
2. Adjust the idler arm bushing to the reference dimension.
3. Install the idler arm pinch bolt. Tighten to 30 N·m (22 ft. lbs.).
4. Install the idler arm to the vehicle.
5. Install the nut and bolt on the idler arm. Tighten to 50 N·m (37 ft. lbs.).
6. Install the heat shield (2).
7. Install the drag link to the idler arm. Tighten to 50 N·m (37 ft. lbs.).

PITMAN ARM

REMOVAL

1. Using Special Tool 9168 Ball Joint Puller remove the drag link from the pitman arm.

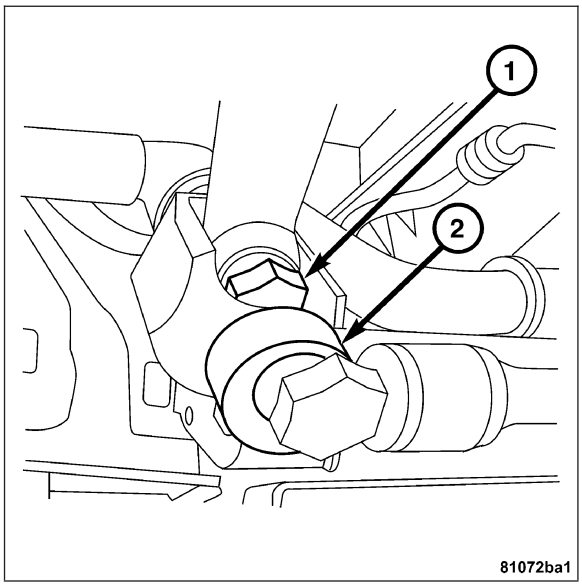

2. Measure the distance of point ″A″ between the pitman arm (2) and the steering gear (1) using a caliper gauge.

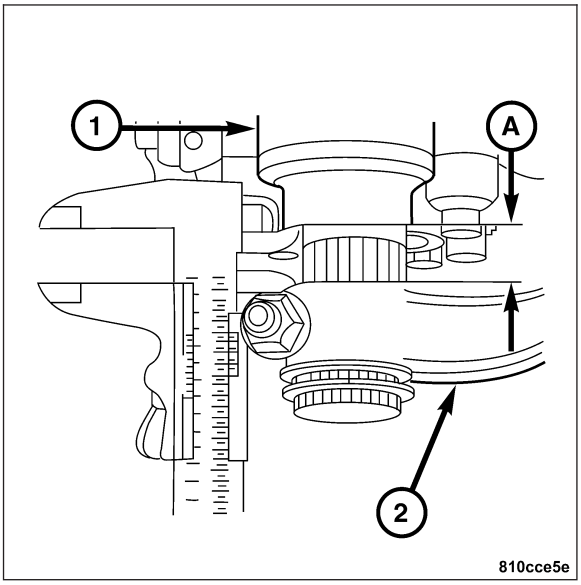

3. Remove the snap ring (2) that holds the pitman arm (1) on the shaft.

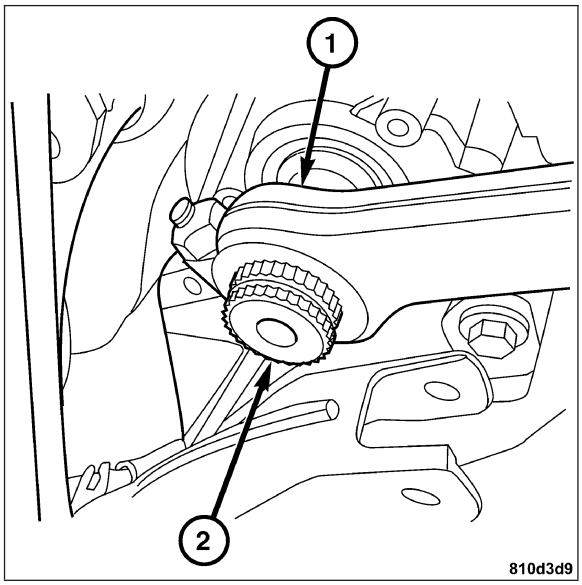

4. Remove the pitman arm by loosening the pinch bolt (1). With a prying device, remove the pitman arm from the pitman arm shaft (2).

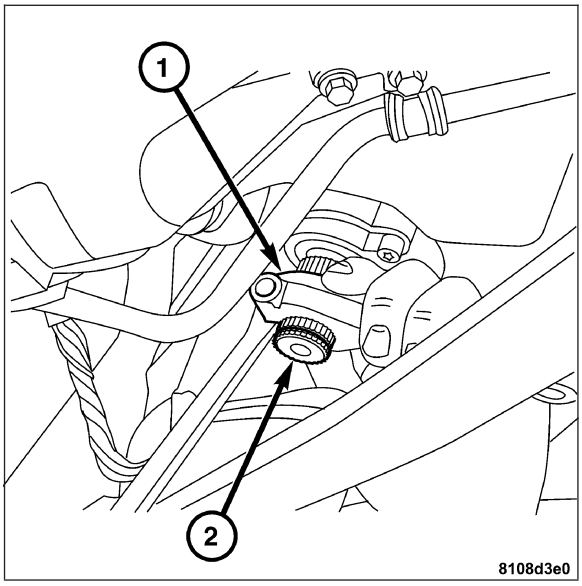

INSTALLATION

1. Remove any oil and grease from the splined section of the pitman arm shaft and the pitman arm.
2. Install the pitman arm (1) to the pitman arm shaft (2).

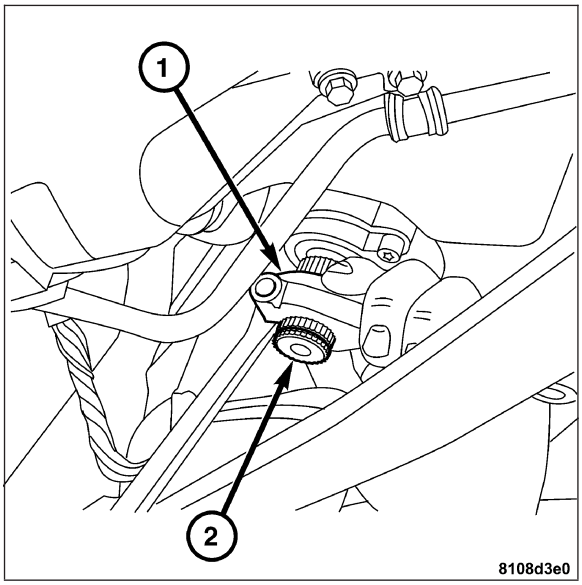

3. Install the snap ring (2).

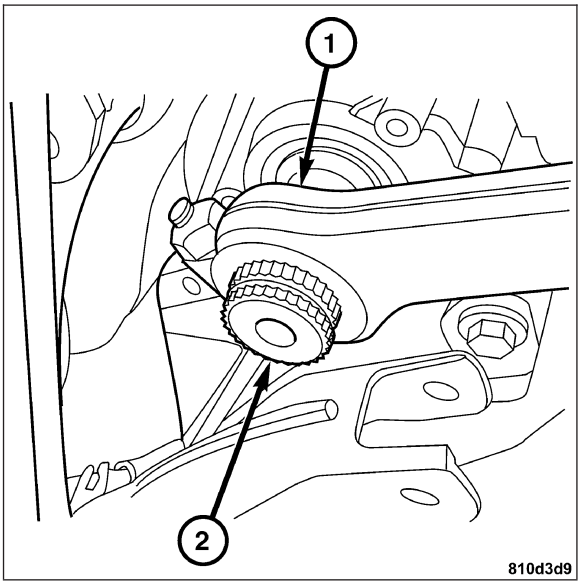

4. Install the pitman arm to the previously measured depth of measurement ″A″. Tighten the pinch bolt to 55 N·m (41 ft. lbs.).

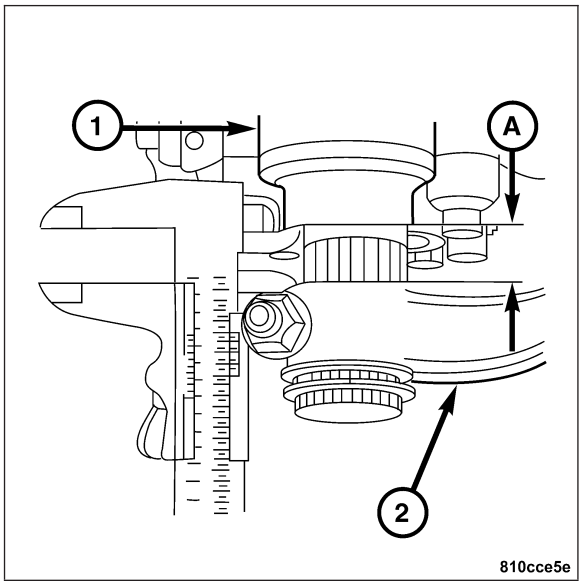

DAMPER

REMOVAL

1. Remove the nut and bolt (1) from the steering damper mounting bracket.
2. Remove the nut and bolt from the drag link.
3. Remove the steering damper from the vehicle.

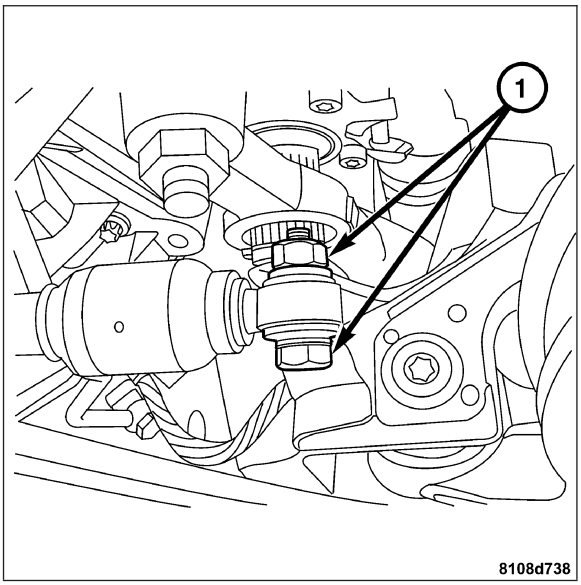

INSTALLATION

1. Install the steering damper into the vehicle.
2. Install the nut and bolt to the drag link. Tighten to 40 N·m (29 ft. lbs.).
3. Install the bolt and nut (1) to the steering damper bracket. Tighten to 40 N·m (29 ft. lbs.).

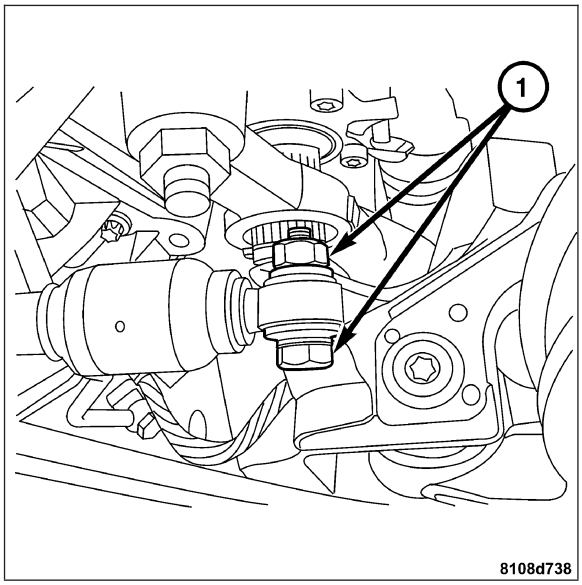

DRAG LINK

REMOVAL

1. Remove the steering dampener from the drag link. **Refer to Page 19-46**.
2. Remove the nuts attaching the drag link (1) to the pitman arm and the idler arm.

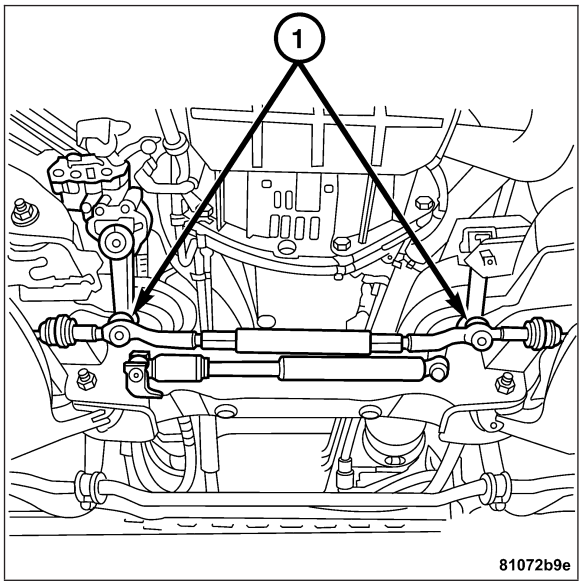

3. Remove the nuts attaching the tie rod ends to the steering knuckles.
4. Using Special Tool C-3894-A (2) Two Jaw Puller remove the tie rod ends (1) from the steering knuckles.

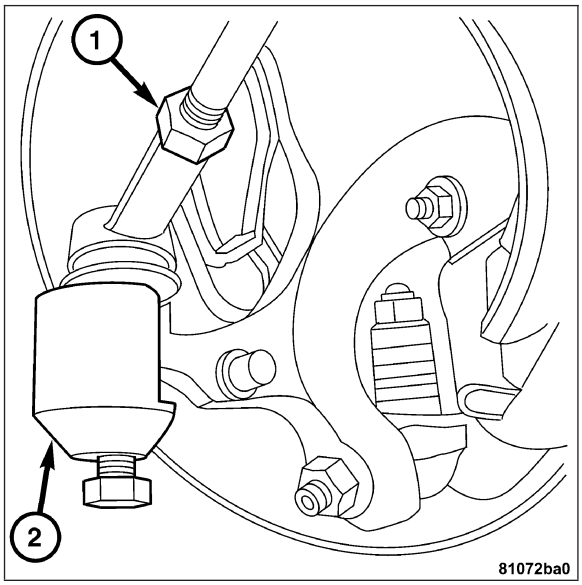

5. Using Special Tool 9168 (2) Ball Joint Puller remove the drag link (1) from the pitman arm and the idler arm.

Note: The right-hand drag link joint is a pivot joint with a swivelling range of max. 2°. This prevents the drag link from tilting.

6. Inspect the tie rod ends for play or damage. Repair as necessary.

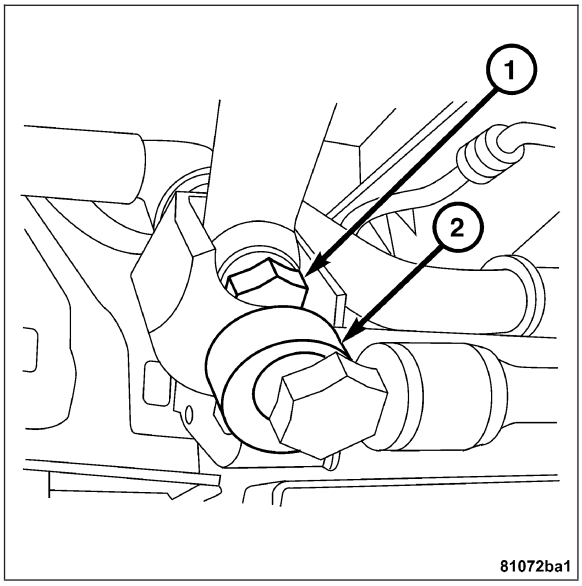

INSTALLATION

1. Clean any grease or debris from the tie rod ends, and the drag link attaching points (1).
2. Install the drag link and the attaching nuts (1) to the idler arm and pitman arm. Tighten the drag link nuts to 50 N·m (37 ft. lbs.).
3. Install the tie rod ends into the steering knuckles.
4. Install the nuts on the tie rod ends. Tighten to 50 N·m (37 ft. lbs.).
5. Install the steering dampener. Tighten to 40 N·m (29 ft. lbs.).
6. Adjust the front toe setting on the vehicle. **Refer to Page 2-6**.

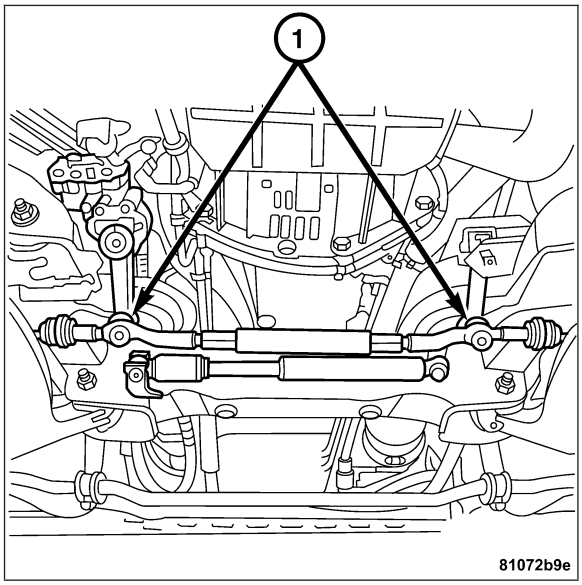

TIE ROD END

REMOVAL

1. Loosen the tie rod end jam nut (1).
2. Remove nut from the tie rod end at the steering knuckle.
3. Using Special Tool C-3894-A (2) two jaw puller remove the tie rod end (1) from the steering knuckle.
4. Unscrew the tie rod end from the drag link.

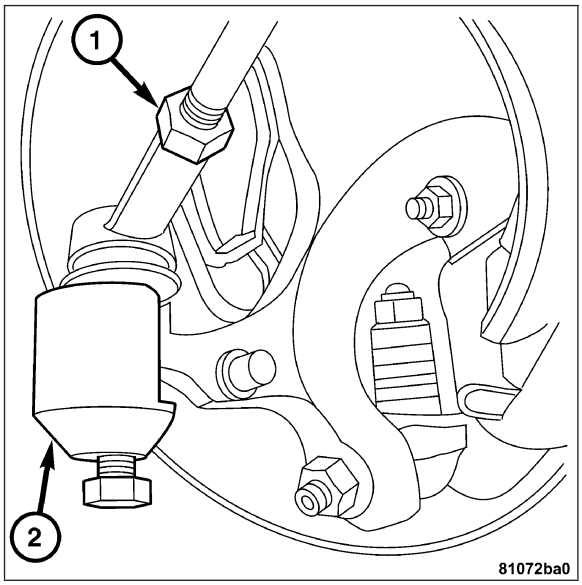

INSTALLATION

1. Clean the tapered surfaces, and remove any grease or debris from the tie rod end.
2. Thread the tie rod end onto the drag link.
3. Install the tie rod end to the steering knuckle.
4. Install the attaching nut on the tie rod end. Tighten to 50 N·m (37 ft. lbs.).
5. Thread the jam nut down far enough to hold the tie rod end in place. Do not tighten the jam nut.
6. Adjust the front toe setting on the vehicle. **Refer to Page 2-6**.

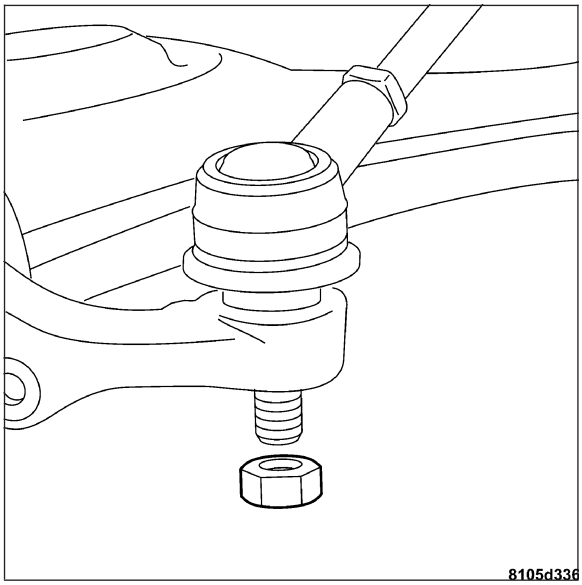

PUMP

TABLE OF CONTENTS

	page
PUMP	
STANDARD PROCEDURE	
STEERING PUMP INITIAL OPERATION	51
REMOVAL	52
INSTALLATION	53

PUMP

STANDARD PROCEDURE

STEERING PUMP INITIAL OPERATION

WARNING: THE FLUID LEVEL SHOULD BE CHECKED WITH ENGINE OFF TO PREVENT INJURY FROM MOVING COMPONENTS.

CAUTION: Use MOPAR® power steering fluid or equivalent. Do not use automatic transmission fluid and do not overfill.

Wipe filler cap clean, then check the fluid level. The dipstick should indicate **COLD** when the fluid is at normal ambient temperature.

1. Fill the pump fluid reservoir to the proper level and let the fluid settle for at least two minutes.
2. Start the engine and let run for a few seconds then turn engine off.
3. Add fluid if necessary. Repeat the above procedure until the fluid level remains constant after running the engine.
4. Raise the front wheels off the ground.
5. Slowly turn the steering wheel right and left, lightly contacting the wheel stops at least 20 times.
6. Check the fluid level and add if necessary.
7. Lower the vehicle, start the engine and turn the steering wheel slowly from lock to lock.
8. Stop the engine and check the fluid level and refill as required.

CAUTION: DO NOT run a vehicle with foamy fluid for an extended period. This may cause pump damage.

9. If the fluid is extremely foamy or milky looking, allow the vehicle to stand a few minutes and repeat the procedure.

REMOVAL

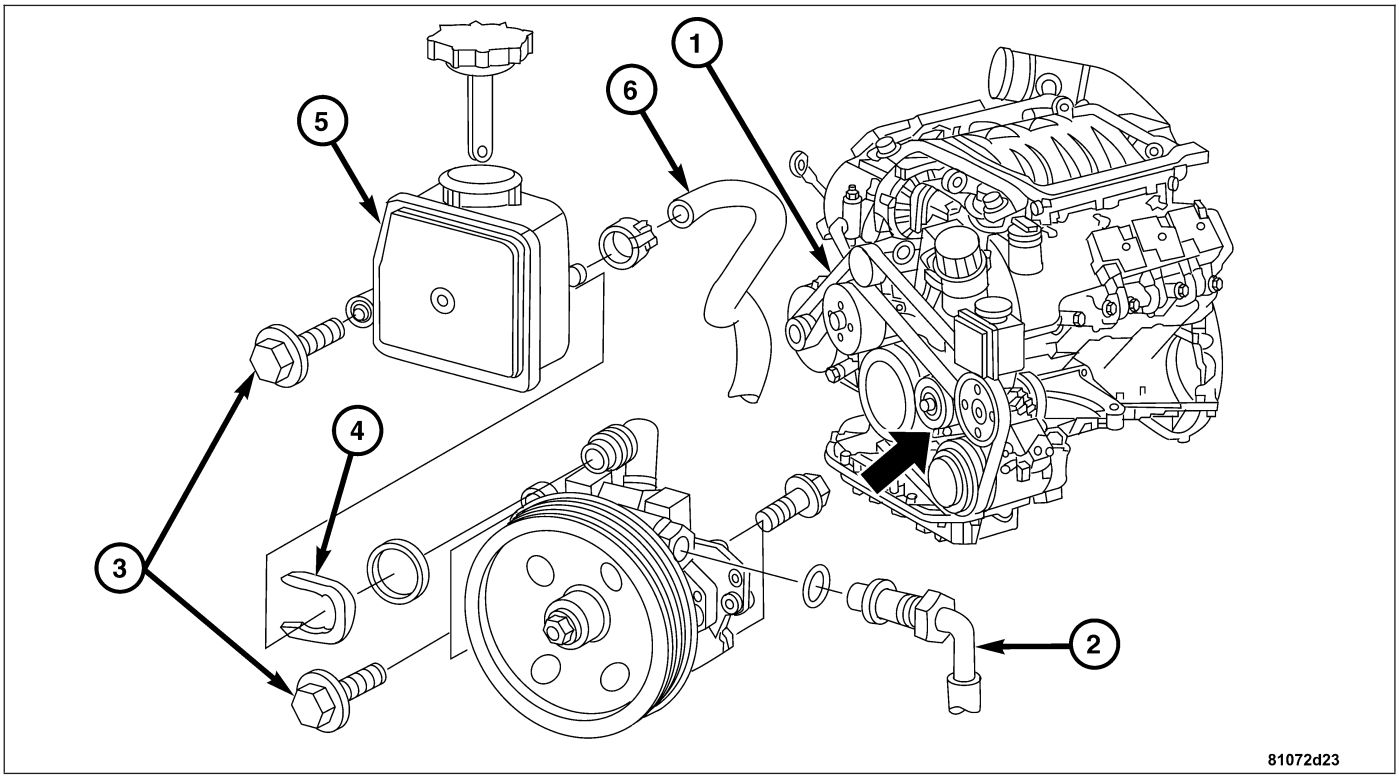

1 - ACCESSORY DRIVE BELT
2 - HIGH PRESSURE HOSE
3 - POWER STEERING PUMP BOLTS
4 - C-CLIP
5 - RESERVOIR
6 - SUPPLY LINE

1. Remove the accessory drive belt (1). **Refer to Page 7-45**.
2. Remove the oil in the power steering reservoir (5).
3. Remove the power steering supply line (6) from the reservoir.
4. Remove the return hose from the power steering pump.
5. Remove the high-pressure hose (2) from the power steering pump.
6. Remove the power steering pump by removing the two bolts (3) attaching it to the engine block.
7. Remove the reservoir if necessary, by pressing out the c-clip (4) using a suitable tool.

INSTALLATION

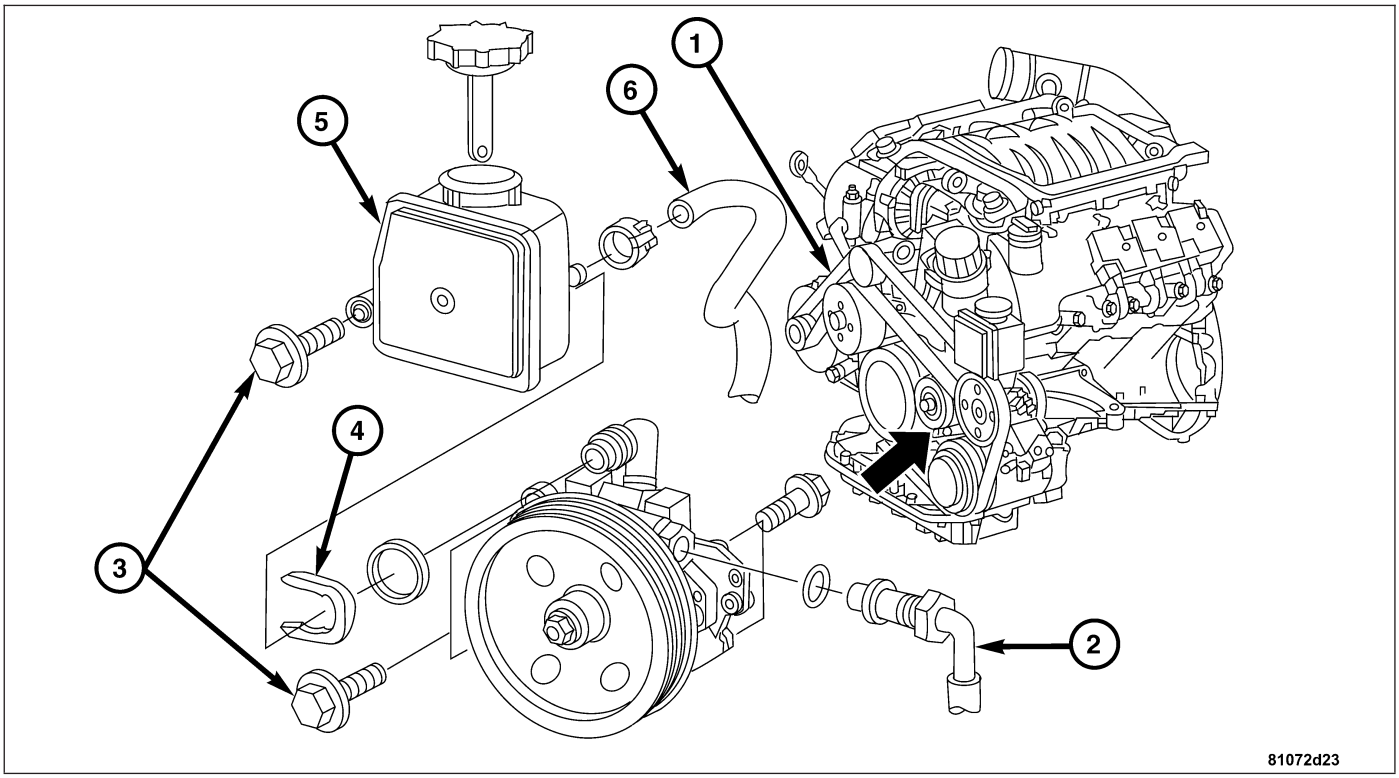

1 - ACCESSORY DRIVE BELT
2 - HIGH PRESSURE HOSE
3 - POWER STEERING PUMP BOLTS
4 - C-CLIP
5 - RESERVOIR
6 - SUPPLY LINE

1. Install the reservoir if it was removed, by inserting the c-clip using a suitable tool.
2. Install the power steering pump and bolts (3) to the engine block. Tighten to 20 N·m (15 ft. lbs.).
3. Install the high-pressure hose (2) on the pump.
4. Install the return hose on the pump.
5. Install the power steering supply line (6) to the reservoir.
6. Install the accessory drive belt (1). **Refer to Page 7-46**.
7. Fill the power steering pump reservoir and then bleed the system by performing the initial operation. **Refer to Page 19-51**.

TRANSMISSION

TABLE OF CONTENTS

page

NAG1 - ELECTRICAL DIAGNOSTICS 1
AUTOMATIC - NAG1 SERVICE INFORMATION . 183
MANUAL - SERVICE INFORMATION 342

NAG1 - ELECTRICAL DIAGNOSTICS

TABLE OF CONTENTS

page

NAG1 - ELECTRICAL DIAGNOSTICS
DIAGNOSIS AND TESTING
(P0219) ENGINE OVERSPEED 3
(P0562) SYSTEM UNDERVOLTAGE 6
(PO563) SYSTEM OVERVOLTAGE 9
(P0600) ABS BRAKE MESSAGE 12
(P0600) ABS CAN MESSAGE INCORRECT . . 15
(P0600) ABS CAN MESSAGE MISSING 18
(P0600) ABS LEFT FRONT SENSOR MESSAGE 22
(P0600) ABS LEFT REAR SENSOR MESSAGE 25
(P0600) ABS RIGHT FRONT SENSOR MESSAGE 28
(P0600) ABS RIGHT REAR SENSOR MESSAGE 31
(P0600) ACCEL PEDAL SENSOR CAN MESSAGE INCORRECT 34
(P0600) CAN MESSAGE FROM ECM FROM SLA 38
(P0600) ENGINE CAN MESSAGE INCORRECT 41
(P0600) ENGINE CAN MESSAGE MISSING . . 44
(P0600) ENGINE RPM MESSAGE 48
(P0600) ENGINE TEMPERATURE MESSAGE . 51
(P0600) ENGINE TORQUE MESSAGE INCORRECT 54
(P0600) IC CAN MESSAGE INCORRECT . . . 57
(P0600) IC/HVAC CAN MESSAGE MISSING . 60
(P0600) SLA CAN MESSAGE INCORRECT . . 64
(P0700) SENSOR SUPPLY VOLTAGE 67
(P0700) TRANSMISSION SLIPPING 71
(P0702) CONTROL MODULE TCM IS NOT CODED 74
(P0702) INTERNAL CONTROLLER 76
(P0702) INVALID CONTROL MODULE VERSION 78
(P0702) SOLENOID SUPPLY/WATCHDOG . . . 80
(P0710) TRANS TEMP SENSOR SHORTED . 83
(P0714) TRANS TEMP SENSOR ERRATIC . . 87
(P0715) INPUT SENSOR MISMATCH 90
(P0715) INPUT SENSOR OVERSPEED 94
(P0715) N2 INPUT SPEED SENSOR CIRCUIT 97
(P0715) N3 INPUT SPEED SENSOR CIRCUIT 103
(P0720) CAN BUS CIRCUIT 109
(P0730) IMPROPER GEAR 113
(P0730) IMPROPER RATIO 116
(P0740) TCC OVERTEMP 119
(P0740) TCC STUCK ON 121
(P0743) TCC SOLENOID CIRCUIT 124
(P0748) MODULATING PRESSURE SOLENOID CIRCUIT 128
(P0753) 1-2/4-5 SOLENOID CIRCUIT 132
(P0753) 1–2/4–5 SOLENOID CIRCUIT SHORT TO GROUND 136
(P0758) 2-3 SOLENOID CIRCUIT 138
(P0758) 2–3 SOLENOID CIRCUIT SHORT TO GROUND 142
(P0763) 3-4 SOLENOID CIRCUIT 144
(P0763) 3–4 SOLENOID CIRCUIT SHORT TO GROUND 148
(P0778) SHIFT PRESSURE SOLENOID CIRCUIT 150
(P0778) SOLENOID SUPPLY VOLTAGE 154
(P0850) TRANS TEMP SENSOR - P/N SWITCH CIRCUIT 158

(P1793) ENGINE TORQUE REDUCTION . . . 163
CAN BUS CIRCUIT 167
INCORRECT CAN MESSAGE FROM ABS . . 169
INTERNAL CONTROLLER 171
LR WHEEL SPIN CAN MESSAGE NOT VALID 173
RR WHEEL SPIN CAN MESSAGE NOT VALID 175
OVERVOLTAGE 177
UNDERVOLTAGE 179
TRANSMISSION VERIFICATION TEST 181
SCHEMATICS AND DIAGRAMS 182

NAG1 - ELECTRICAL DIAGNOSTICS

DIAGNOSIS AND TESTING

(P0219) ENGINE OVERSPEED

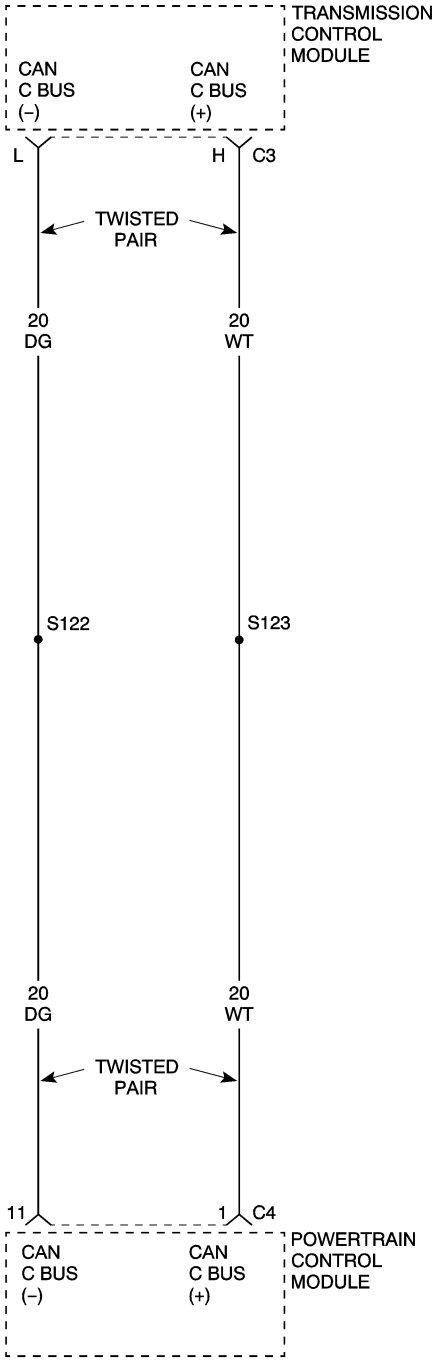

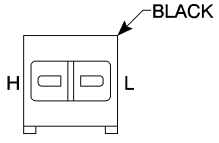

TRANSMISSION CONTROL MODULE C3

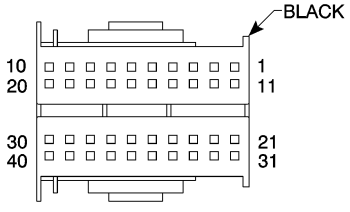

POWERTRAIN CONTROL MODULE – C4

81157b65

(P0219) ENGINE OVERSPEED — CONTINUED

When Monitored and Set Condition

- When Monitored: Valid Engine RPM message received at least once, the CAN Bus Circuit and Engine CAN Message Missing are not active.
- Set Condition: If the engine speed increases above 5100 RPM.

POSSIBLE CAUSES
ENGINE - MECHANICAL PROBLEM
TRANSMISSION - MECHANICAL PROBLEM
POWERTRAIN CONTROL MODULE
TRANSMISSION CONTROL MODULE

For a complete Transmission Control Module Circuit Diagram **Refer to Page 21-182**.

Diagnostic Test

1. PRE-DIAGNOSTIC CHECK OUT

Note: Low fluid level can be the cause of many transmission problems. If the fluid level is low, locate and repair the leak then check and adjust the fluid level in accordance with the Service Information.

Note: Always perform diagnostics with a fully charged battery to avoid false symptoms.

With the DRB III®, read the engine DTCs. Check and repair all engine DTCs prior to performing transmission symptom diagnostics.

With the DRB III®, read and record all Transmission DTCs.

Note: Check connectors - Clean/repair as necessary. Poor pin to terminal connections can set DTCs.

Using the wiring diagram/schematic as a guide, inspect the wiring and connectors. Repair as necessary.

Most DTCs set on start up but some must be set by driving the vehicle such that all diagnostic monitors have run.

Note: Verify flash level of transmission controller. Some problems are corrected by software upgrades to the transmission controller.

Note: Check for any Technical Service Bulletins that may apply.

Perform this procedure prior to Symptom diagnosis.

Continue

Go To 2

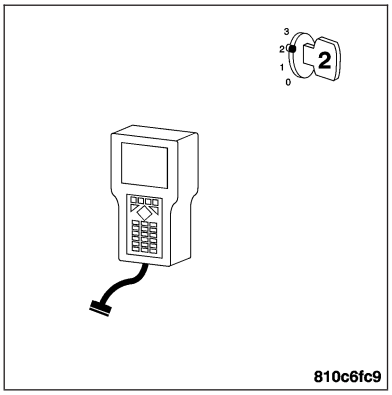

2. ENGINE - MECHANICAL PROBLEM

Determine if any Engine Mechanical problems are present.

Are any Engine Mechanical problems present?

Yes >> Refer to the Engine - Service Information section for the proper repair procedure.

No >> Go To 3

(P0219) ENGINE OVERSPEED — CONTINUED

3. TRANSMISSION - MECHANICAL PROBLEM

Determine if there are any Transmission Mechanical problems present.

Remove the Transmission Oil Pan and inspect for debris or a plugged Transmission Oil Filter.

Is there any debris, plugged Transmission Oil Filter, or signs of an internal transmission problem?

Yes >> Refer to the Transmission - Service Information for the proper repair procedure.

No >> Go To 4

4. PCM - ENGINE OVERSPEED

Note: The Engine and Transmission must not have mechanical problems and be operating normally before proceeding with this test.

Turn the ignition off.

Replace and program the Powertrain Control Module. **Refer to Page 8E-56**

With the DRB III®, erase Transmission DTCs.

Road test the vehicle.

With the DRB III®, read Transmission DTCs.

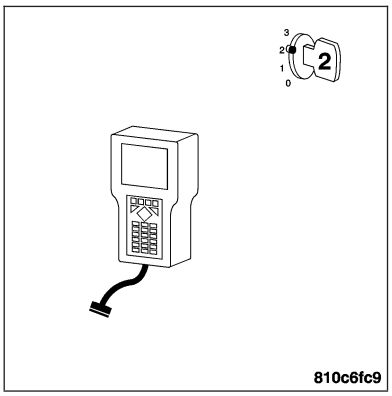

Did DTC (P0219) ENGINE OVERSPEED set again?

Yes >> Replace the Transmission Control Module. **Refer to Page 8E-60**.
Perform NAG1 TRANSMISSION VERIFICATION TEST.

No >> Test Complete.

(P0562) SYSTEM UNDERVOLTAGE

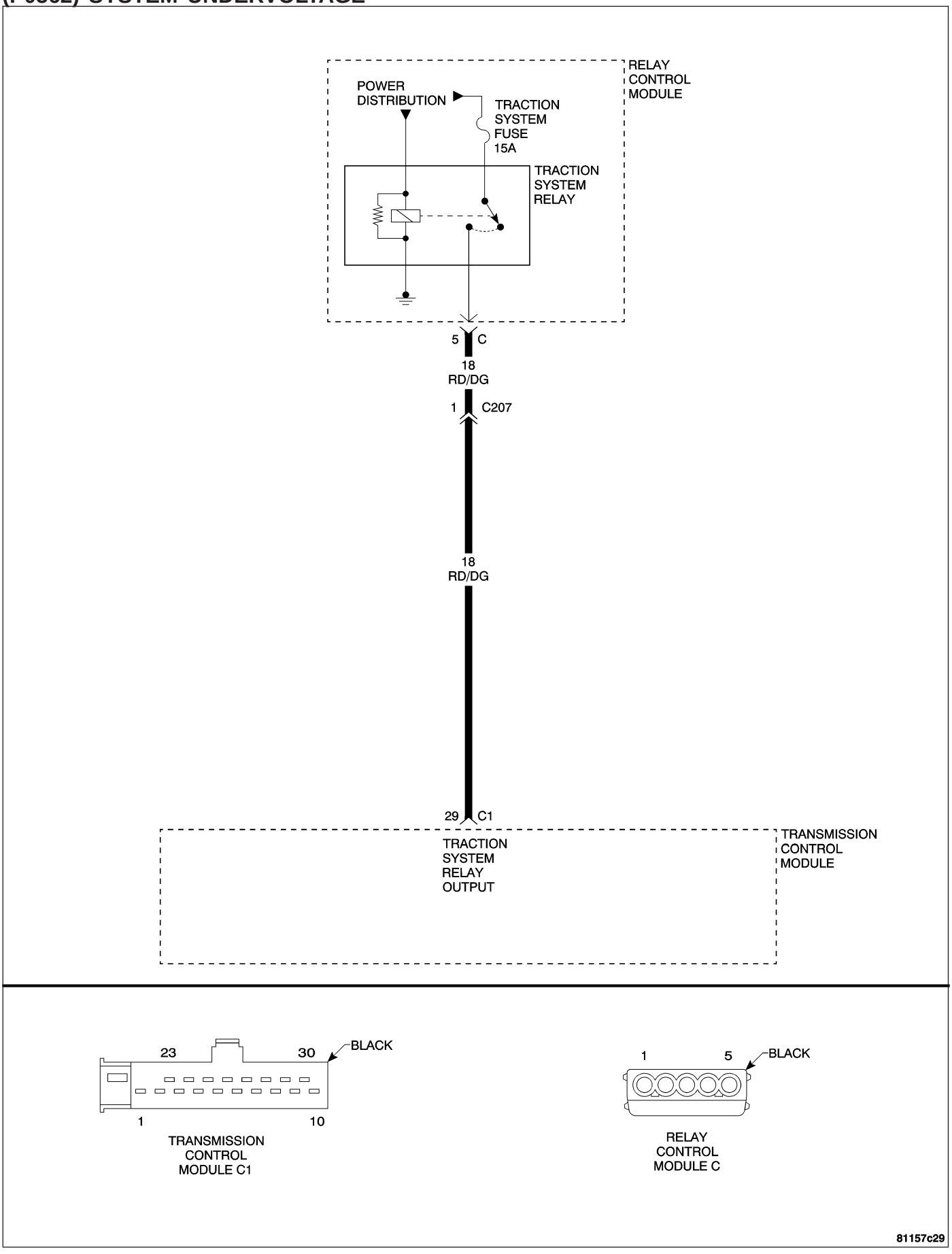

(P0562) SYSTEM UNDERVOLTAGE — CONTINUED

When Monitored and Set Condition

- When Monitored: Always monitored with system active at each ignition cycle.
- Set Condition: System voltage falls below 8.5 volts with the engine RPM greater than 2000 RPM for 60 seconds.

POSSIBLE CAUSES
ENGINE CHARGING SYSTEM DTCS PRESENT
TRACTION SYSTEM RELAY OUTPUT VOLTAGE LOW
TRANSMISSION CONTROL MODULE

For a complete Transmission Control Module Circuit Diagram **Refer to Page 21-182**.

Diagnostic Test

1. PRE-DIAGNOSTIC CHECK OUT

Note: Low fluid level can be the cause of many transmission problems. If the fluid level is low, locate and repair the leak then check and adjust the fluid level in accordance with the Service Information.

Note: Always perform diagnostics with a fully charged battery to avoid false symptoms.

With the DRB III®, read the engine DTCs. Check and repair all engine DTCs prior to performing transmission symptom diagnostics.

With the DRB III®, read and record all Transmission DTCs.

Note: Check connectors - Clean/repair as necessary. Poor pin to terminal connections can set DTCs.

Using the wiring diagram/schematic as a guide, inspect the wiring and connectors. Repair as necessary.

Most DTCs set on start up but some must be set by driving the vehicle such that all diagnostic monitors have run.

Note: Verify flash level of transmission controller. Some problems are corrected by software upgrades to the transmission controller.

Note: Check for any Technical Service Bulletins that may apply.

Perform this procedure prior to Symptom diagnosis.

Continue

Go To 2

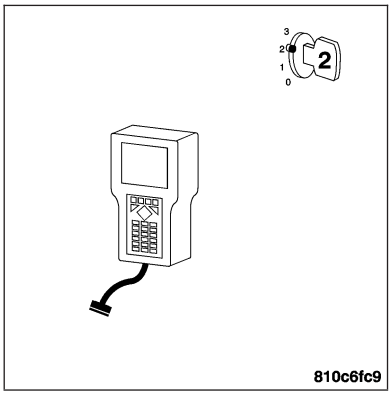

(P0562) SYSTEM UNDERVOLTAGE — CONTINUED

2. ENGINE CHARGING SYSTEM DTCS PRESENT

With the DRB III®, read Engine DTCs.

Are any Engine Charging System DTCs present?

Yes >> Refer to the Engine - Electrical Diagnostics category and perform the appropriate symptom.

No >> Go To 3

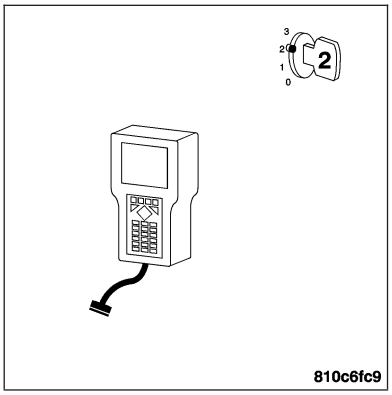

3. TRACTION SYSTEM RELAY OUTPUT VOLTAGE LOW AT TCM

Turn the ignition off.

Disconnect the TCM C1 harness connector.

Note: Check connectors - Clean/repair as necessary.

Start the engine.

Increase the engine speed to 1500 RPM.

Measure the voltage of the Traction System Relay Output circuit at the TCM C1 harness connector.

Is the voltage below 9.0 volts?

Yes >> Repair the Traction System Relay Output circuit for an open.
Perform NAG1 TRANSMISSION VERIFICATION TEST.

No >> Replace the Transmission Control Module. **Refer to Page 8E-60**.
Perform NAG1 TRANSMISSION VERIFICATION TEST.

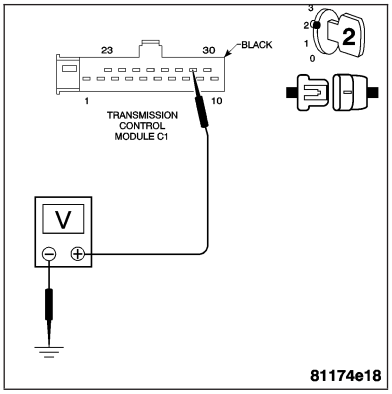

(PO563) SYSTEM OVERVOLTAGE

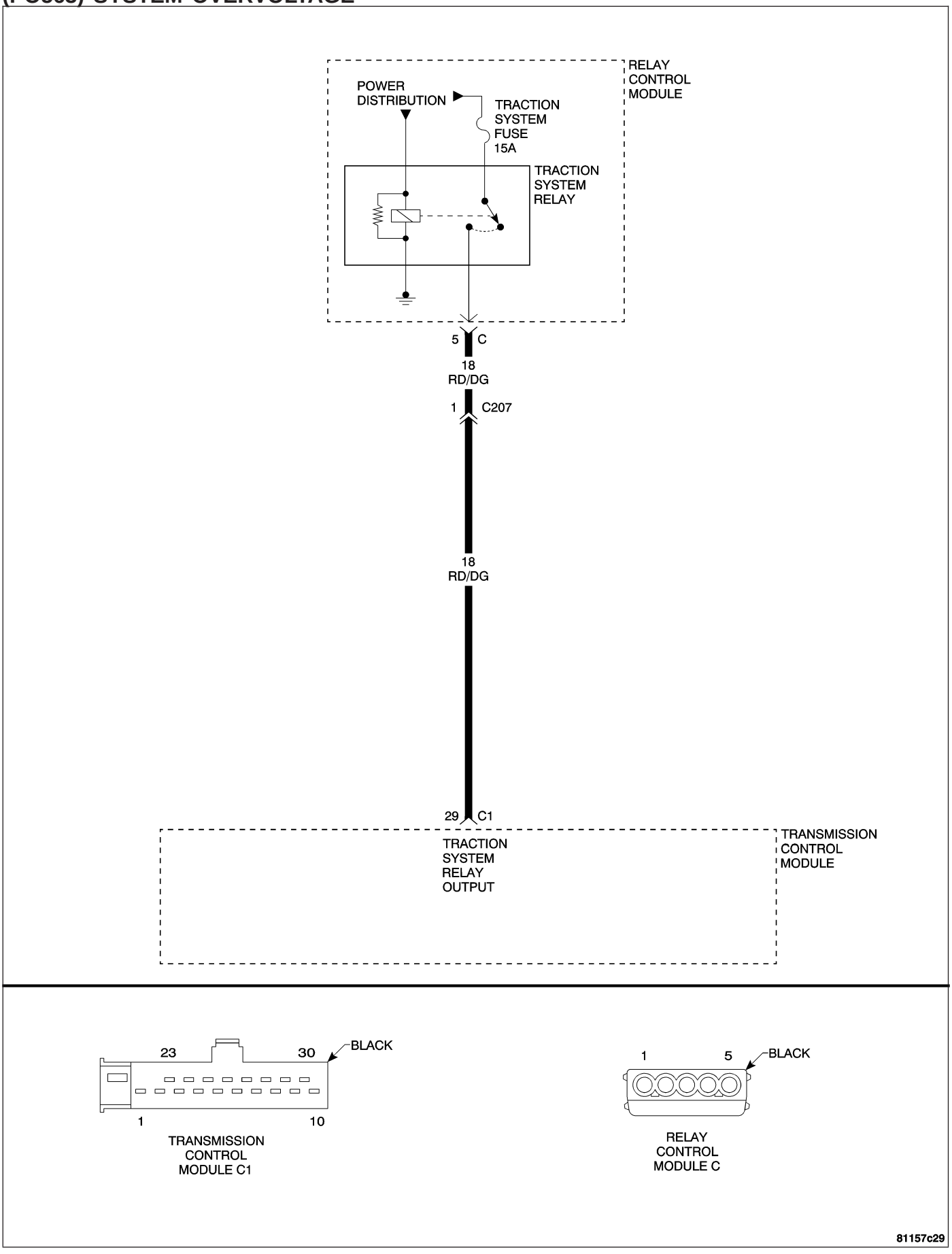

(PO563) SYSTEM OVERVOLTAGE — CONTINUED

When Monitored and Set Condition

- When Monitored: Always monitored with system active at each ignition cycle.
- Set Condition: System voltage above 16.9 volts with the engine and transmission input speed sensors above 2000 RPM for 60 seconds.

POSSIBLE CAUSES
VEHICLE JUMP STARTED IMPROPERLY
ENGINE CHARGING SYSTEM DTCS PRESENT
TRACTION SYSTEM RELAY OUTPUT VOLTAGE HIGH
TRANSMISSION CONTROL MODULE

For a complete Transmission Control Module Circuit Diagram **Refer to Page 21-182**.

Diagnostic Test

1. PRE-DIAGNOSTIC CHECK OUT

Note: Low fluid level can be the cause of many transmission problems. If the fluid level is low, locate and repair the leak then check and adjust the fluid level in accordance with the Service Information.

Note: Always perform diagnostics with a fully charged battery to avoid false symptoms.

With the DRB III®, read the engine DTCs. Check and repair all engine DTCs prior to performing transmission symptom diagnostics.

With the DRB III®, read and record all Transmission DTCs.

Note: Check connectors - Clean/repair as necessary. Poor pin to terminal connections can set DTCs.

Using the wiring diagram/schematic as a guide, inspect the wiring and connectors. Repair as necessary.

Most DTCs set on start up but some must be set by driving the vehicle such that all diagnostic monitors have run.

Note: Verify flash level of transmission controller. Some problems are corrected by software upgrades to the transmission controller.

Note: Check for any Technical Service Bulletins that may apply.

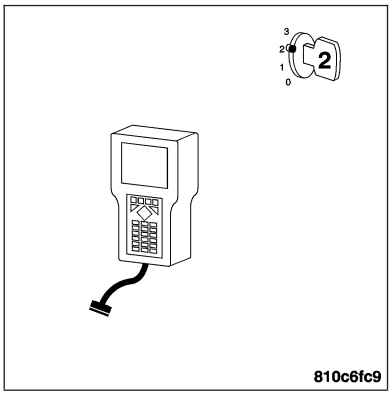

Perform this procedure prior to Symptom diagnosis.

Continue
Go To 2

2. VEHICLE JUMP STARTED IMPROPERLY

Determine if the vehicle was jump started improperly.

Note: If the battery was jump started with the batteries in series, the System Overvoltage DTC will be set.

Was the vehicle jump started improperly?

Yes >> Erase the DTC if the vehicle was jump started improperly. Perform NAG1 TRANSMISSION VERIFICATION TEST.

No >> Go To 3

(PO563) SYSTEM OVERVOLTAGE — CONTINUED

3. ENGINE CHARGING SYSTEM DTCS PRESENT

With the ignition on.
With the DRB III®, read the Engine DTCs.

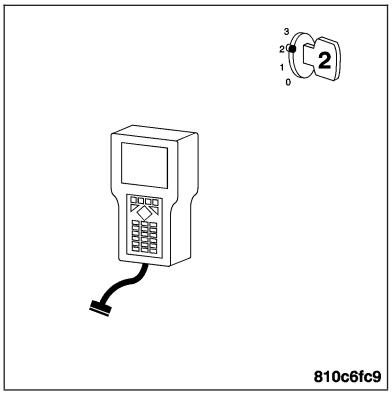

Are any Engine Charging System DTCs present?

Yes >> Refer to the Engine - Electrical Diagnostics category and perform the appropriate symptom.

No >> Go To 4

4. TRACTION SYSTEM RELAY OUTPUT VOLTAGE HIGH AT TCM

Turn the ignition off.
Disconnect the TCM C1 harness connector.

Note: Check connectors - Clean/repair as necessary.
Start the engine.
Increase the engine speed to 1500 RPM.
Measure the voltage of the Traction System Relay Output circuit in the TCM C1 harness connector.

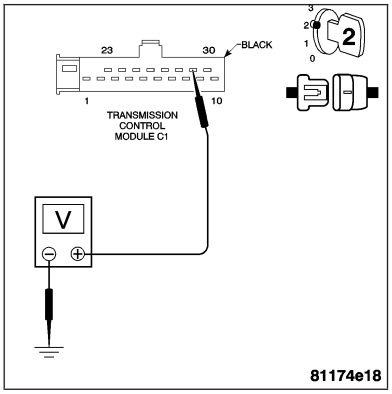

Is the voltage below 16.9 volts?

Yes >> Replace the Transmission Control Module. **Refer to Page 8E-60**.
Perform NAG1 TRANSMISSION VERIFICATION TEST.

No >> Refer to the Engine - Electrical Diagnostics category and perform the appropriate symptom.

(P0600) ABS BRAKE MESSAGE

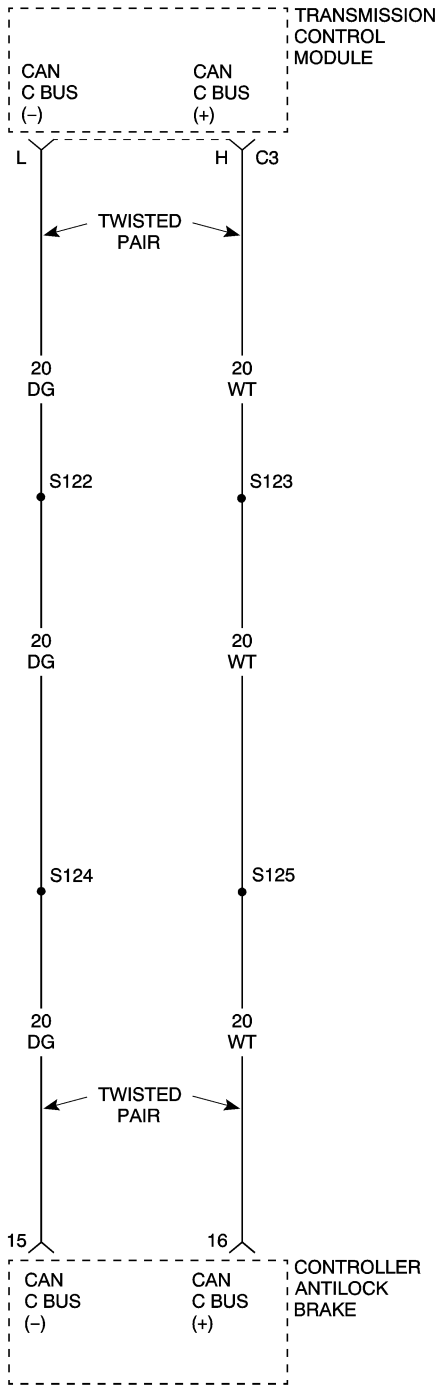

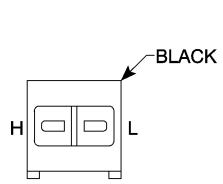

TRANSMISSION
CONTROL
MODULE C3

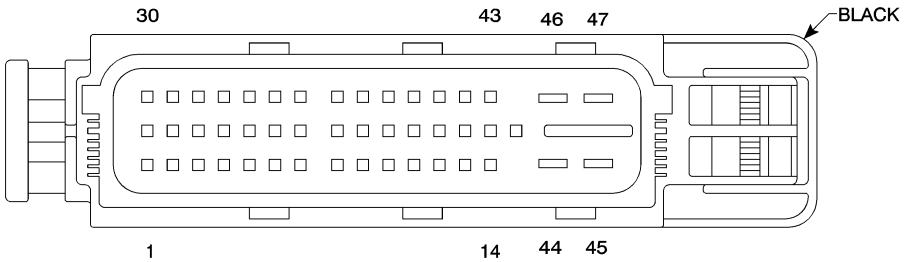

CONTROLLER
ANTILOCK
BRAKE

81157afe

(P0600) ABS BRAKE MESSAGE — CONTINUED

When Monitored and Set Condition

- When Monitored: Valid ABS CAN Bus message received at least once and CAN Bus Circuit, ABS CAN Message Missing, ABS CAN Message Incorrect are not active.
- Set Condition: Brake light switch signal not valid - CAB sending invalid value.

POSSIBLE CAUSES
CAN BUS CIRCUIT DTC PRESENT
ABS DTCS PRESENT
CONTROLLER ANTILOCK BRAKE MODULE
TRANSMISSION CONTROL MODULE

For a complete Transmission Control Module Circuit Diagram **Refer to Page 21-182**.

For a complete CAN BUS Circuit Diagram **Refer to Page 8E-45**.

Diagnostic Test

1. PRE-DIAGNOSTIC CHECK OUT

Note: Low fluid level can be the cause of many transmission problems. If the fluid level is low, locate and repair the leak then check and adjust the fluid level in accordance with the Service Information.

Note: Always perform diagnostics with a fully charged battery to avoid false symptoms.

With the DRB III®, read the engine DTCs. Check and repair all engine DTCs prior to performing transmission symptom diagnostics.

With the DRB III®, read and record all Transmission DTCs.

Note: Check connectors - Clean/repair as necessary. Poor pin to terminal connections can set DTCs.

Using the wiring diagram/schematic as a guide, inspect the wiring and connectors. Repair as necessary.

Most DTCs set on start up but some must be set by driving the vehicle such that all diagnostic monitors have run.

Note: Verify flash level of transmission controller. Some problems are corrected by software upgrades to the transmission controller.

Note: Check for any Technical Service Bulletins that may apply.

Perform this procedure prior to Symptom diagnosis.

Continue

Go To 2

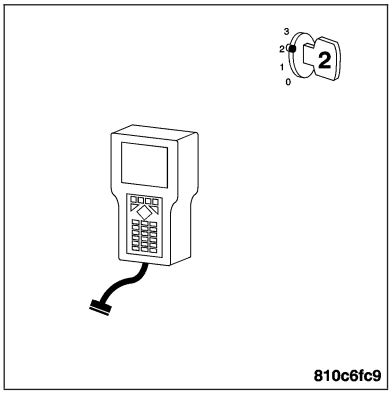

(P0600) ABS BRAKE MESSAGE — CONTINUED

2. (P0720) CAN BUS CIRCUIT DTC PRESENT

Turn the ignition on.
With the DRB III®, read Transmission DTCs.

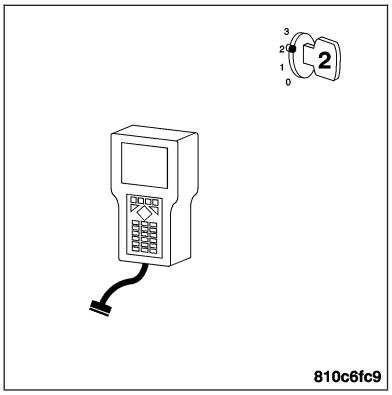

Is DTC (P0720) CAN BUS CIRCUIT present?

Yes >> Refer to the Transmission - Electrical Diagnostics category and perform the appropriate symptom.

No >> Go To 3

3. CHECK TO SEE IF ABS DTCS ARE PRESENT

With the ignition on.
With the DRB III®, read ABS DTCs.

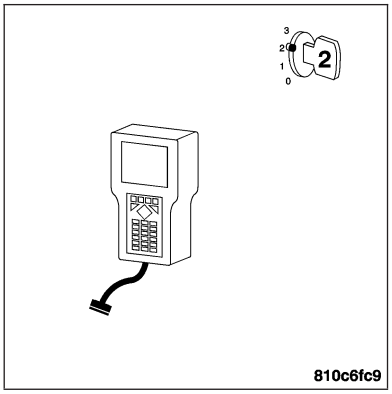

Are any ABS or Bus related DTCs present?

Yes >> Refer to the Brakes - ABS Electrical Diagnostics category and perform the appropriate symptom.

No >> Go To 4

4. CAB - BRAKE MESSAGE ERROR

Turn the ignition off.
Replace the Controller Antilock Brake Module. **Refer to Page 8E-63**.
Turn the ignition on.
With the DRB III®, erase ABS DTCs.
Start the engine.
With the brakes firmly applied, shift the gear selector into drive.
With the DRB III®, read Transmission DTCs.

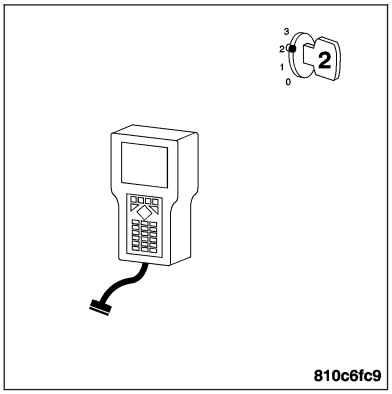

Did DTC (P0600) ABS BRAKE MESSAGE set again?

Yes >> Replace the Transmission Control Module. **Refer to Page 8E-60**.
Perform NAG1 TRANSMISSION VERIFICATION TEST.

No >> Test Complete.

(P0600) ABS CAN MESSAGE INCORRECT

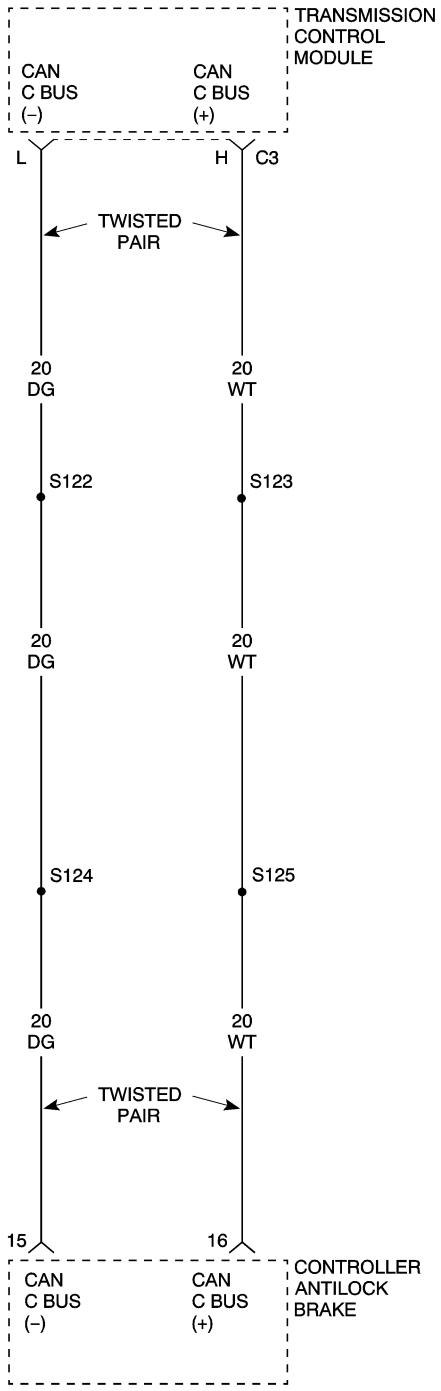

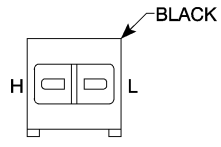

TRANSMISSION
CONTROL
MODULE C3

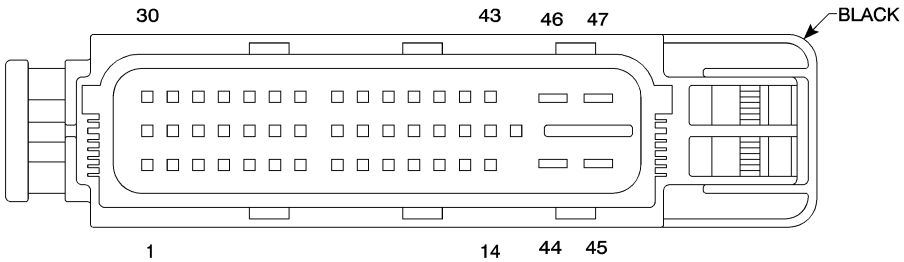

CONTROLLER
ANTILOCK
BRAKE

81157afe

(P0600) ABS CAN MESSAGE INCORRECT — CONTINUED

When Monitored and Set Condition

- When Monitored: ABS CAN messages received at least once and CAN Bus Circuit is not active.
- Set Condition: DTC Detected if the number of bytes incorrect for CAN ID.

POSSIBLE CAUSES
CONTROLLER ANTILOCK BRAKE MODULE
TRANSMISSION CONTROL MODULE

For a complete Transmission Control Module Circuit Diagram **Refer to Page 21-182**.

For a complete CAN BUS Circuit Diagram **Refer to Page 8E-45**.

Diagnostic Test

1. PRE-DIAGNOSTIC CHECK OUT

Note: Low fluid level can be the cause of many transmission problems. If the fluid level is low, locate and repair the leak then check and adjust the fluid level in accordance with the Service Information.

Note: Always perform diagnostics with a fully charged battery to avoid false symptoms.

With the DRB III®, read the engine DTCs. Check and repair all engine DTCs prior to performing transmission symptom diagnostics.

With the DRB III®, read and record all Transmission DTCs.

Note: Check connectors - Clean/repair as necessary. Poor pin to terminal connections can set DTCs.

Using the wiring diagram/schematic as a guide, inspect the wiring and connectors. Repair as necessary.

Most DTCs set on start up but some must be set by driving the vehicle such that all diagnostic monitors have run.

Note: Verify flash level of transmission controller. Some problems are corrected by software upgrades to the transmission controller.

Note: Check for any Technical Service Bulletins that may apply.

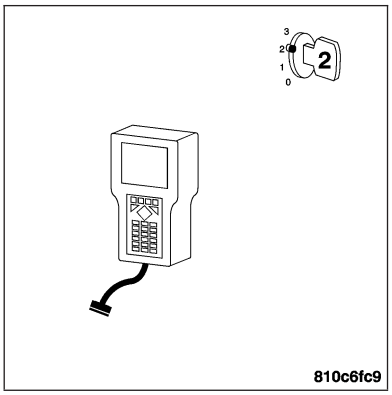

Perform this procedure prior to Symptom diagnosis.

Continue

Go To 2

(P0600) ABS CAN MESSAGE INCORRECT — CONTINUED

2. CAB - INTERNAL

Turn the ignition off.

Replace the Controller Antilock Brake Module. **Refer to Page 8E-63**.

Turn the ignition on.

With the DRB III®, erase Transmission DTCs.

Start the engine and with the brakes firmly applied place the gear selector into Drive.

With the DRB III®, read Transmission DTCs.

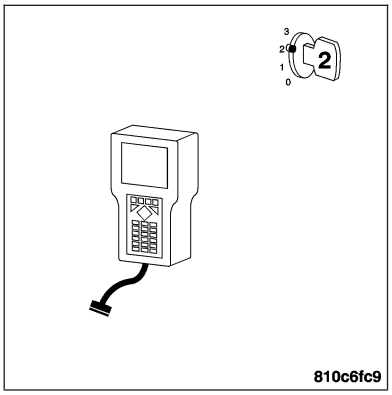

Did DTC (P0600) ABS CAN MESSAGE INCORRECT set again?

Yes >> Replace the Transmission Control Module. **Refer to Page 8E-60**.
Perform NAG1 TRANSMISSION VERIFICATION TEST.

No >> Test Complete.

(P0600) ABS CAN MESSAGE MISSING

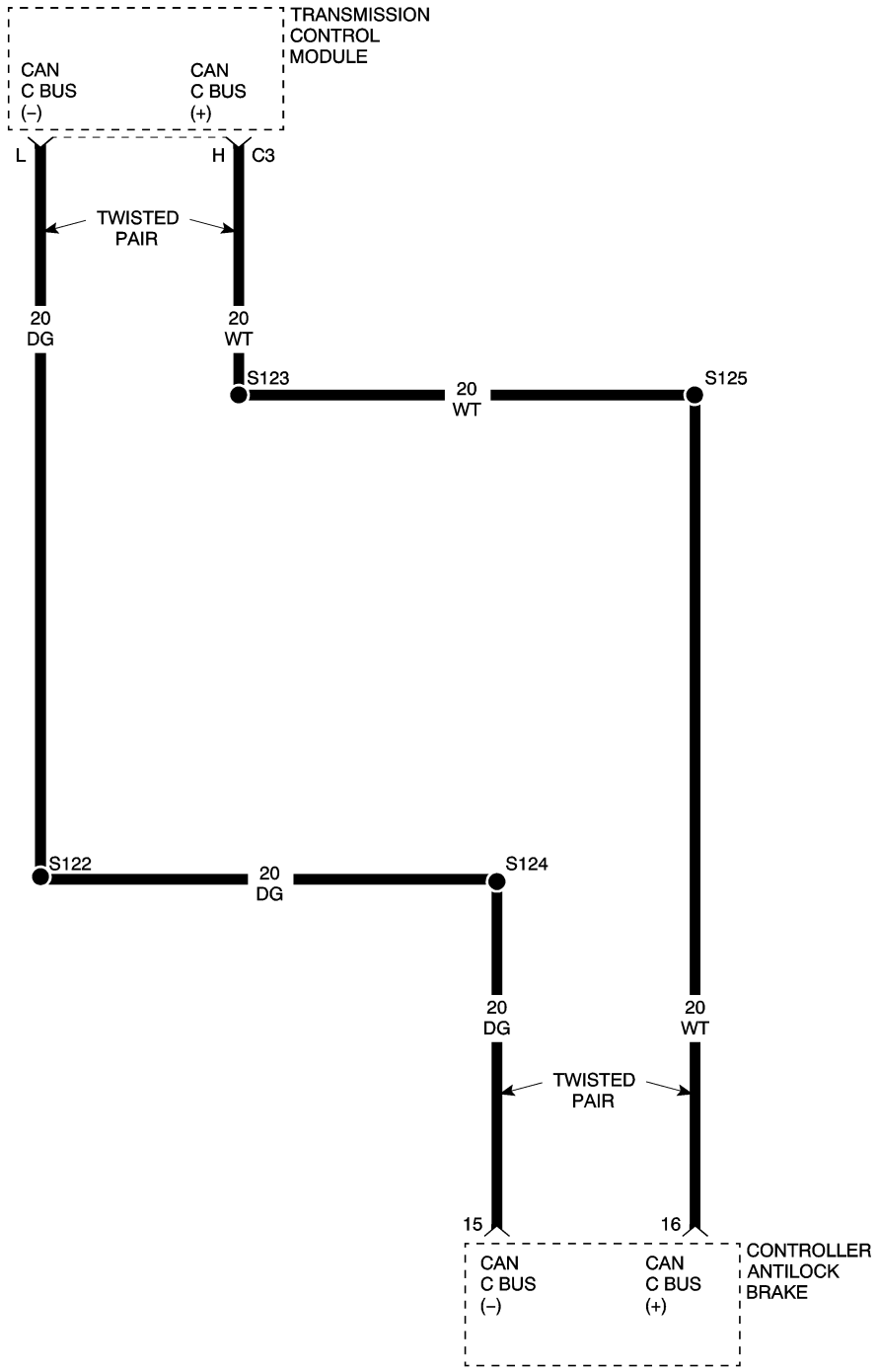

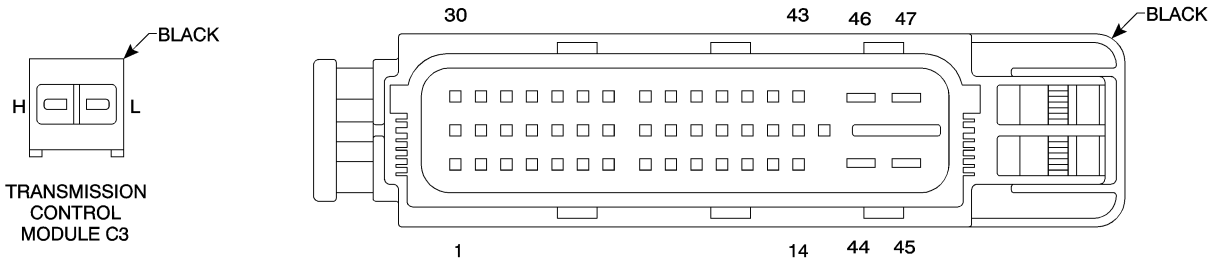

81157b07

(P0600) ABS CAN MESSAGE MISSING — CONTINUED

When Monitored and Set Condition

- When Monitored: CAN Bus Circuit error not present, 1 second after ignition on and not in Park or Neutral, no System Overvoltage or System Undervoltage conditions present, or transmission in Park or Neutral and engine RPM greater than 850 RPM.
- Set Condition: This DTC is set when a CAN ID was not received in the required time are not being sent from the CAB. NOTE: The CAB is powered by the run only ignition feed. This means that this DTC will be set if the key is placed in the start position with the transmission in gear or if in Park or Neutral and the engine RPM is greater than 850 RPM.

POSSIBLE CAUSES
VEHICLE STARTED IN GEAR
CAN BUS CIRCUIT DTC PRESENT
ABS DTCS PRESENT
CAN C BUS +/- CIRCUIT OPEN
CONTROLLER ANTILOCK BRAKE MODULE
TRANSMISSION CONTROL MODULE

For a complete Transmission Control Module Circuit Diagram **Refer to Page 21-182**.

Diagnostic Test

1. PRE-DIAGNOSTIC CHECK OUT

Note: Low fluid level can be the cause of many transmission problems. If the fluid level is low, locate and repair the leak then check and adjust the fluid level in accordance with the Service Information.

Note: Always perform diagnostics with a fully charged battery to avoid false symptoms.

With the DRB III®, read the engine DTCs. Check and repair all engine DTCs prior to performing transmission symptom diagnostics.

With the DRB III®, read and record all Transmission DTCs.

Note: Check connectors - Clean/repair as necessary. Poor pin to terminal connections can set DTCs.

Using the wiring diagram/schematic as a guide, inspect the wiring and connectors. Repair as necessary.

Most DTCs set on start up but some must be set by driving the vehicle such that all diagnostic monitors have run.

Note: Verify flash level of transmission controller. Some problems are corrected by software upgrades to the transmission controller.

Note: Check for any Technical Service Bulletins that may apply.

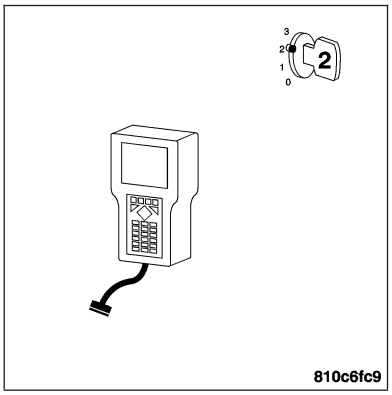

Perform this procedure prior to Symptom diagnosis.

Continue

Go To 2

(P0600) ABS CAN MESSAGE MISSING — CONTINUED

2. ABS DTC SET WHEN VEHICLE STARTED IN GEAR OTHER THAN PARK OR NEUTRAL

Note: This DTC can be erroneously set if the vehicle was started in gear or with the engine running.

Turn the ignition on.

With the DRB III®, erase this DTC.

Turn the ignition off, then back on.

Monitor the DRB III® for this DTC.

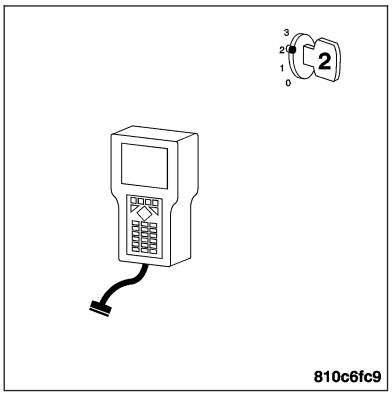

Did DTC (P0600) ABS CAN MESSAGE MISSING set again?

Yes >> Go To 3

Note: If the ignition switch is moved to the RUN/START position with the shift lever not in the Park or Neutral position or the RUN/START position with the engine RPM >850, a (P0600) ABS CAN MESSAGE MISSING DTC will set. Erase DTC and return to customer.

No >> Test Complete.

3. (P0720) CAN BUS CIRCUIT DTC PRESENT

With the DRB III®, read Transmission DTCs.

Note: If DTC (P0720) CAN BUS CIRCUIT is present, perform diagnostics on that symptom first.

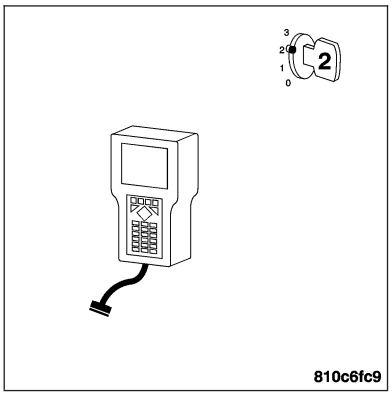

Is DTC (P0720) CAN BUS CIRCUIT present?

Yes >> Refer to the Transmission - Electrical Diagnostics category and perform the appropriate symptom.
Perform NAG1 TRANSMISSION VERIFICATION TEST.

No >> Go To 4

4. CHECK TO SEE IF ABS DTCS ARE PRESENT

Turn the ignition on.

With the DRB III®, read ABS DTCs.

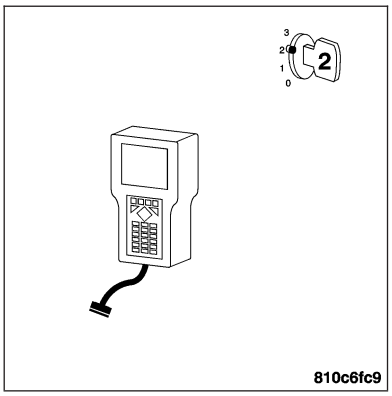

Are any performance or bus related ABS DTCs present?

Yes >> Refer to the Brakes - ABS Electrical Diagnostics category and perform the appropriate symptom.
Perform NAG1 TRANSMISSION VERIFICATION TEST.

No >> Go To 5

(P0600) ABS CAN MESSAGE MISSING — CONTINUED

5. CAN C BUS +/- CIRCUIT OPEN

Turn the ignition off.

Disconnect the CAB harness connector.

Disconnect the TCM C3 harness connector.

Note: Check connectors - Clean/repair as necessary.

Measure the resistance of the CAN C Bus (+) circuit from the CAB harness connector to the TCM C3 harness connector.

Measure the resistance of the CAN C Bus (-) circuit from the CAB harness connector to the TCM C3 harness connector.

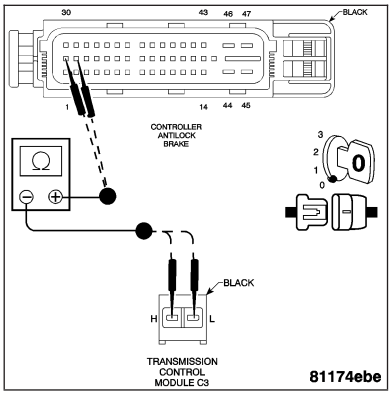

Is the resistance above 5.0 ohms on either circuit?

Yes >> Repair the faulty CAN C Bus circuit for an open.
Perform NAG1 TRANSMISSION VERIFICATION TEST.

No >> Go To 6

6. CAB - BRAKE MESSAGE MISSING

With the ignition off.

Replace and program the Controller Antilock Brake Module. **Refer to Page 8E-63**.

Turn the ignition on.

With the DRB III®, erase Transmission DTCs.

Start the engine.

With the brakes firmly applied, shift the gear selector into drive.

With the DRB III®, read Transmission DTCs.

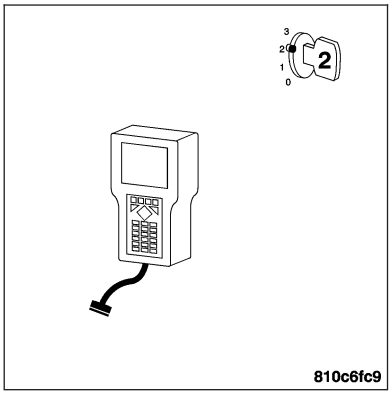

Did DTC (P0600) ABS CAN MESSAGE MISSING set again?

Yes >> Replace the Transmission Control Module. **Refer to Page 8E-60**.
Perform NAG1 TRANSMISSION VERIFICATION TEST.

No >> Test Complete.

(P0600) ABS LEFT FRONT SENSOR MESSAGE

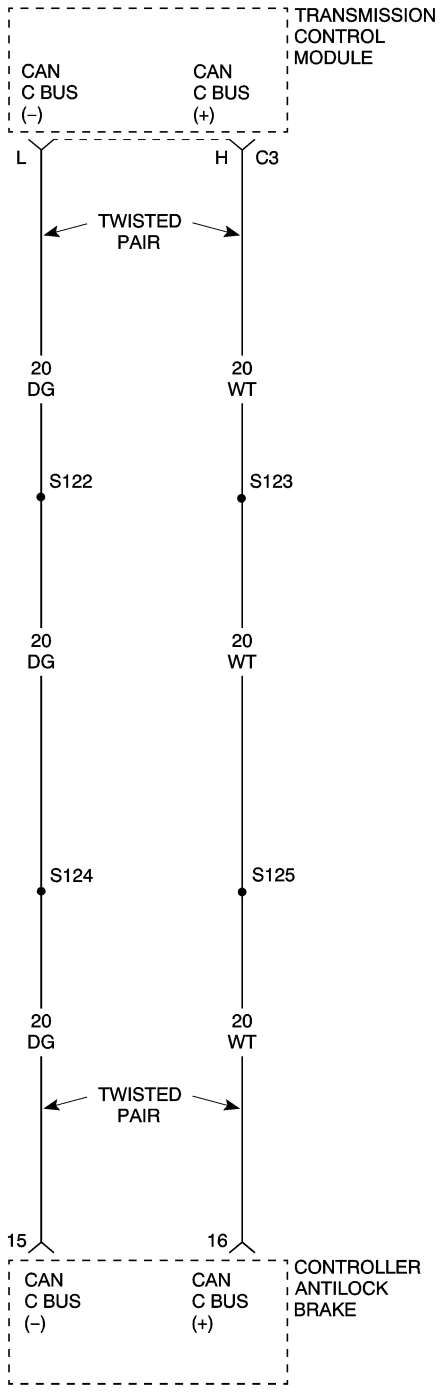

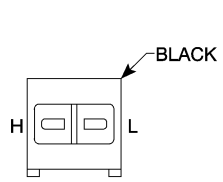

TRANSMISSION
CONTROL
MODULE C3

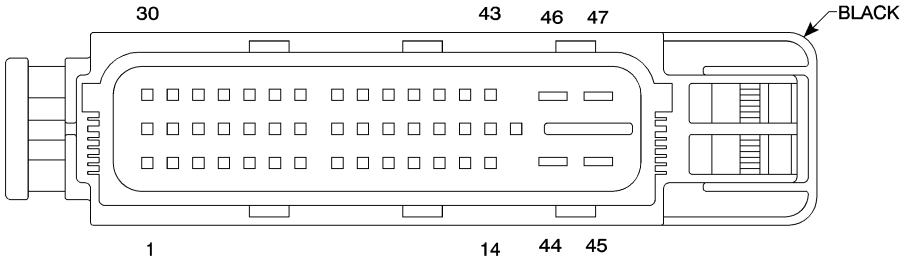

CONTROLLER
ANTILOCK
BRAKE

81157afe

(P0600) ABS LEFT FRONT SENSOR MESSAGE — CONTINUED

When Monitored and Set Condition

- When Monitored: Valid ABS CAN messages received at least once and the CAN Bus Circuit, ABS CAN Message Missing, ABS CAN Message Incorrect are not active.
- Set Condition: Wheel Speed Front Left signal not valid or CAB has detected a sensor failure.

POSSIBLE CAUSES
CAN BUS CIRCUIT DTC PRESENT
ABS DTCS PRESENT
CONTROLLER ANTILOCK BRAKE MODULE
TRANSMISSION CONTROL MODULE

For a complete Transmission Control Module Circuit Diagram **Refer to Page 21-182**.

For a complete CAN BUS Circuit Diagram **Refer to Page 8E-45**.

Diagnostic Test

1. PRE-DIAGNOSTIC CHECK OUT

Note: Low fluid level can be the cause of many transmission problems. If the fluid level is low, locate and repair the leak then check and adjust the fluid level in accordance with the Service Information.

Note: Always perform diagnostics with a fully charged battery to avoid false symptoms.

With the DRB III®, read the engine DTCs. Check and repair all engine DTCs prior to performing transmission symptom diagnostics.

With the DRB III®, read and record all Transmission DTCs.

Note: Check connectors - Clean/repair as necessary. Poor pin to terminal connections can set DTCs.

Using the wiring diagram/schematic as a guide, inspect the wiring and connectors. Repair as necessary.

Most DTCs set on start up but some must be set by driving the vehicle such that all diagnostic monitors have run.

Note: Verify flash level of transmission controller. Some problems are corrected by software upgrades to the transmission controller.

Note: Check for any Technical Service Bulletins that may apply.

Perform this procedure prior to Symptom diagnosis.

Continue

Go To 2

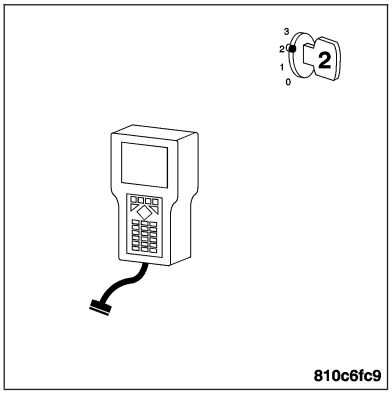

(P0600) ABS LEFT FRONT SENSOR MESSAGE — CONTINUED

2. (P0720) CAN BUS CIRCUIT DTC PRESENT

Turn the ignition on.
With the DRB III®, read Transmission DTCs.

Note: If DTC (P0720) CAN BUS CIRCUIT is present, perform diagnostics on that symptom first.

Is DTC (P0720) CAN BUS CIRCUIT present?

Yes >> Refer to the Transmission - Electrical Diagnostics category and perform the appropriate symptom.

No >> Go To 3

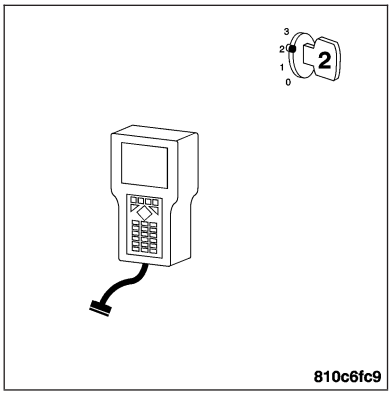

3. CHECK TO SEE IF ABS DTCS ARE PRESENT

With the ignition on.
With the DRB III®, read ABS DTCs.

Are any ABS DTCs present?

Yes >> Refer to the Brakes - ABS Electrical Diagnostics category and perform the appropriate symptom.

No >> Go To 4

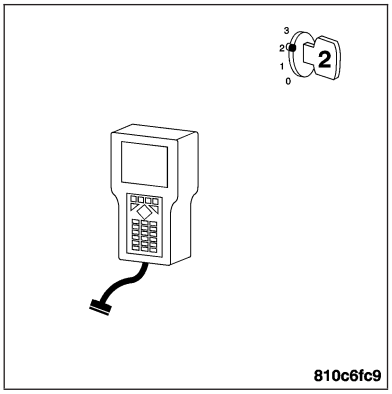

4. CONTROLLER ANTILOCK BRAKE MODULE

Turn the ignition off.
Replace the Controller Antilock Brake Module. **Refer to Page 8E-63**.
Turn the ignition on.
With the DRB III®, erase Transmission DTCs.
Road test the vehicle.
With the DRB III®, read Transmission DTCs.

Did DTC (P0600) ABS LEFT FRONT SENSOR MESSAGE set again?

Yes >> Replace the Transmission Control Module. **Refer to Page 8E-60**.
Perform NAG1 TRANSMISSION VERIFICATION TEST.

No >> Test Complete.

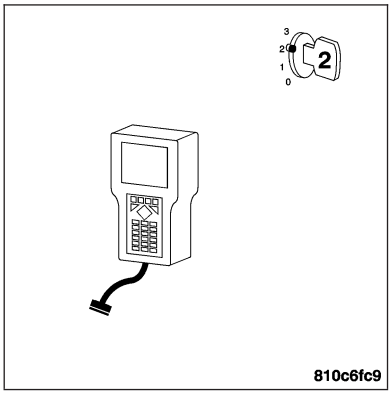

(P0600) ABS LEFT REAR SENSOR MESSAGE

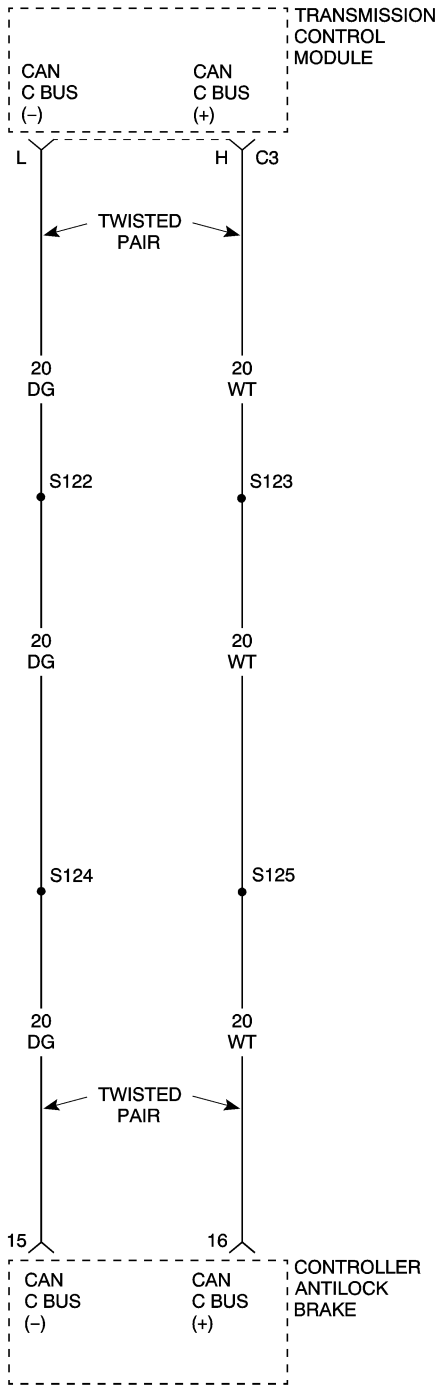

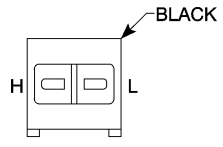

TRANSMISSION
CONTROL
MODULE C3

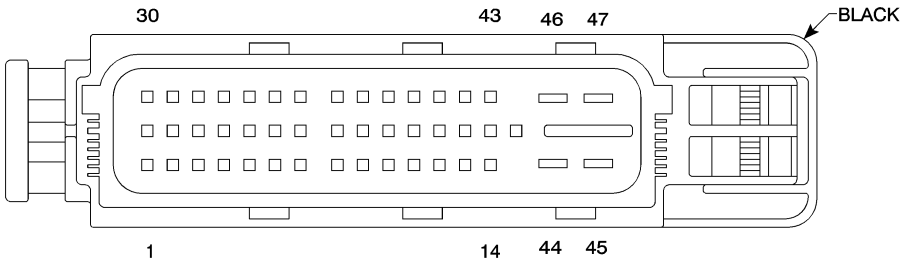

CONTROLLER
ANTILOCK
BRAKE

81157afe

(P0600) ABS LEFT REAR SENSOR MESSAGE — CONTINUED

When Monitored and Set Condition

- When Monitored: Valid ABS CAN messages received at least once and the CAN Bus Circuit, ABS CAN Message Missing, ABS CAN Message Incorrect are not active.
- Set Condition: Wheel Speed Rear Left signal not valid or CAB has detected a sensor failure.

POSSIBLE CAUSES
CAN BUS CIRCUIT DTC PRESENT
ABS DTCS PRESENT
CONTROLLER ANTILOCK BRAKE MODULE
TRANSMISSION CONTROL MODULE

For a complete Transmission Control Module Circuit Diagram **Refer to Page 21-182**.

For a complete CAN BUS Circuit Diagram **Refer to Page 8E-45**.

Diagnostic Test

1. PRE-DIAGNOSTIC CHECK OUT

Note: Low fluid level can be the cause of many transmission problems. If the fluid level is low, locate and repair the leak then check and adjust the fluid level in accordance with the Service Information.

Note: Always perform diagnostics with a fully charged battery to avoid false symptoms.

With the DRB III®, read the engine DTCs. Check and repair all engine DTCs prior to performing transmission symptom diagnostics.

With the DRB III®, read and record all Transmission DTCs.

Note: Check connectors - Clean/repair as necessary. Poor pin to terminal connections can set DTCs.

Using the wiring diagram/schematic as a guide, inspect the wiring and connectors. Repair as necessary.

Most DTCs set on start up but some must be set by driving the vehicle such that all diagnostic monitors have run.

Note: Verify flash level of transmission controller. Some problems are corrected by software upgrades to the transmission controller.

Note: Check for any Technical Service Bulletins that may apply.

Perform this procedure prior to Symptom diagnosis.

Continue

Go To 2

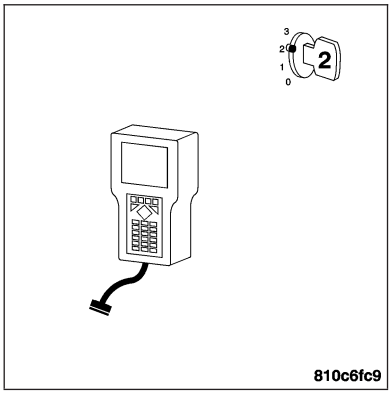

(P0600) ABS LEFT REAR SENSOR MESSAGE — CONTINUED

2. (P0720) CAN BUS CIRCUIT DTC PRESENT

Turn the ignition on.
With the DRB III®, read Transmission DTCs.

Note: If DTC (P0720) CAN BUS CIRCUIT is present, perform diagnostics on that symptom first.

Is DTC (P0720) CAN BUS CIRCUIT present?

Yes >> Refer to the Transmission - Electrical Diagnostics category and perform the appropriate symptom.

No >> Go To 3

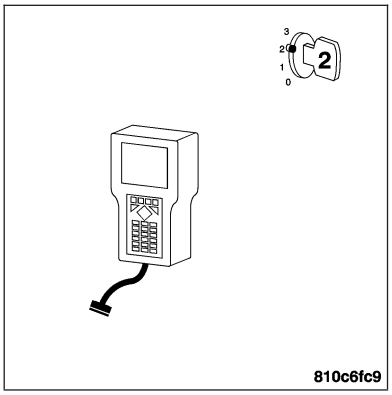

3. CHECK TO SEE IF ABS DTCS ARE PRESENT

With the ignition on.
With the DRB III®, read ABS DTCs.

Are any ABS DTCs present?

Yes >> Refer to the Brakes - ABS Electrical Diagnostics category and perform the appropriate symptom.

No >> Go To 4

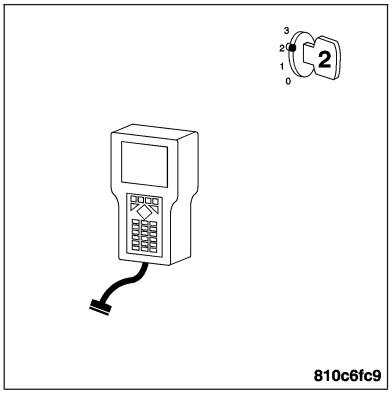

4. CONTROLLER ANTILOCK BRAKE MODULE

Turn the ignition off.
Replace the Controller Antilock Brake Module. **Refer to Page 8E-63**.
Turn the ignition on.
With the DRB III®, erase Transmission DTCs.
Road test the vehicle.
With the DRB III®, read Transmission DTCs.

Did DTC (P0600) ABS LEFT REAR SENSOR MESSAGE set again?

Yes >> Replace the Transmission Control Module. **Refer to Page 8E-60**.
Perform NAG1 TRANSMISSION VERIFICATION TEST.

No >> Test Complete.

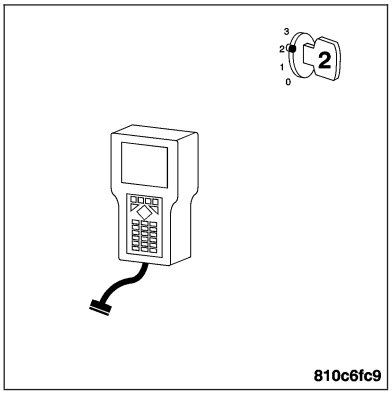

(P0600) ABS RIGHT FRONT SENSOR MESSAGE

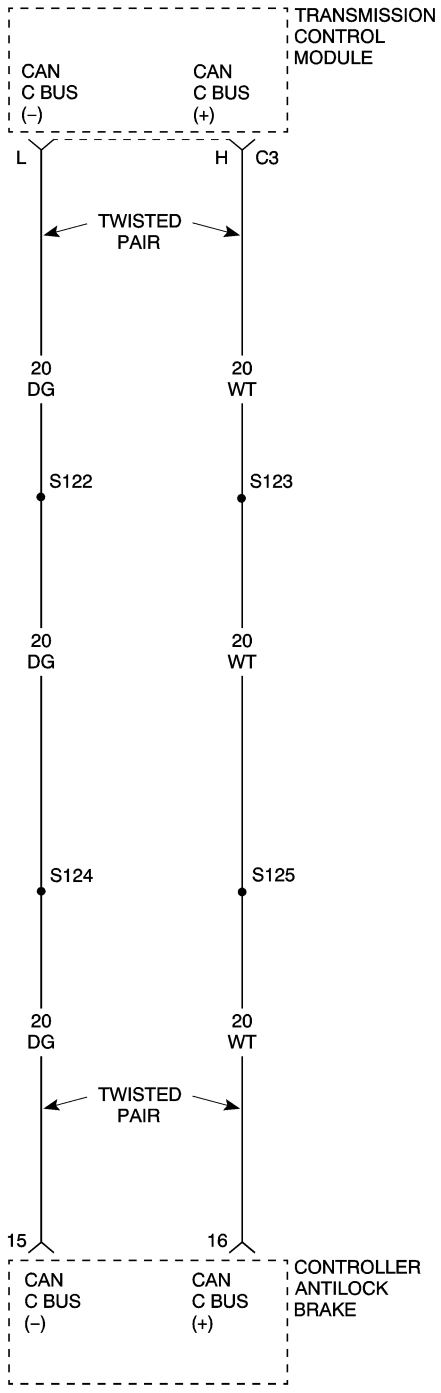

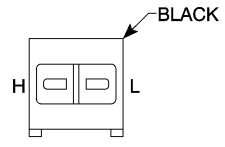

TRANSMISSION CONTROL MODULE C3

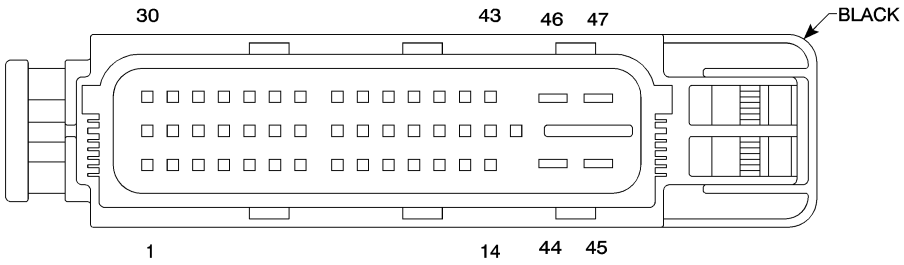

CONTROLLER ANTILOCK BRAKE

81157afe

(P0600) ABS RIGHT FRONT SENSOR MESSAGE — CONTINUED

When Monitored and Set Condition

- When Monitored: Valid ABS CAN messages received at least once and the CAN Bus Circuit, ABS CAN Message Missing, ABS CAN Message Incorrect are not active.
- Set Condition: Wheel Speed Front Right signal not valid or CAB has detected a sensor failure.

POSSIBLE CAUSES
CAN BUS CIRCUIT DTC PRESENT
ABS DTCS PRESENT
CONTROLLER ANTILOCK BRAKE MODULE
TRANSMISSION CONTROL MODULE

For a complete Transmission Control Module Circuit Diagram **Refer to Page 21-182**.

For a complete CAN BUS Circuit Diagram **Refer to Page 8E-45**.

Diagnostic Test

1. PRE-DIAGNOSTIC CHECK OUT

Note: Low fluid level can be the cause of many transmission problems. If the fluid level is low, locate and repair the leak then check and adjust the fluid level in accordance with the Service Information.

Note: Always perform diagnostics with a fully charged battery to avoid false symptoms.

With the DRB III®, read the engine DTCs. Check and repair all engine DTCs prior to performing transmission symptom diagnostics.

With the DRB III®, read and record all Transmission DTCs.

Note: Check connectors - Clean/repair as necessary. Poor pin to terminal connections can set DTCs.

Using the wiring diagram/schematic as a guide, inspect the wiring and connectors. Repair as necessary.

Most DTCs set on start up but some must be set by driving the vehicle such that all diagnostic monitors have run.

Note: Verify flash level of transmission controller. Some problems are corrected by software upgrades to the transmission controller.

Note: Check for any Technical Service Bulletins that may apply.

Perform this procedure prior to Symptom diagnosis.

Continue

Go To 2

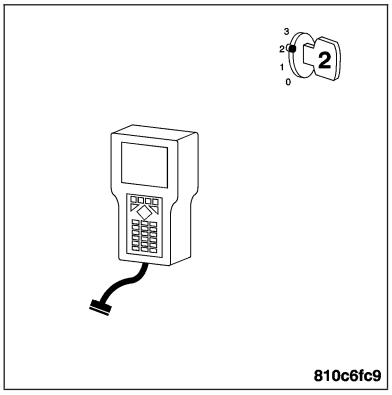

(P0600) ABS RIGHT FRONT SENSOR MESSAGE — CONTINUED

2. (P0720) CAN BUS CIRCUIT DTC PRESENT

Turn the ignition on.
With the DRB III®, read Transmission DTCs.

Note: If DTC (P0720) CAN BUS CIRCUIT is present, perform diagnostics on that symptom first.

Is DTC (P0720) CAN BUS CIRCUIT present?

Yes >> Refer to the Transmission - Electrical Diagnostics category and perform the appropriate symptom.

No >> Go To 3

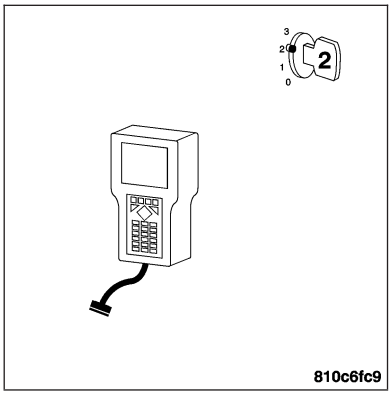

3. CHECK TO SEE IF ABS DTCS ARE PRESENT

With the ignition on.
With the DRB III®, read ABS DTCs.

Are any ABS DTCs present?

Yes >> Refer to the Brakes - ABS Electrical Diagnostics category and perform the appropriate symptom.

No >> Go To 4

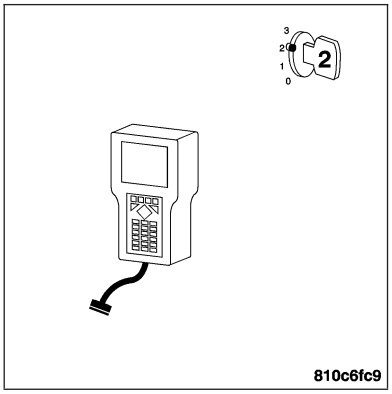

4. CONTROLLER ANTILOCK BRAKE MODULE

Turn the ignition off.
Replace the Controller Antilock Brake Module. **Refer to Page 8E-63**.
Turn the ignition on.
With the DRB III®, erase Transmission DTCs.
Road test the vehicle.
With the DRB III®, read Transmission DTCs.

Did DTC (P0600) ABS RIGHT FRONT SENSOR MESSAGE set again?

Yes >> Replace the Transmission Control Module. **Refer to Page 8E-60**.
Perform NAG1 TRANSMISSION VERIFICATION TEST.

No >> Test Complete.

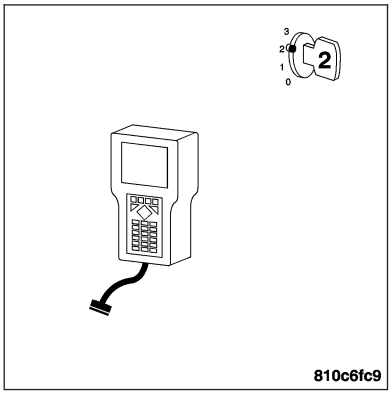

(P0600) ABS RIGHT REAR SENSOR MESSAGE

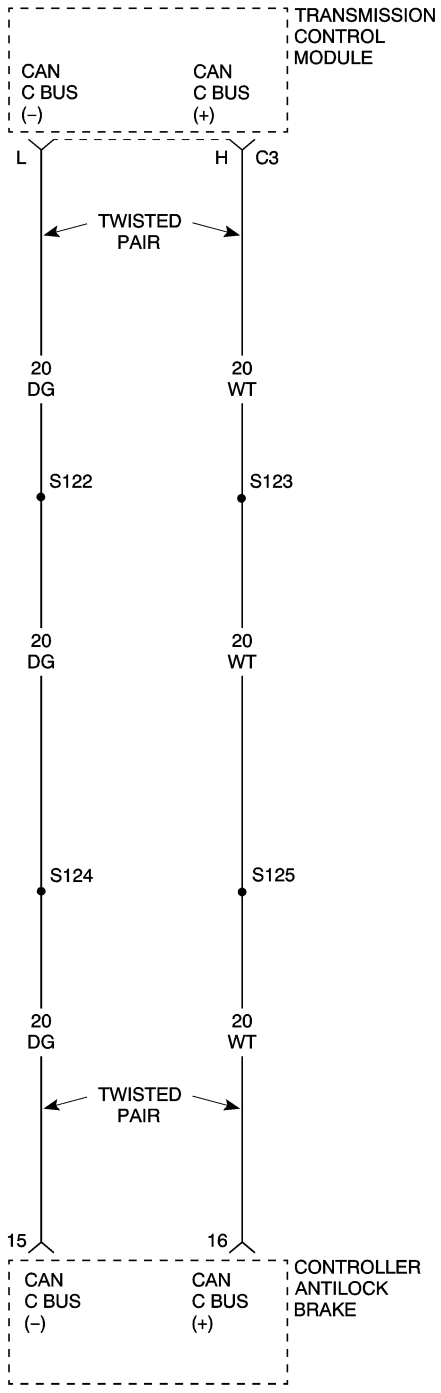

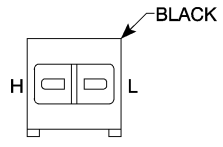

TRANSMISSION
CONTROL
MODULE C3

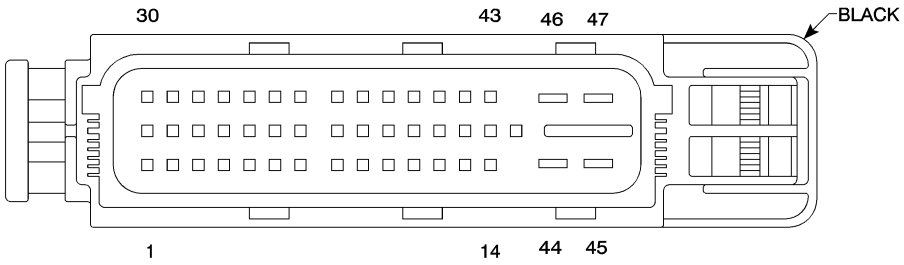

CONTROLLER
ANTILOCK
BRAKE

81157afe

(P0600) ABS RIGHT REAR SENSOR MESSAGE — CONTINUED

When Monitored and Set Condition

- When Monitored: Valid ABS CAN messages received at least once and the CAN Bus Circuit, ABS CAN Message Missing, ABS CAN Message Incorrect are not active.
- Set Condition: Wheel Speed Rear Right signal not valid or CAB has detected a sensor failure.

POSSIBLE CAUSES
CAN BUS CIRCUIT DTC PRESENT
ABS DTCS PRESENT
CONTROLLER ANTILOCK BRAKE MODULE
TRANSMISSION CONTROL MODULE

For a complete Transmission Control Module Circuit Diagram **Refer to Page 21-182**.

For a complete CAN BUS Circuit Diagram **Refer to Page 8E-45**.

Diagnostic Test

1. PRE-DIAGNOSTIC CHECK OUT

Note: Low fluid level can be the cause of many transmission problems. If the fluid level is low, locate and repair the leak then check and adjust the fluid level in accordance with the Service Information.

Note: Always perform diagnostics with a fully charged battery to avoid false symptoms.

With the DRB III®, read and record all Transmission DTCs.

Note: Check connectors - Clean/repair as necessary. Poor pin to terminal connections can set DTCs.

Using the wiring diagram/schematic as a guide, inspect the wiring and connectors. Repair as necessary.

Most DTCs set on start up but some must be set by driving the vehicle such that all diagnostic monitors have run.

Note: Verify flash level of transmission controller. Some problems are corrected by software upgrades to the transmission controller.

Note: Check for any Technical Service Bulletins that may apply.

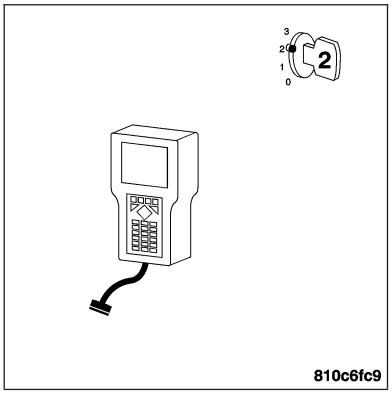

Perform this procedure prior to Symptom diagnosis.

Continue

Go To 2

(P0600) ABS RIGHT REAR SENSOR MESSAGE — CONTINUED

2. (P0720) CAN BUS CIRCUIT DTC PRESENT

Turn the ignition on.
With the DRB III®, read Transmission DTCs.

Note: If DTC (P0720) CAN BUS CIRCUIT is present, perform diagnostics on that symptom first.

Is DTC (P0720) CAN BUS CIRCUIT present?

Yes >> Refer to the Transmission - Electrical Diagnostics category and perform the appropriate symptom.

No >> Go To 3

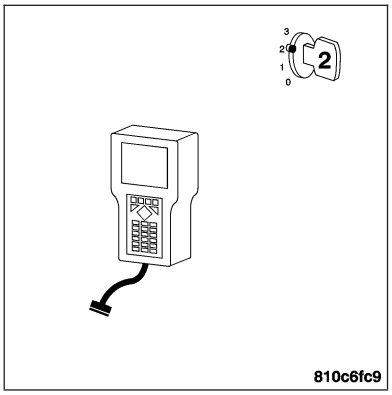

3. CHECK TO SEE IF ABS DTCS ARE PRESENT

With the ignition on.
With the DRB III®, read ABS DTCs.

Are any ABS DTCs present?

Yes >> Refer to the Brakes - ABS Electrical Diagnostics category and perform the appropriate symptom.

No >> Go To 4

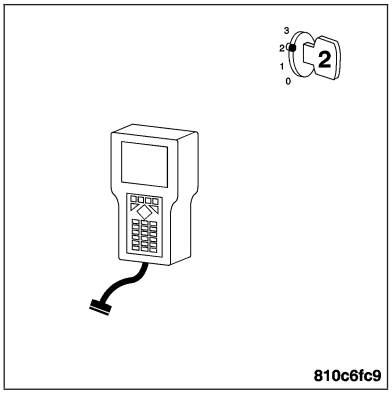

4. CONTROLLER ANTILOCK BRAKE MODULE

Turn the ignition off.
Replace the Controller Antilock Brake Module. **Refer to Page 8E-63**.
Turn the ignition on.
With the DRB III®, erase Transmission DTCs.
Road test the vehicle.
With the DRB III®, read Transmission DTCs.

Did DTC (P0600) ABS RIGHT REAR SENSOR MESSAGE set again?

Yes >> Replace the Transmission Control Module. **Refer to Page 8E-60**.
Perform NAG1 TRANSMISSION VERIFICATION TEST.

No >> Test Complete.

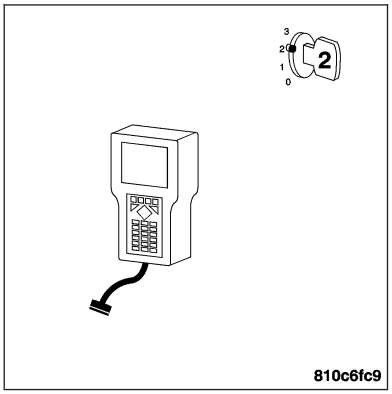

(P0600) ACCEL PEDAL SENSOR CAN MESSAGE INCORRECT



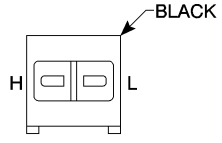

TRANSMISSION CONTROL MODULE C3

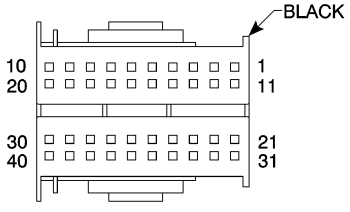

POWERTRAIN CONTROL MODULE – C4

81157b65

(P0600) ACCEL PEDAL SENSOR CAN MESSAGE INCORRECT — CONTINUED

When Monitored and Set Condition

- When Monitored: When a valid Accelerator Pedal Position Sensor (APPS) or Throttle Position Sensor (TPS) CAN Message Received at least once and the DTCs, CAN Bus Circuit, Engine CAN Message Missing and Engine CAN Message Incorrect are not active.
- Set Condition: Accelerator Pedal Position Sensor (APPS) or Throttle Position Sensor (TPS) Message not valid or a PCM Engine Sensor DTC detected.

POSSIBLE CAUSES
CAN BUS CIRCUIT DTC PRESENT
ENGINE APP OR TPS DTCS PRESENT
ENGINE COMMUNICATION DTCS PRESENT
TRANSMISSION CONTROL MODULE
POWERTRAIN CONTROL MODULE

For a complete Transmission Control Module Circuit Diagram **Refer to Page 21-182**.

For a complete CAN BUS Circuit Diagram **Refer to Page 8E-45**.

Diagnostic Test

1. PRE-DIAGNOSTIC CHECK OUT

Note: Low fluid level can be the cause of many transmission problems. If the fluid level is low, locate and repair the leak then check and adjust the fluid level in accordance with the Service Information.

Note: Always perform diagnostics with a fully charged battery to avoid false symptoms.

With the DRB III®, read the engine DTCs. Check and repair all engine DTCs prior to performing transmission symptom diagnostics.

With the DRB III®, read and record all Transmission DTCs.

Note: Check connectors - Clean/repair as necessary. Poor pin to terminal connections can set DTCs.

Using the wiring diagram/schematic as a guide, inspect the wiring and connectors. Repair as necessary.

Most DTCs set on start up but some must be set by driving the vehicle such that all diagnostic monitors have run.

Note: Verify flash level of transmission controller. Some problems are corrected by software upgrades to the transmission controller.

Note: Check for any Technical Service Bulletins that may apply.

Perform this procedure prior to Symptom diagnosis.

Continue

Go To 2

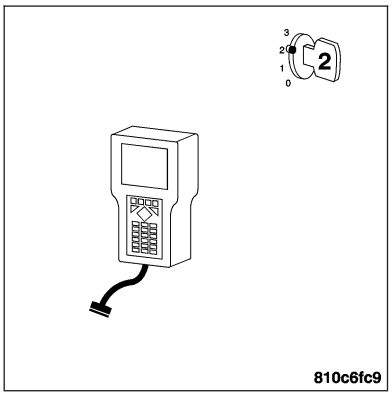

(P0600) ACCEL PEDAL SENSOR CAN MESSAGE INCORRECT — CONTINUED

2. (P0720) CAN BUS CIRCUIT DTC PRESENT

Turn the ignition on.
With the DRB III®, read Transmission DTCs.

Note: If DTC (P0720) CAN BUS CIRCUIT is present, perform diagnostics on that symptom first.

Is DTC (P0720) CAN BUS CIRCUIT present?

Yes >> Refer to the Transmission - Electrical Diagnostics category and perform the appropriate symptom.

No >> Go To 3

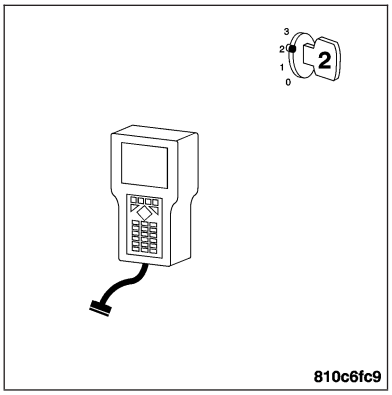

3. CHECK FOR CURRENT DTC

Note: If the TCM detects and stores a DTC, the TCM also stores the engine/vehicle operating conditions under which the DTC was set. Some of these conditions are displayed on the DRB III® at the same time the DTC is displayed.

Note: Before erasing stored DTCs, record these conditions. Attempting to duplicate these conditions may assist when checking for an active DTC.
Turn the ignition on.
With the DRB III®, erase TCM DTCs.

Note: It maybe necessary to road test the vehicle for this DTC to set.
With the DRB III®, read the TCM DTCs.

Did this DTC set again?

Yes >> Go To 4

No >> Go To 7

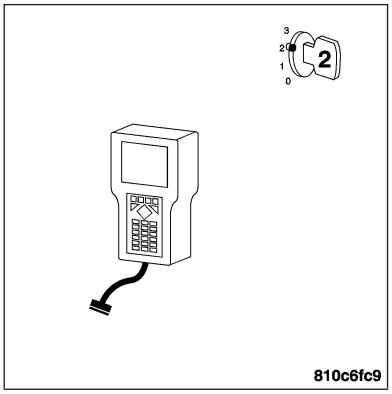

4. CHECK TO SEE IF ENGINE COMMUNICATION DTCS ARE PRESENT

With the ignition on.
With the DRB III®, read Engine DTCs.

Are any Engine Bus related DTCs present?

Yes >> Refer to the Engine - Electrical Diagnostics category and perform the appropriate symptom.

No >> Go To 5

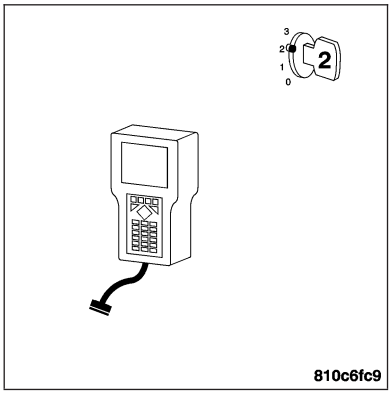

(P0600) ACCEL PEDAL SENSOR CAN MESSAGE INCORRECT — CONTINUED

5. CHECK TO SEE IF ENGINE DTCS ARE PRESENT

With the ignition on.
With the DRB III®, read Engine DTCs.

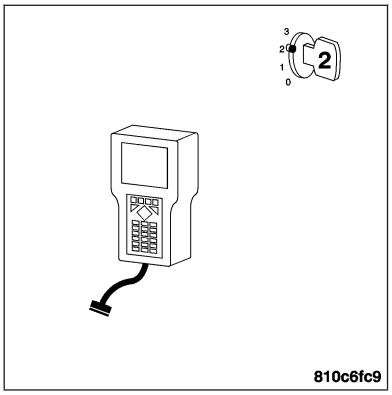

Are any Engine APPS or TPS DTCs present?

Yes >> Refer to the Engine - Electrical Diagnostics category and perform the appropriate symptom.

No >> Go To 6

6. TCM - ENGINE TPS MESSAGE

Turn the ignition off.
Replace the Transmission Control Module. **Refer to Page 8E-60**.
Perform NAG1 TRANSMISSION VERIFICATION TEST.
Turn the ignition on.
With the DRB III®, read Transmission DTCs.

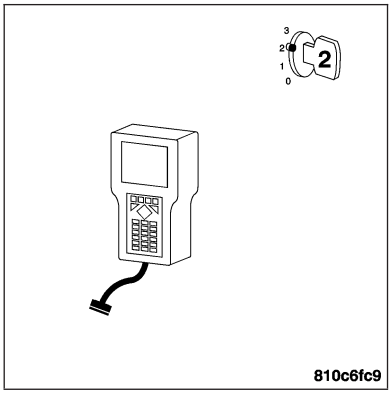

Did DTC (P0600) ACCEL PEDAL SENSOR CAN MESSAGE INCORRECT set again?

Yes >> Replace and program the Powertrain Control Module. **Refer to Page 8E-56**.
Perform NAG1 TRANSMISSION VERIFICATION TEST.

No >> Test Complete.

7. INTERMITTENT WIRING AND CONNECTORS

The condition that caused this DTC to set is currently not present. Inspect the related wiring harness for a possible intermittent condition.
Using the schematics as a guide, inspect the wiring and connectors specific to this circuit.
Wiggle the wires while checking for shorts and open circuits.

Note: Check for any Technical Service Bulletins that may apply.

Were any problems found?

Yes >> Repair as necessary.
Perform NAG1 TRANSMISSION VERIFICATION TEST.

No >> Test Complete.

(P0600) CAN MESSAGE FROM ECM FROM SLA

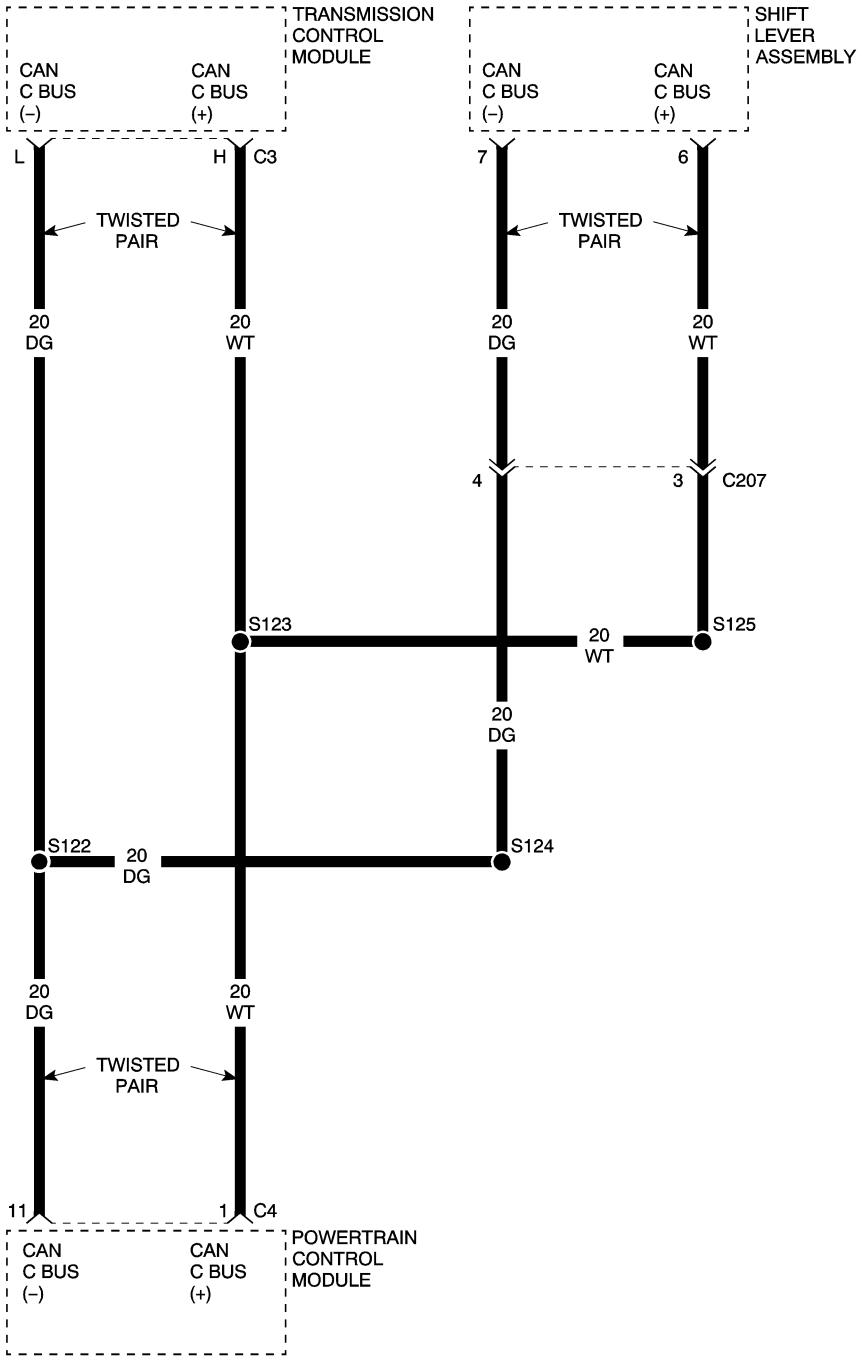

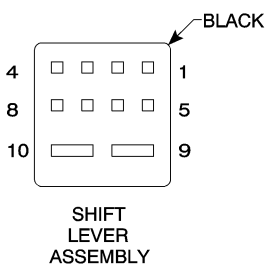

SHIFT LEVER ASSEMBLY

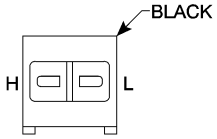

TRANSMISSION CONTROL MODULE C3

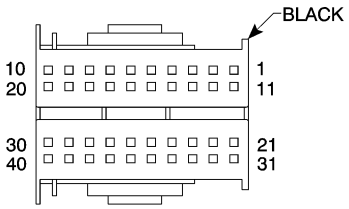

POWERTRAIN CONTROL MODULE – C4

81159382

(P0600) CAN MESSAGE FROM ECM FROM SLA — CONTINUED

When Monitored and Set Condition

- When Monitored: SLA CAN-ID received at least once by the PCM and CAN Bus Circuit DTC is not active.
- Set Condition: CAN message received by the PCM from the Shift Lever Assembly is incorrect.

POSSIBLE CAUSES
CAN BUS CIRCUIT DTC PRESENT
SHIFT LEVER DTCS PRESENT
CAN C BUS CIRCUIT(S) OPEN
SHIFT LEVER ASSEMBLY

For a complete Transmission Control Module Circuit Diagram **Refer to Page 21-182**.

For a complete CAN BUS Circuit Diagram **Refer to Page 8E-45**.

Diagnostic Test

1. PRE-DIAGNOSTIC CHECKOUT

Note: Low fluid level can be the cause of many transmission problems. If the fluid level is low, locate and repair the leak, then check and adjust the fluid level in accordance with the Service Information.

Note: Always perform diagnostics with a fully charged battery to avoid false symptoms.

With the DRB III®, read the engine DTCs. Check and repair all engine DTCs prior to performing transmission symptom diagnostics.

With the DRB III®, read and record all Transmission DTCs.

Note: Check connectors – Clean/Repair as necessary. Poor pin to terminal connections can set DTCs.

Using the wiring diagram/schematic as a guide, inspect the wiring and connectors.

Repair as necessary.

Most DTCs set on startup but some must be set by driving the vehicle such that all diagnostic monitors have run.

Note: Verify flash level of the transmission controller. Some problems are corrected by software upgrades to the transmission controller.

Note: Check for any Technical Service Bulletins that may apply.

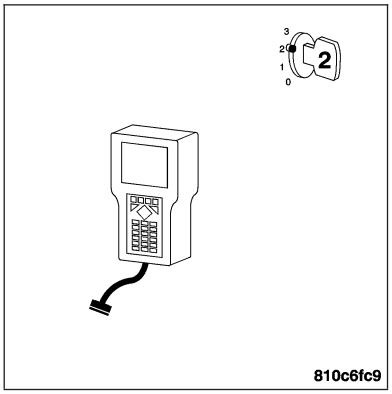

Perform this procedure prior to Symptom diagnosis.

Continue

Go To 2

(P0600) CAN MESSAGE FROM ECM FROM SLA — CONTINUED

2. CHECK TO SEE IF (P0720) CAN BUS CIRCUIT DTC PRESENT

Turn the ignition on.
With the DRB III®, read DTCs.

Note: If the DTC, (P0720) CAN BUS CIRCUIT, is present, perform diagnostics on that symptom first.

Is the DTC, (P0720) CAN BUS CIRCUIT, present?

Yes >> Refer to the Transmission - Electrical Diagnostics category and perform the appropriate symptom.

No >> Go To 3

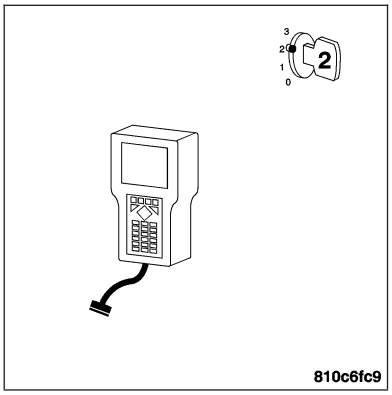

3. CHECK TO SEE IF SHIFT LEVER DTC PRESENT

With the ignition on.
With the DRB III®, read Shift Lever DTCs.

Are any Shift Lever DTCs present?

Yes >> Refer to the Shift Lever Assembly category in this section and perform the appropriate symptom.

No >> Go To 4

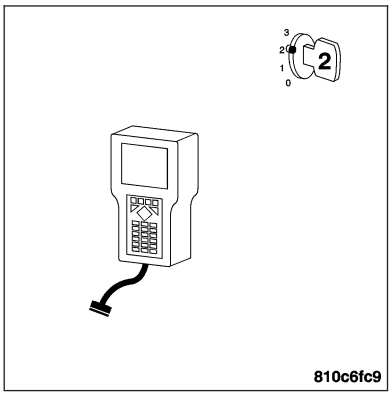

4. CAN C BUS (+) OR (-) CIRCUIT(S) OPEN

Turn the ignition off.
Disconnect the Shift Lever Assembly harness connector.

Note: Check connectors - Clean/repair as necessary.
Measure the resistance between the CAN C Bus (+) circuit and the CAN C Bus (-) circuit in the Shift Lever Assembly harness connector.

Is the resistance 60 ohms ± 3.0 ohms?

Yes >> Replace the Shift Lever Assembly. **Refer to Page 21-340**. Perform NAG1 TRANSMISSION VERIFICATION TEST.

No >> Repair the faulty CAN C Bus circuit for an open. Perform NAG1 TRANSMISSION VERIFICATION TEST.

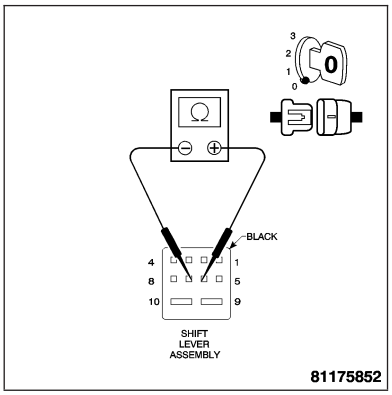

(P0600) ENGINE CAN MESSAGE INCORRECT



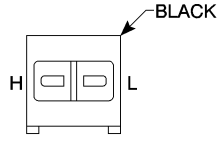

TRANSMISSION CONTROL MODULE C3

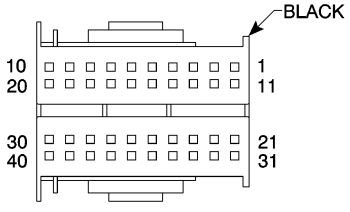

POWERTRAIN CONTROL MODULE – C4

81157b65

(P0600) ENGINE CAN MESSAGE INCORRECT — CONTINUED

When Monitored and Set Condition

- When Monitored: CAN-ID received at least once and CAN Bus Circuit is not active.
- Set Condition: DTC Detected if the number of bytes is incorrect for CAN ID.

POSSIBLE CAUSES
ENGINE DTCS PRESENT
POWERTRAIN CONTROL MODULE
TRANSMISSION CONTROL MODULE

For a complete Transmission Control Module Circuit Diagram **Refer to Page 21-182**.

For a complete CAN BUS Circuit Diagram **Refer to Page 8E-45**.

1. PRE-DIAGNOSTIC CHECK OUT

Note: Low fluid level can be the cause of many transmission problems. If the fluid level is low, locate and repair the leak then check and adjust the fluid level in accordance with the Service Information.

Note: Always perform diagnostics with a fully charged battery to avoid false symptoms.

With the DRB III®, read the engine DTCs. Check and repair all engine DTCs prior to performing transmission symptom diagnostics.

With the DRB III®, read and record all Transmission DTCs.

Note: Check connectors - Clean/repair as necessary. Poor pin to terminal connections can set DTCs.

Using the wiring diagram/schematic as a guide, inspect the wiring and connectors. Repair as necessary.

Most DTCs set on start up but some must be set by driving the vehicle such that all diagnostic monitors have run.

Note: Verify flash level of transmission controller. Some problems are corrected by software upgrades to the transmission controller.

Note: Check for any Technical Service Bulletins that may apply.

Perform this procedure prior to Symptom diagnosis.

Continue

Go To 2

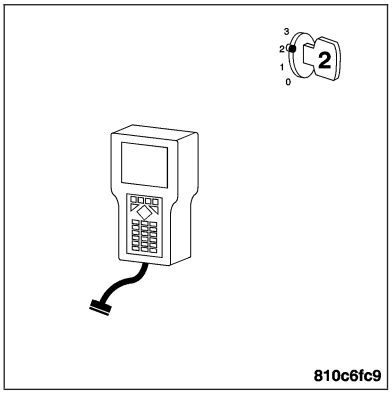

(P0600) ENGINE CAN MESSAGE INCORRECT — CONTINUED

2. CHECK TO SEE IF ENGINE DTCS ARE PRESENT

Turn the ignition on.
With the DRB III®, read Engine DTCs.

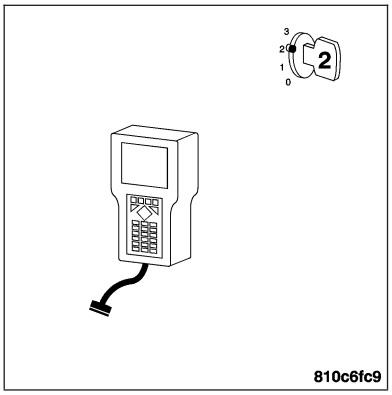

Are any performance or bus related Engine DTCs present?

Yes >> Refer to the Engine - Electrical Diagnostics category and perform the appropriate symptom.

No >> Go To 3

3. PCM - ENGINE CAN MESSAGE INCORRECT

Turn the ignition off.
Replace and program the Powertrain Control Module. **Refer to Page 8E-56**.
Turn the ignition on.
With the DRB III®, erase Transmission DTCs.
Start the engine.
With the brakes firmly applied, shift the gear selector into drive.
With the DRB III®, read Transmission DTCs.

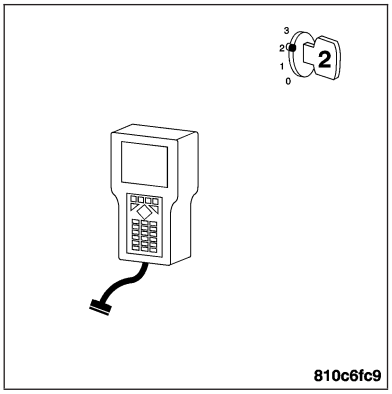

Did DTC (P0600) ENGINE CAN MESSAGE INCORRECT set again?

Yes >> Replace the Transmission Control Module. **Refer to Page 8E-60**.
Perform NAG1 TRANSMISSION VERIFICATION TEST.

No >> Test Complete.

(P0600) ENGINE CAN MESSAGE MISSING

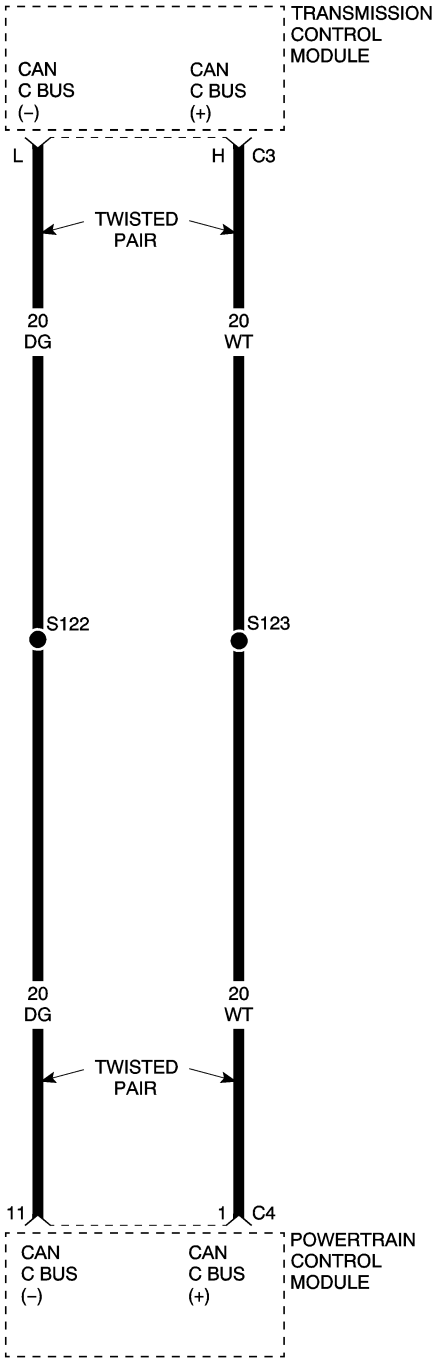

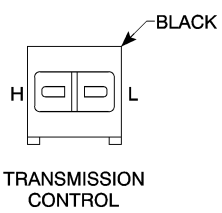

TRANSMISSION CONTROL MODULE C3

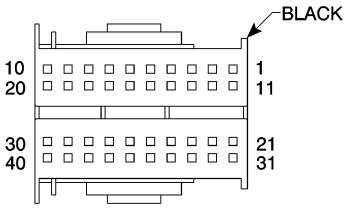

POWERTRAIN CONTROL MODULE – C4

81157b81

(P0600) ENGINE CAN MESSAGE MISSING — CONTINUED

When Monitored and Set Condition

- When Monitored: CAN Bus Circuit error not present 1 second after ignition on and not in Park or Neutral, no System Overvoltage or System Undervoltage conditions present, or transmission in Park or Neutral and engine RPM greater than 850 RPM.
- Set Condition: This DTC is set if a CAN ID was not received in the required time, from the Powertrain Controller.

POSSIBLE CAUSES
CAN BUS CIRCUIT DTC PRESENT
ENGINE DTCS PRESENT
CAN C BUS +/- CIRCUIT OPEN
POWERTRAIN CONTROL MODULE
TRANSMISSION CONTROL MODULE

For a complete Transmission Control Module Circuit Diagram **Refer to Page 8E-45**.

For a complete CAN BUS Circuit Diagram **Refer to Page 21-182**.

Diagnostic Test

1. PRE-DIAGNOSTIC CHECK OUT

Note: Low fluid level can be the cause of many transmission problems. If the fluid level is low, locate and repair the leak then check and adjust the fluid level in accordance with the Service Information.

Note: Always perform diagnostics with a fully charged battery to avoid false symptoms.

With the DRB III®, read the engine DTCs. Check and repair all engine DTCs prior to performing transmission symptom diagnostics.

With the DRB III®, read and record all Transmission DTCs.

Note: Check connectors - Clean/repair as necessary. Poor pin to terminal connections can set DTCs.

Using the wiring diagram/schematic as a guide, inspect the wiring and connectors. Repair as necessary.

Most DTCs set on start up but some must be set by driving the vehicle such that all diagnostic monitors have run.

Note: Verify flash level of transmission controller. Some problems are corrected by software upgrades to the transmission controller.

Note: Check for any Technical Service Bulletins that may apply.

Perform this procedure prior to Symptom diagnosis.

Continue

Go To 2

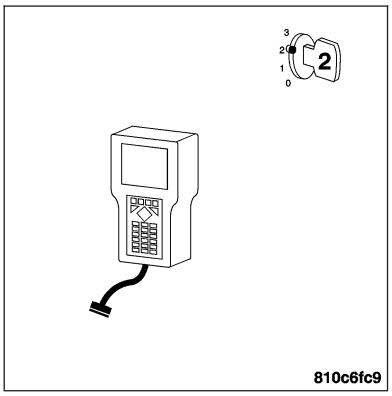

(P0600) ENGINE CAN MESSAGE MISSING — CONTINUED

2. (P0720) CAN BUS CIRCUIT DTC PRESENT

Turn the ignition on.
With the DRB III®, read Transmission DTCs.

Note: If DTC (P0720) CAN BUS CIRCUIT is present, perform diagnostics on that symptom first.

Is DTC (P0720) CAN BUS CIRCUIT present?

Yes >> Refer to the Transmission - Electrical Diagnostics category and perform the appropriate symptom.
Perform NAG1 TRANSMISSION VERIFICATION TEST.

No >> Go To 3

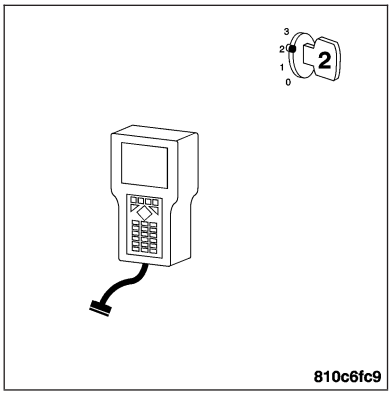

3. CHECK TO SEE IF ENGINE DTCS ARE PRESENT

With the ignition on.
With the DRB III®, read Engine DTCs.

Are any performance or bus related Engine DTCs present?

Yes >> Refer to the Engine - Electrical Diagnostics category and perform the appropriate symptom.
Perform NAG1 TRANSMISSION VERIFICATION TEST.

No >> Go To 4

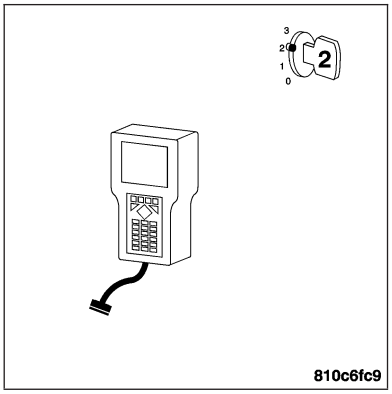

4. CAN C BUS +/- CIRCUIT OPEN

Turn the ignition off.
Disconnect the PCM C4 harness connector.
Disconnect the TCM C3 harness connector.

Note: Check connectors - Clean/repair as necessary.
Measure the resistance of the CAN C Bus (+) circuit from the PCM C4 harness connector to the TCM C3 harness connector.
Measure the resistance of the CAN C Bus (-) circuit from the PCM C4 harness connector to the TCM C3 harness connector.

Is the resistance above 5.0 ohms on either circuit?

Yes >> Repair the faulty CAN C Bus circuit for an open.
Perform NAG1 TRANSMISSION VERIFICATION TEST.

No >> Go To 5

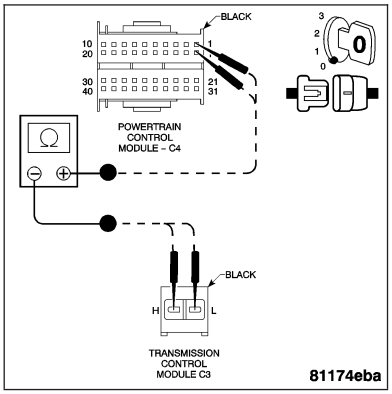

(P0600) ENGINE CAN MESSAGE MISSING — CONTINUED

5. PCM - ENGINE CAN MESSAGE MISSING

With the ignition off.

Reconnect the TCM C3 harness connector.

Replace and program the Powertrain Control Module. **Refer to Page 8E-56**.

With the DRB III®, erase Transmission DTCs.

Start the engine.

With the brakes firmly applied, shift the gear selector into Drive.

With the DRB III®, read Transmission DTCs.

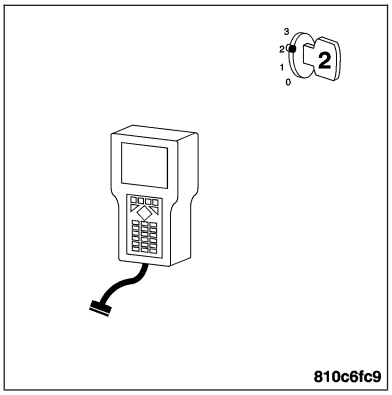

Did DTC (P0600) ENGINE CAN MESSAGE MISSING set again?

Yes >> Replace the Transmission Control Module in accordance with the Service Information. **Refer to Page 8E-60**.
Perform NAG1 TRANSMISSION VERIFICATION TEST.

No >> Test Complete.

(P0600) ENGINE RPM MESSAGE

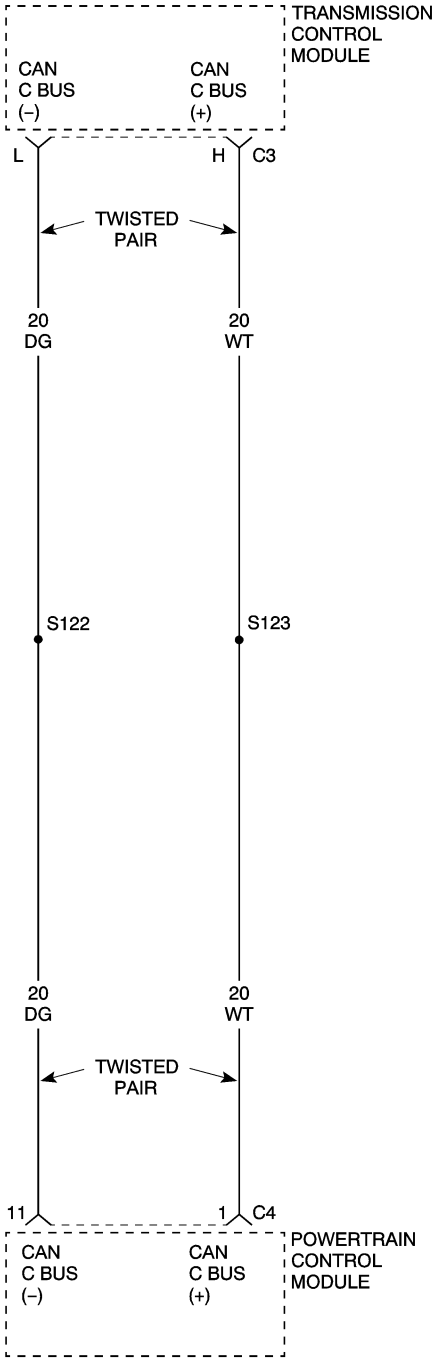

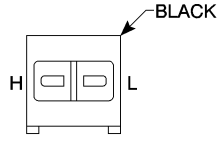

TRANSMISSION CONTROL MODULE C3

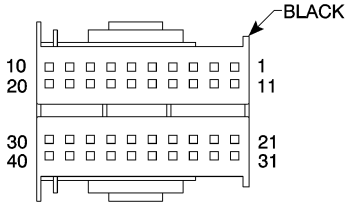

POWERTRAIN CONTROL MODULE – C4

81157b65

(P0600) ENGINE RPM MESSAGE — CONTINUED

When Monitored and Set Condition

- When Monitored: Valid TPS CAN message received at least once and CAN Bus Circuit, Engine CAN Message Missing and Engine CAN Message Incorrect are not active.
- Set Condition: Engine Speed signal not valid or PCM error.

POSSIBLE CAUSES
CAN BUS CIRCUIT DTC PRESENT
ENGINE DTCS PRESENT
POWERTRAIN CONTROL MODULE
TRANSMISSION CONTROL MODULE

For a complete Transmission Control Module Circuit Diagram **Refer to Page 21-182**.

For a complete CAN BUS Circuit Diagram **Refer to Page 8E-45**.

Diagnostic Test

1. PRE-DIAGNOSTIC CHECK OUT

Note: Low fluid level can be the cause of many transmission problems. If the fluid level is low locate and repair the leak then check and adjust the fluid level in accordance with the Service Information.

Note: Always perform diagnostics with a fully charged battery to avoid false symptoms.

With the DRB III®, read the engine DTCs. Check and repair all engine DTCs prior to performing transmission symptom diagnostics.

With the DRB III®, read and record all Transmission DTCs.

Note: Check connectors - Clean/repair as necessary. Poor pin to terminal connections can set DTCs.

Using the wiring diagram/schematic as a guide, inspect the wiring and connectors. Repair as necessary.

Most DTCs set on start up but some must be set by driving the vehicle such that all diagnostic monitors have run.

Note: Verify flash level of transmission controller. Some problems are corrected by software upgrades to the transmission controller.

Note: Check for any Technical Service bulletins that may apply.

Perform this procedure prior to Symptom diagnosis.

Continue

Go To 2

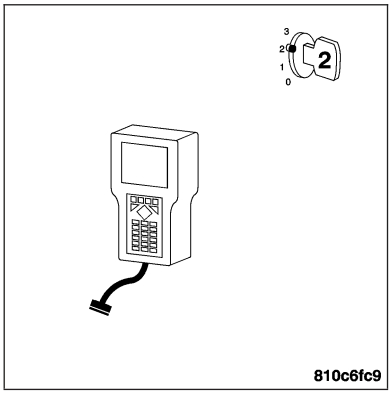

(P0600) ENGINE RPM MESSAGE — CONTINUED

2. (P0720) CAN BUS CIRCUIT DTC PRESENT

Turn the ignition on.
With the DRB III®, read Transmission DTCs.

Note: If DTC (P0720) CAN BUS CIRCUIT is present, perform diagnostics on that symptom first.

Is DTC (P0720) CAN BUS CIRCUIT present?

Yes >> Refer to the Transmission - Electrical Diagnostics category and perform the appropriate symptom.

No >> Go To 3

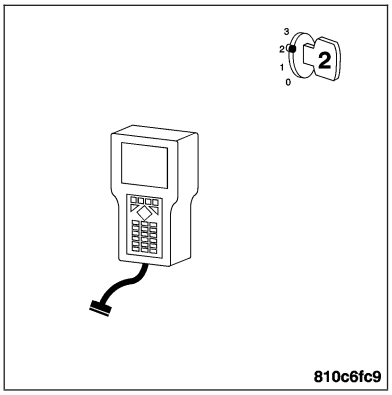

3. CHECK TO SEE IF ENGINE DTCS ARE PRESENT

With the ignition on.
With the DRB III®, read Engine DTCs.

Are any performance or Bus related Engine DTCs present?

Yes >> Refer to the Engine - Electrical Diagnostics category and perform the appropriate symptom.

No >> Go To 4

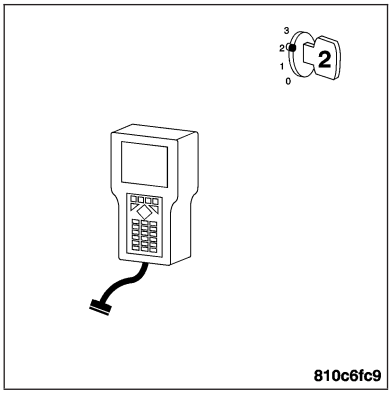

4. PCM - ENGINE RPM MESSAGE

Turn the ignition off.
Replace and program the Powertrain Control Module. **Refer to Page 8E-56**.
Turn the ignition on.
With the DRB III®, erase Transmission DTCs.
Start the engine.
With the brakes firmly applied, shift the gear selector into drive.
With the DRB III®, read Transmission DTCs.

Did DTC (P0600) ENGINE RPM MESSAGE set again?

Yes >> Replace the Transmission Control Module. **Refer to Page 8E-60**.
Perform NAG1 TRANSMISSION VERIFICATION TEST.

No >> Test Complete.

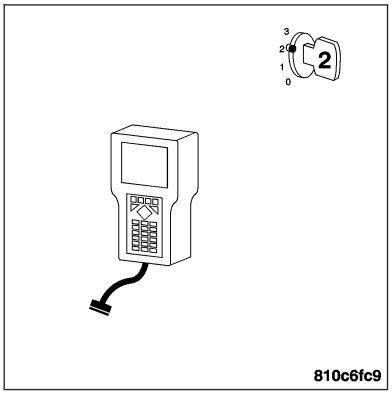

(P0600) ENGINE TEMPERATURE MESSAGE



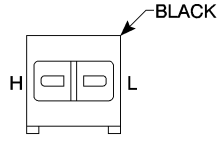

TRANSMISSION CONTROL MODULE C3

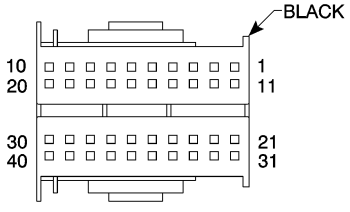

POWERTRAIN CONTROL MODULE – C4

81157b65

(P0600) ENGINE TEMPERATURE MESSAGE — CONTINUED

When Monitored and Set Condition

- When Monitored: Valid Engine Temperature CAN message received at least once and CAN Bus Circuit error, Engine CAN Message Missing and Engine CAN Message Incorrect are not active.
- Set Condition: Engine coolant temperature signal is not valid - indicates possible coolant temperature sensor error.

POSSIBLE CAUSES
CAN BUS CIRCUIT DTC PRESENT
ENGINE DTCS PRESENT
POWERTRAIN CONTROL MODULE
TRANSMISSION CONTROL MODULE

For a complete Transmission Control Module Circuit Diagram **Refer to Page 21-182**.

For a complete CAN BUS Circuit Diagram **Refer to Page 8E-45**.

Diagnostic Test

1. PRE-DIAGNOSTIC CHECK OUT

Note: Low fluid level can be the cause of many transmission problems. If the fluid level is low, locate and repair the leak then check and adjust the fluid level in accordance with the Service Information.

Note: Always perform diagnostics with a fully charged battery to avoid false symptoms.

With the DRB III®, read the engine DTCs. Check and repair all engine DTCs prior to performing transmission symptom diagnostics.

With the DRB III®, read and record all Transmission DTCs.

Note: Check connectors - Clean/repair as necessary. Poor pin to terminal connections can set DTCs.

Using the wiring diagram/schematic as a guide, inspect the wiring and connectors. Repair as necessary.

Most DTCs set on start up but some must be set by driving the vehicle such that all diagnostic monitors have run.

Note: Verify flash level of transmission controller. Some problems are corrected by software upgrades to the transmission controller.

Note: Check for any Technical Service Bulletins that may apply.

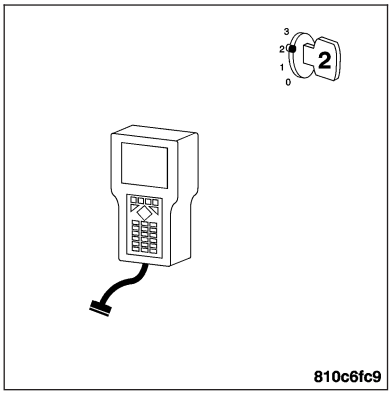

Perform this procedure prior to Symptom diagnosis.

Continue

Go To 2

(P0600) ENGINE TEMPERATURE MESSAGE — CONTINUED

2. (P0720) CAN BUS CIRCUIT DTC PRESENT

Turn the ignition on.
With the DRB III®, read Transmission DTCs.

Note: If DTC (P0720) CAN BUS CIRCUIT is present, perform diagnostics on that symptom first.

Is DTC (P0720) CAN BUS CIRCUIT present?

Yes >> Refer to the Transmission - Electrical Diagnostics category and perform the appropriate symptom.

No >> Go To 3

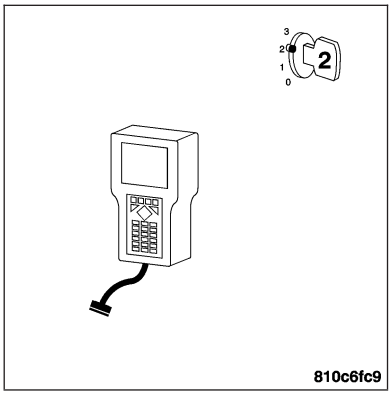

3. CHECK TO SEE IF ENGINE DTCS ARE PRESENT

With the ignition on.
With the DRB III®, read Engine DTCs.

Are any Engine Coolant Temperature Sensor DTCs present?

Yes >> Refer to the Engine - Electrical Diagnostics category and perform the appropriate symptom.

No >> Go To 4

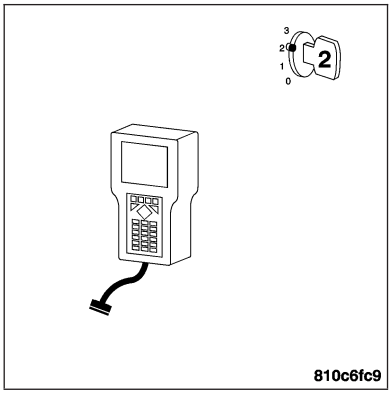

4. PCM - ENGINE TEMP MESSAGE

Turn the ignition off.
Replace and program the Powertrain Control Module. **Refer to Page 8E-56**.
Turn the ignition on.
With the DRB III®, erase Transmission DTCs.
Start the engine.
With the brakes firmly applied, shift the gear selector into drive.
With the DRB III®, read Transmission DTCs.

Did DTC (P0600) ENGINE TEMPERATURE MESSAGE set again?

Yes >> Replace the Transmission Control Module. **Refer to Page 8E-60**.
Perform NAG1 TRANSMISSION VERIFICATION TEST.

No >> Test Complete.

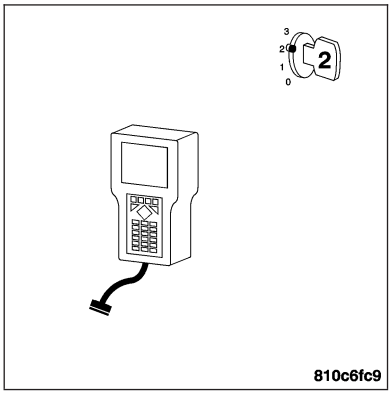

(P0600) ENGINE TORQUE MESSAGE INCORRECT



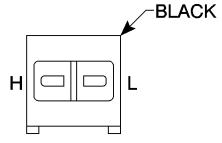

TRANSMISSION CONTROL MODULE C3

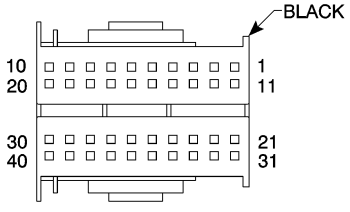

POWERTRAIN CONTROL MODULE – C4

81157b65

(P0600) ENGINE TORQUE MESSAGE INCORRECT — CONTINUED

When Monitored and Set Condition

- When Monitored: Valid Torque CAN message received at least once and CAN Bus Circuit, Engine CAN Message Missing and Engine CAN Message Incorrect are not active.
- Set Condition: Engine torque message not valid or Powertrain Control Module error.

POSSIBLE CAUSES
ENGINE DTCS PRESENT
POWERTRAIN CONTROL MODULE
TRANSMISSION CONTROL MODULE

For a complete Transmission Control Module Circuit Diagram **Refer to Page 21-182**.

For a complete CAN BUS Circuit Diagram **Refer to Page 8E-45**.

Diagnostic Test

1. PRE-DIAGNOSTIC CHECK OUT

Note: Low fluid level can be the cause of many transmission problems. If the fluid level is low, locate and repair the leak then check and adjust the fluid level in accordance with the Service Information.

Note: Always perform diagnostics with a fully charged battery to avoid false symptoms.

With the DRB III®, read the engine DTCs. Check and repair all engine DTCs prior to performing transmission symptom diagnostics.

With the DRB III®, read and record all Transmission DTCs.

Note: Check connectors - Clean/repair as necessary. Poor pin to terminal connections can set DTCs.

Using the wiring diagram/schematic as a guide, inspect the wiring and connectors. Repair as necessary.

Most DTCs set on start up but some must be set by driving the vehicle such that all diagnostic monitors have run.

Note: Verify flash level of transmission controller. Some problems are corrected by software upgrades to the transmission controller.

Note: Check for any Technical Service Bulletins that may apply.

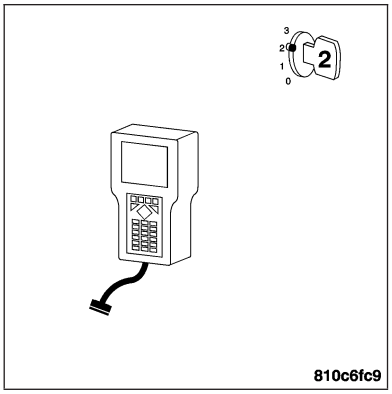

Perform this procedure prior to Symptom diagnosis.

Continue

Go To 2

(P0600) ENGINE TORQUE MESSAGE INCORRECT — CONTINUED

2. CHECK TO SEE IF ENGINE DTCS ARE PRESENT

Turn the ignition on.
With the DRB III®, read Engine DTCs.

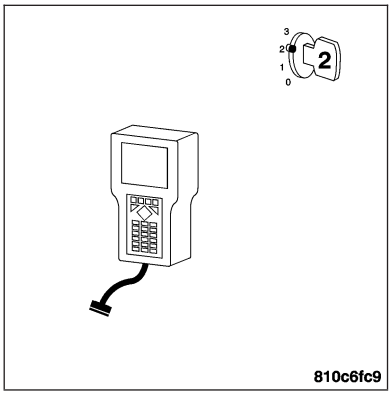

Are any performance or Bus related Engine DTCs present?

Yes >> Refer to the Engine - Electrical Diagnostics category and perform the appropriate symptom.

No >> Go To 3

3. PCM - ENGINE TORQUE MESSAGE INCORRECT

Turn the ignition off.
Replace and program the Powertrain Control Module. **Refer to Page 8E-56**.
Turn the ignition on.
With the DRB III®, erase Transmission DTCs.
Drive the vehicle performing multiple aggressive upshifts and downshifts.
With the DRB III®, read Transmission DTCs.

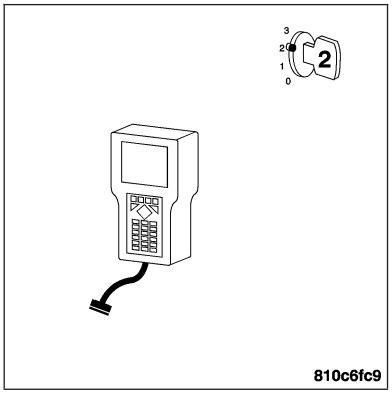

Did DTC (P0600) ENGINE TORQUE MESSAGE INCORRECT set again?

Yes >> Replace the Transmission Control Module. **Refer to Page 8E-60**.
Perform NAG1 TRANSMISSION VERIFICATION TEST.

No >> Test Complete.

(P0600) IC CAN MESSAGE INCORRECT

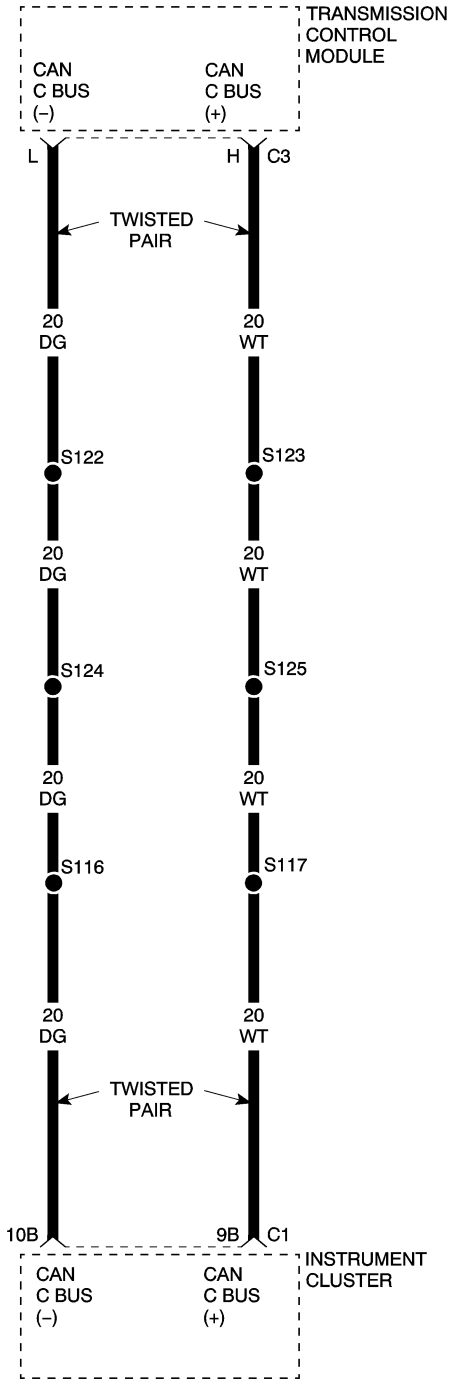

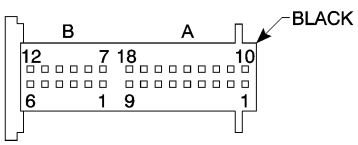

INSTRUMENT CLUSTER C1

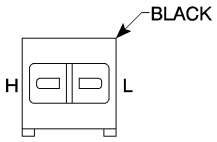

TRANSMISSION CONTROL MODULE C3

811590cf

(P0600) IC CAN MESSAGE INCORRECT — CONTINUED

When Monitored and Set Condition

- When Monitored: IC CAN-ID received at least once and CAN Bus Circuit DTC is not active.
- Set Condition: CAN message received from the Instrument Cluster is incorrect.

POSSIBLE CAUSES
CAN BUS CIRCUIT DTC PRESENT
INSTRUMENT CLUSTER DTCS PRESENT
CAN C BUS CIRCUIT OPEN
INSTRUMENT CLUSTER

For a complete Transmission Control Module Circuit Diagram **Refer to Page 21-182**.

For a complete CAN BUS Circuit Diagram **Refer to Page 8E-45**.

Diagnostic Test

1. PRE-DIAGNOSTIC CHECK OUT

Note: Low fluid level can be the cause of many transmission problems. If the fluid level is low, locate and repair the leak, then check and adjust the fluid level in accordance with the Service Information.

Note: Always perform diagnostics with a fully charged battery to avoid false symptoms.

With the DRB III®, read the engine DTCs. Check and repair all engine DTCs prior to performing transmission symptom diagnostics.

With the DRB III®, read and record all Transmission DTCs.

Note: Check connectors – Clean/Repair as necessary. Poor pin to terminal connections can set DTCs.

Using the wiring diagram/schematic as a guide, inspect the wiring and connectors.

Repair as necessary.

Most DTCs set on startup but some must be set by driving the vehicle such that all diagnostic monitors have run.

Note: Verify flash level of the transmission controller. Some problems are corrected by software upgrades to the transmission controller.

Note: Check for any Technical Service Bulletins that may apply.

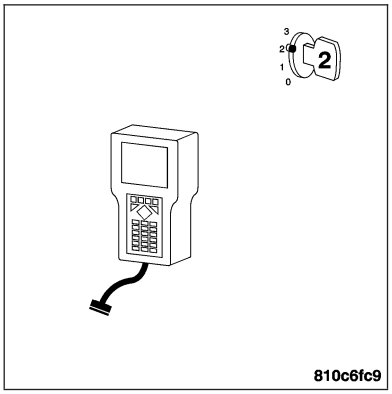

Perform this procedure prior to Symptom diagnosis.

Continue

Go To 2

(P0600) IC CAN MESSAGE INCORRECT — CONTINUED

2. CHECK TO SEE IF (P0720) CAN BUS CIRCUIT DTC PRESENT

Turn the ignition on.
With the DRB III®, read Transmission DTCs.

Note: If DTC (P0720) CAN BUS CIRCUIT is present, perform diagnostics on that symptom first.

Is DTC (P0720) CAN BUS CIRCUIT present?

Yes >> Refer to the Transmission - Electrical Diagnostics category and perform the appropriate symptom.

No >> Go To 3

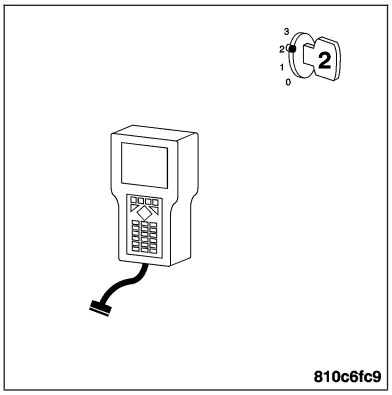

3. CHECK TO SEE IF INSTRUMENT CLUSTER DTC PRESENT

With the ignition on.
With the DRB III®, read Instrument Cluster DTCs.

Are any Instrument Cluster DTCs present?

Yes >> Refer to the Instrument Cluster - Electrical Diagnostics category and perform the appropriate symptom.

No >> Go To 4

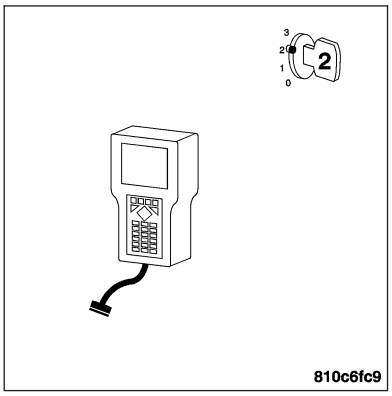

4. CAN C BUS (+) OR (-) CIRCUIT(S) OPEN

Turn the ignition off.
Disconnect the Instrument Cluster C1 harness connector.

Note: Check connectors - Clean/repair as necessary.
Measure the resistance between the CAN C Bus (+) circuit and the CAN C Bus (-) circuit in the Instrument Cluster C1 harness connector.

Is the resistance 60 ohms ± 3.0 ohms?

Yes >> Replace the Instrument Cluster. **Refer to Page 8J-83**.
Perform NAG1 TRANSMISSION VERIFICATION TEST.

No >> Repair the faulty CAN C Bus circuit for an open.
Perform NAG1 TRANSMISSION VERIFICATION TEST.

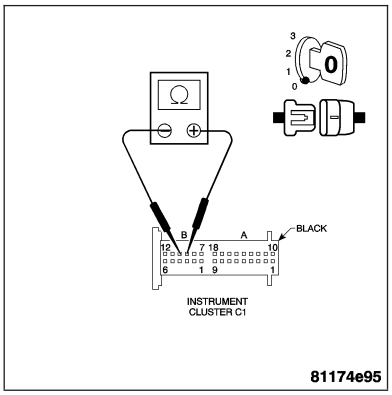

(P0600) IC/HVAC CAN MESSAGE MISSING

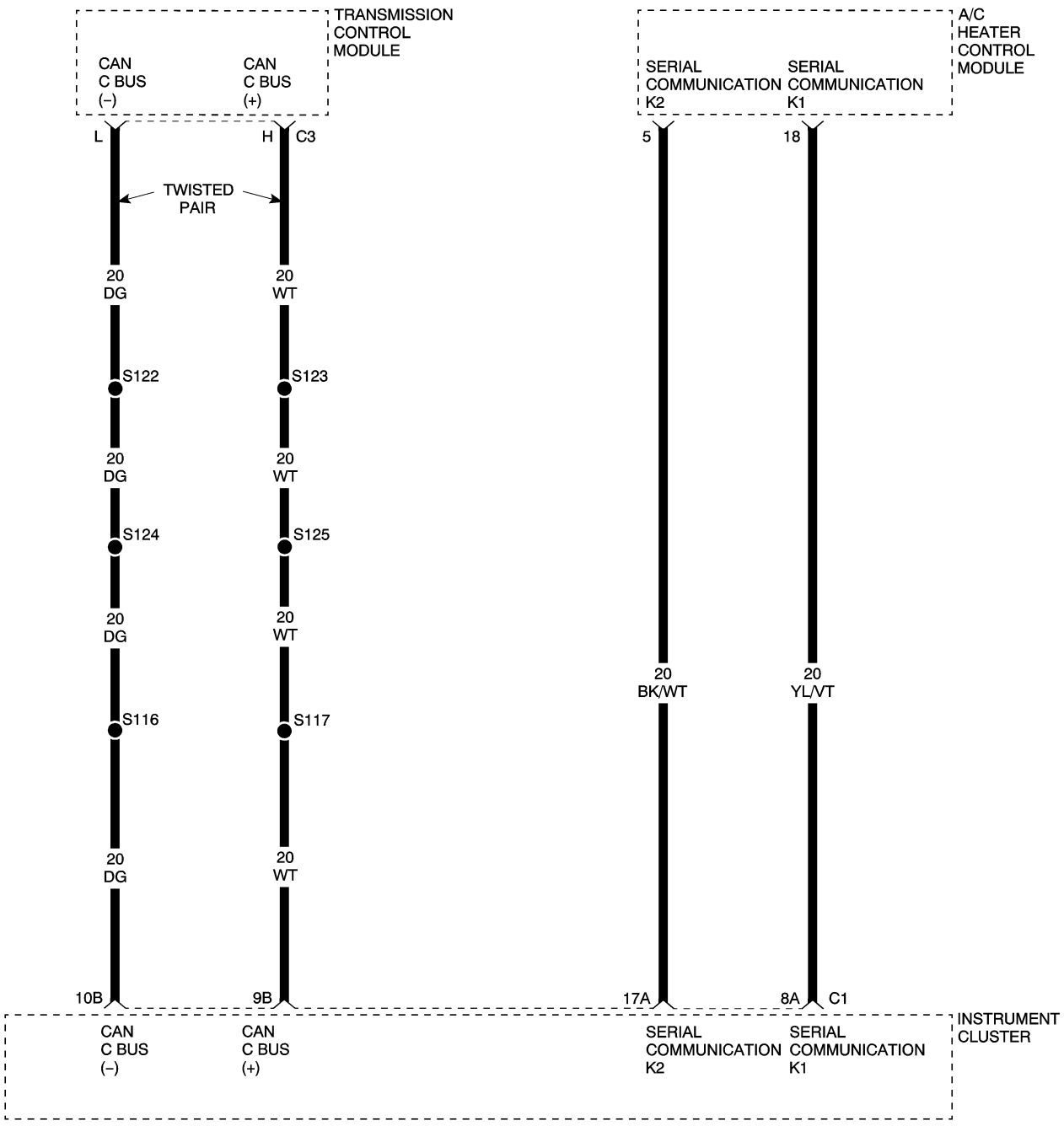

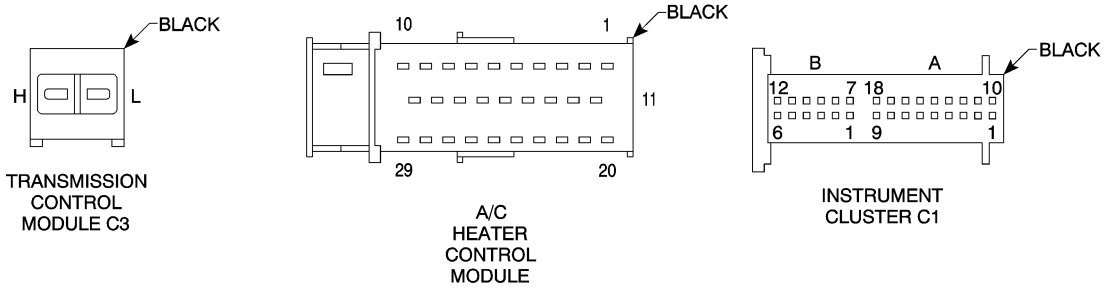

811585f3

(P0600) IC/HVAC CAN MESSAGE MISSING — CONTINUED

When Monitored and Set Condition

- When Monitored: IC CAN-ID received at least once and CAN Bus Circuit DTC is not active.
- Set Condition: CAN message received from the Instrument Cluster is missing or the IC reports over the CAN C Bus an SCI Bus message missing from the A/C Heater Control Module.

POSSIBLE CAUSES
CAN BUS CIRCUIT DTC PRESENT
INSTRUMENT CLUSTER DTC PRESENT
A/C HEATER CONTROL MODULE DTC PRESENT
CAN C BUS CIRCUIT OPEN
SERIAL COMMUNICATION CIRCUIT OPEN
A/C HEATER CONTROL MODULE
INSTRUMENT CLUSTER

For a complete Transmission Control Module Circuit Diagram **Refer to Page 21-182**.

For a complete CAN BUS Circuit Diagram **Refer to Page 8E-45**.

Diagnostic Test

1. PRE-DIAGNOSTIC CHECK OUT

Note: Low fluid level can be the cause of many transmission problems. If the fluid level is low, locate and repair the leak, then check and adjust the fluid level in accordance with the Service Information.

Note: Always perform diagnostics with a fully charged battery to avoid false symptoms.

With the DRB III®, read the engine DTCs. Check and repair all engine DTCs prior to performing transmission symptom diagnostics.

With the DRB III®, read and record all Transmission DTCs.

Note: Check connectors – Clean/Repair as necessary. Poor pin to terminal connections can set DTCs.

Using the wiring diagram/schematic as a guide, inspect the wiring and connectors.

Repair as necessary.

Most DTCs set on startup but some must be set by driving the vehicle such that all diagnostic monitors have run.

Note: Verify flash level of the transmission controller. Some problems are corrected by software upgrades to the transmission controller.

Note: Check for any Technical Service Bulletins that may apply.

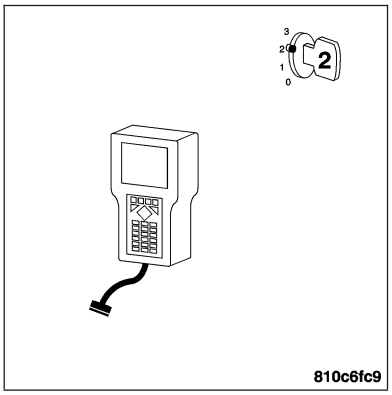

Perform this procedure prior to Symptom diagnosis.

Continue

Go To 2

(P0600) IC/HVAC CAN MESSAGE MISSING — CONTINUED

2. CHECK TO SEE IF (P0720) CAN BUS CIRCUIT DTC PRESENT

Turn the ignition on.
With the DRB III®, read Transmission DTCs.

Note: If DTC (P0720) CAN BUS CIRCUIT is present, perform diagnostics on that symptom first.

Is DTC (P0720) CAN BUS CIRCUIT present?

Yes >> Refer to the Transmission - Electrical Diagnostics category and perform the appropriate symptom.

No >> Go To 3

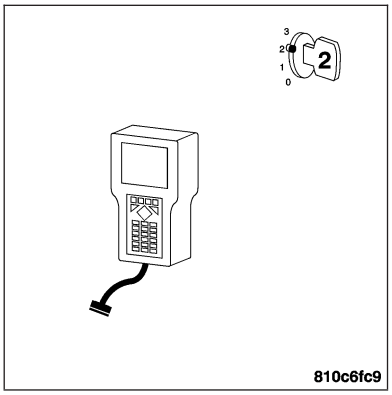

3. CHECK TO SEE IF INSTRUMENT CLUSTER DTC PRESENT

With the ignition on.
With the DRB III®, read Instrument Cluster DTCs.

Are any Instrument Cluster DTCs present?

Yes >> Refer to the Instrument Cluster - Electrical Diagnostics category and perform the appropriate symptom.

No >> Go To 4

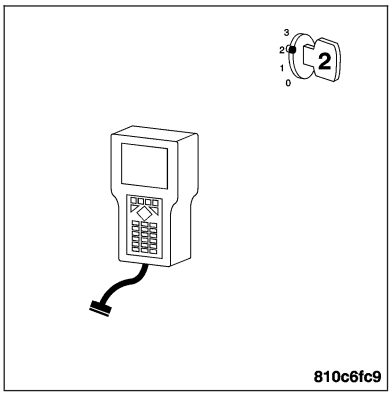

4. CHECK TO SEE IF A/C HEATER CONTROL MODULE DTC PRESENT

With the ignition on.
With the DRB III®, read A/C Heater Control Module DTCs.

Are any A/C Heater Control Module DTCs present?

Yes >> Refer to the Heating & Air Conditioning - Electrical Diagnostics category and perform the appropriate symptom.

No >> Go To 5

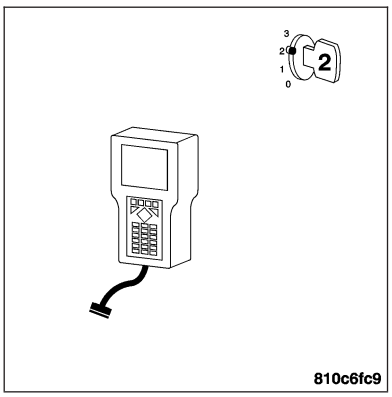

(P0600) IC/HVAC CAN MESSAGE MISSING — CONTINUED

5. CAN C BUS (+) OR (-) CIRCUIT(S) OPEN

Turn the ignition off.
Disconnect the Instrument Cluster C1 harness connector.

Note: Check connectors - Clean/repair as necessary.
Measure the resistance between the CAN C Bus (+) circuit and the CAN C Bus (-) circuit in the Instrument Cluster C1 harness connector.

Is the resistance 60 ohms ± 3.0 ohms?

Yes >> Go To 6

No >> Repair the faulty CAN C Bus circuit for an open.
Perform NAG1 TRANSMISSION VERIFICATION TEST.

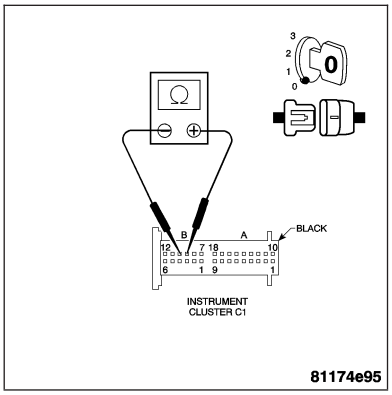

6. SERIAL COMMUNICATION K1 OR K2 CIRCUIT OPEN

With the ignition off.
Disconnect the A/C Heater Control Module harness connector.

Note: Check connectors - Clean/repair as necessary.
Measure the resistance of the Serial Communication K1 and K2 circuits from the Instrument Cluster C1 harness connector to the A/C Heater Control Module harness connector.

Is the resistance below 5 ohms for both circuits?

Yes >> Go To 7

No >> Repair the Serial Communication circuit(s) for an open.
Perform NAG1 TRANSMISSION VERIFICATION TEST.

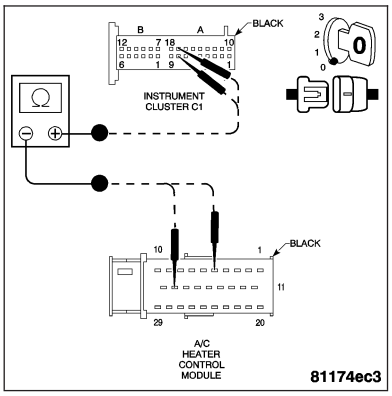

7. MODULE REPLACEMENT

Replace the A/C Heater Control Module. **Refer to Page 24-79**.
Perform NAG1 TRANSMISSION VERIFICATION TEST.
Turn the ignition on.
With the DRB III®, read Transmission DTCs.

Did this DTC set again?

Yes >> Replace the Instrument Cluster. **Refer to Page 8J-83**.
Perform NAG1 TRANSMISSION VERIFICATION TEST.

No >> Test Complete.

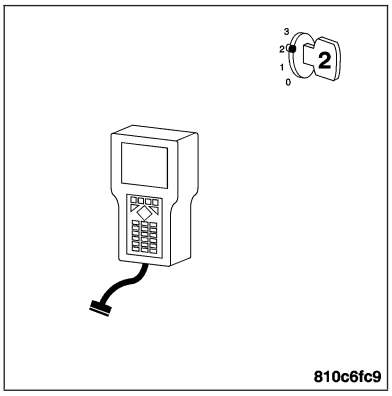

(P0600) SLA CAN MESSAGE INCORRECT

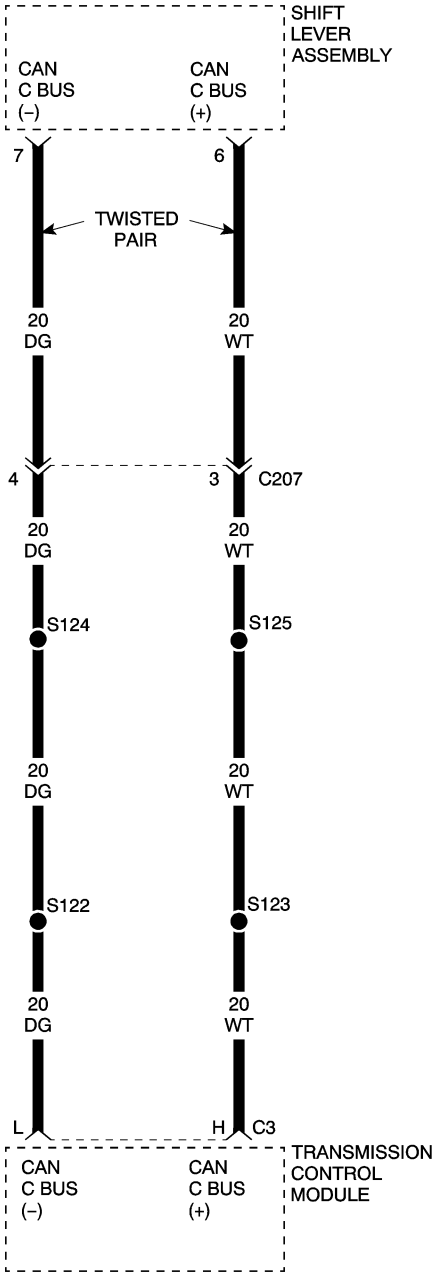

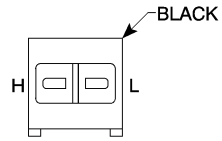

TRANSMISSION
CONTROL
MODULE C3

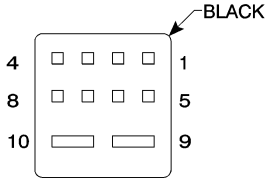

SHIFT
LEVER
ASSEMBLY

81159239

(P0600) SLA CAN MESSAGE INCORRECT — CONTINUED

When Monitored and Set Condition

- When Monitored: SLA CAN-ID received at least once and CAN Bus Circuit DTC is not active.
- Set Condition: CAN message received from the Shift Lever Assembly is incorrect.

POSSIBLE CAUSES
CAN BUS CIRCUIT DTC PRESENT
SHIFT LEVER ASSEMBLY DTCS PRESENT
CAN BUS CIRCUIT OPEN
SHIFT LEVER ASSEMBLY

For a complete Transmission Control Module Circuit Diagram **Refer to Page 21-182**.

For a complete CAN BUS Circuit Diagram **Refer to Page 8E-45**.

Diagnostic Test

1. PRE-DIAGNOSTIC CHECK OUT

Note: Low fluid level can be the cause of many transmission problems. If the fluid level is low, locate and repair the leak, then check and adjust the fluid level in accordance with the Service Information.

Note: Always perform diagnostics with a fully charged battery to avoid false symptoms.

With the DRB III®, read the engine DTCs. Check and repair all engine DTCs prior to performing transmission symptom diagnostics.

With the DRB III®, read and record all Transmission DTCs.

Note: Check connectors – Clean/Repair as necessary. Poor pin to terminal connections can set DTCs.

Using the wiring diagram/schematic as a guide, inspect the wiring and connectors.

Repair as necessary.

Most DTCs set on startup but some must be set by driving the vehicle such that all diagnostic monitors have run.

Note: Verify flash level of the transmission controller. Some problems are corrected by software upgrades to the transmission controller.

Note: Check for any Technical Service Bulletins that may apply.

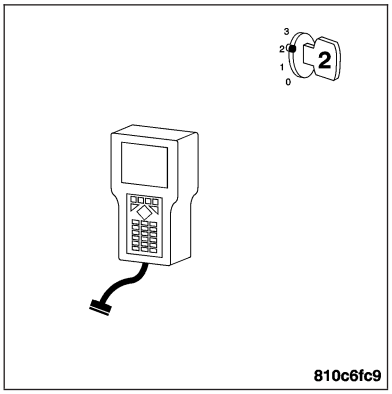

Perform this procedure prior to Symptom diagnosis.

Continue

Go To 2

(P0600) SLA CAN MESSAGE INCORRECT — CONTINUED

2. CHECK TO SEE IF (P0720) CAN BUS CIRCUIT DTC PRESENT

Turn the ignition on.
With the DRB III®, read Transmission DTCs.

Note: If DTC (P0720) CAN BUS CIRCUIT is present, perform diagnostics on that symptom first.

Is DTC (P0720) CAN BUS CIRCUIT present?

Yes >> Refer to the Transmission - Electrical Diagnostics category and perform the appropriate symptom.

No >> Go To 3

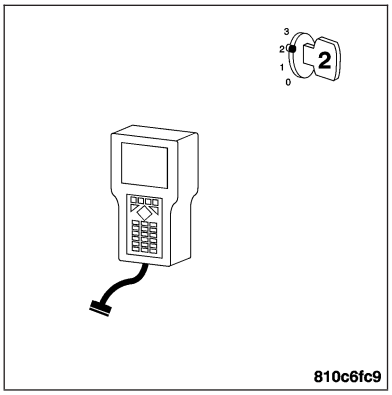

3. CHECK TO SEE IF SHIFT LEVER DTC PRESENT

With the ignition on.
With the DRB III®, read Shift Lever Assembly DTCs.

Are any Shift Lever Assembly DTCs present?

Yes >> Refer to the Shift Lever Assembly category and perform the appropriate symptom.

No >> Go To 4

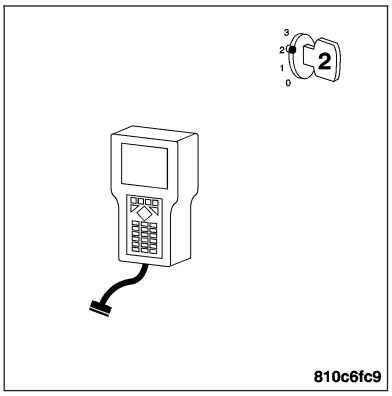

4. CAN C BUS (+) OR (-) CIRCUIT(S) OPEN

Turn the ignition off.
Disconnect the Shift Lever Assembly harness connector.

Note: Check connectors - Clean/repair as necessary.
Measure the resistance from the CAN C Bus (+) circuit to the CAN C Bus (-) circuit at the Shift Lever Assembly harness connector.

Is the resistance 60 ohms ± 3.0 ohms?

Yes >> Replace the Shift Lever Assembly. **Refer to Page 21-340**.
Perform NAG1 TRANSMISSION VERIFICATION TEST.

No >> Repair the faulty CAN C Bus circuit for an open.
Perform NAG1 TRANSMISSION VERIFICATION TEST.

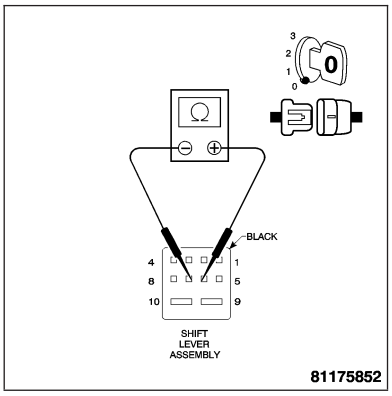

(P0700) SENSOR SUPPLY VOLTAGE

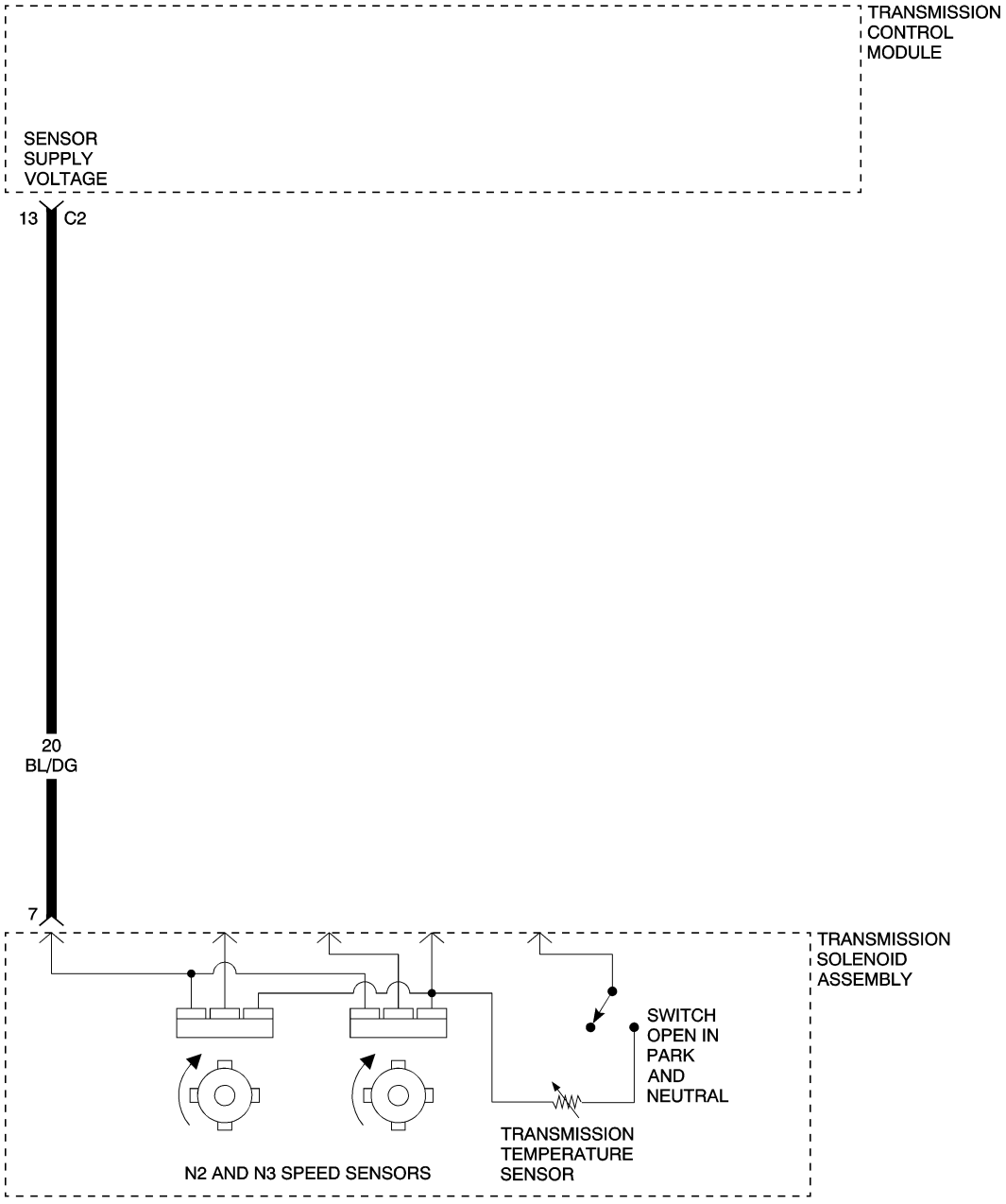

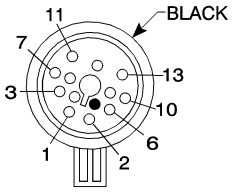

TRANSMISSION SOLENOID ASSEMBLY

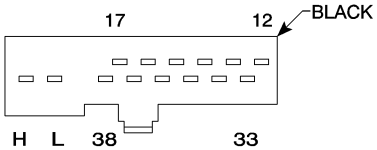

TRANSMISSION CONTROL MODULE C2

81157c04

(P0700) SENSOR SUPPLY VOLTAGE — CONTINUED

When Monitored and Set Condition

- When Monitored: Always monitored with system active at each ignition cycle and no undervoltage condition exists.
- Set Condition: If measured sensor voltage is not within specified limits 4.8-7.2 volts or if a failed regulator, Sensor Supply Voltage circuit shorted to ground, Sensor Supply Voltage circuit shorted to voltage is detected.

POSSIBLE CAUSES
SENSOR SUPPLY VOLTAGE CIRCUIT SHORTED TO ANOTHER CIRCUIT
SENSOR SUPPLY VOLTAGE CIRCUIT SHORTED TO GROUND
TRANSMISSION CONTROL MODULE

For a complete Transmission Control Module Circuit Diagram **Refer to Page 21-182**.

Diagnostic Test

1. PRE-DIAGNOSTIC CHECK OUT

Note: Low fluid level can be the cause of many transmission problems. If the fluid level is low, locate and repair the leak then check and adjust the fluid level in accordance with the Service Information.

Note: Always perform diagnostics with a fully charged battery to avoid false symptoms.

With the DRB III®, read the engine DTCs. Check and repair all engine DTCs prior to performing transmission symptom diagnostics.

With the DRB III®, read and record all Transmission DTCs.

Note: Check connectors - Clean/repair as necessary. Poor pin to terminal connections can set DTCs.

Using the wiring diagram/schematic as a guide, inspect the wiring and connectors. Repair as necessary.

Most DTCs set on start up but some must be set by driving the vehicle such that all diagnostic monitors have run.

Note: Verify flash level of transmission controller. Some problems are corrected by software upgrades to the transmission controller.

Note: Check for any Technical Service Bulletins that may apply.

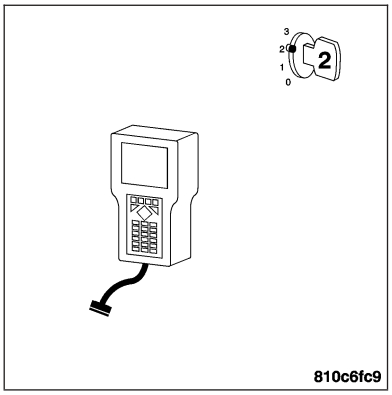

Perform this procedure prior to Symptom diagnosis.

Continue

Go To 2

(P0700) SENSOR SUPPLY VOLTAGE — CONTINUED

2. CHECK FOR CURRENT DTC

Note: If the TCM detects and stores a DTC, the TCM also stores the engine/vehicle operating conditions under which the DTC was set. Some of these conditions are displayed on the DRB III® at the same time the DTC is displayed.

Note: Before erasing stored DTCs, record these conditions. Attempting to duplicate these conditions may assist when checking for an active DTC.

Turn the ignition on.

With the DRB III®, erase TCM DTCs.

Note: It maybe necessary to road test the vehicle for this DTC to set.

With the DRB III®, read the TCM DTCs.

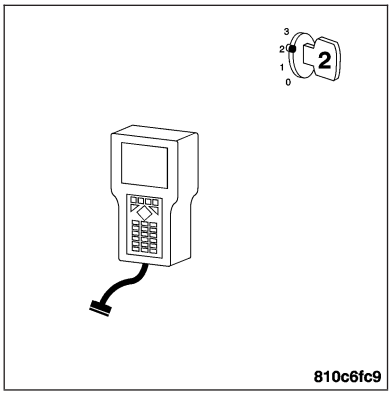

Did this DTC set again?

Yes >> Go To 3

No >> Go To 5

3. SENSOR SUPPLY VOLTAGE CIRCUIT SHORT TO OTHER CIRCUITS

Turn the ignition off.

Disconnect the Transmission Solenoid Assembly harness connector.

Note: Check connectors - Clean/repair as necessary.

Measure the resistance from the Sensor Supply Voltage circuit to all other circuits in the Transmission Solenoid harness connector.

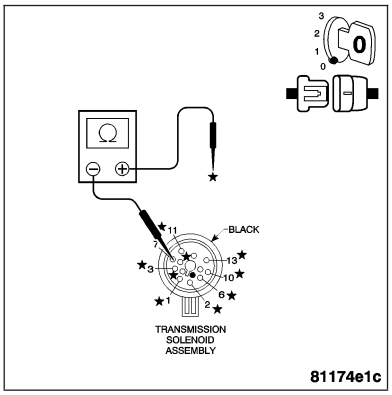

Is the resistance below 100 kohms between any other circuit?

Yes >> Repair the Sensor Supply Voltage circuit for a short to other circuit(s).
Perform NAG1 TRANSMISSION VERIFICATION TEST.

No >> Go To 4

4. SENSOR SUPPLY VOLTAGE CIRCUIT SHORT TO GROUND

With the ignition off.

Measure the resistance between ground and the Sensor Supply Voltage circuit at the Transmission Solenoid Assembly harness connector.

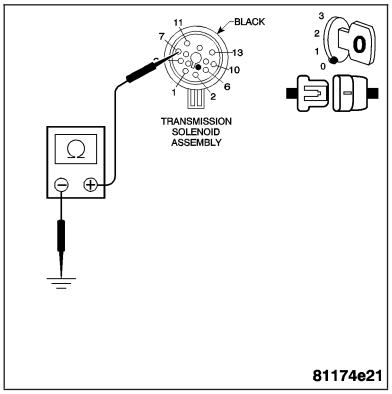

Is the resistance below 100 kohms?

Yes >> Repair the Sensor Supply Voltage circuit for a short to ground.
Perform NAG1 TRANSMISSION VERIFICATION TEST.

No >> Replace the Transmission Control Module. **Refer to Page 8E-60**.
Perform NAG1 TRANSMISSION VERIFICATION TEST.

(P0700) SENSOR SUPPLY VOLTAGE — CONTINUED

5. INTERMITTENT WIRING AND CONNECTORS

The condition that caused this DTC to set is currently not present. Inspect the related wiring harness for a possible intermittent condition.

Using the schematics as a guide, inspect the wiring and connectors specific to this circuit.

Wiggle the wires while checking for shorts and open circuits.

Note: Check for any Technical Service Bulletins that may apply.

Were any problems found?

Yes >> Repair as necessary
Perform NAG1 TRANSMISSION VERIFICATION TEST.

No >> Test Complete.

(P0700) TRANSMISSION SLIPPING

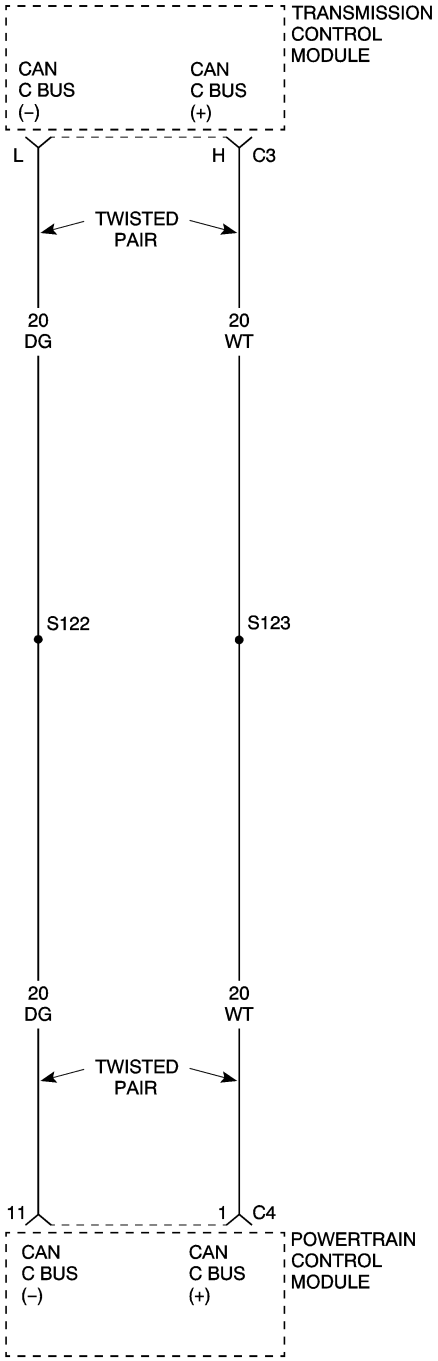

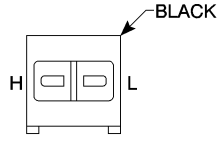

TRANSMISSION CONTROL MODULE C3

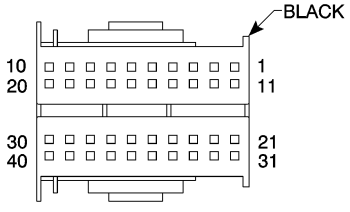

POWERTRAIN CONTROL MODULE – C4

81157b65

(P0700) TRANSMISSION SLIPPING — CONTINUED

When Monitored and Set Condition

- When Monitored: Engine RPM greater than 450 RPM, output speed greater than 180 RPM, no N2 - N3 input speed sensor errors present, no gear selector lever errors present, no ABS system errors, and all wheel speeds between 70 - 380 RPM with no wheel slip detected.
- Set Condition: Calculated ratio not within allowable range for the engaged gear. No shifting operation. The TCM constantly calculates the transmission ratio based on the N2 - N3 input speed signals and the calculated output shaft speed (CAN message from the ABS). The TCM will detect if the transmission is slipping or an invalid gear ratio is present.

POSSIBLE CAUSES
OTHER DTCS PRESENT
AXLE - MECHANICAL - GEAR RATIO
INTERNAL TRANSMISSION
TRANSMISSION CONTROL MODULE

For a complete Transmission Control Module Circuit Diagram **Refer to Page 21-182**.

Diagnostic Test

1. PRE-DIAGNOSTIC CHECK OUT

Note: Low fluid level can be the cause of many transmission problems. If the fluid level is low locate and repair the leak then check and adjust the fluid level in accordance with the Service Information.

Note: Always perform diagnostics with a fully charged battery to avoid false symptoms.

With the DRB III®, read the engine DTCs. Check and repair all engine DTCs prior to performing transmission symptom diagnostics.

With the DRB III®, read and record all Transmission DTCs.

Note: Check connectors - Clean/repair as necessary. Poor pin to terminal connections can set DTCs.

Using the wiring diagram/schematic as a guide, inspect the wiring and connectors. Repair as necessary.

Most DTCs set on start up but some must be set by driving the vehicle such that all diagnostic monitors have run.

Note: Verify flash level of transmission controller. Some problems are corrected by software upgrades to the transmission controller.

Note: Check for any Technical Service Bulletin that may apply.

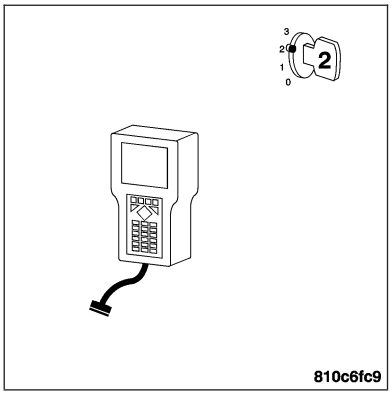

Perform this procedure prior to Symptom diagnosis.

Continue

Go To 2

(P0700) TRANSMISSION SLIPPING — CONTINUED

2. OTHER DTCS PRESENT

With the ignition on.
With the DRB III®, read Transmission DTCs.

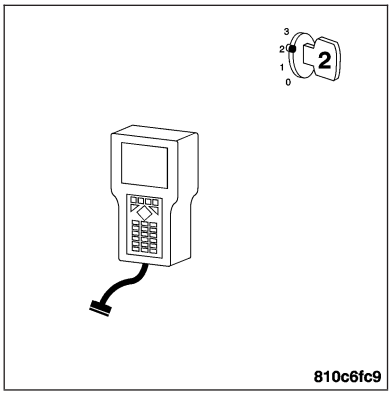

Are any Improper Gear and/or Improper Ratio DTCs present?

Yes >> Refer to the Transmission - Electrical Diagnostics category and perform the appropriate symptom.

No >> Go To 3

3. AXLE - MECHANICAL - GEAR RATIO

Verify the correct axle gear ratio and make sure there are no mechanical problems. Refer to the Differential & Driveline category for the proper procedures.

Were any problems found?

Yes >> Refer to the Differential & Driveline category for proper repair procedures.

No >> Go To 4

4. INTERNAL TRANSMISSION

Determine if the Transmission is mechanically slipping.

Is the transmission slipping?

Yes >> Repair internal transmission as necessary. Refer to the Service Information for the proper repair procedure.
Perform NAG1 TRANSMISSION VERIFICATION TEST.

No >> Replace the Transmission Control Module. **Refer to Page 8E-60**.
Perform NAG1 TRANSMISSION VERIFICATION TEST.

(P0702) CONTROL MODULE TCM IS NOT CODED



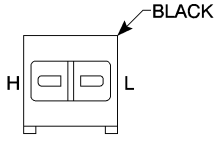

TRANSMISSION CONTROL MODULE C3

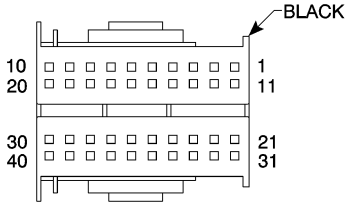

POWERTRAIN CONTROL MODULE – C4

81157b65

(P0702) CONTROL MODULE TCM IS NOT CODED — CONTINUED

When Monitored and Set Condition

- When Monitored: With the ignition on.
- Set Condition: The TCM has not been flashed.

POSSIBLE CAUSES
TRANSMISSION CONTROL MODULE NOT FLASHED

For a complete Transmission Control Module Circuit Diagram **Refer to Page 21-182**.

Diagnostic Test

1. TRANSMISSION CONTROL MODULE NOT FLASHED

View repair.

Repair >> Flash the Transmission Control Module to the proper level. Perform NAG1 TRANSMISSION VERIFICATION TEST.

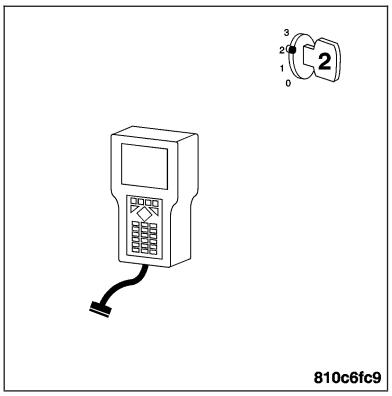

(P0702) INTERNAL CONTROLLER

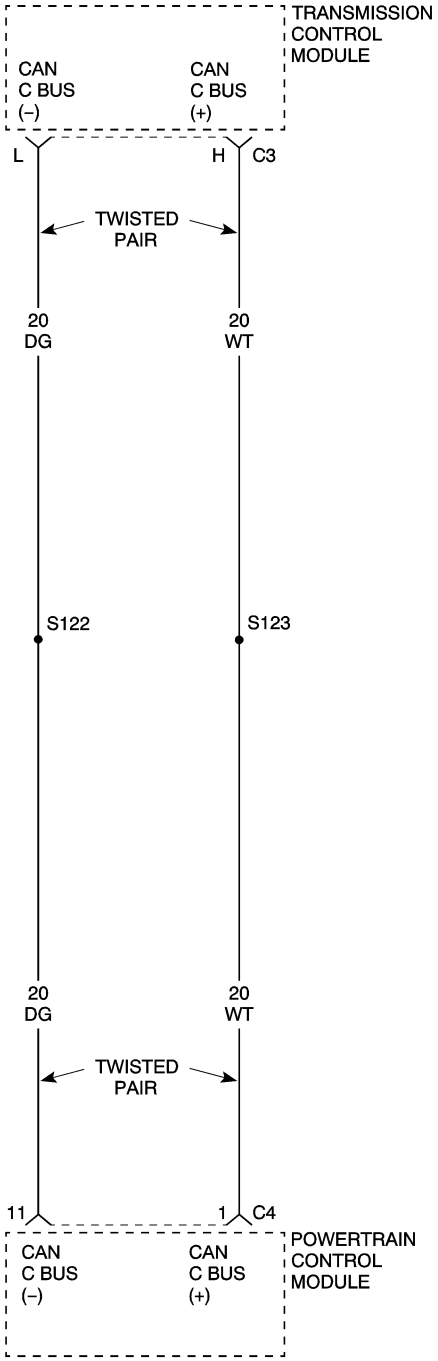

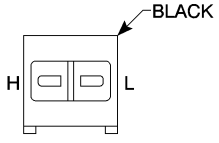

TRANSMISSION CONTROL MODULE C3

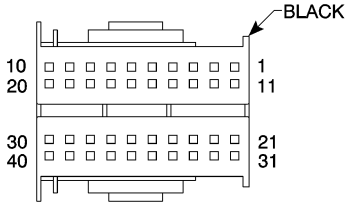

POWERTRAIN CONTROL MODULE – C4

81157b65

(P0702) INTERNAL CONTROLLER — CONTINUED

When Monitored and Set Condition

- When Monitored: Always monitored with system active at each ignition cycle.
- Set Condition: This code is set whenever Transmission Control Module (TCM) senses an internal error. If the Internal Controller DTC is set with any Solenoid DTCs, repair the Solenoid DTCs first, erase all DTCs, then verify the Internal Controller DTC sets again before replacing the TCM.

POSSIBLE CAUSES
TRANSMISSION CONTROL MODULE

For a complete Transmission Control Module Circuit Diagram **Refer to Page 21-182**.

Diagnostic Test

1. TRANSMISSION CONTROL MODULE

The Transmission Control Module is reporting internal errors and must be replaced.

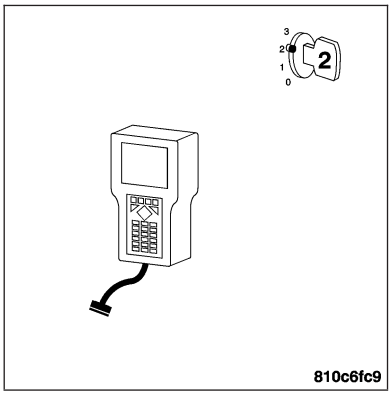

View repair.

Repair >> Replace the Transmission Control Module. **Refer to Page 8E-60**.
Perform NAG1 TRANSMISSION VERIFICATION TEST.

(P0702) INVALID CONTROL MODULE VERSION



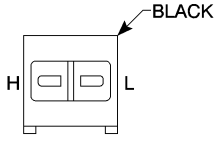

TRANSMISSION CONTROL MODULE C3

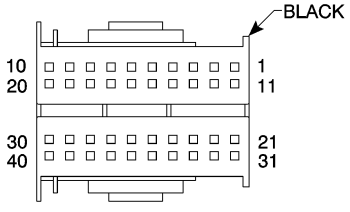

POWERTRAIN CONTROL MODULE – C4

81157b65

(P0702) INVALID CONTROL MODULE VERSION — CONTINUED

When Monitored and Set Condition

- When Monitored: With the ignition on.
- Set Condition: The TCM is not the correct one for the vehicle or has not been flashed properly.

POSSIBLE CAUSES
TRANSMISSION CONTROL MODULE

For a complete Transmission Control Module Circuit Diagram **Refer to Page 21-182**.

For a complete CAN BUS Circuit Diagram **Refer to Page 8E-45**.

Diagnostic Test

1. PRE-DIAGNOSTIC CHECK OUT

Note: Low fluid level can be the cause of many transmission problems. If the fluid level is low, locate and repair the leak, then check and adjust the fluid level in accordance with the Service Information.

Note: Always perform diagnostics with a fully charged battery to avoid false symptoms.

With the DRB III®, read the engine DTCs. Check and repair all engine DTCs prior to performing transmission symptom diagnostics.

With the DRB III®, read and record all Transmission DTCs.

Note: Check connectors – Clean/Repair as necessary. Poor pin to terminal connections can set DTCs.

Using the wiring diagram/schematic as a guide, inspect the wiring and connectors.

Repair as necessary.

Most DTCs set on startup but some must be set by driving the vehicle such that all diagnostic monitors have run.

Note: Verify flash level of the transmission controller. Some problems are corrected by software upgrades to the transmission controller.

Note: Check for any Technical Service Bulletins that may apply.

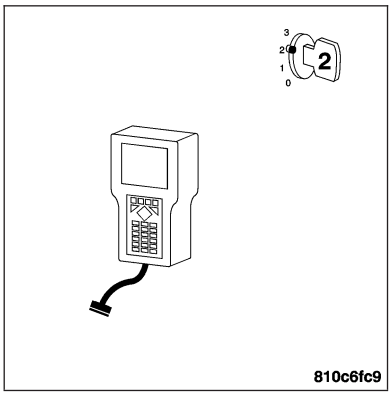

Perform this procedure prior to Symptom diagnosis.

Continue

Go To 2

2. VALIDATE PART NUMBER AND FLASH

Validate if the TCM part number and flash is correct for the vehicle.

Is the TCM part number and flash correct for the vehicle?

Yes >> Replace the Transmission Control Module. **Refer to Page 8E-60**.
Perform NAG1 TRANSMISSION VERIFICATION TEST.

No >> Flash the controller as applicable. If the controller has the wrong part number or cannot be flashed, replace the Transmission Control Module. **Refer to Page 8E-60**.
Perform NAG1 TRANSMISSION VERIFICATION TEST.

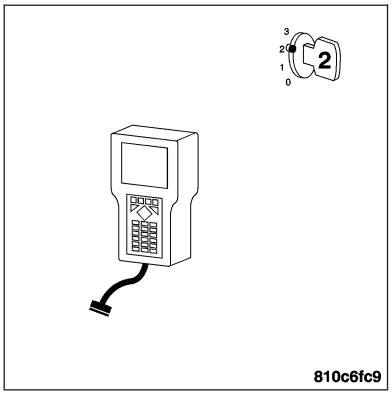

(P0702) SOLENOID SUPPLY/WATCHDOG

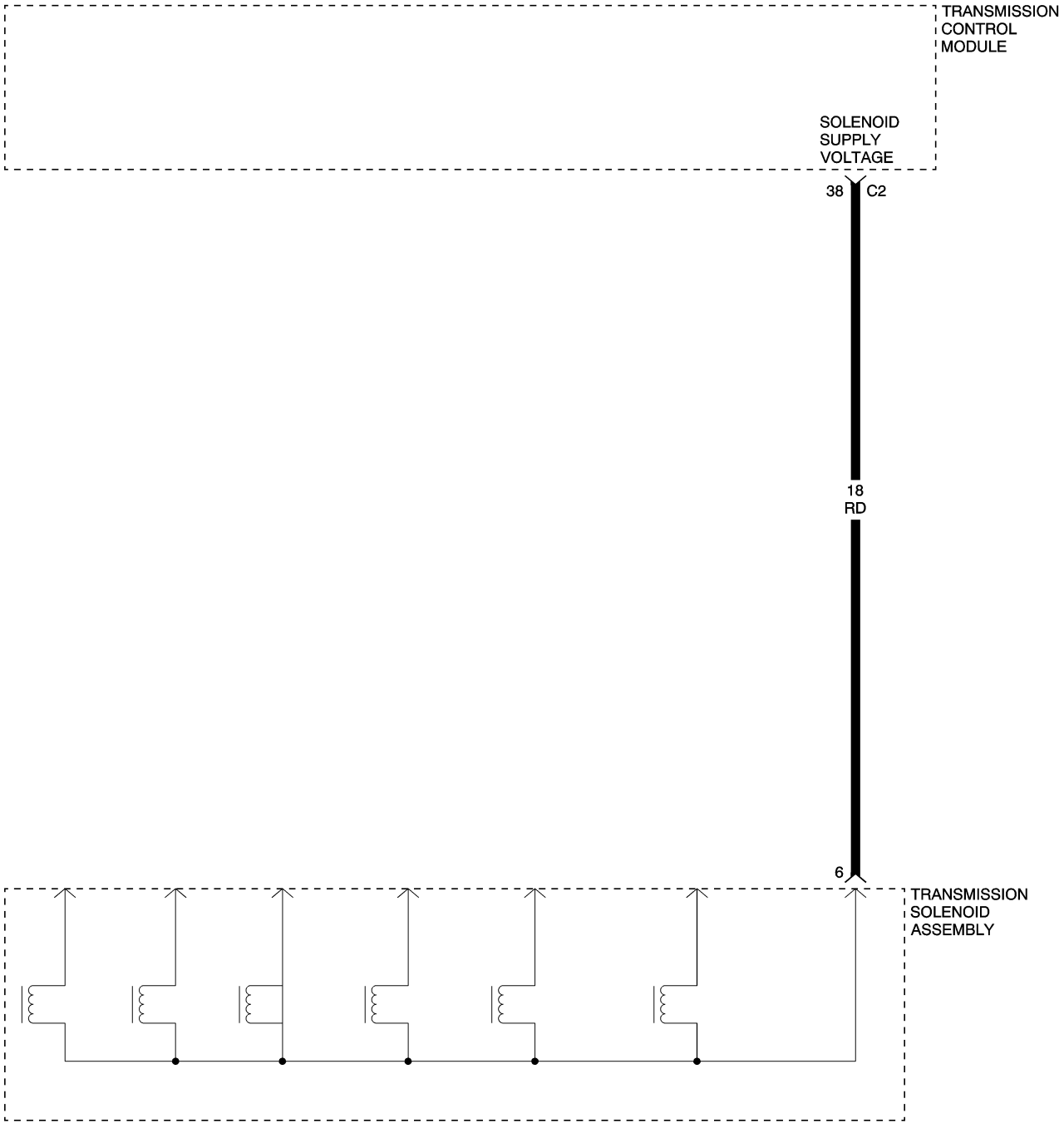

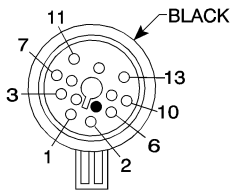

TRANSMISSION SOLENOID ASSEMBLY

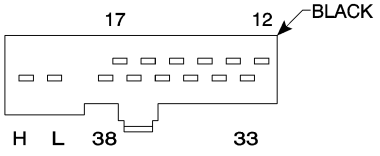

TRANSMISSION CONTROL MODULE C2

81157c1a

(P0702) SOLENOID SUPPLY/WATCHDOG — CONTINUED

When Monitored and Set Condition

- When Monitored: Always monitored with system active at each ignition cycle.
- Set Condition: During the power up of the TCM, it tests the ability of the external watchdog to shut down the Solenoid Supply Voltage driver.

POSSIBLE CAUSES
SOLENOID DTCS PRESENT
SOLENOID SUPPLY CIRCUIT SHORTED TO ANOTHER CIRCUIT
TRANSMISSION CONTROL MODULE

For a complete Transmission Control Module Circuit Diagram **Refer to Page 21-182**.

Diagnostic Test

1. PRE-DIAGNOSTIC CHECK OUT

Note: Low fluid level can be the cause of many transmission problems. If the fluid level is low, locate and repair the leak then check and adjust the fluid level in accordance with the Service Information.

Note: Always perform diagnostics with a fully charged battery to avoid false symptoms.

With the DRB III®, read the engine DTCs. Check and repair all engine DTCs prior to performing transmission symptom diagnostics.

With the DRB III®, read and record all Transmission DTCs.

Note: Check connectors - Clean/repair as necessary. Poor pin to terminal connections can set DTCs.

Using the wiring diagram/schematic as a guide, inspect the wiring and connectors. Repair as necessary.

Most DTCs set on start up but some must be set by driving the vehicle such that all diagnostic monitors have run.

Note: Verify flash level of transmission controller. Some problems are corrected by software upgrades to the transmission controller.

Note: Check for any Technical Service Bulletins that may apply.

Perform this procedure prior to Symptom diagnosis.

Continue

Go To 2

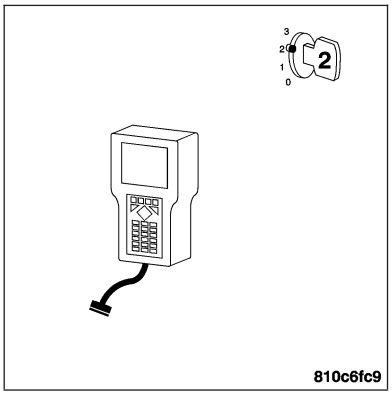

(P0702) SOLENOID SUPPLY/WATCHDOG — CONTINUED

2. SOLENOID DTCS PRESENT

With the ignition on.
With the DRB III®, read DTCs.

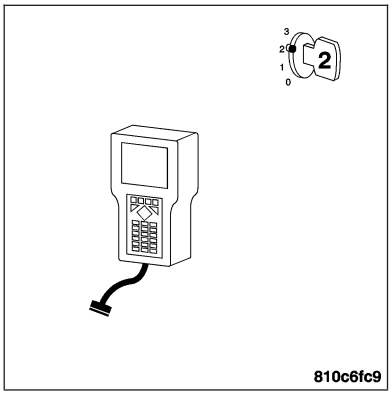

Are any Solenoid DTCs present?

Yes >> Repair all Solenoid DTCs before proceeding with test.
Perform NAG1 TRANSMISSION VERIFICATION TEST.

No >> Go To 3

3. SOLENOID SUPPLY VOLTAGE CIRCUIT SHORTED TO ANOTHER CIRCUIT

Turn the ignition off.
Disconnect the TCM C2 harness connector.
Disconnect the Transmission Solenoid Assembly harness connector.

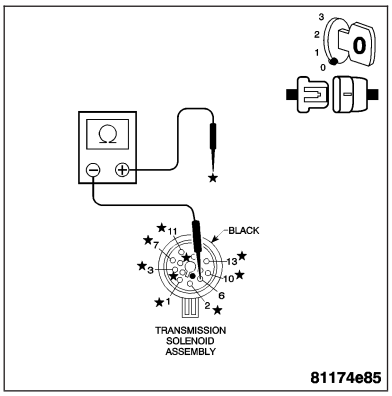

Note: Check connectors - Clean/repair as necessary.
Check the resistance from the Solenoid Supply Voltage circuit to all other circuits at the Transmission Solenoid Assembly harness connector.

Is the resistance below 100 kohms between the Solenoid Supply Voltage circuit and any other circuit?

Yes >> Repair the Solenoid Supply Voltage circuit for a short to another circuit.
Perform NAG1 TRANSMISSION VERIFICATION TEST.

No >> Replace the Transmission Control Module. **Refer to Page 8E-60**
Perform NAG1 TRANSMISSION VERIFICATION TEST.

(P0710) TRANS TEMP SENSOR SHORTED

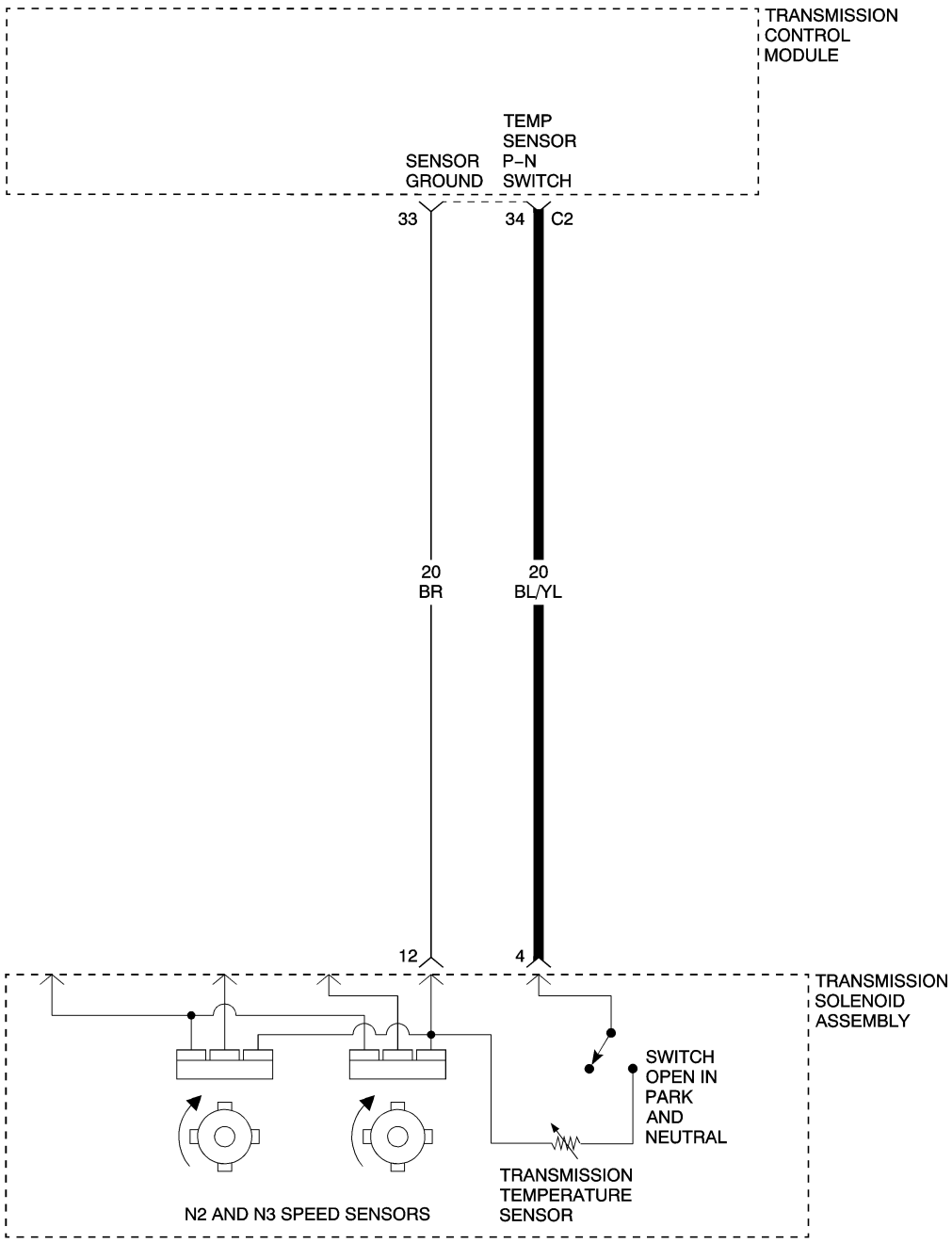

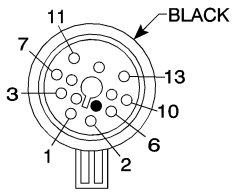

TRANSMISSION SOLENOID ASSEMBLY

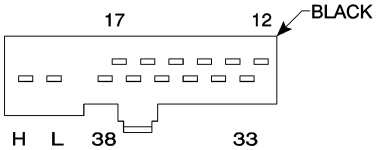

TRANSMISSION CONTROL MODULE C2

81157c67

(P0710) TRANS TEMP SENSOR SHORTED — CONTINUED

When Monitored and Set Condition

- When Monitored: Always monitored with system active.
- Set Condition: Temperature sensor input below a threshold, failed temperature sensor, short to ground, TCM.

POSSIBLE CAUSES
TEMP SENSOR - P/N SWITCH CIRCUIT SHORT TO GROUND
TEMP SENSOR - P/N SWITCH CIRCUIT SHORT TO OTHER CIRCUITS
TRANSMISSION TEMP SENSOR - P/N SWITCH
TRANSMISSION CONTROL MODULE

For a complete Transmission Control Module Circuit Diagram **Refer to Page 21-182**.

Diagnostic Test

1. PRE-DIAGNOSTIC CHECK OUT

Note: Low fluid level can be the cause of many transmission problems. If the fluid level is low, locate and repair the leak then check and adjust the fluid level in accordance with the Service Information.

Note: Always perform diagnostics with a fully charged battery to avoid false symptoms.

With the DRB III®, read the engine DTCs. Check and repair all engine DTCs prior to performing transmission symptom diagnostics.

With the DRB III®, read and record all Transmission DTCs.

Note: Check connectors - Clean/repair as necessary. Poor pin to terminal connections can set DTCs.

Using the wiring diagram/schematic as a guide, inspect the wiring and connectors. Repair as necessary.

Most DTCs set on start up but some must be set by driving the vehicle such that all diagnostic monitors have run.

Note: Verify flash level of transmission controller. Some problems are corrected by software upgrades to the transmission controller.

Note: Check for any Technical Service Bulletins that may apply.

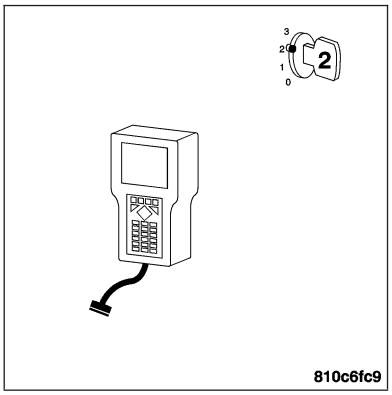

Perform this procedure prior to Symptom diagnosis.

Continue
Go To 2

2. CHECK TO SEE IF ENGINE STARTS

Attempt to start the engine in Park and Neutral.

Does the engine start in either position, Park or Neutral?

Yes >> Go To 3

No >> Go To 4

(P0710) TRANS TEMP SENSOR SHORTED — CONTINUED

3. TRANSMISSION TEMPERATURE SENSOR

Turn the ignition off.

Disconnect the TCM C2 harness connector.

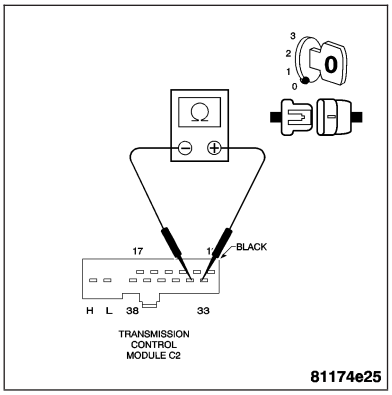

Note: Check connectors - Clean/repair as necessary.
Place the gear selector in Drive.

Measure the resistance of the Transmission Temperature Sensor from the Temp Sensor - P/N Switch circuit to the Sensor Ground circuit at the TCM C2 harness connector.

Is the resistance between 500 ohms and 2500 ohms?

Yes >> Replace the Transmission Control Module. **Refer to Page 8E-60**.
Perform NAG1 TRANSMISSION VERIFICATION TEST.

No >> Check for a poor terminal to pin connections at the Transmission Solenoid Assembly harness connector and repair as necessary. If no problems are found in the connector, replace the Transmission Temperature Sensor - P/N Switch. **Refer to Page 21-281**.
Perform NAG1 TRANSMISSION VERIFICATION TEST.

4. TRANSMISSION TEMP SENSOR - P/N SWITCH

Turn the ignition off.

Disconnect the Transmission Solenoid Assembly harness connector.

Note: Check connectors - Clean/repair as necessary.

Note: This procedure may set several DTCs in both the PCM and TCM. Disregard and erase DTCs after this procedure.
With the gear selector in park, attempt to start the engine.

Does the engine start?

Yes >> Replace the Transmission Temperature Sensor - P/N Switch Assembly. **Refer to Page 21-281**.
Perform NAG1 TRANSMISSION VERIFICATION TEST.

No >> Go To 5

5. TEMP SENSOR - P/N SWITCH CIRCUIT SHORT TO GROUND

Turn the ignition off.

Disconnect the TCM C2 harness connector.

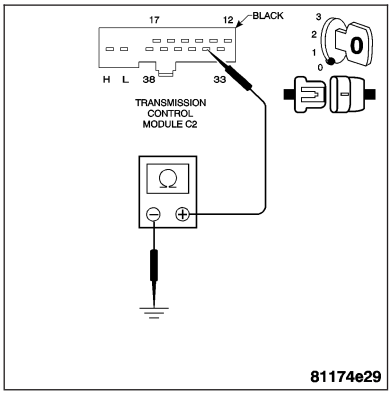

Note: Check connectors - Clean/repair as necessary.
Measure the resistance between ground and the Temp Sensor - P/N Switch circuit.

Is the resistance below 100 kohms?

Yes >> Repair the Temp Sensor - P/N Switch circuit for a short to ground.
Perform NAG1 TRANSMISSION VERIFICATION TEST.

No >> Go To 6

(P0710) TRANS TEMP SENSOR SHORTED — CONTINUED

6. TEMP SENSOR - P/N SWITCH CIRCUIT SHORT TO OTHER CIRCUITS

With the ignition off.

Disconnect the TCM C1 harness connector.

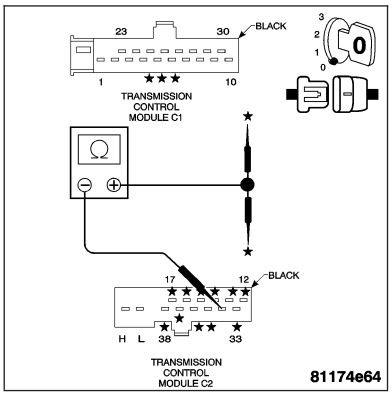

Note: Check connectors - Clean/repair as necessary.

Measure the resistance from the Temp Sensor - P/N Switch circuit to all other circuits in the TCM C1 and C2 harness connectors.

Is the resistance below 100 kohms between any other circuit?

Yes >> Repair the Temp Sensor - P/N Switch circuit for a short to other circuit(s).
Perform NAG1 TRANSMISSION VERIFICATION TEST.

No >> Replace the Transmission Control Module. **Refer to Page 8E-60**.
Perform NAG1 TRANSMISSION VERIFICATION TEST.

(P0714) TRANS TEMP SENSOR ERRATIC

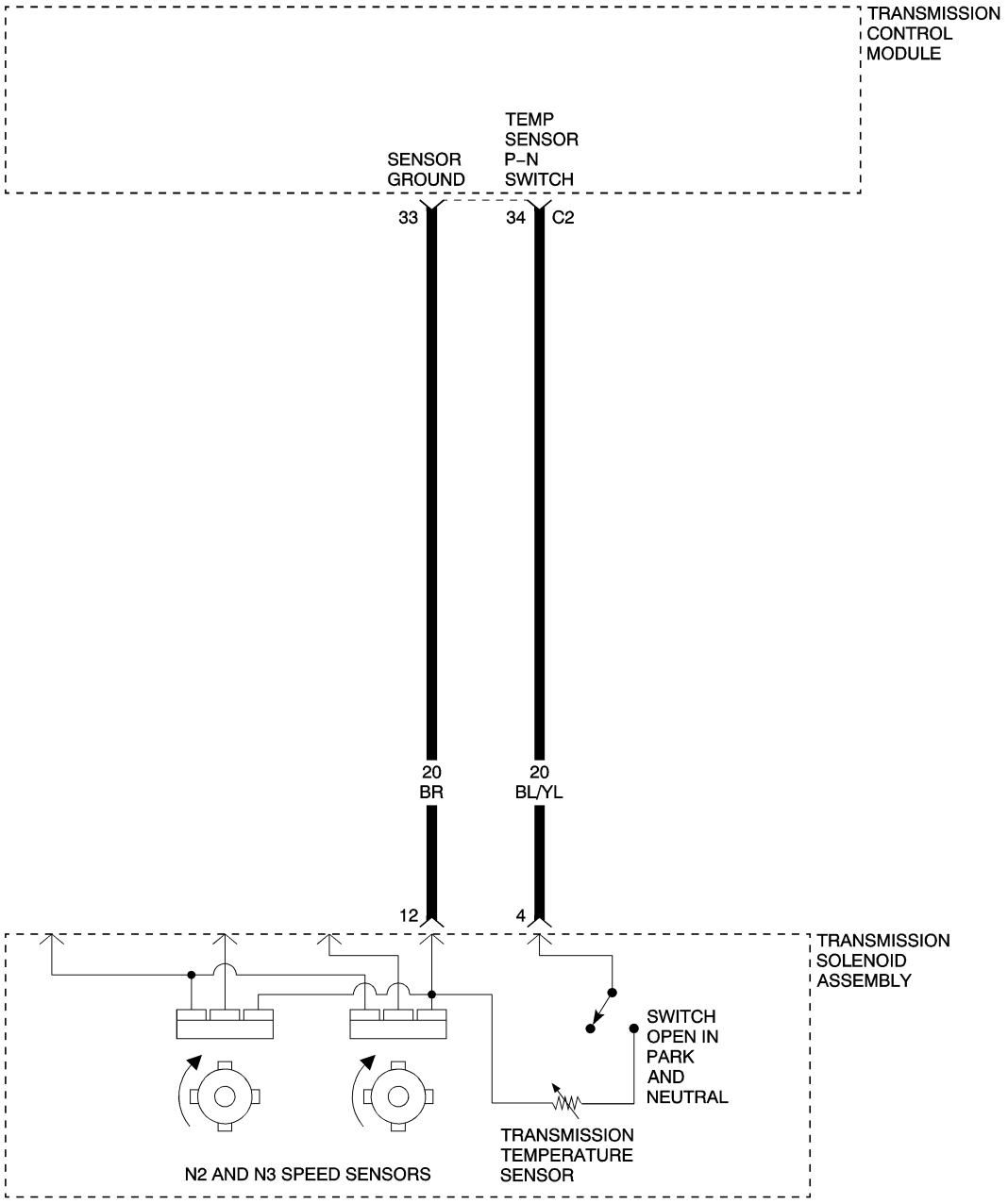

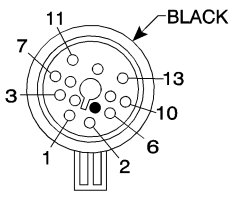

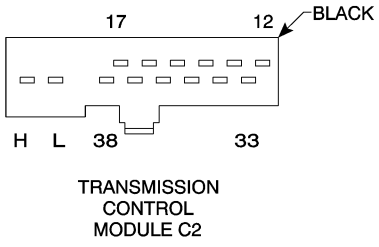

81157c47

(P0714) TRANS TEMP SENSOR ERRATIC — CONTINUED

When Monitored and Set Condition

- When Monitored: When transmission temperature is below 170°C (338°F).
- Set Condition: When there is a 10°C (18°F) variation between each transmission temperature sensor read. If the DTC is reset (after an ignition cycle), the DTC will be set to Stored (Intermittent) status.

POSSIBLE CAUSES
TRANSMISSION TEMP SENSOR CIRCUITS
TRANSMISSION CONTROL MODULE

For a complete Transmission Control Module Circuit Diagram **Refer to Page 21-182**.

Diagnostic Test

1. PRE-DIAGNOSTIC CHECK OUT

Note: Low fluid level can be the cause of many transmission problems. If the fluid level is low, locate and repair the leak then check and adjust the fluid level in accordance with the Service Information.

Note: Always perform diagnostics with a fully charged battery to avoid false symptoms.

With the DRB III®, read the engine DTCs. Check and repair all engine DTCs prior to performing transmission symptom diagnostics.

With the DRB III®, read and record all Transmission DTCs.

Note: Check connectors - Clean/repair as necessary. Poor pin to terminal connections can set DTCs.

Using the wiring diagram/schematic as a guide, inspect the wiring and connectors. Repair as necessary.

Most DTCs set on start up but some must be set by driving the vehicle such that all diagnostic monitors have run.

Note: Verify flash level of transmission controller. Some problems are corrected by software upgrades to the transmission controller.

Note: Check for any Technical Service Bulletins that may apply.

Perform this procedure prior to Symptom diagnosis.

Continue

Go To 2

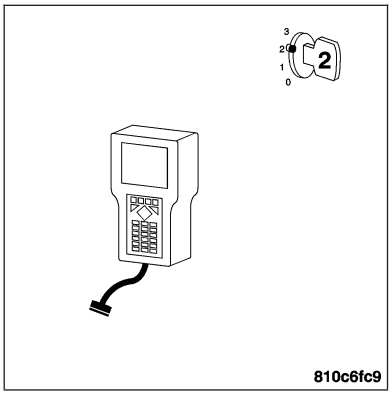

2. TRANSMISSION TEMP SENSOR CIRCUITS

Turn the ignition on.

With the DRB III®, monitor the Transmission Temperature.

With the brakes firmly applied, place the gear selector in Drive.

While monitoring the DRB III®, wiggle the wires and connectors from the TCM to the Transmission Solenoid Assembly.

Did the transmission temperature fluctuate while wiggling the wires?

Yes >> Repair the wiring and/or connectors as necessary.
Perform NAG1 TRANSMISSION VERIFICATION TEST.

No >> Go To 3

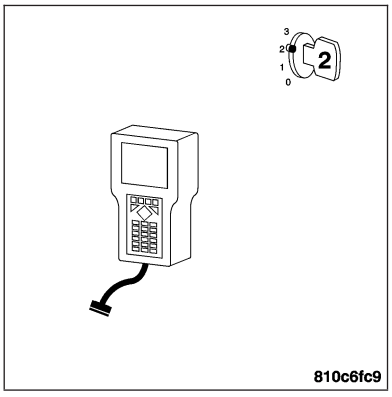

(P0714) TRANS TEMP SENSOR ERRATIC — CONTINUED

3. TRANS TEMP SENSOR - PARK NEUTRAL SWITCH

Replace the Transmission Temp Sensor - P/N Switch. **Refer to Page 21-281**.
Perform NAG1 TRANSMISSION VERIFICATION TEST.
With the DRB III®, read Transmission DTCs.

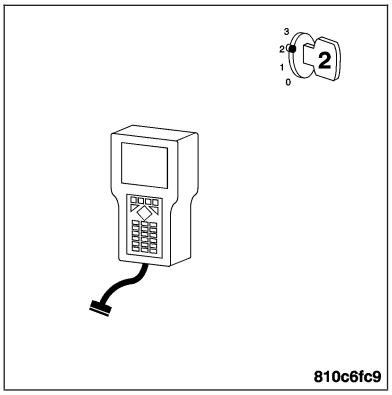

Did DTC (P0714) TRANS TEMP SENSOR ERRATIC set again?

Yes >> Replace the Transmission Control Module. **Refer to Page 8E-60**.
Perform NAG1 TRANSMISSION VERIFICATION TEST.

No >> Test Complete.

(P0715) INPUT SENSOR MISMATCH

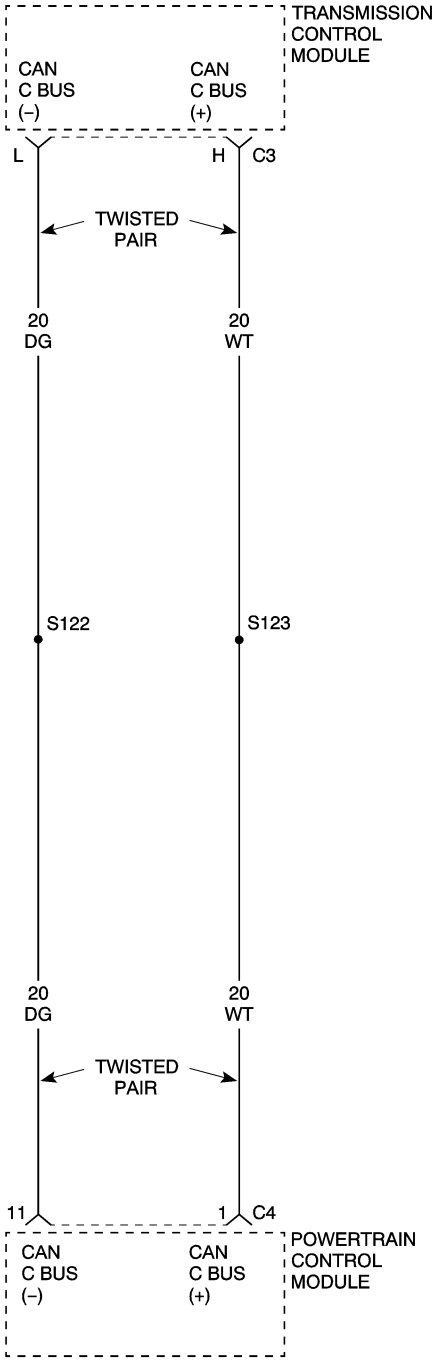

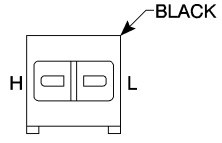

TRANSMISSION CONTROL MODULE C3

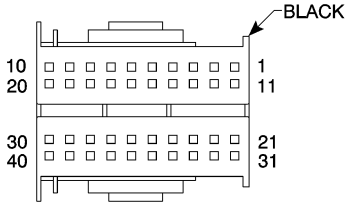

POWERTRAIN CONTROL MODULE – C4

81157b65

(P0715) INPUT SENSOR MISMATCH — CONTINUED

When Monitored and Set Condition

- When Monitored: Engine speed greater than 450 RPM, no engine speed DTCs, no TCM undervoltage system operation, no output speed sensor DTCs (signal from the ABS system), all wheel speeds above 250 RPM (signal from the ABS system), no rear wheel speed DTCs (signal from the ABS system), and no wheel slip detected (signal from the ABS system), no shifting operation, N3 input speed sensor greater than 800 RPM and N2 input speed sensor greater than 0 RPM and the TCM not in reset.
- Set Condition: If the speed difference between the N2 and N3 input speed sensors is greater than 150 RPM.

POSSIBLE CAUSES
SPEED SENSOR DTCS PRESENT
INTERNAL TRANSMISSION
TRANSMISSION CONTROL MODULE

For a complete Transmission Control Module Circuit Diagram **Refer to Page 21-182**.

Diagnostic Test

1. PRE-DIAGNOSTIC CHECK OUT

Note: Low fluid level can be the cause of many transmission problems. If the fluid level is low, locate and repair the leak then check and adjust the fluid level in accordance with the Service Information.

Note: Always perform diagnostics with a fully charged battery to avoid false symptoms.

With the DRB III®, read the engine DTCs. Check and repair all engine DTCs prior to performing transmission symptom diagnostics.

With the DRB III®, read and record all Transmission DTCs.

Note: Check connectors - Clean/repair as necessary. Poor pin to terminal connections can set DTCs.

Using the wiring diagram/schematic as a guide, inspect the wiring and connectors. Repair as necessary.

Most DTCs set on start up but some must be set by driving the vehicle such that all diagnostic monitors have run.

Note: Verify flash level of transmission controller. Some problems are corrected by software upgrades to the transmission controller.

Note: Check for any Technical Service Bulletins that may apply.

Perform this procedure prior to Symptom diagnosis.

Continue

Go To 2

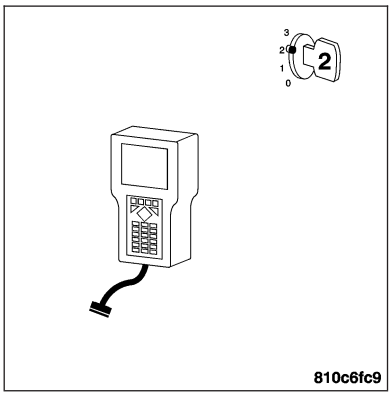

(P0715) INPUT SENSOR MISMATCH — CONTINUED

2. SPEED SENSOR DTCS PRESENT

With the ignition on.
With the DRB III®, read DTCs.

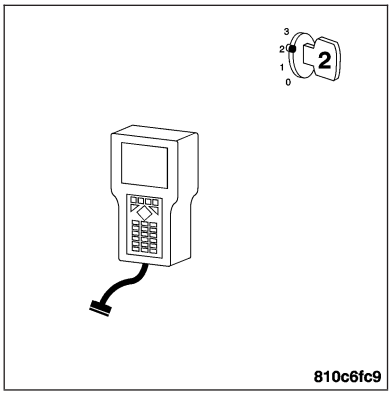

Are any Speed Sensor or Sensor Supply DTCs present?

Yes >> Repair any Speed Sensor and/or Sensor Supply DTCs before proceeding with test.
Perform NAG1 TRANSMISSION VERIFICATION TEST.

No >> Go To 3

3. CHECK TO SEE IF INPUT SENSOR MISMATCH IS CURRENT

Turn the ignition on.
With the DRB III®, erase Transmission DTCs.
Start the engine.
Drive the vehicle at speeds to allow multiple 2-3 and 3-4 upshifts.

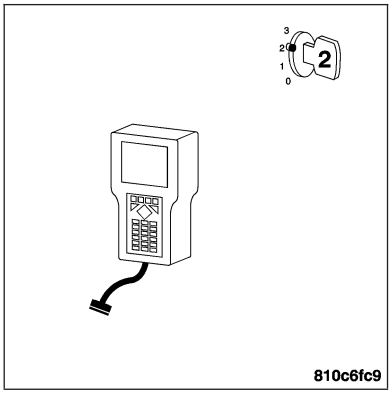

Did DTC (P0715) INPUT SENSOR MISMATCH set again?

Yes >> Go To 4

No >> Go To 5

4. INTERNAL TRANSMISSION

Turn the ignition off.
Remove the Transmission Oil Pan and inspect for debris or a plugged Transmission Oil Filter.

Is there any debris, plugged Transmission Oil Filter, or sign of an internal transmission problem?

Yes >> Repair the internal transmission as necessary. Refer to the Transmission - Service Information for proper repair procedures.
Perform NAG1 TRANSMISSION VERIFICATION TEST.

No >> Replace the Transmission Control Module. **Refer to Page 8E-60**.
Perform NAG1 TRANSMISSION VERIFICATION TEST.

(P0715) INPUT SENSOR MISMATCH — CONTINUED

5. INTERMITTENT WIRING AND CONNECTORS

The condition that caused this DTC to set is currently not present. Inspect the related wiring harness for a possible intermittent condition.

Using the schematics as a guide, inspect the wiring and connectors specific to this circuit.

Wiggle the wires while checking for shorts and open circuits.

Note: Check for any Technical Service Bulletins that may apply.

Were any problems found?

Yes >> Repair as necessary.
Perform NAG1 TRANSMISSION VERIFICATION TEST.

No >> Test Complete.

(P0715) INPUT SENSOR OVERSPEED



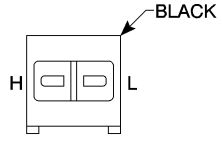

TRANSMISSION CONTROL MODULE C3

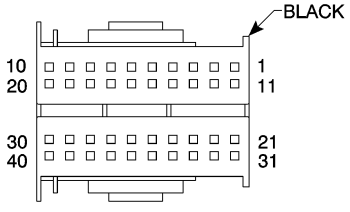

POWERTRAIN CONTROL MODULE – C4

81157b65

(P0715) INPUT SENSOR OVERSPEED — CONTINUED

When Monitored and Set Condition

- When Monitored: Whenever the N2 input speed sensor is greater than 0 RPM.
- Set Condition: If the RPM of the N2 or N3 input speed sensor is greater than 7700 RPM.

POSSIBLE CAUSES
INTERNAL TRANSMISSION
TRANSMISSION CONTROL MODULE

For a complete Transmission Control Module Circuit Diagram **Refer to Page 21-182**.

Diagnostic Test

1. PRE-DIAGNOSTIC CHECK OUT

Note: Low fluid level can be the cause of many transmission problems. If the fluid level is low, locate and repair the leak then check and adjust the fluid level in accordance with the Service Information.

Note: Always perform diagnostics with a fully charged battery to avoid false symptoms.

With the DRB III®, read the engine DTCs. Check and repair all engine DTCs prior to performing transmission symptom diagnostics.

With the DRB III®, read and record all Transmission DTCs.

Note: Check connectors - Clean/repair as necessary. Poor pin to terminal connections can set DTCs.

Using the wiring diagram/schematic as a guide, inspect the wiring and connectors. Repair as necessary.

Most DTCs set on start up but some must be set by driving the vehicle such that all diagnostic monitors have run.

Note: Verify flash level of transmission controller. Some problems are corrected by software upgrades to the transmission controller.

Note: Check for any Technical Service Bulletins that may apply.

Perform this procedure prior to Symptom diagnosis.

Continue

Go To 2

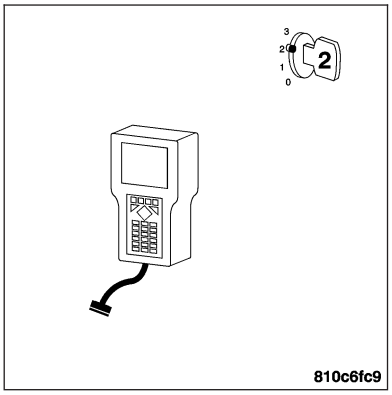

(P0715) INPUT SENSOR OVERSPEED — CONTINUED

2. CHECK TO SEE IF INPUT SENSOR OVERSPEED IS CURRENT

Turn the ignition on.

With the DRB III®, erase Transmission DTCs.

Raise the vehicle on the hoist.

Start the engine.

Note: This DTC indicates a catastrophic transmission failure.

With the DRB III® in Sensors, monitor the N2 and N3 Speed Sensors.

Firmly apply the brakes and place the gear selector in Drive.

Release the brakes and raise the engine RPM to allow the transmission to upshift to the 2-3 and 3-4 shift schedule.

WARNING: BE SURE TO KEEP HANDS AND FEET CLEAR OF ROTATING WHEELS.

Did either the N2 or N3 Speed Sensors display an RPM above 7700?

Yes >> Go To 3

No >> Go To 4

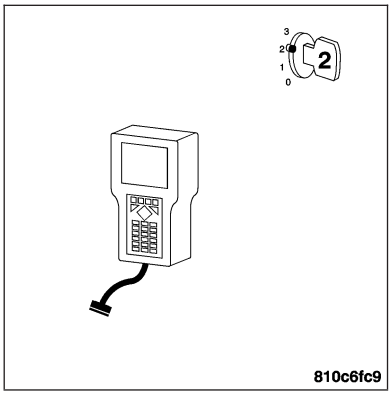

3. INTERNAL TRANSMISSION

Turn the ignition off.

Remove the Transmission Oil Pan and inspect for debris or a plugged Transmission Oil Filter.

Is there any debris, plugged Transmission Oil Filter, or signs of an internal transmission problem?

Yes >> Repair the internal transmission as necessary. Refer to the Transmission - Service Information for proper repair procedures.
Perform NAG1 TRANSMISSION VERIFICATION TEST.

No >> Replace the Transmission Control Module. **Refer to Page 8E-60**.
Perform NAG1 TRANSMISSION VERIFICATION TEST.

4. INTERMITTENT WIRING AND CONNECTORS

The condition that caused this DTC to set is currently not present. Inspect the related wiring harness for a possible intermittent condition.

Using the schematics as a guide, inspect the wiring and connectors specific to this circuit.

Wiggle the wires while checking for shorts and open circuits.

Note: Check for any Technical Service Bulletins that may apply.

Were any problems found?

Yes >> Repair as necessary.
Perform NAG1 TRANSMISSION VERIFICATION TEST.

No >> Test Complete.

(P0715) N2 INPUT SPEED SENSOR CIRCUIT

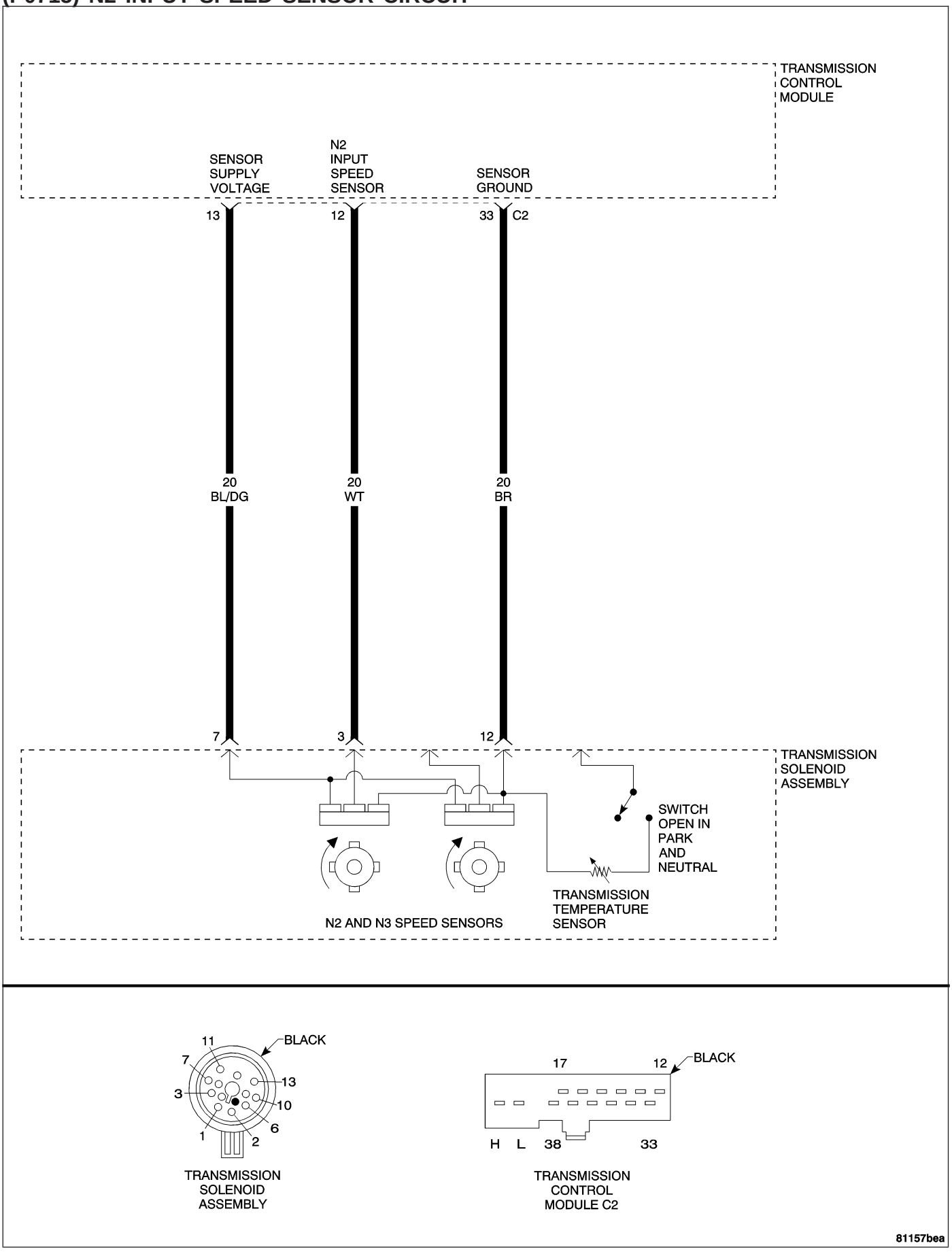

(P0715) N2 INPUT SPEED SENSOR CIRCUIT — CONTINUED

When Monitored and Set Condition

- When Monitored: Engine speed greater than 450 RPM, no engine speed DTCs, no TCM undervoltage system operation, no output speed sensor DTCs (signal from the ABS system), all wheel speeds above 250 RPM (signal from the ABS system), no rear wheel speed DTCs (signal from the ABS system), and no wheel slip detected (signal from the ABS system).
- Set Condition: If the N2 input speed sensor signal is equal to 0 RPM, signal circuit shorted to ground, shorted to battery, an open input speed sensor, a faulty input speed sensor, or an open sensor supply circuit.

POSSIBLE CAUSES
SENSOR SUPPLY VOLTAGE CIRCUIT OPEN
N2 INPUT SPEED SENSOR SIGNAL CIRCUIT OPEN
N2 SPEED SENSOR SIGNAL CIRCUIT SHORTED TO ANOTHER CIRCUIT
SENSOR GROUND CIRCUIT OPEN
SENSOR GROUND CIRCUIT SHORTED TO OTHER CIRCUIT
N2 INPUT SPEED SENSOR SIGNAL CIRCUIT SHORTED TO GROUND
SENSOR GROUND CIRCUIT SHORTED TO GROUND
N2 INPUT SPEED SENSOR
TRANSMISSION CONTROL MODULE

For a complete Transmission Control Module Circuit Diagram **Refer to Page 21-182**.

Diagnostic Test

1. PRE-DIAGNOSTIC CHECK OUT

Note: Low fluid level can be the cause of many transmission problems. If the fluid level is low, locate and repair the leak then check and adjust the fluid level in accordance with the Service Information.

Note: Always perform diagnostics with a fully charged battery to avoid false symptoms.

With the DRB III®, read the engine DTCs. Check and repair all engine DTCs prior to performing transmission symptom diagnostics.

With the DRB III®, read and record all Transmission DTCs.

Note: Check connectors - Clean/repair as necessary. Poor pin to terminal connections can set DTCs.

Using the wiring diagram/schematic as a guide, inspect the wiring and connectors. Repair as necessary.

Most DTCs set on start up but some must be set by driving the vehicle such that all diagnostic monitors have run.

Note: Verify flash level of transmission controller. Some problems are corrected by software upgrades to the transmission controller.

Note: Check for any Technical Service Bulletins that may apply.

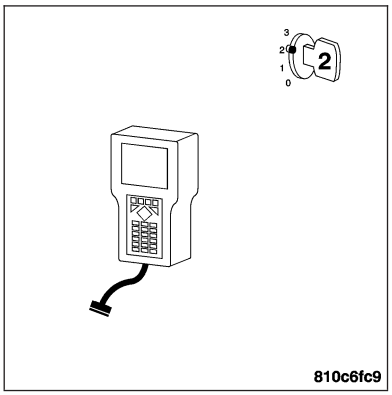

Perform this procedure prior to Symptom diagnosis.

Continue

Go To 2

(P0715) N2 INPUT SPEED SENSOR CIRCUIT — CONTINUED

2. CHECK FOR CURRENT DTC

Note: If the TCM detects and stores a DTC, the TCM also stores the engine/vehicle operating conditions under which the DTC was set. Some of these conditions are displayed on the DRB III® at the same time the DTC is displayed.

Note: Before erasing stored DTCs, record these conditions. Attempting to duplicate these conditions may assist when checking for an active DTC.

Turn the ignition on.

With the DRB III®, erase TCM DTCs.

Note: It maybe necessary to road test the vehicle for this DTC to set.

With the DRB III®, read the TCM DTCs.

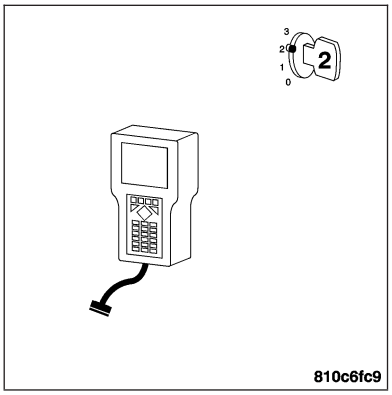

Did this DTC set again?

Yes >> Go To 3

No >> Go To 11

3. SENSOR SUPPLY VOLTAGE CIRCUIT OPEN

Turn the ignition off.

Disconnect the TCM C2 harness connector.

Disconnect the Transmission Solenoid Assembly harness connector.

Note: Check connectors - Clean/repair as necessary.

Measure the resistance of the Sensor Supply Voltage circuit from the TCM C2 harness connector to the Transmission Solenoid Assembly harness connector.

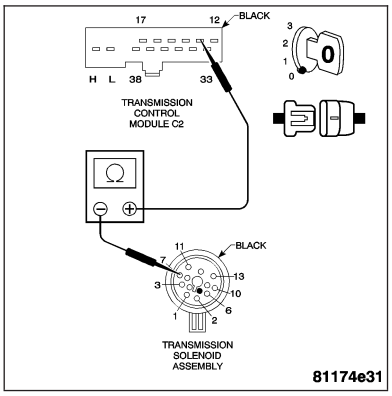

Is the resistance below 5.0 ohms?

Yes >> Go To 4

No >> Repair the Sensor Supply Voltage circuit for an open.
Perform NAG1 TRANSMISSION VERIFICATION TEST.

4. N2 INPUT SPEED SENSOR SIGNAL CIRCUIT OPEN

With the ignition off.

Measure the resistance of the N2 Input Speed Sensor Signal circuit from the TCM C2 harness connector to the Transmission Solenoid Assembly harness connector.

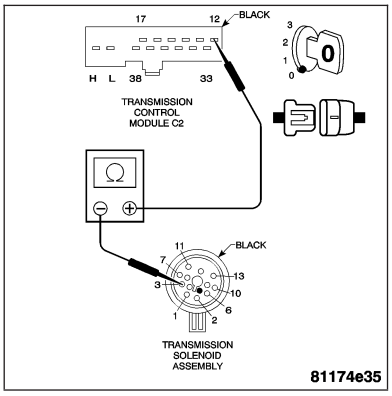

Is the resistance below 5.0 ohms?

Yes >> Go To 5

No >> Repair the N2 Input Speed Sensor Signal circuit for an open.
Perform NAG1 TRANSMISSION VERIFICATION TEST.

(P0715) N2 INPUT SPEED SENSOR CIRCUIT — CONTINUED

5. SENSOR GROUND CIRCUIT OPEN

With the ignition off.

Measure the resistance of the Sensor Ground circuit from the TCM C2 harness connector to the Transmission Solenoid Assembly harness connector.

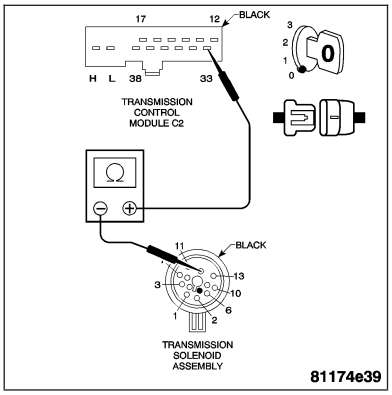

Is the resistance below 5.0 ohms?

Yes >> Go To 6

No >> Repair the Sensor Ground circuit for an open.
Perform NAG1 TRANSMISSION VERIFICATION TEST.

6. N2 SPEED SENSOR SIGNAL CIRCUIT SHORT TO OTHER CIRCUITS

With the ignition off.

Measure the resistance from the N2 Speed Sensor Signal circuit to all other circuits in the Transmission Solenoid Assembly harness connector.

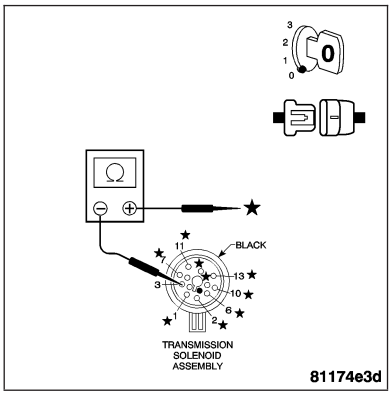

Is the resistance below 100 kohms between any other circuit?

Yes >> Repair the N2 Speed Sensor Signal circuit for a short to other circuit(s).
Perform NAG1 TRANSMISSION VERIFICATION TEST.

No >> Go To 7

7. N2 INPUT SPEED SENSOR SIGNAL CIRCUIT SHORT TO GROUND

With the ignition off.

Measure the resistance between ground and the N2 Input Speed Sensor Signal circuit.

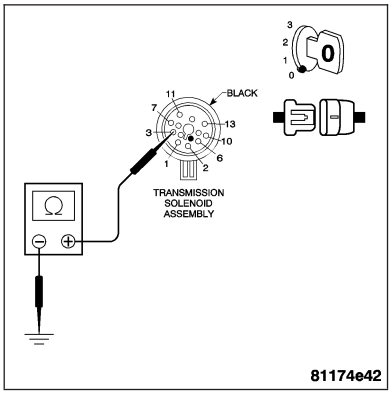

Is the resistance below 100 kohms?

Yes >> Repair the N2 Input Speed Sensor Signal circuit for a short to ground.
Perform NAG1 TRANSMISSION VERIFICATION TEST.

No >> Go To 8

(P0715) N2 INPUT SPEED SENSOR CIRCUIT — CONTINUED

8. SENSOR GROUND CIRCUIT SHORT TO OTHER CIRCUITS

With the ignition off.

Measure the resistance from the Sensor Ground circuit to all other circuits in the Transmission Solenoid Assembly harness connector.

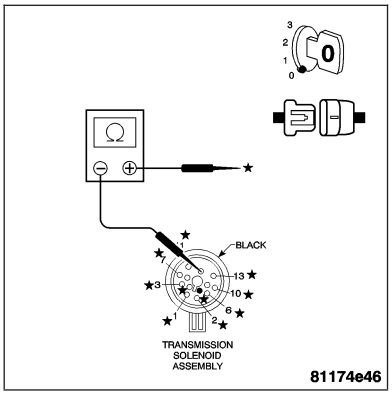

Is the resistance below 100 kohms between any other circuit?

Yes >> Repair the Sensor Ground circuit for a short to other circuit(s).
Perform NAG1 TRANSMISSION VERIFICATION TEST.

No >> Go To 9

9. SENSOR GROUND CIRCUIT SHORT TO GROUND

With the ignition off.

Measure the resistance between ground and the Sensor Ground circuit.

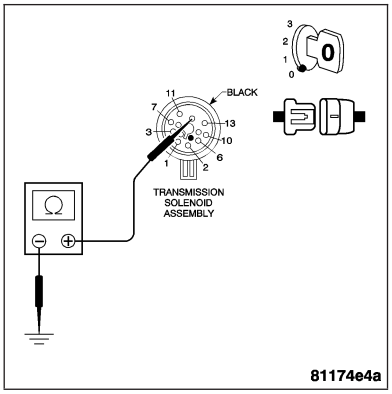

Is the resistance below 100 kohms?

Yes >> Repair the Sensor Ground circuit for a short to ground.
Perform NAG1 TRANSMISSION VERIFICATION TEST.

No >> Go To 10

(P0715) N2 INPUT SPEED SENSOR CIRCUIT — CONTINUED

10. CHECKING N2 INPUT SPEED SENSOR W/ LAB SCOPE

With the ignition off.

Reconnect the TCM C2 harness connector.

Reconnect the Transmission Solenoid Assembly harness connector.

With the DRB III®/PEP Module being used as a Dual Channel Lab Scope with Special Tool #6801, backprobe N2 Input Speed Sensor Signal circuit using Channel 1 at the TCM C2 harness connector.

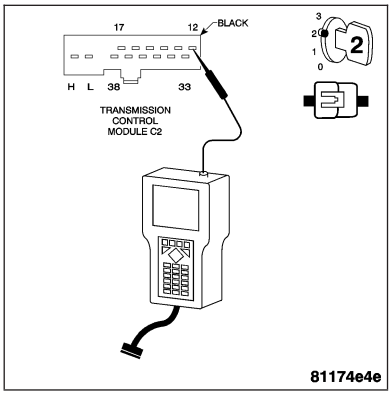

WARNING: PROPERLY SUPPORT VEHICLE.

Raise all drive wheels off the ground.

Start the engine.

WARNING: BE SURE TO KEEP HANDS AND FEET CLEAR OF ROTATING WHEELS.

Place gear selector in drive and increase vehicle speed to engage 2nd gear.

Compare the scope pattern on the DRB III® with a typical 5 volt square wave pattern.

Does the scope pattern match a typical 5 volt square wave signal scope pattern?

Yes >> Replace the Transmission Control Module. **Refer to Page 8E-60**.
Perform NAG1 TRANSMISSION VERIFICATION TEST.

No >> Replace the N2 Input Speed Sensor. **Refer to Page 21-281**.
Perform NAG1 TRANSMISSION VERIFICATION TEST.

11. INTERMITTENT WIRING AND CONNECTORS

The condition that caused this DTC to set is currently not present. Inspect the related wiring harness for a possible intermittent condition.

Using the schematics as a guide, inspect the wiring and connectors specific to this circuit.

Wiggle the wires while checking for shorts and open circuits.

Note: Check for any Technical Service Bulletins that may apply.

Were any problems found?

Yes >> Repair as necessary.
Perform NAG1 TRANSMISSION VERIFICATION TEST.

No >> Test Complete.

(P0715) N3 INPUT SPEED SENSOR CIRCUIT

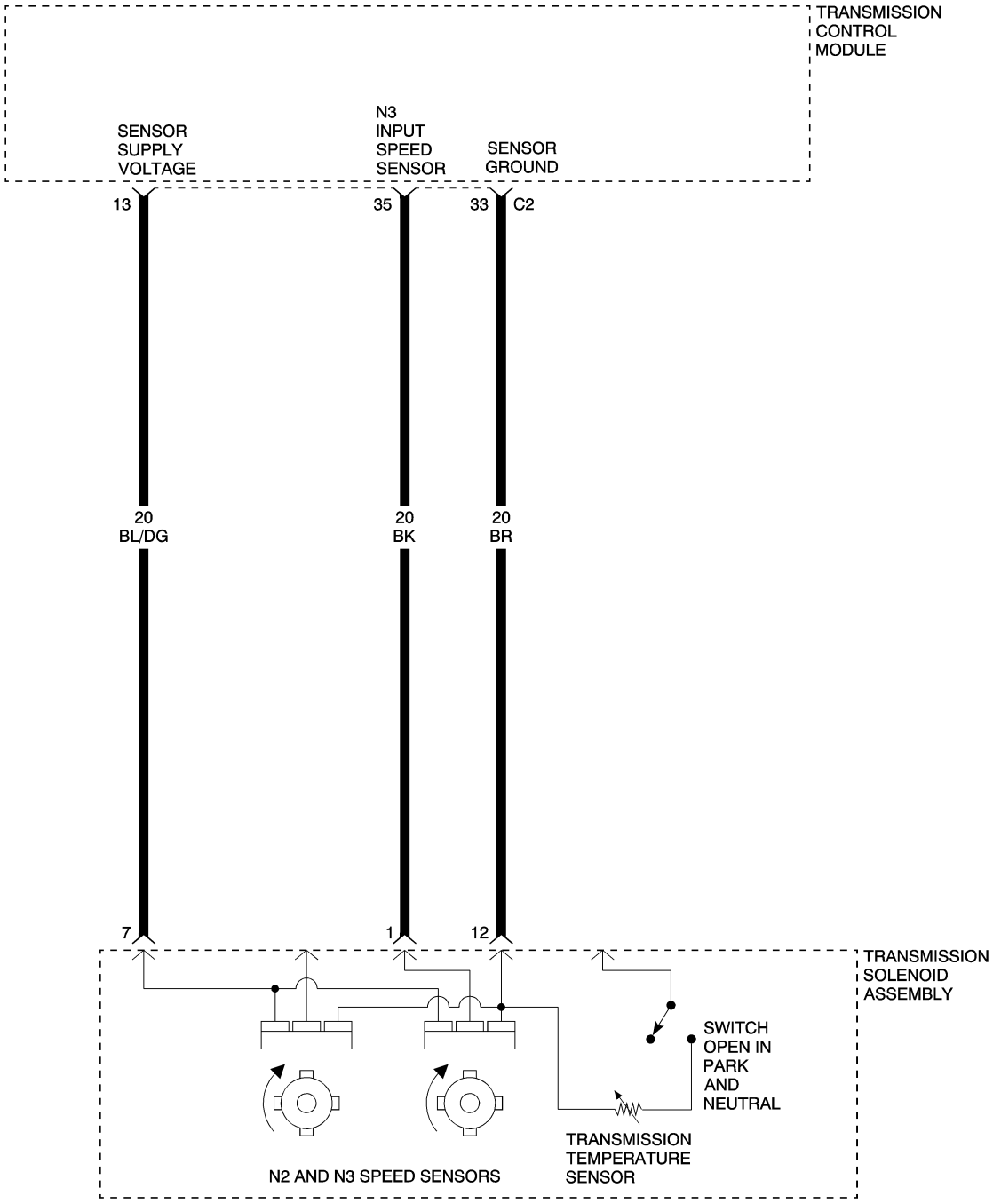

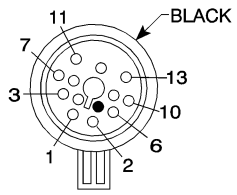

TRANSMISSION SOLENOID ASSEMBLY

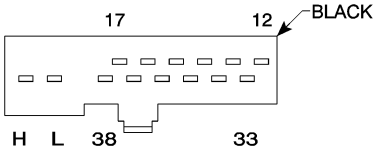

TRANSMISSION CONTROL MODULE C2

81157bf1

(P0715) N3 INPUT SPEED SENSOR CIRCUIT — CONTINUED

When Monitored and Set Condition

- When Monitored: Engine speed greater than 450 RPM, no engine speed DTCs, no TCM undervoltage system operation, no output speed sensor DTCs (signal from the ABS system), all wheel speeds above 250 RPM (signal from the ABS system), no rear wheel speed DTCs (signal from the ABS system), and no wheel slip detected (signal from the ABS system), no shifting operation, detected gear is 3rd or 4th and the detected gear is the actual vehicle gear.
- Set Condition: If the N3 input speed sensor signal is equal to 0 RPM, short signal circuit to ground, shorted to battery, an open input speed sensor, a faulty input speed sensor, or an open sensor supply circuit.

POSSIBLE CAUSES
SENSOR SUPPLY VOLTAGE CIRCUIT OPEN
N3 INPUT SPEED SENSOR SIGNAL CIRCUIT OPEN
N3 INPUT SPEED SENSOR SIGNAL CIRCUIT SHORTED TO GROUND
N3 SPEED SENSOR SIGNAL CIRCUIT SHORTED TO ANOTHER CIRCUIT
SENSOR GROUND CIRCUIT OPEN
SENSOR GROUND CIRCUIT SHORTED TO GROUND
SENSOR GROUND CIRCUIT SHORTED TO ANOTHER CIRCUIT
N3 INPUT SPEED SENSOR
TRANSMISSION CONTROL MODULE

For a complete Transmission Control Module Circuit Diagram, **Refer to Page 21-182**.

Diagnostic Test

1. PRE-DIAGNOSTIC CHECK OUT

Note: Low fluid level can be the cause of many transmission problems. If the fluid level is low, locate and repair the leak then check and adjust the fluid level in accordance with the Service Information.

Note: Always perform diagnostics with a fully charged battery to avoid false symptoms.

With the DRB III®, read the engine DTCs. Check and repair all engine DTCs prior to performing transmission symptom diagnostics.

With the DRB III®, read and record all Transmission DTCs.

Note: Check connectors - Clean/repair as necessary. Poor pin to terminal connections can set DTCs.

Using the wiring diagram/schematic as a guide, inspect the wiring and connectors. Repair as necessary.

Most DTCs set on start up but some must be set by driving the vehicle such that all diagnostic monitors have run.

Note: Verify flash level of transmission controller. Some problems are corrected by software upgrades to the transmission controller.

Note: Check for any Technical Service Bulletins that may apply.

Perform this procedure prior to Symptom diagnosis.

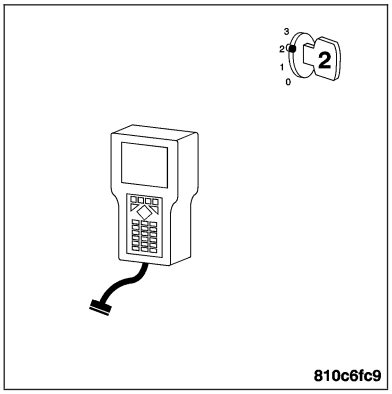

Continue

Go To 2

(P0715) N3 INPUT SPEED SENSOR CIRCUIT — CONTINUED

2. CHECK FOR CURRENT DTC

Note: If the TCM detects and stores a DTC, the TCM also stores the engine/vehicle operating conditions under which the DTC was set. Some of these conditions are displayed on the DRB III® at the same time the DTC is displayed.

Note: Before erasing stored DTCs, record these conditions. Attempting to duplicate these conditions may assist when checking for an active DTC.

Turn the ignition on.

With the DRB III®, erase TCM DTCs.

Note: It maybe necessary to road test the vehicle for this DTC to set.

With the DRB III®, read the TCM DTCs.

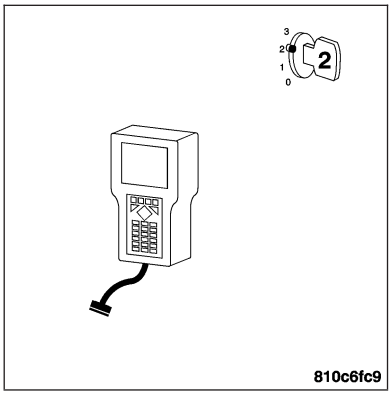

Did this DTC set again?

Yes >> Go To 3

No >> Go To 11

3. SENSOR SUPPLY VOLTAGE CIRCUIT OPEN

Turn the ignition off.

Disconnect the TCM C2 harness connector.

Disconnect the Transmission Solenoid Assembly harness connector.

Note: Check connectors - Clean/repair as necessary.

Measure the resistance of the Sensor Supply Voltage circuit from the TCM C2 harness connector to the Transmission Solenoid Assembly harness connector.

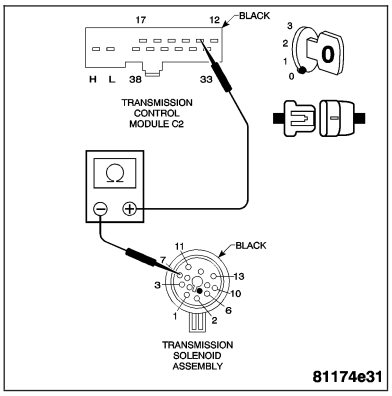

Is the resistance below 5.0 ohms?

Yes >> Go To 4

No >> Repair the Sensor Supply Voltage circuit for an open.
Perform NAG1 TRANSMISSION VERIFICATION TEST.

4. N3 INPUT SPEED SENSOR SIGNAL CIRCUIT OPEN

With the ignition off.

Measure the resistance of the N3 Input Speed Sensor Signal circuit from the TCM C2 harness connector to the Transmission Solenoid Assembly harness connector.

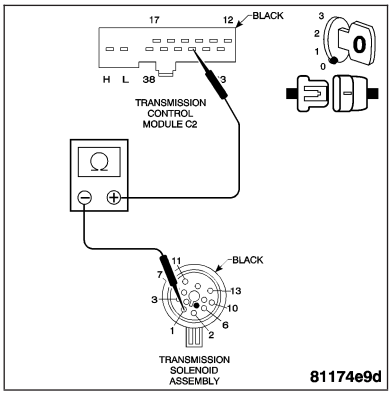

Is the resistance below 5.0 ohms?

Yes >> Go To 5

No >> Repair the N3 Input Speed Sensor Signal circuit for an open.
Perform NAG1 TRANSMISSION VERIFICATION TEST.

(P0715) N3 INPUT SPEED SENSOR CIRCUIT — CONTINUED

5. SENSOR GROUND CIRCUIT OPEN

With the ignition off.

Measure the resistance of the Sensor Ground circuit from the TCM C2 harness connector to the Transmission Solenoid Assembly harness connector.

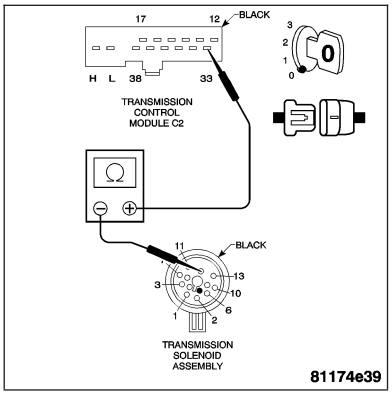

Is the resistance below 5.0 ohms?

Yes >> Go To 6

No >> Repair the Sensor Ground circuit for an open.
Perform NAG1 TRANSMISSION VERIFICATION TEST.

6. N3 SPEED SENSOR SIGNAL CIRCUIT SHORT TO OTHER CIRCUITS

With the ignition off.

Measure the resistance from the N3 Speed Sensor Signal circuit to all other circuits in the Transmission Solenoid Assembly harness connector.

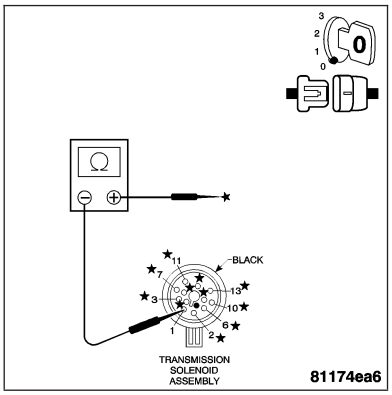

Is the resistance below 100 kohms between any other circuit?

Yes >> Repair the N3 Speed Sensor Signal circuit for a short to other circuit(s).
Perform NAG1 TRANSMISSION VERIFICATION TEST.

No >> Go To 7

7. N3 INPUT SPEED SENSOR SIGNAL CIRCUIT SHORT TO GROUND

With the ignition off.

Measure the resistance between ground and the N3 Input Speed Sensor Signal circuit.

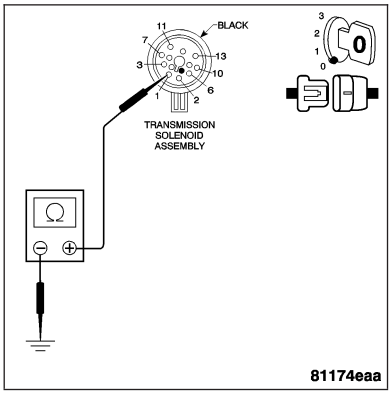

Is the resistance below 100 kohms?

Yes >> Repair the N3 Input Speed Sensor Signal circuit for a short to ground.
Perform NAG1 TRANSMISSION VERIFICATION TEST.

No >> Go To 8

(P0715) N3 INPUT SPEED SENSOR CIRCUIT — CONTINUED

8. SENSOR GROUND CIRCUIT SHORT TO OTHER CIRCUITS

With the ignition off.

Measure the resistance from the Sensor Ground circuit to all other circuits in the Transmission Solenoid harness connector.

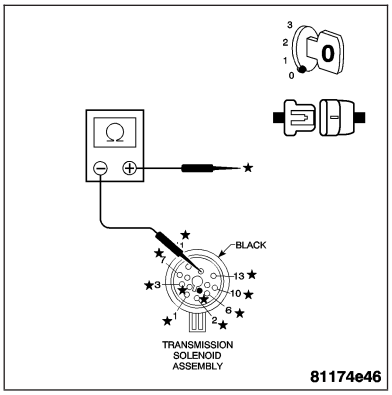

Is the resistance below 100 kohms between any other circuit?

Yes >> Repair the Sensor Ground circuit for a short to other circuits.
Perform NAG1 TRANSMISSION VERIFICATION TEST.

No >> Go To 9

9. SENSOR GROUND CIRCUIT SHORT TO GROUND

With the ignition off.

Measure the resistance between ground and the Sensor Ground circuit.

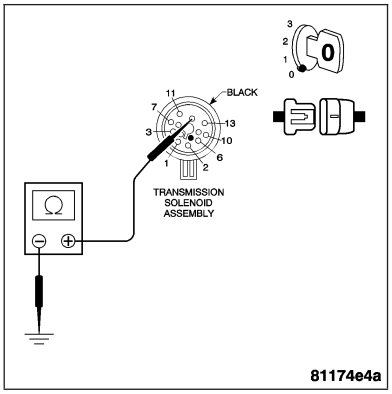

Is the resistance below 100 kohms?

Yes >> Repair the Sensor Ground circuit for a short to ground.
Perform NAG1 TRANSMISSION VERIFICATION TEST.

No >> Go To 10

(P0715) N3 INPUT SPEED SENSOR CIRCUIT — CONTINUED

10. CHECKING N3 INPUT SPEED SENSOR W/ LAB SCOPE

With the ignition off.

Reconnect the TCM C2 harness connector.

Reconnect the Transmission Solenoid Assembly harness connector.

Turn the ignition on.

With the DRB III®/PEP Module being used as a Dual Channel Lab Scope with Miller special tool #6801, backprobe N3 Input Speed Sensor Signal circuit using Channel 1 at the TCM C2 harness connector.

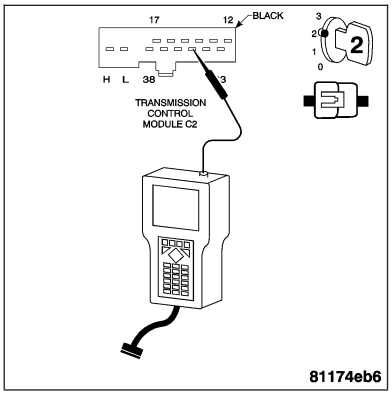

WARNING: PROPERLY SUPPORT THE VEHICLE.

Raise all drive wheels off the ground.

Start the engine.

WARNING: BE SURE TO KEEP HANDS AND FEET CLEAR OF ROTATING WHEELS.

Place gear selector in drive and increase vehicle speed to engage 2nd gear.

Compare the scope pattern on the DRB III® with a typical 5 volt square wave pattern.

Does the scope pattern match a typical 5 volt square wave signal scope pattern?

Yes >> Replace the Transmission Control Module. **Refer to Page 8E-60**.
Perform NAG1 TRANSMISSION VERIFICATION TEST.

No >> Replace the N3 Input Speed Sensor. **Refer to Page 21-281**.
Perform NAG1 TRANSMISSION VERIFICATION TEST.

11. INTERMITTENT WIRING AND CONNECTORS

The condition that caused this DTC to set is currently not present. Inspect the related wiring harness for a possible intermittent condition.

Using the schematics as a guide, inspect the wiring and connectors specific to this circuit.

Wiggle the wires while checking for shorts and open circuits.

Note: Check for any Technical Service Bulletins that may apply.

Were any problems found?

Yes >> Repair as necessary.
Perform NAG1 TRANSMISSION VERIFICATION TEST.

No >> Test Complete.

(P0720) CAN BUS CIRCUIT

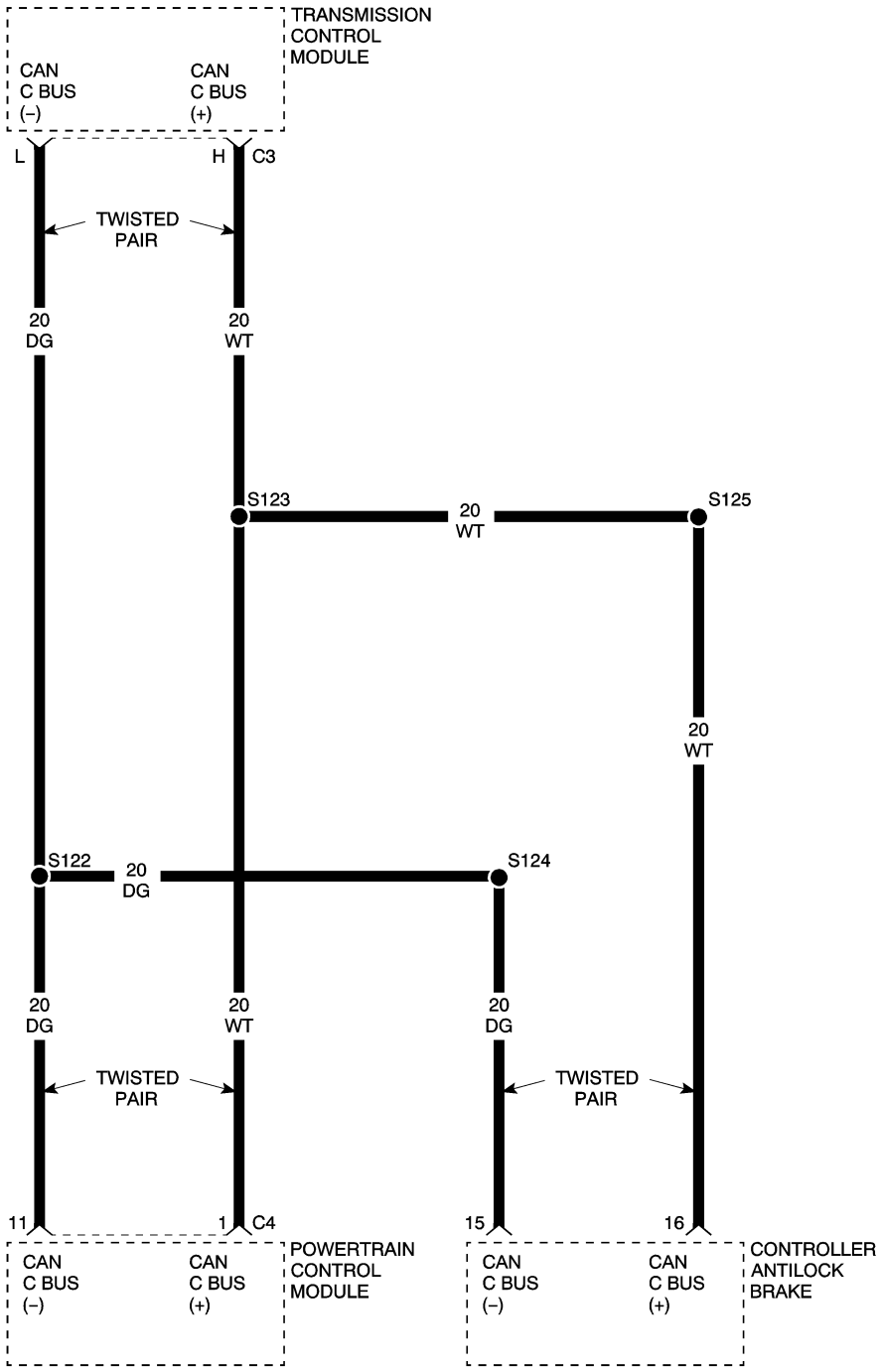

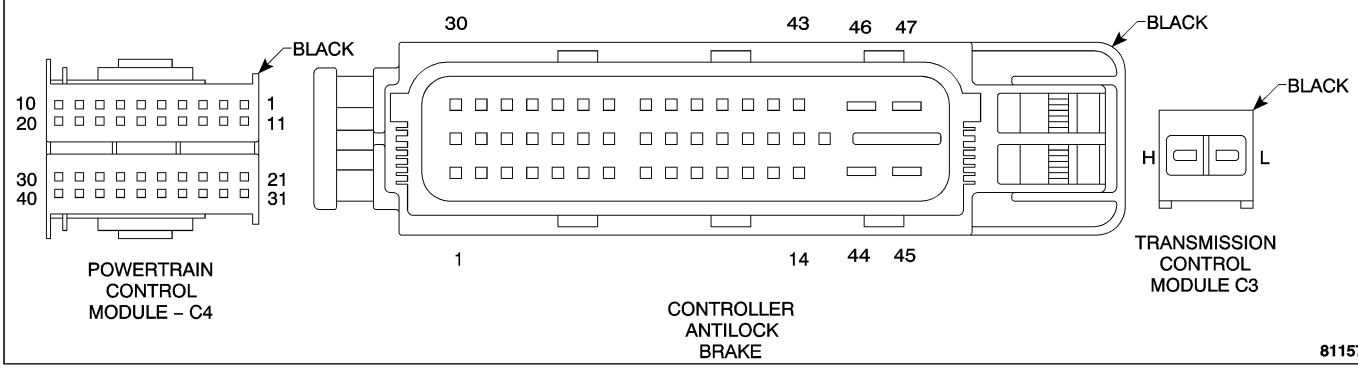

(P0720) CAN BUS CIRCUIT — CONTINUED

When Monitored and Set Condition

- When Monitored: Always monitored with system active at each ignition cycle.
- Set Condition: Open circuit in the CAN C Bus (+) circuit or CAN C Bus (-) circuit, short to ground of CAN C Bus (+) circuit or CAN C Bus (-) circuit, short to voltage of CAN C Bus (+) circuit or CAN C Bus (-) circuit, CAN C Bus (+) circuit shorted to CAN C Bus (-) circuit, or a TCM failure. Note: All CAN message missing DTCs will also be present, which indicates a complete Bus failure.

POSSIBLE CAUSES
CAN C BUS(+) SHORTED TO CAN C BUS (-)
CAN C BUS (+) AND/OR CAN C BUS (-) CIRCUIT OPEN
CAN C BUS (+) AND/OR CAN C BUS (-) CIRCUIT SHORTED TO GROUND
CAN C BUS (+) AND/OR CAN C BUS (-) CIRCUIT SHORTED TO ANOTHER CIRCUIT
CONTROLLER ANTILOCK BRAKE MODULE
POWERTRAIN CONTROL MODULE
TRANSMISSION CONTROL MODULE

For a complete Transmission Control Module Circuit Diagram **Refer to Page 21-182**.

For a complete CAN BUS Circuit Diagram **Refer to Page 8E-45**.

Diagnostic Test

1. PRE-DIAGNOSTIC CHECK OUT

Note: Low fluid level can be the cause of many transmission problems. If the fluid level is low, locate and repair the leak then check and adjust the fluid level in accordance with the Service Information.

Note: Always perform diagnostics with a fully charged battery to avoid false symptoms.

With the DRB III®, read the engine DTCs. Check and repair all engine DTCs prior to performing transmission symptom diagnostics.

With the DRB III®, read and record all Transmission DTCs.

Note: Check connectors - Clean/repair as necessary. Poor pin to terminal connections can set DTCs.

Using the wiring diagram/schematic as a guide, inspect the wiring and connectors. Repair as necessary.

Most DTCs set on start up but some must be set by driving the vehicle such that all diagnostic monitors have run.

Note: Verify flash level of transmission controller. Some problems are corrected by software upgrades to the transmission controller.

Note: Check for any Technical Service Bulletins that may apply.

Perform this procedure prior to Symptom diagnosis.

Continue

Go To 2

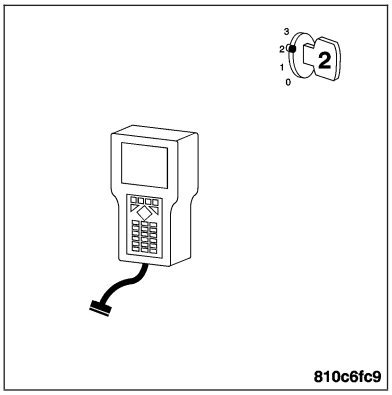

(P0720) CAN BUS CIRCUIT — CONTINUED

2. CAN C BUS (+) AND/OR CAN C BUS (-) CIRCUIT OPEN

Note: If the CAN BUS CIRCUIT DTC is present, all the CAN MESSAGE MISSING DTCs will be set also. Ignore the Missing Message DTCs and perform the CAN BUS CIRCUIT DTC test.

Turn the ignition off.

Disconnect the TCM C3 harness connector.

Disconnect the PCM harness connector.

Disconnect the CAB harness connector.

Note: Check connectors - Clean/repair as necessary.

Measure the resistance of both the CAN C Bus (+) circuit and the CAN C Bus (-) circuit from the TCM C3 harness connector and to both the PCM harness connector and to the CAB harness connector.

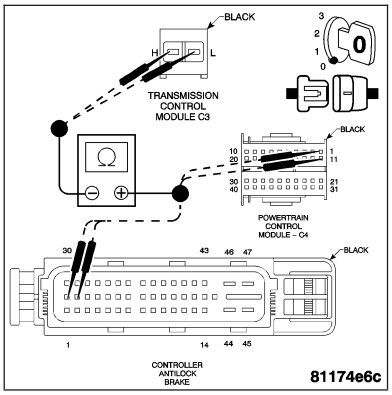

Is the resistance of both Bus circuits below 5.0 ohms?

Yes >> Go To 3

No >> Repair the faulty CAN C Bus circuit for an open.
Perform NAG1 TRANSMISSION VERIFICATION TEST.

3. CAN C BUS (+) SHORT TO CAN C BUS (-)

With the ignition off.

Measure the resistance from the CAN C Bus (+) circuit to the CAN C Bus (-) circuit.

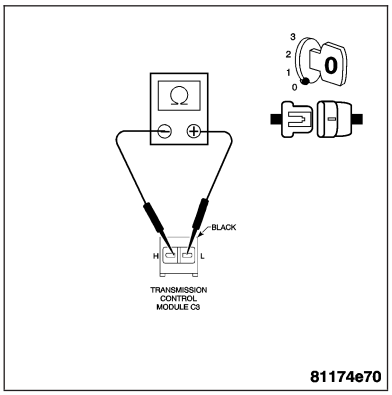

Is the resistance below 5.0 ohms?

Yes >> Repair the CAN C Bus (+) circuit for a short to the CAN C Bus (-) circuit.
Perform NAG1 TRANSMISSION VERIFICATION TEST.

No >> Go To 4

4. CAN C BUS (+) AND/OR CAN C BUS (-) CIRCUIT SHORT TO GROUND

With the ignition off.

Measure the resistance between ground and both the CAN C Bus (+) circuit and the CAN C Bus (-) circuit.

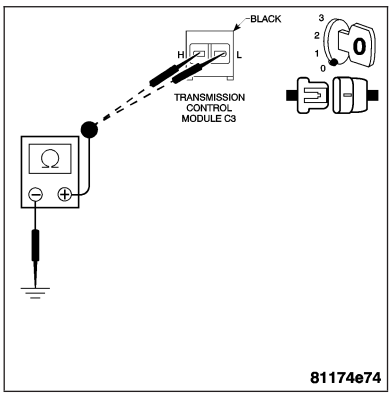

Is the resistance below 5.0 ohms on either Bus circuit?

Yes >> Repair the faulty CAN C Bus circuit for a short to ground.
Perform NAG1 TRANSMISSION VERIFICATION TEST.

No >> Go To 5

(P0720) CAN BUS CIRCUIT — CONTINUED

5. CAN C BUS (+) AND/OR CAN C BUS (-) CIRCUIT SHORTED TO ANOTHER CIRCUIT

With the ignition off.

Measure the resistance from both the CAN C Bus (+) circuit and the CAN C Bus (-) circuit to all other circuits in the TCM C3 and C2 harness connector.

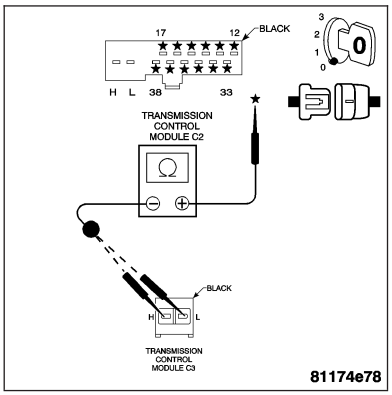

Is the resistance below 5.0 ohms between any other circuit?

Yes >> Repair the CAN C Bus (+) and/or CAN C Bus (-) circuit for a short to other circuits.
Perform NAG1 TRANSMISSION VERIFICATION TEST.

No >> Go To 6

6. PCM - CAN BUS CIRCUIT

With the ignition off.

Reconnect the TCM C3 harness connector.

Reconnect the CAB harness connector.

Measure the resistance from the CAN C Bus (+) circuit to the CAN C Bus (-) circuit at the PCM harness connector.

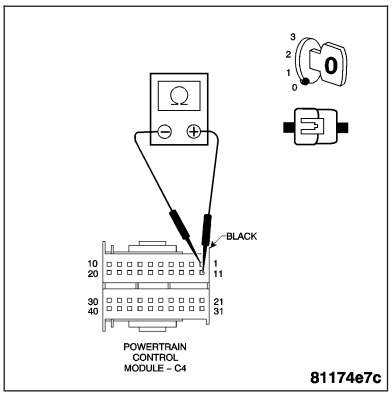

Is the resistance 60.0 ohms, ± 3.0 ohms?

Yes >> Replace and program the Powertrain Control Module. **Refer to Page 8E-56**.
Perform NAG1 TRANSMISSION VERIFICATION TEST.

No >> Go To 7

7. CAB - TERMINATING RESISTOR

With the ignition off.

Reconnect the PCM harness connector.

Disconnect the CAB harness connector.

Measure the resistance from the CAN C Bus (+) circuit to the CAN C Bus (-) circuit at the CAB harness connector.

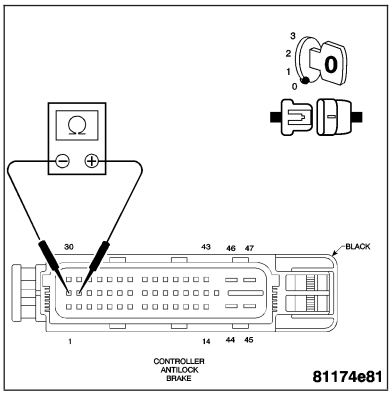

Is the resistance 120 ohms, ± 2.0 ohms?

Yes >> Replace the Controller Antilock Brake Module. **Refer to Page 8E-63**.
Perform NAG1 TRANSMISSION VERIFICATION TEST.

No >> Replace the Transmission Control Module. **Refer to Page 8E-60**.
Perform NAG1 TRANSMISSION VERIFICATION TEST.

(P0730) IMPROPER GEAR

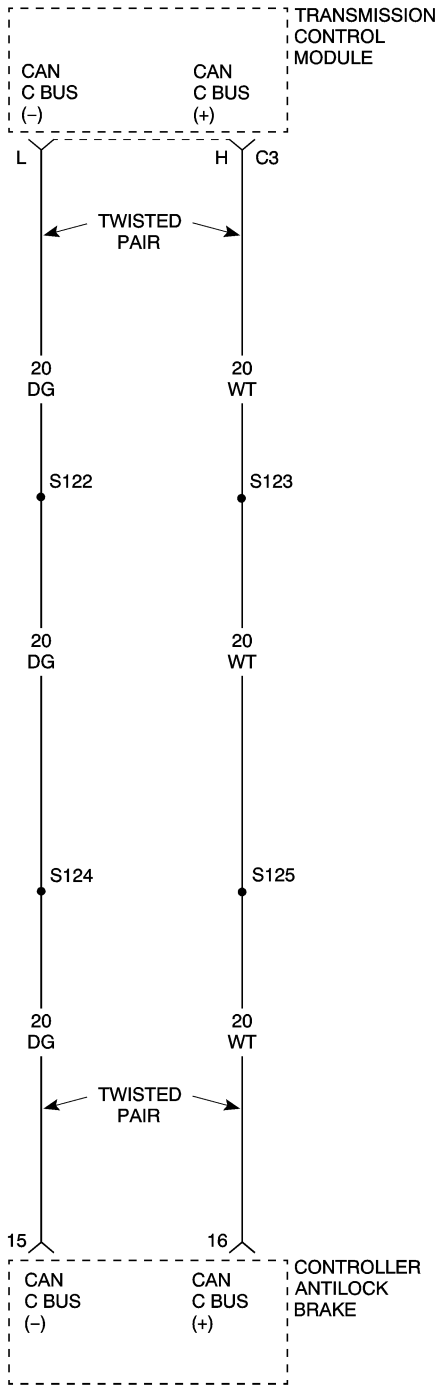

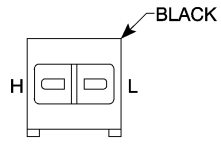

TRANSMISSION CONTROL MODULE C3

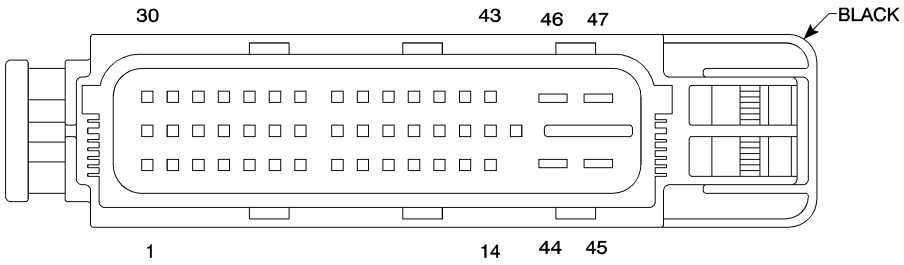

CONTROLLER ANTILOCK BRAKE

81157afe

(P0730) IMPROPER GEAR — CONTINUED

When Monitored and Set Condition

- When Monitored: Engine RPM greater than 450 and output speed (ABS) greater than 180 RPM. No Input Speed sensor N2 - N3, Shift lever, and/or ABS wheel speed DTCs present.
- Set Condition: The TCM compares the calculated gear with the gear the transmission has actually engaged. If the actual gear differs from the gear calculated by the TCM, the TCM value is adjusted to the engaged gear and a counter is increased by 2. If after a shift the engaged gear and the calculated gear still match, the counter is decreased by 1 point. A DTC is detected as soon as the counter exceeds a threshold. If the fault is detected 3 consecutive ignition cycles, the transmission will be placed in Limp-in and the MIL activated.

POSSIBLE CAUSES
ABS DTCS PRESENT
SOLENOID DTCS PRESENT
INTERNAL TRANSMISSION
TRANSMISSION CONTROL MODULE

For a complete Transmission Control Module Circuit Diagram **Refer to Page 21-182**.

Diagnostic Test

1. PRE-DIAGNOSTIC CHECK OUT

Note: Low fluid level can be the cause of many transmission problems. If the fluid level is low, locate and repair the leak then check and adjust the fluid level in accordance with the Service Information.

Note: Always perform diagnostics with a fully charged battery to avoid false symptoms.

With the DRB III®, read the engine DTCs. Check and repair all engine DTCs prior to performing transmission symptom diagnostics.

With the DRB III®, read and record all Transmission DTCs.

Note: Check connectors - Clean/repair as necessary. Poor pin to terminal connections can set DTCs.

Using the wiring diagram/schematic as a guide, inspect the wiring and connectors. Repair as necessary.

Most DTCs set on start up but some must be set by driving the vehicle such that all diagnostic monitors have run.

Note: Verify flash level of transmission controller. Some problems are corrected by software upgrades to the transmission controller.

Note: Check for any Technical Service Bulletins that may apply.

Perform this procedure prior to Symptom diagnosis.

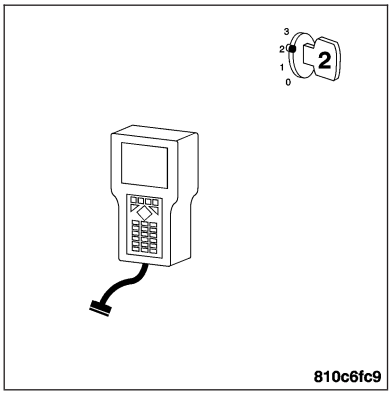

Continue

Go To 2

(P0730) IMPROPER GEAR — CONTINUED

2. SOLENOID DTCS PRESENT

Turn the ignition on.
With the DRB III®, read Transmission DTCs.

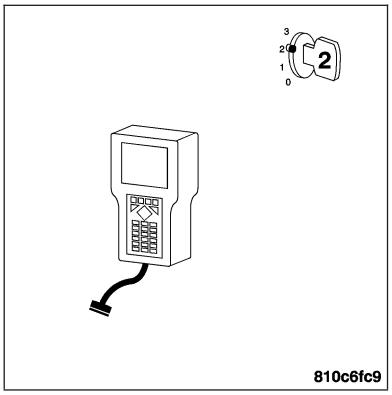

Are any Transmission Solenoid DTCs present?

Yes >> Refer to the Transmission - Electrical Diagnostics category and perform the appropriate symptom.

No >> Go To 3

3. ABS DTCS PRESENT

With the ignition on.
With the DRB III®, read ABS DTCs.

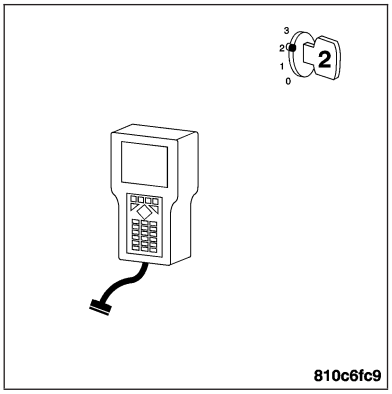

Are any ABS DTCs present?

Yes >> Refer to the Brakes - ABS Electrical Diagnostics category and perform the appropriate symptom.

No >> Go To 4

4. INTERNAL TRANSMISSION

Remove and inspect the Transmission Valve Body and Solenoid Assembly in accordance with the Service Information.

Note: This DTC is usually set due to an internal transmission problem such as but not limited to: stuck solenoid, valve and/or contamination in the valve body, broken springs, leaking clutch seals, dislodged or broken snap ring.
Inspect the internal transmission in accordance with the Service Information.

Where any problems found?

Yes >> Repair the internal transmission as necessary. Refer to the Transmission - Service Information for the proper repair procedure.
Perform NAG1 TRANSMISSION VERIFICATION TEST.

No >> Replace the Transmission Control Module. **Refer to Page 8E-60**.
Perform NAG1 TRANSMISSION VERIFICATION TEST.

(P0730) IMPROPER RATIO



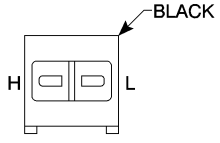

TRANSMISSION CONTROL MODULE C3

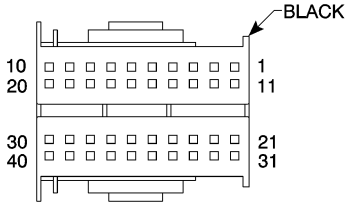

POWERTRAIN CONTROL MODULE – C4

81157b65

(P0730) IMPROPER RATIO — CONTINUED

When Monitored and Set Condition

- When Monitored: Engine RPM greater than 450 RPM, output speed greater than 180 RPM, no N2 - N3 input speed sensor errors present, no gear selector lever errors present, no ABS system errors, and all wheel speeds above 450 RPM.
- Set Condition: No shifting operation and detected gear is not the actual gear. No shifting operation - detected (calculated) gear is less than actual (expected) gear, no plausible gear is calculated, actual turbine speed - calculated turbine speed >300 RPM or calculated transmission ratio is above threshold. During an Upshift - detected (calculated) gear is less than actual (expected) gear-1. During Downshift - detected (calculated) gear is less than actual (expected) gear.

POSSIBLE CAUSES
INTERNAL TRANSMISSION
TRANSMISSION CONTROL MODULE

For a complete Transmission Control Module Circuit Diagram **Refer to Page 21-182**.

Diagnostic Test

1. PRE-DIAGNOSTIC CHECK OUT

Note: Low fluid level can be the cause of many transmission problems. If the fluid level is low, locate and repair the leak then check and adjust the fluid level in accordance with the Service Information.

Note: Always perform diagnostics with a fully charged battery to avoid false symptoms.

With the DRB III®, read the engine DTCs. Check and repair all engine DTCs prior to performing transmission symptom diagnostics.

With the DRB III®, read and record all Transmission DTCs.

Note: Check connectors - Clean/repair as necessary. Poor pin to terminal connections can set DTCs.

Using the wiring diagram/schematic as a guide, inspect the wiring and connectors. Repair as necessary.

Most DTCs set on start up but some must be set by driving the vehicle such that all diagnostic monitors have run.

Note: Verify flash level of transmission controller. Some problems are corrected by software upgrades to the transmission controller.

Note: Check for any Technical Service Bulletins that may apply.

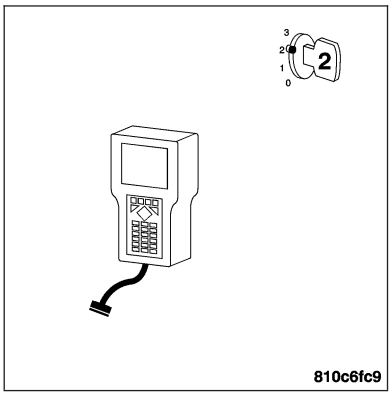

Perform this procedure prior to Symptom diagnosis.

Continue

Go To 2

(P0730) IMPROPER RATIO — CONTINUED

2. TRANSMISSION MECHANICAL PROBLEM

Determine if there are any Transmission Mechanical problems present.

Remove the Transmission Oil Pan and inspect for debris or a plugged Transmission Oil Filter.

Refer to the Service Information for proper removal and inspection procedures.

Is there any debris, plugged Transmission Oil Filter, or signs of an internal transmission problem?

Yes >> Refer to the Transmission - Service Information for the proper repair procedure. Pay particular attention to the valve body components and stuck solenoids.
Perform NAG1 TRANSMISSION VERIFICATION TEST.

No >> Replace the Transmission Control Module. **Refer to Page 8E-60**.
Perform NAG1 TRANSMISSION VERIFICATION TEST.

(P0740) TCC OVERTEMP



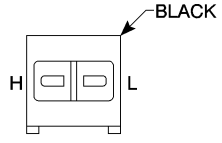

TRANSMISSION CONTROL MODULE C3

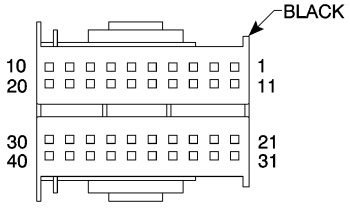

POWERTRAIN CONTROL MODULE – C4

81157b65

(P0740) TCC OVERTEMP — CONTINUED

When Monitored and Set Condition

- When Monitored: Solenoid supply active. No Input Speed Sensor N2 - N3, CAN Bus, PCM, CAN Engine, CAN Engine Speed DTCs present. Torque Converter Clutch in slip mode.
- Set Condition: Friction loss factor reaches threshold.

POSSIBLE CAUSES
INTERNAL TRANSMISSION

For a complete Transmission Control Module Circuit Diagram **Refer to Page 21-182**.

Diagnostic Test

1. PRE-DIAGNOSTIC CHECK OUT

Note: Low fluid level can be the cause of many transmission problems. If the fluid level is low, locate and repair the leak then check and adjust the fluid level in accordance with the Service Information.

Note: Always perform diagnostics with a fully charged battery to avoid false symptoms.

With the DRB III®, read the engine DTCs. Check and repair all engine DTCs prior to performing transmission symptom diagnostics.

With the DRB III®, read and record all Transmission DTCs.

Note: Check connectors - Clean/repair as necessary. Poor pin to terminal connections can set DTCs.

Using the wiring diagram/schematic as a guide, inspect the wiring and connectors. Repair as necessary.

Most DTCs set on start up but some must be set by driving the vehicle such that all diagnostic monitors have run.

Note: Verify flash level of transmission controller. Some problems are corrected by software upgrades to the transmission controller.

Note: Check for any Technical Service Bulletins that may apply.

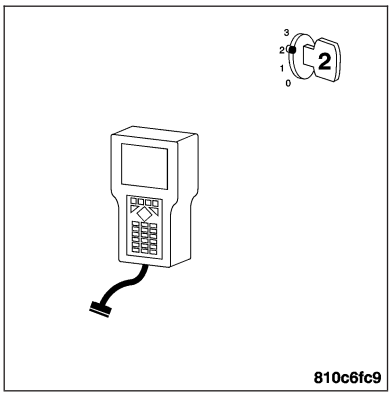

Perform this procedure prior to Symptom diagnosis.

Continue
Go To 2

2. INTERNAL TRANSMISSION

This DTC is an informational DTC.

Check for any Technical Service Bulletins or Controller updates that may apply.

This is usually a sign of TCC failure or internal transmission problems.

Check the Engine and Transmission Cooling Systems for proper operation.

View repair.

Repair >> Repair internal Transmission as necessary. Refer to the Service Information for proper repair procedure.

(P0740) TCC STUCK ON

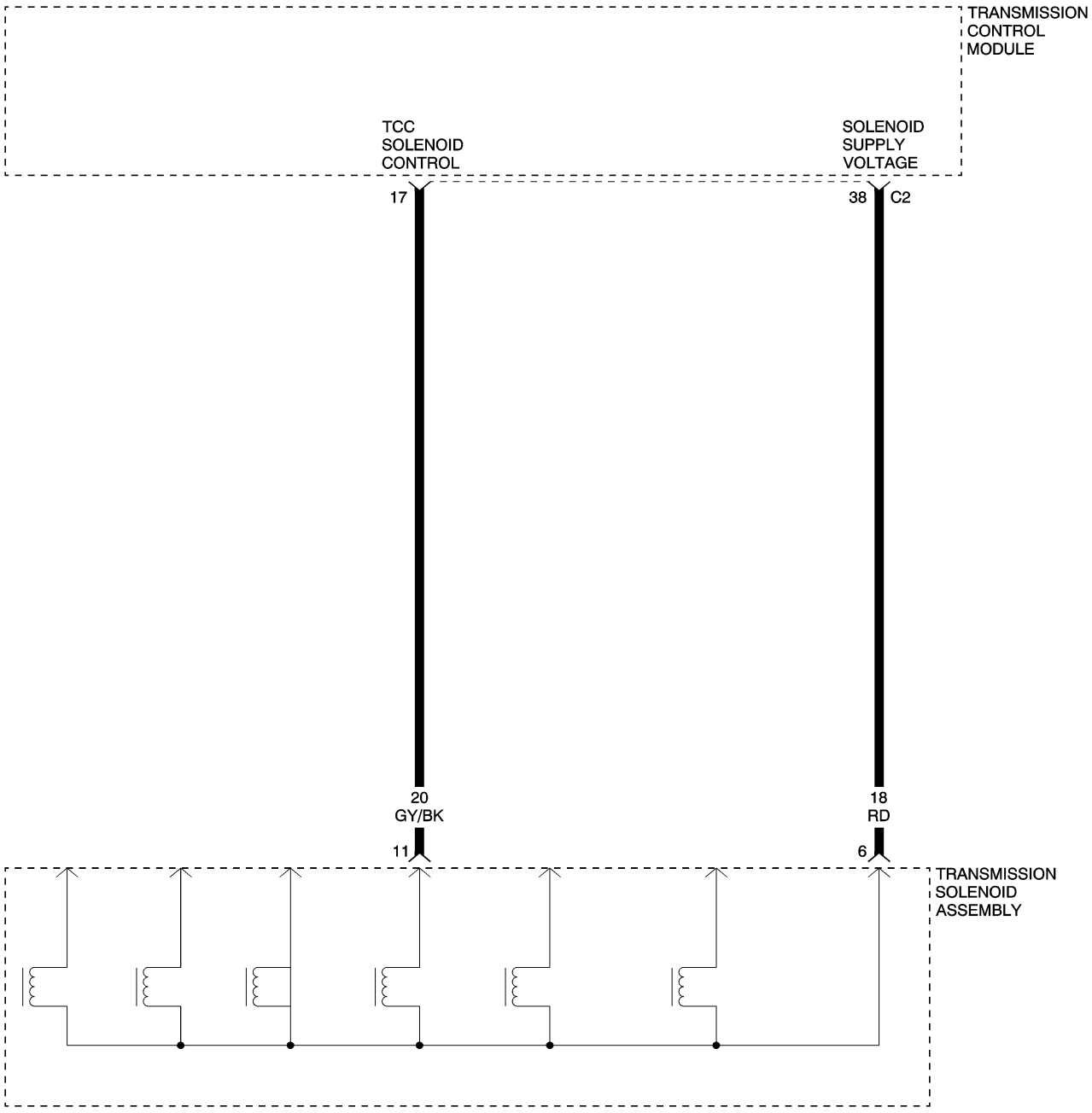

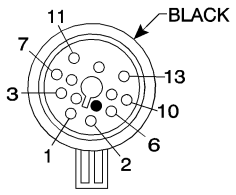

TRANSMISSION SOLENOID ASSEMBLY

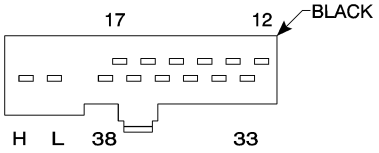

TRANSMISSION CONTROL MODULE C2

81157c35

(P0740) TCC STUCK ON — CONTINUED

When Monitored and Set Condition

- When Monitored: No Input Speed Sensor N2 - N3, CAN Bus Circuit, PCM, CAN Engine, No CAN Engine Torque and/or Shift in progress DTCs present. Must be in a valid forward gear.
- Set Condition: Engine RPM (turbine speed) is greater than 30 RPM when the engine torque is less than 100 N·m for 1.0 second.

POSSIBLE CAUSES
TCC SOLENOID CONTROL CIRCUIT SHORTED TO GROUND
TCC SOLENOID CONTROL CIRCUIT SHORTED TO ANOTHER CIRCUIT
INTERNAL TRANSMISSION
TRANSMISSION CONTROL MODULE

For a complete Transmission Control Module Circuit Diagram **Refer to Page 21-182**.

Diagnostic Test

1. PRE-DIAGNOSTIC CHECK OUT

Note: Low fluid level can be the cause of many transmission problems. If the fluid level is low, locate and repair the leak then check and adjust the fluid level in accordance with the Service Information.

Note: Always perform diagnostics with a fully charged battery to avoid false symptoms.

With the DRB III®, read the engine DTCs. Check and repair all engine DTCs prior to performing transmission symptom diagnostics.

With the DRB III®, read and record all Transmission DTCs.

Note: Check connectors - Clean/repair as necessary. Poor pin to terminal connections can set DTCs.

Using the wiring diagram/schematic as a guide, inspect the wiring and connectors. Repair as necessary.

Most DTCs set on start up but some must be set by driving the vehicle such that all diagnostic monitors have run.

Note: Verify flash level of transmission controller. Some problems are corrected by software upgrades to the transmission controller.

Note: Check for any Technical Service Bulletins that may apply.

Perform this procedure prior to Symptom diagnosis.

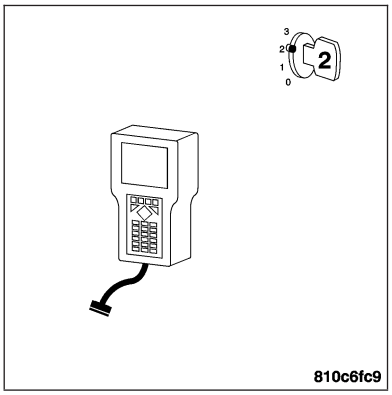

Continue

Go To 2

(P0740) TCC STUCK ON — CONTINUED

2. INTERNAL TRANSMISSION

Turn the ignition off.

Disconnect the Transmission Solenoid Assembly harness connector.

Note: Check connectors - Clean/repair as necessary.

Start the engine.

With the brakes firmly applied, shift the gear selector into Drive.

Did the engine stall or stumble?

Yes >> Repair the internal transmission. Pay particular attention to the components related to the TCC. Refer to the Transmission - Service Information for the proper repair procedure.

No >> Go To 3

3. TCC SOLENOID CONTROL CIRCUIT SHORT TO GROUND

Turn the ignition off.

Disconnect the TCM C2 harness connector.

Note: Check connectors - Clean/repair as necessary.

Measure the resistance between ground and the TCC Solenoid Control circuit.

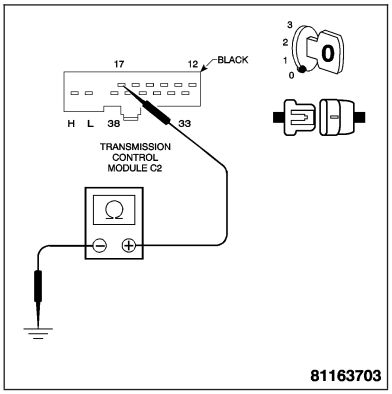

Is the resistance below 100 kohms?

Yes >> Repair the TCC Solenoid Control circuit for a short to ground.

Perform NAG1 TRANSMISSION VERIFICATION TEST.

No >> Go To 4

4. TCC SOLENOID CONTROL CIRCUIT SHORT TO OTHER CIRCUITS

With the ignition off.

Measure the resistance from the TCC Solenoid Control circuit to all other circuits at the Transmission Solenoid Assembly harness connector.

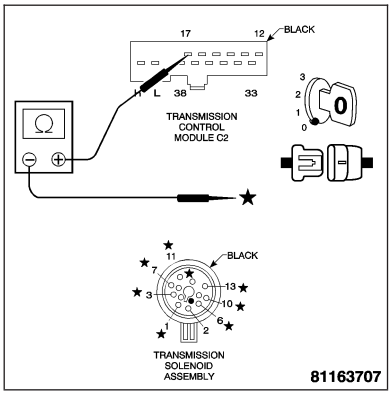

Is the resistance below 100 kohms on any circuit?

Yes >> Repair the TCC Solenoid Control circuit for a short to other circuit(s).

Perform NAG1 TRANSMISSION VERIFICATION TEST.

No >> Replace the Transmission Control Module. **Refer to Page 8E-60**.

Perform NAG1 TRANSMISSION VERIFICATION TEST.

(P0743) TCC SOLENOID CIRCUIT

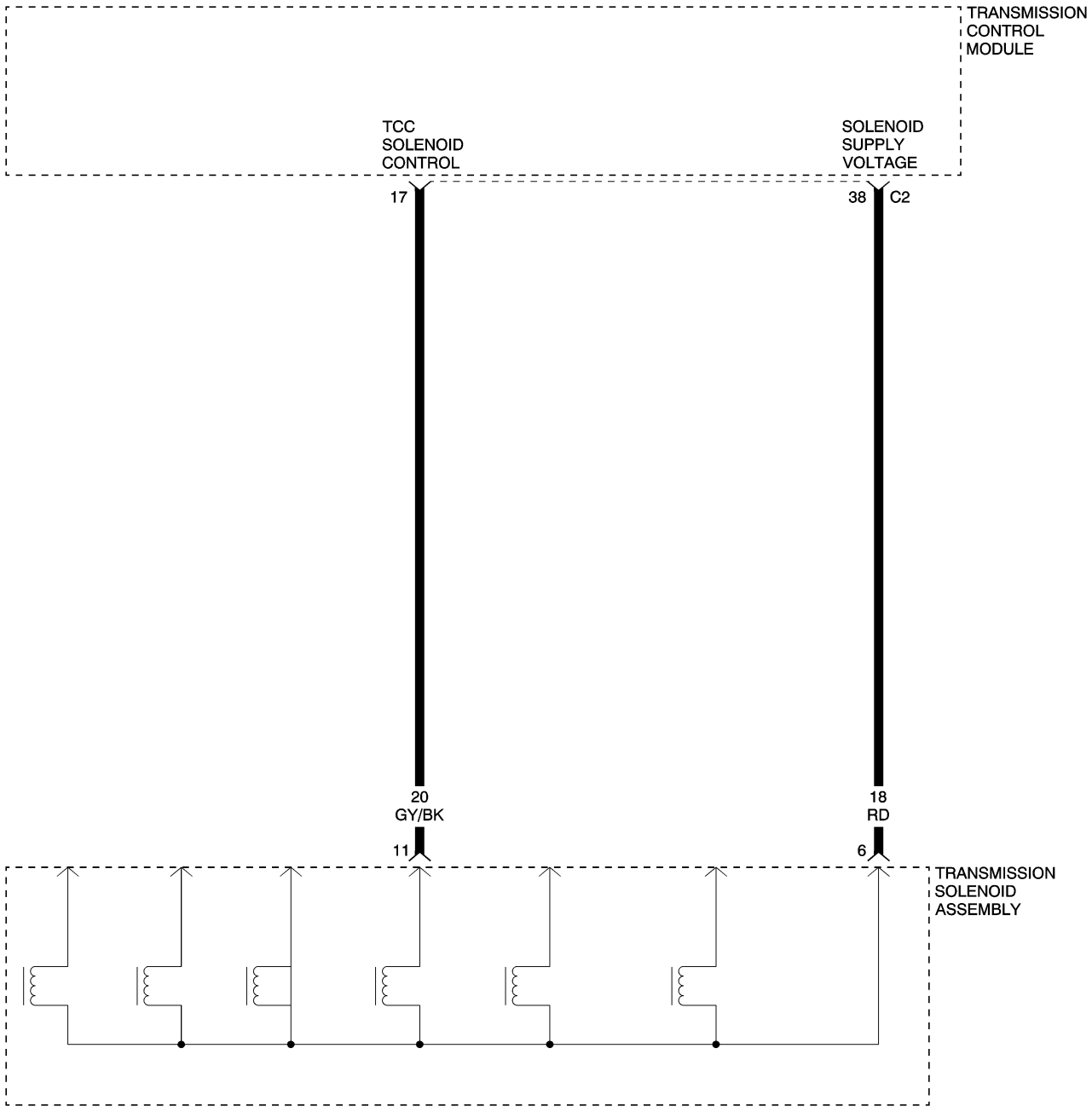

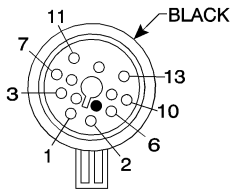

TRANSMISSION SOLENOID ASSEMBLY

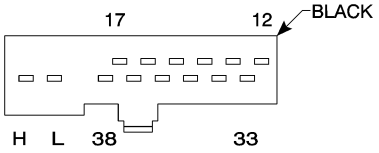

TRANSMISSION CONTROL MODULE C2

81157c35

(P0743) TCC SOLENOID CIRCUIT — CONTINUED

When Monitored and Set Condition

- When Monitored: Always monitored with system active at each ignition cycle.
- Set Condition: If the TCM detects a short to ground or battery on the solenoid control circuit, shorted solenoid, open solenoid, or an open or shorted solenoid control circuit driver in the TCM.

POSSIBLE CAUSES
TCC SOLENOID CONTROL CIRCUIT OPEN
TCC SOLENOID CONTROL CIRCUIT SHORTED TO GROUND
TCC SOLENOID CONTROL CIRCUIT SHORTED TO ANOTHER CIRCUIT
TCC SOLENOID
TRANSMISSION CONTROL MODULE

For a complete Transmission Control Module Circuit Diagram **Refer to Page 21-182**.

Diagnostic Test

1. PRE-DIAGNOSTIC CHECK OUT

Note: Low fluid level can be the cause of many transmission problems. If the fluid level is low, locate and repair the leak then check and adjust the fluid level in accordance with the Service Information.

Note: Always perform diagnostics with a fully charged battery to avoid false symptoms.

With the DRB III®, read the engine DTCs. Check and repair all engine DTCs prior to performing transmission symptom diagnostics.

With the DRB III®, read and record all Transmission DTCs.

Note: Check connectors - Clean/repair as necessary. Poor pin to terminal connections can set DTCs.

Using the wiring diagram/schematic as a guide, inspect the wiring and connectors. Repair as necessary.

Most DTCs set on start up but some must be set by driving the vehicle such that all diagnostic monitors have run.

Note: Verify flash level of transmission controller. Some problems are corrected by software upgrades to the transmission controller.

Note: Check for any Technical Service Bulletins that may apply.

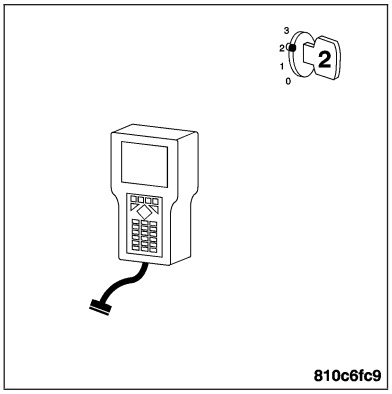

Perform this procedure prior to Symptom diagnosis.

Continue

Go To 2

(P0743) TCC SOLENOID CIRCUIT — CONTINUED

2. CHECK FOR CURRENT DTC

Note: If the TCM detects and stores a DTC, the TCM also stores the engine/vehicle operating conditions under which the DTC was set. Some of these conditions are displayed on the DRB III® at the same time the DTC is displayed.

Note: Before erasing stored DTCs, record these conditions. Attempting to duplicate these conditions may assist when checking for an active DTC.

Turn the ignition on.

With the DRB III®, erase TCM DTCs.

Note: It maybe necessary to road test the vehicle for this DTC to set.

With the DRB III®, read the TCM DTCs.

Did this DTC set again?

Yes >> Go To 3

No >> Go To 7

3. TCC SOLENOID CONTROL CIRCUIT OPEN

Turn the ignition off.

Disconnect the Transmission Control Module C2 harness connector.

Disconnect the Transmission Solenoid Assembly harness connector

Note: Check connectors - Clean/repair as necessary.

Measure the resistance of the TCC Solenoid Control circuit from the TCM C2 harness connector to the Transmission Solenoid Assembly harness connector.

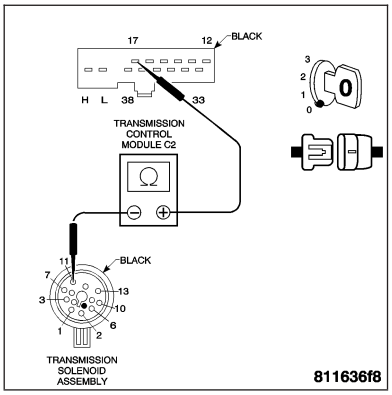

Is the resistance below 5.0 ohms?

Yes >> Go To 4

No >> Repair the TCC Solenoid Control circuit for an open.
Perform NAG1 TRANSMISSION VERIFICATION TEST.

4. TCC SOLENOID CONTROL CIRCUIT SHORT TO GROUND

With the ignition off.

Measure the resistance between ground and the TCC Solenoid Control circuit.

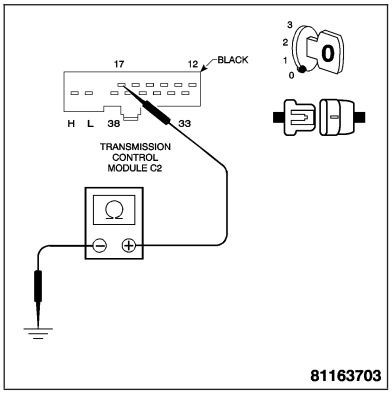

Is the resistance below 100 kohms?

Yes >> Repair the TCC Solenoid Control circuit for a short to ground.
Perform NAG1 TRANSMISSION VERIFICATION TEST.

No >> Go To 5

(P0743) TCC SOLENOID CIRCUIT — CONTINUED

5. TCC SOLENOID CONTROL CIRCUIT SHORT TO OTHER CIRCUITS

With the ignition off.

Measure the resistance from the TCC Solenoid Control circuit to all other circuits at the Transmission Solenoid Assembly harness connector.

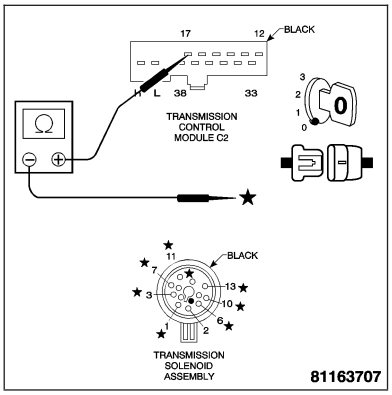

Is the resistance below 100 kohms between any other circuit?

Yes >> Repair the TCC Solenoid Control circuit for a short to other circuit(s).
Perform NAG1 TRANSMISSION VERIFICATION TEST.

No >> Go To 6

6. TCC SOLENOID RESISTANCE OUT OF TOLERANCE

With the ignition off.

Reconnect the Transmission Solenoid Assembly harness connector.

Measure the resistance from the TCC Solenoid Control circuit to the Solenoid Supply Voltage circuit at the Transmission Control Module C2 harness connector.

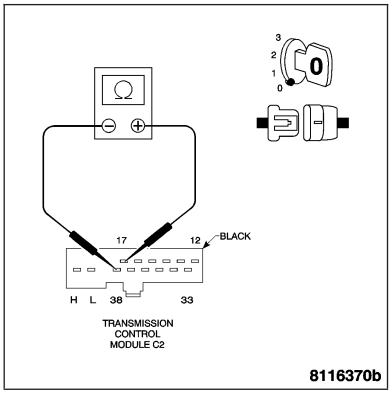

Is the resistance between 2.0 and 4.0 ohms?

Yes >> Replace the Transmission Control Module. **Refer to Page 8E-60**.
Perform NAG1 TRANSMISSION VERIFICATION TEST.

No >> Replace the TCC Solenoid. **Refer to Page 21-281**.
Perform NAG1 TRANSMISSION VERIFICATION TEST.

7. INTERMITTENT WIRING AND CONNECTORS

The condition that caused this DTC to set is currently not present. Inspect the related wiring harness for a possible intermittent condition.

Using the schematics as a guide, inspect the wiring and connectors specific to this circuit.

Wiggle the wires while checking for shorts and open circuits.

Note: Check for Technical Service Bulletins that may apply.

Were any problems found?

Yes >> Repair as necessary.
Perform NAG1 TRANSMISSION VERIFICATION TEST.

No >> Test Complete.

(P0748) MODULATING PRESSURE SOLENOID CIRCUIT

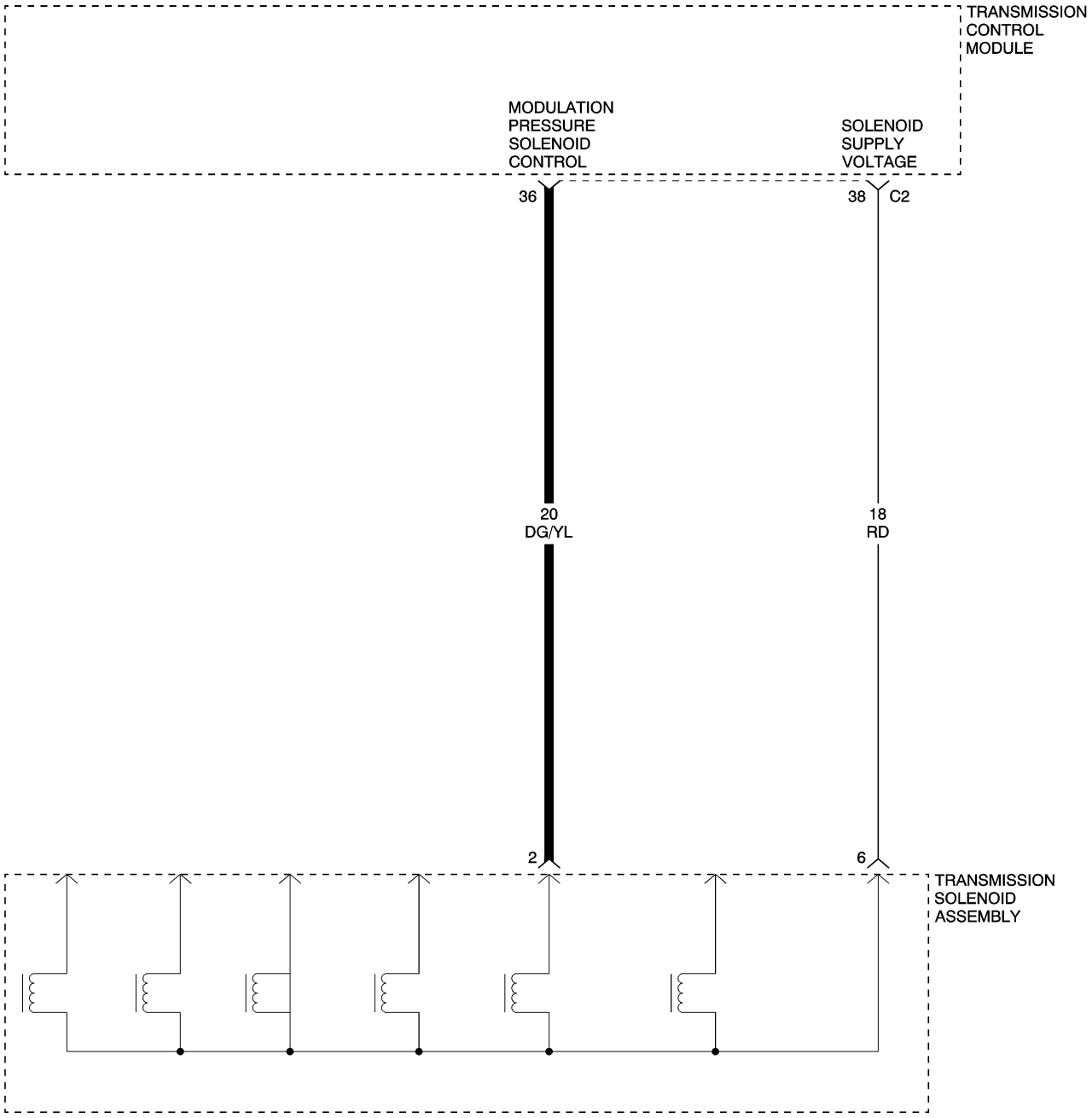

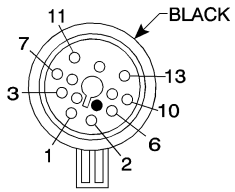

TRANSMISSION SOLENOID ASSEMBLY

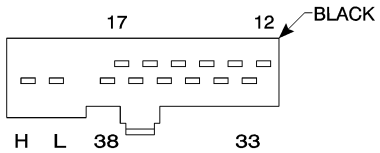

TRANSMISSION CONTROL MODULE C2

81157be3

(P0748) MODULATING PRESSURE SOLENOID CIRCUIT — CONTINUED

When Monitored and Set Condition

- When Monitored: Always monitored with system active at each ignition cycle.
- Set Condition: If the TCM detects a short to ground, a short to voltage on the solenoid control circuit, a shorted solenoid, an open solenoid, or an open or shorted solenoid control circuit driver in the TCM.

POSSIBLE CAUSES
MODULATING PRESSURE SOLENOID CONTROL CIRCUIT OPEN
MODULATING PRESSURE SOLENOID CONTROL CIRCUIT SHORTED TO GROUND
MODULATING PRESSURE SOLENOID CONTROL CIRCUIT SHORTED TO ANOTHER CIRCUIT
MODULATING PRESSURE SOLENOID
TRANSMISSION CONTROL MODULE

For a complete Transmission Control Module Circuit Diagram **Refer to Page 21-182**.

Diagnostic Test

1. PRE-DIAGNOSTIC CHECK OUT

Note: Low fluid level can be the cause of many transmission problems. If the fluid level is low, locate and repair the leak then check and adjust the fluid level in accordance with the service information.

Note: Always perform diagnostics with a fully charged battery to avoid false symptoms.

With the DRB III®, read the engine DTCs. Check and repair all engine DTCs prior to performing transmission symptom diagnostics.

With the DRB III®, read and record all Transmission DTCs.

Note: Check connectors - Clean/repair as necessary. Poor pin to terminal connections can set DTCs.

Using the wiring diagram/schematic as a guide, inspect the wiring and connectors. Repair as necessary.

Most DTCs set on start up but some must be set by driving the vehicle such that all diagnostic monitors have run.

Note: Verify flash level of transmission controller. Some problems are corrected by software upgrades to the transmission controller.

Note: Check for any Technical Service Bulletins that may apply.

Perform this procedure prior to Symptom diagnosis.

Continue

Go to 2

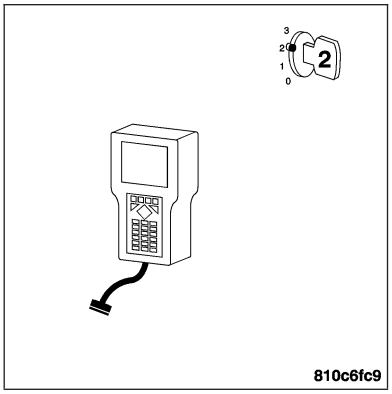

(P0748) MODULATING PRESSURE SOLENOID CIRCUIT — CONTINUED

2. CHECK FOR CURRENT DTC

Note: If the TCM detects and stores a DTC, the TCM also stores the engine/vehicle operating conditions under which the DTC was set. Some of these conditions are displayed on the DRB III® at the same time the DTC is displayed.

Note: Before erasing stored DTCs, record these conditions. Attempting to duplicate these conditions may assist when checking for an active DTC.

Turn the ignition on.

With the DRB III®, erase TCM DTCs.

Note: It maybe necessary to road test the vehicle for this DTC to set.

With the DRB III®, read the TCM DTCs.

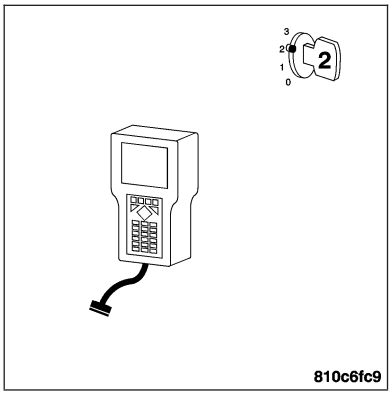

Did this DTC set again?

Yes >> Go To 3

No >> Go To 7

3. MODULATING PRESSURE SOLENOID CONTROL CIRCUIT OPEN

Turn the ignition off.

Disconnect the Transmission Control Module C2 harness connector.

Disconnect the Transmission Solenoid Assembly harness connector.

Note: Check connectors - Clean/repair as necessary.

Measure the resistance of the Modulating Pressure Solenoid Control circuit from the TCM C2 harness connector to the Transmission Solenoid Assembly harness connector.

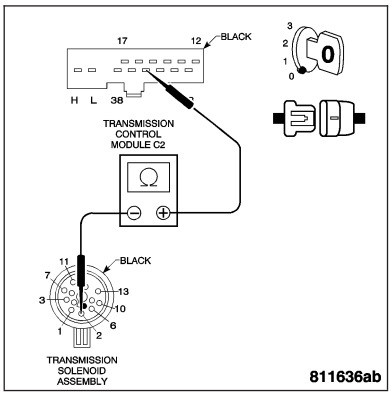

Is the resistance below 5.0 ohms?

Yes >> Go To 4

No >> Repair the Modulating Pressure Solenoid Control circuit for an open.

Perform NAG1 TRANSMISSION VERIFICATION TEST.

4. MODULATING PRESSURE SOLENOID CONTROL CIRCUIT SHORT TO GROUND

With the ignition off.

Measure the resistance between ground and the Modulating Pressure Solenoid Control circuit.

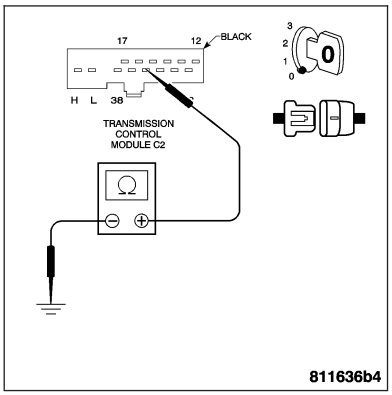

Is the resistance below 100 kohms?

Yes >> Repair the Modulating Pressure Solenoid Control circuit for a short to ground.

Perform NAG1 TRANSMISSION VERIFICATION TEST.

No >> Go To 5

(P0748) MODULATING PRESSURE SOLENOID CIRCUIT — CONTINUED

5. MODULATING PRESSURE SOLENOID CONTROL CIRCUIT SHORT TO OTHER CIRCUITS

With the ignition off.

Measure the resistance from the Modulating Pressure Solenoid Control circuit to all other circuits in the Transmission Solenoid Assembly harness connector.

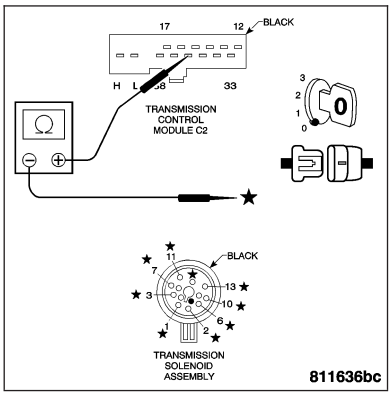

Is the resistance below 100 kohms between any other circuit?

Yes >> Repair the Modulating Pressure Solenoid Control circuit for a short to other circuits.
Perform NAG1 TRANSMISSION VERIFICATION TEST.

No >> Go To 6

6. MODULATING PRESSURE SOLENOID RESISTANCE OUT OF TOLERANCE

With the ignition off.

Reconnect the Transmission Solenoid Assembly harness connector.

Measure the resistance from the Modulating Pressure Solenoid Control circuit to the Solenoid Supply Voltage circuit at the Transmission Control Module C2 harness connector.

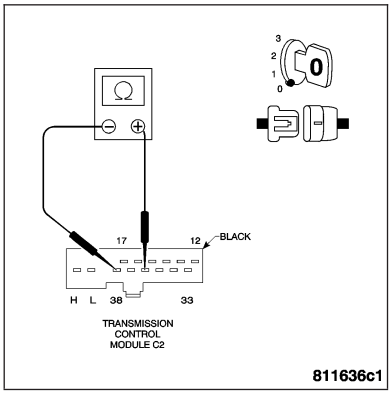

Is the resistance between 2.5 and 6.5 ohms?

Yes >> Replace the Transmission Control Module. **Refer to Page 8E-60**.
Perform NAG1 TRANSMISSION VERIFICATION TEST.

No >> Replace the Modulating Pressure Solenoid. **Refer to Page 21-281**.
Perform NAG1 TRANSMISSION VERIFICATION TEST.

7. INTERMITTENT WIRING AND CONNECTORS

The condition that caused this DTC to set is currently not present. Inspect the related wiring harness for a possible intermittent condition.

Using the schematics as a guide, inspect the wiring and connectors specific to this circuit.

Wiggle the wires while checking for shorts and open circuits.

Note: Check for any Technical Service Bulletins that may apply.

Were any problems found?

Yes >> Repair as necessary
Perform NAG1 TRANSMISSION VERIFICATION TEST.

No >> Test Complete.

(P0753) 1-2/4-5 SOLENOID CIRCUIT

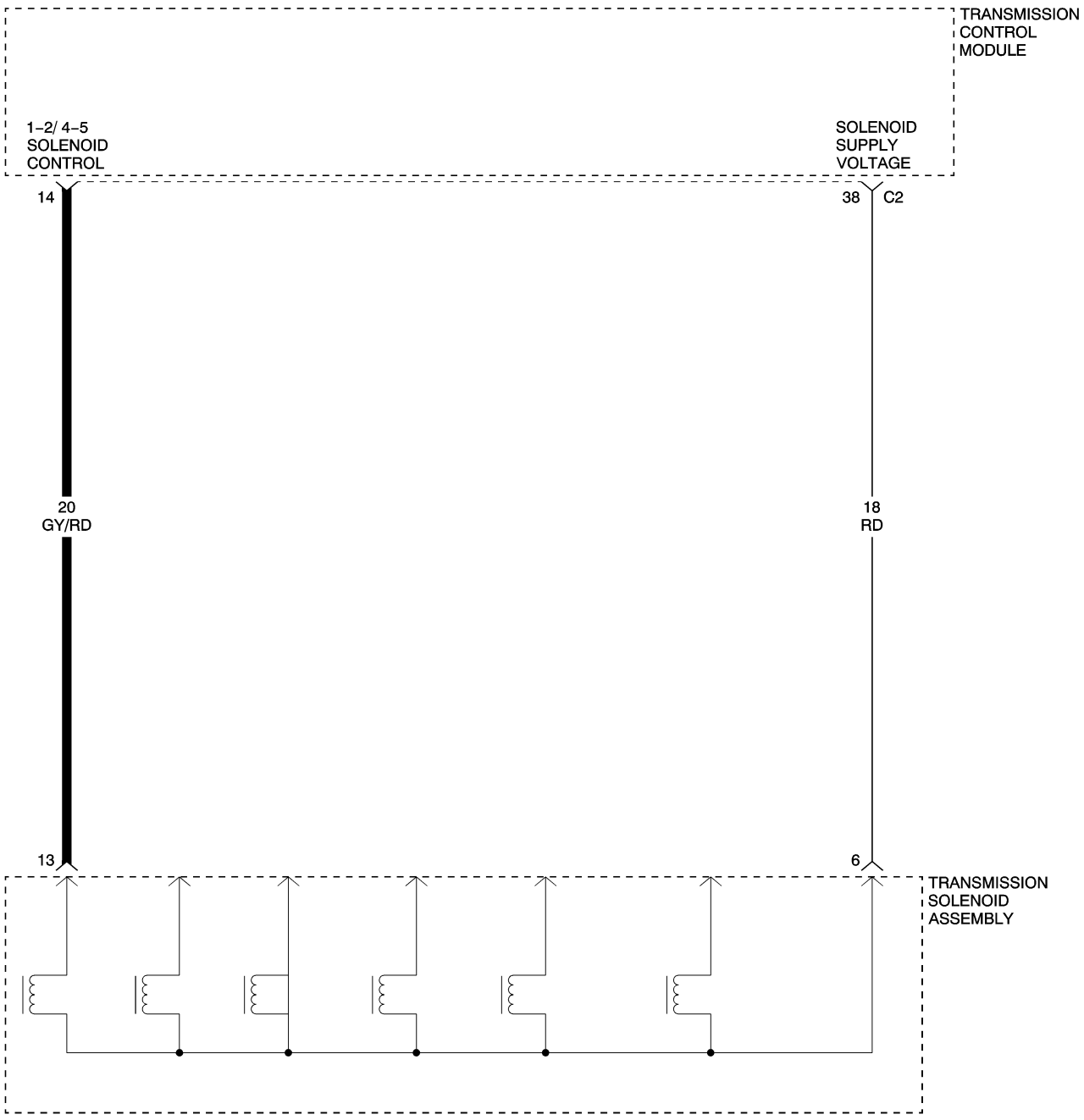

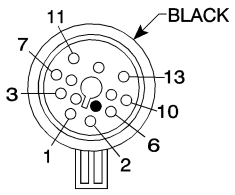

TRANSMISSION SOLENOID ASSEMBLY

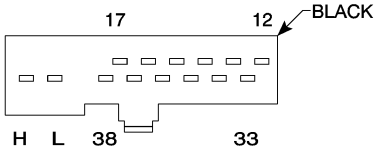

TRANSMISSION CONTROL MODULE C2

81157ae9

(P0753) 1-2/4-5 SOLENOID CIRCUIT — CONTINUED

When Monitored and Set Condition

- When Monitored: Always monitored with system active at each ignition cycle.
- Set Condition: If the TCM detects a short to battery on the solenoid control circuit, shorted solenoid, open solenoid, or an open or shorted solenoid control circuit in the TCM.

POSSIBLE CAUSES
1-2/4-5 SOLENOID CONTROL CIRCUIT OPEN
1-2/4-5 SOLENOID CONTROL CIRCUIT SHORTED TO GROUND
1-2/4-5 SOLENOID CONTROL CIRCUIT SHORTED TO ANOTHER CIRCUIT
1-2/4-5 SOLENOID
TRANSMISSION CONTROL MODULE

For a complete Transmission Control Module Circuit Diagram **Refer to Page 21-182**.

Diagnostic Test

1. PRE-DIAGNOSTIC CHECK OUT

Note: Low fluid level can be the cause of many transmission problems. If the fluid level is low, locate and repair the leak then check and adjust the fluid level in accordance with the Service Information.

Note: Always perform diagnostics with a fully charged battery to avoid false symptoms.

With the DRB III®, read the engine DTCs. Check and repair all engine DTCs prior to performing transmission symptom diagnostics.

With the DRB III®, read and record all Transmission DTCs.

Note: Check connectors - Clean/repair as necessary. Poor pin to terminal connections can set DTCs.

Using the wiring diagram/schematic as a guide, inspect the wiring and connectors. Repair as necessary.

Most DTCs set on start up but some must be set by driving the vehicle such that all diagnostic monitors have run.

Note: Verify flash level of transmission controller. Some problems are corrected by software upgrades to the transmission controller.

Note: Check for any Technical Service Bulletins that may apply.

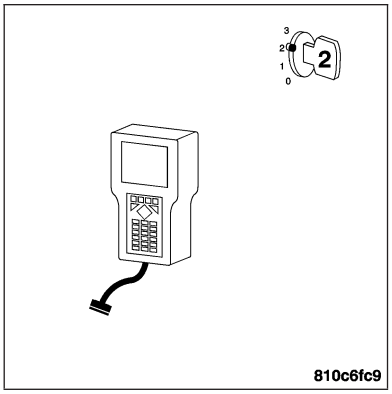

Perform this procedure prior to Symptom diagnosis.

Continue

Go To 2

(P0753) 1-2/4-5 SOLENOID CIRCUIT — CONTINUED

2. CHECK FOR CURRENT DTC

Note: If the TCM detects and stores a DTC, the TCM also stores the engine/vehicle operating conditions under which the DTC was set. Some of these conditions are displayed on the DRB III® at the same time the DTC is displayed.

Note: Before erasing stored DTCs, record these conditions. Attempting to duplicate these conditions may assist when checking for an active DTC.

Turn the ignition on.

With the DRB III®, erase TCM DTCs.

Note: It maybe necessary to road test the vehicle for this DTC to set.

With the DRB III®, read the TCM DTCs.

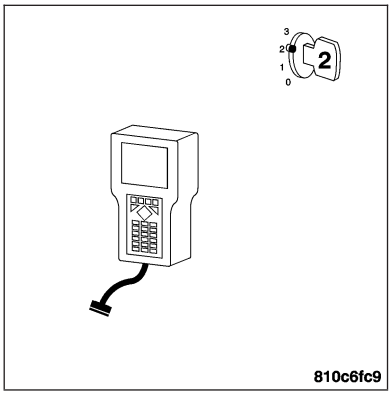

Did this DTC set again?

Yes >> Go To 3

No >> Go To 7

3. 1-2/4-5 SOLENOID CONTROL CIRCUIT OPEN

Turn the ignition off.

Disconnect the Transmission Control Module C2 harness connector.

Disconnect the Transmission Solenoid Assembly harness connector

Note: Check connectors - Clean/repair as necessary.

Measure the resistance of the 1-2/4-5 Solenoid Control circuit from the TCM harness connector to the Transmission Solenoid Assembly harness connector.

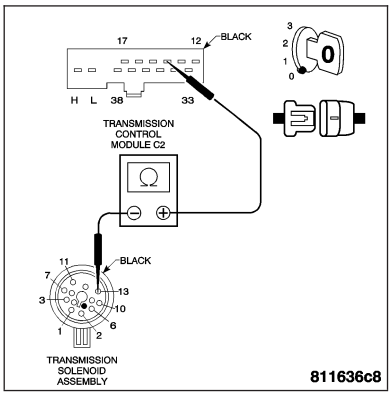

Is the resistance below 5.0 ohms?

Yes >> Go To 4

No >> Repair the 1-2/4-5 Solenoid Control circuit for an open.
Perform NAG1 TRANSMISSION VERIFICATION TEST.

4. Test 1-2/4-5 SOLENOID CONTROL CIRCUIT SHORT TO GROUND

With the ignition off.

Measure the resistance between ground and the 1-2/4-5 Solenoid Control circuit.

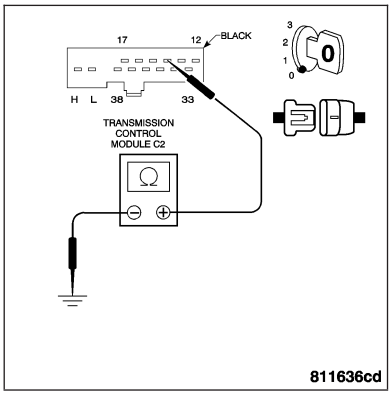

Is the resistance below 100 kohms?

Yes >> Repair the 1-2/4-5 Solenoid Control circuit for a short to ground.
Perform NAG1 TRANSMISSION VERIFICATION TEST.

No >> Go To 5

(P0753) 1-2/4-5 SOLENOID CIRCUIT — CONTINUED

5. 1-2/4-5 SOLENOID CONTROL CIRCUIT SHORT TO OTHER CIRCUITS

With the ignition off.

Measure the resistance from the 1-2/4-5 Solenoid Control circuit to all other circuits in the Transmission Solenoid Assembly harness connector.

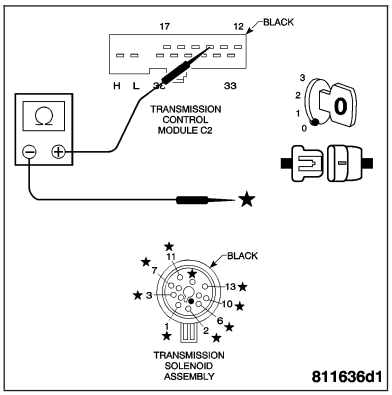

Is the resistance below 100 kohms between any other circuit?

Yes >> Repair the 1-2/4-5 Solenoid Control circuit for a short to other circuit(s).
Perform NAG1 TRANSMISSION VERIFICATION TEST.

No >> Go To 6

6. 1-2/4-5 SOLENOID RESISTANCE OUT OF TOLERANCE

With the ignition off.

Reconnect the Transmission Solenoid Assembly harness connector.

Measure the resistance from the 1-2/4-5 Solenoid Control circuit to the Solenoid Supply Voltage circuit at the Transmission Control Module C2 harness connector.

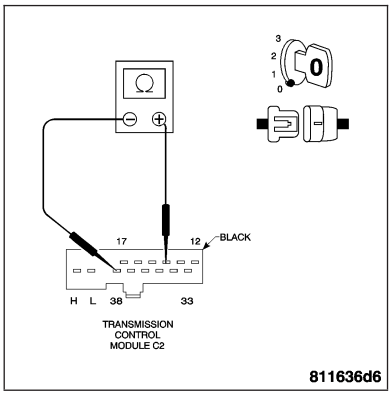

Is the resistance between 2.5 and 6.5 ohms?

Yes >> Replace the Transmission Control Module. **Refer to Page 8E-60**.
Perform NAG1 TRANSMISSION VERIFICATION TEST.

No >> Replace the 1-2/4-5 Solenoid. **Refer to Page 21-281**.
Perform NAG1 TRANSMISSION VERIFICATION TEST.

7. INTERMITTENT WIRING AND CONNECTORS

The condition that caused this DTC to set is currently not present. Inspect the related wiring harness for a possible intermittent condition.

Using the schematics as a guide, inspect the wiring and connectors specific to this circuit.

Wiggle the wires while checking for shorts and open circuits.

Note: Check for any Technical Service Bulletins that may apply.

Were any problems found?

Yes >> Repair as necessary.
Perform NAG1 TRANSMISSION VERIFICATION TEST.

No >> Test Complete.

(P0753) 1–2/4–5 SOLENOID CIRCUIT SHORT TO GROUND

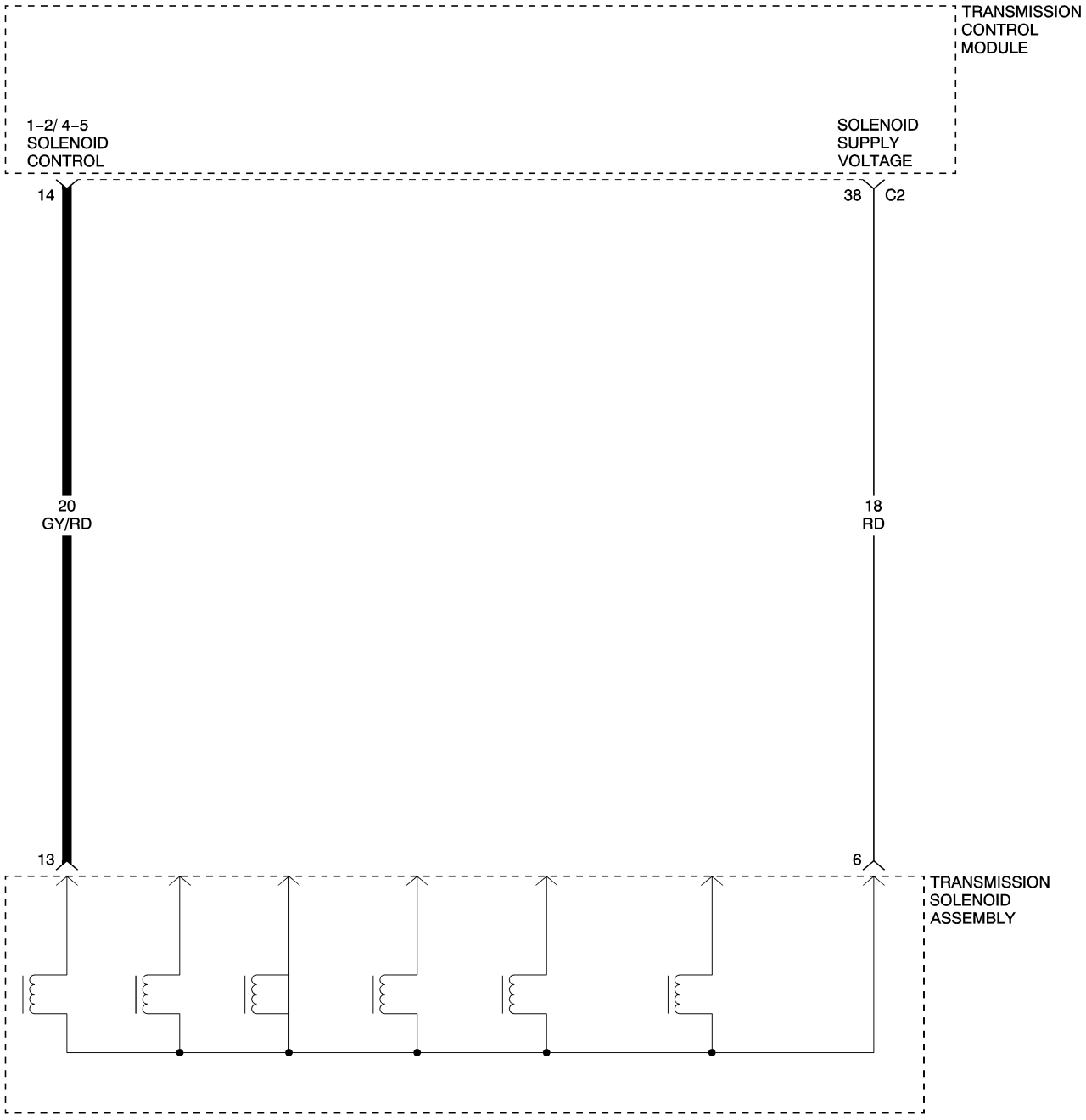

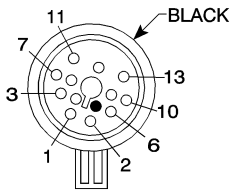

TRANSMISSION SOLENOID ASSEMBLY

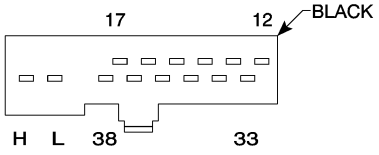

TRANSMISSION CONTROL MODULE C2

81157ae9

(P0753) 1–2/4–5 SOLENOID CIRCUIT SHORT TO GROUND — CONTINUED

When Monitored and Set Condition

- When Monitored: Always monitored with system active at each ignition cycle.
- Set Condition: If the TCM detects a short to ground on the solenoid control circuit or solenoid control circuit shorted to ground in the TCM.

POSSIBLE CAUSES
1-2/4-5 SOLENOID CONTROL CIRCUIT SHORTED TO GROUND
1-2/4-5 SOLENOID CONTROL CIRCUIT SHORTED TO ANOTHER CIRCUIT
1-2/4-5 SOLENOID
TRANSMISSION CONTROL MODULE

Diagnostic Test

1. CHECK FOR CURRENT DTC

Turn the ignition on.
With the DRB III®, read the TCM DTCs.

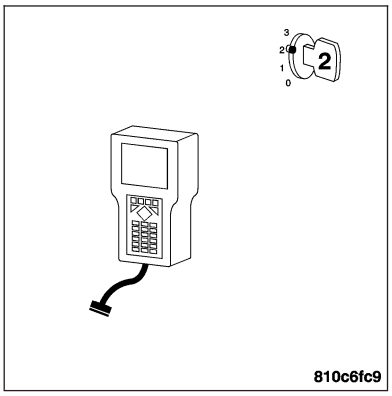

Is this DTC preset?

Yes >> For complete diagnosis of this DTC, refer to (P0753) 1–2/4–5 SOLENOID CIRCUIT.

No >> Go To 2

2. INTERMITTENT WIRING AND CONNECTORS

The conditions necessary to set this DTC are not present at this time.

Note: Check connectors — Clean/repair as necessary. Poor pin to terminal connections can set DTCs.Using the wiring diagram/schematic as a guide, inspect the wiring and connectors specific to this DTC. Wiggle the wires while checking for shorts and open circuits.

Note: Check for any Technical Service Bulletins that may apply.

Were there any problems found?

Yes >> Repair as necessary.
Perform NAG1 TRANSMISSION VERIFICATION TEST.

No >> The condition that caused this DTC to set is currently not present. Inspect the related wiring harness for a possible intermittent condition.

(P0758) 2-3 SOLENOID CIRCUIT

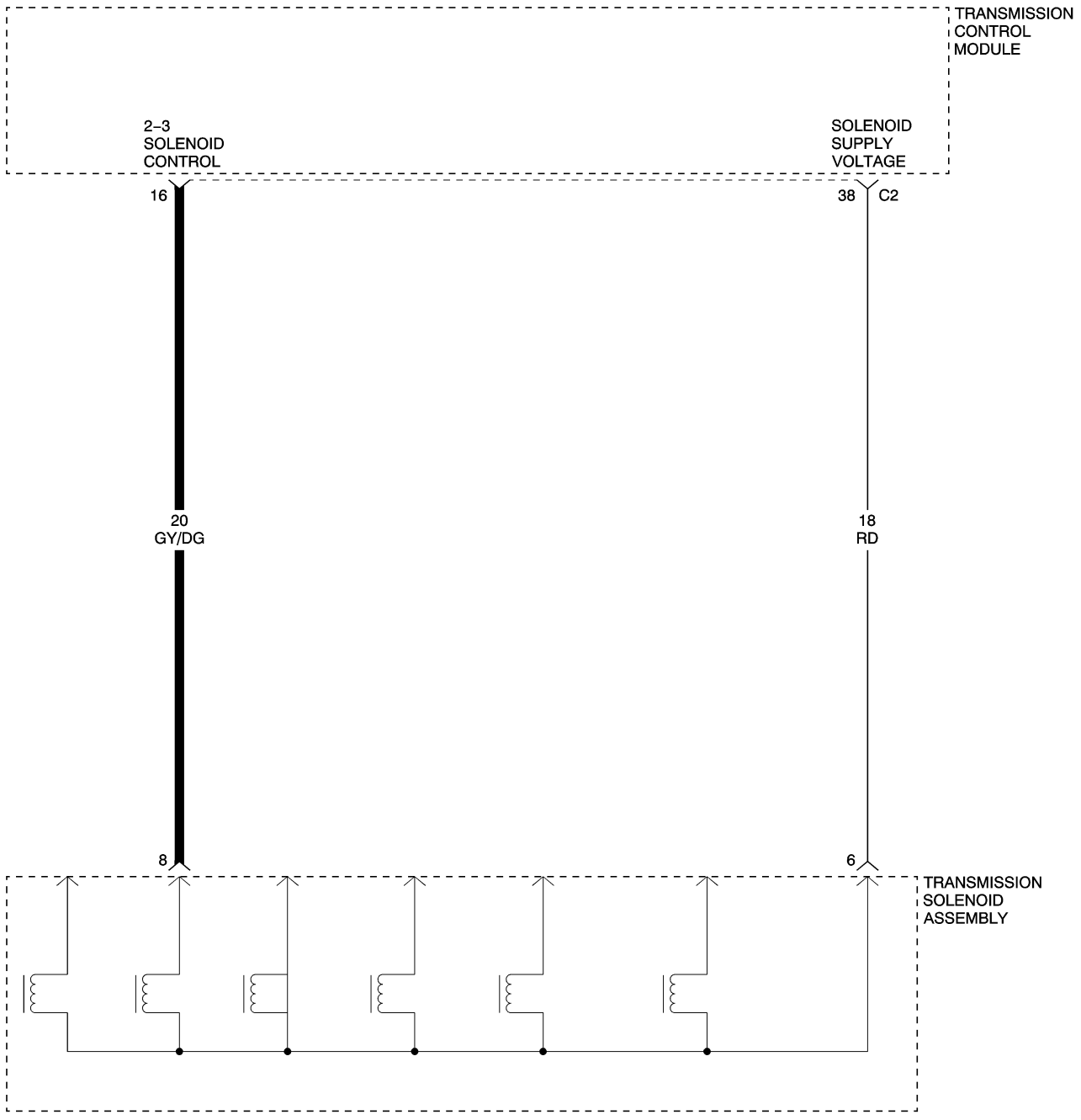

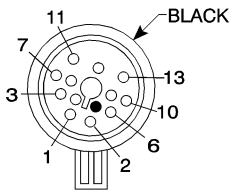

TRANSMISSION SOLENOID ASSEMBLY

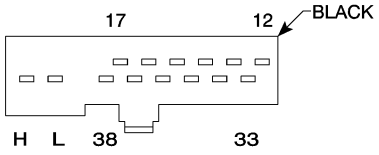

TRANSMISSION CONTROL MODULE C2

81157af0

(P0758) 2-3 SOLENOID CIRCUIT — CONTINUED

When Monitored and Set Condition

- When Monitored: Always monitored with system active at each ignition cycle.
- Set Condition: If the TCM detects a short to battery on the solenoid control circuit, shorted solenoid, open solenoid, or an open or shorted solenoid control circuit in the TCM.

POSSIBLE CAUSES
2-3 SOLENOID CONTROL CIRCUIT OPEN
2-3 SOLENOID CONTROL CIRCUIT SHORTED TO GROUND
2-3 SOLENOID CONTROL CIRCUIT SHORTED TO ANOTHER CIRCUIT
2-3 SOLENOID
TRANSMISSION CONTROL MODULE

For a complete Transmission Control Module Circuit Diagram **Refer to Page 21-182**.

Diagnostic Test

1. PRE-DIAGNOSTIC CHECK OUT

Note: Low fluid level can be the cause of many transmission problems. If the fluid level is low, locate and repair the leak then check and adjust the fluid level in accordance with the Service Information.

Note: Always perform diagnostics with a fully charged battery to avoid false symptoms.

With the DRB III®, read the engine DTCs. Check and repair all engine DTCs prior to performing transmission symptom diagnostics.

With the DRB III®, read and record all Transmission DTCs.

Note: Check connectors - Clean/repair as necessary. Poor pin to terminal connections can set DTCs.

Using the wiring diagram/schematic as a guide, inspect the wiring and connectors. Repair as necessary.

Most DTCs set on start up but some must be set by driving the vehicle such that all diagnostic monitors have run.

Note: Verify flash level of transmission controller. Some problems are corrected by software upgrades to the transmission controller.

Note: Check for any Technical Service Bulletins that may apply.

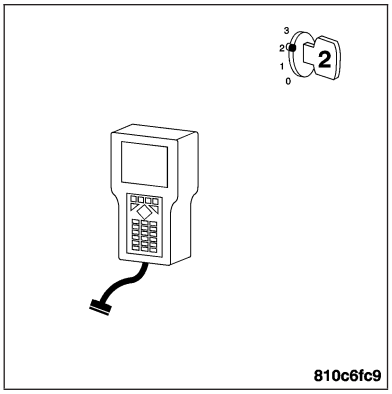

Perform this procedure prior to Symptom diagnosis.

Continue

Go To 2

(P0758) 2-3 SOLENOID CIRCUIT — CONTINUED

2. CHECK FOR CURRENT DTC

Note: If the TCM detects and stores a DTC, the TCM also stores the engine/vehicle operating conditions under which the DTC was set. Some of these conditions are displayed on the DRB III® at the same time the DTC is displayed.

Note: Before erasing stored DTCs, record these conditions. Attempting to duplicate these conditions may assist when checking for an active DTC.

Turn the ignition on.

With the DRB III®, erase TCM DTCs.

Note: It maybe necessary to road test the vehicle for this DTC to set.

With the DRB III®, read the TCM DTCs.

Did this DTC set again?

Yes >> Go To 3

No >> Go To 7

3. 2-3 SOLENOID CONTROL CIRCUIT OPEN

Turn the ignition off.

Disconnect the Transmission Control Module C2 harness connector.

Disconnect the Transmission Solenoid Assembly harness connector.

Note: Check connectors - Clean/repair as necessary.

Measure the resistance of the 2-3 Solenoid Control circuit from the TCM C2 harness connector to the Transmission Solenoid Assembly harness connector.

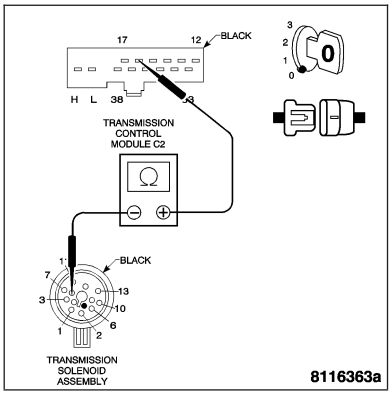

Is the resistance below 5.0 ohms?

Yes >> Go To 4

No >> Repair the 2-3 Solenoid Control circuit for an open. Perform NAG1 TRANSMISSION VERIFICATION TEST.

4. 2-3 SOLENOID CONTROL CIRCUIT SHORT TO GROUND

With the ignition off.

Measure the resistance between ground and the 2-3 Solenoid Control circuit.

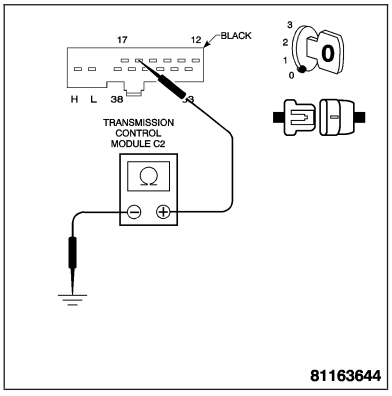

Is the resistance below 100 kohms?

Yes >> Repair the 2-3 Solenoid Control circuit for a short to ground. Perform NAG1 TRANSMISSION VERIFICATION TEST.

No >> Go To 5

(P0758) 2-3 SOLENOID CIRCUIT — CONTINUED

5. 2-3 SOLENOID CONTROL CIRCUIT SHORT TO OTHER CIRCUITS

With the ignition off.

Measure the resistance of the 2-3 Solenoid Control circuit to all other circuits in the Transmission Solenoid Assembly harness connector.

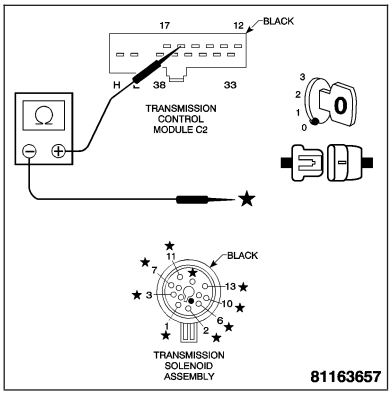

Is the resistance below 100 kohms between any other circuit?

Yes >> Repair the 2-3 Solenoid Control circuit for a short to the other circuit(s).
Perform NAG1 TRANSMISSION VERIFICATION TEST.

No >> Go To 6

6. 2-3 SOLENOID RESISTANCE OUT OF TOLERANCE

With the ignition off.

Reconnect the Transmission Solenoid Assembly harness connector.

Measure the resistance from the 2-3 Solenoid Control circuit to the Solenoid Supply Voltage circuit in the Transmission Control Module C2 harness connector.

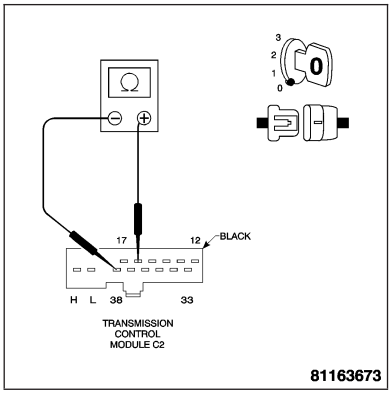

Is the resistance between 2.5 and 6.5 ohms?

Yes >> Replace the Transmission Control Module. **Refer to Page 8E-60**.
Perform NAG1 TRANSMISSION VERIFICATION TEST.

No >> Replace the 2-3 Solenoid. **Refer to Page 21-281**.
Perform NAG1 TRANSMISSION VERIFICATION TEST.

7. INTERMITTENT WIRING AND CONNECTORS

The conditions that caused this DTC to set is currently not present. Inspect the related wiring harness for a possible intermittent condition.

Using the schematics as a guide, inspect the wiring and connectors specific to this circuit.

Wiggle the wires while checking for shorts and open circuits.

Note: Check for any Technical Service Bulletins that may apply.

Were any problems found?

Yes >> Repair as necessary.
Perform NAG1 TRANSMISSION VERIFICATION TEST.

No >> Test Complete.

(P0758) 2–3 SOLENOID CIRCUIT SHORT TO GROUND

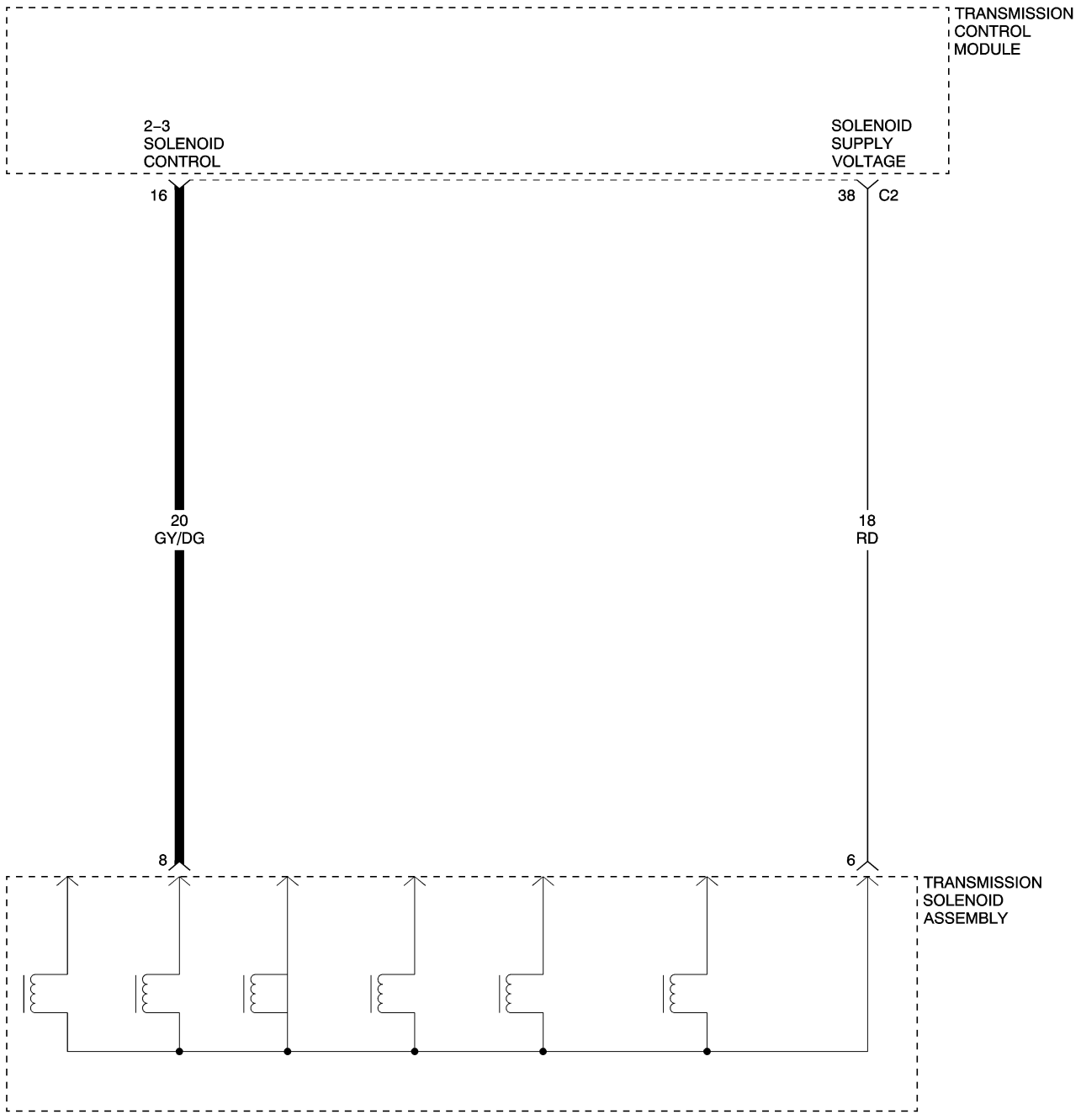

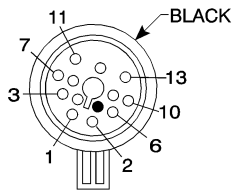

TRANSMISSION SOLENOID ASSEMBLY

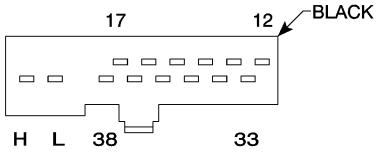

TRANSMISSION CONTROL MODULE C2

81157af0

(P0758) 2–3 SOLENOID CIRCUIT SHORT TO GROUND — CONTINUED

When Monitored and Set Condition

- When Monitored: Always monitored with system active at each ignition cycle.
- Set Condition: If the TCM detects a short to ground on the solenoid control circuit or solenoid control circuit shorted to ground in the TCM.

POSSIBLE CAUSES
2-3 SOLENOID CONTROL CIRCUIT SHORTED TO GROUND
2-3 SOLENOID CONTROL CIRCUIT SHORTED TO ANOTHER CIRCUIT
2-3 SOLENOID
TRANSMISSION CONTROL MODULE

Diagnostic Test

1. CHECK FOR CURRENT DTC

Turn the ignition on.
With the DRB III®, read the TCM DTCs.

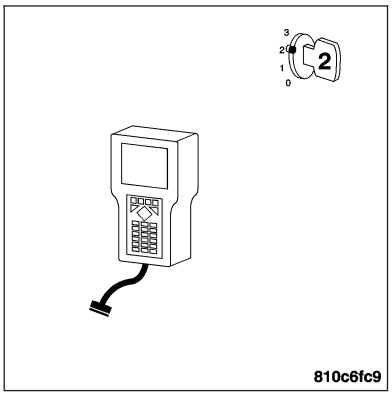

Is this DTC preset?

Yes >> For complete diagnosis of this DTC, refer to (P0758) 2–3 SOLENOID CIRCUIT.

No >> Go To 2

2. INTERMITTENT WIRING AND CONNECTORS

The conditions necessary to set this DTC are not present at this time.

Note: Check connectors — Clean/repair as necessary. Poor pin to terminal connections can set DTCs.
Using the wiring diagram/schematic as a guide, inspect the wiring and connectors specific to this DTC. Wiggle the wires while checking for shorts and open circuits.

Note: Check for any Technical Service Bulletins that may apply.

Were there any problems found?

Yes >> Repair as necessary.
Perform NAG1 TRANSMISSION VERIFICATION TEST.

No >> The condition that caused this DTC to set is currently not present. Inspect the related wiring harness for a possible intermittent condition.

(P0763) 3-4 SOLENOID CIRCUIT

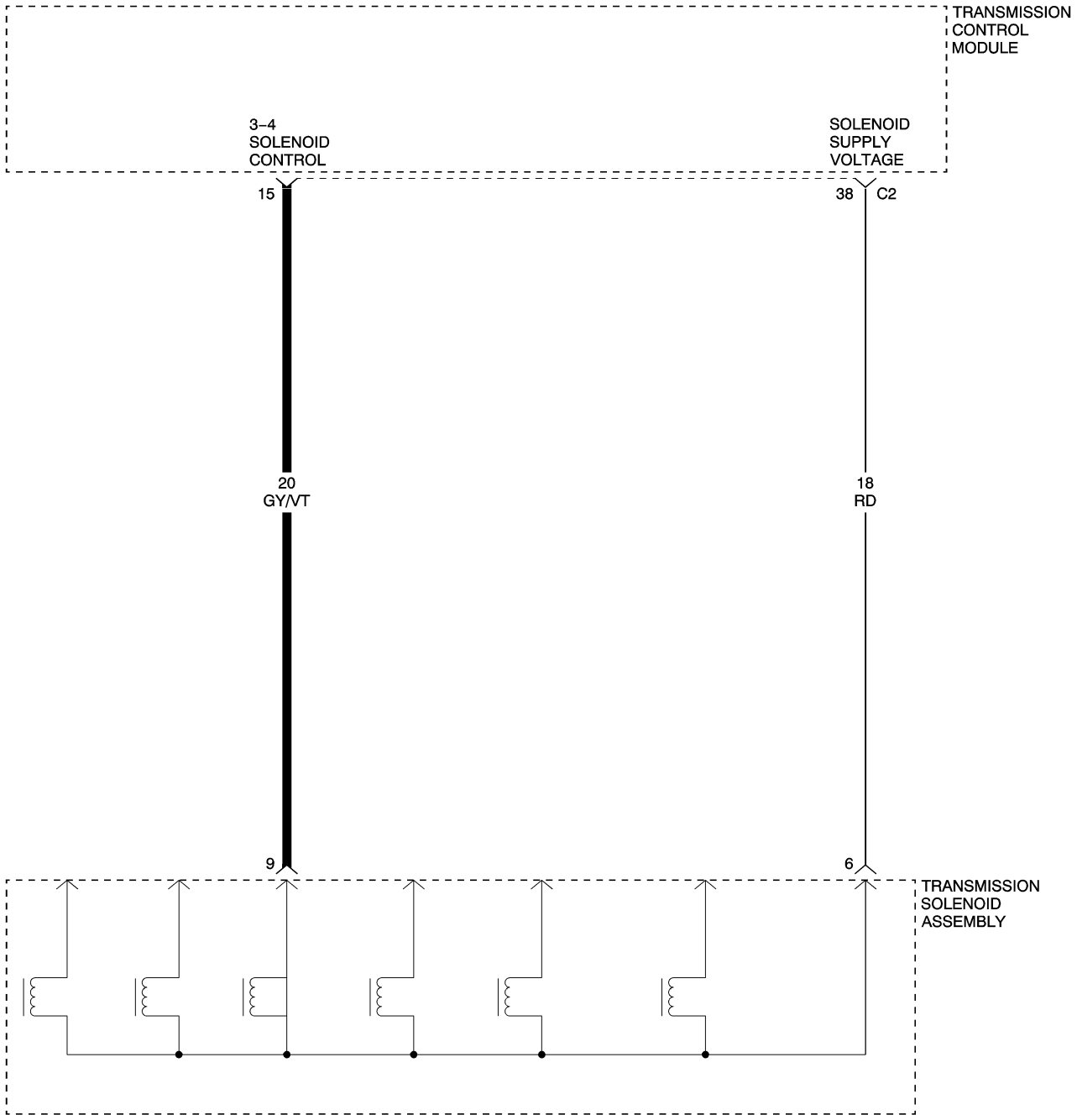

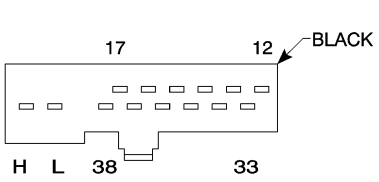

TRANSMISSION CONTROL MODULE C2

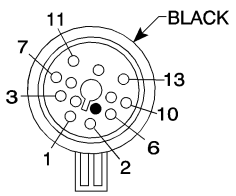

TRANSMISSION SOLENOID ASSEMBLY

81157af4

(P0763) 3-4 SOLENOID CIRCUIT — CONTINUED

When Monitored and Set Condition

- When Monitored: Always monitored with system active at each ignition cycle.
- Set Condition: If the TCM detects a short to battery on the solenoid control circuit, shorted solenoid, open solenoid, or an open or shorted solenoid control circuit in the TCM.

POSSIBLE CAUSES
3-4 SOLENOID CONTROL CIRCUIT OPEN
3-4 SOLENOID CONTROL CIRCUIT SHORTED TO GROUND
3-4 SOLENOID CONTROL CIRCUIT SHORTED TO ANOTHER CIRCUIT
3-4 SOLENOID
TRANSMISSION CONTROL MODULE

For a complete Transmission Control Module Circuit Diagram **Refer to Page 21-182**.

Diagnostic Test

1. PRE-DIAGNOSTIC CHECK OUT

Note: Low fluid level can be the cause of many transmission problems. If the fluid level is low, locate and repair the leak then check and adjust the fluid level in accordance with the Service Information.

Note: Always perform diagnostics with a fully charged battery to avoid false symptoms.

With the DRB III®, read the engine DTCs. Check and repair all engine DTCs prior to performing transmission symptom diagnostics.

With the DRB III®, read and record all Transmission DTCs.

Note: Check connectors - Clean/repair as necessary. Poor pin to terminal connections can set DTCs.

Using the wiring diagram/schematic as a guide, inspect the wiring and connectors. Repair as necessary.

Most DTCs set on start up but some must be set by driving the vehicle such that all diagnostic monitors have run.

Note: Verify flash level of transmission controller. Some problems are corrected by software upgrades to the transmission controller.

Note: Check for any Technical Service Bulletins that may apply.

Perform this procedure prior to Symptom diagnosis.

Continue

Go To 2

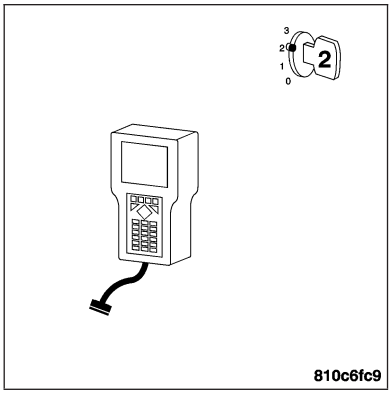

(P0763) 3-4 SOLENOID CIRCUIT — CONTINUED

2. CHECK FOR CURRENT DTC

Note: If the TCM detects and stores a DTC, the TCM also stores the engine/vehicle operating conditions under which the DTC was set. Some of these conditions are displayed on the DRB III® at the same time the DTC is displayed.

Note: Before erasing stored DTCs, record these conditions. Attempting to duplicate these conditions may assist when checking for an active DTC.

Turn the ignition on.

With the DRB III®, erase TCM DTCs.

Note: It maybe necessary to road test the vehicle for this DTC to set.

With the DRB III®, read the TCM DTCs.

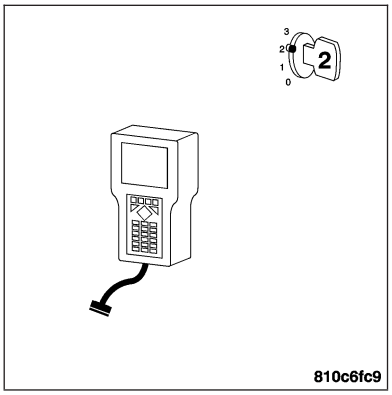

Did this DTC set again?

Yes >> Go To 3

No >> Go To 7

3. 3-4 SOLENOID CONTROL CIRCUIT OPEN

Turn the ignition off.

Disconnect the Transmission Control Module C2 harness connector.

Disconnect the Transmission Solenoid Assembly harness connector

Note: Check connectors - Clean/repair as necessary.

Measure the resistance of the 3-4 Solenoid Control circuit from the TCM C2 harness connector to the Transmission Solenoid Assembly harness connector.

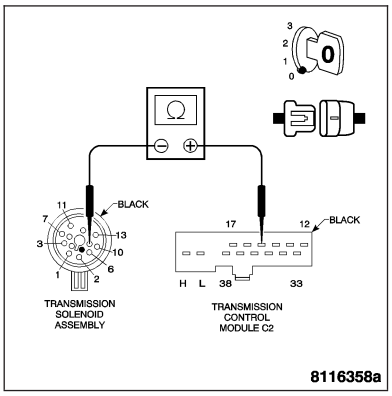

Is the resistance below 5.0 ohms?

Yes >> Go To 4

No >> Repair the 3-4 Solenoid Control circuit for an open. Perform NAG1 TRANSMISSION VERIFICATION TEST.

4. 3-4 SOLENOID CONTROL CIRCUIT SHORT TO GROUND

With the ignition off.

Measure the resistance between ground and the 3-4 Solenoid Control circuit.

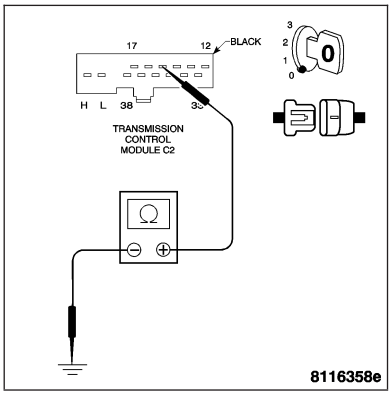

Is the resistance below 100 kohms?

Yes >> Repair the 3-4 Solenoid Control circuit for a short to ground. Perform NAG1 TRANSMISSION VERIFICATION TEST.

No >> Go To 5

(P0763) 3-4 SOLENOID CIRCUIT — CONTINUED

5. 3-4 SOLENOID CONTROL CIRCUIT SHORT TO OTHER CIRCUITS

With the ignition off.

Measure the resistance of the 3-4 Solenoid Control circuit between all other circuits in the Transmission Solenoid Assembly harness connector.

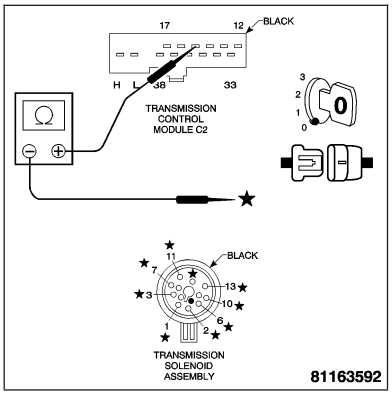

Is the resistance below 100 kohms between any other circuit?

Yes >> Repair the 3-4 Solenoid Control circuit for a short to other circuits.
Perform NAG1 TRANSMISSION VERIFICATION TEST.

No >> Go To 6

6. 3-4 SOLENOID RESISTANCE OUT OF TOLERANCE

With the ignition off.

Reconnect the Transmission Solenoid Assembly harness connector.

Measure the resistance from the 3-4 Solenoid Control circuit to the Solenoid Supply Voltage circuit at the Transmission Control Module C2 harness connector.

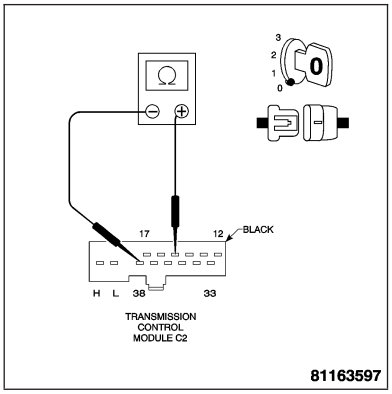

Is the resistance between 2.5 and 6.5 ohms?

Yes >> Replace the Transmission Control Module. **Refer to Page 8E-60**.
Perform NAG1 TRANSMISSION VERIFICATION TEST.

No >> Replace the 3-4 Solenoid. **Refer to Page 21-281**.
Perform NAG1 TRANSMISSION VERIFICATION TEST.

7. INTERMITTENT WIRING AND CONNECTORS

The condition that caused this DTC to set is currently not present. Inspect the related wiring harness for a possible intermittent condition.

Using the schematics as a guide, inspect the wiring and connectors specific to this circuit.

Wiggle the wires while checking for shorts and open circuits.

Note: Check for any Technical Service Bulletins that may apply.

Were any problems found?

Yes >> Repair as necessary.
Perform NAG1 TRANSMISSION VERIFICATION TEST.

No >> Test Complete.

(P0763) 3–4 SOLENOID CIRCUIT SHORT TO GROUND

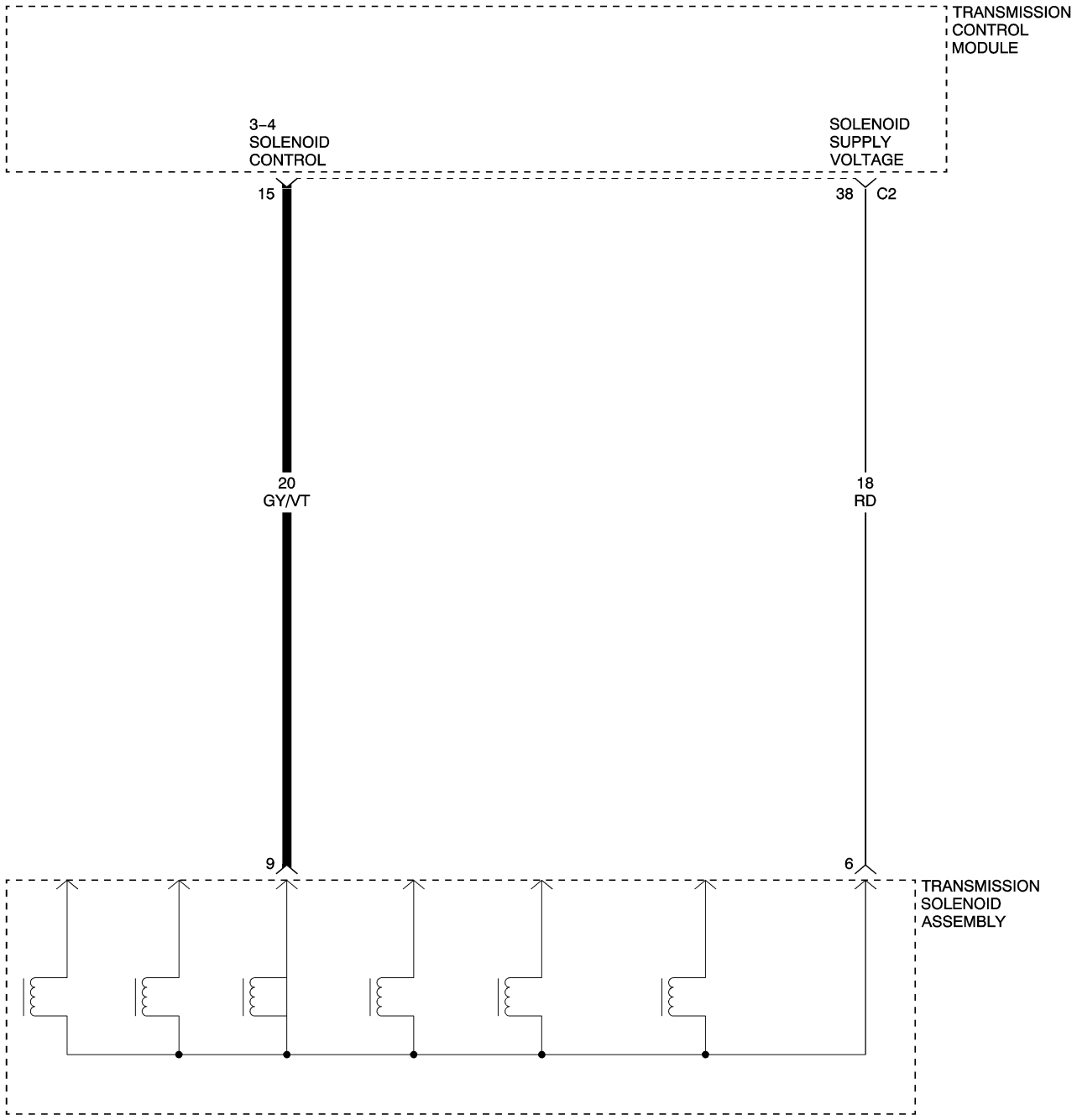

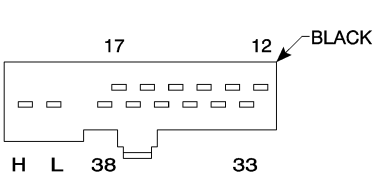

TRANSMISSION CONTROL MODULE C2

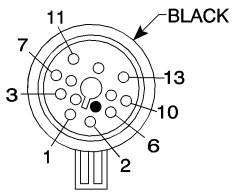

TRANSMISSION SOLENOID ASSEMBLY

81157af4

(P0763) 3–4 SOLENOID CIRCUIT SHORT TO GROUND — CONTINUED

When Monitored and Set Condition

- When Monitored: Always monitored with system active at each ignition cycle.
- Set Condition: If the TCM detects a short to ground on the solenoid control circuit or a solenoid control circuit shorted to ground in the TCM.

POSSIBLE CAUSES
3-4 SOLENOID CONTROL CIRCUIT SHORTED TO GROUND
3-4 SOLENOID CONTROL CIRCUIT SHORTED TO ANOTHER CIRCUIT
3-4 SOLENOID
TRANSMISSION CONTROL MODULE

Diagnostic Test

1. CHECK FOR CURRENT DTC

Turn the ignition on.
With the DRB III®, read the TCM DTCs.

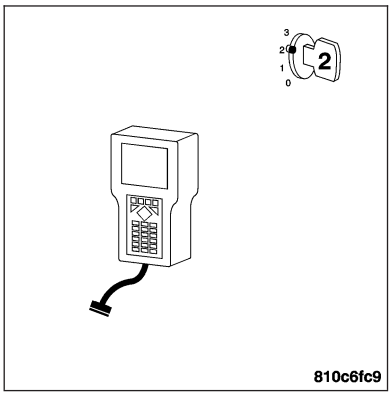

Is this DTC preset?

Yes >> For complete diagnosis of this DTC, refer to (P0763) 3–4 SOLENOID CIRCUIT.

No >> Go To 2

2. INTERMITTENT WIRING AND CONNECTORS

The conditions necessary to set this DTC are not present at this time.

Note: Check connectors — Clean/repair as necessary. Poor pin to terminal connections can set DTCs.Using the wiring diagram/schematic as a guide, inspect the wiring and connectors specific to this DTC. Wiggle the wires while checking for shorts and open circuits.

Note: Check for any Technical Service Bulletins that may apply.

Were there any problems found?

Yes >> Repair as necessary.
Perform NAG1 TRANSMISSION VERIFICATION TEST.

No >> The condition that caused this DTC to set is currently not present. Inspect the related wiring harness for a possible intermittent condition.

(P0778) SHIFT PRESSURE SOLENOID CIRCUIT

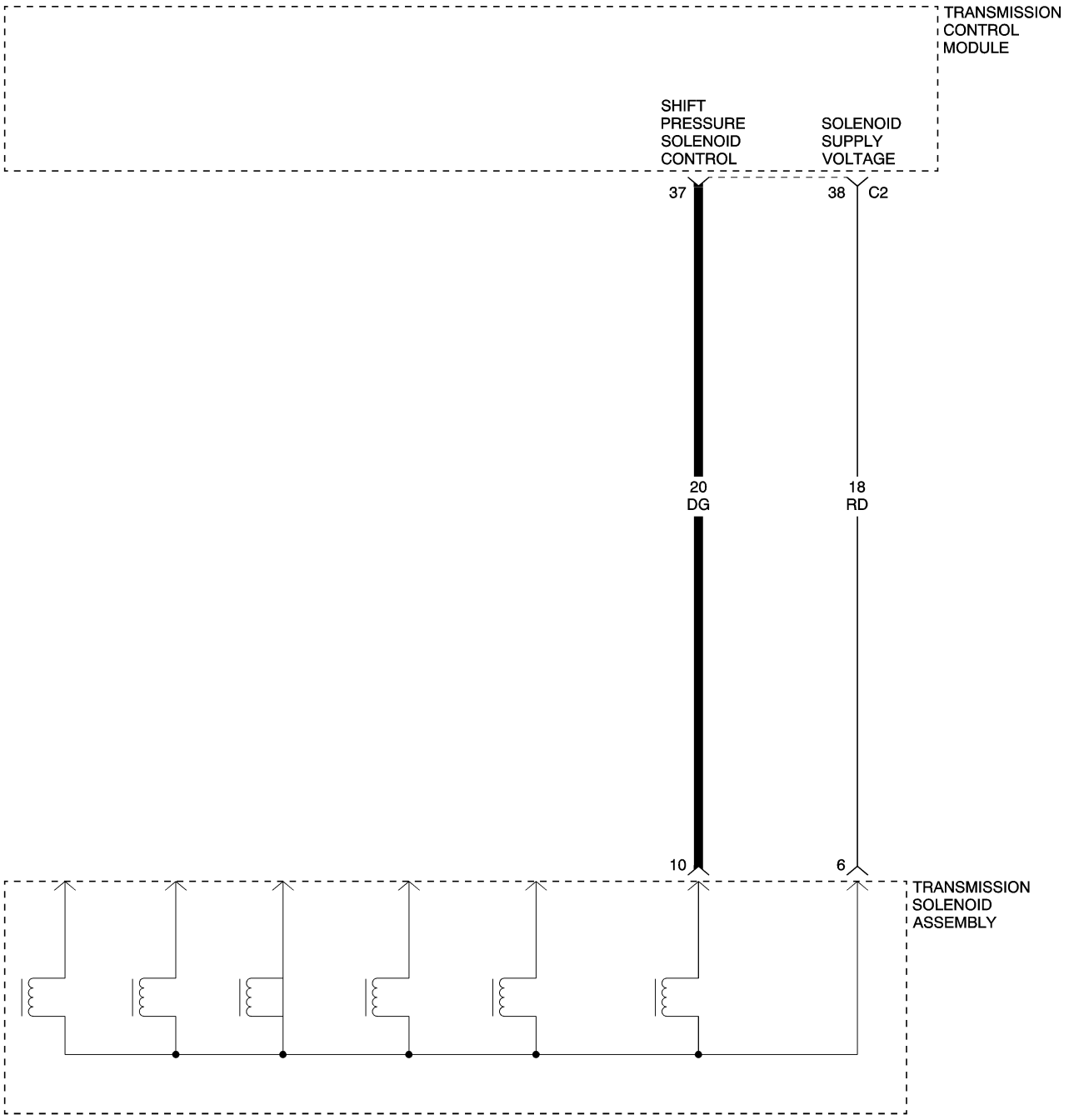

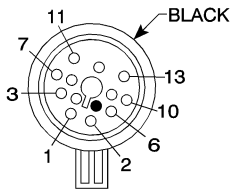

TRANSMISSION SOLENOID ASSEMBLY

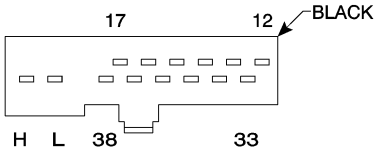

TRANSMISSION CONTROL MODULE C2

81157c0b

(P0778) SHIFT PRESSURE SOLENOID CIRCUIT — CONTINUED

When Monitored and Set Condition

- When Monitored: When the solenoid is off, solenoid active with 25-75% duty cycle and/or the solenoid supply is active.
- Set Condition: If the TCM detects a short to ground or battery on the solenoid control circuit, shorted solenoid, open solenoid, or an open or shorted solenoid control circuit in the TCM.

POSSIBLE CAUSES
SHIFT PRESSURE SOLENOID CONTROL CIRCUIT OPEN
SHIFT PRESSURE SOLENOID CONTROL CIRCUIT SHORTED TO GROUND
SHIFT PRESSURE SOLENOID CONTROL CIRCUIT SHORTED TO ANOTHER CIRCUIT
SHIFT PRESSURE SOLENOID
TRANSMISSION CONTROL MODULE

For a complete Transmission Control Module Circuit Diagram **Refer to Page 21-182**.

Diagnostic Test

1. PRE-DIAGNOSTIC CHECK OUT

Note: Low fluid level can be the cause of many transmission problems. If the fluid level is low, locate and repair the leak then check and adjust the fluid level in accordance with the Service Information.

Note: Always perform diagnostics with a fully charged battery to avoid false symptoms.

With the DRB III®, read the engine DTCs. Check and repair all engine DTCs prior to performing transmission symptom diagnostics.

With the DRB III®, read and record all Transmission DTCs.

Note: Check connectors - Clean/repair as necessary. Poor pin to terminal connections can set DTCs.

Using the wiring diagram/schematic as a guide, inspect the wiring and connectors. Repair as necessary.

Most DTCs set on start up but some must be set by driving the vehicle such that all diagnostic monitors have run.

Note: Verify flash level of transmission controller. Some problems are corrected by software upgrades to the transmission controller.

Note: Check for any Technical Service Bulletins that may apply.

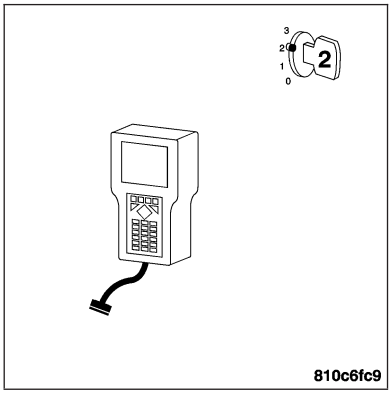

Perform this procedure prior to Symptom diagnosis.

Continue

Go To 2

(P0778) SHIFT PRESSURE SOLENOID CIRCUIT — CONTINUED

2. CHECK FOR CURRENT DTC

Note: If the TCM detects and stores a DTC, the TCM also stores the engine/vehicle operating conditions under which the DTC was set. Some of these conditions are displayed on the DRB III® at the same time the DTC is displayed.

Note: Before erasing stored DTCs, record these conditions. Attempting to duplicate these conditions may assist when checking for an active DTC.

Turn the ignition on.

With the DRB III®, erase TCM DTCs.

Note: It maybe necessary to road test the vehicle for this DTC to set.

With the DRB III®, read the TCM DTCs.

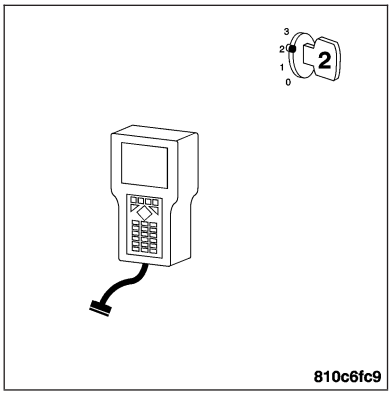

Did this DTC set again?

Yes >> Go To 3

No >> Go To 7

3. SHIFT PRESSURE SOLENOID CONTROL CIRCUIT OPEN

Turn the ignition off.

Disconnect the Transmission Control Module C2 harness connector.

Disconnect the Transmission Solenoid Assembly harness connector.

Note: Check connectors - Clean/repair as necessary.

Measure the resistance of the Shift Pressure Solenoid Control circuit from the TCM C2 harness connector to the Transmission Solenoid Assembly harness connector.

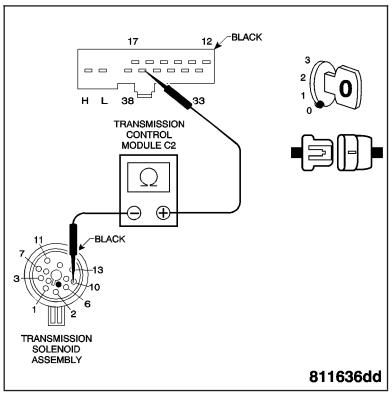

Is the resistance below 5.0 ohms?

Yes >> Go To 4

No >> Repair the Shift Pressure Solenoid Control circuit for an open.

Perform NAG1 TRANSMISSION VERIFICATION TEST.

4. SHIFT PRESSURE SOLENOID CONTROL CIRCUIT SHORT TO GROUND

With the ignition off.

Measure the resistance between ground and the Shift Pressure Solenoid Control circuit.

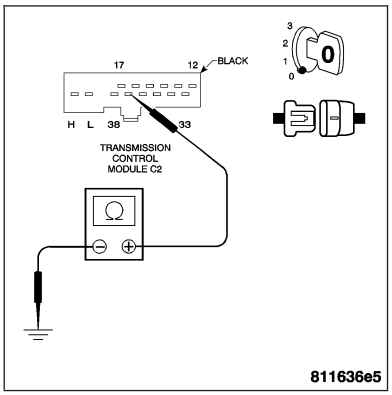

Is the resistance below 100 kohms?

Yes >> Repair the Shift Pressure Solenoid Control circuit for a short to ground.

Perform NAG1 TRANSMISSION VERIFICATION TEST.

No >> Go To 5

(P0778) SHIFT PRESSURE SOLENOID CIRCUIT — CONTINUED

5. SHIFT PRESSURE SOLENOID CONTROL CIRCUIT SHORT TO OTHER CIRCUITS

With the ignition off.

Measure the resistance from the Shift Pressure Solenoid Control circuit to all other circuits at the Transmission Solenoid Assembly harness connector.

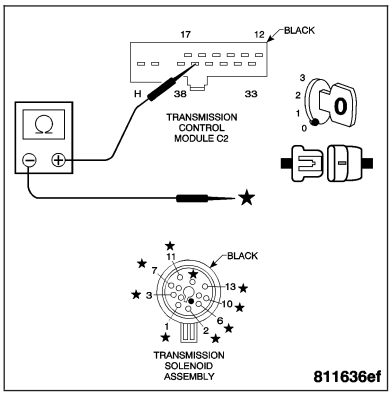

Is the resistance below 100 kohms between any other circuit?

Yes >> Repair the Shift Pressure Solenoid Control circuit for a short to other circuits.
Perform NAG1 TRANSMISSION VERIFICATION TEST.

No >> Go To 6

6. SHIFT PRESSURE SOLENOID RESISTANCE OUT OF TOLERANCE

With the ignition off.

Reconnect the Transmission Solenoid Assembly harness connector.

Measure the resistance from the Shift Pressure Solenoid Control circuit to the Solenoid Supply Voltage circuit at the Transmission Control Module C2 harness connector.

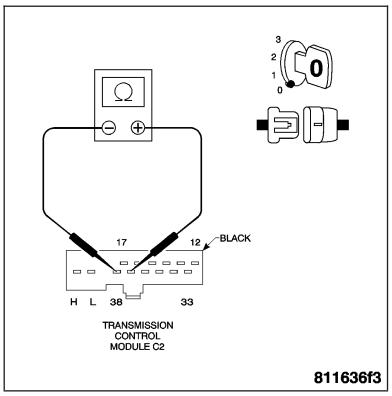

Is the resistance between 4.0 and 8.0 ohms?

Yes >> Replace the Transmission Control Module. **Refer to Page 8E-60**.
Perform NAG1 TRANSMISSION VERIFICATION TEST.

No >> Replace the Shift Pressure Solenoid. **Refer to Page 21-281**.
Perform NAG1 TRANSMISSION VERIFICATION TEST.

7. INTERMITTENT WIRING AND CONNECTORS

The condition that caused this DTC to set is currently not present. Inspect the related wiring harness for a possible intermittent condition.

Using the schematics as a guide, inspect the wiring and connectors specific to this circuit.

Wiggle the wires while checking for shorts and open circuits.

Note: Check for any Technical Service Bulletins that may apply.

Were any problems found?

Yes >> Repair as necessary.
Perform NAG1 TRANSMISSION VERIFICATION TEST.

No >> Test Complete.

(P0778) SOLENOID SUPPLY VOLTAGE

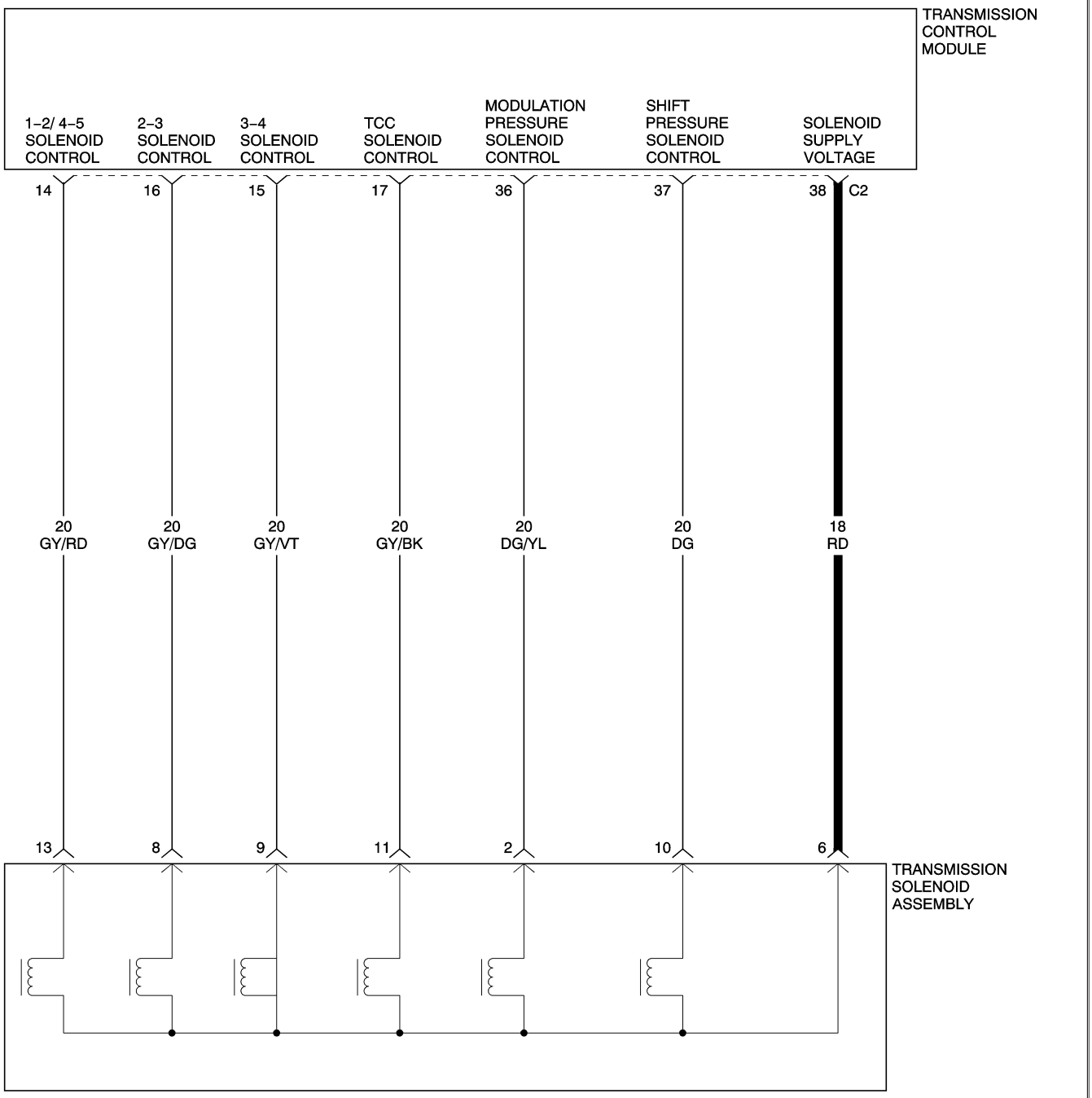

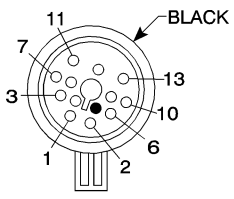

TRANSMISSION SOLENOID ASSEMBLY

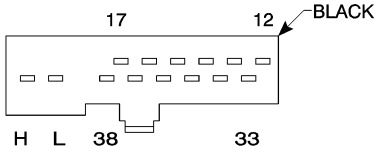

TRANSMISSION CONTROL MODULE C2

81157c13

(P0778) SOLENOID SUPPLY VOLTAGE — CONTINUED

When Monitored and Set Condition

- When Monitored: When the solenoid is active or not active and no undervoltage condition exists.
- Set Condition: If voltage is present when the output is off or the measured supply voltage and measured battery voltage differ by 3.6 volts.

POSSIBLE CAUSES
SOLENOID SUPPLY CIRCUIT SHORTED TO ANOTHER CIRCUIT
SOLENOID SUPPLY VOLTAGE CIRCUIT SHORTED TO GROUND
SOLENOID
TRANSMISSION CONTROL MODULE

For a complete Transmission Control Module Circuit Diagram **Refer to Page 21-182**.

Diagnostic Test

1. PRE-DIAGNOSTIC CHECK OUT

Note: Low fluid level can be the cause of many transmission problems. If the fluid level is low, locate and repair the leak then check and adjust the fluid level in accordance with the Service Information.

Note: Always perform diagnostics with a fully charged battery to avoid false symptoms.

With the DRB III®, read the engine DTCs. Check and repair all engine DTCs prior to performing transmission symptom diagnostics.

With the DRB III®, read and record all Transmission DTCs.

Note: Check connectors - Clean/repair as necessary. Poor pin to terminal connections can set DTCs.

Using the wiring diagram/schematic as a guide, inspect the wiring and connectors. Repair as necessary.

Most DTCs set on start up but some must be set by driving the vehicle such that all diagnostic monitors have run.

Note: Verify flash level of transmission controller. Some problems are corrected by software upgrades to the transmission controller.

Note: Check for any Technical Service Bulletins that may apply.

Perform this procedure prior to Symptom diagnosis.

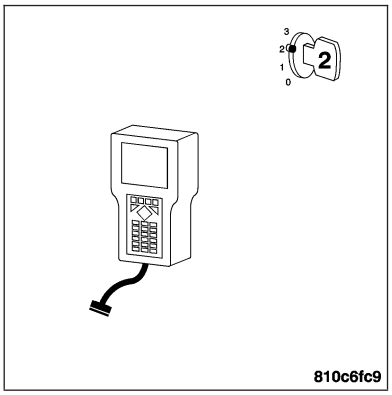

Continue

Go To 2

(P0778) SOLENOID SUPPLY VOLTAGE — CONTINUED

2. CHECK FOR CURRENT DTC

Note: If the TCM detects and stores a DTC, the TCM also stores the engine/vehicle operating conditions under which the DTC was set. Some of these conditions are displayed on the DRB III® at the same time the DTC is displayed.

Note: Before erasing stored DTCs, record these conditions. Attempting to duplicate these conditions may assist when checking for an active DTC.

Turn the ignition on.

With the DRB III®, erase TCM DTCs.

Note: It maybe necessary to road test the vehicle for this DTC to set.

With the DRB III®, read the TCM DTCs.

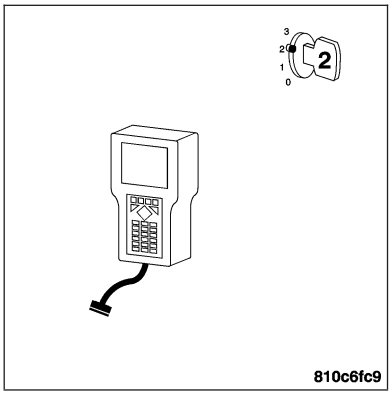

Did this DTC set again?

Yes >> Go To 3

No >> Go To 6

3. SOLENOID SUPPLY CIRCUIT SHORTED TO ANOTHER CIRCUIT

Turn the ignition off.

Disconnect the Transmission Control Module C2 harness connector.

Disconnect the Transmission Solenoid Assembly harness connector.

Note: Check connectors - Clean/repair as necessary.

Measure the resistance from the Solenoid Supply Voltage circuit to all other circuits in the Transmission Solenoid Assembly harness connector.

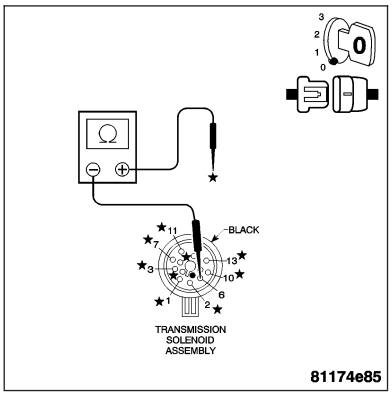

Is the resistance below 100 kohms between any other circuit?

Yes >> Repair the Solenoid Supply Voltage circuit for a short to another circuit.
Perform NAG1 TRANSMISSION VERIFICATION TEST.

No >> Go To 4

4. SOLENOID SUPPLY CIRCUIT SHORTED TO GROUND

With the ignition off.

Measure the resistance between ground and the Solenoid Supply Voltage circuit at the Transmission Solenoid Assembly harness connector.

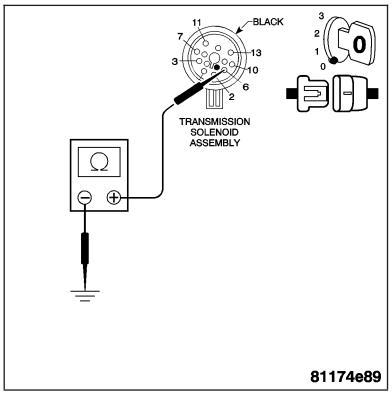

Is the resistance below 100 kohms?

Yes >> Repair the Solenoid Supply Voltage circuit for a short to ground.
Perform NAG1 TRANSMISSION VERIFICATION TEST.

No >> Go To 5

(P0778) SOLENOID SUPPLY VOLTAGE — CONTINUED

5. SOLENOID ASSEMBLY SHORTED TO GROUND

With the ignition off.

Reconnect the Transmission Solenoid Assembly harness connector.

Measure the resistance between ground and all Solenoid Control circuits at the Transmission Control Module C2 harness connector.

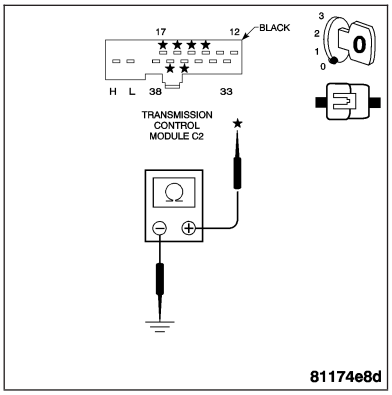

Is the resistance below 100 kohms?

Yes >> Replace the Solenoid that is shorted to ground in accordance with the Service Information.
Perform NAG1 TRANSMISSION VERIFICATION TEST.

No >> Replace the Transmission Control Module. **Refer to Page 8E-60**.
Perform NAG1 TRANSMISSION VERIFICATION TEST.

6. INTERMITTENT WIRING AND CONNECTORS

The condition that caused this DTC to set is currently not present. Inspect the related wiring harness for a possible intermittent condition.

Using the schematics as a guide, inspect the wiring and connectors specific to this circuit.

Wiggle the wires while checking for shorts and open circuits.

Note: Check for any Technical Service Bulletins that may apply.

Were any problems found?

Yes >> Repair as necessary.
Perform NAG1 TRANSMISSION VERIFICATION TEST.

No >> Test Complete.

(P0850) TRANS TEMP SENSOR - P/N SWITCH CIRCUIT

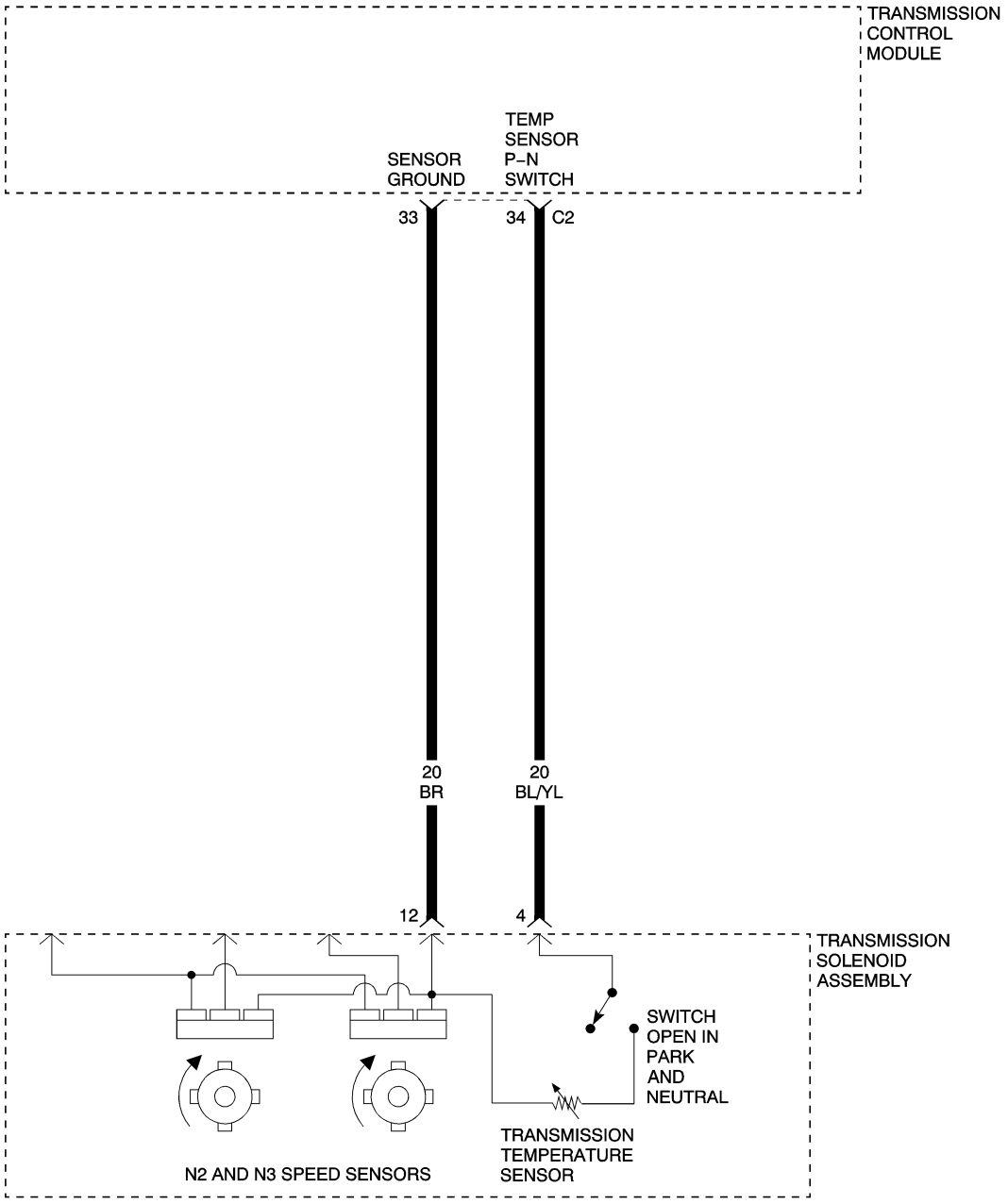

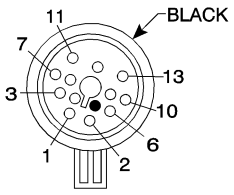

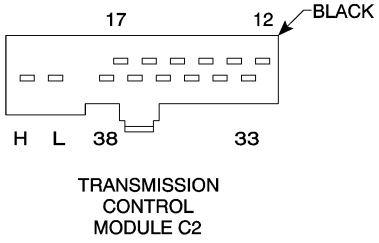

81157c47

(P0850) TRANS TEMP SENSOR - P/N SWITCH CIRCUIT — CONTINUED

When Monitored and Set Condition

- When Monitored: Always monitored with system active at each ignition cycle.
- Set Condition: Temp sensor is open while in forward gears (1-5), temp sensor, open Temp Sensor- P/N Switch circuit, P/N Switch.

POSSIBLE CAUSES
SHIFT LEVER ASSEMBLY ADJUSTMENT
SENSOR GROUND CIRCUIT OPEN
TEMP SENSOR - P/N SWITCH CIRCUIT OPEN
TEMP SENSOR - P/N SWITCH CIRCUIT SHORTED TO GROUND
SENSOR GROUND CIRCUIT SHORTED TO ANOTHER CIRCUIT
TEMP SENSOR- P/N SWITCH CIRCUIT SHORTED TO ANOTHER CIRCUIT
TEMP SENSOR - P/N SWITCH
TRANSMISSION CONTROL MODULE

For a complete Transmission Control Module Circuit Diagram **Refer to Page 21-182**.

Diagnostic Test

1. PRE-DIAGNOSTIC CHECK OUT

Note: Low fluid level can be the cause of many transmission problems. If the fluid level is low, locate and repair the leak then check and adjust the fluid level in accordance with the Service Information.

Note: Always perform diagnostics with a fully charged battery to avoid false symptoms.

With the DRB III®, read the engine DTCs. Check and repair all engine DTCs prior to performing transmission symptom diagnostics.

With the DRB III®, read and record all Transmission DTCs.

Note: Check connectors - Clean/repair as necessary. Poor pin to terminal connections can set DTCs.

Using the wiring diagram/schematic as a guide, inspect the wiring and connectors. Repair as necessary.

Most DTCs set on start up but some must be set by driving the vehicle such that all diagnostic monitors have run.

Note: Verify flash level of transmission controller. Some problems are corrected by software upgrades to the transmission controller.

Note: Check for any Technical Service Bulletins that may apply.

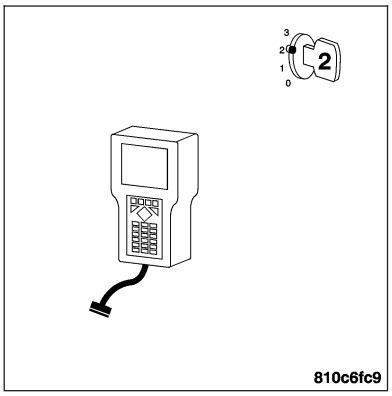

Perform this procedure prior to Symptom diagnosis.

Continue

Go To 2

(P0850) TRANS TEMP SENSOR - P/N SWITCH CIRCUIT — CONTINUED

2. CHECK FOR CURRENT DTC

Note: If the TCM detects and stores a DTC, the TCM also stores the engine/vehicle operating conditions under which the DTC was set. Some of these conditions are displayed on the DRB III® at the same time the DTC is displayed.

Note: Before erasing stored DTCs, record these conditions. Attempting to duplicate these conditions may assist when checking for an active DTC.

Turn the ignition on.

With the DRB III®, erase TCM DTCs.

Note: It maybe necessary to road test the vehicle for this DTC to set.

With the DRB III®, read the TCM DTCs.

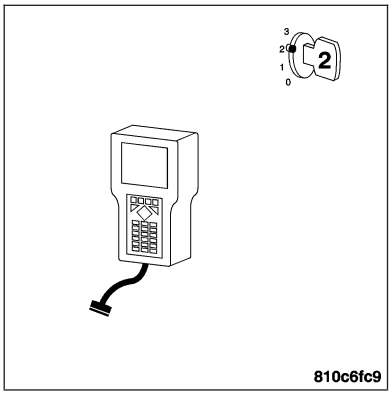

Did this DTC set again?

Yes >> Go To 3

No >> Go To 9

3. SENSOR GROUND CIRCUIT OPEN

Turn the ignition off.

Disconnect the TCM C2 harness connector.

Disconnect the Transmission Solenoid Assembly harness connector.

Note: Check connectors - Clean/repair as necessary.

Measure the resistance of the Sensor Ground circuit from the TCM C2 harness connector to the Transmission Solenoid Assembly harness connector.

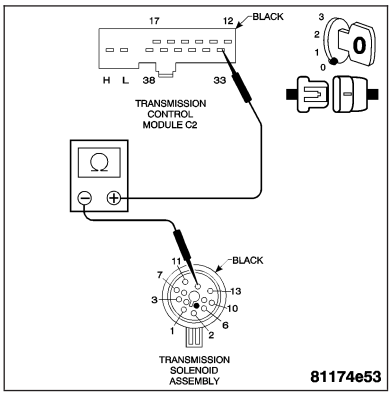

Is the resistance above 5.0 ohms?

Yes >> Repair the Sensor Ground circuit for an open.
Perform NAG1 TRANSMISSION VERIFICATION TEST.

No >> Go To 4

4. TEMP SENSOR - P/N SWITCH CIRCUIT OPEN

With the ignition off.

Measure the resistance of the Temp Sensor - P/N Switch circuit from the TCM C2 harness connector to the Transmission Solenoid Assembly harness connector.

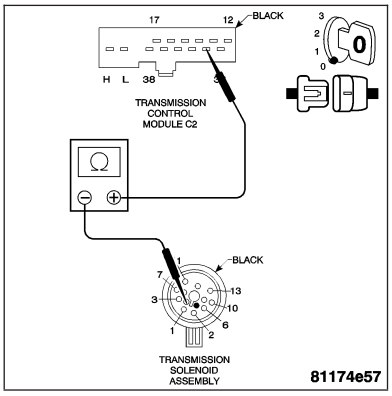

Is the resistance below 5.0 ohms?

Yes >> Go To 5

No >> Repair the Temp Sensor - P/N Switch circuit for an open.
Perform NAG1 TRANSMISSION VERIFICATION TEST.

(P0850) TRANS TEMP SENSOR - P/N SWITCH CIRCUIT — CONTINUED

5. TEMP SENSOR - P/N SWITCH CIRCUIT SHORT TO GROUND

With the ignition off.

Measure the resistance between ground and the Temp Sensor - P/N Switch circuit.

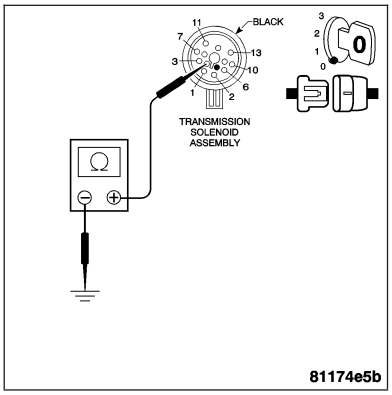

Is the resistance below 100 kohms?

Yes >> Repair the Temp Sensor - P/N Switch circuit for a short to ground.
Perform NAG1 TRANSMISSION VERIFICATION TEST.

No >> Go To 6

6. SENSOR GROUND CIRCUIT SHORT TO OTHER CIRCUITS

With the ignition off.

Disconnect the TCM C1 harness connector.

Note: Check connectors - Clean/repair as necessary.
Measure the resistance from the Sensor Ground circuit to all other circuits at the TCM C1 and C2 harness connectors.

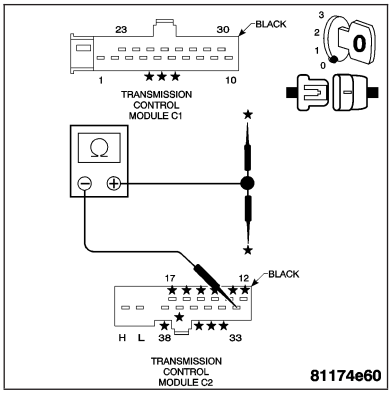

Is the resistance below 100 kohms on any of the circuits?

Yes >> Repair the Sensor Ground circuit for a short to other circuit(s).
Perform NAG1 TRANSMISSION VERIFICATION TEST.

No >> Go To 7

7. TEMP SENSOR - P/N SWITCH CIRCUIT SHORT TO OTHER CIRCUITS

With the ignition off.

Measure the resistance from the Temp Sensor - P/N Switch circuit to all other circuits at the TCM C1 and C2 harness connectors.

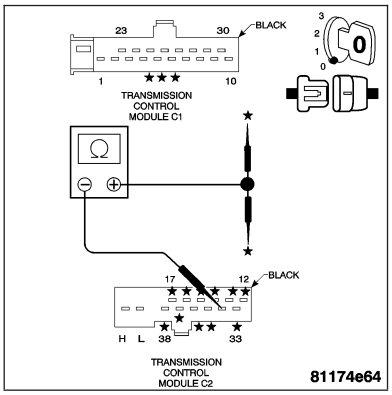

Is the resistance below 100 kohms on any circuit?

Yes >> Repair the Temp Sensor - P/N Switch circuit for a short to other circuit(s).
Perform NAG1 TRANSMISSION VERIFICATION TEST.

No >> Go To 8

(P0850) TRANS TEMP SENSOR - P/N SWITCH CIRCUIT — CONTINUED

8. TEMP SENSOR - P/N SWITCH

With the ignition off.

Reconnect the Transmission Solenoid Assembly harness connector.

Reconnect the TCM C1 harness connector.

With the brakes firmly applied, place the gear selector in Drive.

Measure the resistance between the Temp Sensor - P/N Switch circuit and the Sensor Ground circuit in the TCM C2 harness connector.

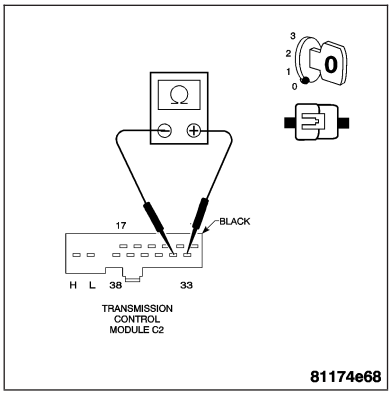

Is the resistance between 500 and 2500 ohms?

Yes >> Replace the Transmission Control Module. **Refer to Page 8E-60**.
Perform NAG1 TRANSMISSION VERIFICATION TEST.

No >> Replace the Temp Sensor - P/N Switch. **Refer to Page 21-281**.
Perform NAG1 TRANSMISSION VERIFICATION TEST.

9. INTERMITTENT WIRING AND CONNECTORS

The condition that caused this DTC to set is currently not present. Inspect the related wiring harness for a possible intermittent condition.

Using the schematics as a guide, inspect the wiring and connectors specific to this circuit.

Wiggle the wires while checking for shorts and open circuits.

Note: Check for any Technical Service Bulletins that may apply.

Were any problems found?

Yes >> Repair as necessary.
Perform NAG1 TRANSMISSION VERIFICATION TEST.

No >> Test Complete.

(P1793) ENGINE TORQUE REDUCTION

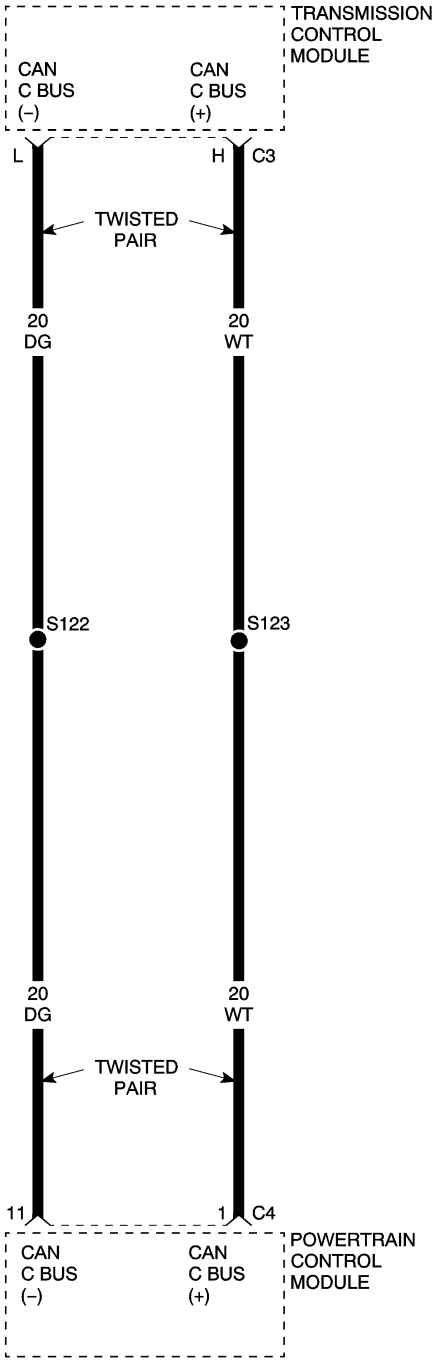

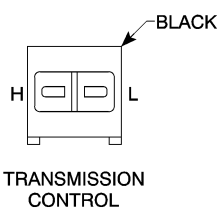

TRANSMISSION CONTROL MODULE C3

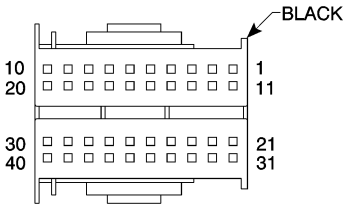

POWERTRAIN CONTROL MODULE – C4

81157b81

(P1793) ENGINE TORQUE REDUCTION — CONTINUED

When Monitored and Set Condition

- When Monitored: Engine intervention active for at least 20 ms, no engine torque errors, engine torque demand is greater than 0.
- Set Condition: Torque Reduction acknowledge bit - not set, no shift aborts, the error flag Torque Reduction Acknowledge is not set, Powertrain controller not supporting torque requests.

POSSIBLE CAUSES
CAN BUS CIRCUIT DTC PRESENT
ENGINE DTCS PRESENT
CAN C BUS (+) / (-) CIRCUIT OPEN
POWERTRAIN CONTROL MODULE
TRANSMISSION CONTROL MODULE

For a complete Transmission Control Module Circuit Diagram **Refer to Page 21-182**.

For a complete CAN BUS Circuit Diagram **Refer to Page 8E-45**.

Diagnostic Test

1. PRE-DIAGNOSTIC CHECK OUT

Note: Low fluid level can be the cause of many transmission problems. If the fluid level is low, locate and repair the leak then check and adjust the fluid level in accordance with the Service Information.

Note: Always perform diagnostics with a fully charged battery to avoid false symptoms.

With the DRB III®, read the engine DTCs. Check and repair all engine DTCs prior to performing transmission symptom diagnostics.

With the DRB III®, read and record all Transmission DTCs.

Note: Check connectors - Clean/repair as necessary. Poor pin to terminal connections can set DTCs.

Using the wiring diagram/schematic as a guide, inspect the wiring and connectors. Repair as necessary.

Most DTCs set on start up but some must be set by driving the vehicle such that all diagnostic monitors have run.

Note: Verify flash level of transmission controller. Some problems are corrected by software upgrades to the transmission controller.

Note: Check for any Technical Service Bulletins that may apply.

Perform this procedure prior to Symptom diagnosis.

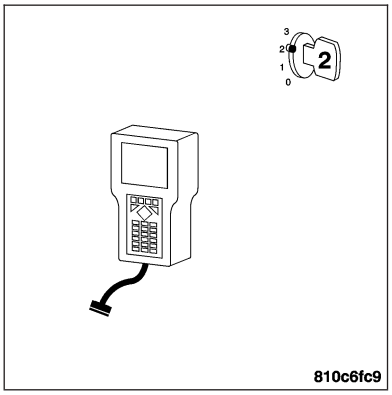

Continue

Go To 2

(P1793) ENGINE TORQUE REDUCTION — CONTINUED

2. (P0720) CAN BUS CIRCUIT DTC PRESENT

Turn the ignition on.
With the DRB III®, read Transmission DTCs.

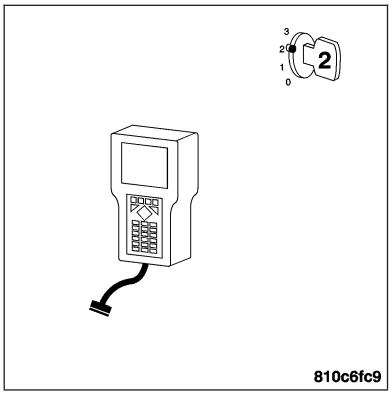

Is DTC (P0720) CAN BUS CIRCUIT present?

Yes >> Refer to the Transmission - Electrical Diagnostics category and perform the appropriate symptom.

No >> Go To 3

3. CHECK TO SEE IF ENGINE DTCS ARE PRESENT

With the ignition on.
With the DRB III®, read Engine DTCs.

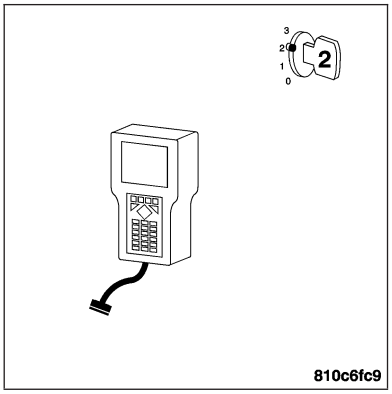

Are any performance or Bus related Engine DTCs present?

Yes >> Refer to the Engine - Electrical Diagnostics category and perform the appropriate symptom.

No >> Go To 4

4. CAN C BUS (+) / (-) CIRCUIT OPEN

Turn the ignition off.
Disconnect the PCM C4 harness connector.
Disconnect the TCM C3 harness connector.

Note: Check connectors - Clean/repair as necessary.
Measure the resistance of the CAN C Bus (+) circuit from the PCM C4 harness connector to the TCM C3 harness connector.
Measure the resistance of the CAN C Bus (-) circuit from the PCM C4 harness connector to the TCM C3 harness connector.

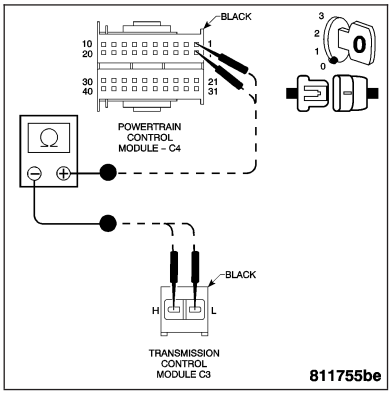

Is the resistance of both CAN C Bus circuits below 5 ohms?

Yes >> Go To 5

No >> Repair the faulty CAN C Bus circuit(s) for an open.
Perform NAG1 TRANSMISSION VERIFICATION TEST.

(P1793) ENGINE TORQUE REDUCTION — CONTINUED

5. PCM - ENGINE TORQUE REDUCTION

With the ignition off.
Replace and program the Powertrain Control Module. **Refer to Page 8E-56**.
Turn the ignition on.
With the DRB III®, erase Transmission DTCs.
Start the engine.
With the brakes firmly applied, shift the gear selector into drive.
With the DRB III®, read Transmission DTCs.

Did DTC (P1793) ENGINE TORQUE REDUCTION set again?

Yes >> Replace the Transmission Control Module. **Refer to Page 8E-60**.
Perform NAG1 TRANSMISSION VERIFICATION TEST.

No >> Test Complete.

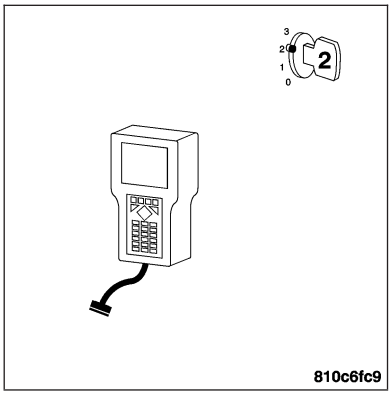

CAN BUS CIRCUIT

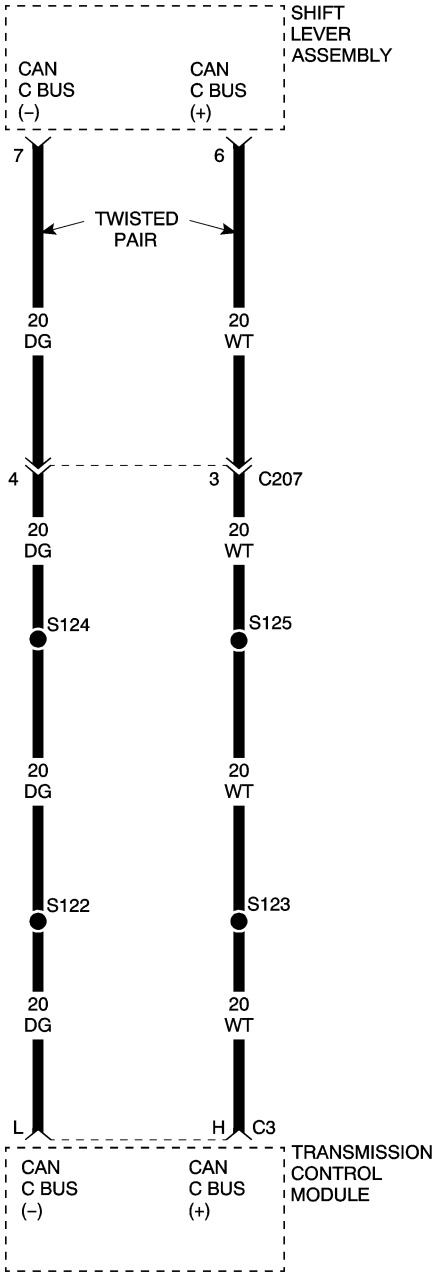

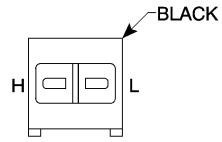

TRANSMISSION
CONTROL
MODULE C3

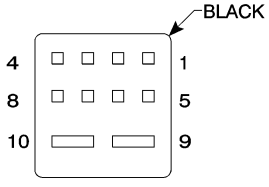

SHIFT
LEVER
ASSEMBLY

81159239

CAN BUS CIRCUIT — CONTINUED

POSSIBLE CAUSES
CAN COMMUNICATION FAILURE
CAN C BUS (+) AND/OR CAN C BUS (-) CIRCUIT OPEN
SHIFT LEVER ASSEMBLY

For a complete Shift Lever Assembly Circuit Diagram **Refer to Page 21-182** .

Diagnostic Test

1. CHECK FOR CAN DTCS IN OTHER MODULES

Turn the ignition on.

With the DRB III®, read the stored and active DTCs for all modules on the CAN C Bus.

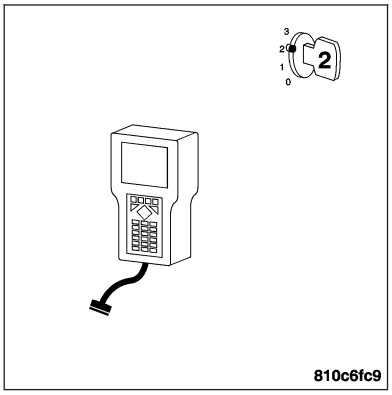

Are other modules reporting CAN Bus DTCs?

Yes >> Refer to the reporting category and perform the appropriate symptom. If the PCM is reporting a CAN Bus failure, refer to the PCM tests first.

No >> Go To2

2. CAN C BUS (+) AND/OR CAN C BUS (-) CIRCUIT OPEN

Turn the ignition off.

Disconnect the PCM harness connector.

Disconnect the SLA harness connector.

Note: Check connectors - Clean/repair as necessary.

Measure the resistance of both the CAN C Bus (+) circuit and the CAN C Bus (-) circuit from the PCM harness connector to the SLA harness connector.

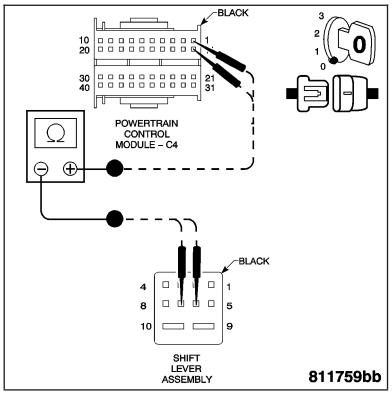

Is the resistance of both CAN C Bus circuits below 5.0 ohms?

Yes >> Replace the Shift Lever Assembly. **Refer to Page 21-340**. Perform NAG1 TRANSMISSION VERIFICATION TEST.

No >> Repair the faulty CAN C Bus circuit for an open. Perform NAG1 TRANSMISSION VERIFICATION TEST.

INCORRECT CAN MESSAGE FROM ABS

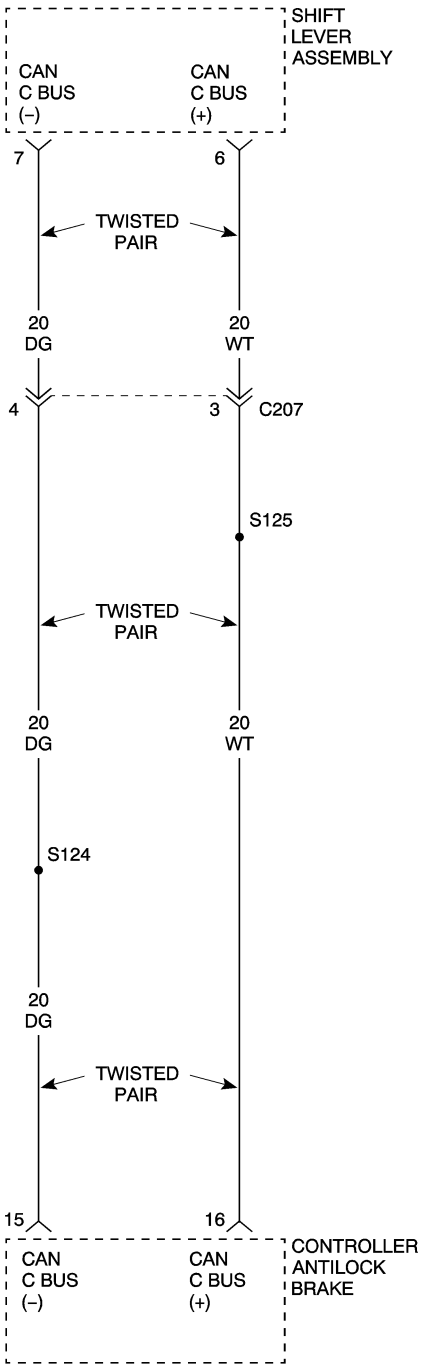

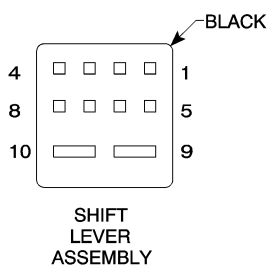

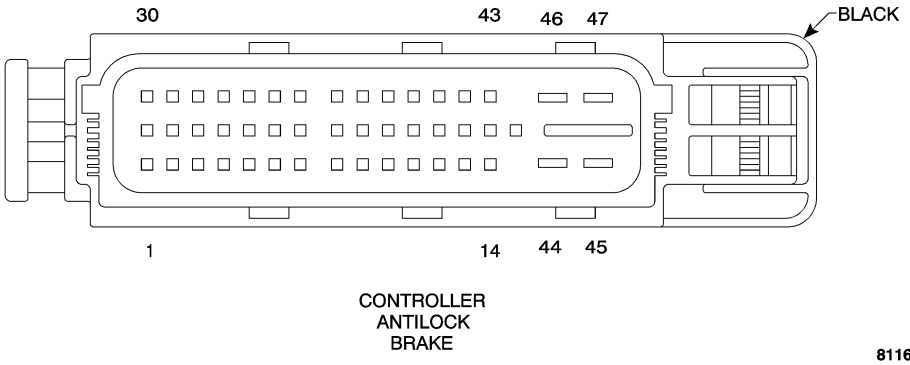

811605ae

INCORRECT CAN MESSAGE FROM ABS — CONTINUED

POSSIBLE CAUSES
CONTROLLER ANTILOCK BRAKE MODULE
SHIFT LEVER ASSEMBLY

For a complete Shift Lever Assembly Circuit Diagram, **Refer to Page 21-182**.

Diagnostic Test

1. CAB - INTERNAL

Turn the ignition off.
Replace the Controller Antilock Brake Module. **Refer to Page 8E-63**.
Turn the ignition on.
With the DRB III®, erase SLA DTCs.
Start the engine.
With the brakes firmly applied, place the shift lever into Drive.
With the DRB III®, read SLA DTCs.

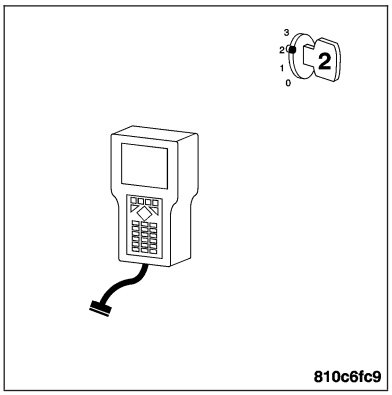

Did DTC INCORRECT CAN MESSAGE FROM ABS set again?

Yes >> Replace the Shift Lever Assembly. **Refer to Page 21-340**.
Perform NAG1 TRANSMISSION VERIFICATION TEST.

No >> Test Complete.

INTERNAL CONTROLLER

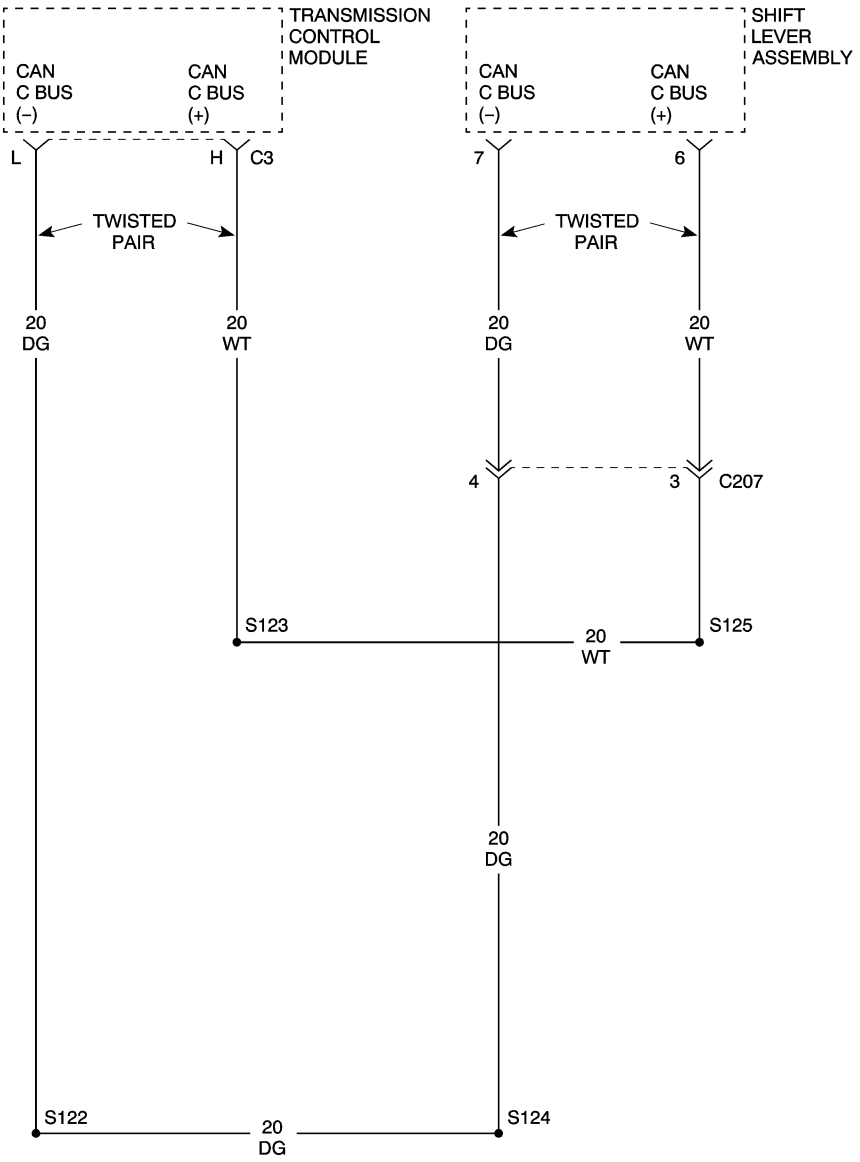

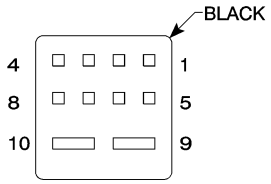

SHIFT LEVER ASSEMBLY

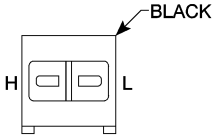

TRANSMISSION CONTROL MODULE C3

81160e65

INTERNAL CONTROLLER — CONTINUED

POSSIBLE CAUSES
SHIFT LEVER ASSEMBLY

For a complete Shift Lever Assembly Circuit Diagram, **Refer to Page 21-182**.

Diagnostic Test

1. SLA - INTERNAL ERROR

The Shift Lever Assembly is reporting internal errors.

View repair.

Repair >> Replace the Shift Lever Assembly. **Refer to Page 21-340**.
Perform NAG1 TRANSMISSION VERIFICATION TEST.

LR WHEEL SPIN CAN MESSAGE NOT VALID

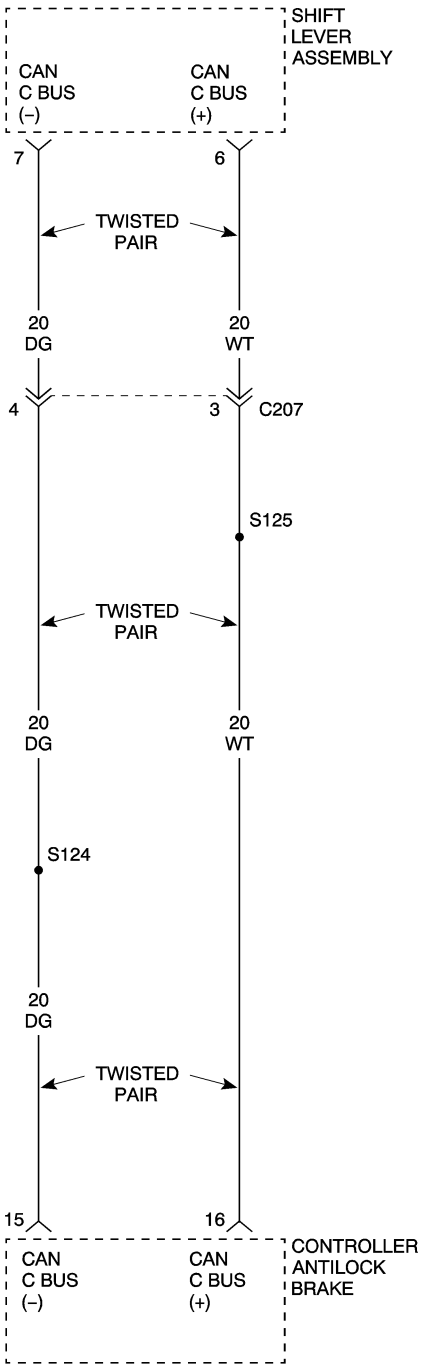

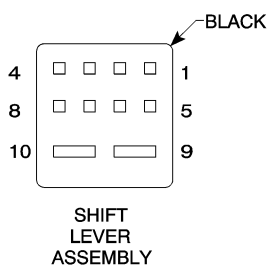

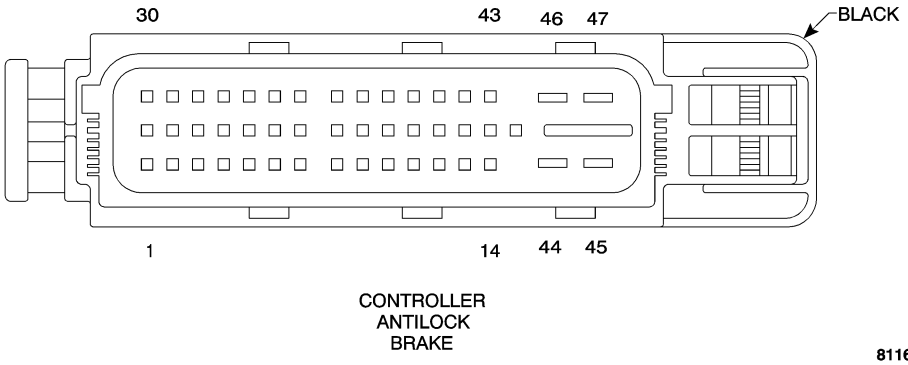

811605ae

LR WHEEL SPIN CAN MESSAGE NOT VALID — CONTINUED

POSSIBLE CAUSES
ABS WHEEL SPEED SENSOR DTC PRESENT
CONTROLLER ANTILOCK BRAKE MODULE
SHIFT LEVER ASSEMBLY

For a complete Shift Lever Assembly Circuit Diagram, **Refer to Page 21-182**.

Diagnostic Test

1. CAN BUS OR ABS DTC PRESENT

Turn the ignition on.
With the DRB III®, read the ABS DTCs.

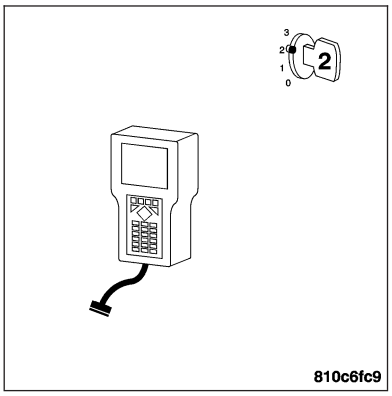

Are any CAN Bus or Wheel Speed Sensor DTCs present?

Yes >> Refer to the Brakes - ABS Electrical Diagnostics category and perform the appropriate symptom.

No >> Go To 2

2. CAB – ABS LR SENSOR MESSAGE

Turn the ignition off.
Replace the Controller Antilock Brake Module. **Refer to Page 8E-63**.
Start the engine.
Road test the vehicle.
With the DRB III®, read ABS DTCs.

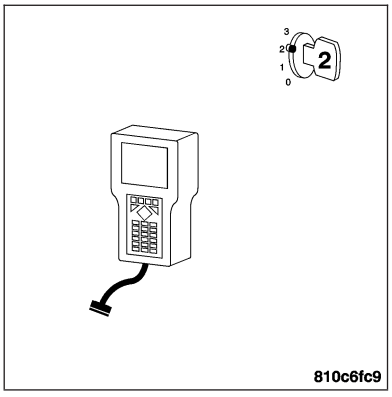

Did DTC LR WHEEL SPIN CAN MESSAGE NOT VALID set again?

Yes >> Replace the Shift Lever Assembly. **Refer to Page 21-340**.
Perform NAG1 TRANSMISSION VERIFICATION TEST.

No >> Test Complete.

RR WHEEL SPIN CAN MESSAGE NOT VALID

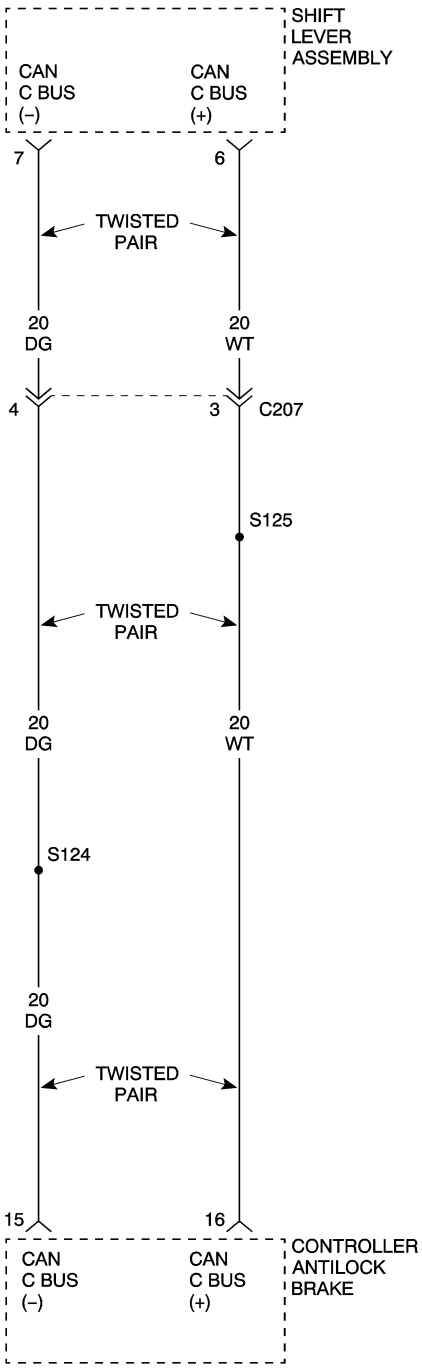

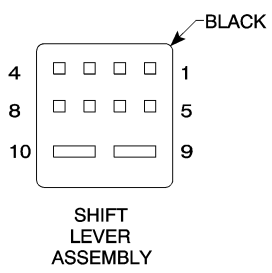

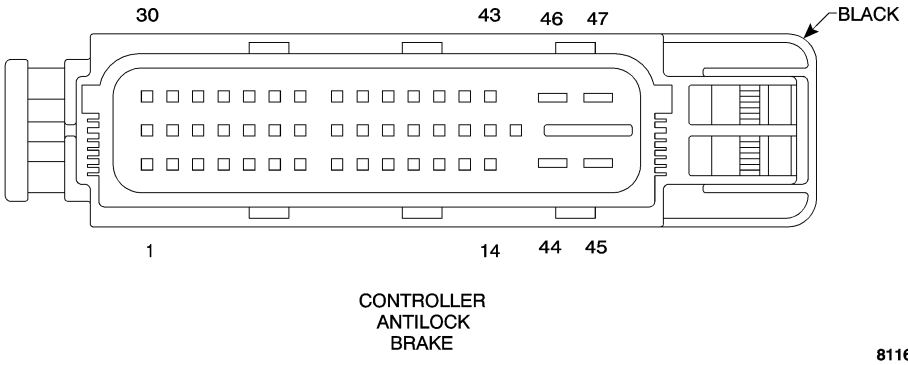

811605ae

RR WHEEL SPIN CAN MESSAGE NOT VALID — CONTINUED

POSSIBLE CAUSES
ABS WHEEL SPEED SENSOR DTC PRESENT
CONTROLLER ANTILOCK BRAKE MODULE
SHIFT LEVER ASSEMBLY

For a complete Shift Lever Assembly Circuit Diagram, **Refer to Page 21-182**.

Diagnostic Test

1. CAN BUS OR ABS DTC PRESENT

Turn the ignition on.
With the DRB III®, read the ABS DTCs.

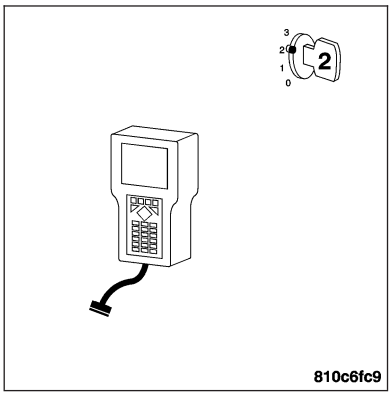

Are any CAN Bus or Wheel Speed Sensor DTCs present?

Yes >> Refer to the Brakes - ABS Electrical Diagnostics category and perform the appropriate symptom.

No >> Go To2

2. CAB – ABS RR SENSOR MESSAGE

Turn the ignition off.
Replace the Controller Antilock Brake Module. **Refer to Page 8E-63**.
Start the engine.
Road test the vehicle.
With the DRB III®, read ABS DTCs.

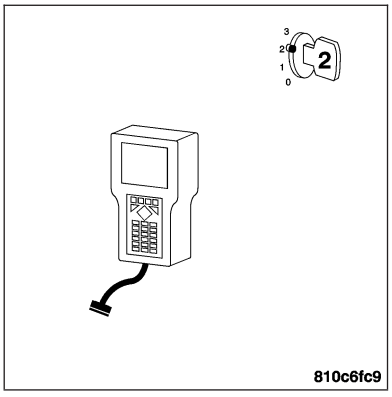

Did DTC RR WHEEL SPIN CAN MESSAGE NOT VALID set again?

Yes >> Replace the Shift Lever Assembly. **Refer to Page 21-340**.
Perform NAG1 TRANSMISSION VERIFICATION TEST.

No >> Test Complete.

OVERVOLTAGE

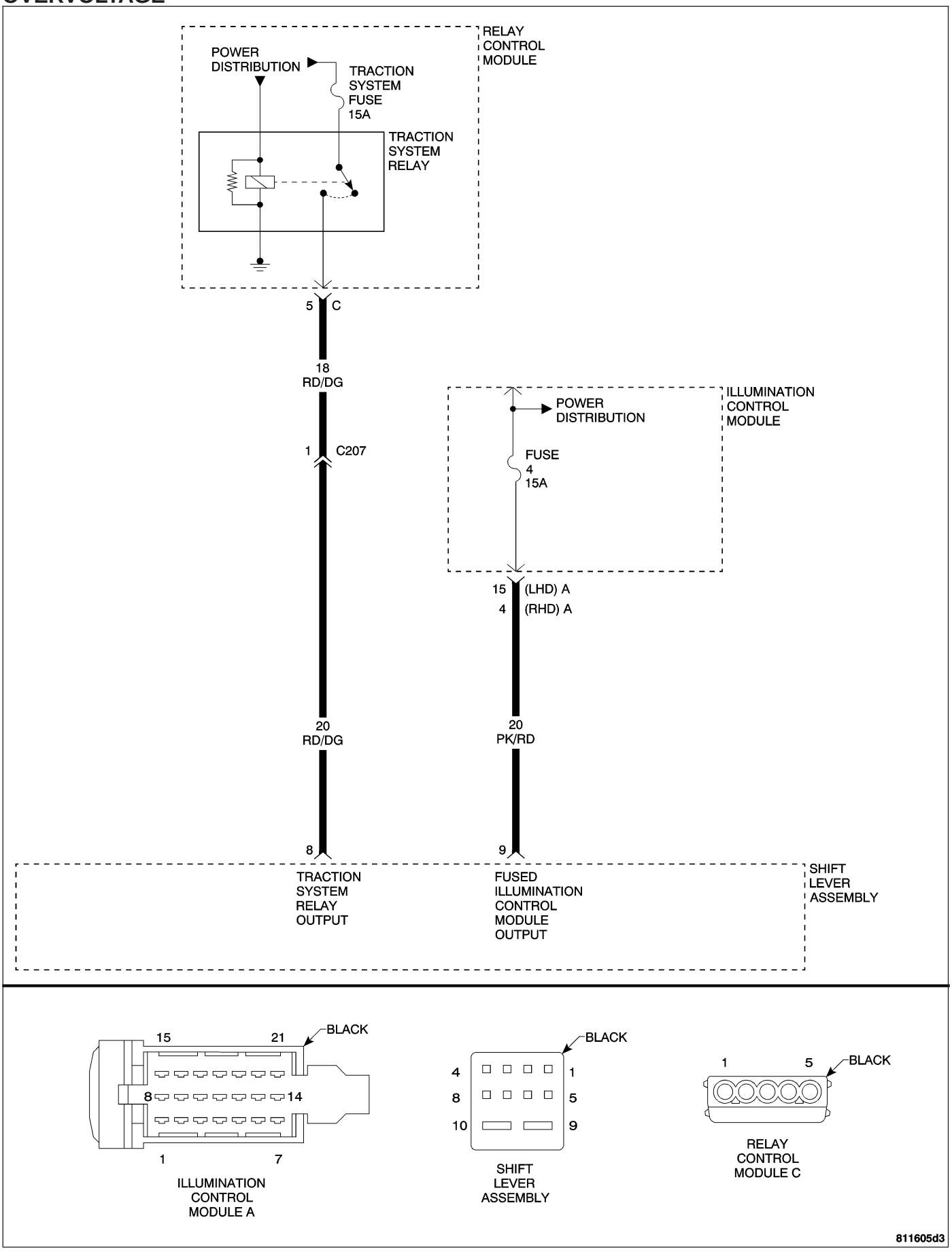

OVERVOLTAGE — CONTINUED

POSSIBLE CAUSES
ENGINE CHARGING SYSTEM DTCS PRESENT
FUSED IGNITION SWITCH OUTPUT OR TRACTION SYSTEM RELAY OUTPUT CIRCUITS HIGH AT SLA
SHIFT LEVER ASSEMBLY

For a complete Shift Lever Assembly Circuit Diagram, **Refer to Page 21-182**.

Diagnostic Test

1. ENGINE CHARGING SYSTEM DTCS PRESENT

Turn the ignition on.
With the DRB III®, read the engine DTCs.

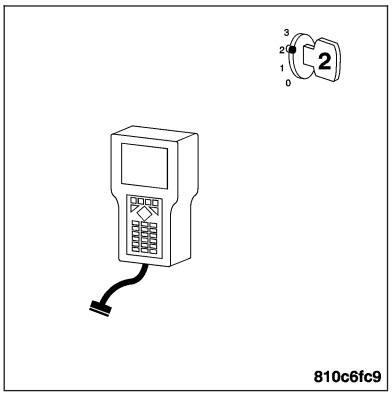

Are any Engine Charging System DTCs present?

Yes >> Refer to the Engine - Electrical Diagnostics category and perform the appropriate symptom.

No >> Go To 2

2. FUSED IGNITION SWITCH OUTPUT OR TRACTION SYSTEM RELAY OUTPUT CIRCUITS OVERVOLTAGE

Turn the ignition off.
Disconnect the Shift Lever Assembly harness connector.

Note: Check connectors - Clean/repair as necessary.
Start the engine and raise the engine speed to 1500 RPM.
Measure the voltage of the Fused Ignition Switch Output and Traction System Relay Output circuits at the SLA harness connector.

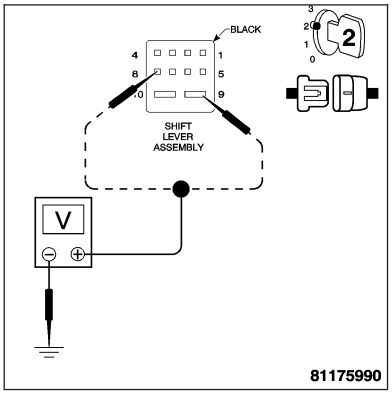

Is the voltage above 16.0 volts ± 0.3 volt?

Yes >> Repair the Fused Ignition Switch Output and Traction System Relay Output circuits for an overvoltage condition.
Perform NAG1 TRANSMISSION VERIFICATION TEST.

No >> Replace the Shift Lever Assembly. **Refer to Page 21-340**.
Perform NAG1 TRANSMISSION VERIFICATION TEST.

UNDERVOLTAGE

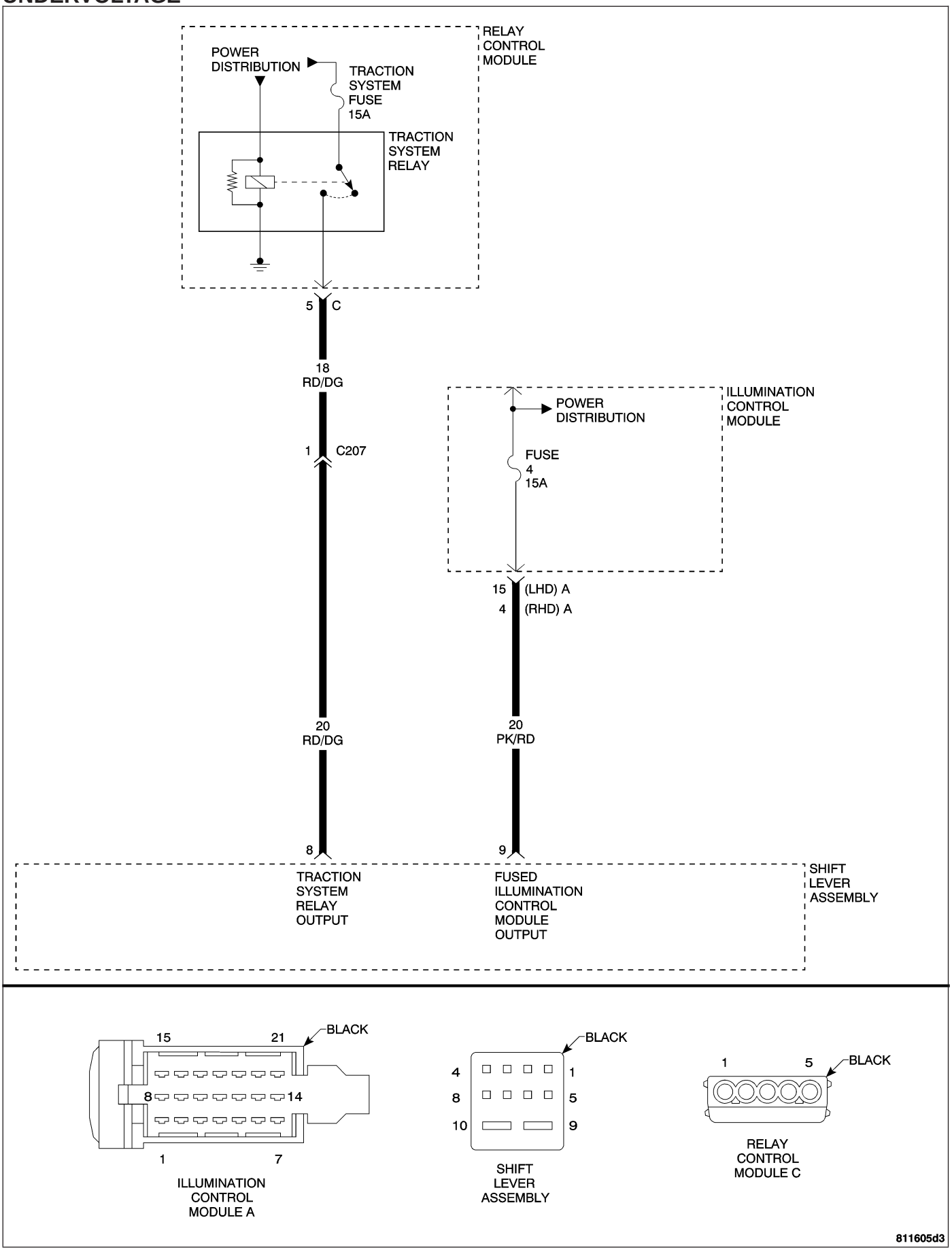

UNDERVOLTAGE — CONTINUED

POSSIBLE CAUSES
ENGINE CHARGING SYSTEM DTCS PRESENT
FUSED IGNITION SWITCH OUTPUT OR TRACTION SYSTEM RELAY OUTPUT LOW AT SLA
SHIFT LEVER ASSEMBLY

For a complete Shift Lever Assembly Circuit Diagram, **Refer to Page 21-182**.

Diagnostic Test

1. ENGINE CHARGING SYSTEM DTCS PRESENT

Turn the ignition on.
With the DRB III®, read the engine DTCs.

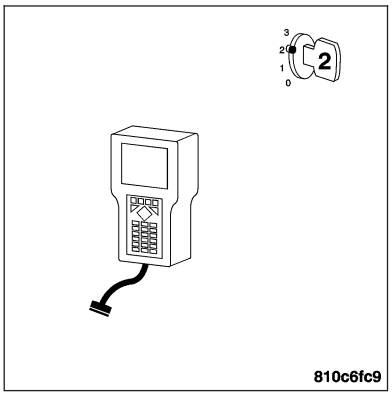

Are any Engine Charging System DTCs present?

Yes >> Refer to the Engine - Electrical Diagnostics category and perform the appropriate symptom.

No >> Go To 2

2. FUSED IGNITION SWITCH OUTPUT OR TRACTION SYSTEM RELAY OUTPUT LOW AT SLA

Turn the ignition off.
Disconnect the Shift Lever Assembly harness connector.

Note: Check connectors - Clean/repair as necessary.
Start the engine and raise the engine speed to 1500 RPM.
Measure the voltage of the Fused Ignition Switch Output or Traction System Relay Output circuits at the SLA harness connector.

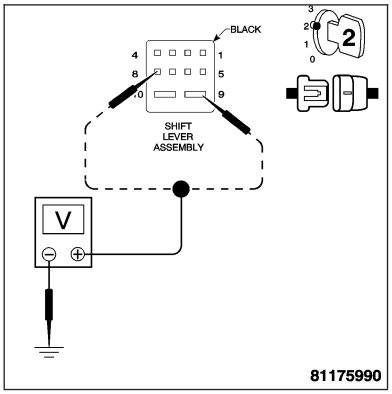

Is the voltage below 9.0 volts?

Yes >> Repair the Fused Ignition Switch Output or Traction System Relay Output circuit for an open.
Perform NAG1 TRANSMISSION VERIFICATION TEST.

No >> Replace the Shift Lever Assembly. **Refer to Page 21-340**.
Perform NAG1 TRANSMISSION VERIFICATION TEST.

TRANSMISSION VERIFICATION TEST

1.

Reconnect any disconnected components.

Connect the DRB III® to the Data Link Connector.

With the DRB III®, erase ABS DTCs.

With the DRB III®, erase PCM DTCs.

With the DRB III®, erase TCM DTCs.

With the DRB III®, display the Transmission temperature. Start and run the engine until the Transmission temperature is above 43°C (110°F).

Check the Transmission fluid and adjust if necessary. Refer to the Service Information for the proper Fluid Fill procedure.

Note: If internal repairs were performed and the shift quality is still poor, it may be necessary to check the internal repair.

ROAD TEST PROCEDURE

Road test the vehicle. Make fifteen to twenty 1–2, 2–3, 3–4, and 4–5 upshifts.

Perform these shifts from a standing start to 72 km/h (45 MPH) with a constant throttle opening of 20 to 25 degrees.

With speeds below 40 km/h (25 MPH), make five to eight wide open throttle kickdowns to 1st gear. Allow at least 5 seconds each in 2nd and 3rd gear between each kickdown.

With the DRB III®, read Transmission DTCs.

Were any Diagnostic Trouble Codes set?

Yes >> Repair is not complete, refer to appropriate symptom.

No >> Repair is complete.

SCHEMATICS AND DIAGRAMS

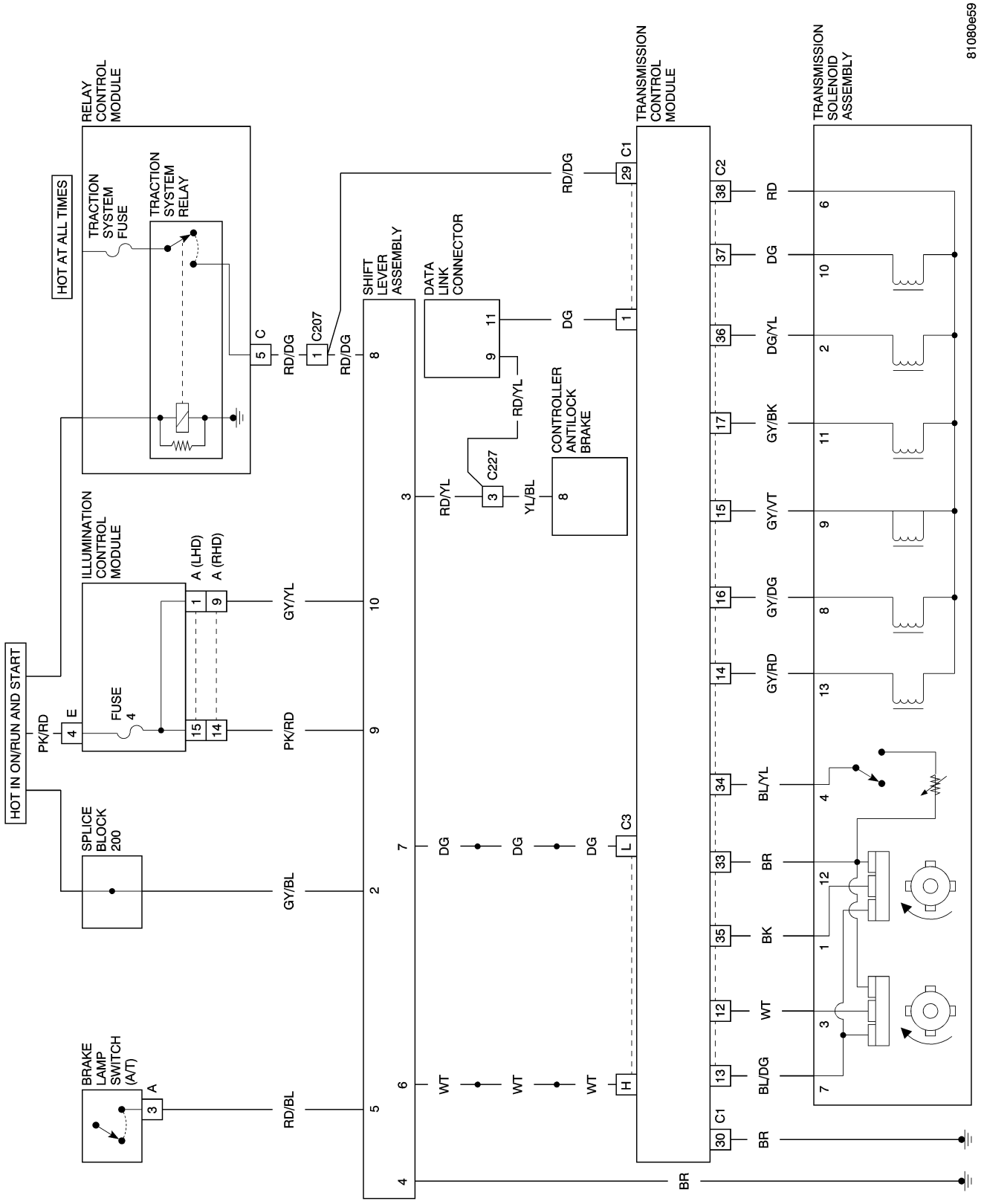

AUTOMATIC - NAG1 SERVICE INFORMATION

TABLE OF CONTENTS

page

AUTOMATIC - NAG1 SERVICE INFORMATION
DESCRIPTION . . . 184
OPERATION . . . 186
DIAGNOSIS AND TESTING
AUTOMATIC TRANSMISSION . . . 206
DIAGNOSIS AND TESTING - PRELIMINARY . . 206
DIAGNOSIS AND TESTING - ROAD TESTING . . . 206
DIAGNOSIS AND TESTING - AUTOMATIC TRANSMISSION . . . 207
STANDARD PROCEDURE - ALUMINUM THREAD REPAIR . . . 210
REMOVAL . . . 210
DISASSEMBLY . . . 213
ASSEMBLY . . . 219
INSTALLATION . . . 227
SCHEMATICS AND DIAGRAMS . . . 230
SPECIFICATIONS - NAG1 AUTOMATIC TRANSMISSION . . . 251
SPECIAL TOOLS - NAG1 AUTOMATIC TRANSMISSION . . . 252
DRIVING CLUTCHES
DESCRIPTION . . . 255
OPERATION . . . 256
DRIVING CLUTCH K1
DISASSEMBLY . . . 257
ASSEMBLY . . . 258
DRIVING CLUTCH K2
DISASSEMBLY . . . 261
ASSEMBLY . . . 263
DRIVING CLUTCH K3
DISASSEMBLY . . . 266
ASSEMBLY . . . 267
ELECTROHYDRAULIC UNIT
DESCRIPTION . . . 268
OPERATION . . . 275
REMOVAL . . . 281
DISASSEMBLY . . . 282
ASSEMBLY . . . 287
INSTALLATION . . . 290
FLUID AND FILTER
DESCRIPTION . . . 292
OPERATION . . . 292
DIAGNOSIS AND TESTING
EFFECTS OF INCORRECT FLUID LEVEL . . 293
DIAGNOSIS AND TESTING - CAUSES OF BURNT FLUID . . . 293
DIAGNOSIS AND TESTING - FLUID CONTAMINATION . . . 293
STANDARD PROCEDURE
CHECK OIL LEVEL . . . 294
STANDARD PROCEDURE - TRANSMISSION FILL . . . 296
STANDARD PROCEDURE - FILTER CHANGE . . . 296
FREEWHEELING CLUTCH
DESCRIPTION . . . 298
OPERATION . . . 298
DISASSEMBLY . . . 299
ASSEMBLY . . . 301
HOLDING CLUTCHES
DESCRIPTION . . . 302
OPERATION . . . 303
HOLDING CLUTCH B1
DISASSEMBLY . . . 304
ASSEMBLY . . . 305
HOLDING CLUTCH B2
DISASSEMBLY . . . 307
ASSEMBLY . . . 308
SPEED SENSOR
DESCRIPTION . . . 311
OPERATION . . . 311
OIL PUMP
DESCRIPTION . . . 312
OPERATION . . . 312
DISASSEMBLY . . . 312
ASSEMBLY . . . 313
OUTPUT SHAFT BEARING
REMOVAL . . . 314
INSTALLATION . . . 316
OUTPUT SHAFT SEAL
REMOVAL . . . 318
INSTALLATION . . . 318
PISTONS
DESCRIPTION . . . 319
OPERATION . . . 319
PLANETARY GEARTRAIN
DESCRIPTION . . . 321
OPERATION . . . 321
DISASSEMBLY . . . 322
ASSEMBLY . . . 323
SHIFT INTERLOCK SOLENOID
DESCRIPTION . . . 324
OPERATION . . . 326
TEMP SENSOR/PARK-NEUTRAL SWITCH
DESCRIPTION
PARK/NEUTRAL CONTACT . . . 327

DESCRIPTION - TRANSMISSION TEMPERATURE SENSOR 327
OPERATION
PARK/NEUTRAL CONTACT 328
OPERATION - TRANSMISSION TEMPERATURE SENSOR 328
TORQUE CONVERTER
DESCRIPTION 330
OPERATION 333
REMOVAL 335
INSTALLATION 336
TORQUE CONVERTER HUB SEAL
REMOVAL 337
INSTALLATION 337
SHIFT INTERLOCK SOLENOID
DESCRIPTION 338
ADJUSTMENTS - SHIFT INTERLOCK SOLENOID 338
SHIFT LEVER ASSEMBLY
DESCRIPTION 339
OPERATION 339
REMOVAL 340
INSTALLATION 340
GEAR SHIFT ROD
REMOVAL 341
INSTALLATION 341

AUTOMATIC - NAG1 SERVICE INFORMATION

DESCRIPTION

The NAG1 automatic transmission is an electronically controlled 5-speed transmission with a lock-up clutch in the torque converter. The ratios for the gear stages are obtained by 3 planetary gear sets. Fifth gear is designed as an overdrive with a high-speed ratio.

The gears are actuated electronically/hydraulically. The gears are shifted by means of an appropriate combination of three multi-disc holding clutches, three multi-disc driving clutches, and two freewheeling clutches.

Electronic transmission control enables precise adaptation of pressures to the respective operating conditions and to the engine output during the shift phase which results in a significant improvement in shift quality.

Furthermore, it offers the advantage of a flexible adaptation to various vehicles and engines.

Basically, the automatic transmission with electronic control offers the following advantages:

- Reduces fuel consumption.
- Improved shift comfort.
- More favorable step-up through the five gears.
- Increased service life and reliability.
- Lower maintenance costs.

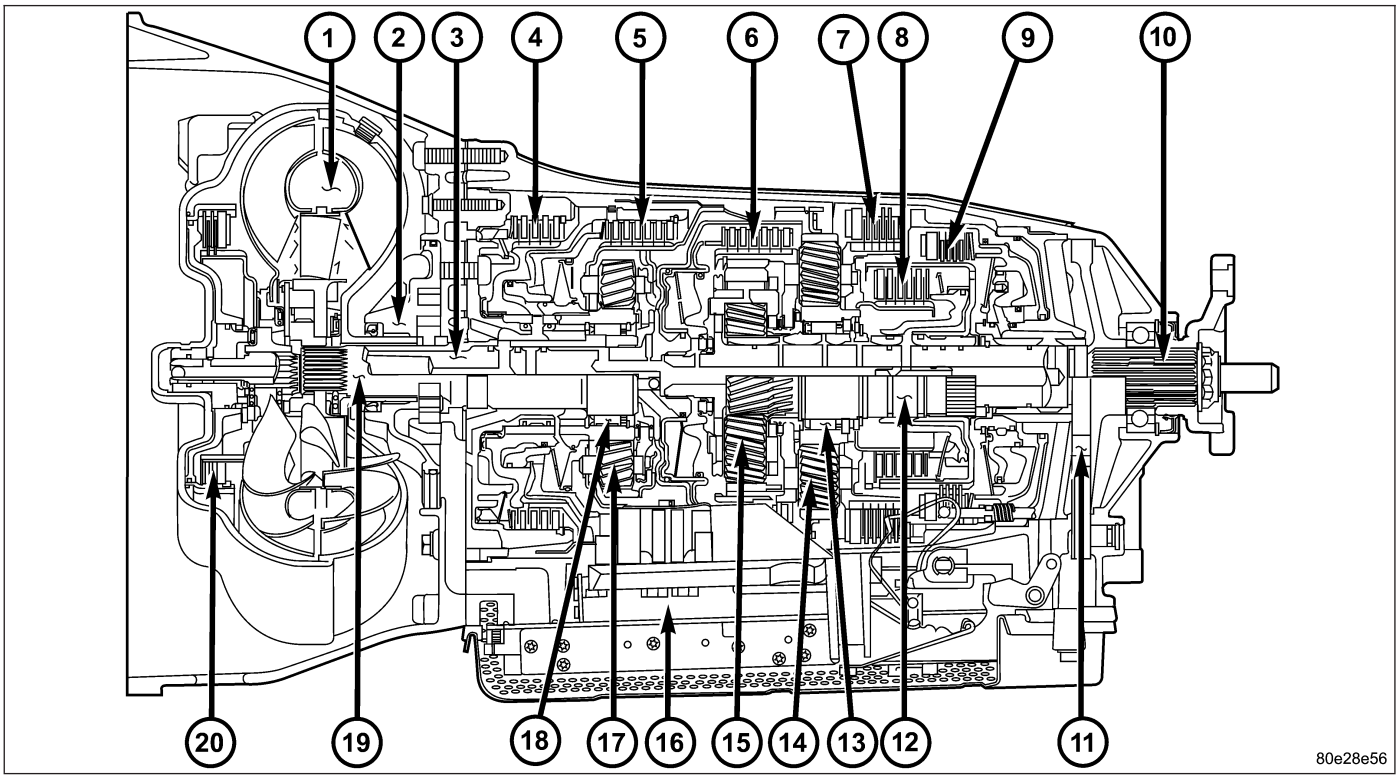

1 - TORQUE CONVERTER
2 - OIL PUMP
3 - DRIVESHAFT
4 - MULTI-DISC HOLDING CLUTCH B1
5 - DRIVING CLUTCH K1
6 - DRIVING CLUTCH K2
7 - MULTI-DISC HOLDING CLUTCH B3
8 - DRIVING CLUTCH K3
9 - MULTI-DISC HOLDING CLUTCH B2
10 - OUTPUT SHAFT
11 - PARKING LOCK GEAR
12 - INTERMEDIATE SHAFT
13 - FREEWHEEL F2
14 - REAR PLANETARY GEAR SET
15 - CENTER PLANETARY GEAR SET
16 - ELECTROHYDRAULIC CONTROL UNIT
17 - FRONT PLANETARY GEAR SET
18 - FREEWHEEL F1
19 - STATOR SHAFT
20 - TORQUE CONVERTER LOCK-UP CLUTCH

TRANSMISSION IDENTIFICATION

The transmission name, NAG1, means New Automatic Gearbox, generation 1.

The transmission can be generically identified visually by the presence of a round 13-way connector located near the front corner of the transmission oil pan, on the right side. Specific transmission information can be found stamped into a pad on the left side of the transmission, above the oil pan rail.

TRANSMISSION GEAR RATIOS

The gear ratios for the NAG1 automatic transmission are as follows:

1st Gear	3.59:1
2nd Gear	2.19:1
3rd Gear	1.41:1
4th Gear	1.00:1
5th Gear	0.83:1
Reverse	3.16:1

TRANSMISSION HOUSING

The converter housing and transmission are made from a light alloy. These are bolted together and centered via the outer multi-disc carrier of multi-disc holding clutch, B1 (4). A coated intermediate plate provides the sealing. The oil pump (2) and the outer multi-disc carrier of the multi-disc holding clutch, B1 (4), are bolted to the converter housing. The stator shaft (19) is pressed into it and prevented from rotating by splines. The electrohydraulic control unit (16) is bolted to the transmission housing from underneath. A sheet metal steel oil pan forms the closure.

MECHANICAL SECTION

The mechanical section consists of a driveshaft (3), output shaft (10), a sun gear shaft, and three planetary gear sets (14, 15 and 17) which are coupled to each other. The planetary gear sets each have four planetary pinion gears. The oil pressure for the torque converter lock-up clutch (20) and driving clutch K2 (6) is supplied through bores in the drive shaft (3). The oil pressure to driving clutch K3 (8) is transmitted through the output shaft (10). The lubricating oil is distributed through additional bores in both shafts. All the bearing points of the gear sets, as well as the freewheeling clutches and actuators, are supplied with lubricating oil. The parking lock gear (11) is connected to the output shaft (10) via splines.

Freewheel F1 (18) and F2 (13) are used to optimize the shifts. The front freewheel, F1 (18), is supported on the extension of the stator shaft (19) on the transmission side and, in the locking direction, connects the sun gear of the front planetary gear set (17) to the transmission housing. In the locking direction, the rear freewheel, F2 (13), connects the sun gear of the center planetary gear set (15) to the sun gear of the rear planetary gear set (14).

ELECTROHYDRAULIC CONTROL UNIT

The electrohydraulic control unit (16) comprises the shift plate made from light alloy for the hydraulic control and an electrical control unit. The electrical control unit comprises of a supporting body made of plastic, into which the electrical components are assembled. The supporting body is mounted on the shift plate and screwed to it.

Strip conductors inserted into the supporting body make the connection between the electrical components and a plug connector. The connection to the wiring harness on the vehicle and the transmission control module (TCM) is produced via this 13-pin plug connector with a bayonet lock.

SHIFT GROUPS

The hydraulic control components (including actuators), which are responsible for the pressure distribution before, during, and after a gear change are described as a shift group. Each shift group contains a command valve, a holding pressure shift valve, a shift pressure shift valve, overlap regulating valve, and a solenoid.

The hydraulic system contains three shift groups: 1-2/4-5, 2-3, and 3-4. Each shift group can also be described as being in one of two possible states. The active shift group is described as being in the shift phase when it is actively engaging/disengaging a clutch combination. The 1-2/4-5 shift group control the B1 (4) and K1 (5) clutches. The 2-3 shift group controls the K2 (6) and K3 (8) clutches. The 3-4 shift group controls the K3 (8) and B2 (9) clutches.

OPERATION

The transmission control is divided into the electronic and hydraulic transmission control functions. While the electronic transmission control is responsible for gear selection and for matching the pressures to the torque to be transmitted, the transmission's power supply control occurs via hydraulic elements in the electrohydraulic control module. The oil supply to the hydraulic elements, such as the hydrodynamic torque converter, the shift elements and the hydraulic transmission control, is provided by way of an oil pump connected with the torque converter.

The Transmission Control Module (TCM) allows for the precise adaptation of pressures to the corresponding operating conditions and to the engine output during the gearshift phase, resulting in a noticeable improvement in shift quality. The engine speed limit can be reached in the individual gears at full throttle and kickdown. The shift range can be changed in the forward gears while driving, but the TCM employs a downshift safeguard to prevent overrevving the engine. The system offers the additional advantage of flexible adaptation to different vehicle and engine variants.

EMERGENCY RUNNING FUNCTION

In order to ensure a safe driving state and to prevent damage to the automatic transmission, the TCM control module switches to limp-home mode in the event of critical faults. A DTC assigned to the fault is stored in memory. All solenoid and regulating valves are thus de-energized.

The net effect is:

- The last engaged gear remains engaged.
- The modulating pressure and shift pressures rise to the maximum levels.
- The torque converter lockup clutch is deactivated.

In order to preserve the operability of the vehicle to some extent, the hydraulic control can be used to engage 2nd gear or reverse using the following procedure:

- Stop the vehicle.
- Switch off engine.
- Move selector lever to “P”.
- Wait at least 10 seconds.
- Start engine.
- Move selector lever to D: 2nd gear.
- Move selector lever to R: Reverse gear.

The limp-home function remains active until the DTC is rectified or the stored DTC is erased with the DRBIII® tool. Sporadic faults can be reset via ignition OFF/ON.

CLUTCH APPLICATION

Refer to the following table for which shift elements are applied in each gear position.

CLUTCH APPLICATION

GEAR	RATIO	B1	B2	B3	K1	K2	K3	F1	F2
1	3.59	X*	X				X*	X	X
2	2.19		X		X		X*		X
3	1.41		X		X	X			
4	1.00				X	X	X		
5	0.83	X				X	X	X*	
N	X						X		
R	3.16	X*		X			X	X	
* = The shift components required during coast.									

FIRST GEAR POWERFLOW

Torque from the torque converter is increased via the driveshaft (25) and all three planetary gearsets and transferred to the output shaft (26).

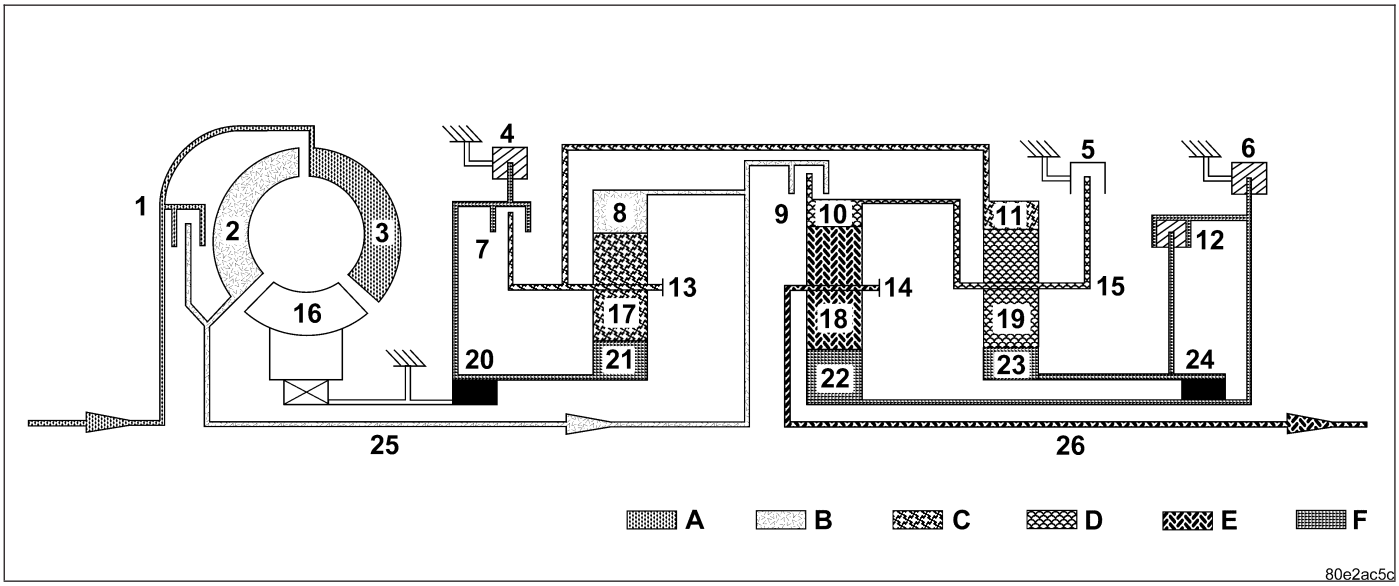

1 - TORQUE CONVERTER LOCK-UP CLUTCH
2 - TORQUE CONVERTER TURBINE
3 - TORQUE CONVERTER IMPELLER
4 - MULTI-DISC HOLDING CLUTCH B1
5 - MULTI-DISC HOLDING CLUTCH B3
6 - MULTI-DISC HOLDING CLUTCH B2
7 - DRIVING CLUTCH K1
8 - FRONT PLANETARY ANNULUS GEAR
9 - DRIVING CLUTCH K2
10 - CENTER PLANETARY ANNULUS GEAR
11 - REAR PLANETARY ANNULUS GEAR
12 - DRIVING CLUTCH K3
13 - FRONT PLANETARY CARRIER
14 - CENTER PLANETARY CARRIER
15 - REAR PLANETARY CARRIER
16 - TORQUE CONVERTER STATOR
17 - FRONT PLANETARY PINION GEARS
18 - CENTER PLANETARY PINION GEARS
19 - REAR PLANETARY PINION GEARS
20 - FREEWHEEL F1
21 - FRONT PLANETARY SUN GEAR
22 - CENTER PLANETARY SUN GEAR
23 - REAR PLANETARY SUN GEAR
24 - FREEWHEEL F2
25 - DRIVE SHAFT
26 - OUTPUT SHAFT
A - ENGINE SPEED
B - TRANSMISSION INPUT SPEED
C - FIRST GEAR RATIO
D - SECOND GEAR RATIO
E - THIRD GEAR RATIO
F - FIXED PARTS

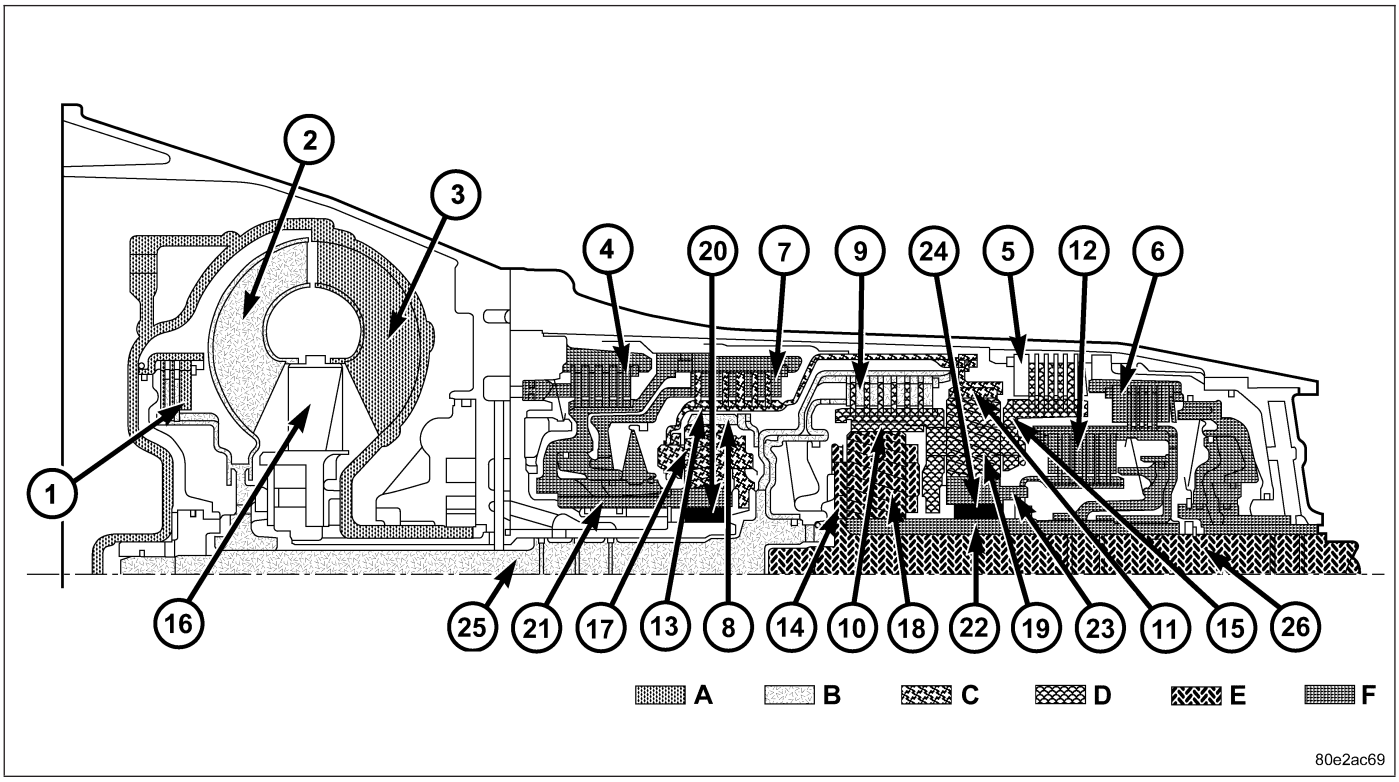

1 - TORQUE CONVERTER LOCK-UP CLUTCH
2 - TORQUE CONVERTER TURBINE
3 - TORQUE CONVERTER IMPELLER
4 - MULTI-DISC HOLDING CLUTCH B1
5 - MULTI-DISC HOLDING CLUTCH B3
6 - MULTI-DISC HOLDING CLUTCH B2
7 - DRIVING CLUTCH K1
8 - FRONT PLANETARY ANNULUS GEAR
9 - DRIVING CLUTCH K2
10 - CENTER PLANETARY ANNULUS GEAR
11 - REAR PLANETARY ANNULUS GEAR
12 - DRIVING CLUTCH K3
13 - FRONT PLANETARY CARRIER
A - ENGINE SPEED
B - TRANSMISSION INPUT SPEED
C - FIRST GEAR RATIO
14 - CENTER PLANETARY CARRIER
15 - REAR PLANETARY CARRIER
16 - TORQUE CONVERTER STATOR
17 - FRONT PLANETARY PINION GEARS
18 - CENTER PLANETARY PINION GEARS
19 - REAR PLANETARY PINION GEARS
20 - FREEWHEEL F1
21 - FRONT PLANETARY SUN GEAR
22 - CENTER PLANETARY SUN GEAR
23 - REAR PLANETARY SUN GEAR
24 - FREEWHEEL F2
25 - DRIVE SHAFT
26 - OUTPUT SHAFT
D - SECOND GEAR RATIO
E - THIRD GEAR RATIO
F - FIXED PARTS

Front Planetary Gear Set

The annulus gear (8) is driven by the driveshaft (25). The sun gear (21) is held against the housing by the locked freewheel F1 (20) during acceleration and via the engaged multi-disc holding clutch B1 (4) during deceleration. The planetary pinion gears (17) turn on the fixed sun gear (21) and increase the torque from the annulus gear (8) to the planetary carrier (13). The planetary carrier (13) moves at a reduced speed in the running direction of the engine.

Center Planetary Gear Set

The annulus gear (10) is driven at the same speed as the rear planetary carrier (15) as a result of a mechanical connection. The sun gear (22) is held against the housing by the multi-disc holding clutch B2 (6). The planetary pinion gears (18) turn on the fixed sun gear (22) and increase the torque from the annulus gear (10) to the planetary carrier. The output shaft (26) connected to the center planetary carrier (14) turns at a reduced speed in the running direction of the engine.

Rear Planetary Gear Set

The annulus gear (11) turns at a reduced speed due to the mechanical connection to the front planetary carrier (15). The sun gear (23) is held against the housing by the engaged multi-disc holding clutch B2 (6), by the locked free-wheel F2 (24) during acceleration and by the engaged driving clutch K3 (12) during deceleration. The rear planetary gears (19) turn on the fixed sun gear (23) and increase the torque from the annulus gear (11) to the planetary carrier (15). The planetary carrier (15) moves at a reduced speed in the running direction of the engine.

SECOND GEAR POWERFLOW

Torque from the torque converter is increased via the driveshaft (25) and the center and rear planetary gearset and transferred to the output shaft (26).

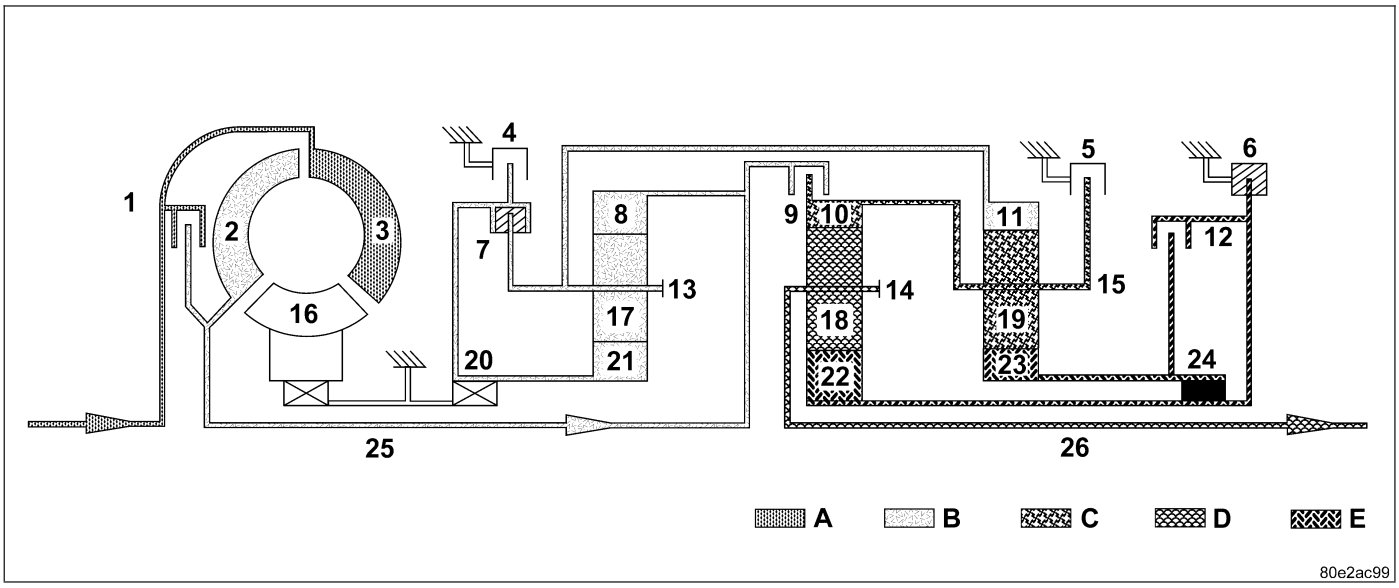

1 - TORQUE CONVERTER LOCK-UP CLUTCH
2 - TORQUE CONVERTER TURBINE
3 - TORQUE CONVERTER IMPELLER
4 - MULTI-DISC HOLDING CLUTCH B1
5 - MULTI-DISC HOLDING CLUTCH B3
6 - MULTI-DISC HOLDING CLUTCH B2
7 - DRIVING CLUTCH K1
8 - FRONT PLANETARY ANNULUS GEAR
9 - DRIVING CLUTCH K2
10 - CENTER PLANETARY ANNULUS GEAR
11 - REAR PLANETARY ANNULUS GEAR
12 - DRIVING CLUTCH K3
13 - FRONT PLANETARY CARRIER
A - ENGINE SPEED
B - TRANSMISSION INPUT SPEED
C - FIRST GEAR RATIO
14 - CENTER PLANETARY CARRIER
15 - REAR PLANETARY CARRIER
16 - TORQUE CONVERTER STATOR
17 - FRONT PLANETARY PINION GEARS
18 - CENTER PLANETARY PINION GEARS
19 - REAR PLANETARY PINION GEARS
20 - FREEWHEEL F1
21 - FRONT PLANETARY SUN GEAR
22 - CENTER PLANETARY SUN GEAR
23 - REAR PLANETARY SUN GEAR
24 - FREEWHEEL F2
25 - DRIVE SHAFT
26 - OUTPUT SHAFT
D - SECOND GEAR RATIO
E - FIXED PARTS

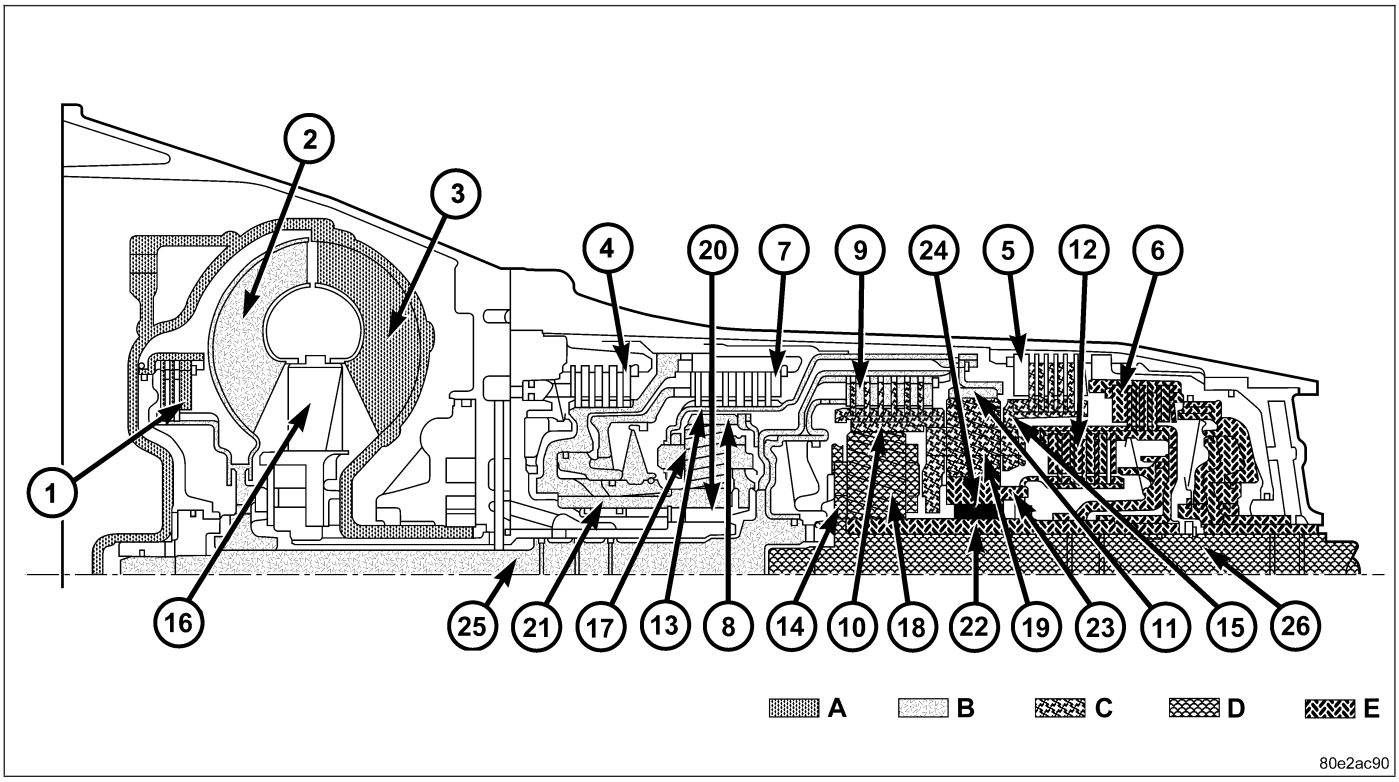

1 - TORQUE CONVERTER LOCK-UP CLUTCH
2 - TORQUE CONVERTER TURBINE
3 - TORQUE CONVERTER IMPELLER
4 - MULTI-DISC HOLDING CLUTCH B1
5 - MULTI-DISC HOLDING CLUTCH B3
6 - MULTI-DISC HOLDING CLUTCH B2
7 - DRIVING CLUTCH K1
8 - FRONT PLANETARY ANNULUS GEAR
9 - DRIVING CLUTCH K2
10 - CENTER PLANETARY ANNULUS GEAR
11 - REAR PLANETARY ANNULUS GEAR
12 - DRIVING CLUTCH K3
13 - FRONT PLANETARY CARRIER
A - ENGINE SPEED
B - TRANSMISSION INPUT SPEED
C - FIRST GEAR RATIO
14 - CENTER PLANETARY CARRIER
15 - REAR PLANETARY CARRIER
16 - TORQUE CONVERTER STATOR
17 - FRONT PLANETARY PINION GEARS
18 - CENTER PLANETARY PINION GEARS
19 - REAR PLANETARY PINION GEARS
20 - FREEWHEEL F1
21 - FRONT PLANETARY SUN GEAR
22 - CENTER PLANETARY SUN GEAR
23 - REAR PLANETARY SUN GEAR
24 - FREEWHEEL F2
25 - DRIVE SHAFT
26 - OUTPUT SHAFT
D - SECOND GEAR RATIO
E - FIXED PARTS

Front Planetary Gear Set

The planetary carrier (13) and sun gear (21) are connected via the engaged driving clutch K1 (7). The planetary gearset is therefore blocked and turns as a closed unit at the input speed due to the mechanical connection of the annulus gear (8) and driveshaft (25).

Center Planetary Gear Set

The annulus gear (10) is driven at the same speed as the rear planetary carrier (15) as a result of a mechanical connection. The sun gear (22) is held against the housing by the multi-disc holding clutch B2 (6). The planetary pinion gears (18) turn on the fixed sun gear (22) and increase the torque from the annulus gear (10) to the planetary carrier (14). The output shaft (26) connected to the planetary carrier (14) turns at a reduced speed in the running direction of the engine.

Rear Planetary Gear Set

The annulus gear (11) turns at the input speed as a result of the mechanical connection to the front planetary carrier (13). The sun gear (23) is held against the housing by the engaged multi-disc holding clutch B2 (6), by the locked freewheel F2 (24) during acceleration and by the engaged driving clutch K3 (12) during deceleration. The rear planetary pinion gears (19) turn on the fixed sun gear (23) and increase the torque from the annulus gear (11) to the planetary carrier (15). The planetary carrier (15) moves at a reduced speed in the running direction of the engine.

THIRD GEAR POWERFLOW

Torque from the torque converter is increased via the driveshaft (25) and the center planetary gearset and transferred to the output shaft (26).

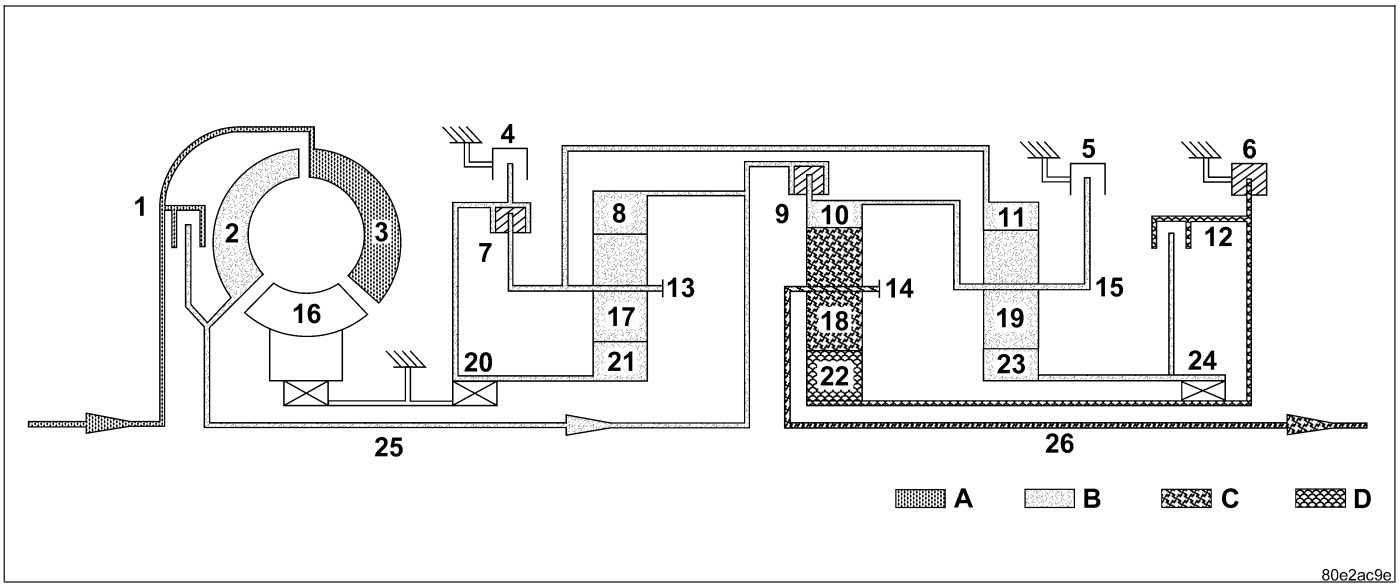

1 - TORQUE CONVERTER LOCK-UP CLUTCH
2 - TORQUE CONVERTER TURBINE
3 - TORQUE CONVERTER IMPELLER
4 - MULTI-DISC HOLDING CLUTCH B1
5 - MULTI-DISC HOLDING CLUTCH B3
6 - MULTI-DISC HOLDING CLUTCH B2
7 - DRIVING CLUTCH K1
8 - FRONT PLANETARY ANNULUS GEAR
9 - DRIVING CLUTCH K2
10 - CENTER PLANETARY ANNULUS GEAR
11 - REAR PLANETARY ANNULUS GEAR
12 - DRIVING CLUTCH K3
13 - FRONT PLANETARY CARRIER
A - ENGINE SPEED
B - TRANSMISSION INPUT SPEED
14 - CENTER PLANETARY CARRIER
15 - REAR PLANETARY CARRIER
16 - TORQUE CONVERTER STATOR
17 - FRONT PLANETARY PINION GEARS
18 - CENTER PLANETARY PINION GEARS
19 - REAR PLANETARY PINION GEARS
20 - FREEWHEEL F1
21 - FRONT PLANETARY SUN GEAR
22 - CENTER PLANETARY SUN GEAR
23 - REAR PLANETARY SUN GEAR
24 - FREEWHEEL F2
25 - DRIVE SHAFT
26 - OUTPUT SHAFT
C - FIRST GEAR RATIO
D - FIXED PARTS

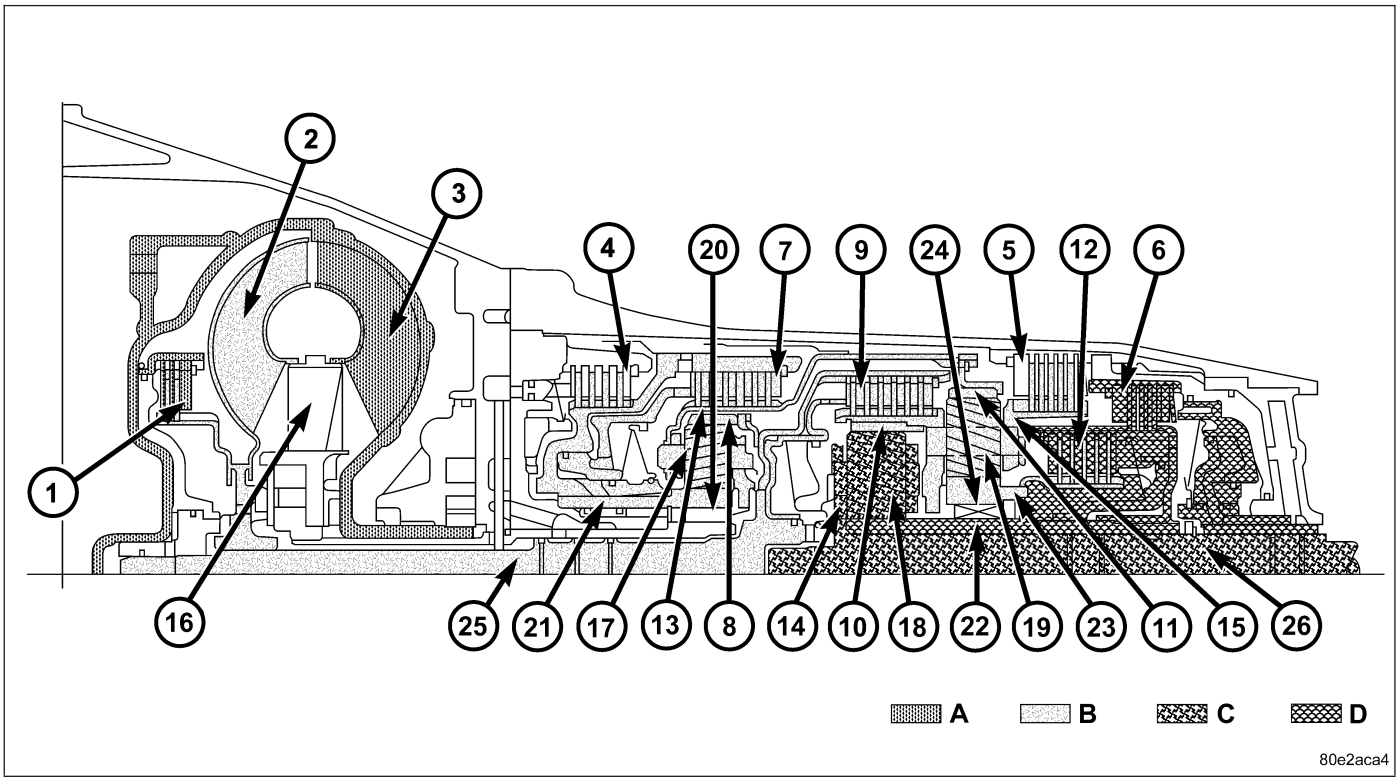

1 - TORQUE CONVERTER LOCK-UP CLUTCH
2 - TORQUE CONVERTER TURBINE
3 - TORQUE CONVERTER IMPELLER
4 - MULTI-DISC HOLDING CLUTCH B1
5 - MULTI-DISC HOLDING CLUTCH B3
6 - MULTI-DISC HOLDING CLUTCH B2
7 - DRIVING CLUTCH K1
8 - FRONT PLANETARY ANNULUS GEAR
9 - DRIVING CLUTCH K2
10 - CENTER PLANETARY ANNULUS GEAR
11 - REAR PLANETARY ANNULUS GEAR
12 - DRIVING CLUTCH K3
13 - FRONT PLANETARY CARRIER
A - ENGINE SPEED
B - TRANSMISSION INPUT SPEED
14 - CENTER PLANETARY CARRIER
15 - REAR PLANETARY CARRIER
16 - TORQUE CONVERTER STATOR
17 - FRONT PLANETARY PINION GEARS
18 - CENTER PLANETARY PINION GEARS
19 - REAR PLANETARY PINION GEARS
20 - FREEWHEEL F1
21 - FRONT PLANETARY SUN GEAR
22 - CENTER PLANETARY SUN GEAR
23 - REAR PLANETARY SUN GEAR
24 - FREEWHEEL F2
25 - DRIVE SHAFT
26 - OUTPUT SHAFT
C - FIRST GEAR RATIO
D - FIXED PARTS

Front Planetary Gear Set

The planetary carrier (13) and sun gear (21) are connected via the engaged driving clutch K1 (7). The planetary gearset is therefore locked and turns as a closed unit at the input speed due to the mechanical connection of the annulus gear (8) and driveshaft (25).

Center Planetary Gear Set

The annulus gear (10) turns at the input speed as a result of the engaged driving clutch K2 (9). The sun gear (22) is held against the housing by the multi-disc holding clutch B2 (6). The planetary pinion gears (18) turn on the fixed sun gear (22) and increase the torque from the annulus gear (10) to the planetary carrier (14). The output shaft (26) connected to the planetary carrier (14) turns at a reduced speed in the running direction of the engine.

Rear Planetary Gear Set

The driving clutch K2 (9) is engaged and transfers the input speed of the driveshaft (25) to the planetary carrier (15) via the annulus gear (10). The annulus gear (11) turns in the same way as the planetary carrier (15) due to the mechanical connection with the locked front planetary gearset. This planetary gearset is therefore locked and turns as a closed unit.

FOURTH GEAR POWERFLOW

Speed and torque are not converted by the direct gear ratio of the 4th gear. Power is transferred from the driveshaft (25) to the output shaft (26) via three locked planetary gearsets.

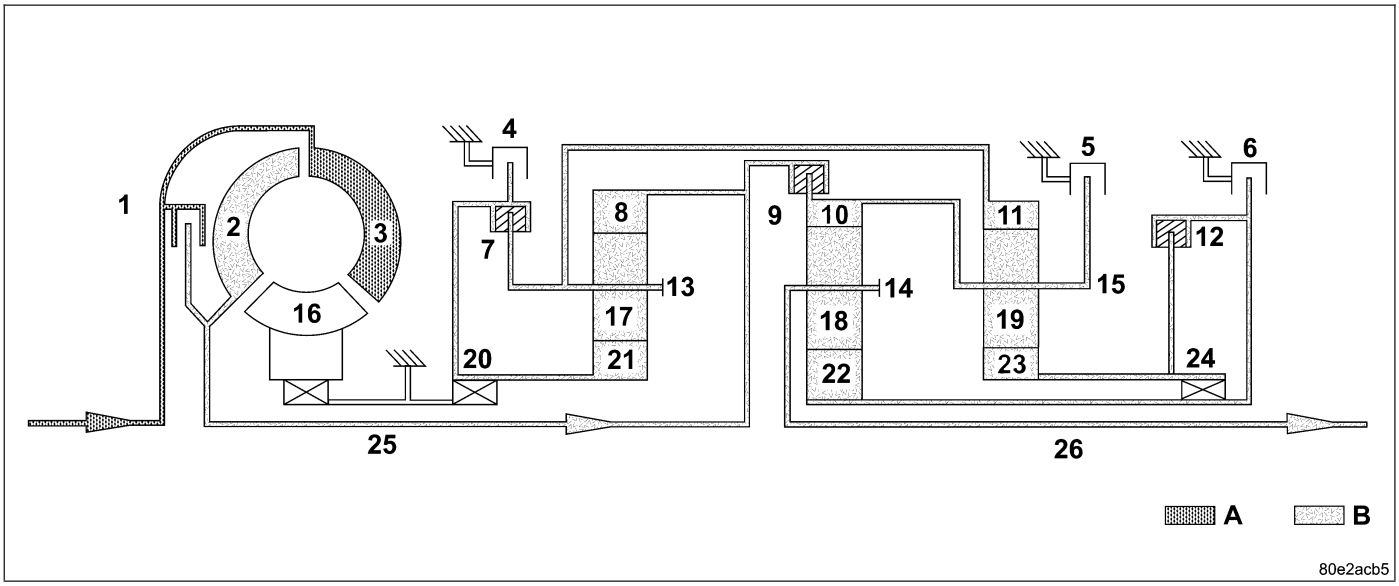

1 - TORQUE CONVERTER LOCK-UP CLUTCH
2 - TORQUE CONVERTER TURBINE
3 - TORQUE CONVERTER IMPELLER
4 - MULTI-DISC HOLDING CLUTCH B1
5 - MULTI-DISC HOLDING CLUTCH B3
6 - MULTI-DISC HOLDING CLUTCH B2
7 - DRIVING CLUTCH K1
8 - FRONT PLANETARY ANNULUS GEAR
9 - DRIVING CLUTCH K2
10 - CENTER PLANETARY ANNULUS GEAR
11 - REAR PLANETARY ANNULUS GEAR
12 - DRIVING CLUTCH K3
13 - FRONT PLANETARY CARRIER
A - ENGINE SPEED
14 - CENTER PLANETARY CARRIER
15 - REAR PLANETARY CARRIER
16 - TORQUE CONVERTER STATOR
17 - FRONT PLANETARY PINION GEARS
18 - CENTER PLANETARY PINION GEARS
19 - REAR PLANETARY PINION GEARS
20 - FREEWHEEL F1
21 - FRONT PLANETARY SUN GEAR
22 - CENTER PLANETARY SUN GEAR
23 - REAR PLANETARY SUN GEAR
24 - FREEWHEEL F2
25 - DRIVE SHAFT
26 - OUTPUT SHAFT
B - TRANSMISSION INPUT SPEED

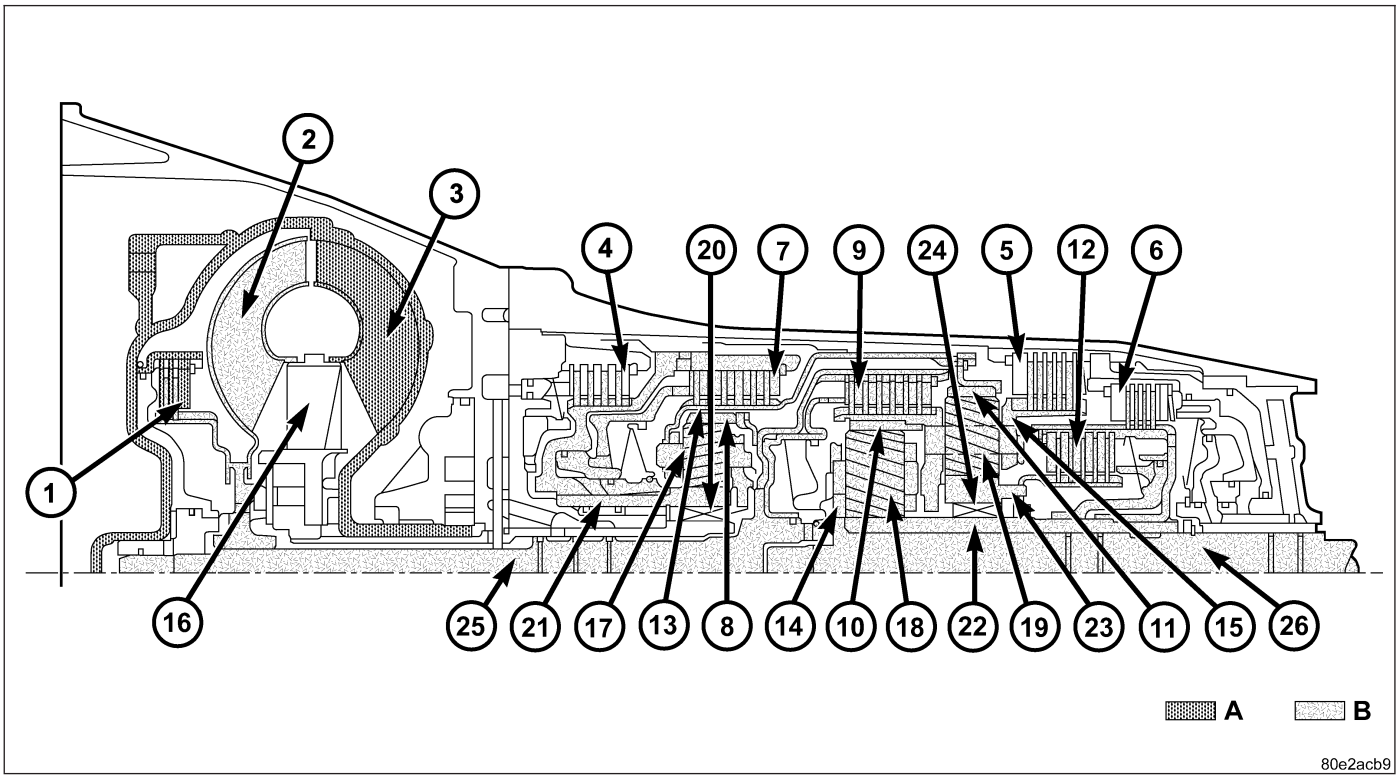

1 - TORQUE CONVERTER LOCK-UP CLUTCH
2 - TORQUE CONVERTER TURBINE
3 - TORQUE CONVERTER IMPELLER
4 - MULTI-DISC HOLDING CLUTCH B1
5 - MULTI-DISC HOLDING CLUTCH B3
6 - MULTI-DISC HOLDING CLUTCH B2
7 - DRIVING CLUTCH K1
8 - FRONT PLANETARY ANNULUS GEAR
9 - DRIVING CLUTCH K2
10 - CENTER PLANETARY ANNULUS GEAR
11 - REAR PLANETARY ANNULUS GEAR
12 - DRIVING CLUTCH K3
13 - FRONT PLANETARY CARRIER
A - ENGINE SPEED
14 - CENTER PLANETARY CARRIER
15 - REAR PLANETARY CARRIER
16 - TORQUE CONVERTER STATOR
17 - FRONT PLANETARY PINION GEARS
18 - CENTER PLANETARY PINION GEARS
19 - REAR PLANETARY PINION GEARS
20 - FREEWHEEL F1
21 - FRONT PLANETARY SUN GEAR
22 - CENTER PLANETARY SUN GEAR
23 - REAR PLANETARY SUN GEAR
24 - FREEWHEEL F2
25 - DRIVE SHAFT
26 - OUTPUT SHAFT
B - TRANSMISSION INPUT SPEED

Front Planetary Gear Set

The planetary carrier (13) and sun gear (21) are connected via the engaged driving clutch K1 (7). The planetary gearset is therefore locked and turns as a closed unit at the input speed due to the mechanical connection of the annulus gear (8) and the driveshaft (25).

Center Planetary Gear Set

The annulus gear (10) turns at the input speed as a result of the engaged driving clutch K2 (9). The driving clutch K3 (12) connects the sun gears (22) and (23) of the rear and center planetary gearset. The planetary gearset is locked by the same speeds of the annulus gear (10) and the sun gear (22) and it turns as a closed unit.

Rear Planetary Gear Set

The driving clutch K2 (9) is engaged and transfers the input speed of the driveshaft (25) to the planetary carrier (15) via the annulus gear (10). The annulus gear (11) turns in the same way as the planetary carrier (15) due to the mechanical connection with the locked front planetary gearset. The planetary gearset is therefore locked and turns as a closed unit.

FIFTH GEAR POWERFLOW

Torque from the torque converter is increased via the driveshaft (25) and all three planetary gearsets and transferred to the output shaft (26).

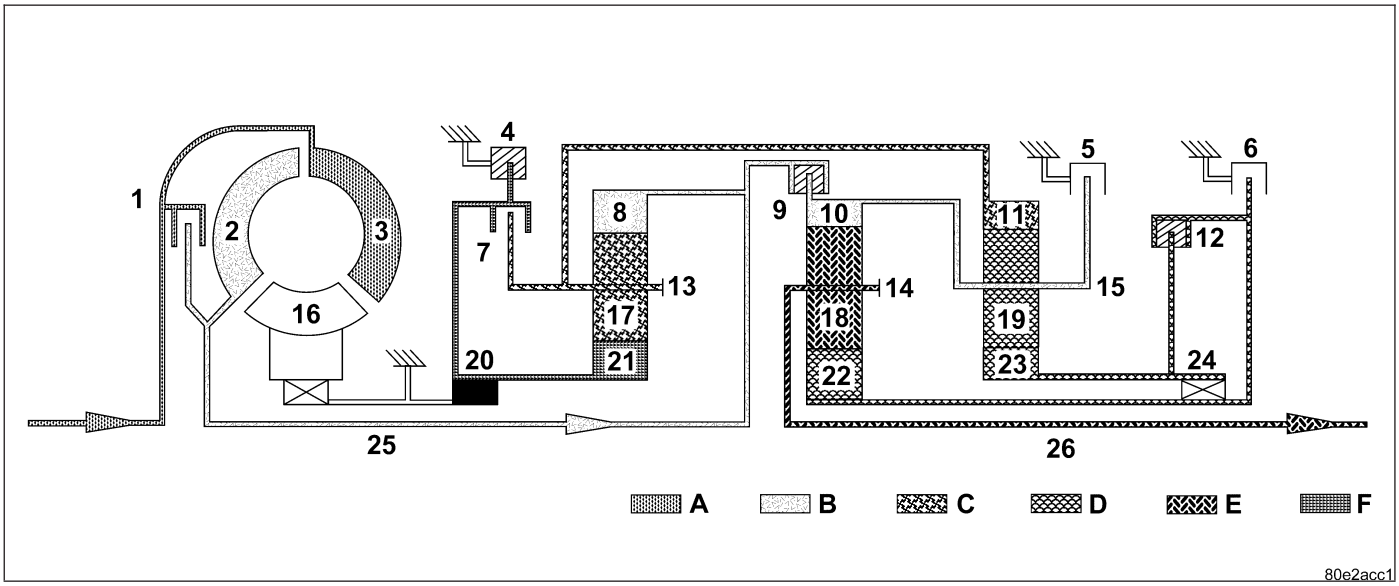

1 - TORQUE CONVERTER LOCK-UP CLUTCH
2 - TORQUE CONVERTER TURBINE
3 - TORQUE CONVERTER IMPELLER
4 - MULTI-DISC HOLDING CLUTCH B1
5 - MULTI-DISC HOLDING CLUTCH B3
6 - MULTI-DISC HOLDING CLUTCH B2
7 - DRIVING CLUTCH K1
8 - FRONT PLANETARY ANNULUS GEAR
9 - DRIVING CLUTCH K2
10 - CENTER PLANETARY ANNULUS GEAR
11 - REAR PLANETARY ANNULUS GEAR
12 - DRIVING CLUTCH K3
13 - FRONT PLANETARY CARRIER
A - ENGINE SPEED
B - TRANSMISSION INPUT SPEED
C - FIRST GEAR RATIO
14 - CENTER PLANETARY CARRIER
15 - REAR PLANETARY CARRIER
16 - TORQUE CONVERTER STATOR
17 - FRONT PLANETARY PINION GEARS
18 - CENTER PLANETARY PINION GEARS
19 - REAR PLANETARY PINION GEARS
20 - FREEWHEEL F1
21 - FRONT PLANETARY SUN GEAR
22 - CENTER PLANETARY SUN GEAR
23 - REAR PLANETARY SUN GEAR
24 - FREEWHEEL F2
25 - DRIVE SHAFT
26 - OUTPUT SHAFT
D - SECOND GEAR RATIO
E - THIRD GEAR RATIO
F - FIXED PARTS

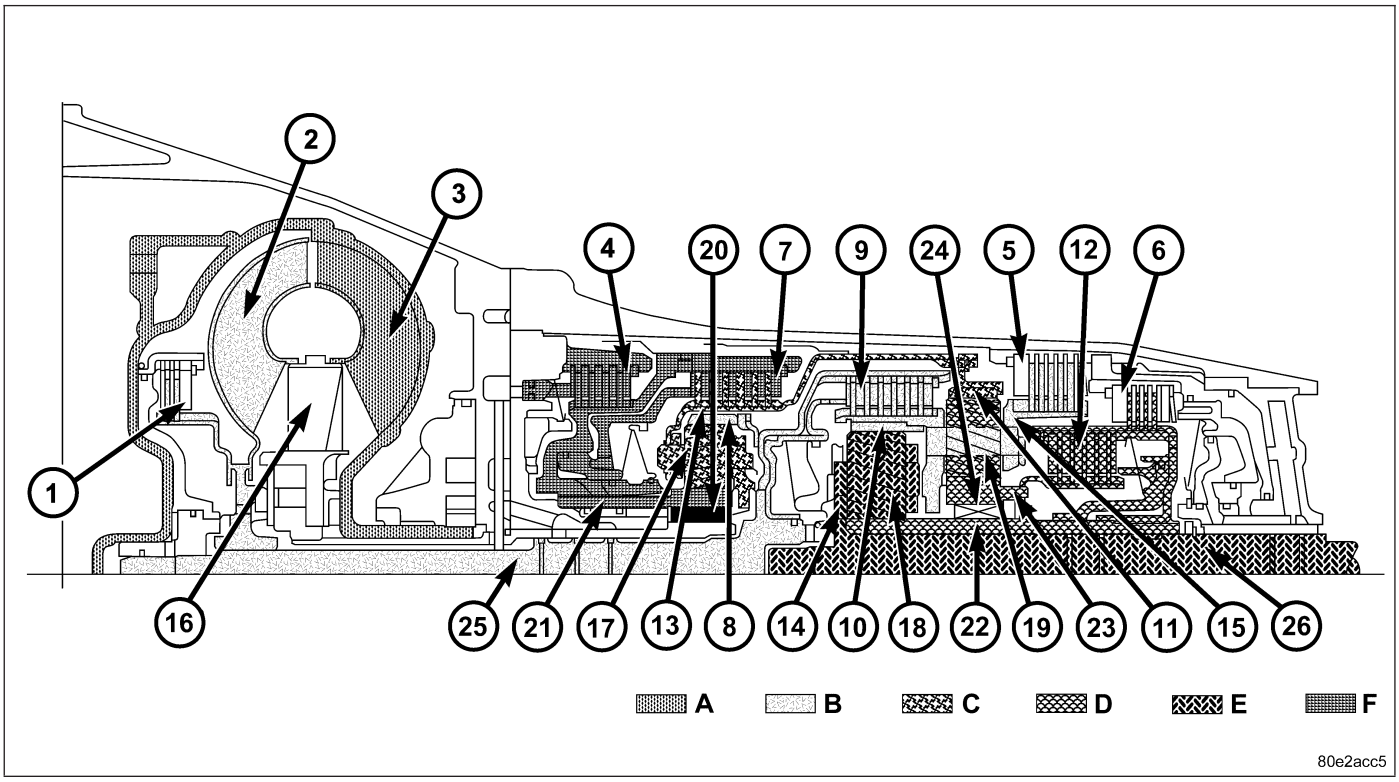

1 - TORQUE CONVERTER LOCK-UP CLUTCH
2 - TORQUE CONVERTER TURBINE
3 - TORQUE CONVERTER IMPELLER
4 - MULTI-DISC HOLDING CLUTCH B1
5 - MULTI-DISC HOLDING CLUTCH B3
6 - MULTI-DISC HOLDING CLUTCH B2
7 - DRIVING CLUTCH K1
8 - FRONT PLANETARY ANNULUS GEAR
9 - DRIVING CLUTCH K2
10 - CENTER PLANETARY ANNULUS GEAR
11 - REAR PLANETARY ANNULUS GEAR
12 - DRIVING CLUTCH K3
13 - FRONT PLANETARY CARRIER
A - ENGINE SPEED
B - TRANSMISSION INPUT SPEED
C - FIRST GEAR RATIO
14 - CENTER PLANETARY CARRIER
15 - REAR PLANETARY CARRIER
16 - TORQUE CONVERTER STATOR
17 - FRONT PLANETARY PINION GEARS
18 - CENTER PLANETARY PINION GEARS
19 - REAR PLANETARY PINION GEARS
20 - FREEWHEEL F1
21 - FRONT PLANETARY SUN GEAR
22 - CENTER PLANETARY SUN GEAR
23 - REAR PLANETARY SUN GEAR
24 - FREEWHEEL F2
25 - DRIVE SHAFT
26 - OUTPUT SHAFT
D - SECOND GEAR RATIO
E - THIRD GEAR RATIO
F - FIXED PARTS

Front Planetary Gear Set

The annulus gear (8) is driven by the driveshaft (25). The sun gear (21) is held against the housing by the locked freewheel F1 (20) during acceleration and via the engaged multi-disc holding clutch B1 (4) during deceleration. The planetary pinion gears (17) turn on the fixed sun gear (21) and increase the torque from the annulus gear (8) to the planetary carrier (13). The planetary carrier (13) moves at a reduced speed in the running direction of the engine.

Center Planetary Gear Set

The annulus gear (10) turns at the input speed as a result of the engaged driving clutch K2 (9). The driving clutch K3 (12) transfers an increased speed to the center planetary sun gear (22) due to the connection with the rear planetary sun gear (23). The planetary pinion gears (18) turn between the annulus gear (10) and the sun gear (22). The speed of the center planetary carrier (14) and the output shaft (26) connected to the center planetary carrier lies between that of the annulus gear (10) and the sun gear (22). This provides a step-up ratio.

Rear Planetary Gear Set

The driving clutch K2 (9) is engaged and transfers the input speed of the driveshaft (25) to the planetary carrier (15) via the annulus gear (10). The annulus gear (11) turns at a reduced speed due to the mechanical connection with the front planetary carrier (13). The rear planetary pinion gears (19) turn between the annulus gear (11) and the sun gear (23). The sun gear (23) moves at an increased speed in the running direction of the engine.

REVERSE GEAR POWERFLOW

Torque from the torque converter is increased via the driveshaft (25) and all three planetary gearsets and transferred with reversed direction of rotation to the output shaft (26).

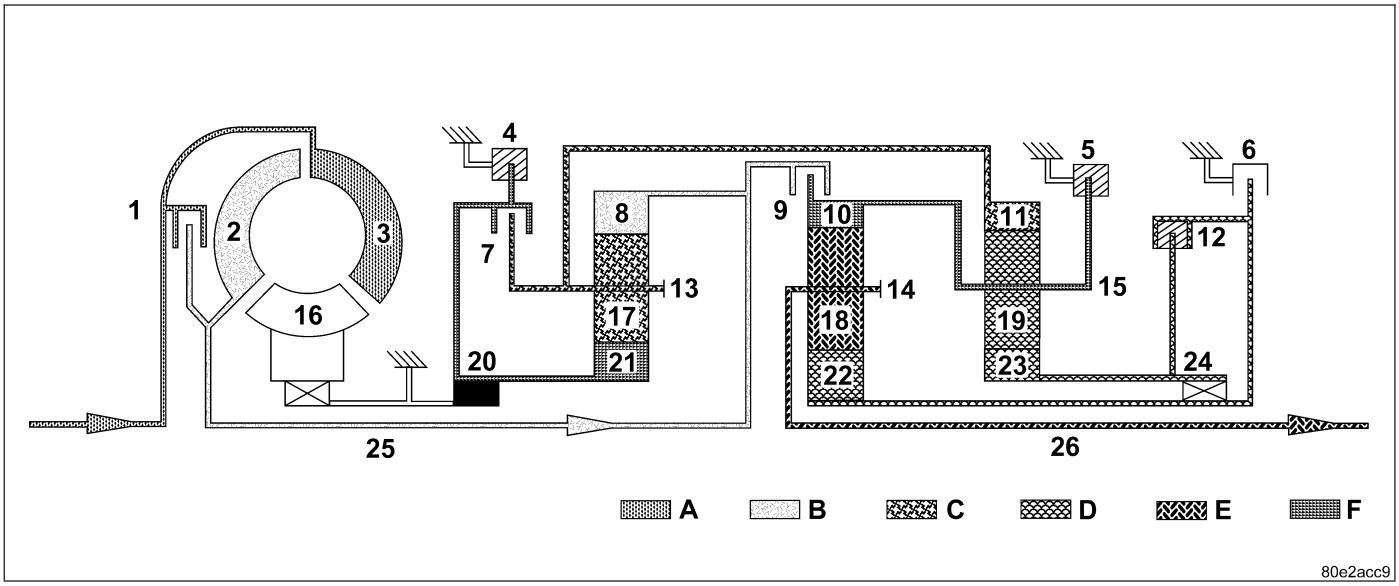

1 - TORQUE CONVERTER LOCK-UP CLUTCH
2 - TORQUE CONVERTER TURBINE
3 - TORQUE CONVERTER IMPELLER
4 - MULTI-DISC HOLDING CLUTCH B1
5 - MULTI-DISC HOLDING CLUTCH B3
6 - MULTI-DISC HOLDING CLUTCH B2
7 - DRIVING CLUTCH K1
8 - FRONT PLANETARY ANNULUS GEAR
9 - DRIVING CLUTCH K2
10 - CENTER PLANETARY ANNULUS GEAR
11 - REAR PLANETARY ANNULUS GEAR
12 - DRIVING CLUTCH K3
13 - FRONT PLANETARY CARRIER
A - ENGINE SPEED
B - TRANSMISSION INPUT SPEED
C - FIRST GEAR RATIO
14 - CENTER PLANETARY CARRIER
15 - REAR PLANETARY CARRIER
16 - TORQUE CONVERTER STATOR
17 - FRONT PLANETARY PINION GEARS
18 - CENTER PLANETARY PINION GEARS
19 - REAR PLANETARY PINION GEARS
20 - FREEWHEEL F1
21 - FRONT PLANETARY SUN GEAR
22 - CENTER PLANETARY SUN GEAR
23 - REAR PLANETARY SUN GEAR
24 - FREEWHEEL F2
25 - DRIVE SHAFT
26 - OUTPUT SHAFT
D - SECOND GEAR RATIO
E - THIRD GEAR RATIO
F - FIXED PARTS

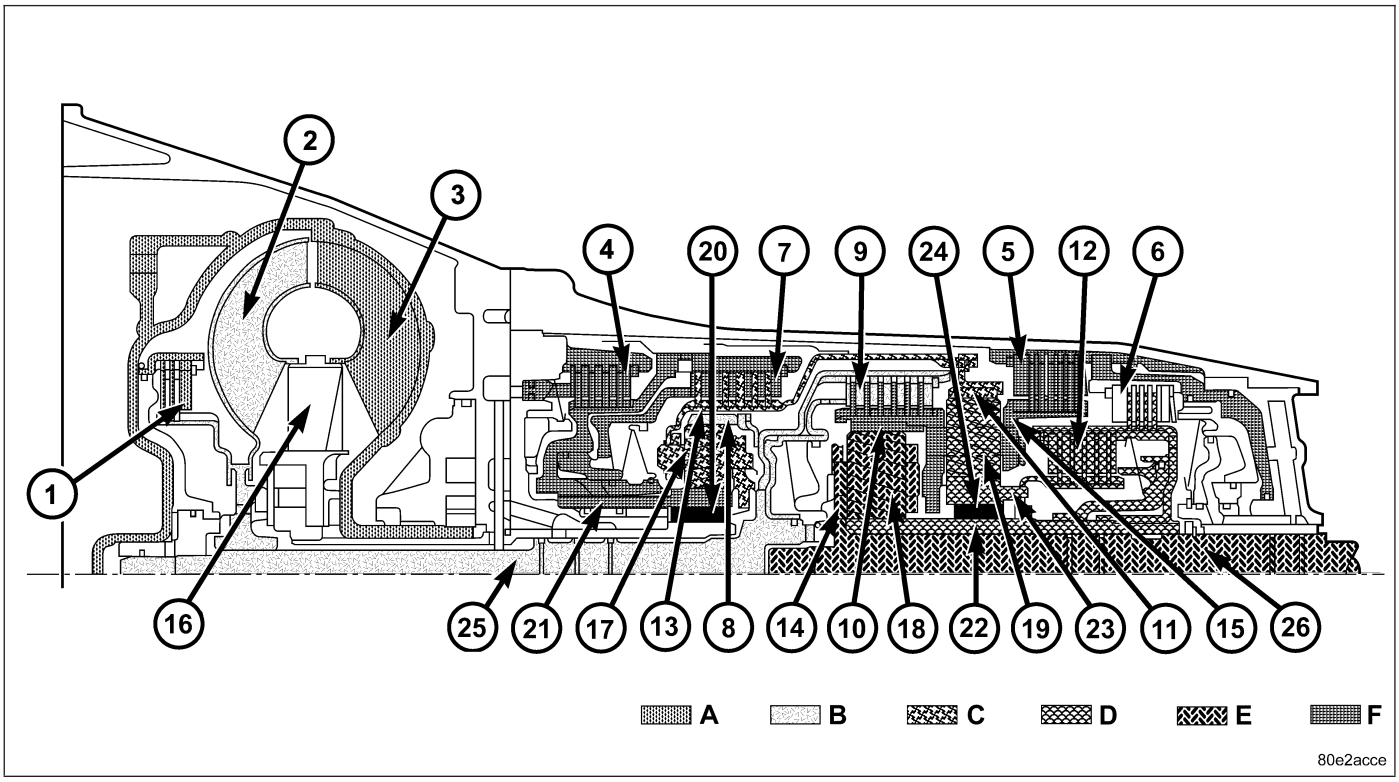

1 - TORQUE CONVERTER LOCK-UP CLUTCH
2 - TORQUE CONVERTER TURBINE
3 - TORQUE CONVERTER IMPELLER
4 - MULTI-DISC HOLDING CLUTCH B1
5 - MULTI-DISC HOLDING CLUTCH B3
6 - MULTI-DISC HOLDING CLUTCH B2
7 - DRIVING CLUTCH K1
8 - FRONT PLANETARY ANNULUS GEAR
9 - DRIVING CLUTCH K2
10 - CENTER PLANETARY ANNULUS GEAR
11 - REAR PLANETARY ANNULUS GEAR
12 - DRIVING CLUTCH K3
13 - FRONT PLANETARY CARRIER
A - ENGINE SPEED
B - TRANSMISSION INPUT SPEED
C - FIRST GEAR RATIO
14 - CENTER PLANETARY CARRIER
15 - REAR PLANETARY CARRIER
16 - TORQUE CONVERTER STATOR
17 - FRONT PLANETARY PINION GEARS
18 - CENTER PLANETARY PINION GEARS
19 - REAR PLANETARY PINION GEARS
20 - FREEWHEEL F1
21 - FRONT PLANETARY SUN GEAR
22 - CENTER PLANETARY SUN GEAR
23 - REAR PLANETARY SUN GEAR
24 - FREEWHEEL F2
25 - DRIVE SHAFT
26 - OUTPUT SHAFT
D - SECOND GEAR RATIO
E - THIRD GEAR RATIO
F - FIXED PARTS

Front Planetary Gear Set

The annulus gear (8) is driven by the driveshaft (25). The sun gear (21) is held against the housing by the locked freewheel F1 (20) during acceleration and via the engaged multi-disc holding clutch B1 (4) during deceleration. The planetary pinion gears (17) turn on the fixed sun gear (21) and increase the torque from the annulus gear (8) to the planetary carrier (13). The planetary carrier (13) moves at a reduced speed in the running direction of the engine.

Center Planetary Gear Set

The annulus gear (10) is held against the housing by the multi-disc holding clutch B3 (5) via the mechanical connection to the planetary carrier (15). The sun gear (22) turns backwards due to the engaged driving clutch K3 (12). The planetary gears (18) turn on the fixed annulus gear (10) and increase the torque from the sun gear (22) to the planetary carrier (14). The output shaft (26) connected to the planetary carrier (14) turns at a reduced speed in the opposite direction to the running direction of the engine.

Rear Planetary Gear Set

The planetary carrier (15) is held against the housing by the engaged multi-disc holding clutch B3 (5). The annulus gear (11) turns at a reduced speed due to the mechanical connection to the front planetary carrier (13). The rear planetary gears (19) turn between the annulus gear (11) and the sun gear (23). The direction is reversed by the held planetary carrier (15) so that the sun gear (23) turns in the opposite direction to the running direction of the engine.

SHIFT GROUPS/SHIFT SEQUENCE

1-2 Shift - First Gear Engaged

The end face of the command valve (5) is kept unpressurized via the solenoid valve for 1-2 and 4-5 shift (1). Via the holding pressure shift valve (4), the working pressure (p-A) is present at the multi-disc holding clutch B1 (7). Clutch K1 (6) is unpressurized.

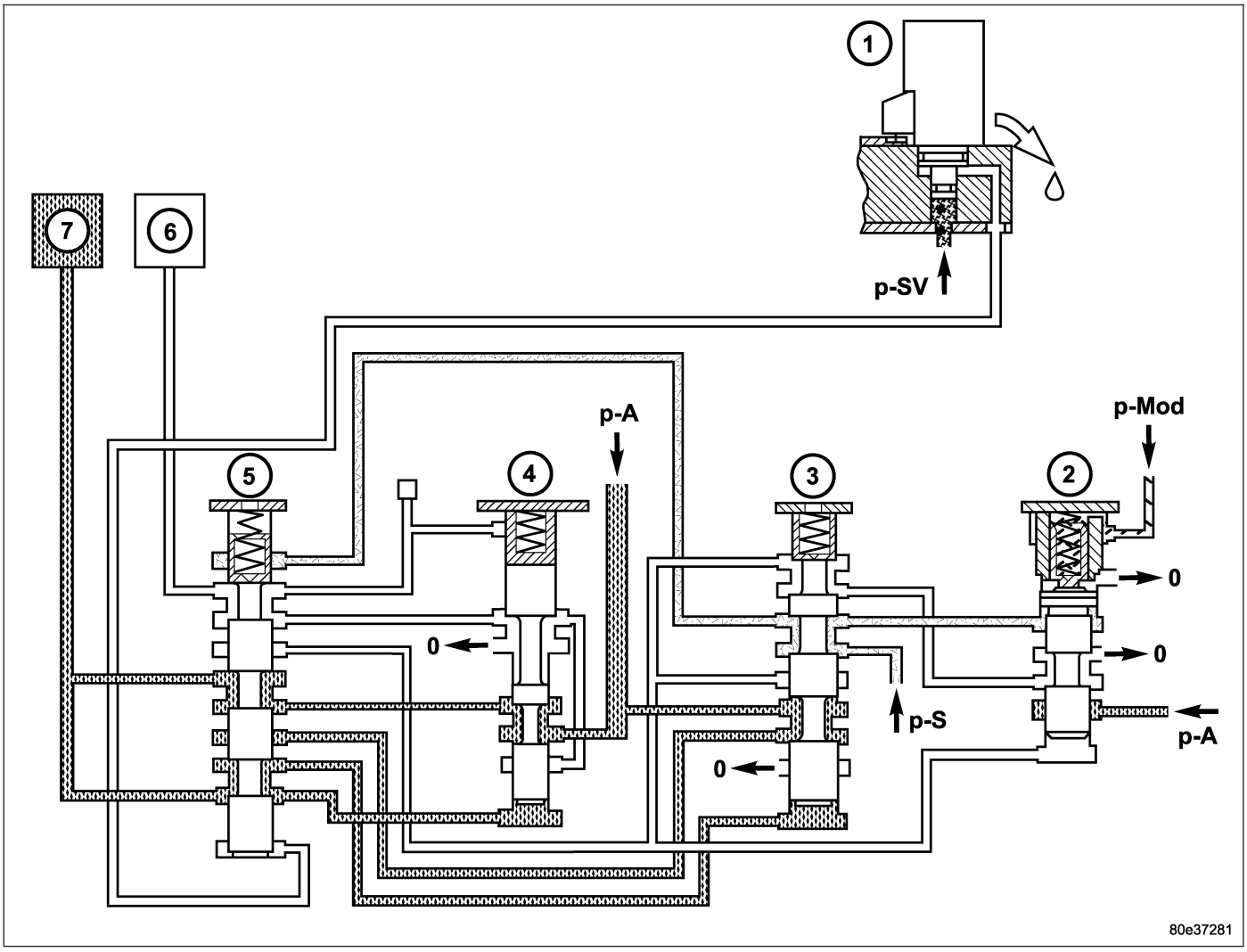

1 - 1-2/4-5 SHIFT SOLENOID
2 - 1-2/4-5 OVERLAP VALVE
3 - 1-2/4-5 SHIFT PRESSURE SHIFT VALVE
4 - 1-2/4-5 HOLDING PRESSURE SHIFT VALVE
5 - 1-2/4-5 COMMAND VALVE
6 - DRIVING CLUTCH K1
7 - MULTI-DISC HOLDING CLUTCH B1

Shift Phase

Via the 1-2 and 4-5 shift solenoid (1), the shift valve pressure (p-SV) is directed onto the end face of the command valve (5). The command valve (5) is moved and the shift pressure (p-S) coming from the shift pressure shift valve (3) is directed via the command valve (5) onto driving clutch K1 (6). Simultaneously the multi-disc holding clutch B1 (7) is subjected to overlap pressure by the overlap valve (2).

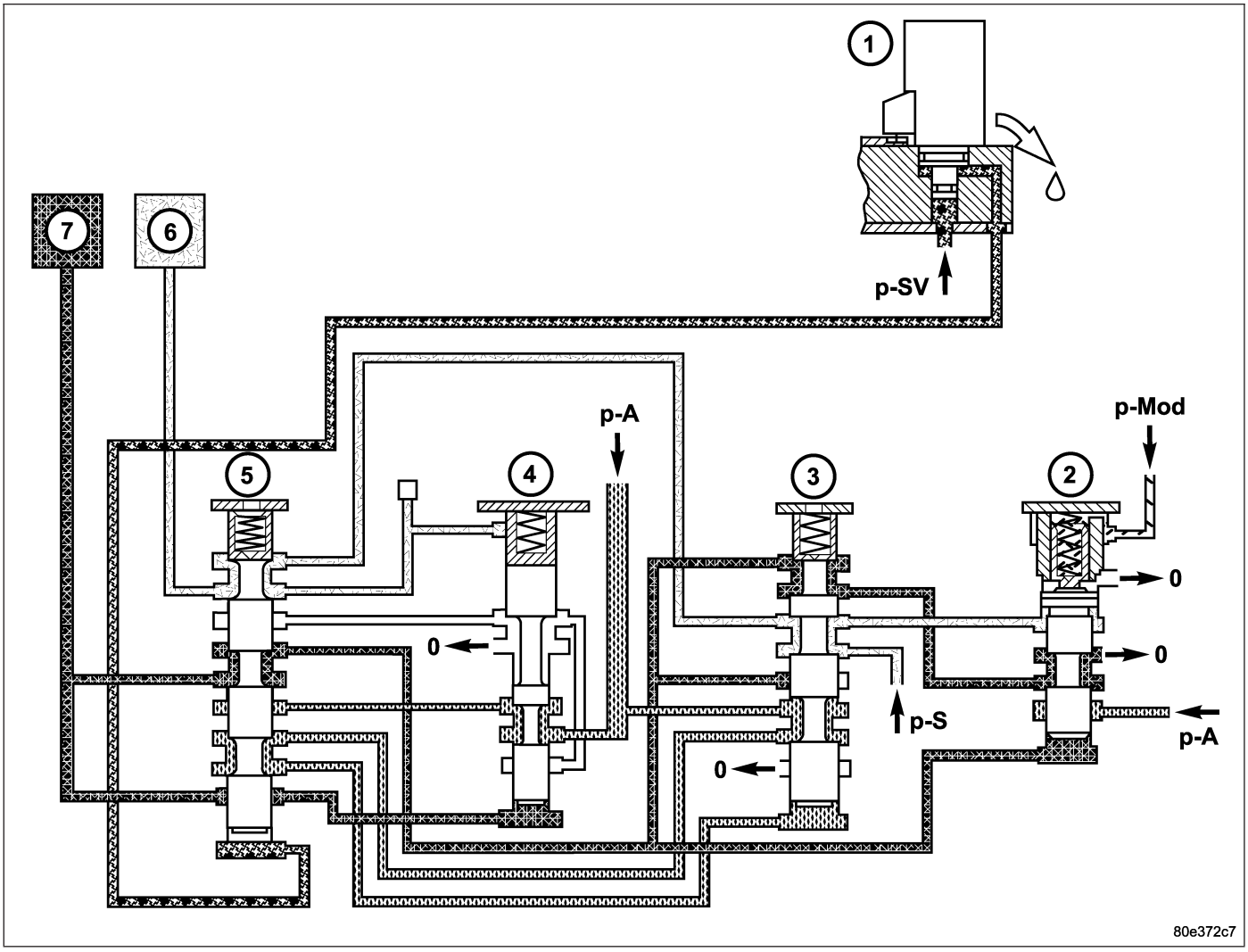

1 - 1-2/4-5 SHIFT SOLENOID
2 - 1-2/4-5 OVERLAP VALVE
3 - 1-2/4-5 SHIFT PRESSURE SHIFT VALVE
4 - 1-2/4-5 HOLDING PRESSURE SHIFT VALVE
5 - 1-2/4-5 COMMAND VALVE
6 - DRIVING CLUTCH K1
7 - MULTI-DISC HOLDING CLUTCH B1

The multi-disc holding clutch B1 (7) pressure acting on the end face of the shift pressure shift valve (3) is replaced by the working pressure (p-A). The rising shift pressure (p-S) at driving clutch K1 (6) acts on the annular face of the overlap regulating valve (2) and reduces the overlap pressure regulated by the overlap regulating valve (2). When a corresponding pressure level is reached at the holding pressure shift valve (4), this valve switches over.

Second Gear Engaged

After the gearchange is complete, the pressure on the end face of the command valve (5) is reduced via the 1-2 and 4-5 shift solenoid valve (1), and the command valve (5) is pushed back to its basic position. Via the holding pressure shift valve (4) the working pressure (p-A) now passes via the command valve (5) to driving clutch K1 (6). The multi-disc holding clutch B1 (7) is deactivated (unpressurized). The spring of the shift pressure shift valve (3) pushes the valve back to its basic position.

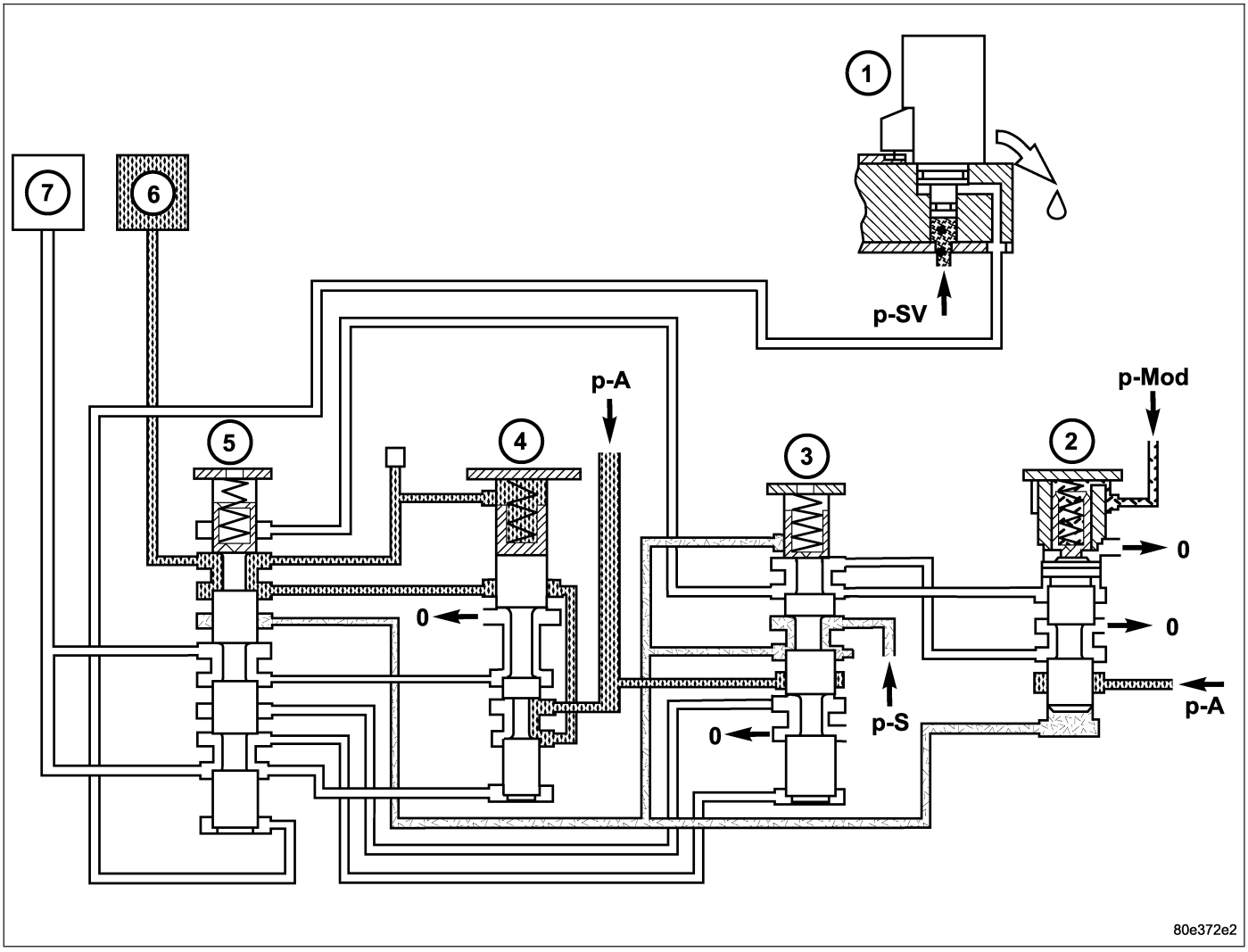

1 - 1-2/4-5 SHIFT SOLENOID
2 - 1-2/4-5 OVERLAP VALVE
3 - 1-2/4-5 SHIFT PRESSURE SHIFT VALVE
4 - 1-2/4-5 HOLDING PRESSURE SHIFT VALVE
5 - 1-2/4-5 COMMAND VALVE
6 - DRIVING CLUTCH K1
7 - MULTI-DISC HOLDING CLUTCH B1

Gear Shift N to D (1st gear) - Engine Started

With the engine started and the gearshift lever in the NEUTRAL or PARK positions, holding clutch B1 (1) and driving clutch K3 (4) are applied and the various valves in the 1-2/4-5 shift group are positioned to apply pressure to the multi-disc holding clutch B2.

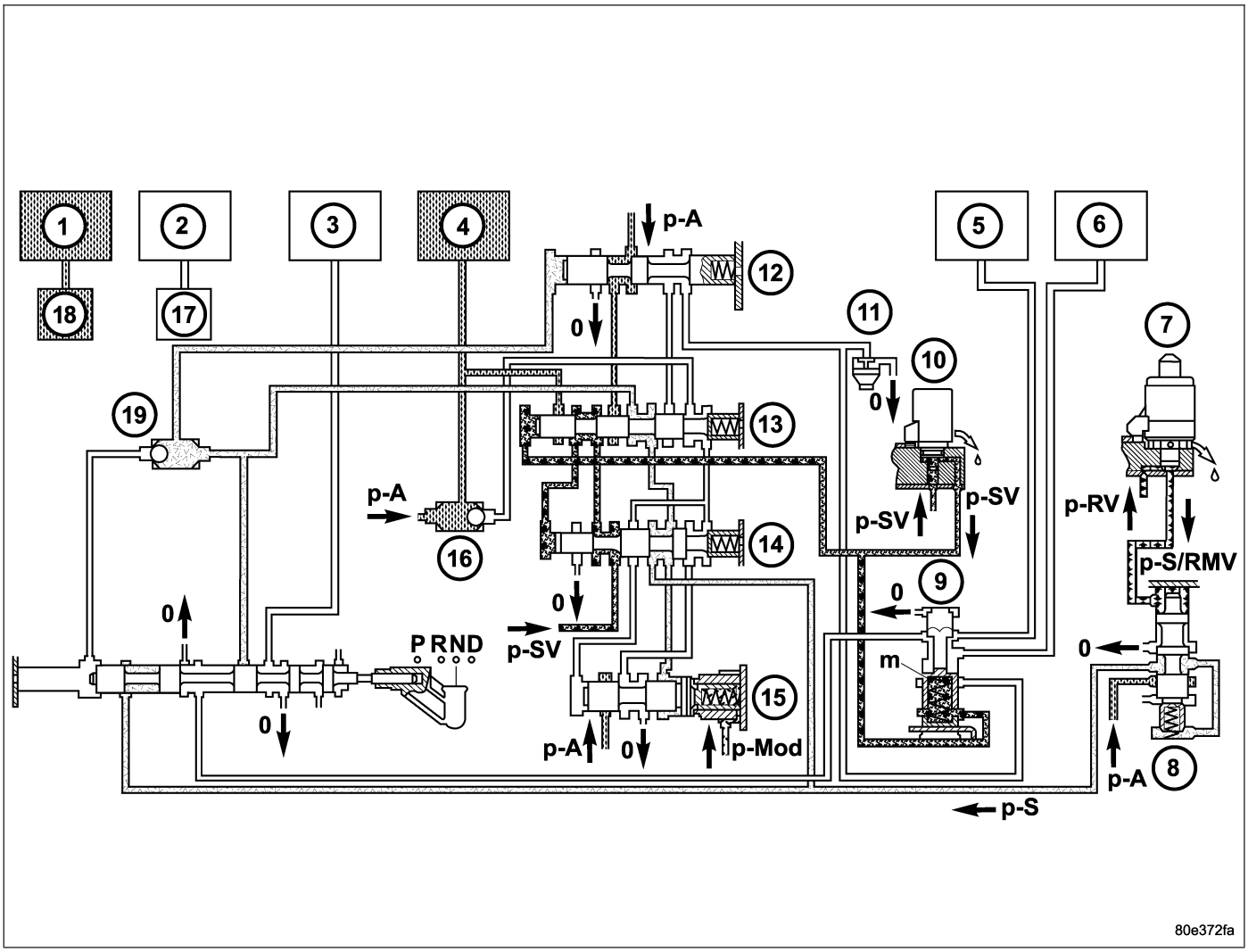

1 - MULTI-DISC HOLDING CLUTCH B1
2 - DRIVING CLUTCH K1
3 - MULTI-DISC HOLDING CLUTCH B3
4 - DRIVING CLUTCH K3
5 - MULTI-DISC HOLDING CLUTCH B2 PISTON
6 - MULTI-DISC HOLDING CLUTCH B2 PISTON OPPOSING FACE
7 - SHIFT PRESSURE REGULATING SOLENOID
8 - SHIFT PRESSURE REGULATING VALVE
9 - SHIFT VALVE B2
10 - 3-4 SHIFT SOLENOID
11 - PRESSURE HOLDING VALVE
12 - 3-4 HOLDING PRESSURE SHIFT VALVE
13 - 3-4 COMMAND VALVE
14 - 3-4 SHIFT PRESSURE SHIFT VALVE
15 - 3-4 OVERLAP REGULATING VALVE
16 - BALL VALVE
17 - 1-2/4-5 COMMAND VALVE
18 - 1-2/4-5 COMMAND VALVE
19 - BALL VALVE

Activation Sequence

The selector valve opens the shift pressure (p-S) feed connection from the ball valve (19) with the shift valve B2 (9). With the shift valve B2 (9) in the upper position, shift pressure (p-S) travels behind the piston B2 (5) and simultaneously to the opposing face of the piston B2 (6). The multi-disc holding clutch B2 begins to close.

The pressure on the opposing face of the piston B2 (6) ensures a soft activation of the multi-disc holding clutch B2.

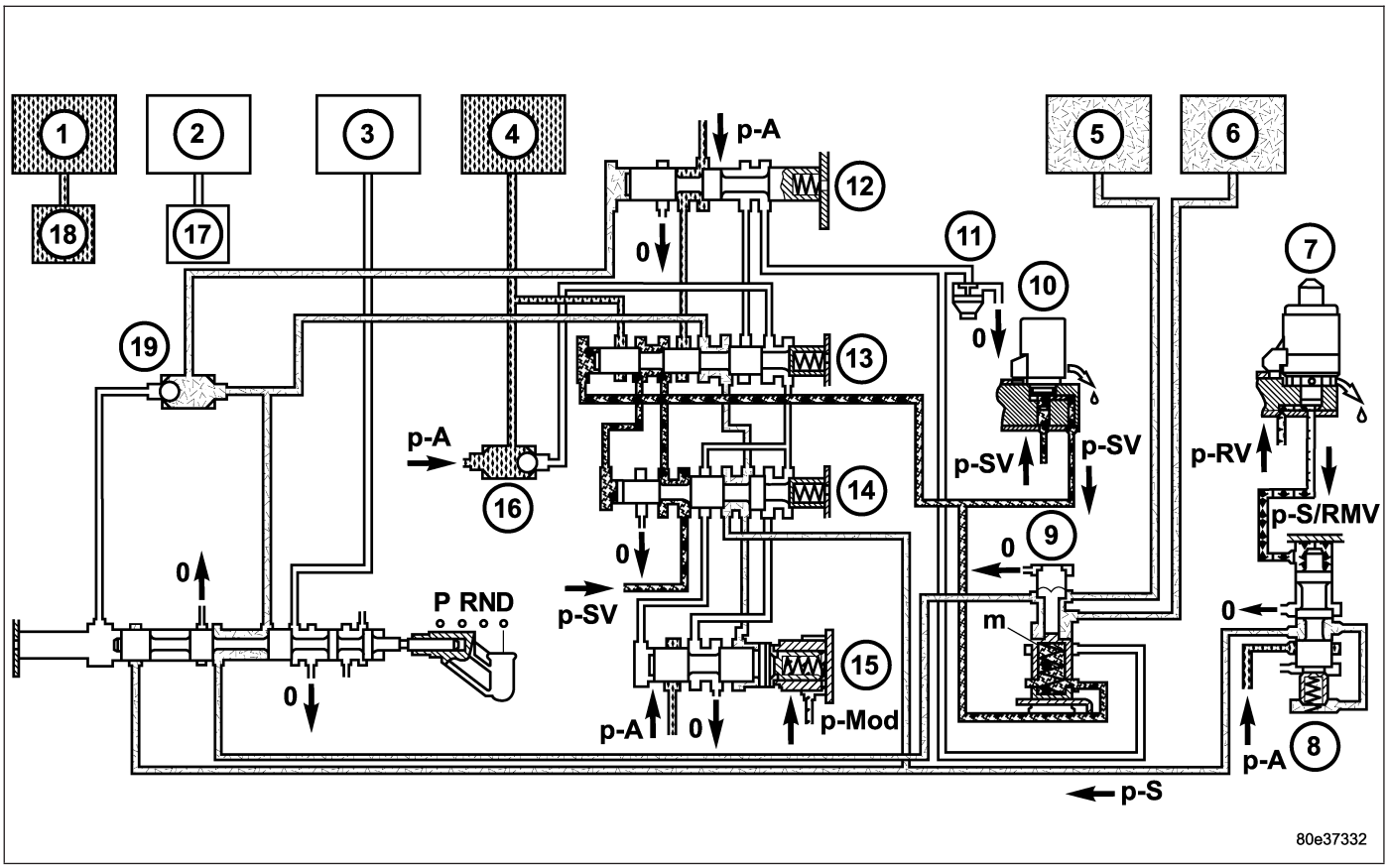

1 - MULTI-DISC HOLDING CLUTCH B1
2 - DRIVING CLUTCH K1
3 - MULTI-DISC HOLDING CLUTCH B3
4 - DRIVING CLUTCH K3
5 - MULTI-DISC HOLDING CLUTCH B2 PISTON
6 - MULTI-DISC HOLDING CLUTCH B2 PISTON OPPOSING FACE
7 - SHIFT PRESSURE REGULATING SOLENOID
8 - SHIFT PRESSURE REGULATING VALVE
9 - SHIFT VALVE B2
10 - 3-4 SHIFT SOLENOID
11 - PRESSURE HOLDING VALVE
12 - 3-4 HOLDING PRESSURE SHIFT VALVE
13 - 3-4 COMMAND VALVE
14 - 3-4 SHIFT PRESSURE SHIFT VALVE
15 - 3-4 OVERLAP REGULATING VALVE
16 - BALL VALVE
17 - 1-2/4-5 COMMAND VALVE
18 - 1-2/4-5 COMMAND VALVE
19 - BALL VALVE

First Gear Engaged

The TCM monitors the activation sequence via the speed of the input shaft, which slows down as the frictional connection in the multiple-disc holding clutch increases. When the speed drops to the specified level, the TCM shuts off the power to the 3-4 shift solenoid (10). The spring chamber of the shift valve B2 (9) is depressurized and switches downwards. This connects the line to the opposing face of the piston B2 (6) with the pressure holding valve (11). The pressure on the opposing face of the piston B2 (6) drops to a residual pressure.

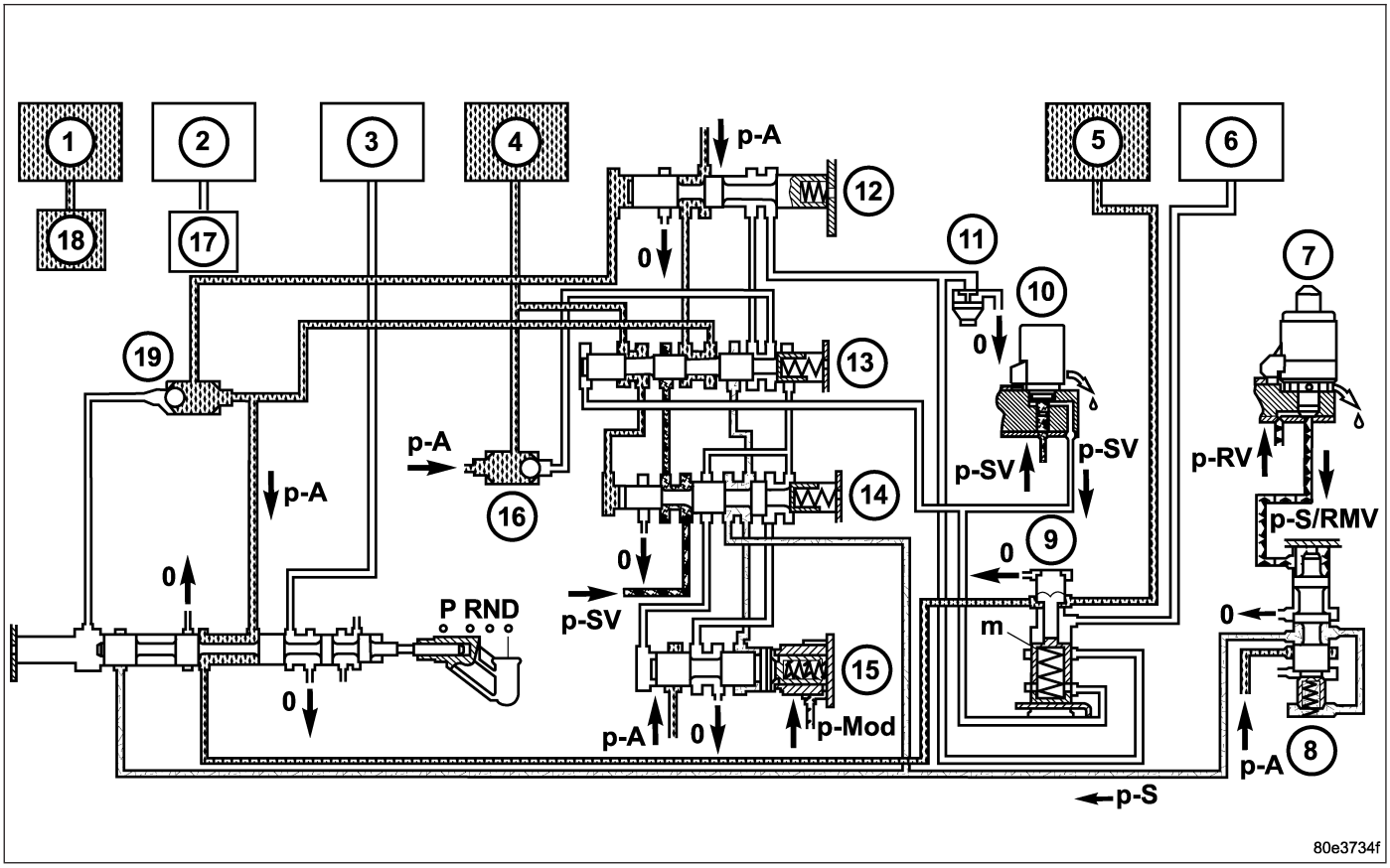

1 - MULTI-DISC HOLDING CLUTCH B1
2 - DRIVING CLUTCH K1
3 - MULTI-DISC HOLDING CLUTCH B3
4 - DRIVING CLUTCH K3
5 - MULTI-DISC HOLDING CLUTCH B2 PISTON
6 - MULTI-DISC HOLDING CLUTCH B2 PISTON OPPOSING FACE
7 - SHIFT PRESSURE REGULATING SOLENOID
8 - SHIFT PRESSURE REGULATING VALVE
9 - SHIFT VALVE B2
10 - 3-4 SHIFT SOLENOID
11 - PRESSURE HOLDING VALVE
12 - 3-4 HOLDING PRESSURE SHIFT VALVE
13 - 3-4 COMMAND VALVE
14 - 3-4 SHIFT PRESSURE SHIFT VALVE
15 - 3-4 OVERLAP REGULATING VALVE
16 - BALL VALVE
17 - 1-2/4-5 COMMAND VALVE
18 - 1-2/4-5 COMMAND VALVE
19 - BALL VALVE

The working pressure (p-A) is formed and travels via the 2-3 holding pressure shift valve, the 2-3 command valve and the ball valve (16) to driving clutch K3 (4) and via the 3-4 command valve (13) to the end face of the 3-4 shift pressure shift valve (14). The 3-4 shift pressure shift valve (14) is moved against the force of the spring towards the right. At the same time the 3-4 solenoid valve (10) is energized. This allows shift valve pressure (p-SV) to enter the spring chamber of the shift valve B2 (9) and to reach the end face of the 3-4 command valve (13). The shift valve B2 (9) is held in the upper position and the 3-4 command valve (13) switches towards the right. At the end face of the 3-4 shift pressure shift valve (14) the working pressure (p-A) is replaced by shift valve pressure (p-SV).

The 3-4 command valve (13) moves to the left. Working pressure (p-A) travels via the holding pressure shift valve (12) and the 3-4 command valve (13) to the piston of multi-disc holding clutch B2 (5).

DIAGNOSIS AND TESTING

AUTOMATIC TRANSMISSION

CAUTION: Before attempting any repair on a NAG1 automatic transmission, check for Diagnostic Trouble Codes with the DRBIII® scan tool.

Transmission malfunctions may be caused by these general conditions:

- Poor engine performance.
- Improper adjustments.
- Hydraulic malfunctions.
- Mechanical malfunctions.
- Electronic malfunctions.
- Transfer case performance.

Diagnosis of these problems should always begin by checking the easily accessible variables: fluid level and condition, gearshift cable adjustment. Then perform a road test to determine if the problem has been corrected or if more diagnosis is necessary.

DIAGNOSIS AND TESTING - PRELIMINARY

IF VEHICLE IS DRIVEABLE

1. Check for transmission fault codes using the DRBIII® scan tool.
2. Check the fluid level and its condition.
3. Adjust the gearshift cable if the complaint was based on delayed, erratic, or harsh shifts.
4. Road test the vehicle and note how the transmission upshifts, downshifts, and engages.

IF VEHICLE IS DISABLED

1. Check the fluid level and its condition.
2. Check for a broken or disconnected gearshift cable.
3. Check for a cracked or leaking cooler line, loose or missing pressure-port plugs.
4. Raise and support the vehicle on safety stands, start the engine, shift the transmission into gear, and note the following:
   a. If the propeller shaft turns but the wheels do not, inspect the differential and axle shafts.
   b. If the propeller shaft does not turn and the transmission is noisy, stop the engine. Remove the transmission oil pan, and check for debris. If the pan is clear, remove the transmission and check for a damaged flexplate, torque converter, oil pump, or input shaft.
   c. If the propeller shaft does not turn and the transmission is not noisy, perform the hydraulic-pressure test to determine if the concern is hydraulic or mechanical.

DIAGNOSIS AND TESTING - ROAD TESTING

Before road testing the vehicle, be sure that the fluid level and the control cable adjustments have been checked and adjusted if necessary. Verify that all the diagnostic trouble codes have been resolved.

Observe the engine's performance during the road test. A poorly tuned engine will not allow an accurate analysis of the transmission's operation.

Operate the transmission in all gear ranges. Check for shift variations and engine flare which indicates slippage. Note if shifts are harsh, spongy, delayed, early, or if part throttle downshifts are sensitive.

Slippage is indicated by engine flare, this usually means that the transmission has a clutch concern an overrunning clutch or a possible line pressure problem.

A slipping clutch can often be determined by comparing which internal units are applied in various gear ranges. The clutch application chart provides a basis for analyzing road test results.

CLUTCH APPLICATION

GEAR	RATIO	B1	B2	B3	K1	K2	K3	F1	F2
1	3.59	X*	X				X*	X	X
2	2.19		X		X		X*		X
3	1.41		X		X	X			
4	1.00				X	X	X		
5	0.83	X				X	X	X*	
N	X						X		
R	3.16	X*		X			X	X	
* = The shift components required during coast.									

DIAGNOSIS AND TESTING - AUTOMATIC TRANSMISSION

CONDITION	POSSIBLE CAUSES	CORRECTION
MAXIMUM SPEED 30 km/h	1. Speed Control 30 Actuated.	1. Instruct Customer.
ENGINE DIES WHEN TRANSMISSION IS SHIFTED INTO GEAR, ALSO NOISES IN N AND/OR P	1. PWM Valve Blocked. 2. Torque Converter Lock Up Control Valve Locked.	1. Replace Valve. 2. Enable Movement of Valve, Remove Particle.
LEVER IN ″P″ POSITION BLOCKED (BRAKE ACTIVATED)	1. No Vacuum Brake Booster After Long Immobilization, Brake Pedal Not Fully Applied/Hard Pedal. 2. No Stoplamp Switch Signal (no DTC IN PCM).	1. Check Vacuum/ Tightness of Brake Booster. 2. Check Contact to Stoplamp Switch. Replace Switch if Necessary.
GRUMBLING, DRONING, JERKING WHEN TCC IS ENGAGED	1. Slip Speed TCC too Low.	1. Switch Off Torque Converter Lock Up Using DRBIII®. If Complaint is Not Reproduced Afterwards, Replace PWM Valve, Set Adaption Values to Zero.
HOWLING, HUMMING ABOVE 4000 RPM IN EACH GEAR	1. Oil Filter Blocked. 2. Oil Pump.	1. Replace Oil Filter. 2. Replace Oil Pump.
WHINING, SINGING	1. Gear Set Noises in 1st, 2nd and 5th Gear. 2. Intermediate Bearing of the Drive Shaft at 0 km/h, Only When Cold.	1. Replace Transmission. 2. Replace Intermediate Bearing of the Drive Shaft.
″CLACK″ NOISE FROM CENTER SHIFT AREA WHEN STOPPING OR STARTING	1. Park Lock Solenoid.	1. Replace Shift Lever Assembly.
CRACKING NOISE WHEN LOAD CYCLE	1. Stick - Slip Between Joint Flange and Collar Nut.	1. Install Zinc Coated Collar Nut Together with Washer.

CONDITION	POSSIBLE CAUSES	CORRECTION
CHATTERING IN CENTER CONSOLE SHIFT WHILE ACCELERATING	1. Bushing Shift Shaft has too Much Clearance.	1. Replace Shifter Lever and Cover Plate.
HARD 2-3 UPSHIFT WHEN STEPPING OFF THE ACCELERATOR PEDAL	1. Response Characteristic Control Loop.	1. Install K2 Disc Spring.
UPSHIFT 2-3, 3-4 SLIPPING	1. Spring of Regulating Valve Pressure control Valve Broken.	1. Replace Spring.
HARD 2-1 DOWNSHIFT WHEN COMING TO A STOP	1. Transmission (2-1 downshift) not Adapted. 2. TCM Software Data. 3. Freewheel F1 Defective.	1. Re-adapt Transmission. 2. Flash TCM. 3. Replace Freewheel F1.
HARD 3-2 DOWNSHIFT WHEN DECELERATION EVEN AFTER READAPTION	1. K3 Idles.	1. Install TCM and/or Electrohydraulic Control Unit.
NO RESP. DELAYED UPSHIFT, NO DTC	1. Different Tire Sizes are Mounted on the Front Axle.	1. Mount Uniform Tire Sizes on the Front Axle.
NO UPSHIFT 3-4, 4-5 AFTER FAST OFF (ACCELERATOR)	1. Upshift Prevention to Realize Dynamical Drivestyle.	1. Instruct Customer.
NO UPSHIFT OF 1ST GEAR BELOW 5000 RPM	1. Gear Recognition Switch.	1. Replace Gear Recognition Switch.
NO UPSHIFT INTO 5TH GEAR WHEN FULL THROTTLE OR KICK DOWN ACTIVATION	1. The Upshift 4-5 at Full Throttle or Kick Down Never Occurs Until Reaching Cut Off Speed. Under These Conditions, the High Powered Vehicle Will Never Shift Into 5th Gear Below 250 km/h.	1. Instruct Customer.
NO KICK DOWN SHIFTING	1. Accelerator Pedal Value < 95%.	1. Check Engine Control. Adjust as Necessary.
ENGINE TURNS UP WHILE 2-3 UPSHIFT AND/OR HARD 3-2 DOWNSHIFT	1. Oil Level too Low. 2. Oil Filter not Installed. 3. Freewheel F2 Defective.	1. Check Oil Level. Add if Necessary. 2. Install Oil Filter. 3. Replace Freewheel F2, Hollow Shaft, and Rear Sun Gear/Inner Disc Carrier K3.
GRABBING 2-3 COASTING UPSHIFT AND/OR BRAKE DOWNSHIFT	1. Oil Level too Low. 2. Oil Filter not Installed. 3. Control Shift or Command Valve Blocked. 4. K3 Disc Burnt, Hot Spots or Rubbed Down.	1. Check Oil Level. Add if Necessary. 2. Install Oil Filter. 3. Check Each Slide Valve for Base Position and Ease of Movement, Remove Particle. 4. Replace Inner and Outer Disc Carrier K3 and Control Valve.

CONDITION	POSSIBLE CAUSES	CORRECTION
DELAYED ENGAGEMENT, NO TRANSFER OF POWER IN R AND/OR D, ALSO AT TIMES	1. Oil Level too Low.	1. Check Oil Level. Add if Necessary.
	2. Recognition Switch - Selector Lever Position.	2. Replace Recognition Switch Only When Intermediate Position or Fault is Indicated.
	3. Oil Filter not Installed.	3. Install Oil Filter.
	4. AEV, Delayed Pressure Build Up on Piston B2/B3.	4. Install New Shifting Procedure (TCM, Electrohydraulic Control Unit or Repair Set).
	5. Wrong Combination TCM/ Electrohydraulic Control Unit.	5. Check Combination TCM/Electrohydraulic Control Unit. Replace TCM Resp. Electrohydraulic Control Unit, if necessary.
NO UPSHIFT OF 1ST GEAR AT TIMES	1. Connector Ballast Unit. Output Speed Sensor Loose, Incorrectly Contacted.	1. Check Connectors, Replace Output Speed Sensor if Necessary.
	2. Output Speed Sensor Defective	2. Replace Output Speed Sensor.
LEAKAGE AT THE AREA OF THE ELECTRICAL PLUG TO THE CONDUCTOR PLATE	1. Deformation O-rings.	1. Replace O-rings.
	2. Deformation Adapter.	2. Replace Adaptor.
	3. The Conductor Plate is not Fitted Surface to Surface on the Valve Body in One Corner, the Plug Is not Centered in the Socket and the O-ring Will Not Seal.	3. Remove Nose of Conductor Plate.
	4. Contacting At The Conductor Plate Leaky. Oil In Harness, Sometimes In The Control Module.	4. Replace Conductor Plate.
LEAKAGE AT THE AREA OF BELL HOUSING/ TORQUE CONVERTER	1. Bolts (Torx M6) Outer Disc Carrier B1.	1. Clean Thread and Install the Bolts Using Sealer.
OIL LEAKS	1. 6 Lower Bolts (TorxM8) Converter Housing.	1. Clean Thread and Install the Bolts Using Sealer.
	2. Oil Drain Plug Converter Loose Resp. No Seal Ring Installed.	2. Install Drain Plug Correctly.
	3. Weld Seam of Torque Converter Leaky.	3. Replace Torque Converter.
	4. Radial Sealing Ring Oil Pump Defective.	4. Replace Sealing Ring.
	5. O-ring Oil Pump Defective or not Installed.	5. Install O-ring.
	6. Bushing of Oil Pump Loose, caused by Missing Fit Bolt at Transmission/Engine Flange.	6. Install Fit Bolt if Necessary.

STANDARD PROCEDURE - ALUMINUM THREAD REPAIR

Damaged or worn threads in the aluminum transmission case and valve body can be repaired by the use of Heli-Coils™, or equivalent. This repair consists of drilling out the worn-out damaged threads. Then tap the hole with a special Heli-Coil™ tap, or equivalent, and installing a Heli-Coil™ insert, or equivalent, into the hole. This brings the hole back to its original thread size.

Heli-Coil™, or equivalent, tools and inserts are readily available from most automotive parts suppliers.

REMOVAL

1. Disconnect the negative battery cable.
2. Remove the propeller shaft. **Refer to Page 3-26**.
3. Remove the lower splash shield screws (1) and the lower splash shield.

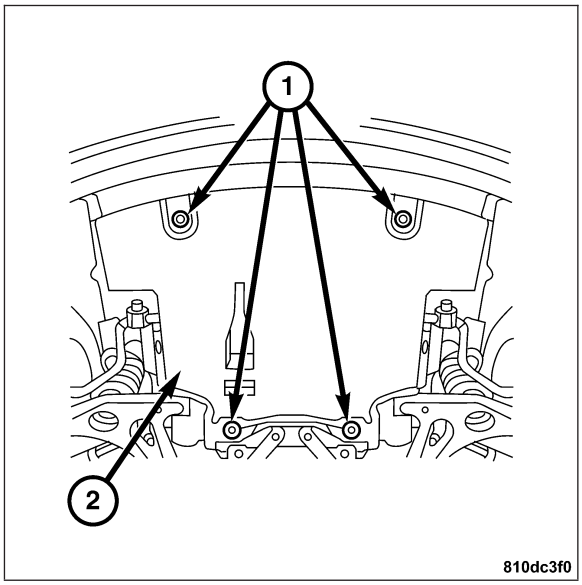

4. Remove the transmission ground bolt (1) and cable.

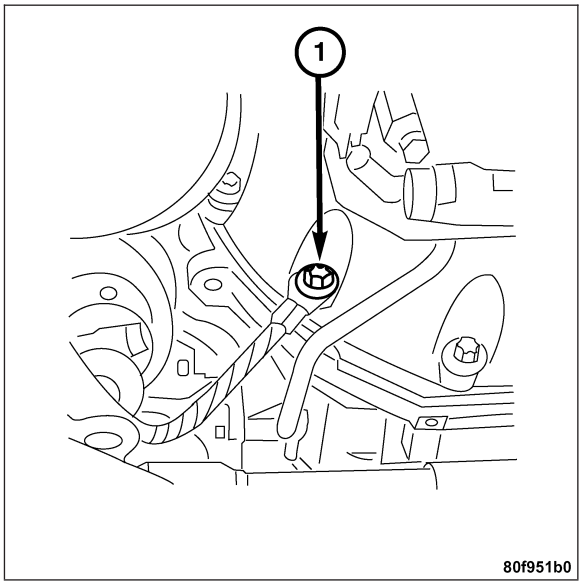

5. Place a suitable drain pan beneath the transmission drain.
6. Remove the transmission drain plug (2) and drain the transmission.

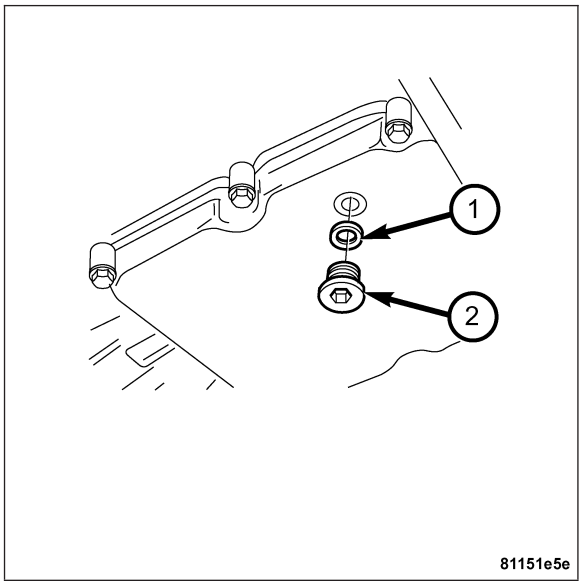

7. Disconnect the transmission shift selector rod (1).

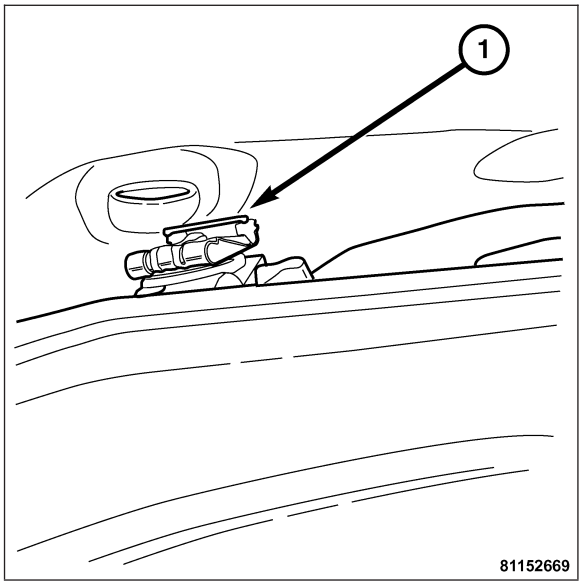

8. Disconnect the transmission oil cooler line banjo fittings (1) from the left and right sides of the tranmission housing.

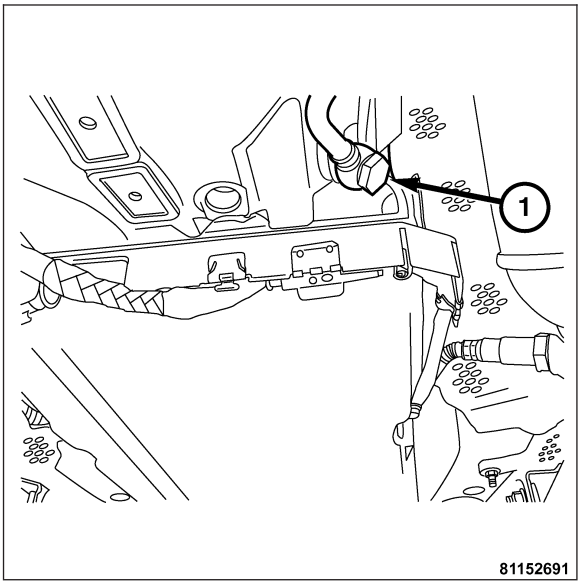

9. Remove the transmission oil cooler line retainer bolts (1) from the left and right side of the engine lower oil pan.

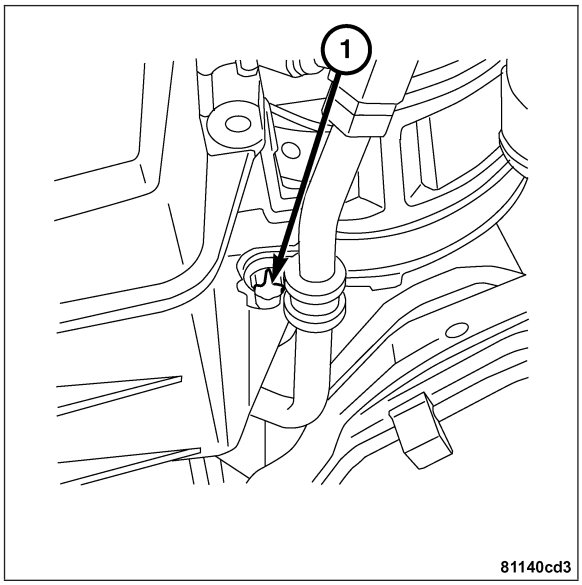

10. Remove the torque converter access cover (1).

Note: Rotate the engine at the vibration damper bolt.

11. Remove the torque converter bolts (2).

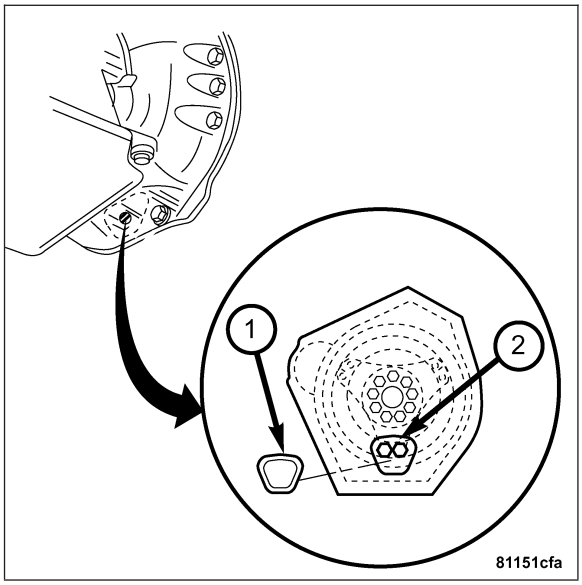

12. Disconnect and remove the oxygen sensor harness connectors (1)
13. Remove the heat shield bolts (2) and the heat shield

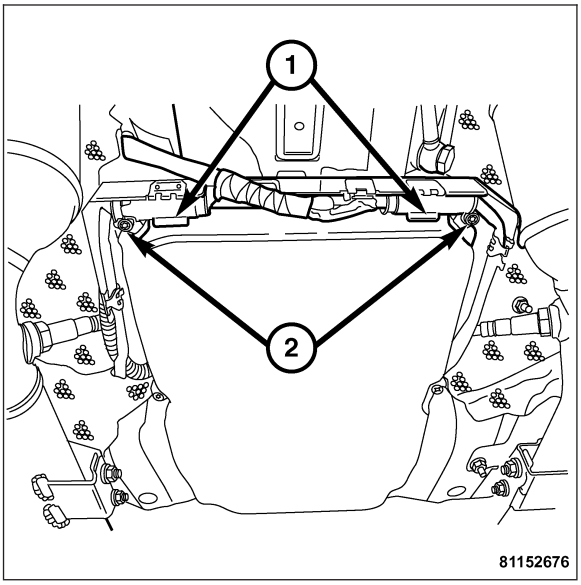

14. Disconnect the transmission control harness connector (2).
15. Position a transmission jack under the transmission oil pan rail.
16. Remove the starter. **Refer to Page 8F-43**.
17. Remove the transmission to engine retaining bolts.
18. Lower and remove the transmission from the vehicle.

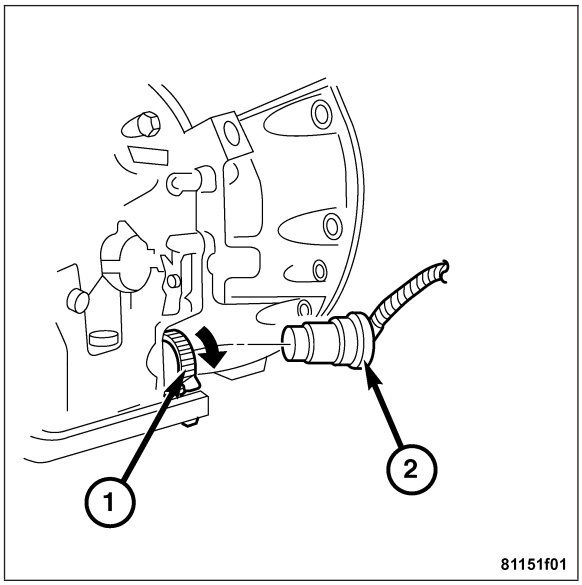

DISASSEMBLY

1. Remove the torque converter (1). **Refer to Page 21-335**.

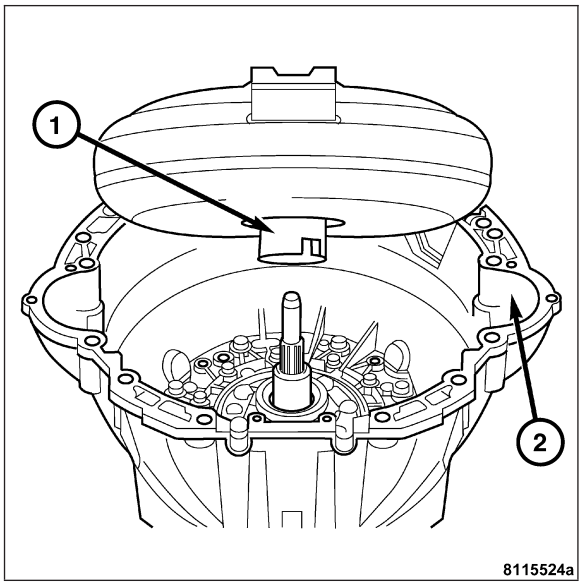

2. Place the transmission in a vertical position.
3. Measure the input shaft end play as follows.
   a. Attach the Special Tool 8266-18 (2) to Special Tool 8266-8 (1).
   b. Attach the Special Tool C-3339 (3) and the Special Tool 8266-8 (1).
   c. Install the assembled tool onto the input shaft of the transmission and tighten the retaining screw on Special Tool 8266-18 (2) to secure it to the input shaft.
   d. Position the dial indicator plunger against a flat spot on the oil pump and zero the dial indicator.
   e. Move the input shaft in and out. Record the maximum travel for assembly reference.

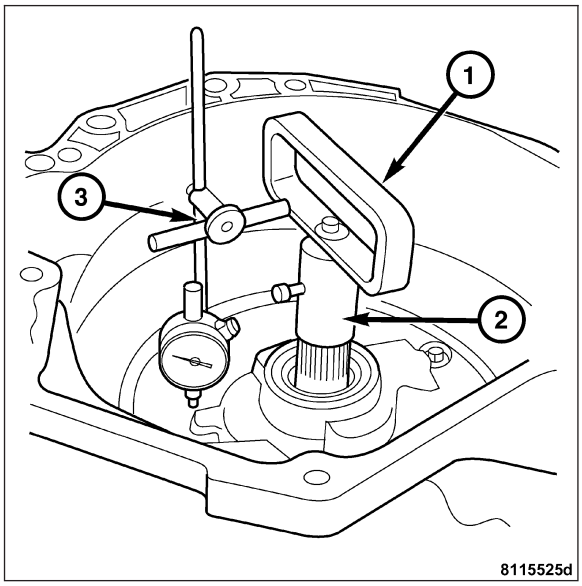

4. Loosen the guide bushing (12) and remove it from the transmission housing.
5. Remove the oil pan (5).
6. Remove the oil filter (4).
7. Unscrew the bolts (3) and remove the electrohydraulic unit (2).
8. Place the transmission in the PARK position before attempting to remove the output shaft nut.
9. Remove the output shaft nut holding the propeller shaft flange to the output shaft.
10. Remove the propeller shaft flange.
11. Remove the transmission rear oil seal with a suitable slide hammer and screw.
12. Remove the transmission output shaft washer. Be sure to tag the washer since it is very similar to the geartrain endplay shim and they must not be interchanged.
13. Remove the transmission rear output shaft bearing retaining ring (1).

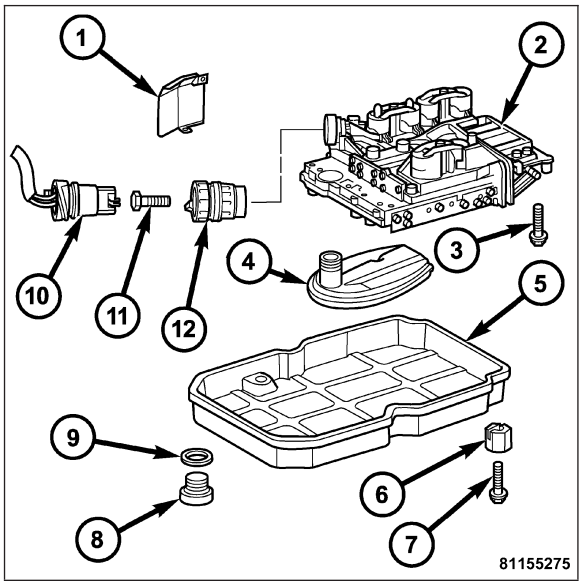

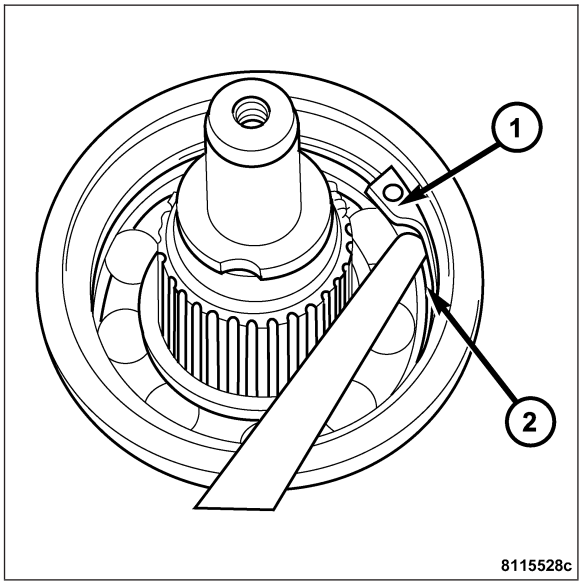

14. Position Special Tool 9082 (1) over the inner race of the output shaft bearing (3).

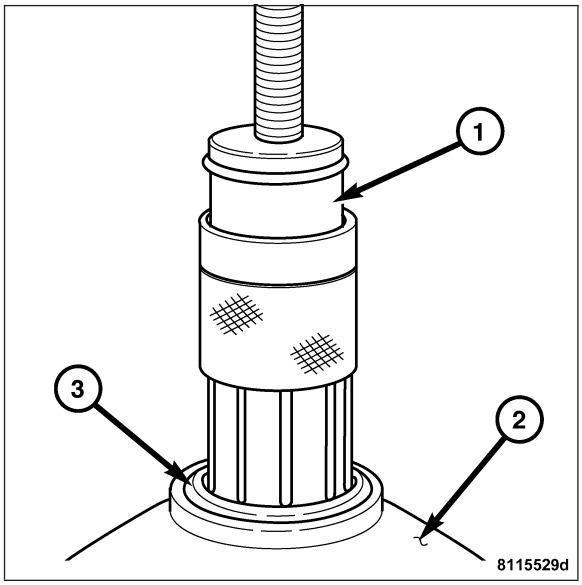

15. Slide the collar (3) on Special Tool 9082 (1) downward over the fingers of the tool (4).

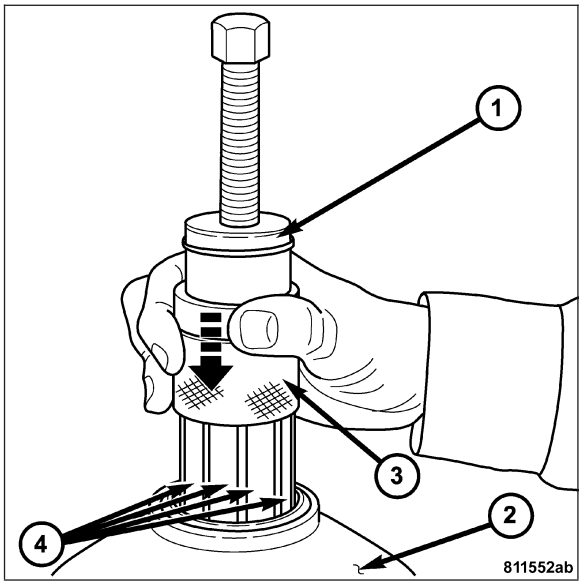

16. Remove the output shaft bearing (3).
17. Remove the geartrain end-play shim from the output shaft. Be sure to tag the shim since it is very similar to the output shaft washer and they must not be interchanged.
18. Remove the bolts holding the transmission housing to the torque converter housing from inside the converter housing.
19. Stand the transmission upright on the converter housing. Be sure to use suitable spacers between the bench surface and the torque converter housing since the input shaft protrudes past the front surface of the housing.
20. Remove the remaining bolts holding the transmission housing to the torque converter housing.
21. Remove the transmission housing from the torque converter housing.

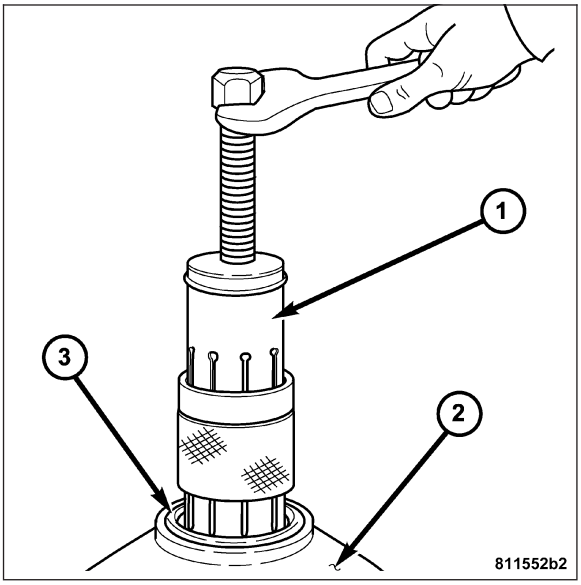

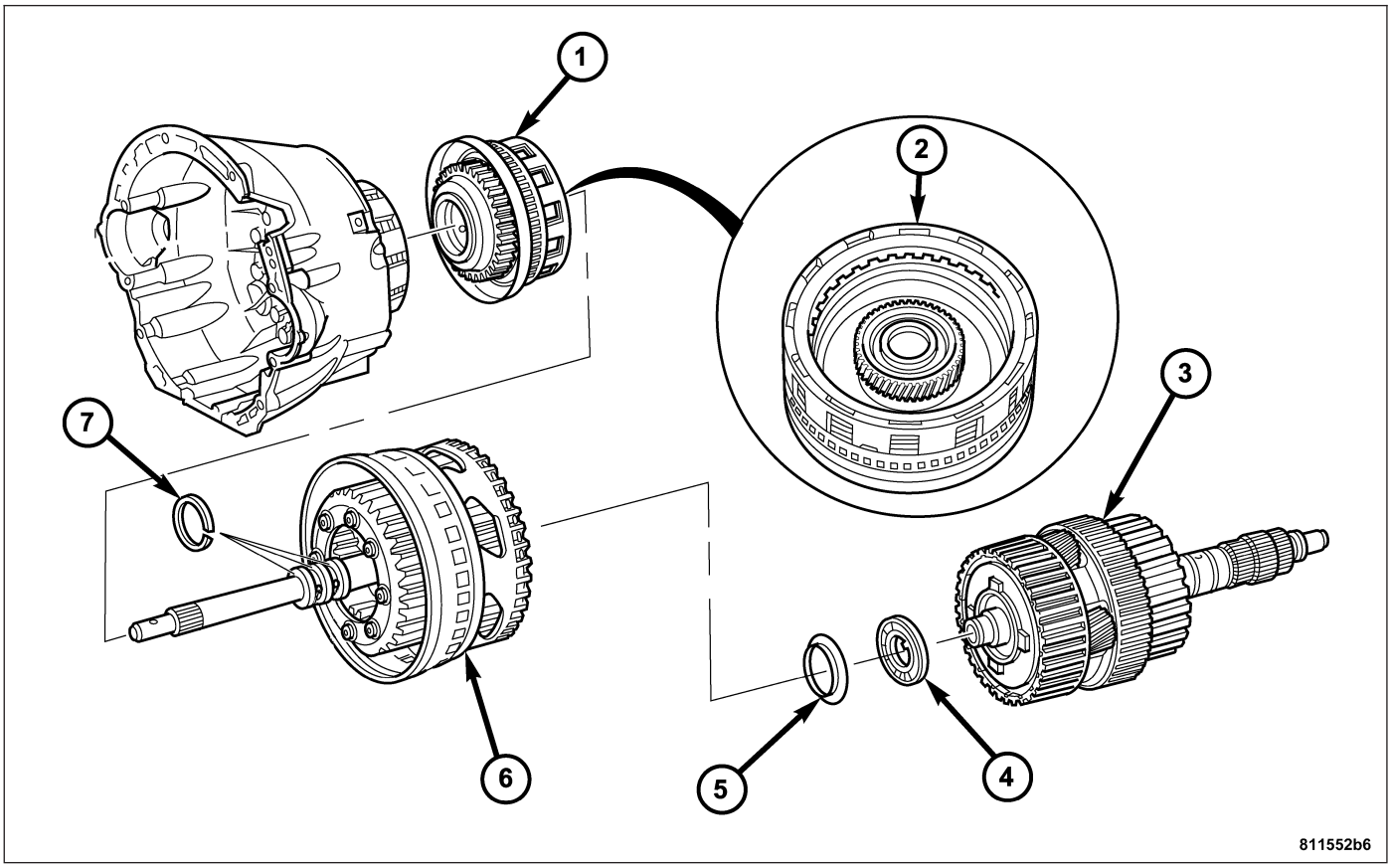

1 - DRIVING CLUTCH K1
2 - SUN GEAR OF FRONT PLANETARY GEAR SET
3 - DRIVING CLUTCH K3, OUTPUT SHAFT, AND CENTER AND REAR PLANETARY GEAR SETS
4 - THRUST NEEDLE BEARING
5 - THRUST WASHER
6 - FRONT PLANETARY GEAR SET, CLUTCH K2
7 - TEFLON RINGS

22. Remove the output shaft with the center and rear gear set and clutch K3 (3).
23. Remove the thrust needle bearing (4) and the thrust washer (5).
24. Remove the drive shaft with driving clutch K2 and front planetary gear set (6).
25. Remove the driving clutch K1 (1).

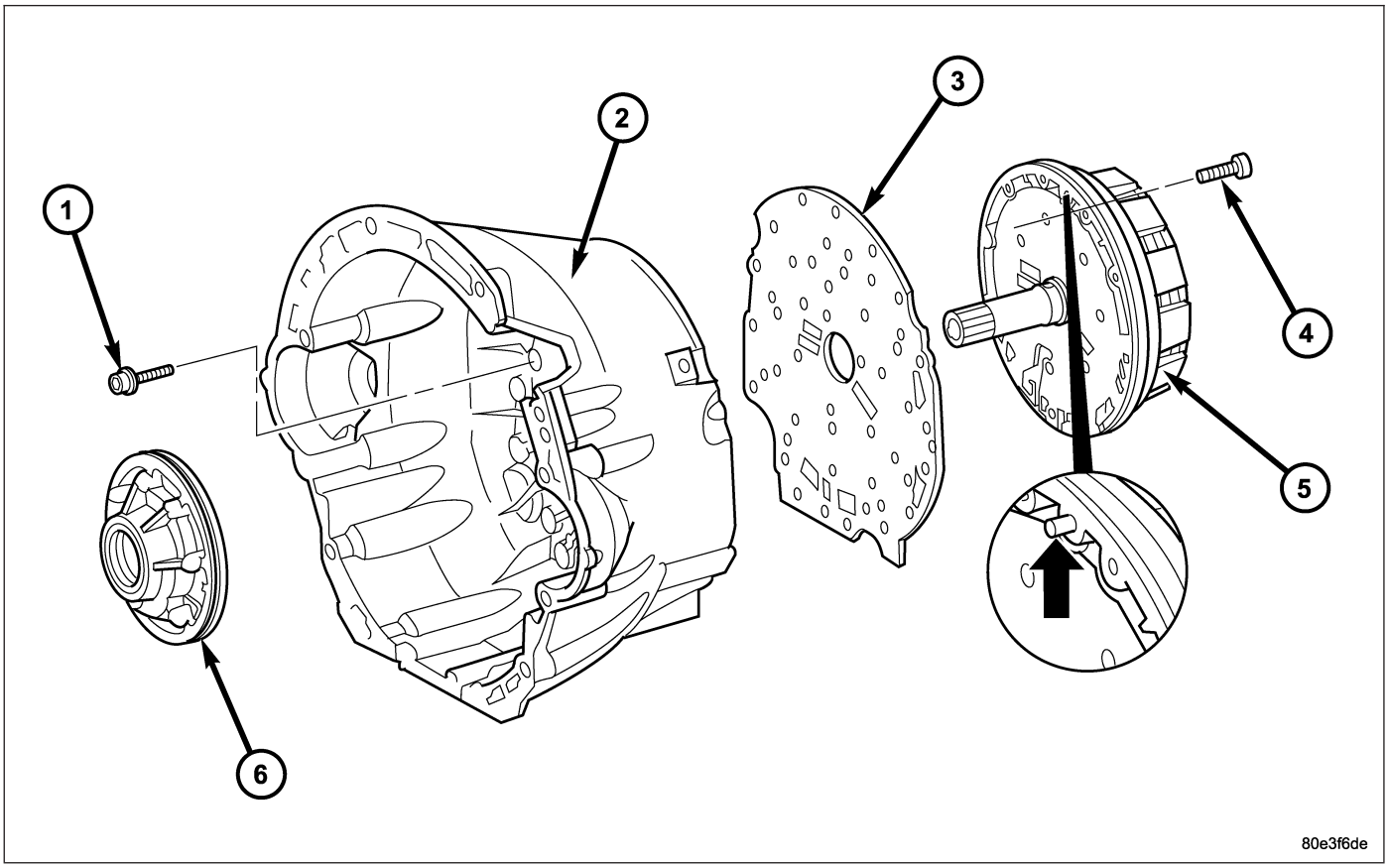

1 - BOLTS - M6X32
2 - CONVERTER HOUSING
3 - INTERMEDIATE PLATE
4 - BOLTS - M8X35
5 - MULTI-DISC HOLDING CLUTCH B1
6 - OIL PUMP

26. Unscrew the bolts (4) and remove the oil pump (6). Screw two opposed bolts into the oil pump housing and press the oil pump out of the converter housing by applying light blows with a plastic hammer.
27. Remove and discard the torque converter hub seal and the oil pump outer o-ring seal from the oil pump.
28. Unscrew the bolts (1) and remove the multi-disc brake B1 (5) from the torque converter housing. Screw two opposed bolts into the multi-disc brake B1 (5) and separate from the torque converter housing by applying light blows with a plastic hammer.
29. Detach the intermediate plate (3) from torque converter housing (2).

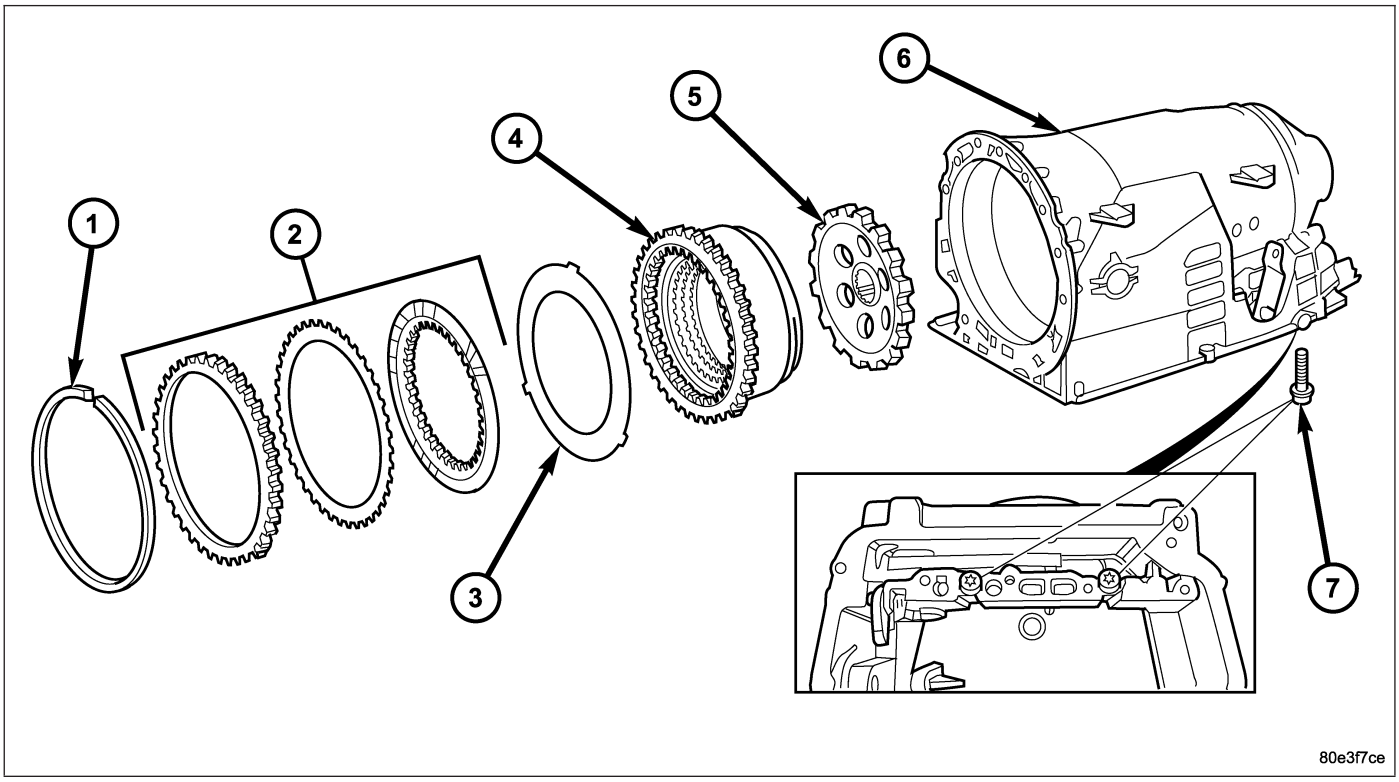

1 - SNAP-RING
2 - MULTI-DISC HOLDING CLUTCH B3 DISCS
3 - SPRING WASHER
4 - MULTI-DISC HOLDING CLUTCH B2
5 - PARKING LOCK GEAR
6 - TRANSMISSION HOUSING
7 - BOLTS - M8X60

30. Unscrew the bolts (7).
31. Remove the snap-ring (1), then remove the multi-disc holding clutch B3 discs (2) from the transmission housing (6). The externally toothed disc carrier for the multi-disc holding clutch B2 (4) is also the piston for the multi-disc holding clutch B3 discs (2).
32. Remove the parking lock gear (5).

ASSEMBLY

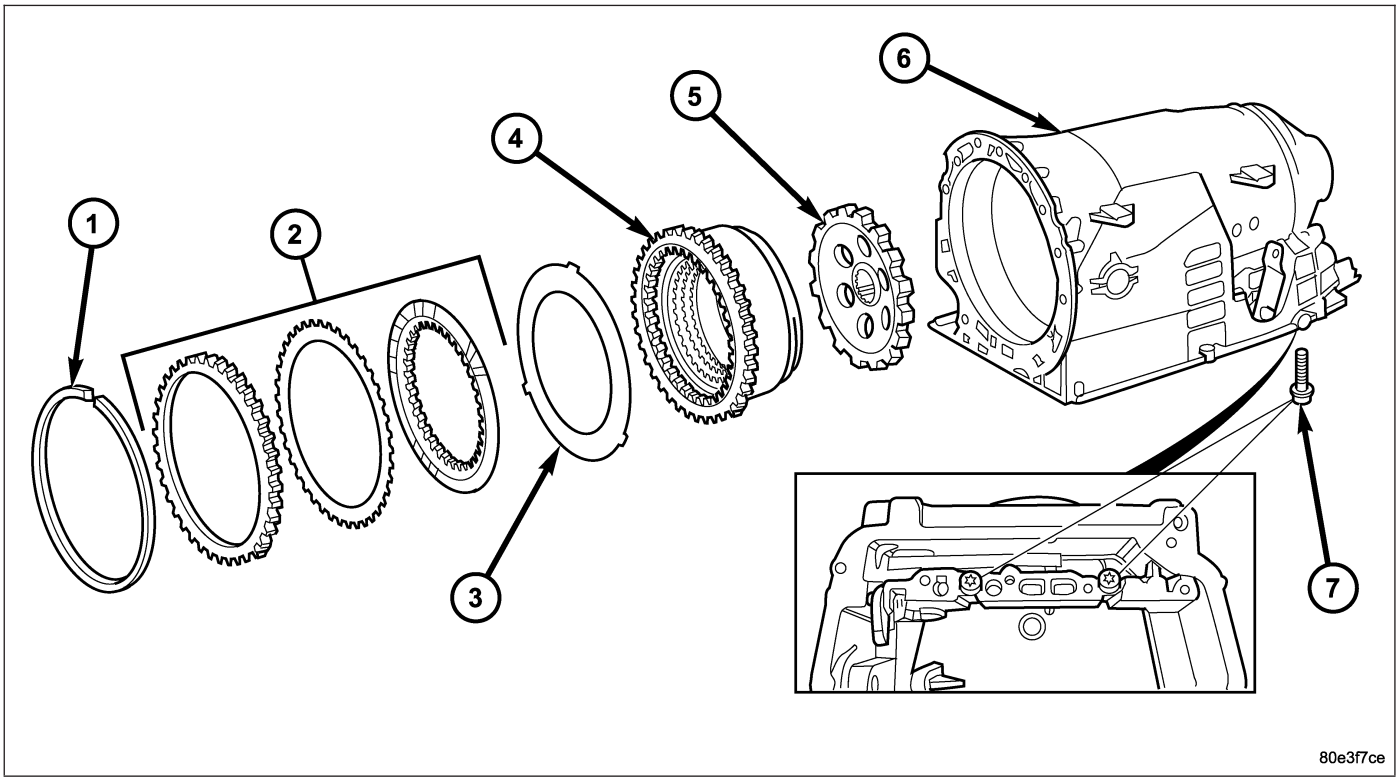

1 - SNAP-RING
2 - MULTI-DISC HOLDING CLUTCH B3 DISCS
3 - SPRING WASHER
4 - MULTI-DISC HOLDING CLUTCH B2
5 - PARKING LOCK GEAR
6 - TRANSMISSION HOUSING
7 - BOLTS - M8X60

1. Insert the parking lock gear (5).
2. Install the multi-disc holding clutch B2 (4) in the transmission housing (6).
3. Screw in the bolts (7). Tighten the bolts to 16 N·m (141 in. lbs.).

Note: During the measurement the snap ring (7) must contact the upper bearing surface of the groove in the outer multi-disc carrier (8).

Note: Pay attention to the sequence of discs. Place new friction multi-discs in ATF fluid for one hour before installing.

4. Insert and measure the spring washer (4) and multi-disc holding clutch pack B3 (2, 6).
   a. Put the multi-discs for multi-disc holding clutch B3 together in the sequence shown in the illustration and insert individually.
   b. Using a feeler gauge, determine the play “L” at three points between the snap-ring (7) and outer multi-disc (1). B3 clutch clearance should be 1.0-1.4 mm (0.039-0.055 in.). Adjust the clearance as necessary.
   c. Adjust with snap-ring (7), if necessary. Snap-rings are available in thicknesses of 3.2 mm (0.126 in.), 3.5 mm (0.138 in.), 3.8 mm (0.150 in.), 4.1 mm (0.162 in.), 4.4 mm (0.173 in.), and 4.7 mm (0.185 in.).

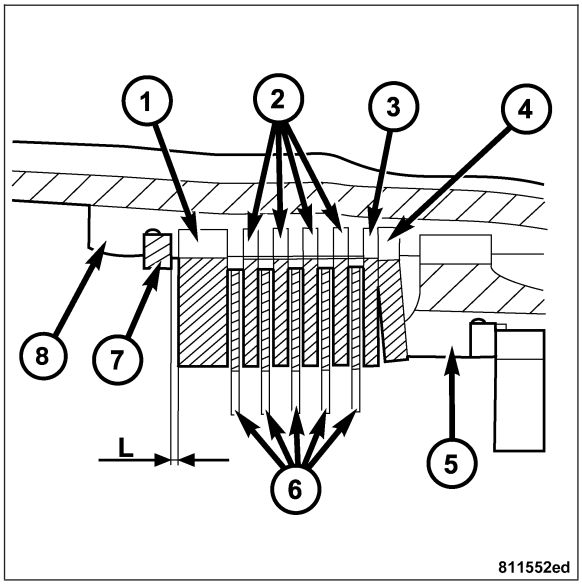

5. Place the intermediate plate (3) on the converter housing (2) and align.

Note: The intermediate plate can generally be used several times. The plate must not be coated with sealant

6. Check that the driving clutch K1 feed hole (1) in the inner hub of multi-disc holding clutch B1 is free before installing multi-disc holding clutch B1.

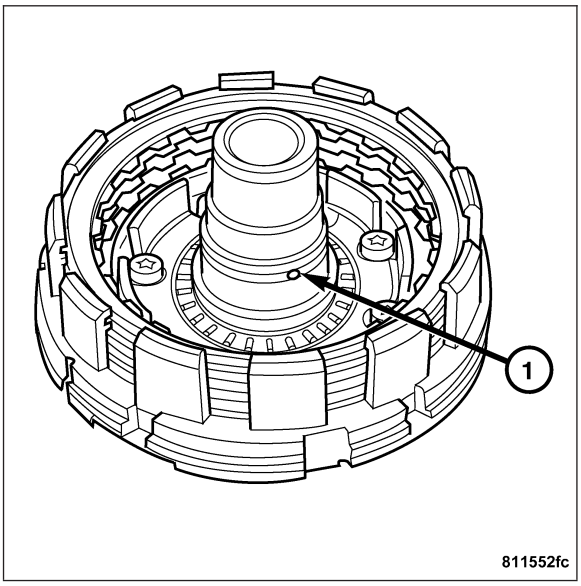

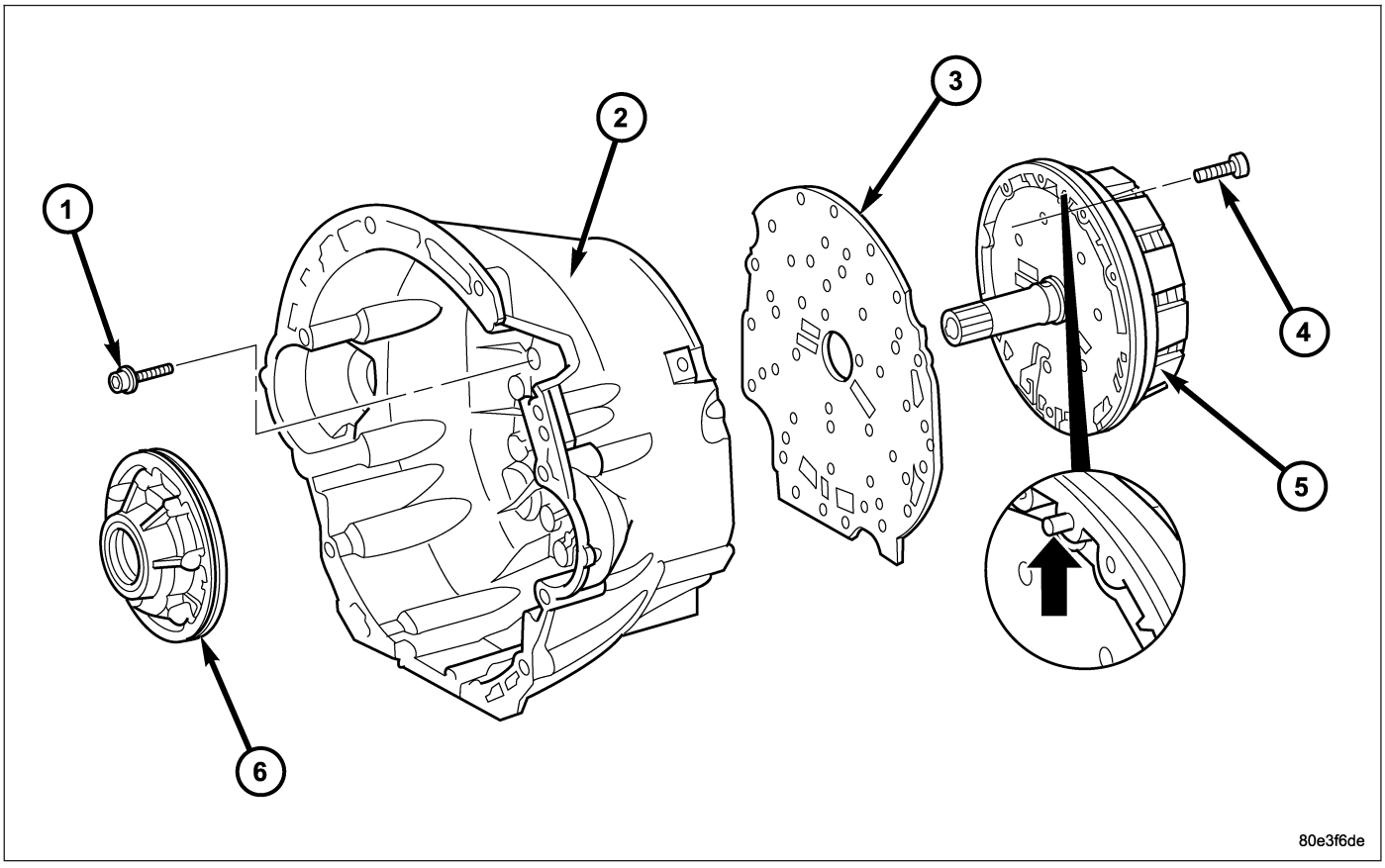

1 - BOLTS - M6X32
2 - CONVERTER HOUSING
3 - INTERMEDIATE PLATE
4 - BOLTS - M8X35
5 - MULTI-DISC HOLDING CLUTCH B1
6 - OIL PUMP

7. Install the multi-disc holding clutch B1 (5) onto the converter housing (2) and intermediate plate (3). Installed position of clutch B1 (5) in relation to converter housing (2) is specified by a plain dowel pin (arrow) in clutch B1 (5).
8. Install the bolts to multi-disc holding clutch B1 (5) to the converter housing (2).
9. Securely tighten the multi-disc holding clutch B1 (5) on the converter housing (2) to 10 N·m (88.5 in. lbs.).
10. Install a new torque converter hub seal (1) into the oil pump using Special Tool 8902A.
11. Install a new oil pump outer o-ring seal (2) onto the oil pump.
12. Install the oil pump (6) and securely tighten. Tighten the oil pump bolts to 20 N·m (177 in. lbs.).

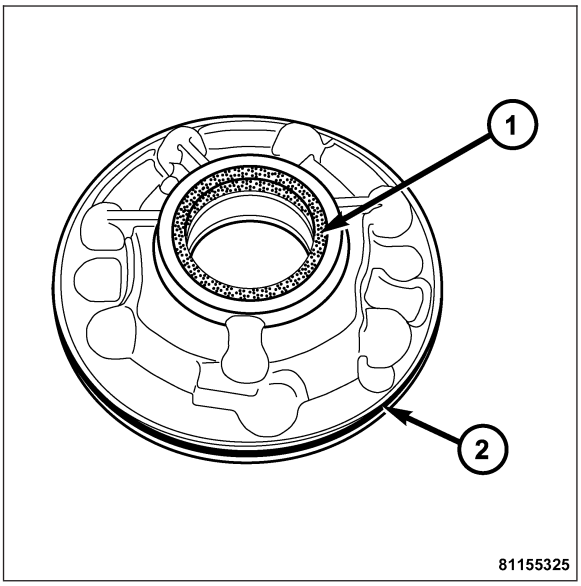

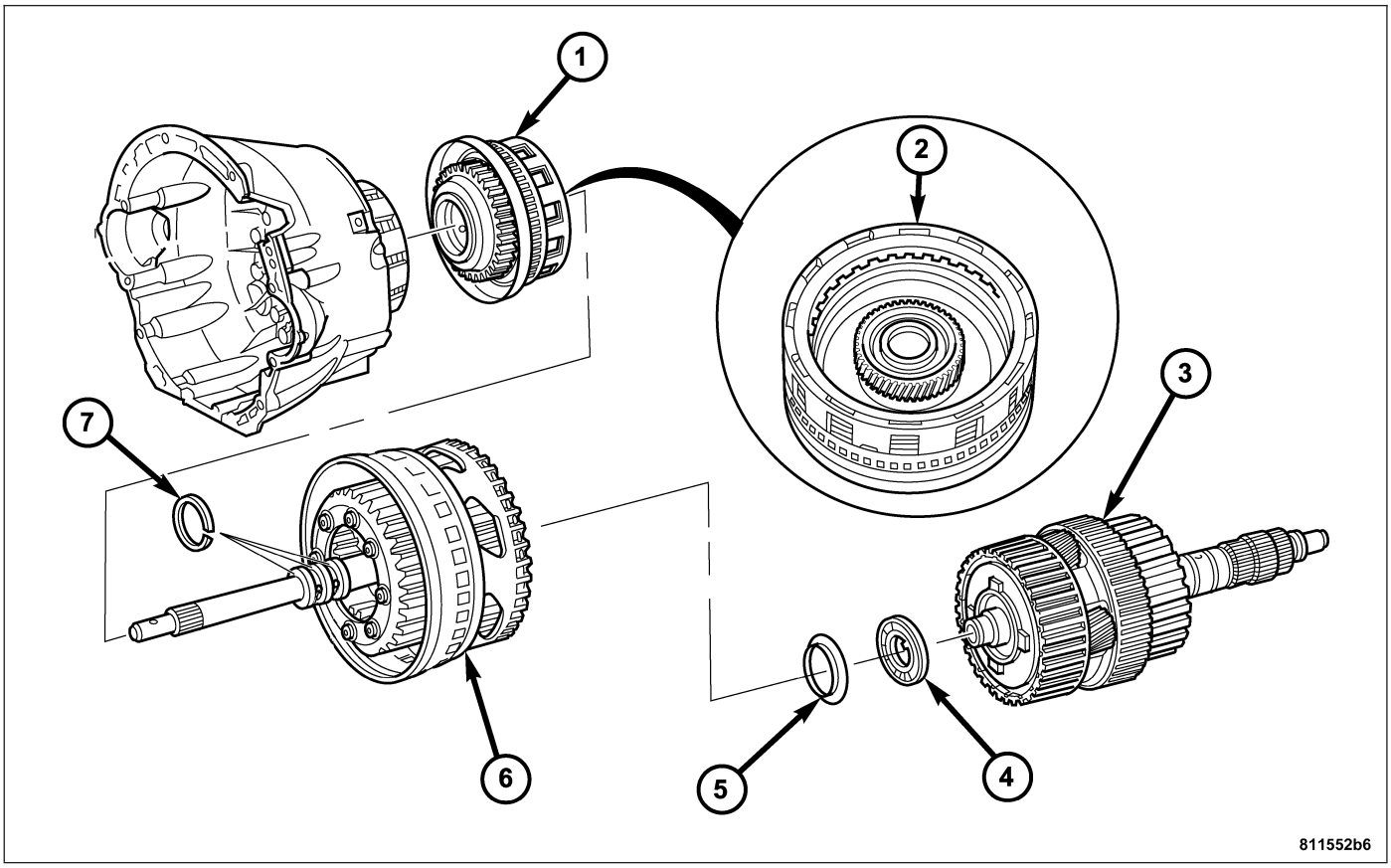

1 - DRIVING CLUTCH K1
2 - SUN GEAR OF FRONT PLANETARY GEAR SET
3 - DRIVING CLUTCH K3, OUTPUT SHAFT, AND CENTER AND REAR PLANETARY GEAR SETS
4 - THRUST NEEDLE BEARING
5 - THRUST WASHER
6 - FRONT PLANETARY GEAR SET, CLUTCH K2
7 - TEFLON RINGS

13. Using grease, insert the teflon rings (7) in the groove so that the joint remains together.
14. Install the driving clutch K1 (1) onto multi-disc holding clutch B1.
15. Install the drive shaft with driving clutch K2 (6) and front planetary gear set (1).
16. Install the front washer (5) and the thrust needle bearing (4).
17. Install the output shaft with the center and rear planetary gear set and driving clutch K3 (3).
18. Using grease, install both the teflon rings (7) in the groove at the rear of the output shaft so that the joint stays together.
19. Mount the transmission housing on the torque converter housing.
20. Screw in the bolts through the transmission housing into the torque converter housing. Tighten the bolts to 20 N·m (177 in. lbs.).
21. Measure the end-play between the parking lock gear and the grooved ball bearing in order to select the proper geartrain end-play shim.

a. Place Special Tool 6311 (1) on the transmission housing. Using a depth gauge, measure from the gauge bar (1) to the parking lock gear (2).

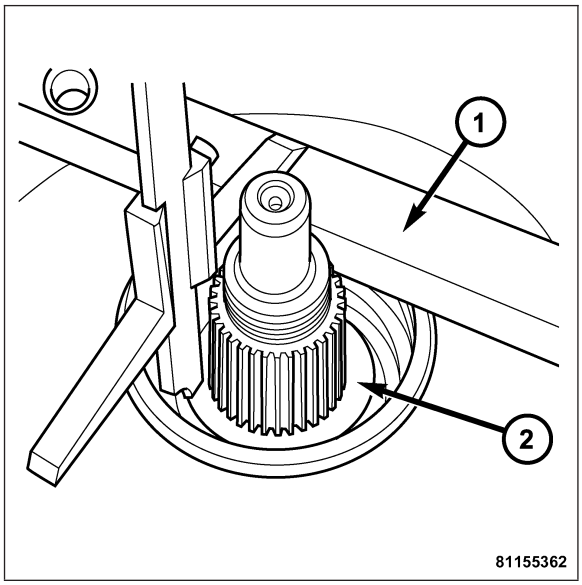

b. Using a depth gauge, measure from the Special Tool 6311 (1) to the contact surface of the output shaft bearing (2) in the transmission housing.
c. Subtract the first figure from the second figure to determine the current end-play of the transmission. Select a shim such that the end-play will be 0.3-0.5 mm (0.012-0.020 in.). Shims are available in thicknesses of 0.2 mm (0.008 in.), 0.3 mm (0.012 in.), 0.4 mm (0.016 in.), and 0.5 mm (0.020 in.).
d. Install the selected end-play shim.

22. Screw in the bolts through the converter housing into the transmission housing. Tighten the bolts to 20 N·m (177 in. lbs.)

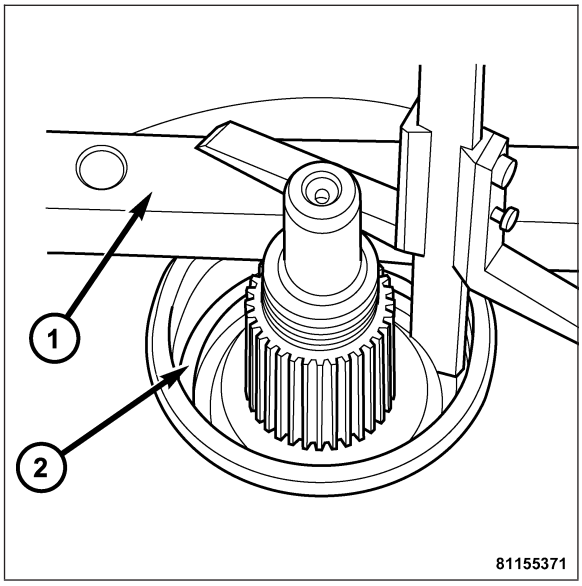

23. Install the output shaft bearing in the rear transmission housing.
    a. Using Special Tool 9287 (1), install the output shaft bearing (2) into the transmission housing (3). **The closed side of the plastic cage must point towards the parking lock gear.**

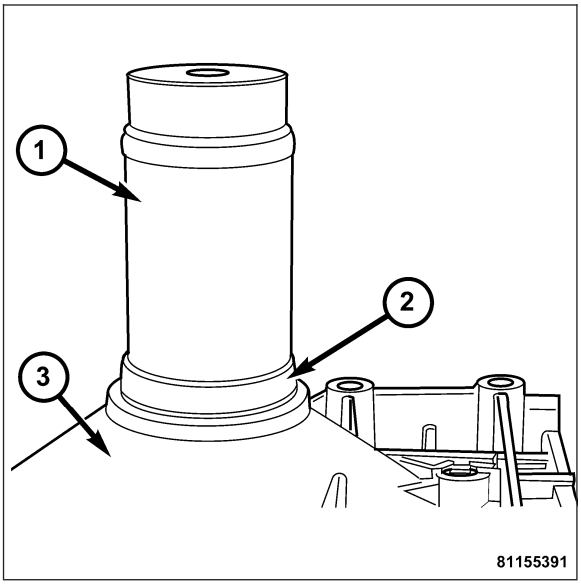

b. Install the retaining ring (1). Ensure that the retaining ring (1) is seated correctly in the groove.
c. Check that there is no play between the bearing (2) and the retaining ring (1) using a feeler gauge.
d. There must be no play between the retaining ring (1) and the bearing (2). If the ring cannot be installed, a thinner ring must be used. If there is play between the ring (1) and the bearing (2), a thicker ring must be installed. Retaining rings are available in thicknesses of 2.0 mm (0.079 in.), 2.1 mm (0.083 in.), and 2.2 mm (0.087 in.).

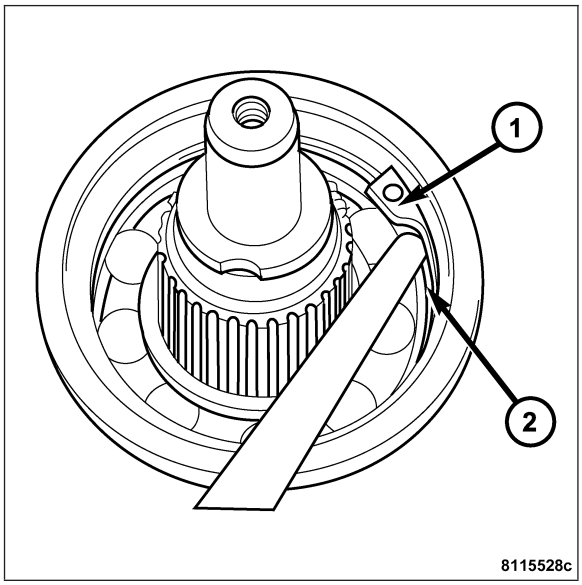

24. Rotate the transmission so that the bellhousing is pointed upward and ensuring that the output shaft is allowed to move freely.

25. Measure the input shaft end-play.

Note: If the end-play is incorrect, the transmission is incorrectly assembled, or the geartrain end-play shim is incorrect. The geartrain end-play shim is selective.

a. Attach Special Tool 8266-18 (2) to Special Tool 8266-8 (1).
b. Attach Special Tool C-3339 (3) to Special Tool 8266-8 (1).
c. Install the assembled tool onto the input shaft of the transmission and tighten the retaining screw on Special Tool 8266-18 (2) to secure it to the input shaft.
d. Position the dial indicator plunger against a flat spot on the oil pump and zero the dial indicator.
e. Move the input shaft in and out and record reading. End play should be 0.3-0.5 mm (0.012-0.020 in.). Adjust as necessary.

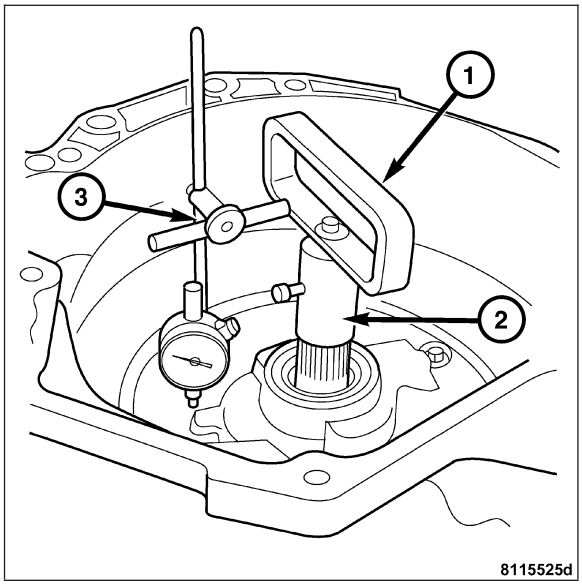

26. Install the output shaft washer onto the output shaft.

27. Install a new transmission rear seal into the transmission case (2) with Special Tool 8902A (1).
28. Install the propeller shaft flange onto the output shaft.
29. Place the transmission in the PARK position before attempting to tighten the output shaft nut.
30. Install a new output shaft nut. Tighten the output shaft nut to 120 N·m (88.5 ft. lbs.).

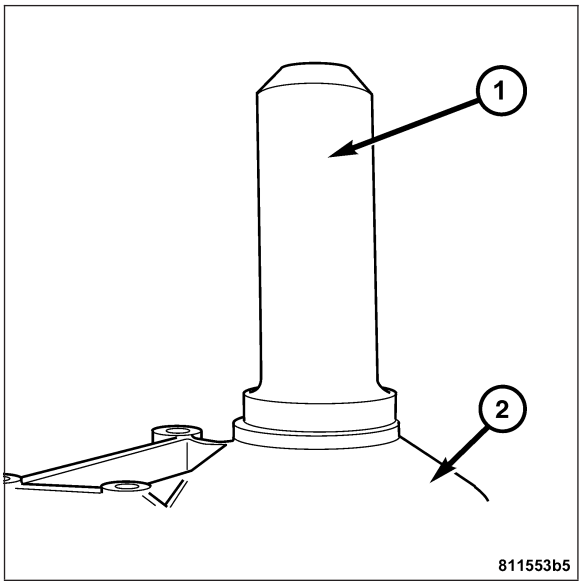

31. Stake the output shaft nut to the output shaft as follows.
    a. Place the Special Tool 9078 (2) Special Tool C-4171 onto the output shaft.
    b. Rotate the Special Tool 9078 (2) until the alignment pin (3) engages the output shaft notch (4).

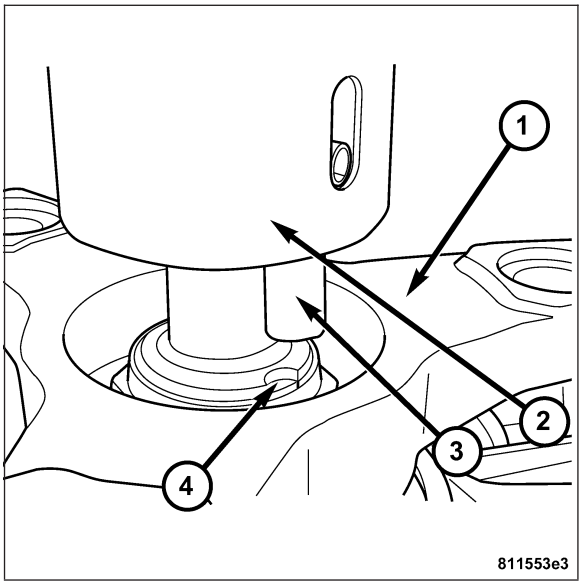

    c. Press downward on the staking tool (1) until the staking pin (3) contacts the output shaft nut flange (2).
    d. Strike Special Tool C-4171 with a suitable hammer until the output shaft nut is securely staked to the output shaft.

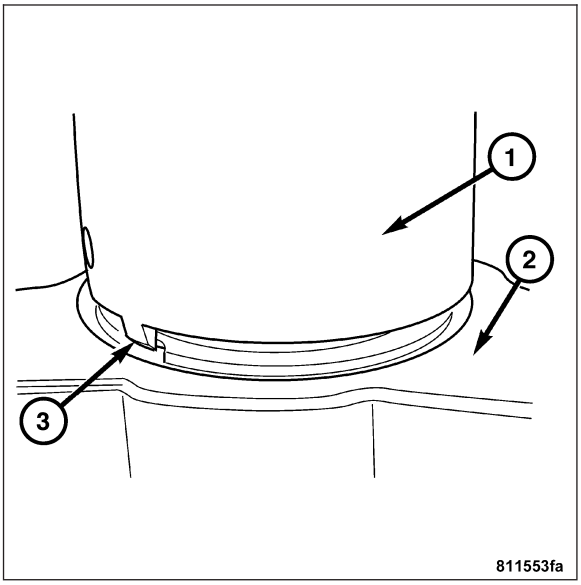

32. Install the electrohydraulic unit (2). Tighten the bolts to 8 N·m (71 in. lbs.).
33. Install the oil filter (4).
34. Install the oil pan (5). Tighten the bolts to 8 N·m (71 in. lbs.).
35. Install the guide bushing (12).

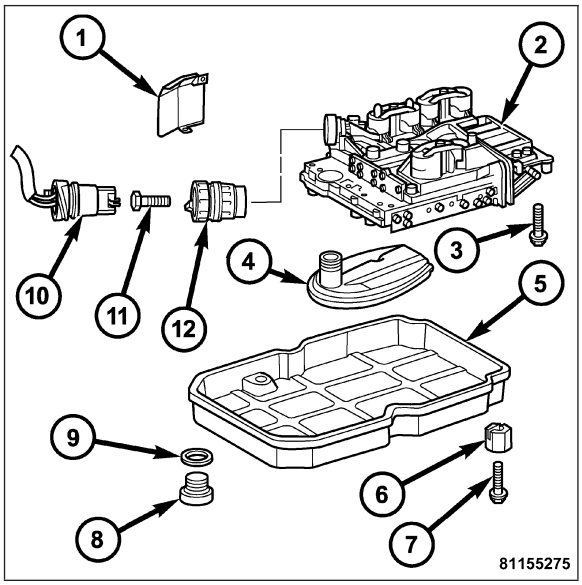

36. Install the torque converter (1). **Refer to Page 21-336**.

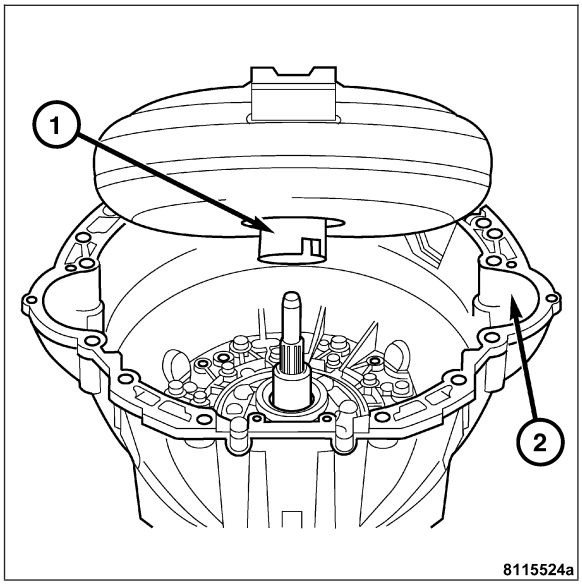

INSTALLATION

1. Inspect the rear crankshaft seal area for signs of leakage. Replace the seal if required. **Refer to Page 9-634**.
2. Ensure the torque converter is fully seated in the transmission. Mount the transmission on the transmission jack.
3. Position the transmission in the vehicle on the engine block dowels.
4. Install the transmission retaining bolts and the ground cable. Tighten the bolts to 38 N·m (28 ft. lbs.).

Note: Rotate the engine at the vibration damper bolt.

5. Install the torque converter bolts. Tighten the bolts to 50 N·m (37 ft. lbs.).
6. Install the torque converter access cover (1).
7. Install the starter. **Refer to Page 8F-44**.

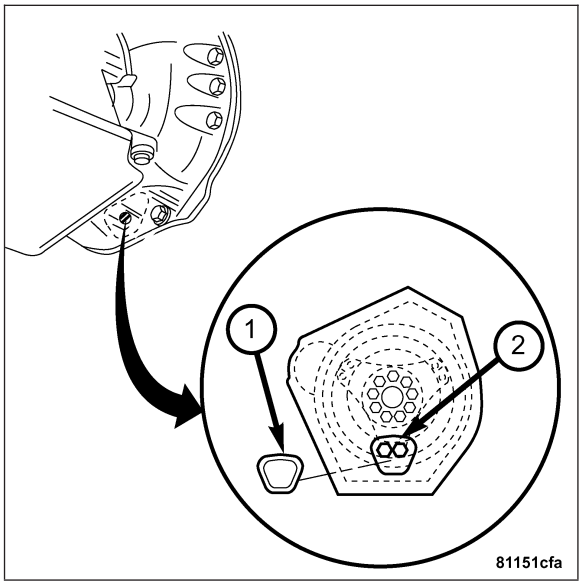

8. Check the seal on the bayonet retainer (1). Replace as required. Connect the transmission controller harness connector (2).

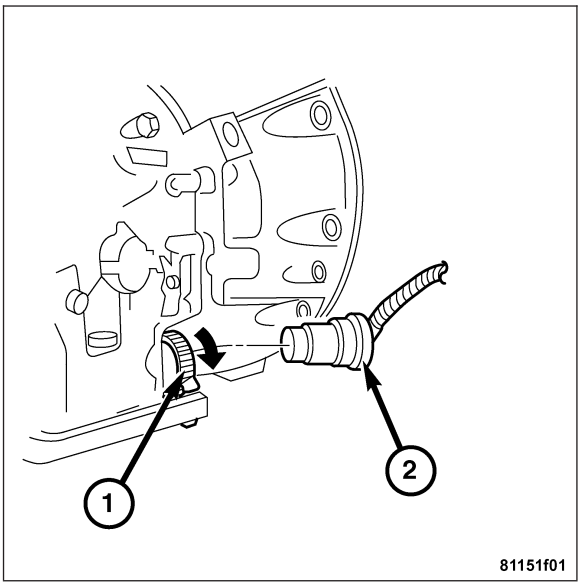

9. Install the heat shield and harness retainer with bolts (2). Tighten the bolts to 20 N·m (15 ft. lbs.).
10. Route the oxygen sensor wire harness in the retainer and connect the oxygen sensors (1).

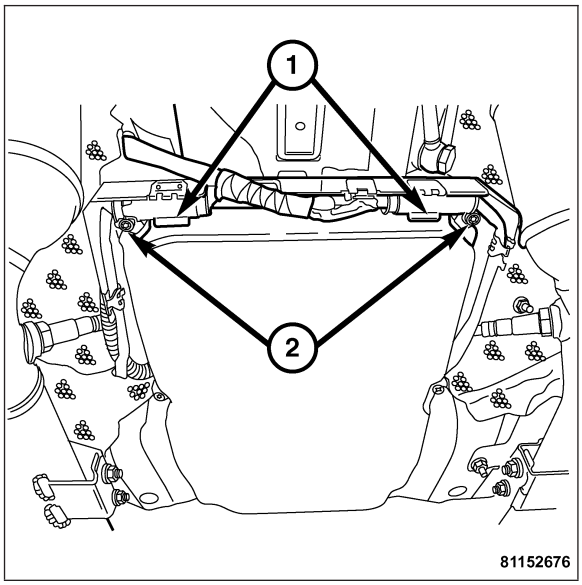

11. Install the transmission oil cooler line banjo bolt fittings (1) through the washers and into the transmission oil cooler lines. Install the fittings on the left and right sides of the transmission case. Tighten the fittings to 34 N·m (25 ft. lbs.).

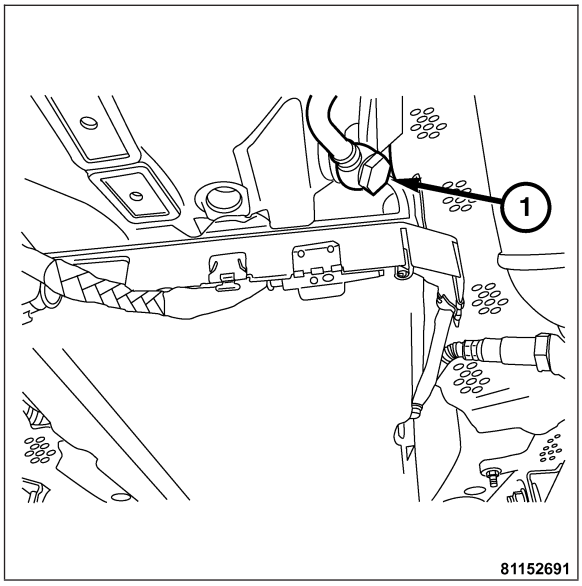

12. Install the transmission oil cooler line retainers and bolts at the left and right sides of the oil pan. Tighten the bolts to 20 N·m (15 ft. lbs.).

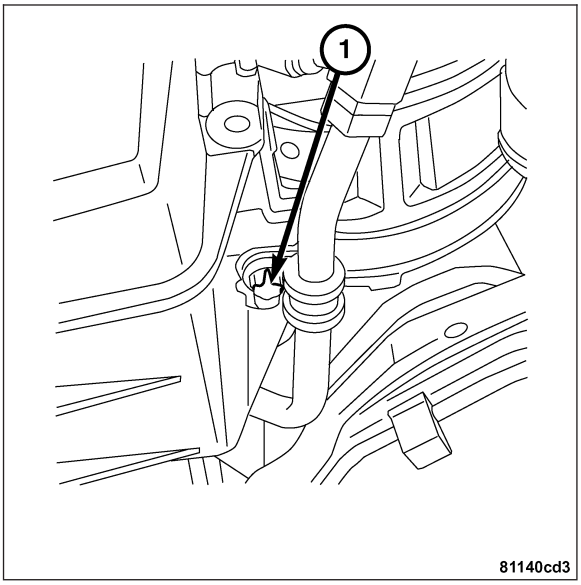

13. Attach the shift rod to the transmission shift arm and install the retaining clip (1).

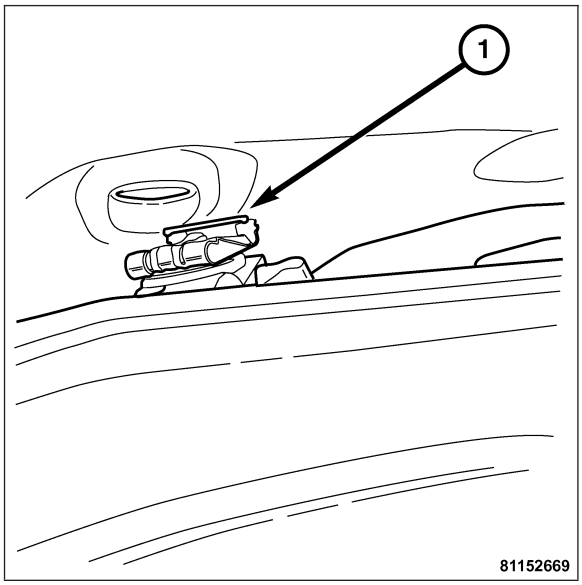

14. Install the transmission drain plug (2) with a new gasket (1). Tighten the drain plug to 20 N·m (15 ft. lbs.).
15. Install the propeller shift. **Refer to Page 3-28**.

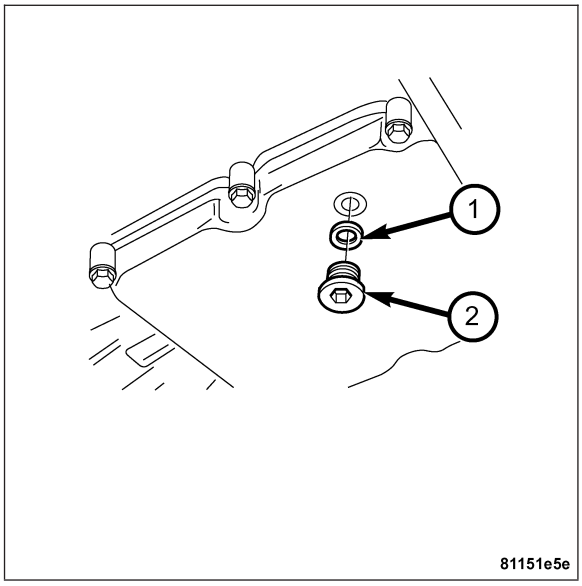

16. Install the lower splash shield and screws (1). Tighten the screws to 5 N·m (44 in. lbs.).
17. Lower the vehicle.
18. Connect the negative battery cable.
19. Fill the transmission to the specified level with the specified transmission fluid.
20. Start the engine and check for leaks.
21. Check the transmission fluid level using Special Tool 8863–A.

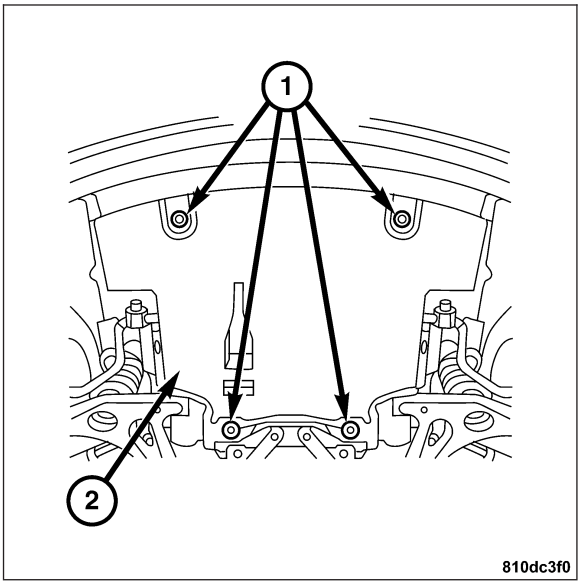

SCHEMATICS AND DIAGRAMS

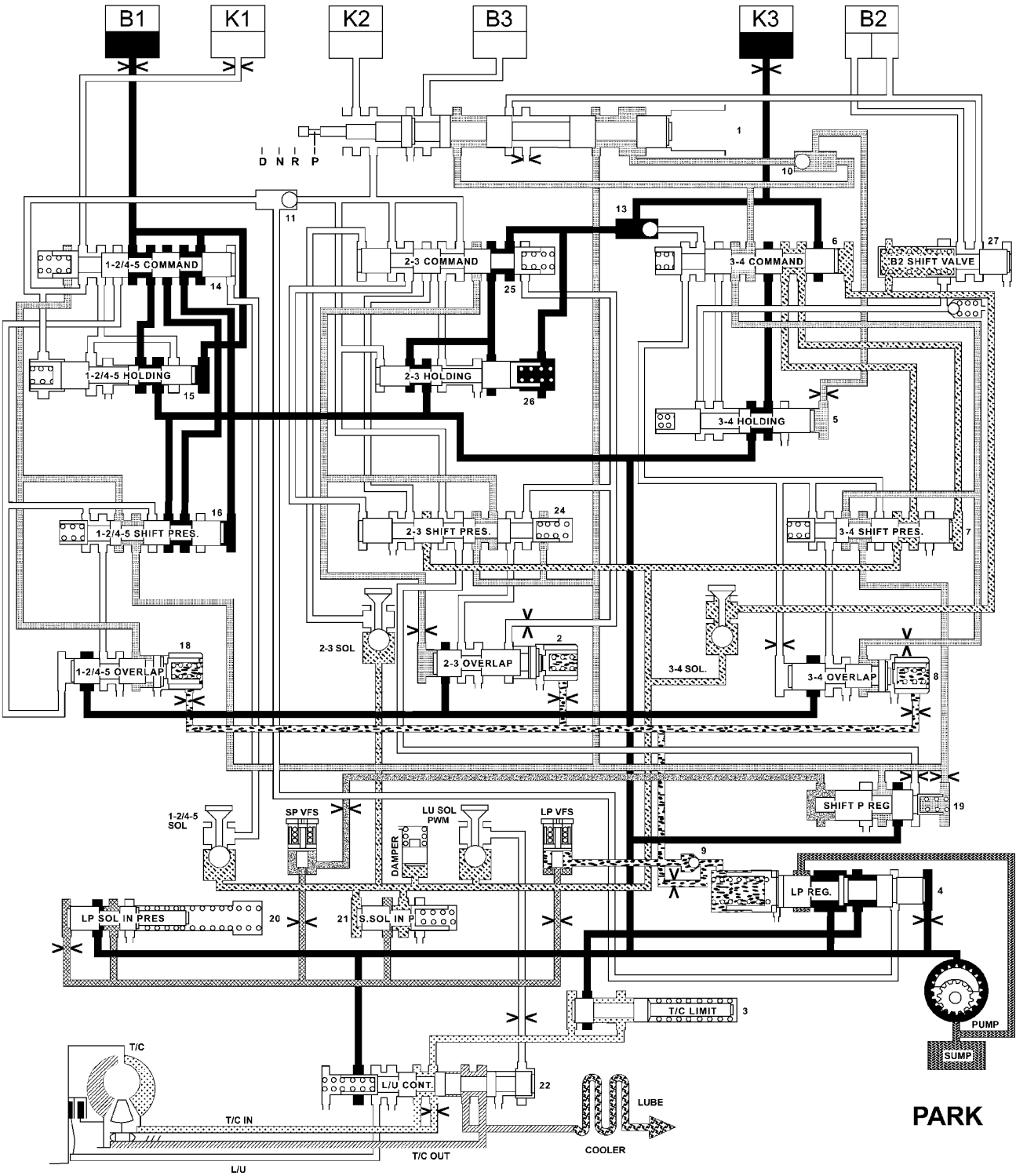

810baf1a

HYDRAULIC FLOW IN PARK

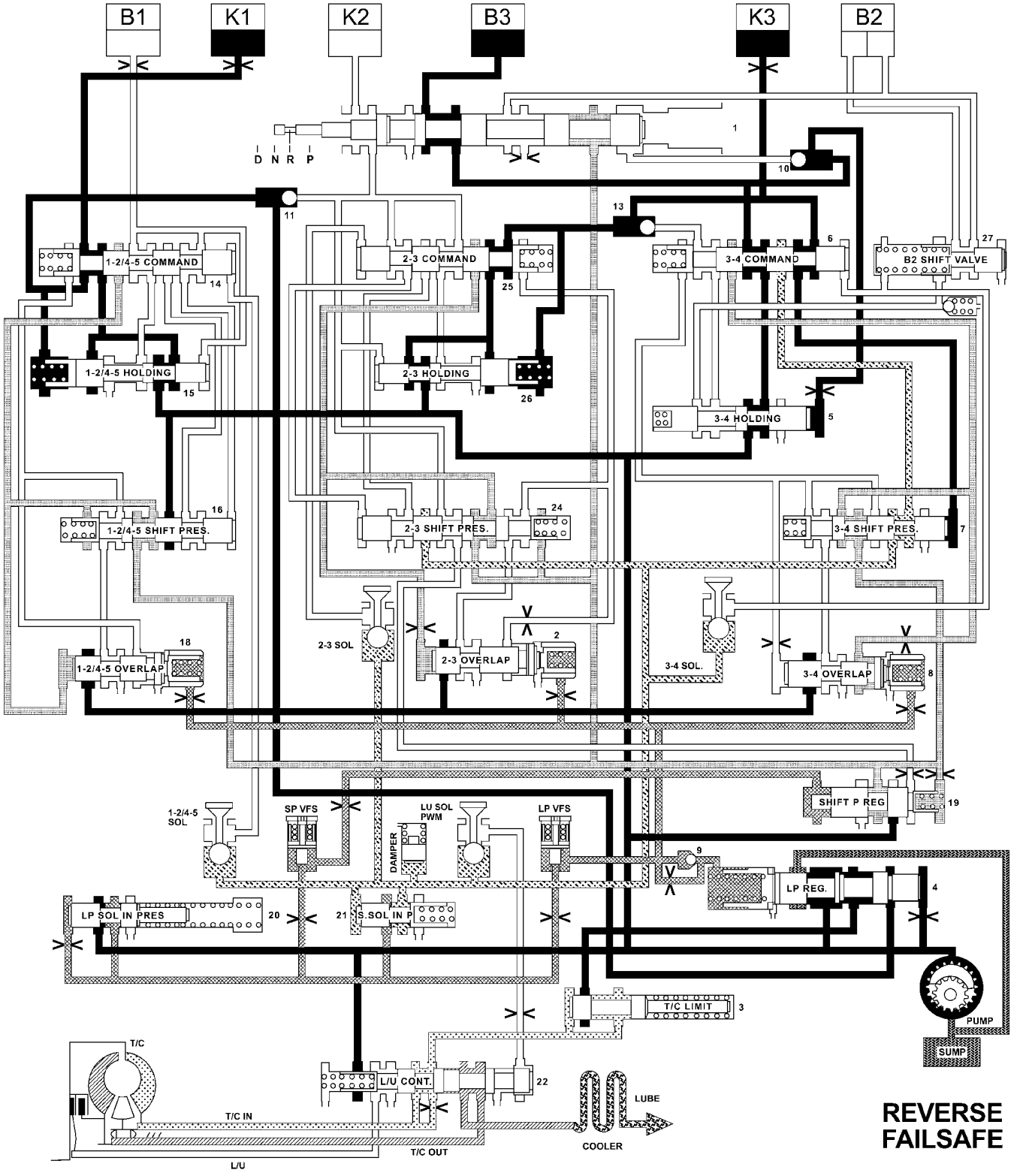

810bae77

HYDRAULIC FLOW IN REVERSE - FAILSAFE

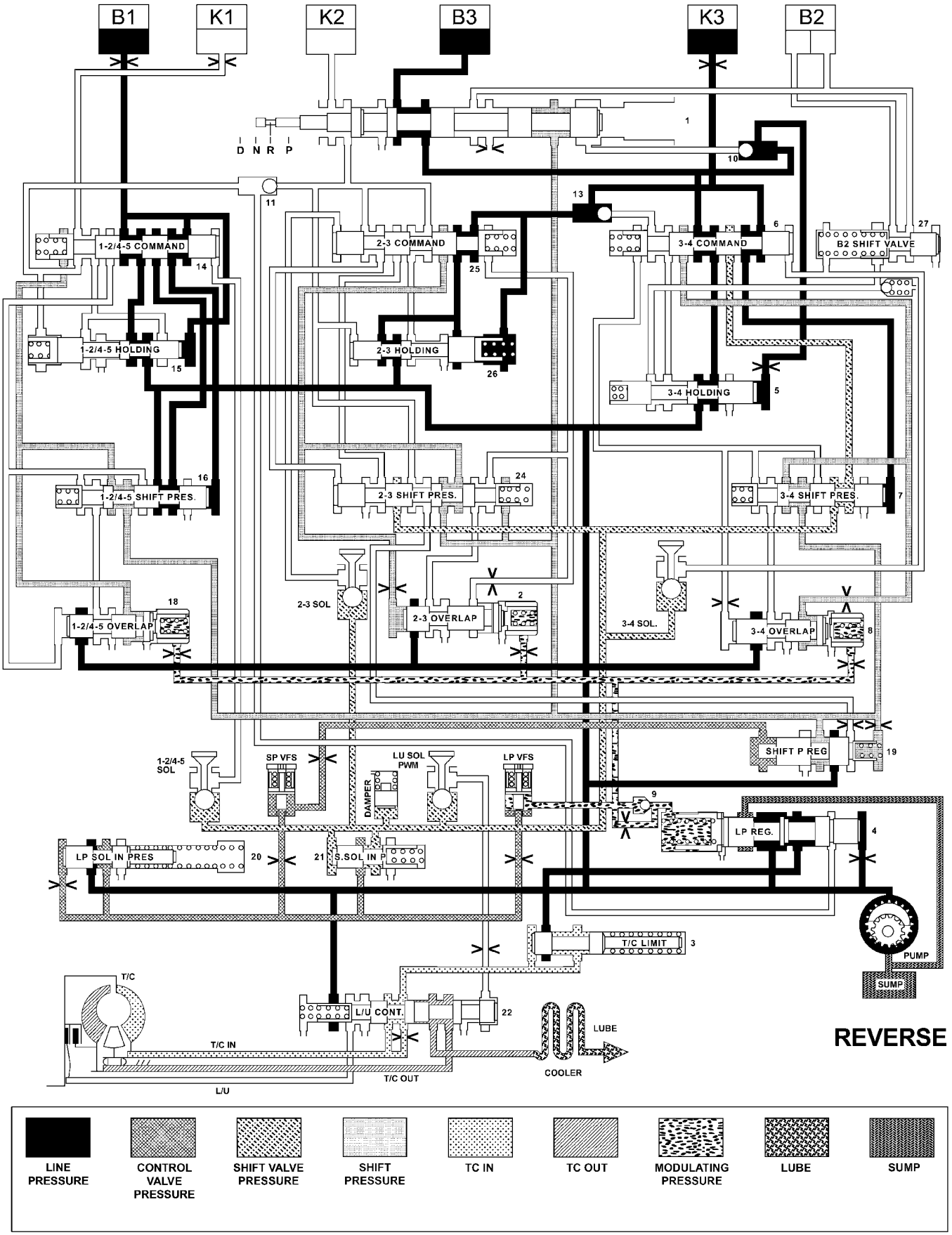

810baf23

HYDRAULIC FLOW IN REVERSE

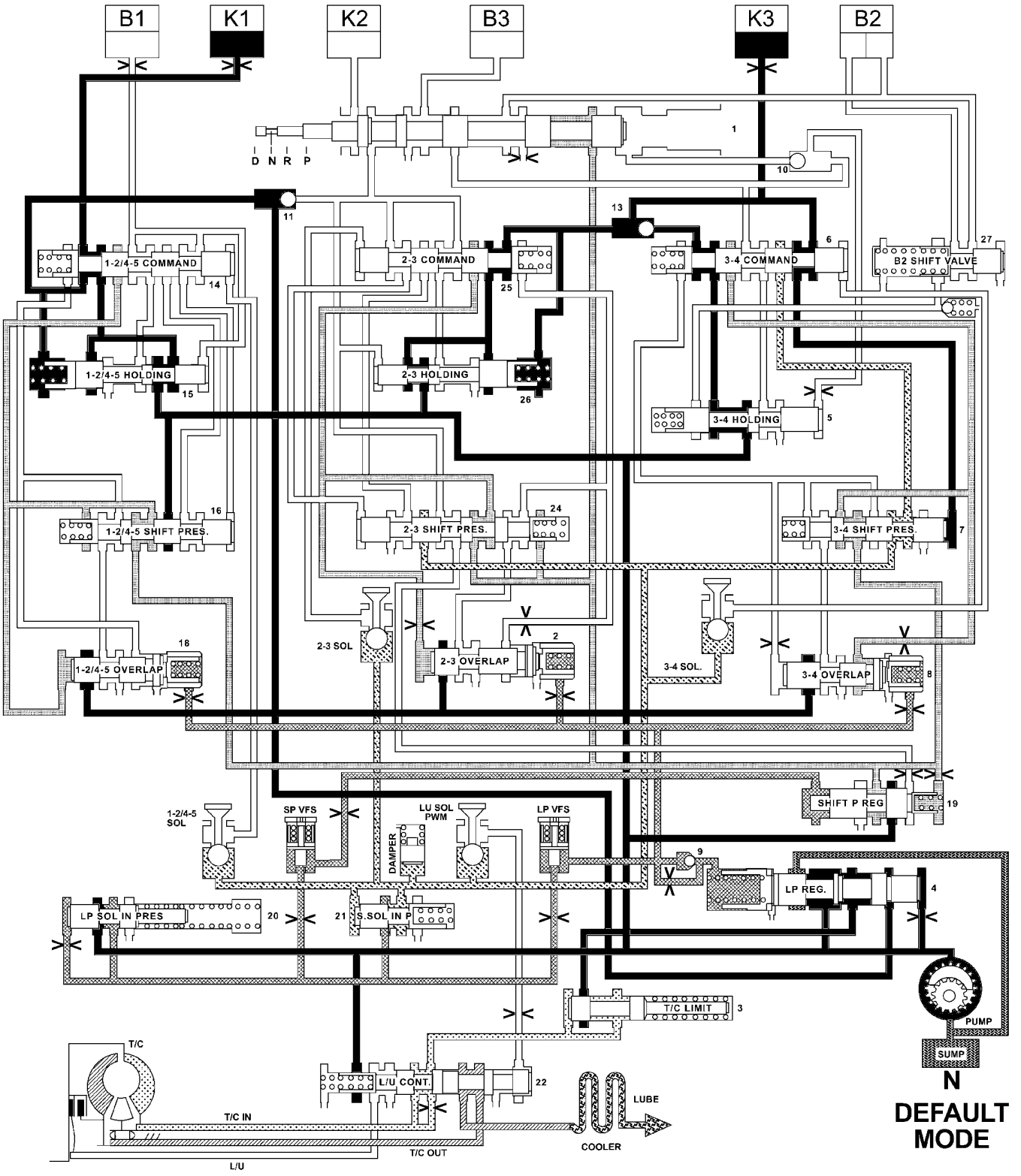

810baf1e

HYDRAULIC FLOW IN NEUTRAL - DEFAULT

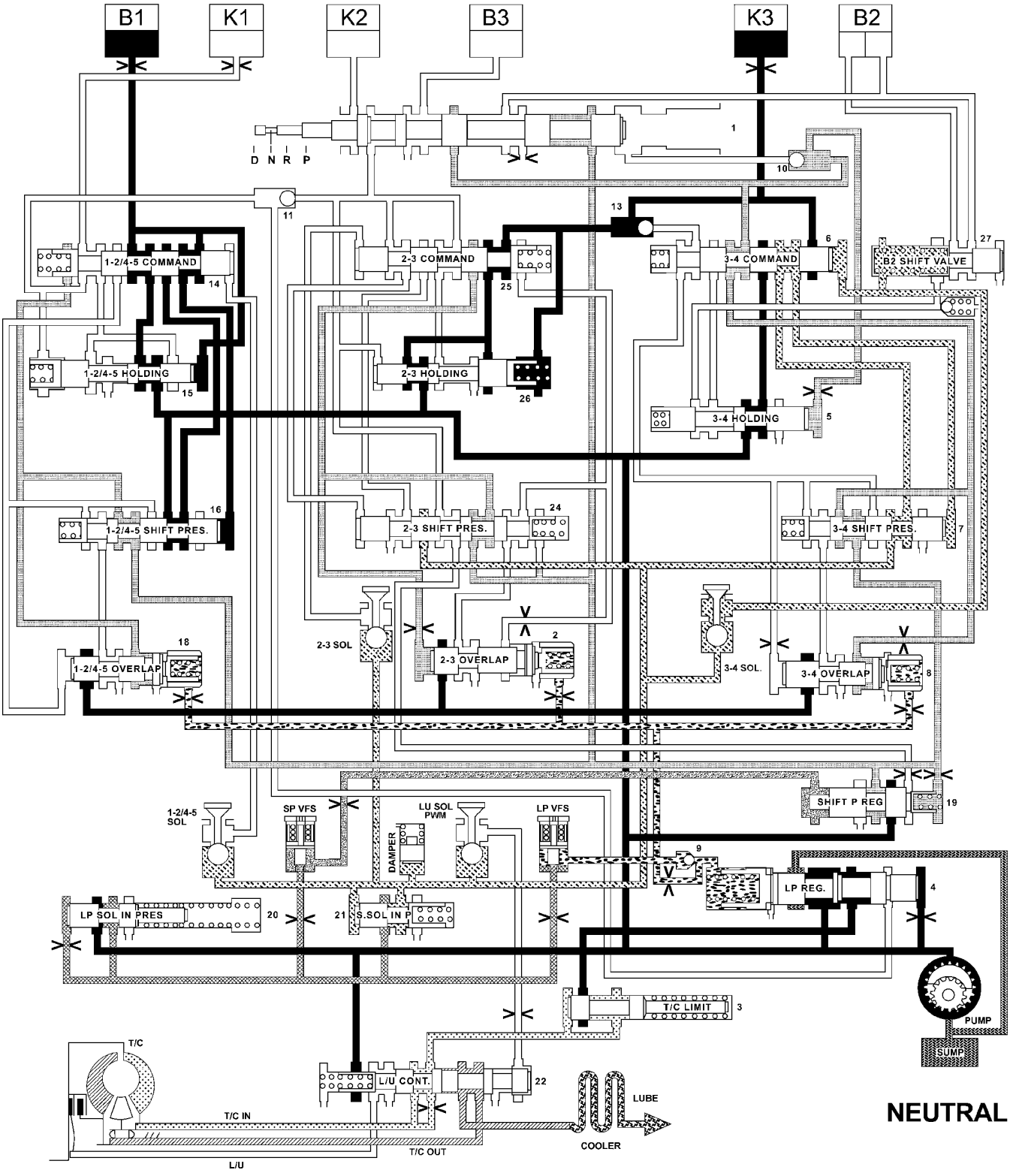

810baf59

HYDRAULIC FLOW IN NEUTRAL

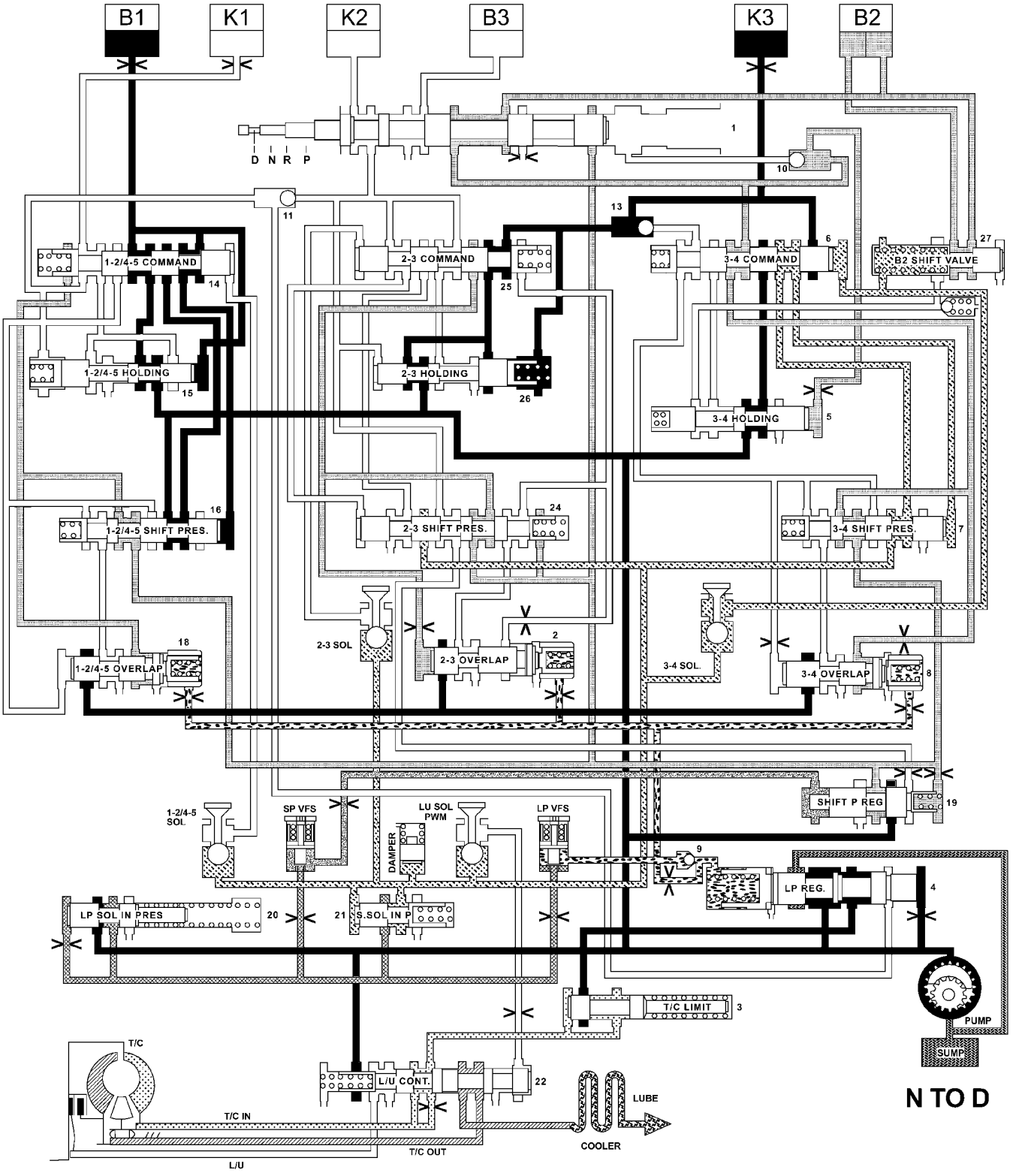

810baf80

HYDRAULIC FLOW IN NEUTRAL TO DRIVE

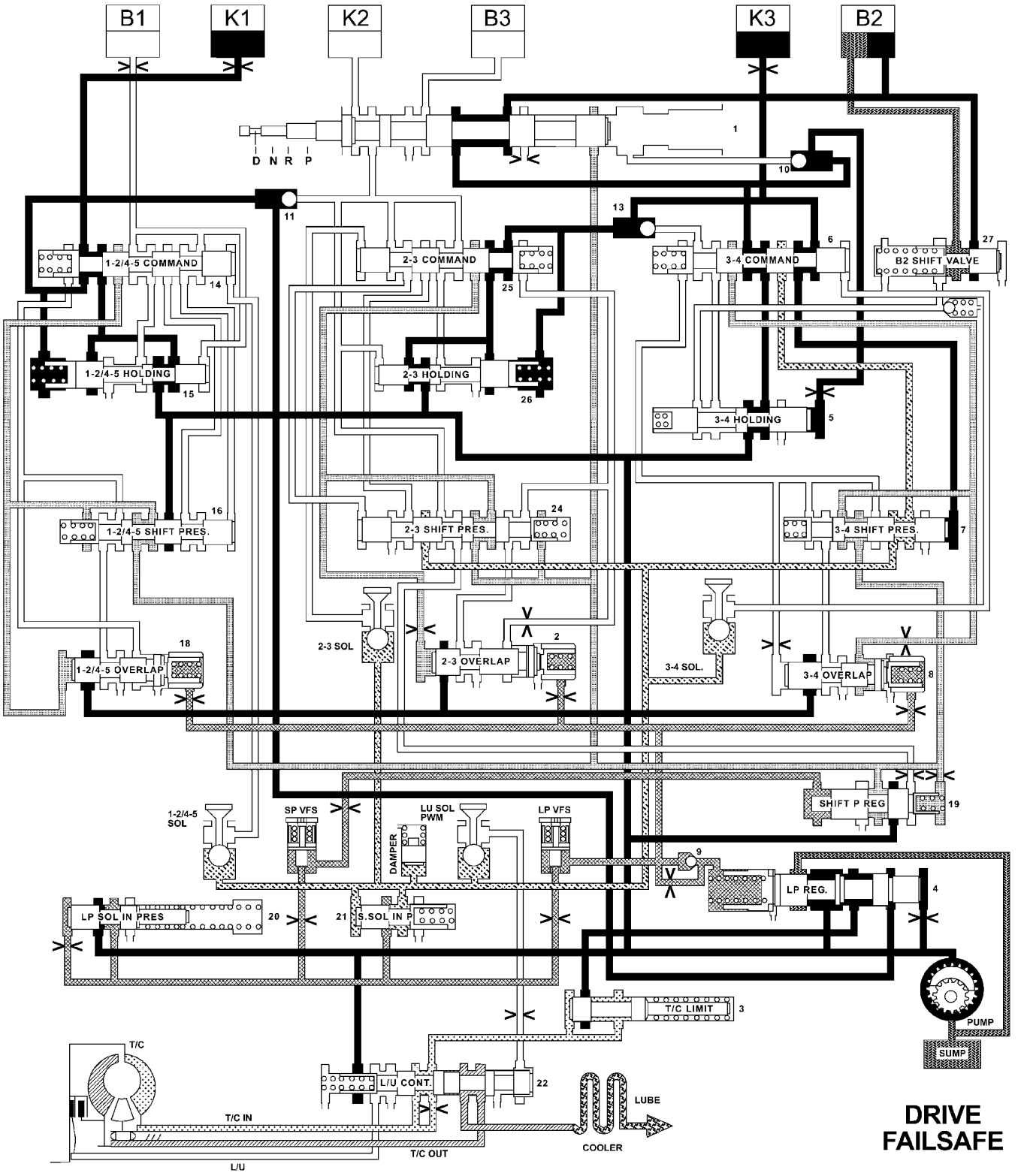

810bae73

HYDRAULIC FLOW IN DRIVE - FAILSAFE

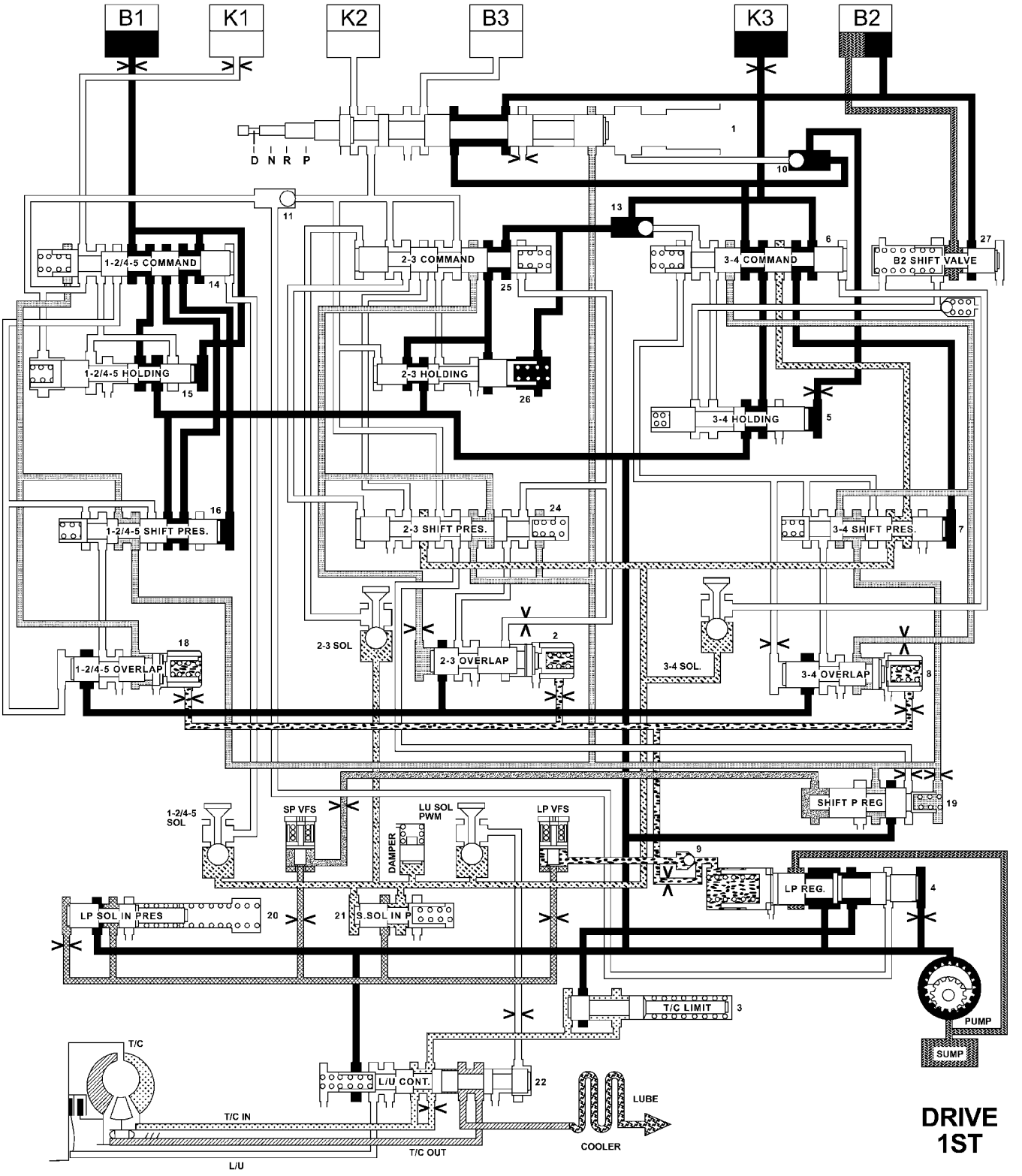

810baf9b

HYDRAULIC FLOW IN DRIVE - FIRST

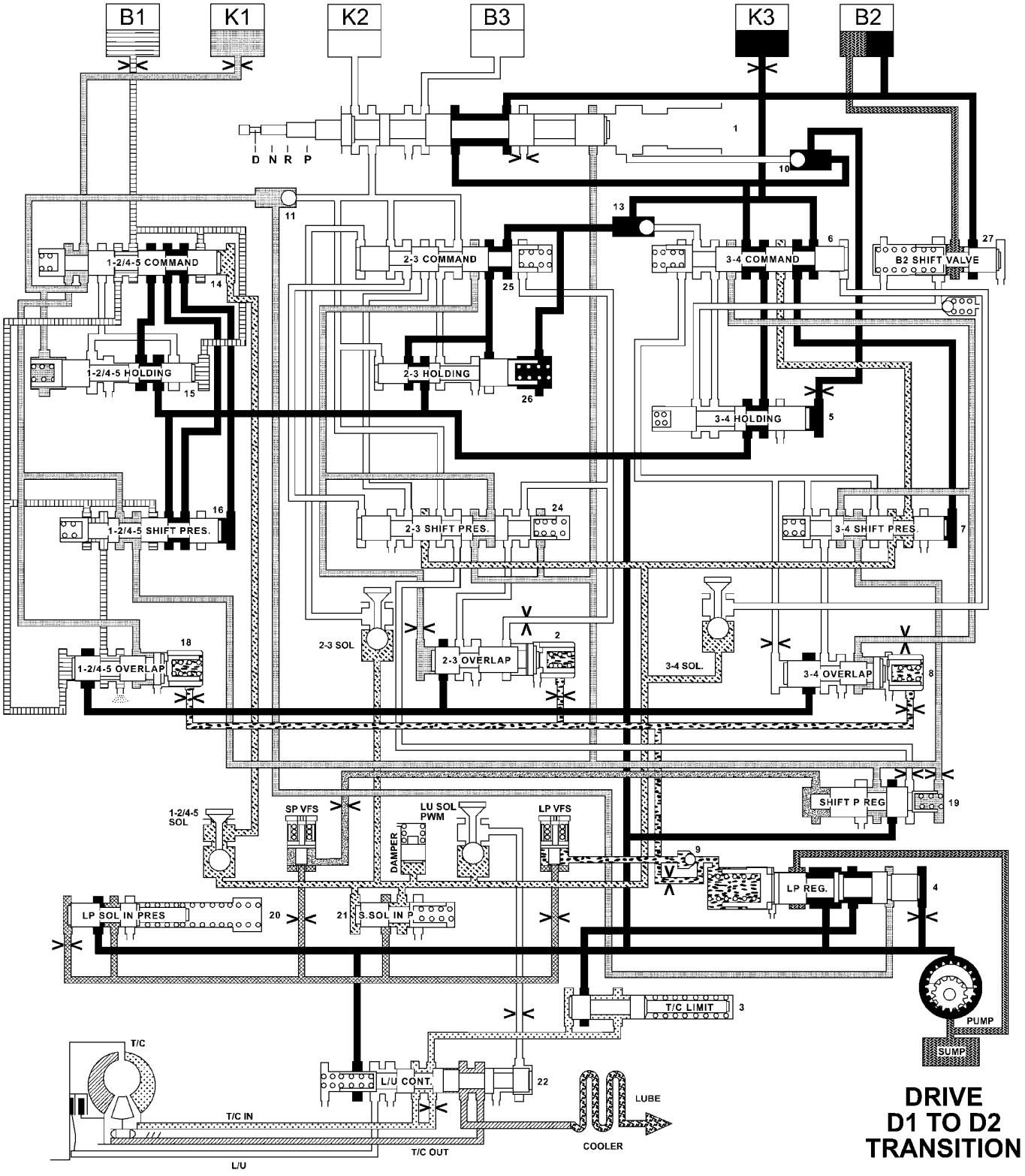

810bafa9

HYDRAULIC FLOW IN DRIVE - FIRST

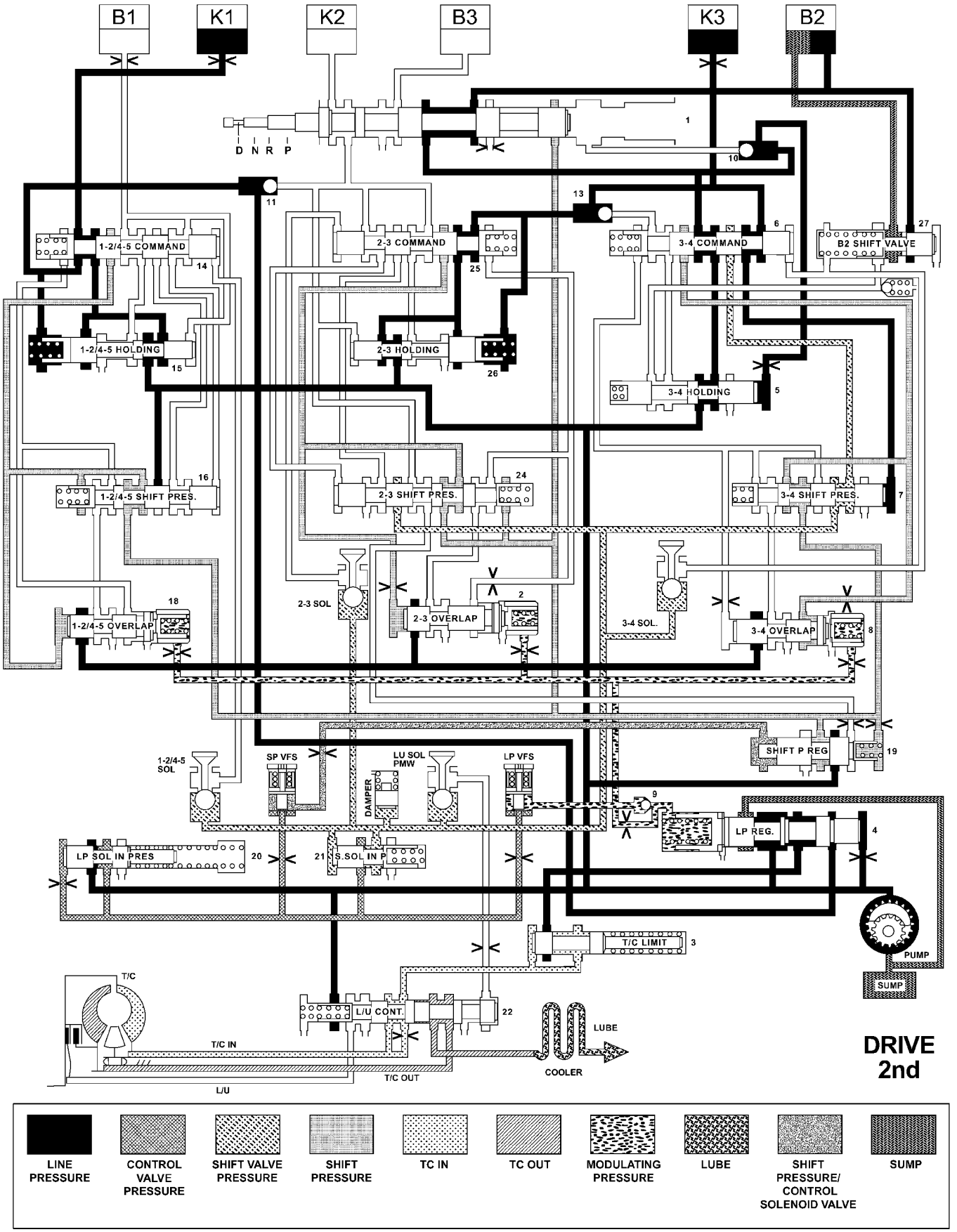

810bafb9

HYDRAULIC FLOW IN DRIVE - SECOND

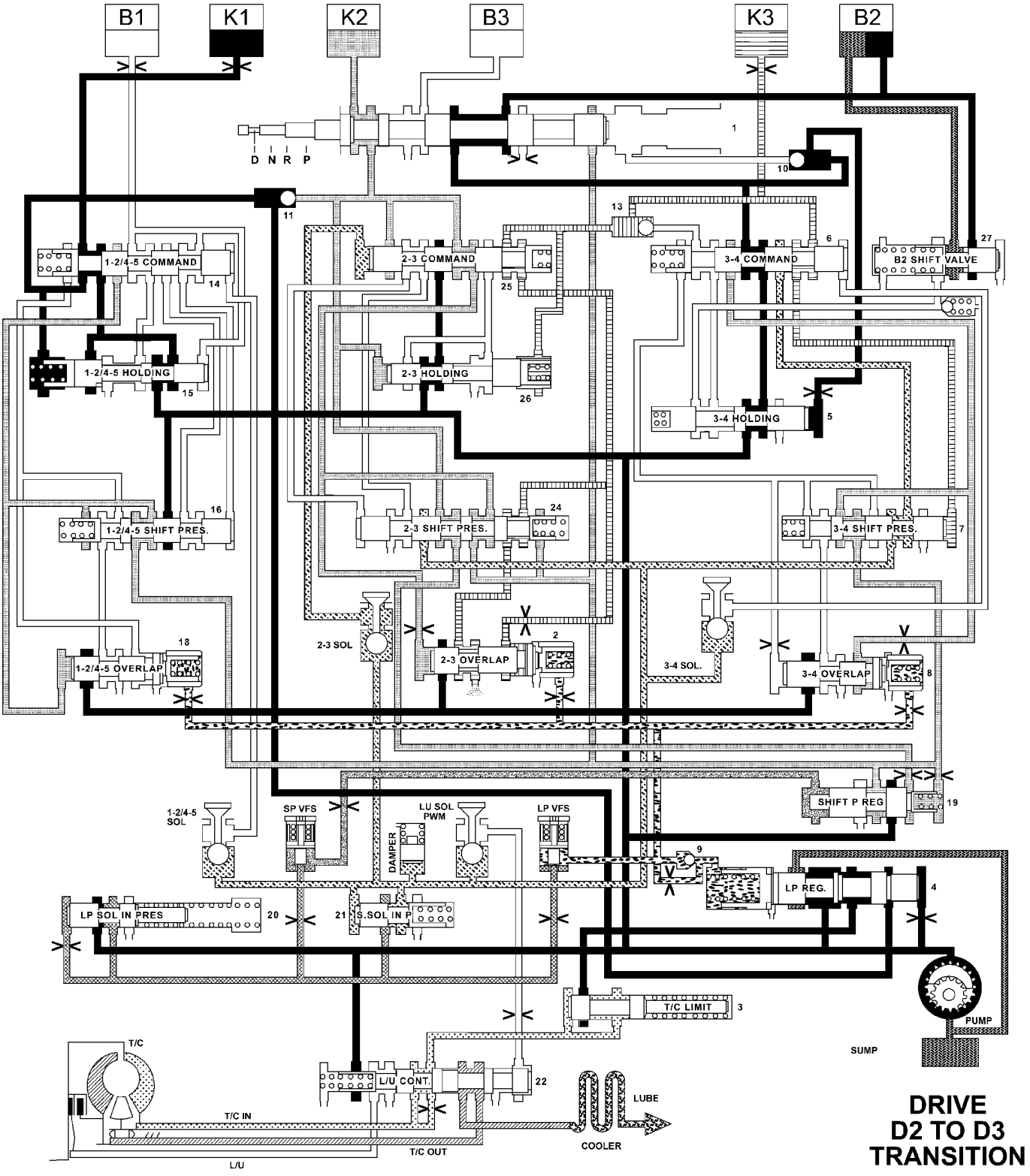

810baff2

HYDRAULIC FLOW IN DRIVE - SECOND

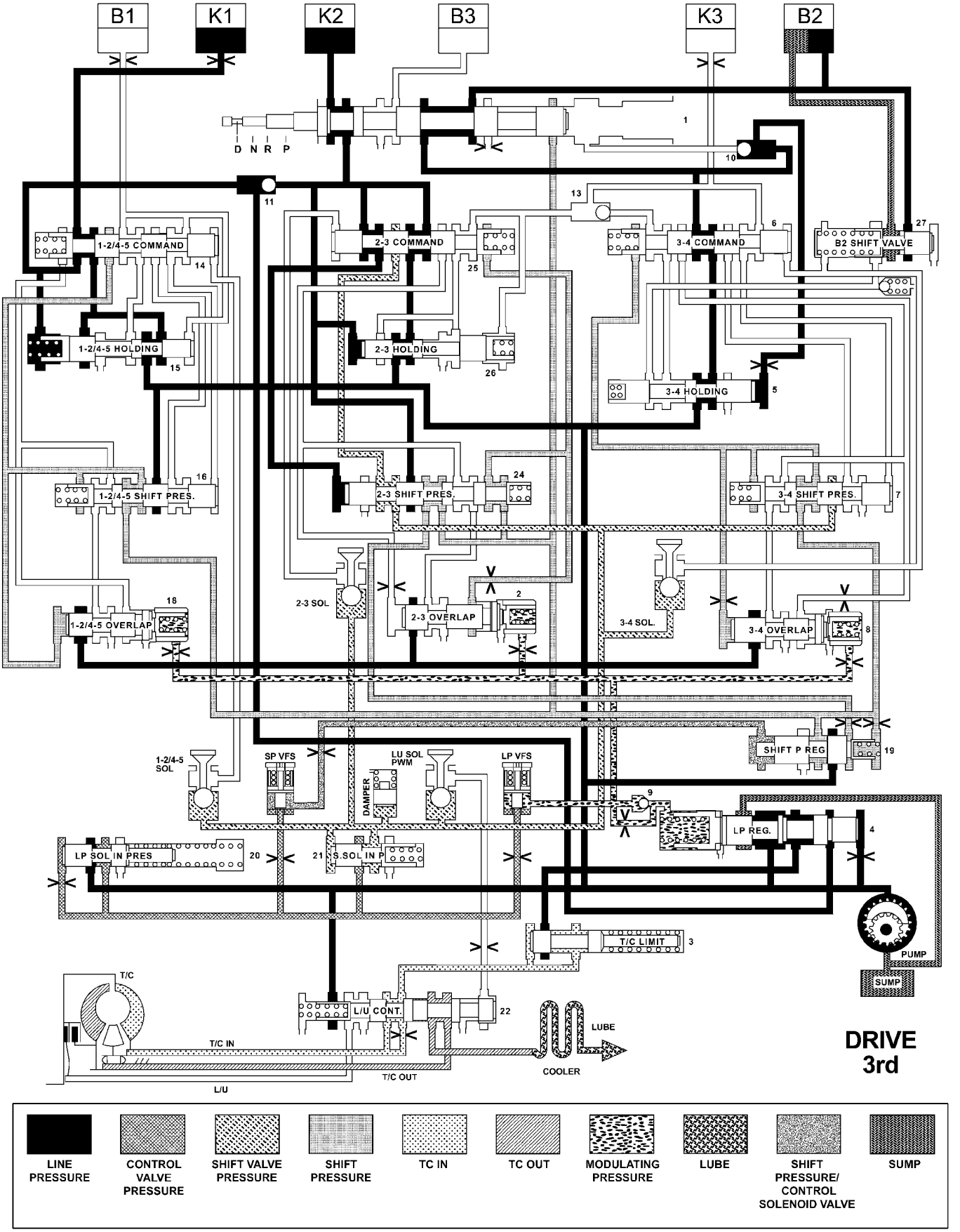

810bb0bb

HYDRAULIC FLOW IN DRIVE - THIRD

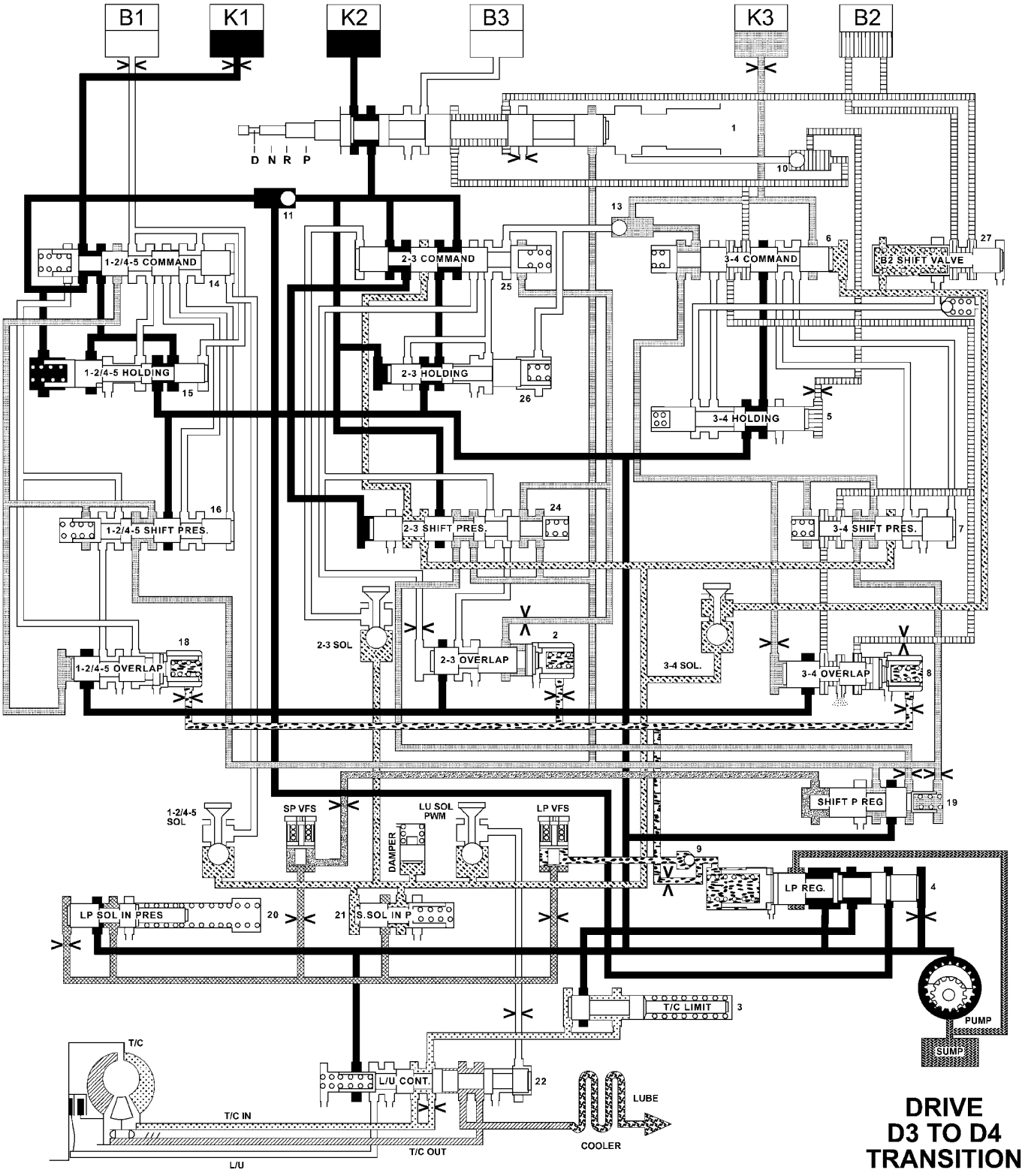

810bb0e0

HYDRAULIC FLOW IN DRIVE - THIRD

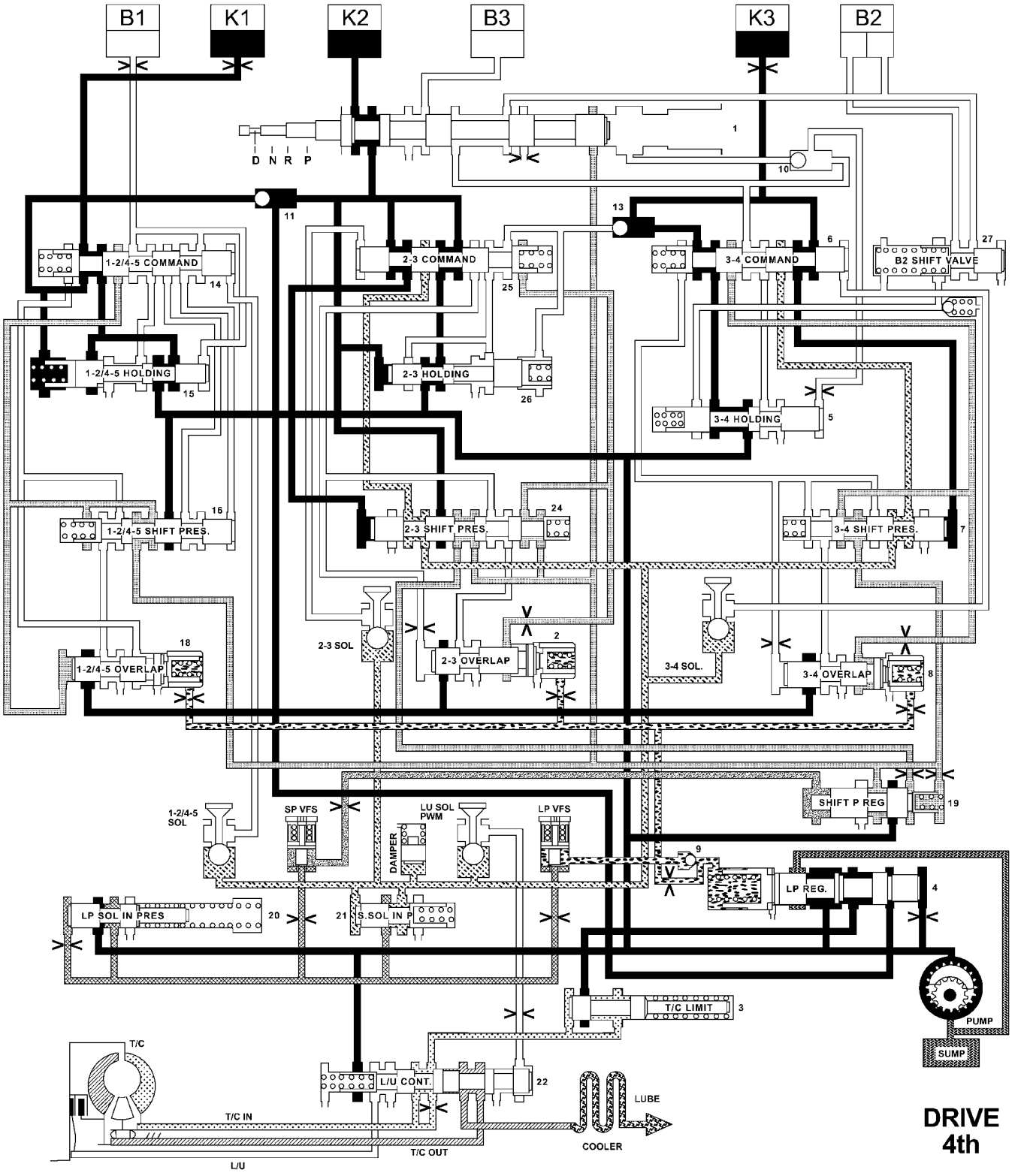

810bb1f5

HYDRAULIC FLOW IN DRIVE - FOURTH

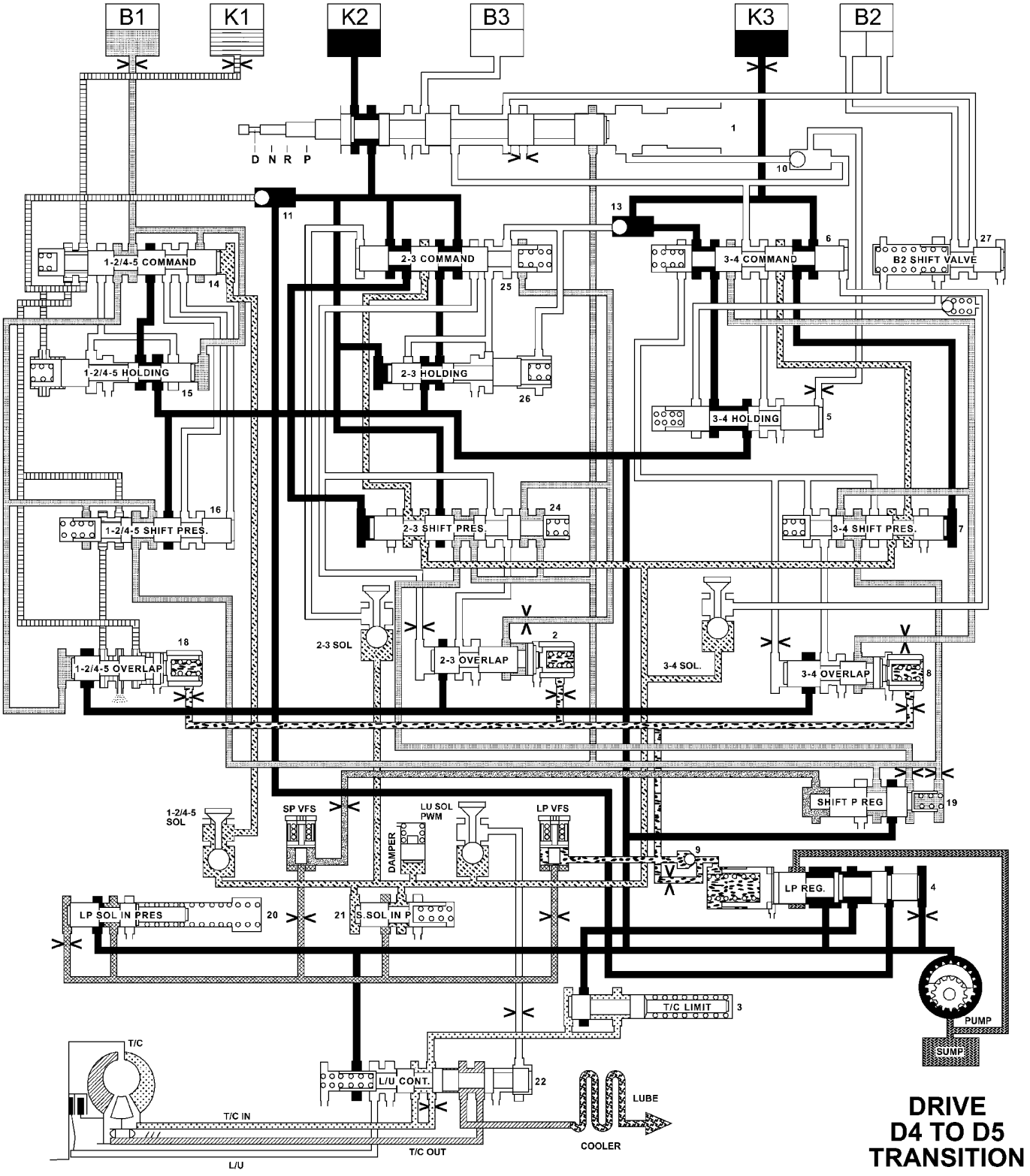

810bb20a

HYDRAULIC FLOW IN DRIVE - FOURTH

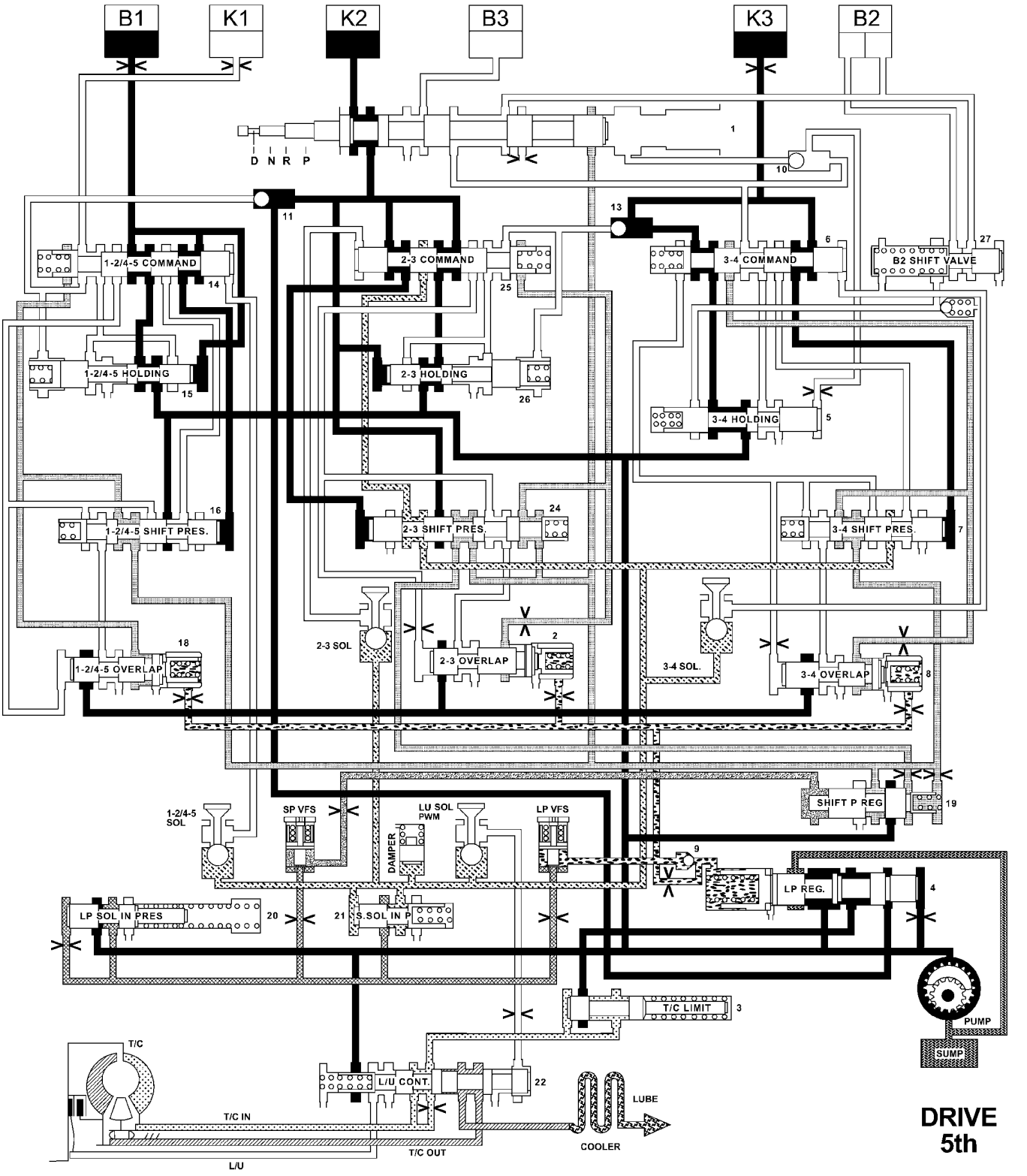

810bb210

HYDRAULIC FLOW IN DRIVE - FIFTH

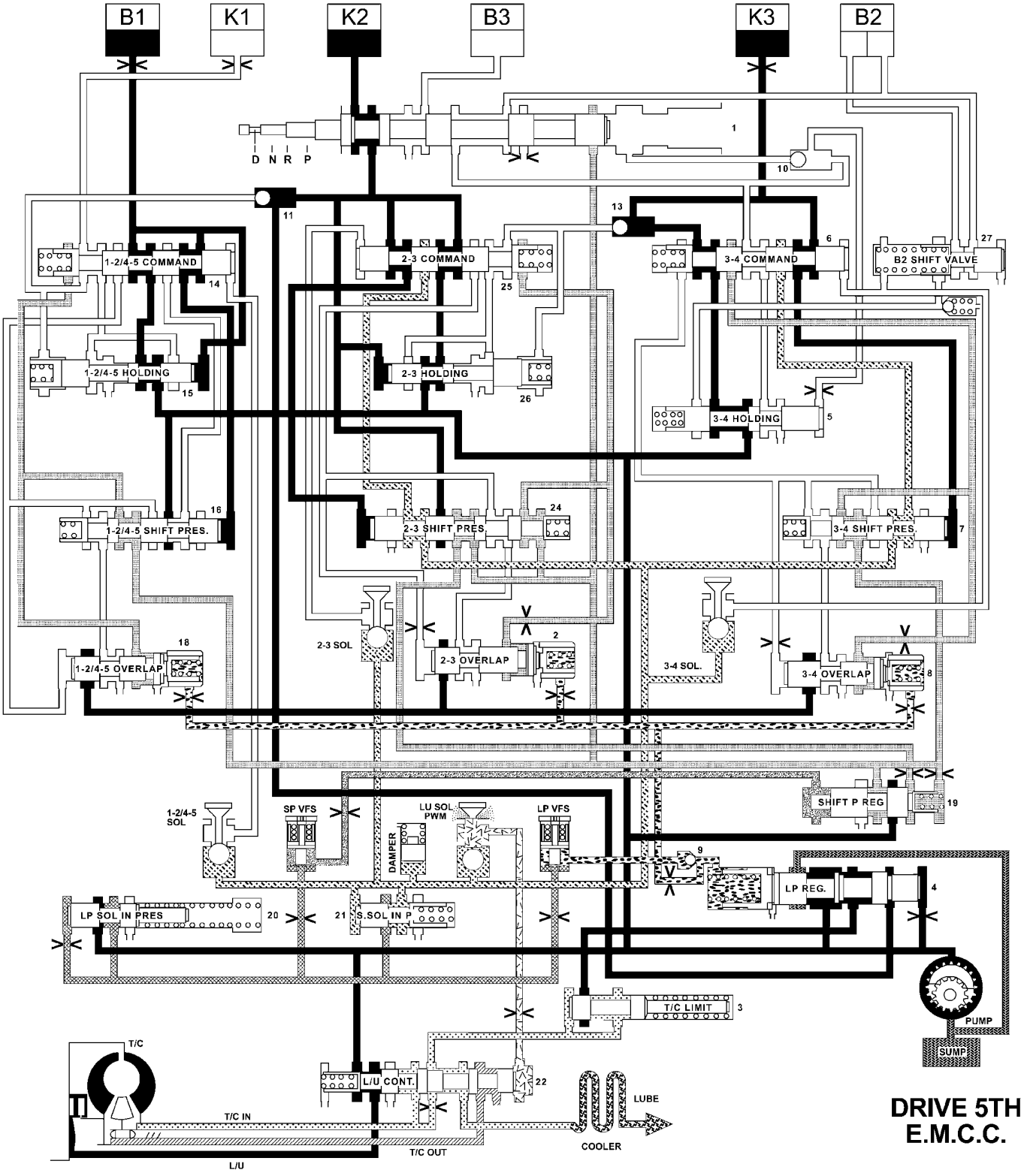

810bb235

HYDRAULIC FLOW IN DRIVE - FIFTH

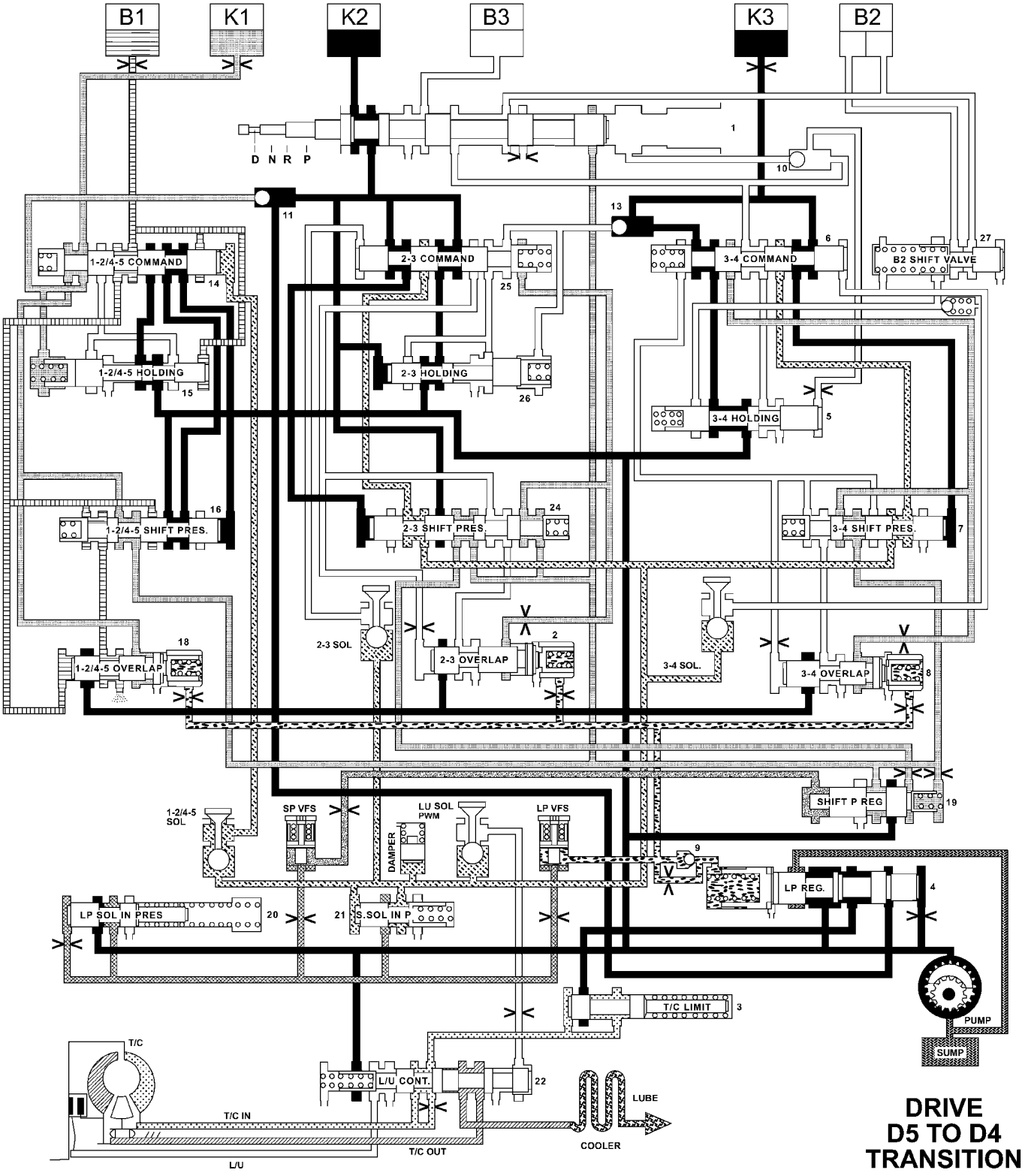

810bb261

HYDRAULIC FLOW IN DRIVE - FIFTH

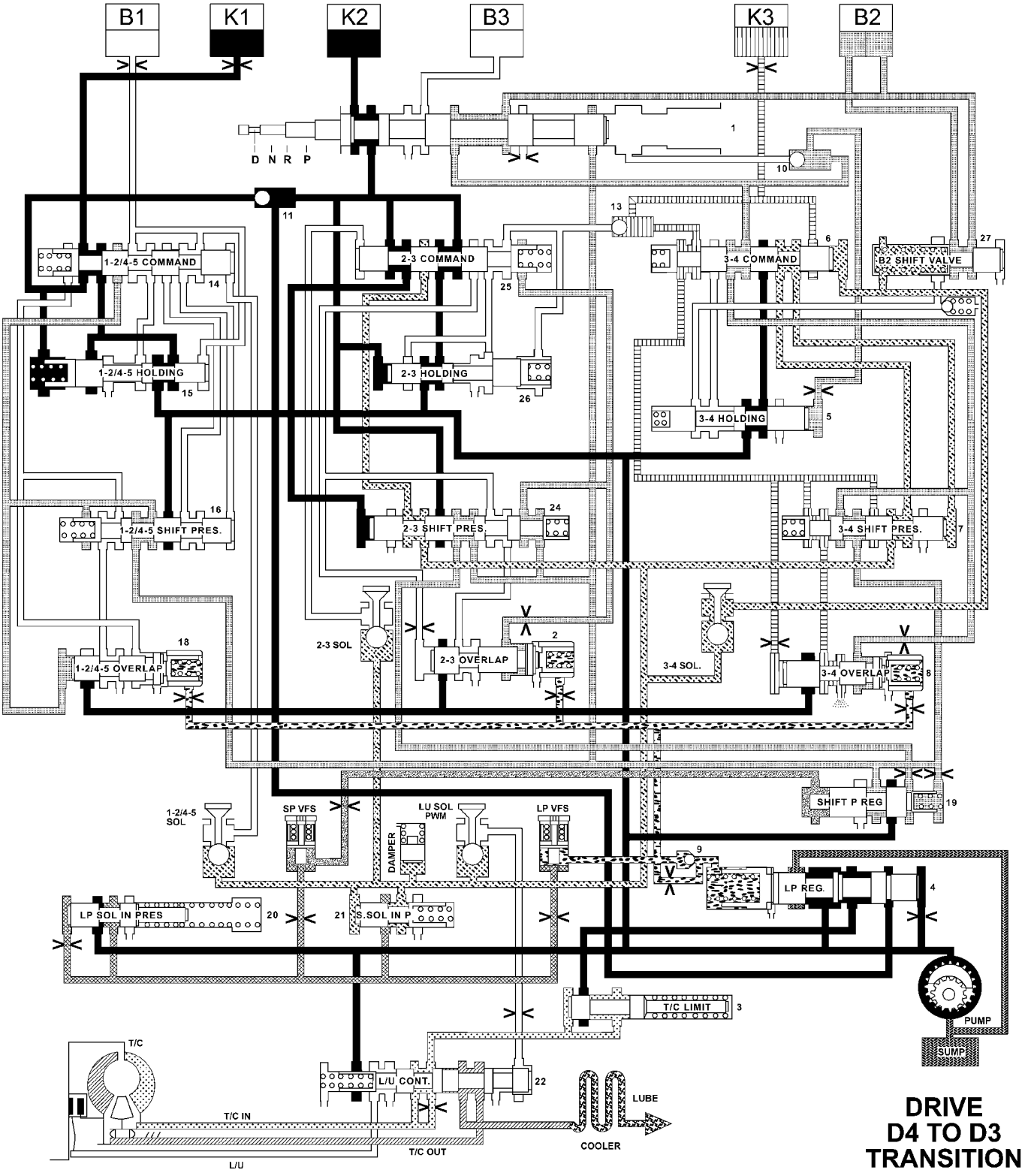

810bb2e7

HYDRAULIC FLOW IN DRIVE - FOURTH

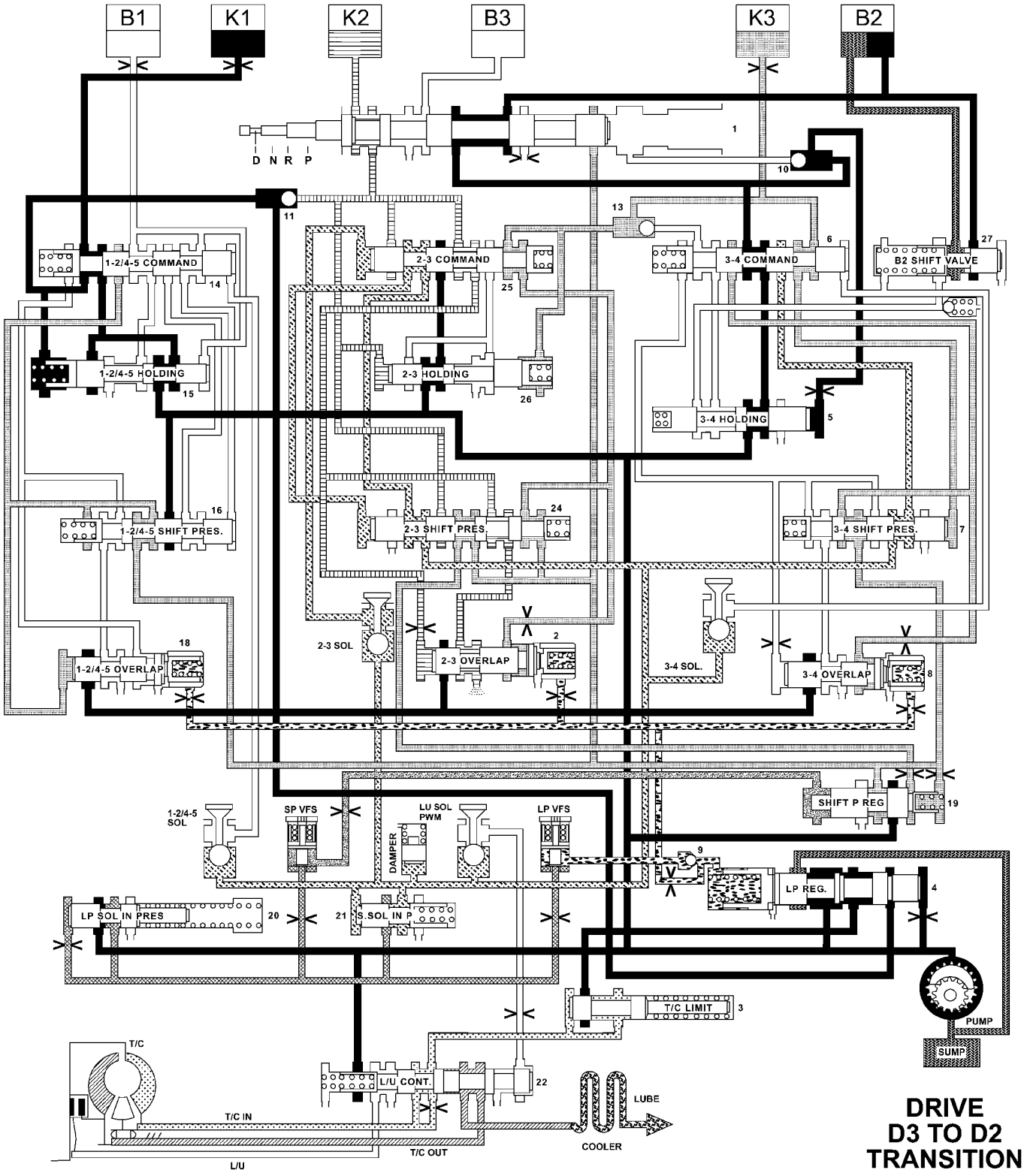

810bb2ec

HYDRAULIC FLOW IN DRIVE - THIRD

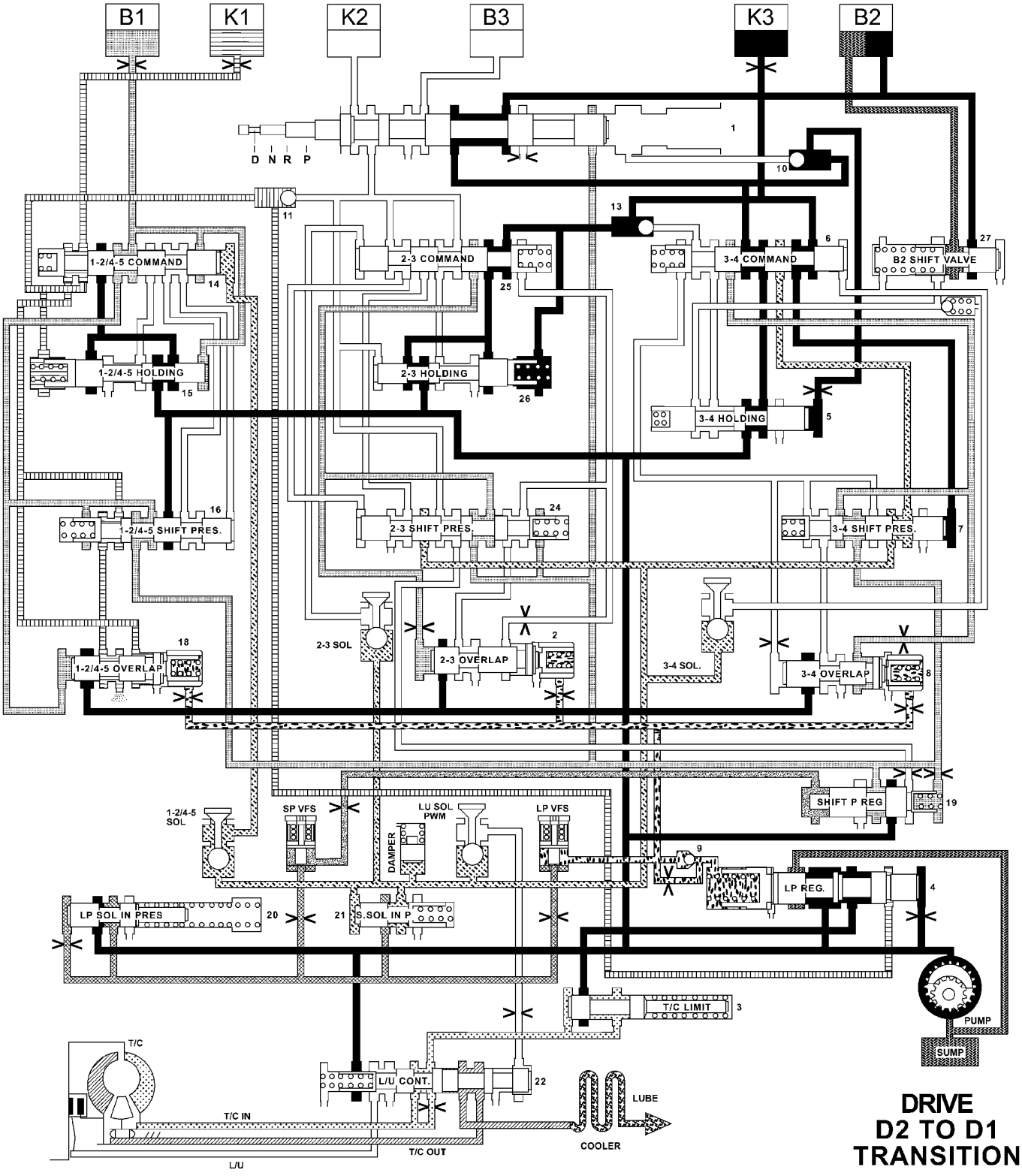

810bb2f7

HYDRAULIC FLOW IN DRIVE - SECOND

SPECIFICATIONS - NAG1 AUTOMATIC TRANSMISSION

GEAR RATIOS

1ST	3.59:1
2ND	2.19:1
3RD	1.41:1
4TH	1.00:1
5TH	0.83:1
REVERSE	3.16:1

SPECIFICATIONS

COMPONENT		METRIC (mm)	INCH (in.)
Geartrain End-play		0.3-0.5	0.012-0.020
Geartrain End-play Shim		0.2, 0.3, 0.4, and 0.5	0.008, 0.012, 0.016, 0.020
Rear Planetary Gear Set End-play		0.15-0.6	0.006-0.024
Rear Planetary Gear Set Snap-rings		3.0, 3.4, and 3.7	0.118, 0.134, 0.146
B1 Clutch Clearance	2 Disc	2.3-2.7	0.091-0.106
	3 Disc	2.7-3.1	0.106-0.122
	4 Disc	3.0-3.4	0.118-0.134
B1 Clutch Snap-rings		2.6, 2.9, 3.2, 3.5, 3.8, and 4.1	0.102, 0.114, 0.126, 0.138, 0.150, 0.162
B2 Clutch Clearance	4 Disc	1.9-2.3	0.075-0.091
	5 Disc	2.0-2.4	0.079-0.095
B2 Clutch Snap-rings		2.9, 3.2, 3.5, 3.8, and 4.1	0.114, 0.126, 0.138, 0.150, 0.162
B3 Clutch Clearance		1.0-1.4	0.039-0.055
B3 Clutch Snap-rings		3.2, 3.5, 3.8, 4.1, 4.4, and 4.7	0.126, 0.138, 0.150, 0.162, 0.173, 0.185
K1 Clutch Clearance	3 Disc	2.7-3.1	0.106-0.122
	4 Disc	3.0-3.4	0.118-0.134
	5 Disc	3.3-3.7	0.13-0.146
	6 Disc	3.6-4.0	0.142-0.158
K1 Clutch Snap-rings		2.6, 2.9, 3.2, 3.5, 3.8, and 4.1	0.102, 0.114, 0.126, 0.138, 0.150, 0.162
K2 Clutch Clearance	3 Disc	2.3-2.7	0.091-0.106
	4 Disc	2.4-2.8	0.095-0.110
	5 Disc	2.5-2.9	0.099-0.114
	6 Disc	2.7-3.1	0.106-0.122
K2 Clutch Snap-rings		2.3, 2.6, 2.9, 3.2, 3.5, and 3.8	0.091, 0.102, 0.114, 0.126, 0.138, 0.150
K3 Clutch Clearance	3 Disc	2.3-2.7	0.091-0.106
	4 Disc	2.4-2.8	0.095-0.110
	5 Disc	2.5-2.9	0.099-0.114
K3 Clutch Snap-rings		2.0, 2.3, 2.6, 2.9, 3.2, and 3.5	0.079, 0.091, 0.102, 0.114, 0.126, 0.138

TORQUE SPECIFICATIONS

DESCRIPTION	N·m	Ft. Lbs.	In. Lbs.
Bolt, B2 Clutch Carrier	16	-	141
Bolt, B1 Carrier to Converter Housing	10	-	88.5
Nut, Propeller Flange	120	88.5	-
Bolt, Electrohydraulic Unit	8	-	71
Bolt, Transmission Housing to Converter Housing	20	-	177
Bolts, Oil Pan	8	-	71
Screws, Valve Body/Housing Side Cover	4	-	35
Bolt, Shift Plate	8	-	71
Bolt, Solenoid Leaf Spring	8	-	71
Plug, Oil Pan Drain	20	-	177
Nut, Shifter Mechanism to Floor Pan	7	-	65

SPECIAL TOOLS - NAG1 AUTOMATIC TRANSMISSION

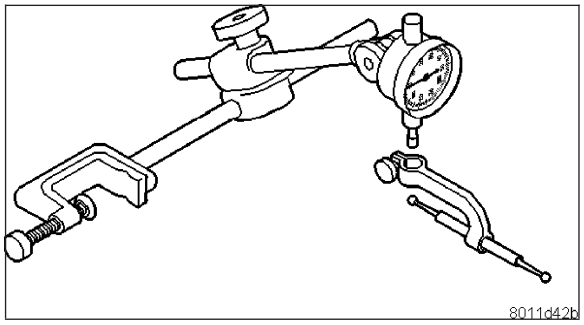

C-3339 DIAL INDICATOR

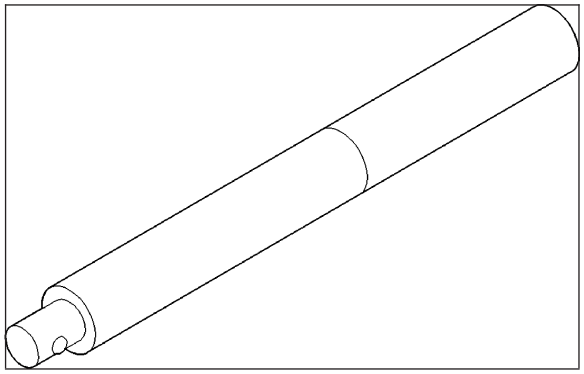

C-4171 HANDLE

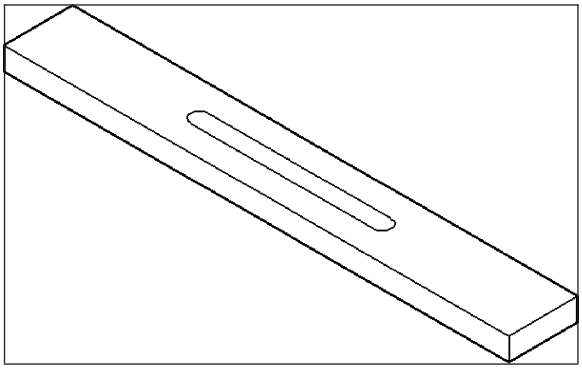

6311 BAR, GAUGE

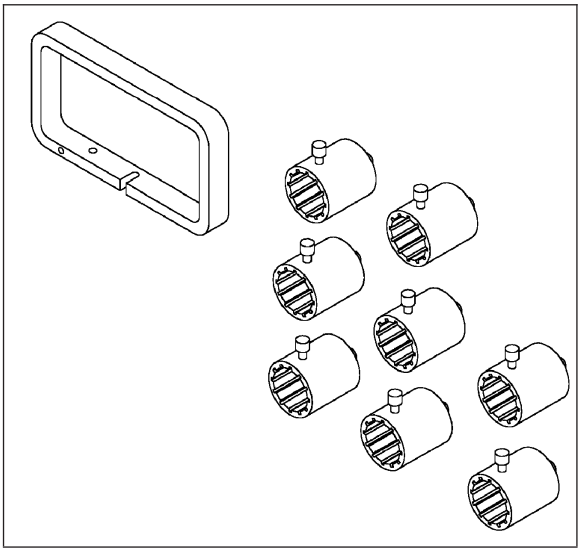

8266 END PLAY SET

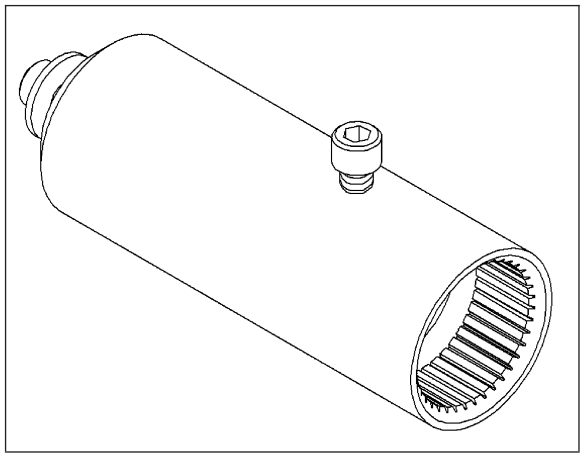

82 ADAPTER, GEARTRAIN END-PLAY

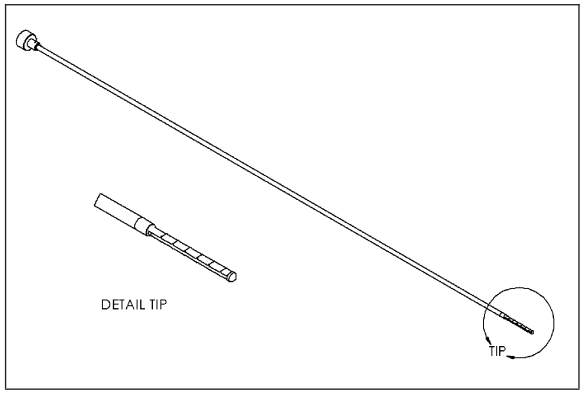

8863A DIPSTICK

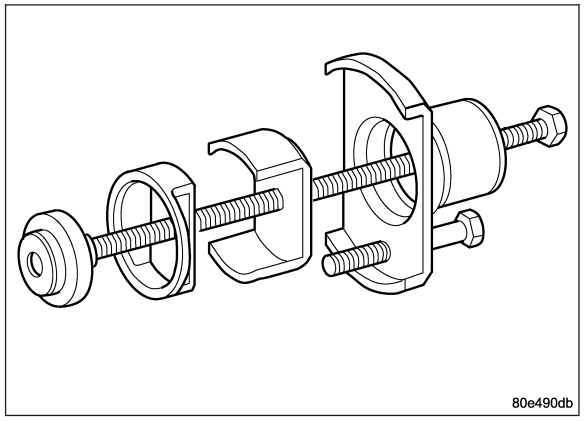

8900 Compressor, Multi-use Spring

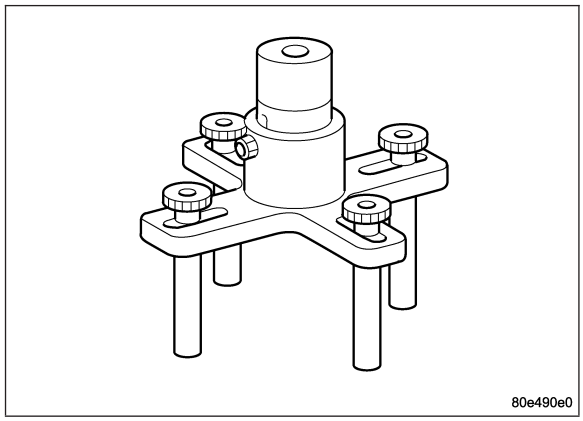

8901 TOOL, PRESSING

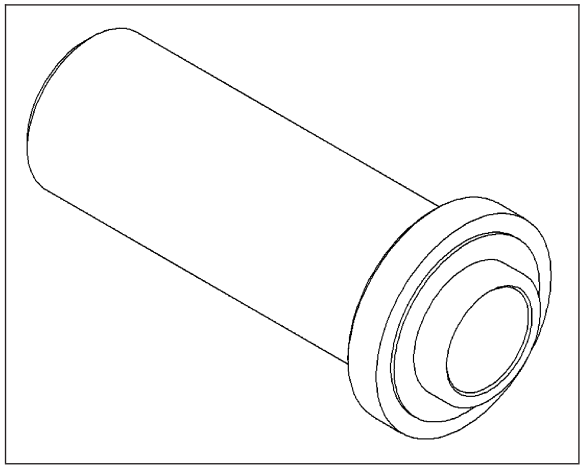

8902A INSTALLER, SEAL

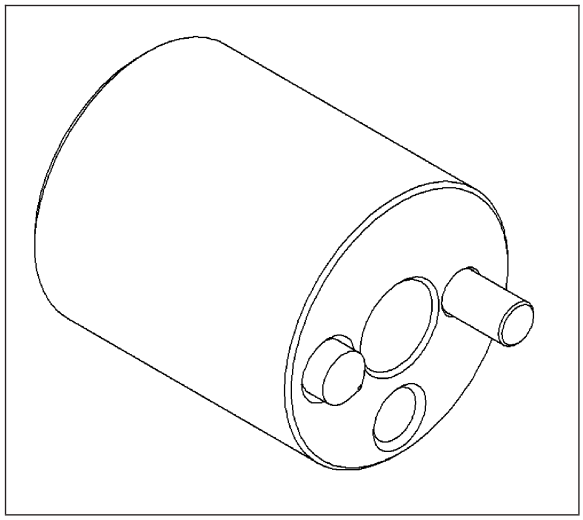

9078 TOOL, STAKING

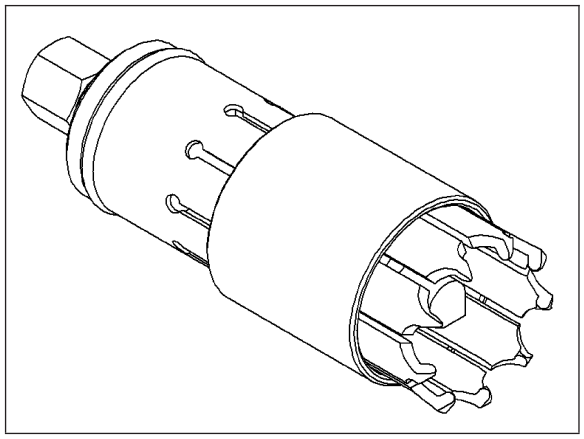

9082 REMOVER, BEARING

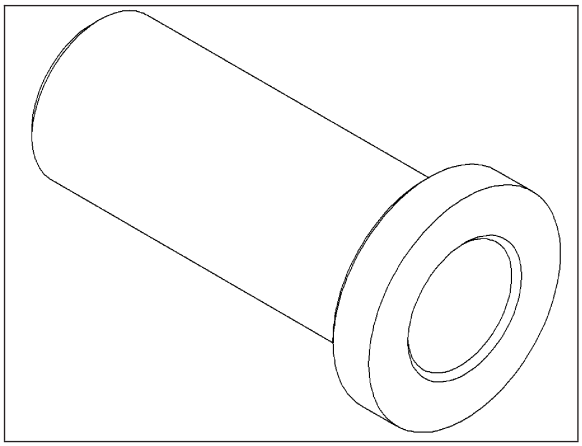

9287 INSTALLER, BEARING

DRIVING CLUTCHES

DESCRIPTION

Three multi-plate driving clutches the front, middle and rear multi-plate clutches K1 (1), K2 (2) and K3 (5), are located in the planetary gear sets in the transmission housing.

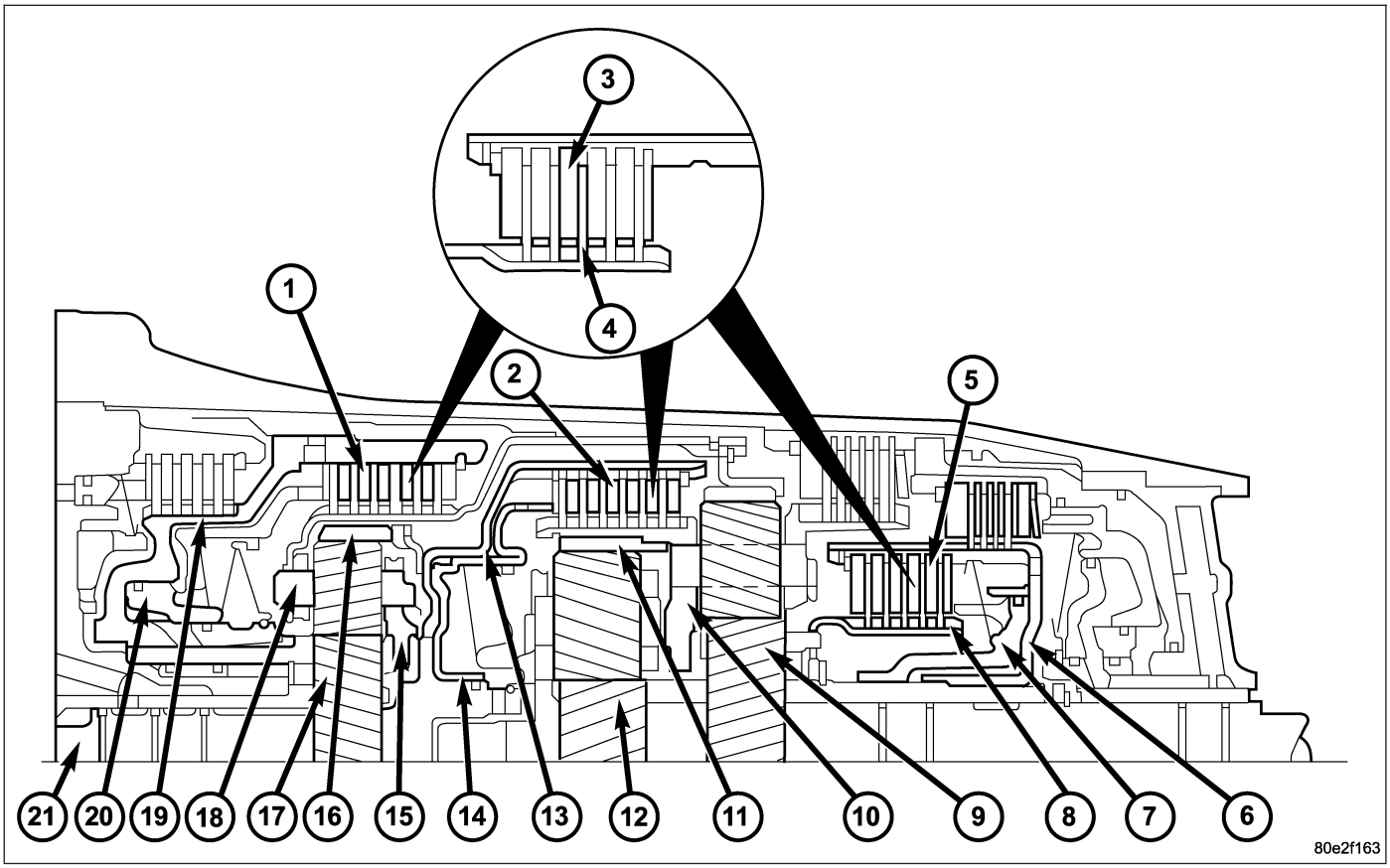

1 - K1 DRIVING CLUTCH
2 - K2 DRIVING CLUTCH
3 - EXTERNAL TOOTHED DISC
4 - INTERNAL TOOTHED DISC
5 - K3 DRIVING CLUTCH
6 - K3 DRIVING CLUTCH EXTERNAL TOOTH DISC CARRIER
7 - K3 PISTON
8 - K3 DRIVING CLUTCH INTERNAL TOOTH DISC CARRIER
9 - REAR PLANETARY GEARSET SUN GEAR
10 - CENTER PLANETARY GEARSET PLANETARY CARRIER
11 - CENTER PLANETARY GEARSET ANNULUS GEAR
12 - CENTER PLANETARY GEARSET SUN GEAR
13 - K2 DRIVING CLUTCH EXTERNAL TOOTH DISC CARRIER
14 - K2 DRIVING CLUTCH PISTON
15 - FRONT PLANETARY GEARSET PLANETARY CARRIER
16 - FRONT PLANETARY GEARSET ANNULUS GEAR
17 - FRONT PLANETARY GEARSET SUN GEAR
18 - K1 DRIVING CLUTCH INTERNAL TOOTH DISC CARRIER
19 - K1 DRIVING CLUTCH EXTERNAL TOOTH DISC CARRIER
20 - K1 DRIVING CLUTCH PISTON
21 - DRIVE SHAFT

A multi-plate driving clutch consists of a number of internally toothed discs (4) on an internally toothed disc carrier and externally toothed discs (3) on an externally toothed disc carrier.

OPERATION

The driving clutches (1, 2 and 5) produce a non-positive locking connection between two elements of a planetary gear set or between one element from each of two planetary gear sets in order to transmit the drive torque.

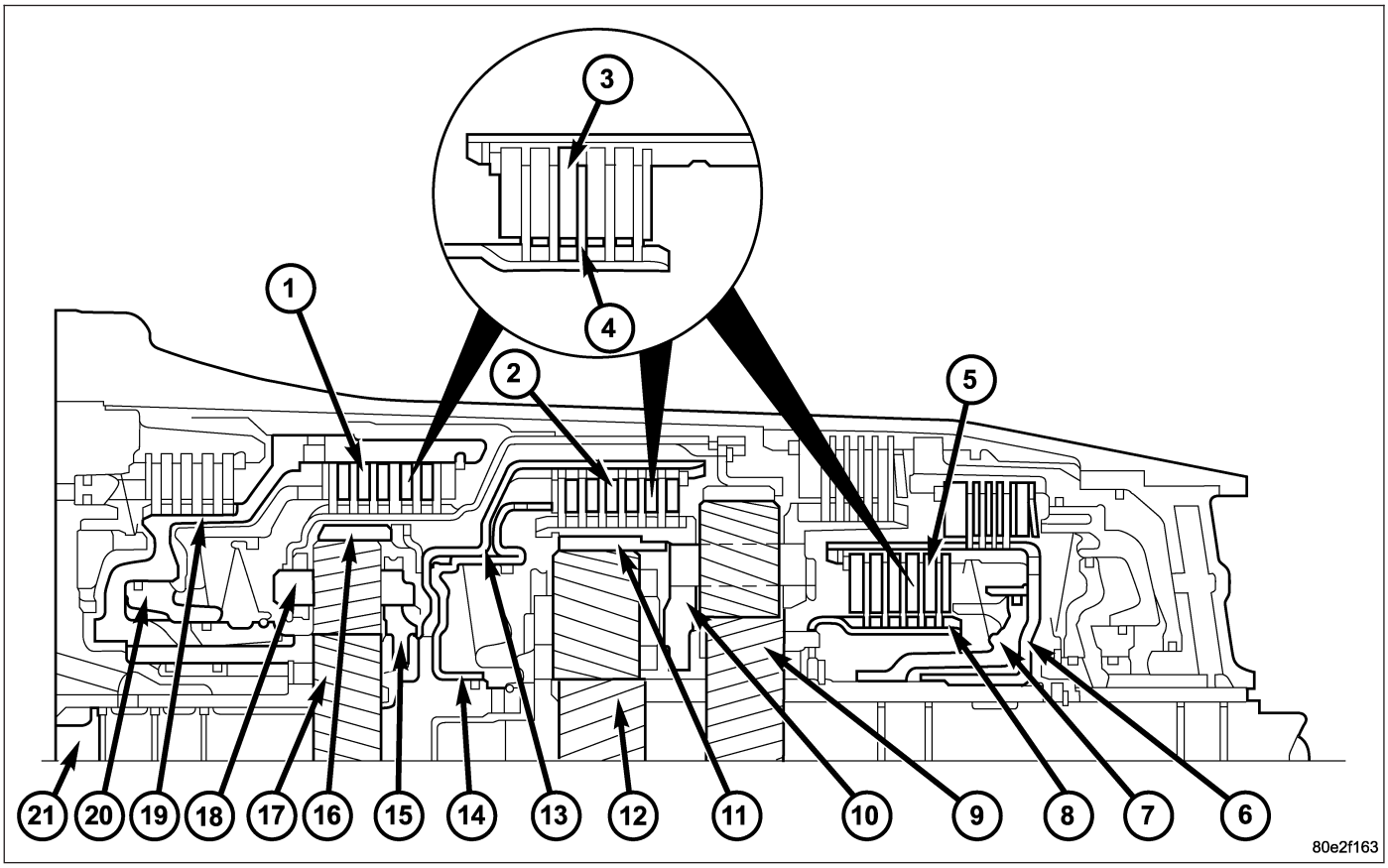

1 - K1 DRIVING CLUTCH
2 - K2 DRIVING CLUTCH
3 - EXTERNALLY TOOTHED DISC
4 - INTERNALLY TOOTHED DISC
5 - K3 DRIVING CLUTCH
6 - K3 DRIVING CLUTCH EXTERNALLY TOOTHED DISC CARRIER
7 - K3 DRIVING CLUTCH PISTON
8 - K3 DRIVING CLUTCH INTERNALLY TOOTHED DISC CARRIER
9 - REAR PLANETARY GEARSET SUN GEAR
10 - CENTER PLANETARY GEARSET PLANETARY CARRIER
11 - CENTER PLANETARY GEARSET ANNULUS GEAR
12 - CENTER PLANETARY GEARSET SUN GEAR
13 - K2 DRIVING CLUTCH EXTERNALLY TOOTHED DISC CARRIER
14 - K2 DRIVING CLUTCH PISTON
15 - FRONT PLANETARY GEARSET PLANETARY CARRIER
16 - FRONT PLANETARY GEARSET ANNULUS GEAR
17 - FRONT PLANETARY GEARSET SUN GEAR
18 - K1 DRIVING CLUTCH INTERNALLY TOOTHED DISC CARRIER
19 - K1 DRIVING CLUTCH EXTERNALLY TOOTHED DISC CARRIER
20 - K1 DRIVING CLUTCH PISTON
21 - DRIVE SHAFT

If the piston (20) on driving clutch K1 (1) is subjected to oil pressure, it presses the internal and external discs of the disc set together. The sun gear (17) is locked with the planetary carrier (15) via the externally toothed disc carrier (19) and the internally toothed disc carrier (18). The front planetary gear set is thus locked and turns as a closed unit.

If the driving clutch K2 (2) is actuated via the piston (14), the piston compresses the disc set. The annulus gear (16) of the front planetary gear set is locked with the annulus gear (11) of the center planetary gear set via the externally toothed disc carrier (13) and the center planetary carrier (10) on which the internally toothed discs are seated. Annulus gear (16) and annulus gear (11) turn at the same speed as the input shaft (21)

If the driving clutch K3 (5) is actuated via the piston (7), the piston compresses the disc set. The sun gear (12) of the center planetary gear set is locked with the sun gear (9) of the rear planetary gear set via the externally toothed disc carrier (6) and the internally toothed disc carrier (8). Sun gear (12) and sun gear (9) turn at the same speed.

DRIVING CLUTCH K1

DISASSEMBLY

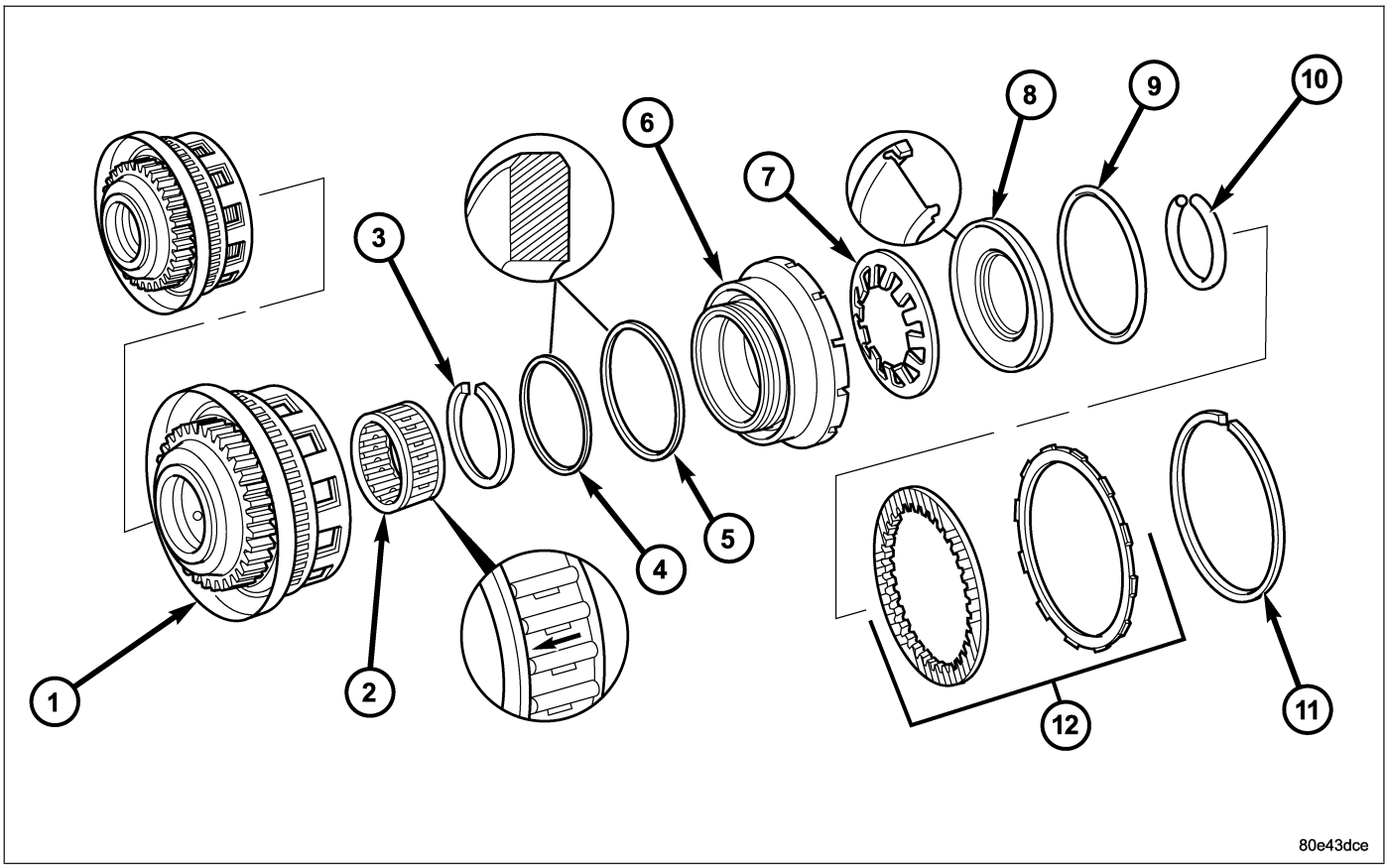

1 - K1 OUTER DISC CARRIER
2 - FREEWHEEL F1
3 - SNAP-RING
4 - OUTER DISC CARRIER SEALING RING
5 - PISTON SEALING RING
6 - PISTON
7 - DISC SPRING
8 - SPRING PLATE
9 - SPRING PLATE SEALING RING
10 - SNAP-RING
11 - SNAP-RING
12 - MULTIPLE DISC PACK

1. Remove the snap-ring (11) from the K1 outer disc carrier (1).
2. Take the multiple-disc pack (12) out of the K1 outer disc carrier (1).
3. Place Special Tool 8900 on the spring plate (8) and compress the spring until the snap-ring (10) is exposed.
4. Remove the snap-ring (10).
5. Take out the disc spring (7) and remove the piston (6) by carefully blowing compressed air into the bore.
6. Remove the snap-ring (3) and take out the freewheel F1 (2).

ASSEMBLY

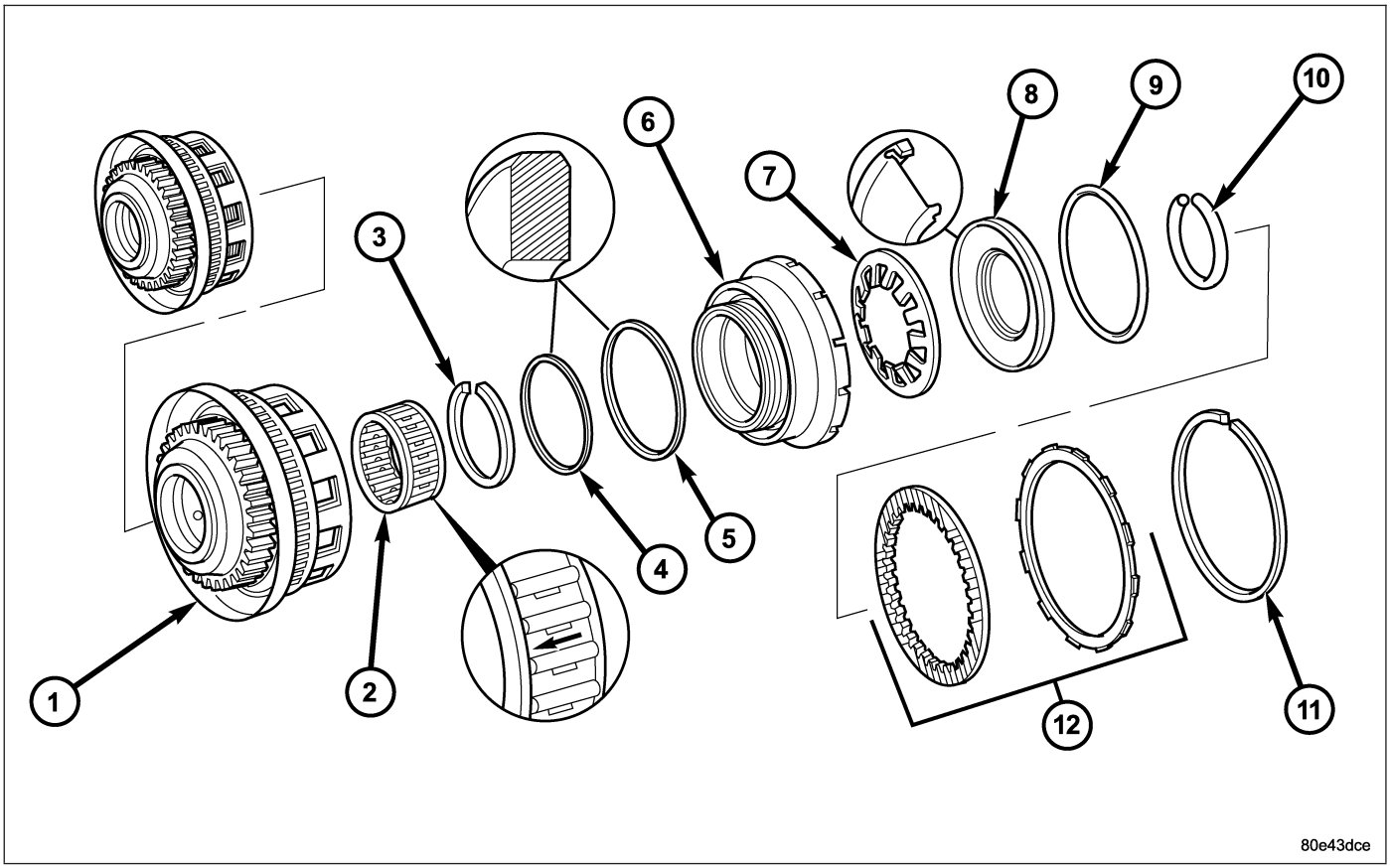

1 - K1 OUTER DISC CARRIER
2 - FREEWHEEL F1
3 - SNAP-RING
4 - OUTER DISC CARRIER SEALING RING
5 - PISTON SEALING RING
6 - PISTON
7 - DISC SPRING
8 - SPRING PLATE
9 - SPRING PLATE SEALING RING
10 - SNAP-RING
11 - SNAP-RING
12 - MULTIPLE DISC PACK

1. Install the piston (6) in the K1 outer disc carrier (1). Check the sealing rings (4 and 5) and replace if necessary. The rounded off edges of the sealing rings must point outwards.
2. Insert the disc spring (7). Insert the disc spring with the curvature towards the piston.
3. Insert the spring plate (8). Insert the spring plate with the curvature towards the sun gear. Check the sealing ring (9), replace if necessary.
4. Place Special Tool 8900 on spring plate (8) and compress the spring until the groove of the snap-ring is exposed.
5. Insert the snap-ring (10). After installing, check the snap-ring for correct seat.

Note: Pay attention to the sequence of the discs. Place new friction multiple-discs in ATF fluid for one hour before installing.

6. Insert the multiple disc pack (12) in the K1 outer disc carrier (1).
7. Insert the snap-ring (11).
8. Measure the K1 clutch pack clearance.

a. Mount Special Tool 8901 (1) on the K1 outer disc carrier (2).
b. Using a lever press, compress the pressing tool as far as the stop (then the marking ring is still visible, see small arrow).

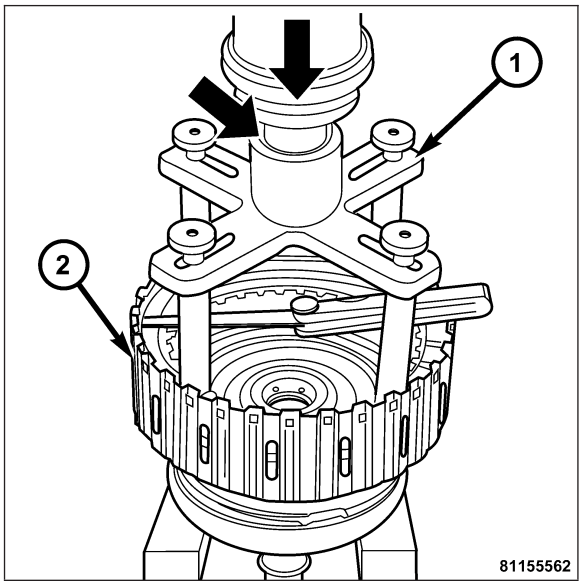

c. Using a feeler gauge, determine the play “L” at three points between the snap-ring (6) and outer multiple-disc (3).
d. During the measurement, the snap-ring (6) must contact the upper bearing surface of the groove in the outer multiple-disc carrier.
e. The correct clutch clearance is 2.7-3.1 mm (0.106-0.122 in.) for three friction disc versions, 3.0-3.4 mm (0.118-0.134 in.) for four disc versions, 3.3-3.7 mm (0.130-0.146 in.) for five disc versions, and 3.6-4.0 mm (0.142-0.158 in.) for six disc versions.
f. Adjust with snap-ring (6), if necessary. Snap-rings are available in thicknesses of 2.6 mm (0.102 in.), 2.9 mm (0.114 in.), 3.2 mm (0.126 in.), 3.5 mm (0.138 in.), 3.8 mm (0.150 in.), and 4.1 mm (0.162 in.).

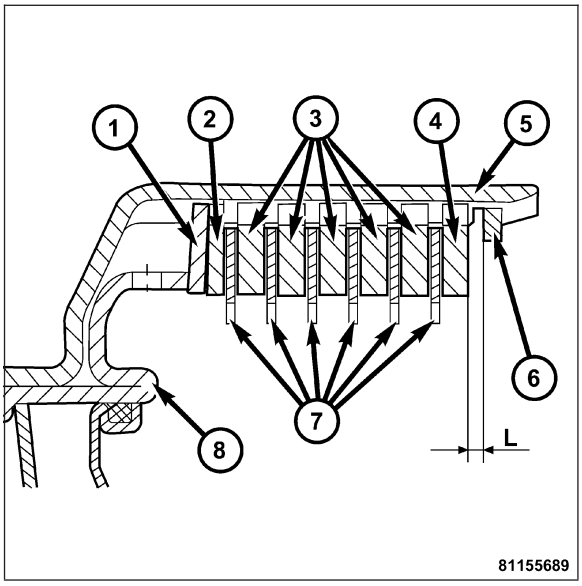

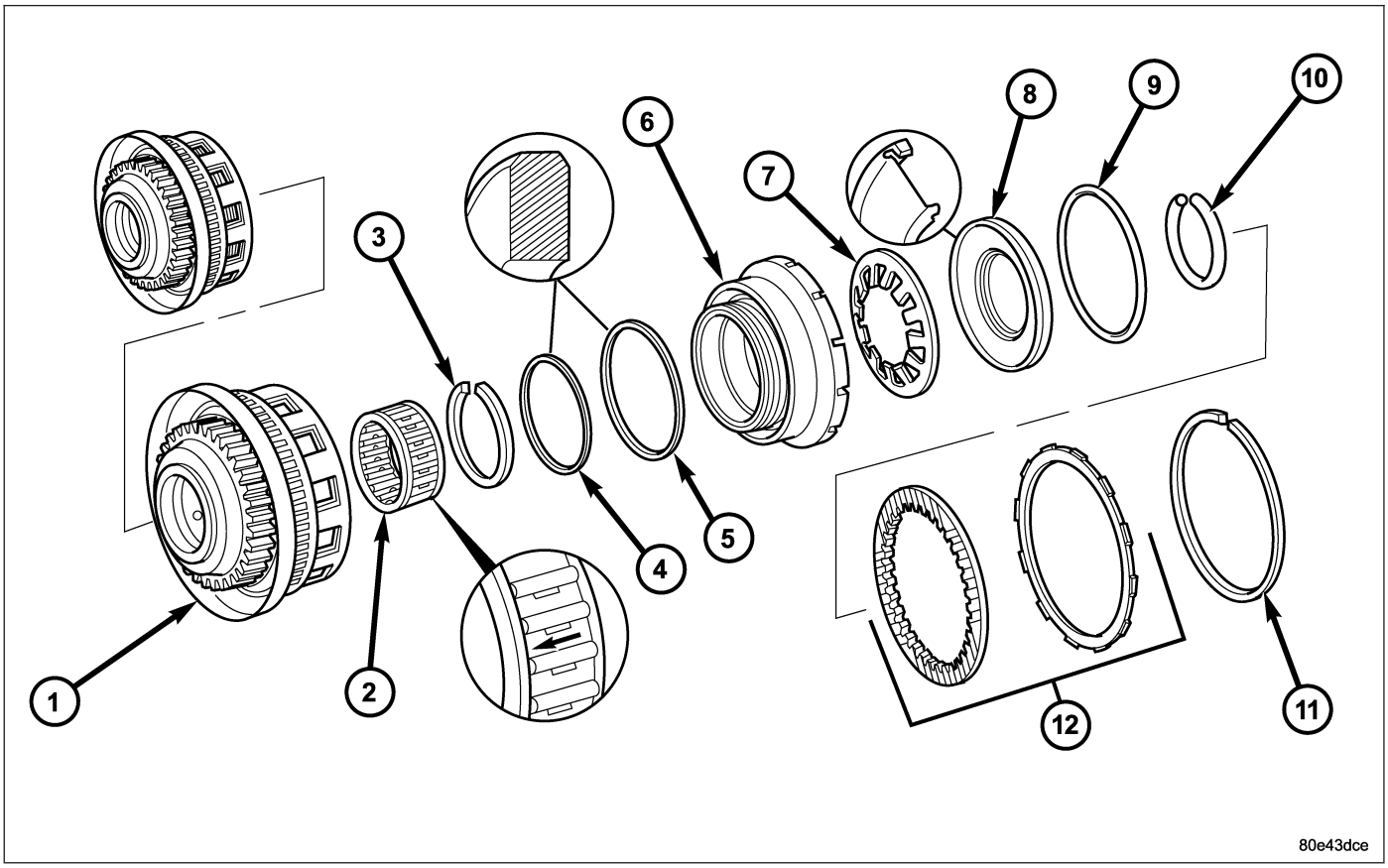

1 - K1 OUTER DISC CARRIER
2 - FREEWHEEL F1
3 - SNAP-RING
4 - OUTER DISC CARRIER SEALING RING
5 - PISTON SEALING RING
6 - PISTON
7 - DISC SPRING
8 - SPRING PLATE
9 - SPRING PLATE SEALING RING
10 - SNAP-RING
11 - SNAP-RING
12 - MULTIPLE DISC PACK

9. Insert the front freewheel F1 (2) and fit the snap-ring (3). The freewheel F1 (2) must be installed in the direction of the arrow.

DRIVING CLUTCH K2

DISASSEMBLY

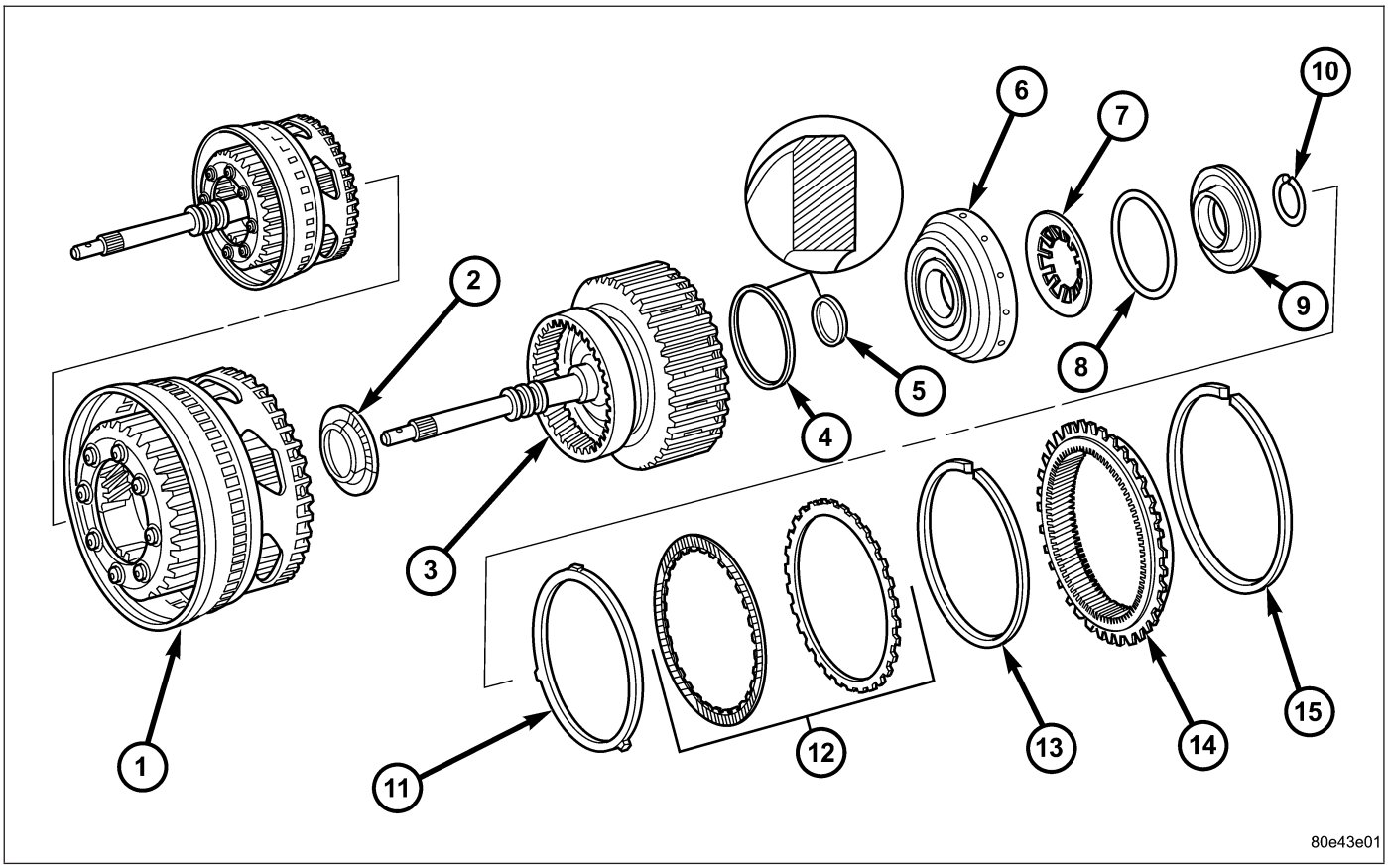

1 - K1 INNER DISC CARRIER WITH INTEGRATED FRONT GEAR SET
2 - THRUST BEARING
3 - INPUT SHAFT AND K2 CLUTCH
4 - PISTON OUTER SEAL RING
5 - PISTON INNER SEAL RING
6 - PISTON
7 - DISC SPRING
8 - SPRING RETAINER SEAL
9 - SPRING RETAINER
10 - SNAP-RING
11 - DISC SPRING
12 - MULTIPLE DISC PACK
13 - SNAP-RING
14 - HOLLOW GEAR
15 - SNAP-RING

1. Remove the snap-ring (15) from the K1 inner disc carrier with integrated front gear set (1) and take off the hollow gear (14).
2. Remove the input shaft and K2 clutch (3).
3. Remove the thrust bearing (2).
4. Remove the snap-ring (13) from K2 outer multiple-disc carrier.
5. Take out the multiple-disc pack (12).
6. Take out the disc spring (11).

7. Fit Special Tool 8900 (1) onto spring retainer and press until snap-ring (2) is released.

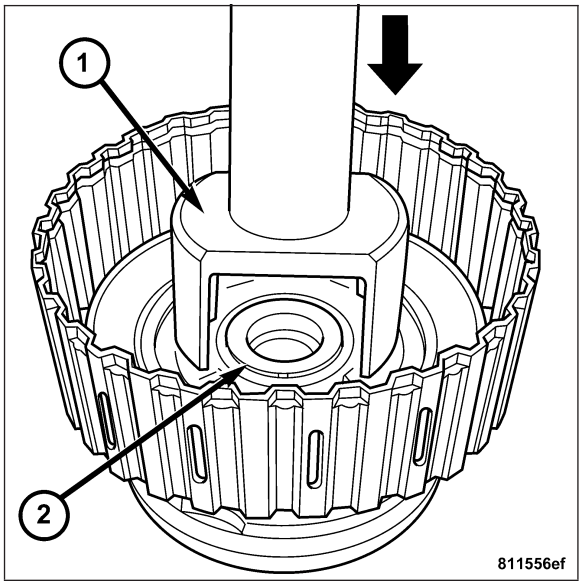

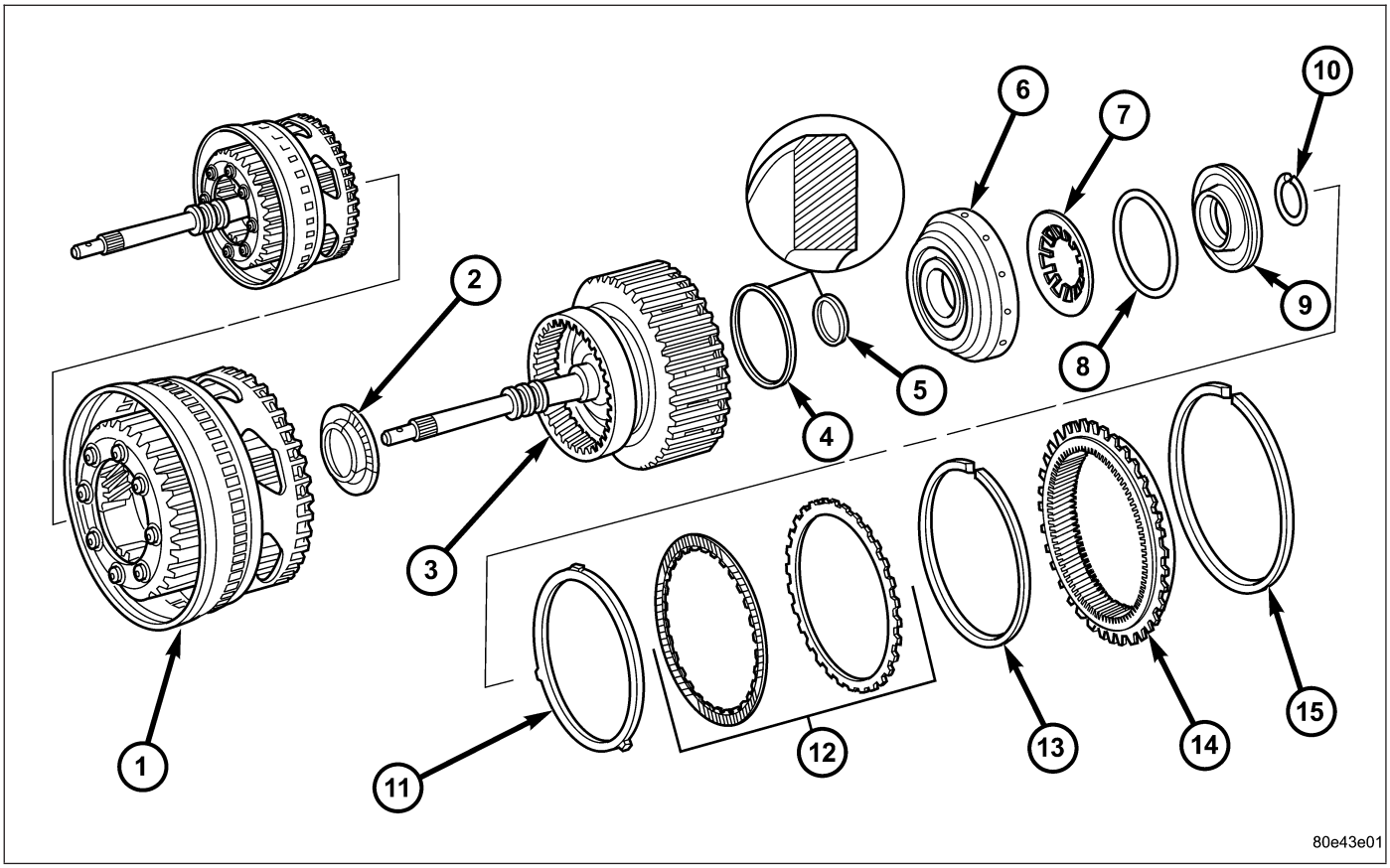

1 - K1 INNER DISC CARRIER WITH INTEGRATED FRONT GEAR SET
2 - THRUST BEARING
3 - INPUT SHAFT AND K2 CLUTCH
4 - PISTON OUTER SEAL RING
5 - PISTON INNER SEAL RING
6 - PISTON
7 - DISC SPRING
8 - SPRING RETAINER SEAL
9 - SPRING RETAINER
10 - SNAP-RING
11 - DISC SPRING
12 - MULTIPLE DISC PACK
13 - SNAP-RING
14 - HOLLOW GEAR
15 - SNAP-RING

8. Remove the snap-ring (10).
9. Take out the disc spring (7) and pull the piston (6) out of the outer multiple-disc carrier.

ASSEMBLY

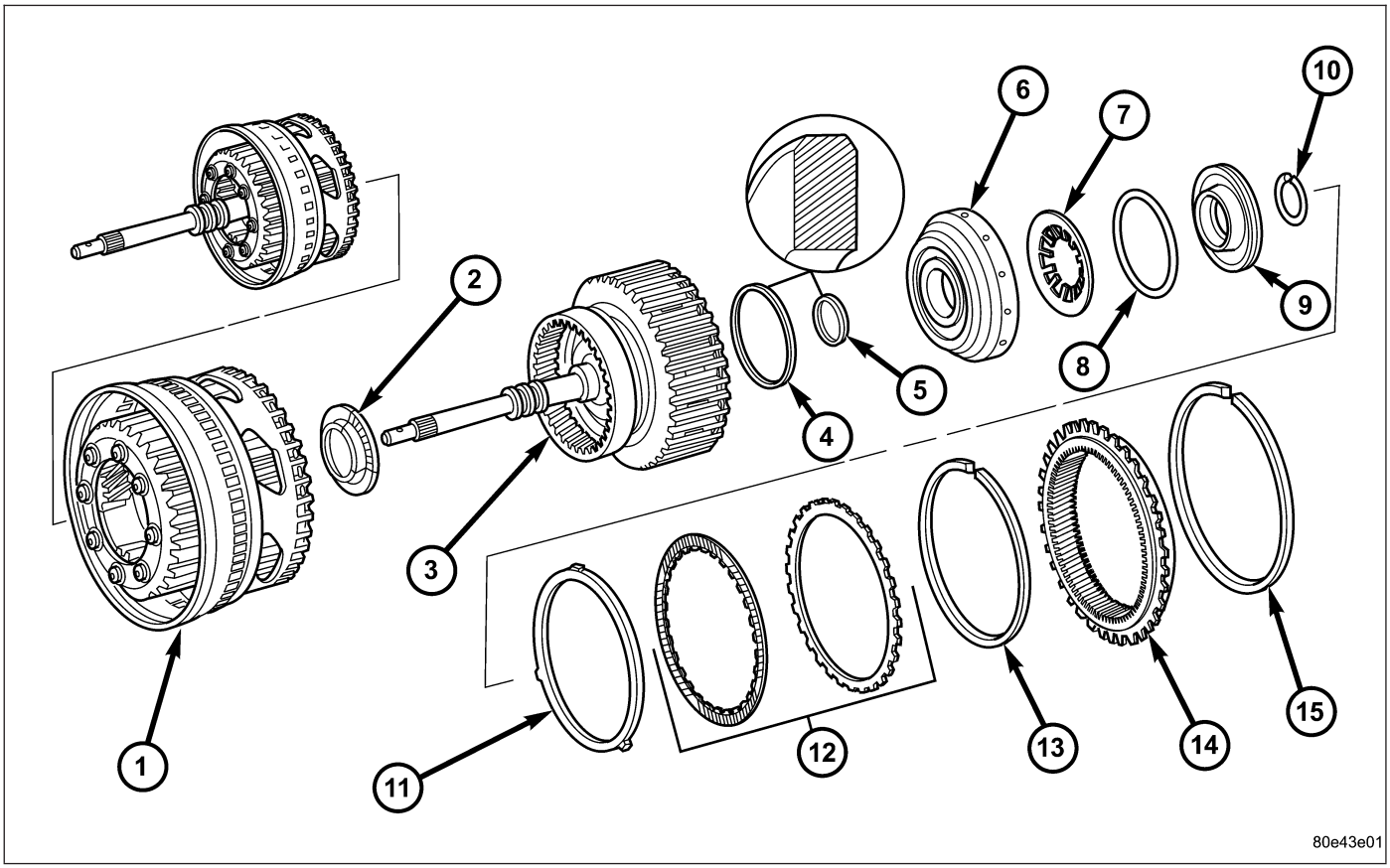

1 - K1 INNER DISC CARRIER WITH INTEGRATED FRONT GEAR SET
2 - THRUST BEARING
3 - INPUT SHAFT AND K2 CLUTCH
4 - PISTON OUTER SEAL RING
5 - PISTON INNER SEAL RING
6 - PISTON
7 - DISC SPRING
8 - SPRING RETAINER SEAL
9 - SPRING RETAINER
10 - SNAP-RING
11 - DISC SPRING
12 - MULTIPLE DISC PACK
13 - SNAP-RING
14 - HOLLOW GEAR
15 - SNAP-RING

1. Install the piston (6) in the outer multiple-disc carrier. Inspect the seals (4 and 5), replace if necessary. The rounded edges of the seals must point to the outside.
2. Insert the disc spring (7) and the spring retainer (9). Insert the disc spring (7) with the curved side pointing toward the spring retainer (9). Inspect the seal (8), replace if necessary.

3. Place Special Tool 8900 on the spring plate (1) and press until the groove of the snap-ring is exposed.
4. Insert the snap-ring (2).
5. Insert the disc spring.

Note: Pay attention to the sequence of the discs. Place new friction multiple-discs in ATF fluid for one hour before installing.

6. Insert the multiple-disk set into the outer multiple-disk carrier.
7. Fit the snap-ring.

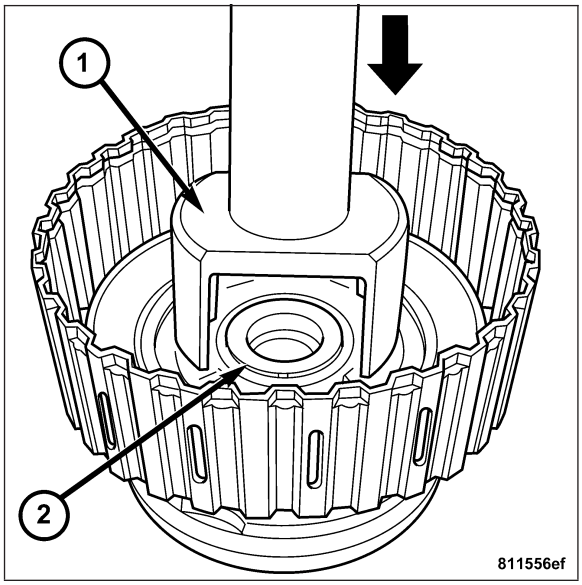

8. Measure the K2 clutch clearance.
   a. Mount Special Tool 8901 (1) on the outer multiple disc (2).
   b. Using a lever press, compress the pressing tool as far as the stop (then the marking ring is still visible, see small arrow).

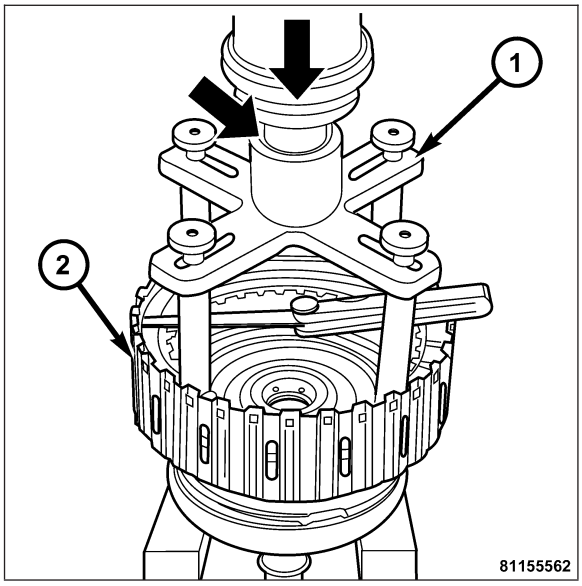

   c. Using a feeler gauge, determine the play “L” at three points between the snap-ring (6) and outer multiple-disc (4).
   d. During the measurement the snap-ring (6) must contact the upper bearing surface of the groove in the outer multiple-disc carrier.
   e. The correct clutch clearance is 2.3-2.7 mm (0.091-0.106 in.) for three friction disc versions, 2.4-2.8 mm (0.095-0.110 in.) for four disc versions, 2.5-2.9 mm (0.099-0.114 in.) for five disc versions, and 2.7-3.1 mm (0.106-0.122 in.) for six disc versions.
   f. Adjust with snap-ring (6), if necessary. Snap-rings are available in thicknesses of 2.3 mm (0.091 in.), 2.6 mm (0.102 in.), 2.9 mm (0.114 in.), 3.2 mm (0.126 in.), 3.5 mm (0.138 in.), and 3.8 mm (0.150 in.).

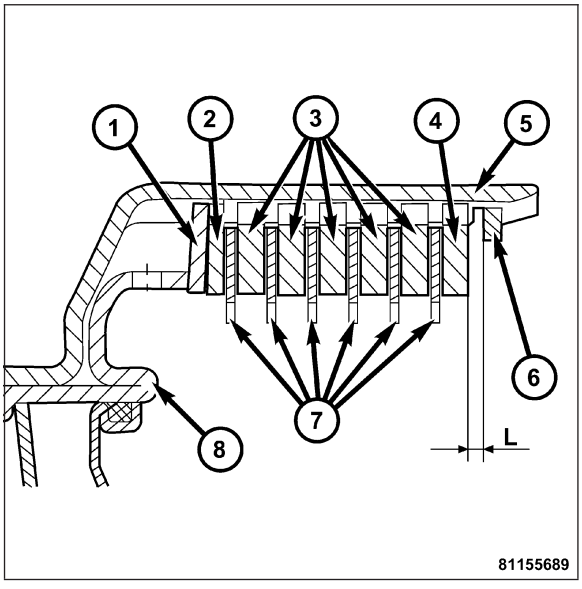

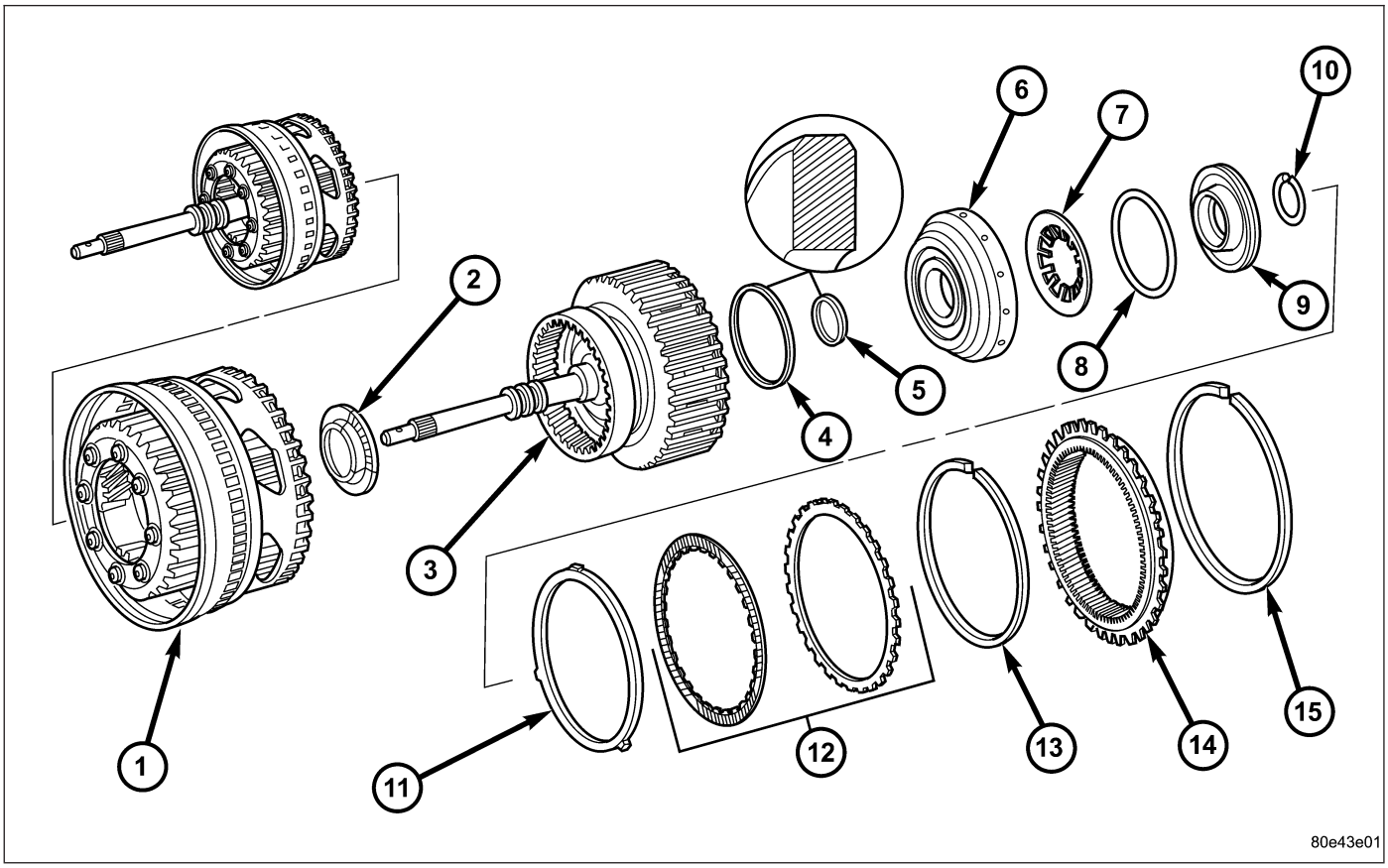

1 - K1 INNER DISC CARRIER WITH INTEGRATED FRONT GEAR SET
2 - THRUST BEARING
3 - INPUT SHAFT AND K2 CLUTCH
4 - PISTON OUTER SEAL RING
5 - PISTON INNER SEAL RING
6 - PISTON
7 - DISC SPRING
8 - SPRING RETAINER SEAL
9 - SPRING RETAINER
10 - SNAP-RING
11 - DISC SPRING
12 - MULTIPLE DISC PACK
13 - SNAP-RING
14 - HOLLOW GEAR
15 - SNAP-RING

9. Insert the thrust bearing (2) into the K1 inner disc carrier. Insert the thrust bearing (2) with a little grease to prevent it from slipping.
10. Install the input shaft and k2 clutch in the K1 inner disc carrier with integrated front gear set (1).
11. Fit the hollow gear (14). Pay attention to the installation position.

DRIVING CLUTCH K3

DISASSEMBLY

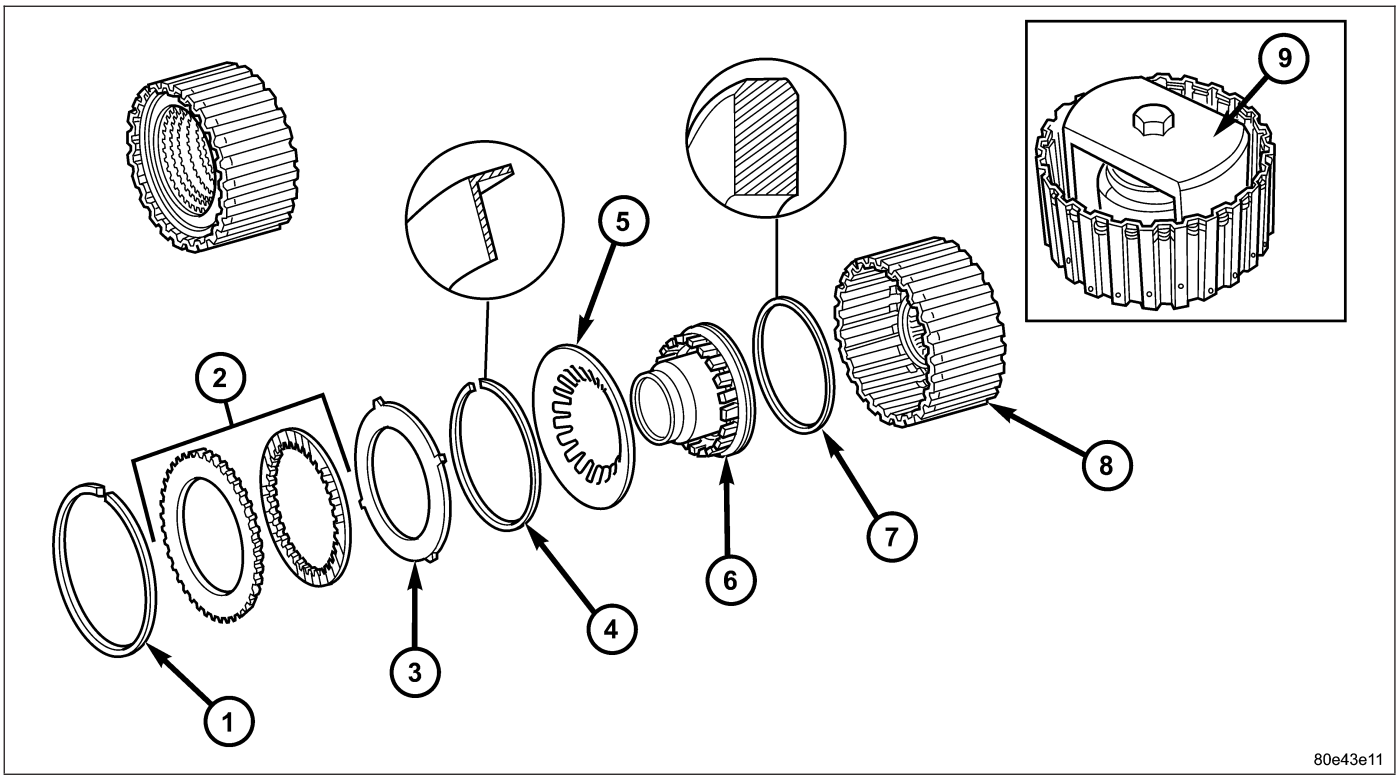

1 - SNAP-RING
2 - MULTIPLE DISC PACK
3 - DISC SPRING
4 - SNAP-RING
5 - SPRING PLATE
6 - PISTON
7 - SEALING RING
8 - OUTER DISC CARRIER
9 - MULTI-USE SPRING COMPRESSOR 8900

1. Remove the snap-ring (1) from the outer disc carrier (8).
2. Remove the multiple disc pack (2) and the disc spring (3) from the outer disc carrier.
3. Place Special Tool 8900 (9) on the spring plate (5) and compress the spring until the snap-ring (4) is exposed.
4. Remove the snap-ring (4).
5. Remove the spring plate (5) and the piston (6) from the outer disc carrier (8).

ASSEMBLY

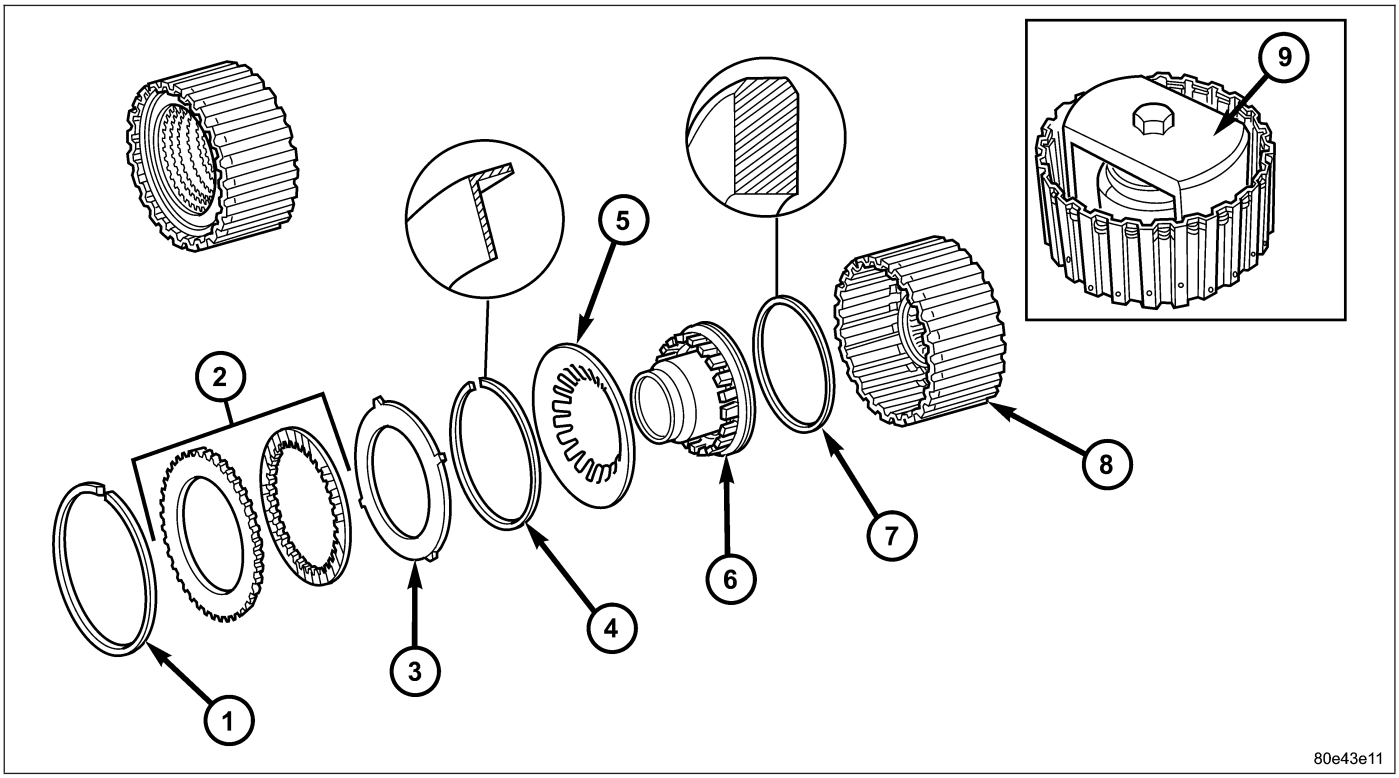

1 - SNAP-RING
2 - MULTIPLE DISC PACK
3 - DISC SPRING
4 - SNAP-RING
5 - SPRING PLATE
6 - PISTON
7 - SEALING RING
8 - OUTER DISC CARRIER
9 - MULTI-USE SPRING COMPRESSOR 8900

1. Install the piston (6) in the outer disc carrier (8). Check the sealing ring (7) and replace if necessary. The rounded off edges of the sealing ring must point outwards.
2. Insert the spring plate (5). Insert the spring plate (5) with the curvature towards the piston.
3. Mount Special Tool 8900 (9) on the spring plate (5) and clamp until the snap-ring groove is exposed.
4. Insert the snap-ring (4). The collar of the snap-ring (4) must point towards the disc pack (2).

Note: Pay attention to the sequence of the discs. Place new friction multiple-discs in ATF fluid for one hour before installing.

5. Install the disc spring (3) and the multiple disc pack (2) in the outer disc carrier (8).
6. Insert the snap-ring (1).
7. Measure the K3 clutch clearance.

a. Mount Special Tool 8901 (1) on the outer disc carrier.
b. Using a lever press, compress the pressing tool as far as the stop (then the marking ring is still visible, see small arrow).

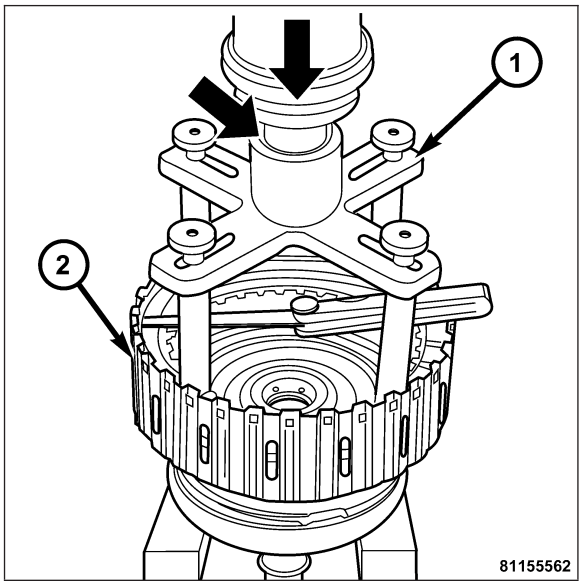

c. Using a feeler gauge, determine the play “L” at three points between the snap-ring (8) and outer multiple-disc (2).
d. During the measurement, the snap-ring must contact the upper bearing surface of the groove in the outer multiple-disc carrier.
e. The correct clutch clearance is 2.3-2.7 mm (0.091-0.106 in.) for three friction disc versions, 2.4-2.8 mm (0.095-0.110 in.) for four disc versions, and 2.5-2.9 mm (0.099-0.114 in.) for five disc versions.
f. Adjust with snap-ring, if necessary. Snap-rings are available in thicknesses of 2.0 mm (0.079 in.), 2.3 mm (0.091 in.), 2.6 mm (0.102 in.), 2.9 mm (0.114 in.), 3.2 mm (0.126 in.), and 3.5 mm (0.138 in.).

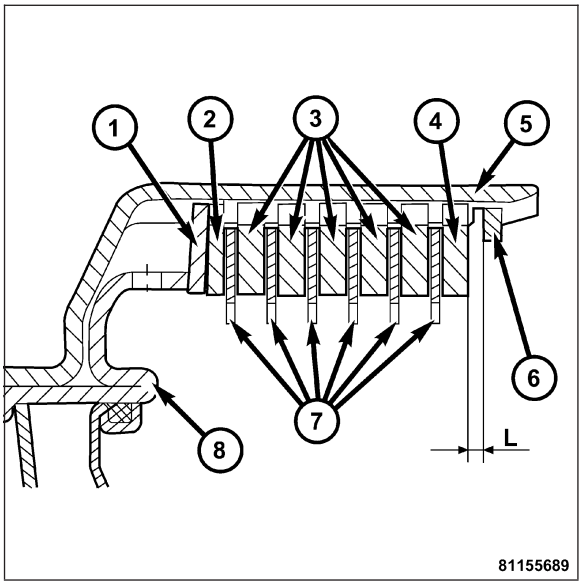

ELECTROHYDRAULIC UNIT

DESCRIPTION

The electrohydraulic control unit comprises the shift plate made from light alloy for the hydraulic control and an electrical control unit. The electrical control unit comprises of a supporting body made of plastic, into which the electrical components are assembled. The supporting body is mounted on the shift plate and screwed to it.

Strip conductors inserted into the supporting body make the connection between the electrical components and a plug connector. The connection to the wiring harness on the vehicle and the transmission control module (TCM) is produced via this 13-pin plug connector with a bayonet lock.

ELECTRICAL CONTROL UNIT

The electrical control unit (7) consists of a plastic shell which houses the RPM sensors (1,12), regulating solenoid valves (3, 4), solenoid valves (5, 6, 10), the TCC solenoid valve (11), the park/neutral contact (9), and the transmission oil temperature sensor (8). Conductor tracks integrated into the shell connect the electric components to a plug connection (2). This 13-pin plug connection (2) establishes the connection to the vehicle-side cable harness and to the transmission control module (TCM). With the exception of the solenoid valves, all other electric components are fixed to the conductor tracks.

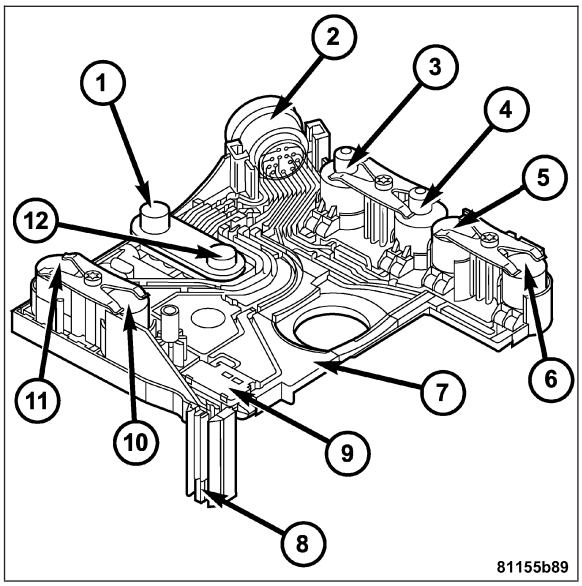

HYDRAULIC CONTROL UNIT

Working Pressure (Operating Pressure) (p-A)

The working pressure provides the pressure supply to the hydraulic control and the transmission shift elements. It is the highest hydraulic pressure in the entire hydraulic system. The working pressure is regulated at the working pressure regulating valve in relation to the load and gear. All other pressures required for the transmission control are derived from the working pressure.

Lubrication Pressure (p-Sm)

At the working pressure regulating valve, surplus oil is diverted to the lubrication pressure regulating valve, from where it is used in regulated amounts to lubricate and cool the mechanical transmission components and the torque converter. Furthermore, the lubrication pressure (p-Sm) is also used to limit the pressure in the torque converter.

Shift Pressure (p-S)

The shift pressure is determined by the shift pressure regulating solenoid valve and the shift pressure regulating valve. The shift pressure:

- Regulates the pressure in the activating shift element during the shift phase.
- Determines, together with the modulating pressure, the pressure reduction at the deactivating shift element as regulated by the overlap regulating valve.
- Initializes 2nd gear in limp-home mode.

Modulating Pressure (p-Mod)

The modulating pressure influences the size of the working pressure and determines, together with the shift pressure, the pressure regulated at the overlap regulating valve. The modulating pressure is regulated at the modulating pressure regulating solenoid valve, which is under regulating valve pressure. The modulating pressure is variable and relative to the engine load.

Regulating Valve Pressure (p-RV)

The regulating valve pressure is regulated at the regulating valve pressure regulating valve in relation to the working pressure (p-A) up to a maximum pressure of 8 bar (116 psi). It supplies the modulating pressure regulating solenoid valve, the shift pressure regulating solenoid valve and the shift valve pressure regulating valve.

Shift Valve Pressure (p-SV)

The shift valve pressure (p-SV) is derived from the regulating valve pressure (p-RV), is regulated at the shift valve pressure regulating valve and is then present at the:

- 1-2 and 4-5 shift solenoid valve.
- 3-4 shift solenoid valve.
- 2-3 shift solenoid valve.
- Torque converter lockup solenoid valve.
- 3-4 and 2-3 shift pressure shift valve.

The shift valve pressure (p-SV) controls the command valves via the upshift/downshift solenoid valves.

Overlap Pressure (p-Ü)

The overlap pressure controls the shift component pressure reduction during a shift phase. The pressure in a shift element as it disengages is controlled during the shift phase depending on engine load (modulating pressure) and the pressure in the shift element as it engages. The adjusted pressure is inversely proportional to the transmission capability of the shift element being engaged (controlled overlap).

Working Pressure Regulating Valve (Operating Pressure)

The working pressure regulating valve (4) is located in the valve housing of the shift plate. It regulates the primary pressure of the hydraulic system.

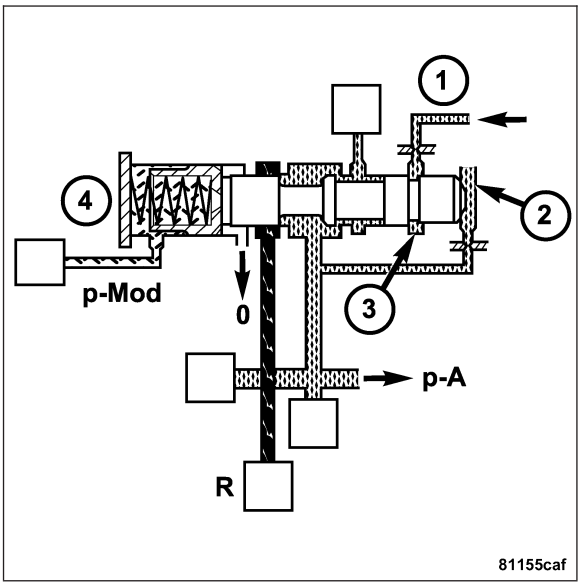

Torque Converter Lockup Clutch Regulating Valve

The torque converter lock-up clutch regulating valve (6) is located in the valve housing of the electrohydraulic control module. The valve is responsible for the hydraulic control of the torque converter lockup clutch and distribution of the lubricating oil.

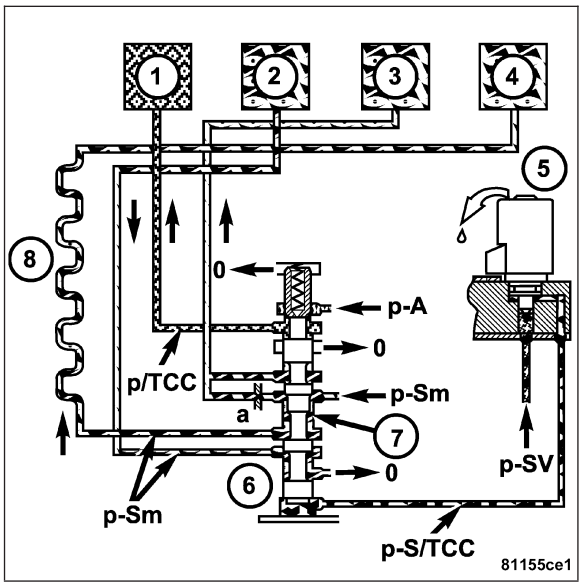

Overlap Regulating Valve

Each shift group is assigned one overlap regulating valve (1). The 1-2 / 4-5 overlap regulating valve is installed in the shift valve housing; the 2-3 and 3-4 overlap regulating valves are installed in the valve housing. The overlap regulating valve regulates the pressure reduction during a shift phase.

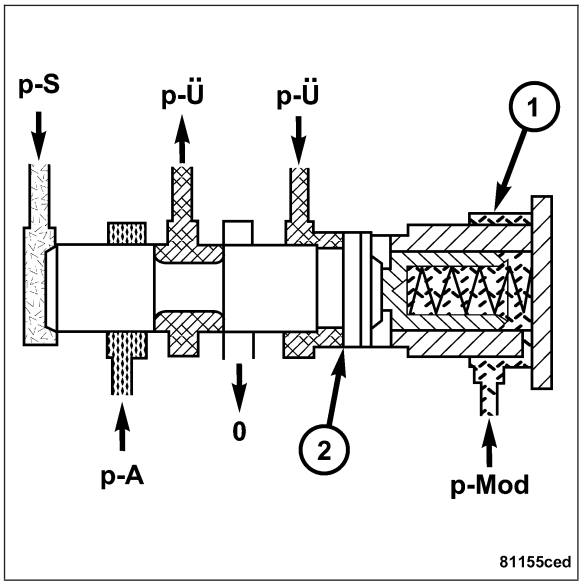

Command Valve

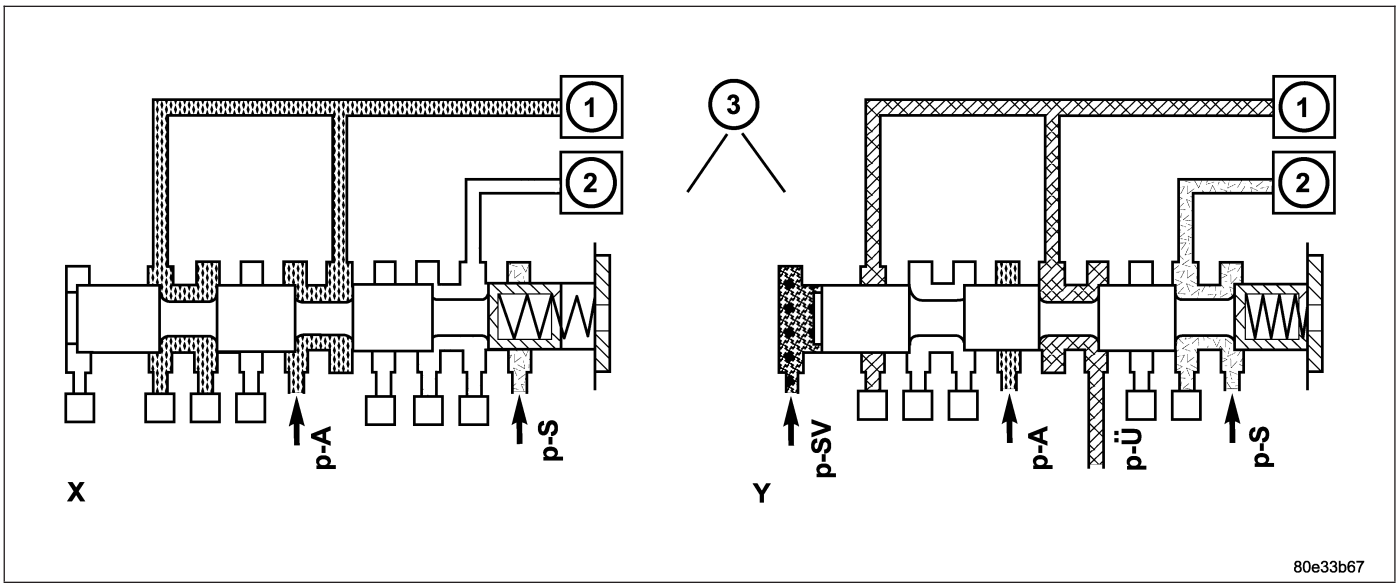

1 - HOLDING CLUTCH B1
2 - DRIVING CLUTCH K1
3 - 1-2/4-5 COMMAND VALVE

Each shift group possesses one command valve (3). The 1-2 / 4-5 and 2-3 command valves are installed in the shift valve housing; the 3-4 command valve is installed in the valve housing. The command valve switches the shift group from the stationary phase to the shift phase and back again.

Holding Pressure Shift Valve

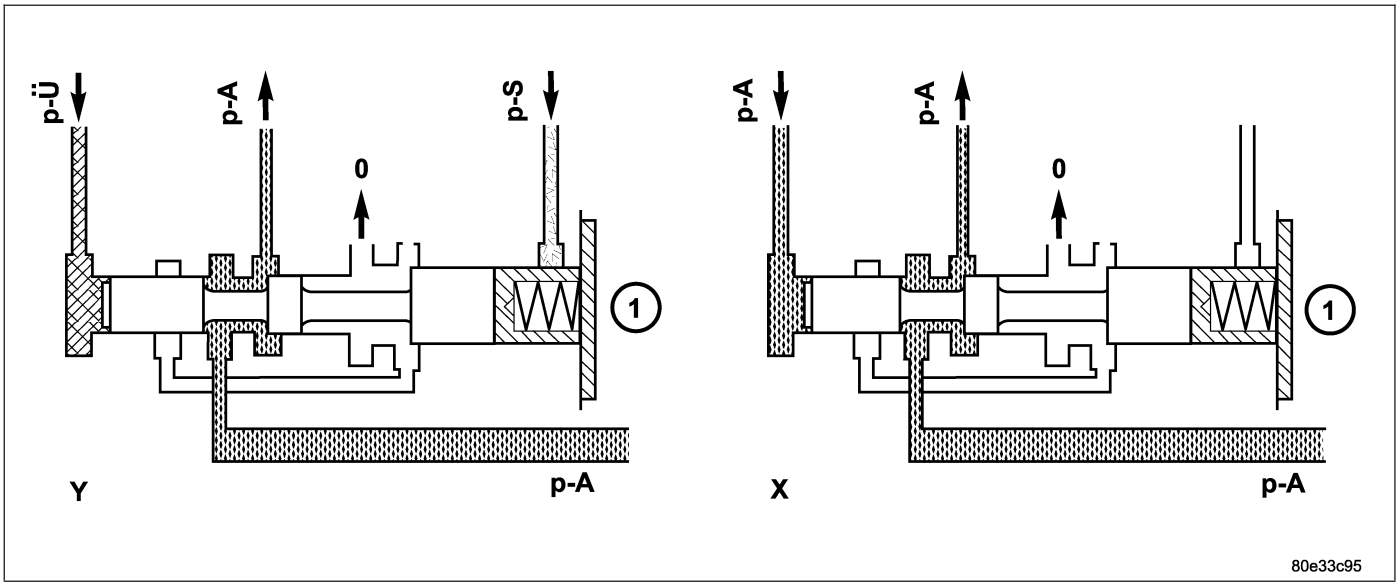

1 - HOLDING PRESSURE SHIFT VALVE

Each shift group possesses one holding pressure shift valve (1). The 1-2 / 4-5 and 2-3 holding pressure shift valves are installed in the shift valve housing; the 3-4 holding pressure shift valve is installed in the valve housing. The holding pressure shift valve allocates the working pressure to one actuator of a shift group.

Shift Pressure Shift Valve

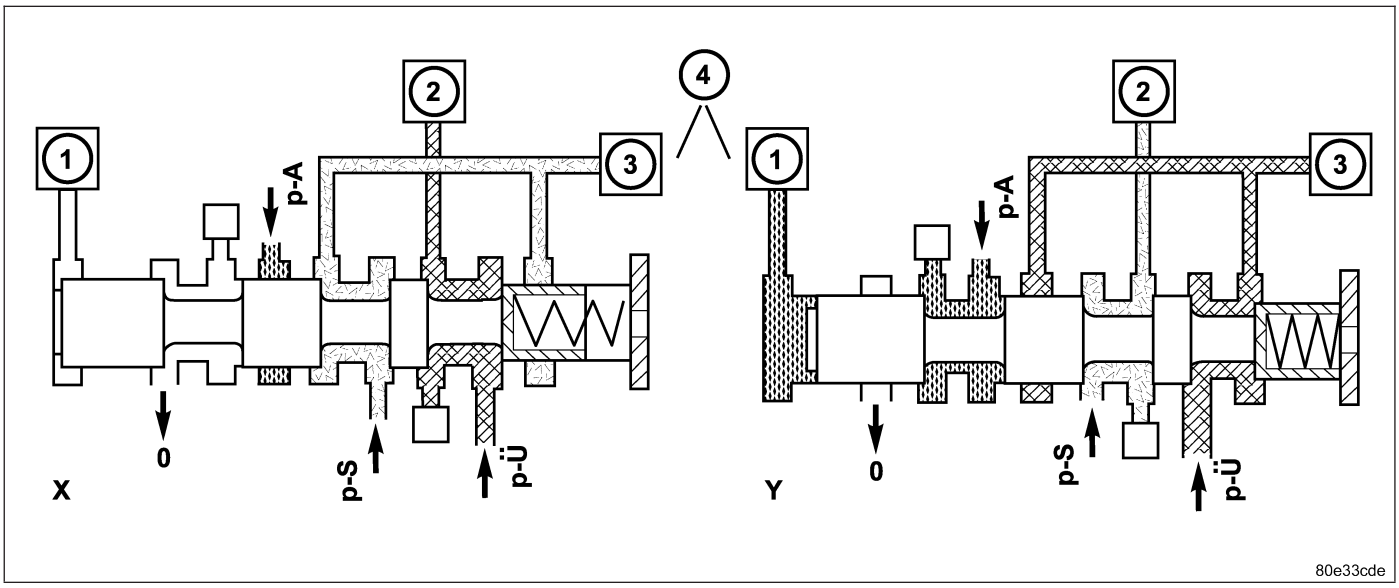

1 - 1-2/4-5 COMMAND VALVE
2 - DRIVING CLUTCH K1
3 - HOLDING CLUTCH B1
4 - 1-2/4-5 SHIFT PRESSURE SHIFT VALVE

Each shift group possesses one shift pressure shift valve (4). The 1-2 / 4-5 and 2-3 shift pressure shift valves are installed in the shift valve housing; the 3-4 shift pressure shift valve is installed in the valve housing. It assigns the shift pressure (p-S) to the activating actuator and the overlap pressure (p-Ü) regulated by the overlap regulating valve to the deactivating actuator.

Lubrication Pressure Regulating Valve

The lubrication pressure regulating valve (1) is located in the valve housing of the electrohydraulic control module. The valve controls the fluid to lubricate and cool the mechanical part of the transmission, and limits the pressure in the torque converter.

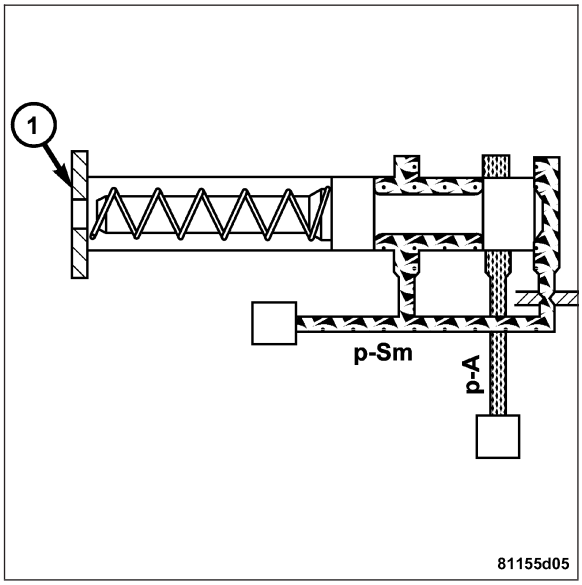

Shift Pressure Regulating Valve

The shift pressure regulating valve (3) is located in the valve housing of the shift plate. It regulates the shift pressure (p-S).

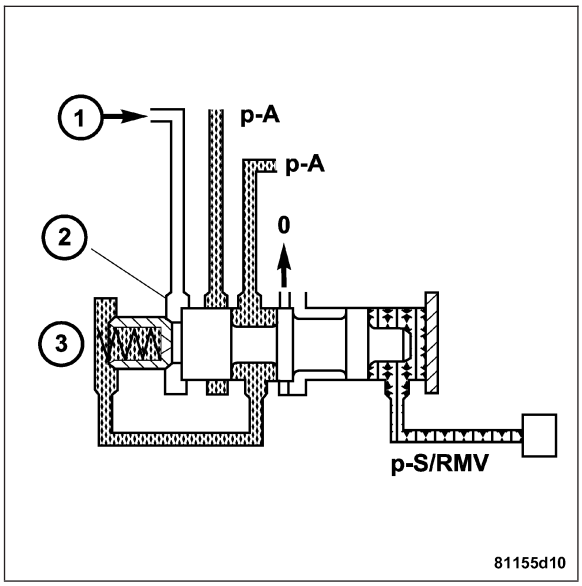

Regulating Valve Pressure Regulating Valve

The regulating valve pressure regulating valve (1) is located in the valve housing of the electrohydraulic control module. It regulates the regulating valve pressure (p-RV).

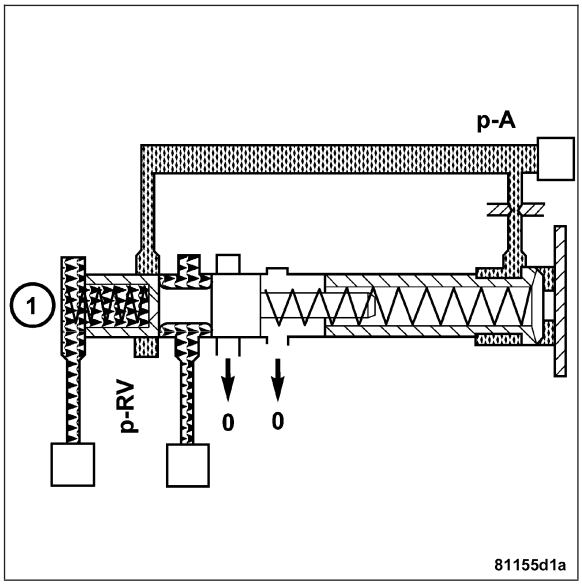

Shift Valve Pressure Regulating Valve

The shift valve pressure regulating valve (1) is located in the valve housing of the electrohydraulic control module. It regulates the shift valve pressure (p-SV).

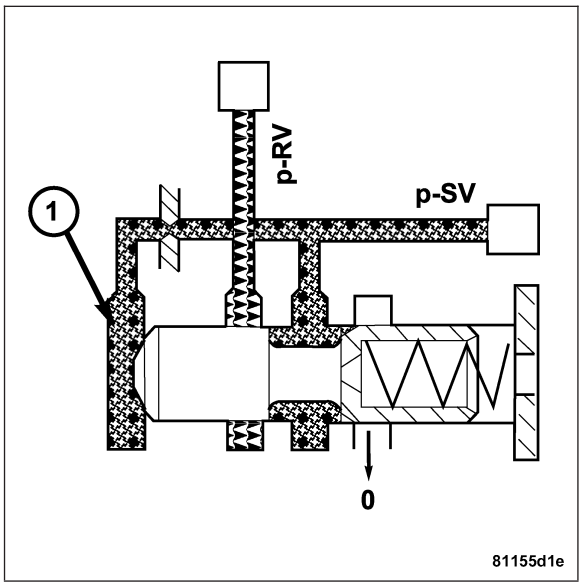

OPERATION

ELECTRICAL CONTROL UNIT

Signals from the transmission control module (TCM) are converted into hydraulic functions in the electrical control unit (7). The RPM sensors (1, 12), starter interlock contact (9), and transmission oil temperature sensor (8) of the electrical control unit (7) supply the TCM with input signals. The solenoid valves are controlled by the TCM and trigger the hydraulic functions.

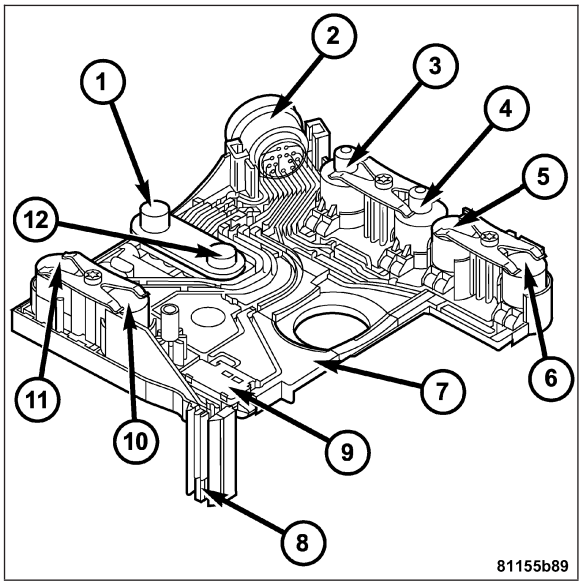

HYDRAULIC CONTROL UNIT

Working Pressure Regulating Valve (Operating Pressure)

The working pressure (p-A) is regulated at the working pressure regulating valve (4) in relation to load (modulating pressure) and gear (K1 or K2 pressure). The spring in the working pressure regulating valve sets a minimum pressure level (basic pressure).

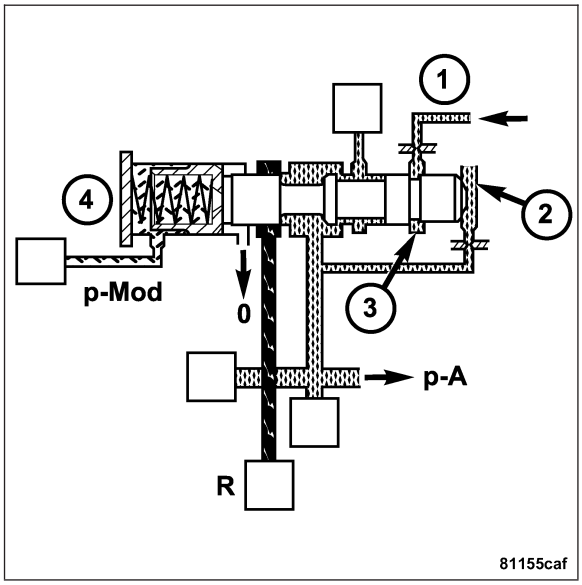

Torque Converter Lockup Clutch Regulating Valve

The torque converter lockup clutch regulating valve (6) regulates the torque converter lock-up clutch working pressure in relation to the torque converter clutch control pressure. According to the size of the working pressure, the torque converter lockup clutch is either Engaged, Disengaged, or Slipping. When the regulating valve (6) is in the lower position, lubricating oil flows through the torque converter and oil cooler (8) into the transmission (torque converter lockup clutch unpressurized). In its regulating position (slipping, torque converter lockup clutch pressurized), a reduced volume of lubricating oil flows through the annular passage (7) bypassing the torque converter and passing direct through the oil cooler into the transmission. The rest of the lubricating oil is directed via the throttle “a” into the torque converter in order to cool the torque converter lockup clutch.

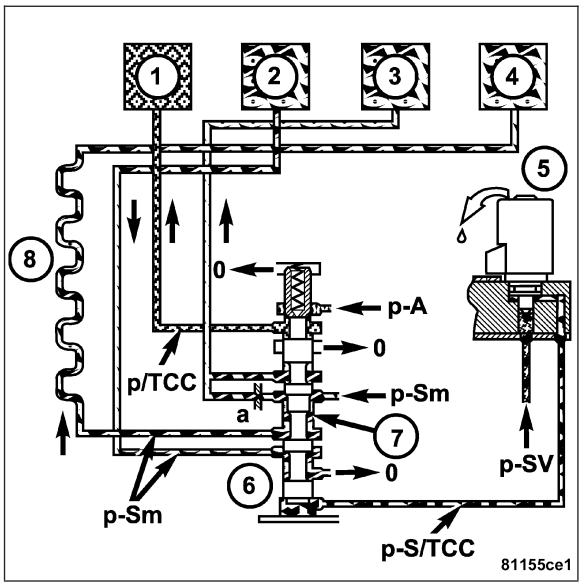

Overlap Regulating Valve

During the shift phase, the pressure in the deactivating shift actuator is regulated in relation to the engine load (modulating pressure) and the pressure in the activating actuator. The regulated pressure is inversely proportional to the transfer capacity of the activating shift actuator (regulated overlap).

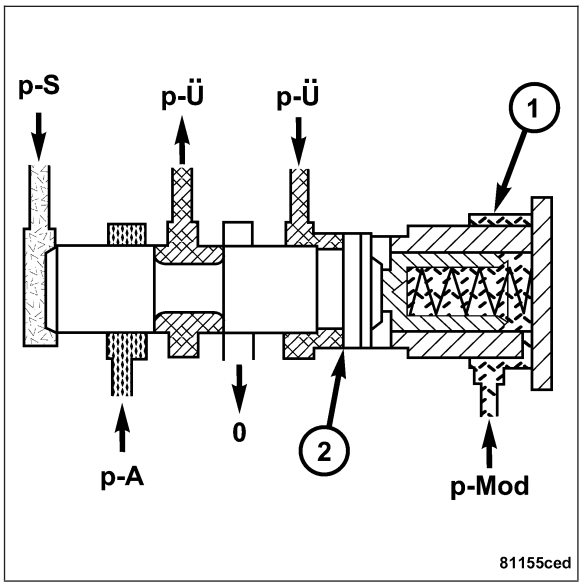

Command Valve

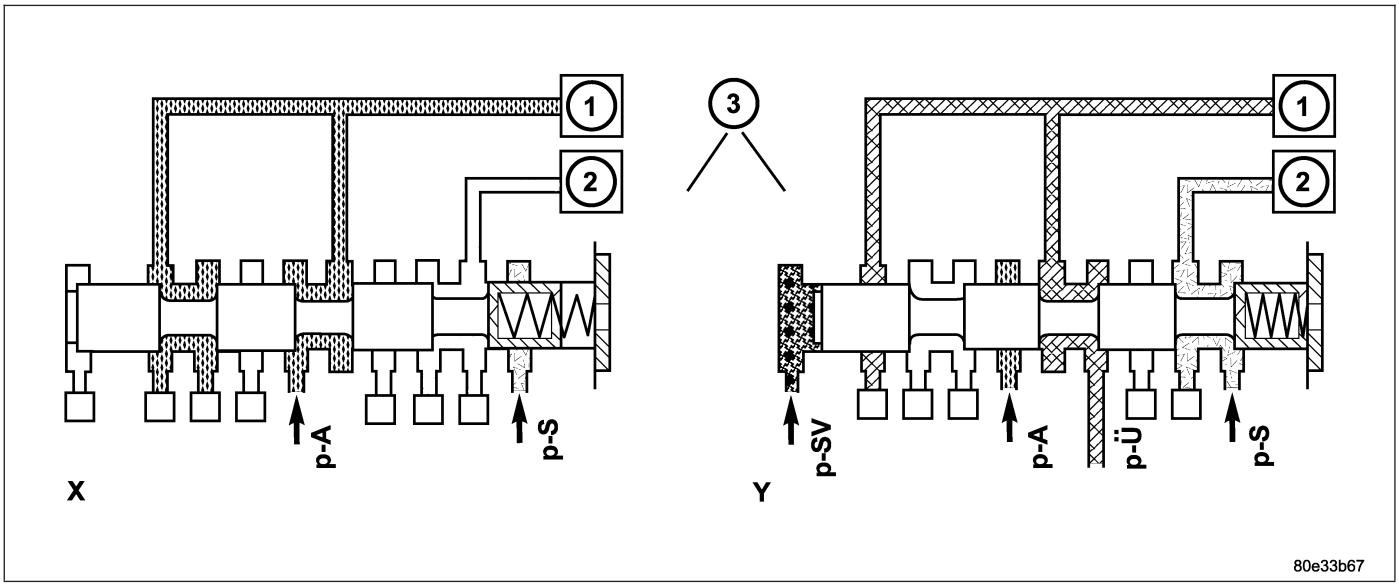

1 - HOLDING CLUTCH B1
2 - DRIVING CLUTCH K1
3 - 1-2/4-5 COMMAND VALVE

When the end face is unpressurized (stationary phase), the working pressure is directed to the actuated shift element. If the end face of the command valve is subjected to the shift valve pressure (p-SV) (shift phase), then the shift pressure is switched to the activating element and the overlap pressure is switched to the deactivating element.

Shift Valve Holding Pressure

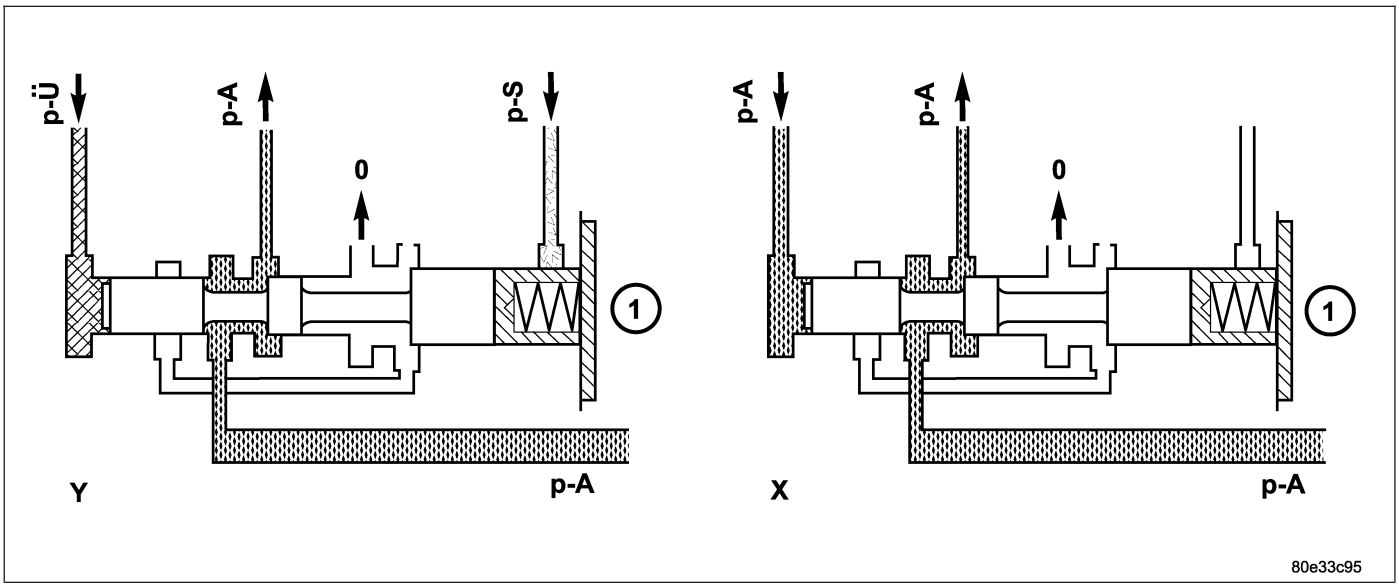

1 - HOLDING PRESSURE SHIFT VALVE

The holding pressure shift valve is actuated by the pressures present at the end face in the actuators and a spring. It assigns the working pressure to the actuator with the higher pressure (taking into account the spring force and the effective surface area). The other element of the shift group is then unpressurized. The valve switches over only during the shift phase and only at a certain pressure ratio between the overlap pressure (p-Ü) and the shift pressure (p-S).

Shift Pressure Shift Valve

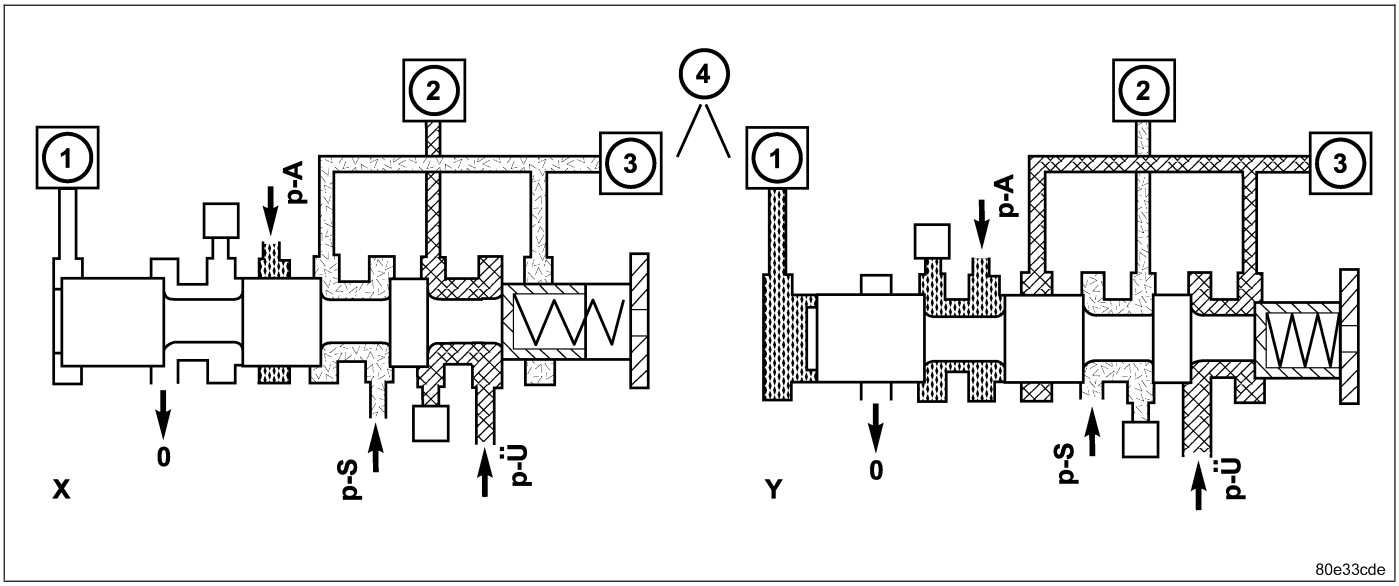

1 - 1-2/4-5 COMMAND VALVE
2 - DRIVING CLUTCH K1
3 - HOLDING CLUTCH B1
4 - 1-2/4-5 SHIFT PRESSURE SHIFT VALVE

When the multiple-disc brake B1 (3) is activated, the working pressure (pa) is applied to the end face of the 1-2 / 4-5 shift pressure shift valve (4) via the command valve (1). Its shift state is maintained during the shift phase by substituting the shift element pressure acting on its end face (and which is variable during the shift phase) with a corresponding constant pressure. When the multi-plate clutch K1 (2) is activated, the end face of the shift valve is unpressurized during the stationary and shift phases, so the shift state is maintained during the shift phase in this case too.

Lubrication Pressure Regulating Valve

At the working pressure, regulating valve surplus oil is diverted to the lubrication pressure regulating valve (1), from where the lubrication pressure (p-Sm) is used in regulated amounts to supply the transmission lubrication system including the torque converter.

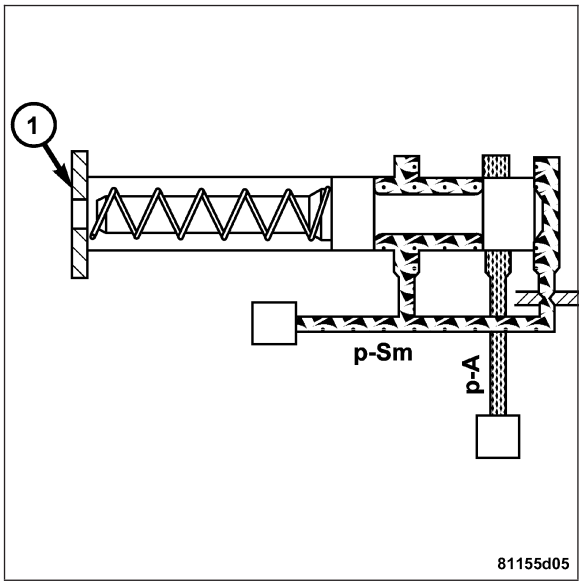

Shift Pressure Regulating Valve

The shift pressure is determined by the shift pressure regulating solenoid valve and the shift pressure regulating valve (3). In addition, pressure from the driving clutch K2 (1) is also present at the annular surface (2) of the shift pressure regulating valve (3). This reduces the shift pressure in 2nd gear.

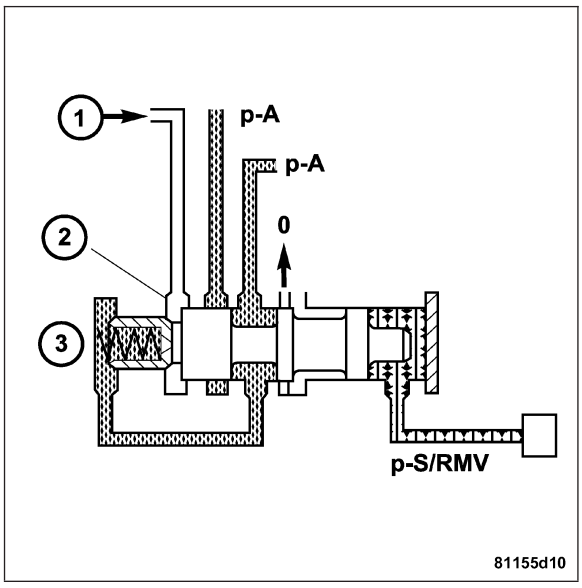

Regulating Valve Pressure Regulating Valve

The regulating valve pressure (p-RV) is set at the regulating valve pressure regulating valve (1) in relation to the working pressure (p-A) as far as the maximum pressure.

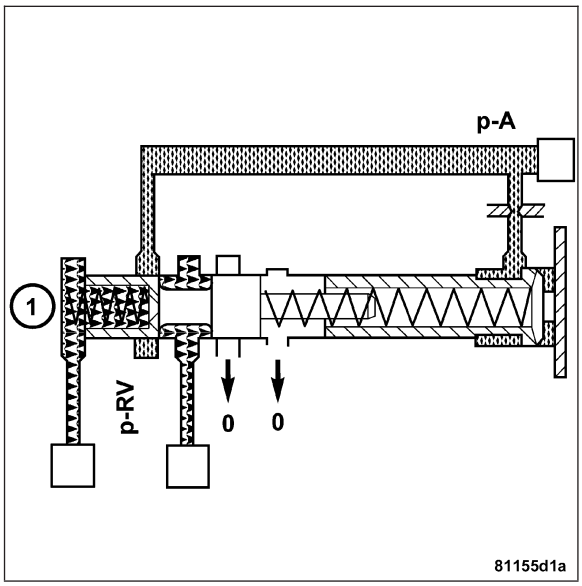

Shift Valve Pressure Regulating Valve

The non-constant regulating valve pressure (p-RV) is regulated to a constant shift valve pressure (p-SV) at the shift valve pressure regulating valve (1) and is used to supply the 1-2 and 4-5 / 3-4 / 2-3 solenoid valves and the torque converter lockup clutch PWM solenoid valve.

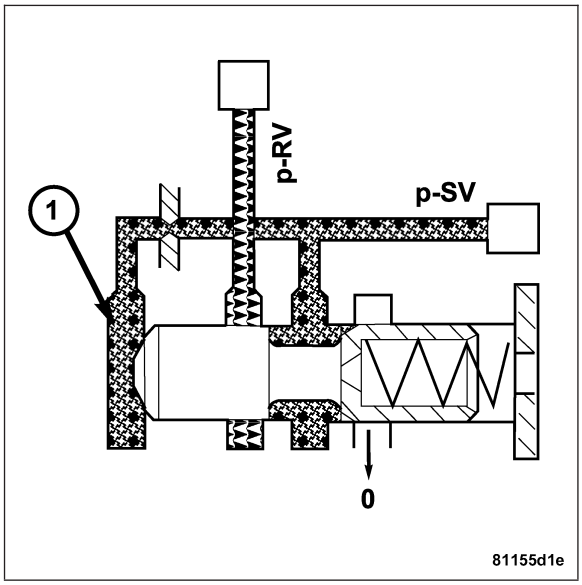

REMOVAL

1. Move selector lever to position “P”.
2. Raise and support the vehicle.
3. Remove the bolt (3) and screw (1) holding the heat shield (2) to the transmission.
4. Loosen the guide bushing and remove it from the transmission housing.

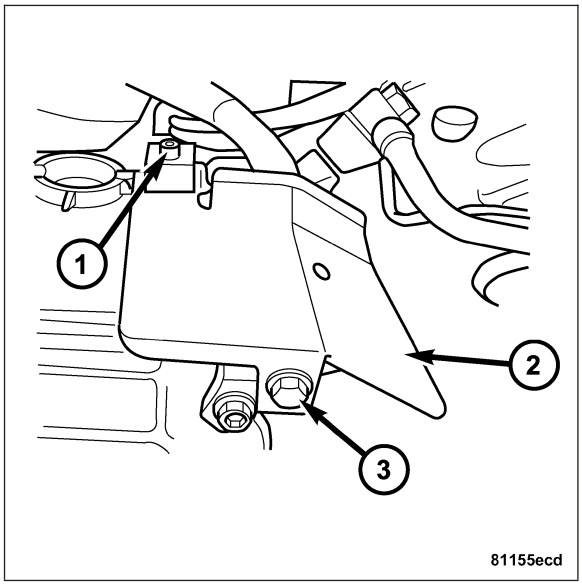

5. Disconnect the 13-pin plug connector (1). Turn the bayonet lock of the guide bushing (2) anti-clockwise.

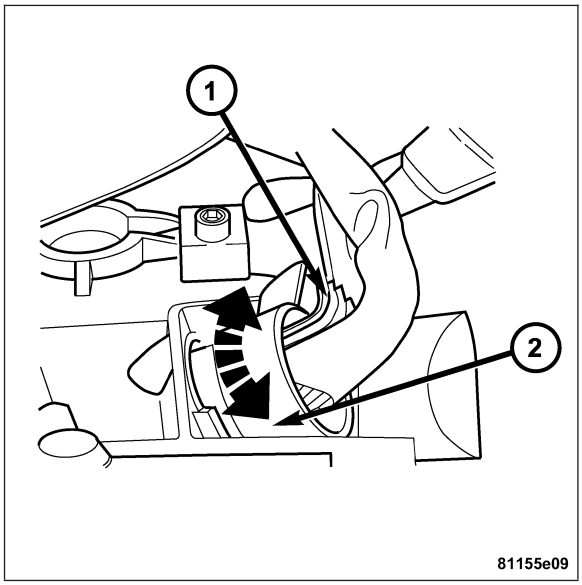

Note: If the transmission fluid is burnt or contains abraded particles, the oil cooler lines and oil cooler must be flushed out.

6. Remove the transmission filter. **Refer to Page 21-294**.

7. Unscrew the bolts (3) and remove electrohydraulic control module (2).

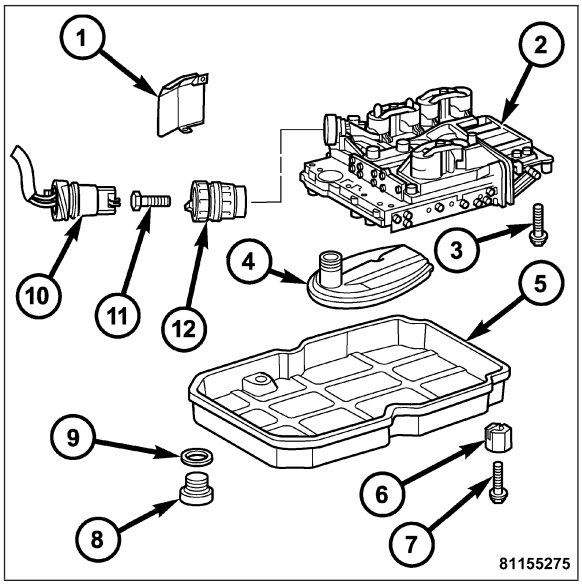

DISASSEMBLY

1. Remove the electrohydraulic control unit from the vehicle. **Refer to Page 21-281**.
2. Remove the solenoid caps (1, 2).
3. Unscrew the bolts (3, 4).

Note: Pay attention to the different lengths of the Torx socket bolts.

4. Remove the leaf springs (5).
5. Withdraw the solenoid valves (6 - 11) from the shift plate (13).

Note: Check O-rings on solenoid valves for damage and replace if necessary.

6. Bend away the retaining lug on the stiffening rib on the transmission oil temperature sensor.
7. Remove the electrohydraulic control module (12) from the shift plate (13).

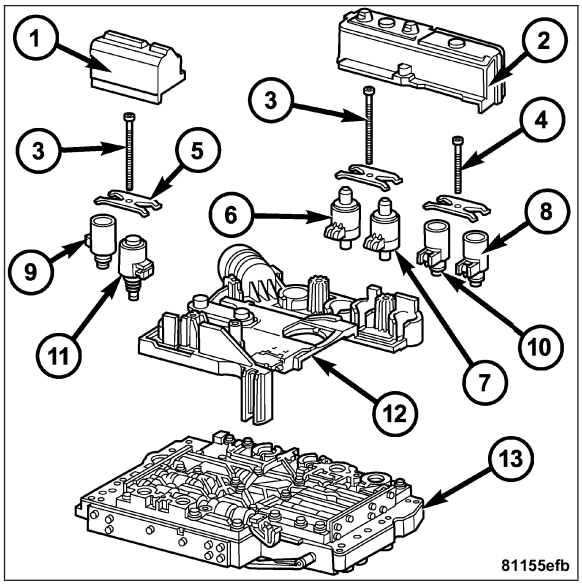

Note: Pay great attention to cleanliness for all work on the shift plate. Fluffy cloths must not be used. Leather cloths are particularly good. After dismantling, all parts must be washed and blown out with compressed-air, noting that parts may be blown away.

8. Unbolt the leaf spring (5).
9. Unscrew the bolts (1).
10. Remove the valve housing (2) from the valve body (4).

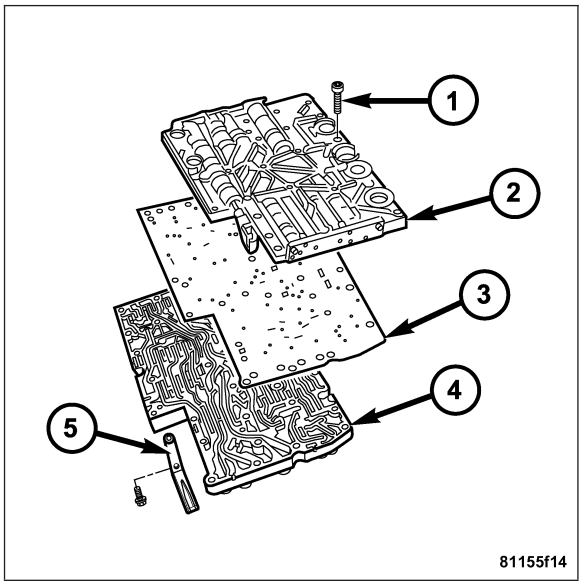

11. Remove the strainers (1) for the modulating pressure and shift pressure control solenoid valves from the valve housing.
12. Note the locations of the major shift valve group components for assembly reference.

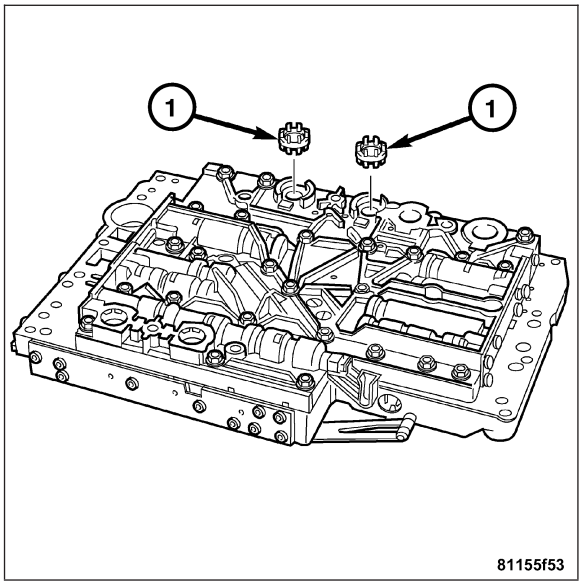

13. Remove the strainer in the inlet to torque converter lock-up control solenoid valve (1).

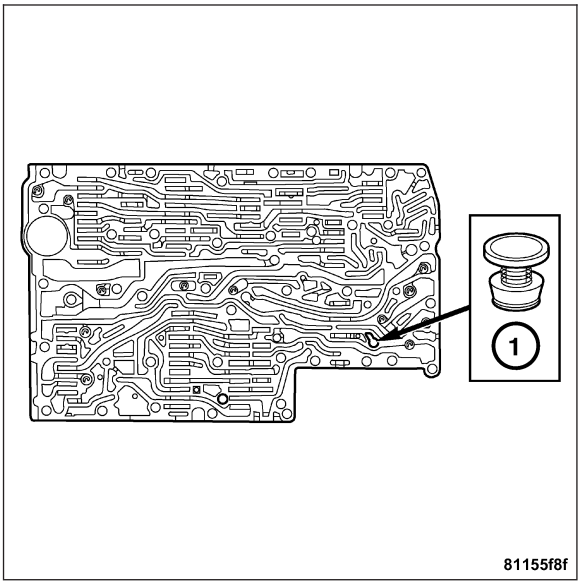

14. Remove the sealing plate (3).

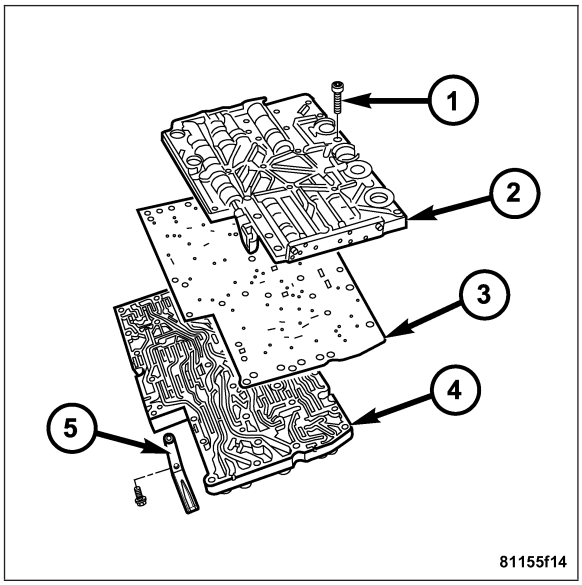

Note: A total of 12 valve balls are located in the valve body, four made from plastic (4) and eight from steel (1, 3).

15. Note the location of all check balls (1, 3, 4) and the central strainer (2) for re-installation. Remove all check balls (1, 3, 4) and the central strainer (2).
16. Remove the screws holding the side covers to the valve body and valve housing.

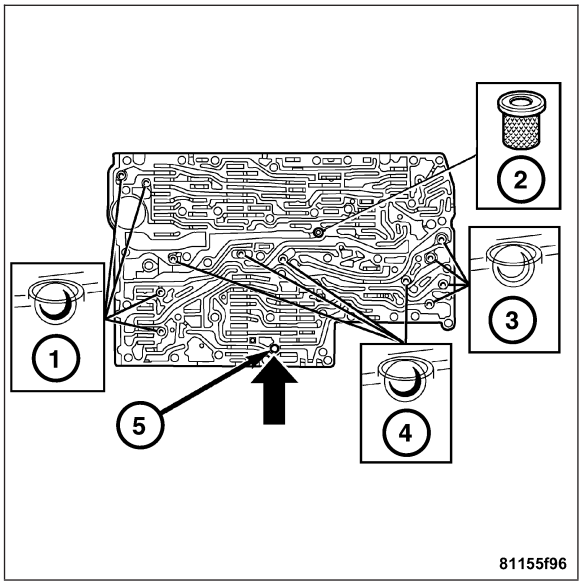

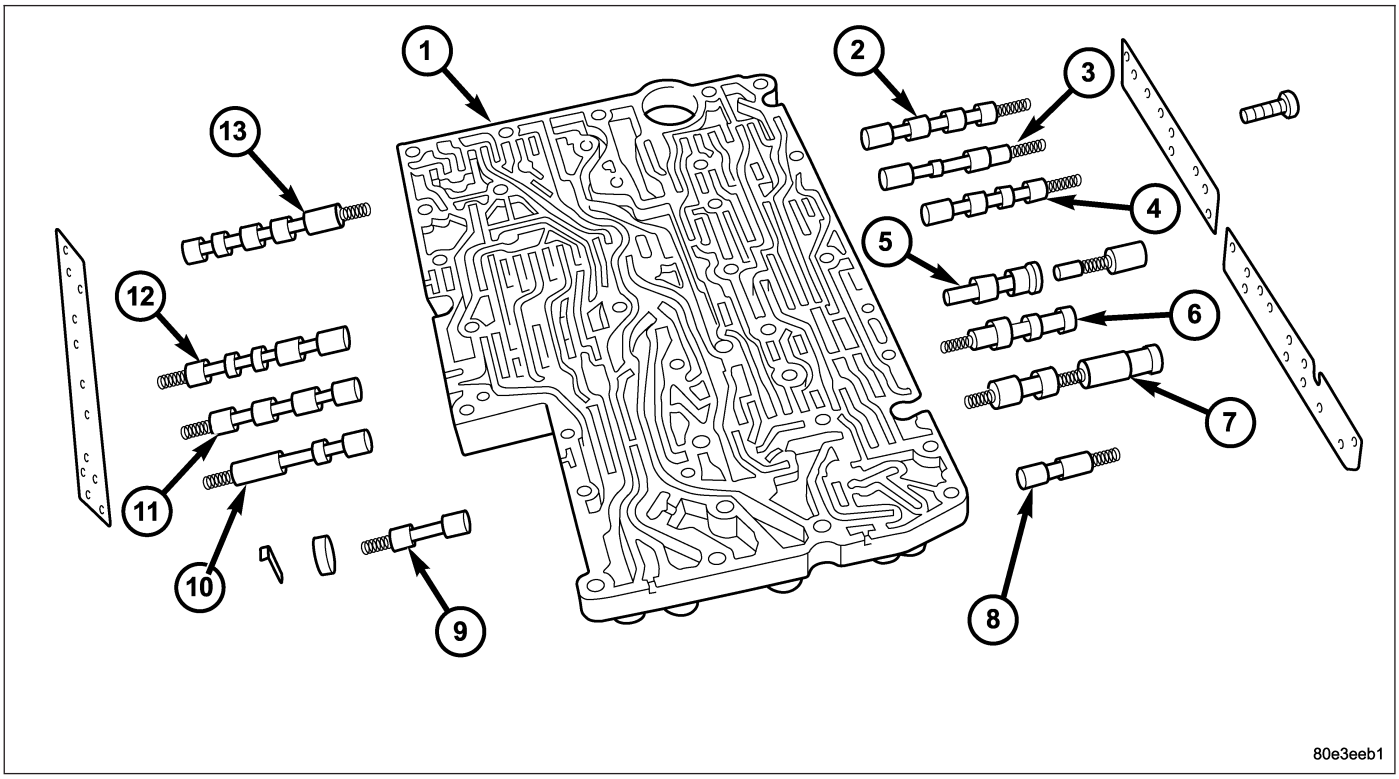

1 - VALVE BODY
2 - 1-2/4-5 COMMAND VALVE
3 - 1-2/4-5 HOLDING PRESSURE SHIFT VALVE
4 - 1-2/4-5 SHIFT PRESSURE SHIFT VALVE
5 - 1-2/4-5 OVERLAP REGULATING VALVE, SLEEVE, AND PISTON
6 - SHIFT PRESSURE REGULATING VALVE
7 - REGULATING VALVE PRESSURE REGULATING VALVE
8 - SHIFT VALVE PRESSURE REGULATING VALVE
9 - B2 SHIFT VALVE
10 - 2-3 HOLDING PRESSURE SHIFT VALVE
11 - 2-3 COMMAND VALVE
12 - 2-3 SHIFT PRESSURE SHIFT VALVE
13 - TCC LOCK-UP REGULATING VALVE

17. Remove all the valves and springs from the valve body (1). Check all valves for ease of movement and shavings.

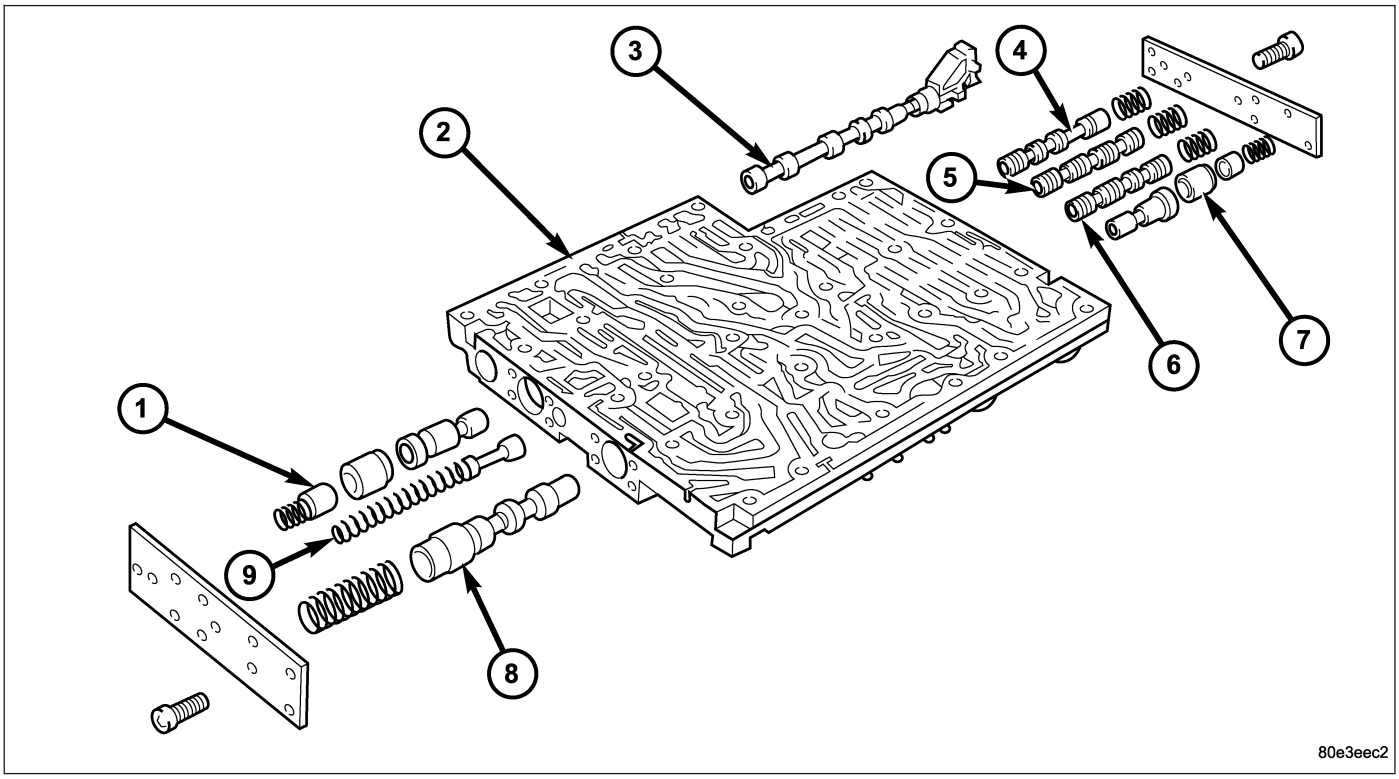

1 - 2-3 OVERLAP REGULATING VALVE, SLEEVE, AND PISTON
2 - VALVE HOUSING
3 - SELECTOR VALVE
4 - 3-4 HOLDING PRESSURE SHIFT VALVE
5 - 3-4 COMMAND VALVE
6 - 3-4 SHIFT PRESSURE SHIFT VALVE
7 - 3-4 OVERLAP REGULATING VALVE, SLEEVE, AND PISTON
8 - OPERATING PRESSURE REGULATING VALVE
9 - LUBRICATING PRESSURE REGULATING VALVE

18. Remove all of the valves and springs from the valve housing (2). Check all valves for ease of movement and shavings.

Note: The sleeves and pistons of the overlap regulating valves must not be mixed up.

19. Remove the pressure supply valve from the valve body.

ASSEMBLY

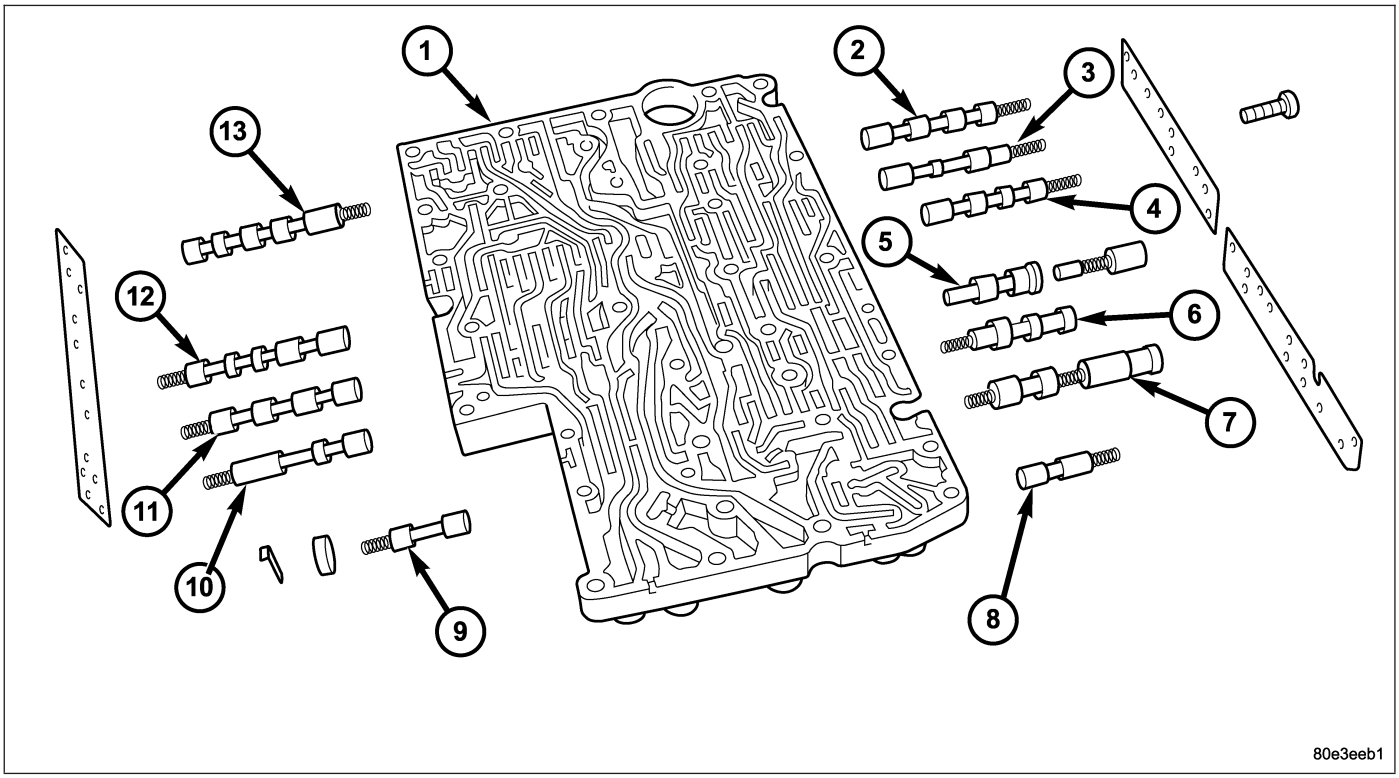

1 - VALVE BODY
2 - 1-2/4-5 COMMAND VALVE
3 - 1-2/4-5 HOLDING PRESSURE SHIFT VALVE
4 - 1-2/4-5 SHIFT PRESSURE SHIFT VALVE
5 - 1-2/4-5 OVERLAP REGULATING VALVE, SLEEVE, AND PISTON
6 - SHIFT PRESSURE REGULATING VALVE
7 - REGULATING VALVE PRESSURE REGULATING VALVE
8 - SHIFT VALVE PRESSURE REGULATING VALVE
9 - B2 SHIFT VALVE
10 - 2-3 HOLDING PRESSURE SHIFT VALVE
11 - 2-3 COMMAND VALVE
12 - 2-3 SHIFT PRESSURE SHIFT VALVE
13 - TCC LOCK-UP REGULATING VALVE

1. Install all of the valves and springs from the valve body (1). Check all valves for ease of movement and shavings.

Note: Pay great attention to cleanliness for all work on the shift plate. Fluffy cloths must not be used. Leather cloths are particularly good. After dismantling, all parts must be washed and blown out with compressed-air, noting that parts may be blown away.

2. Install the pressure supply valve (1) into the valve body.

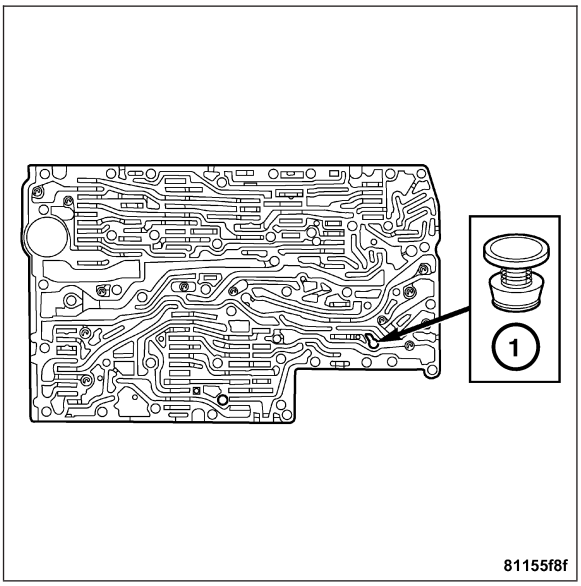

Note: The sleeves and pistons of the overlap regulating valves must not be mixed up.

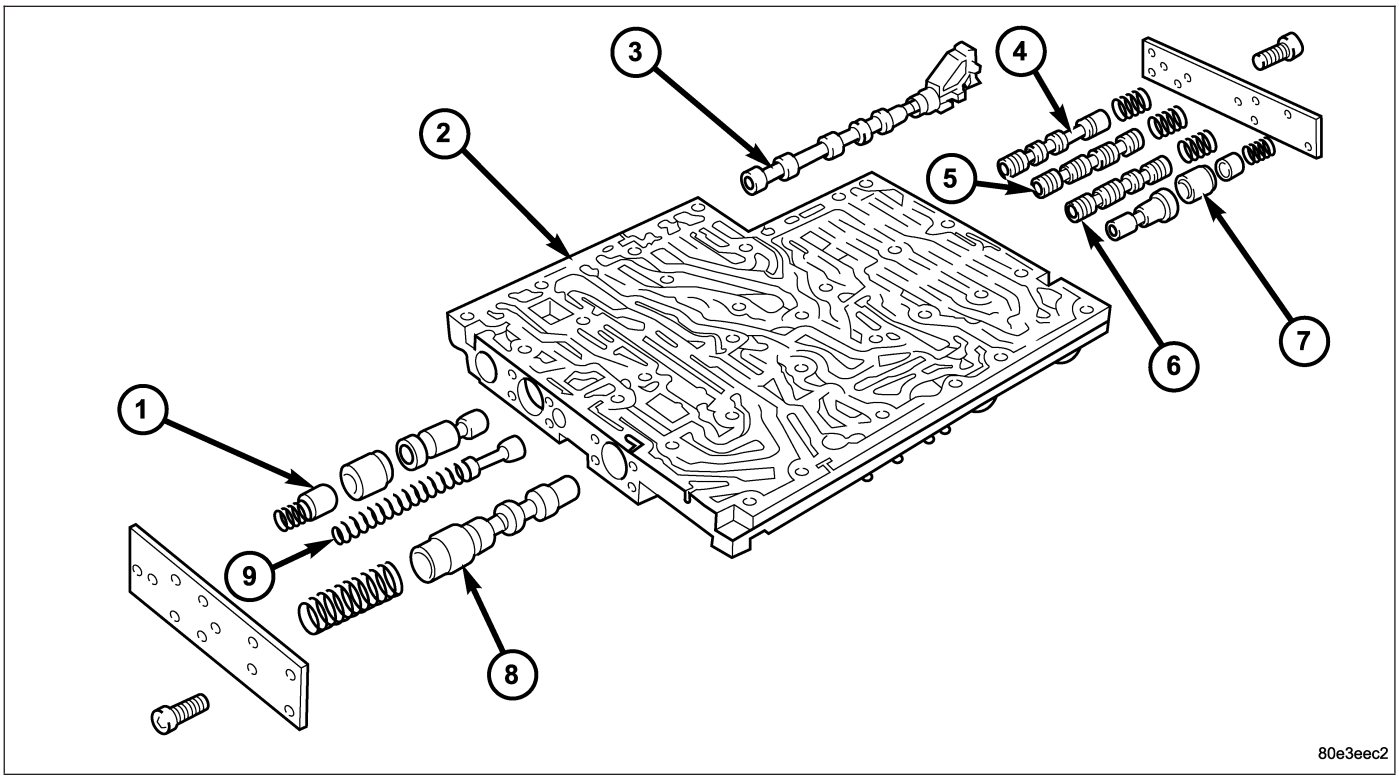

1 - 2-3 OVERLAP REGULATING VALVE, SLEEVE, AND PISTON
2 - VALVE HOUSING
3 - SELECTOR VALVE
4 - 3-4 HOLDING PRESSURE SHIFT VALVE
5 - 3-4 COMMAND VALVE
6 - 3-4 SHIFT PRESSURE SHIFT VALVE
7 - 3-4 OVERLAP REGULATING VALVE, SLEEVE, AND PISTON
8 - OPERATING PRESSURE REGULATING VALVE
9 - LUBRICATING PRESSURE REGULATING VALVE

3. Install all of the valves and springs into the valve housing (2). Check all valves for ease of movement and shavings.
4. Install the screws to hold the side covers to the valve body and valve housing. Tighten the screws to 4 N·m (35 in. lbs.).

Note: A total of 12 valve balls are located in the valve body, four made from plastic (4) and eight from steel (1, 3).

5. Install all of the check balls (1, 3, 4) and the central strainer (2).

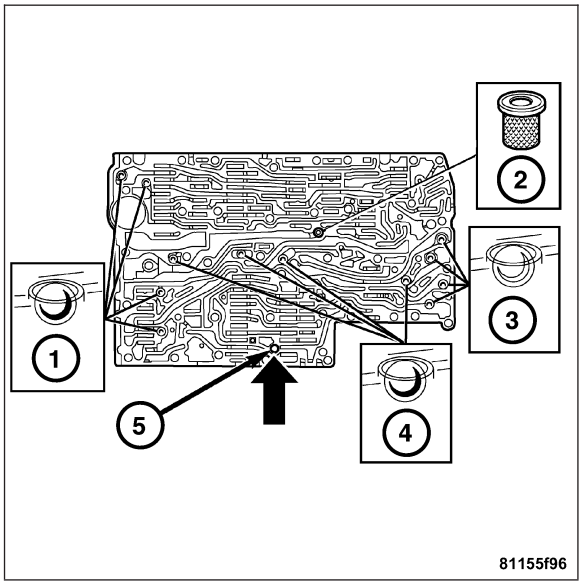

6. Install the strainer in the inlet to the torque converter lock-up control solenoid valve (1).

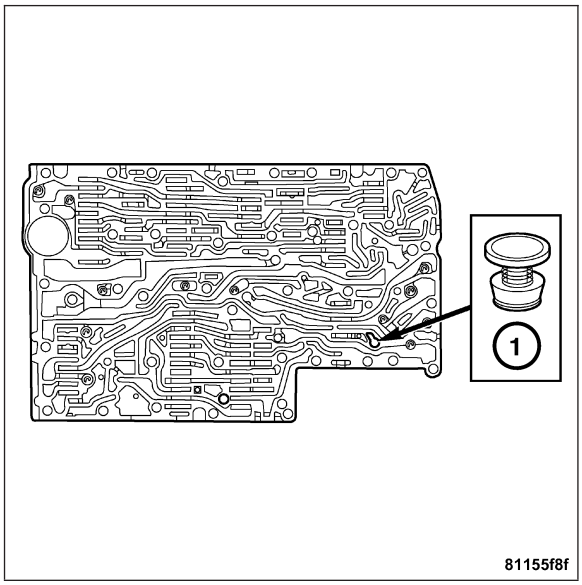

7. Position the sealing plate (3) onto the valve body (4).
8. Install the valve housing (2) onto the valve body (4) and sealing plate (3).
9. Install the shift plate bolts (1). Tighten the bolts to 8 N·m (71 in. lbs.).
10. Install the leaf spring (5).

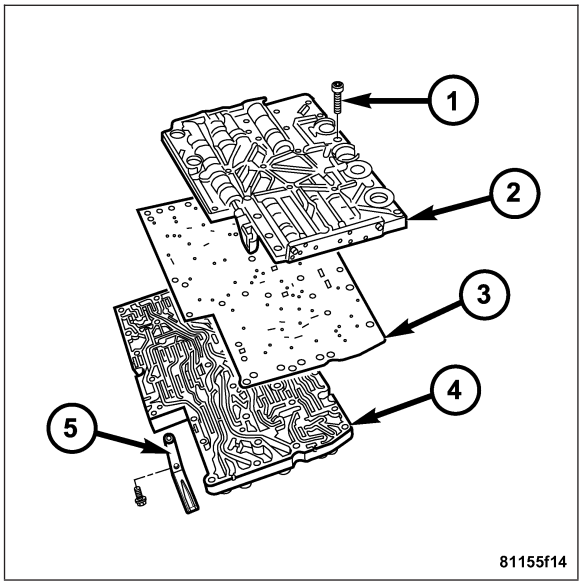

11. Install the strainers (1) for the modulating pressure and shift pressure control solenoid valves into the valve housing.

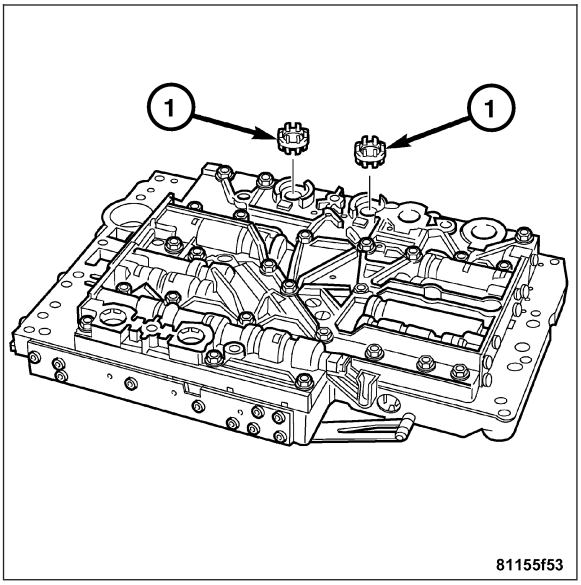

12. Install the electrohydraulic control module (12) onto the shift plate (13).
13. Bend the retaining lug on the stiffening rib on the transmission oil temperature sensor to retain the electrohydraulic control module.
14. Install the solenoid valves (6 - 11) into the shift plate (13).

Note: Check the O-rings on the solenoid valves for damage and replace if necessary.

15. Install the leaf springs (5).
16. Install the bolts (3, 4). Tighten the bolts to 8 N·m (71 in. lbs.).

Note: Pay attention to the different lengths of the bolts.

17. Install the solenoid caps (1, 2).
18. Install the electrohydraulic unit into the vehicle. **Refer to Page 21-290**.

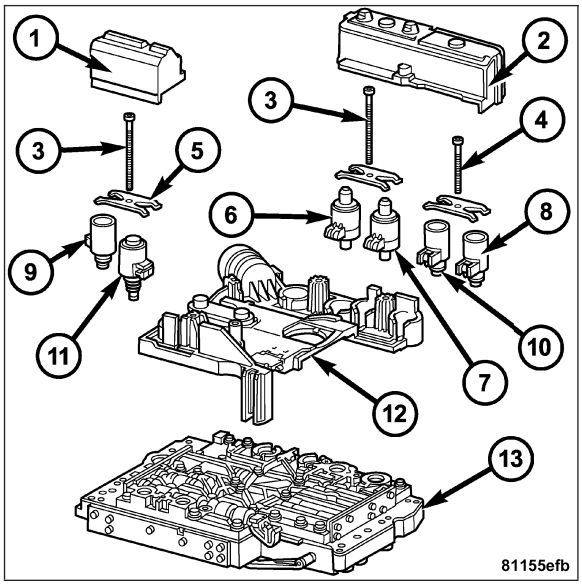

INSTALLATION

1. Position the electrohydraulic unit in the transmission housing.
2. Insert the selector valve (1) in the driver of the detent plate (2). When installing the electrohydraulic control module in the transmission housing, the plastic part of the selector valve (1) must engage in the driver of the detent plate (2).

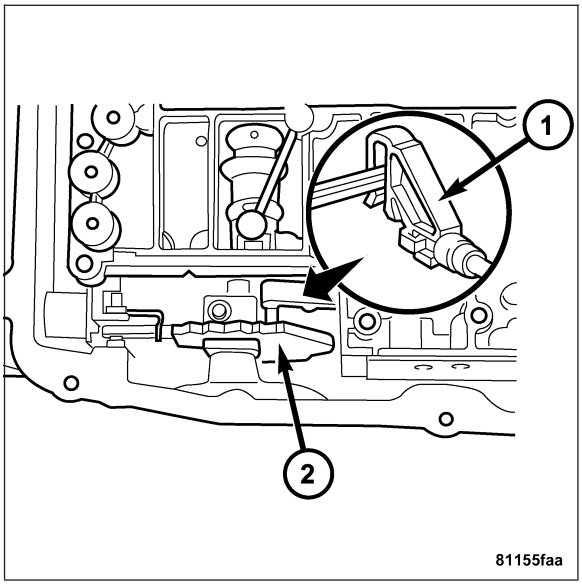

3. Install the bolts (3) and tighten to 8 N·m (71 in. lbs.).
4. Install a new oil filter..
5. Install the oil pan (5) and torque the oil pan bolts to 8 N·m (71 in. lbs.).
6. Install the oil drain plug (8) with a new drain plug gasket (9). Torque the drain plug to 20 N·m (177 in. lbs.).
7. Install the guide bushing (12) into the transmission housing and install the bolt (11) to hold the guide bushing in place.

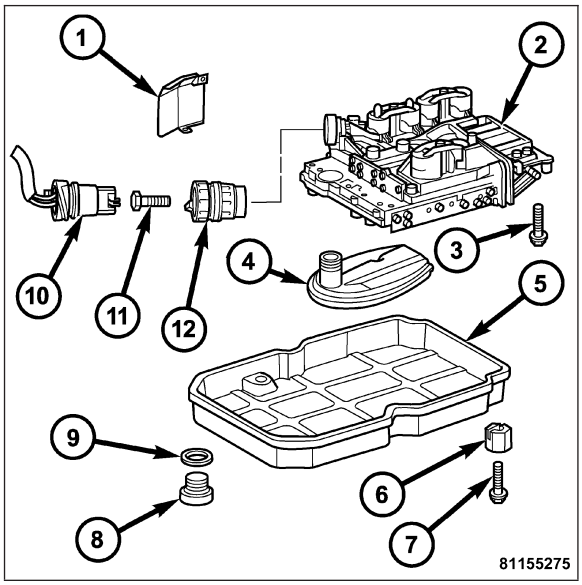

8. Check the O-ring on the plug connector (1), and replace if necessary.
9. Install the plug connector (1) into the guide bushing (2). Turn the bayonet lock of the guide bushing (2) clockwise to connect plug connector (1).

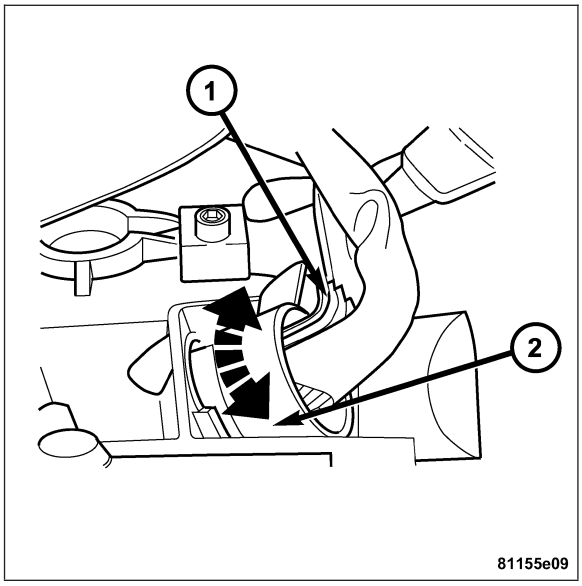

10. Position the heat shield (2) onto the transmission housing and install the screw (1) and bolt (3) to hold the shield in place.
11. Fill the transmission with specified fluid. **Refer to Page 21-294**.

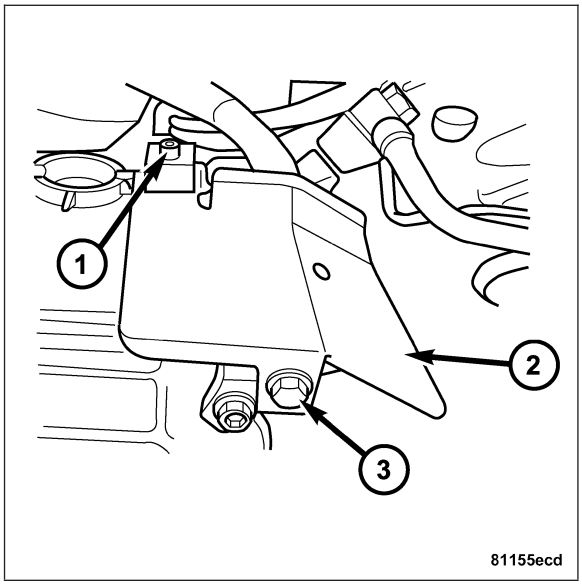

FLUID AND FILTER

DESCRIPTION

The oil level control is located on the electrohydraulic unit and consists of the float (5) which is integrated into the electrohydraulic control unit. The float is positioned to plug the opening between the oil gallery and gearset chamber so that the rotating gearsets do not splash about in oil as the oil level rises. The oil level control reduces power loss and prevents oil from being thrown out of the transmission housing at high oil temperatures.

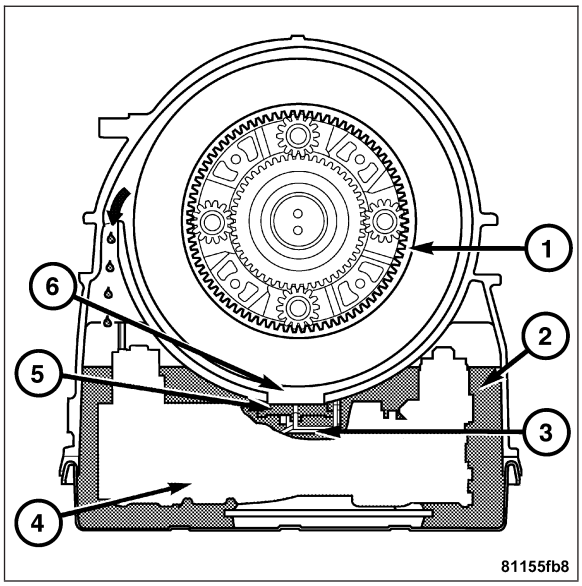

OPERATION

With low oil levels, the lubricating oil which flows constantly out of the gearset, flows back to oil galley (2) though the opening (6). If the oil level rises, the oil presses the float (5) against the housing opening (6). The float (5) therefore separates the oil gallery (2) from the gearset chamber (1). The lubricating oil which continues to flow out of the gearsets is thrown against the housing wall, incorporated by the rotating parts and flows back into the oil galley (2) through the upper opening (arrow).

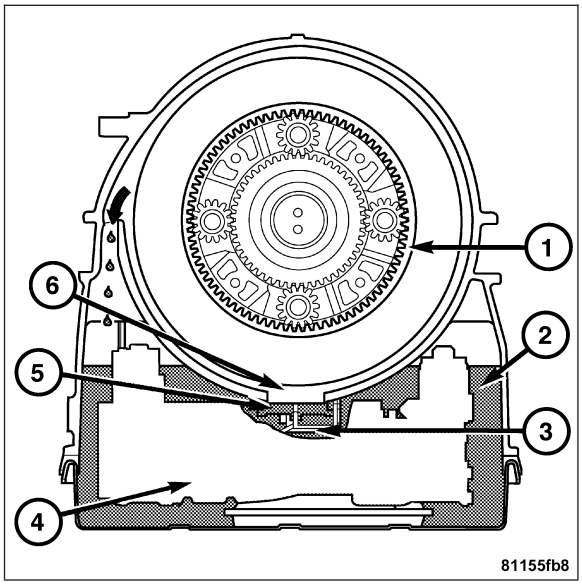

DIAGNOSIS AND TESTING

EFFECTS OF INCORRECT FLUID LEVEL

A low fluid level allows the pump to take in air along with the fluid. Air in the fluid will cause fluid pressures to be low and develop slower than normal. If the transmission is overfilled, the gears churn the fluid into foam. This aerates the fluid and causing the same conditions occurring with a low level. In either case, air bubbles cause fluid overheating, oxidation and varnish buildup which interferes with valve and clutch operation. Foaming also causes fluid expansion which can result in fluid overflow from the transmission vent or fill tube. Fluid overflow can easily be mistaken for a leak if inspection is not careful.

DIAGNOSIS AND TESTING - CAUSES OF BURNT FLUID

Burnt, discolored fluid is a result of overheating which has four primary causes.

1. Internal clutch slippage, usually caused by low line pressure, inadequate clutch apply pressure, or clutch seal failure.
2. A result of restricted fluid flow through the main and/or auxiliary cooler. This condition is usually the result of a faulty or improperly installed drainback valve, a damaged main cooler, or severe restrictions in the coolers and lines caused by debris or kinked lines.
3. Heavy duty operation with a vehicle not properly equipped for this type of operation. Trailer towing or similar high load operation will overheat the transmission fluid if the vehicle is improperly equipped. Such vehicles should have an auxiliary transmission fluid cooler, a heavy duty cooling system, and the engine/axle ratio combination needed to handle heavy loads.
4. Low fluid level.

DIAGNOSIS AND TESTING - FLUID CONTAMINATION

Transmission fluid contamination is generally a result of:

- adding incorrect fluid
- failure to clean dipstick and fill tube when checking level
- engine coolant entering the fluid
- internal failure that generates debris
- overheat that generates sludge (fluid breakdown)
- failure to replace contaminated converter after repair

The use of non-recommended fluids can result in transmission failure. The usual results are erratic shifts, slippage, abnormal wear and eventual failure due to fluid breakdown and sludge formation. Avoid this condition by using recommended fluids only.

The dipstick cap and fill tube should be wiped clean before checking fluid level. Dirt, grease and other foreign material on the cap and tube could fall into the tube if not removed beforehand. Take the time to wipe the cap and tube clean before withdrawing the dipstick.

Engine coolant in the transmission fluid is generally caused by a cooler malfunction. The only remedy is to replace the radiator as the cooler in the radiator is not a serviceable part. If coolant has circulated through the transmission, an overhaul is necessary.

The torque converter should be replaced whenever a failure generates sludge and debris. This is necessary because normal converter flushing procedures will not remove all contaminants.

STANDARD PROCEDURE

CHECK OIL LEVEL

1. Verify that the vehicle is parked on a level surface.
2. Remove locking pin (1). Remove the plate of the locking pin with a suitable tool and press out the pin remaining in the cap downwards.
3. Remove the cap (2) from the fill tube (3).

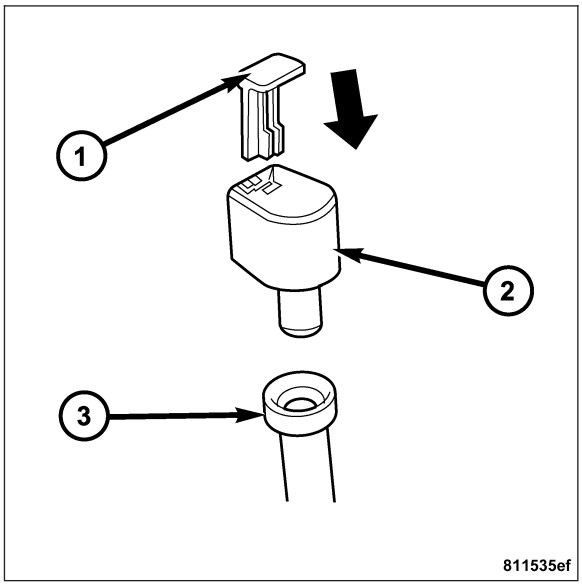

WARNING: RISK OF ACCIDENT FROM VEHICLE STARTING OFF BY ITSELF WHEN ENGINE RUNNING. RISK OF INJURY FROM CONTUSIONS AND BURNS IF YOU INSERT YOUR HANDS INTO THE ENGINE WHEN IT IS STARTED OR WHEN IT IS RUNNING. SECURE VEHICLE TO PREVENT IT FROM MOVING OFF BY ITSELF. WEAR PROPERLY FASTENED AND CLOSE-FITTING WORK CLOTHES. DO NOT TOUCH HOT OR ROTATING PARTS.

4. Actuate the parking brake. Start engine and let it run at idle speed in selector lever position “P”.
5. Shift through the transmission modes several times with the vehicle stationary and the engine idling
6. Warm up the transmission, wait at least 2 minutes and check the oil level with the engine running. Push the Special Tool 8863A (1) in up to the stop and pull out again, read off oil level, repeat if necessary.

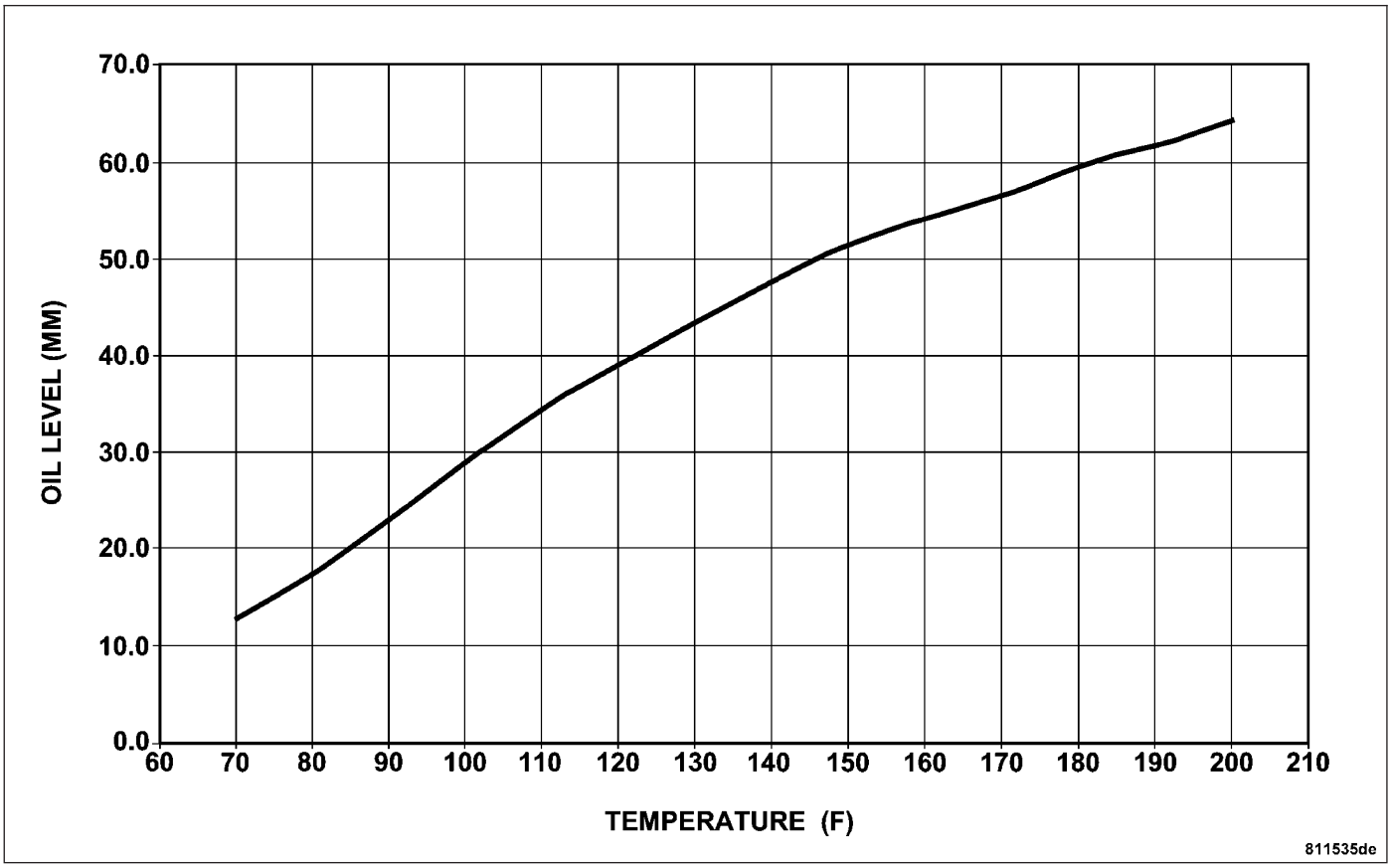

7. Check the transmission oil temperature.

Note: The true transmission oil temperature can only be read by a scan tool in REVERSE or any forward gear position.

8. The transmission Special Tool 8863A has indicator marks every 10mm. Determine the height of the oil level on the dipstick and using the height, the transmission temperature, and the Transmission Fluid Graph, determine if the transmission oil level is correct.
9. Add or remove oil as necessary and recheck the oil level.
10. Once the oil level is correct, install a new dipstick tube cap (2) and lock pin (1).

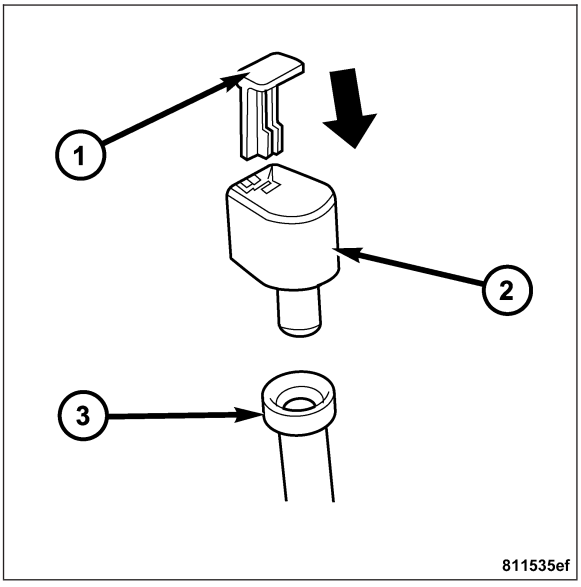

STANDARD PROCEDURE - TRANSMISSION FILL

To avoid overfilling transmission after a fluid change or overhaul, perform the following procedure:

1. Verify that the vehicle is parked on a level surface.
2. Remove the locking pin (1). Remove the plate of the locking pin with a suitable tool and press out the pin remaining in the cap downwards.
3. Remove the cap (2) from the fill tube (3).
4. Add the following initial quantity of Shell® 3403 to transmission:
   a. If only the fluid and filter were changed, add **5.0 L (10.6 pts.)** of transmission fluid to the transmission.
   b. If the transmission was completely overhauled, the torque converter was replaced or drained, and the cooler was flushed, add **7.7 L (16.3 pts.)** of transmission fluid to the transmission.
5. Check the transmission fluid level. **Refer to Page 21-294**, and adjust as required.

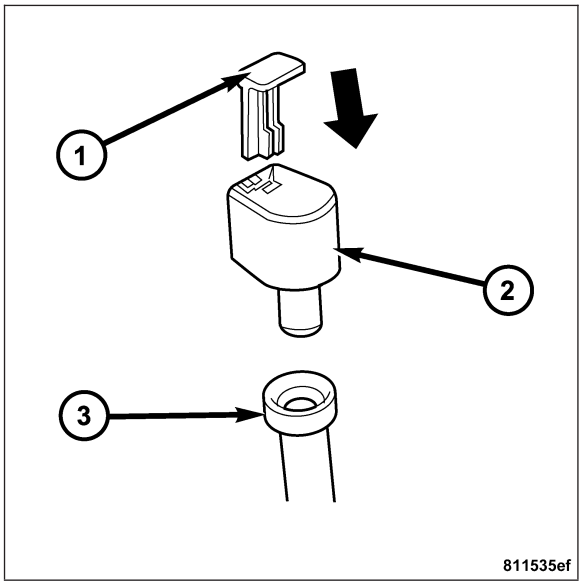

STANDARD PROCEDURE - FILTER CHANGE

1. Raise and support the vehicle.
2. Position a drain pan under the transmission drain plug. Remove the plug (2) and the gasket (1). Allow the transmission to drain thoroughly.
3. Remove the oxygen sensor wire harness (1) from the heat shield.
4. Remove the screws (2) from the heat shield and position it out of the way.

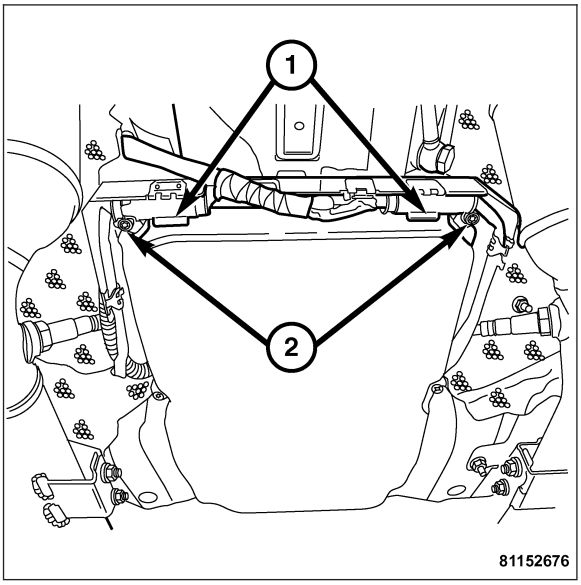

5. Remove the remaining screws (3) and the transmission pan (1).
6. Remove and discard the transmission filter (6) from the valve body.
7. Clean the transmission oil pan and the gasket surface of the transmission.
8. Install a new transmission filter (6).
9. Replace the transmission pan gasket if damaged or swollen.
10. Install the transmission pan (1) and bolts (3). Tighten the bolts to 8 N·m (71 in. lbs.).
11. Install the drain plug (2) with a new gasket (1). Tighten the drain plug to 20 N·m (15 lbs.ft.).

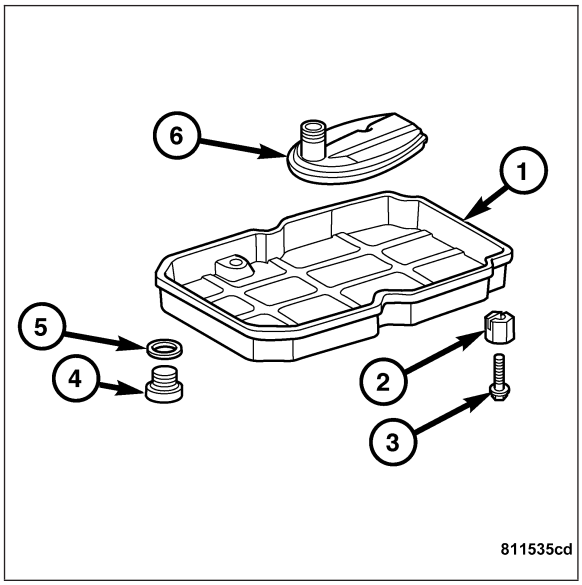

12. Install the heat shield and the bolts (2). Tighten the bolts to 8 N·m (71 in. lbs.).
13. Route the oxygen sensor wire harness (1) in the heat shield. Connect the oxygen sensor wire harness connectors.
14. Lower the vehicle.
15. Fill the transmission with the specified fluid.

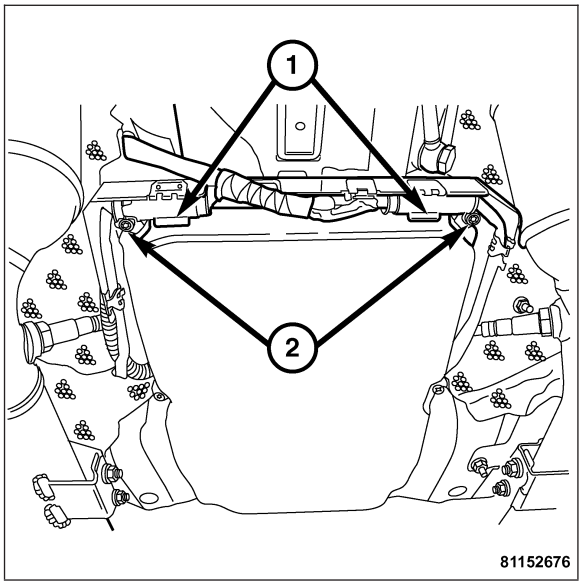

FREEWHEELING CLUTCH

DESCRIPTION

Freewheeling clutches are installed in the front planetary gear set between the sun gear and the stator shaft, and in the rear planetary gear set between the sun gear and the intermediate shaft.

The freewheel consists of an outer race (4), an inner race (7), a number of locking elements (3) and a cage (6) for these locking elements.

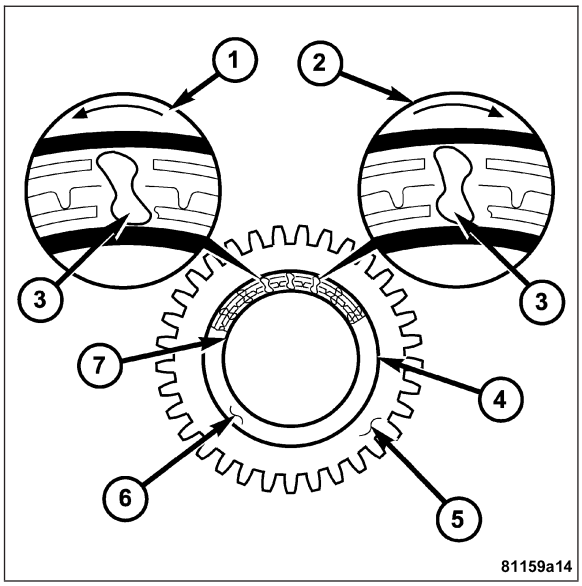

OPERATION

The freewheel optimizes individual gearshifts. They lock individual elements of a planetary gear set together or against the transmission housing in one direction of rotation to allow the torque to be transmitted.

If the inner race (7) of the freewheeling clutch is locked and the outer race (4) turns counter clockwise (1), the locking elements (3) adopt a diagonal position on account of their special contours, allowing the freewheel function. The outer race (4) slides over the locking elements (3) with negligible friction. If the rotation of the outer race (4) changes to clockwise (2), the locking elements (3) stand up and lock the outer and inner races (4, 7) together.

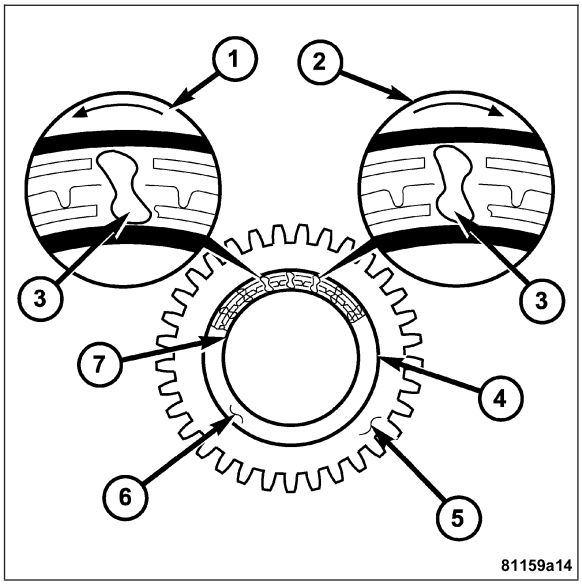

DISASSEMBLY

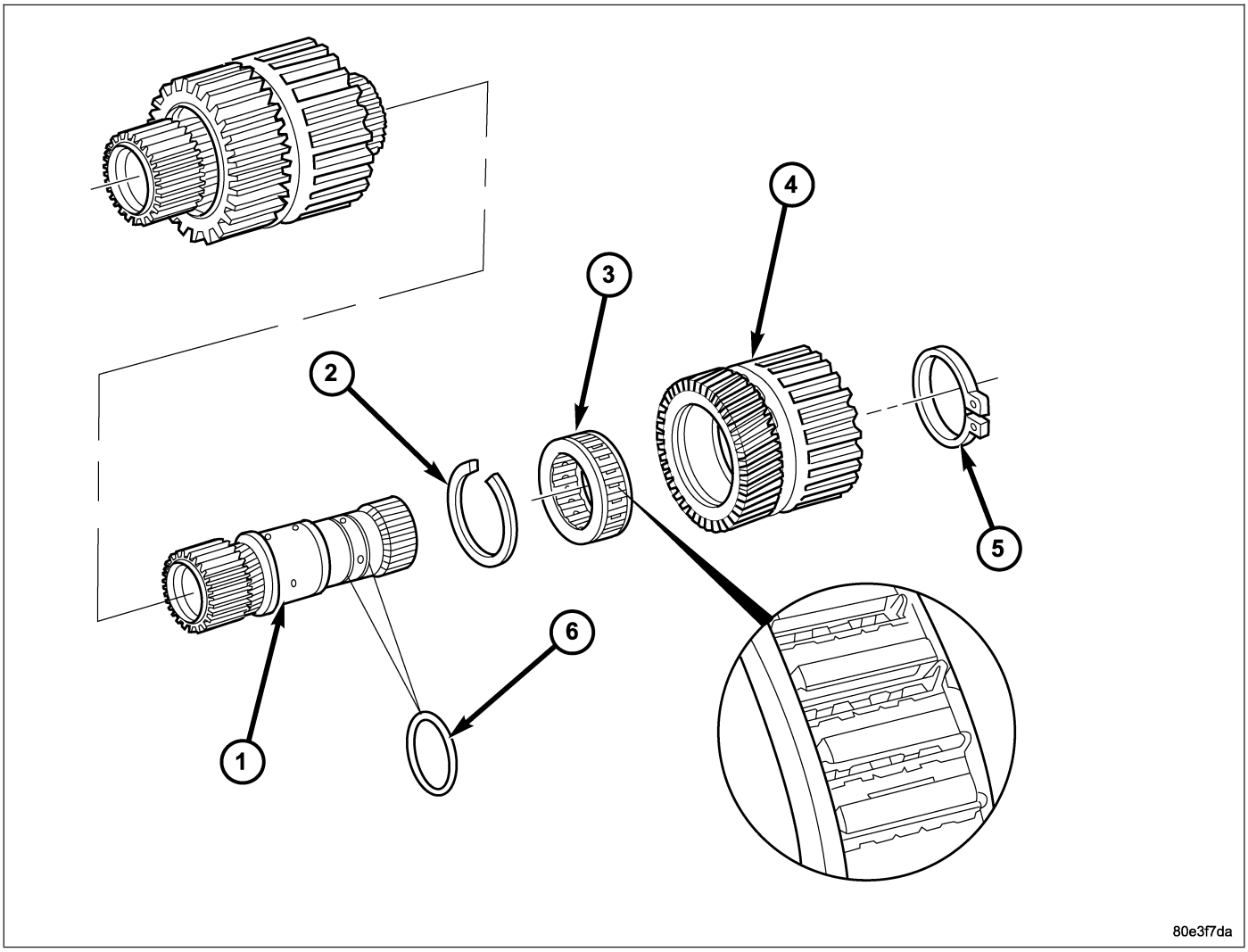

1 - HOLLOW SHAFT
2 - SNAP-RING
3 - FREEWHEEL F2
4 - K3 INNER DISC CARRIER AND REAR PLANETARY SUN GEAR
5 - RETAINING RING
6 - O-RINGS

1. Remove the retaining ring (5) from the hollow shaft (1).
2. Remove the K3 inner disc carrier and rear planetary sun gear (4) with the K3 internally toothed disk carrier and the rear freewheel F2 (3).
3. Remove the snap-ring (2) for freewheel.
4. Press the freewheel out of the K3 inner disc carrier and rear planetary sun gear (4).
5. Check the O-rings (6), replace if necessary.

6. Check the anti-friction bearing (2) in the K3 inner disc carrier and rear planetary sun gear for damage. Replace as necessary.

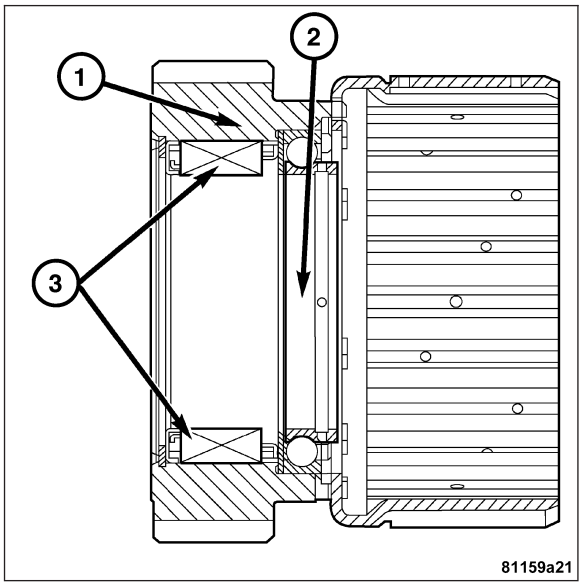

ASSEMBLY

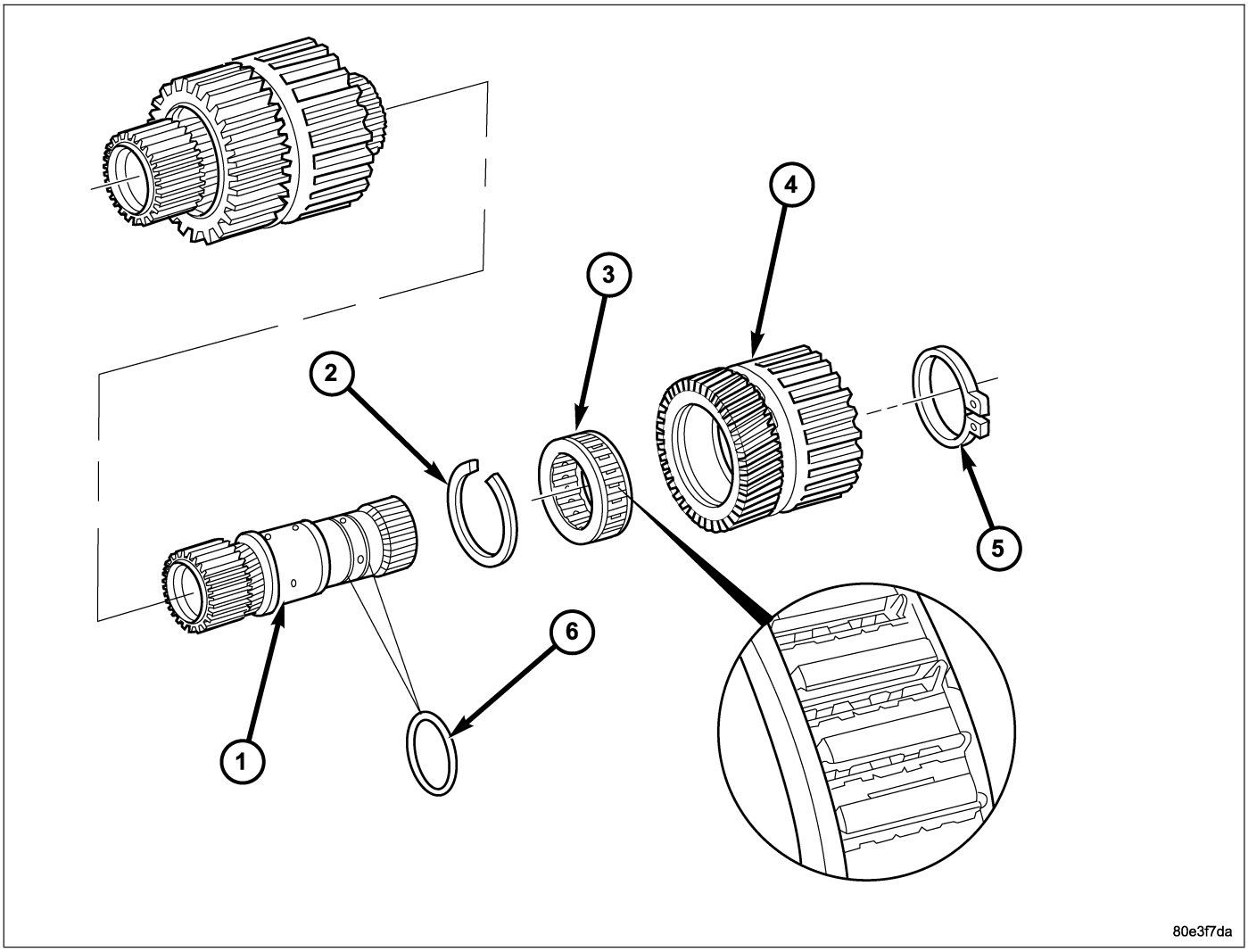

1 - HOLLOW SHAFT
2 - SNAP-RING
3 - FREEWHEEL F2
4 - K3 INNER DISC CARRIER AND REAR PLANETARY SUN GEAR
5 - RETAINING RING
6 - O-RINGS

1. Press the freewheel F2 (3) into the K3 inner disc carrier and rear planetary sun gear (4).
2. Install the snap-ring (2) for the freewheel.
3. Check the O-rings (6) on the hollow shaft (1), replace if necessary.
4. Install the K3 inner disc carrier and rear planetary sun gear (4) with the K3 internally toothed disc carrier and the freewheel (3) onto the hollow shaft (1).
5. Install the retaining ring (5) onto the hollow shaft (1).

HOLDING CLUTCHES

DESCRIPTION

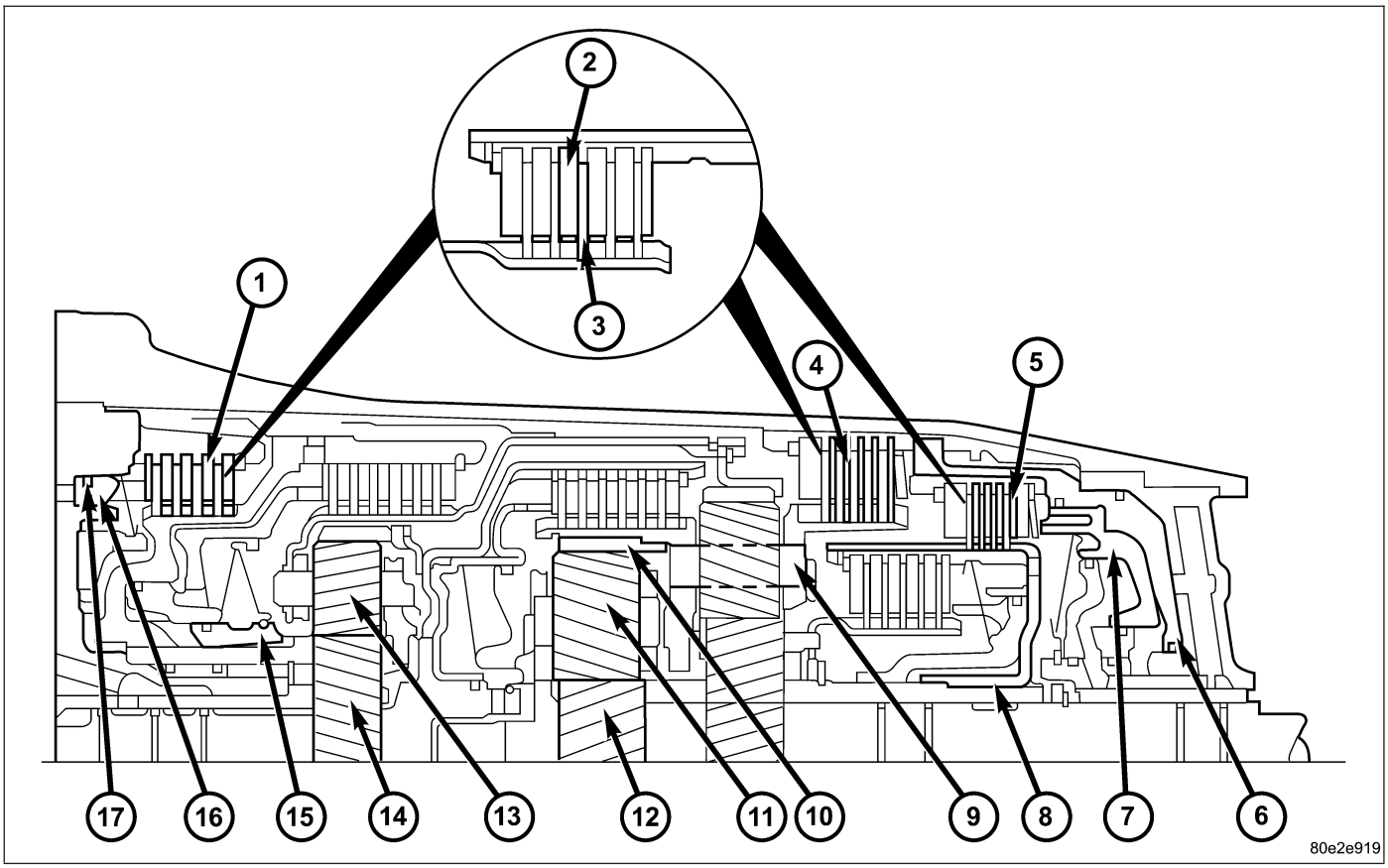

1 - B1
2 - EXTERNALLY TOOTHED DISC
3 - INTERNALLY TOOTHED DISC
4 - B3
5 - B2
6 - B3 PISTON
7 - B2 PISTON
8 - B2 INTERNALLY TOOTHED DISC CARRIER
9 - REAR PLANETARY GEARSET PLANETARY CARRIER
10 - CENTER PLANETARY GEARSET ANNULUS GEAR
11 - CENTER PLANETARY GEARSET PINION GEARS
12 - CENTER PLANETARY GEARSET SUN GEAR
13 - FRONT PLANETARY GEARSET PINION GEARS
14 - FRONT PLANETARY GEARSET SUN GEAR
15 - B1 INTERNALLY TOOTHED DISC CARRIER
16 - B1 PISTON
17 - B1 EXTERNALLY TOOTHED DISC CARRIER

Three multi-disc holding clutches, the front, middle and rear multi-disc holding clutches B1 (1), B3 (4) and B2 (5), are located in the planetary gear sets in the transmission housing.

A multi-disc holding clutch consists of a number of internally toothed discs (10) on an internally toothed disc carrier and externally toothed discs (9) on an externally toothed disc carrier, which is rigidly connected to the transmission housing.

OPERATION

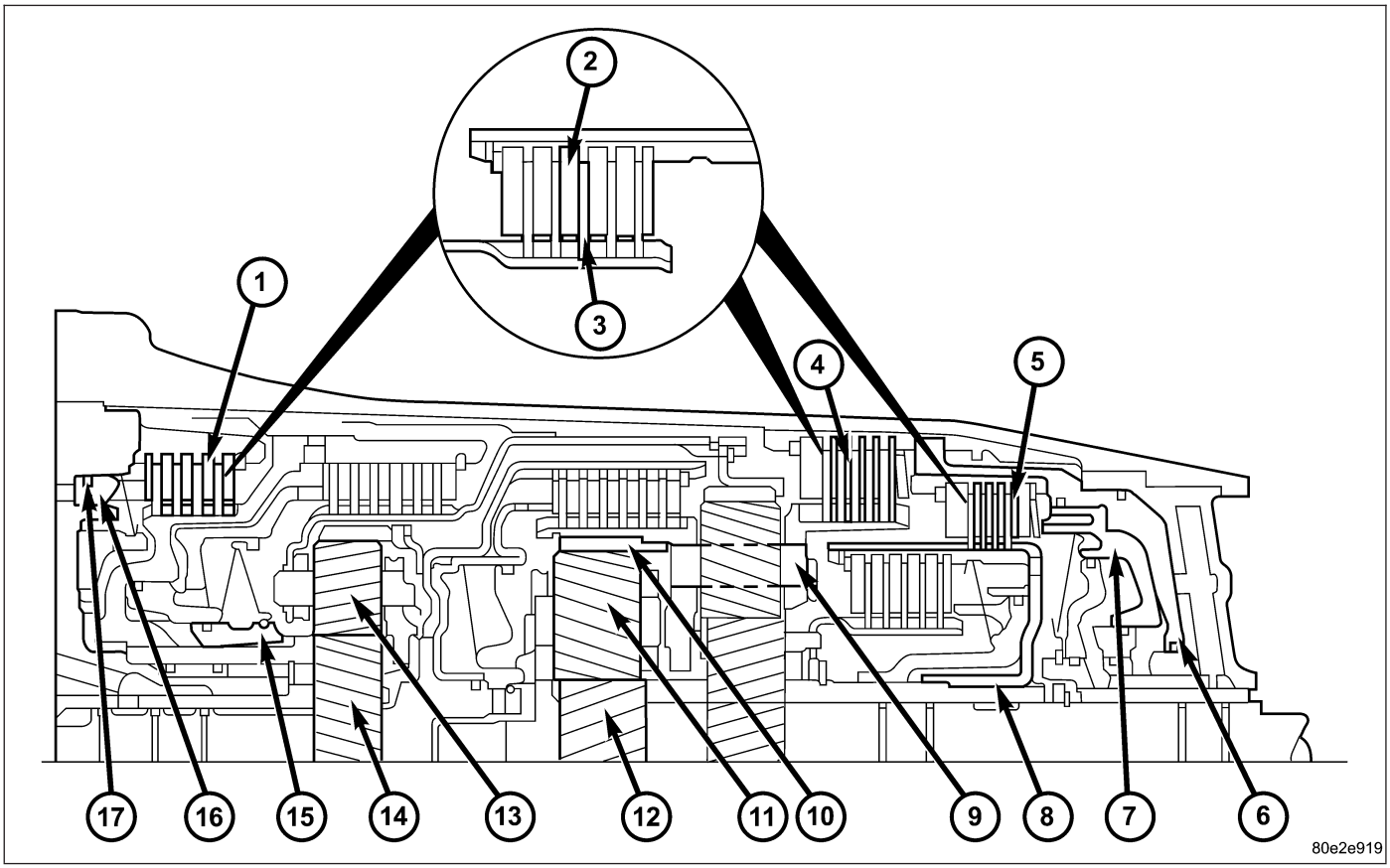

1 - B1
2 - EXTERNALLY TOOTHED DISC
3 - INTERNALLY TOOTHED DISC
4 - B3
5 - B2
6 - B3 PISTON
7 - B2 PISTON
8 - B2 INTERNALLY TOOTHED DISC CARRIER
9 - REAR PLANETARY GEARSET PLANETARY CARRIER
10 - CENTER PLANETARY GEARSET ANNULUS GEAR
11 - CENTER PLANETARY GEARSET PINION GEARS
12 - CENTER PLANETARY GEARSET SUN GEAR
13 - FRONT PLANETARY GEARSET PINION GEARS
14 - FRONT PLANETARY GEARSET SUN GEAR
15 - B1 INTERNALLY TOOTHED DISC CARRIER
16 - B1 PISTON
17 - B1 EXTERNALLY TOOTHED DISC CARRIER

The multi-disc holding clutches (1, 4 and 5) connect the annulus gear, sun gear, or planetary carrier of a planetary gear set against the transmission housing in order to transmit the drive torque.

If the piston (16) on multi-disc holding clutch B1 (1) is subjected to oil pressure, it presses the internal (3) and external discs (2) of the disc set together. The internally toothed disc carrier (15) locks the sun gear (14) against the housing. The planetary pinion gears (13) turn on the sun gear (14).

If the multi-disc holding clutch B2 (5) is actuated via the piston (7), the piston compresses the disc set. The internally toothed disc carrier (8) locks the sun gear (12) against the housing. The planetary pinion gears (11) turn on the sun gear (12).

If the multi-disc holding clutch B3 (4) is actuated via the piston (6), the planetary carrier (9) and the annulus gear (10) are locked. When the multi-disc clutch B3 (4) is actuated, the direction of rotation is reversed.

HOLDING CLUTCH B1

DISASSEMBLY

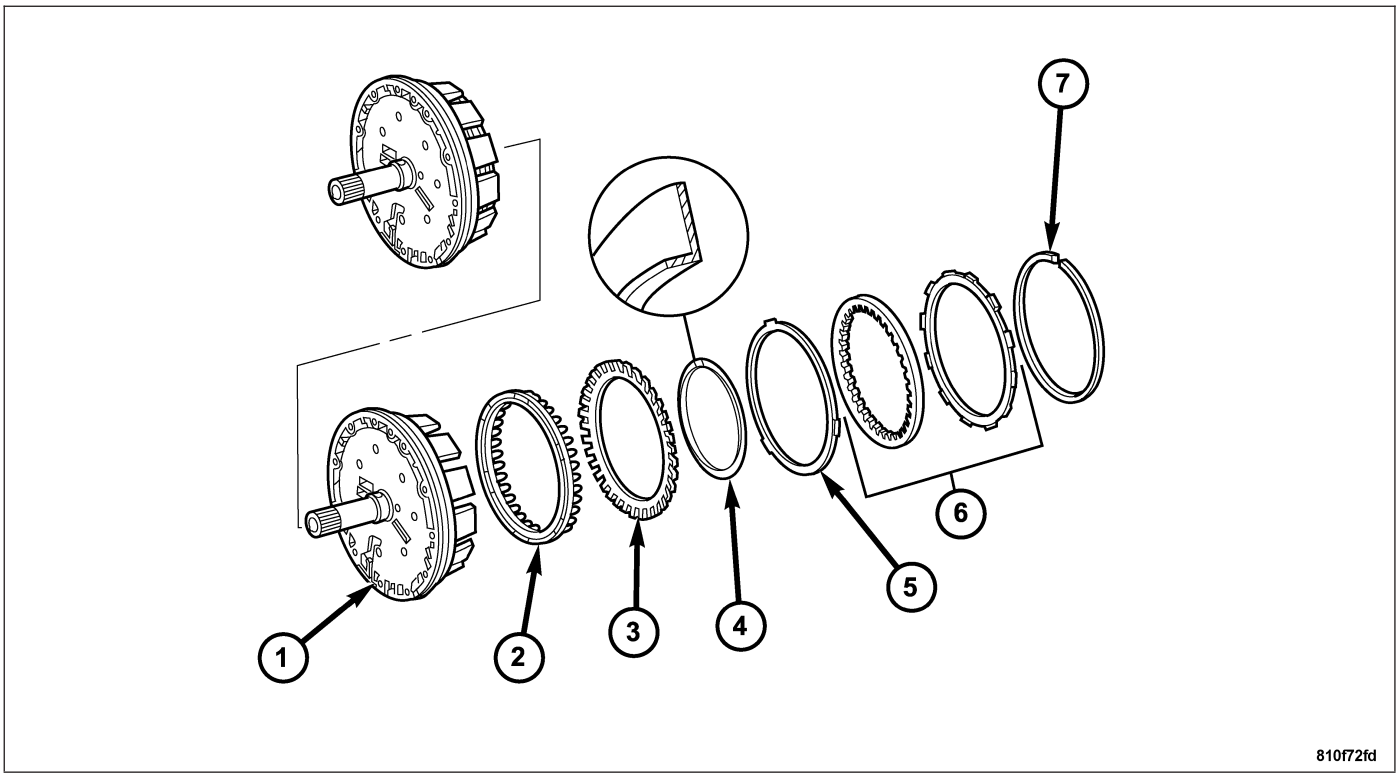

1 - HOLDING CLUTCH B1 OUTER CARRIER
2 - PISTON
3 - DISC SPRING
4 - SNAP-RING
5 - DISC SPRING
6 - MULTIPLE DISC PACK
7 - SNAP-RING

1. Remove the snap-ring (7).
2. Remove the multiple-disc pack (6) and the disc spring (5) from the multi-disc holding clutch B1 outer carrier.
3. Place Special Tool 8900 on the disc spring and compress the spring until the snap-ring (4) is exposed.
4. Remove the snap-ring (4).
5. Remove the piston (2) from the multi-disc holding clutch B1 carrier by carefully blowing compressed air into the bore.

ASSEMBLY

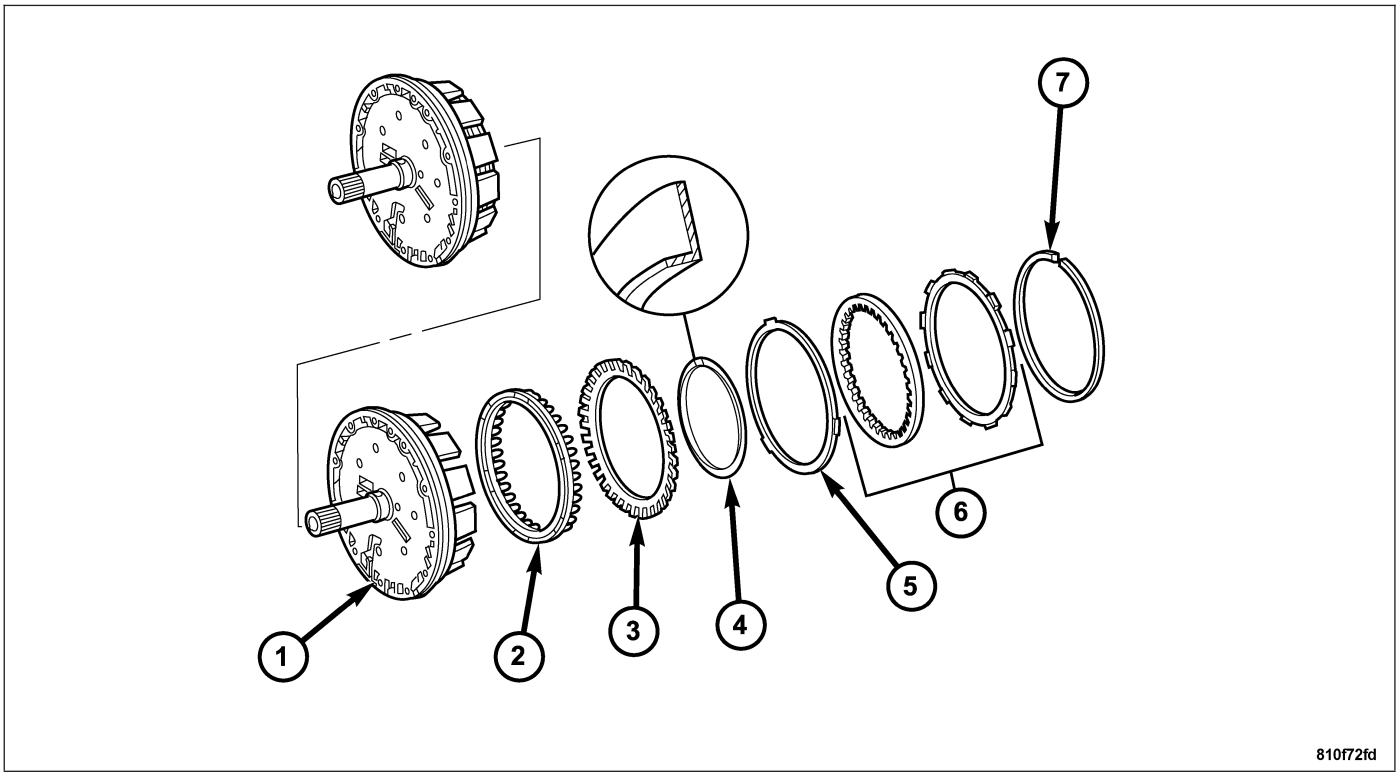

1 - HOLDING CLUTCH B1 OUTER CARRIER
2 - PISTON
3 - DISC SPRING
4 - SNAP-RING
5 - DISC SPRING
6 - MULTIPLE DISC PACK
7 - SNAP-RING

1. Install the piston (2) in the outer multiple-disc carrier (1). Press in the piston using the disc spring (3) and Special Tool 8900. Place Special Tool 8900 on the disc spring (3) and compress until the groove of the snap-ring (4) is exposed

Note: Check the vulcanized gasket, replace if necessary.

2. Insert the snap-ring (4).

Note: The collar of the snap-ring must point towards the multiple-disc pack. After installing, check the snap-ring for correct seat.

3. Insert the disc spring (5) and the multiple-disc pack (6) in the multi-disc holding clutch B1 outer carrier.
4. Insert the snap-ring (7).

Note: Pay attention to the sequence of discs. Place the new friction multiple-discs in ATF fluid for one hour before installing.

5. Measure the multi-disc holding clutch B1 clearance.

a. Mount Special Tool 8901 (1) multi-disc holding clutch B1 outer carrier (2).
b. Using a lever press, compress the pressing tool as far as the stop (then the marking ring is still visible, see small arrow).

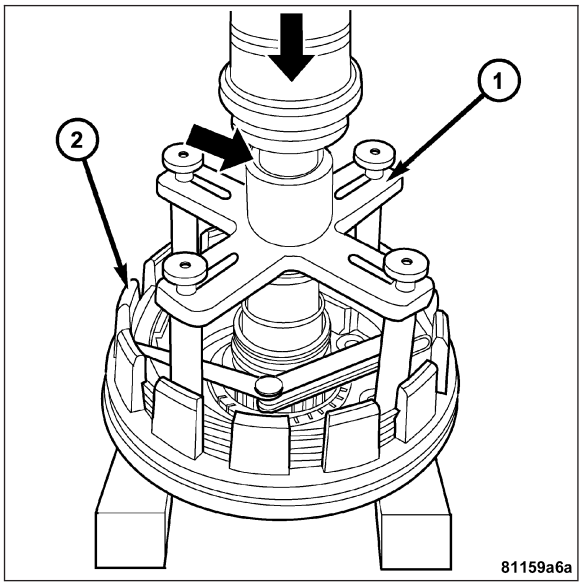

c. Using a feeler gauge, determine the play “L” at three points between the snap-ring (6) and outer multiple-disc (4). During the measurement, the snap-ring (6) must contact the upper bearing surface of the groove in the outer multiple-disc carrier (5). The correct clearance is 2.3-2.7 mm (0.091-0.106 in.) for 2 friction disc versions, 2.7-3.1 mm (0.106-0.122 in.) for 3 disc versions, and 3.0-3.4 mm (0.118-0.134 in.) for 4 disc versions.
d. Adjust with snap-ring (6), if necessary. Snap-rings are available in thicknesses of 2.6 mm (0.102 in.), 2.9 mm (0.114 in.), 3.2 mm (0.126 in.), 3.5 mm (0.138 in.), 3.8 mm (0.150 in.), and 4.1 mm (0.162 in.).

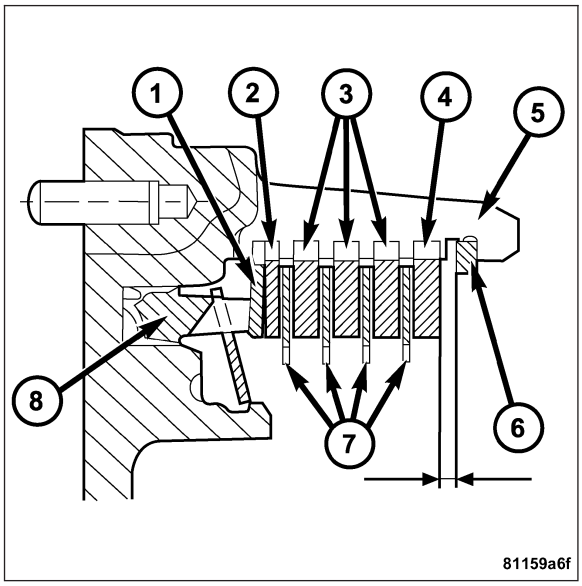

HOLDING CLUTCH B2

DISASSEMBLY

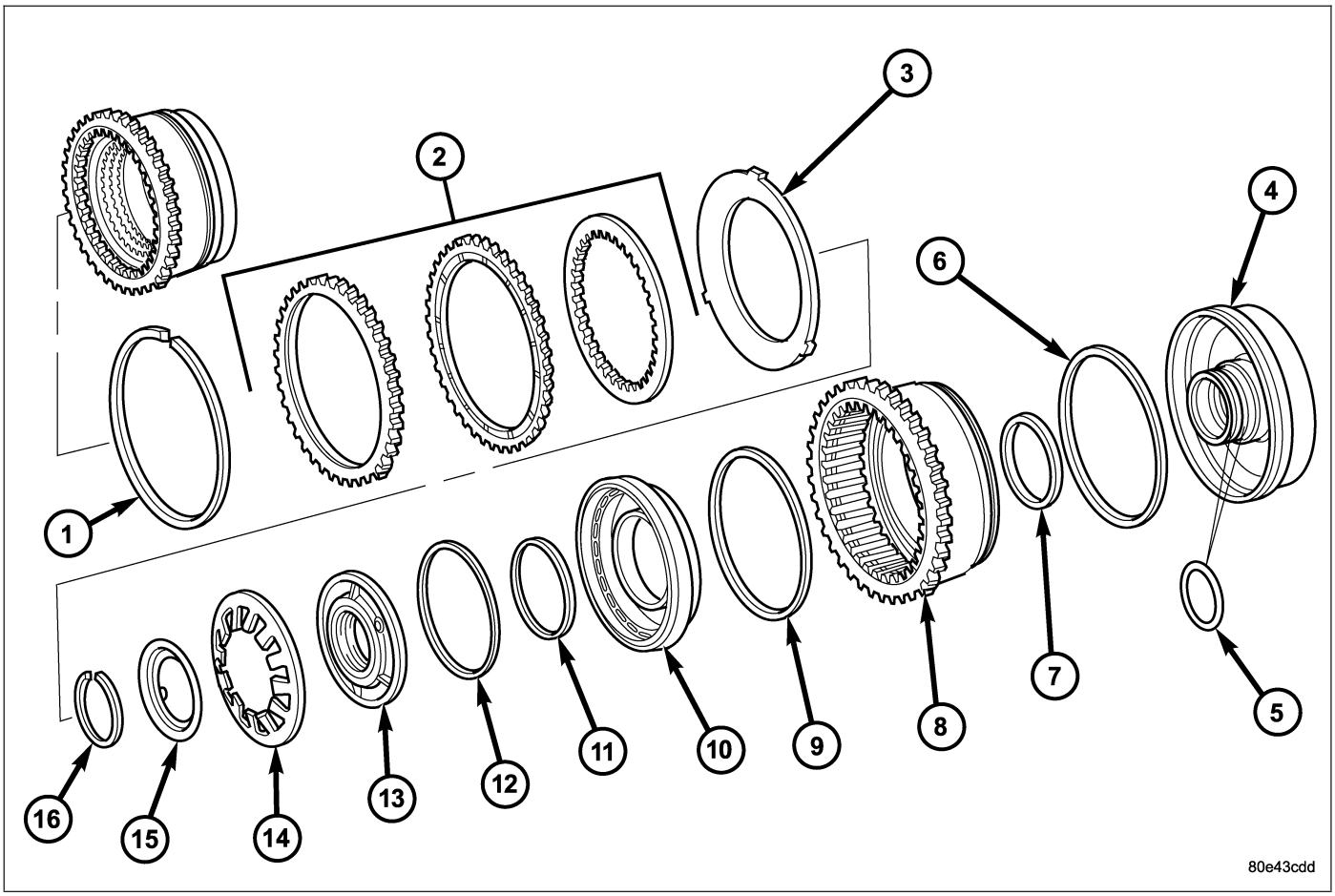

1 - SNAP-RING
2 - MULTIPLE DISC PACK
3 - DISC SPRING
4 - B2 AND B3 PISTON GUIDE
5 - O-RING
6 - B3 PISTON SEALING RING
7 - B3 PISTON SEALING RING
8 - B3 PISTON/B2 OUTER DISC CARRIER
9 - B3 PISTON SEALING RING
10 - B2 PISTON
11 - PISTON GUIDE SEALING RING
12 - PISTON GUIDE SEALING RING
13 - PISTON GUIDE RING
14 - PISTON BACK PRESSURE DISC SPRING
15 - SPRING PLATE
16 - SNAP-RING

1. Remove the snap ring (1).
2. Take the multi-disc pack (2) and the disc spring (3) out of the B3 piston/B2 outer disc carrier (8). The B3 piston/B2 outer disc carrier (8) for the multi-disc holding clutch B2 is the piston for the multiple-disc holding clutch B3 at the same time.
3. Place Special Tool 8900 on the piston back pressure spring disc (14) and compress the spring until the groove for the snap-ring is exposed.
4. Remove the snap-ring (16).
5. Remove the spring plate (15) and the piston back pressure disc spring (14).
6. Separate the piston guide ring (13) and the B2 piston (10) from the B3 piston/B2 outer disc carrier (8) by blowing compressed air into the bore.
7. Press the piston guide ring (13) out of the B2 piston (10).
8. Separate the B2 and B3 piston guide (4) from the B3 piston/B2 outer disc carrier (8) by blowing compressed air into the bore.

ASSEMBLY

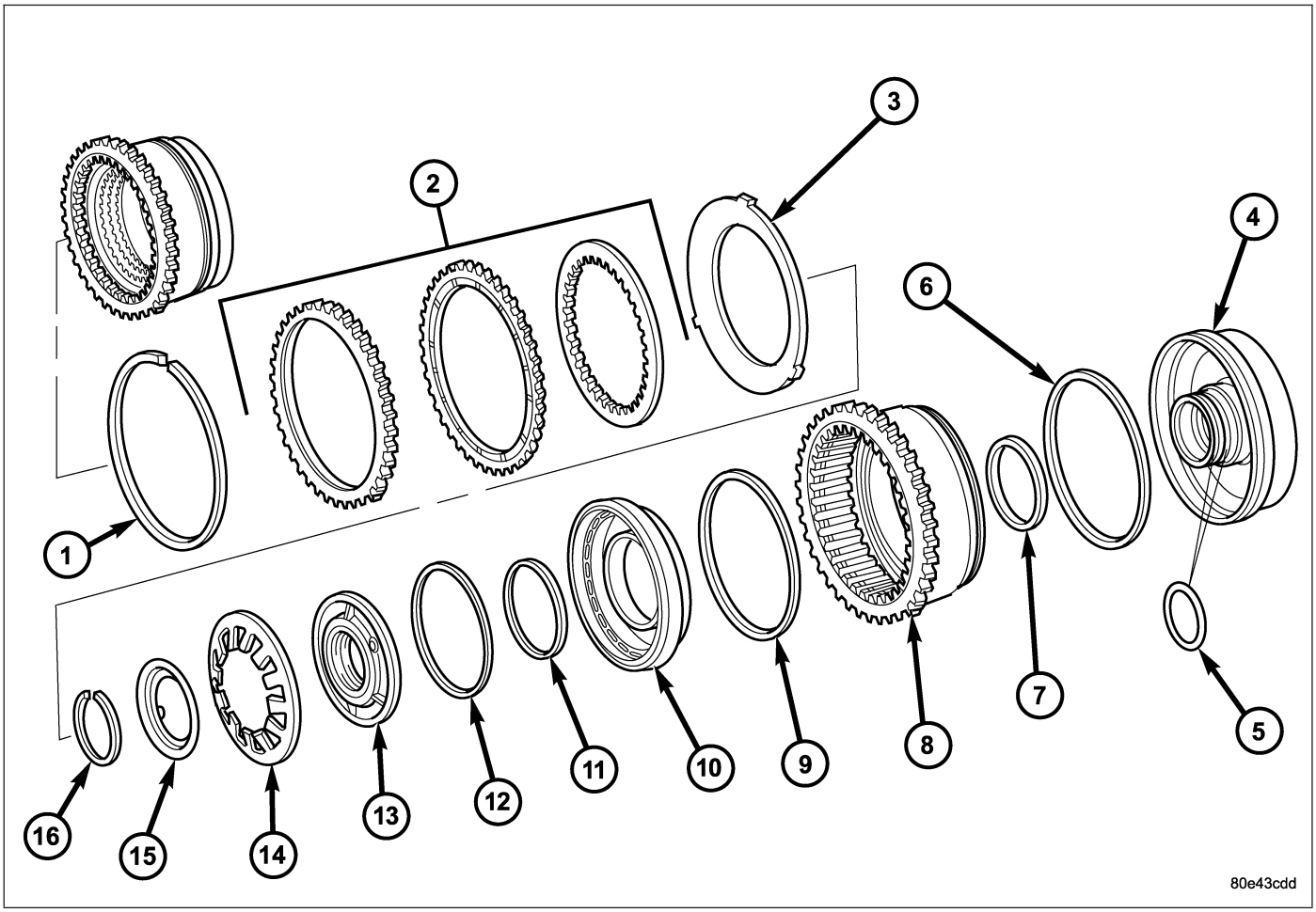

1 - SNAP-RING
2 - MULTIPLE DISC PACK
3 - DISC SPRING
4 - B2 AND B3 PISTON GUIDE
5 - O-RING
6 - B3 PISTON SEALING RING
7 - B3 PISTON SEALING RING
8 - B3 PISTON/B2 OUTER DISC CARRIER
9 - B3 PISTON SEALING RING
10 - B2 PISTON
11 - PISTON GUIDE SEALING RING
12 - PISTON GUIDE SEALING RING
13 - PISTON GUIDE RING
14 - PISTON BACK PRESSURE DISC SPRING
15 - SPRING PLATE
16 - SNAP-RING

1. Assemble the B2 and B3 piston guide (4) and the B3 piston/B2 outer disc carrier (8) in the correct position.
2. Check all of the sealing rings, replace if necessary. The rounded off edges on the sealing rings (6), (11), and (12) must point outwards. The rounded off edges on the sealing ring (9) must point inwards.
3. Insert the B2 piston (10) in B3 piston/B2 outer disc carrier (8).

4. Insert the piston guide ring (2). The valve (1) in the piston guide ring must be on top.

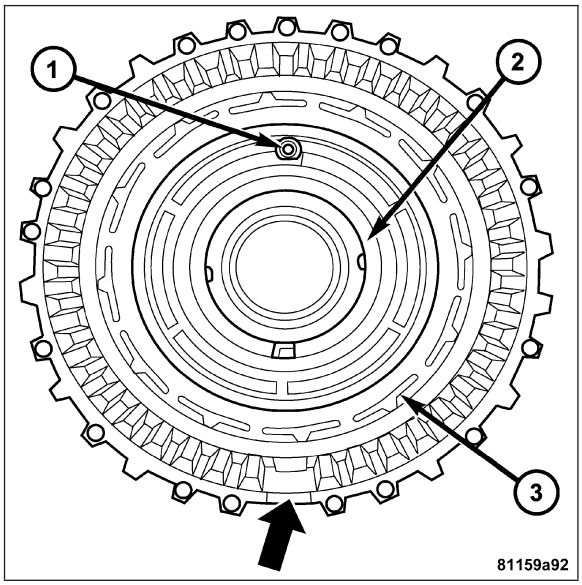

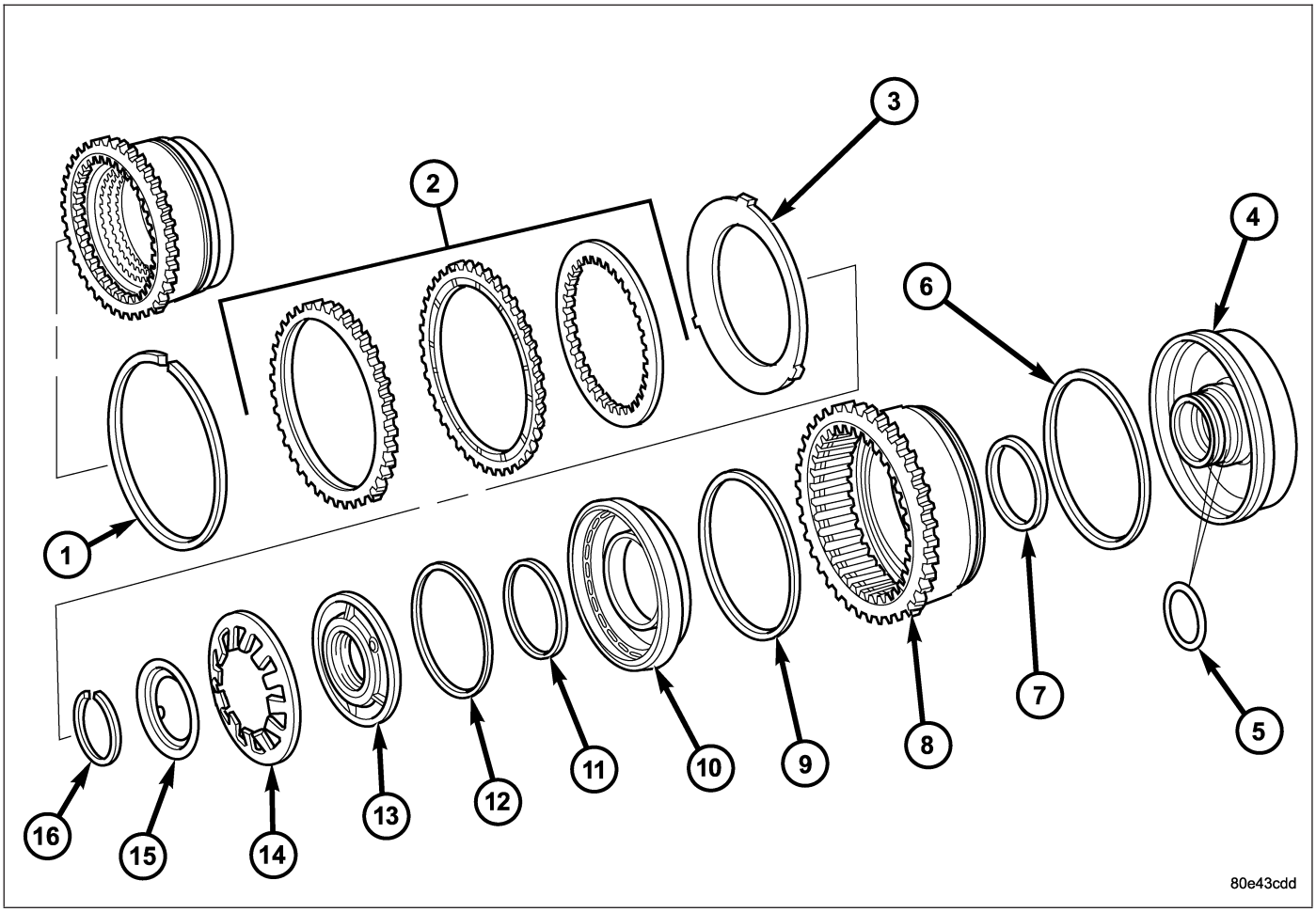

1 - SNAP-RING
2 - MULTIPLE DISC PACK
3 - DISC SPRING
4 - B2 AND B3 PISTON GUIDE
5 - O-RING
6 - B3 PISTON SEALING RING
7 - B3 PISTON SEALING RING
8 - B3 PISTON/B2 OUTER DISC CARRIER
9 - B3 PISTON SEALING RING
10 - B2 PISTON
11 - PISTON GUIDE SEALING RING
12 - PISTON GUIDE SEALING RING
13 - PISTON GUIDE RING
14 - PISTON BACK PRESSURE DISC SPRING
15 - SPRING PLATE
16 - SNAP-RING

5. Insert the piston back pressure disc spring (14) and the spring plate (15). Insert the disc spring with the curvature towards the spring plate.
6. Place Special Tool 8900 on the disc spring (14) and compress the spring until the groove for the snap-ring is exposed.
7. Insert the snap-ring (16).

Note: Pay attention to the sequence of the discs. Place new friction multiple-discs in ATF fluid for one hour before installing.

8. Insert the disc spring (3) and the multi-disc pack (2) in the B3 piston/B2 outer disc carrier (8).
9. Insert the snap-ring (1).

Note: During the measurement the snap-ring (1) must contact the upper bearing surface of the groove in the outer multiple-disc carrier.

10. Measure the B2 clutch pack clearance.
    a. Mount Special Tool 8901 (1) on the B3/B2 outer disc carrier (2).
    b. Using a lever press, compress the pressing tool as far as the stop (then the marking ring is still visible, see small arrow).

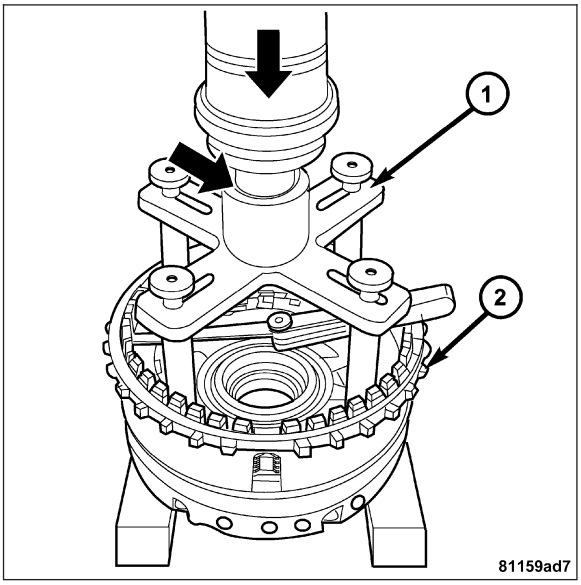

    c. Using a feeler gauge, determine the play “L” at three points between the snap-ring (8) and outer multiple-disc (7).
    d. The correct clutch clearance is 1.9-2.3 mm (0.075-0.091 in.) for the four friction disc versions and 2.0-2.4 mm (0.079-0.095 in.) for the five disc versions.
    e. Adjust with snap-ring (8), if necessary. Snap-rings are available in thicknesses of 2.9 mm (0.114 in.), 3.2 mm (0.126 in.), 3.5 mm (0.138 in.), 3.8 mm (0.150 in.), and 4.1 mm (0.162 in.).

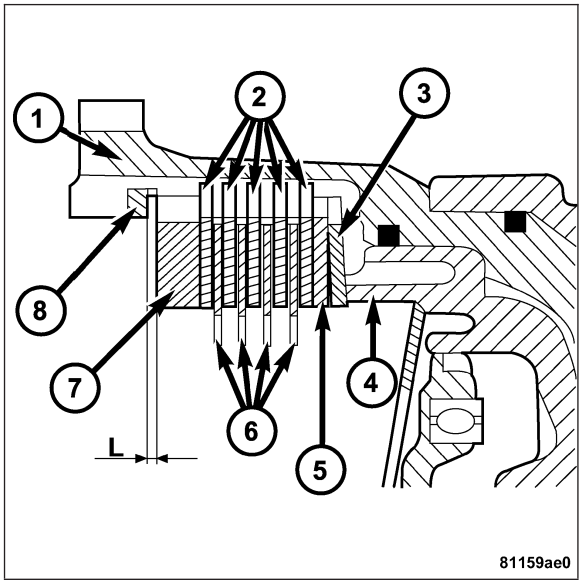

SPEED SENSOR

DESCRIPTION

The input speed sensors (6, 8) are fixed to the shell of the control unit via contact blades. The speed sensors are pressed against the transmission housing (2) by a spring (7) which is held against the valve housing of the shift plate (5). This ensures a defined distance between the speed sensors and the exciter ring (4).

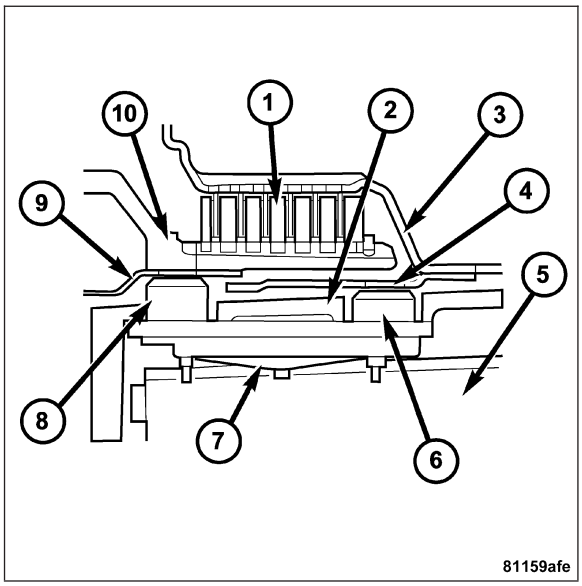

OPERATION

Signals from the input speed sensors (6, 8) are recorded in the transmission control module (TCM) together with the wheel and engine speeds and other information and are processed into an input signal for electronic control.

Input speed sensor N2 (6) records the speed of the front sun gear via the externally toothed disc carrier of the multiple-disc clutch K1 (10) and input speed sensor N3 (8) records the speed of the front planet carrier via the internally toothed disc carrier of driving clutch K1 (3).

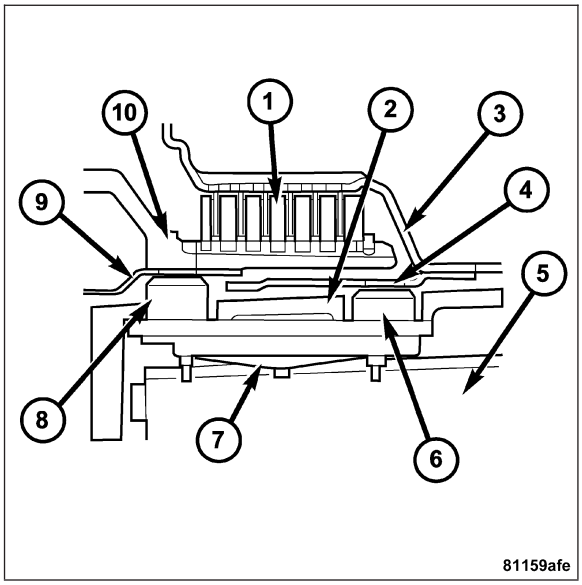

OIL PUMP

DESCRIPTION

The oil pump (crescent-type pump) is installed in the torque converter casing behind the torque converter and is driven by the drive flange of the torque converter. The pump creates the oil pressure required for the hydraulic procedures.

OPERATION

When the engine is running, the oil is pumped through the inlet chamber (5) along the upper and lower side of the crescent to the pressure chamber (6) of the housing. The meshing of the teeth prevents oil flowing from the delivery side to the intake side. An external gear (3), eccentrically mounted in the pump housing, is located on the internal gear (4) which is connected to the drive flange. The crescent (1) drives the external wheel.

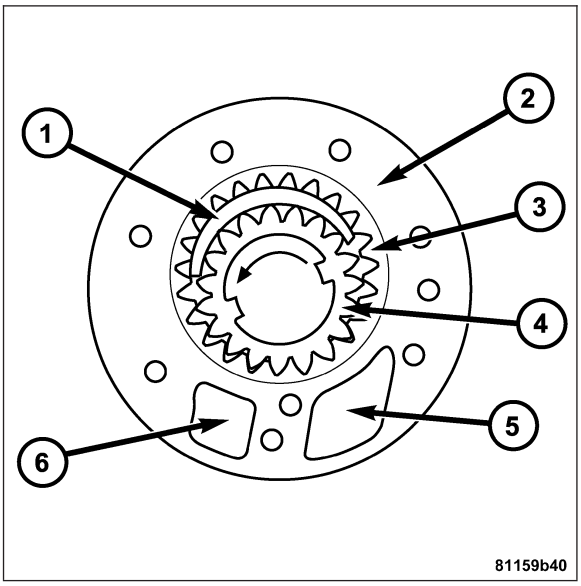

DISASSEMBLY

1. Remove the pump gears (1 and 2) from the pump housing.

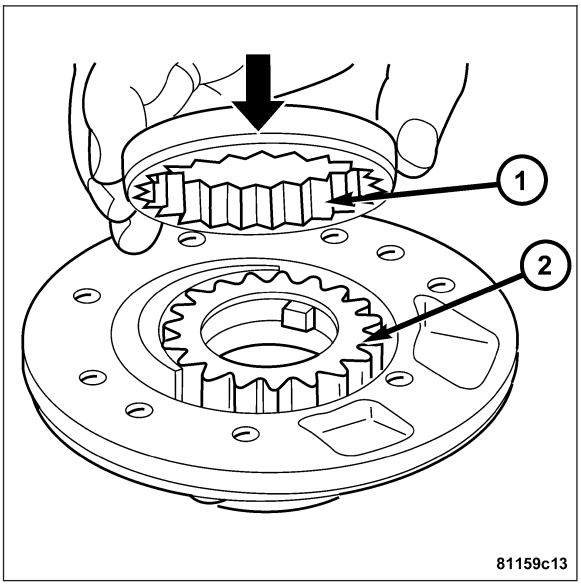

2. Remove the inner oil pump seal (1).
3. Remove the outer oil pump o-ring (2).

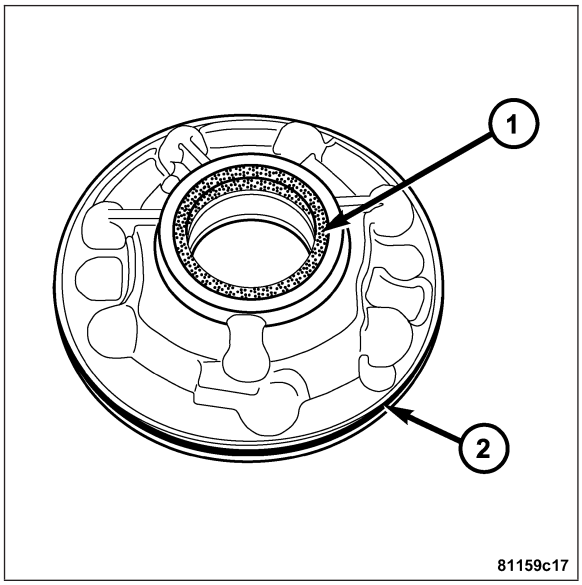

ASSEMBLY

1. Install a new inner oil pump seal (1) with Special Tool 8902-A.
2. Replace the outer oil pump o-ring (2).

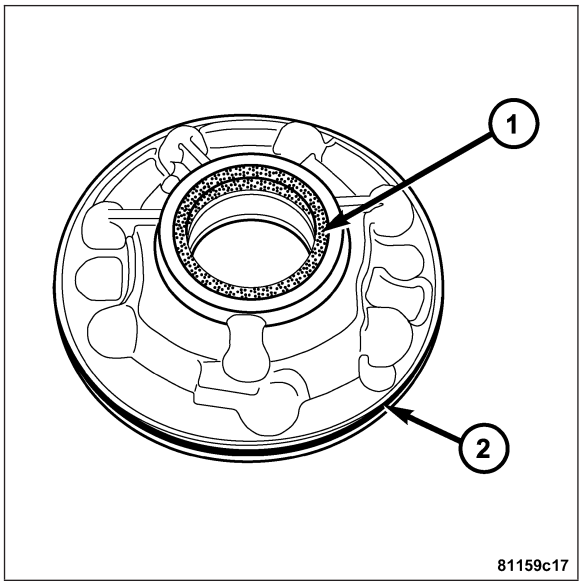

3. Lubricate the pump gears with transmission fluid and place in the pump housing. Insert the pump gear (1) so that the chamfer (arrow) points towards the pump housing.

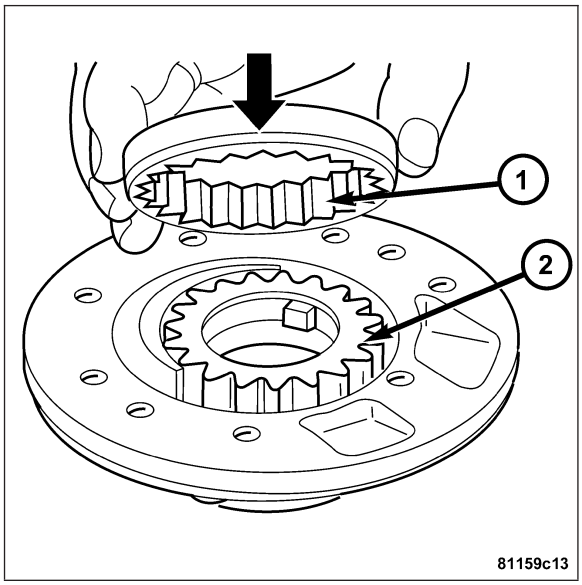

OUTPUT SHAFT BEARING

REMOVAL

1. Raise and support vehicle.
2. Remove the propeller shaft. **Refer to Page 3-26**.
3. Place the transmission in the PARK position before attempting to remove the output shaft nut.
4. Remove the output shaft nut holding the propeller shaft flange to the output shaft.
5. Remove the propeller shaft flange.
6. Remove the transmission rear oil seal with a suitable slide hammer and screw.
7. Remove the transmission output shaft washer. Be sure to tag the washer since it is very similar to the geartrain end-play shim and they must not be interchanged.
8. Remove the transmission rear output shaft bearing retaining ring (1).

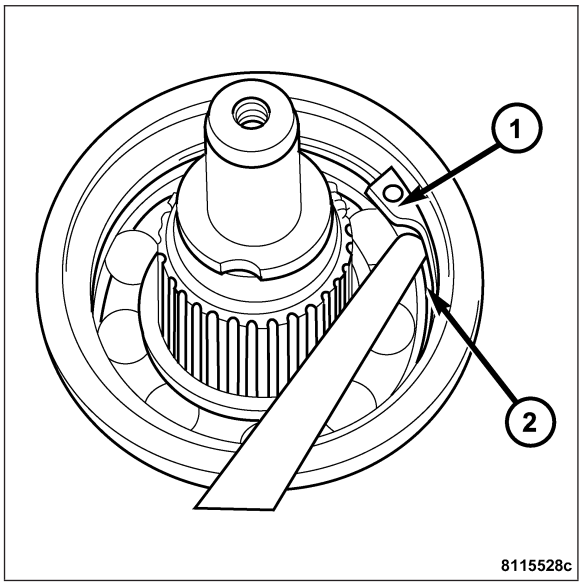

9. Position Special Tool 9082 (1) over the inner race of the output shaft bearing (3).

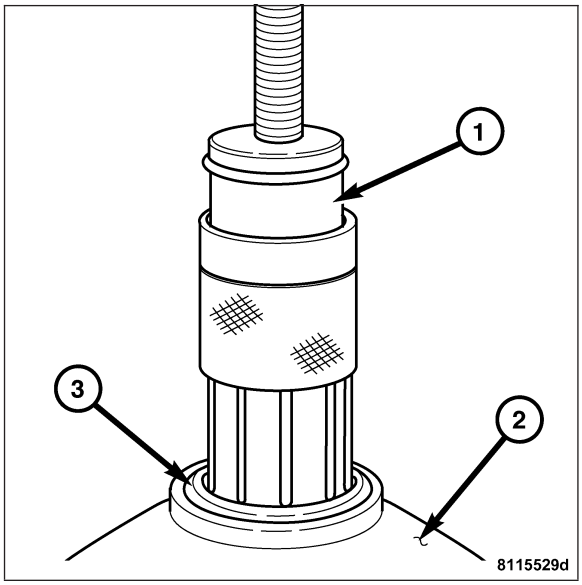

10. Slide the collar (3) on the Special Tool 9082 (1) downward over the fingers (4) of the tool.

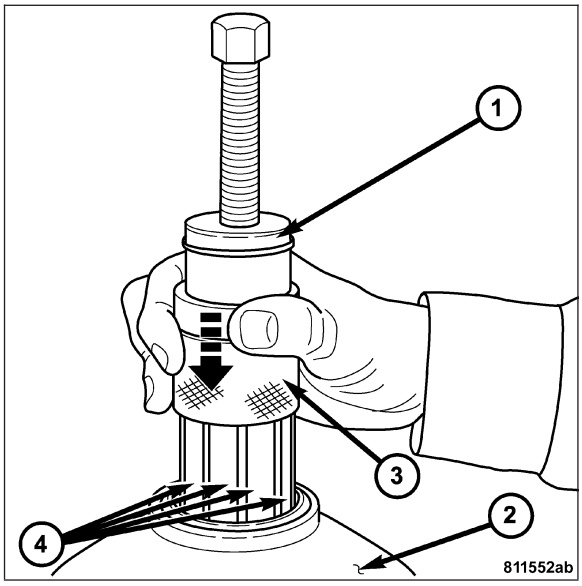

11. Remove the output shaft bearing (3).

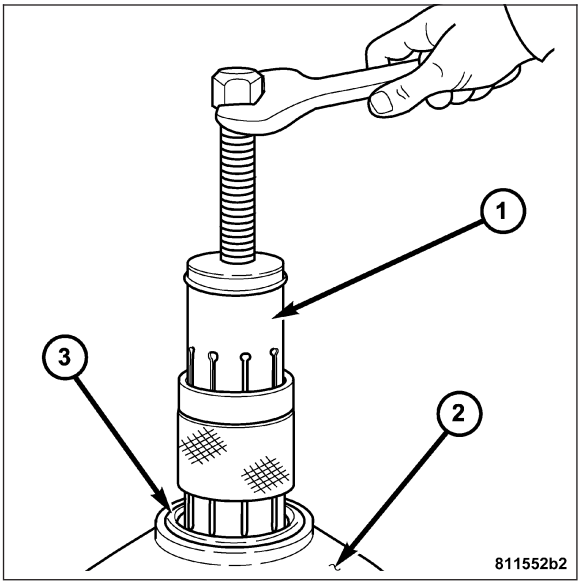

CAUTION: Verify that the geartrain end-play shim has remained on the output shaft and against the park gear. The shim may be adhered to the bearing inner race. Retrieve the shim from the bearing and install over the output shaft and against the park gear.

INSTALLATION

CAUTION: Verify that the geartrain end-play shim is properly installed over the output shaft and against the park gear.

1. Install the output shaft bearing in the rear transmission housing.
   a. Using Special Tool 9287 (1), install the output shaft bearing (2) into the transmission housing (3). **The closed side of the plastic cage must point towards the parking lock gear.**

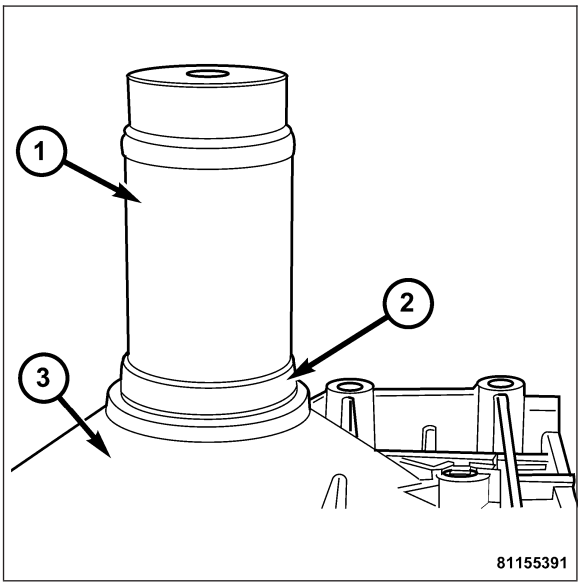

   b. Install the retaining ring (1). Ensure that the retaining ring is seated correctly in the groove.
   c. Check that there is no play between the bearing (2) and the retaining ring (1) using feeler gauge.
   d. There must be no play between the retaining ring and the bearing. If the ring cannot be installed, a thinner ring must be used. If there is play between the ring and the bearing, a thicker ring must be installed. Retaining rings are available in thicknesses of 2.0 mm (0.079 in.), 2.1 mm (0.083 in.), and 2.2 mm (0.087 in.).
2. Install the output shaft washer onto the output shaft.

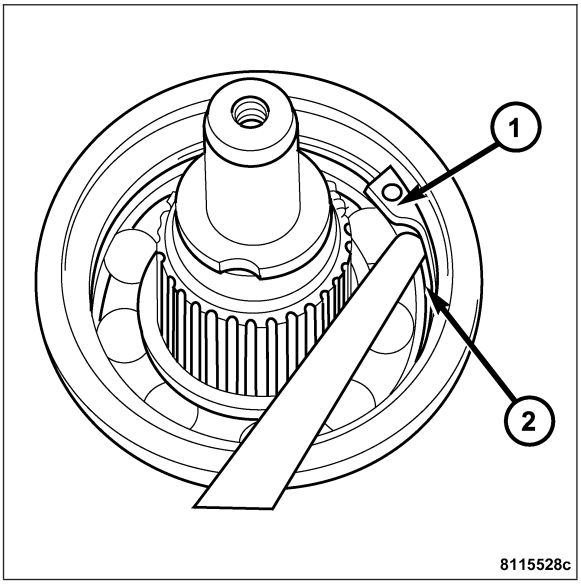

3. Install a new transmission rear seal into the transmission case (2) with Special Tool 8902A (1).
4. Install the propeller shaft flange onto the output shaft.
5. Place the transmission in the PARK position before attempting to tighten the output shaft nut.
6. Install a new output shaft nut. Tighten the output shaft nut to 120 N·m (88.5 ft. lbs.).

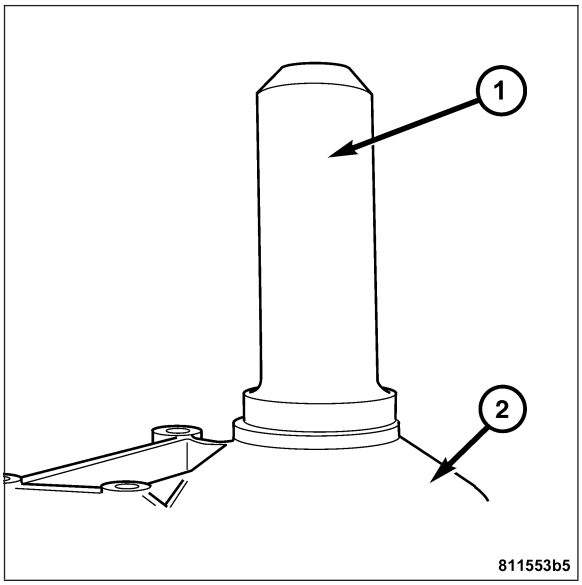

7. Stake the output shaft nut to the output shaft as follows.
   a. Place Special Tool 9078 (2) and Special Tool C-4171 onto the output shaft.
   b. Rotate Special Tool 9078 (2) until the alignment pin (3) engages the output shaft notch (4).

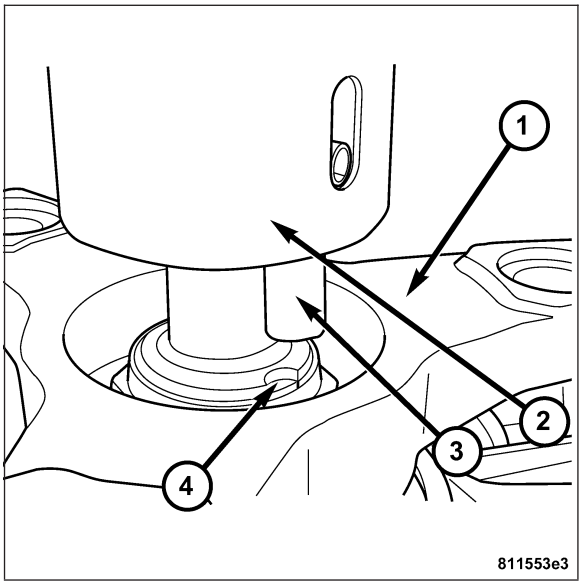

   c. Press downward on Special Tool 9078 (1) until the staking pin (3) contacts the output shaft nut flange (2).
   d. Strike the Special Tool C-4171 with a suitable hammer until the output shaft nut is securely staked to the output shaft.
8. Install the propeller shaft. **Refer to Page 3-28**.

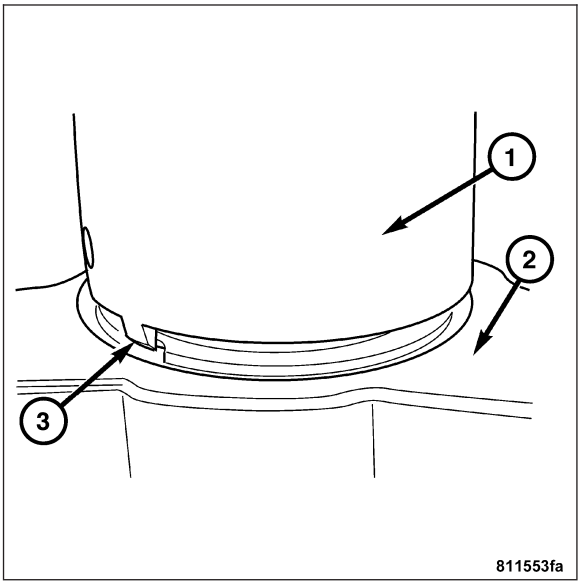

OUTPUT SHAFT SEAL

REMOVAL

1. Remove the propeller shaft. **Refer to Page 3-26**. Move propeller shaft to the right and tie up.
2. Place the transmission in the PARK position before attempting to remove the output shaft nut.
3. Remove the output shaft nut holding the propeller shaft flange to the output shaft.
4. Remove the propeller shaft flange.
5. Remove the output shaft seal with suitable screw and slide hammer.

INSTALLATION

1. Position the new output shaft seal over the output shaft and against the transmission case (2).
2. Use Special Tool 8902A (1) to install the seal.
3. Install the propeller shaft flange onto the output shaft.
4. Place the transmission in the PARK position before attempting to tighten the output shaft nut.
5. Install a new output shaft nut. Tighten the output shaft nut to 120 N·m (88.5 ft. lbs.).

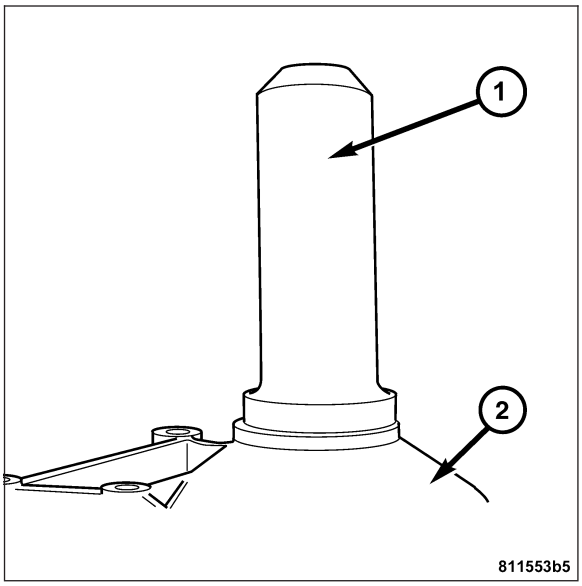

6. Stake the output shaft nut to the output shaft as follows.
   a. Place the Special Tool 9078 (2) and Special Tool C-4171 onto the output shaft.
   b. Rotate the Special Tool 9078 (2) until the alignment pin (3) engages the output shaft notch (4).

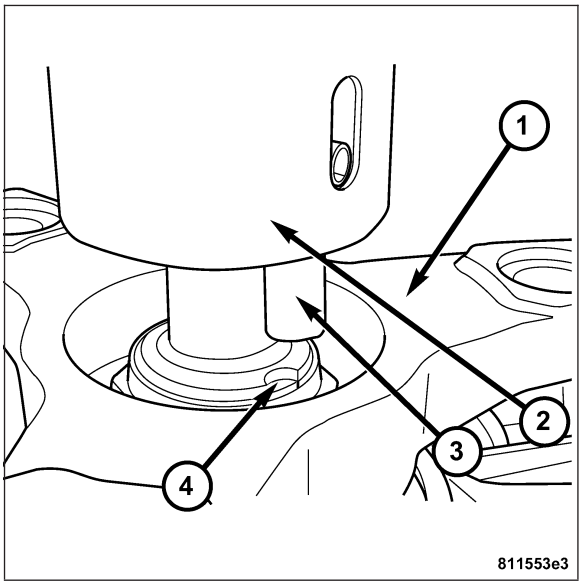

c. Press downward on the Special Tool 9078 (1) until the staking pin (3) contacts the output shaft nut flange.
d. Strike the Special Tool C-4171 with a suitable hammer until the output shaft nut is securely staked to the output shaft.

7. Install the propeller shaft. **Refer to Page 3-28**.

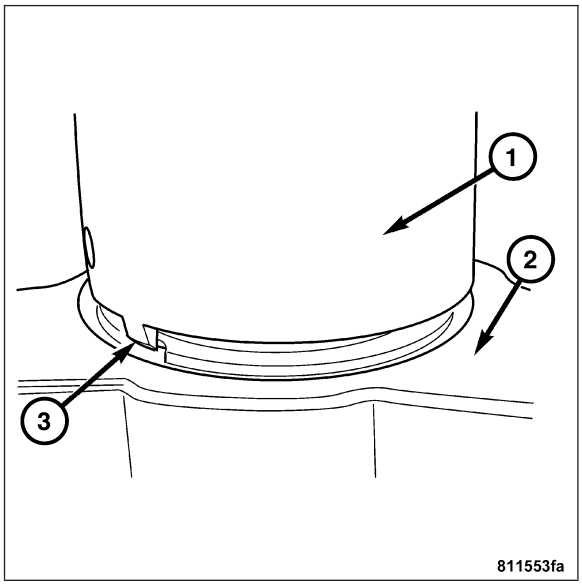

PISTONS

DESCRIPTION

There are several sizes and types of pistons used in an automatic transmission. Some pistons are used to apply clutches. They all have in common the fact that they are round or circular in shape, located within a smooth walled cylinder, which is closed at one end and converts fluid pressure into mechanical movement. The fluid pressure exerted on the piston is contained within the system through the use of piston rings or seals.

OPERATION

The principal which makes this operation possible is known as Pascal's Law. Pascal's Law can be stated as: "Pressure on a confined fluid is transmitted equally in all directions and acts with equal force on equal areas."

PRESSURE

Pressure is nothing more than force (lbs.) divided by area (in or ft.), or force per unit area. Given a 100 lb. block and an area of 100 sq. in. on the floor, the pressure exerted by the block is: 100 lbs. 100 in or 1 pound per square inch, or PSI as it is commonly referred to.

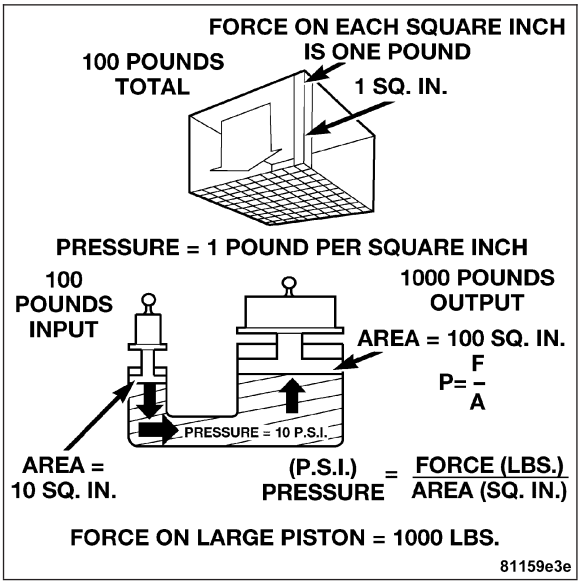

PRESSURE ON A CONFINED FLUID

Pressure is exerted on a confined fluid by applying a force to some given area in contact with the fluid. A good example of this is a cylinder filled with fluid and equipped with a piston that is closely fitted to the cylinder wall. If a force is applied to the piston, pressure will be developed in the fluid. Of course, no pressure will be created if the fluid is not confined. It will simply “leak” past the piston. There must be a resistance to flow in order to create pressure. Piston sealing is extremely important in hydraulic operation. Several kinds of seals are used to accomplish this within a transmission. These include but are not limited to O-rings, D-rings, lip seals, sealing rings, or extremely close tolerances between the piston and the cylinder wall. The force exerted is downward (gravity), however, the principle remains the same no matter which direction is taken. The pressure created in the fluid is equal to the force applied, divided by the piston area. If the force is 100 lbs., and the piston area is 10 sq. in., then the pressure created equals 10 PSI. Another interpretation of Pascal’s Law is that regardless of container shape or size, the pressure will be maintained throughout, as long as the fluid is confined. In other words, the pressure in the fluid is the same everywhere within the container.

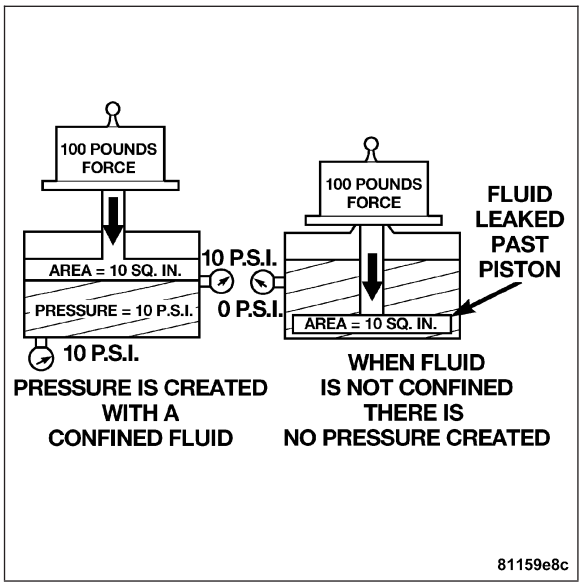

FORCE MULTIPLICATION

Using the 10 PSI example used in the illustration, a force of 1000 lbs. can be moved with a force of only 100 lbs. The secret of force multiplication in hydraulic systems is the total fluid contact area employed. The illustration shows an area that is ten times larger than the original area. The pressure created with the smaller 100 lb. input is 10 PSI. The concept “pressure is the same everywhere” means that the pressure underneath the larger piston is also 10 PSI. Pressure is equal to the force applied divided by the contact area. Therefore, by means of simple algebra, the output force may be found. This concept is extremely important, as it is also used in the design and operation of all shift valves and limiting valves in the valve body, as well as the pistons, of the transmission, which activate the clutches and bands. It is nothing more than using a difference of area to create a difference in pressure to move an object.

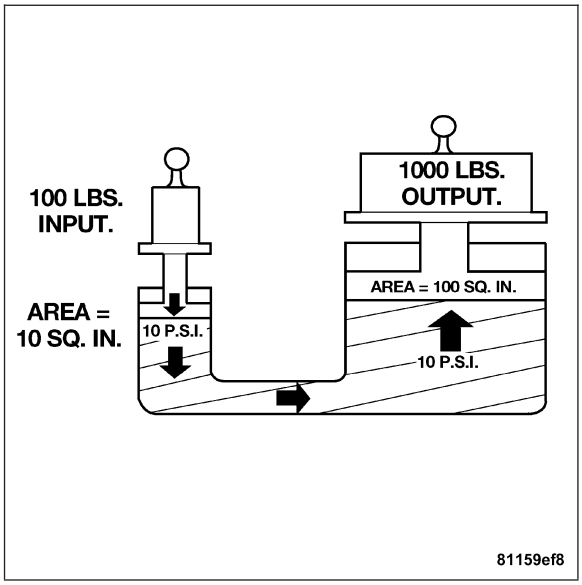

PISTON TRAVEL

The relationship between hydraulic lever and a mechanical lever is the same. With a mechanical lever, it's a weight-to-distance output rather than a pressure-to-area output. Using the same forces and areas as in the previous example, the smaller piston has to move ten times the distance required to move the larger piston one inch. Therefore, for every inch the larger piston moves, the smaller piston moves ten inches. This principle is true in other instances also. A common garage floor jack is a good example. To raise a car weighing 2000 lbs., an effort of only 100 lbs. may be required. For every inch the car moves upward, the input piston at the jack handle must move 20 inches downward.

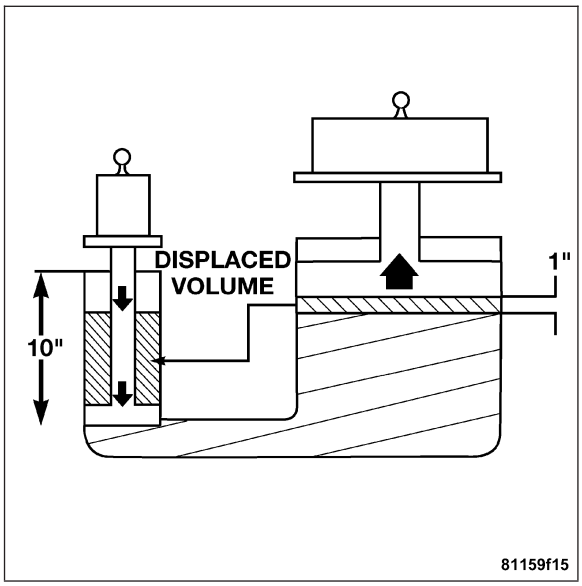

PLANETARY GEARTRAIN

DESCRIPTION

Three planetary gear sets are used to produce the different gear ratios. These are located in the mechanical part of the transmission as the front, middle and rear planetary gear sets.

OPERATION

The annulus gear (1) and sun gear (3) elements of a planetary gear system are alternately driven and braked by the actuating elements of the multi-plate clutch and multiple-disc brake. The planetary pinion gears (2) can turn on the internal gearing of the annulus gear (1) and on the external gearing of the sun gear (3). This allows for a variety of gear ratios and the reversal of the rotation direction without the need for moving gear wheels or shift collars. When two components of the planetary gear set are locked together, the planetary gear set is locked and turns as a closed unit.

The torque and engine speed are converted according to the lever ratios and the ratio of the number of teeth on the driven gears to that on the drive gears, and is referred to as the gear ratio. The overall ratio of a number of planetary gear sets connected in series is obtained by multiplying the partial ratios.

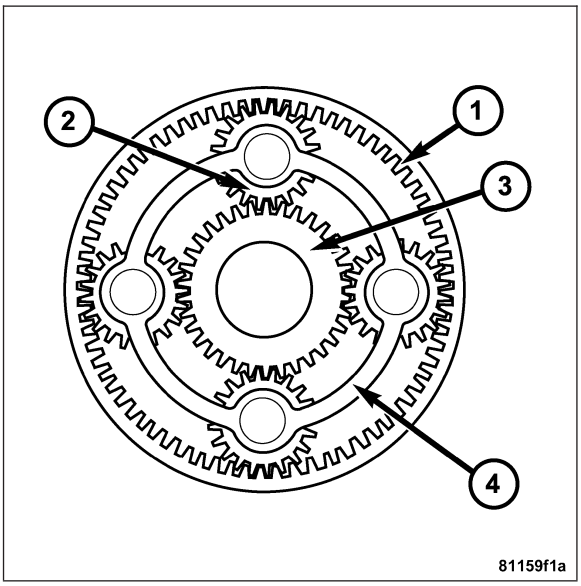

DISASSEMBLY

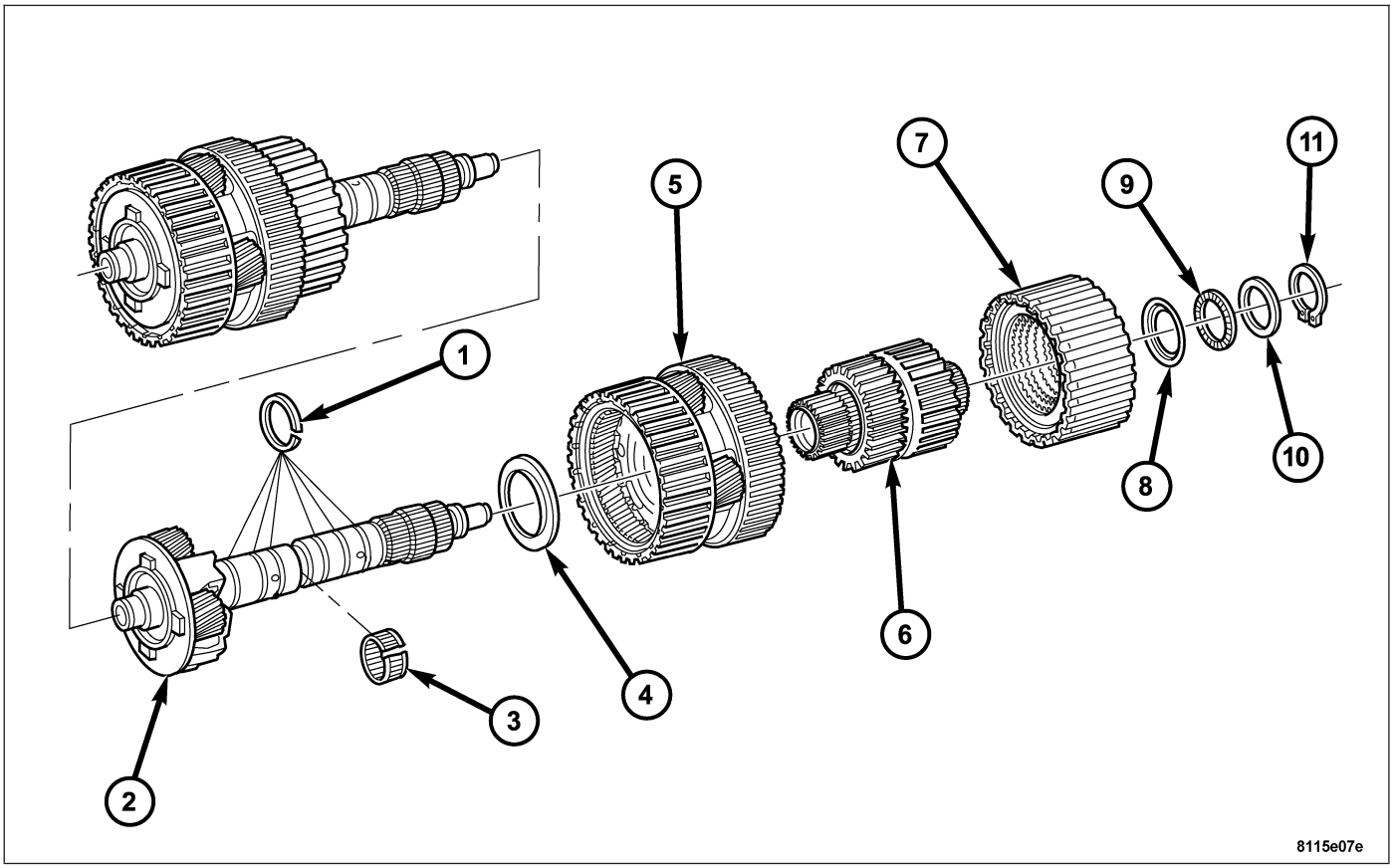

1 - TEFLON RINGS
2 - OUTPUT SHAFT WITH CENTER PLANETARY CARRIER
3 - NEEDLE BEARING
4 - THRUST WASHER
5 - REAR PLANETARY GEAR SET
6 - REAR HOLLOW SHAFT/FREEWHEEL F2
7 - DRIVING CLUTCH K3
8 - THRUST WASHER
9 - AXIAL NEEDLE BEARING
10 - SHIM
11 - RETAINING RING

1. Remove the upper two visible teflon rings (1) from the output shaft with center planetary carrier (2).
2. Remove the retaining ring (11), shim (10), axial needle bearing (9) and thrust washer (8) from the output shaft with center planetary carrier (2).
3. Remove the driving clutch K3 (7).
4. Remove the rear hollow shaft/freewheel F2 (6) from the output shaft with center planetary carrier (2).
5. Remove the rear planetary gear set (5) with integrated tubular shaft of center gear set from the output shaft with center planetary carrier (2).
6. Remove the thrust washer (4).

ASSEMBLY

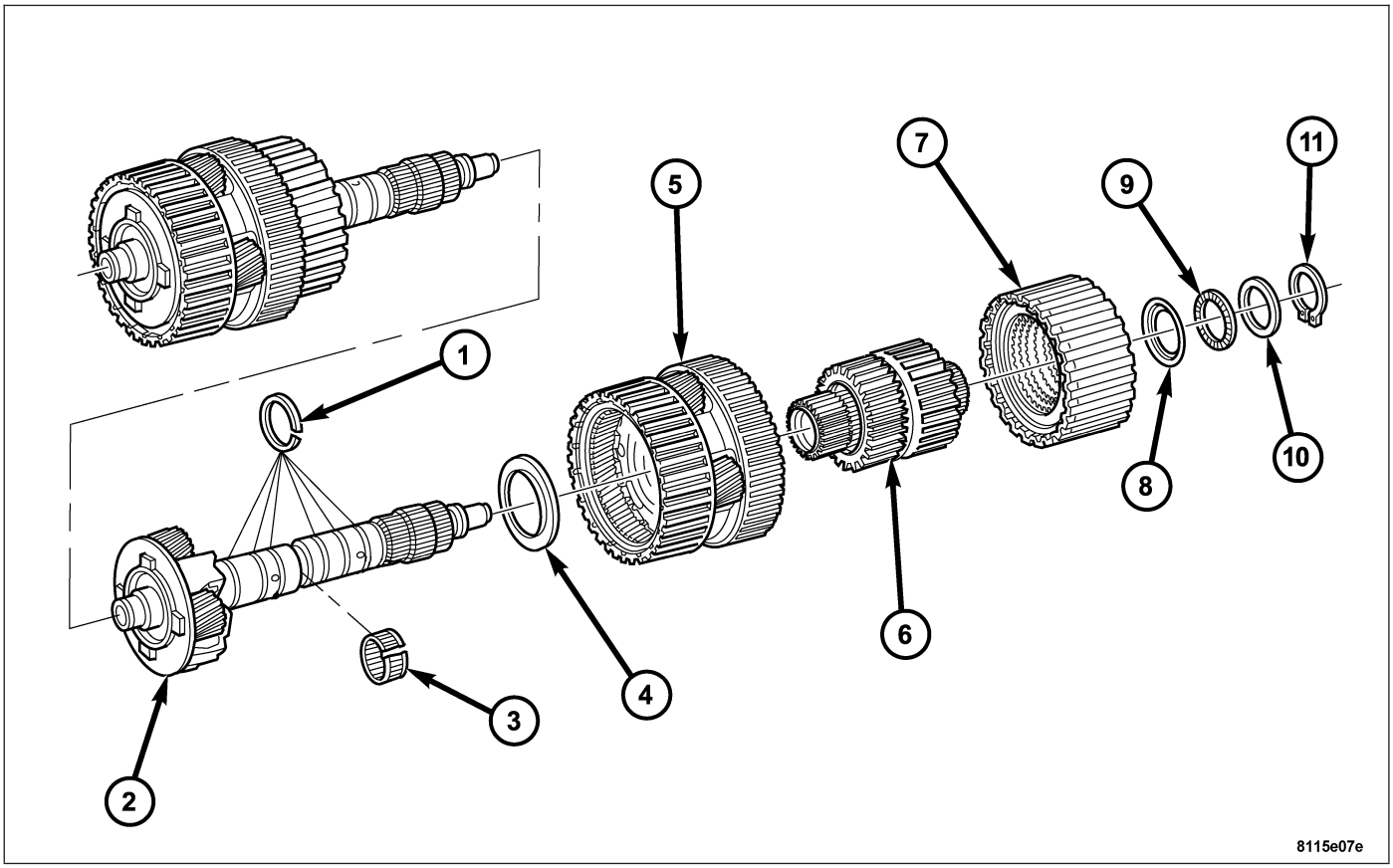

1 - TEFLON RINGS
2 - OUTPUT SHAFT WITH CENTER PLANETARY CARRIER
3 - NEEDLE BEARING
4 - THRUST WASHER
5 - REAR PLANETARY GEAR SET
6 - REAR HOLLOW SHAFT/FREEWHEEL F2
7 - DRIVING CLUTCH K3
8 - THRUST WASHER
9 - AXIAL NEEDLE BEARING
10 - SHIM
11 - RETAINING RING

1. Mount the thrust washer (4) with the collar pointing towards the planet carrier.
2. Mount the rear planetary gear set (5) with the integrated tubular shaft of the center gear set on the output shaft with center planetary carrier (2).
3. Using grease, install the lower three teflon rings (1) in the groove so that the joint stays together.
4. Put the rear hollow shaft/freewheel F2 (6) onto the output shaft.
5. Install the clutch K3 (7).
6. Mount the retaining ring (11), shim, axial needle bearing (9) and thrust washer (8).
7. Using grease, insert the upper two teflon rings (1) in the groove so that the joint remains together.
8. Inspect for axial play between shim (10) and retaining ring (11). Check axial play “S” between shim (10) and retaining ring (1) using a feeler gauge. Clearance should be 0.15-0.6 mm (0.006-0.024 in.). Shims are available in thicknesses of 3.0 mm (0.118 in.), 3.4 mm (0.134 in.), and 3.7 mm (0.146 in.). Adjust as necessary.

Note: During the test, apply a contact force by hand to K3 in the direction of the output shaft.

SHIFT INTERLOCK SOLENOID

DESCRIPTION

The typical electrical solenoid used in automotive applications is a linear actuator. It is a device that produces motion in a straight line. This straight line motion can be either forward or backward in direction, and short or long distance.

A solenoid is an electromechanical device that uses a magnetic force to perform work. It consists of a coil of wire, wrapped around a magnetic core made from steel or iron, and a spring loaded, movable plunger, which performs the work, or straight line motion.

The solenoids used in transmission applications are attached to valves which can be classified as **normally open** or **normally closed**. The **normally open** solenoid valve is defined as a valve which allows hydraulic flow when no current or voltage is applied to the solenoid. The **normally closed** solenoid valve is defined as a valve which does not allow hydraulic flow when no current or voltage is applied to the solenoid. These valves perform hydraulic control functions for the transmission and must therefore be durable and tolerant of dirt particles. For these reasons, the valves have hardened steel poppets and ball valves. The solenoids operate the valves directly, which means that the solenoids must have very high outputs to close the valves against the sizable flow areas and line pressures found in current transmissions. Fast response time is also necessary to ensure accurate control of the transmission.

The strength of the magnetic field is the primary force that determines the speed of operation in a particular solenoid design. A stronger magnetic field will cause the plunger to move at a greater speed than a weaker one. There are basically two ways to increase the force of the magnetic field:

1. Increase the amount of current applied to the coil or
2. Increase the number of turns of wire in the coil.

The most common practice is to increase the number of turns by using thin wire that can completely fill the available space within the solenoid housing. The strength of the spring and the length of the plunger also contribute to the response speed possible by a particular solenoid design.

A solenoid can also be described by the method by which it is controlled. Some of the possibilities include variable force, pulse-width modulated, constant ON, or duty cycle. The variable force and pulse-width modulated versions utilize similar methods to control the current flow through the solenoid to position the solenoid plunger at a desired position somewhere between full ON and full OFF. The constant ON and duty cycled versions control the voltage across the solenoid to allow either full flow or no flow through the solenoid's valve.

UPSHIFT/DOWNSHIFT SOLENOID VALVES

The solenoid valves for upshifts and downshifts are located in the shell of the electric control unit and pressed against the shift plate with a spring.

The solenoid valves (1) initiate the upshift and downshift procedures in the shift plate.

The solenoid valves (1) are sealed off from the valve housing of the shift plate (5) by two O-rings (4, 6). The contact springs (8) at the solenoid valve engage in a slot in the conductor tracks (7). The force of the contact spring (8) ensures safe contacts.

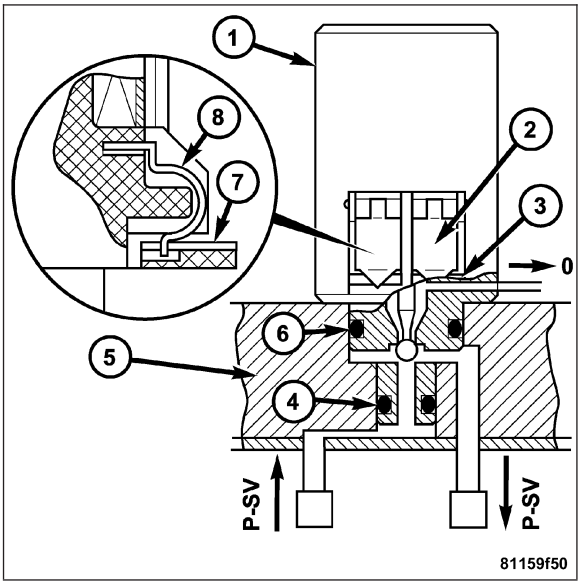

MODULATING PRESSURE CONTROL SOLENOID VALVE

The modulating pressure control solenoid valve is located in the shell of the electric valve control unit and pressed against the shift plate by a spring.

Its purpose is to control the modulating pressure, depending on the continuously changing operating conditions, such as load and gear change.

The modulating pressure regulating solenoid valve (1) has an interference fit and is sealed off to the valve body of the shift plate (4) by a seal (arrow). The contact springs (2) at the solenoid valve engage in a slot in the conductor tracks (3). The force of the contact springs (2) ensures secure contacts.

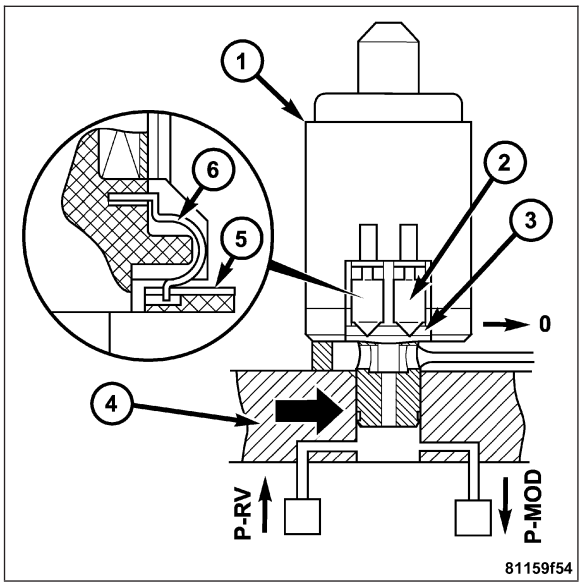

TORQUE CONVERTER LOCKUP CLUTCH PWM SOLENOID VALVE

The torque converter lockup clutch PWM solenoid valve (1) is located in the shell of the electric valve control unit and is pressed against the shift plate by a spring.

The PWM solenoid valve (1) for the torque converter lockup controls the pressure for the torque converter lockup clutch.

The torque converter lockup PWM solenoid valve (1) is sealed off to the valve body of the shift plate (4) by an O-ring (5) and a seal (arrow). The contact springs (2) at the solenoid valve engage in a slot in the conductor tracks (3). The force of the contact springs (2) ensures secure contacts.

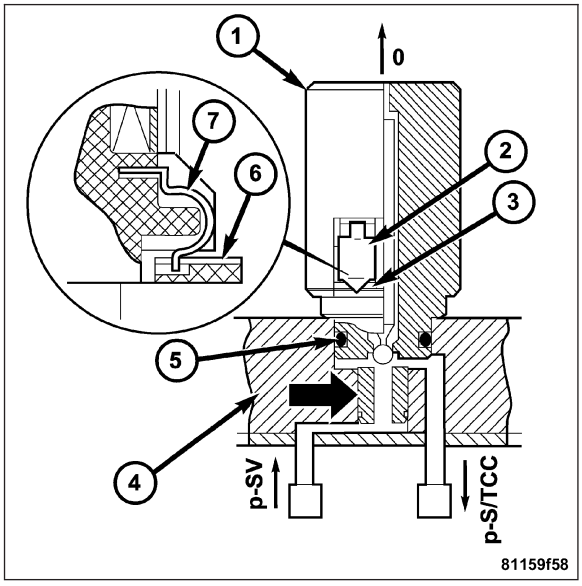

SHIFT PRESSURE CONTROL SOLENOID VALVE

The shift pressure control solenoid valve (1) is located in the shell of the electric valve control unit and is pressed against the shift plate by a spring.

Its purpose is to control the shift pressure depending on the continuously changing operating conditions, such as load and gear change.

The shift pressure regulating solenoid valve (1) has an interference fit and is sealed off to the valve body of the shift plate (4) by a seal (arrow). The contact springs (2) at the solenoid valve engage in a slot in the conductor tracks (3). The force of the contact springs (2) ensures secure contacts.

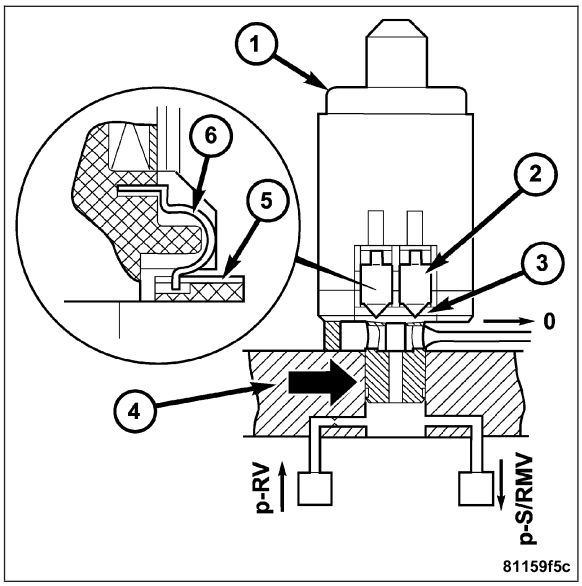

OPERATION

When an electrical current is applied to the solenoid coil, a magnetic field is created which produces an attraction to the plunger, causing the plunger to move and work against the spring pressure and the load applied by the fluid the valve is controlling. The plunger is normally directly attached to the valve which it is to operate. When the current is removed from the coil, the attraction is removed and the plunger will return to its original position due to spring pressure.

The plunger is made of a conductive material and accomplishes this movement by providing a path for the magnetic field to flow. By keeping the air gap between the plunger and the coil to the minimum necessary to allow free movement of the plunger, the magnetic field is maximized.

UPSHIFT/DOWNSHIFT SOLENOID VALVES

If a solenoid valve is actuated by the TCM, it opens and guides the control pressure (p-SV) to the assigned command valve. The solenoid valve remains actuated and therefore open until the shifting process is complete. The shift pressure (p-SV) to the command valve is reduced to zero as soon as the power supply to the solenoid valve is interrupted.

SHIFT PRESSURE CONTROL SOLENOID VALVE

The shift pressure regulating solenoid valve (1) assigns a proportional pressure to the current which is controlled by the TCM according to the load.

TEMP SENSOR/PARK-NEUTRAL SWITCH

DESCRIPTION

PARK/NEUTRAL CONTACT

The park/neutral contact (4) is located in the shell of the electric control unit and is fixed to the conductor tracks.

Its purpose is to recognize selector valve and selector lever positions “P” and “N”. The park/neutral contact consists of:

- the plunger (2).
- the permanent magnet (3).
- the dry-reed contact (4).

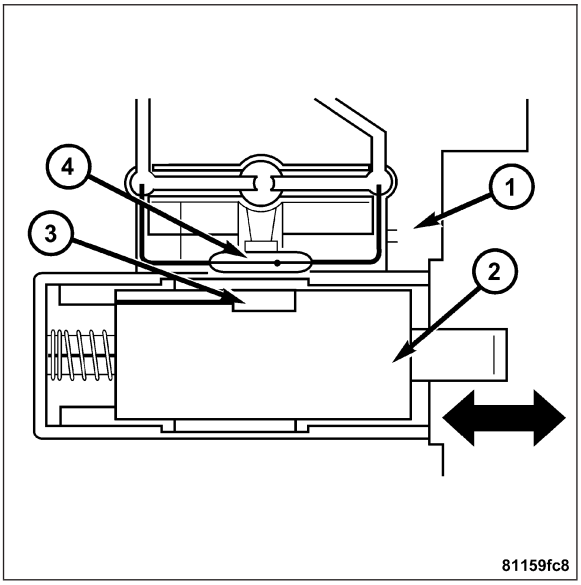

DESCRIPTION - TRANSMISSION TEMPERATURE SENSOR

The transmission oil temperature sensor (1) is located in the shell of the electric valve control unit and is fixed to the conductor tracks.

Its purpose is to measure the temperature of the transmission oil and pass the temperature to the TCM as an input signal. It is a temperature-dependent resistor (PTC).

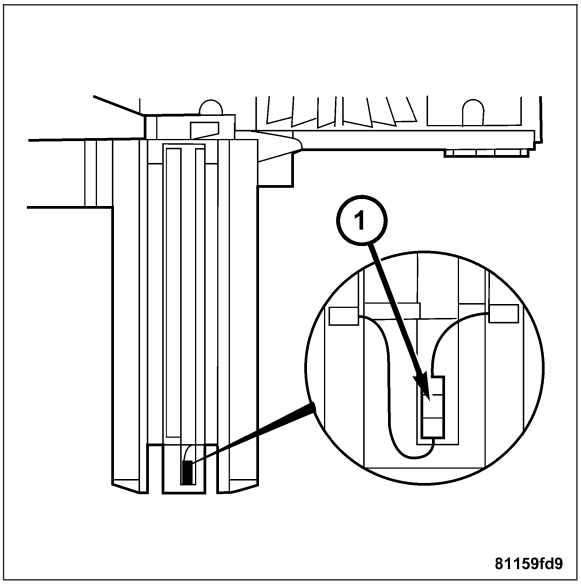

OPERATION

PARK/NEUTRAL CONTACT

In selector lever positions “P” and “N” the park/neutral contact (4) is actuated by a cam track which is located on the detent plate. The permanent magnet (3) is moved away from the dry-reed contact (4). The dry-reed contact (4) is opened. The TCM receives an electric signal. The circuit to the starter in the selector lever positions “P” and “N” is closed.

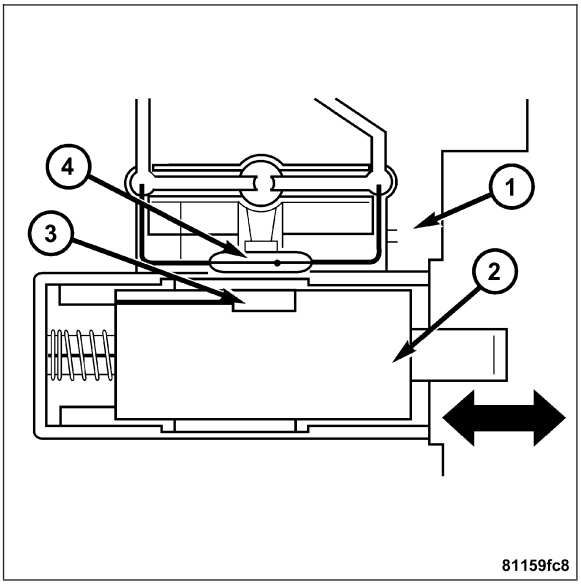

OPERATION - TRANSMISSION TEMPERATURE SENSOR

The temperature of the transmission oil has a considerable effect on the shifting time and therefore the shift quality. By measuring the oil temperature, shift operations can be optimized in all temperature ranges. The transmission oil temperature sensor (1) is switched in series with the park/neutral contact. The temperature signal is transferred to the TCM only when the dry-reed contact of the park/neutral contact is closed in REVERSE or a forward gear position.

Refer to the Transmission Temperature Sensor Specifications table for the relationship between transmission temperature, sensor voltage, and sensor resistance.

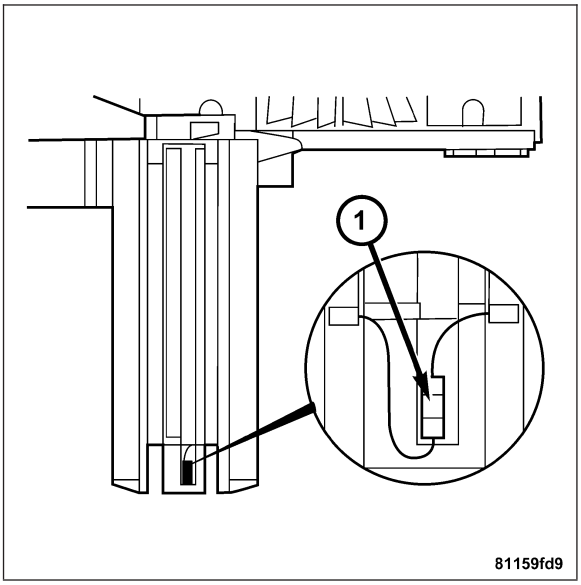

TRANSMISSION TEMP SENSOR SPECIFICATIONS

TEMPERATURE (C)	TEMPERATURE (F)	VOLTAGE	RESISTANCE
-50	-58	0.73	506.0
-45	-49	0.77	534.0
-40	-40	0.80	564.0
-35	-31	0.84	593.0
-30	-22	0.88	624.0
-25	-13	0.91	654.0
-20	-4	0.95	686.0
-15	5	0.98	718.0
-10	14	1.02	750.0
-5	23	1.05	783.0
0	32	1.09	817.0
5	41	1.12	851.0
10	50	1.16	886.0
15	59	1.19	921.0
20	68	1.23	957.0
25	77	1.26	994.0
30	86	1.30	1032.0
35	95	1.33	1070.0
40	104	1.37	1109.0
45	113	1.40	1149.0
50	122	1.44	1189.0
55	131	1.48	1231.0
60	140	1.51	1273.0
65	149	1.55	1316.0
70	158	1.58	1360.0
75	167	1.62	1405.0
80	176	1.65	1450.0
85	185	1.69	1497.0
90	194	1.72	1545.0
95	203	1.76	1594.0
100	212	1.79	1644.0
105	221	1.83	1695.0
110	230	1.86	1747.0
115	239	1.90	1800.0
120	248	1.93	1855.0
125	257	1.97	1911.0
130	266	2.00	1968.0
135	275	2.04	2027.0
140	284	2.08	2087.0
145	293	2.11	2148.0
150	302	2.15	2211.0

TEMPERATURE (C)	TEMPERATURE (F)	VOLTAGE	RESISTANCE
155	311	2.18	2276.0
160	320	2.22	2342.0
165	329	2.25	2410.0
170	338	2.29	2479.0
175	347	2.32	2551.0

TORQUE CONVERTER

DESCRIPTION

The torque converter is a hydraulic device that couples the engine crankshaft to the transmission. The torque converter consists of an outer shell with an internal turbine (1), a stator (3), an overrunning clutch, an impeller (2) and an electronically applied converter clutch. The converter clutch provides reduced engine speed and greater fuel economy when engaged. Clutch engagement also provides reduced transmission fluid temperatures. The converter clutch engages in third gear. The torque converter hub drives the transmission oil (fluid) pump.

The torque converter is a sealed, welded unit that is not repairable and is serviced as an assembly.

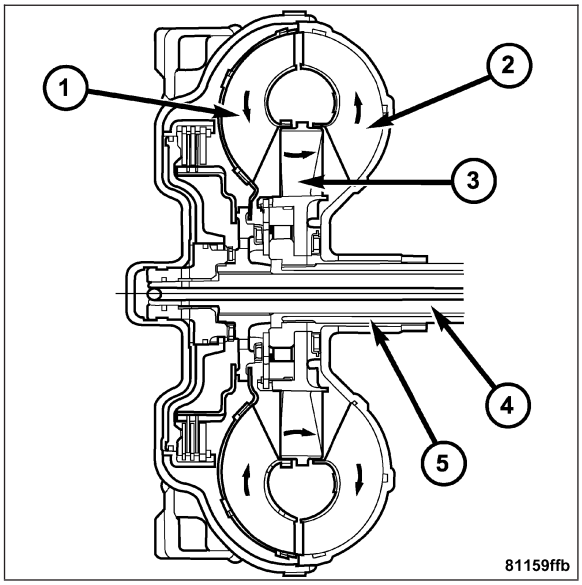

CAUTION: The torque converter must be replaced if a transmission failure resulted in large amounts of metal or fiber contamination in the fluid.

IMPELLER

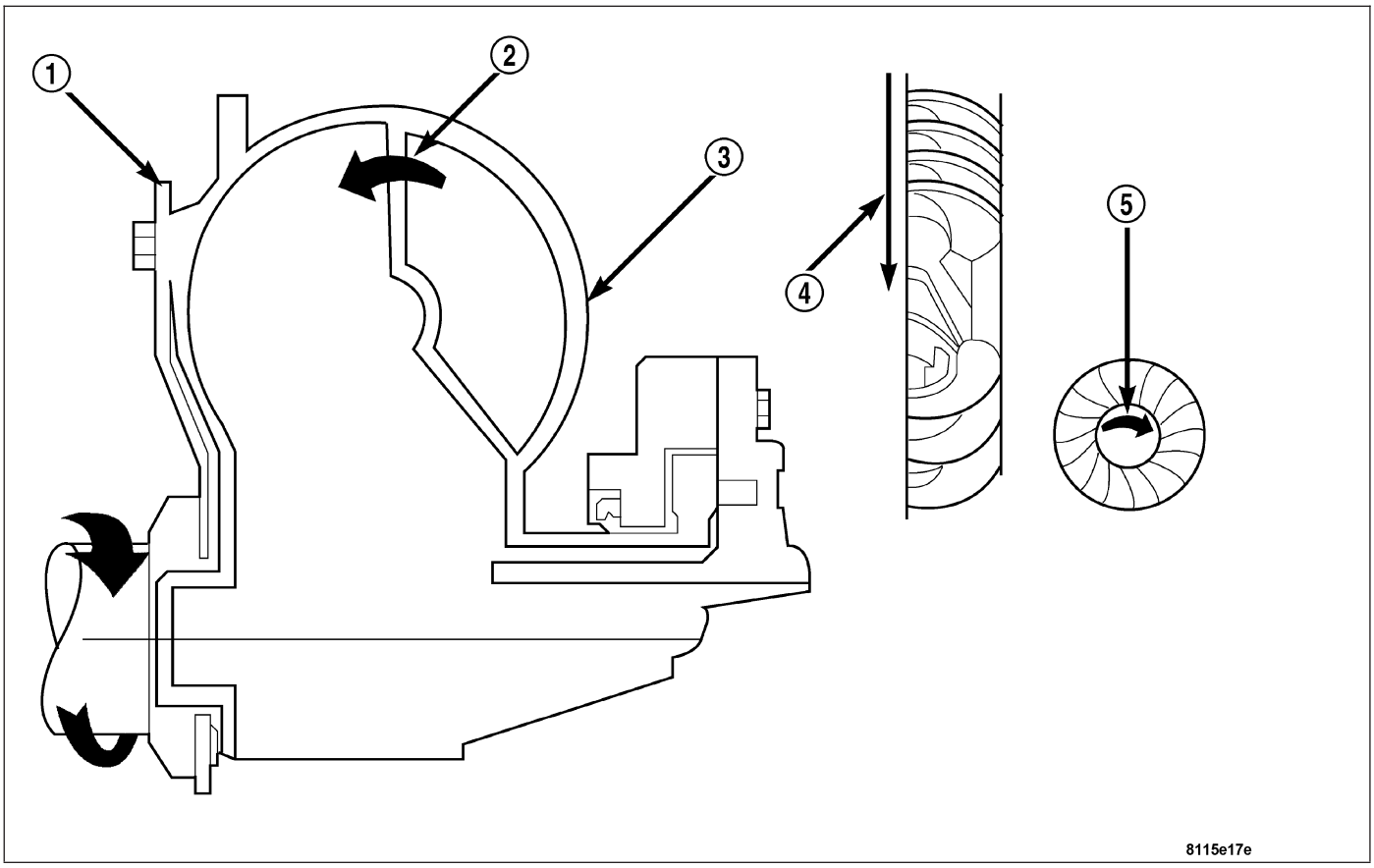

1 - ENGINE FLEXPLATE
2 - OIL FLOW FROM IMPELLER SECTION INTO TURBINE SECTION
3 - IMPELLER VANES AND COVER ARE INTEGRAL
4 - ENGINE ROTATION
5 - ENGINE ROTATION

The impeller is an integral part of the converter housing. The impeller consists of curved blades placed radially along the inside of the housing on the transmission side of the converter. As the converter housing is rotated by the engine, so is the impeller, because they are one and the same and are the driving members of the system.

TURBINE

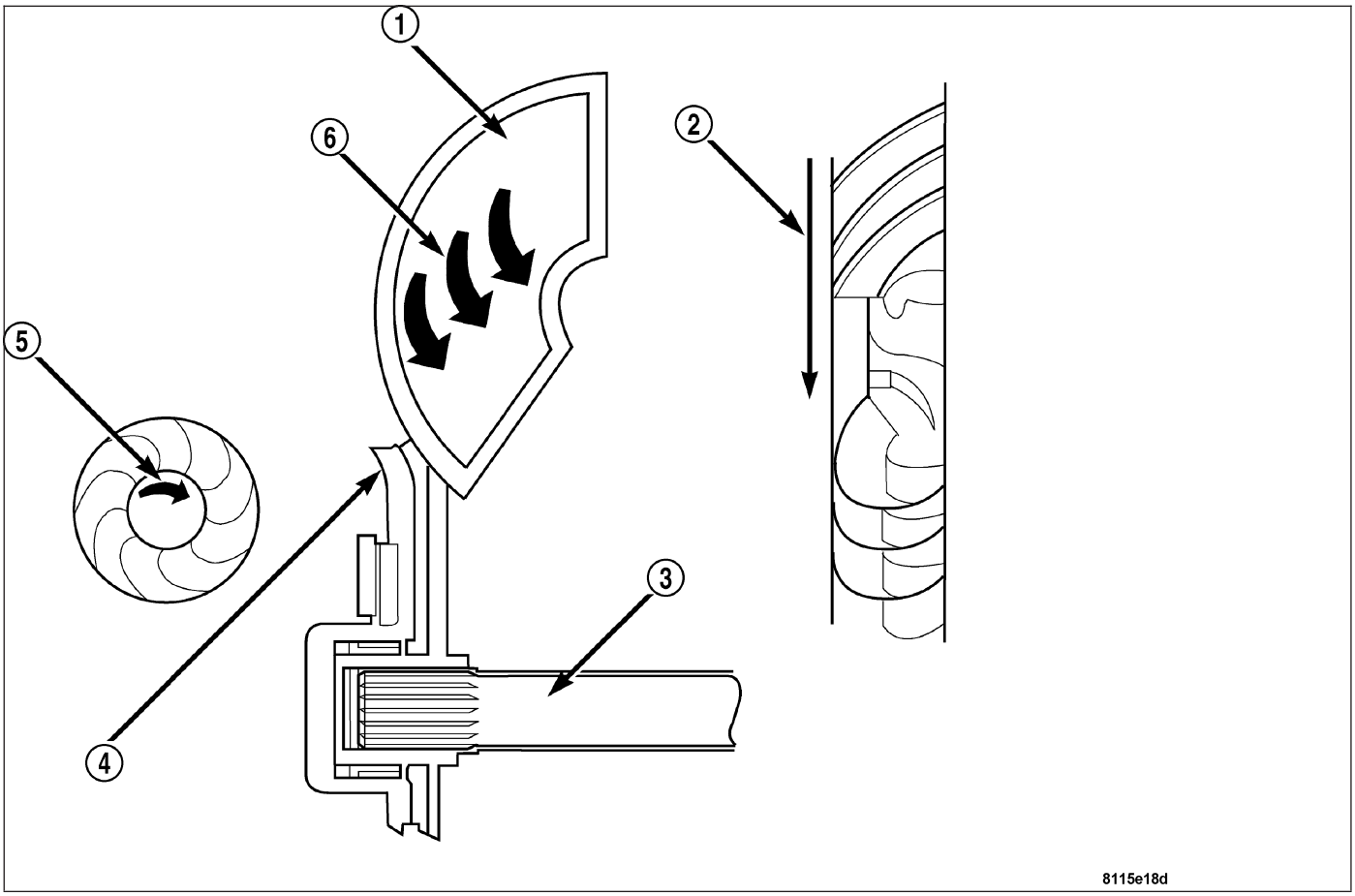

1 - TURBINE VANE
2 - ENGINE ROTATION
3 - INPUT SHAFT
4 - PORTION OF TORQUE CONVERTER COVER
5 - ENGINE ROTATION
6 - OIL FLOW WITHIN TURBINE SECTION

The turbine is the output, or driven, member of the converter. The turbine is mounted within the housing opposite the impeller, but is not attached to the housing. The input shaft is inserted through the center of the impeller and splined into the turbine. The design of the turbine is similar to the impeller, except the blades of the turbine are curved in the opposite direction.

STATOR

The stator assembly is mounted on a stationary shaft which is an integral part of the oil pump. The stator (1) is located between the impeller (2) and turbine (4) within the torque converter case. The stator contains a freewheeling clutch, which allows the stator to rotate only in a clockwise direction. When the stator is locked against the freewheeling clutch, the torque multiplication feature of the torque converter is operational.

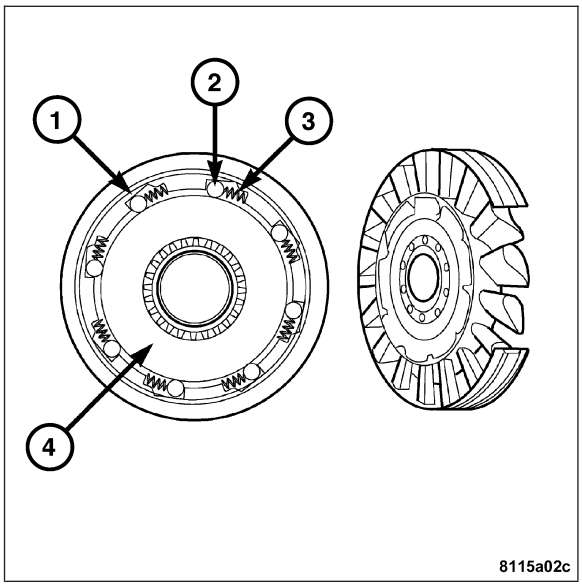

TORQUE CONVERTER CLUTCH (TCC)

The TCC was installed to improve the efficiency of the torque converter that is lost to the slippage of the fluid coupling. Although the fluid coupling provides smooth, shock-free power transfer, it is natural for all fluid couplings to slip. If the impeller and turbine were mechanically locked together, a zero slippage condition could be obtained. A hydraulic piston with friction material was added to the turbine assembly to provide this mechanical lock-up.

In order to reduce heat build-up in the transmission and buffer the powertrain against torsional vibrations, the TCM can duty cycle the torque converter lock-up solenoid to achieve a smooth application of the torque converter clutch. This function, referred to as Electronically Modulated Converter Clutch (EMCC) can occur at various times depending on the following variables:

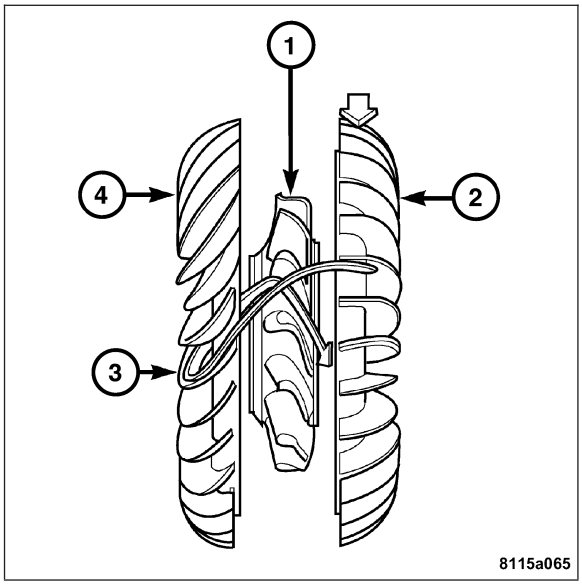

- Shift lever position
- Current gear range
- Transmission fluid temperature
- Engine coolant temperature
- Input speed
- Throttle angle
- Engine speed

OPERATION

The converter impeller (driving member), which is integral to the converter housing and bolted to the engine drive plate, rotates at engine speed. The converter turbine (driven member), which reacts from fluid pressure generated by the impeller, rotates and turns the transmission input shaft.

TURBINE

As the fluid that was put into motion by the impeller blades strikes the blades of the turbine, some of the energy and rotational force is transferred into the turbine and the input shaft. This causes both of them (turbine and input shaft) to rotate in a clockwise direction following the impeller. As the fluid is leaving the trailing edges of the turbine's blades, it continues in a "hindering" direction back toward the impeller. If the fluid is not redirected before it strikes the impeller, it will strike the impeller in such a direction that it would tend to slow it down.

STATOR

Torque multiplication is achieved by locking the stator's over-running clutch to its shaft. Under stall conditions (the turbine is stationary), the oil leaving the turbine blades strikes the face of the stator blades and tries to rotate them in a counterclockwise direction (3). When this happens the over-running clutch of the stator locks and holds the stator from rotating. With the stator locked, the oil strikes the stator blades and is redirected into a "helping" direction before it enters the impeller. This circulation of oil from impeller to turbine, turbine to stator, and stator to impeller, can produce a maximum torque multiplication of about 2.0:1. As the turbine begins to match the speed of the impeller, the fluid that was hitting the stator in such as way as to cause it to lock-up is no longer doing so. In this condition of operation, the stator begins to free wheel and the converter acts as a fluid coupling.

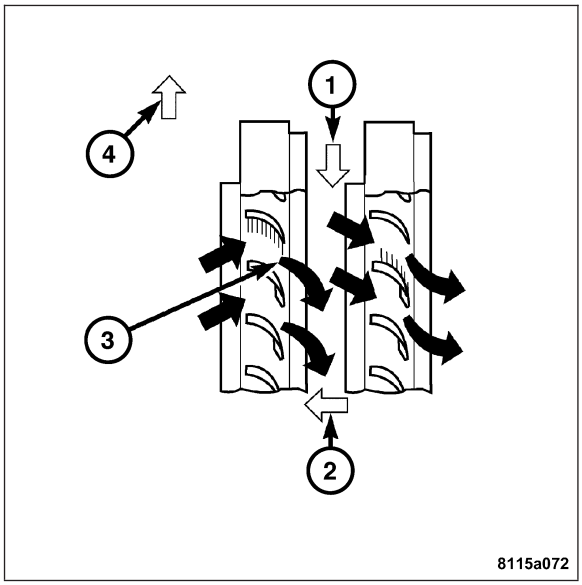

TORQUE CONVERTER CLUTCH (TCC)

In a standard torque converter, the impeller and turbine are rotating at about the same speed and the stator is freewheeling, providing no torque multiplication. By applying the turbine's piston and friction material to the front cover, a total converter engagement can be obtained. The result of this engagement is a direct 1:1 mechanical link between the engine and the transmission.

The clutch can be engaged in second, third, fourth, and fifth gear ranges.

The TCM controls the torque converter by way of internal logic software. The programming of the software provides the TCM with control over the torque converter solenoid. There are four output logic states that can be applied as follows:

- No EMCC
- Partial EMCC
- Full EMCC
- Gradual-to-no EMCC

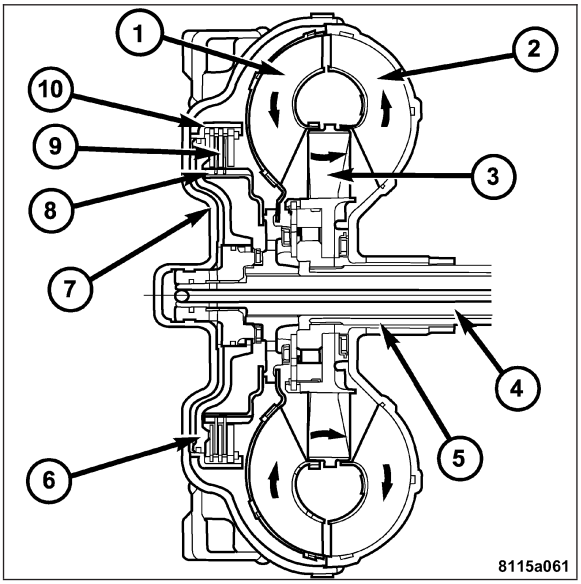

NO EMCC

Under No EMCC conditions, the TCC Solenoid is OFF. There are several conditions that can result in NO EMCC operations. No EMCC can be initiated due to a fault in the transmission or because the TCM does not see the need for EMCC under current driving conditions.

PARTIAL EMCC

Partial EMCC operation modulates the TCC Solenoid (duty cycle) to obtain partial torque converter clutch application. Partial EMCC operation is maintained until Full EMCC is called for and actuated. During Partial EMCC some slip does occur. Partial EMCC will usually occur at low speeds, low load and light throttle situations.

FULL EMCC

During Full EMCC operation, the TCM increases the TCC Solenoid duty cycle to full ON after Partial EMCC control brings the engine speed within the desired slip range of transmission input speed relative to engine rpm.

GRADUAL-TO-NO EMCC

This operation is to soften the change from Full or Partial EMCC to No EMCC. This is done at mid-throttle by decreasing the TCC Solenoid duty cycle.

REMOVAL

1. Remove transmission and torque converter from vehicle. **Refer to Page 21-210**
2. Place a suitable drain pan under the converter housing end of the transmission.

CAUTION: Verify that transmission is secure on the lifting device or work surface; the center of gravity of the transmission will shift when the torque converter is removed creating an unstable condition. The torque converter is a heavy unit. Use caution when separating the torque converter from the transmission.

3. Pull the torque converter (1) forward until the center hub clears the oil pump seal.
4. Separate the torque converter from the transmission (2).

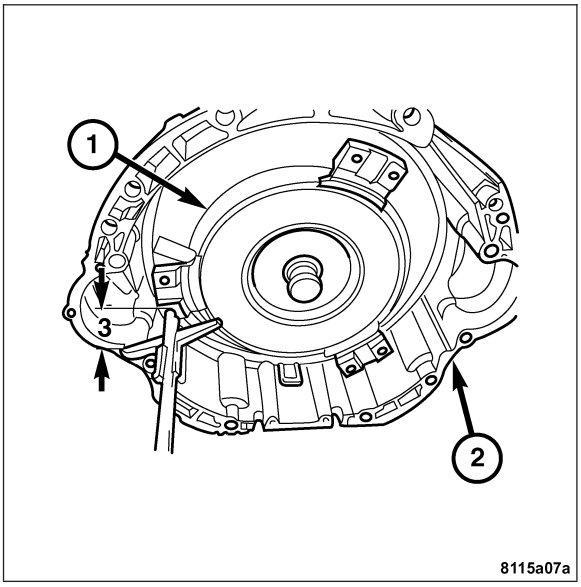

INSTALLATION

Check the converter hub and drive flats for sharp edges, burrs, scratches, or nicks. Polish the hub and flats with 320/400 grit paper or crocus cloth if necessary. The hub must be smooth to avoid damaging the pump seal at installation.

1. Lubricate the oil pump seal lip with transmission fluid.
2. Place the torque converter in position on the transmission.

CAUTION: Do not damage oil pump seal or converter hub while inserting torque converter into the front of the transmission.

3. Align the torque converter to oil pump seal opening.
4. Insert the torque converter hub into the oil pump.
5. While pushing the torque converter inward, rotate converter until converter is fully seated in the oil pump gears.
6. Check the converter seating with a scale and straightedge. Surface of the converter lugs should be at least 19 mm (3/4 in.) (3) to the rear of the straightedge when converter is fully seated.
7. If necessary, temporarily secure the converter with a C-clamp attached to the converter housing.
8. Install the transmission in the vehicle. **Refer to Page 21-227**.
9. Fill the transmission with the recommended fluid.

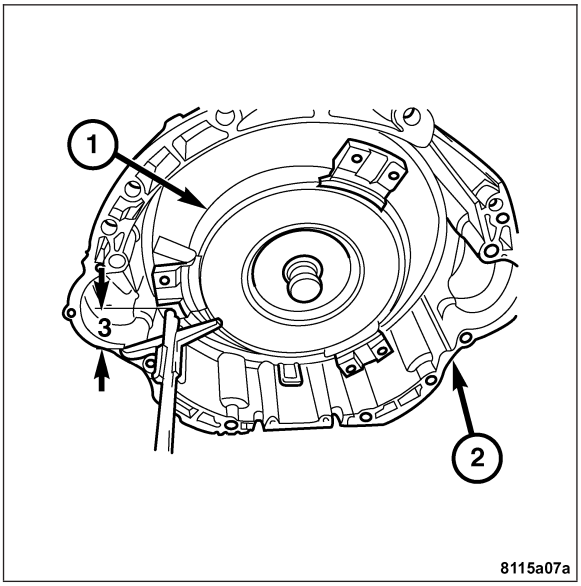

TORQUE CONVERTER HUB SEAL

REMOVAL

1. Remove the torque converter. **Refer to Page 21-335**.
2. Remove the torque converter hub seal with suitable screw and slide hammer.

INSTALLATION

1. Position the torque converter hub seal (1) over the input shaft (2) and against the transmission oil pump.

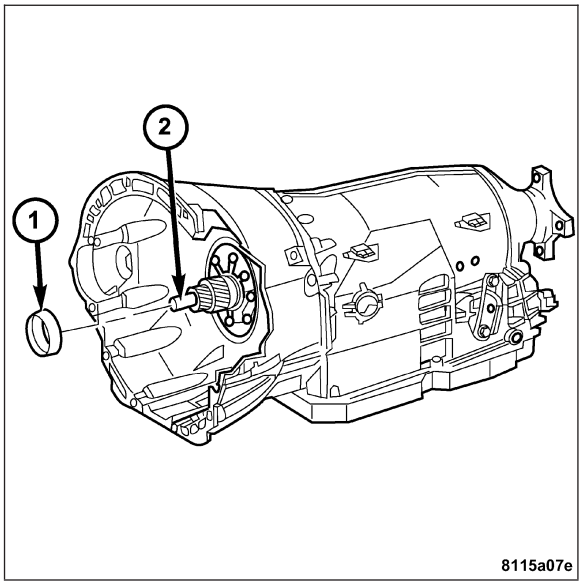

2. Using Special Tool 8902A (2), install a new torque converter hub seal.
3. Install the torque converter. **Refer to Page 21-336**.

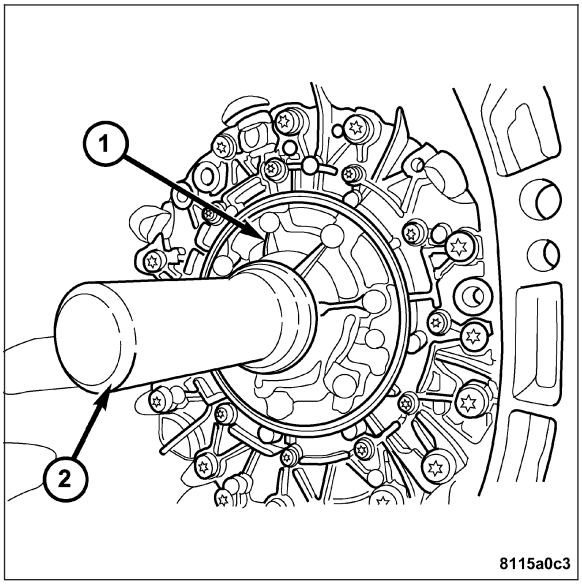

SHIFT INTERLOCK SOLENOID

DESCRIPTION

The shift interlock solenoid is not serviced separately. If the shift interlock solenoid becomes inoperable, the shift mechanism must be replaced.

ADJUSTMENTS - SHIFT INTERLOCK SOLENOID

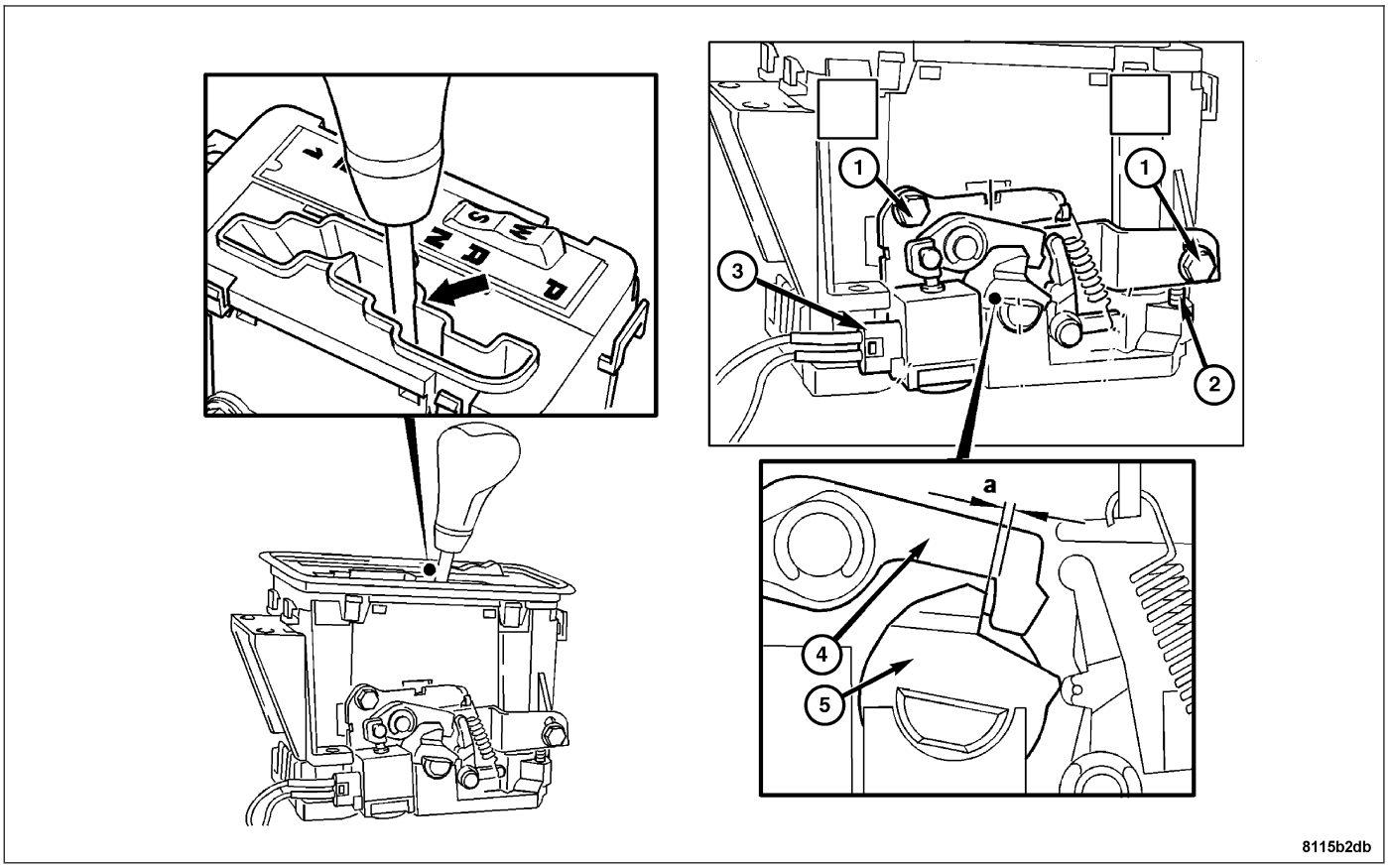

1. Set the parking brake.
2. Remove the front center console. **Refer to Page 23-173**.
3. Remove the shifter outer cover.
4. Set the selector lever to nuetral. Lever must be touching the slot (arrow).
5. Energize the interlock solenoid (3).
6. Loosen the bolts (1).
7. Adjust the gap between the locking lever (4) and the cam plate (5) to .02 mm using the adjusting screw (2).
8. Tighten the bolts (1) to 3.5 N·m (31 in. lbs.).
9. Install the shifter outer cover.
10. Install the console. **Refer to Page 23-183**.

SHIFT LEVER ASSEMBLY

DESCRIPTION

In vehicles equipped with an automatic transmission, the Shift Lever Assembly (2) is located at the front of the center console (1).

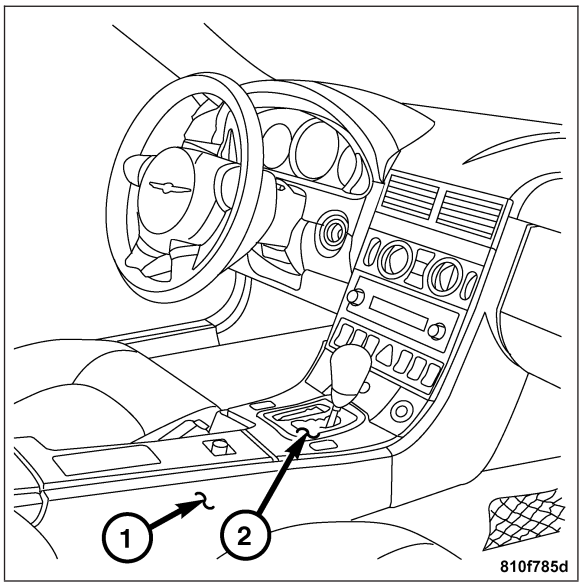

The Shift Lever Assembly provides four shift positions which are:

- Park (P)
- Reverse (R)
- Neutral (N)
- Drive (D)

In the Drive (D) position, five forward gears are available. On the Shift Lever Assembly next to the “D” is a “+” symbol and a “–” symbol. While in the Drive position, pushing the shift lever to the right toward the “+” on the Shift Lever Assembly will upshift one range at a time. Conversely, pushing the shift lever to the left toward the “–” on the Shift Lever Assembly will downshift one range at a time. This enables the other forward gears to be accessed (engine speed permitting). Also, pushing and holding the shift lever to the left or right will change the transmission gear that is accessed when the shift lever is put into the Drive (D) position.

Also located on the Shift Lever Assembly is the transmission mode switch (W/S). In Standard (S) mode, the vehicle transmission starts off in first gear at all times. In Winter (W) mode, the vehicle transmission starts off in second gear unless manually downshifted and the forward gears have a reduced RPM range. In Winter mode, if transmission kickdown occurs, transmission upshifts and downshifts are the same as Standard mode operation.

OPERATION

The Shift Lever Assembly consists of a printed circuit board, an opti-electronic switch for program selection recognition at the “W/S” program selector, contacts at the shift lever for recognizing the selected shift range, two plugs, and four light emitting diodes (LEDs) to illuminate the shift gate. The shift lever printed circuit board receives digital and analog input signals, controls various components and transfers information to various modules via the Controller Area Network (CAN) bus. The Shift Lever Assembly has input and output signals to the Data Link Connector. The Shift Lever Assembly receives input signals from the selector lever, the W/S switch, the upshift/downshift (+/-) Autostick switch, the shift gate illumination, the kickdown switch, and the brake lamp switch. The Shift Lever Assembly sends output signals to the reverse/park lock and the reverse lamps. A safety mechanism is built into the Shift Lever Assembly to prevent mechanical damage to the automatic transmission. The rear wheel speed is measured through the Controller Antilock Brake (CAB) and delivered to the Shift Lever Assembly. As a result, shifting the selector lever from Neutral to Reverse above approximately 8 km/h (5 MPH) is not allowed.

The ignition lock control cable attached to the Shift Lever Assembly prevents the driver from removing the ignition key if the selector lever is not in the Park position.

Brake Transmission Shift Interlock

BTSI is a safety feature that enables the shift selector lever to stay locked in the Park position when the brake pedal is not depressed (ignition on) or when there is no current present in the Shift Lever Assembly. If the Shift Lever Assembly selector lever cannot be shifted from the Park position due to a mechanical or electrical failure, the selector lever can be released from the Park position using the shift lock override procedure. To do this, insert a long screwdriver into the notch just below the “-D+” symbol on the Shift Lever Assembly and depress the lock button while moving the selector lever out of the Park position at the same time. This will allow the shift lever to be manually moved out of the Park position in order to move the vehicle.

REMOVAL

1. Remove the front center console. **Refer to Page 23-173**.
2. Remove the gear shift lever handle.
3. Disconnect the wire harness connectors (2) at the rear of the shift mechanism.
4. Remove the retaining bolts (3).
5. Lift the shift mechanim up and disconnect the shift rod. Remove the shift mechanism from the vehicle.

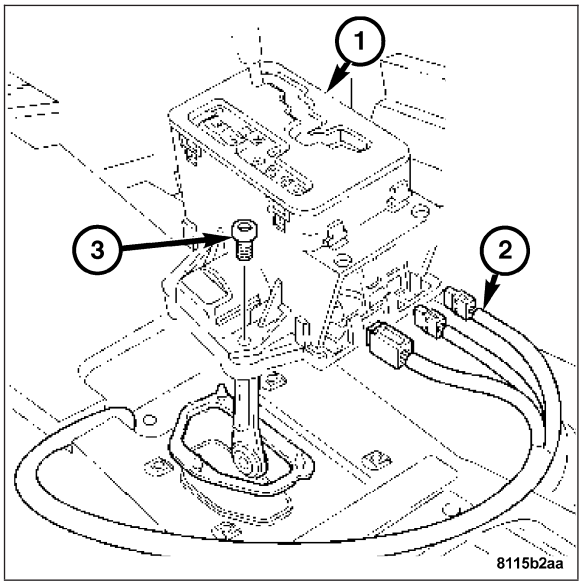

INSTALLATION

1. Connect the shift rod to the shift mechanism and install the retainer clip.
2. Position the shift mechanism (1) in the vehicle.
3. Install the retaining bolts (3). Tighten the bolts to 7 N·m (65 in. lbs.).
4. Connect the wire harness (2) connectors at the rear of the shift mechanism.
5. Install the front center console. **Refer to Page 23-183**.
6. Install the gear shift lever handle.

GEAR SHIFT ROD

REMOVAL

1. Raise and support the vehicle.
2. Remove the retaining clip at the shifter (1).

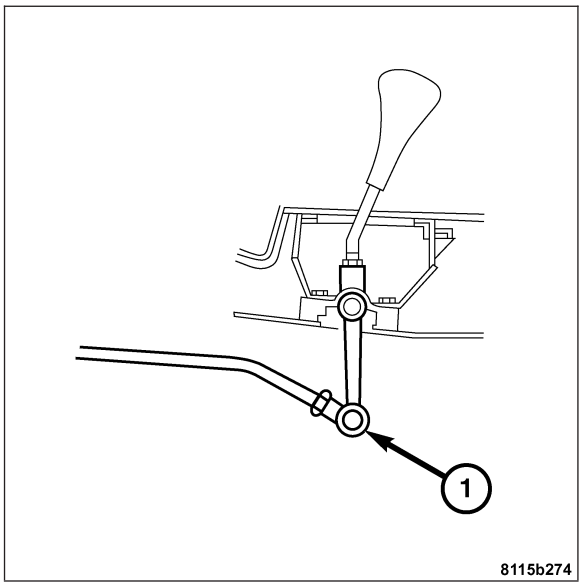

3. Remove the retaining clip at the transmission shift arm and remove the shift rod from the vehicle.

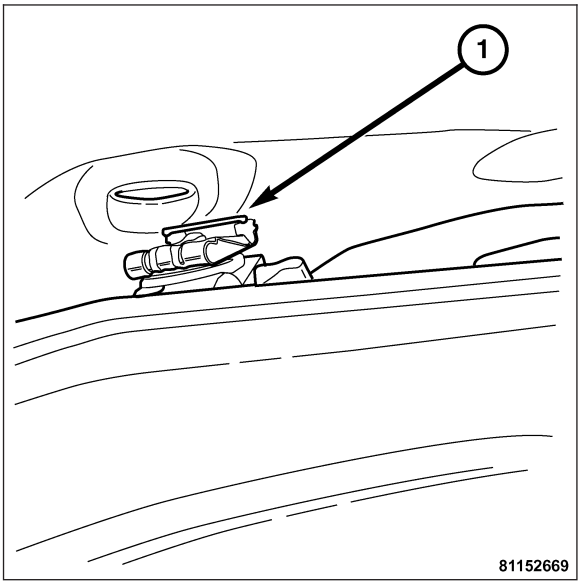

INSTALLATION

1. Position the shift rod on the transmission shift arm an install the clip.
2. Position the shift rod on the shifter and install the clip.
3. Lower the vehicle and check the operation of the shift mechanism.

MANUAL - SERVICE INFORMATION

TABLE OF CONTENTS

page

MANUAL - SERVICE INFORMATION
DESCRIPTION 342
OPERATION 343
DIAGNOSIS AND TESTING 344
REMOVAL 344
CLEANING 347
INSTALLATION 347
SPECIFICATIONS
SPECIFICATIONS - GEAR RATIOS 349
SPECIFICATIONS 350
SPECIAL TOOLS 351
FLUID
STANDARD PROCEDURE
STANDARD PROCEDURE - FLUID DRAIN AND FILL 352
STANDARD PROCEDURE - CHECKING FLUID LEVEL 353
BACKUP LAMP SWITCH
REMOVAL 353
INSTALLATION 354
OUTPUT FLANGE SEAL
REMOVAL 355
INSTALLATION 356
DETENT PLUG
REMOVAL 358
INSTALLATION 359
INPUT SHAFT SEAL
REMOVAL 359
INSTALLATION 360
TRANSMISSION FRONT SECTION
DISASSEMBLY 361

page

ASSEMBLY 361
REAR SECTION HOUSING
DISASSEMBLY 362
ASSEMBLY 362
REVERSE SHAFT
DESCRIPTION 363
GEARTRAIN HOUSING
DISASSEMBLY 363
ASSEMBLY 365
MAINSHAFT W/INPUT SHAFT
DESCRIPTION 368
DISASSEMBLY 369
ASSEMBLY 374
COUNTERSHAFT
DISASSEMBLY 380
ASSEMBLY 383
SYNCHRONIZER
DESCRIPTION 386
ASSEMBLY 386
GEAR SHIFT LEVER HANDLE
REMOVAL 387
INSTALLATION 387
REVERSE LOCKOUT CABLE
DESCRIPTION 388
SHIFT MECHANISM
DESCRIPTION 388
STANDARD PROCEDURE - SHIFT LEVER ADJUSTMENT 389
REMOVAL 391
INSTALLATION 392

MANUAL - SERVICE INFORMATION

DESCRIPTION

The manual transmission is a fully synchronized two-shaft transmission with six forward gears and one reverse gear. The 6th gear is used to save fuel and reduce engine speed. The manual transmission is equipped with a conventional dry clutch with automatic wear adjuster which is operated by a central clutch operator. The transmission is maintenance-free and has a permanent oil fill. A precise and light shift with short shifting travels is achieved by the following measures:

- Transmission of the shift lever movement to the transmission by the shift rod and control cable
- Central shift shaft supported on needle bearings
- Multiple-cone synchronization in 1st, 2nd, 3rd and 4th gear
- Fully-synchronized reverse gear

OPERATION

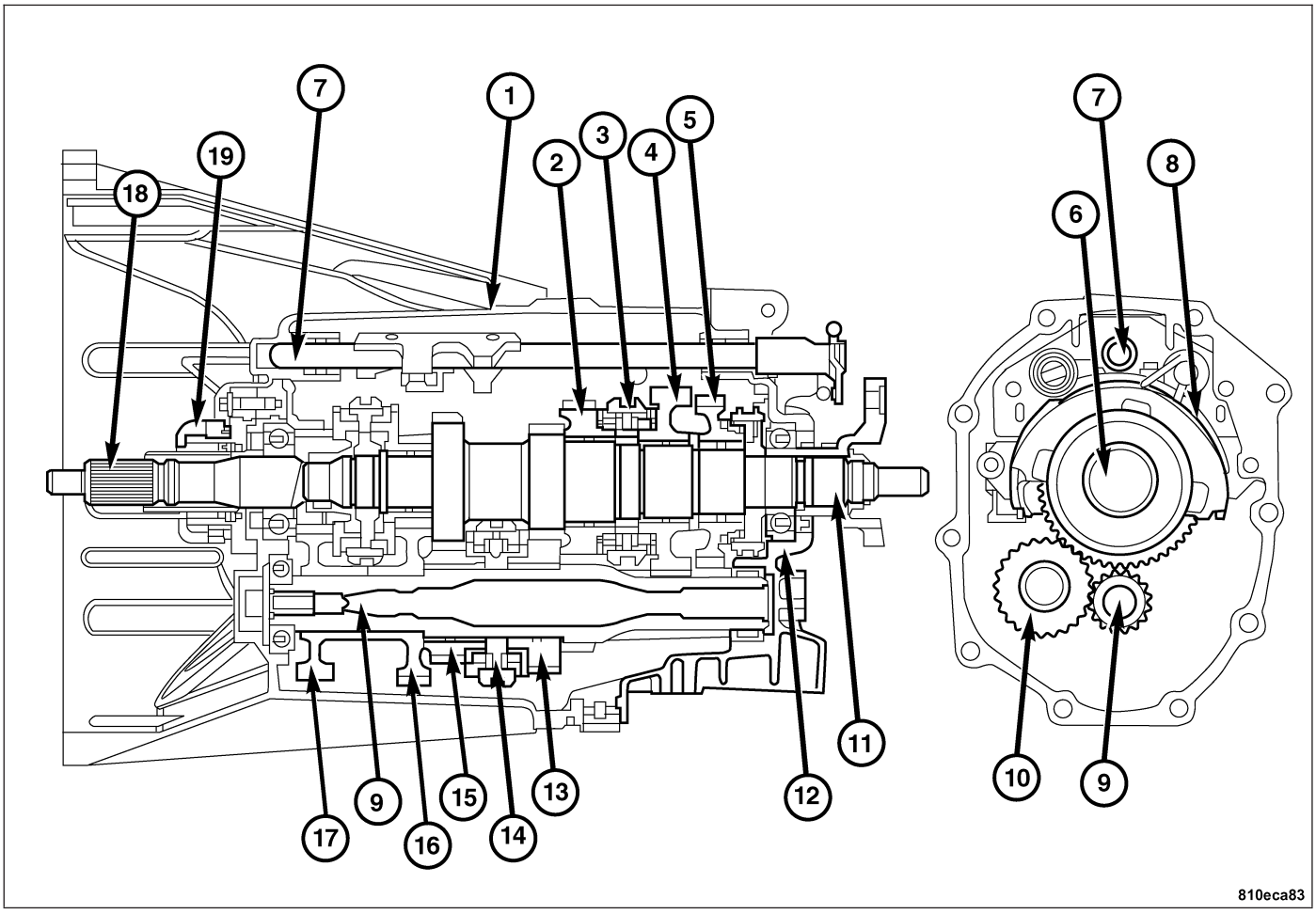

1 - FRONT TRANSMISSION HOUSING
2 - 2ND GEAR
3 - MULTIPLE-CONE SYNCHRONIZATION 1ST/2ND GEAR
4 - 1ST GEAR
5 - REVERSE GEAR
6 - MAIN SHAFT
7 - CENTRAL SHIFT SHAFT
8 - INNER SHIFT MODULE
9 - COUNTER SHAFT
10 - REVERSE GEAR IDLER GEAR
11 - MAIN SHAFT
12 - CENTRAL SHIFT SHAFT
13 - 4TH GEAR
14 - MULTIPLE-CONE SYNCHRONIZATION 1ST/2ND GEAR
15 - THIRD GEAR
16 - 6TH GEAR
17 - 5TH GEAR
18 - INPUT SHAFT
19 - RELEASE BEARING/SLAVE CYLINDER

The gear assemblies and shafts are located between two bearing planes. The divided transmission housing is made up of a light metal alloy, the housing parts of which are sealed with liquid sealing agent. The input shaft is supported by a pilot bearing in the flywheel and by a deep-groove ball bearing in the transmission housing. The main shaft and input shaft are inserted into each other on a common shaft plane in the transmission housing and are supported by deep-groove ball bearings. The countershaft is designed as a hollow shaft to reduce weight and is supported by a deep-groove ball bearing and a roller sleeve. The shaft play does not have to be adjusted due to the very tight production tolerances of the gear wheels and housing halves, as well as the use of roller sleeves.

DIAGNOSIS AND TESTING

LOW LUBRICANT LEVEL

A low transmission lubricant level is generally the result of a leak, inadequate lubricant fill, or an incorrect lubricant level check.

Leaks can occur at the mating surfaces of the gear case and adaptor or from the front/rear seals. A suspected leak could also be the result of an overfill condition.

Leaks at the rear of the extension or adapter housing will be from the housing oil seals. Leaks at component mating surfaces will probably be the result of inadequate sealer, gaps in the sealer, incorrect bolt tightening, or use of a non–recommended sealer.

A leak at the front of the transmission will be from either the front bearing retainer or retainer seal. Lubricant may be seen dripping from the clutch housing after extended operation. If the leak is severe, it may also contaminate the clutch disc causing the disc to slip, grab, and/or chatter.

A correct lubricant level check can only be made when the vehicle is level. Also allow the lubricant to settle for a minute or so before checking. These recommendations will ensure an accurate check and avoid an underfill or overfill condition. Always check the lubricant level after any addition of fluid to avoid an incorrect lubricant level condition.

HARD SHIFTING

Hard shifting is usually caused by a low lubricant level, improper, or contaminated lubricants. The consequence of using non–recommended lubricants is noise, excessive wear, internal bind, and hard shifting. Substantial lubricant leaks can result in gear, shift rail, synchronizer, and bearing damage. If a leak goes undetected for an extended period, the first indications of component damage are usually hard shifting and noise.

Shift component damage, incorrect clutch adjustment, or a damaged clutch pressure plate or disc are additional probable causes of increased shift effort. Incorrect adjustment or a worn/damaged pressure plate or disc can cause incorrect release. If the clutch problem is advanced, gear clash during shifts can result. Worn or damaged synchro rings can cause gear clash when shifting into any forward gear. In some new or rebuilt transmissions, new synchronizer rings may tend to stick slightly causing hard or noisy shifts. In most cases, this condition will decline as the rings wear-in.

TRANSMISSION NOISE

Most manual transmissions make some noise during normal operation. Rotating gears generate a mild whine that is audible, but generally only at extreme speeds.

Severe, highly audible transmission noise is generally the initial indicator of a lubricant problem. Insufficient, improper, or contaminated lubricant will promote rapid wear of gears, synchronizers, shift rails, forks and bearings. The overheating caused by a lubricant problem can also lead to gear and bearing damage.

REMOVAL

1. Disconnect the negative battery cable.
2. Raise and support the vehicle.
3. Remove the propeller shaft. **Refer to Page 3-26**.
4. Support the transmission with a jack.

5. Remove the rear transmission mount bolts (1) and the rear crossmember bolts (2). Remove the rear transmission mount together, with the crossmember, from the vehicle.

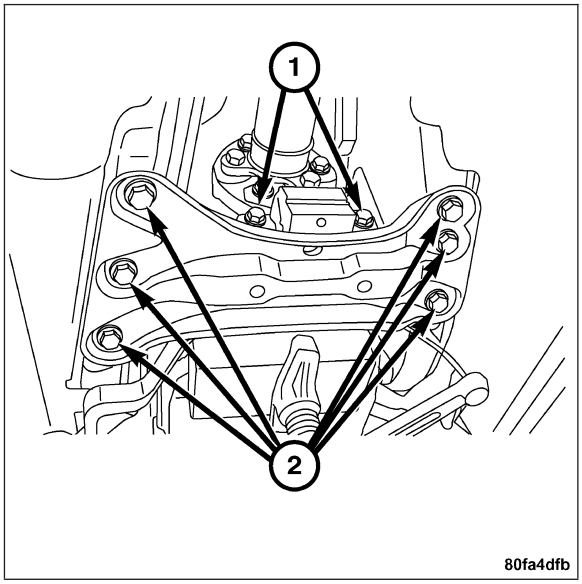

6. Disconnect the backup lamp switch harness connector (1).

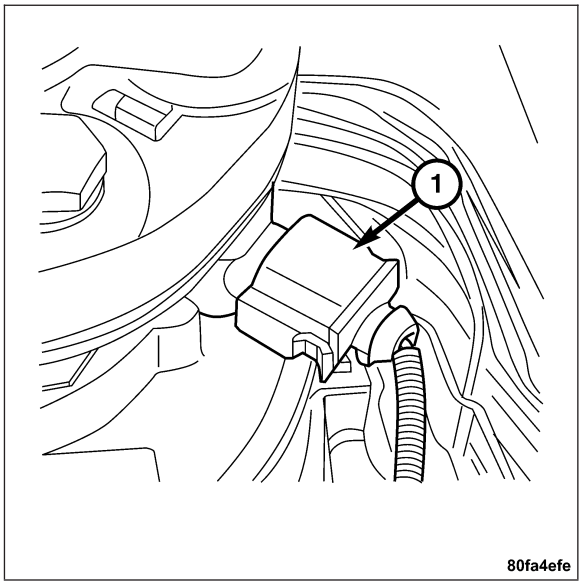

7. Disconnect the pressure line (1) at the clutch slave cylinder. Remove the retaining bolt (2) and the pressure line (1) from the transmission.

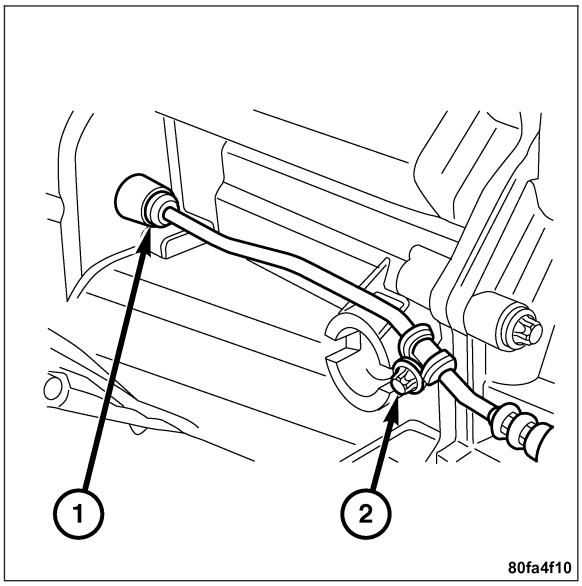

8. Disconnect the reverse lockout cable (1) by turning the locking nut counter clockwise. Remove the cable end from the ball stud and position the cable aside.

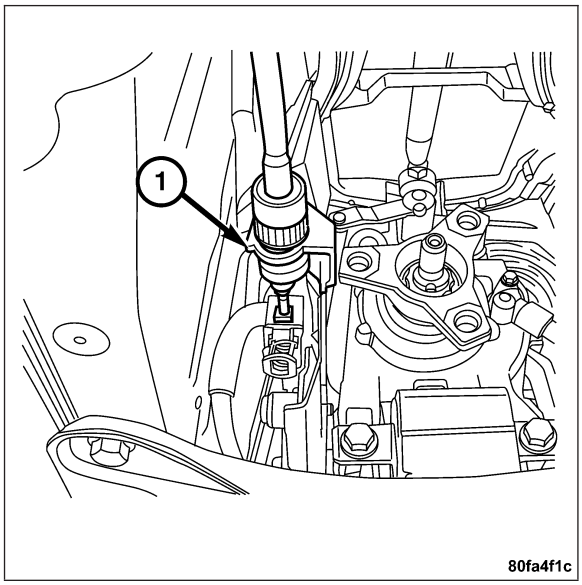

9. Disconnect the shift rod (1) from the ball stud (2). Position the shift rod (1) aside.

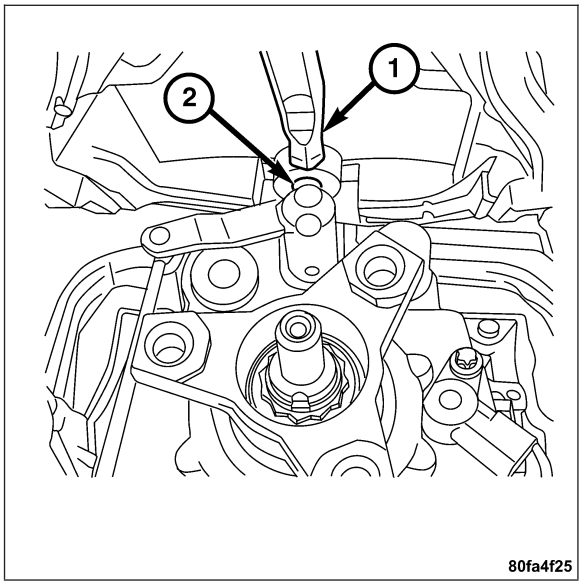

10. Disconnect the ground cable (1) at the transmission.
11. Remove the transmission to engine retaining bolts.
12. Lower the transmission down and out of vehicle.

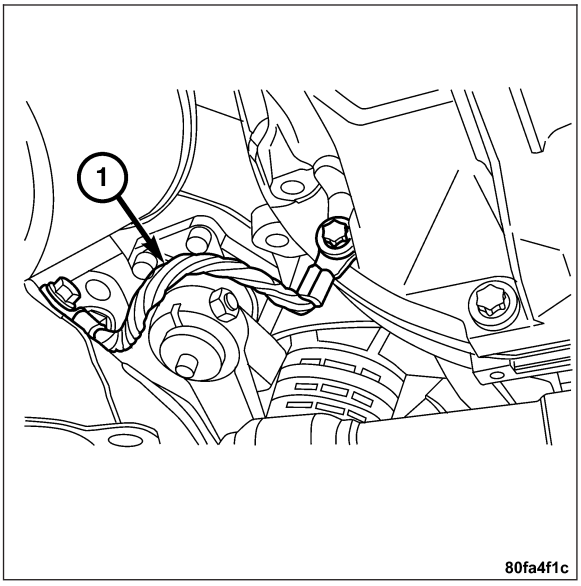

CLEANING

Clean the gears, shafts, shift components and transmission housings with a standard parts cleaning solvent. Do not use acid or corrosive base solvents. Dry all parts except bearings with compressed air.

Clean the shaft bearings with a mild solvent such as Mopar degreasing solvent, Gunk or similar solvents. Do not dry the bearings with compressed air. Allow the bearings to either air dry or wipe them dry with clean shop towels.

INSTALLATION

1. Position the transmission on the jack.
2. Install the transmission to the rear of the engine block. Align the transmission dowels to the engine block dowel holes.
3. Connect the ground cable (1) to the transmission. Tighten the bolt to 40 N·m (30 ft. lbs.).
4. Install the transmission to engine block retaining bolts. Tighten the bolts to 40 N·m (30 ft. lbs.).
5. Raise the rear of the transmission.

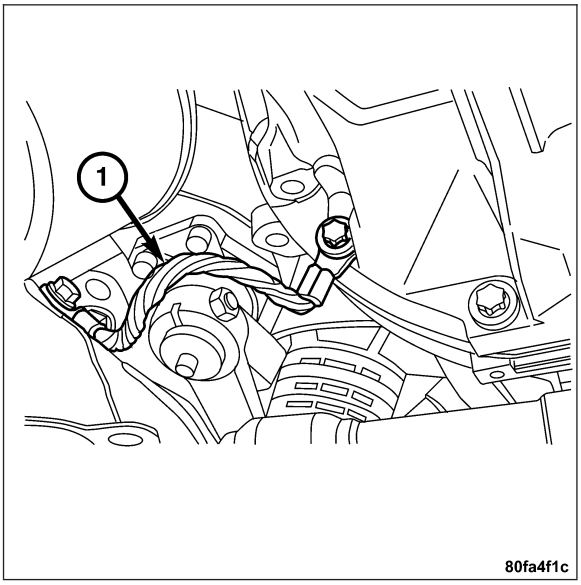

6. Install the rear crossmember together with the transmission mount and install the bolts. Tighten the transmission mount bolts (1) to the transmission to 30 N·m (22 ft. lbs.). Tighten the rear crossmember retaining bolts (2) to the body to 40 N·m (30 ft. lbs.).

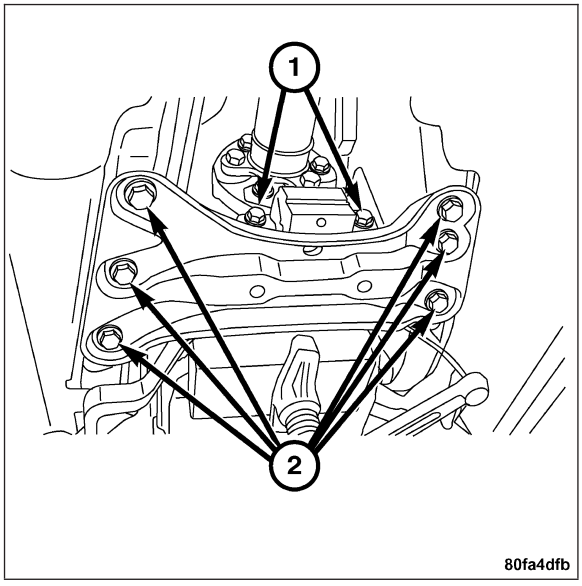

7. Connect the shift rod (1) to the transmission ball stud (2).

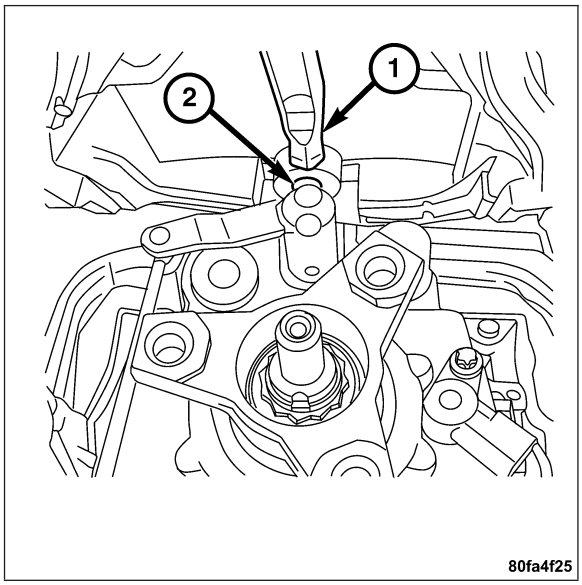

8. Connect the reverse lockout cable (1) and turn the nut clockwise to lock in place. Connect the cable end to the ball stud.

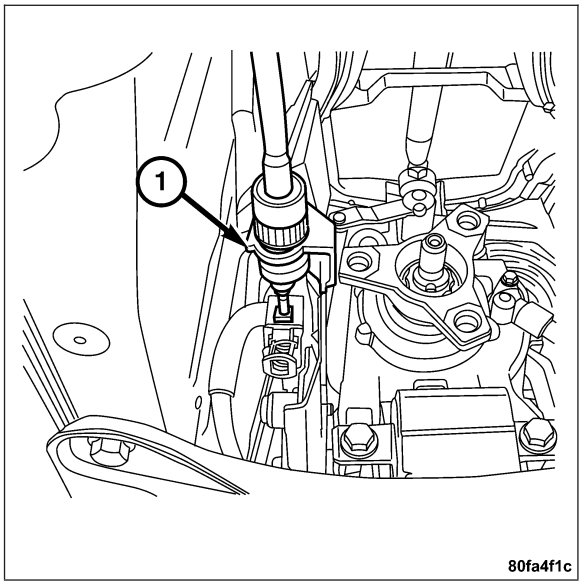

9. Connect the backup lamp switch harness connector (1).

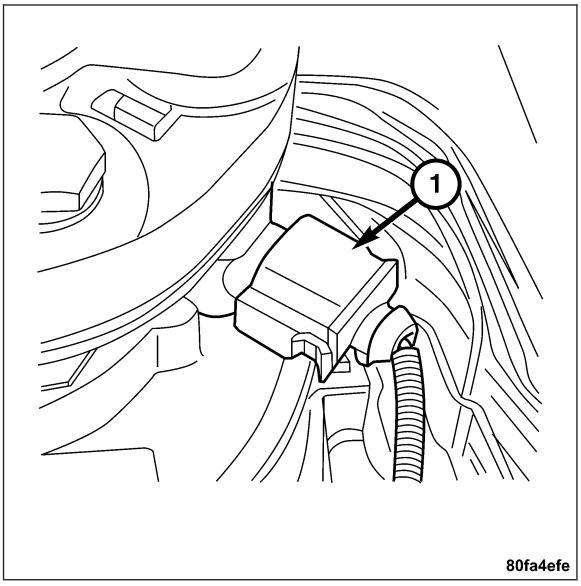

10. Connect the pressure line (1) to the slave cylinder. Install the retaining bolt (2) to the transmission. Tighten the retaining bolt to 10 N·m (89 in. lbs.).
11. Install the propeller shaft. **Refer to Page 3-28**.
12. Fill the transmission. **Refer to Page 21-352**.
13. Lower the vehicle.
14. Check the brake fluid level in master cylinder fluid reservoir.
15. Bleed the clutch slave cylinder. **Refer to Page 6-7**.
16. Recheck the brake fluid level.
17. Connect the negative battery cable.
18. Start the engine and check for leaks.
19. Check for proper clutch operation.

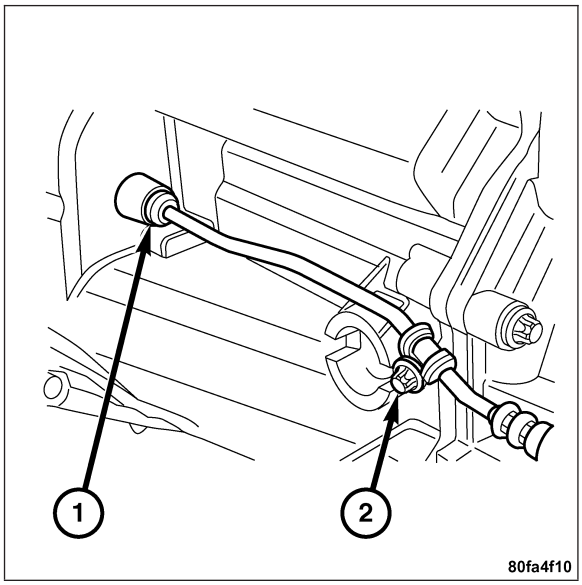

SPECIFICATIONS

SPECIFICATIONS - GEAR RATIOS

GEAR RATIOS

DESCRIPTION	SPECIFICATION
1st Gear	4.46
2nd Gear	2.61
3rd Gear	1.72
4th Gear	1.25
5th Gear	1.00
6th Gear	0.84
Reverse Gear	4.06

SPECIFICATIONS

TORQUE SPECIFICATIONS

DESCRIPTION	N·m	Ft. Lbs.	In. Lbs.
Backup Lamp Switch Bolt	8	6	71
Camshaft Position Sensor	8	6	71
Countershaft Bolt	90	66	797
Front Section To Rear Section Bolts	28	21	248
Locking Plate Bolts	9	7	80
Oil Drain Plug	60	44	531
Oil Fill Plug	50	37	443
Pinion Flange Collared Nut	180	133	1593
Rear Crossmember Bolts	40	30	354
Release Bearing/Slave Cylinder Bolts	9	7	80
Reverse Idler Shaft Retaining Bolt	23	17	204
Reverse Lockout Cable Bracket Bolts	20	15	177
Slave Cylinder Pressure Line Bolt	10	7.3	89
Transmission To Engine Bolts	40	30	354
Transmission Ground Bolt	40	30	354
Transmission Mount Bolts	30	22	266

SPECIAL TOOLS

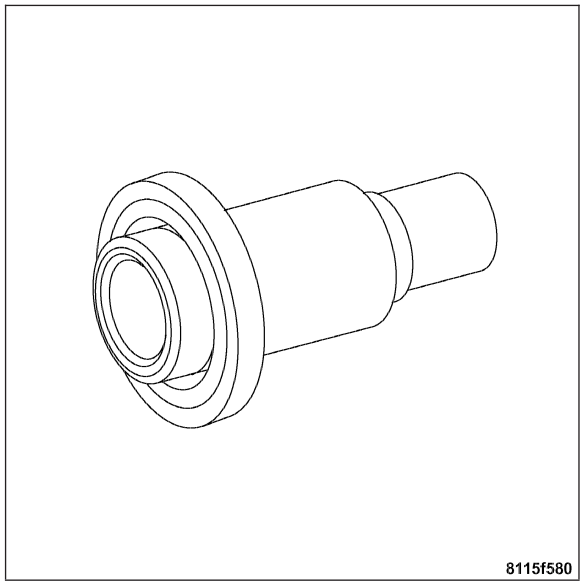

DRIFT 9123

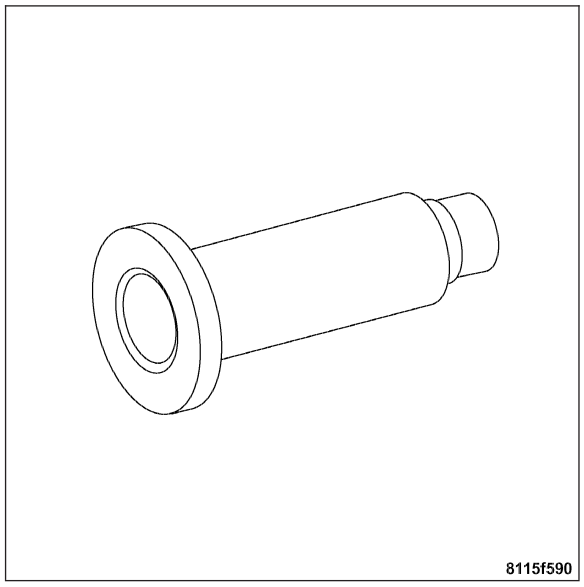

DRIFT 9122

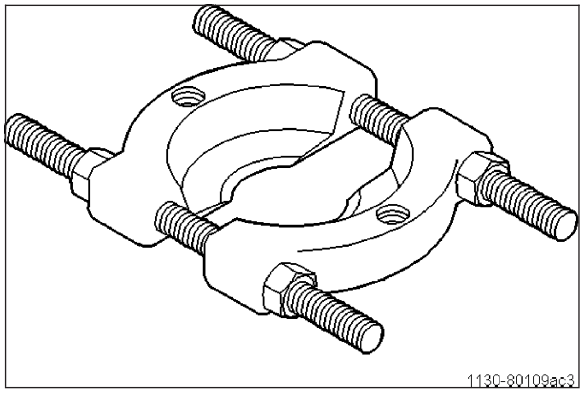

SPLITTER 1126

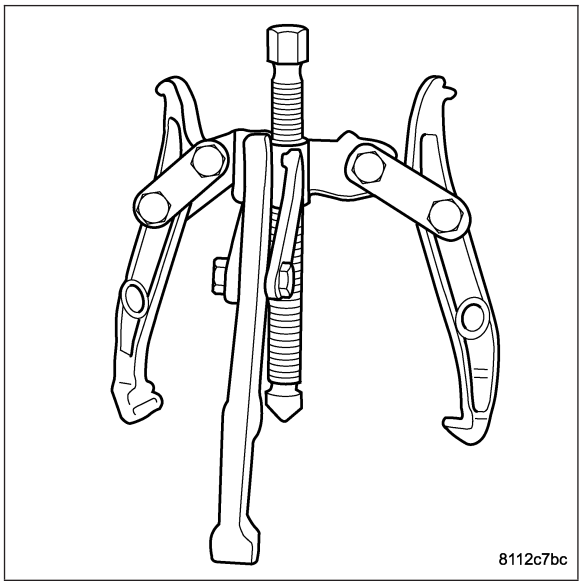

PULLER 1026

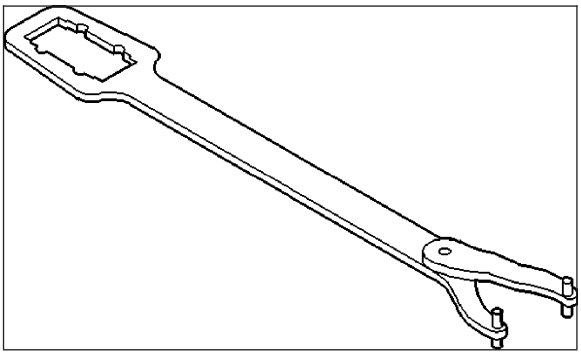

Wrench C-3281

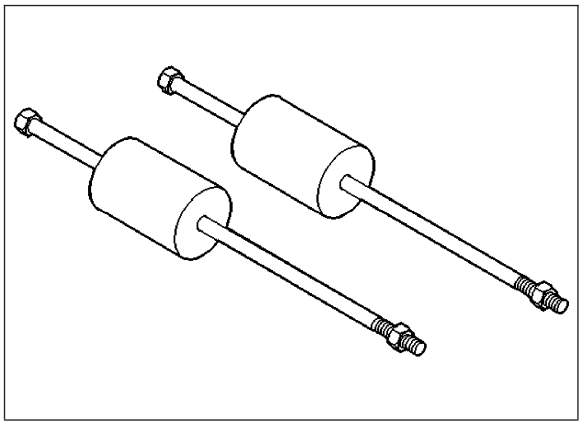

SLIDE HAMMER C-3752

FLUID

STANDARD PROCEDURE

STANDARD PROCEDURE - FLUID DRAIN AND FILL

1. Raise and support the vehicle.
2. Remove the fill plug (1).
3. Place a suitable drain pan below the drain plug (2). Remove the drain plug (2) and allow the transmission to drain completely.
4. Install the drain plug (2) and tighten to 60 N·m (44 ft. lbs.).
5. Remove the drain pan. Fill the transmission with the specified fluid.
6. Install and tighten the fill plug (1) to 50 N·m (37 ft. lbs.).
7. Lower the vehicle.

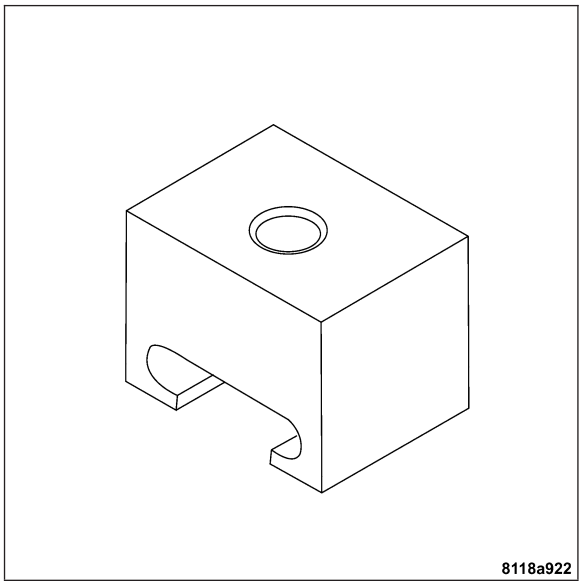

ADAPTOR 8870

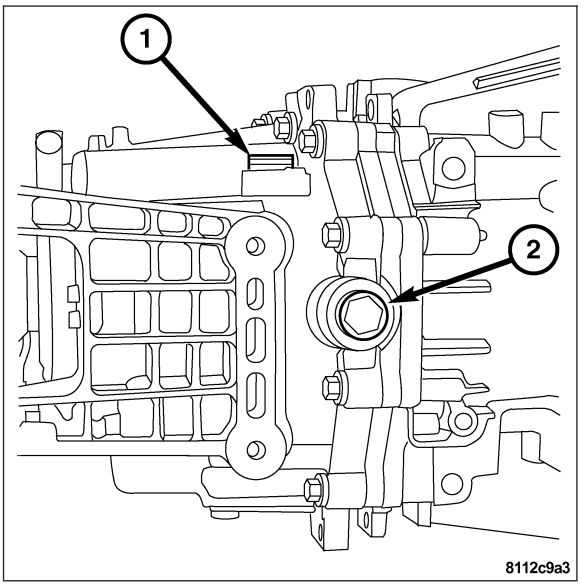

STANDARD PROCEDURE - CHECKING FLUID LEVEL

1. Raise and support the vehicle.
2. Remove the transmission fill plug (1).
3. The full fluid level should be at the base of the fill plug threaded hole. If the fluid is low, check for visible transmission fluid leaks and top off the fluid level.
4. Install and tighten the fill plug (1) to 50 N·m (37 ft. lbs.).
5. Lower the vehicle.

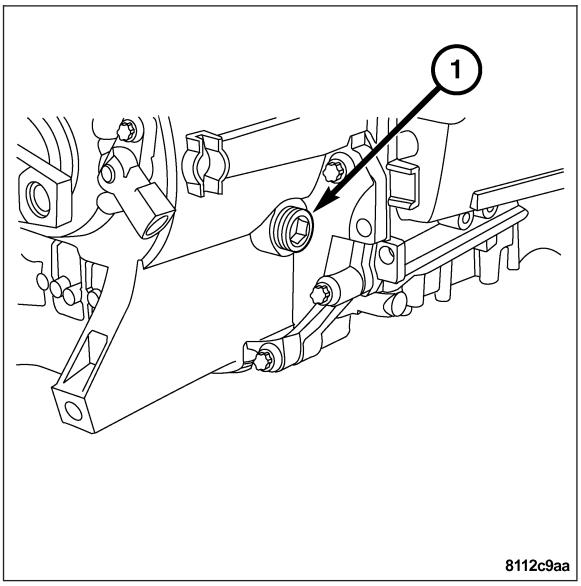

BACKUP LAMP SWITCH

REMOVAL

1. Disconnect the negative battery cable.
2. Put the transmission in reverse.
3. Raise and support the vehicle.
4. Disconnect the backup lamp switch harness connector (1).

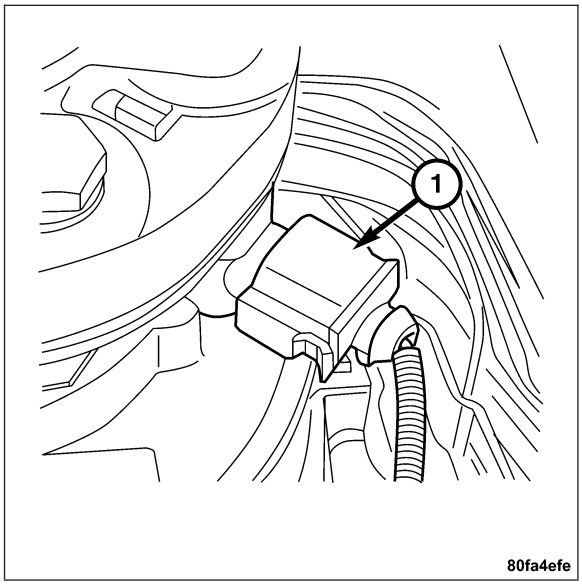

5. Remove the backup lamp switch retaining bolt (1).
6. Remove the backup lamp switch (2) and o-ring seal from the transmission.

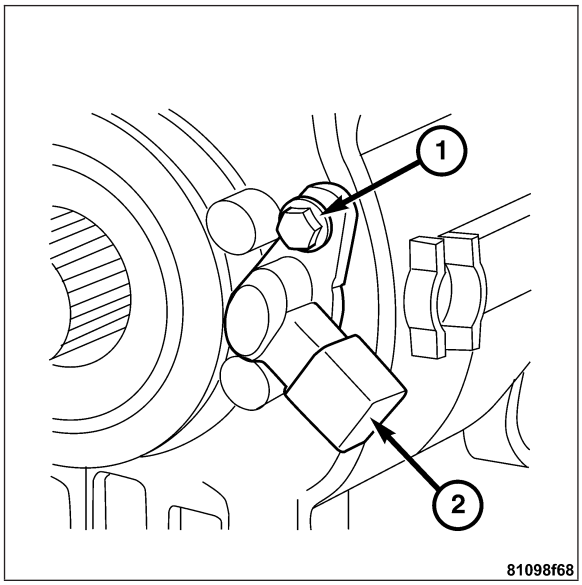

INSTALLATION

1. Install the backup lamp switch (2) with a new o-ring seal.
2. Install the backup lamp switch retaining bolt (1). Tighten the bolt to 10 N·m (89 in. lbs.).

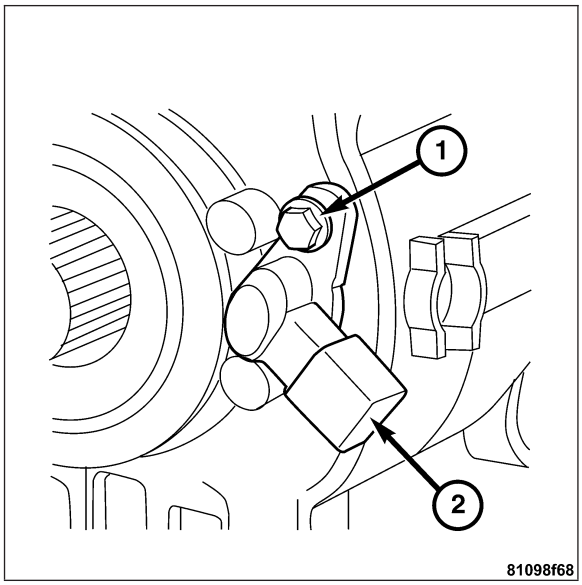

3. Connect the backup lamp switch harness connector (1).
4. Lower the vehicle.
5. Connect the negative battery cable.
6. Check the operation of the backup lamps.

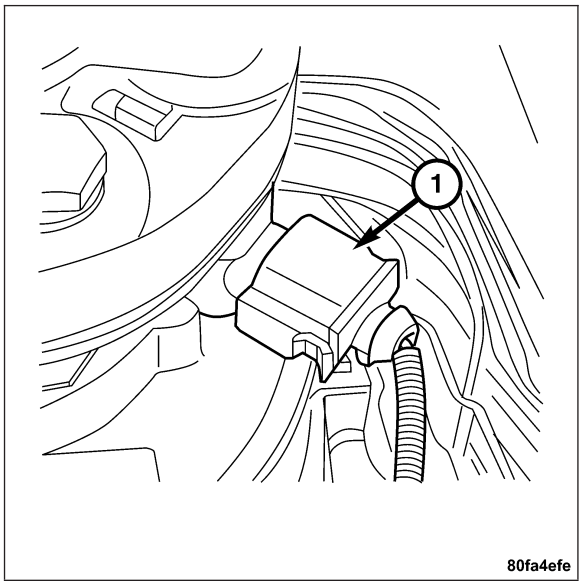

OUTPUT FLANGE SEAL

REMOVAL

1. Support the transmission.
2. Remove the propeller shaft. **Refer to Page 3-26**.
3. Hold the output flange (3) with Special Tool C-3281 (2) Flange Wrench while removing the collared nut (1).

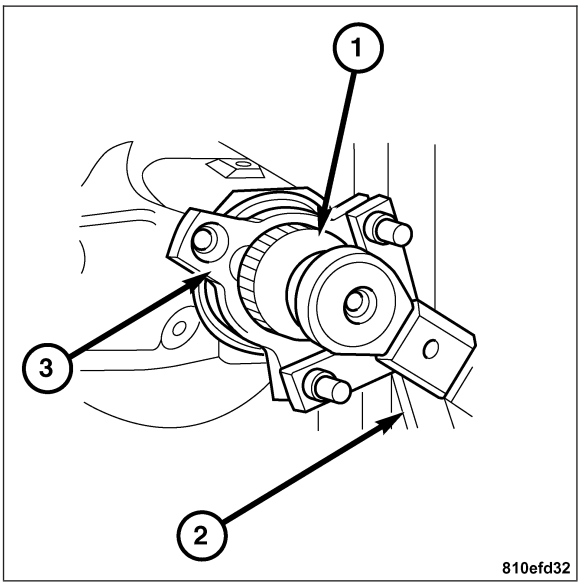

4. Remove the output flange (3) from output shaft (1).

Note: Do not score the transmission seal bore.

5. Pry out transmission output flange seal (2) with a screwdriver.

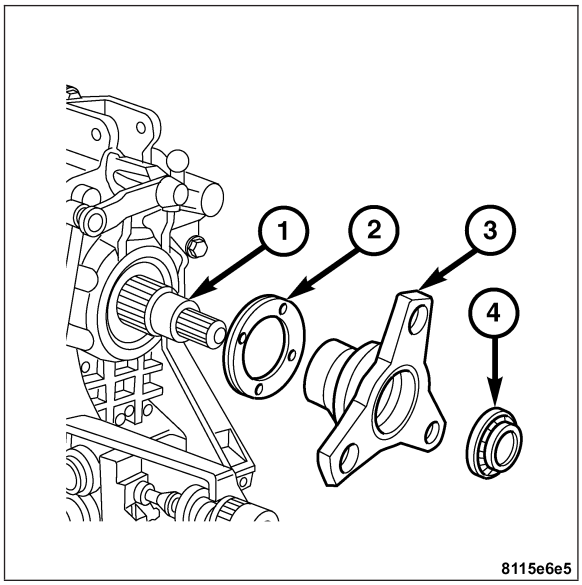

INSTALLATION

1. Install the new output flange seal (1) using Special Tool 9122 Drift (2) and a mallet.

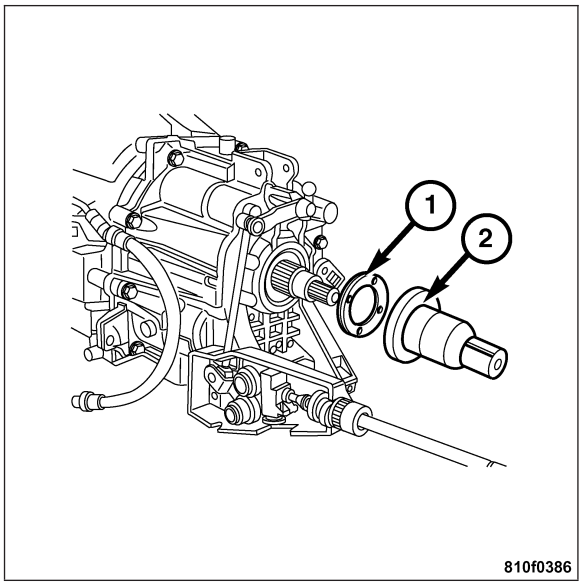

2. Install the output flange (3) and nut. Hold the flange (3) with Special Tool C-3281 Flange Wrench (2). Tighten the nut to 180 N·m (133 ft. lbs.).

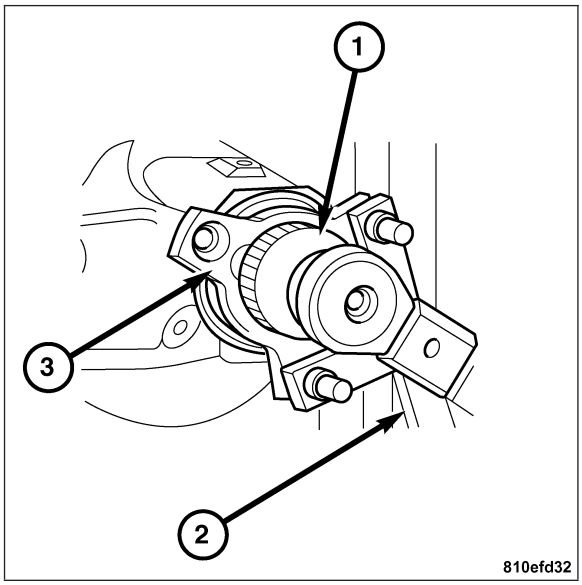

Note: The Special Tool 9078 has two possible locations for the beveled staking pin. The pin must be installed in the hole labeled “Transmission” for this operation. This hole is located directly across from the spring loaded alignment pin.

3. Stake the output shaft nut to the output shaft as follows.
   a. Place the Special Tool 9078 Staking Tool (2) onto the output shaft.
   b. Rotate the Special Tool 9078 Staking Tool (2) until the alignment pin (3) engages the output shaft notch (4).

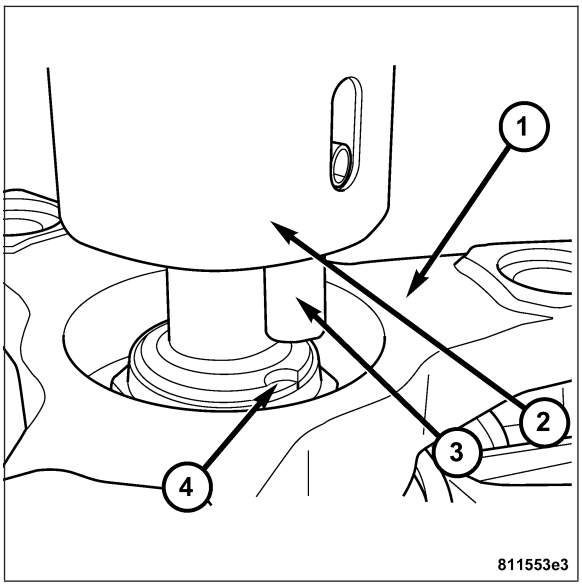

c. Press downward on the staking tool (1) until the staking pin (3) contacts the output shaft nut flange (2).
d. Strike Special Tool 9078 Staking Tool with a suitable hammer until the output shaft nut is securely staked to the output shaft.

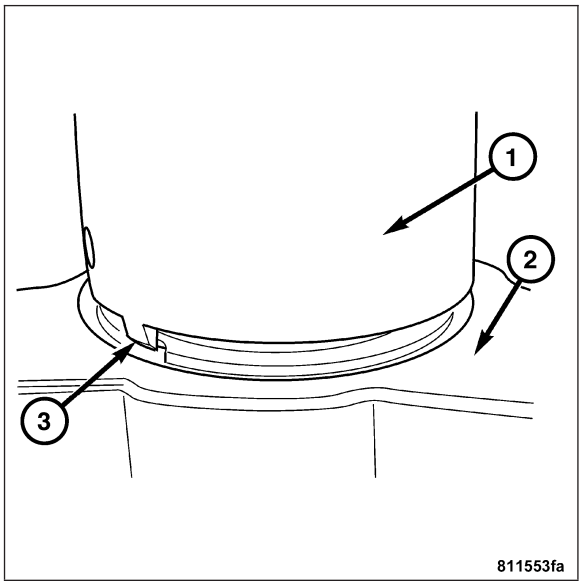

4. Install the propeller shaft. **Refer to Page 3-28**.
5. Check the transmission fluid level. **Refer to Page 21-352**.
6. Lower the vehicle.

DETENT PLUG

REMOVAL

1. Remove the transmission. **Refer to Page 21-344**.
2. Mount the transmission on a holding fixture.
3. Use Special Tool C–3752 Slide Hammer and 8870 Adaptor to remove the detent plug (1).

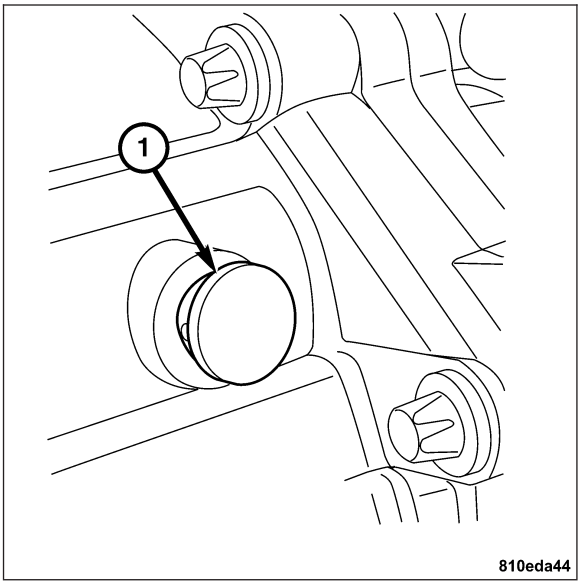

INSTALLATION

1. Smooth any burrs or nicks in the detent plug bore.
2. Use a plastic mallet to drive in and fully seat the detent plug (1).
3. Remove the transmission from the holding fixture.
4. Install the transmission in the vehicle. **Refer to Page 21-347**.

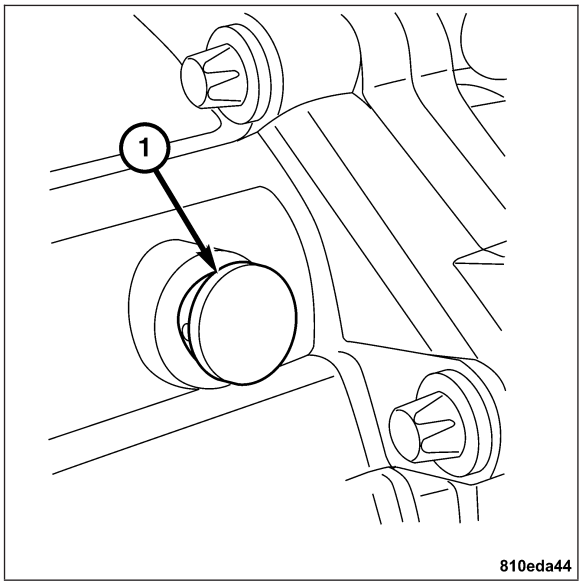

INPUT SHAFT SEAL

REMOVAL

1. Remove the transmission. **Refer to Page 21-344**.
2. Mount the transmission on a holding fixture.
3. Remove the clutch release bearing/slave cylinder. **Refer to Page 6-20**.
4. Use a screwdriver (1) to pry out the input shaft seal (2).

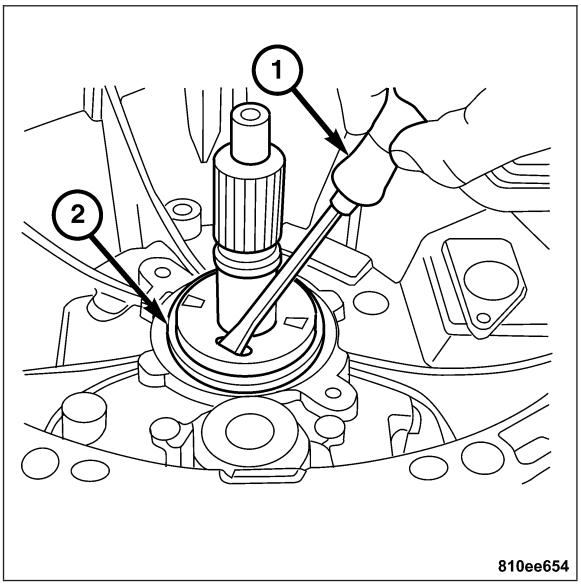

INSTALLATION

1. Use Special Tool 9123 Drift (1) and a mallet to drive in the new seal (2).
2. Install the clutch release bearing/slave cylinder. **Refer to Page 6-20**.
3. Remove the transmission from the holding fixture.
4. Install the transmission in the vehicle. **Refer to Page 21-347**.

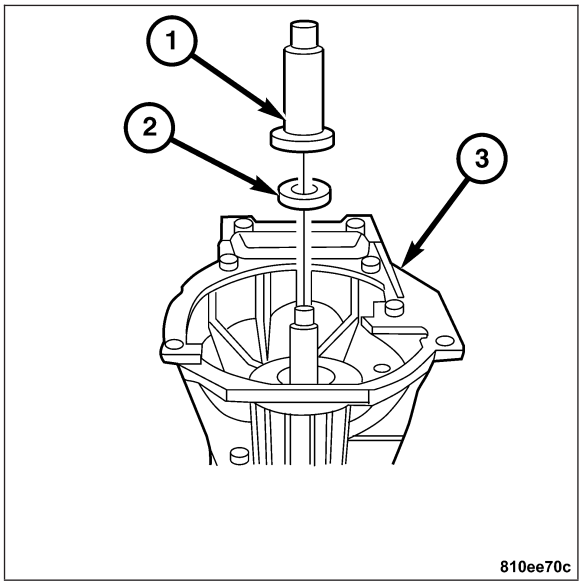

TRANSMISSION FRONT SECTION

DISASSEMBLY

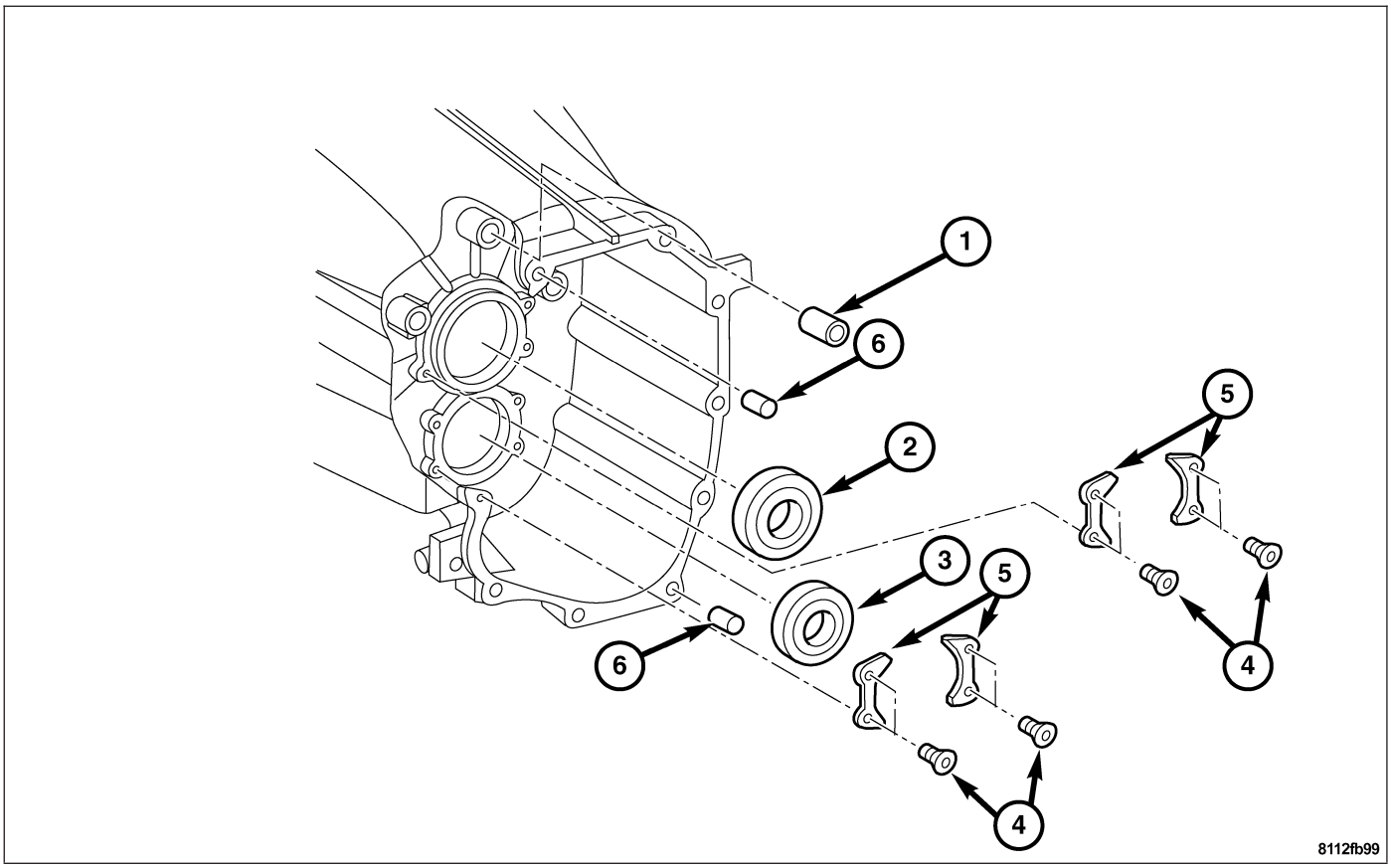

1 - SHIFT SHAFT BEARING
2 - INPUT SHAFT BEARING
3 - COUNTERSHAFT BEARING
4 - LOCKING PLATE BOLTS
5 - LOCKING PLATES
6 - GUIDE SLEEVE

1. Remove the transmission. **Refer to Page 21-344**.
2. Separate the front and rear transmission sections. **Refer to Page 21-363**.
3. Remove the locking plate bolts (4) and the locking plates (5).
4. Drive out the input shaft bearing (2) and the countershaft bearing (3).
5. Remove the shift shaft bearing (1).
6. Remove the guide sleeves (6).

ASSEMBLY

1. Drive in the sleeves (6) using a mallet.
2. Install the shift shaft bearing (1).

Note: The input and counter shaft bearings must be fully seated before installing the locking plates.

3. Install the input shaft bearing (2) and the countershaft bearing (3).
4. Install the locking plates (5) and bolts (4). Tighten the bolts to 9 N·m (7 ft. lbs.).
5. Assemble the front and rear transmission sections. **Refer to Page 21-365**.
6. Install the transmission. **Refer to Page 21-347**.

REAR SECTION HOUSING

DISASSEMBLY

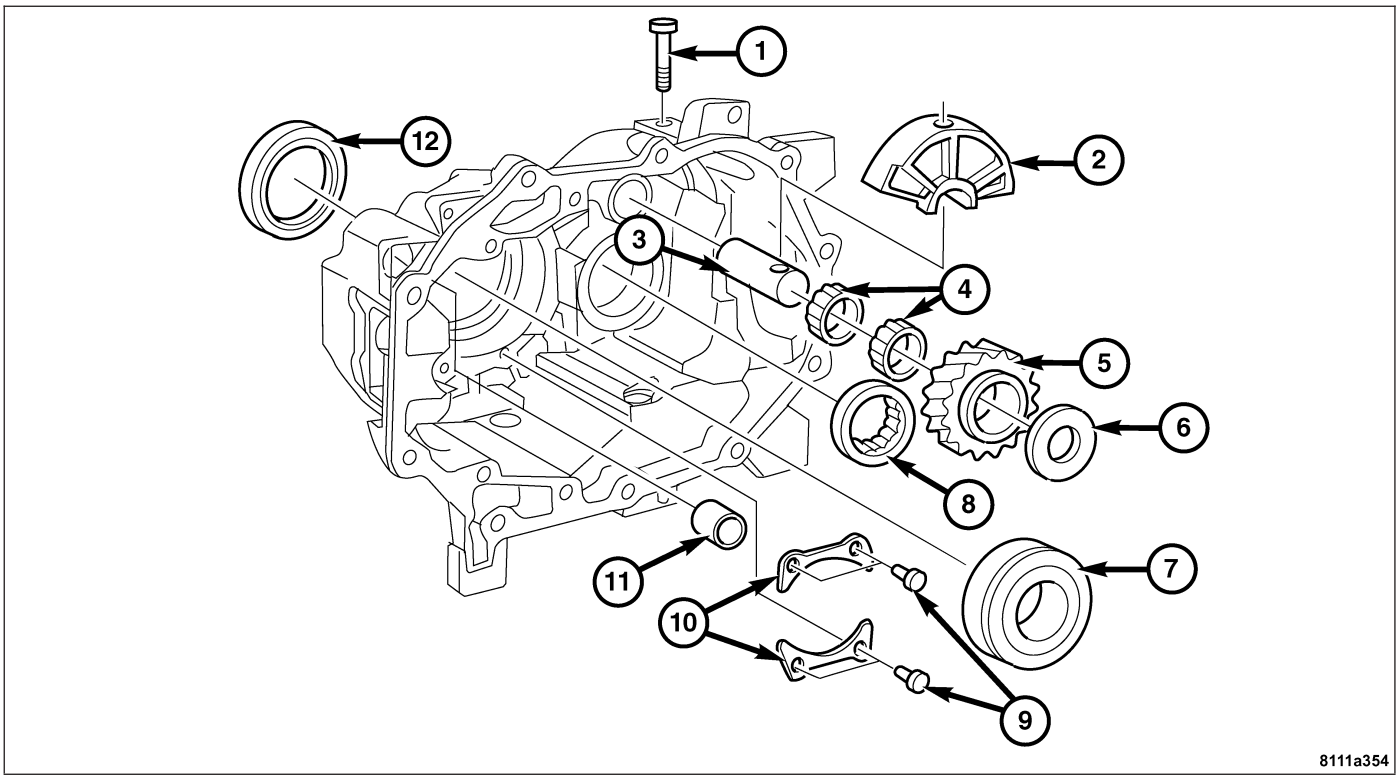

1 - REVERSE IDLER SHAFT RETAINING BOLT
2 - BEARING SHELL
3 - REVERSE IDLER SHAFT
4 - CYLINDRICAL ROLLER BEARING
5 - REVERSE GEAR
6 - WASHER
7 - MAINSHAFT BEARING
8 - COUNTERSHAFT BEARING
9 - LOCKING PLATE RETAINING BOLTS
10 - LOCKING PLATES
11 - SHIFT SHAFT BEARING
12 - OUTPUT FLANGE SEAL

1. Remove the transmission. **Refer to Page 21-344**.
2. Disassemble the geartrain housing. **Refer to Page 21-363**.
3. Remove the retainer bolt (1).
4. Remove the bearing shell (2), reverse idler shaft (3) with the bearings (4), reverse gear (5) and the washer (6).
5. Drive out the countershaft bearing (8) using a drift punch.
6. Remove the retaining bolts (9), locking plates (10), and the mainshaft bearing (7).
7. Remove the shift shaft bearing (11).
8. Drive out the output flange seal (12).

ASSEMBLY

1. Install a new output flange seal (12) using Special Tool 9123 Drift.
2. Use a suitable deep socket to drive in the shift shaft bearing (11).
3. Install the mainshaft bearing (7), locking plates (10), and retaining bolts (9). Tighten the bolts to 9 N·m (7 ft. lbs.).
4. Drive in the countershaft bearing (8).
5. Install the reverse gear idler shaft (3).
6. Install the bearing shell (2).
7. Install the bearings (4), reverse gear (5), and the washer (6).

8. Align the retainer bolt (1) in the shell and the idler shaft and install. Tighten the bolt to 20 N·m (15 ft. lbs.).
9. Assemble the geartrain housing. **Refer to Page 21-365**.
10. Install the transmission. **Refer to Page 21-347**.

REVERSE SHAFT

DESCRIPTION

The reverse shaft and reverse idler gear are housed in the rear gear train housing. Refer to Gear Train Housing in this section.

GEARTRAIN HOUSING

DISASSEMBLY

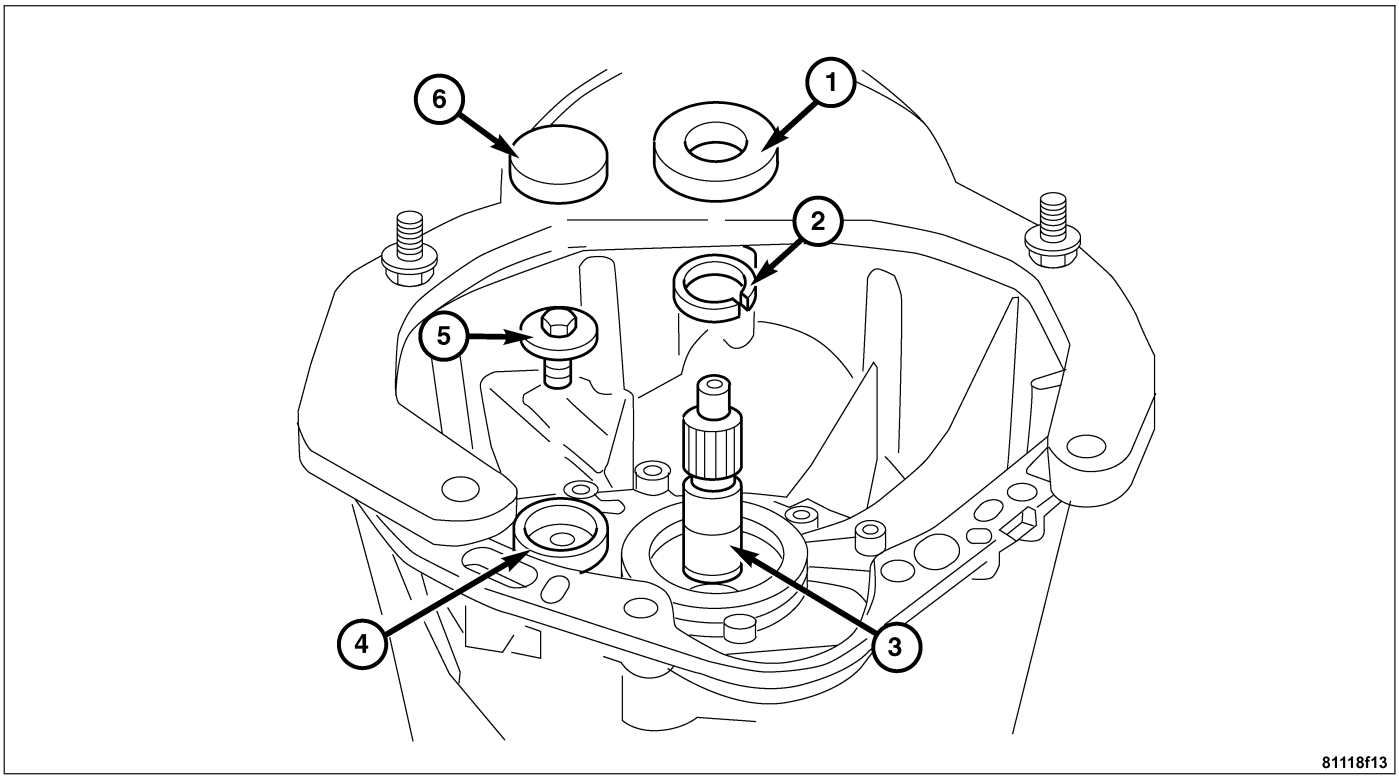

1 - INPUT SHAFT SEAL
2 - SNAP RING
3 - INPUT SHAFT
4 - COUNTERSHAFT
5 - COUNTERSHAFT BOLT
6 - SEALING RING

1. Remove the transmission. **Refer to Page 21-344**.
2. Remove the alignment dowels from the transmission front mounting surface.
3. Mount the transmission in a holding fixture.
4. Remove the clutch release bearing/slave cylinder. **Refer to Page 6-20**.
5. Remove the sealing ring (6) from countershaft bore (4) using a screwdriver.
6. Remove the input shaft seal (1) using a screw driver.
7. Remove the countershaft bolt (5).
8. Remove the input shaft snap ring (2).

9. Rotate the transmission to a vertical position in the fixture.
10. Remove the output shaft collared nut (5) and the output flange (6).
11. Drive out the roll pin (8) with a suitable roll pin punch and remove the shift actuator (7).
12. Remove the reverse gear detent plug (1). **Refer to Page 21-358**.
13. Remove the rear section retaining bolts (4).
14. Separate the rear section from the front section.

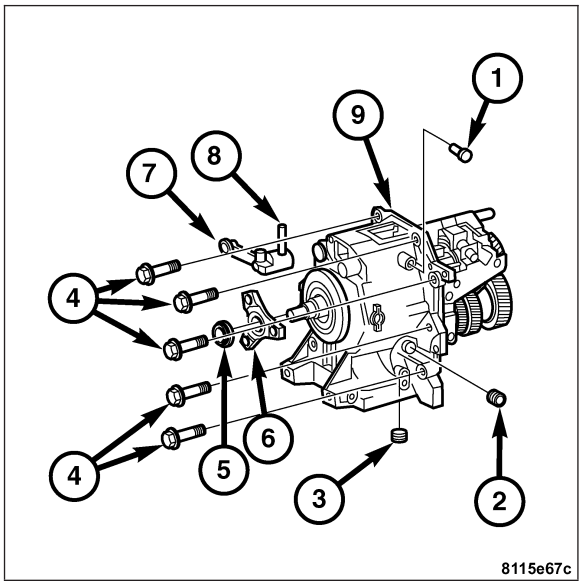

8115e67c

Note: The countershaft, input shaft, and shift unit can only be removed as an assembly from the rear section.

15. Use a two jaw puller (1) to press the shafts and shift unit out of the rear section of the transmission.

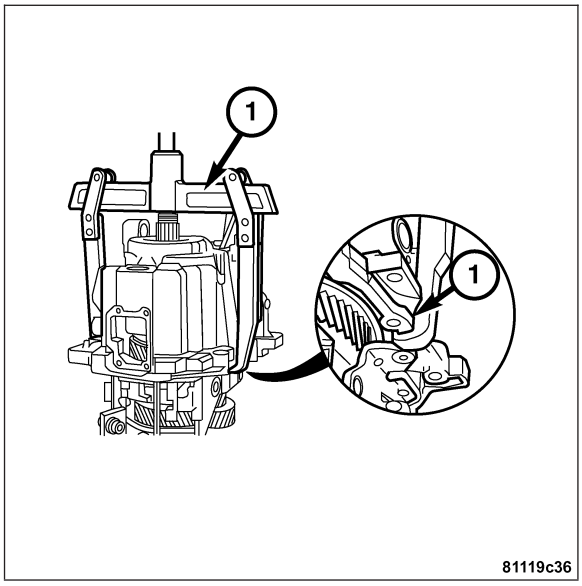

81119c36

16. Mount the mainshaft and countershaft together (1) in a vise with protective jaws. Remove the shifter (2).
17. Disassemble the rear section housing. **Refer to Page 21-362**.

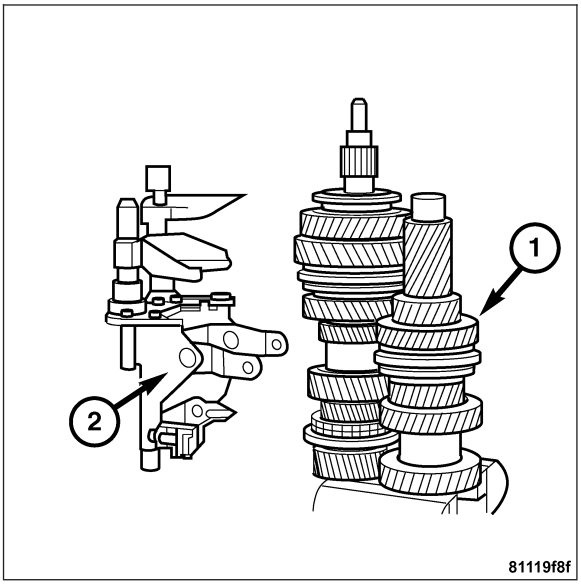

81119f8f

ASSEMBLY

1. Assemble the rear section housing. **Refer to Page 21-362**.

Note: Be certain that the shift forks are aligned in the shifting sleeves on the shafts.

2. Fit the shifter assembly (2) on to the main and counter shafts (1).

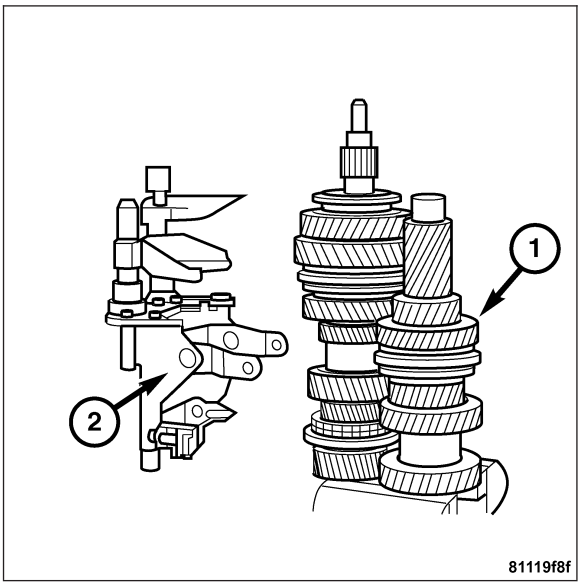

3. Fit the rear section of the transmission (4) over the main shaft and shift shaft. Align the reverse gear (1) to the gear sets as shown.

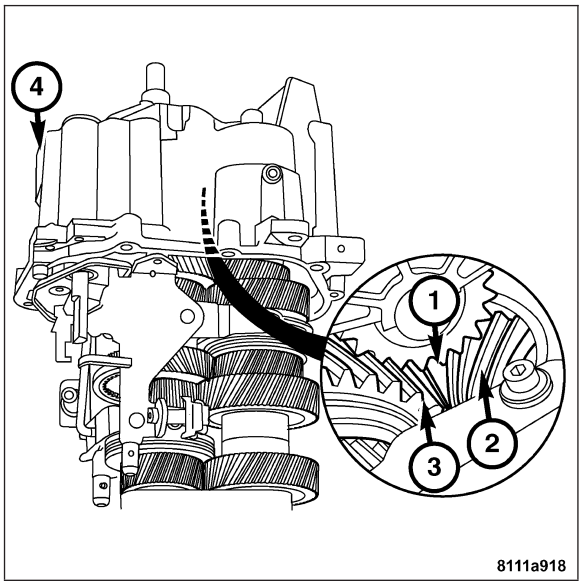

4. Use the output flange (3) and the collared nut (1) to draw in the output shaft. Remove the nut and flange when the rear section is in place.
5. Install the shifter plate bolts. Tighten the bolts to 28 N·m (21 ft. lbs.).

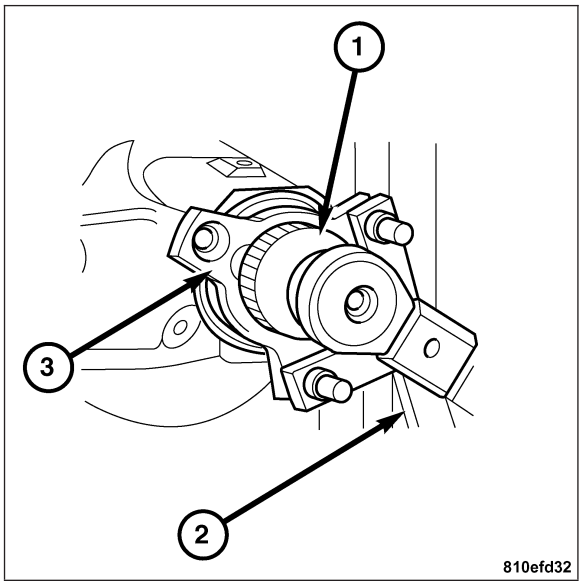

6. Install the counter shaft bolt (5). Tighten the bolt to 90 N·m (66 ft. lbs.).
7. Install the snap ring (2) on the input shaft.
8. Use Special Tool 9123 Drift to drive in a new input shaft seal.
9. Install a new sealing ring (6) in the counter shaft bolt opening (4).
10. Install the clutch release bearing/slave cylinder. **Refer to Page 6-20**.
11. Remove the front section of the transmission from the holding fixture and install the alignment dowels.

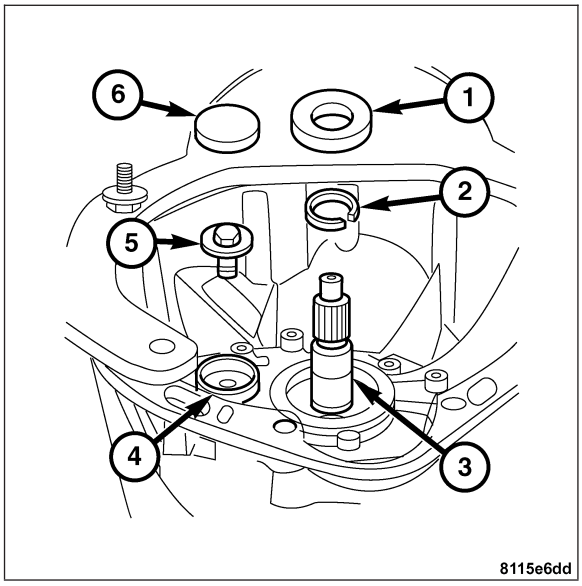

12. Apply a 1.5 to 2mm. bead of Loctite 5203 sealer or equivalent to the front section as shown.

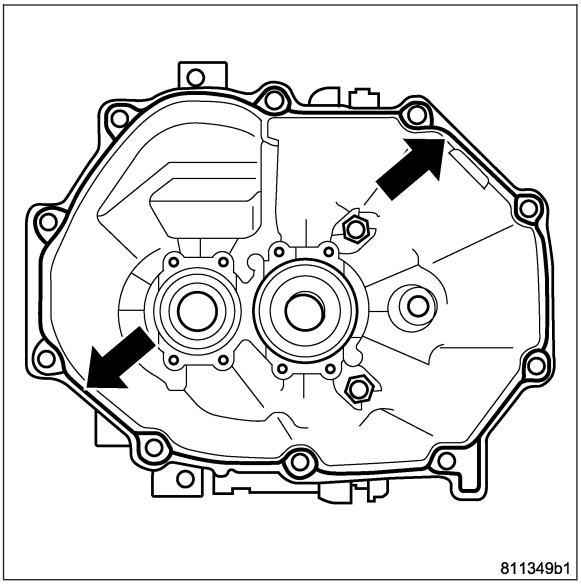

13. Fit the front and rear transmission sections together.
14. Install the bolts (4) and tighten to 28 N·m (21 ft. lbs.).
15. Install the shift actuator (7) and drive the roll pin (8) in until flush.
16. Drive the reverse gear detent (1) in until fully seated.
17. Install the oil filler plug (2). Tighten the plug to 50 N·m (37 ft. lbs.).
18. Install the oil drain plug (3). Tighten the plug to 60 N·m (44 ft. lbs.).
19. Install the output flange (6) and collared nut (5). Tighten the nut to 180 N·m (133 ft. lbs.).

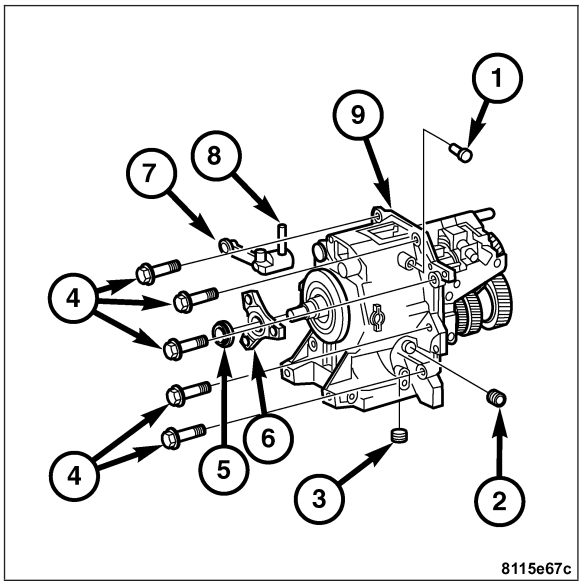

MAINSHAFT W/INPUT SHAFT

DESCRIPTION

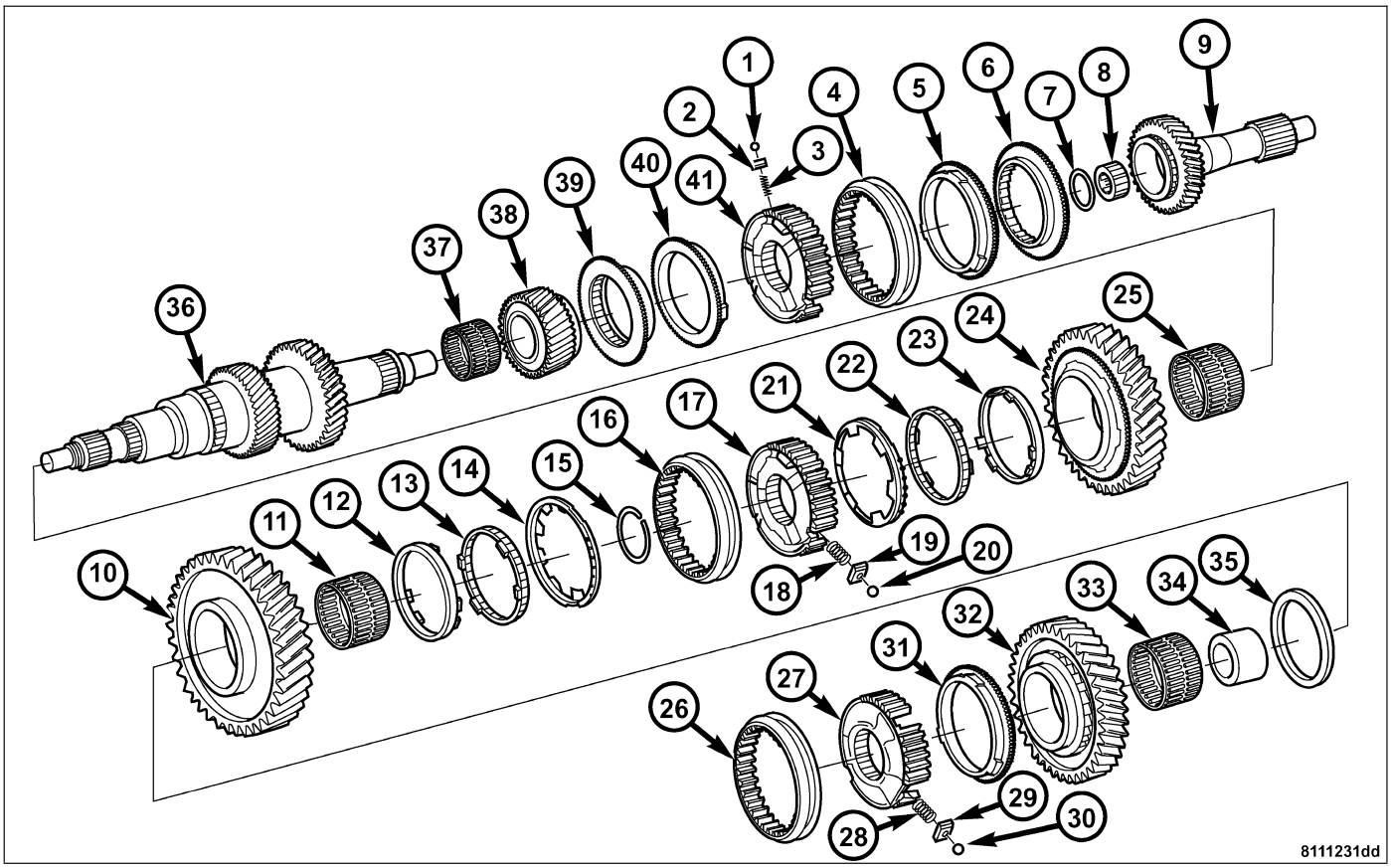

1 - BALL
2 - SLIDER (NARROW)
3 - COMPRESSION SPRING
4 - SLIDING SLEEVE
5 - SYNCHRONIZER RING
6 - CLUTCH BODY
7 - SNAP RING
8 - CYLINDRICAL ROLLER BEARING
9 - INPUT SHAFT
10 - IDLER GEAR FOR 1ST GEAR
11 - 1ST GEAR NEEDLE BEARING
12 - FRICTION RING
13 - CONE RING
14 - SYNCHRONIZER RING
15 - SNAP RING
16 - SLIDING SLEEVE
17 - 1ST/2ND GEAR SYNCHRONIZER BODY
18 - COMPRESSION SPRING
19 - SLIDER (WIDE)
20 - BALL
21 - SYNCHRONIZER RING
22 - CONE RING
23 - FRICTION RING
24 - IDLER GEAR FOR 2ND GEAR
25 - 2ND GEAR NEEDLE BEARING
26 - SLIDING SLEEVE
27 - REVERSE GEAR SYNCHRONIZER BODY
28 - COMPRESSION SPRING
29 - SLIDER (NARROW)
30 - BALL
31 - SYNCHRONIZER RING
32.- IDLER GEAR FOR REVERSE GEAR
33 - REVERSE GEAR NEEDLE BEARING
34 - SLEEVE
35 - THRUST WASHER
36 - MAINSHAFT
37 - 6TH GEAR NEEDLE BEARING
38 - IDLER GEAR FOR 6TH GEAR
39 - CLUTCH BODY
40 - SYNCHRONIZER RING
41 - 5TH/6TH GEAR SYNCHRONIZER BODY

DISASSEMBLY

1. Disassemble the geartrain housing. **Refer to Page 21-363**.
2. Mount the main shaft in a vise with protective jaws.
3. Remove first gear idler gear (2) using a jaw puller (1).

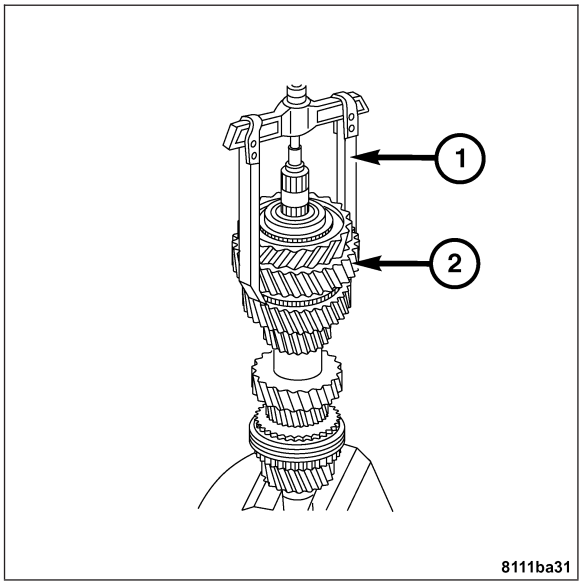

4. Remove the reverse gear synchronizer assembly (1).

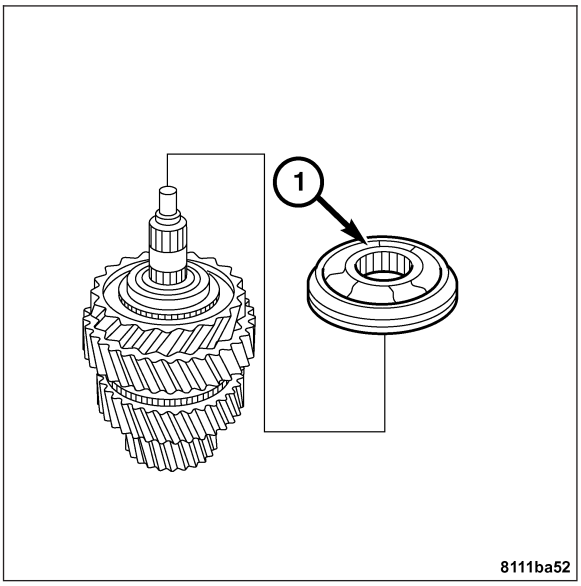

5. Remove the synchronizer ring (1) and idler gear (2) for reverse gear.

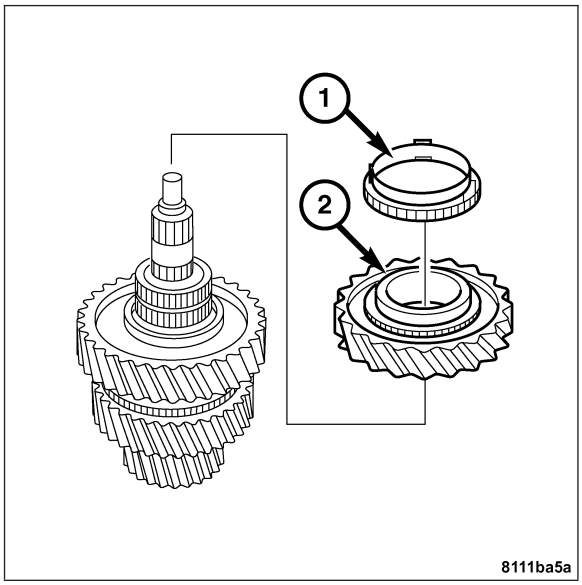

6. Remove first gear needle bearing (1) and sleeve (2).

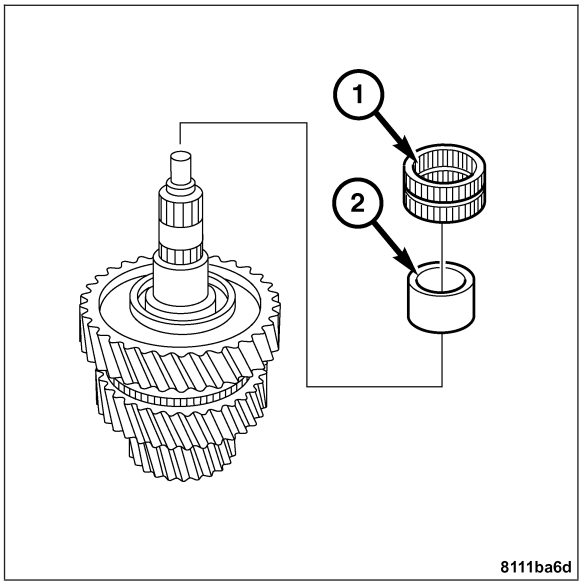

7. Remove the thrust washer (1), first gear idler gear (2), and first gear idler needle bearing (3).

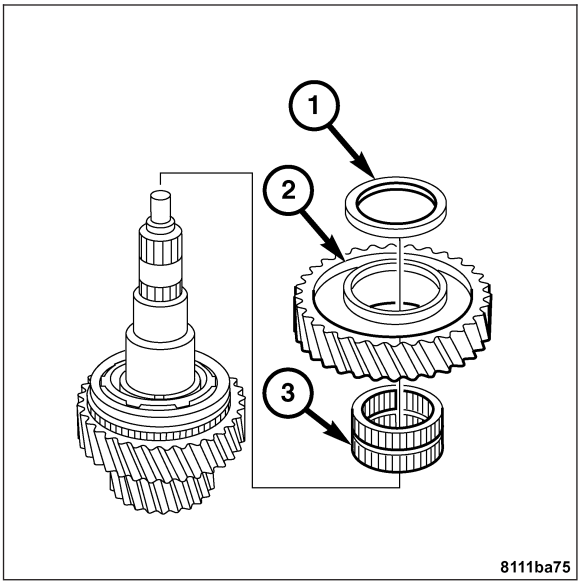

8. Remove the friction ring (1), cone ring (2), and the synchronizer ring (3).

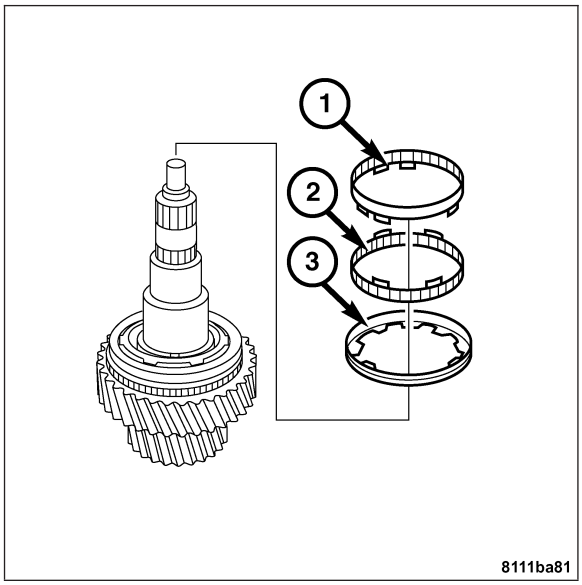

9. Remove the locking ring (1) using pliers. Remove the 1st/2nd gear synchronizer using the jaw puller.

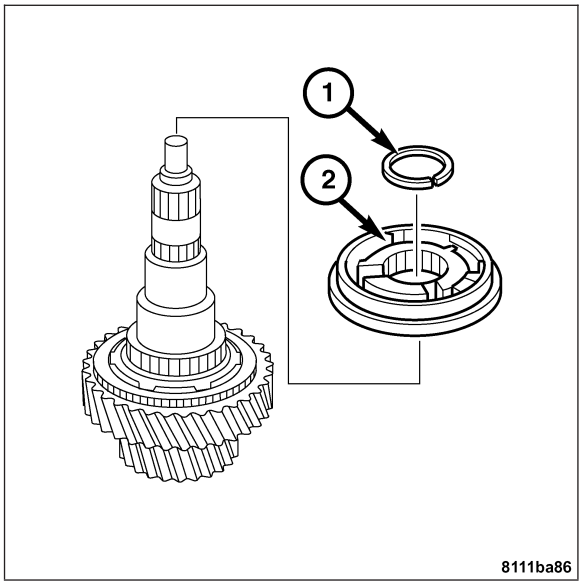

10. Remove the synchronizer ring (1), cone ring (2), and friction ring (3).

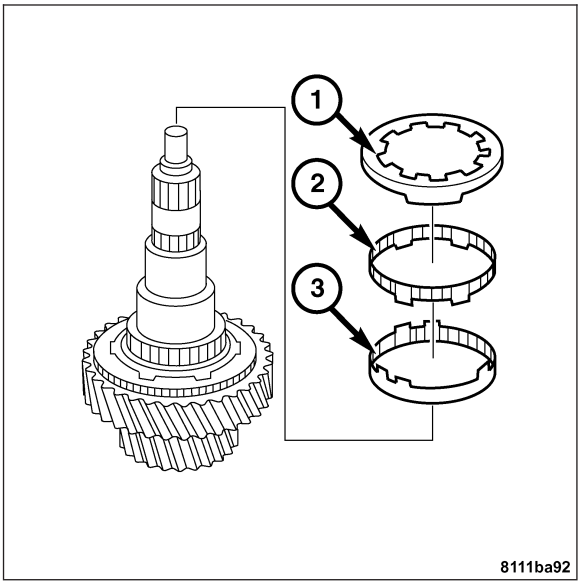

11. Remove the second gear idler gear (1) and needle bearing (2).

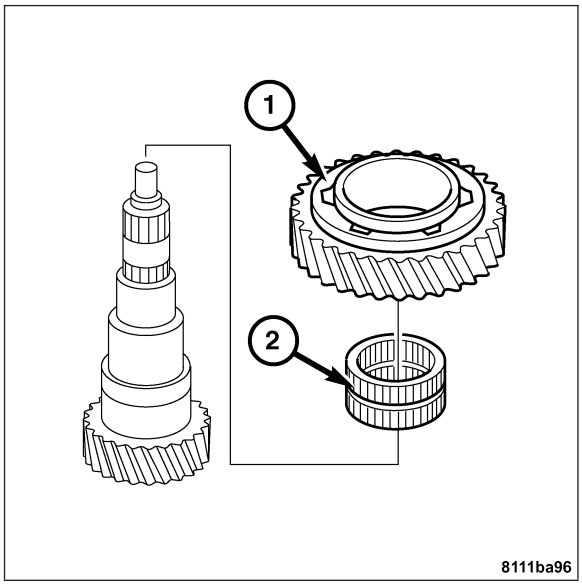

12. Remove the main shaft (1) from the input shaft (2).
13. Remove the synchronizer ring (5) and the clutch body (4).
14. Remove the cylindrical roller bearing (3) from the input shaft (2).
15. Remove the input shaft (2) from the vise.

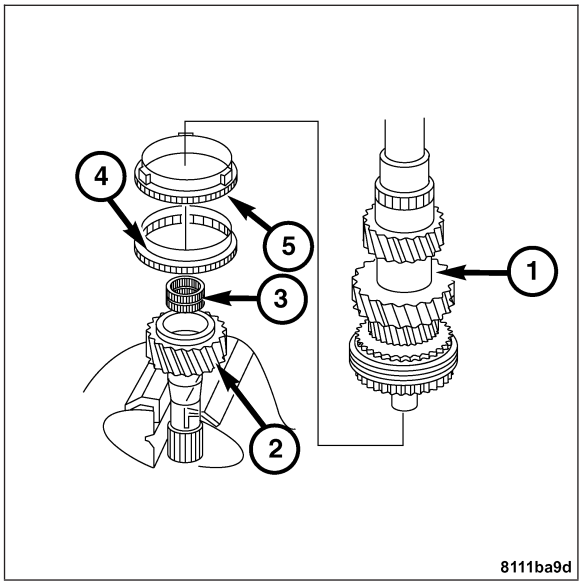

16. Clamp the main shaft (3) in the vise with input end up.
17. Remove the locking ring (1), pull off the synchronizer cone (2) and the clutch body using the jaw puller.

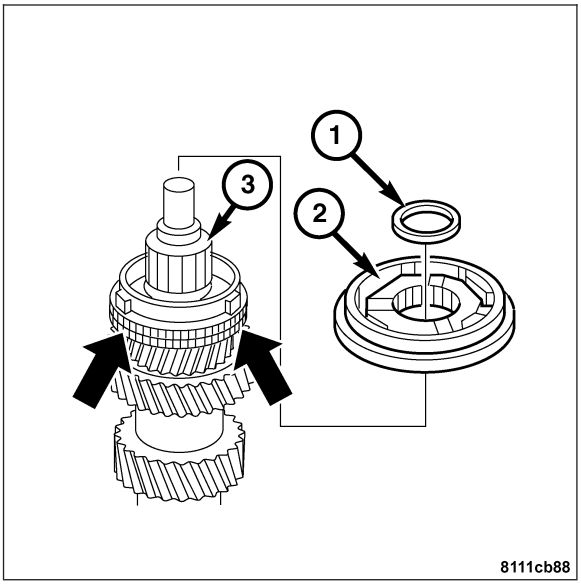

18. Remove the synchronizer ring (1) and the clutch body (2).

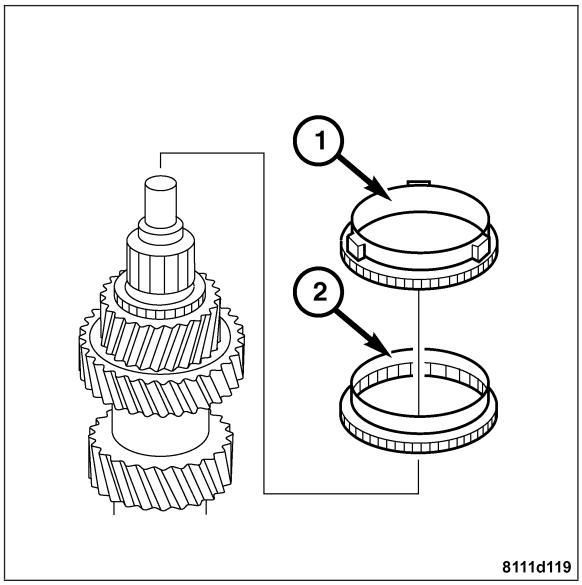

19. Remove the 6th gear idler gear (1) and needle bearing (2).
20. Remove the main shaft (3) from the vise.

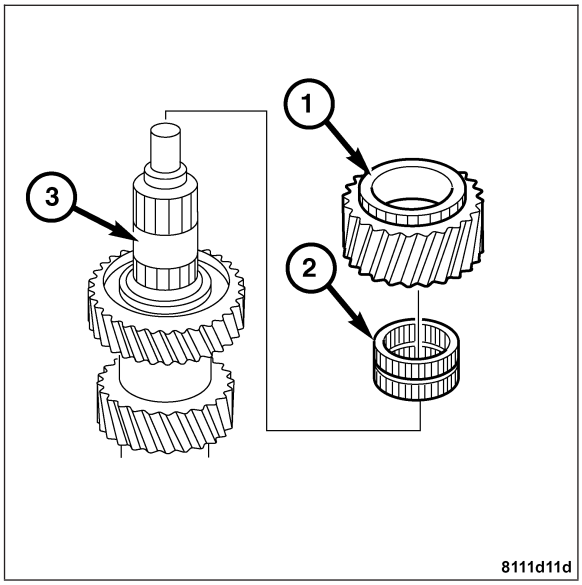

ASSEMBLY

1. Install the 6th gear needle bearing (2) and gear (1) on the mainshaft (3).

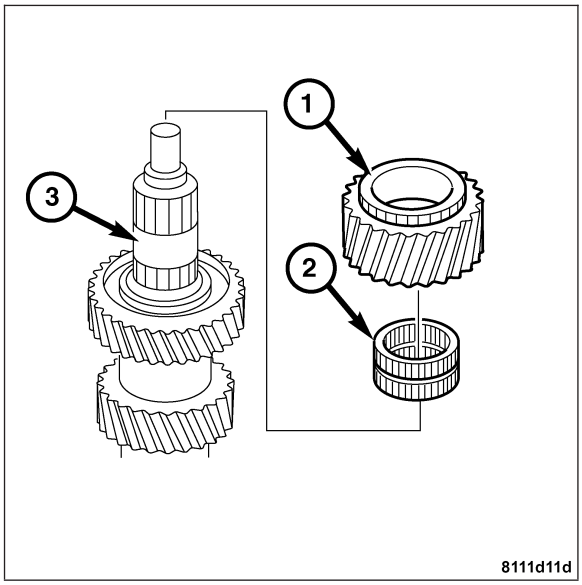

2. Install the clutch body (2) and the synchronizer ring (1).

Note: The inscription on the synchronizer body must face upwards (towards the input end). The drivers on the synchronizer ring must engage in the grooves in the synchronizer body.

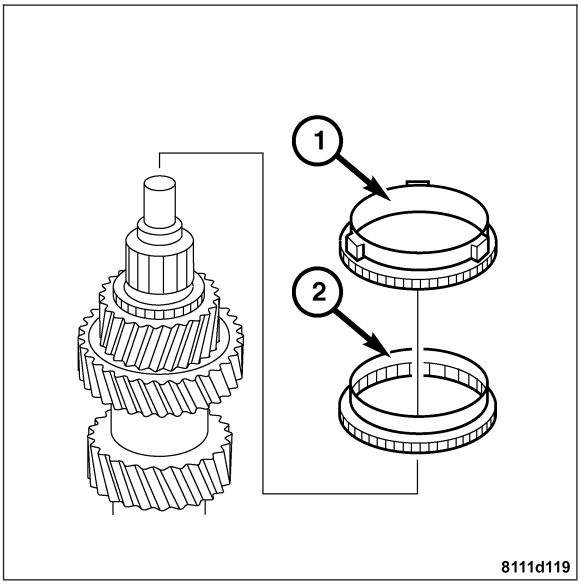

3. Assemble the synchronizer if it is not being replaced. **Refer to Page 21-386**.
4. Press on the 5th/6th gear synchronizer assembly (1).

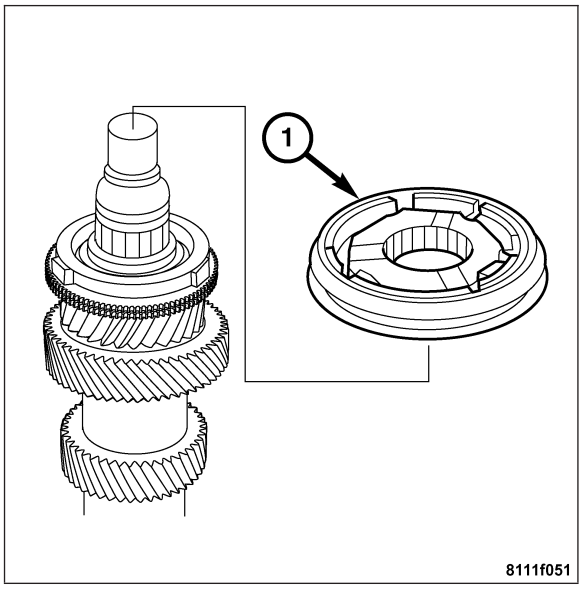

Note: Snap rings that are bent or otherwise damaged must be replaced.

5. Install the snap ring (1) on the mainshaft (2). Check that it is fully seated.

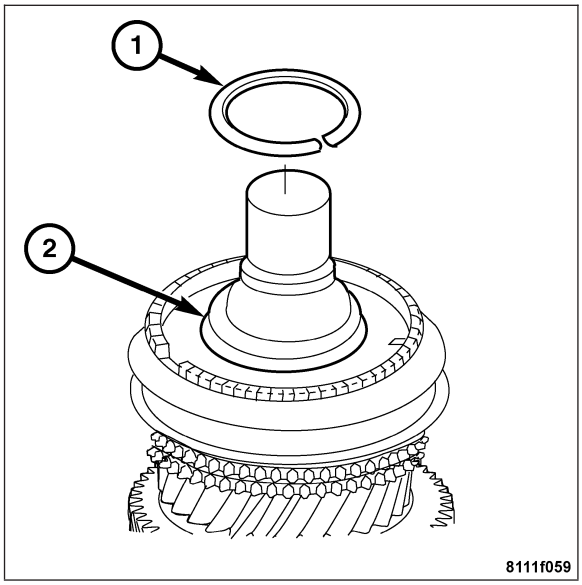

6. Install the synchronizer ring (2). Be sure the drivers on the synchronizer ring are engaged in the grooves of the synchronizer body.

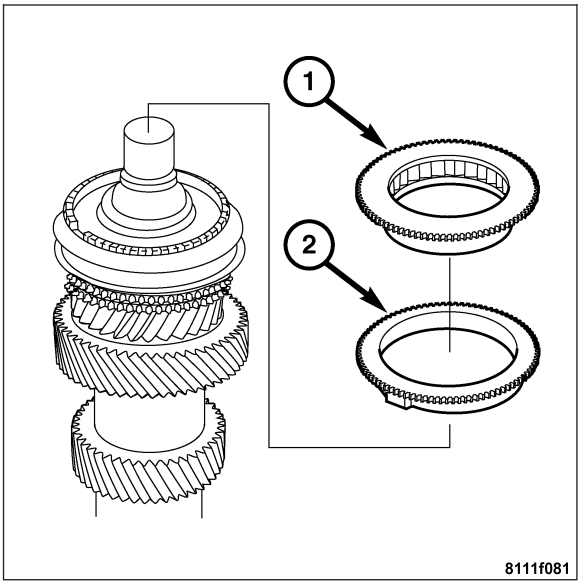

7. Oil the cylindrical bearing (2) and place it in the input shaft (1).
8. Place the input shaft (1) on the mainshaft.

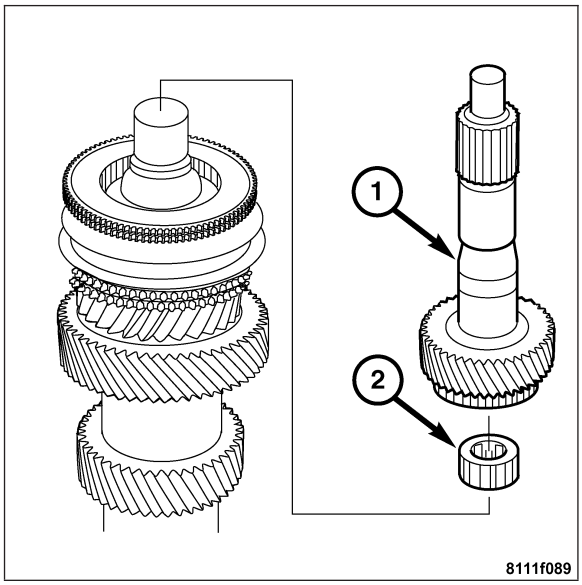

9. Invert the mainshaft with input shaft in the vise. Use protected vise jaws.
10. Install the second gear needle bearing (3), and second gear (2) on the mainshaft (1) with the collar facing upwards.

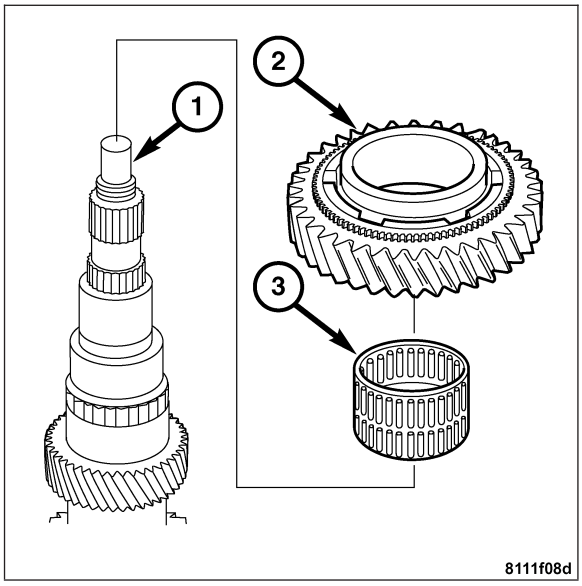

11. Install the friction ring (4), the cone ring (3), and the synchronizer ring (2). The lobes in the friction ring (4) must engage in the recesses of the synchronizer ring (3).

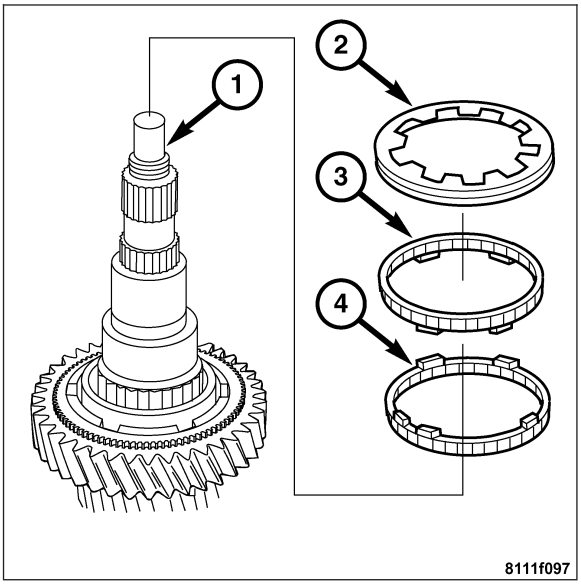

12. Assemble the 1st/2nd gear synchronizer if it is not being replaced. **Refer to Page 21-386**.

13. Install the 1st/2nd gear synchronizer assembly (1).

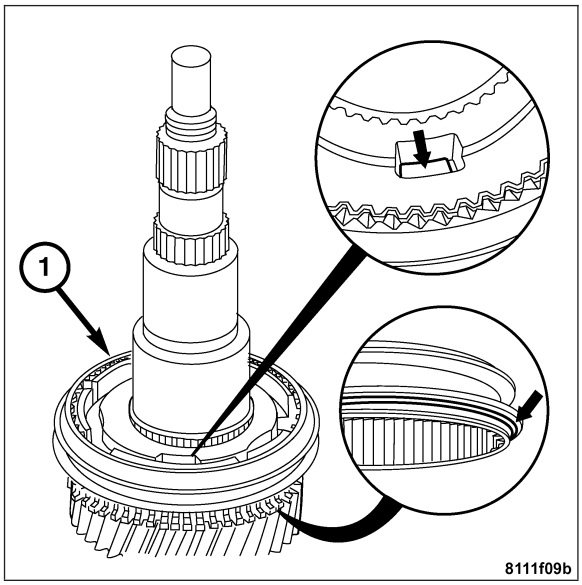

Note: Do not over expand the snap ring.

14. Install the snap ring (1).

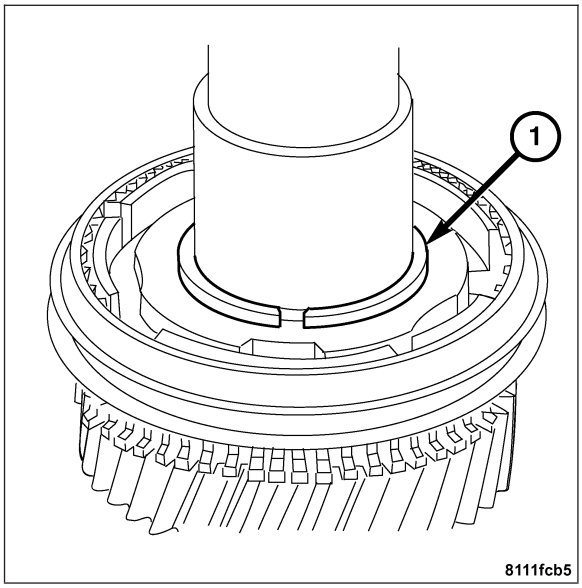

Note: The lobes on the friction ring (1) must engage in the recesses in the synchronizer ring (3).

15. Install the synchronizer ring (3), the cone ring (2), and the friction ring (1).

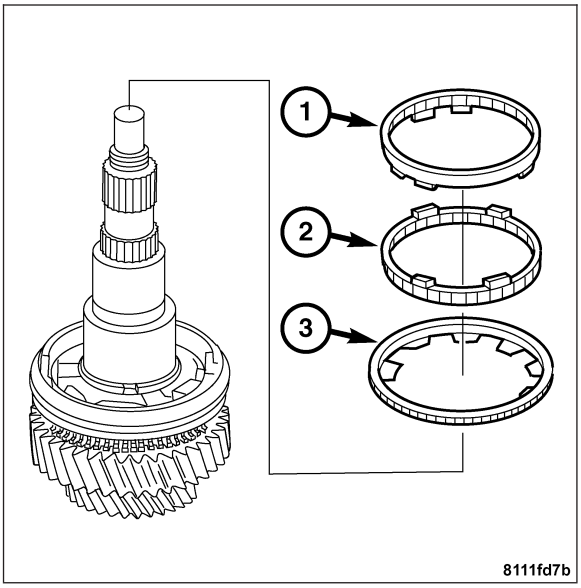

16. Install the first gear needle bearing (3), first gear (2), and press on the 1st gear thrust washer (1).

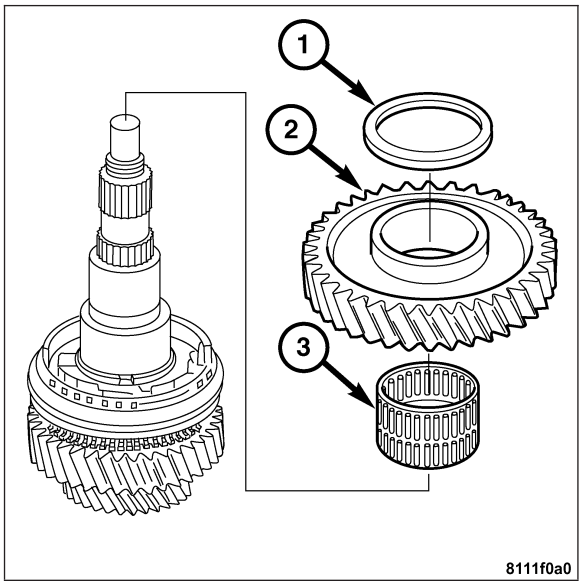

17. Press on the sleeve (2), and the reverse gear needle bearing (1).

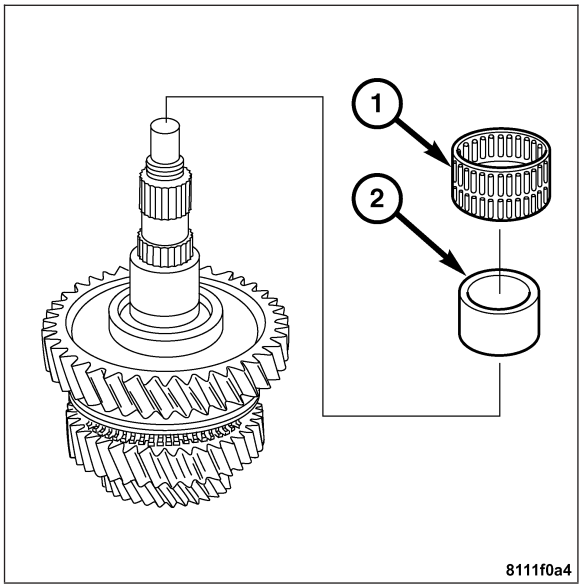

Note: The reverse gear collar must face upwards.

18. Install the reverse gear (2), and the synchronizer ring (1).

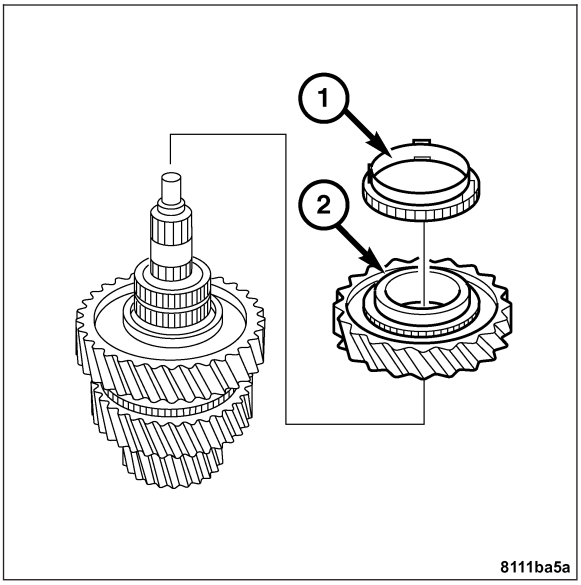

19. Press on the reverse gear synchronizer assembly (1).
20. Remove the input shaft together with the mainshaft from the vise.
21. Assemble the geartrain housing. **Refer to Page 21-365**.

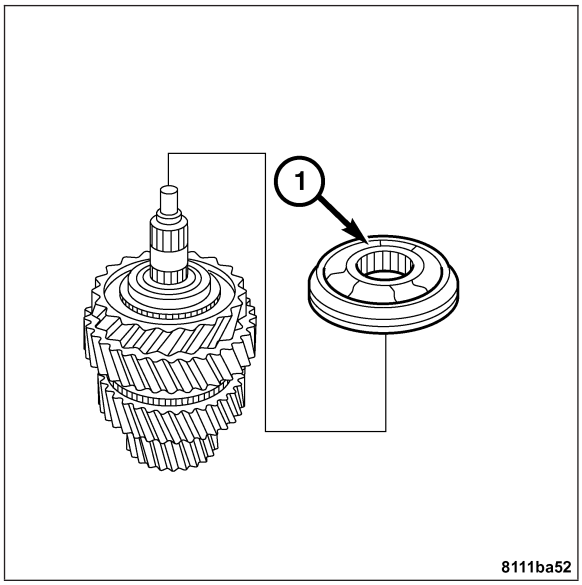

COUNTERSHAFT

DISASSEMBLY

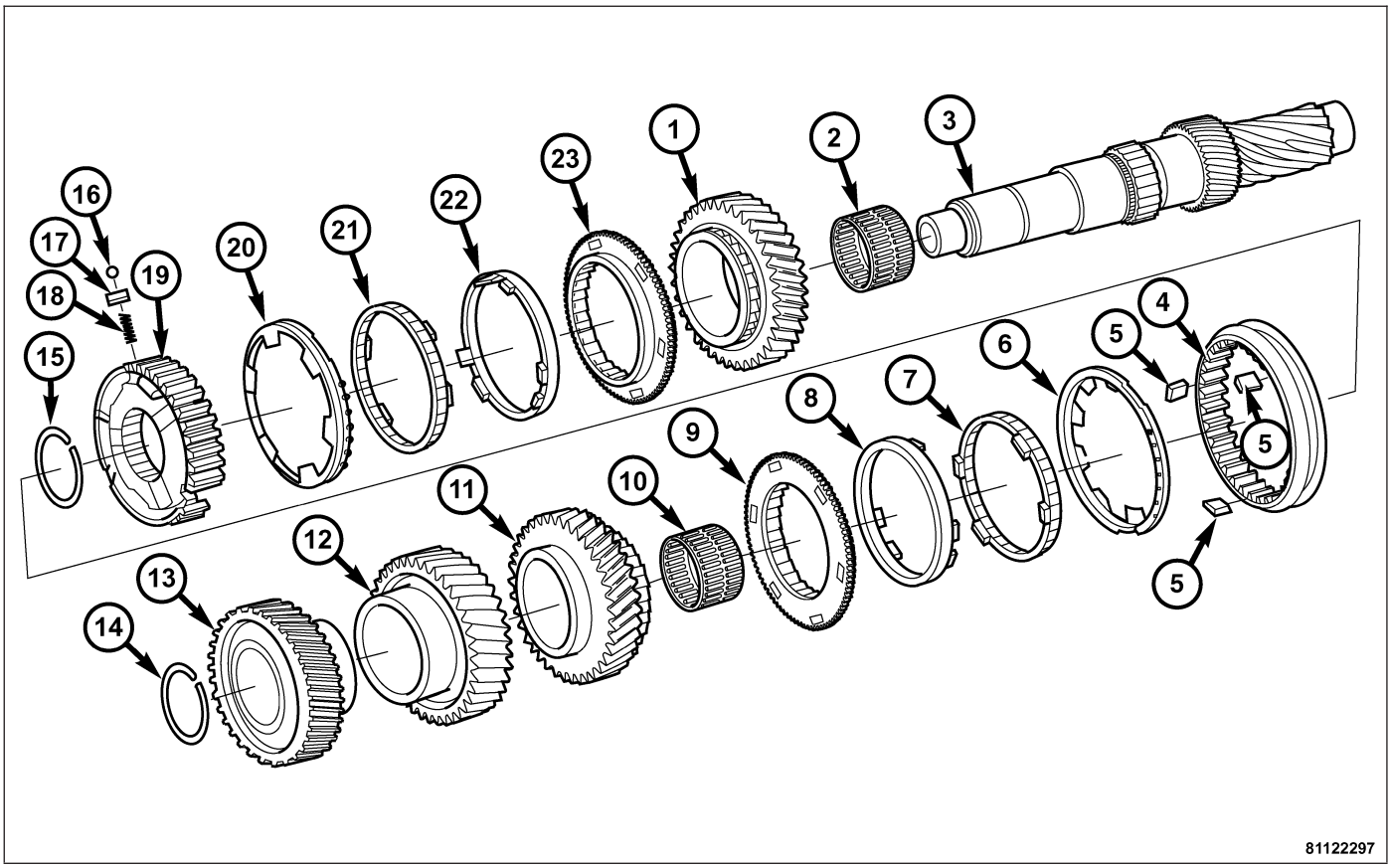

1 - 4TH GEAR IDLER GEAR
2 - 4TH GEAR NEEDLE BEARING
3 - COUNTERSHAFT
4 - SLIDING SLEEVE
5 - BLOCKING PIECE
6 - SYNCHRONIZER RING
7 - SYNCHRONIZER CONE RING
8 - FRICTION RING
9 - CLUTCH BODY
10 - 3RD GEAR NEEDLE BEARING
11 - 3RD GEAR IDLER GEAR
12 - 6TH GEAR DRIVE GEAR
13 - CONSTANT MESH GEAR
14 - SNAP RING
15 - SNAP RING
16 - BALL BEARING
17 - SLIDING BLOCK
18 - COMPRESSION SPRING
19 - 3RD/4TH GEAR SYNCHRONIZER BODY
20 - SYNCHRONIZER RING
21 - SYNCHRONIZER CONE RING
22 - FRICTION RING
23 - CLUTCH BODY

1. Remove the transmission. **Refer to Page 21-344**.
2. Disassemble the geartrain housing. **Refer to Page 21-363**.

3. Remove the snap ring (1).
4. Press off the constant mesh gear (2) and the 6th gear drive gear (3).
5. Clamp the countershaft in a vise with protective jaws with the output end pointing downwards.

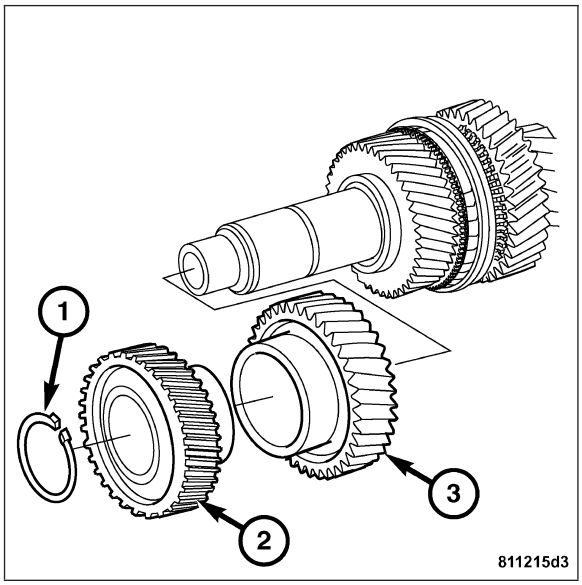

6. Remove the 3rd gear idler gear (1) and needle bearing (2).

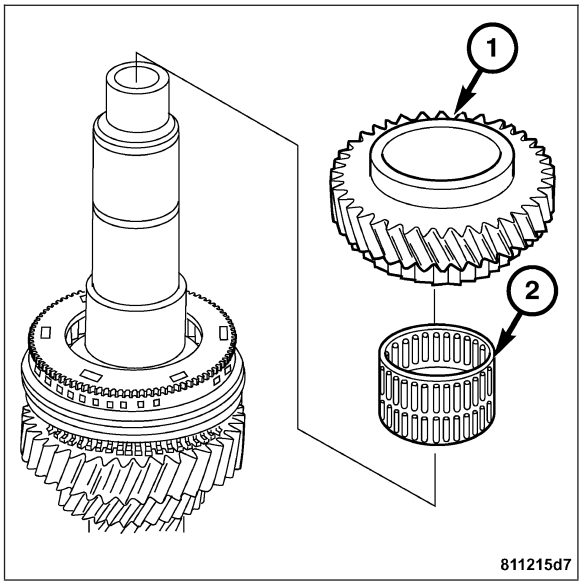

7. Remove the 3rd/4th gear clutch body (1) and the friction ring (2).

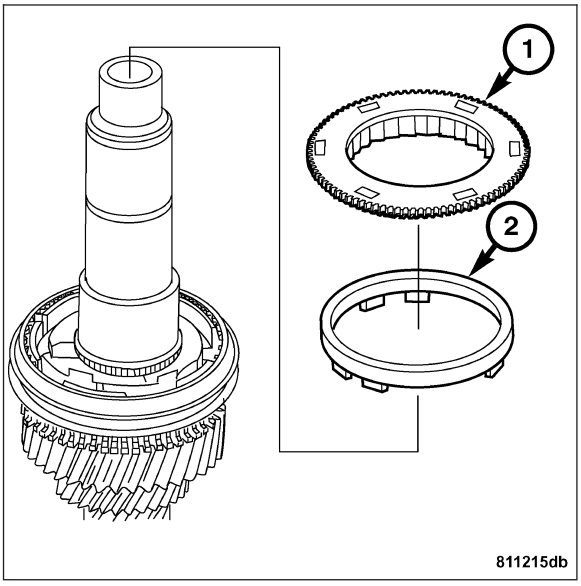

8. Remove the 3rd/4th gear cone ring (1), the synchronizer ring (2), and the locking ring (3) using pliers.

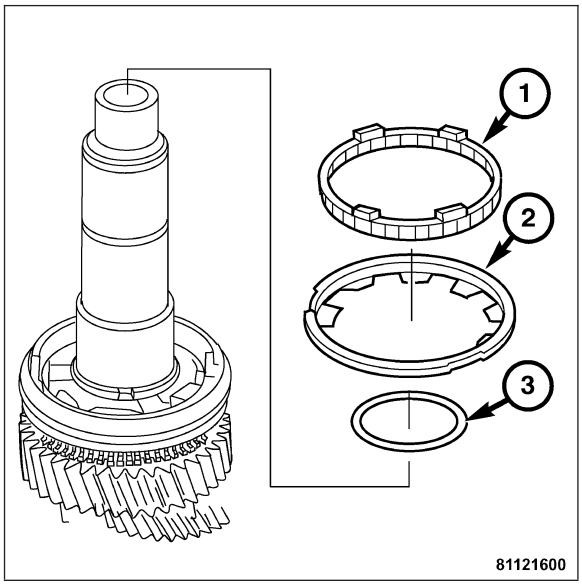

9. Use the jaw puller to remove the 4th gear (2) together with the 3rd/4th gear synchronizer (1).

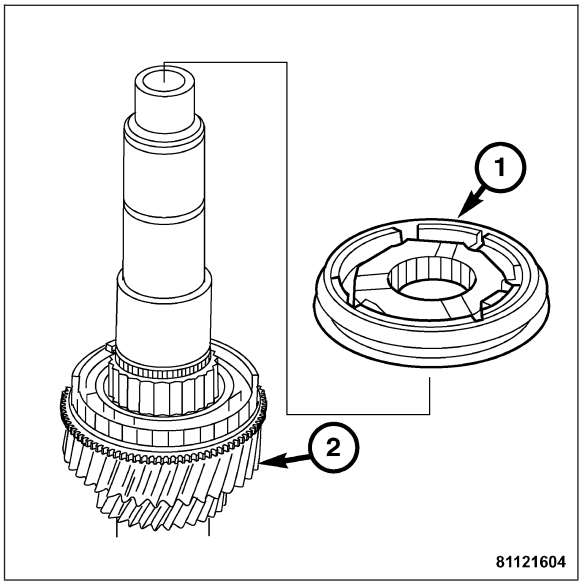

10. Remove the 4th gear synchronizer ring (1), cone ring (2), and friction ring (3).

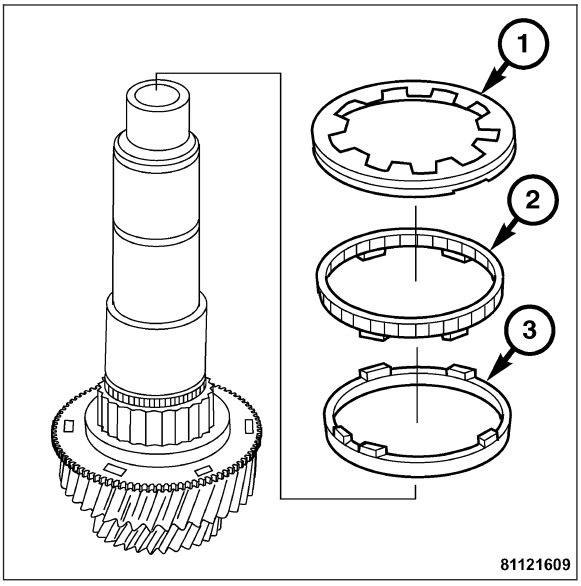

11. Remove the 4th gear clutch body (1), gear (2), and needle bearing (3).
12. Release the countershaft from the vise.

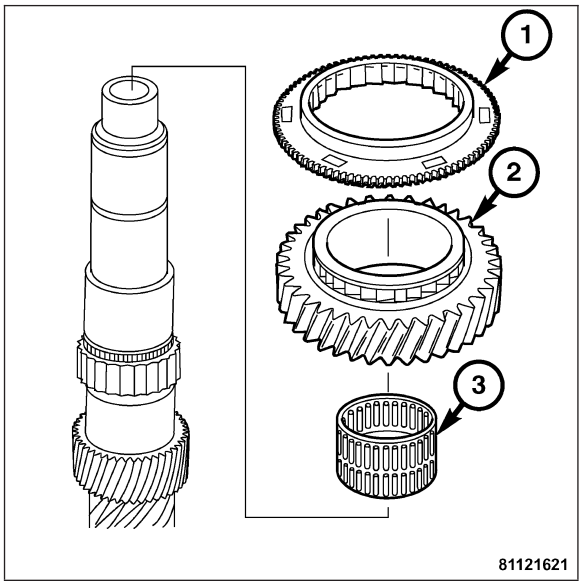

ASSEMBLY

1. Clamp the countershaft in a vise with input end up.
2. Install the 4th gear needle bearing (3), gear (2), and clutch body (1).

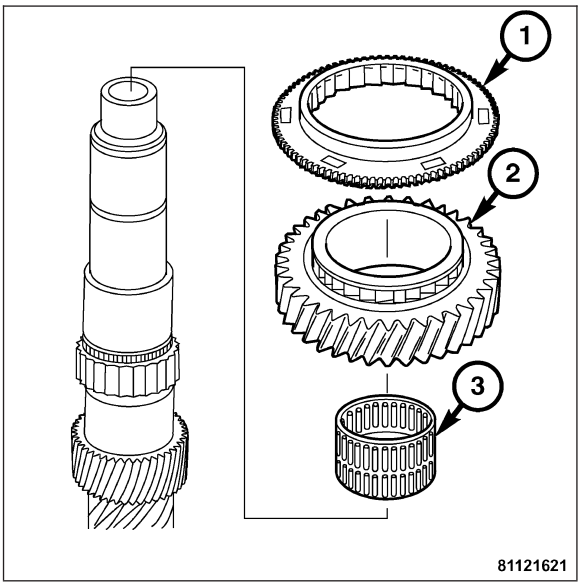

3. Install 4th gear friction ring (3), cone ring (2), and synchronizer ring (1).
4. Unless a new synchronizer is being used, the synchronizer unit must be properly assembled. **Refer to Page 21-386**.

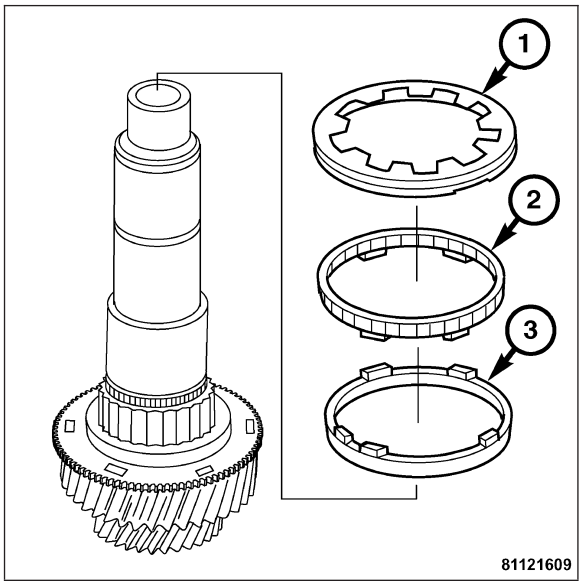

5. Install the 4th gear (2) and the 3rd/4th gear synchronizer unit (1).

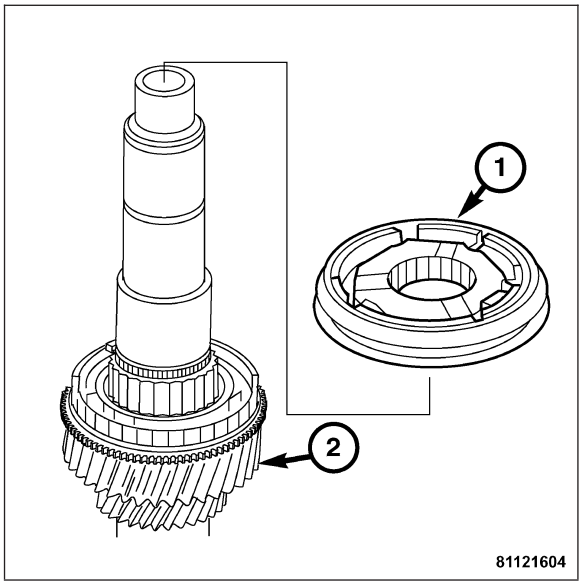

6. Install the snap ring (3), the 3rd/4th gear synchronizer ring (2), and cone ring (1).

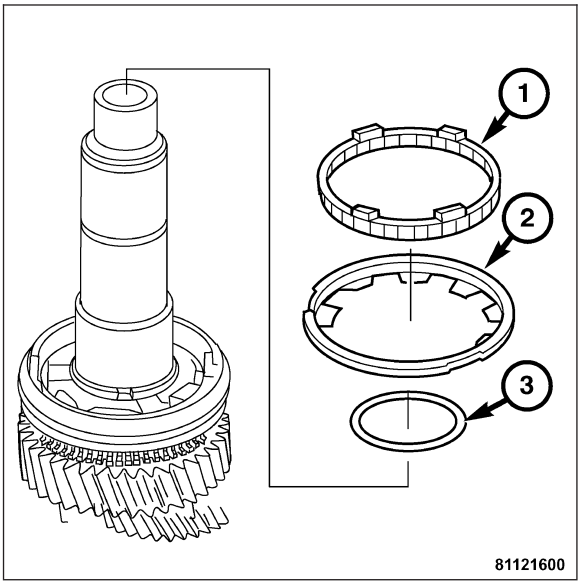

7. Install the friction ring (2), and clutch body (1).

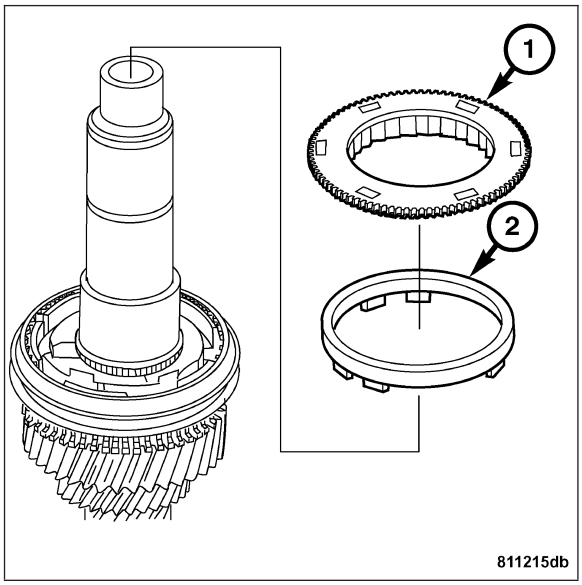

8. Install the 3rd gear needle bearing (2), and 3rd gear idler gear (1).

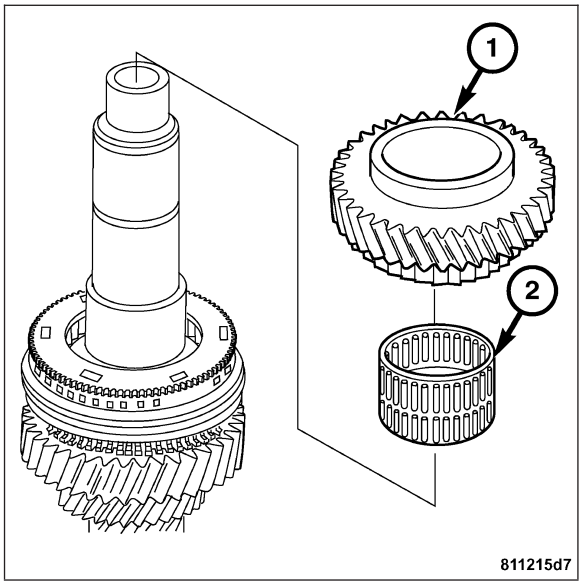

9. Install the 6th gear drive gear (3) and press onto the countershaft.
10. Install the constant mesh gear (2) and press onto the countershaft.
11. Install a new snap ring (1).
12. Remove the countershaft from the vise.
13. Assemble the gear train housing. **Refer to Page 21-365**.
14. Install the transmission. **Refer to Page 21-347**.

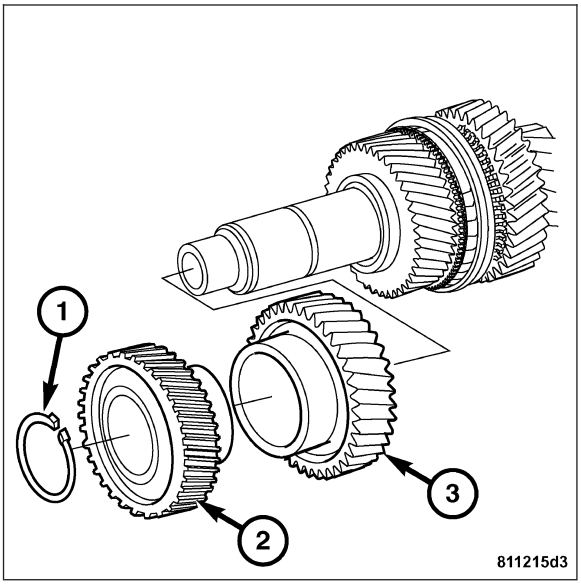

SYNCHRONIZER

DESCRIPTION

When shifting, high torque transmission and frequent shift work with a reduced shift force at the same time require a powerful synchronization unit. The multiple-cone synchronization in gears 1 to 6 meets these requirements and therefore offers the following advantages during the shift process:

- Fast synchronization
- High level of shift comfort
- Low shift forces

ASSEMBLY

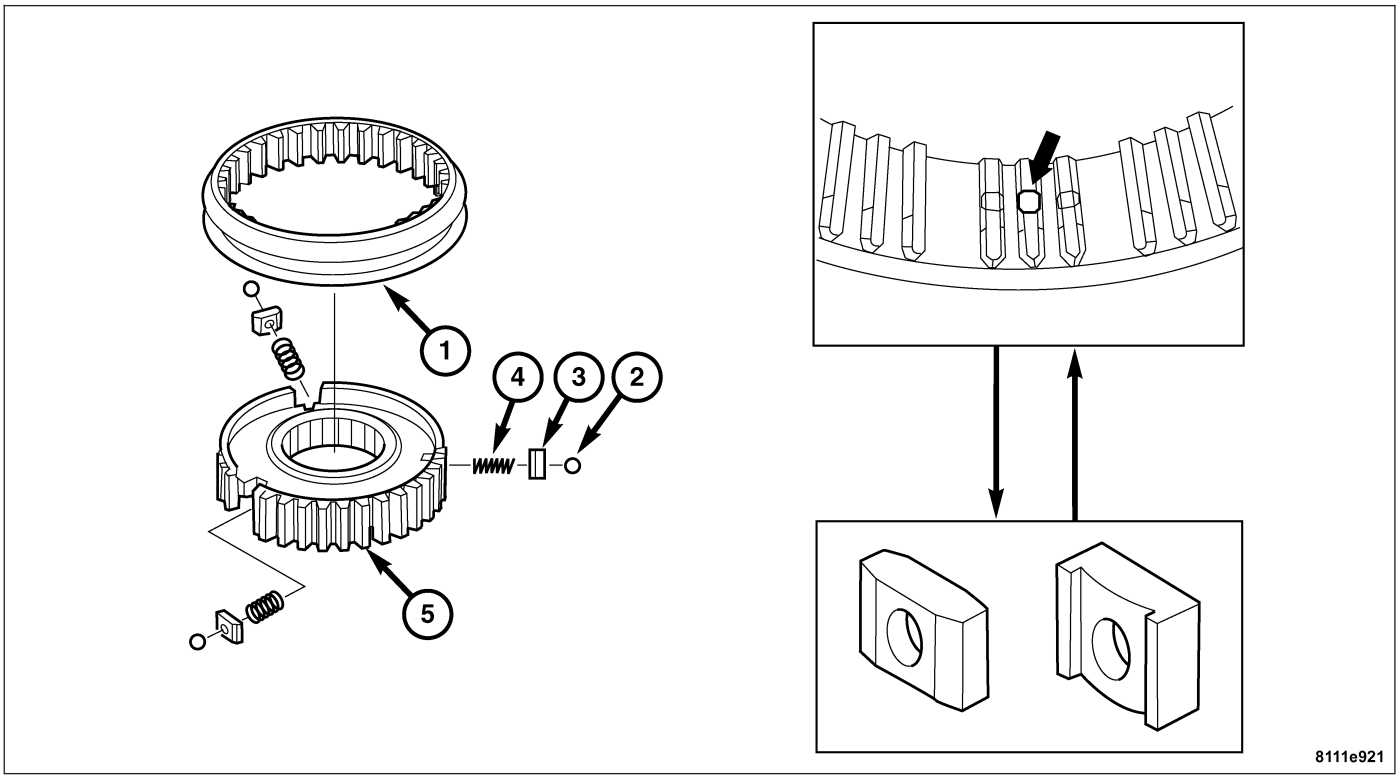

1. SLIDING SLEEVE
2. STEEL BALL
3. SLIDER
4. SPRING
5. SYNCHRONIZER BODY

GEAR SHIFT LEVER HANDLE

REMOVAL

1. Lift the shift boot (2) to expose the retainer nut (3).
2. Rotate the retainer nut (3) clockwise and down to remove the shift handle (1).
3. Pull straight up on the handle (1).

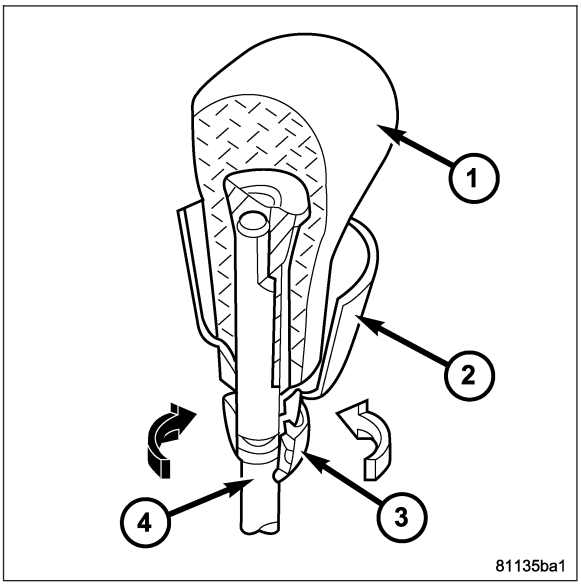

INSTALLATION

1. Install the shift handle (1) on the shift rod (4).
2. Tighten the retainer nut (3) counterclockwise (upward) until it is snug.
3. Push the shifter cover (2) down over the retainer and shift rod (4).

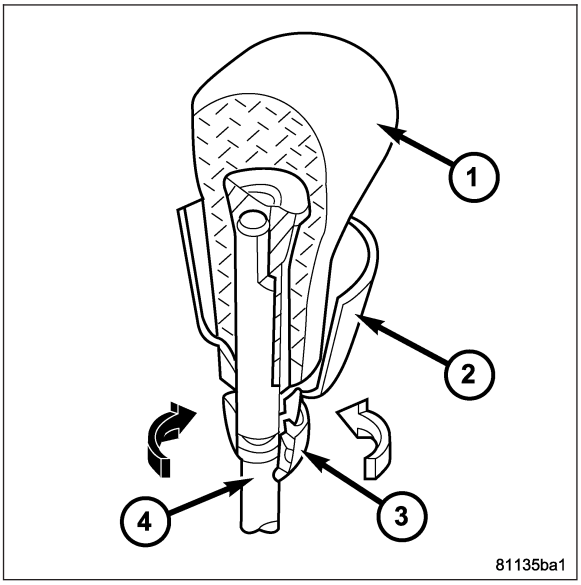

REVERSE LOCKOUT CABLE

DESCRIPTION

Reverse gear, which is selected by moving the lever to the left and back (toward the driver) from first gear is protected against accidental selection by the lockout cable. The lockout cable requires that the knob must be lifted before selecting reverse or the movement will be blocked. The reverse gear lockout cable is serviced only with the shift mechanism. If the cable becomes inoperable, the shift mechanism must be replaced. **Refer to Page 21-391**.

SHIFT MECHANISM

DESCRIPTION

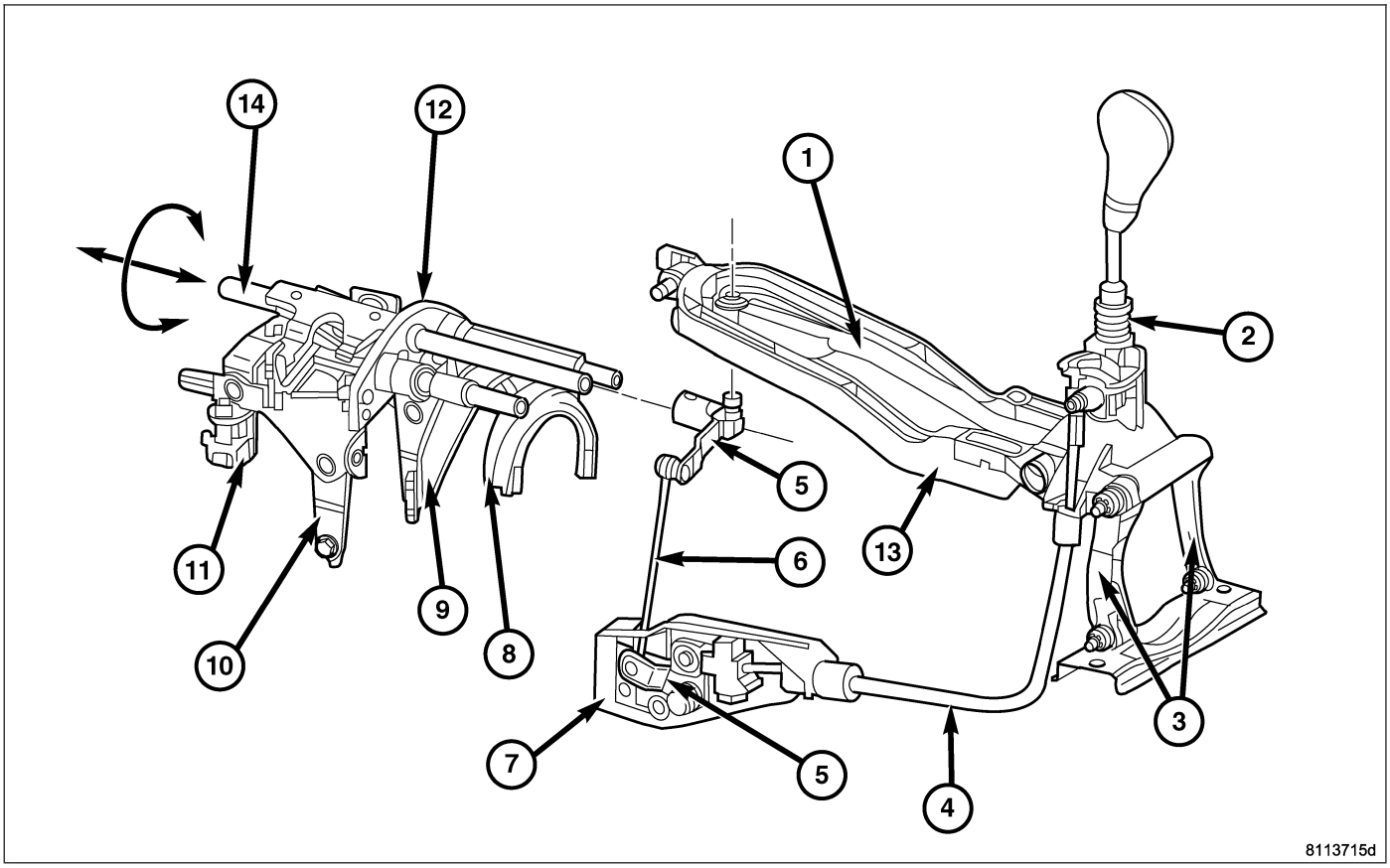

1 - SHIFT ROD
2 - FLOOR SHIFT
3 - SWIVEL LEVER
4 - SELECTOR CABLE
5 - BRACKET
6 - SELECTOR ROD
7 - BRACKET
8 - REVERSE GEAR SHIFT FORK
9 - 1ST/2ND GEAR SHIFT FORK
10 - 3RD/4TH GEAR SHIFT FORK
11 - 5TH/6TH GEAR SHIFT FORK
12 - INNER SHIFT MODULE
13 - COUPLING MODULE
14 - CENTRAL SHIFT SHAFT

The floor shift (2) is connected to the transmission by a coupling module (13) and supported on the body tunnel so that it can move via a swivel lever (3). This prevents transmission of vibrations and noise to the floor shift and to the tunnel by means of rubber mounts on the coupling rod, shift rod and the two swivel levers. The selector movement is transmitted from the shift lever to the inner shift module (12) in the transmission by the selector cable (4) and the shift movement is transmitted by the shift rod (1). Both transmission components are maintenance-free.

This type of shift mechanism has the following advantages:

- Precise and easy to operate shift.
- No transmission of component movements to the shift lever and tunnel. The swivel lever (3) and rubber mounts allow the engine/transmission joint to move in all directions.

STANDARD PROCEDURE - SHIFT LEVER ADJUSTMENT

1. Move the shift lever (1) to the right position and pull up on the shift lever.
2. Insert the Special Tool 9120 (2) into the shifter alignment slot with the recess of the tool facing upwards.

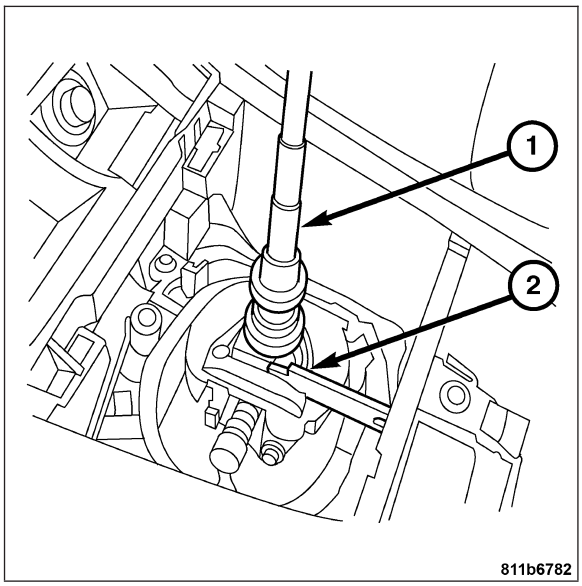

3. Slide the adjustment tool (2) forward until it contacts the plastic ring (1) at the front of the shifter.
4. Ensure the adjustment tool (2) is properly placed at the front and the rear of the shifter housing (3).
5. Move the shift lever the the left position.

Note: Hold the shift lever in place until adjustment procedure is complete.

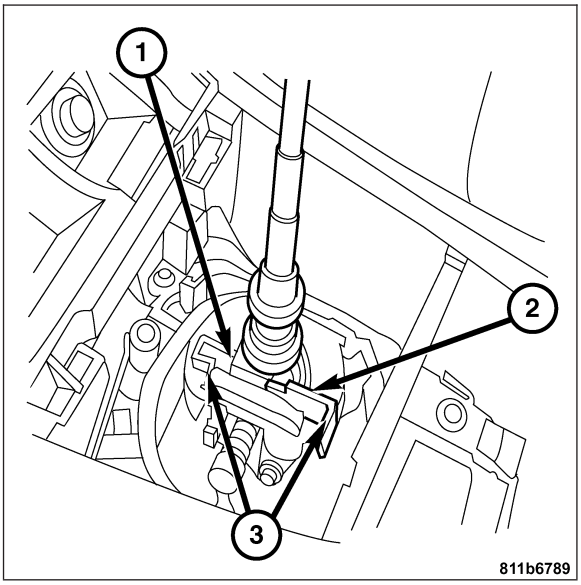

6. Depress the detent tab (1) on the reverse lockout cable.

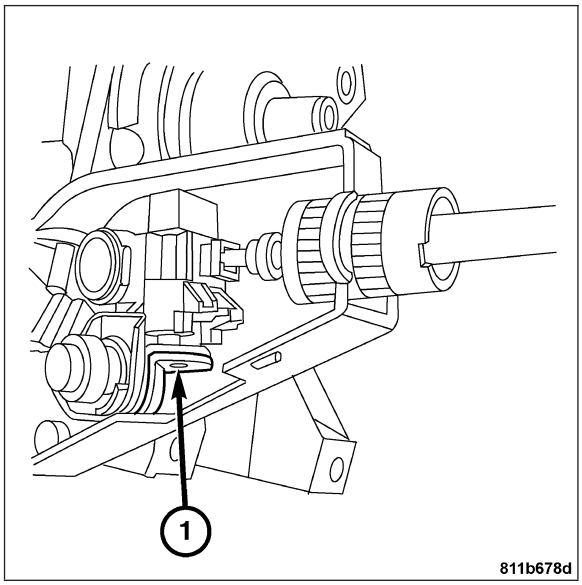

7. Depress the release button (1) on the reverse lockout cable.
8. Adjustment procedure is now complete.

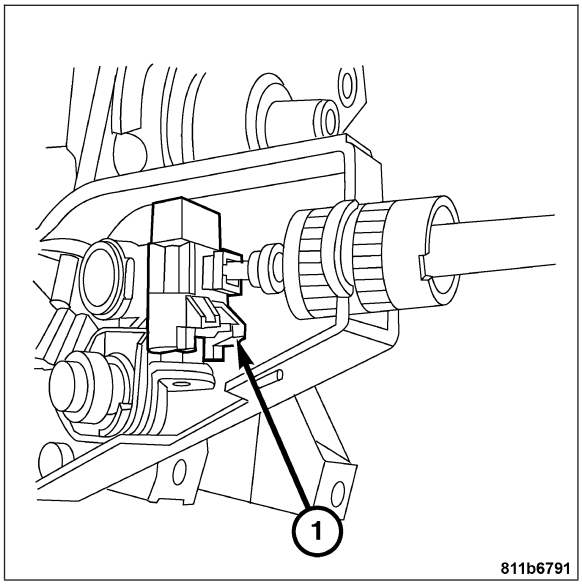

9. Move the shift lever (1) to the right position and pull up on the shift lever (1).
10. Remove the Special Tool 9120 (2) from the shifter alignment slot.

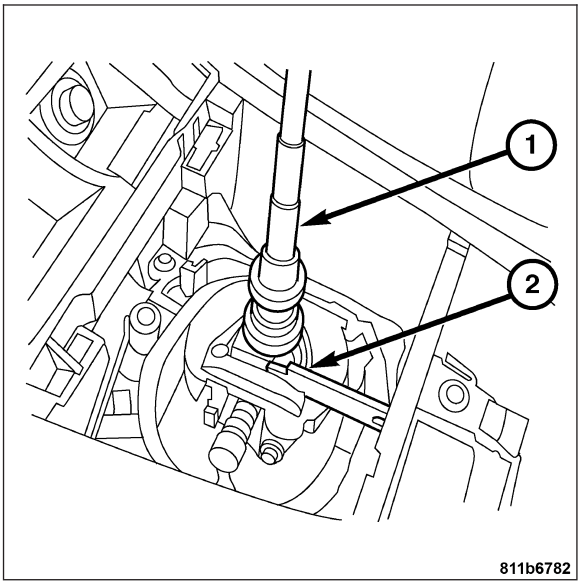

REMOVAL

1. Disconnect the negative battery cable.
2. Remove the shift lever handle. **Refer to Page 21-387**.
3. Press down on the retainer spring (5) and remove the lock pin (2) from the shift lever (1). Remove the shift lever (1), the washer (6) and spring (5), the cover (4) and the boot (3) from the shift mechanism.

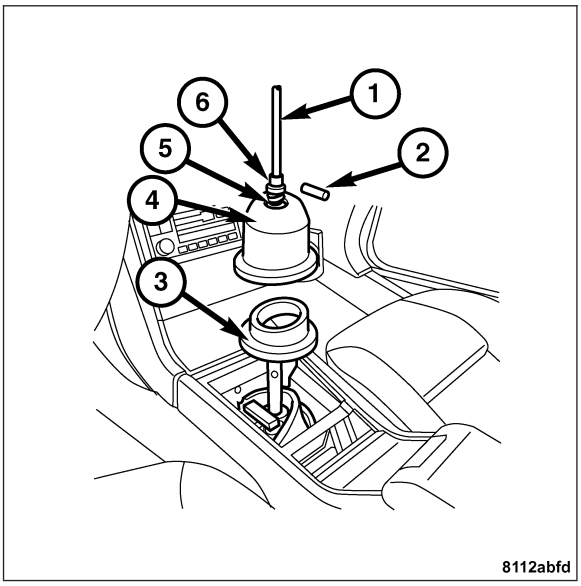

4. Remove the propeller shaft. **Refer to Page 21-344**.
5. Lower the engine and transmission slightly with the support.
6. Loosen the cable lock nut (2) and press In on the release button (3) to remove the reverse lockout cable (1) from the bracket.

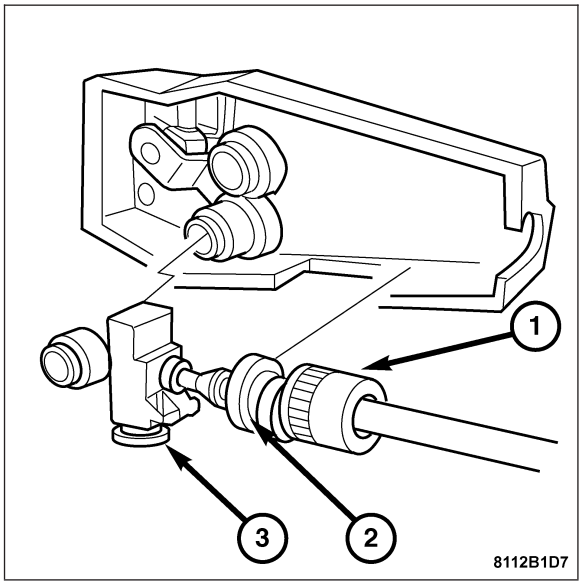

7. Remove the shift rod (2) from the ball stud. Remove the retaining pin (1) from the shift mechanism.
8. Lower and remove the shift mechanism (3) from the vehicle.

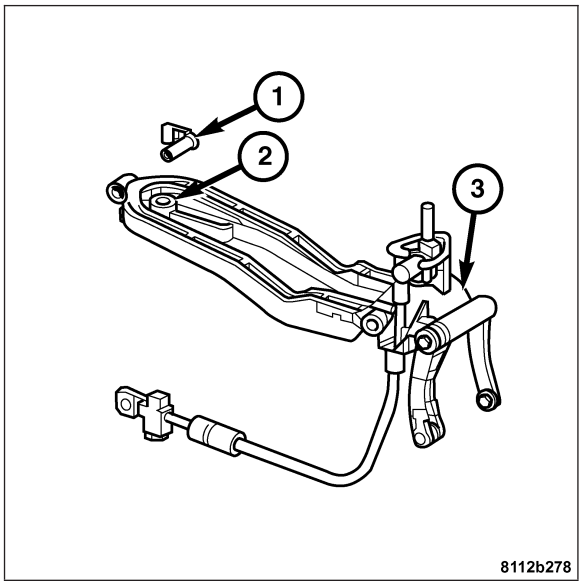

INSTALLATION

Note: Be sure that the foam insulation remains in position around the opening in the floor pan.

1. Position the shift mechanism (3) in the vehicle above the transmission and install the retaining pin (1). Connect the shift rod (2) to the ball stud.

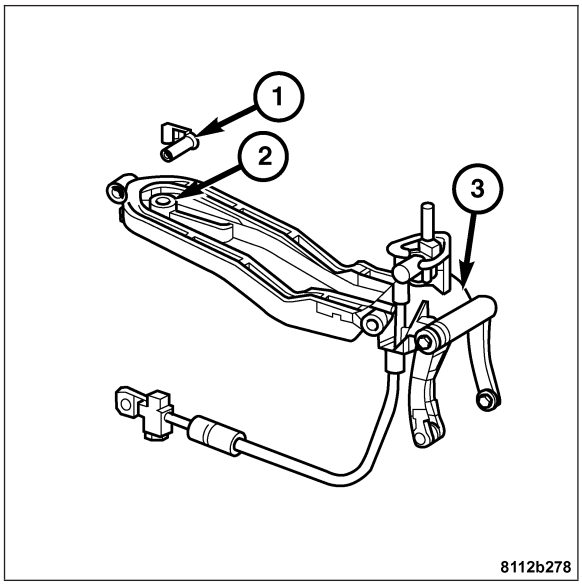

2. Press the release button (3) and install the reverse lockout cable (1) in the bracket. Tighten the lock nut (2).

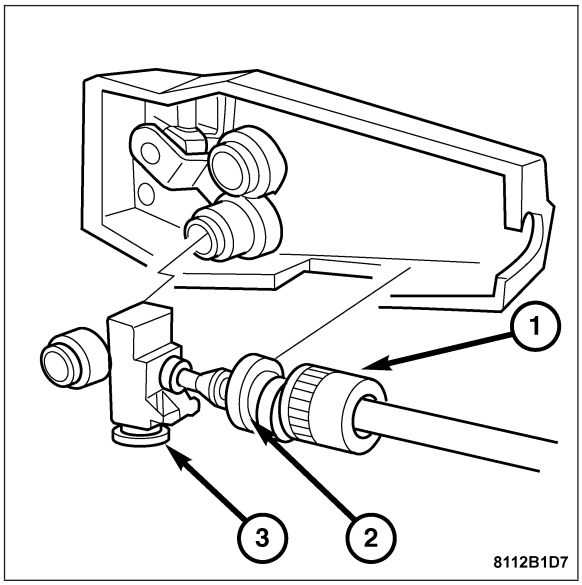

3. Install the propeller shaft. **Refer to Page 3-28**.
4. Lower the vehicle.
5. Install the boot (3), the cover (4), the spring (5) and washer (6) on the shift mechanism.
6. Press down on the washer (6) and install the retaining pin (2).

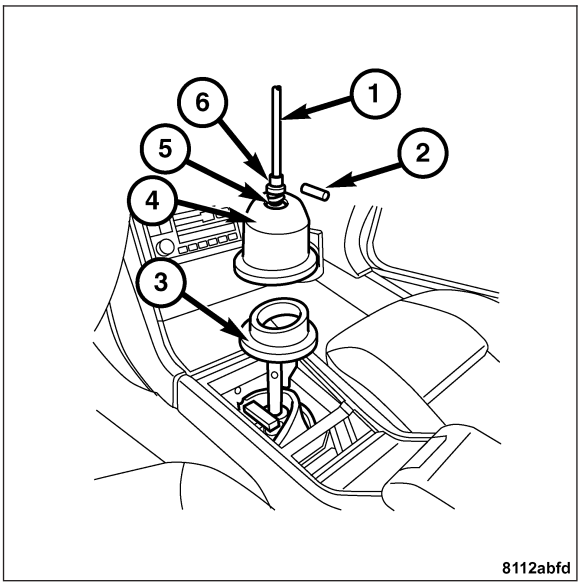

7. Install the gear shift lever handle (1). **Refer to Page 21-387**.
8. Connect the negative battery cable.

TIRES/WHEELS

TABLE OF CONTENTS

page

TIRES/WHEELS - ELECTRICAL DIAGNOSTICS. . . . 1

page

TIRES/WHEELS - SERVICE INFORMATION 37

TIRES/WHEELS - ELECTRICAL DIAGNOSTICS

TABLE OF CONTENTS

page

TIRES/WHEELS - ELECTRICAL DIAGNOSTICS
DIAGNOSIS AND TESTING
NO TIRES TRAINED 2
TIRE PRESSURE MONITOR MODULE FAILURE 4
TIRE PRESSURE SENSOR/TRANSMITTER SIGNAL JAMMED 6
SIGNAL JAMMED 9
LEFT FRONT TIRE PRESSURE SENSOR/ TRANSMITTER SIGNAL JAMMED 11
LEFT REAR TIRE PRESSURE SENSOR/ TRANSMITTER SIGNAL JAMMED 13
RIGHT FRONT TIRE PRESSURE SENSOR/ TRANSMITTER SIGNAL JAMMED 15
RIGHT REAR TIRE PRESSURE SENSOR/ TRANSMITTER SIGNAL JAMMED 17

page

TIRE PRESSURE SENSOR/TRANSMITTER . 19
TRANSMITTER FAILURE 22
LEFT FRONT TIRE PRESSURE SENSOR/ TRANSMITTER 24
LEFT REAR TIRE PRESSURE SENSOR/ TRANSMITTER 26
RIGHT FRONT TIRE PRESSURE SENSOR/ TRANSMITTER 28
RIGHT REAR TIRE PRESSURE SENSOR/ TRANSMITTER 30
TIRE PRESSURE SENSOR/TRANSMITTER LOW BATTERY 32
TIRE PRESSURE VERIFICATION TEST 35
SCHEMATICS AND DIAGRAMS 36

TIRES/WHEELS - ELECTRICAL DIAGNOSTICS

DIAGNOSIS AND TESTING

NO TIRES TRAINED

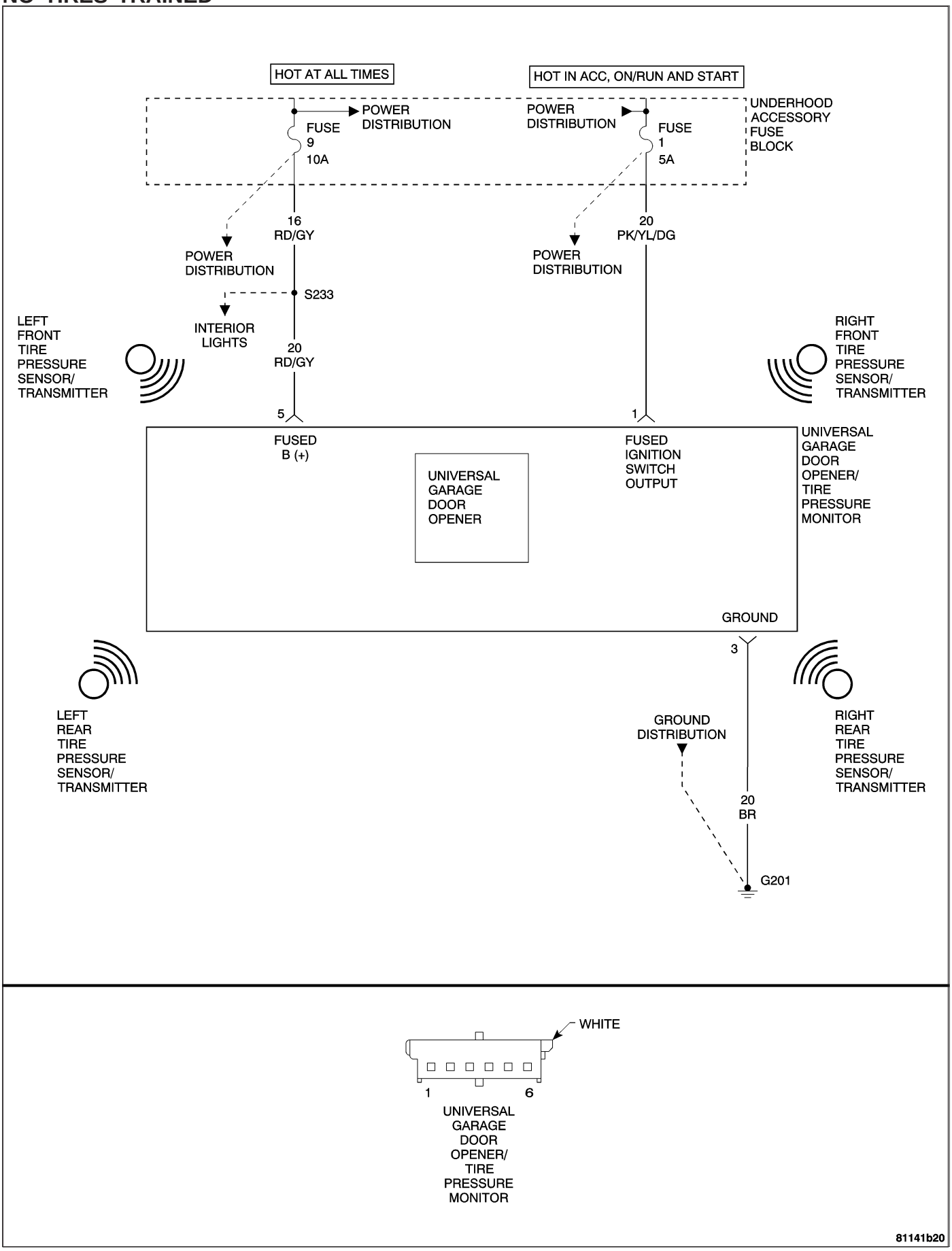

NO TIRES TRAINED — CONTINUED

When Monitored And Set Condition

- When Monitored: With the ignition on, the Tire Pressure Monitor (TPM) monitors the tire pressure sensor/transmitters approximately once a minute (60 – 68 seconds) when the vehicle speed is above 33 km/h (20 MPH).
- Set Condition: If the Tire Pressure Monitor (TPM) module does not receive a signal from any tire pressure sensor/transmitter, the DTC will be set.

POSSIBLE CAUSES
INITIALIZATION FAILURE
TIRE TRAINING TIMEOUT

For a complete Tire Pressure Monitor Circuit Diagram **Refer to Page 22-36**

Diagnostic Test

1. PROGRAMMING TIRE PRESSURE MONITOR

Turn the ignition on.

With the DRB III® and a calibration magnet, program the Tire Pressure Monitor module for all four tire pressure sensor/transmitters.

Disconnect the DRB III® and prepare the vehicle for a road test.

Road test the vehicle above 33 km/h (20 MPH) for a minimum of two minutes.

With the DRB III® read the last 32 transmissions received by the Tire Pressure Monitor.

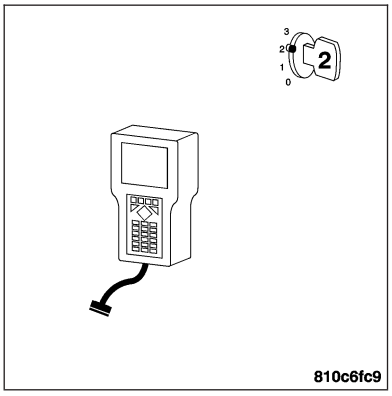

Does the DRB III® display any of the tire pressure transmitter IDs in the last 32 transmissions?

Yes >> Repair is complete.
Perform TIRE PRESSURE MONITOR VERIFICATION TEST.

No >> Replace and program the Tire Pressure Monitor module. **Refer to Page 22-51**
Perform TIRE PRESSURE MONITOR VERIFICATION TEST.

TIRE PRESSURE MONITOR MODULE FAILURE

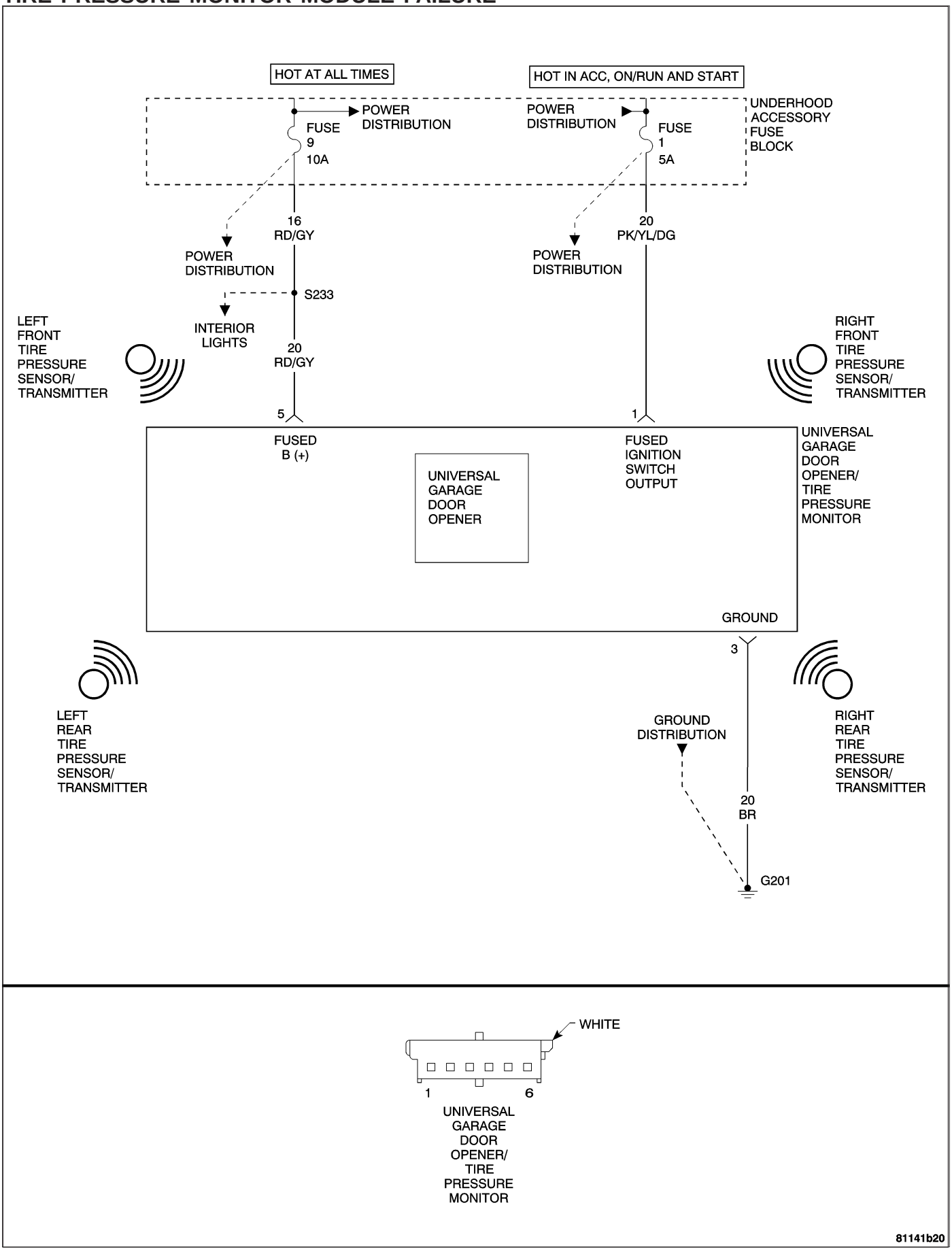

TIRE PRESSURE MONITOR MODULE FAILURE — CONTINUED

When Monitored And Set Condition

- When Monitored: With the ignition on, the Tire Pressure Monitor (TPM) monitors the tire pressure sensor/transmitters approximately once a minute. The TPM module stores the last 32 transmissions from the four tire pressure sensor/transmitters.
- Set Condition: If the Tire Pressure Monitor (TPM) module does not receive a transmission from any of the four tire pressure/transmitters for six consecutive ignition cycles lasting at least 15 minutes, the DTC will be set.

POSSIBLE CAUSES
NO TIRE PRESSURE SENSOR/TRANSMITTERS
TIRE PRESSURE SENSOR/TRANSMITTERS NOT PROGRAMMED
TIRE PRESSURE MONITOR MODULE

For a complete Tire Pressure Monitor Circuit Diagram **Refer to Page 22-36**.

Diagnostic Test

1. INSPECT TIRE PRESSURE SENSOR/TRANSMITTERS

Turn the ignition off.

Inspect all four vehicle wheels for the Tire Pressure Sensor/Transmitters being present.

Do all the wheels have tire pressure sensor/transmitters?

Yes >> Go to 2

No >> Install the Tire Pressure Sensor/Transmitters and program module. **Refer to Page 22-55**
Perform TIRE PRESSURE MONITOR VERIFICATION TEST.

2. PROGRAMMING TIRE PRESSURE MONITOR

Turn the ignition on.

With the DRB III® and a calibration magnet, program the Tire Pressure Monitor module for all four sensor/transmitters.

Disconnect the DRB III® and prepare the vehicle for a road test.

Road test the vehicle above 33 km/h (20 MPH) for a minimum of two minutes.

With the DRB III® read the last 32 transmissions received by the Tire Pressure Monitor.

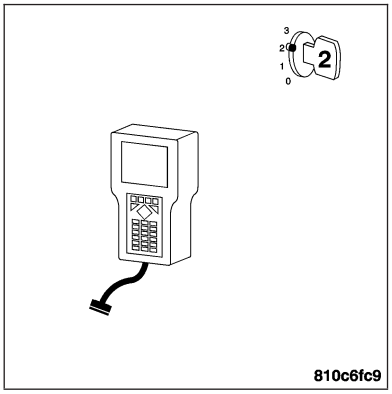

Does the DRB III® display any of the tire pressure transmitter IDs in the last 32 transmissions?

Yes >> Repair is complete.
Perform TIRE PRESSURE MONITOR VERIFICATION TEST.

No >> Replace and program the Tire Pressure Monitor module. **Refer to Page 22-51**
Perform TIRE PRESSURE MONITOR VERIFICATION TEST.

TIRE PRESSURE SENSOR/TRANSMITTER SIGNAL JAMMED

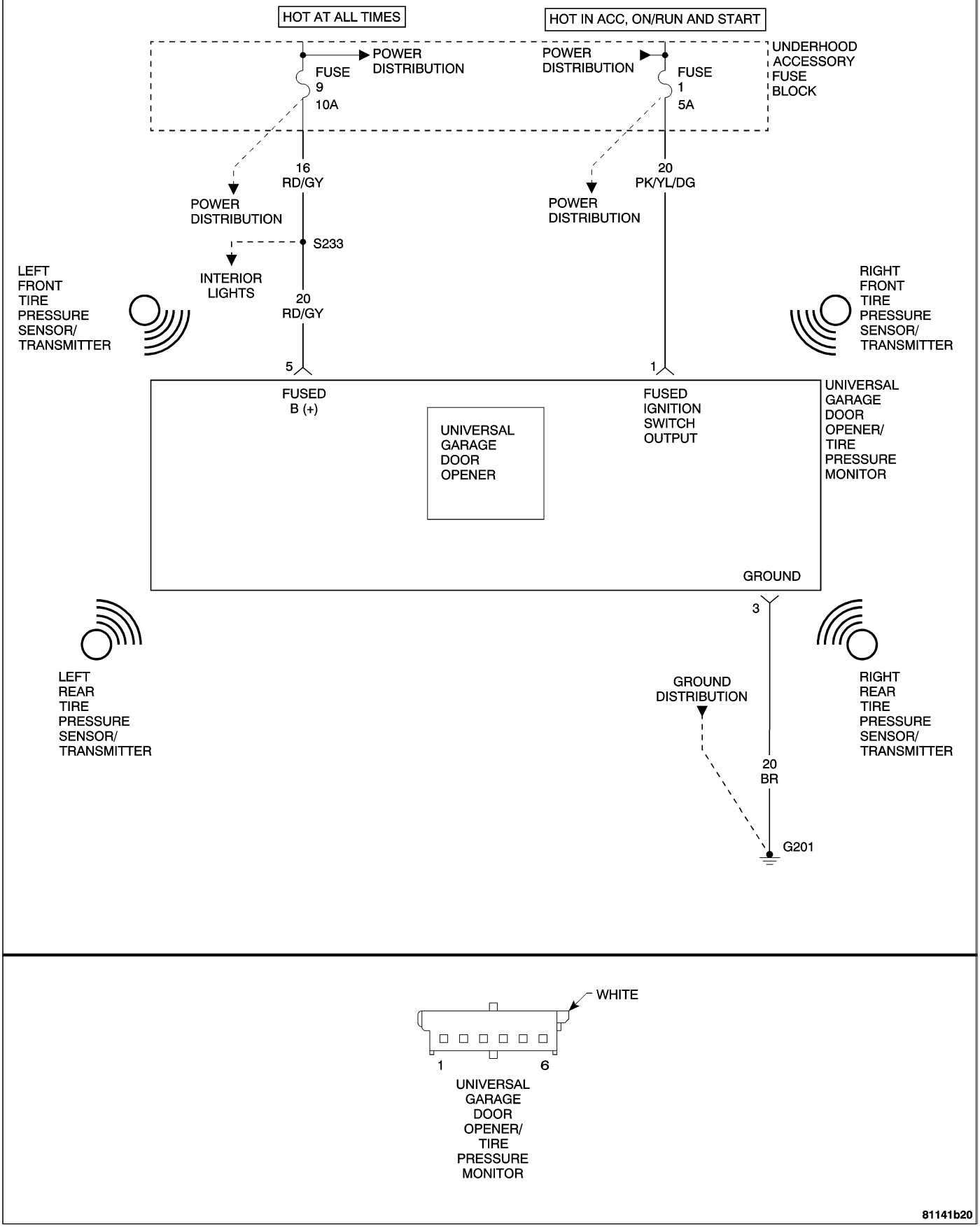

TIRE PRESSURE SENSOR/TRANSMITTER SIGNAL JAMMED — CONTINUED
When Monitored and Set Condition

LEFT FRONT TIRE PRESSURE SENSOR/TRANSMITTER SIGNAL JAMMED

- When Monitored: With the ignition on, the Tire Pressure Monitor (TPM) monitors the tire pressure sensor/transmitters approximately once a minute (60 – 68 seconds) when the vehicle speed is above 33 km/h (20 MPH).
- Set Condition: If the Tire Pressure Monitor (TPM) module receives an undetectable frequency transmission from the left front tire pressure sensor/transmitter, the DTC will be set.

LEFT REAR TIRE PRESSURE SENSOR/TRANSMITTER SIGNAL JAMMED

- When Monitored: With the ignition on, the Tire Pressure Monitor (TPM) monitors the tire pressure sensor/transmitters approximately once a minute (60 – 68 seconds) when the vehicle speed is above 33 km/h (20 MPH).
- Set Condition: If the Tire Pressure Monitor (TPM) module receives an undetectable frequency transmission from the left front tire pressure sensor/transmitter, the DTC will be set.

RIGHT FRONT TIRE PRESSURE SENSOR/TRANSMITTER SIGNAL JAMMED

- When Monitored: With the ignition on, the Tire Pressure Monitor (TPM) monitors the tire pressure sensor/transmitters approximately once a minute (60 – 68 seconds) when the vehicle speed is above 33 km/h (20 MPH).
- Set Condition: If the Tire Pressure Monitor (TPM) module receives an undetectable frequency transmission from the left front tire pressure sensor/transmitter, the DTC will be set.

RIGHT REAR TIRE PRESSURE SENSOR/TRANSMITTER SIGNAL JAMMED

- When Monitored: With the ignition on, the Tire Pressure Monitor (TPM) monitors the tire pressure sensor/transmitters approximately once a minute (60 – 68 seconds) when the vehicle speed is above 33 km/h (20 MPH).
- Set Condition: If the Tire Pressure Monitor (TPM) module receives an undetectable frequency transmission from the left front tire pressure sensor/transmitter, the DTC will be set.

SIGNAL JAMMED

- When Monitored: With the ignition on, the Tire Pressure Monitor (TPM) monitors the tire pressure sensor/transmitters approximately once a minute (60 – 68 seconds) when the vehicle speed is above 33 km/h (20 MPH).
- Set Condition: If the Tire Pressure Monitor (TPM) module receives an undetectable frequency transmission from a tire pressure sensor/transmitter, the DTC will be set.

POSSIBLE CAUSES
OUTSIDE RADIO FREQUENCY INTERFERENCE

For a complete Tire Pressure Monitor Circuit Diagram **Refer to Page 22-36**

TIRE PRESSURE SENSOR/TRANSMITTER SIGNAL JAMMED — CONTINUED

Diagnostic Test

1. INSPECT TIRE PRESSURE SENSOR/TRANSMITTERS

Turn the ignition on.
With the DRB III®, read DTCs.

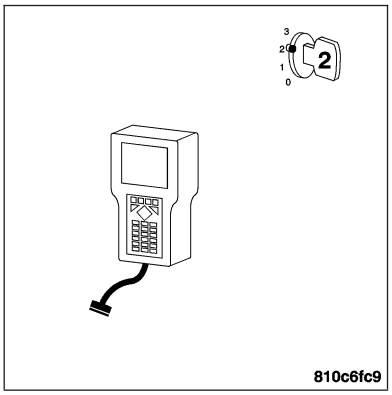

Does the DRB III® display a Sensor/Transmitter Signal Jammed DTC?

Yes >> Replace the Tire Pressure Sensor/Transmitter at the affected wheel. **Refer to Page 22-53**
Perform TIRE PRESSURE MONITOR VERIFICATION TEST.

No >> The condition that caused this DTC is currently not present. Inspect the related wiring harness for a possible intermittent condition.
Perform TIRE PRESSURE MONITOR VERIFICATION TEST.

SIGNAL JAMMED

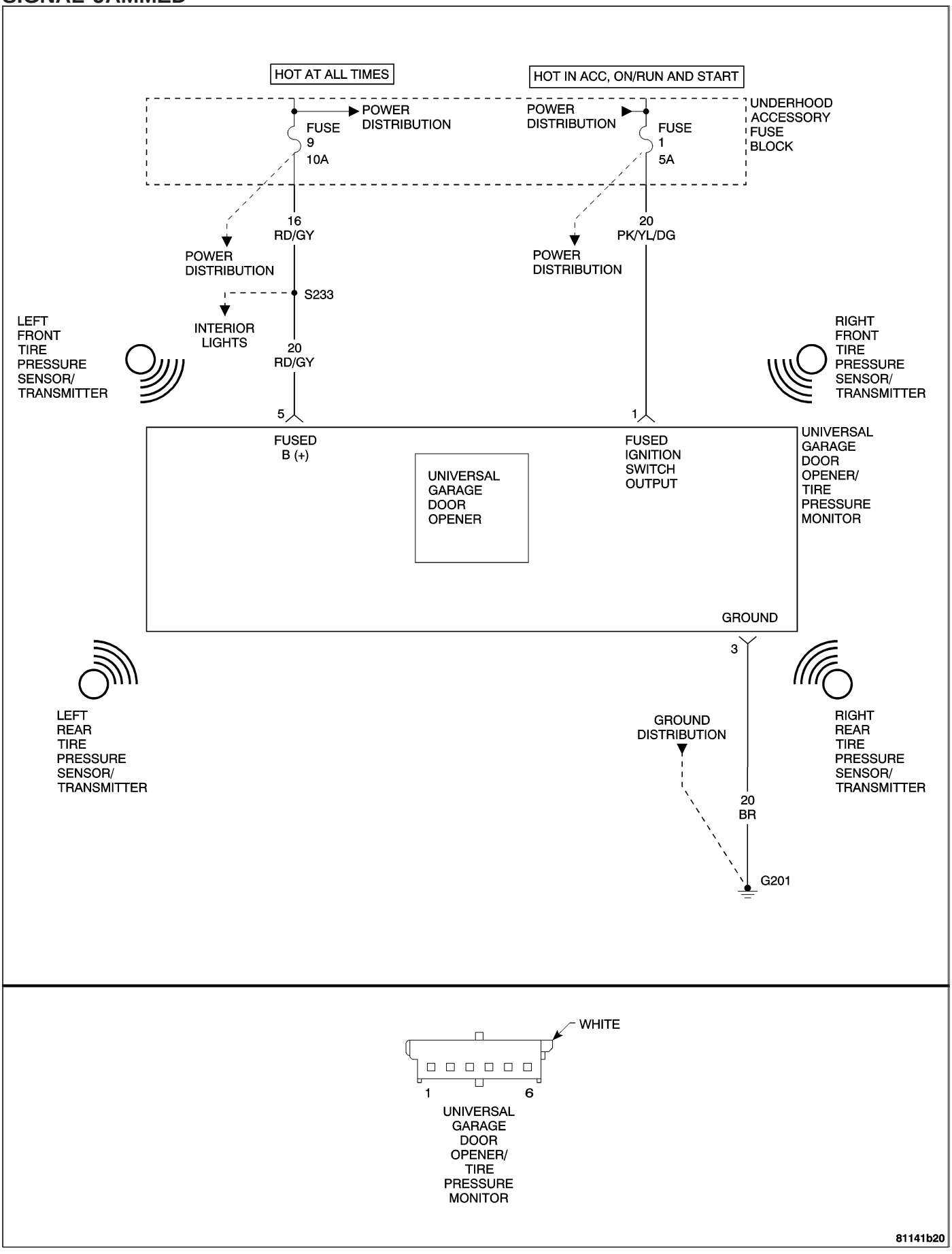

SIGNAL JAMMED — CONTINUED

When Monitored and Set Condition

- When Monitored: With the ignition on, the Tire Pressure Monitor (TPM) monitors the tire pressure sensor/transmitters approximately once a minute (60 – 68 seconds) when the vehicle speed is above 33 km/h (20 MPH).
- Set Condition: If the Tire Pressure Monitor (TPM) module receives an undetectable frequency transmission from a tire pressure sensor/transmitter, the DTC will be set.

POSSIBLE CAUSES
OUTSIDE RADIO FREQUENCY INTERFERENCE

Diagnostic Test

1. CHECK FOR CURRENT DTC

Turn the ignition on.
With the DRB III®, read the TPM DTCs.

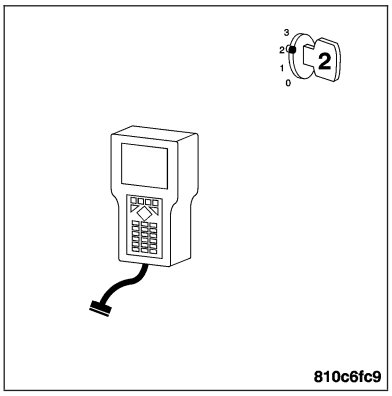

Is this DTC preset?

Yes >> For complete diagnosis of this DTC, refer to TIRE PRESSURE SENSOR/TRANSMITTER SIGNAL JAMMED.

No >> Go To 2

2. INTERMITTENT WIRING AND CONNECTORS

The conditions necessary to set this DTC are not present at this time.

Note: Check connectors — Clean/repair as necessary. Poor pin to terminal connections can set DTCs.Using the wiring diagram/schematic as a guide, inspect the wiring and connectors specific to this DTC. Wiggle the wires while checking for shorts and open circuits.

Note: Check for any Technical Service Bulletins that may apply.

Were there any problems found?

Yes >> Repair as necessary.
Perform TIRE PRESSURE VERIFICATION TEST.

No >> The condition that caused this DTC to set is currently not present. Inspect the related wiring harness for a possible intermittent condition.

LEFT FRONT TIRE PRESSURE SENSOR/TRANSMITTER SIGNAL JAMMED

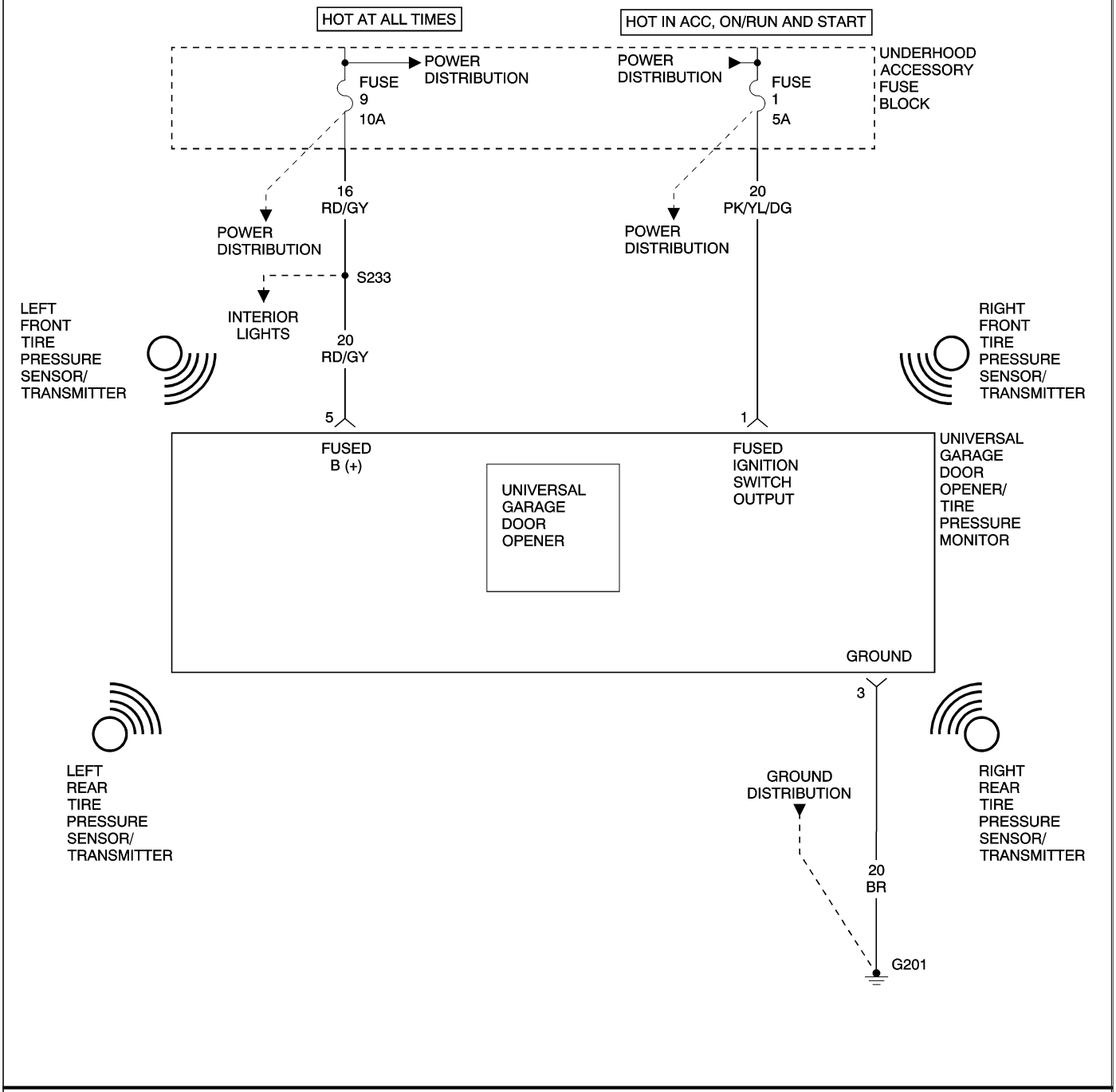

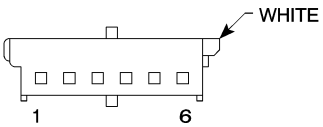

UNIVERSAL GARAGE DOOR OPENER/ TIRE PRESSURE MONITOR

81141b20

LEFT FRONT TIRE PRESSURE SENSOR/TRANSMITTER SIGNAL JAMMED — CONTINUED

When Monitored and Set Condition

- When Monitored: With the ignition on, the Tire Pressure Monitor (TPM) monitors the tire pressure sensor/transmitters approximately once a minute (60 – 68 seconds) when the vehicle speed is above 33 km/h (20 MPH).
- Set Condition: If the Tire Pressure Monitor (TPM) module receives an undetectable frequency transmission from the left front tire pressure sensor/transmitter, the DTC will be set.

POSSIBLE CAUSES
OUTSIDE RADIO FREQUENCY INTERFERENCE

Diagnostic Test

1. CHECK FOR CURRENT DTC

Turn the ignition on.
With the DRB III®, read the TPM DTCs.

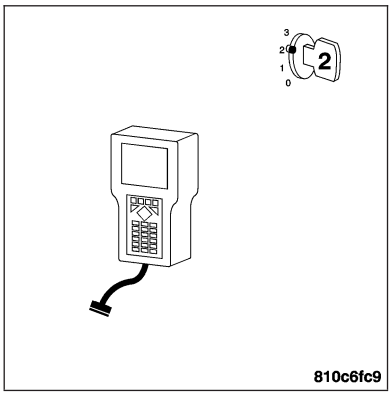

Is this DTC preset?

Yes >> For complete diagnosis of this DTC, refer to TIRE PRESSURE SENSOR/TRANSMITTER SIGNAL JAMMED.

No >> Go To 2

2. INTERMITTENT WIRING AND CONNECTORS

The conditions necessary to set this DTC are not present at this time.

Note: Check connectors — Clean/repair as necessary. Poor pin to terminal connections can set DTCs.Using the wiring diagram/schematic as a guide, inspect the wiring and connectors specific to this DTC. Wiggle the wires while checking for shorts and open circuits.

Note: Check for any Technical Service Bulletins that may apply.

Were there any problems found?

Yes >> Repair as necessary.
Perform TIRE PRESSURE VERIFICATION TEST.

No >> The condition that caused this DTC to set is currently not present. Inspect the related wiring harness for a possible intermittent condition.

LEFT REAR TIRE PRESSURE SENSOR/TRANSMITTER SIGNAL JAMMED

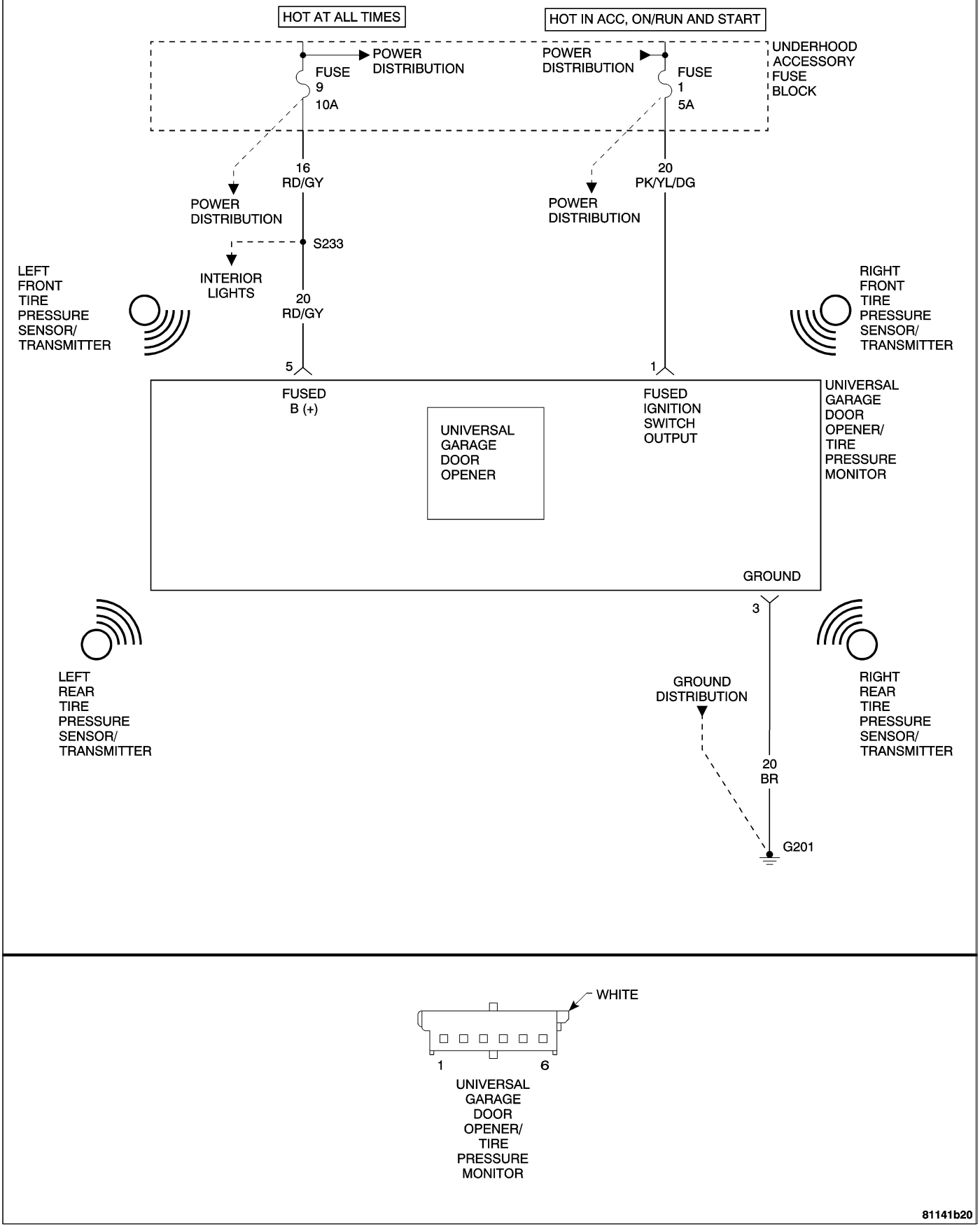

LEFT REAR TIRE PRESSURE SENSOR/TRANSMITTER SIGNAL JAMMED — CONTINUED

When Monitored and Set Condition

- When Monitored: With the ignition on, the Tire Pressure Monitor (TPM) monitors the tire pressure sensor/transmitters approximately once a minute (60 – 68 seconds) when the vehicle speed is above 33 km/h (20 MPH).
- Set Condition: If the Tire Pressure Monitor (TPM) module receives an undetectable frequency transmission from the left front tire pressure sensor/transmitter, the DTC will be set.

POSSIBLE CAUSES
OUTSIDE RADIO FREQUENCY INTERFERENCE

Diagnostic Test

1. CHECK FOR CURRENT DTC

Turn the ignition on.
With the DRB III®, read the TPM DTCs.

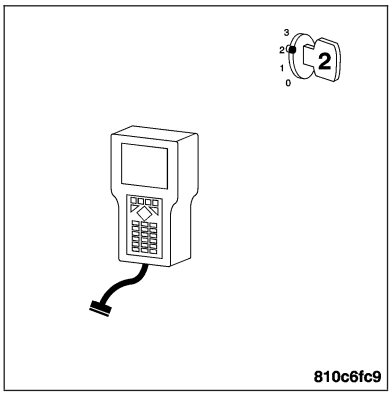

Is this DTC preset?

Yes >> For complete diagnosis of this DTC, refer to TIRE PRESSURE SENSOR/TRANSMITTER SIGNAL JAMMED.

No >> Go To 2

2. INTERMITTENT WIRING AND CONNECTORS

The conditions necessary to set this DTC are not present at this time.

Note: Check connectors — Clean/repair as necessary. Poor pin to terminal connections can set DTCs.Using the wiring diagram/schematic as a guide, inspect the wiring and connectors specific to this DTC. Wiggle the wires while checking for shorts and open circuits.

Note: Check for any Technical Service Bulletins that may apply.

Were there any problems found?

Yes >> Repair as necessary.
Perform TIRE PRESSURE VERIFICATION TEST.

No >> The condition that caused this DTC to set is currently not present. Inspect the related wiring harness for a possible intermittent condition.

RIGHT FRONT TIRE PRESSURE SENSOR/TRANSMITTER SIGNAL JAMMED

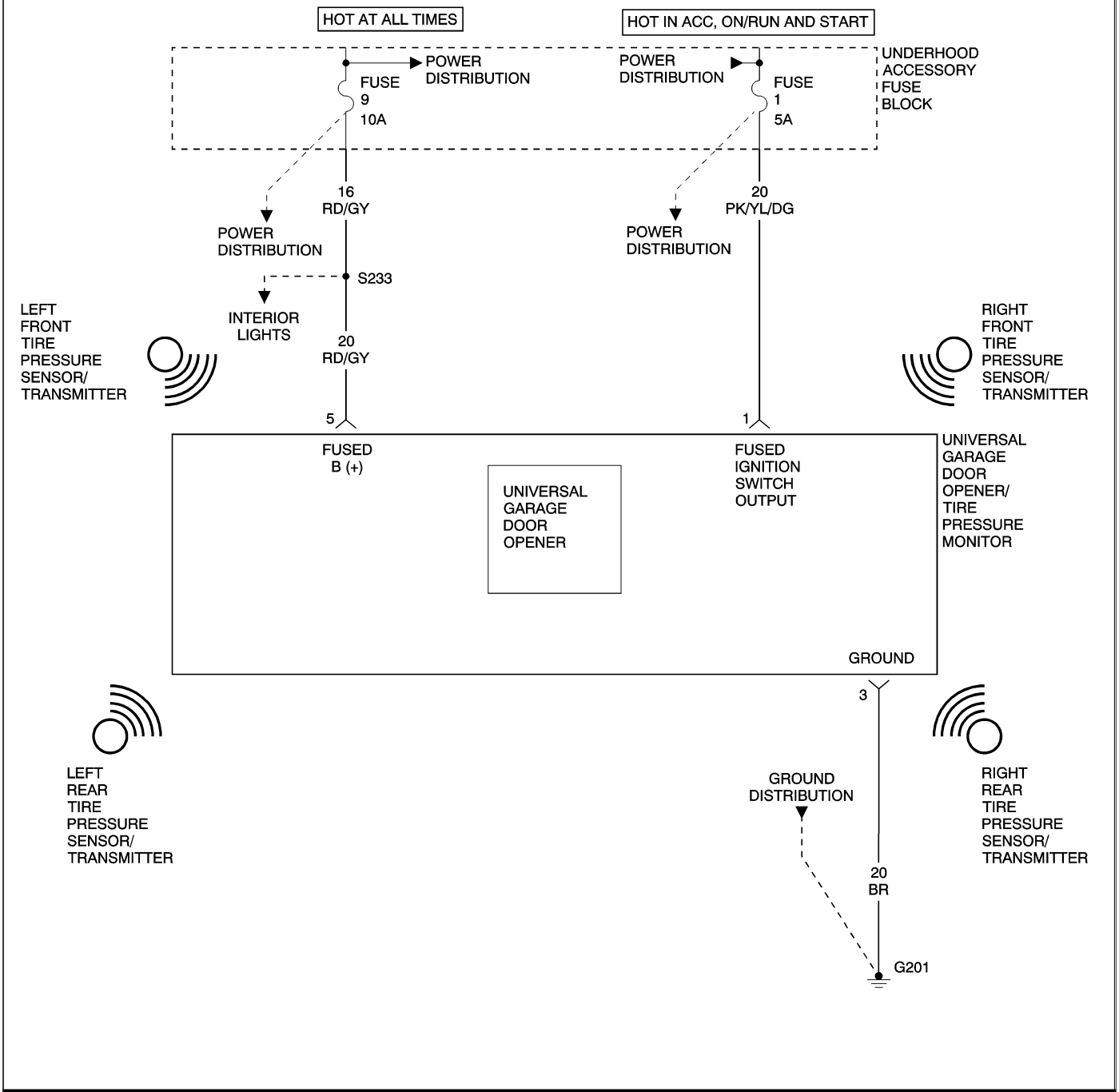

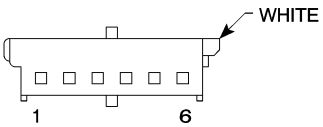

UNIVERSAL GARAGE DOOR OPENER/ TIRE PRESSURE MONITOR

81141b20

RIGHT FRONT TIRE PRESSURE SENSOR/TRANSMITTER SIGNAL JAMMED — CONTINUED

When Monitored and Set Condition

- When Monitored: With the ignition on, the Tire Pressure Monitor (TPM) monitors the tire pressure sensor/transmitters approximately once a minute (60 – 68 seconds) when the vehicle speed is above 33 km/h (20 MPH).
- Set Condition: If the Tire Pressure Monitor (TPM) module receives an undetectable frequency transmission from the left front tire pressure sensor/transmitter, the DTC will be set.

POSSIBLE CAUSES
OUTSIDE RADIO FREQUENCY INTERFERENCE

Diagnostic Test

1. CHECK FOR CURRENT DTC

Turn the ignition on.
With the DRB III®, read the TPM DTCs.

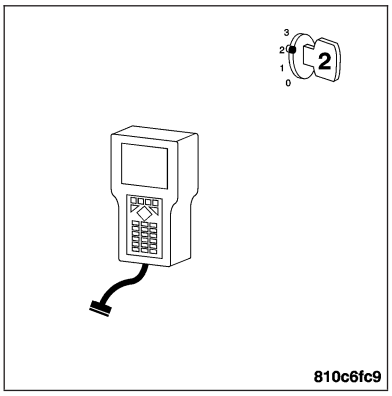

Is this DTC preset?

Yes >> For complete diagnosis of this DTC, refer to TIRE PRESSURE SENSOR/TRANSMITTER SIGNAL JAMMED.

No >> Go To 2

2. INTERMITTENT WIRING AND CONNECTORS

The conditions necessary to set this DTC are not present at this time.

Note: Check connectors — Clean/repair as necessary. Poor pin to terminal connections can set DTCs.Using the wiring diagram/schematic as a guide, inspect the wiring and connectors specific to this DTC. Wiggle the wires while checking for shorts and open circuits.

Note: Check for any Technical Service Bulletins that may apply.

Were there any problems found?

Yes >> Repair as necessary.
Perform TIRE PRESSURE VERIFICATION TEST.

No >> The condition that caused this DTC to set is currently not present. Inspect the related wiring harness for a possible intermittent condition.

RIGHT REAR TIRE PRESSURE SENSOR/TRANSMITTER SIGNAL JAMMED

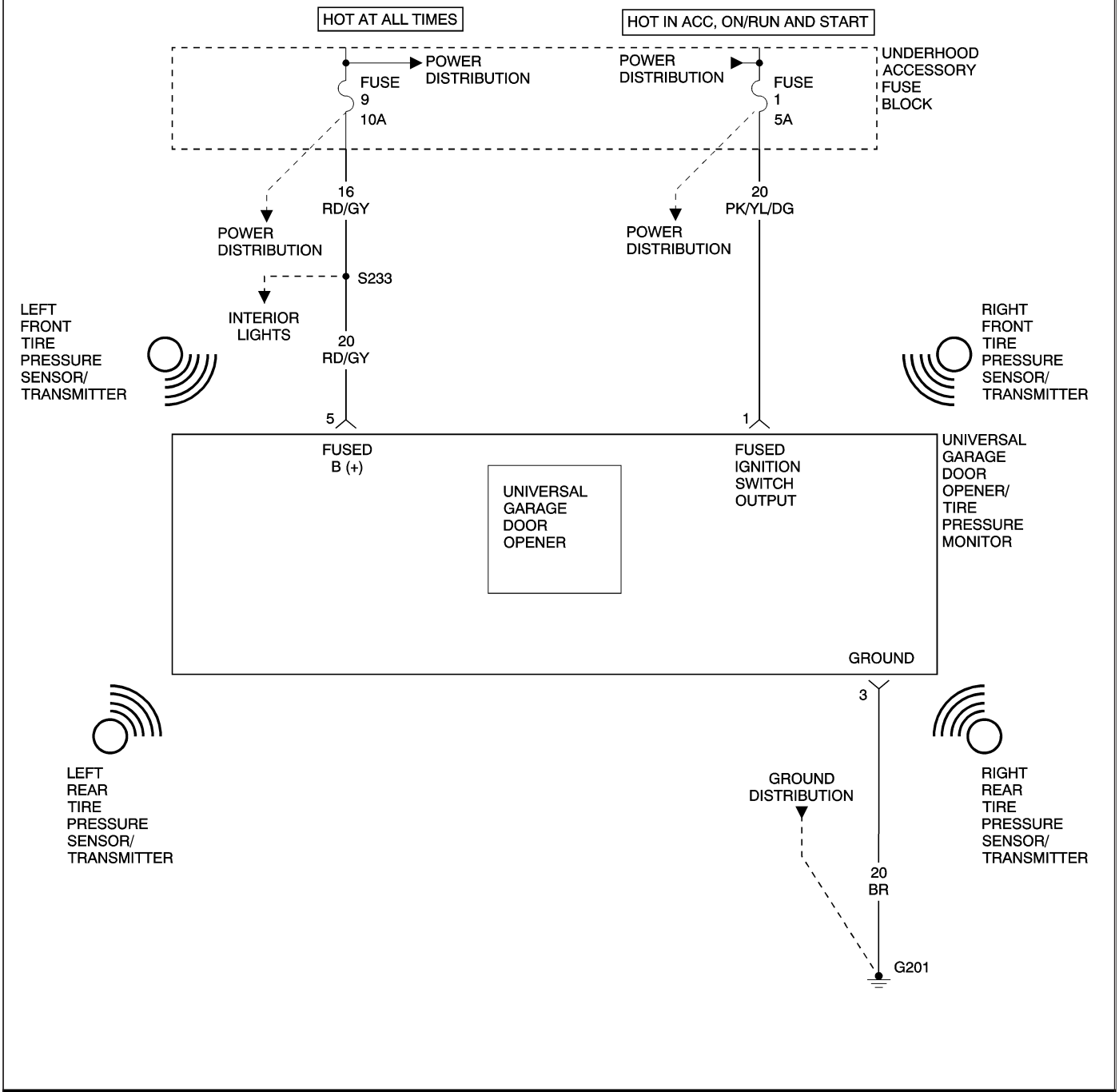

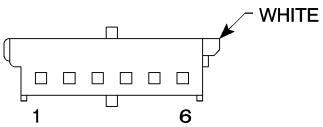

UNIVERSAL GARAGE DOOR OPENER/ TIRE PRESSURE MONITOR

81141b20

RIGHT REAR TIRE PRESSURE SENSOR/TRANSMITTER SIGNAL JAMMED — CONTINUED

When Monitored and Set Condition

- When Monitored: With the ignition on, the Tire Pressure Monitor (TPM) monitors the tire pressure sensor/transmitters approximately once a minute (60 – 68 seconds) when the vehicle speed is above 33 km/h (20 MPH).
- Set Condition: If the Tire Pressure Monitor (TPM) module receives an undetectable frequency transmission from the left front tire pressure sensor/transmitter, the DTC will be set.

POSSIBLE CAUSES
OUTSIDE RADIO FREQUENCY INTERFERENCE

Diagnostic Test

1. CHECK FOR CURRENT DTC

Turn the ignition on.
With the DRB III®, read the TPM DTCs.

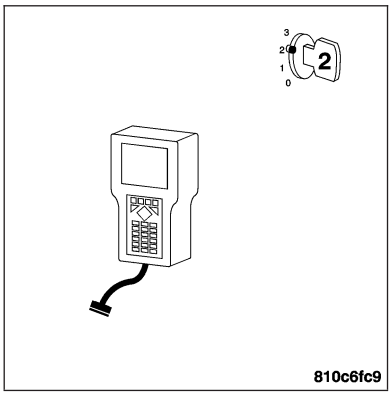

Is this DTC preset?

Yes >> For complete diagnosis of this DTC, refer to TIRE PRESSURE SENSOR/TRANSMITTER SIGNAL JAMMED.

No >> Go To 2

2. INTERMITTENT WIRING AND CONNECTORS

The conditions necessary to set this DTC are not present at this time.

Note: Check connectors — Clean/repair as necessary. Poor pin to terminal connections can set DTCs.Using the wiring diagram/schematic as a guide, inspect the wiring and connectors specific to this DTC. Wiggle the wires while checking for shorts and open circuits.

Note: Check for any Technical Service Bulletins that may apply.

Were there any problems found?

Yes >> Repair as necessary.
Perform TIRE PRESSURE VERIFICATION TEST.

No >> The condition that caused this DTC to set is currently not present. Inspect the related wiring harness for a possible intermittent condition.

TIRE PRESSURE SENSOR/TRANSMITTER

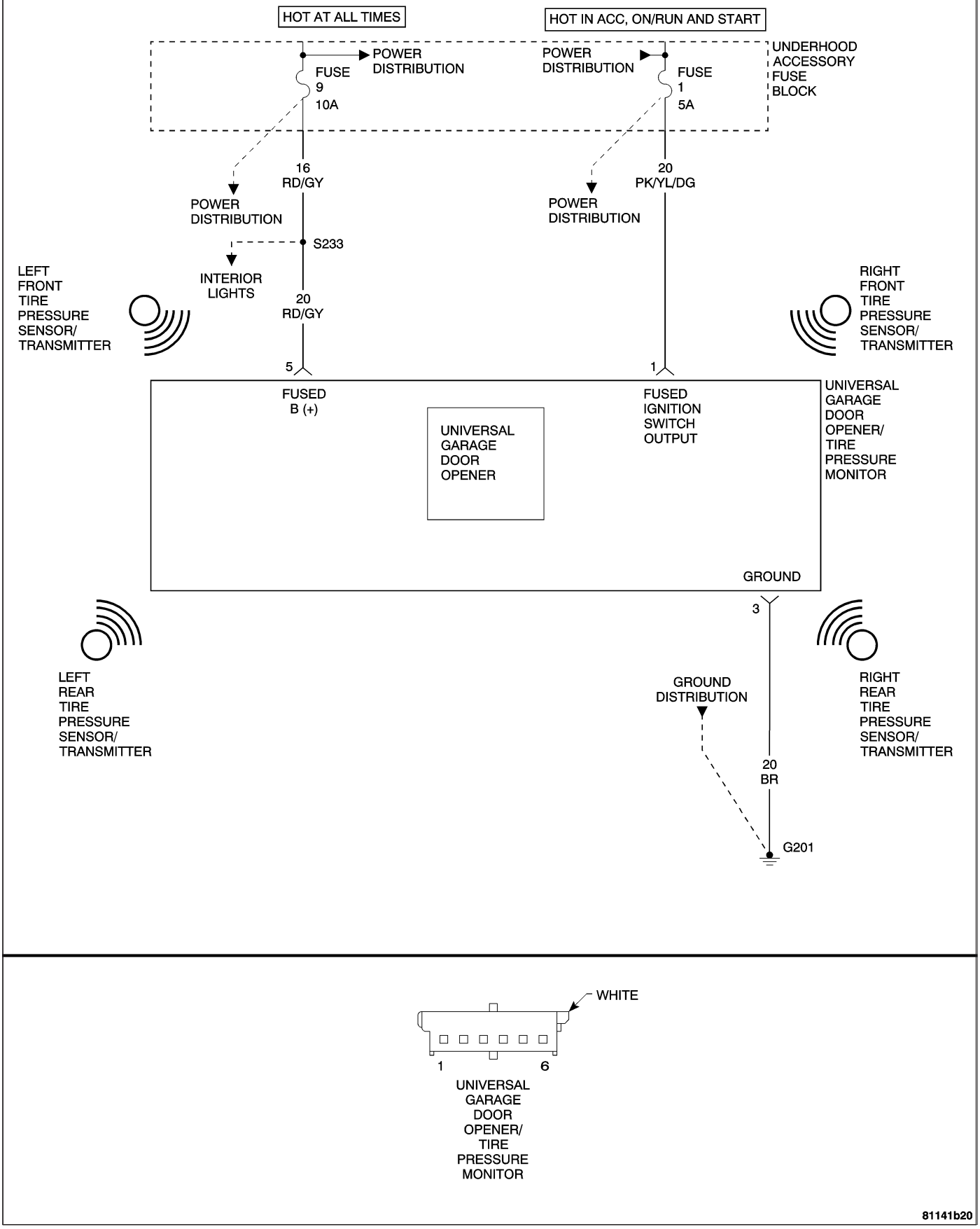

TIRE PRESSURE SENSOR/TRANSMITTER — CONTINUED

When Monitored and Set Condition

LEFT FRONT TIRE PRESSURE SENSOR/TRANSMITTER

- When Monitored: With the ignition on, the Tire Pressure Monitor (TPM) monitors the tire pressure sensor/transmitters approximately once a minute (60 – 68 seconds) when the vehicle speed is above 33 km/h (20 MPH).
- Set Condition: If the Tire Pressure Monitor (TPM) module receives a transmission from the left front tire pressure sensor/transmitter that the battery is low, the DTC will be set.

LEFT REAR TIRE PRESSURE SENSOR/TRANSMITTER

- When Monitored: With the ignition on, the Tire Pressure Monitor (TPM) monitors the tire pressure sensor/transmitters approximately once a minute (60 – 68 seconds) when the vehicle speed is above 33 km/h (20 MPH).
- Set Condition: If the Tire Pressure Monitor (TPM) module receives a transmission from the left rear tire pressure sensor/transmitter that the battery is low, the DTC will be set.

RIGHT FRONT TIRE PRESSURE SENSOR/TRANSMITTER

- When Monitored: With the ignition on, the Tire Pressure Monitor (TPM) monitors the tire pressure sensor/transmitters approximately once a minute (60 – 68 seconds) when the vehicle speed is above 33 km/h (20 MPH).
- Set Condition: If the Tire Pressure Monitor (TPM) module receives a transmission from the right front tire pressure sensor/transmitter that the battery is low, the DTC will be set.

RIGHT REAR TIRE PRESSURE SENSOR/TRANSMITTER

- When Monitored: With the ignition on, the Tire Pressure Monitor (TPM) monitors the tire pressure sensor/transmitters approximately once a minute (60 – 68 seconds) when the vehicle speed is above 33 km/h (20 MPH).
- Set Condition: If the Tire Pressure Monitor (TPM) module receives a transmission from the right rear tire pressure sensor/transmitter that the battery is low, the DTC will be set.

TRANSMITTER FAILURE

- When Monitored: With the ignition on, the Tire Pressure Monitor (TPM) monitors the tire pressure sensor/transmitters approximately once a minute (60 – 68 seconds) when the vehicle speed is above 33 km/h (20 MPH).
- Set Condition: If the Tire Pressure Monitor (TPM) module receives a transmission from a tire pressure sensor/transmitter that the battery is low, the DTC will be set.

POSSIBLE CAUSES
TIRE PRESSURE SENSOR/TRANSMITTER

For a complete Tire Pressure Monitor Circuit Diagram. **Refer to Page 22-36**

TIRE PRESSURE SENSOR/TRANSMITTER — CONTINUED

Diagnostic Test

1. INSPECT TIRE PRESSURE SENSOR/TRANSMITTERS

Turn the ignition on.
With the DRB III®, read DTCs.

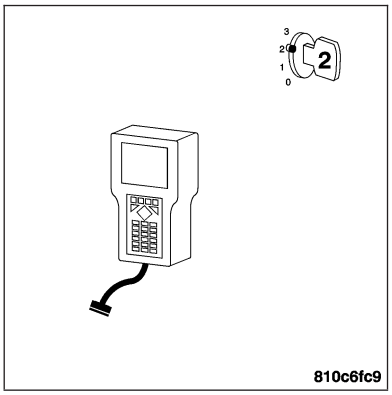

Does the DRB III® display a Tire Pressure Sensor/Transmitter DTC?

Yes >> Replace the Tire Pressure Sensor/Transmitter at the affected wheel.
Perform TIRE PRESSURE MONITOR VERIFICATION TEST.

No >> The condition that caused this DTC is currently not present. Inspect the related wiring harness for a possible intermittent condition.
Perform TIRE PRESSURE MONITOR VERIFICATION TEST.

TRANSMITTER FAILURE

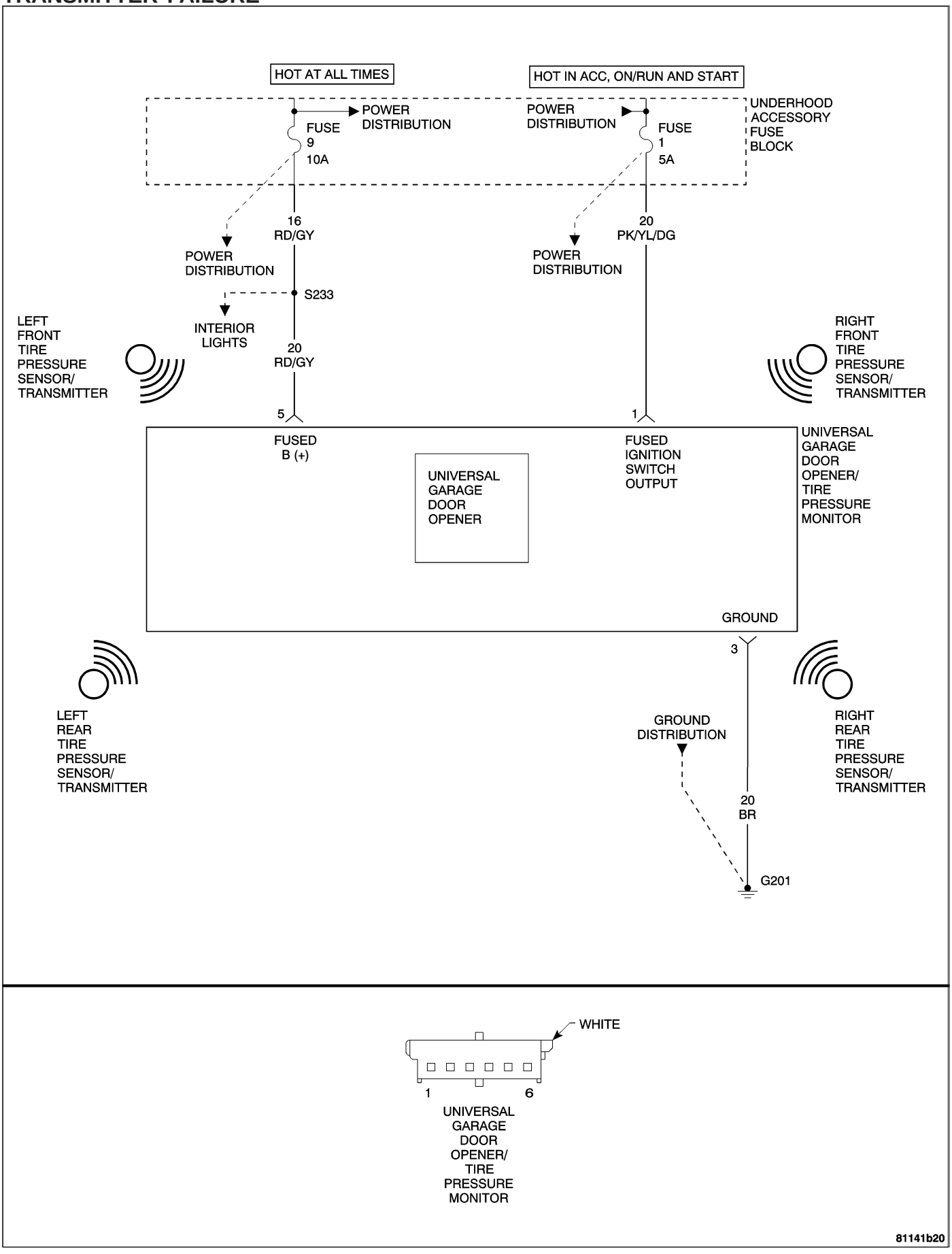

TRANSMITTER FAILURE — CONTINUED

When Monitored and Set Condition

- When Monitored: With the ignition on, the Tire Pressure Monitor (TPM) monitors the tire pressure sensor/transmitters approximately once a minute (60 – 68 seconds) when the vehicle speed is above 33 km/h (20 MPH).
- Set Condition: If the Tire Pressure Monitor (TPM) module receives a transmission from a tire pressure sensor/transmitter that the battery is low, the DTC will be set.

POSSIBLE CAUSES
TIRE PRESSURE SENSOR/TRANSMITTER

Diagnostic Test

1. CHECK FOR CURRENT DTC

Turn the ignition on.
With the DRB III®, read the TCM DTCs.

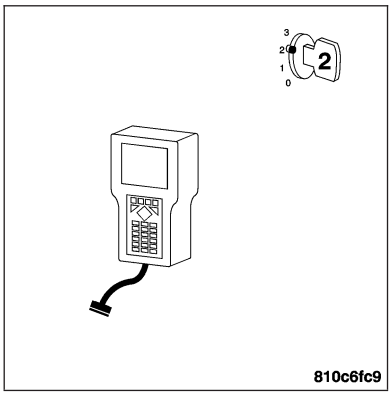

Is this DTC preset?

Yes >> For complete diagnosis of this DTC, refer to TIRE PRESSURE SENSOR/TRANSMITTER.

No >> Go To 2

2. INTERMITTENT WIRING AND CONNECTORS

The conditions necessary to set this DTC are not present at this time.

Note: Check connectors — Clean/repair as necessary. Poor pin to terminal connections can set DTCs.Using the wiring diagram/schematic as a guide, inspect the wiring and connectors specific to this DTC. Wiggle the wires while checking for shorts and open circuits.

Note: Check for any Technical Service Bulletins that may apply.

Were there any problems found?

Yes >> Repair as necessary.
Perform TIRE PRESSURE VERIFICATION TEST.

No >> The condition that caused this DTC to set is currently not present. Inspect the related wiring harness for a possible intermittent condition.

LEFT FRONT TIRE PRESSURE SENSOR/TRANSMITTER

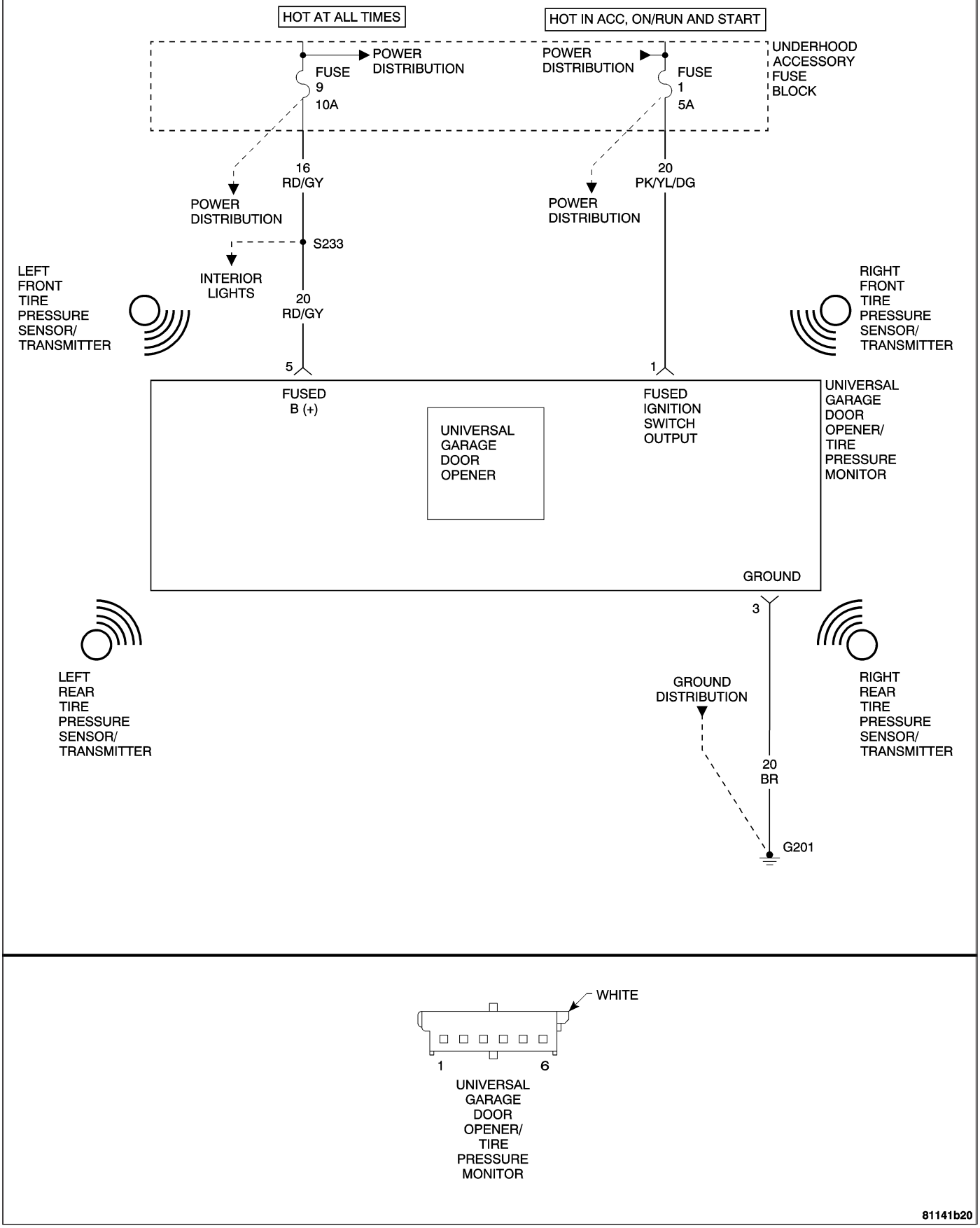

LEFT FRONT TIRE PRESSURE SENSOR/TRANSMITTER — CONTINUED

When Monitored and Set Condition

- When Monitored: With the ignition on, the Tire Pressure Monitor (TPM) monitors the tire pressure sensor/transmitters approximately once a minute (60 – 68 seconds) when the vehicle speed is above 33 km/h (20 MPH).
- Set Condition: If the Tire Pressure Monitor (TPM) module receives a transmission from the left front tire pressure sensor/transmitter that the battery is low, the DTC will be set.

POSSIBLE CAUSES
TIRE PRESSURE SENSOR/TRANSMITTER

Diagnostic Test

1. CHECK FOR CURRENT DTC

Turn the ignition on.
With the DRB III®, read the TCM DTCs.

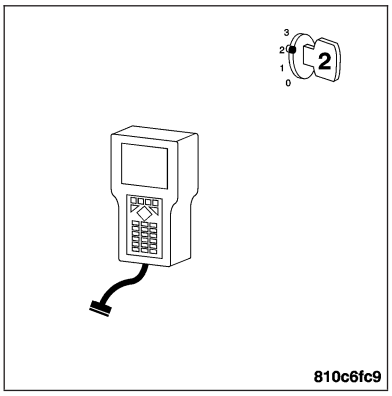

Is this DTC preset?

Yes >> For complete diagnosis of this DTC, refer to TIRE PRESSURE SENSOR/TRANSMITTER.

No >> Go To 2

2. INTERMITTENT WIRING AND CONNECTORS

The conditions necessary to set this DTC are not present at this time.

Note: Check connectors — Clean/repair as necessary. Poor pin to terminal connections can set DTCs.Using the wiring diagram/schematic as a guide, inspect the wiring and connectors specific to this DTC. Wiggle the wires while checking for shorts and open circuits.

Note: Check for any Technical Service Bulletins that may apply.

Were there any problems found?

Yes >> Repair as necessary.
Perform TIRE PRESSURE VERIFICATION TEST.

No >> The condition that caused this DTC to set is currently not present. Inspect the related wiring harness for a possible intermittent condition.

LEFT REAR TIRE PRESSURE SENSOR/TRANSMITTER

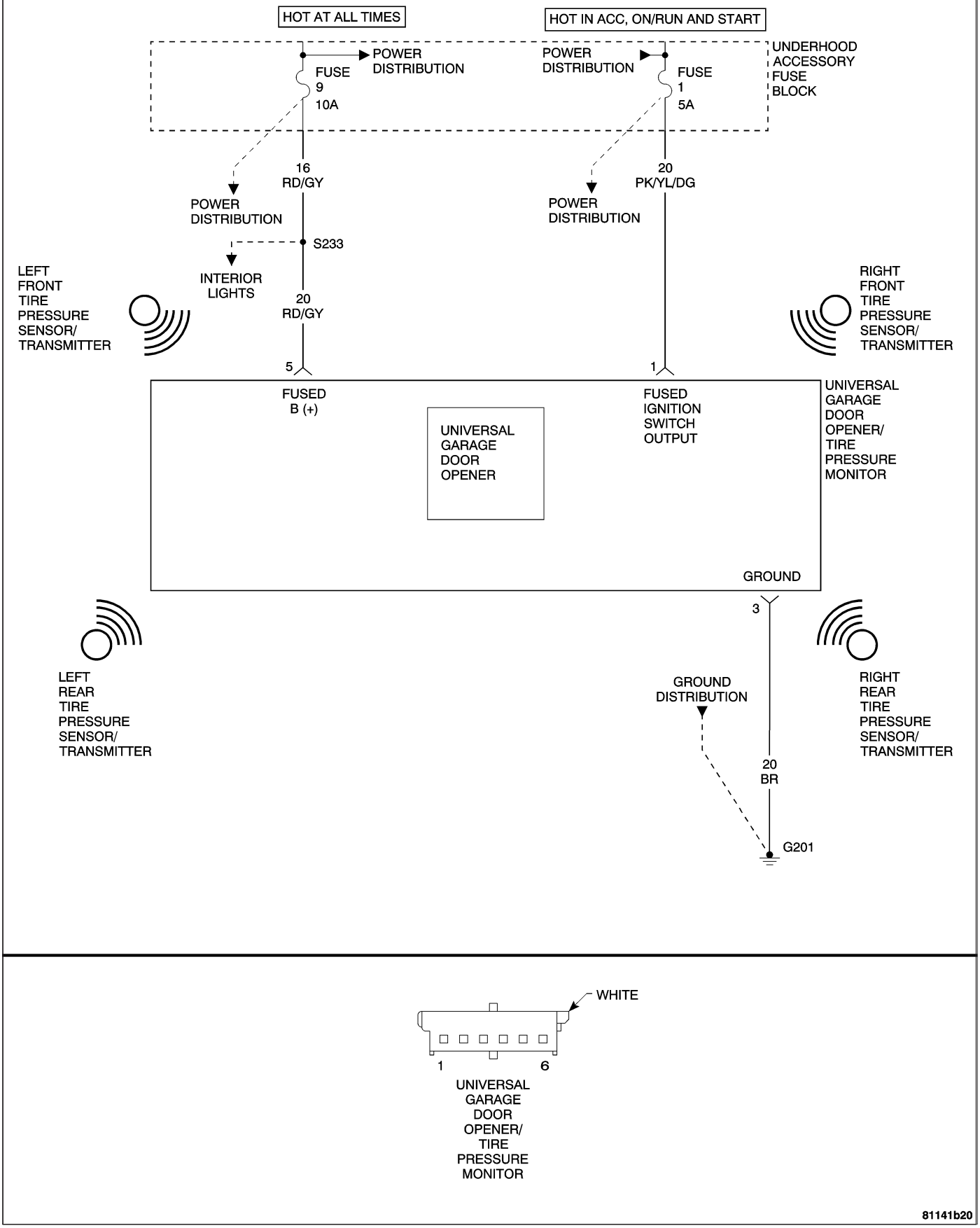

LEFT REAR TIRE PRESSURE SENSOR/TRANSMITTER — CONTINUED

When Monitored and Set Condition

- When Monitored: With the ignition on, the Tire Pressure Monitor (TPM) monitors the tire pressure sensor/transmitters approximately once a minute (60 – 68 seconds) when the vehicle speed is above 33 km/h (20 MPH).
- Set Condition: If the Tire Pressure Monitor (TPM) module receives a transmission from the left rear tire pressure sensor/transmitter that the battery is low, the DTC will be set.

POSSIBLE CAUSES
TIRE PRESSURE SENSOR/TRANSMITTER

Diagnostic Test

1. CHECK FOR CURRENT DTC

Turn the ignition on.
With the DRB III®, read the TCM DTCs.

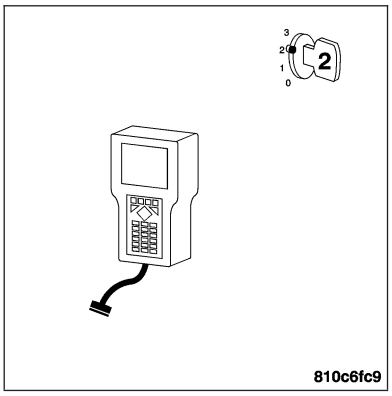

Is this DTC preset?

Yes >> For complete diagnosis of this DTC, refer to TIRE PRESSURE SENSOR/TRANSMITTER.

No >> Go To 2

2. INTERMITTENT WIRING AND CONNECTORS

The conditions necessary to set this DTC are not present at this time.

Note: Check connectors — Clean/repair as necessary. Poor pin to terminal connections can set DTCs.Using the wiring diagram/schematic as a guide, inspect the wiring and connectors specific to this DTC. Wiggle the wires while checking for shorts and open circuits.

Note: Check for any Technical Service Bulletins that may apply.

Were there any problems found?

Yes >> Repair as necessary.
Perform TIRE PRESSURE VERIFICATION TEST.

No >> The condition that caused this DTC to set is currently not present. Inspect the related wiring harness for a possible intermittent condition.

RIGHT FRONT TIRE PRESSURE SENSOR/TRANSMITTER

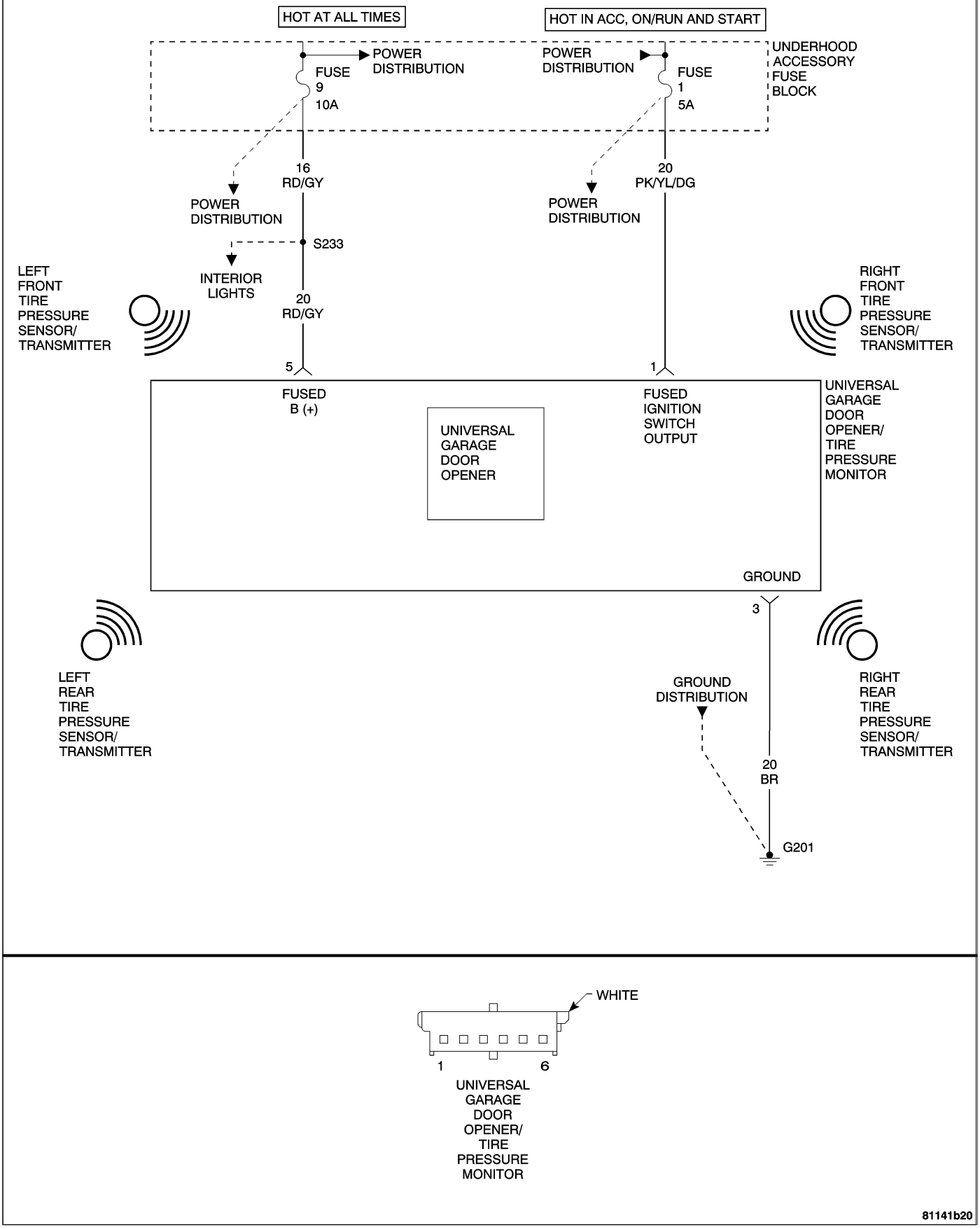

RIGHT FRONT TIRE PRESSURE SENSOR/TRANSMITTER — CONTINUED

When Monitored and Set Condition

- When Monitored: With the ignition on, the Tire Pressure Monitor (TPM) monitors the tire pressure sensor/transmitters approximately once a minute (60 – 68 seconds) when the vehicle speed is above 33 km/h (20 MPH).
- Set Condition: If the Tire Pressure Monitor (TPM) module receives a transmission from the right front tire pressure sensor/transmitter that the battery is low, the DTC will be set.

POSSIBLE CAUSES
TIRE PRESSURE SENSOR/TRANSMITTER

Diagnostic Test

1. CHECK FOR CURRENT DTC

Turn the ignition on.
With the DRB III®, read the TCM DTCs.

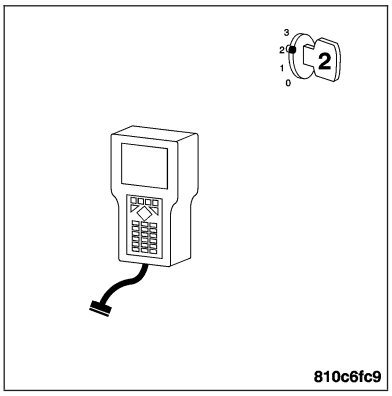

Is this DTC preset?

Yes >> For complete diagnosis of this DTC, refer to TIRE PRESSURE SENSOR/TRANSMITTER.

No >> Go To 2

2. INTERMITTENT WIRING AND CONNECTORS

The conditions necessary to set this DTC are not present at this time.

Note: Check connectors — Clean/repair as necessary. Poor pin to terminal connections can set DTCs.Using the wiring diagram/schematic as a guide, inspect the wiring and connectors specific to this DTC. Wiggle the wires while checking for shorts and open circuits.

Note: Check for any Technical Service Bulletins that may apply.

Were there any problems found?

Yes >> Repair as necessary.
Perform TIRE PRESSURE VERIFICATION TEST.

No >> The condition that caused this DTC to set is currently not present. Inspect the related wiring harness for a possible intermittent condition.

RIGHT REAR TIRE PRESSURE SENSOR/TRANSMITTER

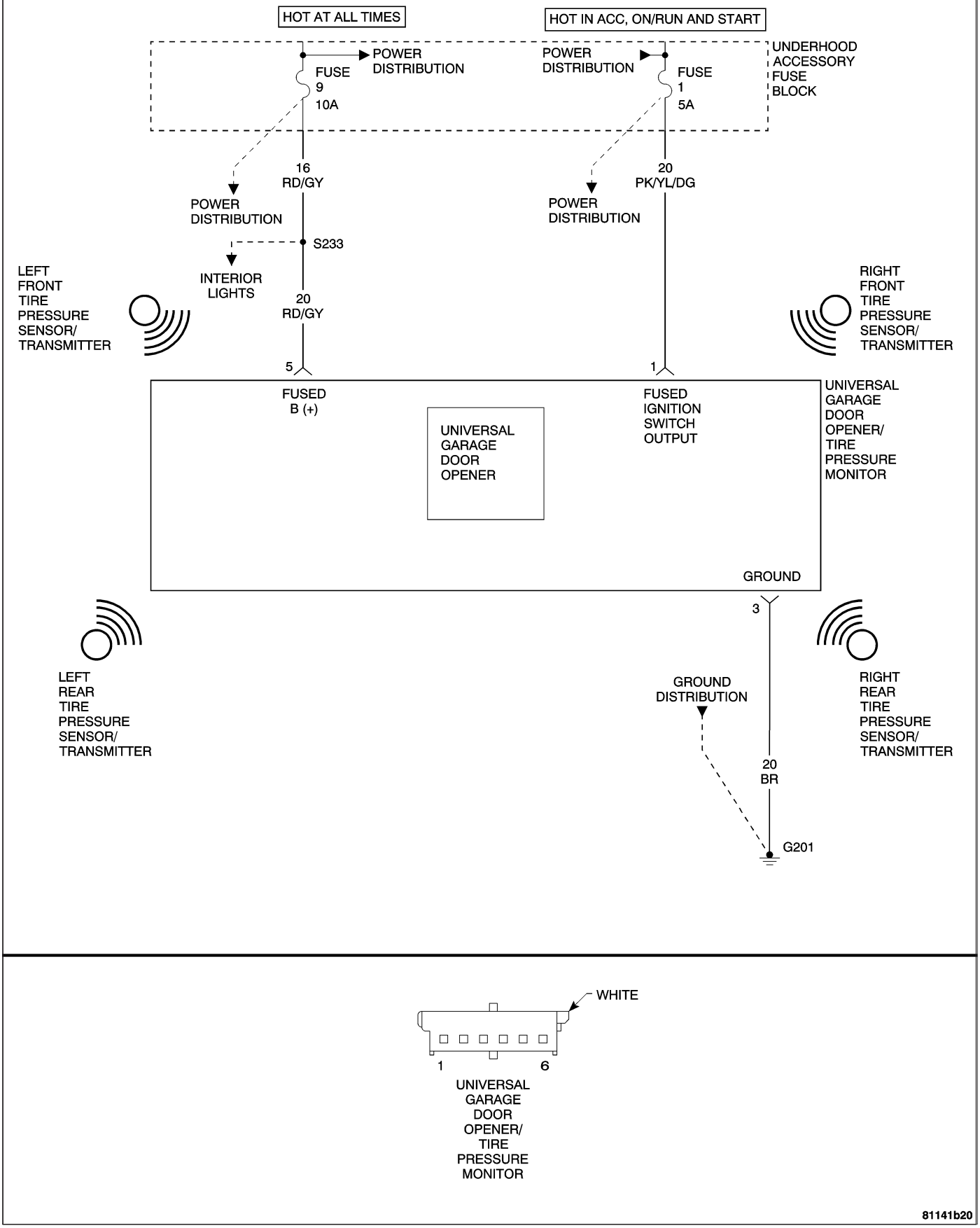

RIGHT REAR TIRE PRESSURE SENSOR/TRANSMITTER — CONTINUED

When Monitored and Set Condition

- When Monitored: With the ignition on, the Tire Pressure Monitor (TPM) monitors the tire pressure sensor/transmitters approximately once a minute (60 – 68 seconds) when the vehicle speed is above 33 km/h (20 MPH).
- Set Condition: If the Tire Pressure Monitor (TPM) module receives a transmission from the right rear tire pressure sensor/transmitter that the battery is low, the DTC will be set.

POSSIBLE CAUSES
TIRE PRESSURE SENSOR/TRANSMITTER

Diagnostic Test

1. CHECK FOR CURRENT DTC

Turn the ignition on.
With the DRB III®, read the TCM DTCs.

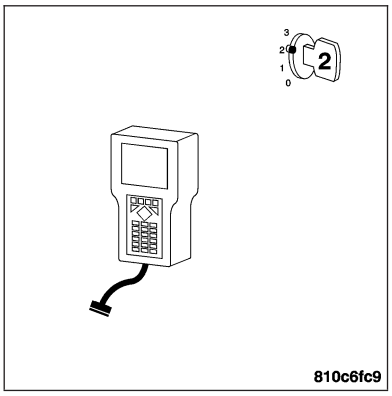

Is this DTC preset?

Yes >> For complete diagnosis of this DTC, refer to TIRE PRESSURE SENSOR/TRANSMITTER.

No >> Go To 2

2. INTERMITTENT WIRING AND CONNECTORS

The conditions necessary to set this DTC are not present at this time.

Note: Check connectors — Clean/repair as necessary. Poor pin to terminal connections can set DTCs.Using the wiring diagram/schematic as a guide, inspect the wiring and connectors specific to this DTC. Wiggle the wires while checking for shorts and open circuits.

Note: Check for any Technical Service Bulletins that may apply.

Were there any problems found?

Yes >> Repair as necessary.
Perform TIRE PRESSURE VERIFICATION TEST.

No >> The condition that caused this DTC to set is currently not present. Inspect the related wiring harness for a possible intermittent condition.

TIRE PRESSURE SENSOR/TRANSMITTER LOW BATTERY

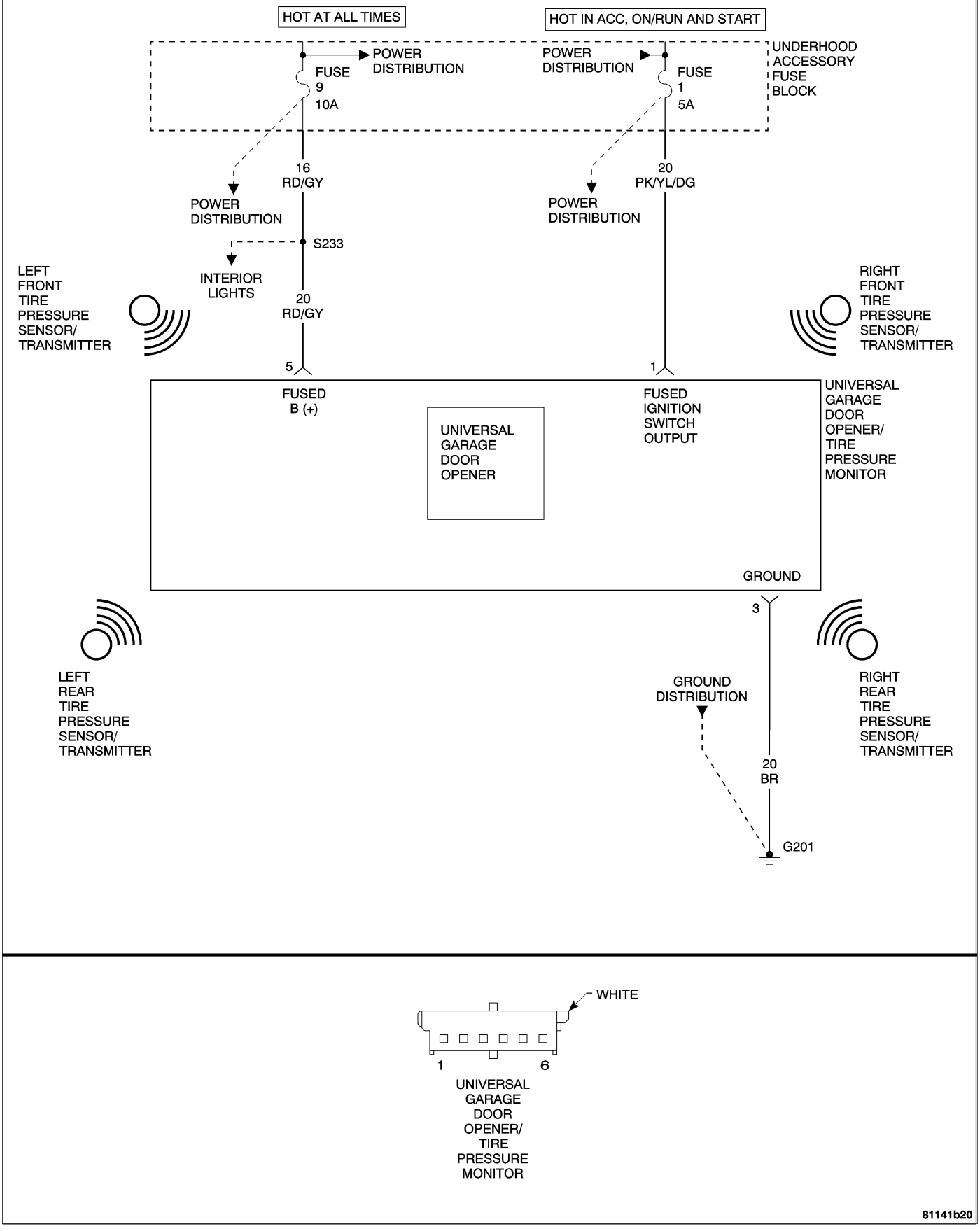

TIRE PRESSURE SENSOR/TRANSMITTER LOW BATTERY — CONTINUED

When Monitored And Set Condition

LEFT FRONT TIRE PRESSURE SENSOR/TRANSMITTER LOW BATTERY

- When Monitored: With the ignition on, the Tire Pressure Monitor (TPM) monitors the tire pressure sensor/transmitters approximately once a minute (60 – 68 seconds) when the vehicle speed is above 33 km/h (20 MPH).
- Set Condition: If the Tire Pressure Monitor (TPM) module receives a transmission from the left front tire pressure sensor/transmitter that the battery is low, the DTC will be set.

LEFT REAR TIRE PRESSURE SENSOR/TRANSMITTER LOW BATTERY

- When Monitored: With the ignition on, the Tire Pressure Monitor (TPM) monitors the tire pressure sensor/transmitters approximately once a minute (60 – 68 seconds) when the vehicle speed is above 33 km/h (20 MPH).
- Set Condition: If the Tire Pressure Monitor (TPM) module receives a transmission from the left rear tire pressure sensor/transmitter that the battery is low, the DTC will be set.

RIGHT FRONT TIRE PRESSURE SENSOR/TRANSMITTER LOW BATTERY

- When Monitored: With the ignition on, the Tire Pressure Monitor (TPM) monitors the tire pressure sensor/transmitters approximately once a minute (60 – 68 seconds) when the vehicle speed is above 33 km/h (20 MPH).
- Set Condition: If the Tire Pressure Monitor (TPM) module receives a transmission from the right front tire pressure sensor/transmitter that the battery is low, the DTC will be set.

RIGHT REAR TIRE PRESSURE SENSOR/TRANSMITTER LOW BATTERY

- When Monitored: With the ignition on, the Tire Pressure Monitor (TPM) monitors the tire pressure sensor/transmitters approximately once a minute (60 – 68 seconds) when the vehicle speed is above 33 km/h (20 MPH).
- Set Condition: If the Tire Pressure Monitor (TPM) module receives a transmission from the right rear tire pressure sensor/transmitter that the battery is low, the DTC will be set.

LOW BATTERY

- When Monitored: With the ignition on, the Tire Pressure Monitor (TPM) monitors the tire pressure sensor/transmitters approximately once a minute (60 – 68 seconds) when the vehicle speed is above 33 km/h (20 MPH).
- Set Condition: If the Tire Pressure Monitor (TPM) module receives a transmission from a tire pressure sensor/transmitter that the battery is low, the DTC will be set.

POSSIBLE CAUSES
TIRE PRESSURE SENSOR/TRANSMITTER LOW BATTERY

For a complete Tire Pressure Monitor Circuit Diagram **Refer to Page 22-36**.

TIRE PRESSURE SENSOR/TRANSMITTER LOW BATTERY — CONTINUED

Diagnostic Test

1. INSPECT TIRE PRESSURE SENSOR/TRANSMITTERS

Turn the ignition on.
With the DRB III®, read DTCs.

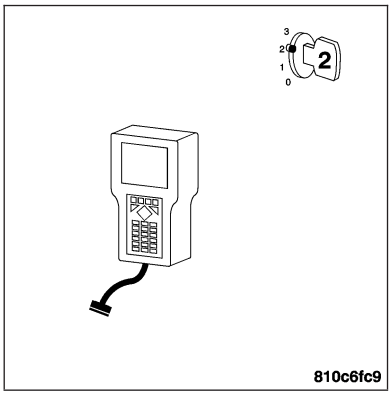

Does the DRB III® display a Sensor/Transmitter Low Battery DTC?

Yes >> Replace the Tire Pressure Sensor/Transmitter at the affected wheel. **Refer to Page 22-53**
Perform TIRE PRESSURE MONITOR VERIFICATION TEST.

No >> The condition that caused this DTC is currently not present. Inspect the related wiring harness for a possible intermittent condition.
Perform TIRE PRESSURE MONITOR VERIFICATION TEST.

TIRE PRESSURE VERIFICATION TEST

1.

Disconnect all jumper wires and reconnect all previously disconnected components and connectors.

Drive the vehicle at 40 km/h (25 MPH) for at least 2 minutes.

With the DRB III®, confirm that no DTCs are present and that all components are functioning properly.

If a DTC is present, refer to the appropriate category and select the corresponding symptom.

Are any DTCs present?

YES >> Repair is not complete, refer to appropriate symptom.

NO >> Repair is complete.

SCHEMATICS AND DIAGRAMS

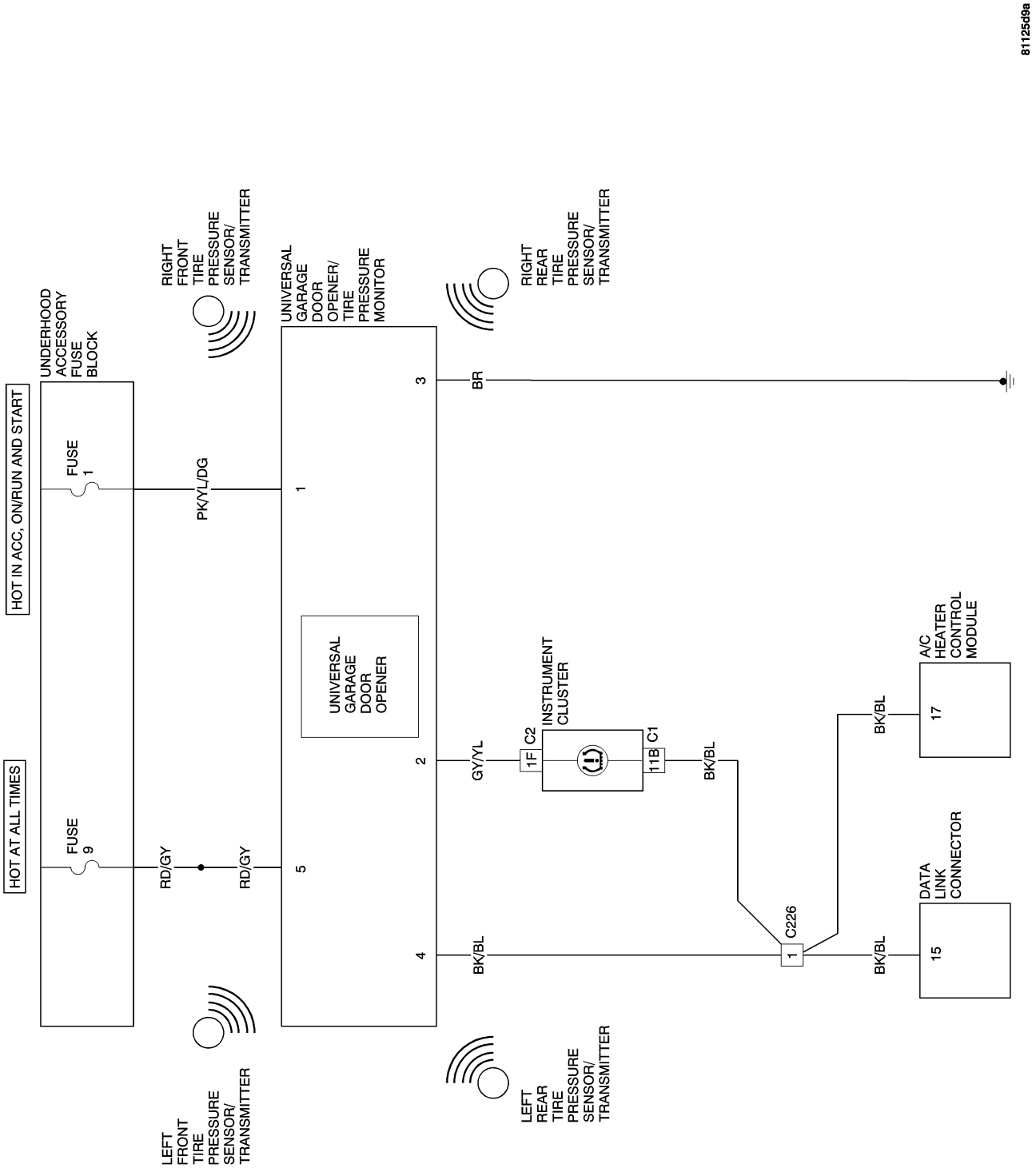

TIRE PRESSURE MONITOR CIRCUIT DIAGRAM

TIRES/WHEELS - SERVICE INFORMATION

TABLE OF CONTENTS

page

TIRES/WHEELS - SERVICE INFORMATION
DIAGNOSIS AND TESTING - TIRE AND WHEEL RUNOUT 38
STANDARD PROCEDURE
TIRE AND WHEEL BALANCE 42
STANDARD PROCEDURE - MATCH MOUNTING 43
STANDARD PROCEDURE - TIRE ROTATION . 45
STANDARD PROCEDURE - TIRE AND WHEEL INSTALLATION 46
TIRE PRESSURE MONITORING
DESCRIPTION 46
OPERATION 48
DIAGNOSIS AND TESTING - TIRE PRESSURE MONITORING SYSTEM 48
SPECIFICATIONS
TIRE PRESSURE MONITORING SYSTEM . . . 49
MODULE
DESCRIPTION 49
OPERATION 50
STANDARD PROCEDURE - TPM MODULE PROGRAMMING 50
REMOVAL 51
INSTALLATION 52
SENSOR
DESCRIPTION 52
OPERATION 53
REMOVAL 53
INSTALLATION 55

page

TIRES
DESCRIPTION
TIRES 56
RADIAL - PLY TIRES 57
TIRE INFLATION PRESSURES 57
TIRE PRESSURE FOR HIGH SPEED 58
REPLACEMENT TIRES 58
DIAGNOSIS AND TESTING
DIAGNOSIS AND TESTING - TREAD WEAR INDICATORS 59
DIAGNOSIS AND TESTING - TIRE WEAR PATTERNS. 59
DIAGNOSIS AND TESTING - TIRE NOISE OR VIBRATION 59
DIAGNOSIS AND TESTING - TIRE/VEHICLE LEAD 60
STANDARD PROCEDURE
REPAIRING LEAKS 60
STANDARD PROCEDURE - DRAINING TIREFIT 60
CLEANING 61
SPECIFICATIONS - TIRES 61
WHEELS
DESCRIPTION
WHEELS 62
DIAGNOSIS AND TESTING
WHEEL INSPECTION 62
STANDARD PROCEDURE
WHEEL REPLACEMENT 63

TIRES/WHEELS - SERVICE INFORMATION

DIAGNOSIS AND TESTING - TIRE AND WHEEL RUNOUT

WHEELS

Radial runout (1) is the difference between the high and low points on the wheel. This is measured by using a dial indicator (1) on the inner portion of the wheel (6).

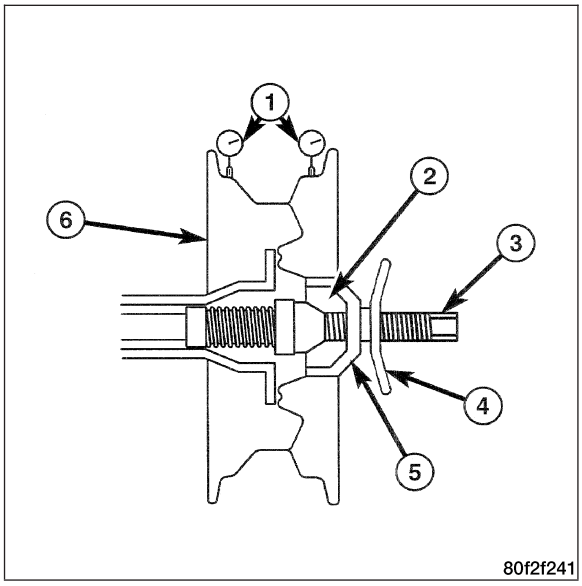

Lateral runout (2) is the side to side movement of the wheel. This is measured by using a dial indicator (1) on the inner portion of the wheel (6) rim.

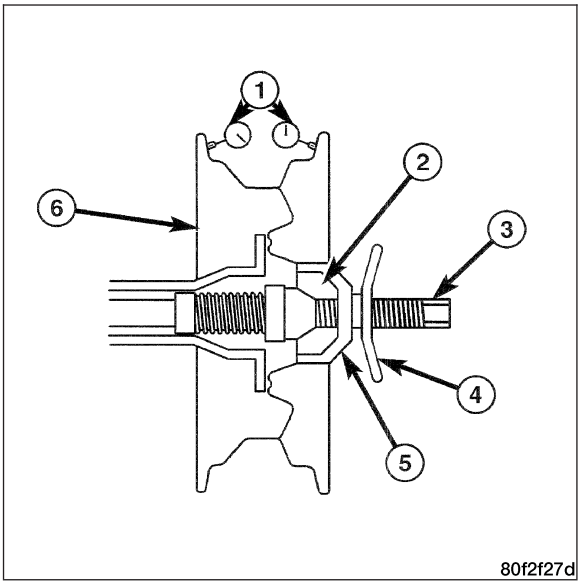

TIRES

- Radial runout (1) of more than 1.5 mm (.060 inch) measured at the center line of the tread may cause the vehicle to shake.
- Lateral runout (2) of more than 1.0 mm (.040 inch) measured near the shoulder of the tire may cause the vehicle to shake.

Sometimes radial runout can be reduced. Relocate the wheel and tire assembly on the mounting bolts (See Method 1). If this does not reduce runout to an acceptable level, the tire can be rotated on the wheel. (See Method 2).

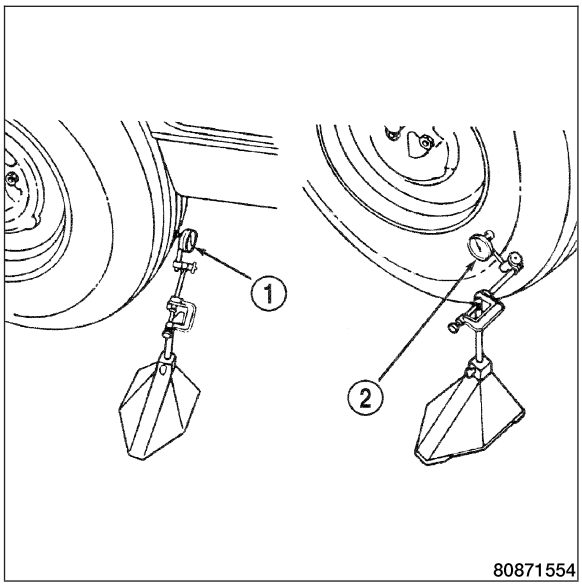

METHOD 1 (RELOCATE WHEEL ON HUB)

1. Drive the vehicle a short distance to eliminate tire flat spotting from a parked position.
2. Check the wheel bearings and adjust or replace if necessary.
   - Front wheel bearings (2).

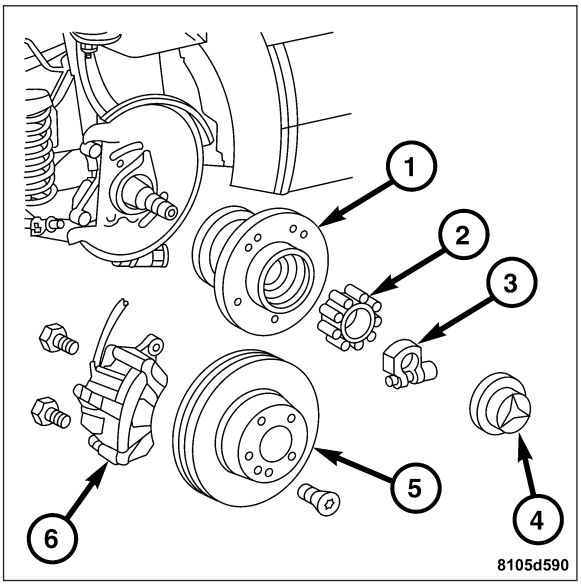

- Rear wheel bearings (5).

3. Check the wheel mounting surface (1) of the wheel hub.
4. Relocate the wheel on the mounting surface of the wheel hub (1), two bolts over from the original position.
5. Tighten wheel bolts until all are properly torqued, to eliminate brake distortion 110 N·m (81 ft. lbs.).

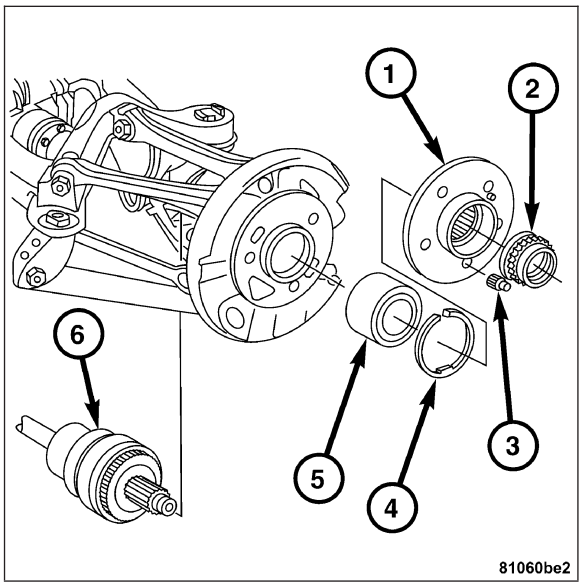

6. Check the radial runout (1). If it is still excessive, mark the tire sidewall, wheel, and bolt at the point of maximum runout and proceed to Method 2.

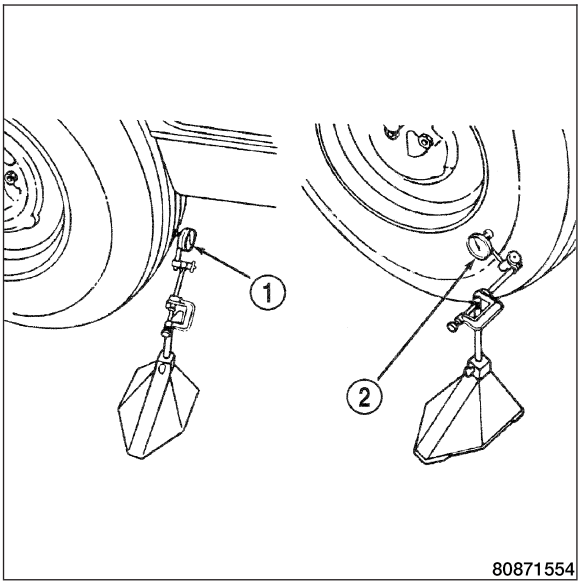

METHOD 2 (RELOCATE TIRE ON WHEEL)

Note: Rotating the tire on wheel is particularly effective when there is runout in both tire and wheel.

1. Remove the tire from the wheel and mount the wheel on a service dynamic balance machine.
2. Check the wheel radial runout and the lateral runout.
   - Radial runout (1). This is measured by using a dial indicator (1) on the inner portion of the wheel (6).

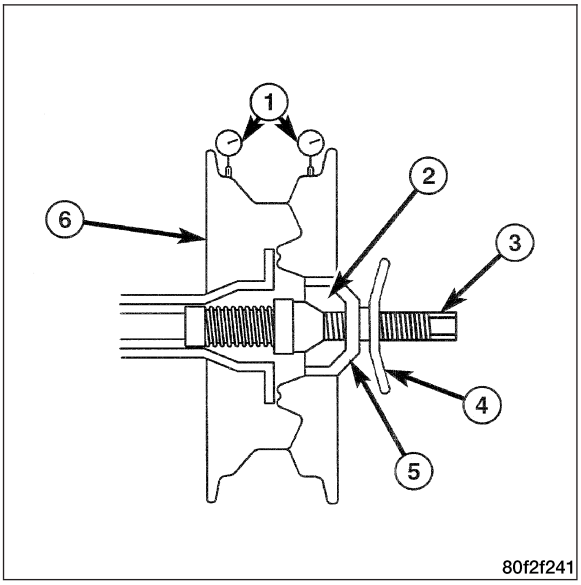

   - Lateral runout (1). This is measured by using a dial indicator (1) on the inner portion of the wheel (6) rim.
3. If the point of the greatest wheel lateral runout is near the original mark, remount the tire 180 degrees. Recheck the runout or match mount.

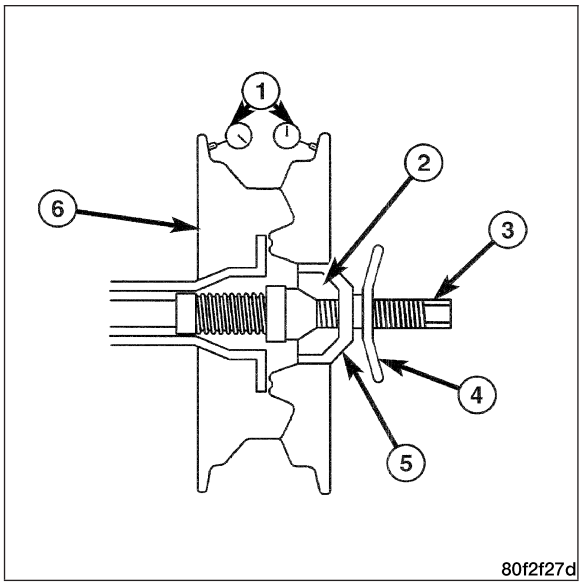

STANDARD PROCEDURE

TIRE AND WHEEL BALANCE

It is recommended that a two plane service dynamic balancer be used when a tire and wheel assembly require balancing. Refer to balancer operation instructions for proper cone mounting procedures. Typically aluminum wheels use the back cone mounting method without a cone spring.

Note: Static should be used only when a two plane balancer is not available.

Note: Aluminum wheels require coated balance weights and special alignment equipment.

Wheel balancing can be accomplished with either on or off vehicle equipment. When using on-vehicle balancing equipment, remove the opposite wheel/tire. Off-vehicle balancing is recommended.

For static balancing, find the location of the heavy spot (1) causing the imbalance. Counter balance wheel directly opposite the heavy spot. Determine weight required to counter balance the area of imbalance. Place half of this weight (3) on the **inner** rim flange and the other half on the **outer** rim flange.

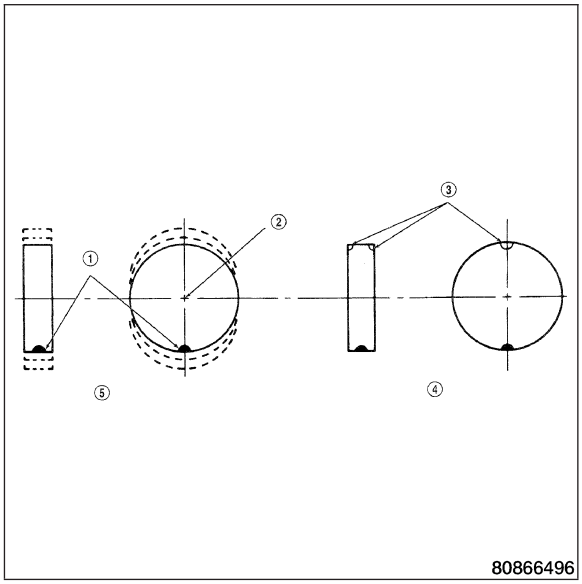

For dynamic balancing, the balancing equipment is designed to locate the amount of weight (2) to be applied to both the inner and outer rim flange.

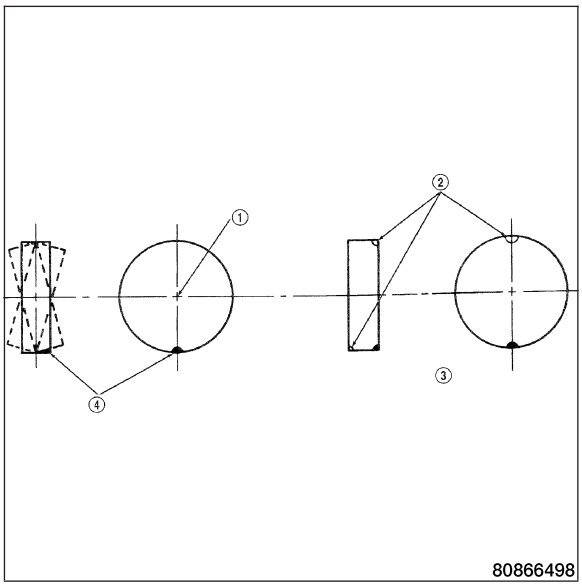

STANDARD PROCEDURE - MATCH MOUNTING

Tires and wheels are not match mounted at the factory. Match mounting is a technique used to reduce runout in the wheel/tire assembly. This means that the high spot of the tire is aligned with the low spot on the wheel rim. The high spot on the tire is marked with a paint mark or a bright colored adhesive label on the outboard sidewall. The low spot on the rim is identified with a label on the outside of the rim and a dot on the inside of the rim. If the outside label has been removed the tire will have to be removed to locate the dot on the inside of the rim.

Before dismounting a tire from its wheel, a reference mark should be placed on the tire at the valve stem location. This reference will ensure that it is remounted in the original position on the wheel.

1. Use a dial indicator to locate the high spot of the tire on the center tread rib. Record the indicator reading and mark the high spot on the tire.

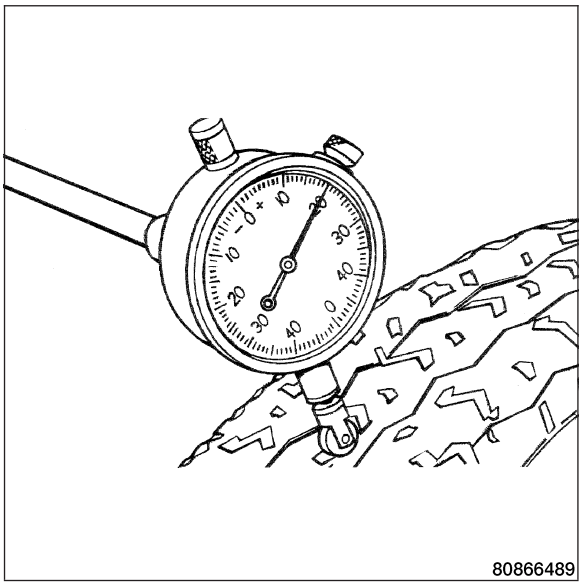

2. Place a mark (1) on the tire at the valve stem (4) location.

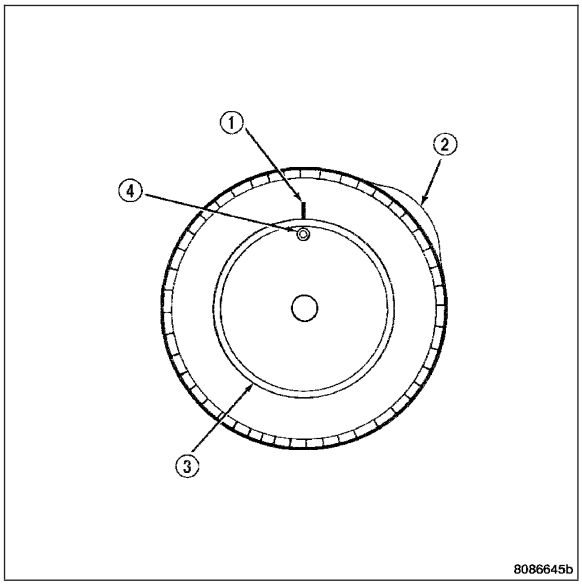

3. Break down the tire and remount it so that the valve stem (1) is 180 degrees from the mark (2) on the tire.

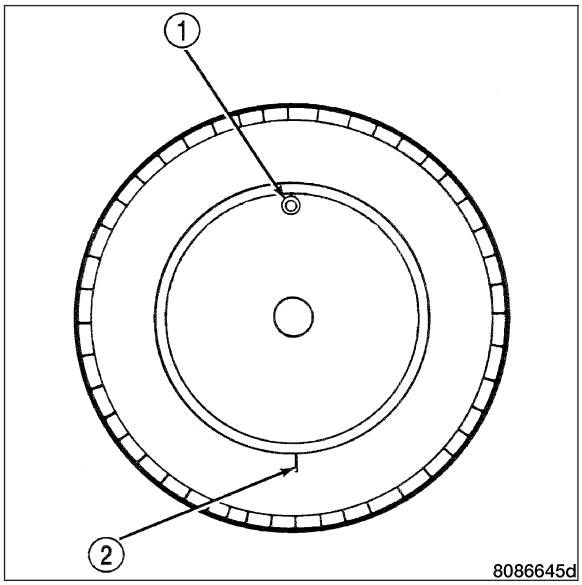

4. Measure the total runout again and mark the tire to indicate the high spot (2).
5. If runout is still excessive use the following procedures.
   - If the high spot is within 101.6 mm (4.0 in.) of the first spot and is still excessive, replace the tire.
   - If the high spot is within 101.6 mm (4.0 in.) of the first spot on the wheel, the wheel may be out of specifications **Refer to Page 22-1**.
   - If the high spot is NOT within 101.6 mm (4.0 in.) of either high spot, draw an arrow on the tread from second high spot to first. Break down the tire and remount it 90 degrees on rim in that direction. This procedure will normally reduce the runout to an acceptable amount.

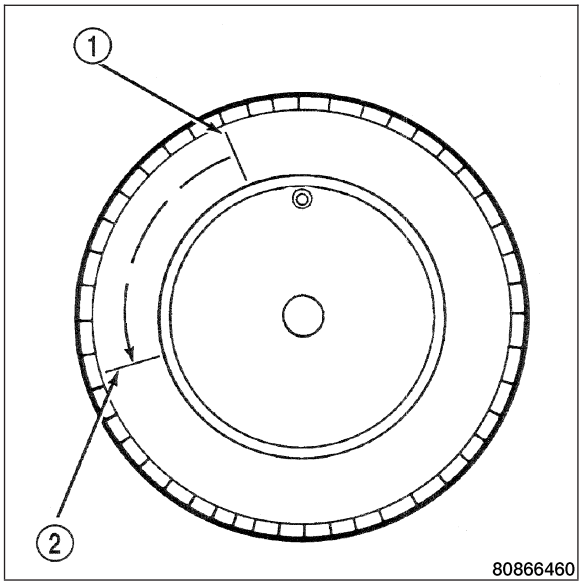

STANDARD PROCEDURE - TIRE ROTATION

WARNING: DO NOT ROTATE TIRES IN A FRONT TO BACK FASHION. THE FRONT AND REAR TIRES ARE DIFFERENT SIZES AND WILL CAUSE VEHICLE MALFUNCTION.

The only method of tire rotation is from the rear right side to rear left side and from the front right side to the front left side.

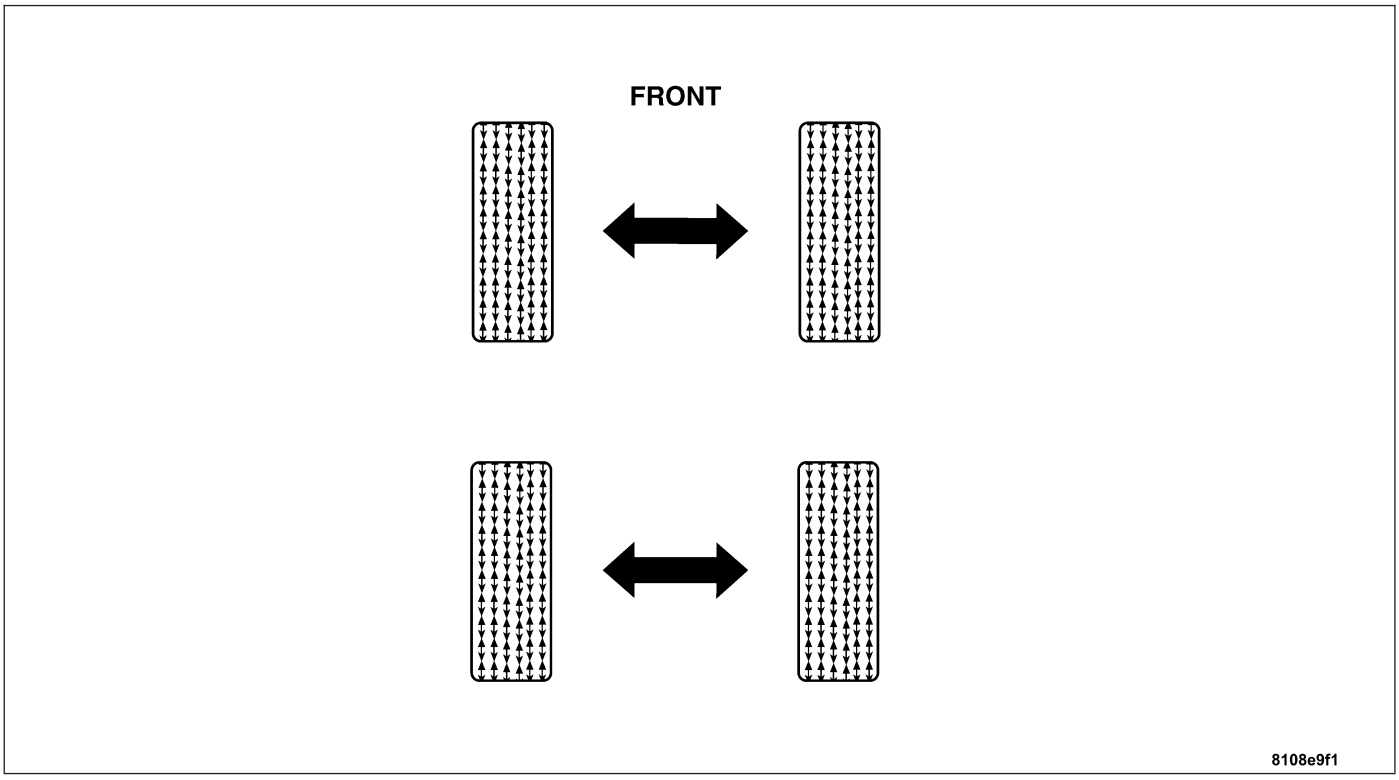

Tires on the front and rear of the vehicle operate at different loads and perform different steering, driving, and braking functions. For these reasons they wear at unequal rates and tend to develop irregular wear patterns. These effects can be reduced by rotating the tires at regular intervals. The benefits of tire rotation are:

- Increase tread life
- Maintain traction levels
- A smooth, quiet ride

STANDARD PROCEDURE - TIRE AND WHEEL INSTALLATION

The wheel bolts are designed for specific applications. They must be replaced with equivalent parts. Do not use replacement parts of lesser quality or a substitute design.

Before installing the wheel, be sure to remove any build up of corrosion on the wheel mounting surfaces. Ensure wheels are installed with good metal-to-metal contact. Improper installation could cause loosening of wheel bolts. This could affect the safety and handling of your vehicle.

To install the wheel, first position it properly on the mounting surface. All wheel bolts should then be tightened just snug. Gradually tighten them in sequence 1, 2, 3, 4, 5 to 110 N·m (81 ft. lbs.). **Never use oil or grease on bolts.**

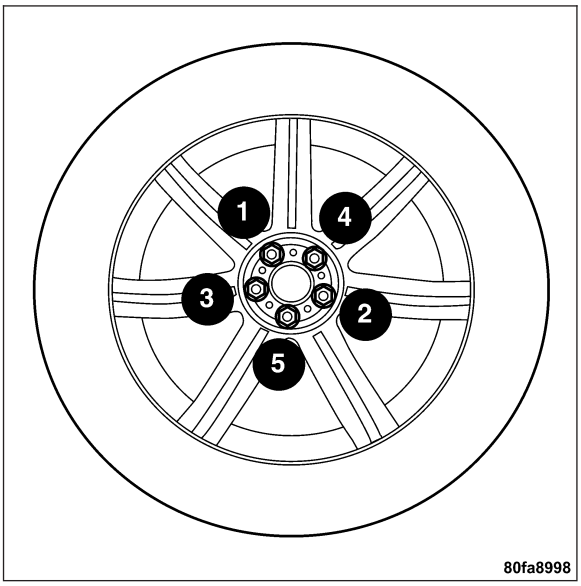

TIRE PRESSURE MONITORING

DESCRIPTION

This vehicle has a tire pressure monitoring (TPM) system. It is there to alert the driver when air pressure in any of the vehicle's four tires falls below a predetermined threshold. It alerts the driver with a lamp in the instrument cluster.

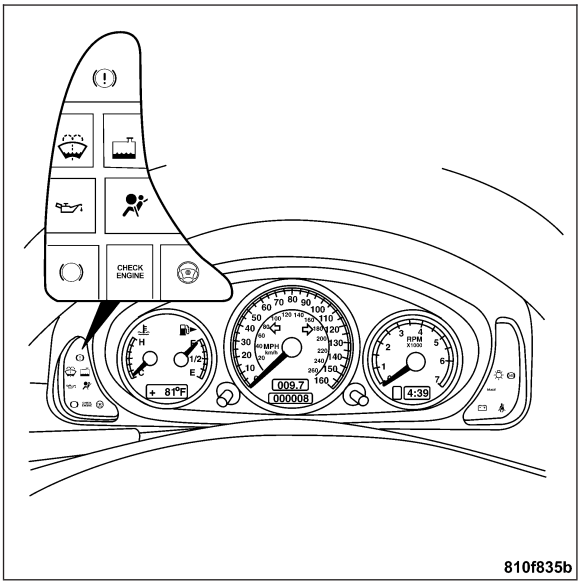

The garage door opener/tire pressure monitor module (1) is located in the headliner near the inside rear view mirror (2). The tire pressure monitoring (TPM) system utilizes a control module to control the system. The control module also has a garage door opener control module integrated along with it.

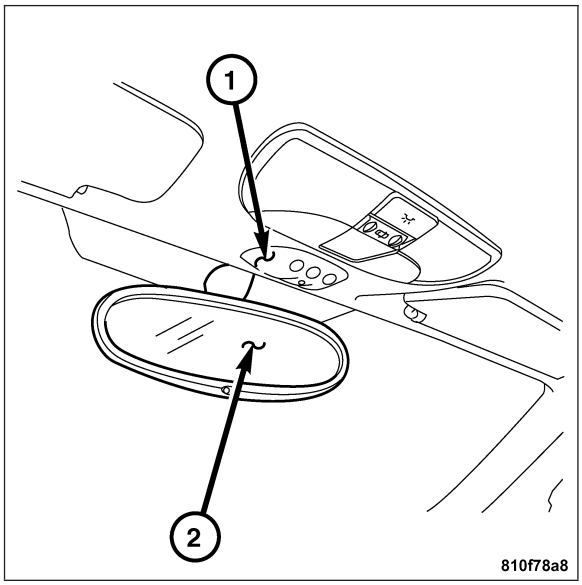

The tire pressure monitoring system utilizes transmitters that are located in the valve stem (1) of each tire (2) to communicate the tire pressure condition to the module. If a tire has low air pressure, an indicator light on the instrument cluster is illuminated. The vehicle operator must check the tire pressure of each tire in order to determine which tire has a low pressure condition.

The low tire pressure warning system utilizes these main components:

- Tire Pressure Monitoring Module
- Tire Pressure Sensors/Transmitters
- Tire Pressure Indicator Lamp

For information on specific components, refer to that individual component.

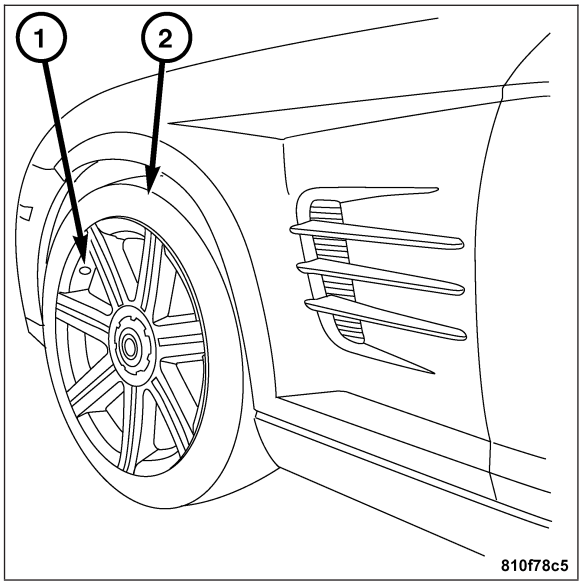

OPERATION

The garage door opener/tire pressure monitoring (TPM) module (1) has a microprocessor controller that can monitor the transmissions from the sensor/transmitters anytime the ignition is on. It can store the last 32 transmissions. There are two important values included in these transmissions. They are:

- Why the transmission was sent,
- Low Tire Pressure

The module compares the transmitted tire pressure from the sensor (2) to the two pressure thresholds (low pressure or critical pressure).

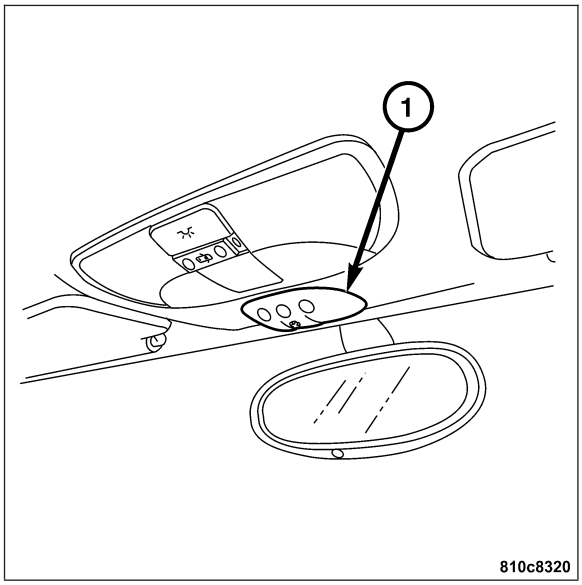

If the module determines that the tire pressure transmitted is below the low or critical pressure thresholds, it will signal for the “Low Tire” pressure warning lamp to come on.

The TPM module performs diagnostic routines, stores diagnostic trouble codes and provides the appropriate lamp status to the body control module (BCM).

When the module determines there is a fault, the low tire pressure indicator lamp circuit is grounded and the BCM turns on the “Low Tire” pressure indicator lamp.

The TPM module also stores its own identification number, module version and the date of manufacture.

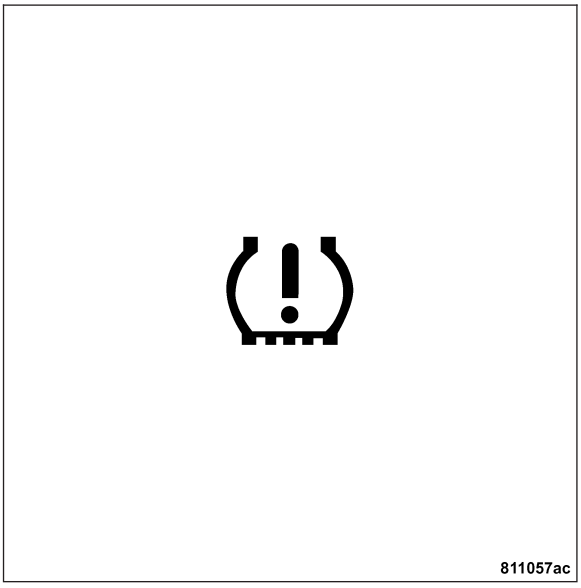

DIAGNOSIS AND TESTING - TIRE PRESSURE MONITORING SYSTEM

Diagnostics for the electronic components of the tire pressure monitoring system can be done using the DRBIII® scan tool and Appropriate Diagnostic Information.

The tire pressure sensors/transmitters and TPM module are not repairable components. If either of these components are found to be at fault or damaged, the component must be replaced. **Refer to Page 22-51**.

SPECIFICATIONS

TIRE PRESSURE MONITORING SYSTEM

DESCRIPTION	SPECIFICATION
Low Pressure Threshold	26 psi
Pressure Sensor/Transmitter Mounting Nut Torque	4 N·m (35 in. Lbs.)

MODULE

DESCRIPTION

The tire pressure monitoring (TPM) system utilizes a control module (1) to control the system. The TPM module (1) is located in the headliner between the dome lamp and the rear view mirror.

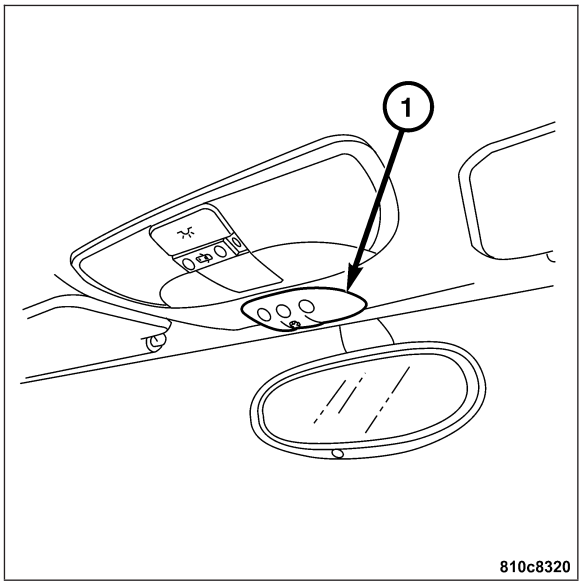

OPERATION

The tire pressure monitoring (TPM) module has a microprocessor controller that can monitor the transmissions from the sensor/transmitters anytime the ignition is on. It can store the last 32 transmissions. There are three important values included in these transmissions. They are:

- Why the transmission was sent,
- Pressure

The module compares the transmitted tire pressure to the two pressure thresholds (low pressure or critical pressure). If the module determines that the tire pressure transmitted is below the low or critical pressure thresholds, it will signal for the “Low Tire” pressure warning lamp to come on.

The TPM module (1) performs diagnostic routines, stores diagnostic trouble codes and provides the appropriate lamp status to the body control module (BCM). When the module determines there is a fault, the low tire pressure indicator lamp circuit is grounded and the BCM turns on the “Low Tire” pressure indicator lamp.

The TPM module (1) also stores its own identification number, each of the four sensor/transmitter identification numbers, module version and the date of manufacture.

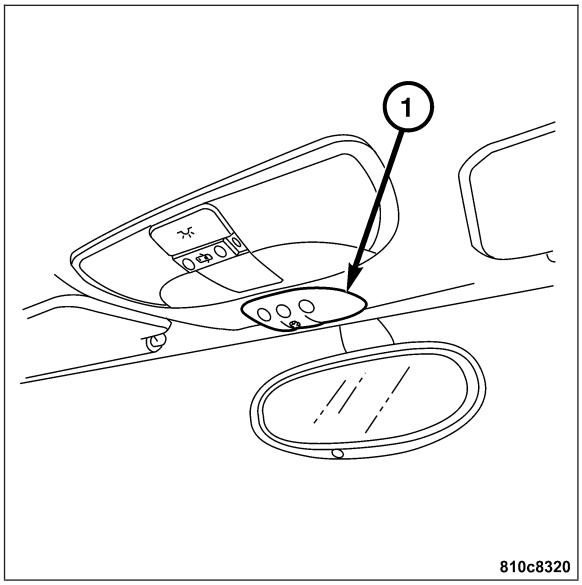

STANDARD PROCEDURE - TPM MODULE PROGRAMMING

If a TPM module fails, or one or more tire pressure sensor/transmitters fail, after replacement, the TPM module’s diagnostic memory must be cleared and reprogrammed. This is necessary for the module to detect which wheel is sending the signal.

Refer to the following procedure to program the module for identification of one new or all tire pressure sensor/transmitters.

Note: The vehicle’s tires must not have been rotated above 8 km/h (5 mph) in the last two minutes prior to programming.

1. Connect a DRBIII® scan tool to the vehicle’s diagnostic connector beneath the instrument panel, to the left of the steering column.
2. Access the Chassis System using the DRBIII®.
3. Once in the Chassis System, select Tire Pressure Monitor.
4. Select the appropriate function from the next screen displaying the following options:
   - Program LF Pressure Sensor
   - Program RF Pressure Sensor
   - Program RR Pressure Sensor
   - Program LR Pressure Sensor
   - Program Module (4 Sensors)

5. Place a magnet, special tool 8821, at the valve stem for that wheel as directed by the DRBIII®. If the Program Module function has been chosen, the DRBIII® will direct you to the left front wheel pressure sensor/transmitter first.
6. When that wheel's pressure sensor/transmitter has been programmed, the DRBIII® will display Program Transmitter Complete or will automatically direct you to the next wheel sensor/transmitter to be programmed.

Note: When programming the module (all four sensor/transmitters), the magnet should be moved from wheel to wheel in a clockwise direction starting at the left front wheel.

7. Remove the magnet and if programming the entire module, move the magnet to each of the remaining wheels as directed by the DRBIII®. Each sensor/transmitter will automatically sense the presence of the magnet and begin programming.
8. Once Program Transmitter Complete is displayed, exit the program function screen.
9. Verify that the module programming is complete by looking at the tire pressure sensor/transmitter ID's in the Sensor Display using the DRBIII®.

REMOVAL

1. Using a plastic wedge. Slide the wedge under the TPM (Tire Pressure Module) module (1) and the headliner and pry the TPM (1) away from the headliner.

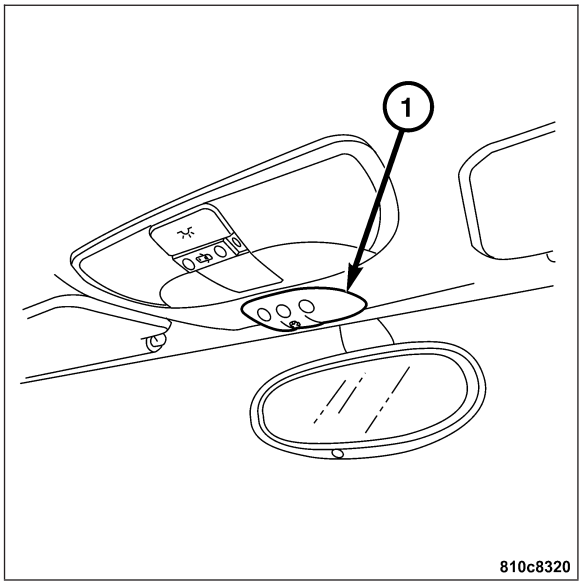

INSTALLATION

1. Install the TPM (1) by snapping it into the headliner.

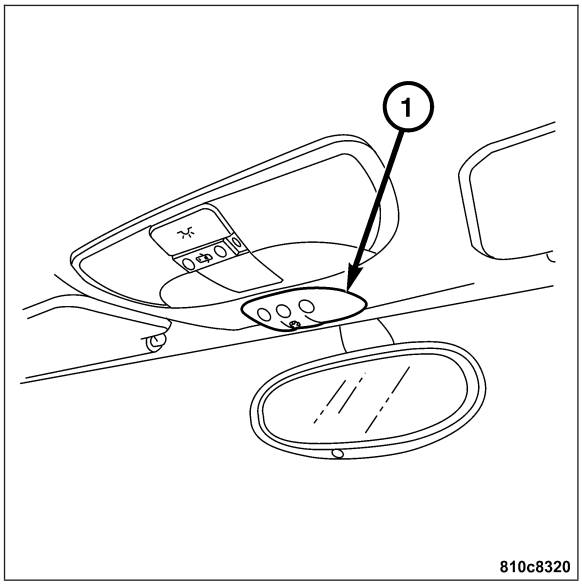

SENSOR

DESCRIPTION

CAUTION: Be sure that an original equipment valve stem cap or a valve stem cap of the same sealing capability is always used if the valve stem cap requires replacement.

A tire pressure sensor/transmitter is installed in each wheel of this vehicle as part of the tire pressure monitoring system. A special valve stem incorporated into each tire pressure sensor/transmitter attaches it to the wheel.

VALVE STEM CORE AND CAP

On this vehicle, the valve stem is part of the tire pressure sensor/transmitter and is used as its antenna. If corrosion were to develop in the valve stem, it would affect the ability of the tire pressure sensor/transmitter to send the radio frequency signal to the TPM module.

The valve stem used on this vehicle is made from aluminum. Corrosion of aluminum will be caused by putting a dissimilar metal in contact with it. To prevent this type of corrosion from developing within the valve stem, the core of the valve stem is made of a compatible metal and is specially coated.

For this reason, a standard valve stem core must never be installed in this valve stem. If the core of the valve stem is removed when servicing the tire, the original valve stem core must be reinstalled. If the valve stem core needs to be replaced, it must be replaced with an original equipment valve stem core.

The valve stem caps used on this vehicle are specially designed for their use on the valve stem of the tire pressure sensor/transmitter. Each valve stem cap has an O-ring in the upper end of the valve stem cap to provide a positive seal at the end of the valve stem. This keeps dirt contamination and corrosion out of the valve stem caused by moisture. As listed earlier, these conditions can affect the ability of the tire pressure transmitter to send the radio frequency signal to the TPM module.

OPERATION

Each tire pressure sensor/transmitter serves three functions:

- It is used as a valve stem to inflate and deflate the tire.
- It periodically measures tire pressure. (Approximately every 30 seconds.)
- It transmits the tire pressure value to the low tire pressure warning module in the vehicle. (Approximately every 60 seconds or if tire pressure changes by one psi or more between transmissions.)

The system operates by monitoring a radio frequency transmission from the sensor/transmitters located in each wheel. When the vehicle reaches a speed of approximately 32 km/h (20 mph), centrifugal force created by the rotating wheels closes a roll switch inside each sensor/transmitter, powering up the circuitry.

The sensor/transmitters will only send out information when vehicle speed is above 32 km/h (20 mph). To facilitate transmitting the radio signal to the TPM module, the valve stem acts as the antenna for the tire pressure sensor/transmitter. When the TPM module senses that pressure is below one of two calibrated thresholds, (low pressure or critical pressure) the TPM system will set a diagnostic trouble code and indirectly operate the “Low Tire” pressure indicator lamp and the chime tone through the body control module (BCM).

The tire pressure sensor/transmitter is powered by an internal battery. The battery is not replaceable separately. In the event of battery failure, the entire tire pressure sensor/transmitter at that wheel will require replacement. To extend the life of the battery, the sensor/transmitter is not activated until the vehicle reaches a speed of approximately 32 km/h (20 mph) as stated earlier.

Each tire pressure sensor/transmitter has a unique identity code. This will allow the TPM system to indicate to a technician, through diagnostic trouble codes in the module, which tire of the vehicle has lost air pressure. This code is also used to identify to a technician which pressure sensor/transmitter has set a diagnostic trouble code. For this reason, if a tire pressure sensor/transmitter needs to be replaced, the new sensor/transmitter must be programmed to have its identity code recognized by the receiver.

REMOVAL

1. Remove the tire/wheel from the vehicle.

CAUTION: When removing the stick-on balancing weights from the wheel, do not use an abrasive cleaner or a cleaner which will damage the protective finish on the wheel.

2. Remove the balancing weights from the wheel (1).

Note: The cap used on this valve stem contains an O-ring seal to prevent contamination and moisture from entering the valve stem. Retain this valve stem cap for reuse. Do not substitute a regular valve stem cap in its place.

3. Remove the cap from the valve stem (2).

Note: The valve stem used on this vehicle is made of aluminum and the core is nickel plated brass. The original valve stem core must be reinstalled and not substituted for a valve stem core made of a different material. This is required to prevent corrosion in the valve stem caused by the different metals.

4. Using the appropriate tool, remove the core (4) from the valve stem (2).
5. Let the tire fully deflate.

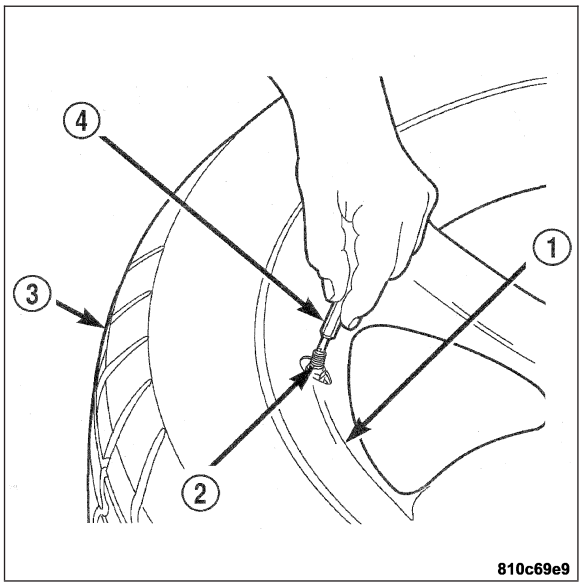

CAUTION: The pressure transmitter must be removed from the wheel and dropped into the tire prior to breaking the bead and dismounting the tire. Failure to do this will greatly increase the risk of damaging the pressure transducer when servicing the tire.

6. Remove the nut (1) mounting the valve stem (4) of the pressure sensor/transmitter to the wheel (2). Drop sensor/transmitter into the tire (3).

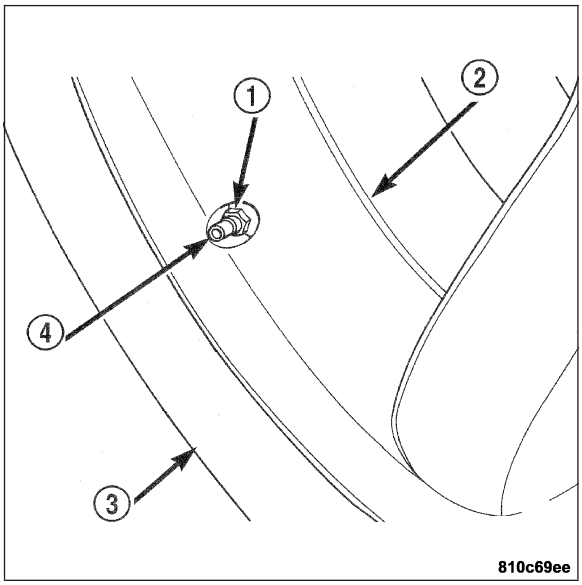

CAUTION: When breaking the top and bottom bead of the tire off the wheel, care must be used so the bead breaking mechanism on the tire changer does not damage the wheel. This includes the surface of the wheel flange on the inside of the wheel.

7. Using the tire changer manufacturer's procedure, first break down the upper bead of the tire. Then break down the bottom bead of the tire.

CAUTION: When dismounting the upper tire bead from the wheel, the proper procedure must be used. Not using the proper procedure will result in damage to the wheel and tire.

8. Dismount the upper bead of the tire(1) from the wheel(2). **The upper bead must be fully dismounted from the wheel to remove the tire pressure transmitter from the inside of the tire. The bottom bead of the tire does not need to be removed from the wheel.**
9. Pull upward on the tire(1). Reach inside the tire and remove the pressure sensor/transmitter(3).

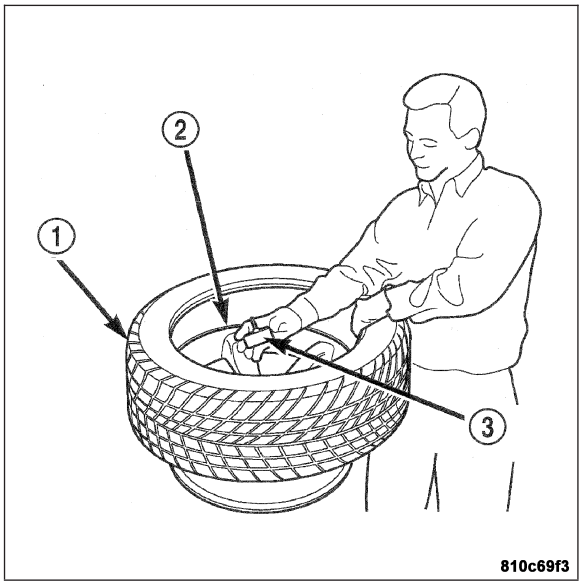

INSTALLATION

Note: When installing the tire pressure sensor/transmitter, replace the sealing grommet at the valve stem base before installing the pressure transmitter in the wheel. Also, be sure that the surface of the wheel that the grommet seals are against is clean and not damaged.

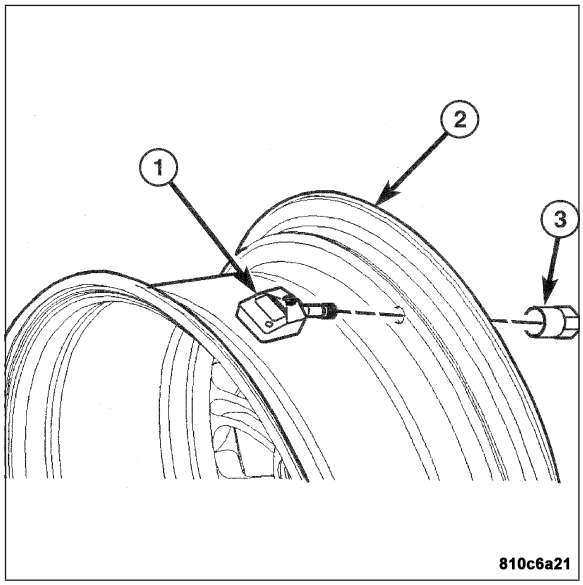

1. Install the tire pressure sensor/transmitter (1) on the wheel (2).
2. Install the special sensor mounting nut (3). When tightening the tire pressure sensor/transmitter nut, hold the sensor so it does not rotate. Once tightened, the gap between the sensor and the wheel must be even on both sides as shown. If the sensor/transmitter rotates (clocks), damage to the sensor/transmitter can occur when mounting the tire. Tighten the nut (3) to 4 N·m (35 in. lbs.).

CAUTION: When mounting the upper bead of the extended mobility tire, the proper procedure must be used. Not using the proper procedure will result in damage to the wheel and tire.

3. Mount the upper bead of the tire on the wheel.
4. Inflate the tire(s) to the proper specification.
5. Install the original or an OEM replacement valve stem cap on the valve stem.
6. Using a soap solution, check that no air leak is present where the valve stem mounts to the wheel.
7. Balance the tire/wheel assembly using the correct procedure for using wheel flange mount and stick-on wheel weights. For balancing information and wheel weight positioning, **Refer to Page 22-42**.
8. Install the tire/wheel on the vehicle. **Refer to Page 22-42**.
9. Program the identification code for the new tire pressure sensor/transmitter into the TPM module.
10. Verify that the TPM module has been programmed with the identification code from the new tire pressure sensor/transmitter using the DRBIII® scan tool. If the identification code and tire pressure thresholds from the new tire pressure transmitter are present in the receivers memory the new tire pressure transmitter has been correctly programmed to the receiver.

TIRES

DESCRIPTION

TIRES

Tires are designed and engineered for each specific vehicle. They provide the best overall performance for normal operation. The ride and handling characteristics match the vehicle's requirements. With proper care they will give excellent reliability, traction, skid resistance, and tread life.

Driving habits have more effect on tire life than any other factor. Careful drivers will obtain in most cases, much greater mileage than severe use or careless drivers. A few of the driving habits which will shorten the life of any tire are:

- Rapid acceleration
- Severe brake applications
- High speed driving
- Excessive speeds on turns
- Striking curbs and other obstacles

Radial-ply tires are more prone to irregular tread wear. It is important to follow the tire rotation interval shown in the section on Tire Rotation. This will help to achieve a greater tread life.

TIRE IDENTIFICATION

Tire type, size, aspect ratio and speed rating are encoded in the letters and numbers imprinted on the side wall of the tire.

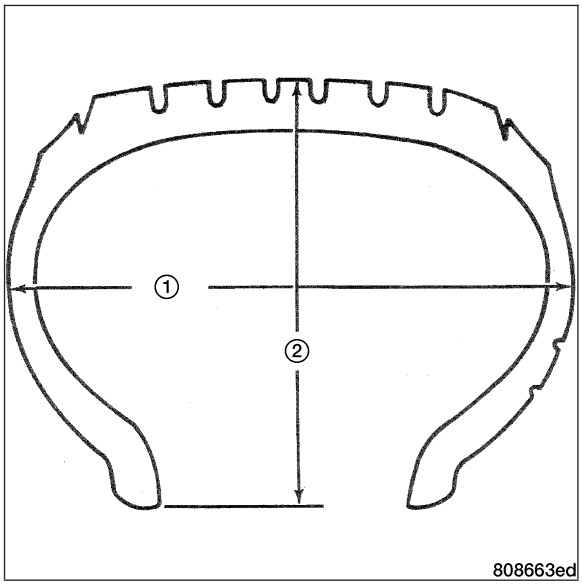

In a metric sire size as P185/80R13. The first letter of the tire size tells if the tire is used for passenger (P), temporary (T), or commercial (C) use. The second designation tells the section width (1) of the tire. The section width is the distance in millimeters from one side of the tire to the other when it is inflated normally. The third designation tells the aspect ratio (2). The aspect ratio (2) is found by dividing the section height (2) by the section width (1). The aspect ratio means the tire's height is 80% of the width. This is called the profile of the tire. Lower profile tires make the vehicle closer to the road and reduce wind drag underneath the vehicle body. The next designation tells the construction type. R means radial tire, B means belted, and D means diagonal (bias). The last designation gives the wheel rim in inches. The most common car rim sizes are 13, 14, 15. Some rims are as large as 20 inches in diameter.

Performance tires have a speed rating letter after the aspect ratio number. The speed rating is not always printed on the tire sidewall. These ratings are:

- **Q** up to 100 mph
- **S** up to 112 mph
- **T** up to 118 mph
- **U** up to 124 mph
- **H** up to 130 mph
- **V** up to 149 mph
- **Z** more than 149 mph (consult the tire manufacturer for the specific speed rating)

An All Season type tire will have either **M + S, M & S or M–S** (indicating mud and snow traction) imprinted on the side wall.

RADIAL - PLY TIRES

Radial-ply tires improve handling, tread life and ride quality, and decrease rolling resistance.

Radial-ply tires must always be used in sets of four. Under no circumstances should they be used on the front only. They may be mixed with temporary spare tires when necessary.

Radial-ply tires have the same load-carrying capacity as other types of tires of the same size. They also use the same recommended inflation pressures.

The use of tires from different manufacture's on the same vehicle is NOT recommended. The proper tire pressure should be maintained on all four tires.

Z-rated tires are optimized for performance driving and may provide slightly reduced ride comfort, increased tire noise and substantially increased tread wear compared to all-season tires.

TIRE INFLATION PRESSURES

WARNING: OVER- OR UNDER-INFLATED TIRES CAN AFFECT VEHICLE HANDLING AND TREAD WEAR. THIS MAY CAUSE THE TIRE TO FAIL SUDDENLY, RESULTING IN LOSS OF VEHICLE CONTROL.

Under-inflation will cause rapid shoulder wear (1), tire flexing, and possible tire failure.

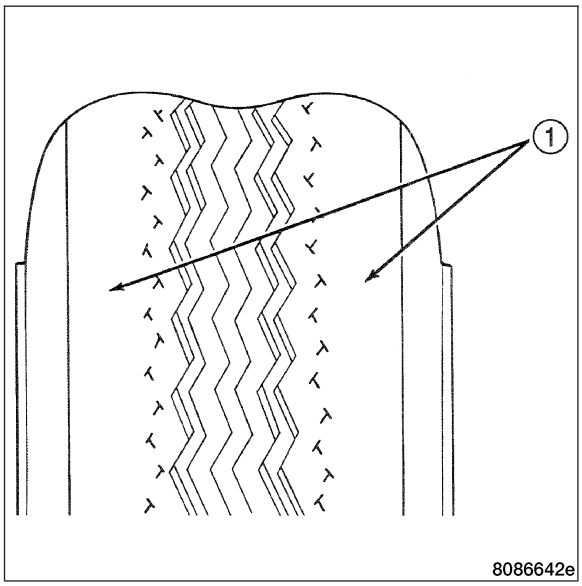

Over-inflation will cause rapid center wear (1) and loss of the tire's ability to cushion shocks.

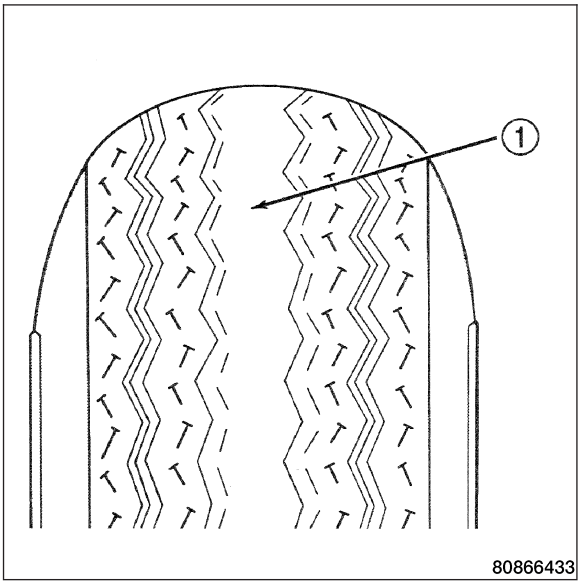

Improper inflation can cause:

- Uneven wear patterns

- Reduced tread life
- Reduced fuel economy
- Unsatisfactory ride
- Vehicle drift

For proper tire pressure specification refer to the Tire Inflation Pressure Chart provided with the vehicle's Owner's Manual. A Certification Label on the driver's side door pillar provides the minimum tire and rim size for the vehicle. The label also lists the cold inflation pressure for these tires at full load operation.

Tire pressures have been chosen to provide safe operation, vehicle stability, and a smooth ride. Tire pressure should be checked cold once a month. Tire pressure decreases as the ambient temperature drops. Check tire pressure frequently when ambient temperature varies widely.

Tire inflation pressures are cold inflation pressure. The vehicle must sit for at least 3 hours to obtain the correct cold inflation pressure reading, or be driven less than one mile after sitting for 3 hours. Tire inflation pressures may increase from 2 to 6 pounds per square inch (psi) during operation. Do not reduce this normal pressure build-up.

TIRE PRESSURE FOR HIGH SPEED

Where speed limits allow the vehicle to be driven at high speeds, correct tire inflation pressure is very important. For speeds up to and including 120 km/h (75 mph), tires must be inflated to the pressures shown on the tire placard. For continuous speeds in excess of 120 km/h (75 mph), tires must be inflated to the maximum pressure specified on the tire sidewall.

Vehicles loaded to the maximum capacity should not be driven at continuous speeds above 75 mph (120 km/h).

For emergency vehicles that are driven at speeds over 90 mph (144 km/h), special high speed tires must be used. Consult tire manufacturer for correct inflation pressure recommendations.

REPLACEMENT TIRES

WARNING: FAILURE TO EQUIP THE VEHICLE WITH TIRES HAVING ADEQUATE SPEED CAPABILITY CAN RESULT IN SUDDEN TIRE FAILURE.

The original equipment tires provide a proper balance of many characteristics such as:

- Ride
- Noise
- Handling
- Durability
- Tread life
- Traction
- Rolling resistance
- Speed capability

It is recommended that tires equivalent to the original equipment tires be used when replacement is needed.

Failure to use equivalent replacement tires may adversely affect the safety and handling of the vehicle.

DIAGNOSIS AND TESTING

DIAGNOSIS AND TESTING - TREAD WEAR INDICATORS

Tread wear indicators (3) are molded into the bottom of the tread grooves.

Tire replacement is necessary when indicators appear in two or more grooves or if localized balding occurs.

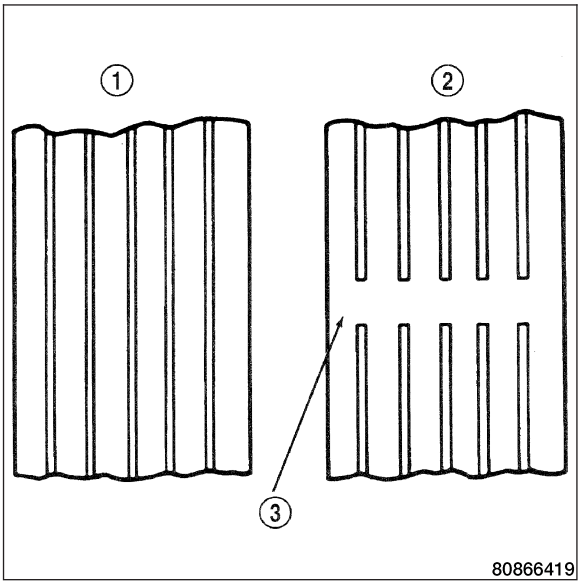

DIAGNOSIS AND TESTING - TIRE WEAR PATTERNS

Under-inflation will cause wear on the shoulders of tire. Over-inflation will cause wear at the center of tire.

Excessive camber causes the tire to run at an angle to the road. One side of tread is then worn more than the other.

Excessive toe-in or toe-out causes wear on the tread edges and a feathered effect across the tread.

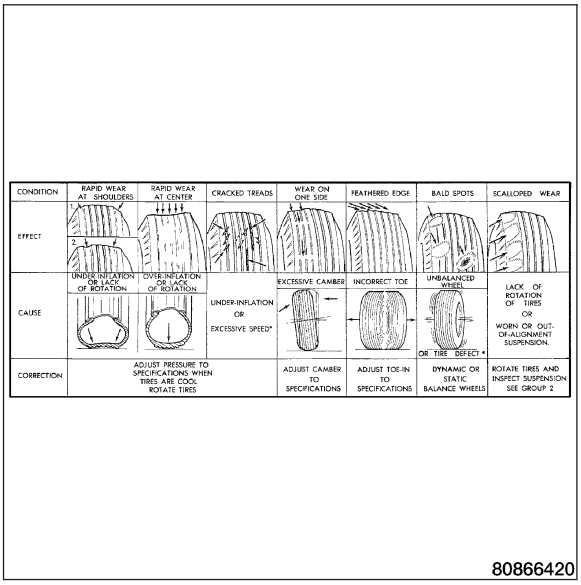

DIAGNOSIS AND TESTING - TIRE NOISE OR VIBRATION

Radial-ply tires are sensitive to force impulses caused by improper mounting, vibration, wheel defects, or possibly tire imbalance.

To find out if tires are causing the noise or vibration, drive the vehicle over a smooth road at varying speeds. Note the noise level during acceleration and deceleration. The engine, differential and exhaust noises will change as speed varies, while the tire noise will usually remain constant.

DIAGNOSIS AND TESTING - TIRE/VEHICLE LEAD

Use the following vehicle lead diagnosis and correction procedure to diagnose and correct a vehicle lead or drift problem.

VEHICLE LEAD DIAGNOSIS AND CORRECTION		
1. Adjust tire pressure to correct specifications.	Road test	OK? If vehicle still leads, go to step 2.
2. Cross switch front tire and wheel assemblies.	Road test	OK? Vehicle leads same direction. Go to step 3. Vehicle leads opposite direction. Go to step 4.
3. Probable Cause - Vehicle. Check front alignment toe - caster - camber.	If alignment is OK go to step 4. If alignment is not OK.	Adjust alignment to correct settings.
4. Probable Cause - Tires. Replace front tires.	WARNING: **DO NOT SWITCH FRONT AND REAR TIRE ASSEMBLIES. THEY ARE DIFFERENT WHEEL SIZES AND WILL CAUSE DAMAGE TO THE VEHICLE**	

STANDARD PROCEDURE

REPAIRING LEAKS

CAUTION: Ensure that the tire has been drained of all TIREFIT tire sealant. If not the tire will have to be properly drained before any tire service may be performed. Refer to Page 22-60.

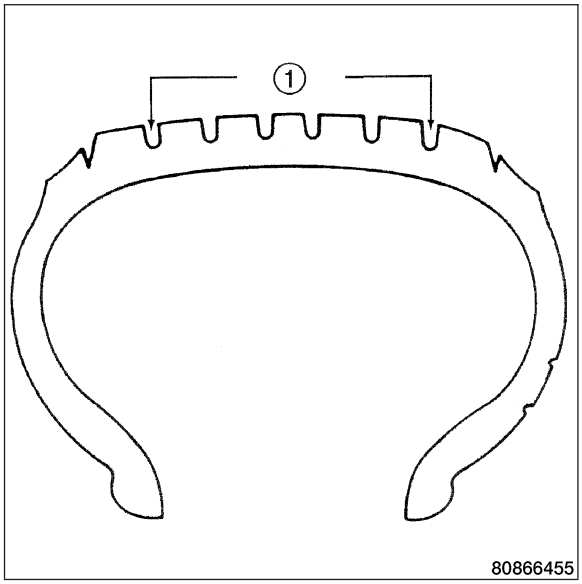

For proper repairing, a radial tire must be removed from the wheel. Repairs should only be made if the defect, or puncture, is in the tread area (1). The tire should be replaced if the puncture is located in the sidewall.

Deflate the tire completely before removing the tire from the wheel. Use lubrication such as a mild soap solution when dismounting or mounting tire. Use tools free of burrs or sharp edges which could damage the tire or wheel rim.

Before mounting tire on wheel, make sure all rust is removed from the rim bead and repaint if necessary.

Install wheel on vehicle, and tighten to proper torque specification, 110 N·m (89 ft. lbs.).

STANDARD PROCEDURE - DRAINING TIREFIT

WARNING: KEEP AWAY FROM FIRE, SPARKS OR NAKED FLAME. DO NOT SMOKE WHILE HANDLING A TIRE THAT HAS BEEN INFLATED USING TIREFIT. DO NOT INHALE VAPORS. CALL A PHYSICIAN IMMEDIATELY IF AN ALLERGIC REACTION OCCURS. KEEP TIREFIT AWAY FROM CHILDREN. IF SWALLOWED, INDUCE VOMITING AND CALL A PHYSICIAN IMMEDIATELY. THE TIRE SEALANT MUST NOT COME INTO CONTACT WITH THE SKIN, EYES OR CLOTHING, RINSE IMMEDIATELY WITH CLEAN WATER.

TIREFIT sealant can be used on the roadside to seal minor punctures, in particular in the tread. The tire can then continue to be used to a limited extent until it can be replaced. After using TIREFIT tire sealant the customer is required to find the nearest authorized DaimlerChrysler® service center immediately and replace the damaged tire with a new one. Tires which have been treated with TIREFIT tire sealant must not be repaired. They must always be replaced with new tires of the same make and manufacturer. **Refer to Page 22-61**. To avoid an odor due to TIREFIT, relieve the tire pressure out in the open.

1. Raise and support the vehicle.
2. Remove the wheel and tire assembly from the vehicle.

Note: Raise the wheel off the ground approximately 8 to 10 inches off the ground to allow the TIREFIT to be forced by gravity.

3. Position the wheel and tire assembly so that the air valve is pointing downwards for approximately ten minutes.

WARNING: THE TIRE SEALANT MUST NOT COME INTO CONTACT WITH THE SKIN, EYES OR CLOTHING, RINSE IMMEDIATELY WITH CLEAN WATER.

4. Remove the valve stem with the appropriate tool, allow the tire pressure to escape from the tire.
5. Remove the valve from the wheel.
6. Attach the hose from the TIREFIT container to the plastic bottle.
7. Squeeze the container and immerse the hose as deep as possible in the tire sealant through the valve bore in the wheel.
8. Remove the sealant by sucking it out of the tire with the container until all of the TIREFIT sealant is removed. This will generally remove 90% of the TIREFIT sealant.
9. Remove the tire from the wheel.
10. Clean the wheel making sure it is free of the TIREFIT sealant.
11. Install a new tire to the wheel.
12. Install the wheel and tire assembly to the vehicle. **Refer to Page 22-63**.

CLEANING

Note: DO NOT use gasoline, mineral oil, oil-based solvent or a wire brush for cleaning.

Remove the protective coating on the tires before delivery of a vehicle. This coating may cause deterioration of the tires.

To remove the protective coating, apply warm water and let it soak for a few minutes. Afterwards, scrub the coating away with a soft bristle brush. Steam cleaning may also be used to remove the coating.

SPECIFICATIONS - TIRES

SPECIFICATIONS

DESCRIPTION	SPECIFICATION
FRONT TIRES	225/40ZR18
REAR TIRES	255/35ZR19

WHEELS

DESCRIPTION

WHEELS

The rim size is on the vehicle safety certification label located on the driver's door shut face. The size of the rim is determined by the drivetrain package. Original equipment wheels/rims are designed for operation up to the specified maximum vehicle capacity.

This vehicle has aluminum wheels. Every wheel has raised sections between the rim flanges (1) and rim drop well (3) called safety humps.

Initial inflation of the tire forces the bead over these raised sections. In case of rapid loss of air pressure, the raised sections help hold the tire on the wheel.

The wheel bolts are designed for specific applications. All aluminum wheels have wheel bolts with an enlarged head. This enlarged head is necessary to ensure proper retention of the wheels. Do not use replacement bolts with a different design or lesser quality.

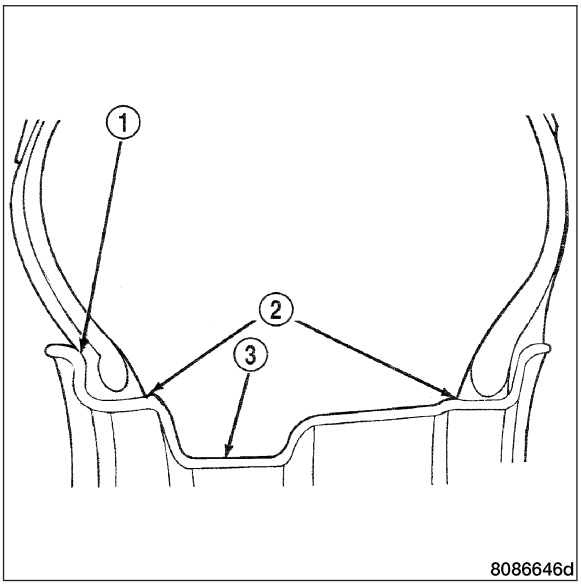

DIAGNOSIS AND TESTING

WHEEL INSPECTION

WARNING: FAILURE TO USE EQUIVALENT REPLACEMENT WHEELS MAY ADVERSELY AFFECT THE SAFETY AND HANDLING OF THE VEHICLE. USED WHEELS ARE NOT RECOMMENDED. THE SERVICE HISTORY OF THE WHEEL MAY HAVE INCLUDED SEVERE TREATMENT OR VERY HIGH MILEAGE. THE RIM COULD FAIL WITHOUT WARNING.

Inspect wheels for:

- Excessive run out
- Dents or cracks
- Damaged wheel bolt holes
- Air leaks from any area or surface of the rim

Note: Do not attempt to repair a wheel by hammering, heating or welding.

If a wheel is damaged an original equipment replacement wheel should be used. When obtaining replacement wheels, they should be equivalent in load carrying capacity. The diameter, width, offset, pilot hole and bolt circle of the wheel should be the same as the original wheel.

STANDARD PROCEDURE

WHEEL REPLACEMENT

The wheel bolts are designed for specific applications. They must be replaced with equivalent parts. Do not use replacement parts of lesser quality or a substitute design. All aluminum wheels have wheel bolts which feature an enlarged head. This enlarged head is necessary to ensure proper retention of the aluminum wheels.

Note: Do not use chrome plated lug bolts with chrome plated wheels.

Before installing the wheel, be sure to remove any build up of corrosion on the wheel mounting surfaces. Ensure wheels are installed with good metal-to-metal contact. Improper installation could cause loosening of the wheel bolts. This could affect the safety and handling of your vehicle.

To install the wheel, first position it properly on the mounting surface. All wheel bolts should then be tightened just snug. Gradually tighten them in sequence (1-5) to the proper torque specification. **Never use oil or grease on the bolts.**

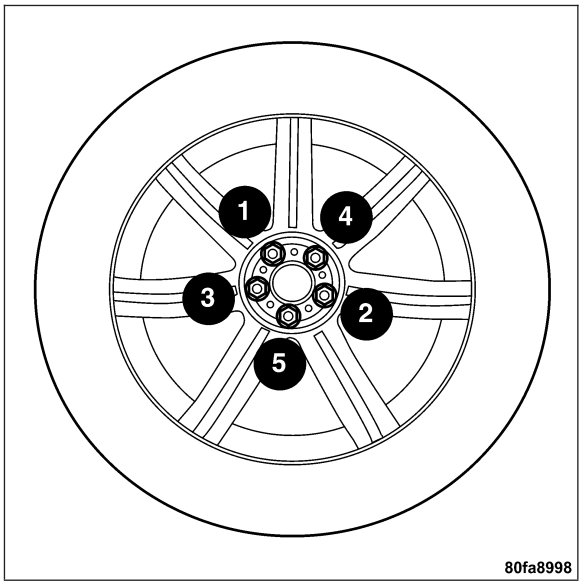

Wheels must be replaced if they have:

- Excessive runout
- Bent or dented
- Leak air through welds
- Have damaged bolt holes

Wheel repairs employing hammering, heating, or welding are not allowed.

Original equipment wheels are available through your dealer. Replacement wheels from any other source should be equivalent in:

- Load carrying capacity
- Diameter
- Width
- Offset
- Mounting configuration

Failure to use equivalent replacement wheels may affect the safety and handling of your vehicle. Replacement with **used** wheels is not recommended. Their service history may have included severe treatment.

BODY

TABLE OF CONTENTS

page

BODY - ELECTRICAL DIAGNOSTICS 1

page

BODY - SERVICE INFORMATION 29

BODY - ELECTRICAL DIAGNOSTICS

TABLE OF CONTENTS

page

BODY - ELECTRICAL DIAGNOSTICS
DIAGNOSIS AND TESTING
BODY CONTROL MODULE INTERNAL FAILURE 2
REAR SPOILER SWITCH SENSE CIRCUIT . . . 4
SPOILER LIMIT SWITCH SIGNAL (UP) CIRCUIT 7
SPOILER LIMIT SWITCH SIGNAL (DOWN) CIRCUIT 10
REAR SPOILER DRIVER (UP) CIRCUIT 13
REAR SPOILER DRIVER (DOWN) CIRCUIT . 16
REAR SPOILER LIMIT SWITCH FAILURE . . . 19
REAR SPOILER MOTOR FAILURE 23
REAR SPOILER VERIFICATION TEST 27
SCHEMATICS AND DIAGRAMS 28

BODY - ELECTRICAL DIAGNOSTICS

DIAGNOSIS AND TESTING

BODY CONTROL MODULE INTERNAL FAILURE

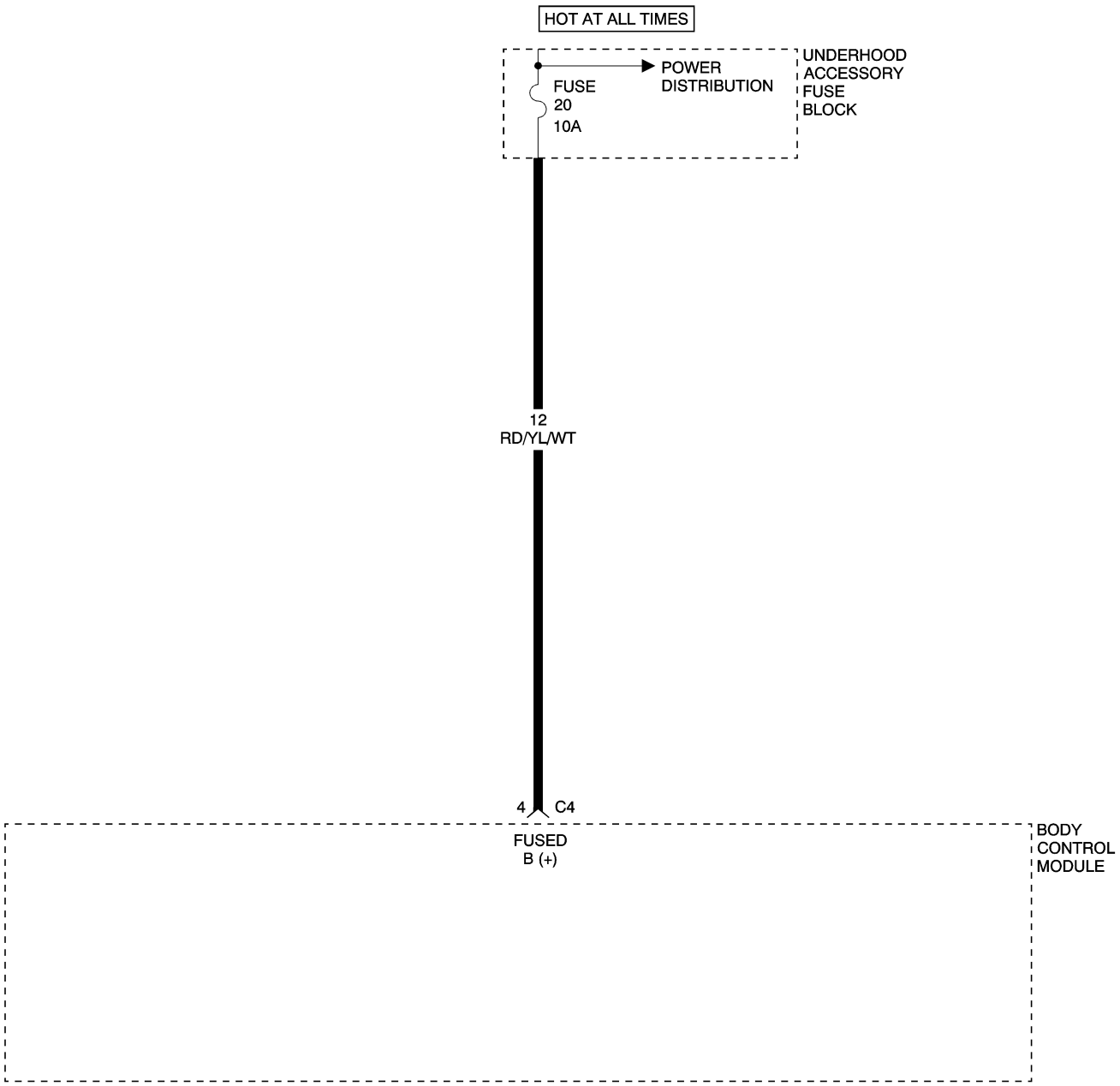

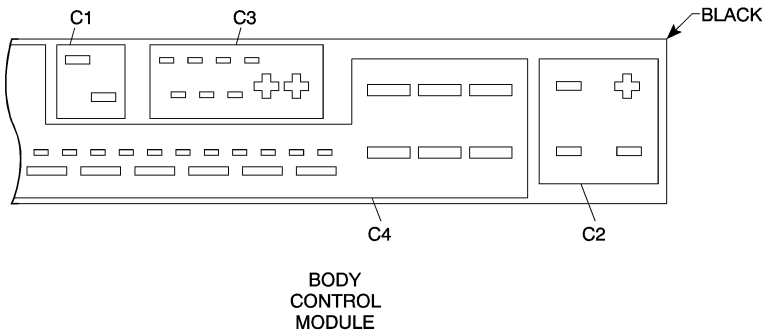

BODY CONTROL MODULE INTERNAL FAILURE — CONTINUED

When Monitored and Set Condition

- When Monitored: Continuous.
- Set Condition: If the Body Control Module (BCM) detects an internal malfunction, the DTC is set.

POSSIBLE CAUSES
NO POWER TO BODY CONTROL MODULE
BODY CONTROL MODULE

For a complete Rear Spoiler Circuit Diagram. **Refer to Page 23-28**.

Diagnostic Test

1. MEASURE THE VOLTAGE OF THE BCM POWER CIRCUIT

Turn the ignition off.

Disconnect the BCM harness connector.

Note: Check connectors - Clean/repair as necessary.

Measure the voltage of the Fused B(+) circuit (cavity 4) at the BCM C4 harness connector.

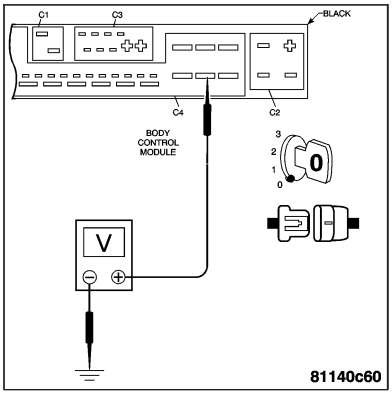

Is the voltage between 12 and 16 volts?

Yes >> Replace the Body Control Module. **Refer to Page 8E-72**.
Perform REAR SPOILER VERIFICATION TEST.

No >> System voltage must be between 12 and 16 volts.
Repair the voltage concern as necessary.
Perform REAR SPOILER VERIFICATION TEST.

REAR SPOILER SWITCH SENSE CIRCUIT

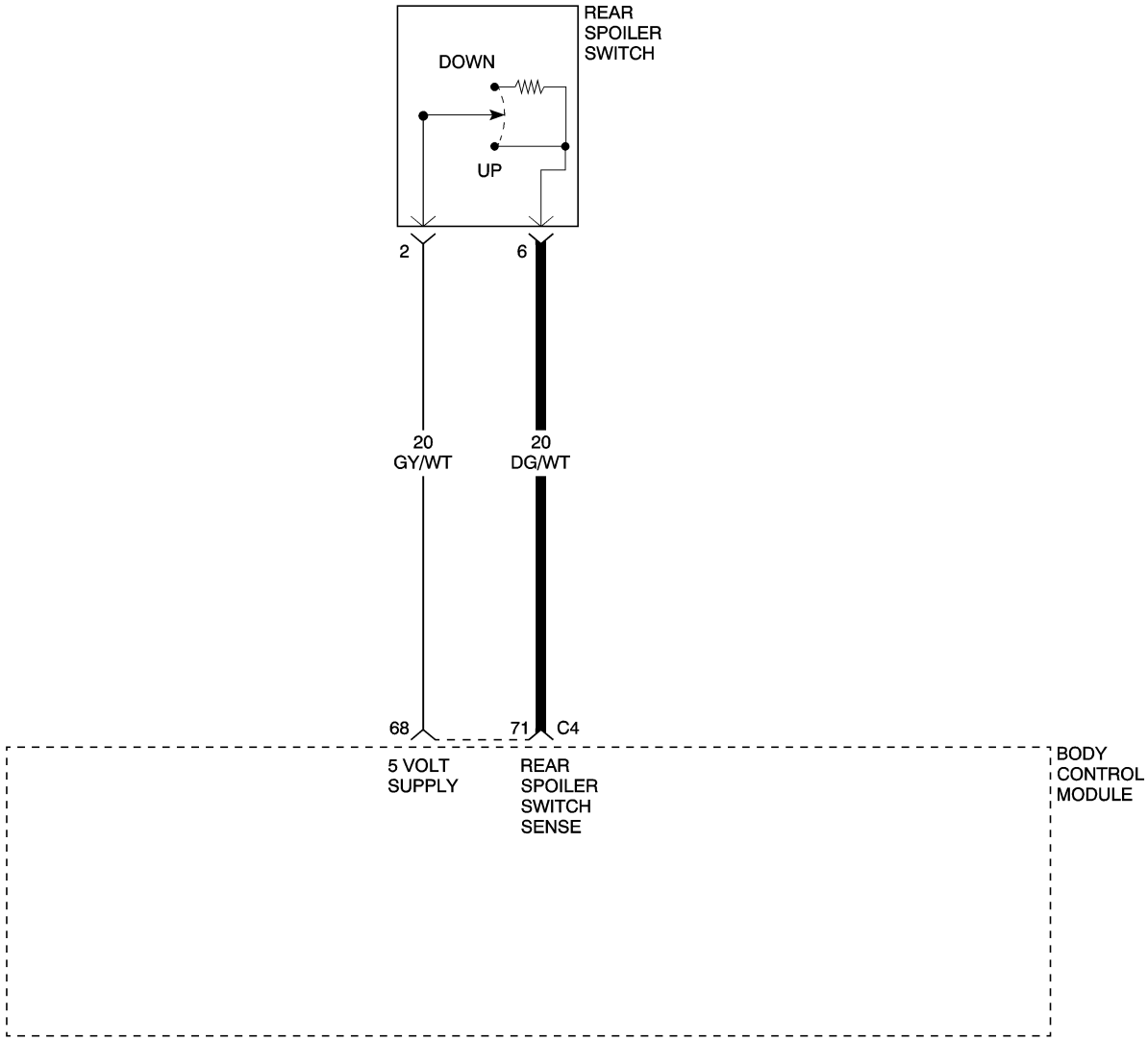

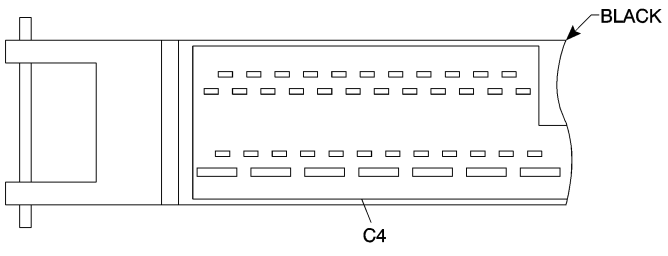

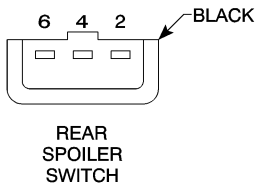

81158cfe

REAR SPOILER SWITCH SENSE CIRCUIT — CONTINUED

When Monitored and Set Condition

- When Monitored: Continuous.
- Set Condition: The Body Control Module (BCM) reports a short to power, ground, or an open circuit failure on the Rear Spoiler Switch Sense circuit.

POSSIBLE CAUSES
REAR SPOILER SWITCH SENSE CIRCUIT SHORTED TO VOLTAGE
REAR SPOILER SWITCH SENSE CIRCUIT SHORTED TO GROUND
REAR SPOILER SWITCH SENSE CIRCUIT OPEN
BODY CONTROL MODULE

For a complete Rear Spoiler Circuit Diagram, **Refer to Page 23-28**.

Diagnostic Test

1. MEASURE THE RESISTANCE OF THE REAR SPOILER SWITCH SENSE CIRCUIT

Turn the ignition off.

Disconnect the BCM harness connector.

Disconnect the Rear Spoiler Switch harness connector.

Note: Check connectors - Clean/repair as necessary.

Measure the resistance of the Rear Spoiler Switch Sense circuit from the BCM harness connector to the Rear Spoiler Switch harness connector.

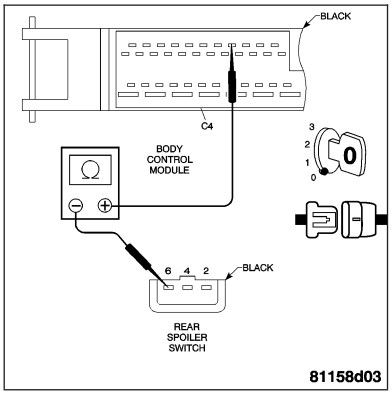

Is the resistance below 5.0 ohms?

Yes >> Go to 2

No >> Repair the Rear Spoiler Switch Sense circuit for an open.
Perform REAR SPOILER VERIFICATION TEST.

2. MEASURE THE VOLTAGE OF THE REAR SPOILER SWITCH SENSE CIRCUIT

Turn the ignition on.

Measure the voltage of the Rear Spoiler Switch Sense circuit at the Rear Spoiler Switch harness connector.

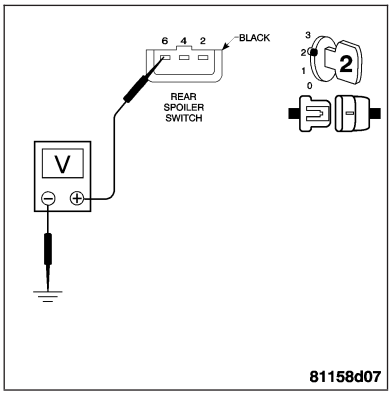

Is voltage present?

Yes >> Repair the Rear Spoiler Switch Sense circuit for a short to voltage.
Perform REAR SPOILER VERIFICATION TEST.

No >> Go to 3

REAR SPOILER SWITCH SENSE CIRCUIT — CONTINUED

3. MEASURE THE RESISTANCE OF THE REAR SPOILER SWITCH SENSE CIRCUIT

Turn the ignition off.

Measure the resistance between ground and the Rear Spoiler Switch Sense circuit at the Rear Spoiler Switch harness connector.

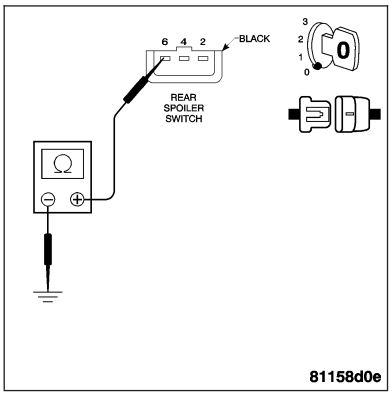

Is the resistance below 10K ohms?

Yes >> Repair the Rear Spoiler Switch Sense circuit for a short to ground.
Perform REAR SPOILER VERIFICATION TEST.

No >> Replace the Body Control Module. **Refer to Page 8E-72**.
Perform REAR SPOILER VERIFICATION TEST.

SPOILER LIMIT SWITCH SIGNAL (UP) CIRCUIT

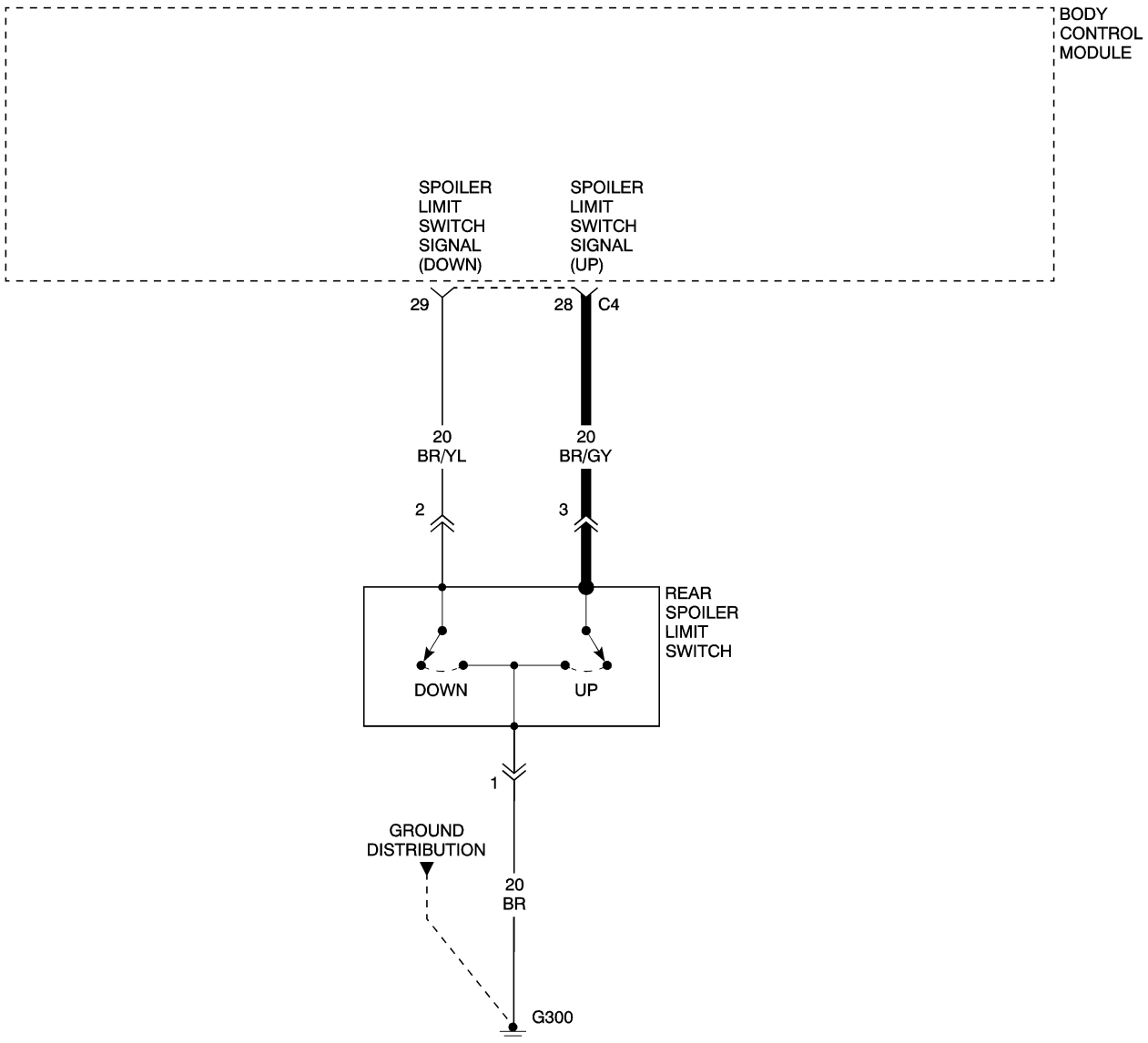

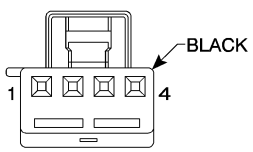

REAR SPOILER LIMIT SWITCH

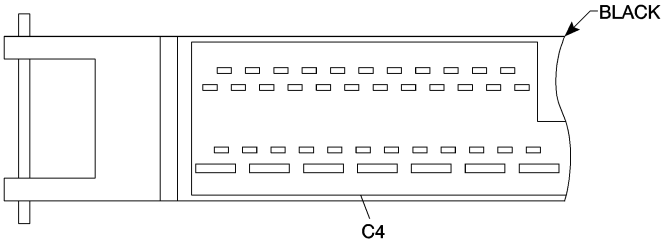

BODY CONTROL MODULE

81158dc0

SPOILER LIMIT SWITCH SIGNAL (UP) CIRCUIT — CONTINUED

When Monitored and Set Condition

- When Monitored: Continuous.
- Set Condition: The Body Control Module (BCM) reports a short to power, ground, or an open circuit failure on the Spoiler Limit Switch Signal (Up) circuit.

POSSIBLE CAUSES
SPOILER LIMIT SWITCH SIGNAL (UP) CIRCUIT SHORTED TO VOLTAGE
SPOILER LIMIT SWITCH SIGNAL (UP) CIRCUIT SHORTED TO GROUND
SPOILER LIMIT SWITCH SIGNAL (UP) CIRCUIT OPEN
BODY CONTROL MODULE

For a complete Rear Spoiler Circuit Diagram, **Refer to Page 23-28**.

Diagnostic Test

1. MEASURE THE RESISTANCE OF THE SPOILER LIMIT SWITCH SIGNAL (UP) CIRCUIT

Turn the ignition off.

Disconnect the BCM harness connector.

Disconnect the Rear Spoiler Limit Switch harness connector.

Note: Check connectors - Clean/repair as necessary.

Measure the resistance of the Spoiler Limit Switch Signal (Up) circuit from the BCM harness connector to the Rear Spoiler Limit Switch harness connector.

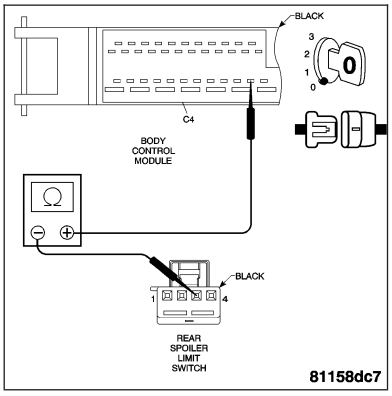

Is the resistance below 5.0 ohms?

Yes >> Go to 2

No >> Repair the Spoiler Limit Switch Signal (Up) circuit for an open.
Perform REAR SPOILER VERIFICATION TEST.

2. MEASURE THE VOLTAGE OF THE SPOILER LIMIT SWITCH SIGNAL (UP) CIRCUIT

Turn the ignition on.

Measure the voltage of the Spoiler Limit Switch Signal (Up) circuit at the Rear Spoiler Limit Switch harness connector.

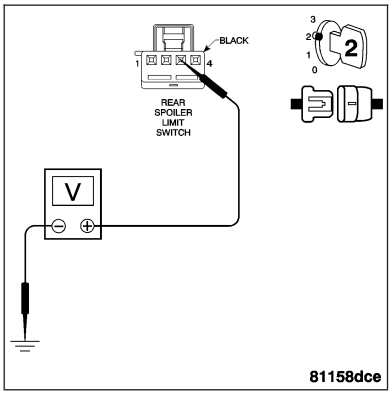

Is voltage present?

Yes >> Repair the Spoiler Limit Switch Signal (Up) circuit for a short to voltage.
Perform REAR SPOILER VERIFICATION TEST.

No >> Go to 3

SPOILER LIMIT SWITCH SIGNAL (UP) CIRCUIT — CONTINUED

3. MEASURE THE RESISTANCE OF THE SPOILER LIMIT SWITCH SIGNAL (UP) CIRCUIT

Turn the ignition off.

Measure the resistance between ground and the Spoiler Limit Switch Signal (Up) circuit at the Rear Spoiler Limit Switch harness connector.

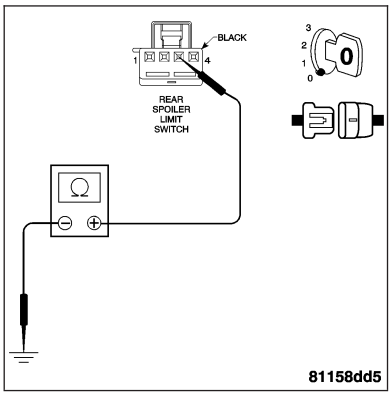

Is the resistance below 10K ohms?

Yes >> Repair the Spoiler Limit Switch Signal (Up) circuit for a short to ground.
Perform REAR SPOILER VERIFICATION TEST.

No >> Replace the Body Control Module. **Refer to Page 8E-72**.
Perform REAR SPOILER VERIFICATION TEST.

SPOILER LIMIT SWITCH SIGNAL (DOWN) CIRCUIT

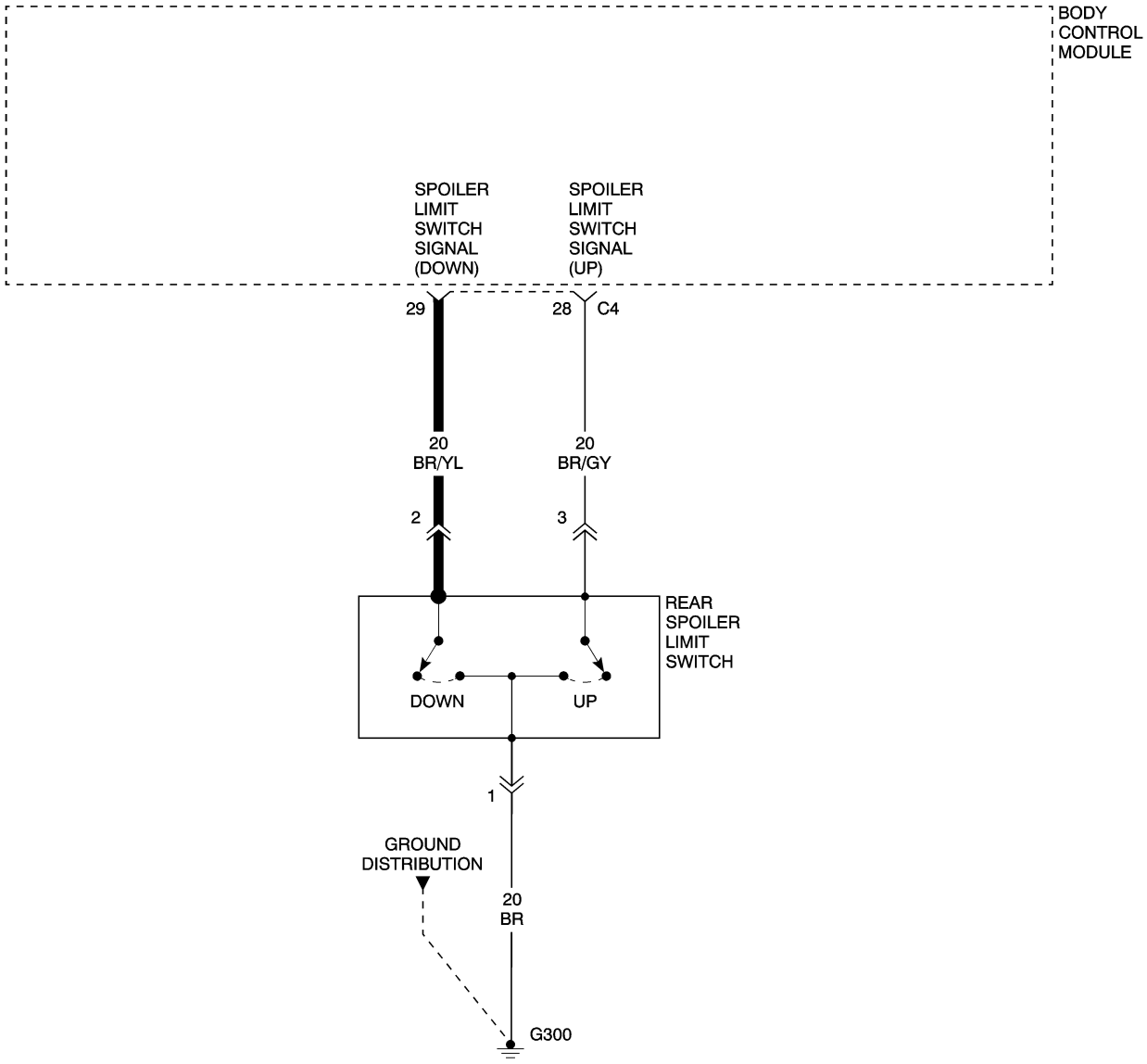

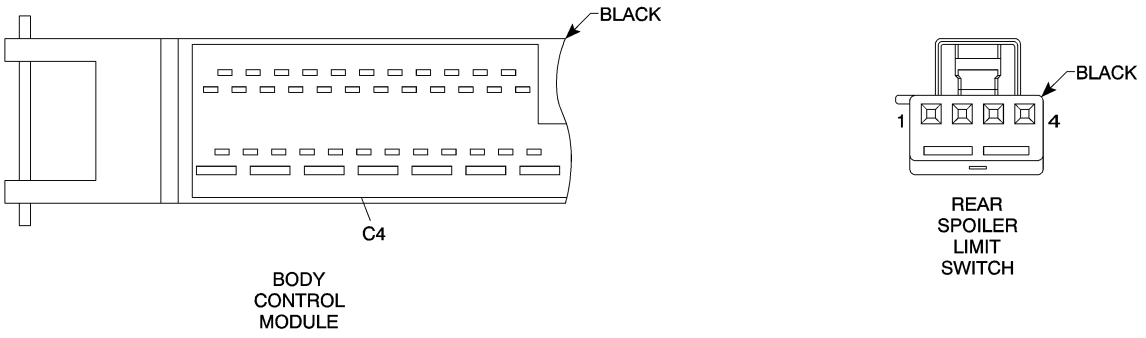

81158e20

SPOILER LIMIT SWITCH SIGNAL (DOWN) CIRCUIT — CONTINUED

When Monitored and Set Condition

- When Monitored: Continuous.
- Set Condition: The Body Control Module (BCM) reports a short to power, ground, or an open circuit failure on the Spoiler Limit Switch Signal (Down) circuit.

POSSIBLE CAUSES
SPOILER LIMIT SWITCH SIGNAL (DOWN) CIRCUIT SHORTED TO VOLTAGE
SPOILER LIMIT SWITCH SIGNAL (DOWN) CIRCUIT SHORTED TO GROUND
SPOILER LIMIT SWITCH SIGNAL (DOWN) CIRCUIT OPEN
BODY CONTROL MODULE

For a complete Rear Spoiler Circuit Diagram, **Refer to Page 23-28**.

Diagnostic Test

1. MEASURE THE RESISTANCE OF THE SPOILER LIMIT SWITCH SIGNAL (DOWN) CIRCUIT

Turn the ignition off.

Disconnect the BCM harness connector.

Disconnect the Rear Spoiler Limit Switch harness connector.

Note: Check connectors - Clean/repair as necessary.

Measure the resistance of the Spoiler Limit Switch Signal (Down) circuit from the BCM harness connector to the Rear Spoiler Limit Switch harness connector.

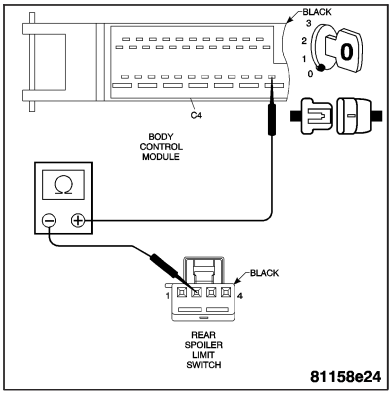

Is the resistance below 5.0 ohms?

Yes >> Go to 2

No >> Repair the Spoiler Limit Switch Signal (Down) circuit for an open.
Perform REAR SPOILER VERIFICATION TEST.

2. MEASURE THE VOLTAGE OF THE SPOILER LIMIT SWITCH SIGNAL (DOWN) CIRCUIT

Turn the ignition on.

Measure the voltage of the Spoiler Limit Switch Signal (Down) circuit at the Rear Spoiler Limit Switch harness connector.

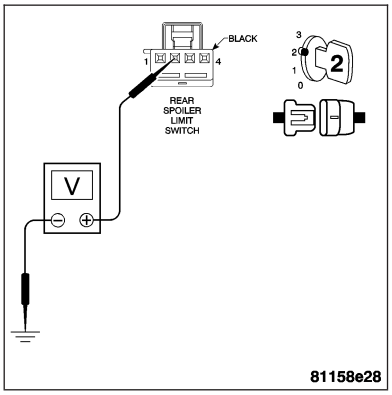

Is voltage present?

Yes >> Repair the Spoiler Limit Switch Signal (Down) circuit for a short to voltage.
Perform REAR SPOILER VERIFICATION TEST.

No >> Go to 3

SPOILER LIMIT SWITCH SIGNAL (DOWN) CIRCUIT — CONTINUED

3. MEASURE THE RESISTANCE OF THE SPOILER LIMIT SWITCH SIGNAL (DOWN) CIRCUIT

Turn the ignition off.

Measure the resistance between ground and the Spoiler Limit Switch Signal (Down) circuit at the Rear Spoiler Limit Switch harness connector.

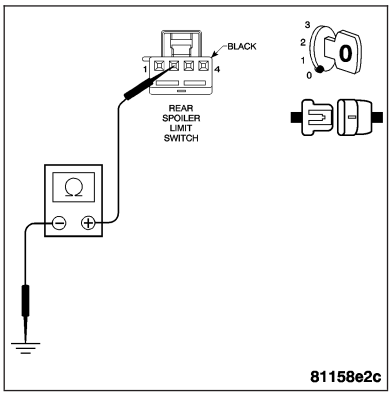

Is the resistance below 10K ohms?

Yes >> Repair the Spoiler Limit Switch Signal (Down) circuit for a short to ground.
Perform REAR SPOILER VERIFICATION TEST.

No >> Replace the Body Control Module. **Refer to Page 8E-72**.
Perform REAR SPOILER VERIFICATION TEST.

REAR SPOILER DRIVER (UP) CIRCUIT

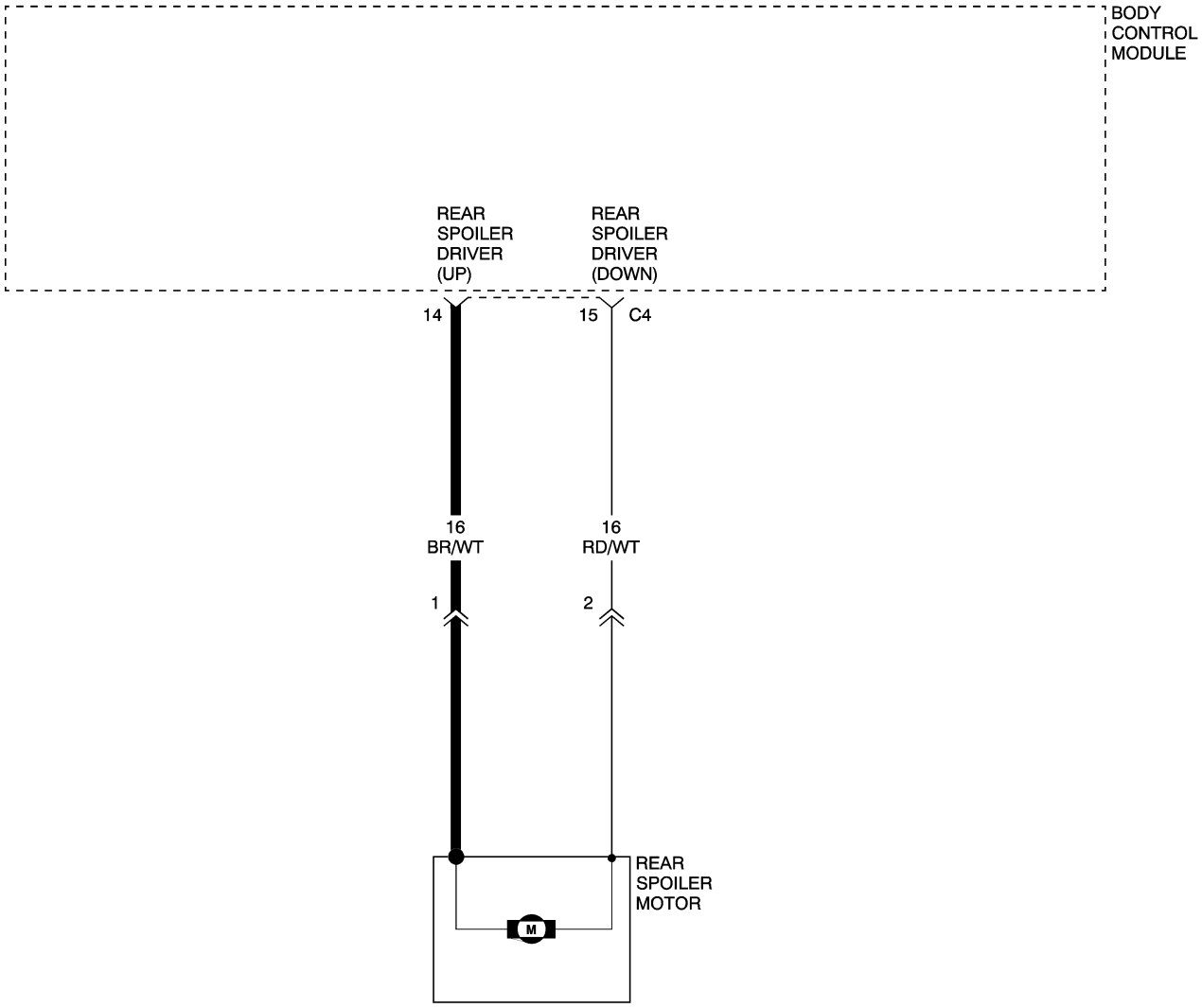

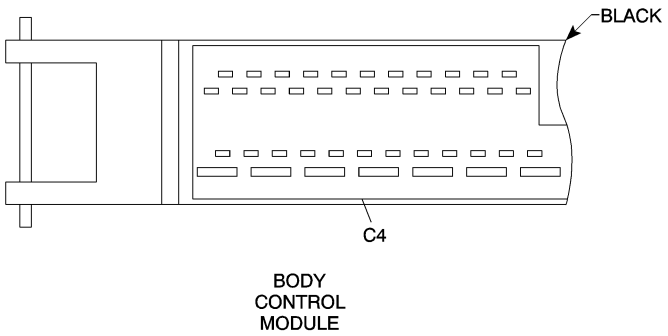

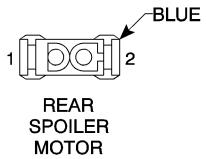

81158e68

REAR SPOILER DRIVER (UP) CIRCUIT — CONTINUED

When Monitored and Set Condition

- When Monitored: Continuous.
- Set Condition: The Body Control Module (BCM) reports a short to power, ground, or an open circuit failure on the Rear Spoiler Driver (Up) circuit.

POSSIBLE CAUSES
REAR SPOILER DRIVER (UP) CIRCUIT SHORTED TO VOLTAGE
REAR SPOILER DRIVER (UP) CIRCUIT SHORTED TO GROUND
REAR SPOILER DRIVER (UP) CIRCUIT OPEN
BODY CONTROL MODULE

For a complete Rear Spoiler Circuit Diagram, **Refer to Page 23-28**.

Diagnostic Test

1. MEASURE THE RESISTANCE OF THE REAR SPOILER DRIVER (UP) CIRCUIT

Turn the ignition off.

Disconnect the BCM harness connector.

Disconnect the Rear Spoiler Motor harness connector.

Note: Check connectors - Clean/repair as necessary.

Measure the resistance of the Rear Spoiler Driver (Up) circuit from the BCM harness connector to the Rear Spoiler Motor harness connector.

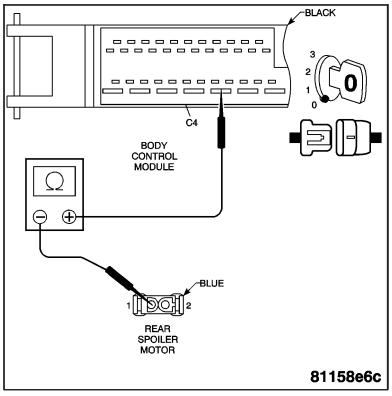

Is the resistance below 5.0 ohms?

Yes >> Go to 2

No >> Repair the Rear Spoiler Driver (Up) circuit for an open.
Perform REAR SPOILER VERIFICATION TEST.

2. MEASURE THE VOLTAGE OF THE REAR SPOILER DRIVER (UP) CIRCUIT

Turn the ignition on.

Measure the voltage of the Rear Spoiler Driver (Up) circuit at the Rear Spoiler Motor harness connector.

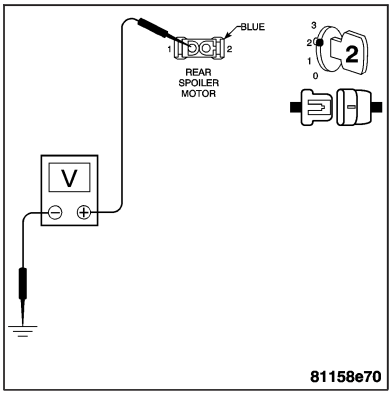

Is voltage present?

Yes >> Repair the Rear Spoiler Driver (Up) circuit for a short to voltage.
Perform REAR SPOILER VERIFICATION TEST.

No >> Go to 3

REAR SPOILER DRIVER (UP) CIRCUIT — CONTINUED

3. MEASURE THE RESISTANCE OF THE REAR SPOILER DRIVER (UP) CIRCUIT

Turn the ignition off.

Measure the resistance between ground and the Rear Spoiler Driver (Up) circuit at the Rear Spoiler Motor harness connector.

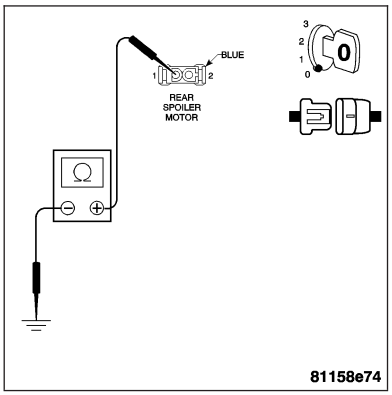

Is the resistance below 10K ohms?

Yes >> Repair the Rear Spoiler Driver (Up) circuit for a short to ground.
Perform REAR SPOILER VERIFICATION TEST.

No >> Replace the Body Control Module. **Refer to Page 8E-72**.
Perform REAR SPOILER VERIFICATION TEST.

REAR SPOILER DRIVER (DOWN) CIRCUIT

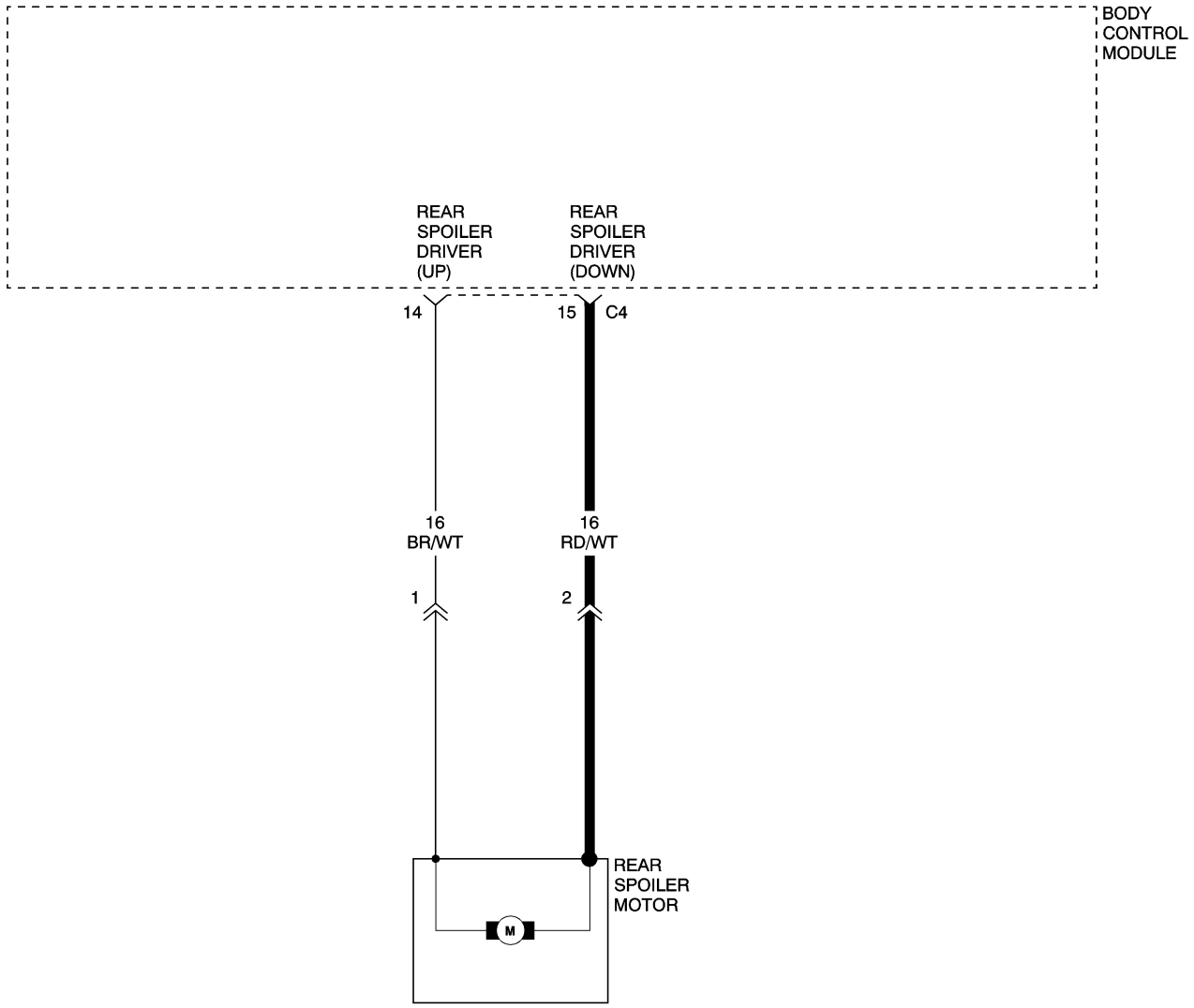

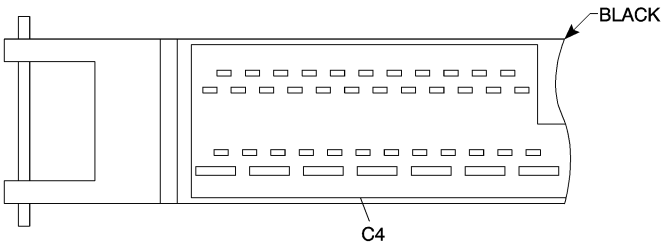

BODY
CONTROL
MODULE

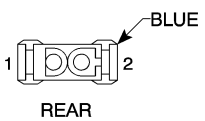

REAR
SPOILER
MOTOR

811590c4

REAR SPOILER DRIVER (DOWN) CIRCUIT — CONTINUED

When Monitored and Set Condition

- When Monitored: Continuous.
- Set Condition: The Body Control Module (BCM) reports a short to power, ground, or an open circuit failure on the Rear Spoiler Driver (Down) circuit.

POSSIBLE CAUSES
REAR SPOILER DRIVER (DOWN) CIRCUIT SHORTED TO VOLTAGE
REAR SPOILER DRIVER (DOWN) CIRCUIT SHORTED TO GROUND
REAR SPOILER DRIVER (DOWN) CIRCUIT OPEN
BODY CONTROL MODULE

For a complete Rear Spoiler Circuit Diagram, **Refer to Page 23-28**.

Diagnostic Test

1. MEASURE THE RESISTANCE OF THE REAR SPOILER DRIVER (DOWN) CIRCUIT

Turn the ignition off.

Disconnect the BCM harness connector.

Disconnect the Rear Spoiler Motor harness connector.

Note: Check connectors - Clean/repair as necessary.

Measure the resistance of the Rear Spoiler Driver (Down) circuit from the BCM harness connector to the Rear Spoiler Motor harness connector.

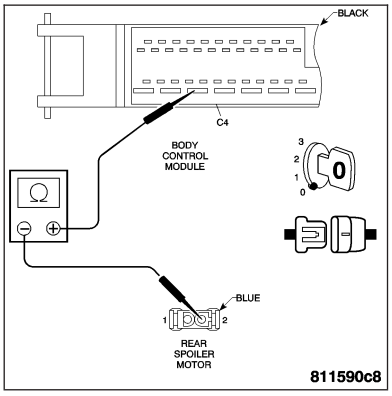

Is the resistance below 5.0 ohms?

Yes >> Go to 2

No >> Repair the Rear Spoiler Driver (Down) circuit for an open.
Perform REAR SPOILER VERIFICATION TEST.

2. MEASURE THE VOLTAGE OF THE REAR SPOILER DRIVER (DOWN) CIRCUIT

Turn the ignition on.

Measure the voltage of the Rear Spoiler Driver (Down) circuit at the Rear Spoiler Motor harness connector.

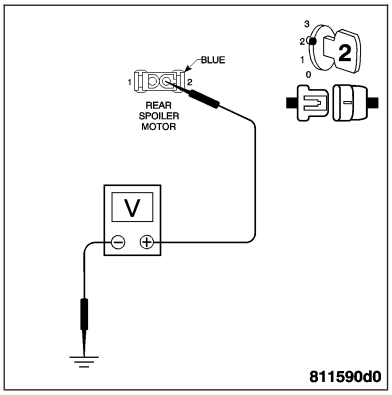

Is voltage present?

Yes >> Repair the Rear Spoiler Driver (Down) circuit for a short to voltage.
Perform REAR SPOILER VERIFICATION TEST.

No >> Go to 3

REAR SPOILER DRIVER (DOWN) CIRCUIT — CONTINUED

3. MEASURE THE RESISTANCE OF THE REAR SPOILER DRIVER (DOWN) CIRCUIT

Turn the ignition off.

Measure the resistance between ground and the Rear Spoiler Driver (Down) circuit at the Rear Spoiler Motor harness connector.

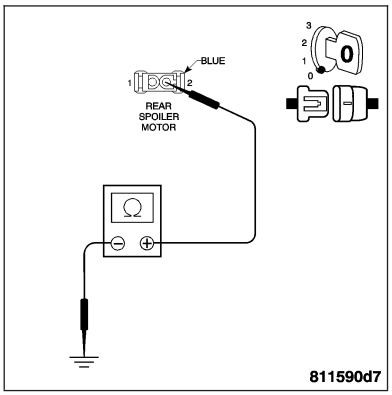

Is the resistance below 10K ohms?

Yes >> Repair the Rear Spoiler Driver (Down) circuit for a short to ground.
Perform REAR SPOILER VERIFICATION TEST.

No >> Replace the Body Control Module. **Refer to Page 8E-72**.
Perform REAR SPOILER VERIFICATION TEST.

REAR SPOILER LIMIT SWITCH FAILURE

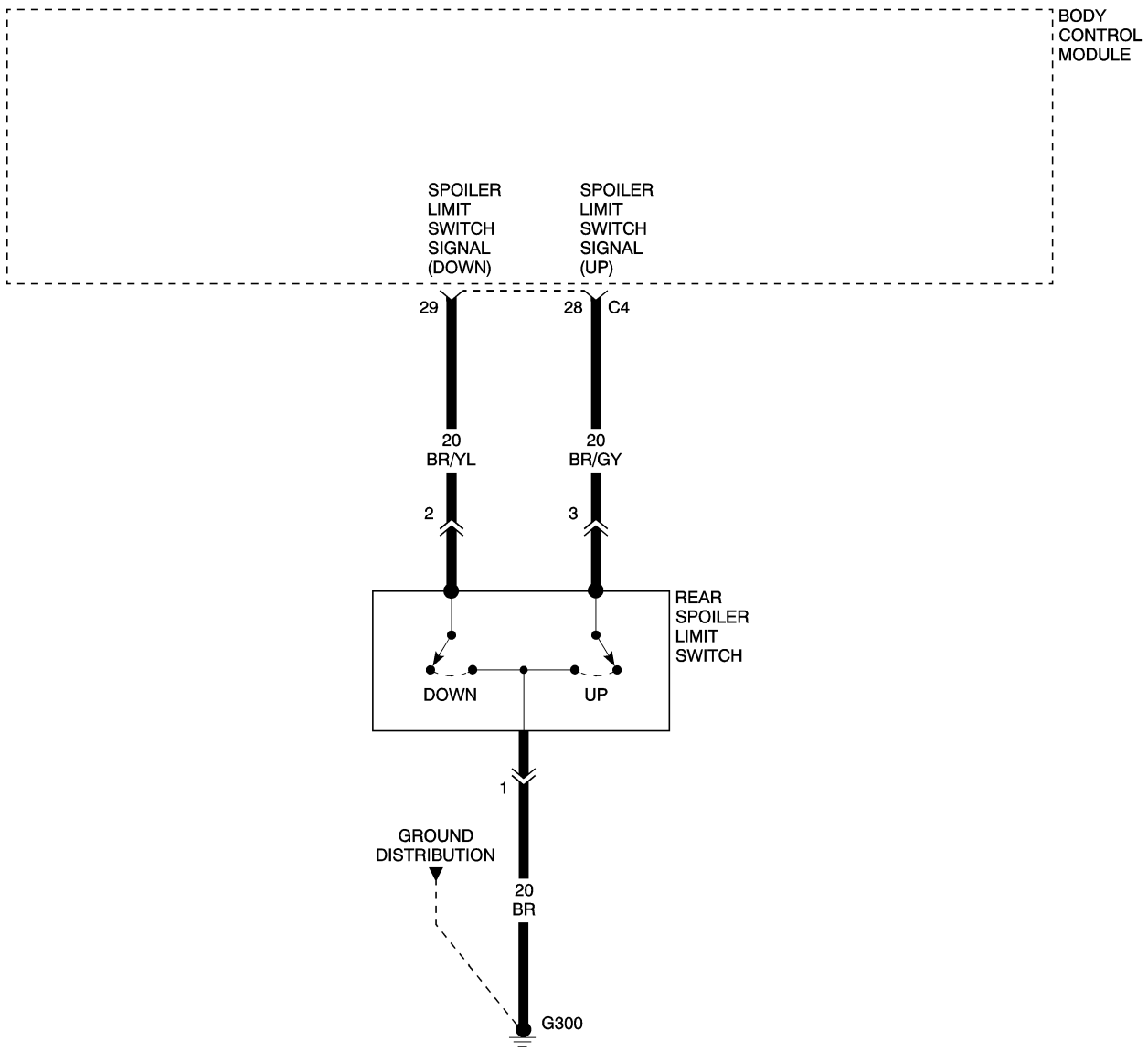

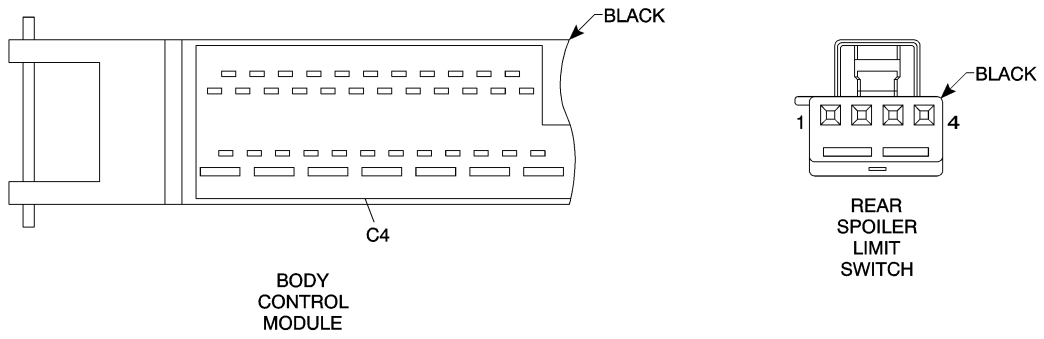

81159dae

REAR SPOILER LIMIT SWITCH FAILURE — CONTINUED

When Monitored and Set Condition

- When Monitored: Continuous.
- Set Condition: The Body Control Module (BCM) reports a Rear Spoiler Limit Switch failure.

POSSIBLE CAUSES
SPOILER LIMIT SWITCH SIGNAL (UP) CIRCUIT SHORTED TO VOLTAGE
SPOILER LIMIT SWITCH SIGNAL (DOWN) CIRCUIT SHORTED TO VOLTAGE
SPOILER LIMIT SWITCH SIGNAL (UP) CIRCUIT SHORTED TO GROUND
SPOILER LIMIT SWITCH SIGNAL (DOWN) CIRCUIT SHORTED TO GROUND
SPOILER LIMIT SWITCH SIGNAL (UP) CIRCUIT OPEN
SPOILER LIMIT SWITCH SIGNAL (DOWN) CIRCUIT OPEN
REAR SPOILER LIMIT SWITCH GROUND CIRCUIT OPEN
REAR SPOILER LIMIT SWITCH

For a complete Rear Spoiler Circuit Diagram, **Refer to Page 23-28**.

Diagnostic Test

1. MEASURE THE RESISTANCE OF THE SPOILER LIMIT SWITCH SIGNAL (UP) CIRCUIT

Turn the ignition off.

Disconnect the BCM harness connector.

Disconnect the Rear Spoiler Limit Switch harness connector.

Note: Check connectors - Clean/repair as necessary.

Measure the resistance of the Spoiler Limit Switch Signal (Up) circuit from the BCM harness connector to the Rear Spoiler Limit Switch harness connector.

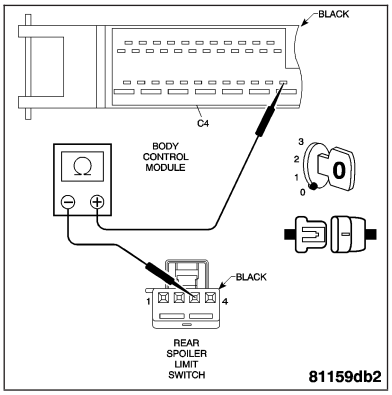

Is the resistance below 5.0 ohms?

Yes >> Go to 2

No >> Repair the Spoiler Limit Switch Signal (Up) circuit for an open.
Perform REAR SPOILER VERIFICATION TEST.

2. MEASURE THE RESISTANCE OF THE SPOILER LIMIT SWITCH SIGNAL (DOWN) CIRCUIT

Measure the resistance of the Spoiler Limit Switch (Down) circuit from the BCM harness connector to the Rear Spoiler Limit Switch harness connector.

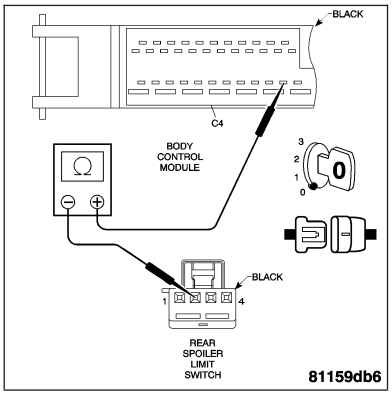

Is the resistance below 5.0 ohms?

Yes >> Go to 3

No >> Repair the Spoiler Limit Switch Signal (Down) circuit for an open.
Perform REAR SPOILER VERIFICATION TEST.

REAR SPOILER LIMIT SWITCH FAILURE — CONTINUED

3. MEASURE THE VOLTAGE OF THE SPOILER LIMIT SWITCH SIGNAL (UP) CIRCUIT

Turn the ignition on.

Measure the voltage of the Spoiler Limit Switch Signal (Up) circuit at the Rear Spoiler Limit Switch harness connector.

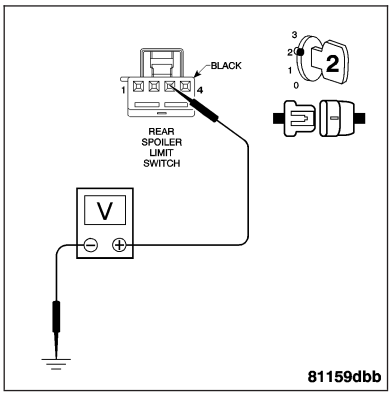

Is voltage present?

Yes >> Repair the Spoiler Limit Switch Signal (Up) circuit for a short to voltage.
Perform REAR SPOILER VERIFICATION TEST.

No >> Go to 4

4. MEASURE THE VOLTAGE OF THE SPOILER LIMIT SWITCH SIGNAL (DOWN) CIRCUIT

Measure the voltage of the Spoiler Limit Switch Signal (Down) circuit at the Rear Spoiler Limit Switch harness connector.

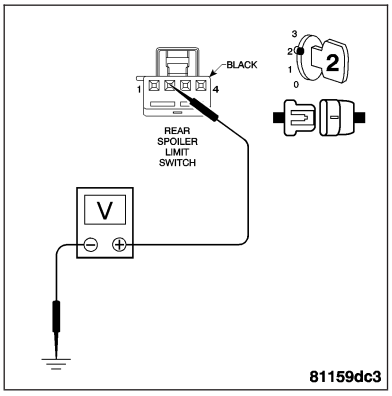

Is voltage present?

Yes >> Repair the Spoiler Limit Switch Signal (Down) circuit for a short to voltage.
Perform REAR SPOILER VERIFICATION TEST.

No >> Go to 5

5. MEASURE THE RESISTANCE OF THE SPOILER LIMIT SWITCH SIGNAL (UP) CIRCUIT

Turn the ignition off.

Measure the resistance between ground and the Spoiler Limit Switch Signal (Up) circuit at the Rear Spoiler Limit Switch harness connector.

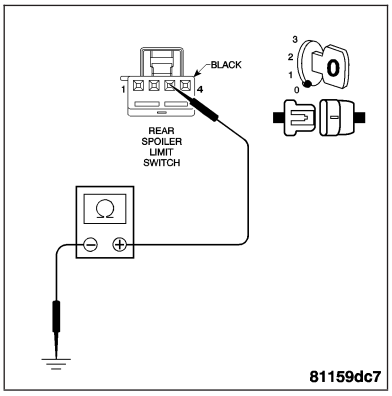

Is the resistance below 10K ohms?

Yes >> Repair the Spoiler Limit Switch Signal (Up) circuit for a short to ground.
Perform REAR SPOILER VERIFICATION TEST.

No >> Go to 6

REAR SPOILER LIMIT SWITCH FAILURE — CONTINUED

6. MEASURE THE RESISTANCE OF THE SPOILER LIMIT SWITCH SIGNAL (DOWN) CIRCUIT

Measure the resistance between ground and the Spoiler Limit Switch Signal (Down) circuit at the Rear Spoiler Limit Switch harness connector.

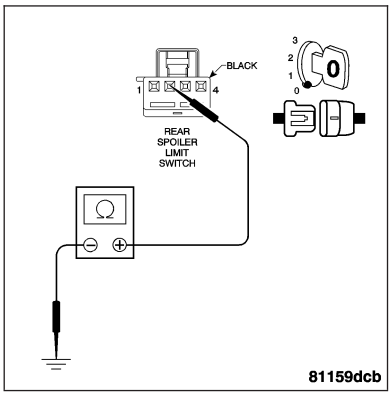

Is the resistance below 10K ohms?

Yes >> Repair the Spoiler Limit Switch Signal (Down) circuit for a short to ground.
Perform REAR SPOILER VERIFICATION TEST.

No >> Go to 7

7. MEASURE THE RESISTANCE OF THE REAR SPOILER LIMIT SWITCH GROUND CIRCUIT

Measure the resistance between ground and the Rear Spoiler Limit Switch Ground circuit.

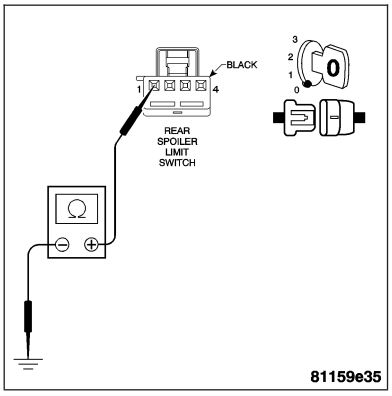

Is the resistance below 5.0 ohms?

Yes >> Replace the Rear Spoiler Limit Switch.
Perform REAR SPOILER VERIFICATION TEST.

No >> Repair the Rear Spoiler Limit Switch Ground circuit for an open.
Perform REAR SPOILER VERIFICATION TEST.

REAR SPOILER MOTOR FAILURE

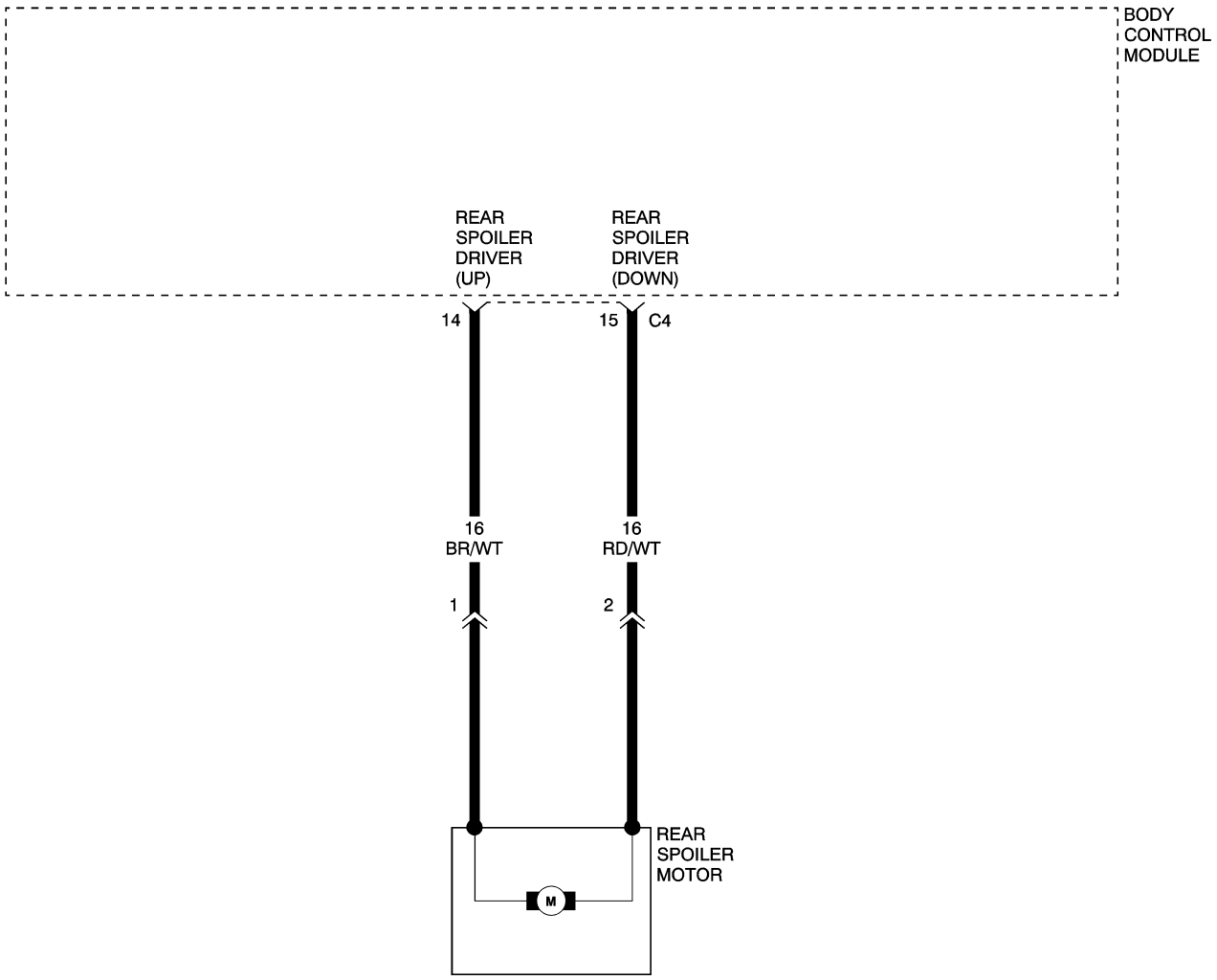

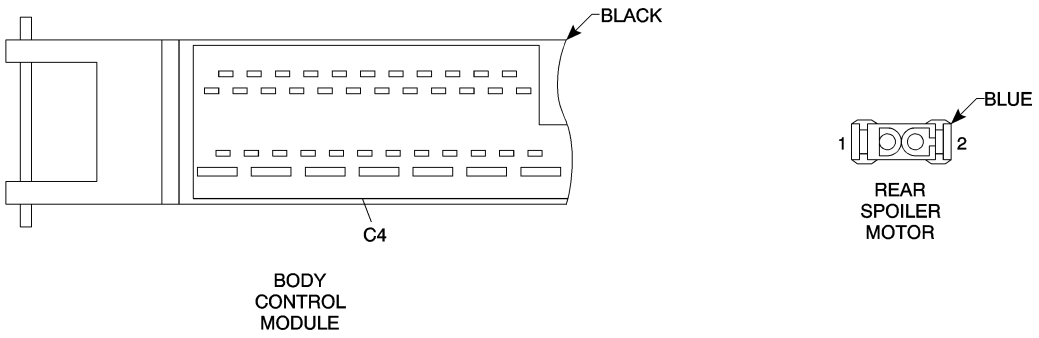

8115941e

REAR SPOILER MOTOR FAILURE — CONTINUED

When Monitored and Set Condition

- When Monitored: Continuous.
- Set Condition: The Body Control Module (BCM) reports a Rear Spoiler Motor failure.

POSSIBLE CAUSES
REAR SPOILER DRIVER (UP) CIRCUIT SHORTED TO VOLTAGE
REAR SPOILER DRIVER (DOWN) CIRCUIT SHORTED TO VOLTAGE
REAR SPOILER DRIVER (UP) CIRCUIT SHORTED TO GROUND
REAR SPOILER DRIVER (DOWN) CIRCUIT SHORTED TO GROUND
REAR SPOILER DRIVER (UP) CIRCUIT OPEN
REAR SPOILER DRIVER (DOWN) CIRCUIT OPEN
REAR SPOILER MOTOR

For a complete Rear Spoiler Circuit Diagram, **Refer to Page 23-28**.

Diagnostic Test

1. MEASURE THE RESISTANCE OF THE REAR SPOILER DRIVER (UP) CIRCUIT

Turn the ignition off.

Disconnect the BCM harness connector.

Disconnect the Rear Spoiler Motor harness connector.

Note: Check connectors - Clean/repair as necessary.

Measure the resistance of the Rear Spoiler Driver (Up) circuit from the BCM harness connector to the Rear Spoiler Motor harness connector.

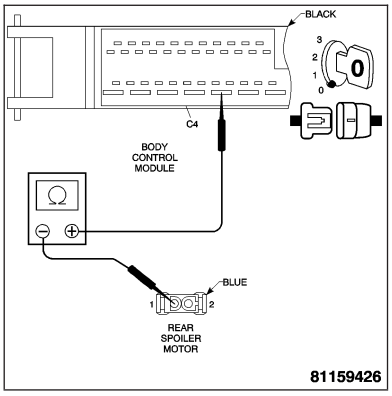

Is the resistance below 5.0 ohms?

Yes >> Go to 2

No >> Repair the Rear Spoiler Driver (Up) circuit for an open.
Perform REAR SPOILER VERIFICATION TEST.

2. MEASURE THE RESISTANCE OF THE REAR SPOILER DRIVER (DOWN) CIRCUIT

Measure the resistance of the Rear Spoiler Driver (Down) circuit from the BCM harness connector to the Rear Spoiler Motor harness connector.

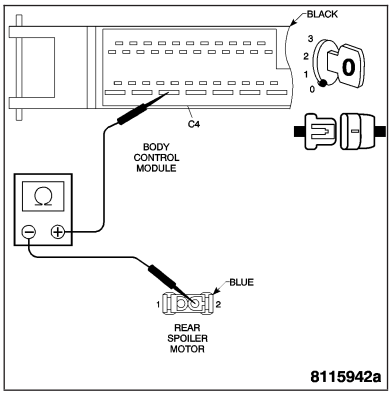

Is the resistance below 5.0 ohms?

Yes >> Go to 3

No >> Repair the Rear Spoiler Driver (Down) circuit for an open.
Perform REAR SPOILER VERIFICATION TEST.

REAR SPOILER MOTOR FAILURE — CONTINUED

3. MEASURE THE VOLTAGE OF THE REAR SPOILER DRIVER (UP) CIRCUIT

Turn the ignition on.

Measure the voltage of the Rear Spoiler Driver (Up) circuit at the Rear Spoiler Motor harness connector.

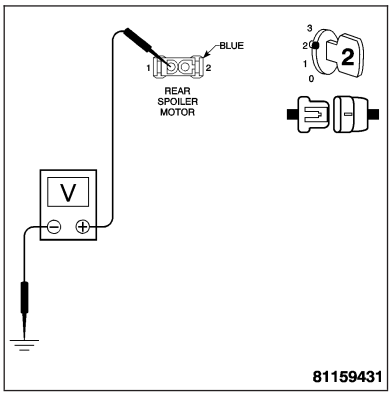

Is voltage present?

Yes >> Repair the Rear Spoiler Driver (Up) circuit for a short to voltage.
Perform REAR SPOILER VERIFICATION TEST.

No >> Go to 4

4. MEASURE THE VOLTAGE OF THE REAR SPOILER DRIVER (DOWN) CIRCUIT

Measure the voltage of the Rear Spoiler Driver (Down) circuit at the Rear Spoiler Motor harness connector.

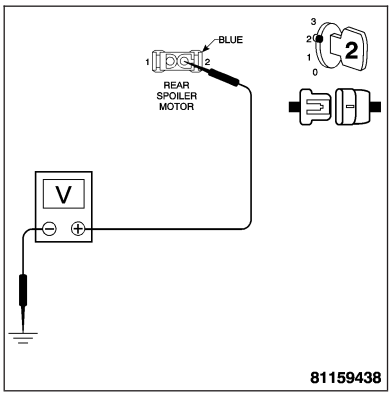

Is voltage present?

Yes >> Repair the Rear Spoiler Driver (Down) circuit for a short to voltage.
Perform REAR SPOILER VERIFICATION TEST.

No >> Go to 5

5. MEASURE THE RESISTANCE OF THE REAR SPOILER DRIVER (UP) CIRCUIT

Turn the ignition off.

Measure the resistance between ground and the Rear Spoiler Driver (Up) circuit at the Rear Spoiler Motor harness connector.

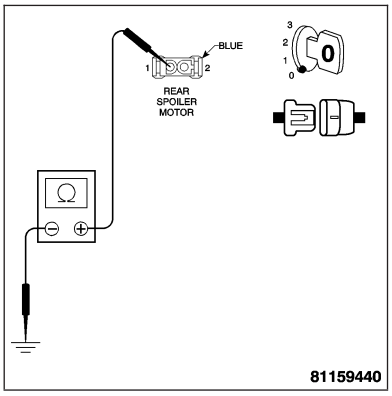

Is the resistance below 10K ohms?

Yes >> Repair the Rear Spoiler Driver (Up) circuit for a short to ground.
Perform REAR SPOILER VERIFICATION TEST.

No >> Go to 6

REAR SPOILER MOTOR FAILURE — CONTINUED

6. MEASURE THE RESISTANCE OF THE REAR SPOILER DRIVER (DOWN) CIRCUIT

Measure the resistance between ground and the Rear Spoiler Driver (Down) circuit at the Rear Spoiler Motor harness connector.

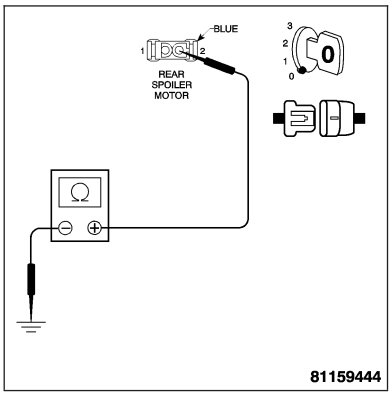

Is the resistance below 10K ohms?

Yes >> Repair the Rear Spoiler Driver (Down) circuit for a short to ground.
Perform REAR SPOILER VERIFICATION TEST.

No >> Replace the Rear Spoiler Motor. **Refer to Page 23-117**.
Perform REAR SPOILER VERIFICATION TEST.

REAR SPOILER VERIFICATION TEST

1.

Disconnect all jumper wires and reconnect all previously disconnected components and connectors.

Operate the Spoiler Switch to fully extend the spoiler.

Operate the Spoiler Switch to fully retract the spoiler.

Drive the vehicle at 89 km/h (55 MPH) and verify the spoiler operation.

With the DRB III®, confirm that no DTCs are present and that all components are functioning properly.

If a DTC is present, refer to the appropriate category and select the corresponding symptom.

Are any DTCs present?

YES >> Repair is not complete, refer to appropriate symptom.

NO >> Repair is complete.

SCHEMATICS AND DIAGRAMS

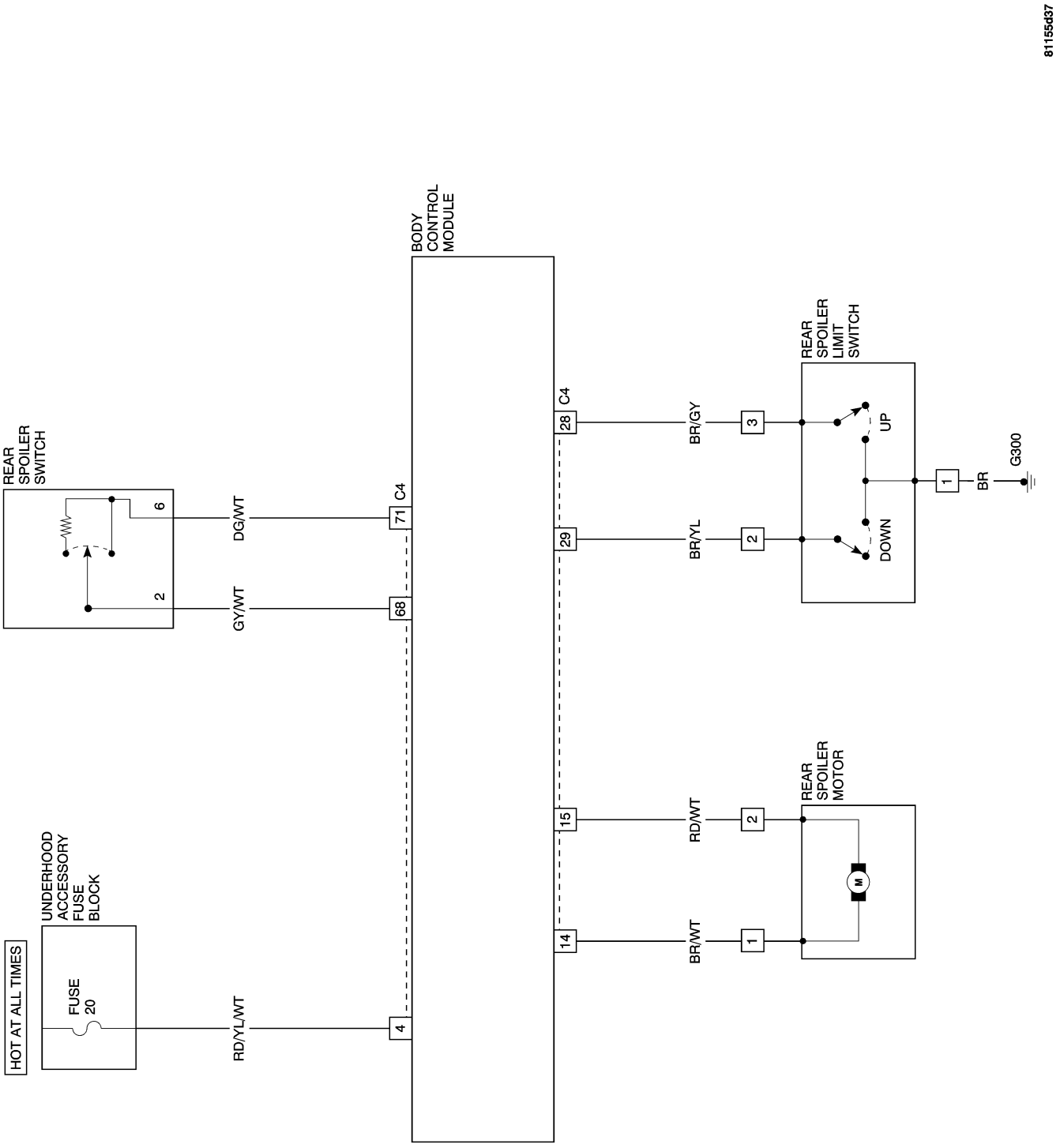

BODY - SERVICE INFORMATION

TABLE OF CONTENTS

page

BODY - SERVICE INFORMATION
DIAGNOSIS AND TESTING
WATER LEAKS 29
WIND NOISE 30
STANDARD PROCEDURE
BODY LUBRICATION 31
DRILLING AND WELDING 31
SPECIFICATIONS
SPECIFICATIONS - BODY LUBRICATION . . . 32
SPECIFICATIONS - TORQUE 33

page

LIFTGATE 34
BODY STRUCTURE 52
DOOR 88
EXTERIOR 110
HOOD 126
INSTRUMENT PANEL 141
INTERIOR 161
PAINT 199
SEATS 201

BODY - SERVICE INFORMATION

DIAGNOSIS AND TESTING

WATER LEAKS

Water leaks can be caused by poor sealing, improper body component alignment, body seam porosity, missing plugs, or blocked drain holes. Centrifugal and gravitational force can cause water to drip from a location away from the actual leak point, making leak detection difficult. All body sealing points should be water tight in normal wet-driving conditions. Water flowing downward from the front of the vehicle should not enter the passenger or luggage compartment. Moving sealing surfaces will not always seal water tight under all conditions. At times, side glass or door seals will allow water to enter the passenger compartment during high pressure washing or hard driving rain (severe) conditions. Over-compensating on door or glass adjustments to stop a water leak that occurs under severe conditions can cause premature seal wear and excessive closing or latching effort. After completing a repair, water test vehicle to verify leak has stopped before returning vehicle to use.

VISUAL INSPECTION BEFORE WATER LEAK TESTS

Verify that floor and body plugs are in place, body drains are clear, and body components are properly aligned and sealed. If component alignment or sealing is necessary, refer to the appropriate section of this group for proper procedures.

WATER LEAK TESTS

WARNING: DO NOT USE ELECTRIC SHOP LIGHTS OR TOOLS IN WATER TEST AREA. PERSONAL INJURY CAN RESULT.

When the conditions causing a water leak have been determined, simulate the conditions as closely as possible.

- If a leak occurs with the vehicle parked in a steady light rain, flood the leak area with an open-ended garden hose.
- If a leak occurs while driving at highway speeds in a steady rain, test the leak area with a reasonable velocity stream or fan spray of water. Direct the spray in a direction comparable to actual conditions.
- If a leak occurs when the vehicle is parked on an incline, hoist the end or side of the vehicle to simulate this condition. This method can be used when the leak occurs when the vehicle accelerates, stops or turns. If the leak occurs on acceleration, hoist the front of the vehicle. If the leak occurs when braking, hoist the back of the vehicle. If the leak occurs on left turns, hoist the left side of the vehicle. If the leak occurs on right turns, hoist the right side of the vehicle.

WATER LEAK DETECTION

To detect a water leak point-of-entry, do a water test and watch for water tracks or droplets forming on the inside of the vehicle. If necessary, remove interior trim covers or panels to gain visual access to the leak area. If the hose cannot be positioned without being held, have someone help do the water test.

Some water leaks must be tested for a considerable length of time to become apparent. When a leak appears, find the highest point of the water track or drop. The highest point usually will show the point of entry. After leak point has been found, repair the leak and water test to verify that the leak has stopped.

Locating the entry point of water that is leaking into a cavity between panels can be difficult. The trapped water may splash or run from the cavity, often at a distance from the entry point. Most water leaks of this type become apparent after accelerating, stopping, turning, or when on an incline.

MIRROR INSPECTION METHOD

When a leak point area is visually obstructed, use a suitable mirror to gain visual access. A mirror can also be used to deflect light to a limited-access area to assist in locating a leak point.

BRIGHT LIGHT LEAK TEST METHOD

Some water leaks in the luggage compartment can be detected without water testing. Position the vehicle in a brightly lit area. From inside the darkened luggage compartment inspect around seals and body seams. If necessary, have a helper direct a shop light over the suspected leak areas around the luggage compartment. If light is visible through a normally sealed location, water could enter through the opening.

PRESSURIZED LEAK TEST METHOD

When a water leak into the passenger compartment cannot be detected by water testing, pressurize the passenger compartment and soap test exterior of the vehicle. To pressurize the passenger compartment, close all doors and windows, start engine, and set heater control to high blower in HEAT position. If engine can not be started, connect a charger to the battery to ensure adequate voltage to the blower. With interior pressurized, apply dish detergent solution to suspected leak area on the exterior of the vehicle. Apply detergent solution with spray device or soft bristle brush. If soap bubbles occur at a body seam, joint, seal or gasket, the leak entry point could be at that location.

WIND NOISE

Wind noise is the result of most air leaks. Air leaks can be caused by poor sealing, improper body component alignment, body seam porosity, or missing plugs in the engine compartment or door hinge pillar areas. All body sealing points should be air tight in normal driving conditions. Moving sealing surfaces will not always seal airtight under all conditions. At times, side glass or door seals will allow wind noise to be noticed in the passenger compartment during high cross winds. Over-compensating on door or glass adjustments to stop wind noise that occurs under severe conditions can cause premature seal wear and excessive closing or latching effort. After a repair procedure has been performed, test vehicle to verify noise has stopped before returning vehicle to use.

Wind noise can also be caused by improperly fitted exterior moldings or body ornamentation. Loose moldings can flutter, creating a buzzing or chattering noise. An open cavity or protruding edge can create a whistling or howling noise. Inspect the exterior of the vehicle to verify that these conditions do not exist.

VISUAL INSPECTION BEFORE TESTS

Verify that floor and body plugs are in place and body components are aligned and sealed. If component alignment or sealing is necessary, refer to the appropriate section of this group for proper procedures.

ROAD TESTING WIND NOISE

1. Drive the vehicle to verify the general location of the wind noise.
2. Apply a 50 mm (2 in.) piece of masking tape in 150 mm (6 in.) lengths along the weatherstrips, weld seams or moldings. After each length is applied, drive the vehicle. If noise goes away after the piece of tape is applied, remove the tape, locate, and repair the concern.

POSSIBLE CAUSE OF WIND NOISE

- Moldings standing away from the body surface can catch the wind and whistle.
- Gaps in sealed areas behind overhanging body flanges can cause wind-rushing sounds.
- Misaligned movable components.
- Missing or improperly installed plugs in pillars.
- Weld burn through holes.

STANDARD PROCEDURE

BODY LUBRICATION

All mechanisms and linkages should be lubricated when necessary. This will maintain ease of operation and provide protection against rust and excessive wear. The weatherstrip seals should be lubricated to prolong their life as well as to improve door sealing.

All applicable exterior and interior vehicle operating mechanisms should be inspected and cleaned. Pivot/sliding contact areas on the mechanisms should then be lubricated.

1. When necessary, lubricate the operating mechanisms with the specified lubricants.
2. Apply silicone lubricant to a cloth and wipe it on door seals to avoid over-spray that can soil passenger's clothing.
3. Before applying lubricant, the component should be wiped clean. After lubrication, any excess lubricant should be removed.
4. The hood latch, latch release mechanism, latch striker, and safety latch should be lubricated periodically.
5. The door lock cylinders should be lubricated twice each year (preferably autumn and spring).
   a. Spray a small amount of lock cylinder lubricant directly into the lock cylinder.
   b. Apply a small amount to the key and insert it into the lock cylinder.
   c. Rotate it to the locked position and then back to the unlocked position several times.
   d. Remove the key. Wipe the lubricant from it with a clean cloth to avoid soiling of clothing.

DRILLING AND WELDING

When holes must be drilled or punched in an inner body panel, verify depth of space to the outer body panel, electrical wiring, or other components. Damage to vehicle can result.

Do not weld exterior panels unless combustible material on the interior of vehicle is removed from the repair area. Fire or hazardous conditions can result.

Always have a fire extinguisher ready for use when welding.

SPECIFICATIONS

SPECIFICATIONS - BODY LUBRICATION

COMPONENT	SERVICE INTERVAL	LUBRICANT
Door Hinges	As Required	Multi-Purpose Grease NLGI GC-LB (Water Resistant) (1)
Door Latches	As Required	Multi-Purpose Grease NLGI GC-LB (Water Resistant) (1)
Hood Latch, Release Mechanism and Safety Latch	As Required (When Performing Other Underhood Service)	Multi-Purpose Grease NLGI GC-LB 2 EP (2)
Hood Hinges	As Required	Engine Oil
Seat Track and Release Mechanism	As Required	Multi-Purpose Grease NLGI GC-LB 2 EP (2)
Liftgate Hinge	As Required	Multi-Purpose Grease NLGI GC-LB 2 EP (2)
Liftgate Support Arms	As Required	Engine Oil
Liftgate Latches	As Required	White Spray Lubricant (3)
Liftgate Release Handle (Pivot and Slide Contact Surfaces)	As Required	Multi-Purpose Grease NLGI GC-LB 2 EP (2)
Window System Components	As Required	White Spray Lubricant (3)
Lock Cylinders	Twice a Year	Lock-Cylinder Lubricant (4)
Parking Brake Mechanism	As Required	Multi-Purpose Grease NLGI GC-LB 2 EP (1)
1 = Mopar® Wheel Bearing Grease (High Temp) 2 = Mopar® Multi-Mileage Lubricant 3 = Mopar® Spray White Lube 4 = Mopar® Lock Cylinder Lubricant		

SPECIFICATIONS - TORQUE

TORQUE SPECIFICATIONS

DESCRIPTION	N·m	Ft. Lbs.	In. Lbs.
Door Check Strap to Body	30	22	266
Door Check Strap to Door	10	7	88
Door Hinge to A-pillar	32	24	283
Door Hinge to Body	30	22	266
Door Lock to Door	8	6	71
Door Striker to Body	28	21	248
Hood Hinge to Body	8	6	71
Hood Hinge to Hood	10	7	88
Hood Latch to Body	8	6	71
Hood Striker to Hood	10	7	88
Liftgate Hinge to Body	25	18	221
Liftgate Hinge to Liftgate	25	18	221
Liftgate Latch to Liftgate	8	6	71
Liftgate Striker to Frame	10	7	88
Power Window Motor to Door	13	10	115
Liftgate Release Handle Retaining Bolt	8	6	71
Liftgate Latch Assembly to Liftgate	8	6	71
Rear Cross Strut to Frame	60	44	531
Seat Adjustment Motor	4	3	35
Seat Height Adjustment to Frame	24	18	212
Seat Rail to Seat	50	37	443
Seat Track to Floor	50	37	443
Seatback to Frame	35	26	310
Seatbelt End Fitting	35	26	310
Spoiler Blade to Mounting Plate	8	6	71
Spoiler Mounting Plate to Liftgate	8	6	71

LIFTGATE

TABLE OF CONTENTS

page

EXTERIOR HANDLE
REMOVAL 34
INSTALLATION 37
GAS PROP
REMOVAL 40
INSTALLATION 41
HINGE
REMOVAL 42
INSTALLATION 42
LATCH
REMOVAL 43
INSTALLATION 43

page

LATCH STRIKER
REMOVAL 43
INSTALLATION 43
LIFTGATE
REMOVAL 44
INSTALLATION 46
TRIM PANEL
REMOVAL 48
INSTALLATION 49
BUMPER
REMOVAL 51
INSTALLATION 51

EXTERIOR HANDLE

REMOVAL

1. Disconnect the negative battery cable.
2. Remove the rear liftgate trim panel. **Refer to Page 23-48**.
3. Disconnect the rear spoiler harness connectors (1).

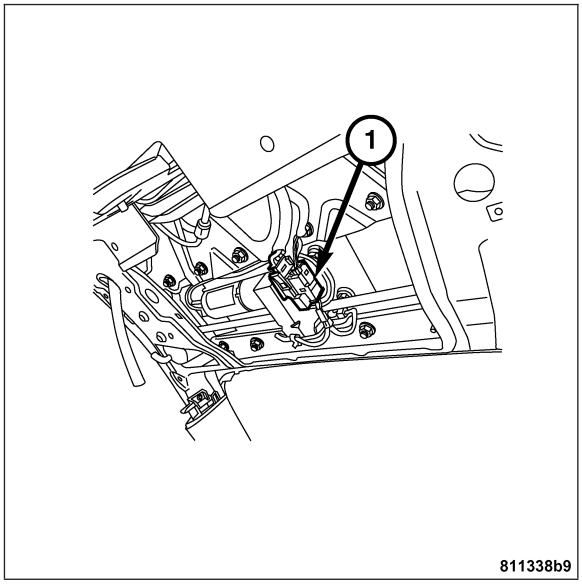

4. Remove the seven rear latch support bracket retaining nuts and bolts (1).
5. Remove the bracket from vehicle.

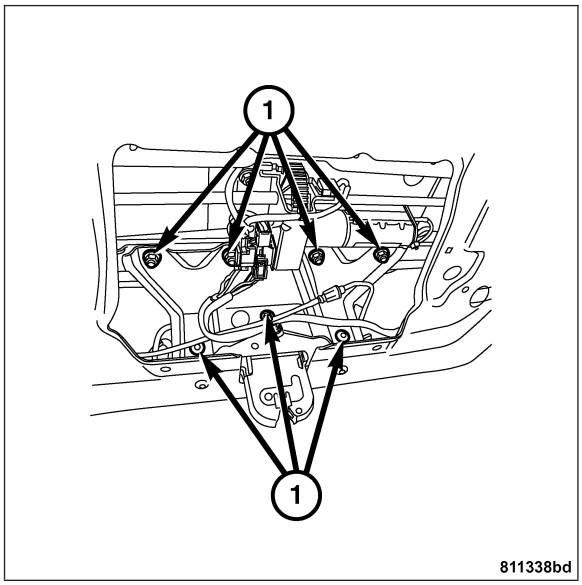

6. Remove the four rear latch retaining bolts (1) and remove the latch assembly from the rear liftgate.

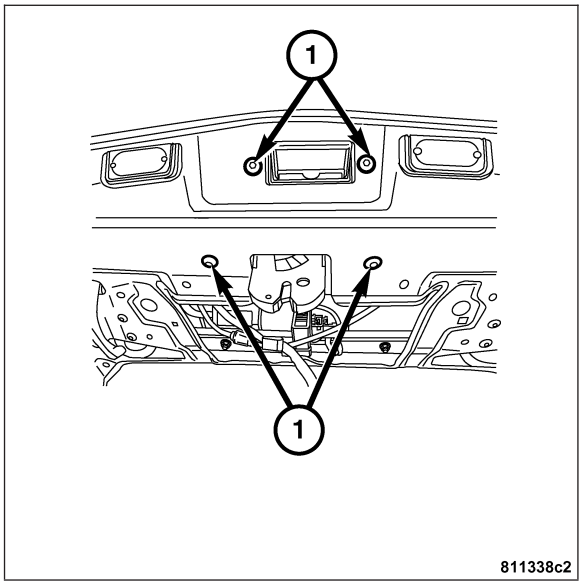

7. Disconnect the pneumatic harness connector (1) and the harness connector (2) from the rear latch assembly.

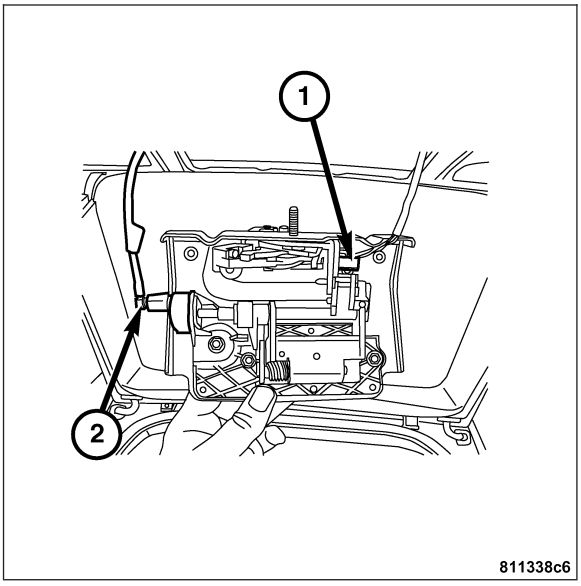

DISASSEMBLY

1. Disconnect the rear liftgate release handle linkage by pushing the arm (1) up off the linkage and then pulling the linkage out of the latch.

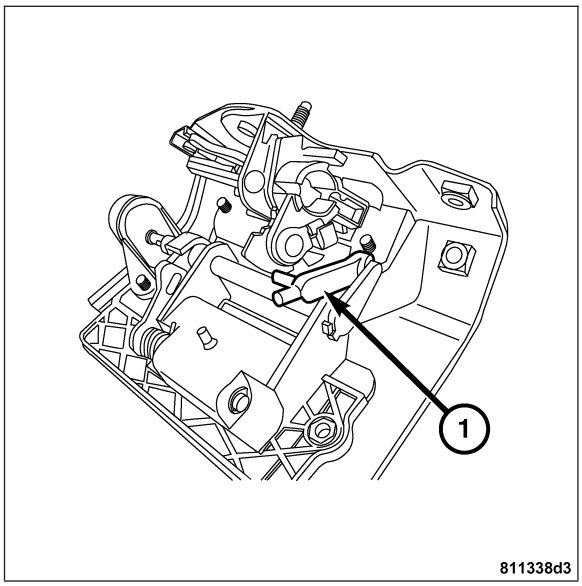

2. Remove the remaining handle retaining bolt (1) and remove the handle assembly from the latch assembly bracket.

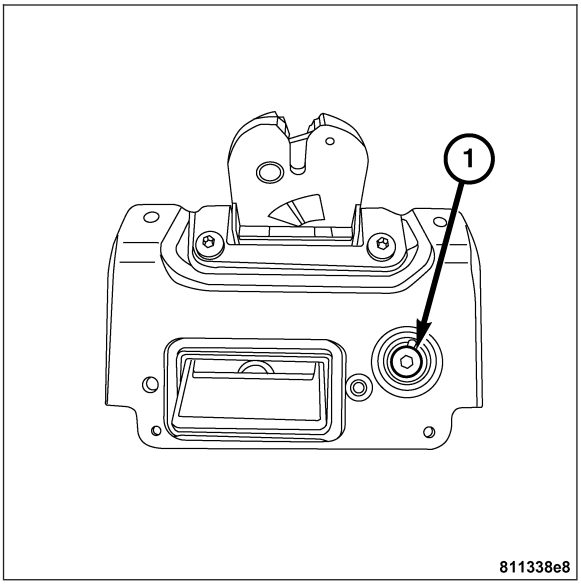

INSTALLATION

ASSEMBLY

1. Install the liftgate release handle assembly on the latch bracket. Install the retaining bolt (1). Tighten to 8 N·m (71 in. lbs.).

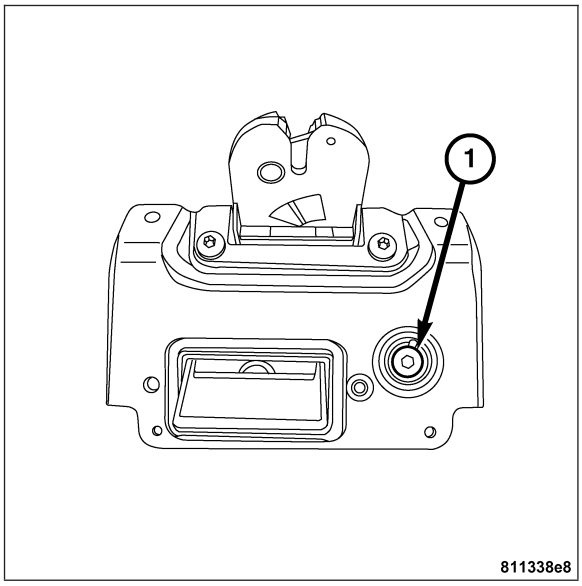

2. Connect the rear liftgate release handle linkage (1).

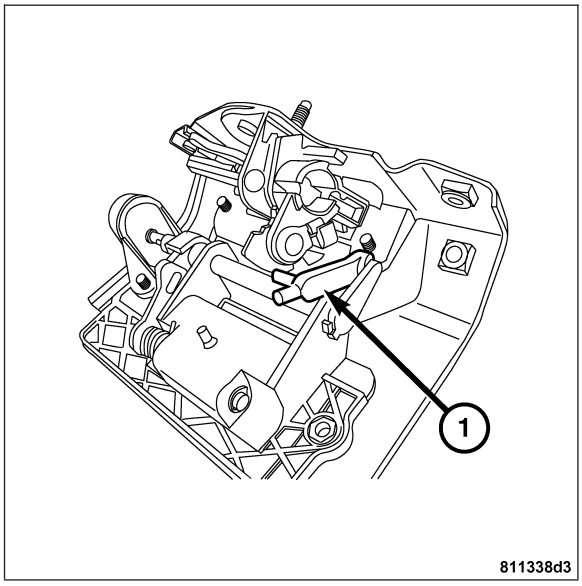

INSTALLATION

1. Connect the pneumatic harness connector (2) and the harness connector (1) to the rear latch assembly.

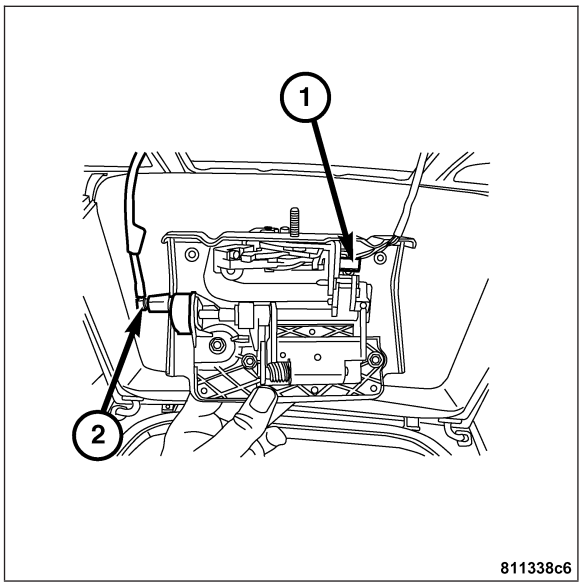

2. Install the rear latch assembly into the rear liftgate. Install the retaining bolts (1). Tighten to 8 N·m (71 in. lbs.).

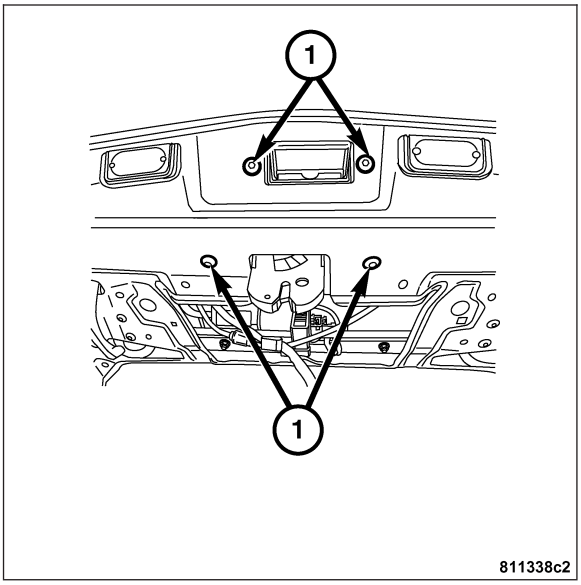

3. Install the rear latch assembly bracket and then install the seven retaining nuts and bolts (1). Tighten to 8 N·m (71 in. lbs.).

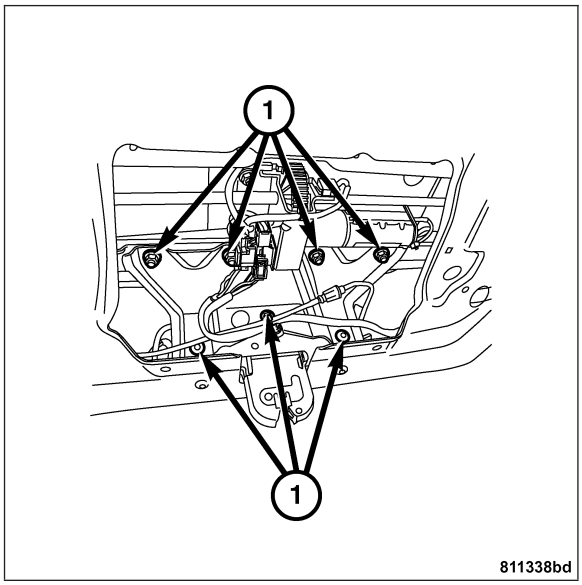

4. Connect the rear spoiler harness connectors (1).
5. Install the rear liftgate trim panel. **Refer to Page 23-49**.
6. Connect the negative battery cable.

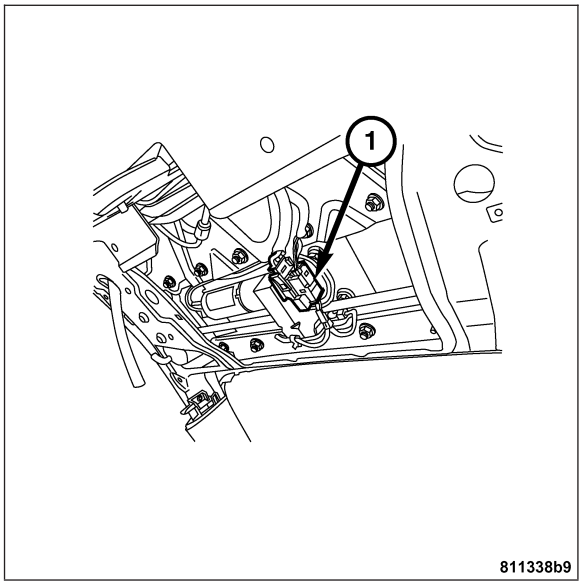

GAS PROP

REMOVAL

1. Open the rear liftgate.
2. Support the liftgate with a suitable propping device.
3. Remove the gas prop lock cap (1) on the upper end. Then pull the gas prop (2) off of its mounting point.

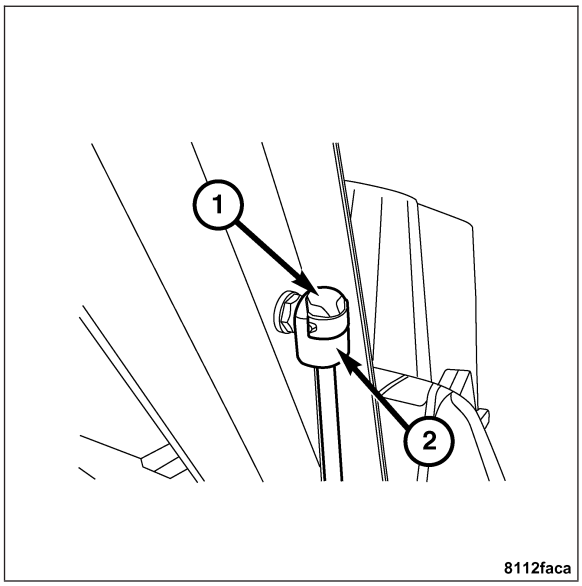

4. Remove the gas prop lock cap (1) on the lower end. Then pull the gas prop (2) off of its mounting point.

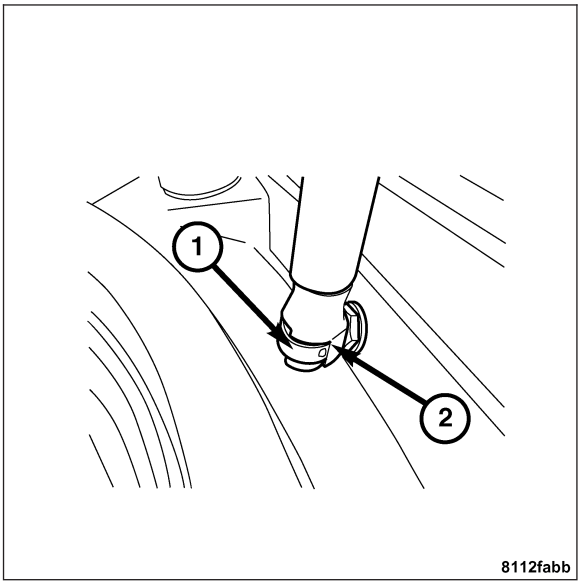

INSTALLATION

1. Place the gas prop on its upper and lower mounting points and push it in until it clicks.
2. Install the upper lock cap (1) on the gas prop (2).

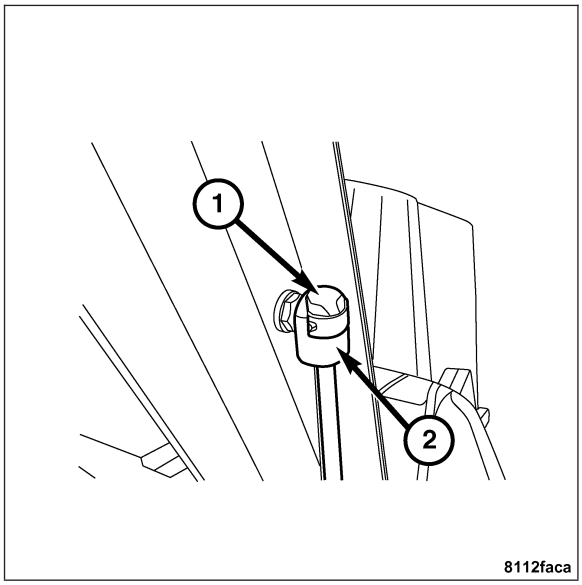

3. Install the lower lock cap (1) on the gas prop (2).
4. Verify the rear liftgate operation.

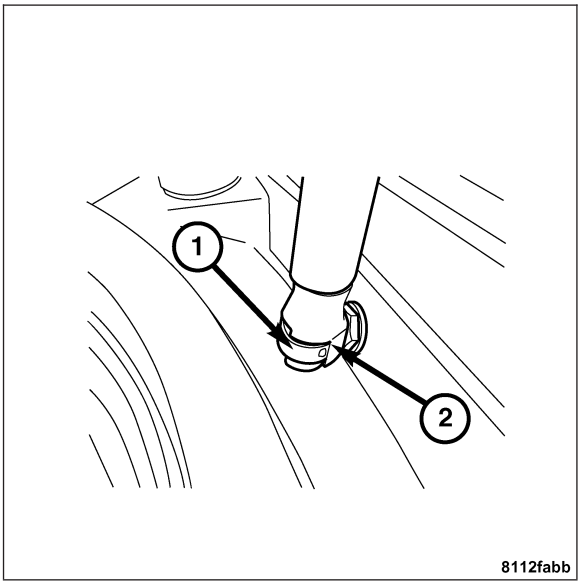

HINGE

REMOVAL

1. Remove the liftgate. **Refer to Page 23-44**.
2. Remove the remaining two bolts (1) from the hinges and then remove the hinges from the liftgate.

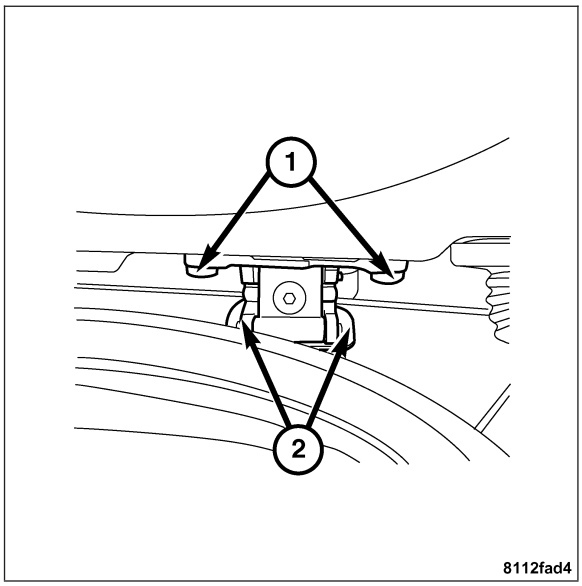

INSTALLATION

1. Install the hinges onto the liftgate lining them up with the witness marks in the paint.
2. Install the two bolts (1) attaching the hinges to the liftgate. Tighten to 25 N·m (18 ft. lbs.).
3. Install the liftgate. **Refer to Page 23-46**.

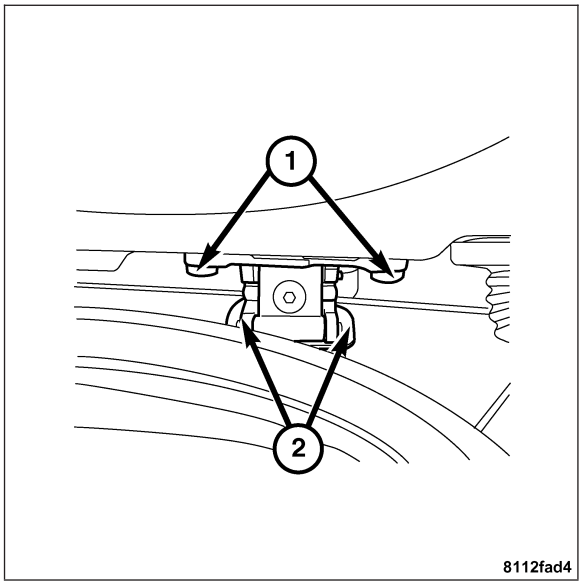

LATCH

REMOVAL

1. For removal of the latch, **Refer to Page 23-34**.

INSTALLATION

For installation of the latch, **Refer to Page 23-37**.

LATCH STRIKER

REMOVAL

1. Remove the trunk rear trim panel. **Refer to Page 23-48**.
2. Remove the bolts (1) attaching the striker (2) to the vehicle.

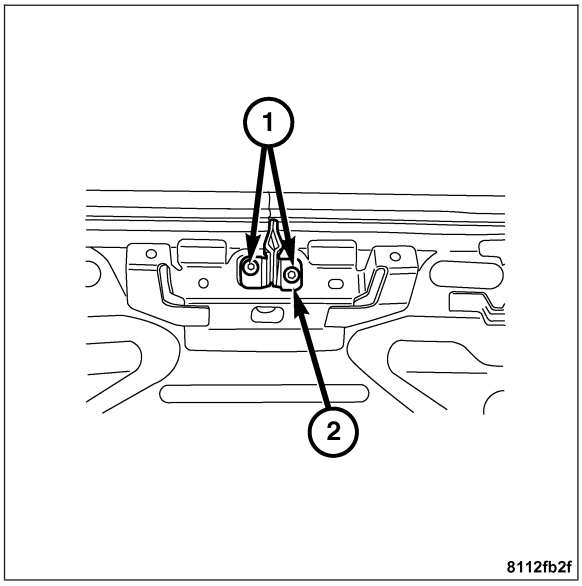

INSTALLATION

1. Align the striker (2) to the witness marks in the paint then install the striker's bolts (1). Tighten to 10 N·m (88 in. lbs.).
2. Install the trunk rear trim panel. **Refer to Page 23-49**.

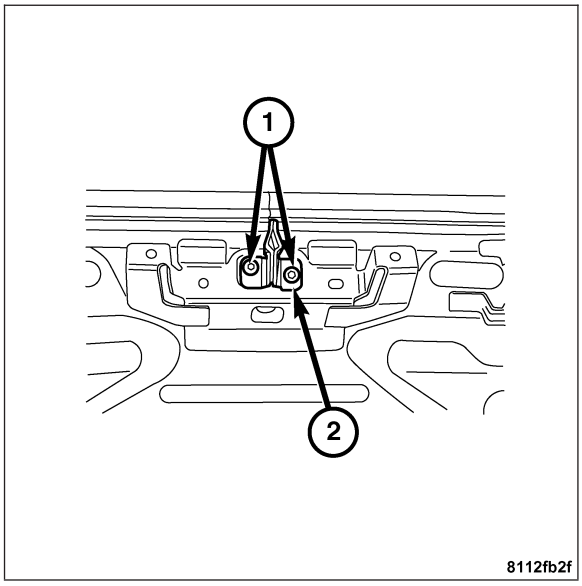

LIFTGATE

REMOVAL

1. Open the liftgate.
2. Remove the trim panels (1) from the liftgate. The liftgate has two trim panels, an upper and a lower. Both trim panels must be removed to access the liftgate's harness connectors. **Refer to Page 23-48**.
3. Disconnect the following harness connections:
   - Right and left defroster harness connections.
   - Right and left license plate lamp harness connections.
   - Ground lug G302.
   - Antenna amplifier harness connector.
   - Rear liftgate lock switch.
   - Pneumatic lock air line.
   - Center High Mounted Stop Lamp (CHMSL) harness connector.
   - Rear spoiler limit switch and motor harness connectors.
4. Remove the rubber grommet (1) from the liftgate. Then pull the harness through the access hole.
5. Remove the headliner. **Refer to Page 23-194**.

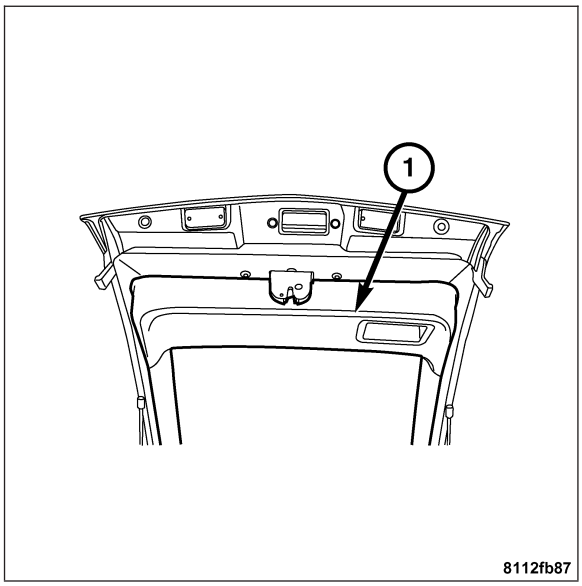

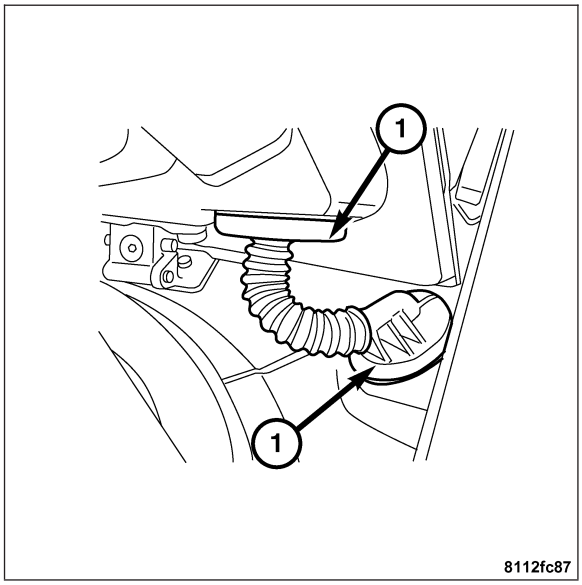

6. Using a suitable propping device, prop the liftgate up and remove the gas prop (2) from its mount point (1).

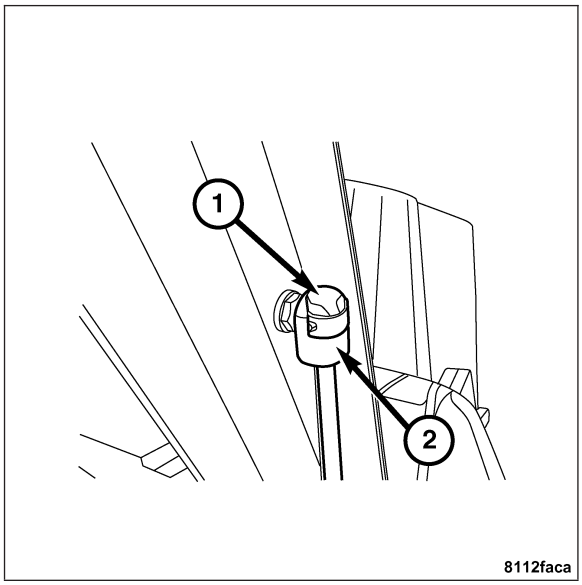

7. Have a helper hold the liftgate and remove the two bolts (2) from each hinge under the roof of the vehicle, leaving the hinge bolts (1) attached to the liftgate.
8. Carefully lift the liftgate off the body and then set it down on a clean dry surface.

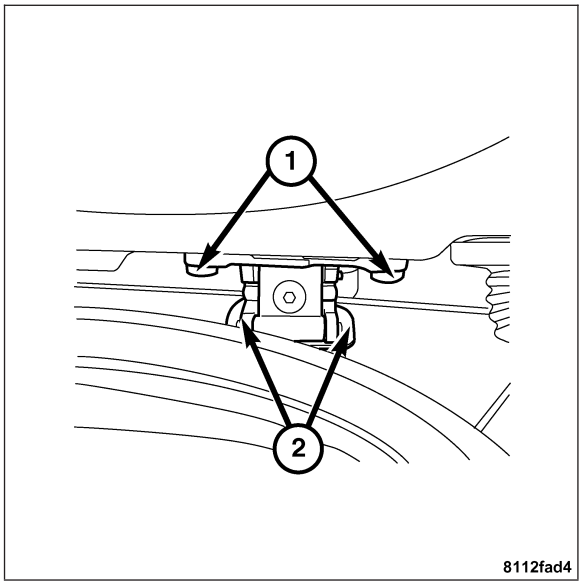

INSTALLATION

1. Have a helper lift the liftgate and install the two bolts (1) for each hinge from inside the roof panel. Tighten to 25 N·m (18 ft. lbs.).

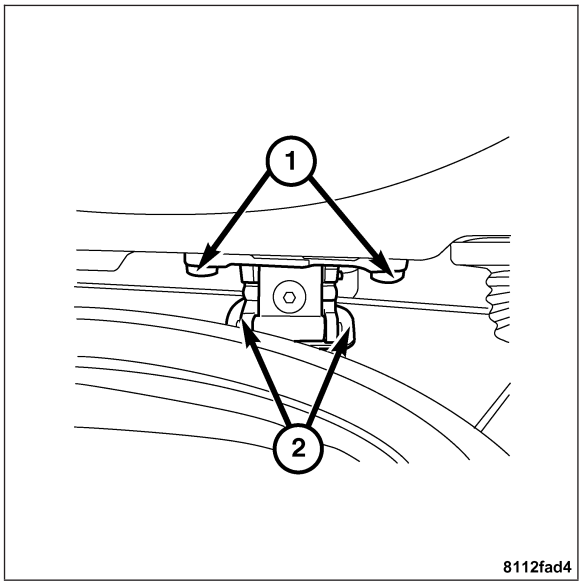

2. Using a suitable propping device, prop the rear liftgate up and install the gas prop (2) to its mount point. The install the upper lock cap (1) on the gas prop.
3. Connect the following harness connections:
   - Right and left defroster harness connections.
   - Right and left license plate lamp harness connections.
   - Ground lug G302.
   - Antenna amplifier harness connector.
   - Rear liftgate lock switch.
   - Pneumatic lock air line.
   - Center High Mounted Stop Lamp (CHMSL) harness connector.
   - Rear spoiler limit switch and motor harness connectors.

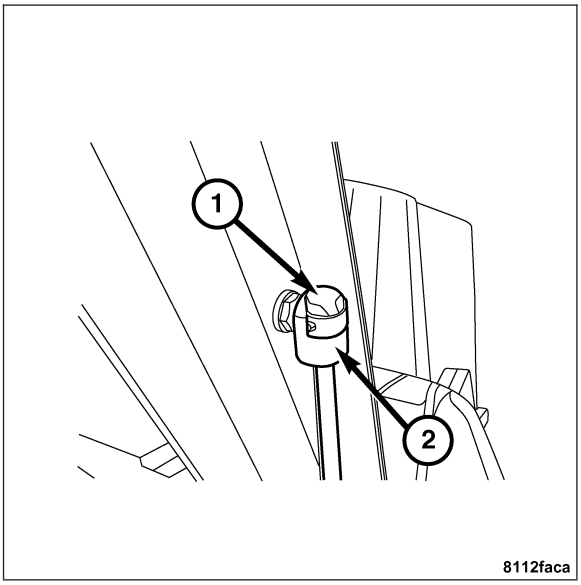

4. Install the rubber grommet (1) to the liftgate.

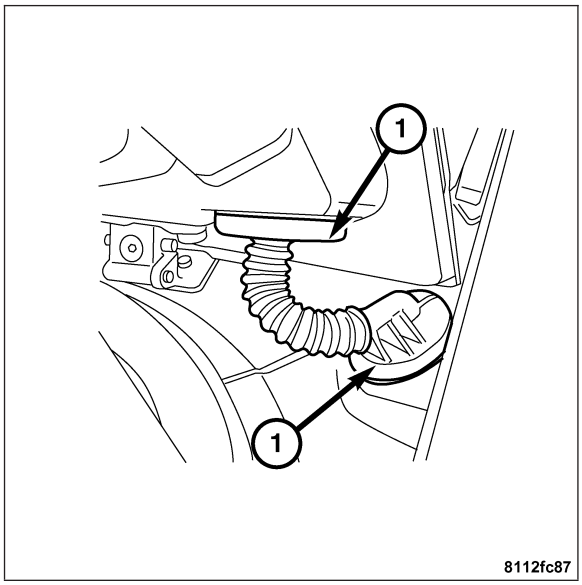

5. Install the trim panel to the liftgate. **Refer to Page 23-49**.
6. Align the liftgate. **Refer to Page 23-53**.

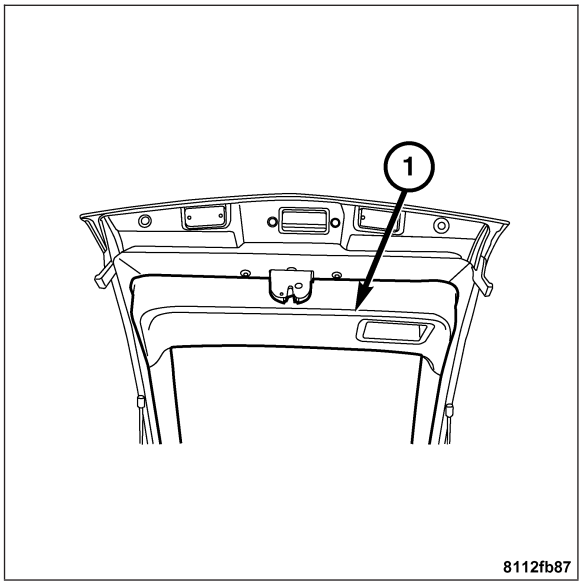

TRIM PANEL

REMOVAL

LOWER LIFTGATE TRIM PANEL

1. Remove the handle trim screw (1).

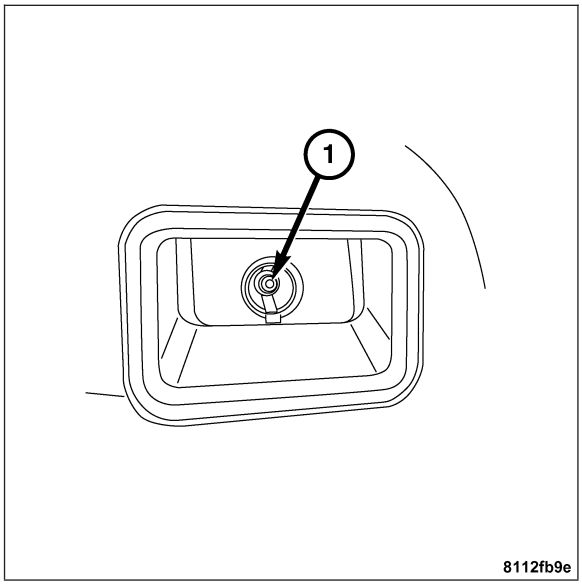

2. Pull down on the lower liftgate trim panel (1) to release it from the liftgate.

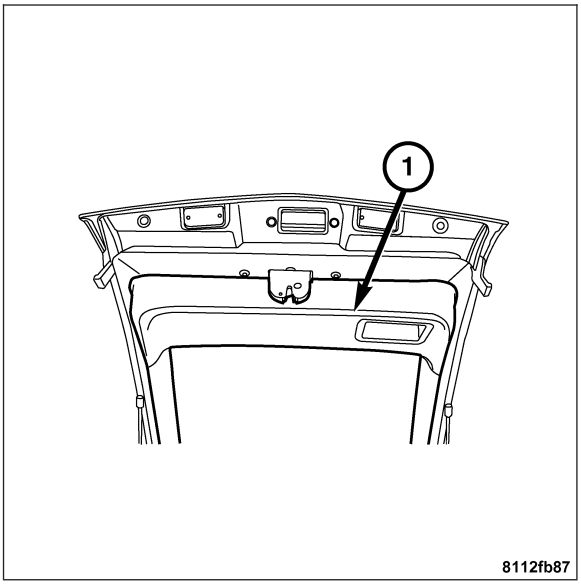

UPPER LIFTGATE TRIM PANEL

1. Remove the lower trim panel. Refer to Lower Liftgate Trim Panel.
2. Remove the two screws (1) attaching the upper liftgate trim panel (2) to the liftgate.
3. Pull down on the upper liftgate trim panel (2) to release it from the liftgate.

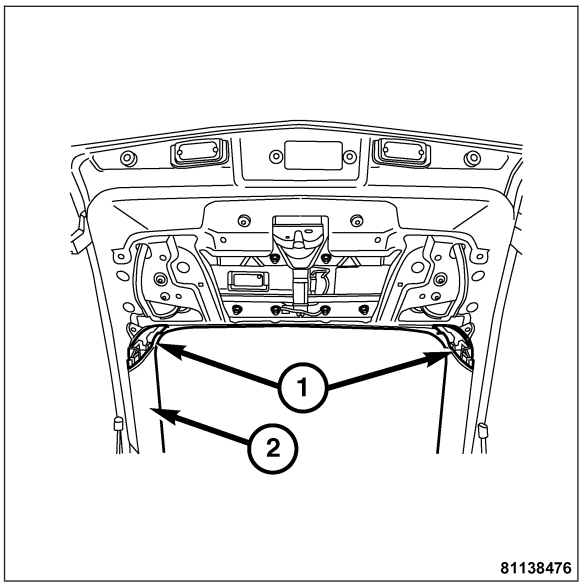

INSTALLATION

UPPER LIFTGATE TRIM PANEL

1. Push up on the upper liftgate trim panel (2) to attach it to the liftgate.
2. Install the two screws (1) attaching the upper liftgate trim panel (2) to the liftgate.
3. Install the lower trim panel. Refer to Lower Liftgate Trim Panel.

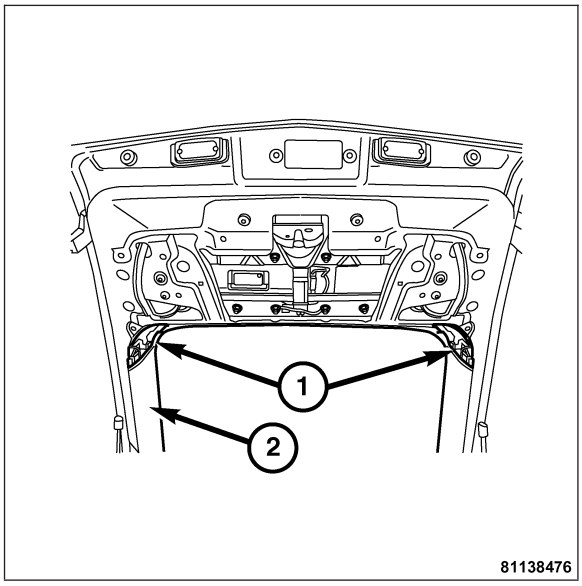

LOWER LIFTGATE TRIM PANEL

1. Push on the lower liftgate trim panel (1) to attach the retainers to the liftgate.

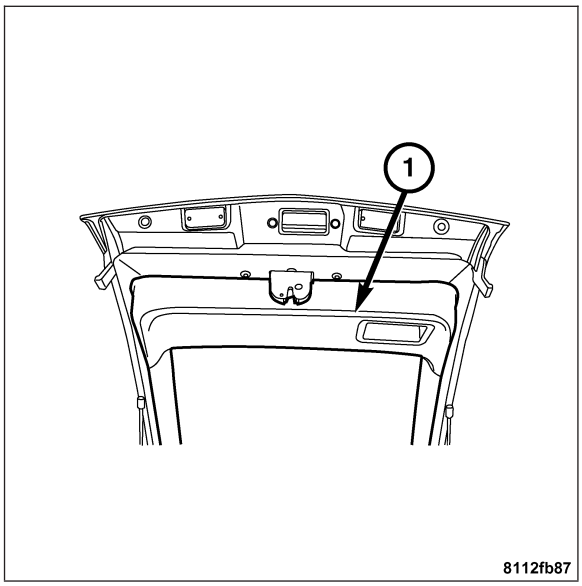

2. Install the handle trim screw (1).

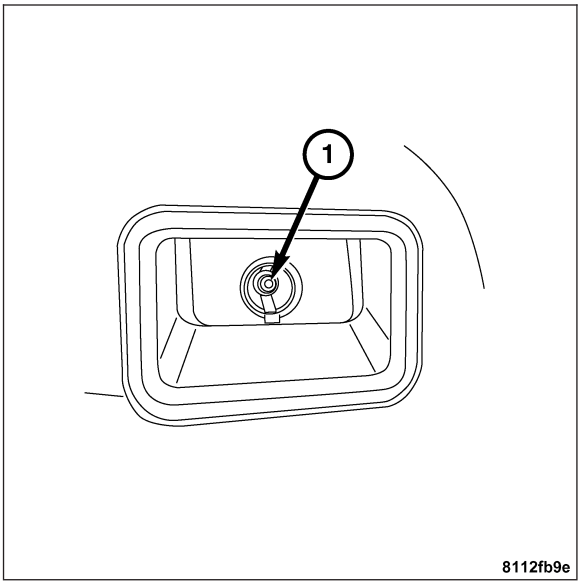

BUMPER

REMOVAL

1. Open the liftgate.
2. Remove the bolt (1) attaching the bumper to the liftgate.

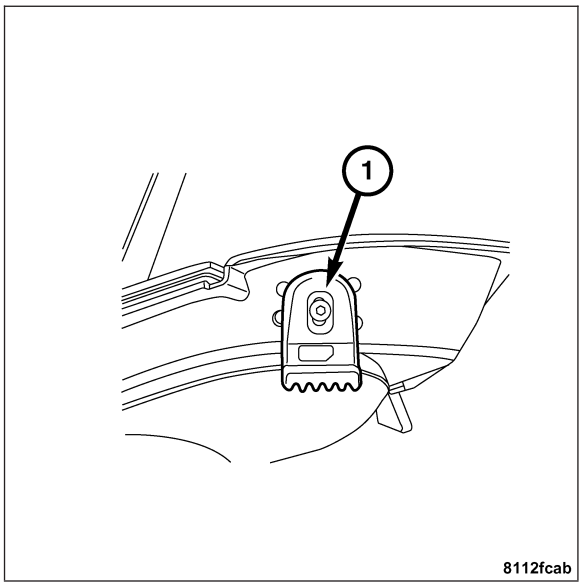

INSTALLATION

1. Position the bumper, then install the bolt attaching the bumper to the liftgate. Do not tighten the bolt at this time.
2. Close the liftgate and align it with the quarter panels. **Refer to Page 23-53**.
3. Tighten the liftgate bumper bolt.

BODY STRUCTURE

TABLE OF CONTENTS

page

GAP AND FLUSH
SPECIFICATIONS - BODY GAP MEASUREMENTS 53
OPENING DIMENSIONS
SPECIFICATIONS - BODY DIMENSIONS 55
SEALER LOCATIONS
SPECIFICATIONS - SEALER LOCATIONS 57

page

WELD LOCATIONS
SPECIFICATIONS - WELD LOCATIONS 74
STRUCTURAL ADHESIVE LOCATIONS
SPECIFICATIONS - STRUCTURAL ADHESIVES 87

GAP AND FLUSH

SPECIFICATIONS - BODY GAP MEASUREMENTS

FRONT AND SIDE GAP DIMENSIONS

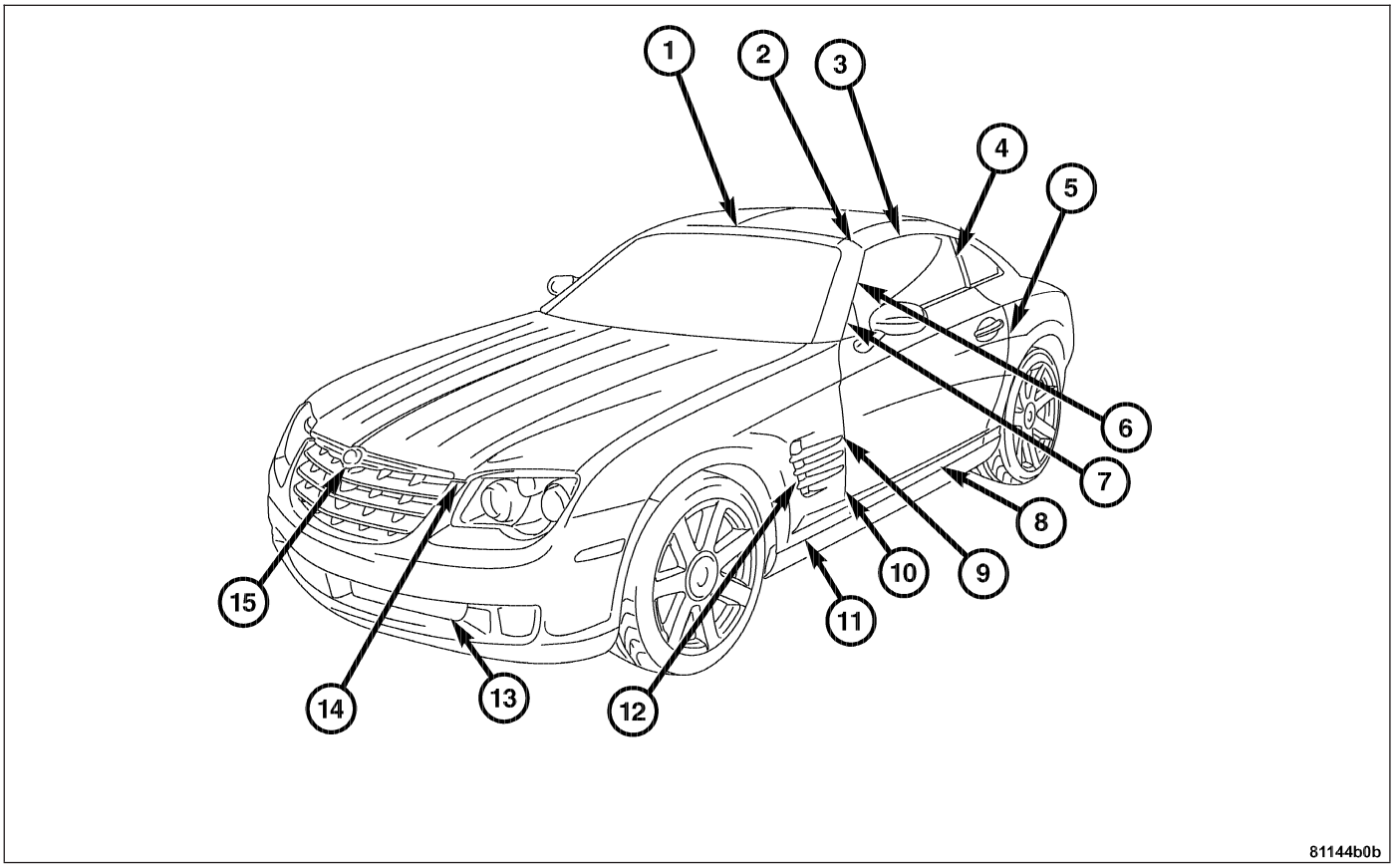

	LOCATION	GAP
1	WINDSHIELD SURROUND FRAME TO BODY	0.9 +/- 0.5
2	WINDSHIELD SURROUND FRAME TO CROSS MEMBER PANEL	2 +/- 1
3	DOOR GLASS TO OUTER QUARTER PANEL OUTER QUARTER PANEL TO ROOF PANEL PART / RAIL	7 +/- 1.5 INNER GAP 1 +/- 0.5 OUTER GAP 1 +/- 0.2
4	DOOR GLASS TO REAR WINDOW BRACKET SEAL	8 +/- 2.5
5	OUTER DOOR SKIN TO OUTER QUARTER PANEL	4 +/- 0.5
6	DOOR GLASS TO WINDSHIELD SURROUND FRAME	7 +/- 1.5
7	OUTER MIRROR TRIANGLE TO WINDSHIELD SURROUND FRAME	2 +/- 1.5
8	OUTER DOOR PANEL TO ROCKER PANEL	VERTICAL 7 +/- 1.5 HORIZONTAL 5 +/- 1.5
9	SIDE LOUVER TO FRONT FENDER SIDE LOUVER TO OUTER DOOR SKIN	0.5 +0.5 -0.1 0.5 +0.5 -0.1
10	FRONT FENDER TO OUTER DOOR SKIN	4.4 +/- 0.5
11	FRONT FENDER TO ROCKER PANEL	0 + 0.5
12	FRONT FENDER TO LOUVER (UPPER SECTION) FRONT FENDER TO LOUVER (LOWER SECTION)	1.2 +/- 0.5 1.2 +/- 0.5
13	LOWER GRILLE TO FRONT FASCIA	0.5 +0.5 -0.2
14	HOOD TO FRONT FASCIA	4 +/- 1.5
15	HOOD TO GRILLE	6 +/- 1.5

REAR AND SIDE GAP AND FLUSH DIMENSIONS

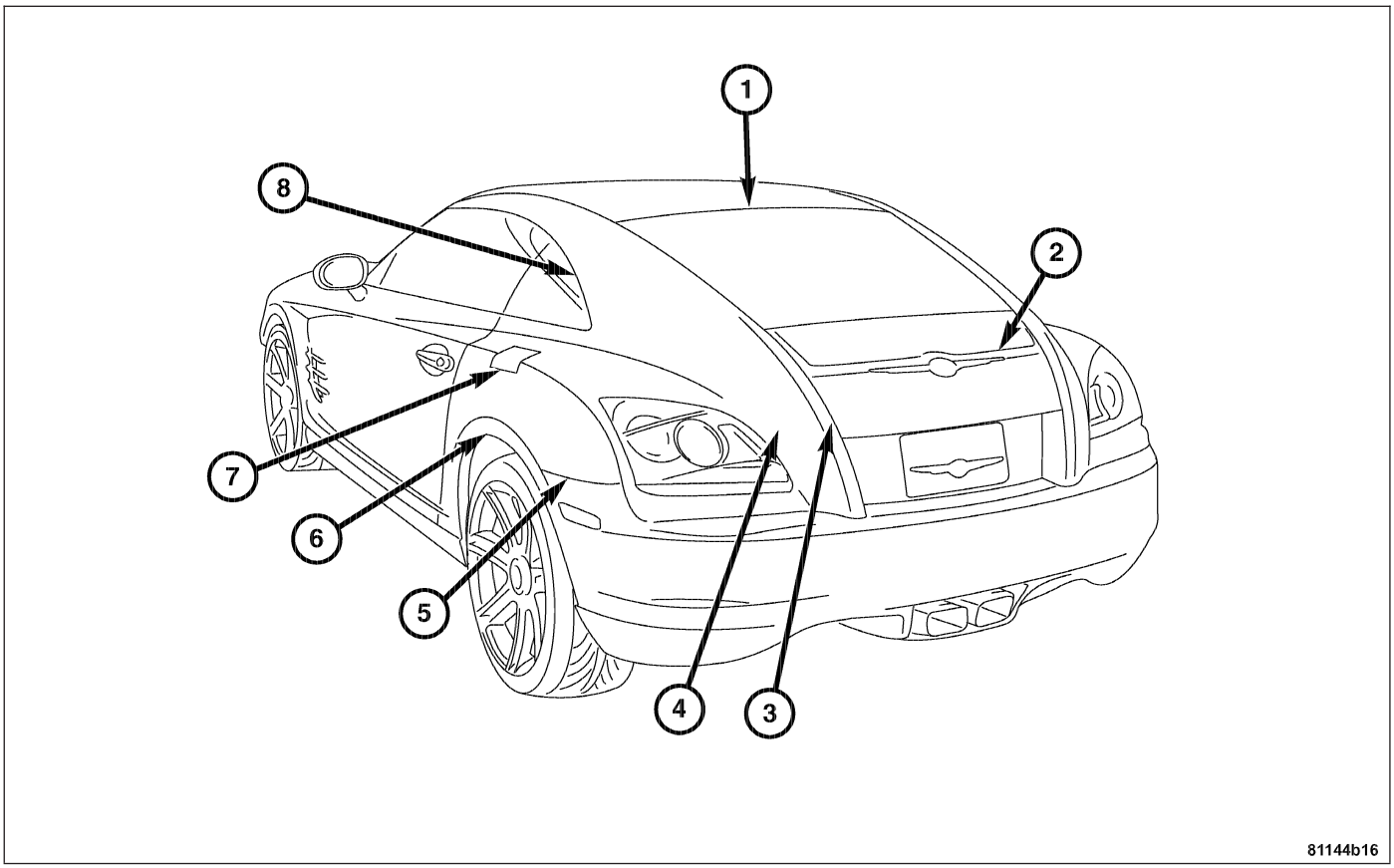

	LOCATION	GAP
1	ROOF PANEL TO REAR WINDOW	6 +1.5 -2
2	OUTSIDE HATCH PANEL TO SPOILER WING	UPPER 6 +/- 1 LOWER 4.5 +/- 1
3	OUTER QUARTER PANEL TO HATCH	4 +/- 1
4	OUTER QUARTER PANEL TO REAR FASCIA	0.7 +/- 0.5
5	OUTER QUARTER PANEL TO REAR FASCIA	0 + 0.5
6	OUTER QUARTER PANEL TO OUTER WHEELHOUSE	0 + 0.5
7	FUEL FILLER DOOR TO OUTER QUARTER PANEL	UPPER 3 +/- 0.5 LOWER 0.1
8	OUTER QUARTER PANEL TO REAR WINDOW	7 +/- 1.5

OPENING DIMENSIONS

SPECIFICATIONS - BODY DIMENSIONS

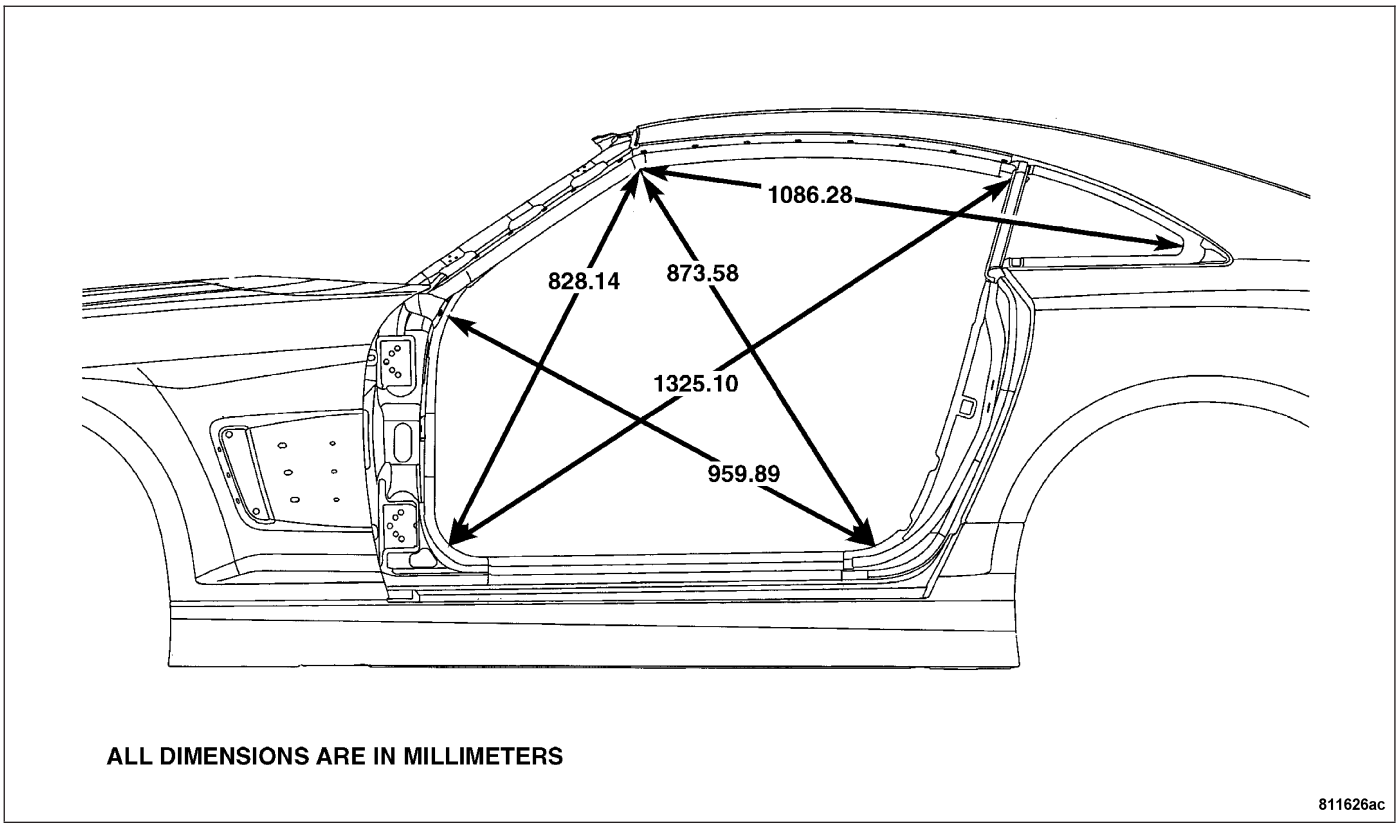

DOOR OPENING

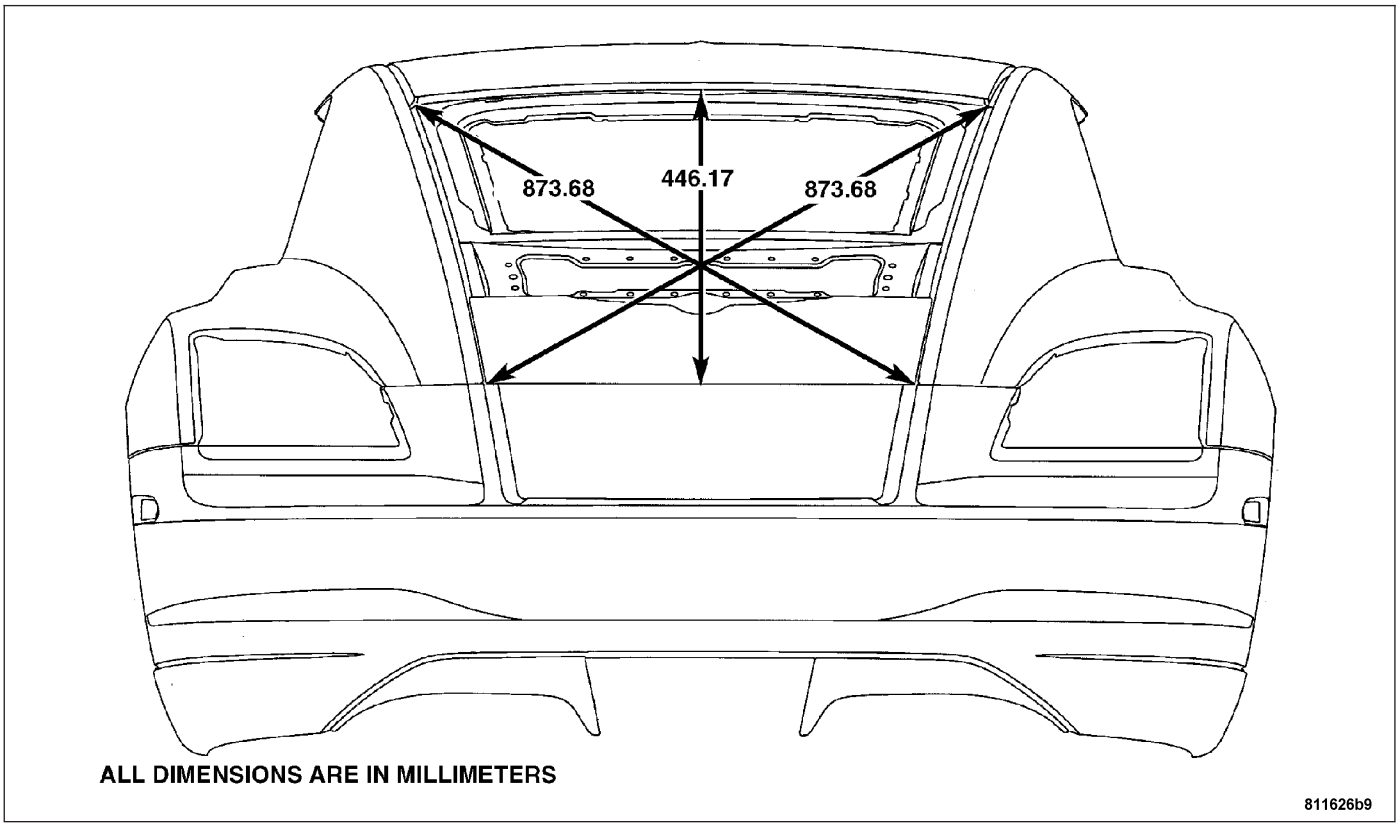

LIFTGATE OPENING

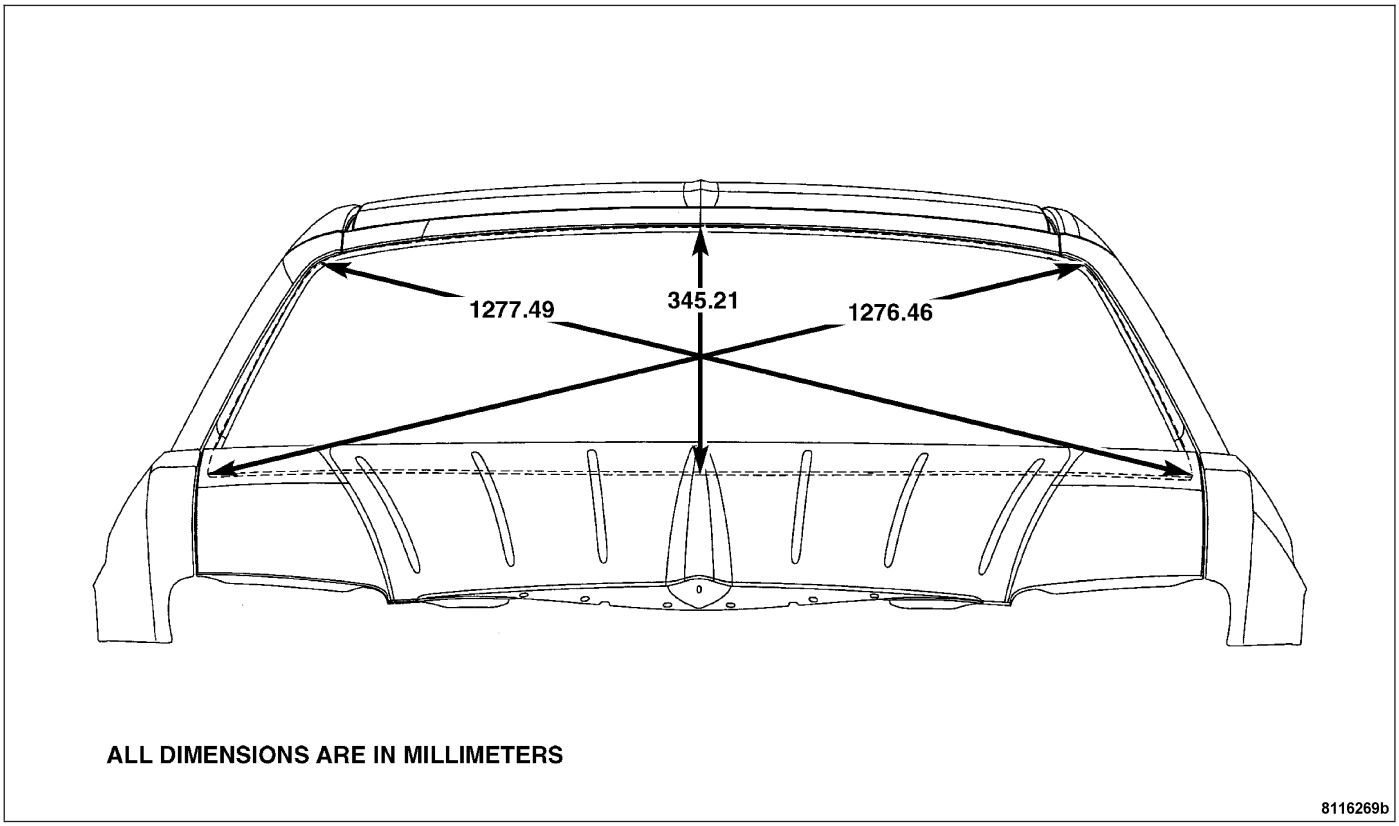

WINDSHIELD OPENING

SEALER LOCATIONS

SPECIFICATIONS - SEALER LOCATIONS

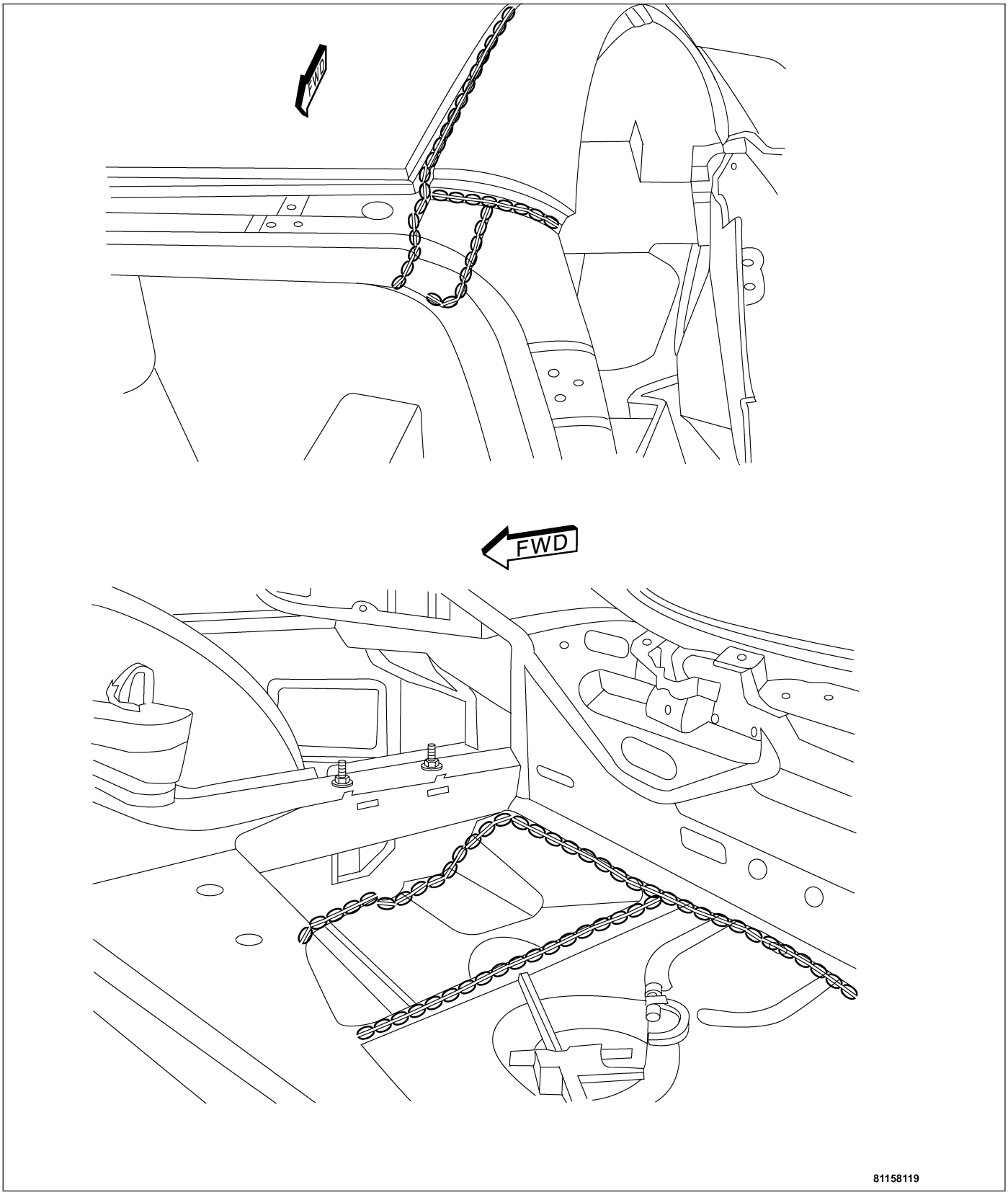

A-PILLAR - TRUNK

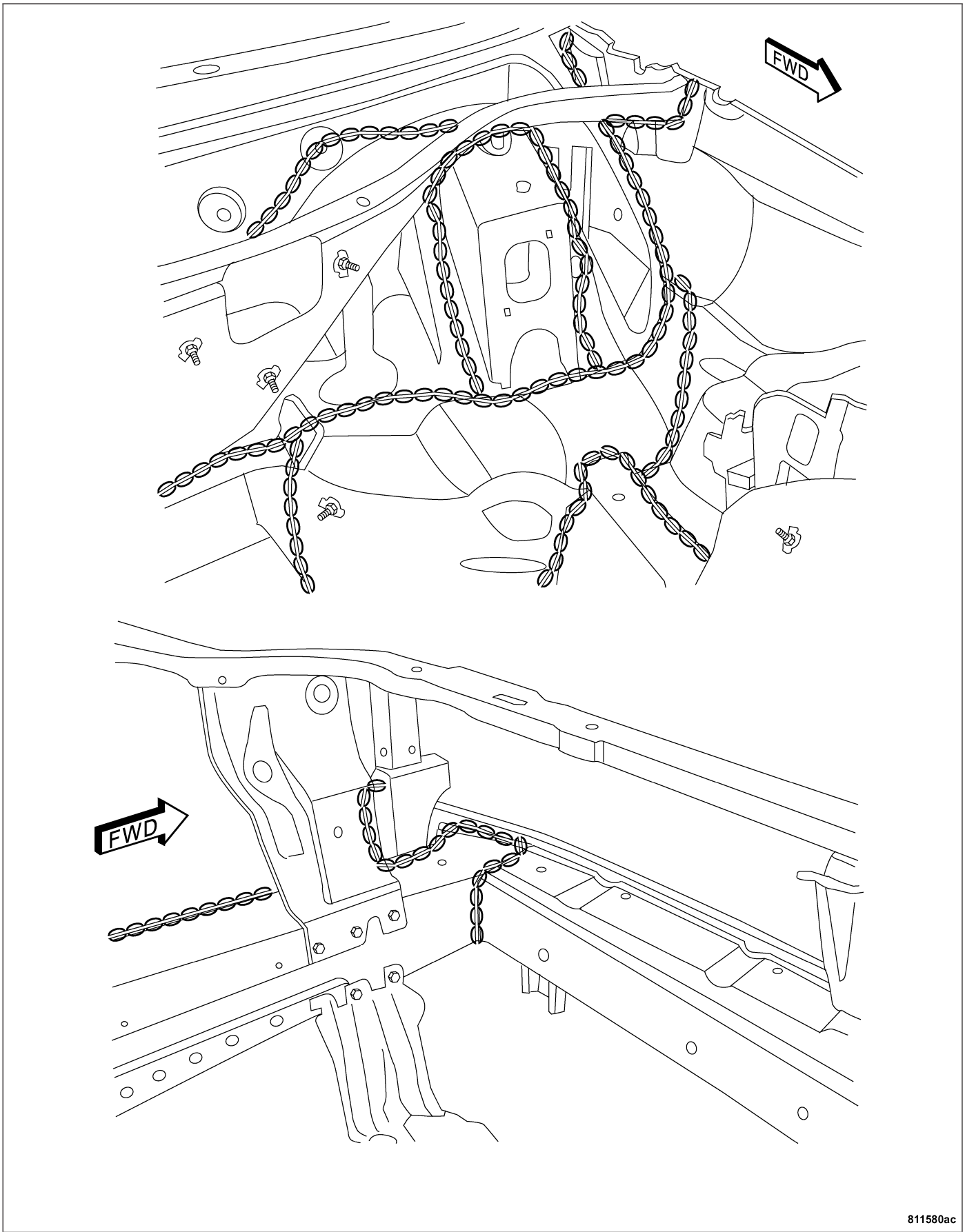

BULKHEAD - FRAME

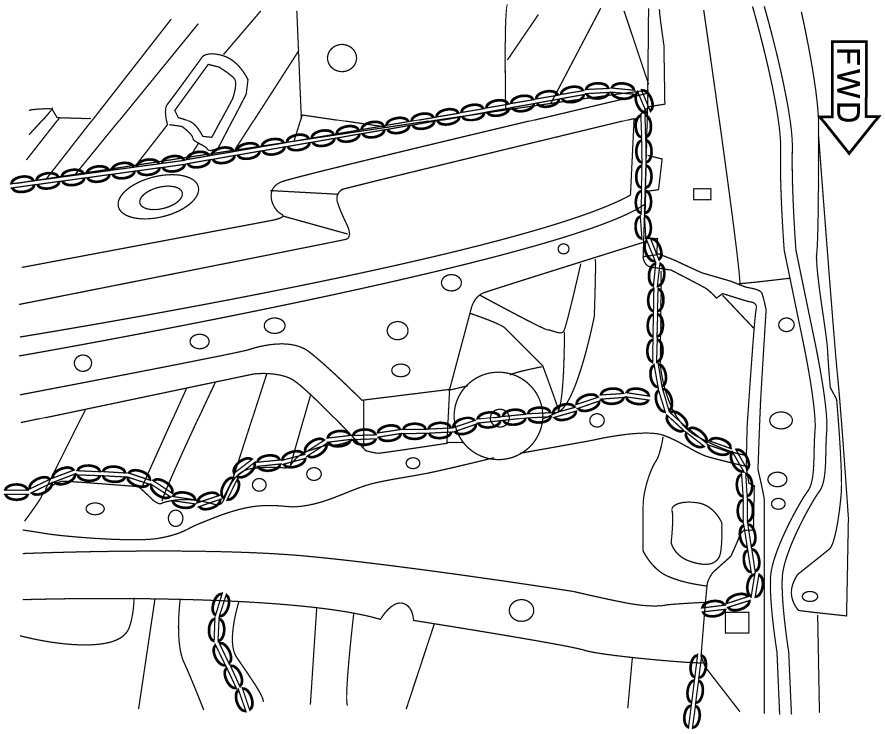

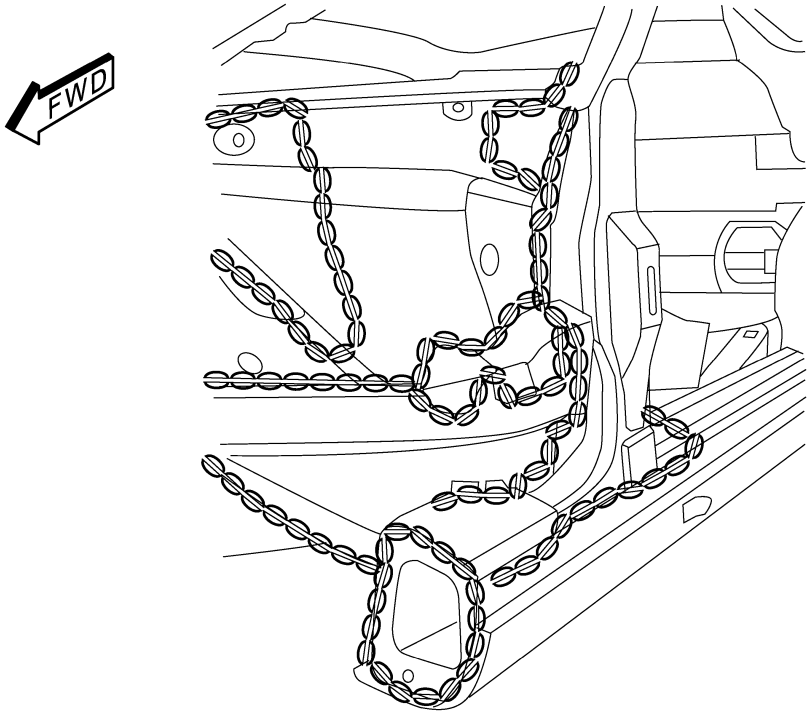

811580fa

BULKHEAD - ROCKER

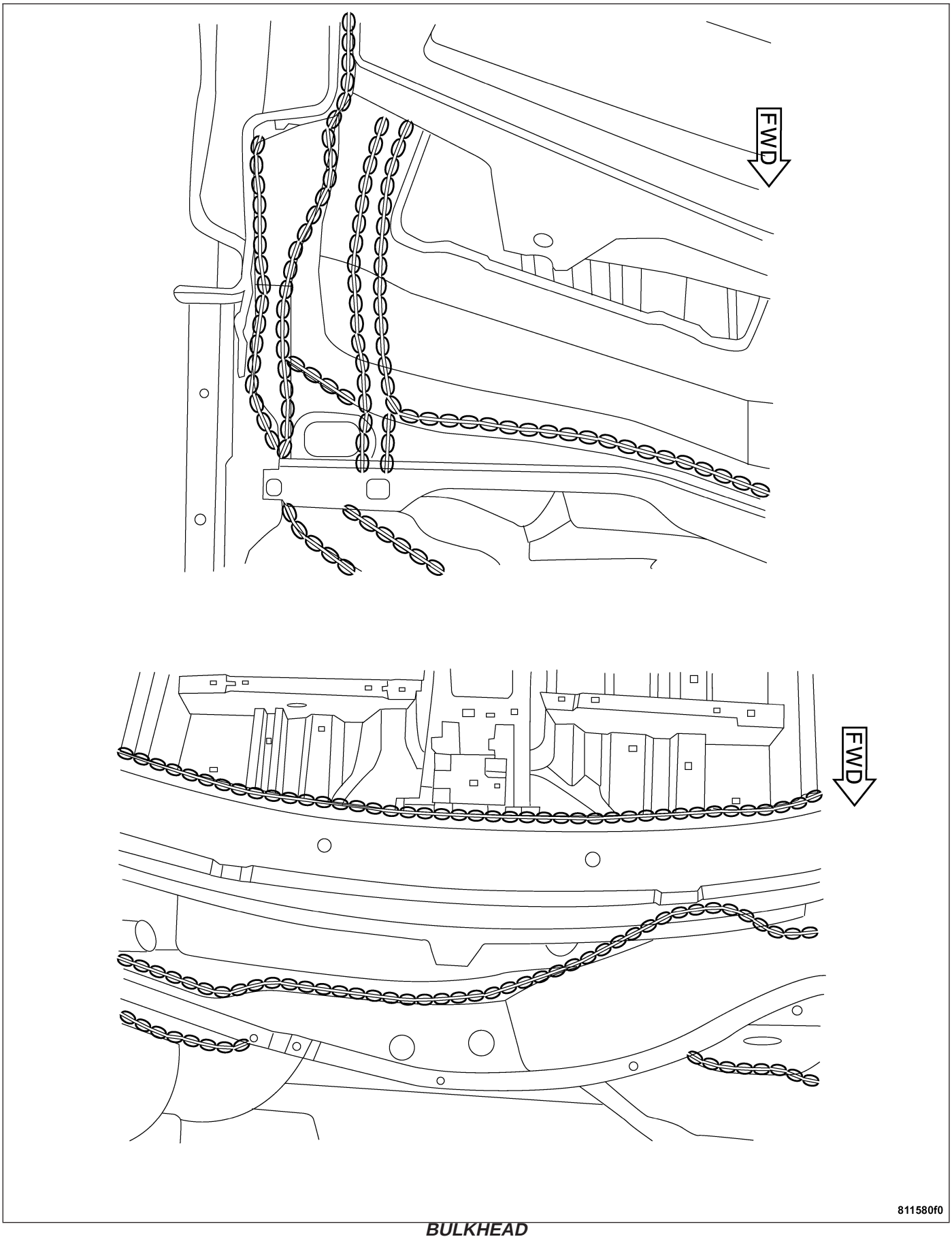

BULKHEAD

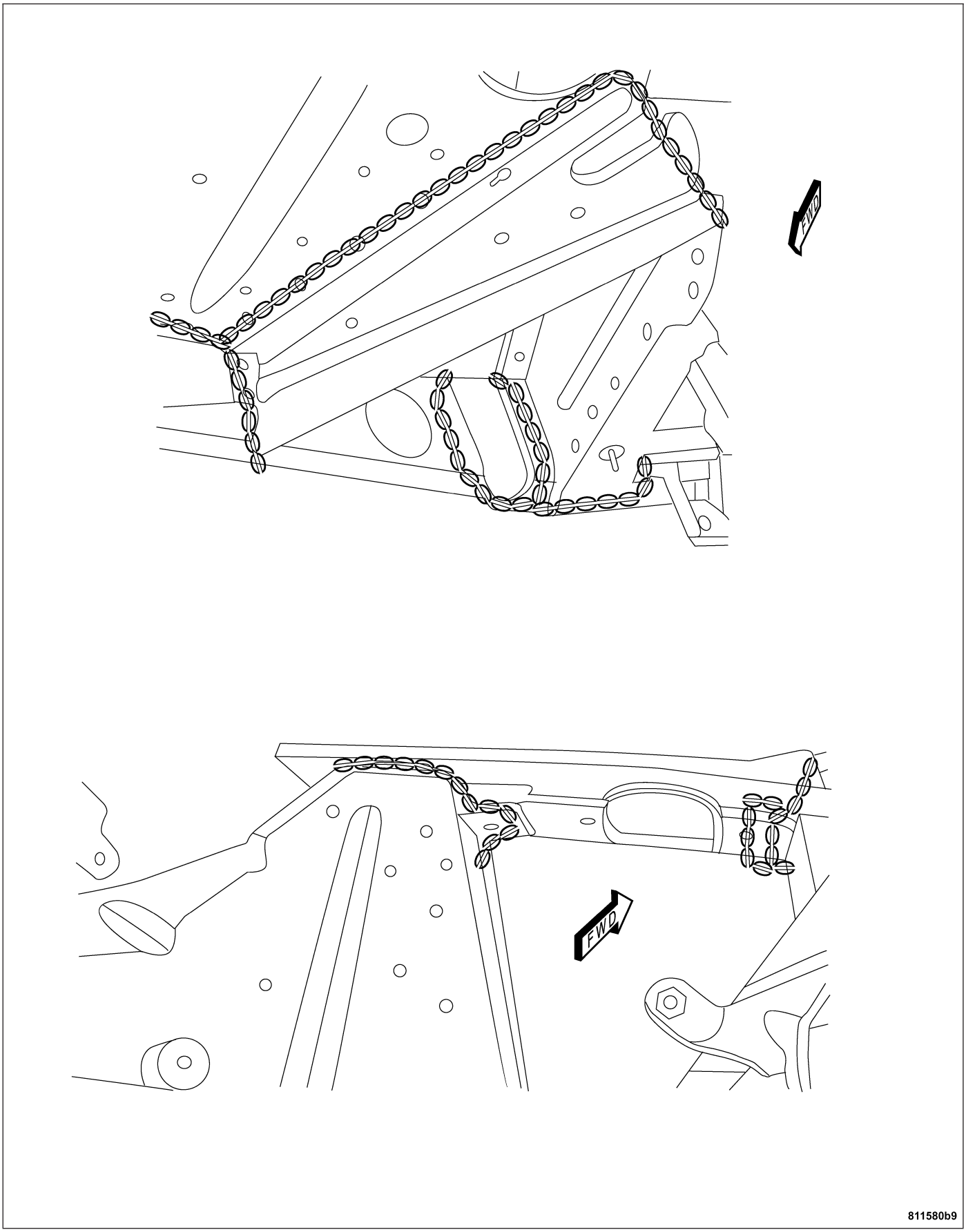

BUMPER FRAME

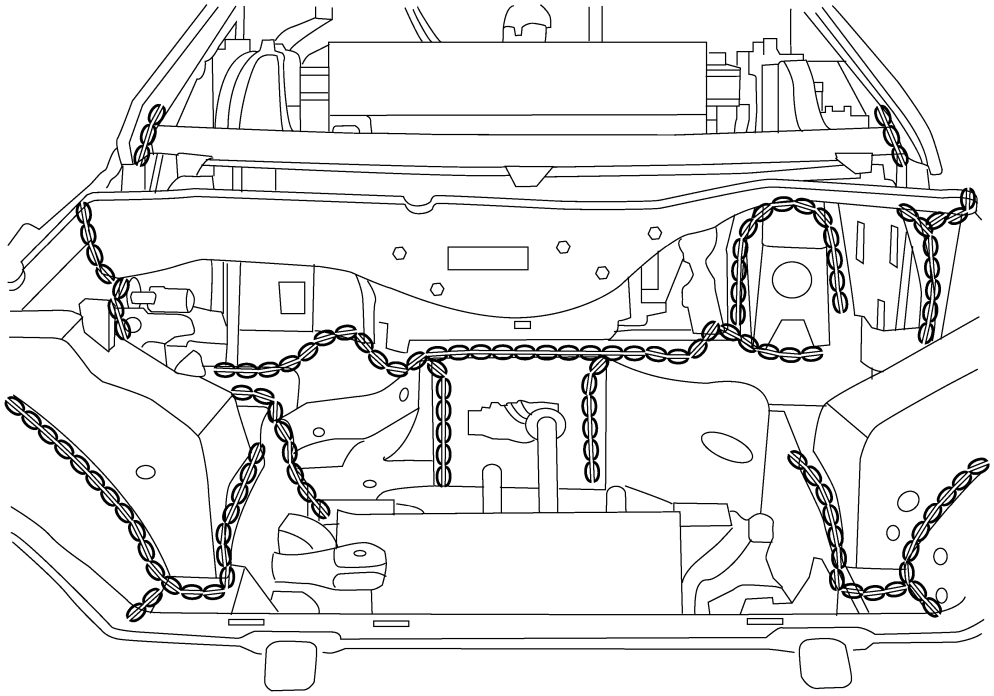

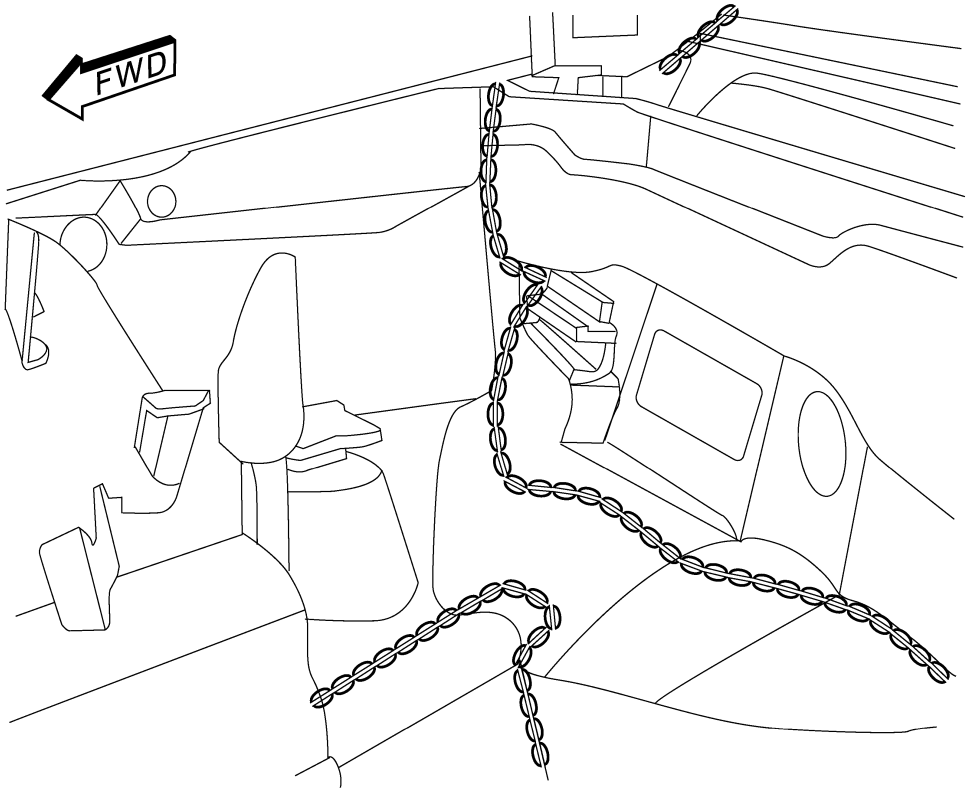

81158079

ENGINE COMPARTMENT

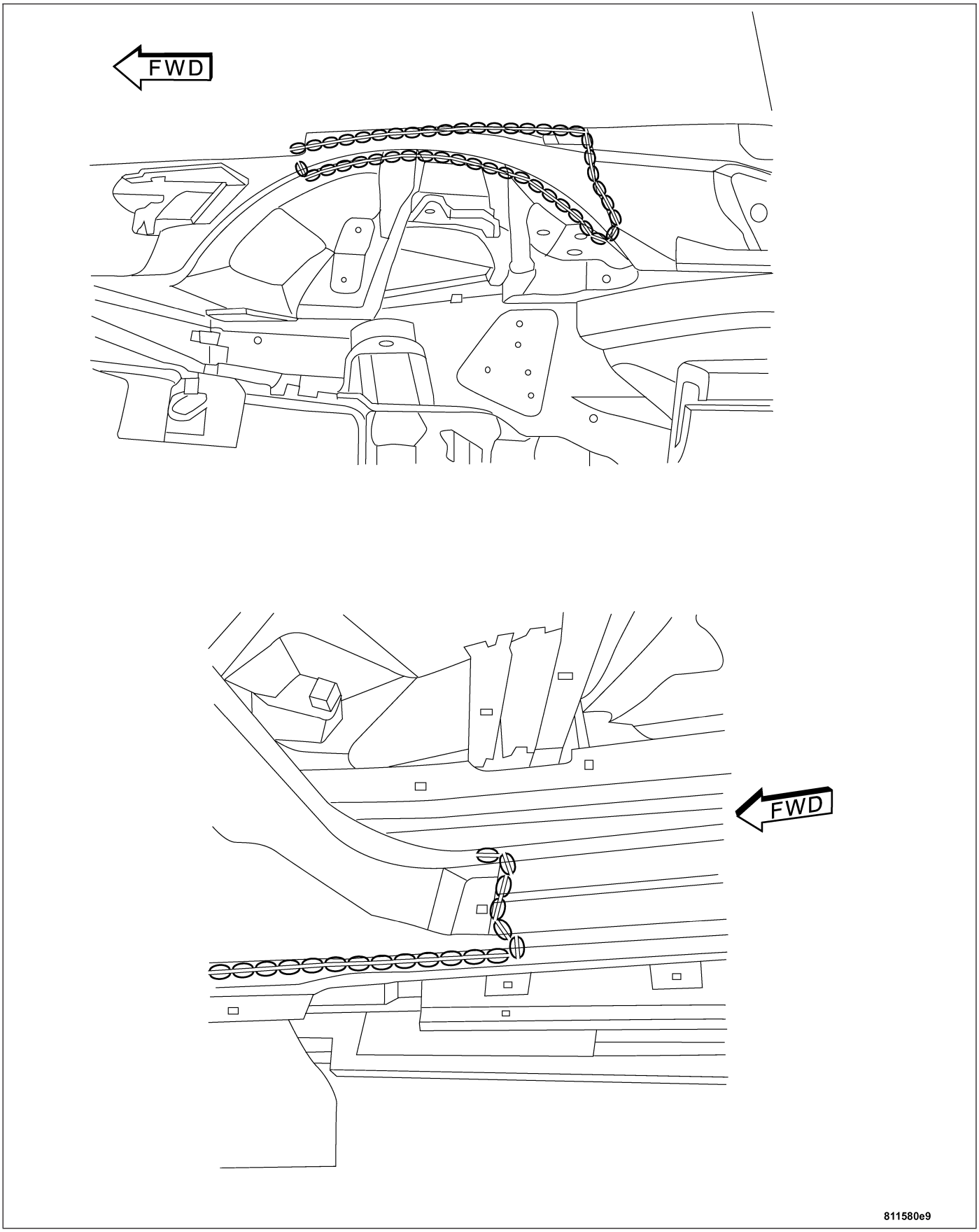

FENDER - ROCKER

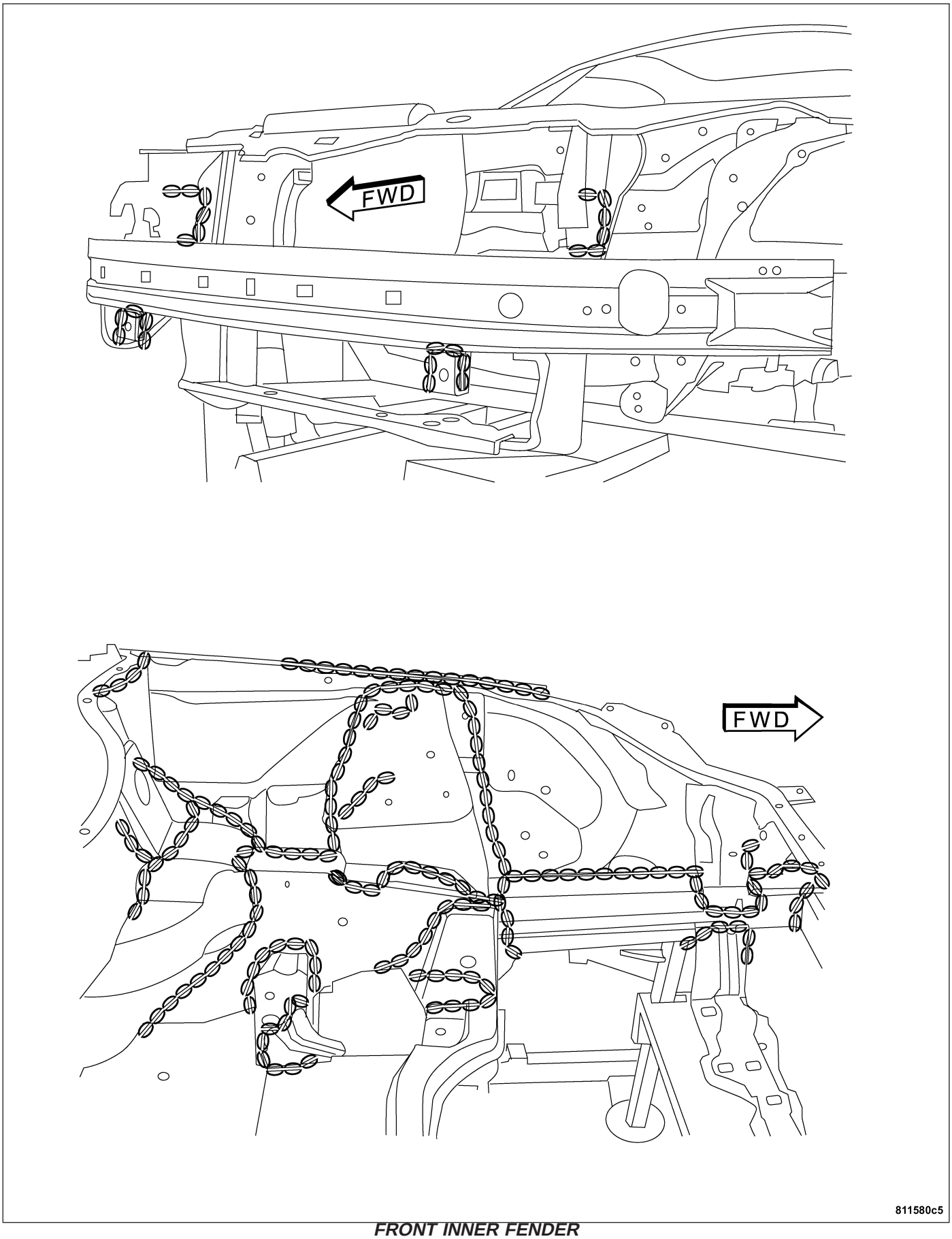

FRONT INNER FENDER

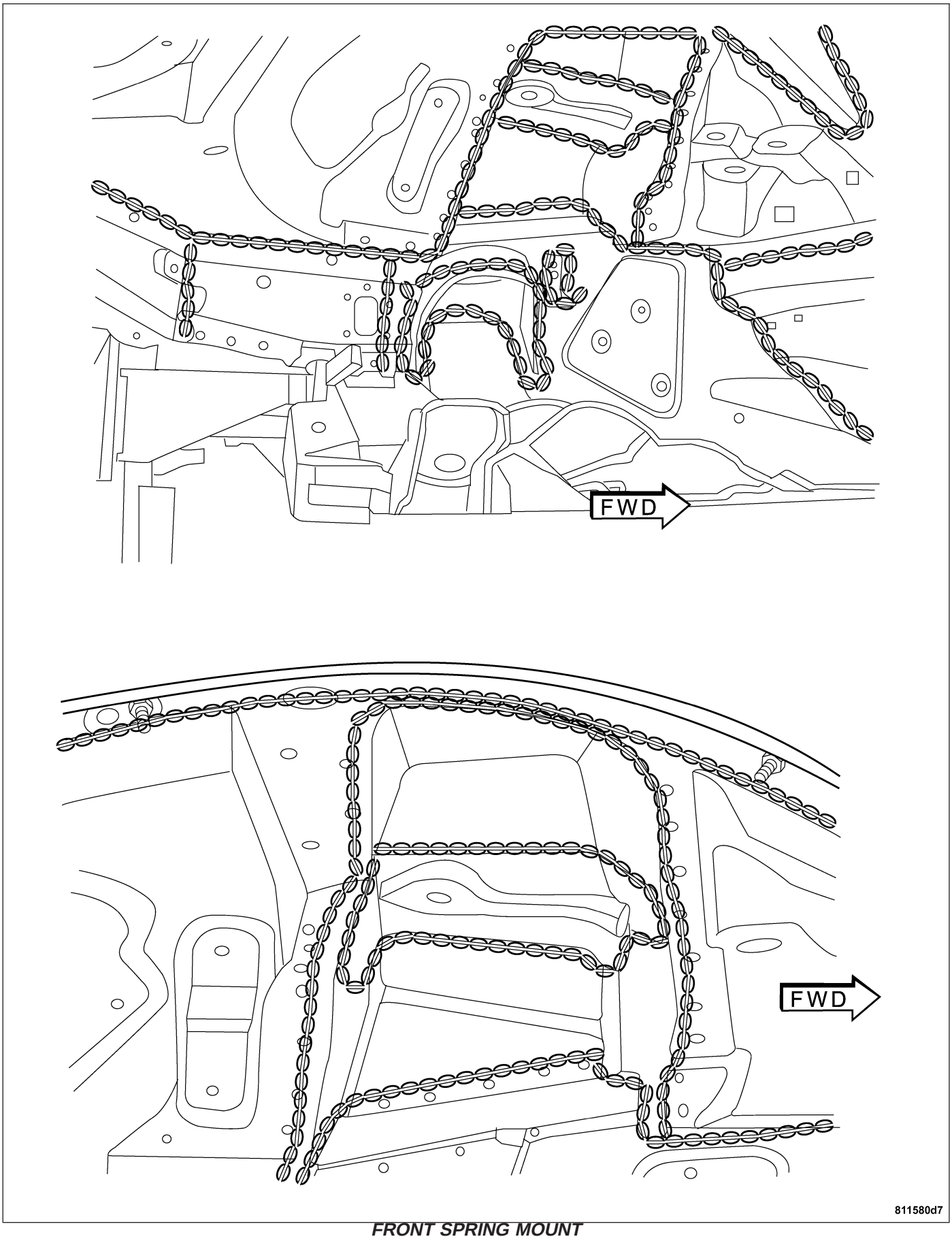

FRONT SPRING MOUNT

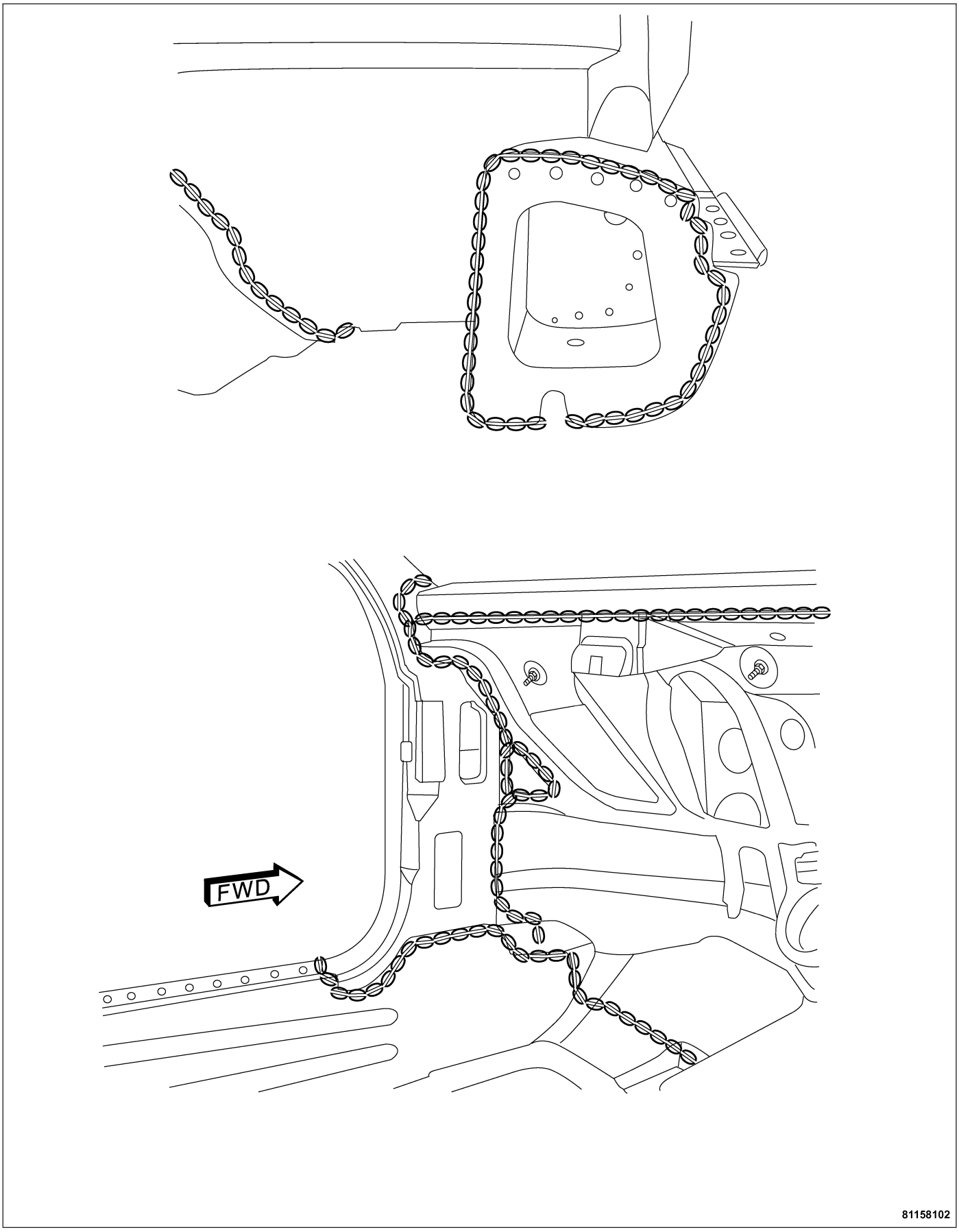

INTERIOR BULKHEAD

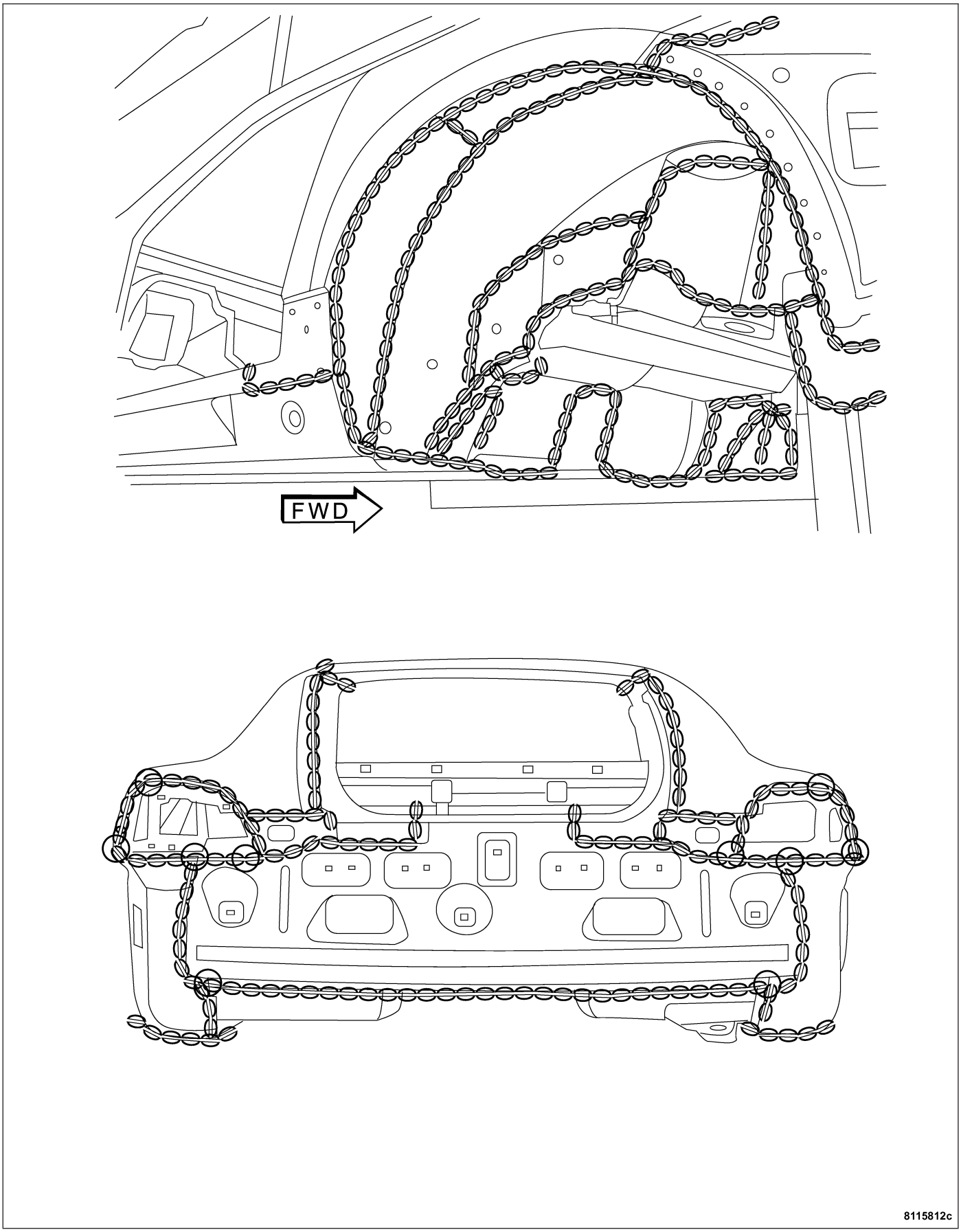

REAR - WHEELHOUSE

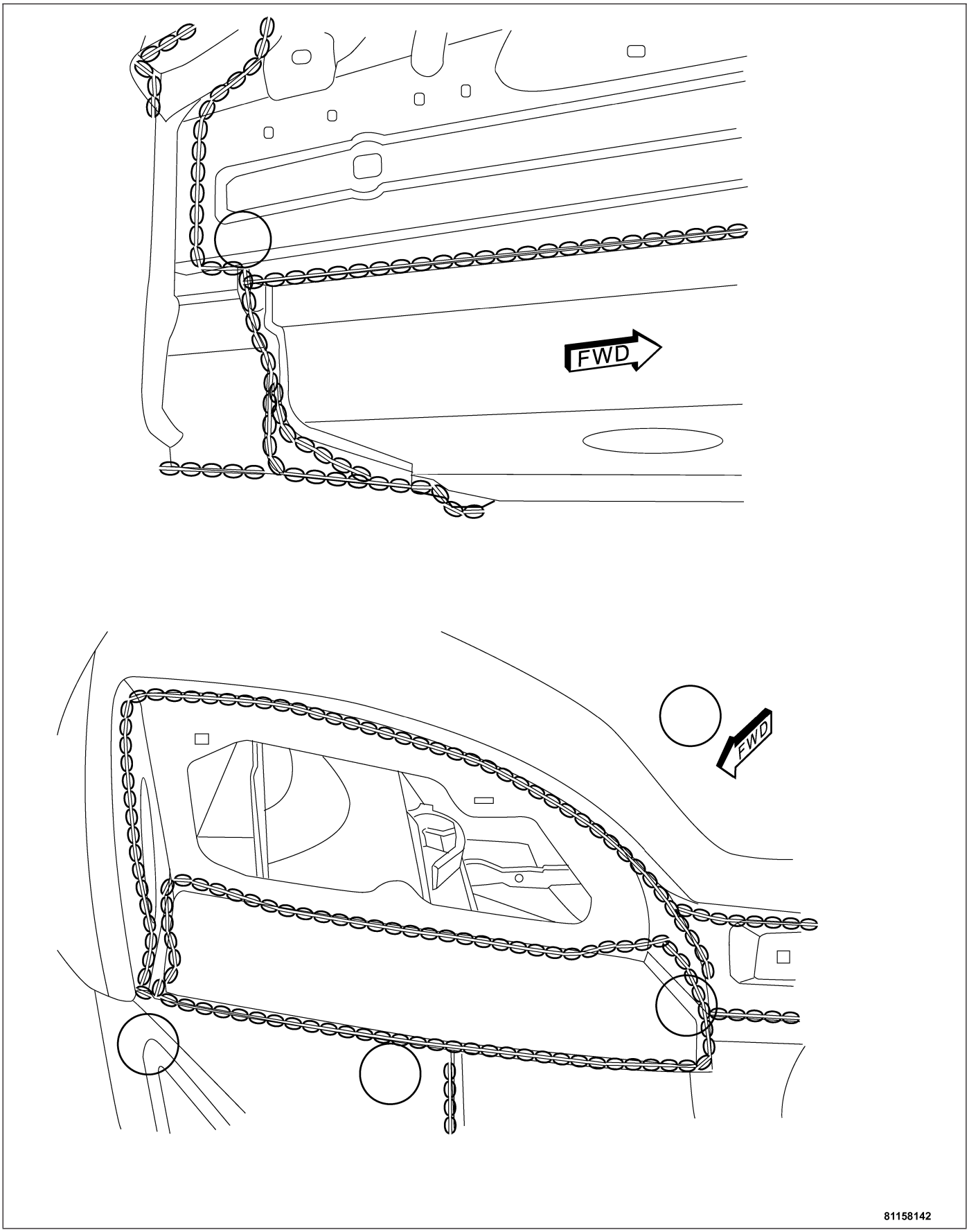

REAR FASCIA - HEADLAMP

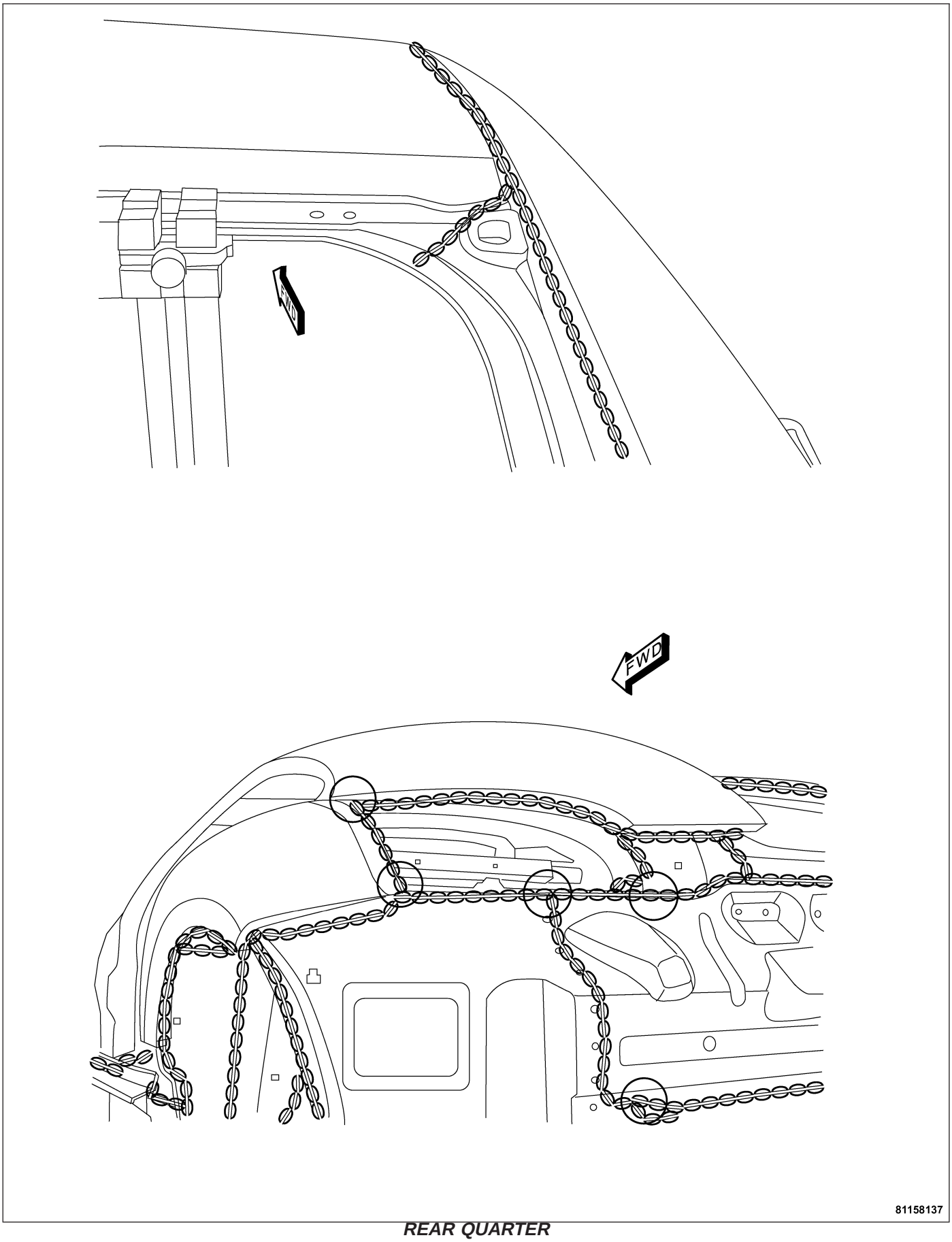

REAR QUARTER

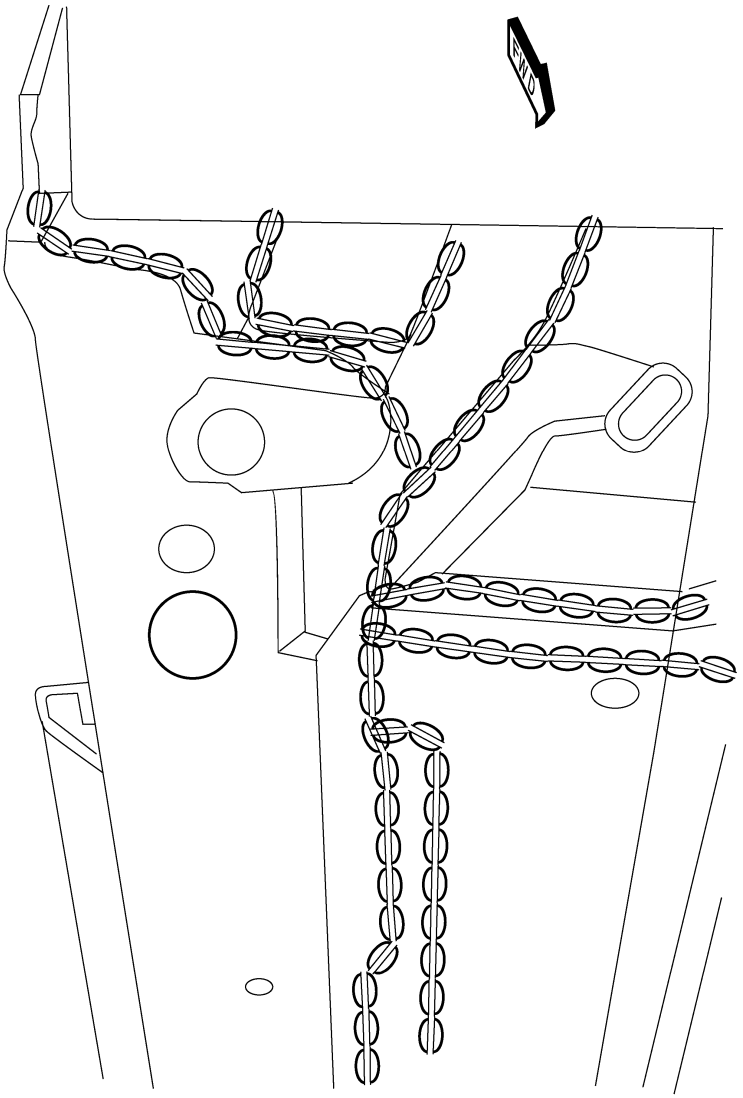

8115815d

ROCKER

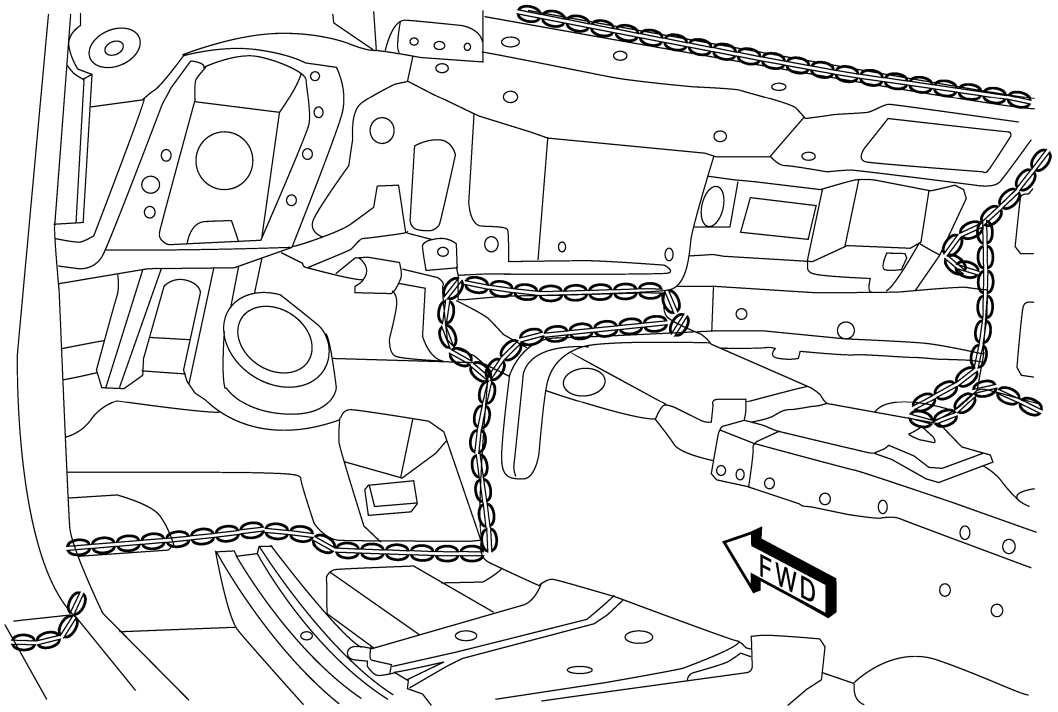

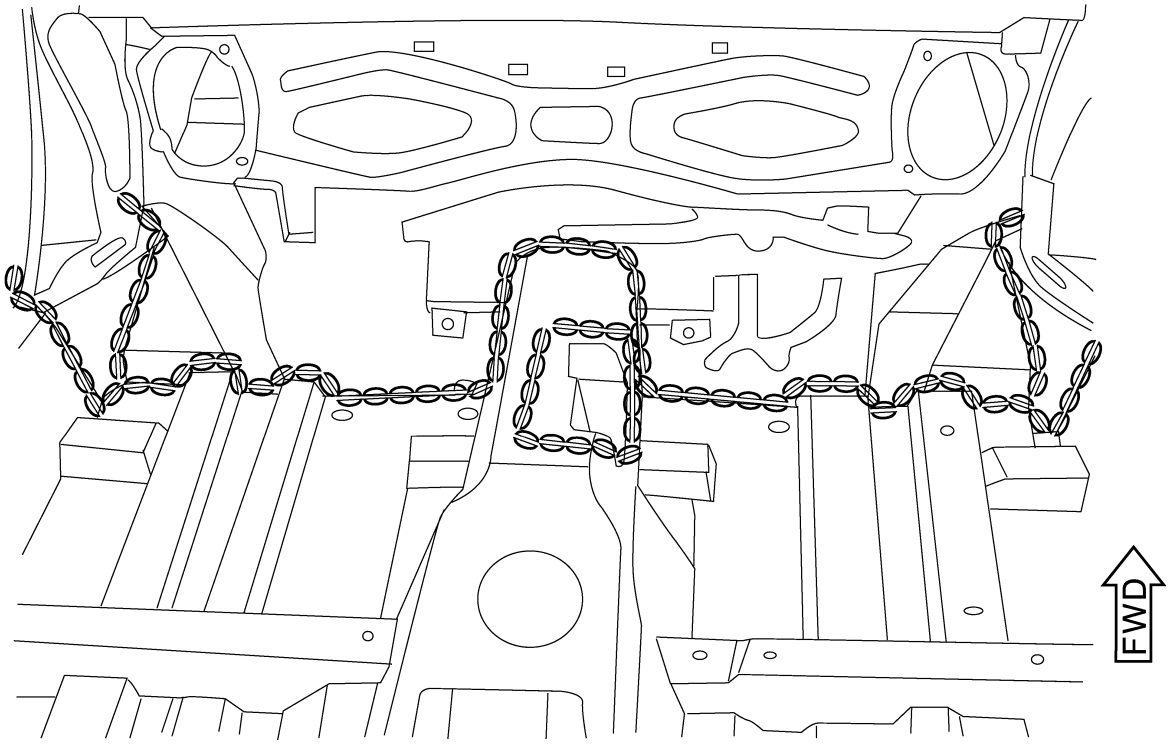

81158109

TUNNEL

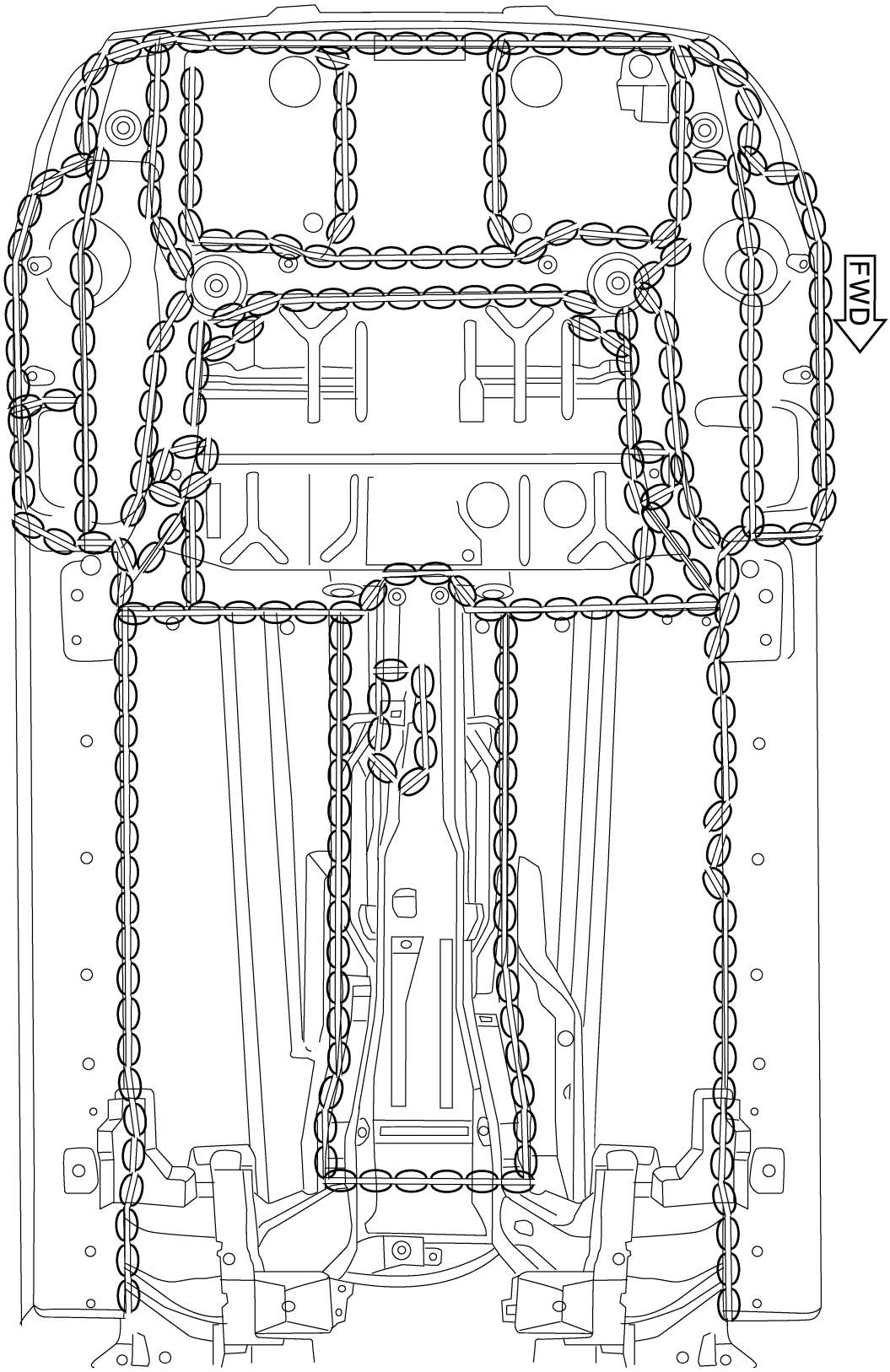

UNDERSIDE

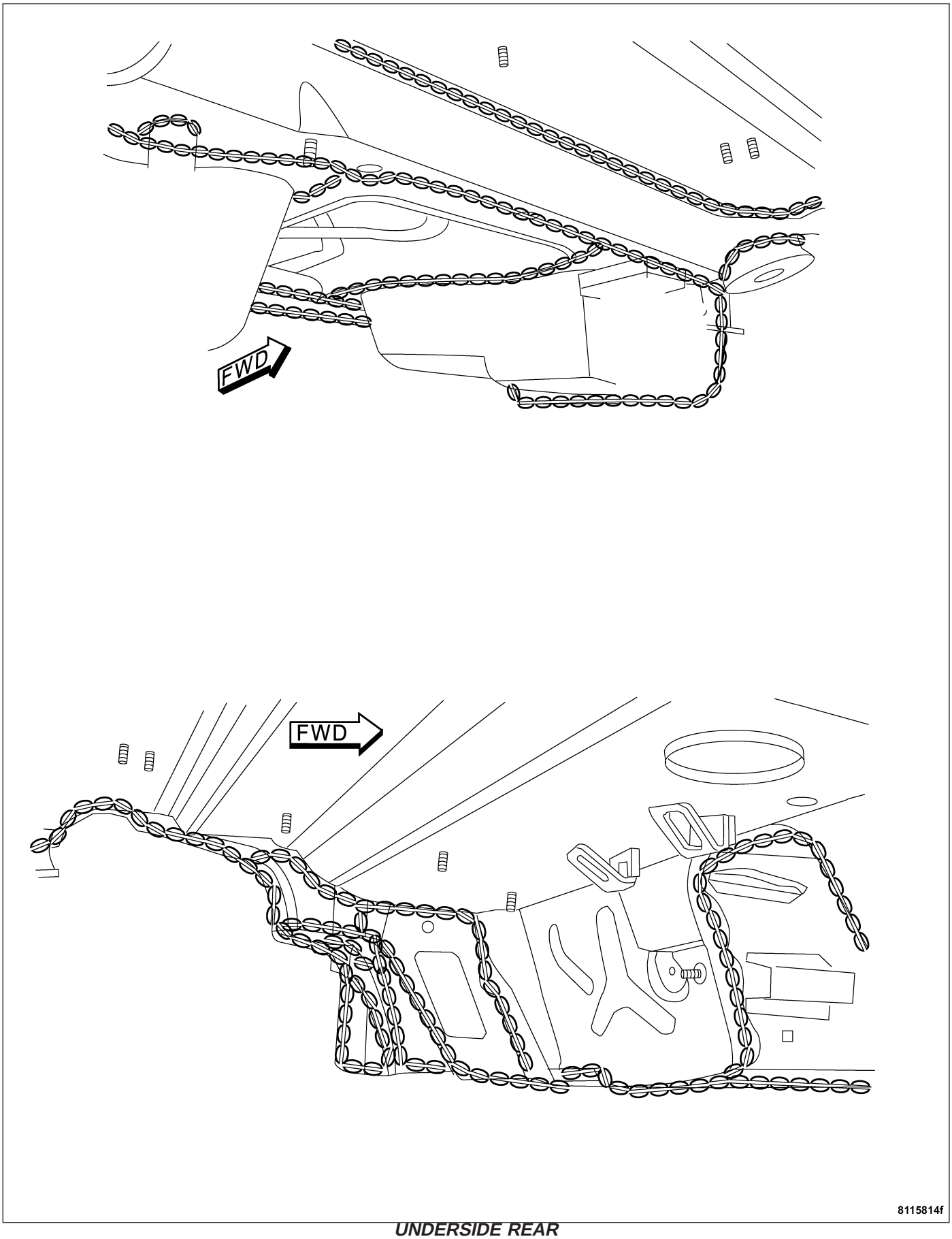

UNDERSIDE REAR

WELD LOCATIONS

SPECIFICATIONS - WELD LOCATIONS

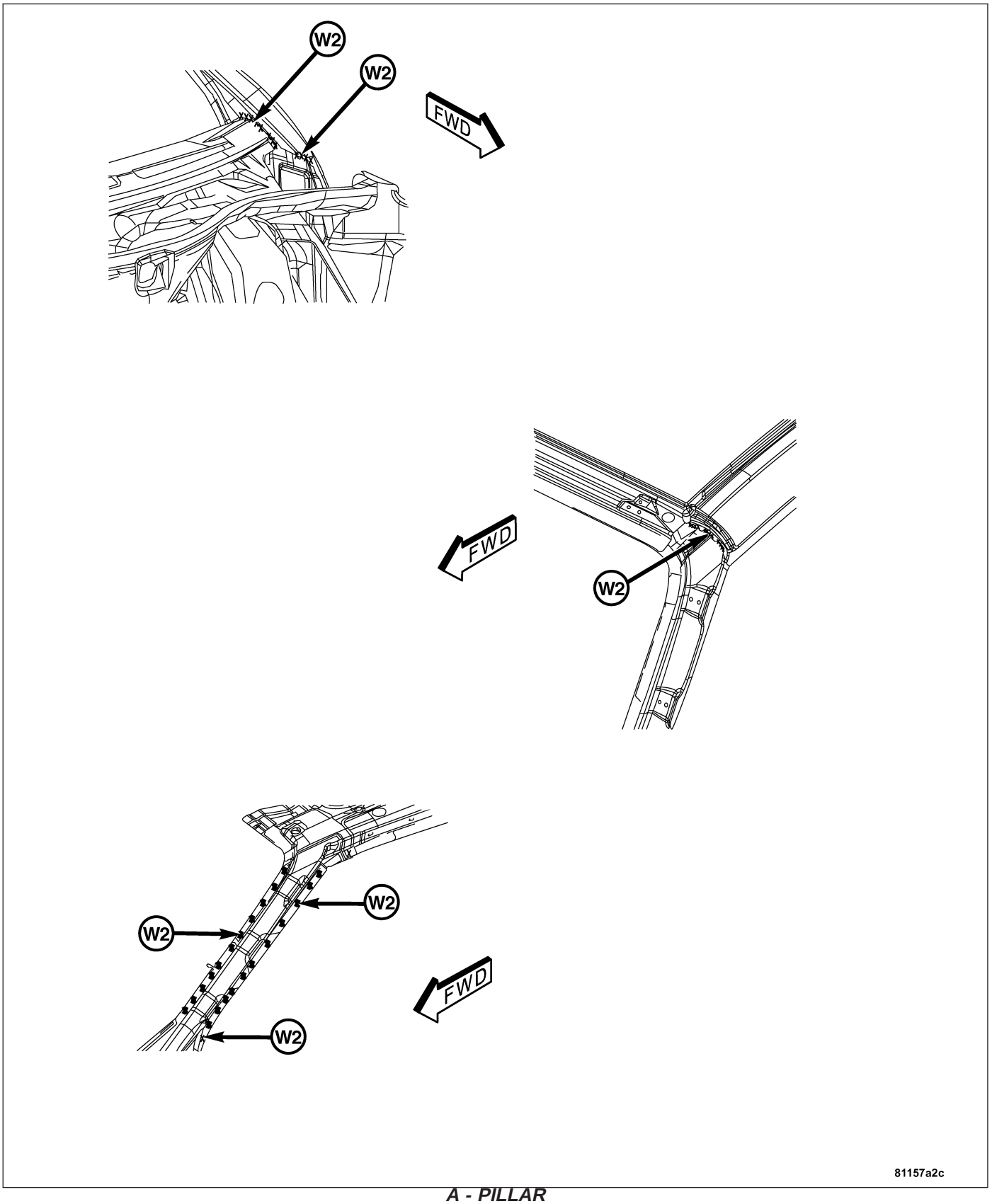

A - PILLAR

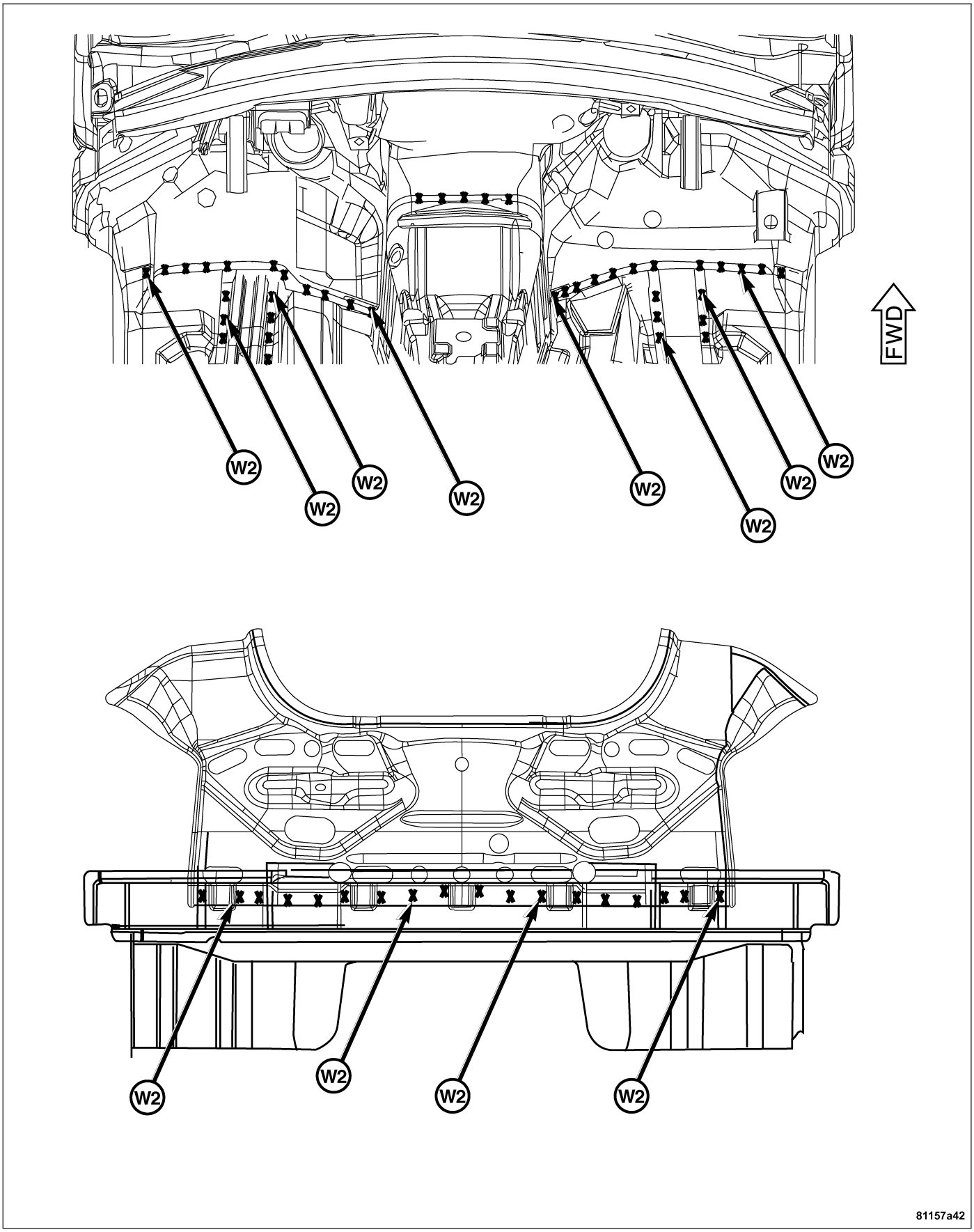

FRONT - REAR FLOOR

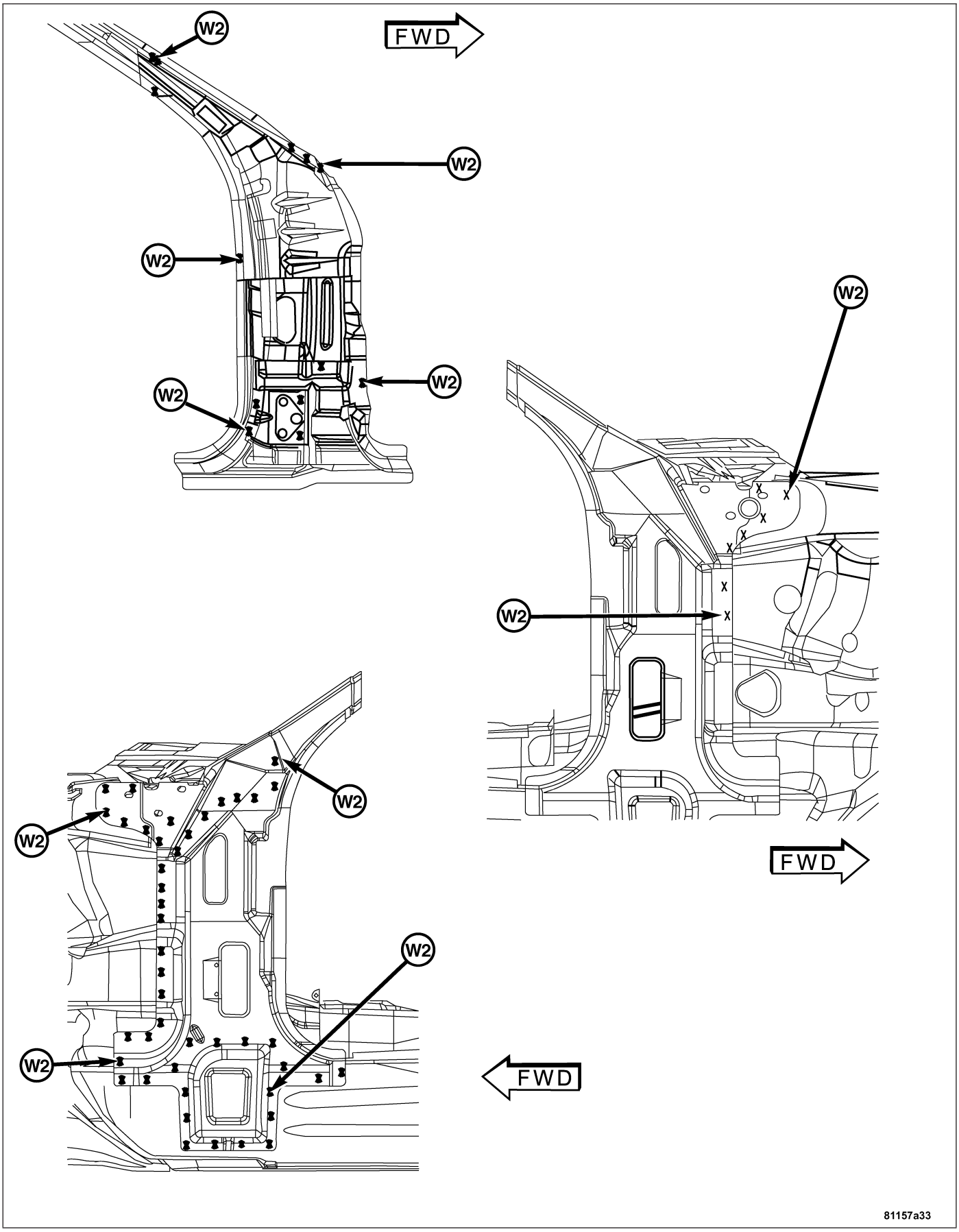

INNER A-PILLAR

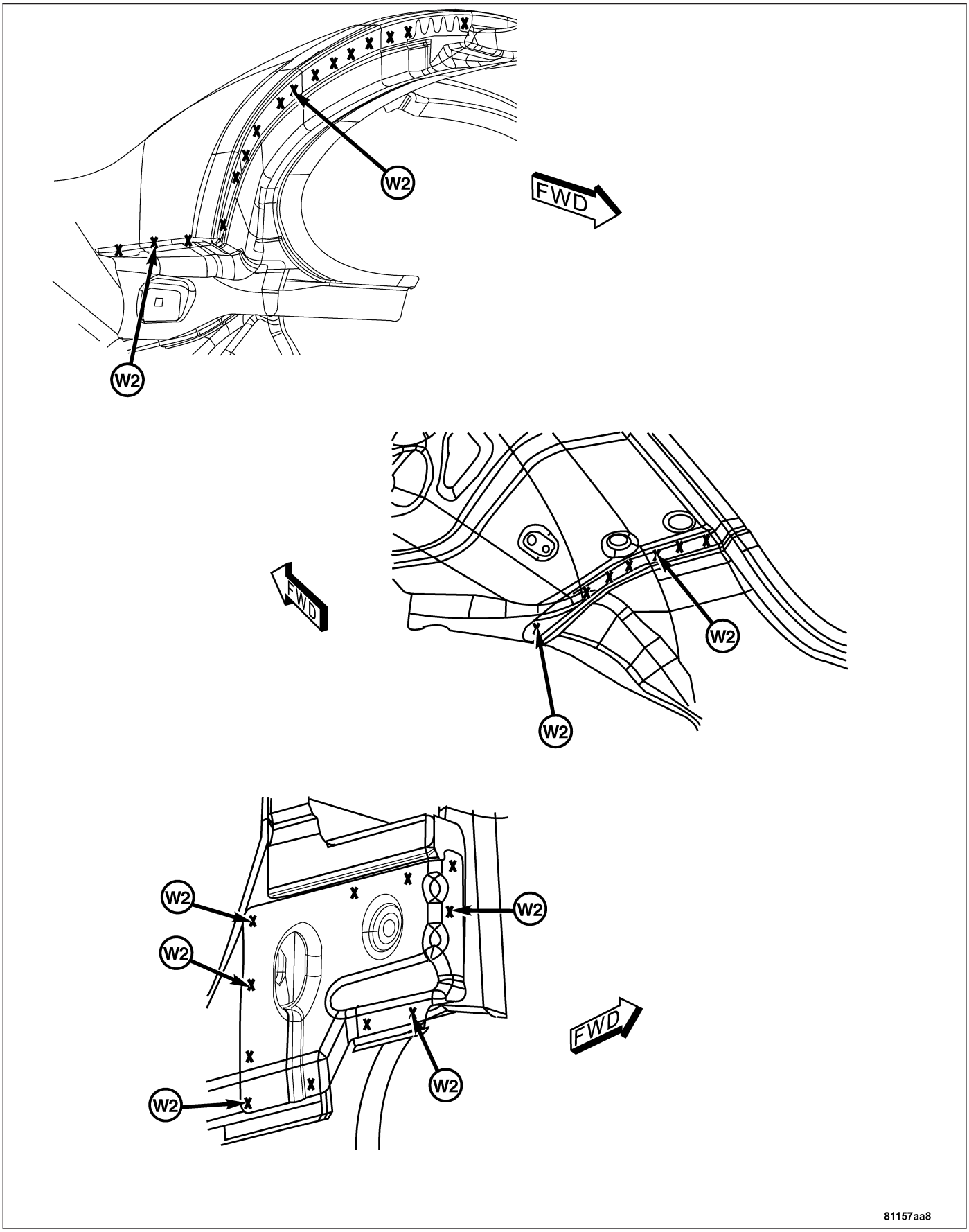

INNER PANEL

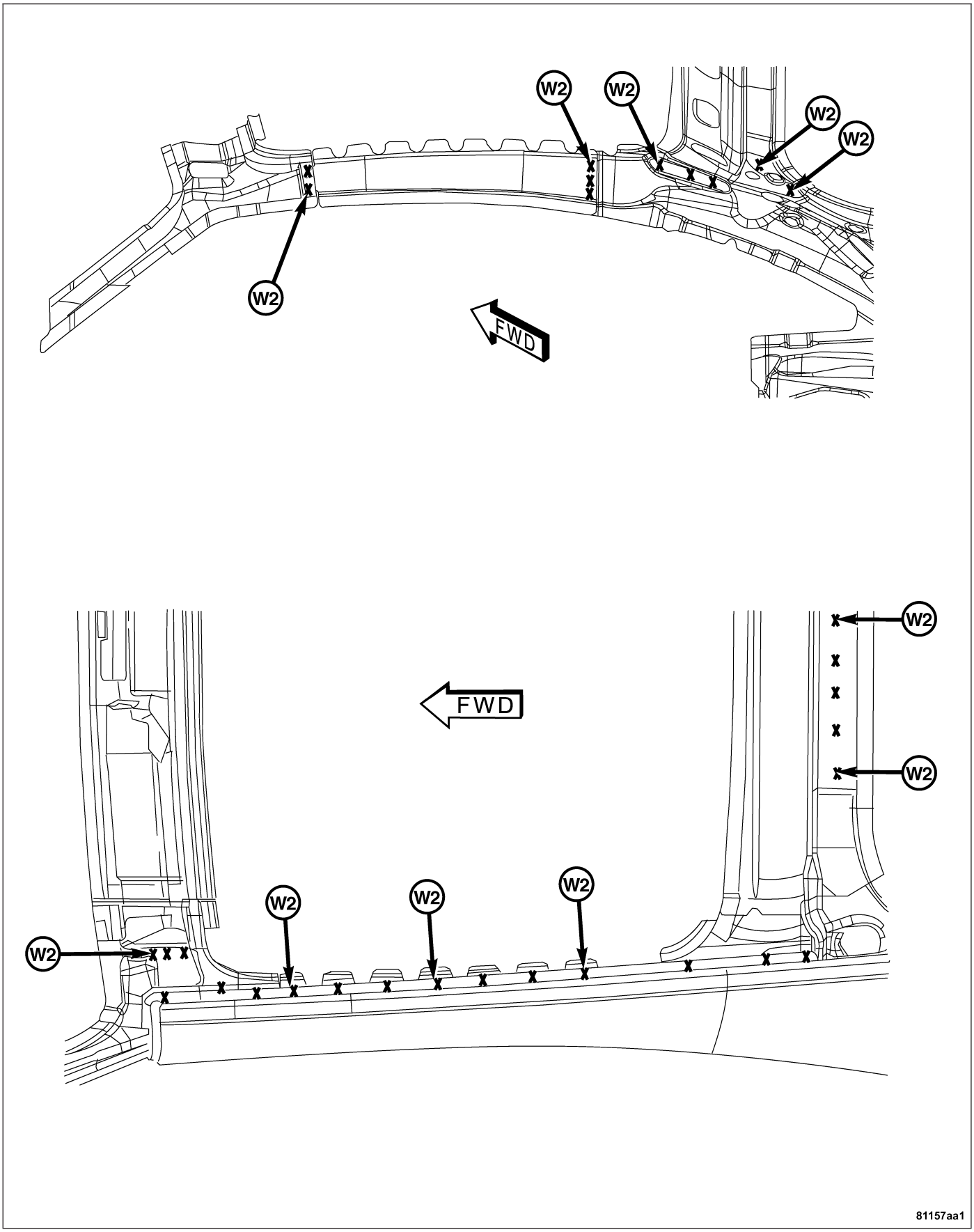

INNER ROOF

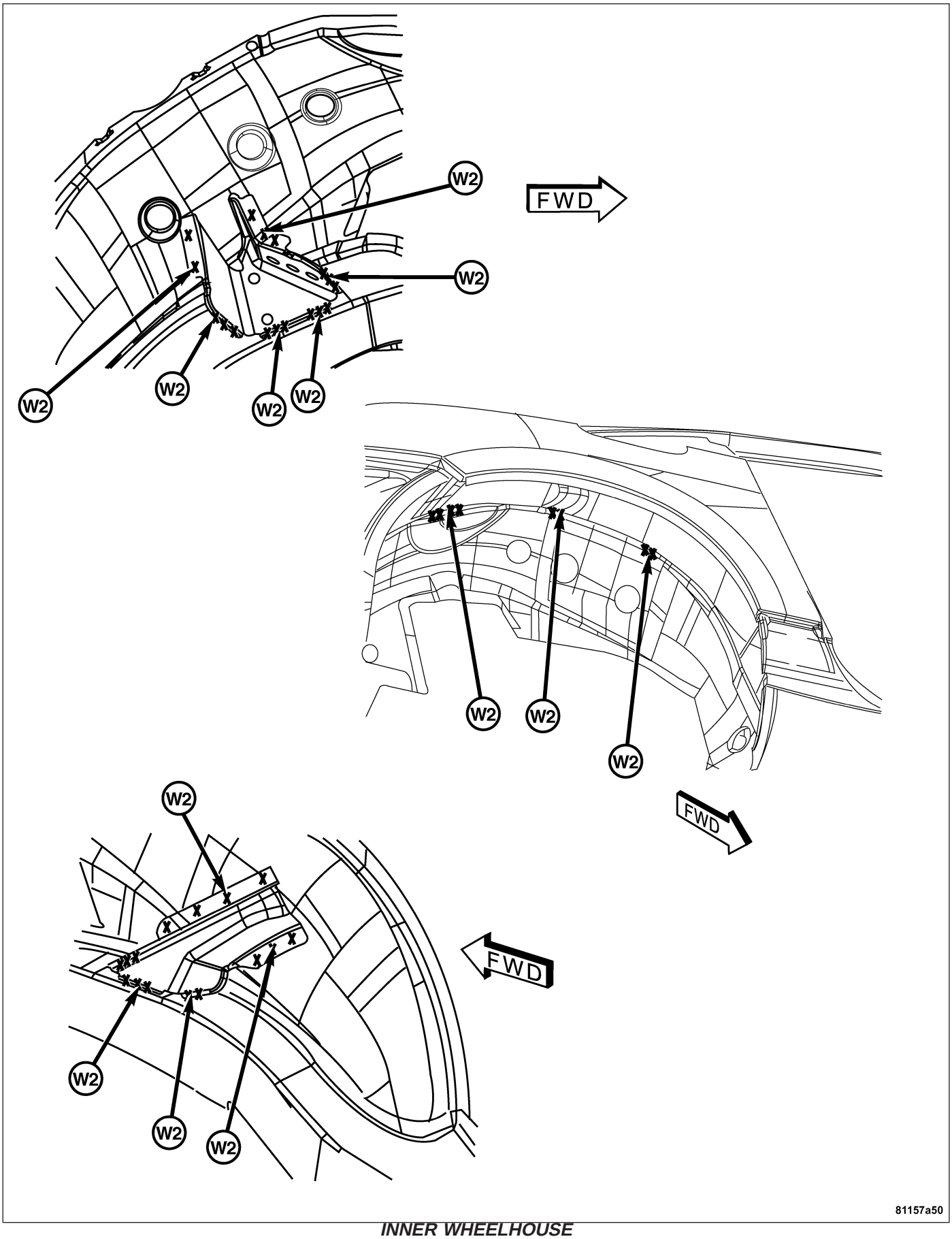

INNER WHEELHOUSE

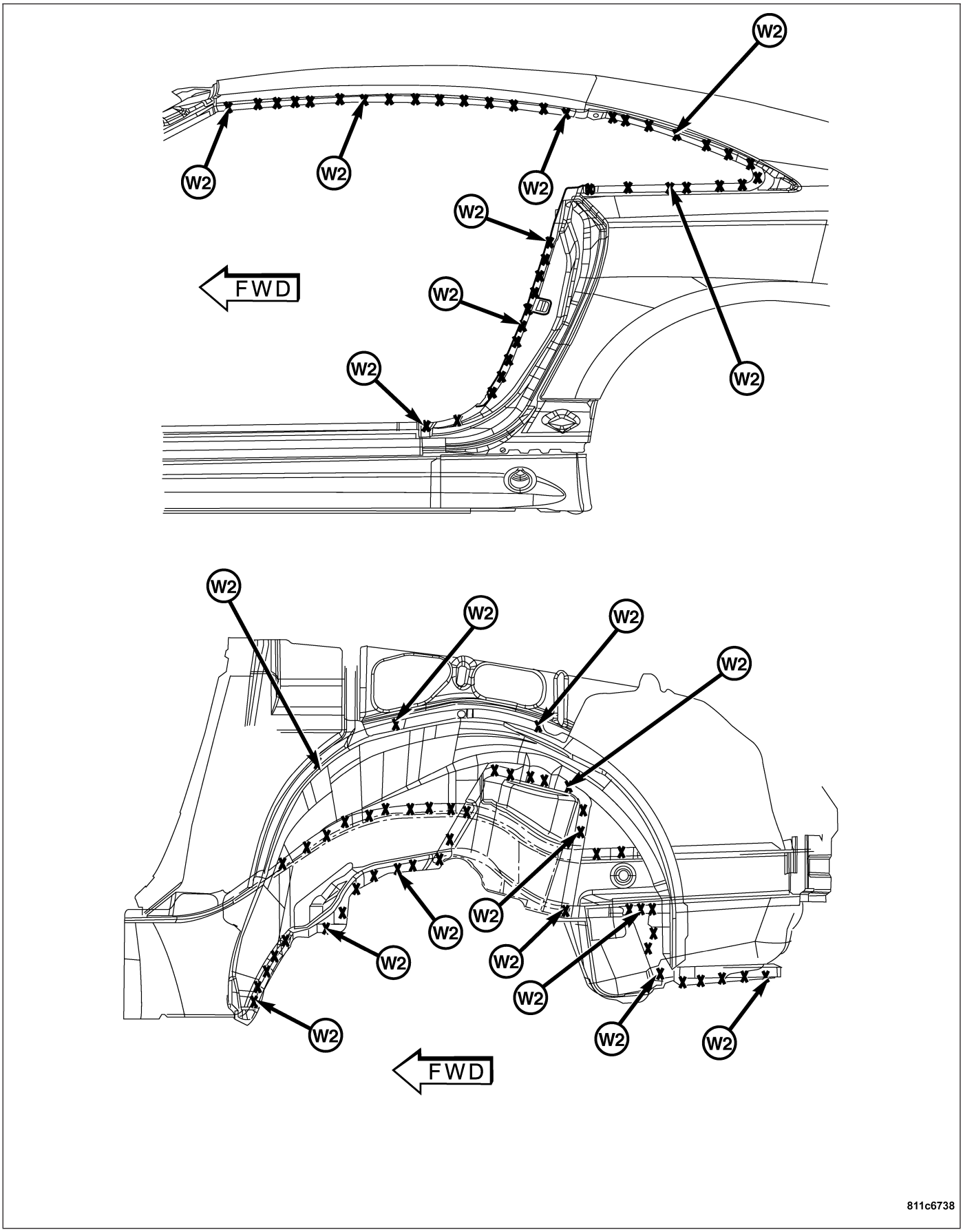

REAR BODY PANEL

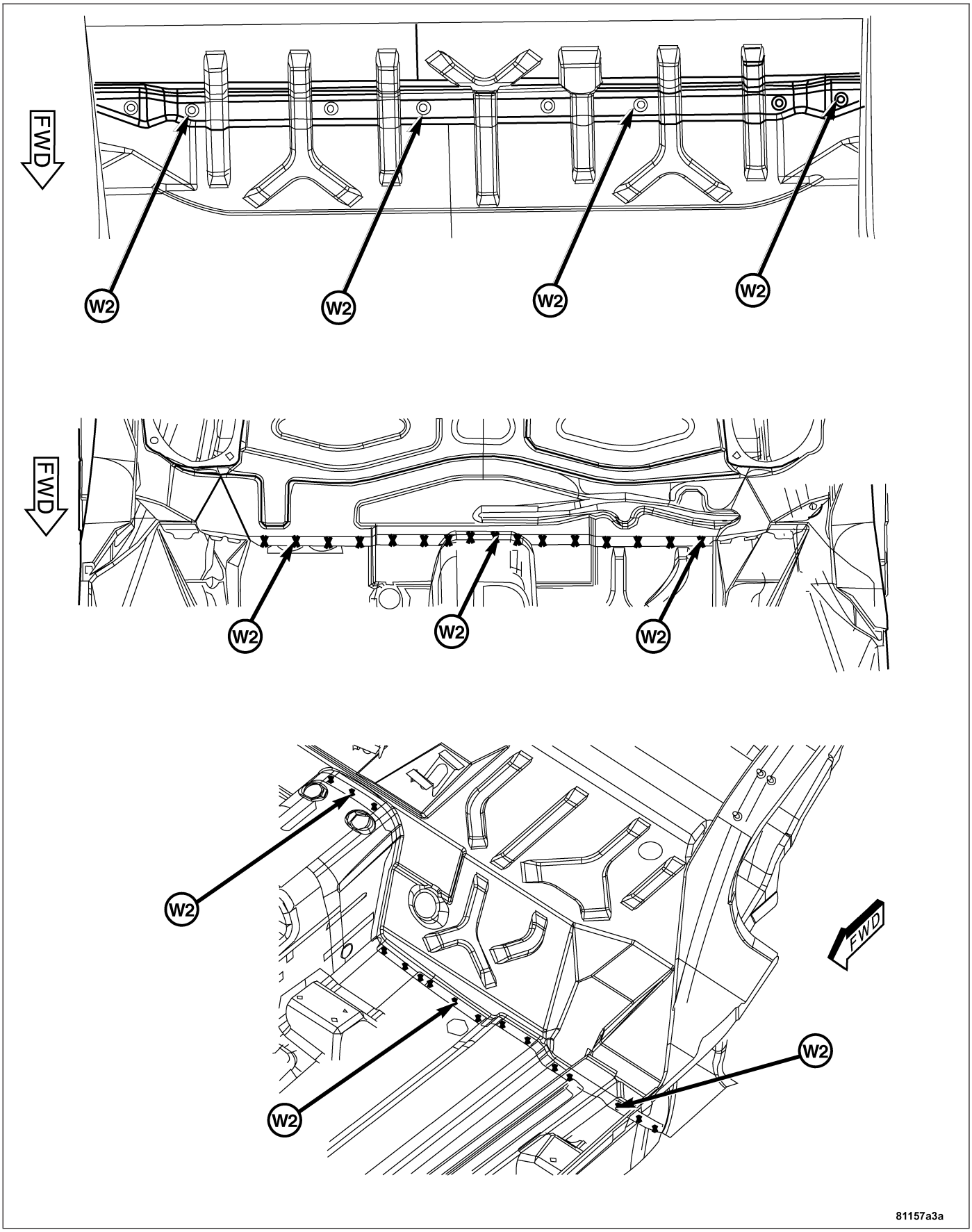

REAR TRUNK FLOOR

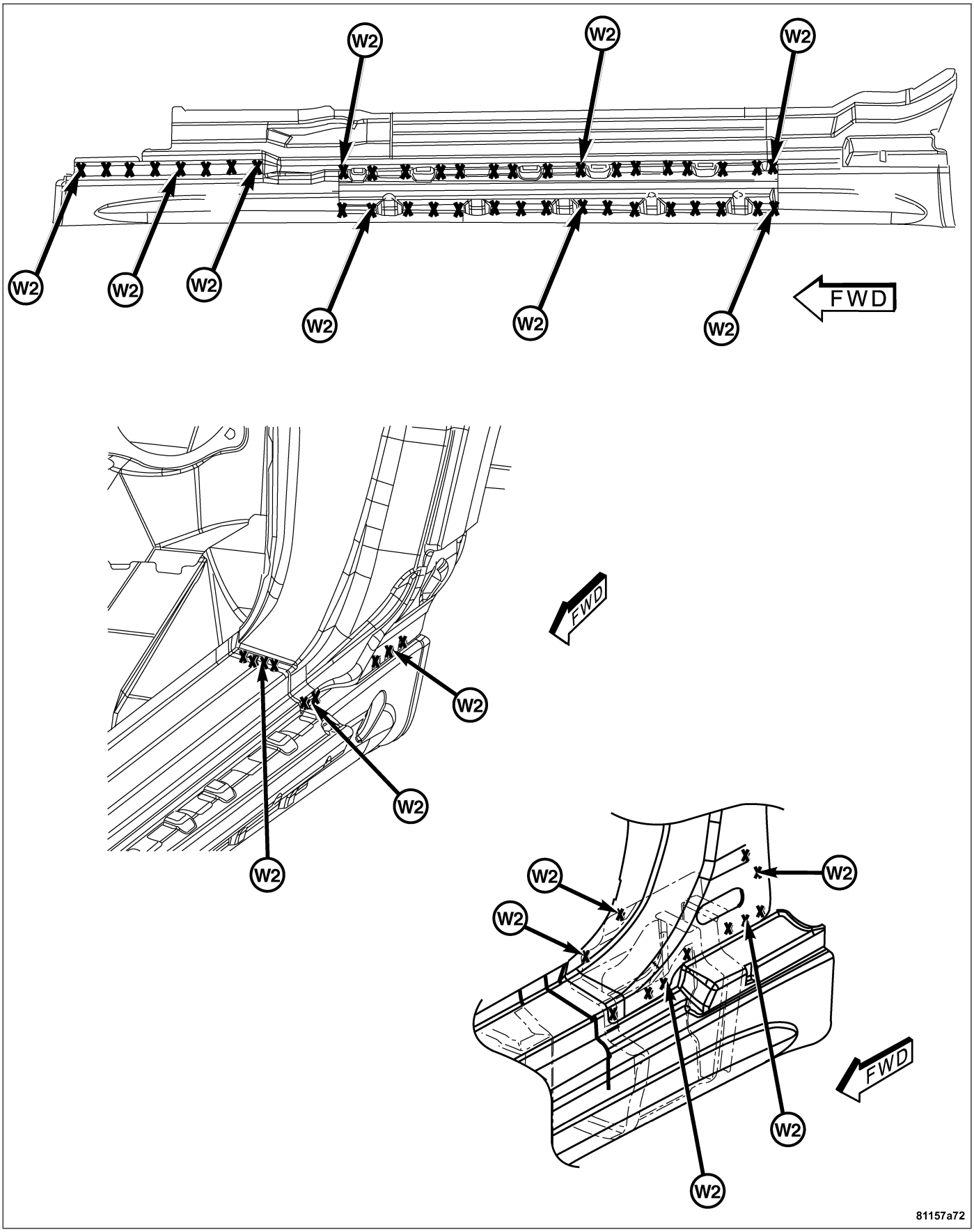

ROCKER PANEL

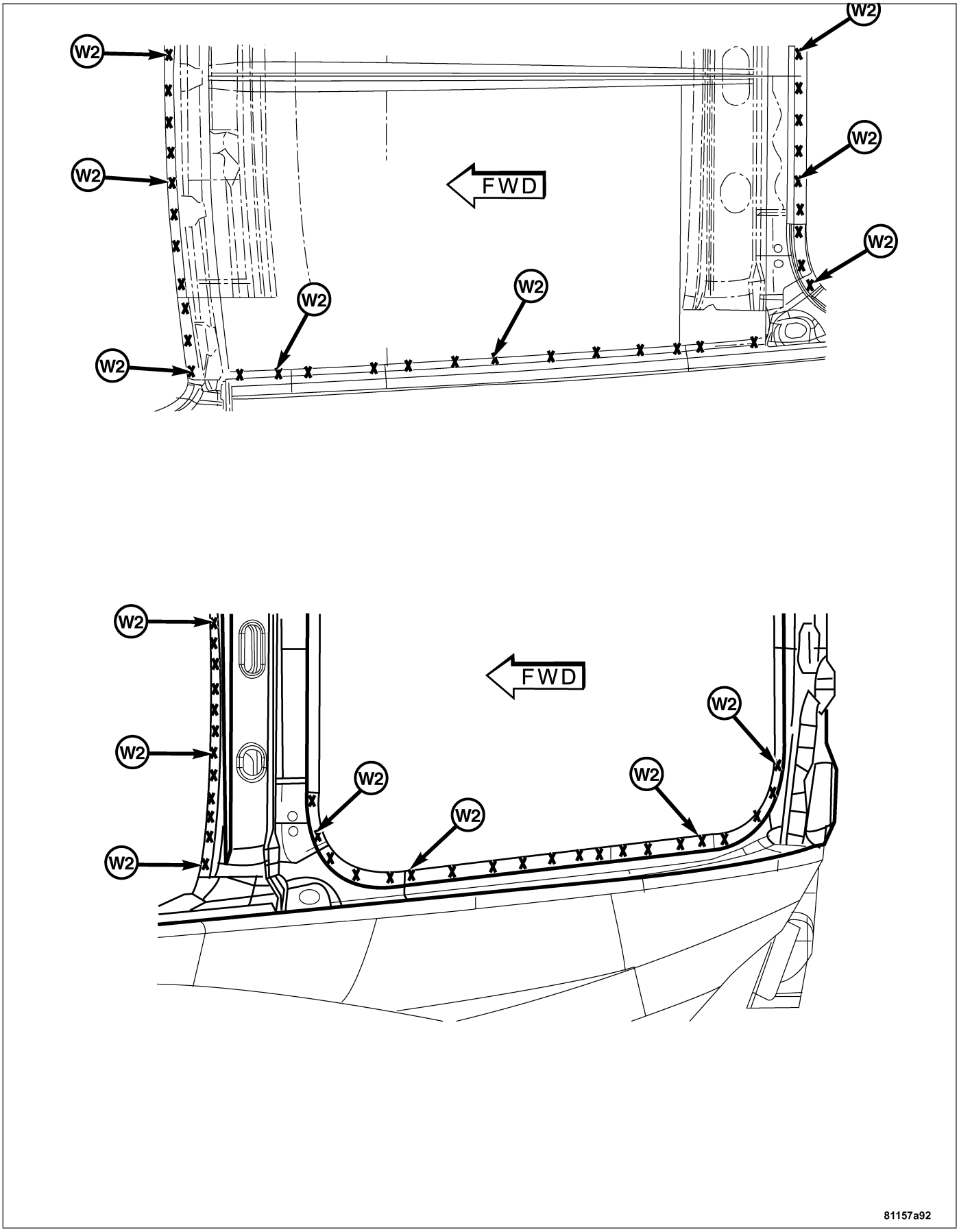

ROOF - HATCH

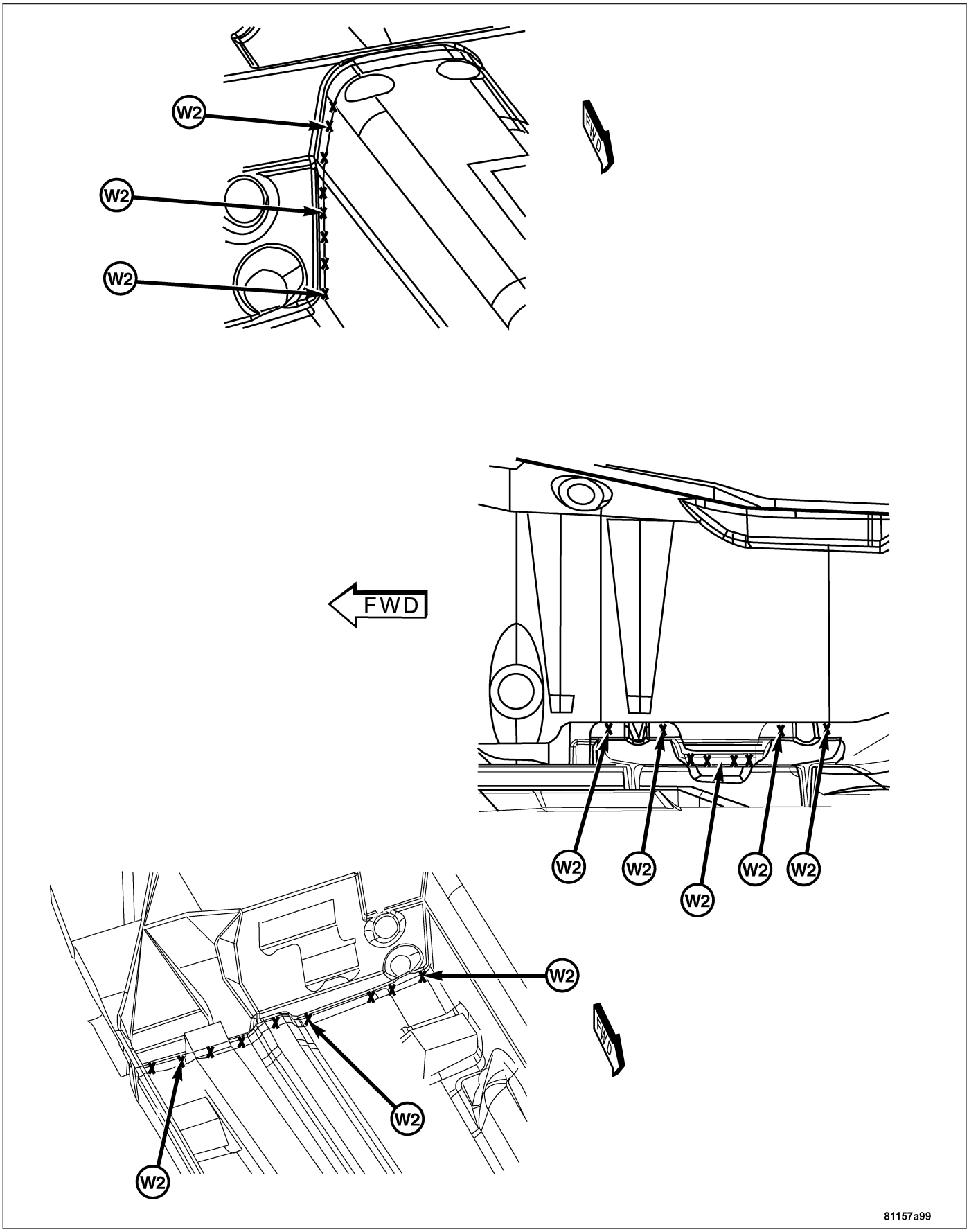

TUNNEL - FLOOR

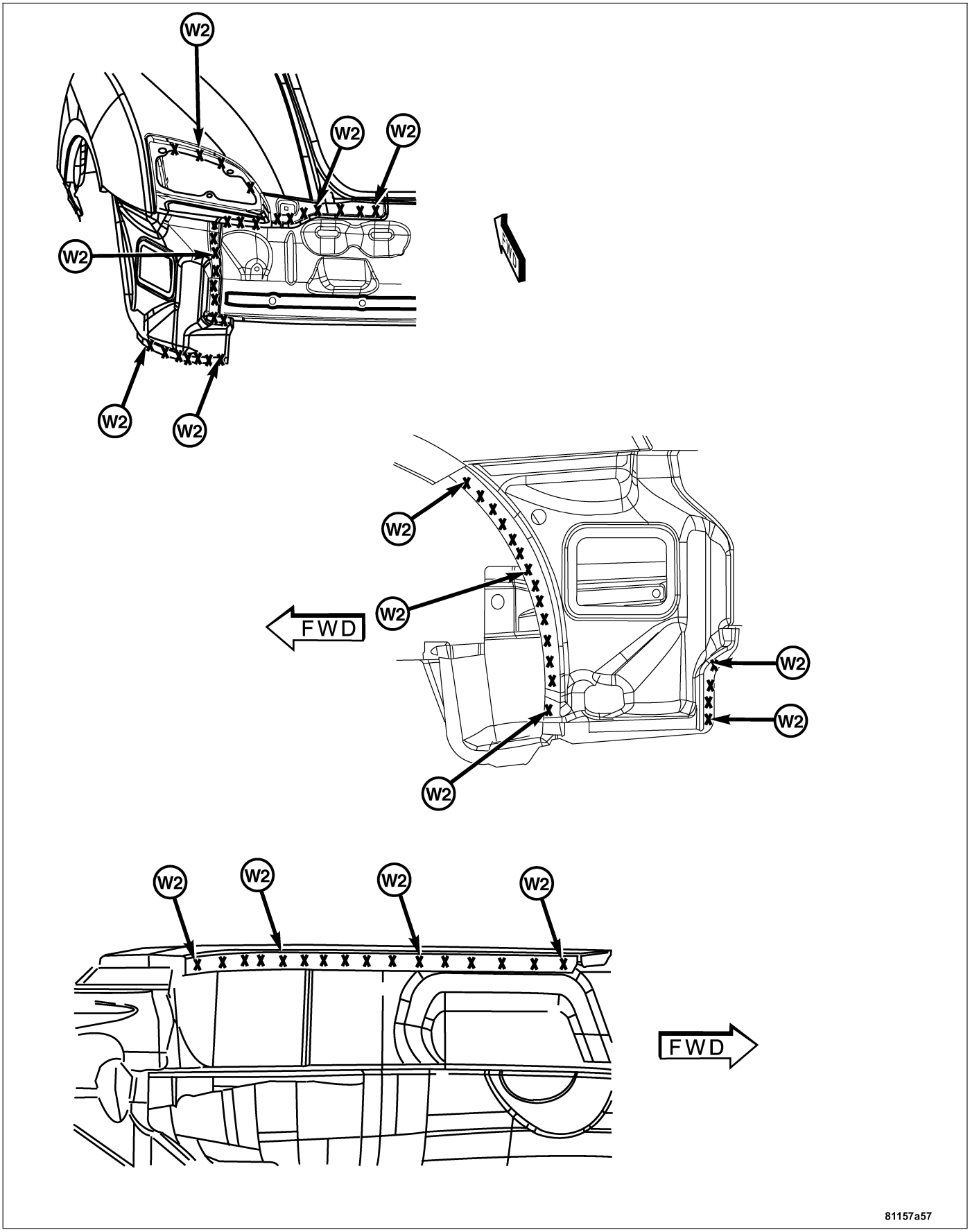

WHEELHOUSE 2

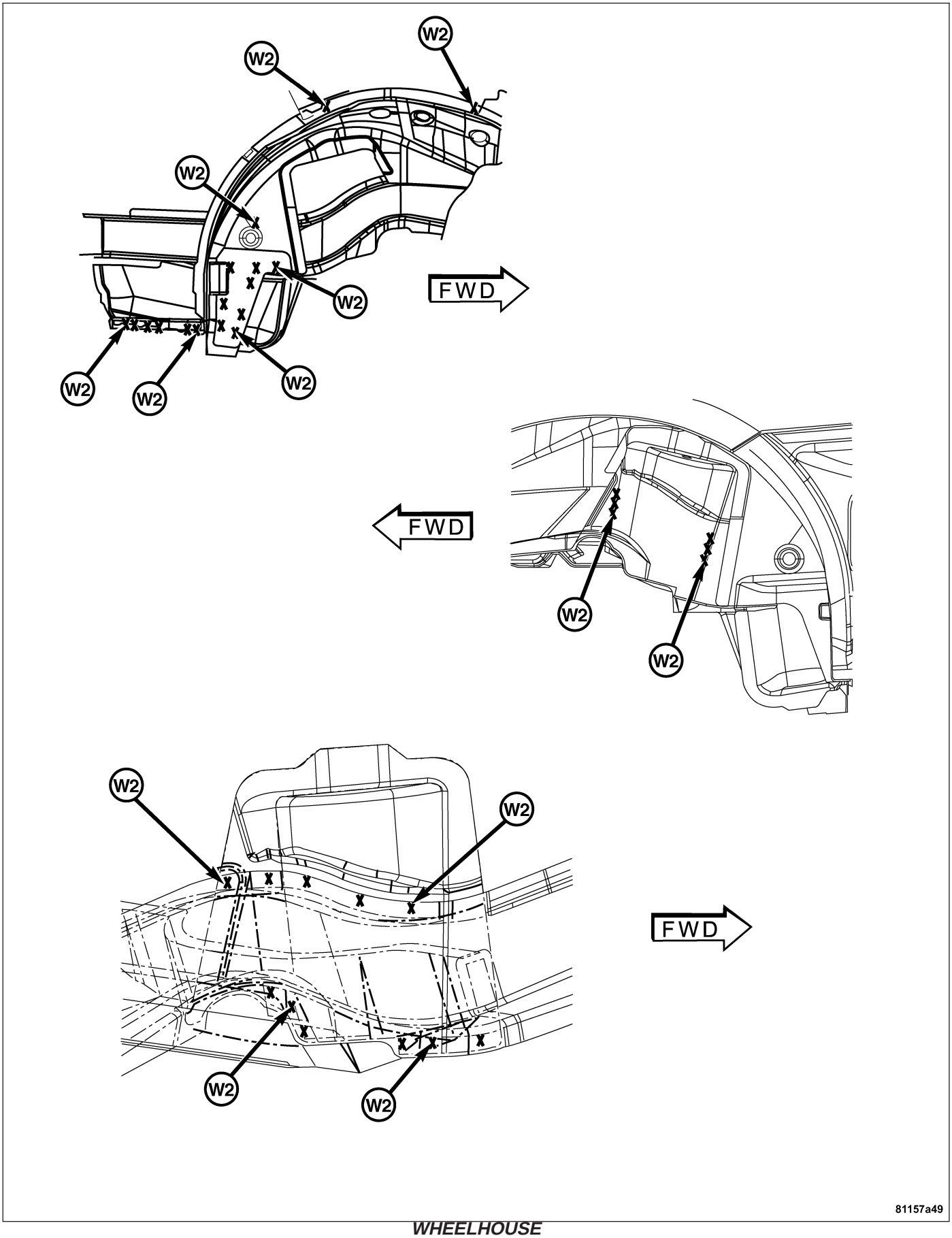

WHEELHOUSE

STRUCTURAL ADHESIVE LOCATIONS

SPECIFICATIONS - STRUCTURAL ADHESIVES

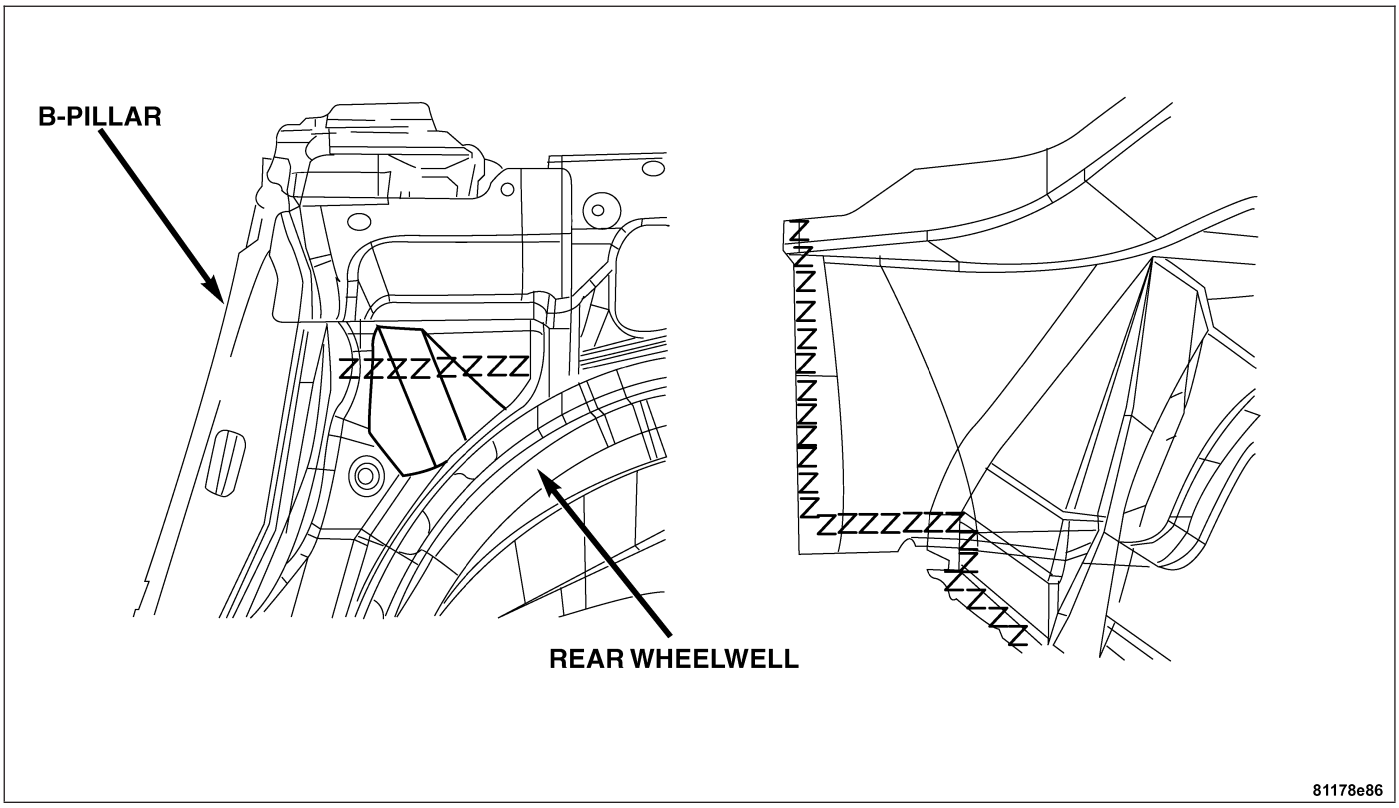

BODY SIDE

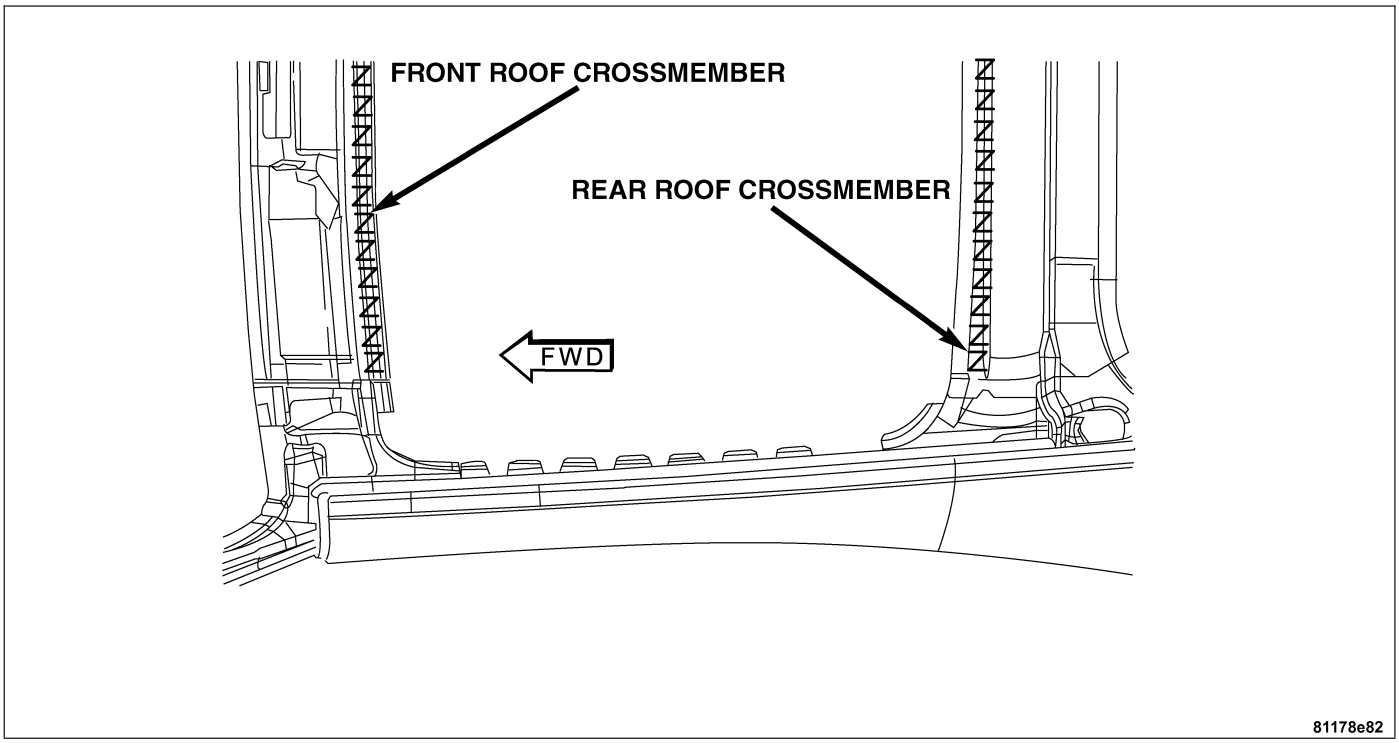

ROOF PANEL

DOOR

TABLE OF CONTENTS

page

CHECK STRAP
REMOVAL 88
INSTALLATION 89
DOOR
REMOVAL 90
INSTALLATION 91
ADJUSTMENTS
ADJUSTMENT 92
DOOR GLASS
REMOVAL 93
INSTALLATION 95
ADJUSTMENTS
ADJUSTMENT 96
EXTERIOR HANDLE
REMOVAL 98
INSTALLATION 99
WINDOW REGULATOR
REMOVAL 101
INSTALLATION 102
LATCH
REMOVAL 103
INSTALLATION 104
LOCK CYLINDER
REMOVAL 105
INSTALLATION 106
TRIM PANEL
REMOVAL 108
INSTALLATION 109

CHECK STRAP

REMOVAL

1. Remove the door trim panel. **Refer to Page 23-108**.
2. Remove the door speaker by removing the screws (1) attaching it to the door.
3. Remove the door foil from the inner door panel front area. Replace any damaged door foil.

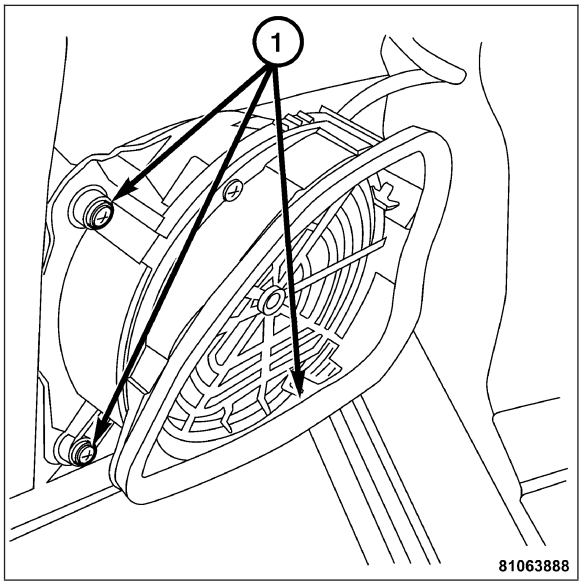

4. Remove the plastic seal located over the check strap bolt (6).

CAUTION: Avoid damaging the vehicle's paint.

5. Remove the torx screw (4) and then remove the retaining plate (3).
6. Remove the bolts (1) attaching the check strap to the door.
7. Remove the seal from the door check strap.
8. Remove the door check strap through the installation opening in the inner door panel.

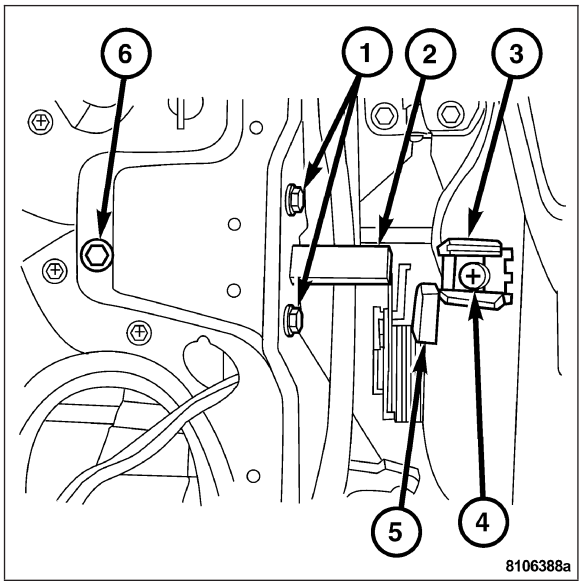

INSTALLATION

Note: Lubricate the door check strap below the plastic cover.

1. Install the door check strap through the installation opening in the inner door panel.
2. Install the screw (3), then install the seal (5) to the door check strap.

Note: Tighten the bolts on the end first.

3. Install the two bolts (1) attaching the door check strap (2) to the door. Tighten to 10 N·m (88 in. lbs.).
4. Install the torx screw (4) and install the retaining plate.

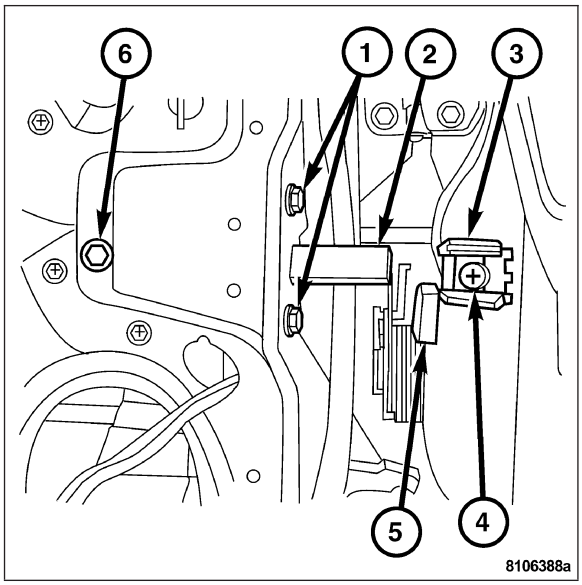

5. Install the door foil to the inner door panel front area.
6. Install the door speaker by installing the screws (1) attaching it to the door.
7. Install the door trim panel on the front door. **Refer to Page 23-109**.

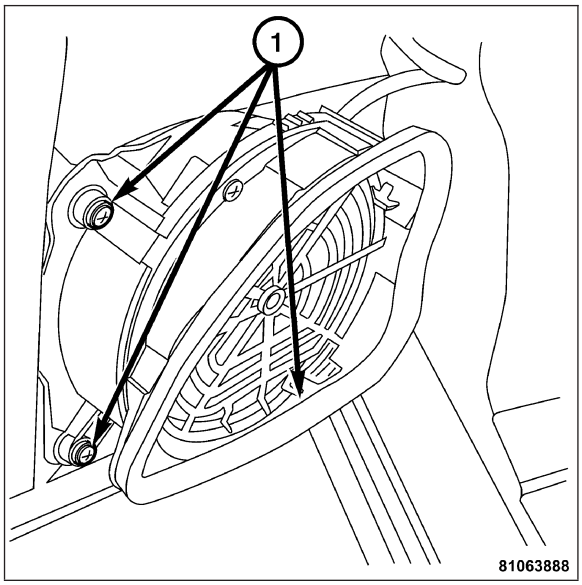

DOOR

REMOVAL

1. Remove the check strap. **Refer to Page 23-88**.
2. Disconnect and remove the lock air line (1) from the door lock. Then remove the air line from the door.

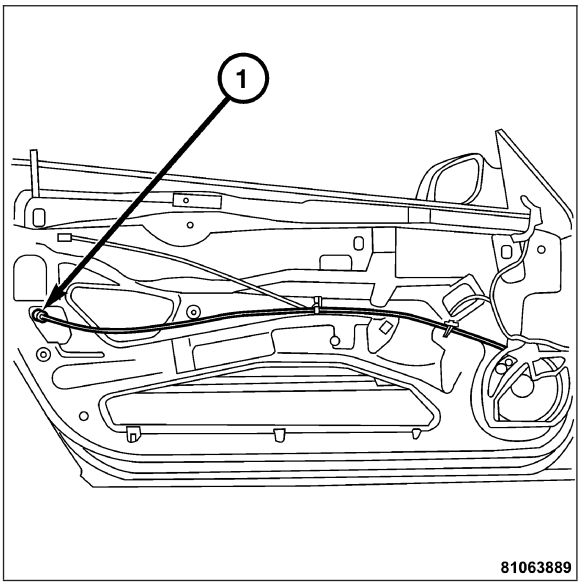

CAUTION: Have a helper hold the door for you to avoid damaging the paint.

3. Disconnect the side view mirror (1) and the power window motor connector (5).
4. Remove the bolts from the bottom and top hinge and then slowly pull door away from A-pillar.
5. Remove the protective hose (3) from the front door and pull out all electrical leads as well as the lock air line.
6. Remove the front door and lay down on secure clean area.

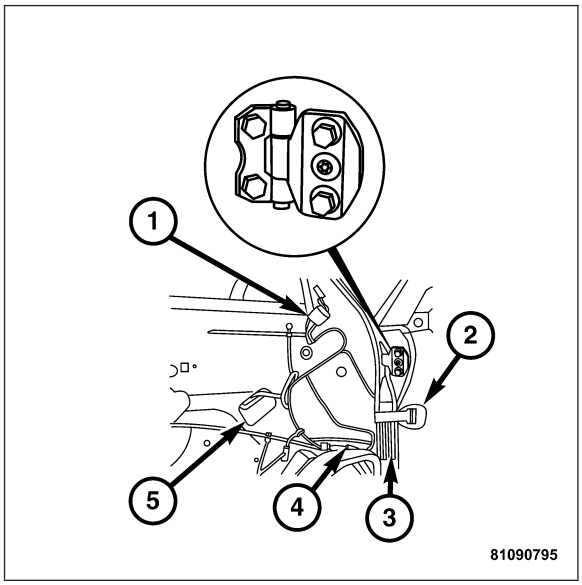

INSTALLATION

CAUTION: Have a helper hold the door for you to avoid damaging the paint.

1. Install the protective hose on the front door and thread all electrical leads as well as the air line lead into the door.
2. Slowly position the door onto the A-pillar then install the bolts to the bottom and top hinge. Tighten to 32 Nm (24 ft. lb.).
3. Connect the rearview mirror (1) and the power window motor (4) electrical connector.

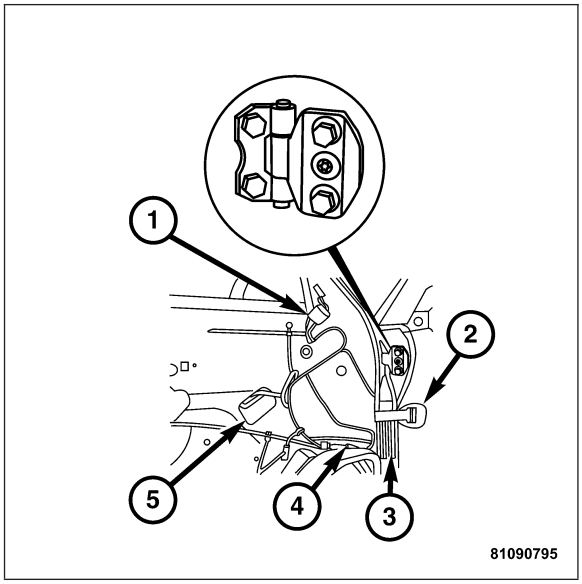

4. Install the door check strap to the A-pillar. **Refer to Page 23-89**.

5. Connect and install the lock air line (1) to the door.
6. Adjust the door for fit and function. **Refer to Page 23-92**.

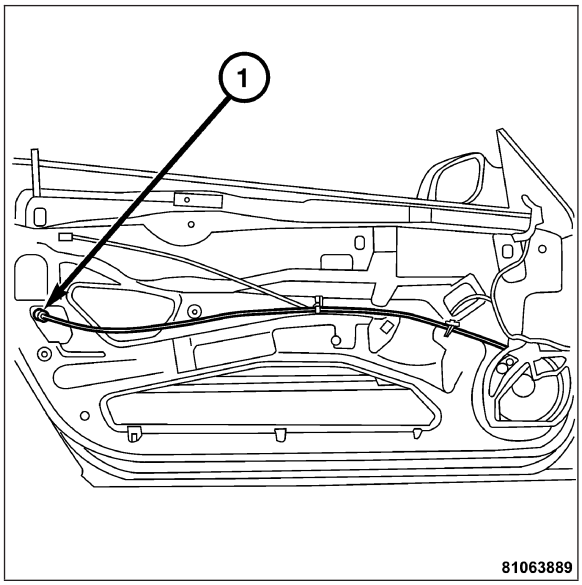

ADJUSTMENTS

ADJUSTMENT

Test and adjustment values for gaps on hoods, doors and lids	
Front Door to Front Fender	4.0 ±0.5 mm
Front Door to Rear Quarter Panel	4.0 ±0.5 mm
Roof to Windshield Frame	9.0 (+0/-2) mm

CAUTION: Avoid damaging the vehicle's paint.

1. Remove the lock striker.
2. Inspect the gap sizes of the door in accordance to the table.
3. Loosen the bolts on the door side, then adjust the gap dimensions by moving the front door up, down; front and back, then tighten to 32 N·m (24 ft. lbs.).
4. Loosen the bolts on the hinge side, adjust, then tighten with the centering screw on the hinge;adjust contour of driver's door at the hinge side. Tighten to 32 N·m (24 ft. lbs.).
5. Install the lock striker. Tighten to 28 N·m (21 ft. lbs.).
6. Insert a centering gauge into the door lock until lock completely catches (catch stage 2).
7. Position a depth stop at the height of the striker on the outside of the door and then close the door until the depth stop makes contact on both sides.
8. Press the striker into the center gauge from the inside through the open window and then tighten the bolts.
9. Pull the outer door handle and then remove the centering gauge.
10. Check the door for easy motion.
11. Check the window for proper adjustment. If necessary adjust the window. **Refer to Page 23-96**.

DOOR GLASS

REMOVAL

WARNING: WHEN WORKING ON THE POWER WINDOWS OR THE WINDOWS IN THE VEHICLE DOORS, THE UNSECURED WINDOW CAN FALL DOWN AND CAN CAUSE INJURY BY PINCHING HANDS.

CAUTION: Secure the window against falling down.

1. Remove the door trim panel. **Refer to Page 23-108**.

Note: Move the plastic wedge directly into the clips.

2. Remove the inner window sealing rail by opening the window, then press the sealing rail off of the inner door with a plastic wedge and remove from the door. Check the clips for wear or damage (5 each).
3. Remove the outer window sealing rail by removing the two chrome cover screws (1), then pull the rubber door seal off at the separation point which is about 3-4 inches down the back of the door seal.
4. Remove the cover on the door escutcheon with a plastic wedge, then remove the expanding anchor clip.
5. Press the sealing rail off of the window shaft uniformly with a wedge and remove from the door.

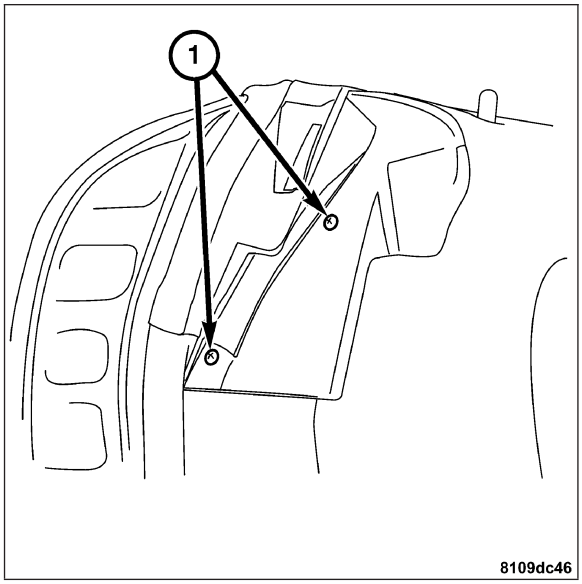

6. Remove the door speakers by removing the screws (1).
7. Remove the door foil from the inner door.

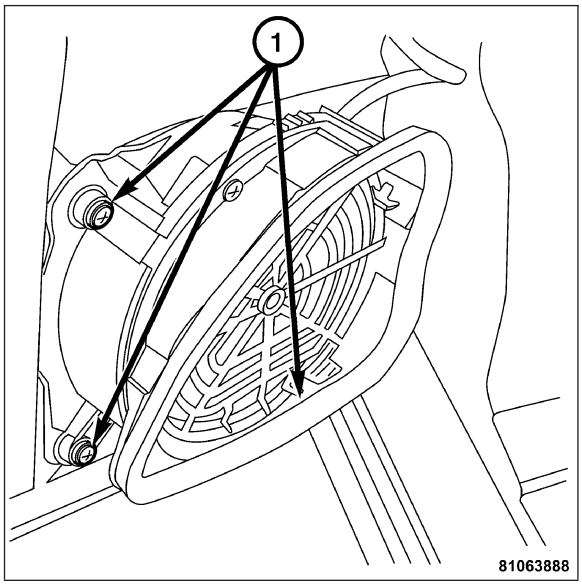

8. Lower the window until the mounting screws (2-4) are accessible through the assembly openings in the door.
9. Disconnect the connector for the power window motor (3).

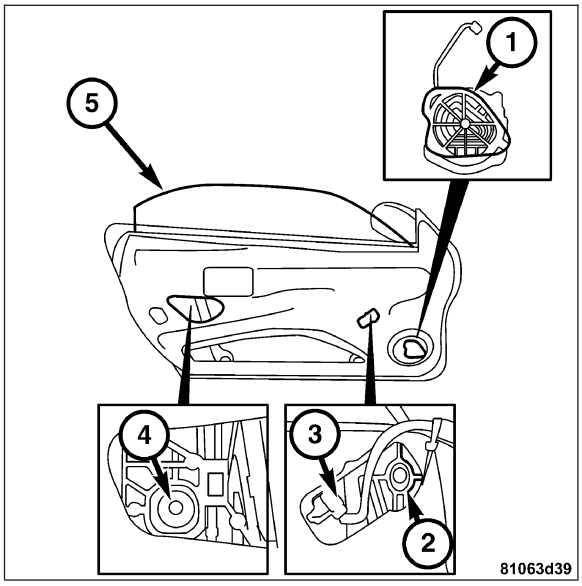

Note: The slider is fastened to the window and cannot be removed.

10. Loosen the mounting bolt only until the window (5) can be lifted out of the slider.
11. Remove the window by pulling it upward while guiding the slider through the opening in the door shaft.
12. Put the window down on a secure and dry surface.

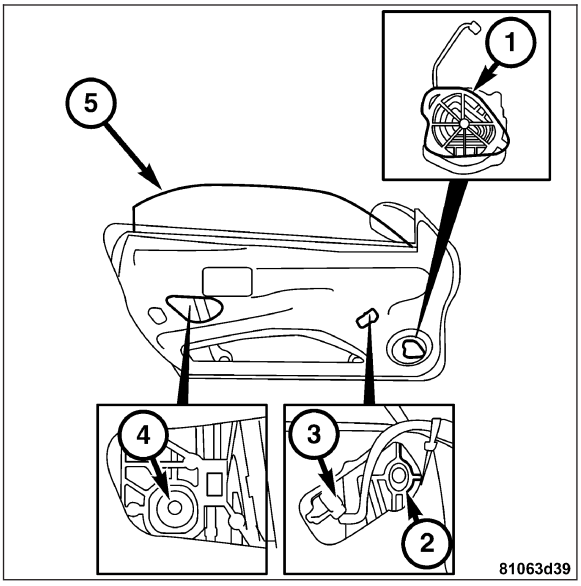

INSTALLATION

WARNING: WHEN WORKING ON THE POWER WINDOWS OR THE WINDOWS IN THE VEHICLE DOORS, THE UNSECURED WINDOW CAN FALL DOWN AND CAN CAUSE INJURY BY PINCHING HANDS.

CAUTION: Secure the window against falling down.

1. Install the window (5) by inserting it downward while guiding the slider through the opening in door shaft.
2. Tighten the mounting bolts (2-4).
3. Connect the connector for the power window motor (3).
4. Install the door foil on the inner door.

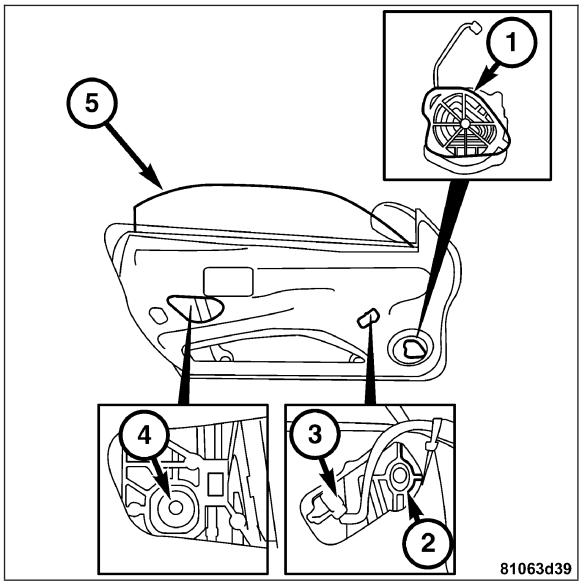

5. Install the door speaker (1).

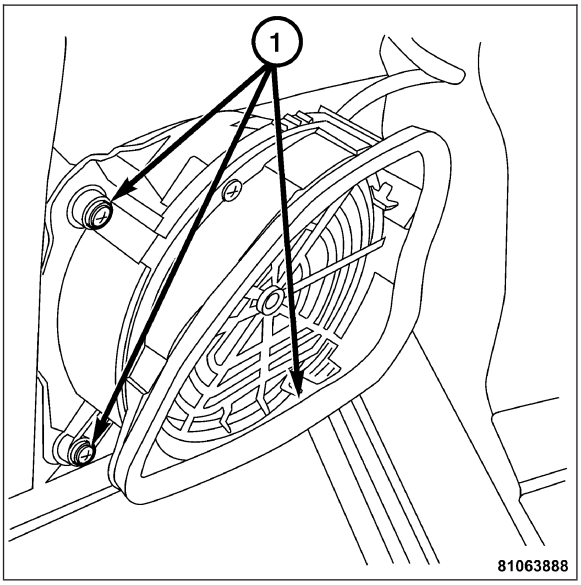

6. Install the outer window sealing rail by pressing the sealing rail onto the window shaft uniformly. Then install the expanding anchor clip. Install the plastic cover on the escutcheon,then install the rubber door seal. Install the chrome cover by installing the two screws (1).
7. Install the inner window sealing rail by pressing the sealing rail on the inner door.
8. Adjust the door glass and clean. **Refer to Page 23-96**.
9. Install the door trim panel. **Refer to Page 23-109**.

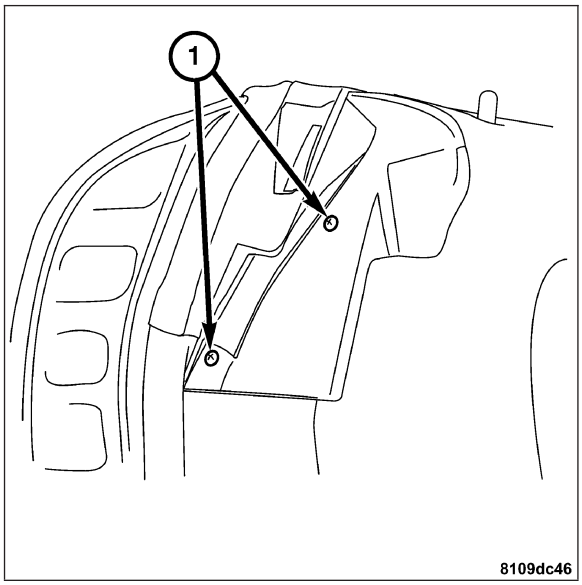

ADJUSTMENTS

ADJUSTMENT

1. Check the front door adjustment and adjust if necessary. **Refer to Page 23-92**.
2. Remove the door trim panel on the front door. **Refer to Page 23-108**.
3. Remove the door speaker (1).
4. Remove the door foil from the door.
5. Loosen the nuts from both of the window stop brackets (2-4) located in the middle portion of the door.
6. Close the window (5) until it is flush with the front edge of the door eschutcheon.

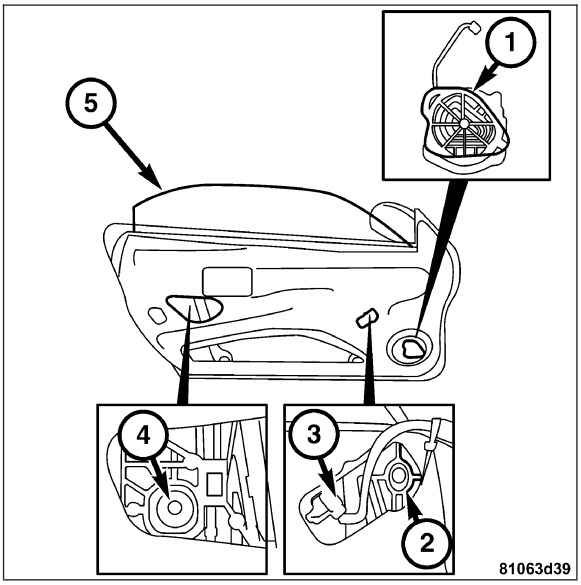

7. Remove the plug on the underside of the door (2) covering the bolt (3), loosen the bolt until the guide rail can be moved.

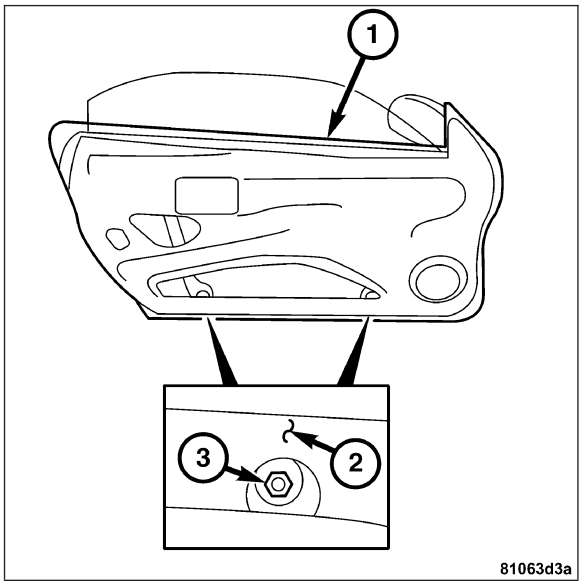

Note: In the second detent stage of the door lock, the edge of the window glass must disappear completely below the rubber seal. If necessary, the inclination of the window can be corrected by loosening the bolts, and the longitudinal direction of the window can be corrected by loosening the bolt. In addition, the inclination of the window relative to the weatherstrip can be increased or reduced by loosening the nut;the sliding jaw must be moved for this purpose.

8. Adjust the window so that the upper glass edge makes contact with the inner rubber sealing lip (1) over the entire length when the door lock is in the first catch position, then tighten bolts and nuts (3) on the guide rail.
9. Tighten the bolts and nut if they were loosened.
10. Install the bolt plug.

Note: Grease the sliding jaws and guide rail as well as the window lift rail.

11. Check the window for ease of movement.
12. Install door foil on the door.
13. Install the door speaker.
14. Install the door trim panel on the front door. **Refer to Page 23-109**.

EXTERIOR HANDLE

REMOVAL

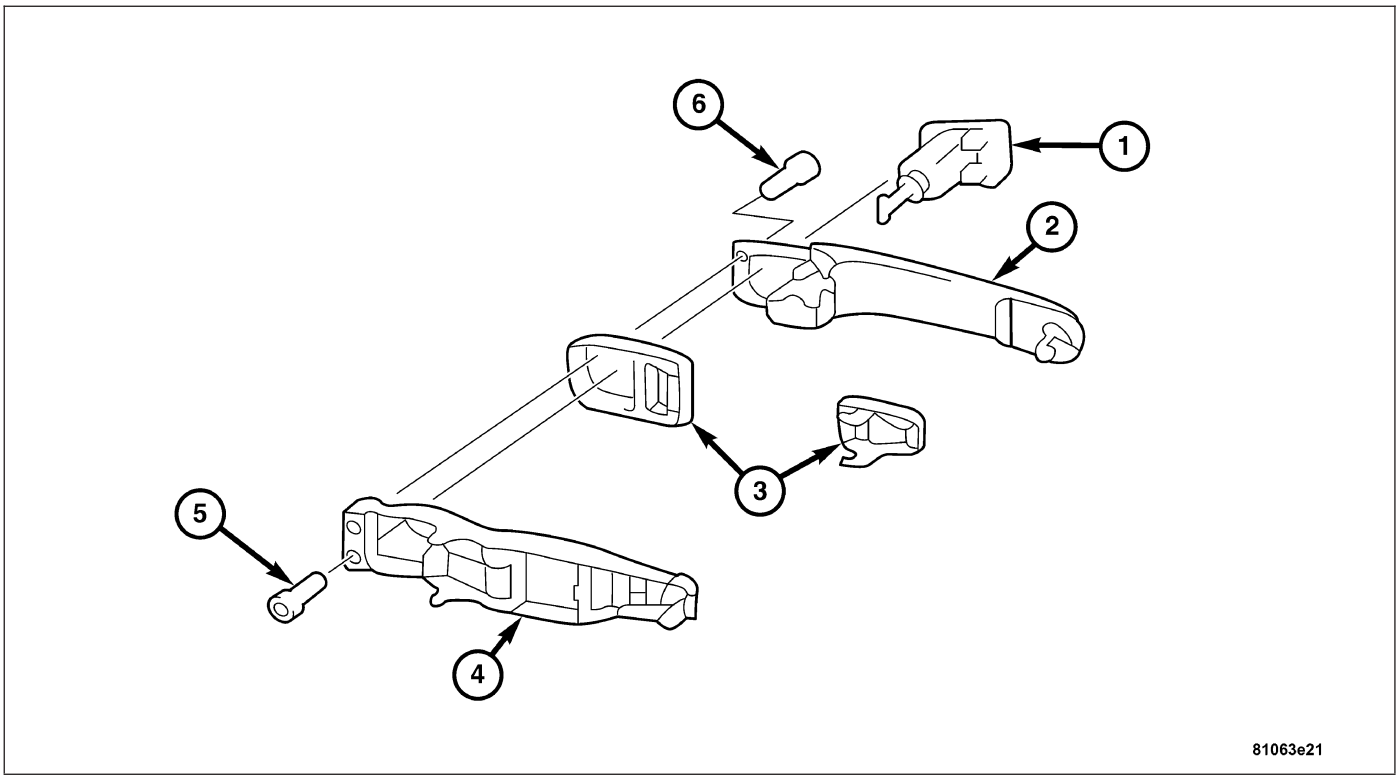

1 - LOCK CYLINDER
2 - DOOR HANDLE
3 - BACKING PLATES
4 - HANDLE RETAINER
5 - SCREW
6 - SCREW

1. Remove the door weather seal (2) from the door in the area of the door lock.
2. Loosen the screw (1), pull door handle out to the stop and hold it in place. Retighten the screw (1) lightly with the handle in this position. **Left front door: Right-hand thread. Right front door: Left-hand thread.**

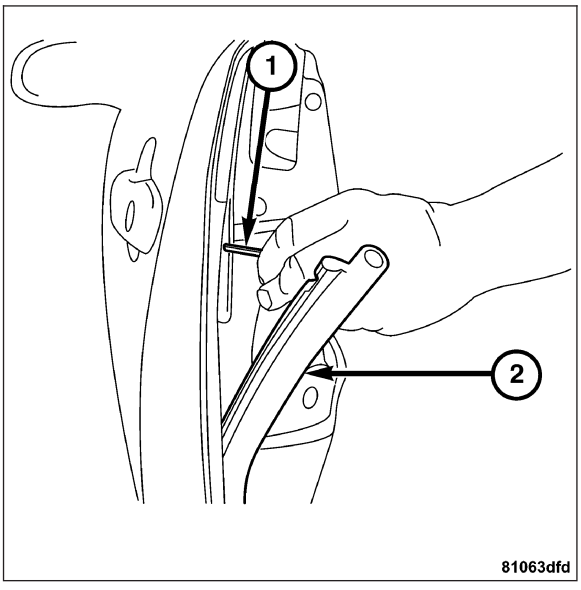

Note: The screw will not fall out.

3. Remove the 4 mm Allen screw (1) on the face of the door.
4. Remove the lock cylinder.

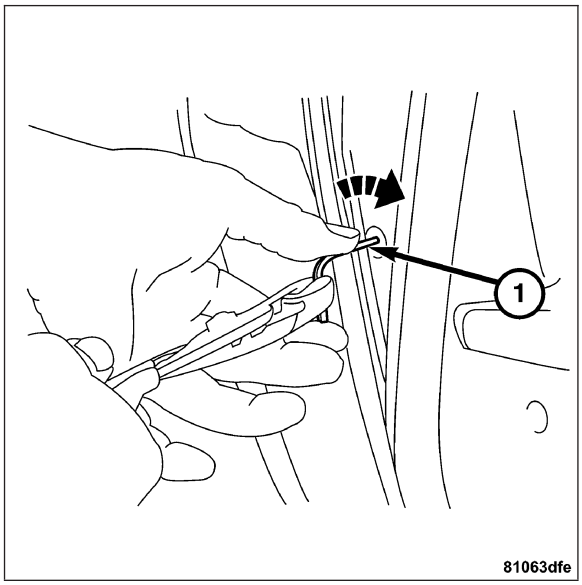

INSTALLATION

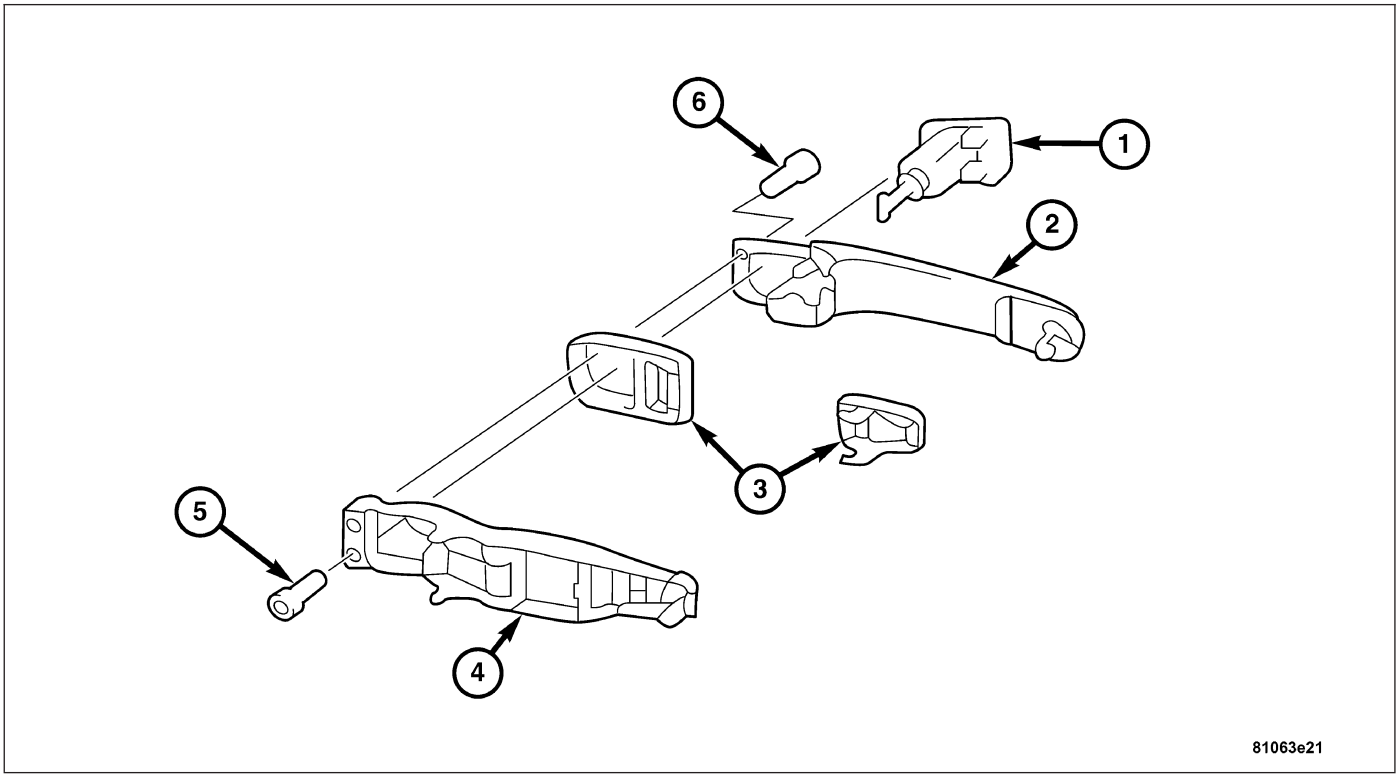

1 - LOCK CYLINDER
2 - DOOR HANDLE
3 - BACKING PLATES
4 - HANDLE RETAINER
5 - SCREW
6 - SCREW

1. Install the lock cylinder and install the screw (1).

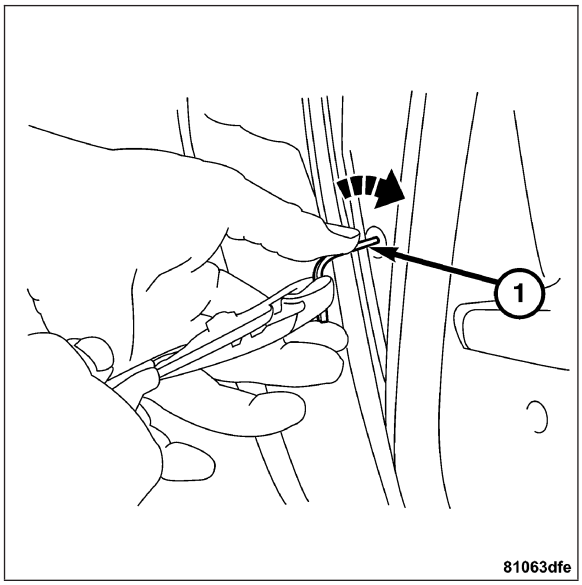

2. Loosen the screw (1) and retighten without pulling or holding the door handle.
3. Check the door lock release for proper function by closing the catch in the door latch with a suitable tool and releasing it with the door handle.
4. Insert the door weather strip (2) into the channel.
5. Check for proper door and handle function.

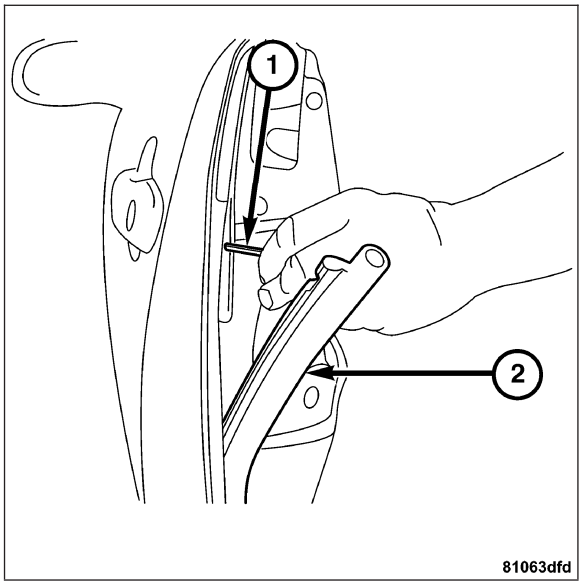

WINDOW REGULATOR

REMOVAL

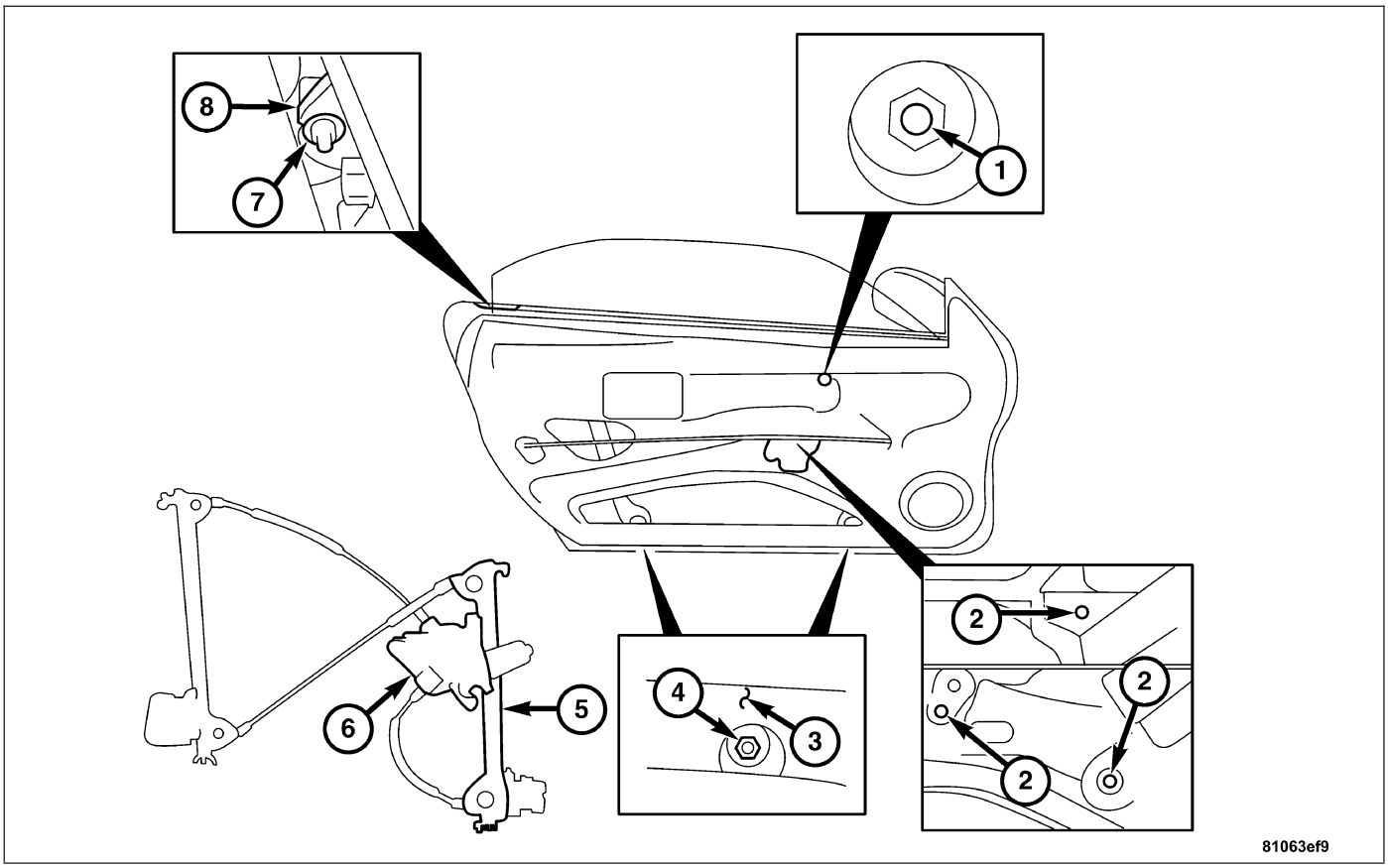

1 - UPPER WINDOW REGULATOR NUT
2 - RIVET
3 - LOWER DOOR
4 - LOWER DOOR NUT
5 - WINDOW REGULATOR
6 - WINDOW MOTOR
7 - UPPER REGULATOR BOLT
8 - BRACKET

1. Remove the door glass. **Refer to Page 23-93**.

Note: Remove the rivet residue and any metal chips from the door.

2. Drill out the rivets (2).

Note: Loosen the bolt only until window lift mechanism can be moved out of bracket.

3. Loosen the upper regulator bolt (7) which is between the inner and outer door panel on the face of the door.
4. Remove the upper window regulator nut (1).
5. Remove the lower door nuts (4) from the door bottom. Nuts are located behind the rubber plugs.
6. Unclip power window motor cable from the door.
7. Lift the window regulator up, then turn it and lift the regulator out through the assembly opening in the door.

INSTALLATION

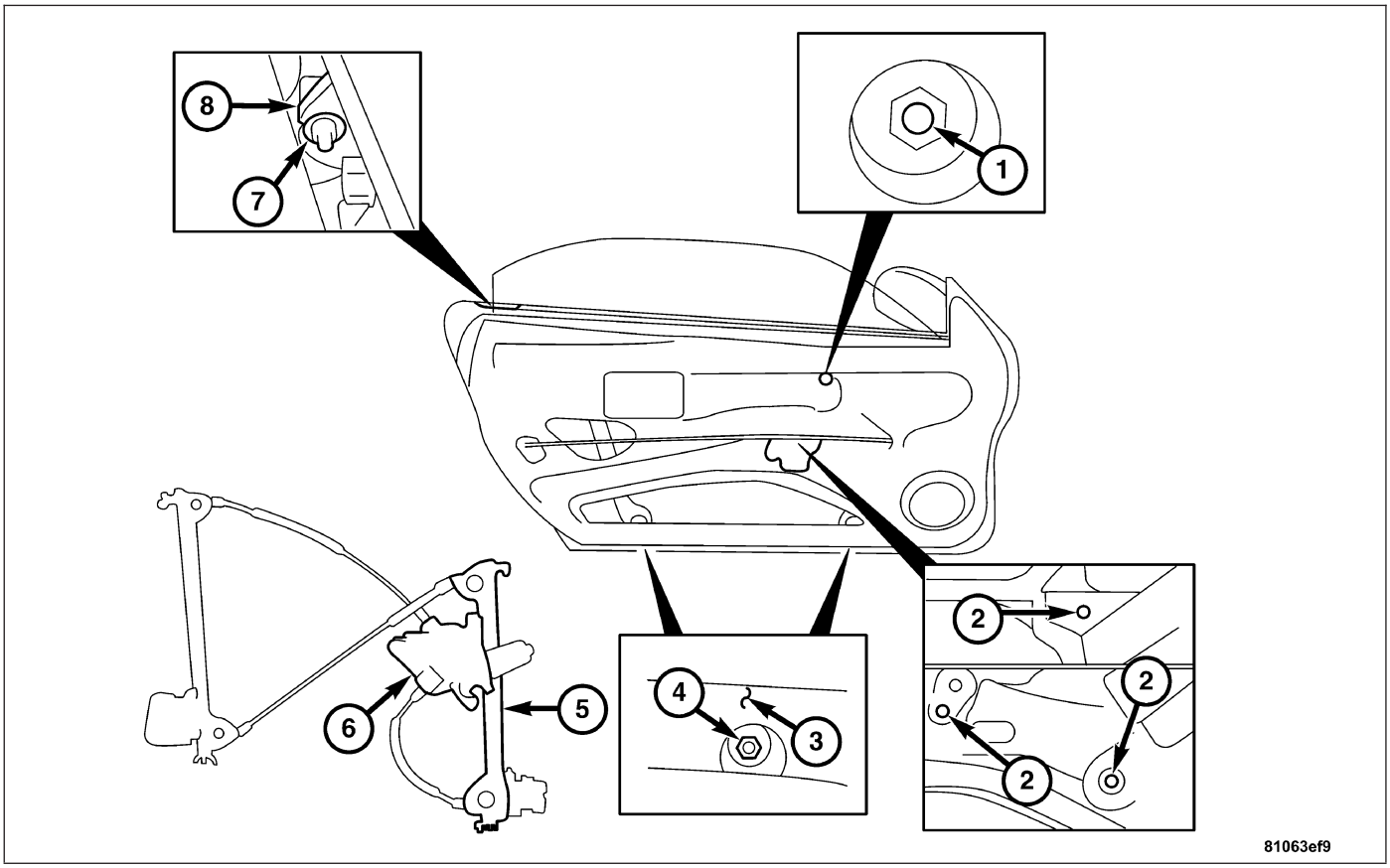

1 - UPPER WINDOW REGULATOR NUT
2 - RIVET
3 - LOWER DOOR
4 - LOWER DOOR NUT
5 - WINDOW REGULATOR
6 - WINDOW MOTOR
7 - UPPER REGULATOR BOLT
8 - BRACKET

1. Install the window regulator (5) through the assembly opening in the door.
2. Fasten the power window motor with three rivets (2).
3. Connect the power window motor (6).
4. Install the lower door nuts (4) in the door bottom (3), then install the rubber plugs.
5. Install the upper window regulator nut (1).
6. Install the upper window regulator nut (1) between the inner and outer door panels.
7. Install the door glass in the front door. **Refer to Page 23-95**.

LATCH

REMOVAL

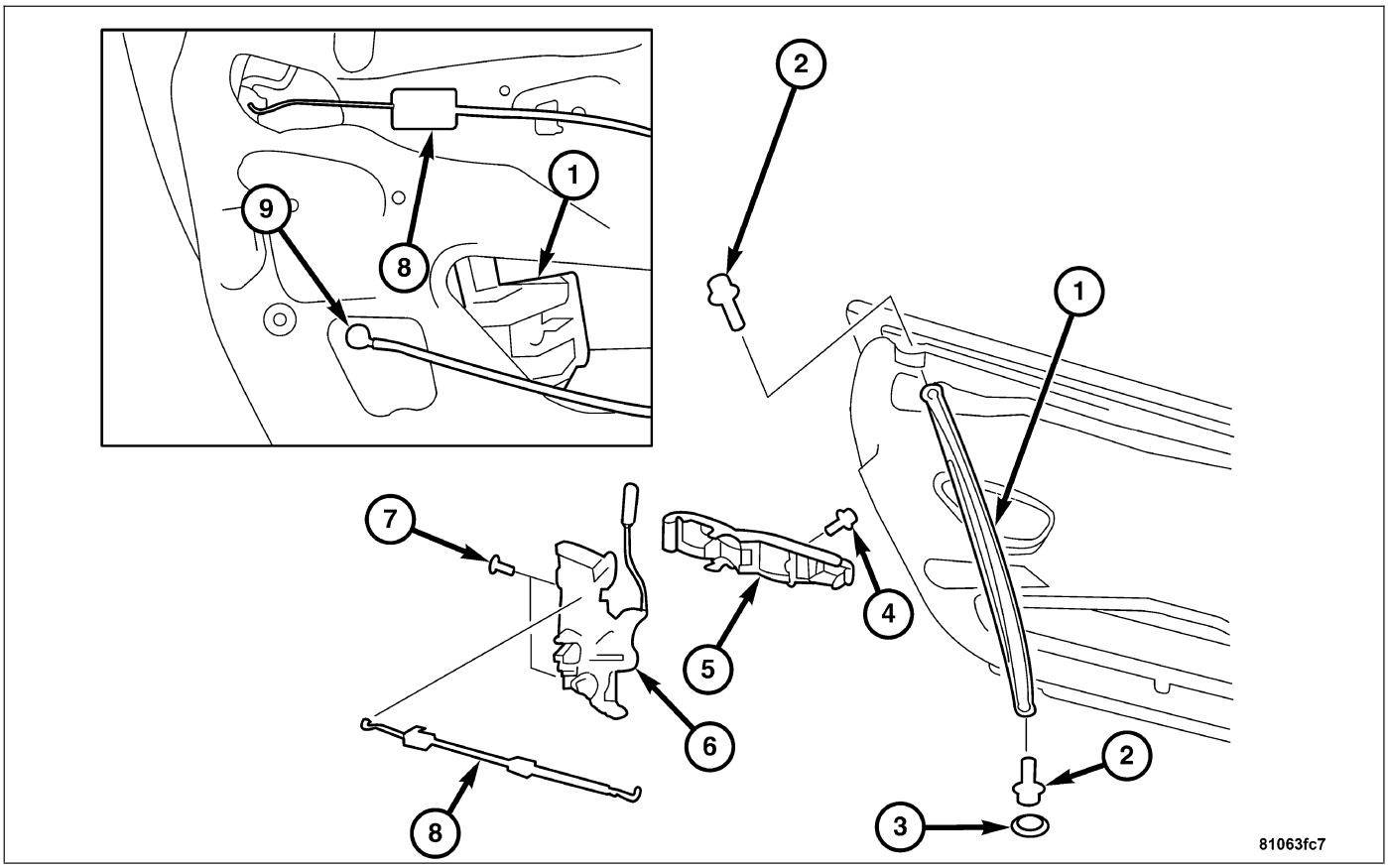

1 - WINDOW RUN CHANNEL
2 - WINDOW RUN CHANNEL BOLTS
3 - RUBBER PLUG
4 - SCREW
5 - RETAINER
6 - DOOR LOCK MODULE
7 - ASSEMBLY SCREW
8 - LATCH CABLE
9 - LATCH AIR LINE

1. Remove the door trim panel on the front door. **Refer to Page 23-108**.
2. Remove the exterior door handle on the front door. **Refer to Page 23-98**.
3. Remove the foil from the door.
4. Remove the rubber plug (3), remove the window channel bolts (2) and remove the window run channel (1) downward through installation opening.
5. Remove the latch cable (8) from the clip.
6. Disconnect the latch air line (9).
7. Remove the assembly screw (7) and remove the door lock module (6).

INSTALLATION

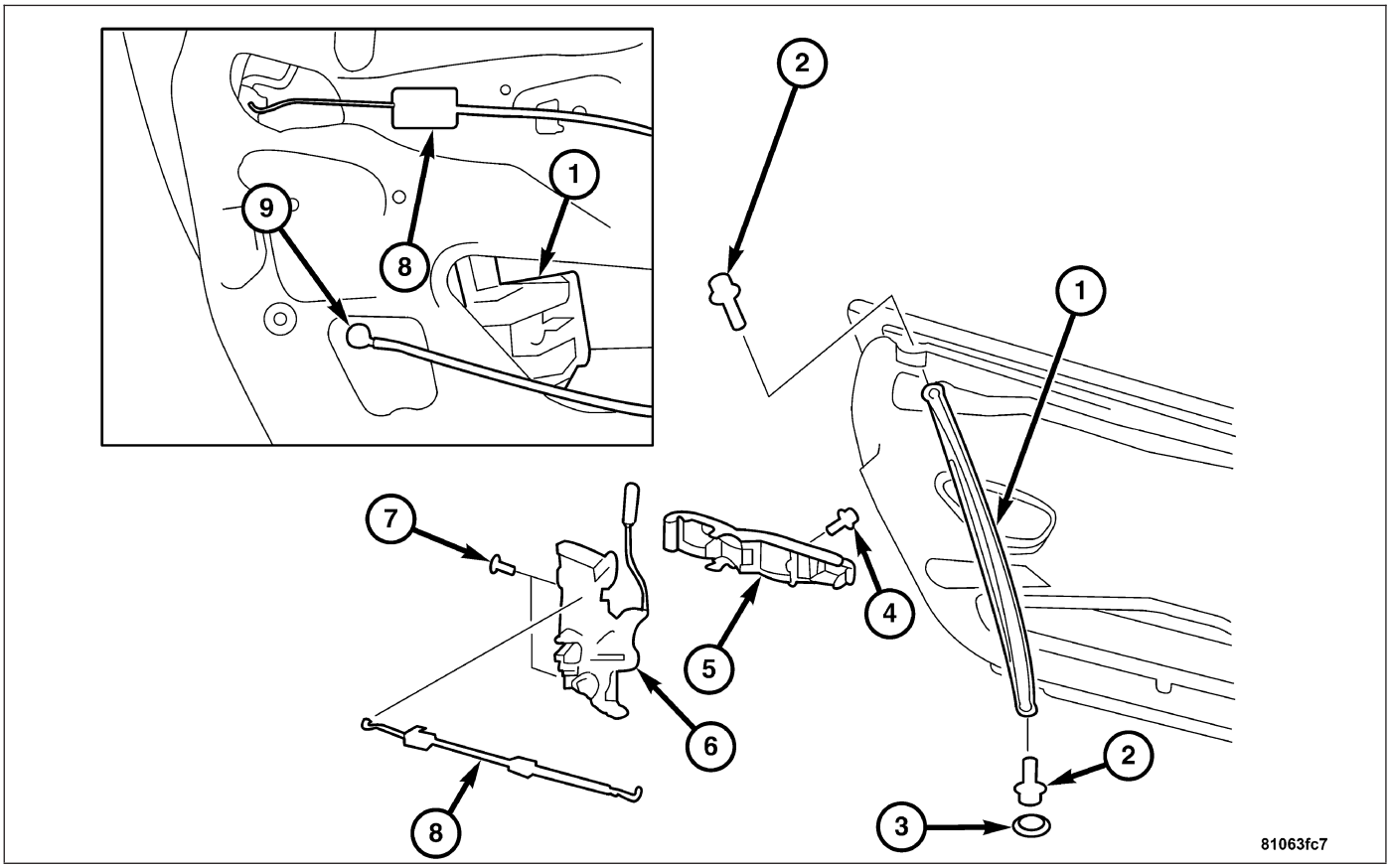

1 - WINDOW RUN CHANNEL
2 - WINDOW RUN CHANNEL BOLTS
3 - RUBBER PLUG
4 - SCREW
5 - RETAINER
6 - DOOR LOCK MODULE
7 - ASSEMBLY SCREW
8 - LATCH CABLE
9 - LATCH AIR LINE

1. Install the door lock module (6) through installation opening then tighten the screws.
2. Connect the line (9) to the vacuum element on door lock.
3. Install the lock control cable (8) to the clip.
4. Install the nuts (2) and window run channel (1) through installation opening then install the rubber plug (3).
5. Install the foil on the front door.
6. Install the exterior door handle on the front door. **Refer to Page 23-99**
7. Install the door trim panel on the front door. **Refer to Page 23-109**

LOCK CYLINDER

REMOVAL

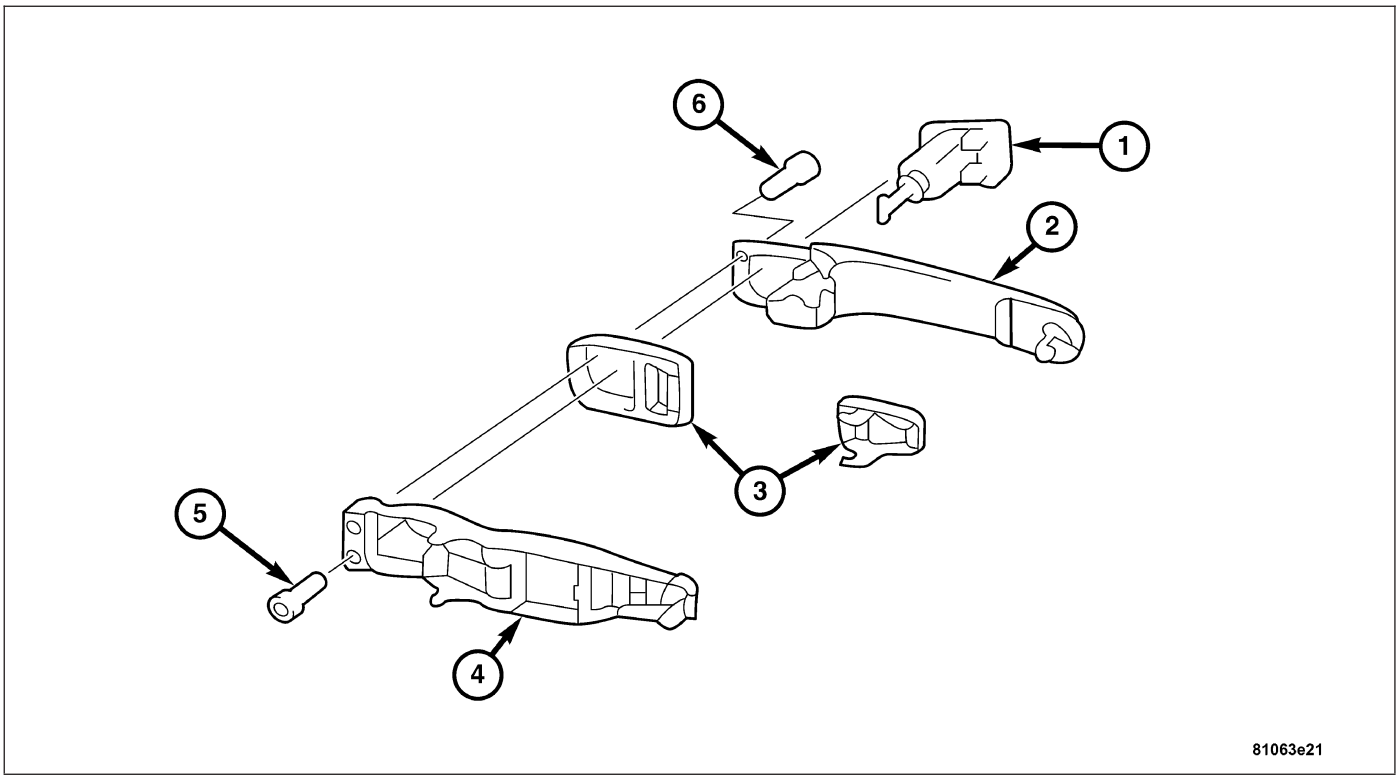

1 - LOCK CYLINDER
2 - DOOR HANDLE
3 - BACKING PLATES
4 - HANDLE RETAINER
5 - SCREW
6 - SCREW

1. Remove the door weather seal (2) from the door in the area of the door lock.
2. Loosen the screw (1), pull door handle out to the stop and hold it in place. Retighten the screw (1) lightly with the handle in this position. **Left front door: Right-hand thread. Right front door: Left-hand thread.**

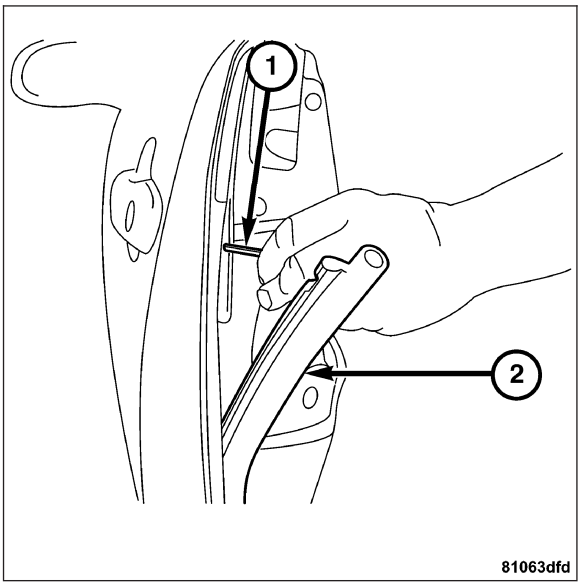

Note: The screw will not fall out.

3. Remove the 4 mm Allen screw (1) on the face of the door.
4. Remove the lock cylinder.

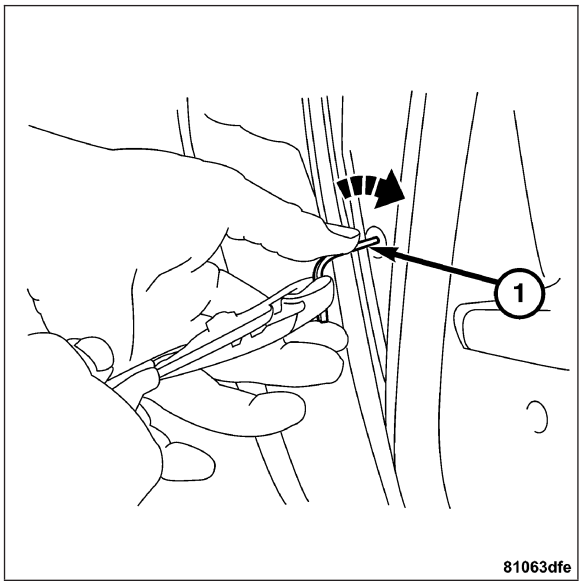

INSTALLATION

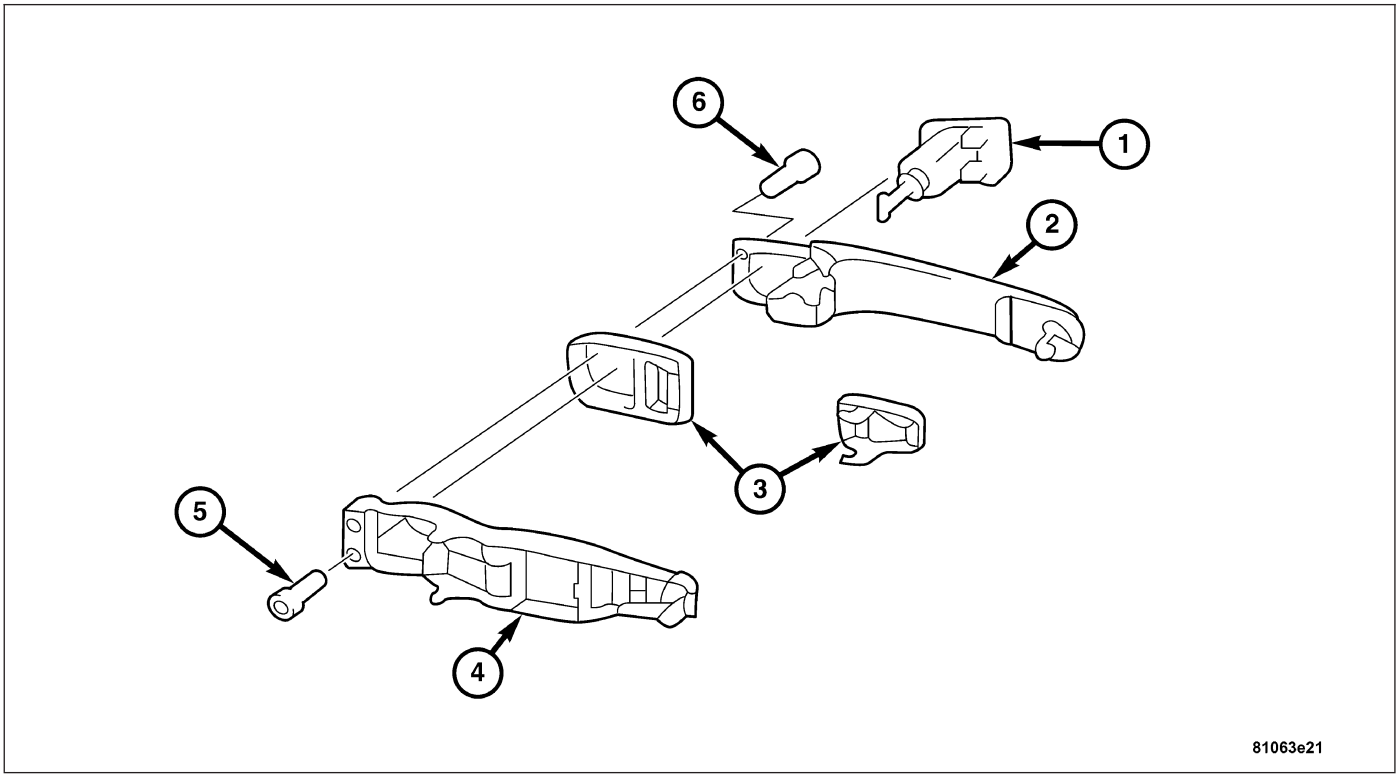

1 - LOCK CYLINDER
2 - DOOR HANDLE
3 - BACKING PLATES
4 - HANDLE RETAINER
5 - SCREW
6 - SCREW

1. Install the lock cylinder and install the screw (1).

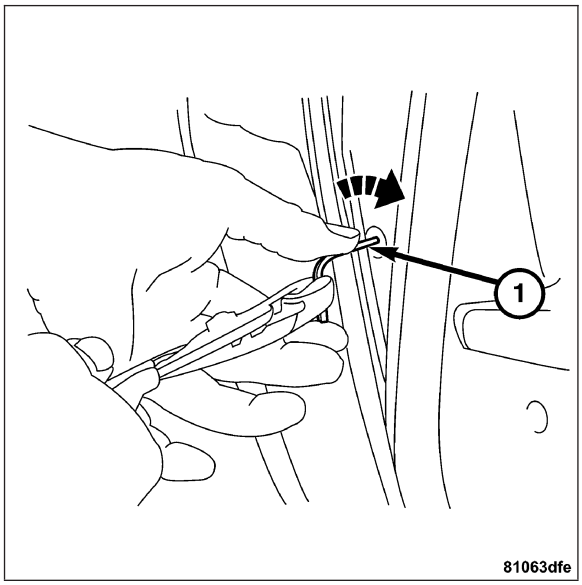

2. Loosen the screw (1) and retighten without pulling or holding the door handle.
3. Check the door lock release for proper function by closing the catch in the door latch with a suitable tool and releasing it with the door handle.
4. Insert the door weather strip (2) into the channel.
5. Check for proper door and handle function.

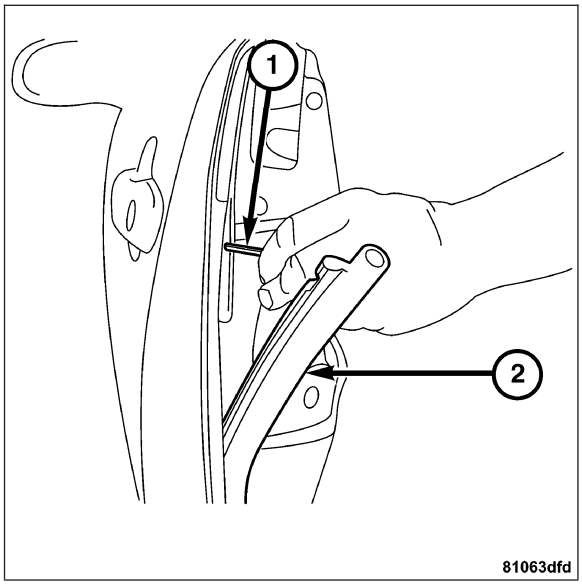

TRIM PANEL

REMOVAL

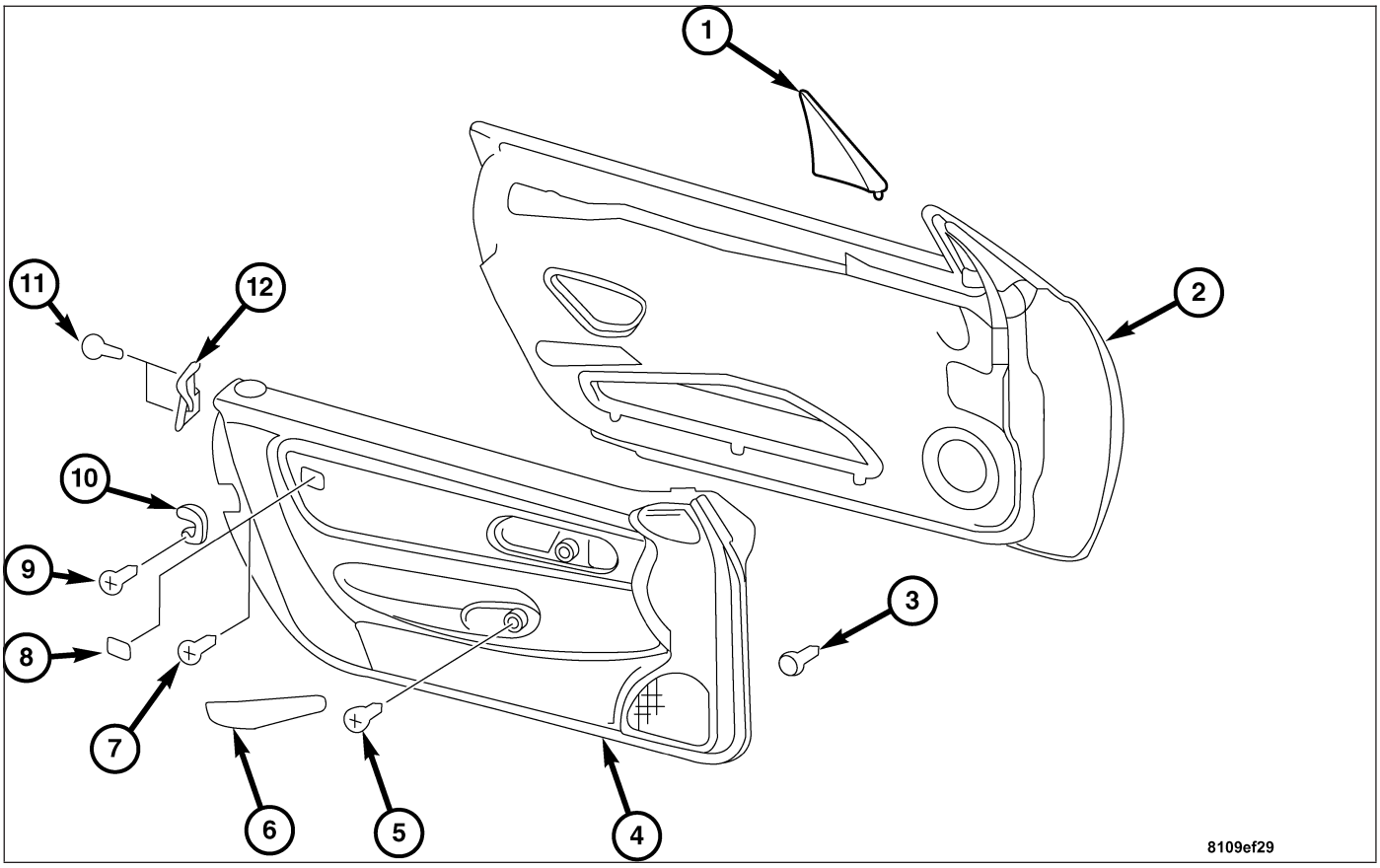

1 - ESCUTCHEON COVER
2 - DOOR
3 - SHEET METAL CLIP NUTS
4 - DOOR TRIM PANEL
5 - SCREW
6 - PULL HANDLE COVER
7 - SCREW
8 - SRS COVER
9 - SCREW
10 - CLIP
11 - SCREWS
12 - CHROME DOOR END COVER

1. Open the window.
2. Remove the pull handle cover (6) from the trim panel (4) by pressing out the cover from the bottom using a plastic wedge.
3. Remove the screw (5) behind the upper portion of the door handle pull (6).
4. Remove the escutcheon cover (1) using a plastic wedge.
5. Remove the door end cover (12) by removing the two screws (11) attaching it to the door frame.
6. Remove the SRS cover (8) and remove the screw (7) behind the cover.
7. Remove the door trim panel (4) off inner door from the bottom, front and back using a plastic wedge.
8. Lift the top of the door trim panel upwards and out of the clips at the sealing rail using a plastic wedge and at the same time pull away from the inner door.
9. Disconnect the front door speaker connector.
10. Disconnect the door lock cable from the plastic retainer clip located on the back side of the inside of the trim panel.
11. Remove the door trim panel (4) and place in a clean dry place.

12. Check the sheet-metal clip nuts (3) on the door trim panel. If necessary replace any damaged sheet-metal clip nuts.
13. Check the door foil on the door and the clips on the door lining. If necessary replace any damaged door foil or clips.

INSTALLATION

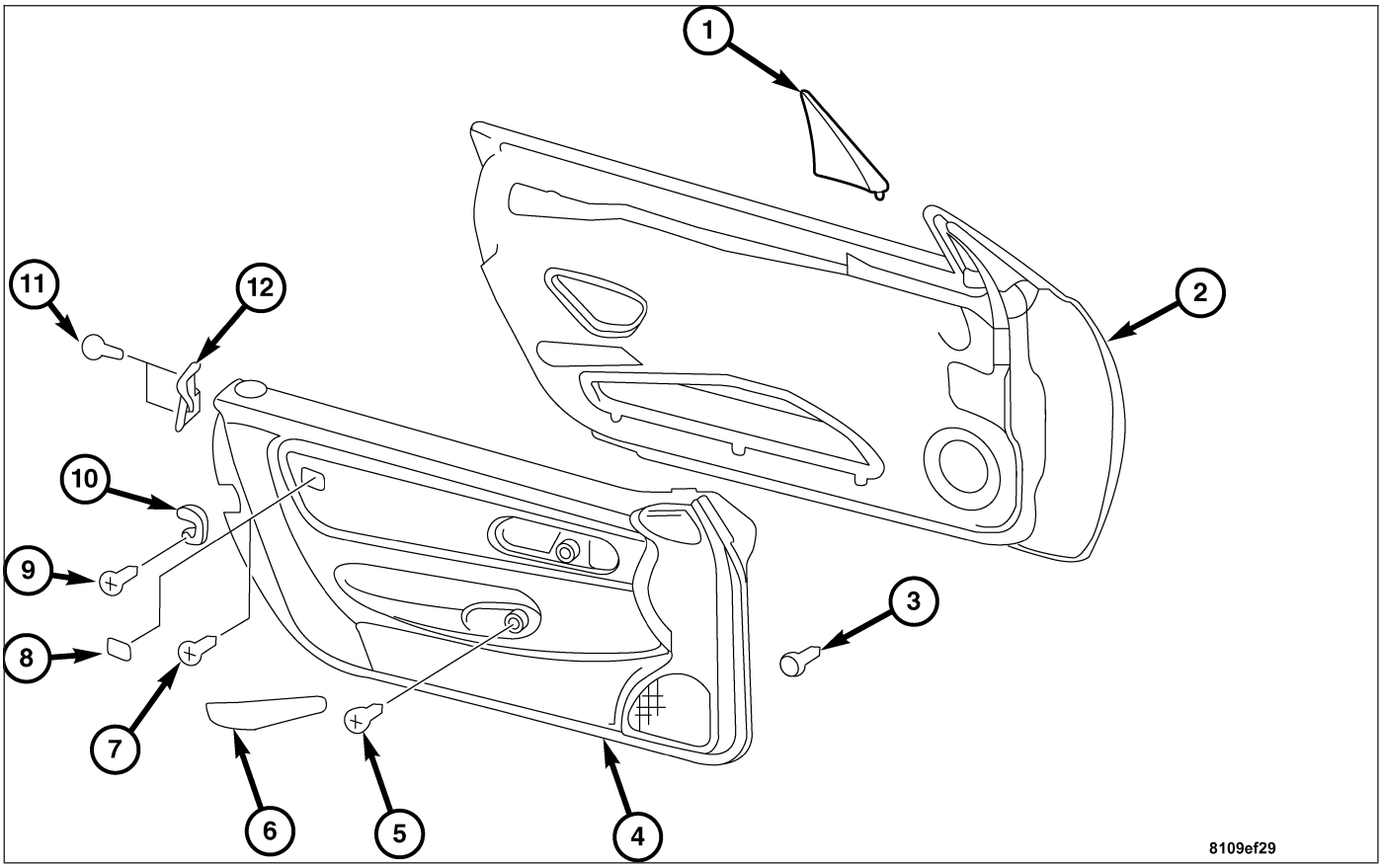

1 - ESCUTCHEON COVER
2 - DOOR
3 - SHEET METAL CLIP NUTS
4 - DOOR TRIM PANEL
5 - SCREW
6 - PULL HANDLE COVER
7 - SCREW
8 - SRS COVER
9 - SCREW
10 - CLIP
11 - SCREWS
12 - CHROME DOOR END COVER

1. Connect the door lock cable to the plastic retainer clip located on the back side of the inside of the trim panel.
2. Connect the front door speaker connector.
3. Install the door trim panel (4) by tilting it outwards and clipping the upper door panel clips. Then swing the door trim panel down and push in the clips on the bottom of the door panel.
4. Install the screw (7) behind the the SRS cover (8) and then install the cover.
5. Install the two screws (11) attaching the chrome door end cover (12) it to the door frame.
6. Install the escutcheon cover (1).
7. Install the screw (5) behind the upper portion of the door handle pull (6).
8. Install the pull handle cover (6).

EXTERIOR

TABLE OF CONTENTS

	page
GRILLE	
REMOVAL	110
INSTALLATION	111
FRONT FENDERS	
REMOVAL	112
INSTALLATION	113
COWL GRILLE	
REMOVAL	114
INSTALLATION	114
EXTERIOR NAME PLATES	
REMOVAL	
DOUBLE SIDED TAPE	114
REMOVAL - ADHESIVES	114
INSTALLATION	
DOUBLE SIDED TAPE	115
INSTALLATION - ADHESIVES	115
FUEL FILL DOOR	
REMOVAL	115
INSTALLATION	115
REAR SPOILER	
DESCRIPTION	116
OPERATION	116
REMOVAL	
SPOILER WING	117
REMOVAL - MOUNTING PLATE	118
REMOVAL - MOTOR	120
INSTALLATION	
SPOILER WING	121
INSTALLATION - MOUNTING PLATE	122
INSTALLATION	125
ROCKER PANEL MOLDING	
REMOVAL	125
INSTALLATION	125

GRILLE

REMOVAL

1. Raise the hood.
2. Remove the four grille retaining screws (1).
3. Pull the grille assembly from the bottom to disengage the bottom retaining clips, and then remove the grille.

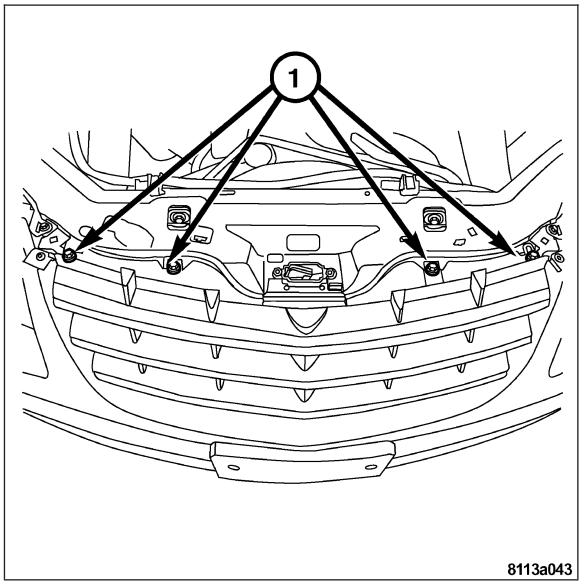

INSTALLATION

1. Align the bottom grille retainer and snap it into place.
2. Install the four upper retaining screws (1).
3. Close the hood.

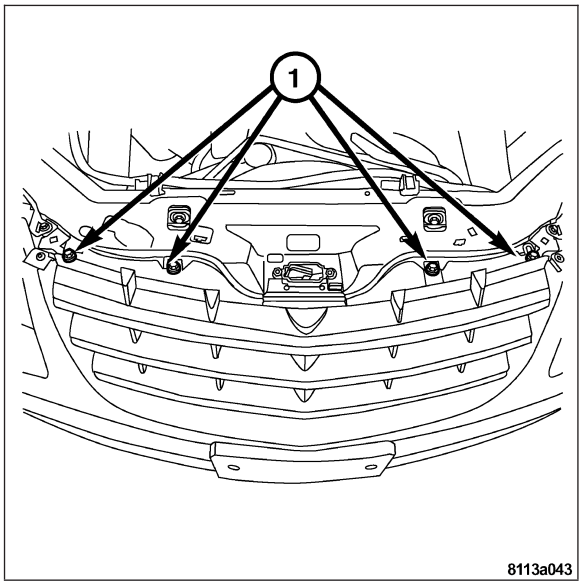

FRONT FENDERS

REMOVAL

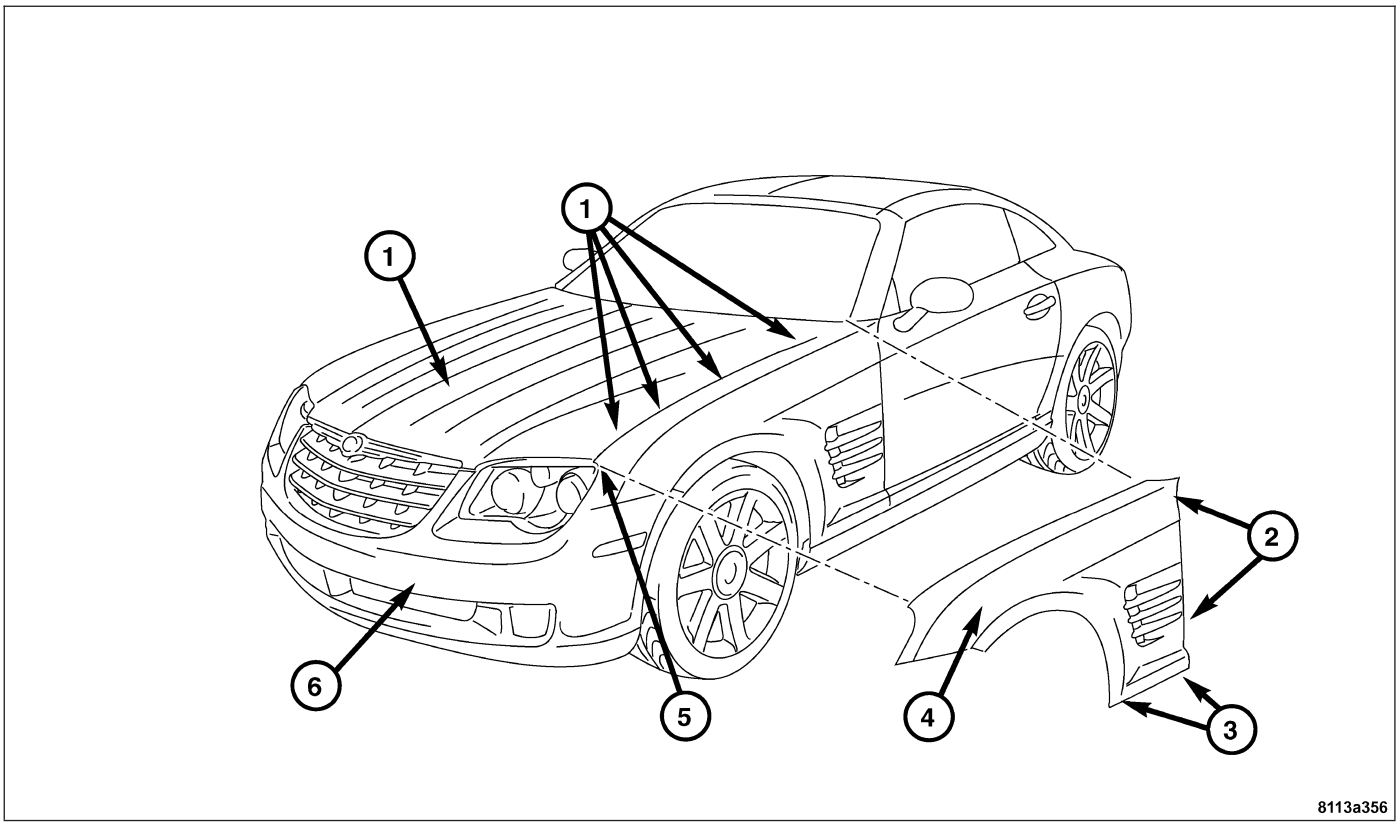

1 - FENDER TO INNER SUPPORT BOLTS
2 - FENDER TO A-PILLAR BOLTS
3 - LOWER FENDER BOLTS
4 - LEFT FRONT FENDER (RIGHT SIDE SIMILAR)
5 - HEADLAMP SCREW
6 - FRONT FASCIA
7 - HOOD

1. Open the hood (7) and raise it to its upright position. **Refer to Page 23-130**.
2. Remove the front fascia (6). **Refer to Page 13-1**.
3. Remove the bolts (2) on the fender attaching it to the A-pillar.
4. Remove the bolts (3) on the lower rear portion of the fender.
5. Remove the screw (5) on the top front of the fender.
6. Remove the four bolts (1) attaching the fender to the inner support.
7. Remove the front fender (4).

INSTALLATION

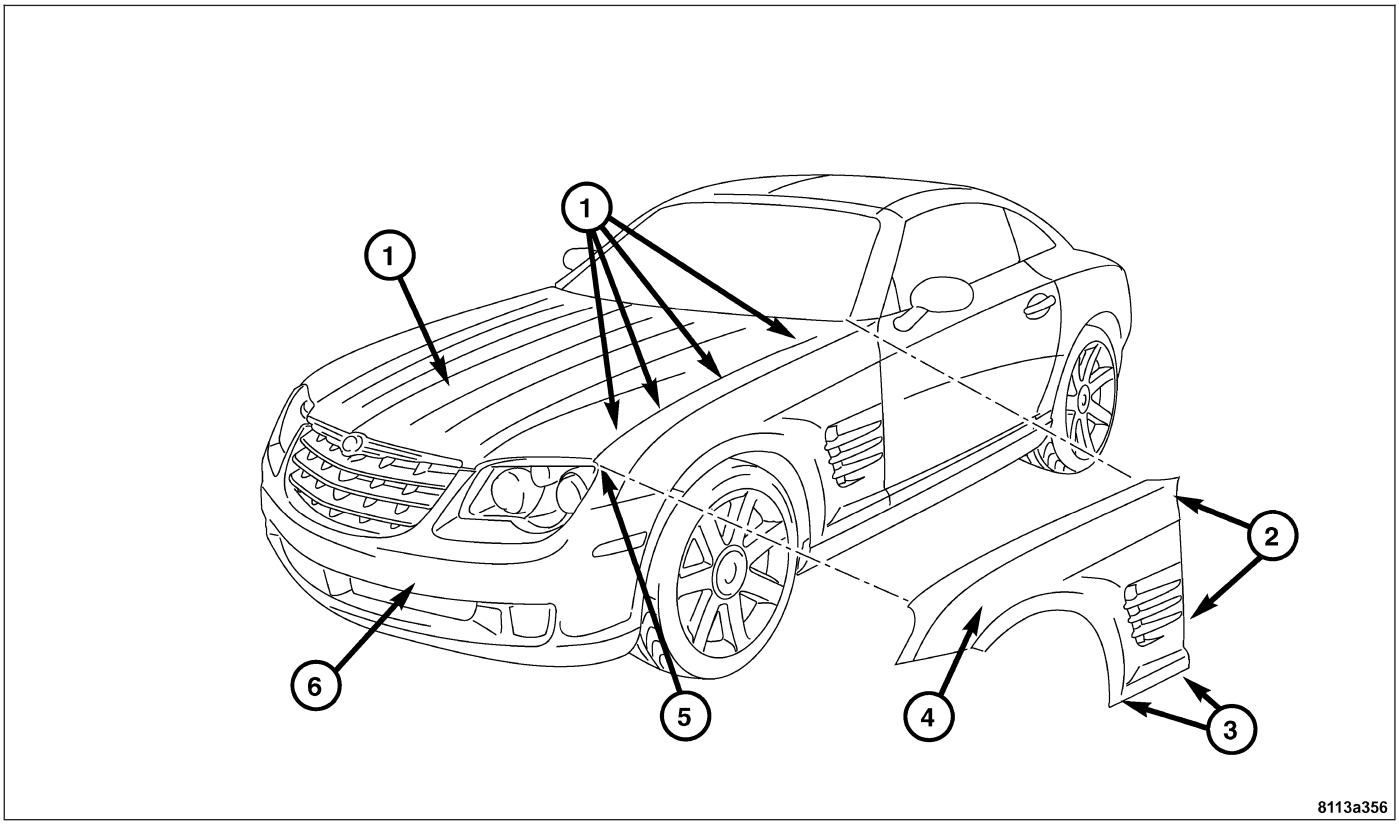

1 - FENDER TO INNER SUPPORT BOLTS
2 - FENDER TO A-PILLAR BOLTS
3 - LOWER FENDER BOLTS
4 - LEFT FRONT FENDER (RIGHT SIDE SIMILAR)
5 - HEADLAMP SCREW
6 - FRONT FASCIA
7 - HOOD

1. Position the front fender (4).
2. Install the four bolts (1) attaching the fender to the inner support.
3. Install the screw (5) on the top front of the fender.
4. Install the bolts (3) on the lower portion of the rear of the fender.
5. Install the bolts (2) on the fender attaching it to the A-pillar.
6. Install the front fascia (6). **Refer to Page 13-4**.
7. Close the hood (7).
8. Align the fender. **Refer to Page 23-53**.

COWL GRILLE

REMOVAL

1. Remove the windshield wiper arm plastic caps, then remove the nuts (1) and the wiper arms.
2. Remove the seven screws (2) from the cowl grille.
3. Pull back on the cowl grille to release the clips (3) and remove the hoses and connections from the underside of the cowl grille, then remove the cowl grille from the vehicle.

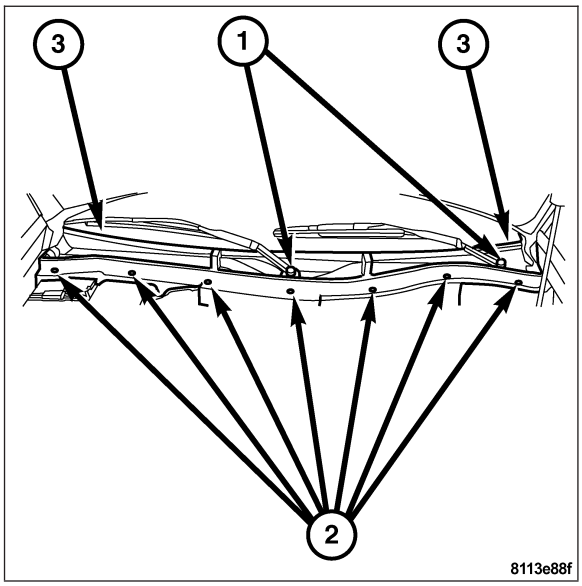

INSTALLATION

1. Install the hoses and connections to the underside of the cowl grille, then install the cowl grille to the vehicle, engaging the clips on the back side of the cowl grille.
2. Install the seven screws to the front of the cowl grille.
3. Install the windshield wiper arms, nuts and plastic caps.

EXTERIOR NAME PLATES

REMOVAL

DOUBLE SIDED TAPE

1. Mark the reference points before removing the name plate.
2. Using a heat gun, gently apply heat in a circular motion to loosen the adhesive bond.
3. Using a nonmetallic prying device, such as a plastic or wood trim stick, gently pry up at the corners and remove.
4. Clean off all traces of adhesive or double sided tape from the panel with a general purpose adhesive remover.

REMOVAL - ADHESIVES

1. Mark the reference points before removing.
2. Using a heat gun, gently apply heat in a circular motion to loosen the adhesive bond.
3. With your fingernail lift up and peel away badging/tape from the panel, using a heat gun as you go.
4. Clean off all traces of adhesive from the panel(s) with a general purpose adhesive remover.

INSTALLATION

DOUBLE SIDED TAPE

1. Clean the panel surface with isopropyl alcohol.
2. Align the badging to it's reference points.
3. Install and press securely to assure full adhesive contact.
4. Clean away any reference points from the panel.

INSTALLATION - ADHESIVES

1. Clean the panel surface with isopropyl alcohol.
2. Remove the paper carrier and align the badging/tape to the reference points or an adjacent panel.
3. Install and press securely, using a plastic spreader to eliminate all air bubbles.
4. Remove the top protective carrier.
5. Clean away any reference points.

FUEL FILL DOOR

REMOVAL

1. Open the fuel filler door (1).
2. Remove the two bolts (2).
3. Remove the fuel filler door.

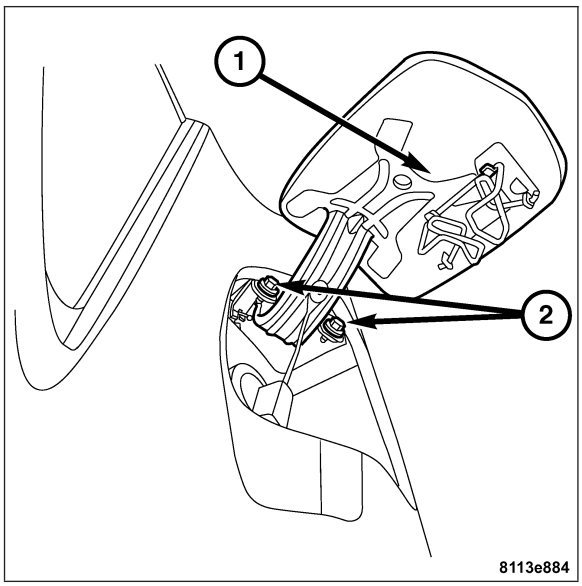

INSTALLATION

1. Install the fuel filler door (1) to the vehicle.
2. Install the two bolts (2).
3. Verify correct alignment of the fuel filler door and the body. **Refer to Page 23-53**.

REAR SPOILER

DESCRIPTION

A deployable rear spoiler enhances the vehicle's stability. Powered by an electric motor, it deploys automatically when the vehicle speed reaches 50 mph (80 km/h) to provide 40 Lbs. (356 Newtons) of aerodynamic downforce to the rear of the vehicle at 80 mph (129 km/h).

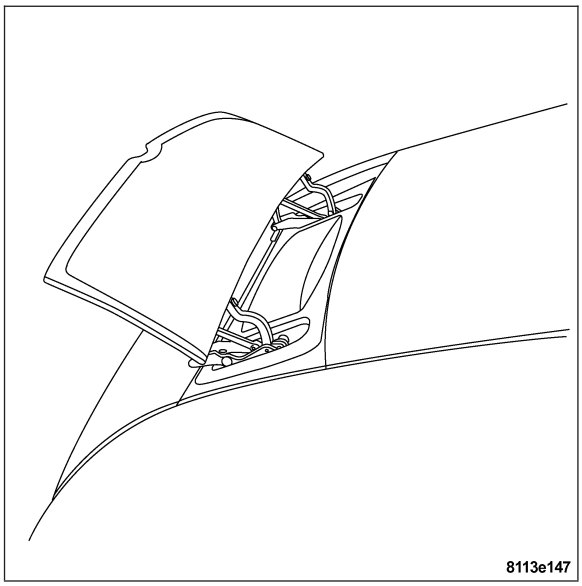

OPERATION

The rear spoiler is powered by an electric motor located directly below the spoiler wing in the spoiler assembly. When the vehicle reaches 50 mph (80 km/h), the rear spoiler deploys, giving the vehicle 40 Lbs. (356 Newtons) of downforce at 80 mph (129 km/h). As the vehicle decelerates, the rear spoiler starts to retract at a speed of 25 mph (40 km/h). When retracted, the spoiler nestles between the rear quarter panels and the rear liftgate window.

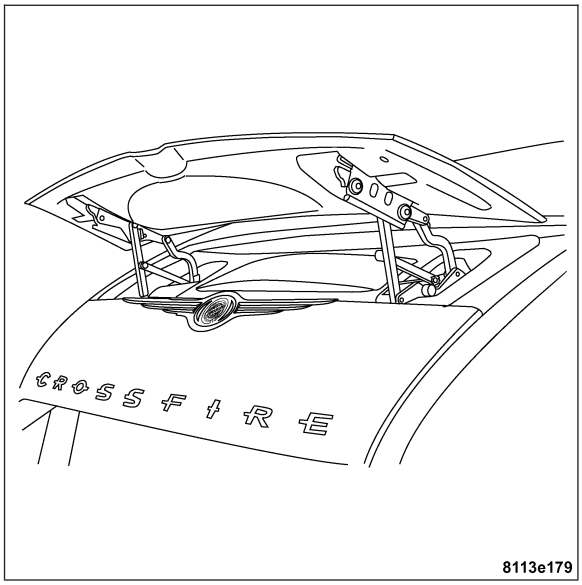

The spoiler can be manually deployed at lower speed using the override switch mounted in the center console. Pushing the switch up raises the rear spoiler. Pushing the switch down lowers the rear spoiler.

To prevent injury, the rear spoiler retracts in defined steps to allow time to pull any hands or foreign objects that may be in the path of the rear spoiler before it is all the way down. If the rear spoiler gets disturbed while retracting automatically or while retracting manually, the rear spoiler is automatically driven up again and will lock in the up position. During manual retraction, if you let up on the switch, the rear spoiler will be driven to its up position. When retracting the rear spoiler manually, a single audible chime is produced to indicate to the driver that the rear spoiler is in the fully retracted position. A warning signal (LED) on the spoiler override switch illuminates, indicating a malfunction to the driver. A malfunction that prevents the spoiler from deploying illuminates a red warning lamp in the override switch.

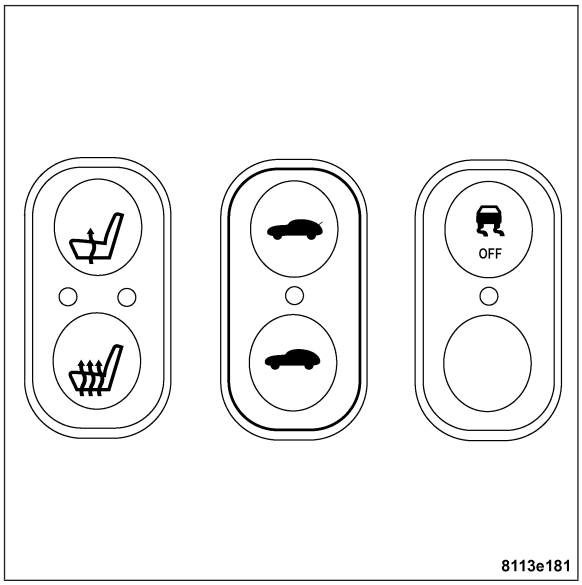

REMOVAL

SPOILER WING

1. If the rear spoiler is not already in the up position, raise the rear spoiler by pushing the top of the manual override switch (1).

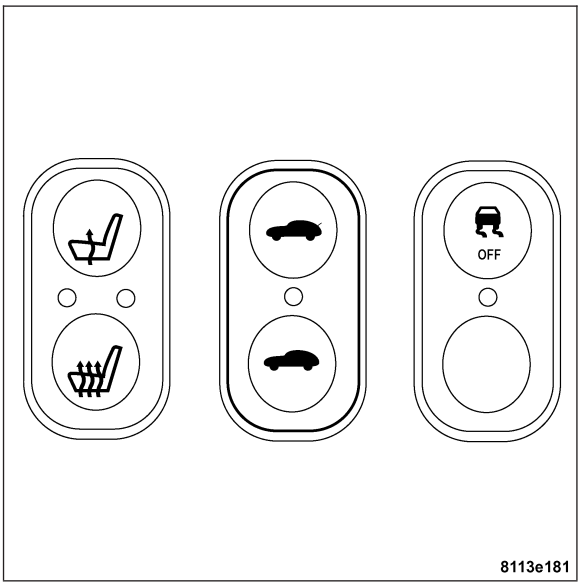

2. Remove the four screws (1) then remove the rear spoiler wing (2) from the rear spoiler linkage.

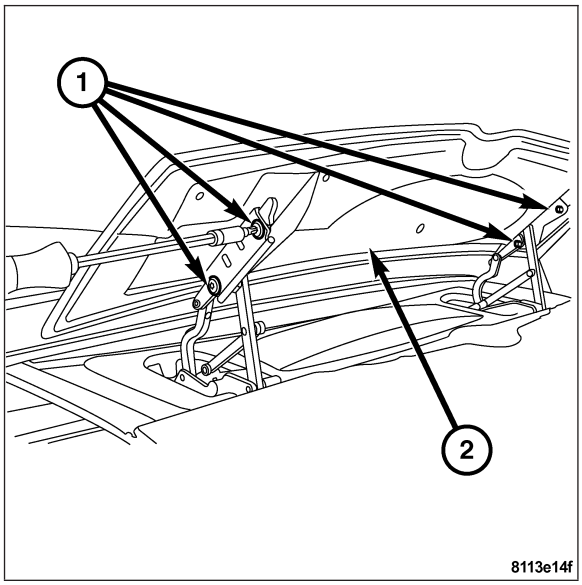

REMOVAL - MOUNTING PLATE

1. Remove the spoiler wing (2) from the linkage. **Refer to Page 23-117**.

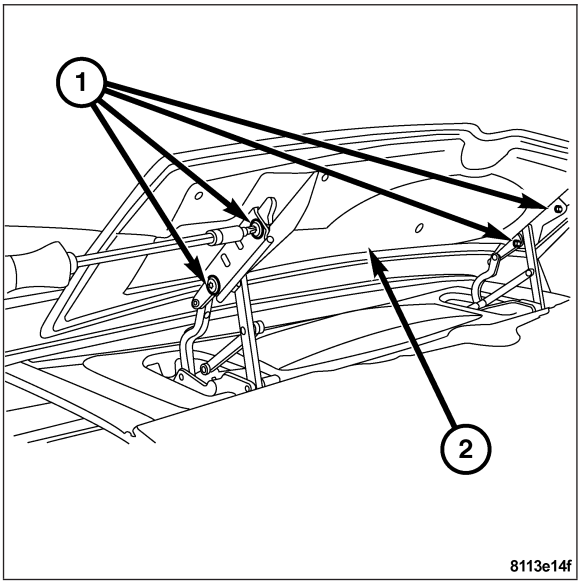

2. Open the rear hatch.
3. Remove the lower trim panel (1). **Refer to Page 23-48**.

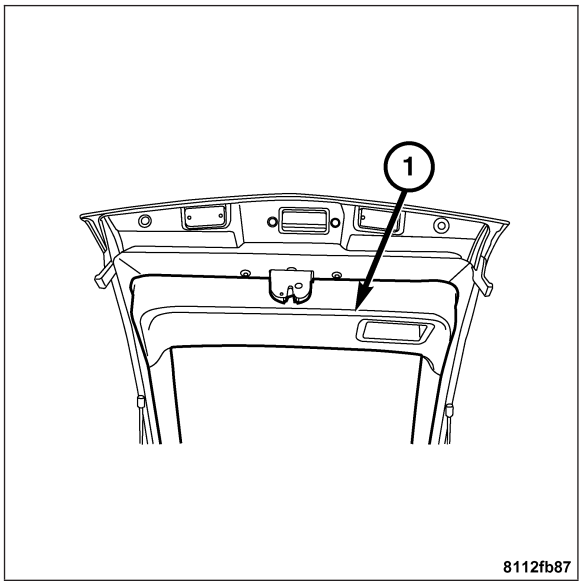

4. Disconnect the spoiler electrical connections (1).

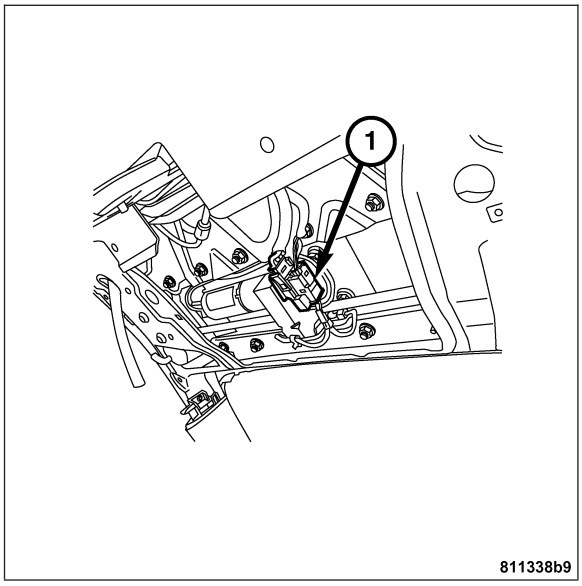

5. Remove the two drain tubes from the mounting plate.
6. Remove the sixteen mounting plate nuts (1) from the rear hatch.
7. Lower the hatch down and pull the mounting plate out of the rear hatch.

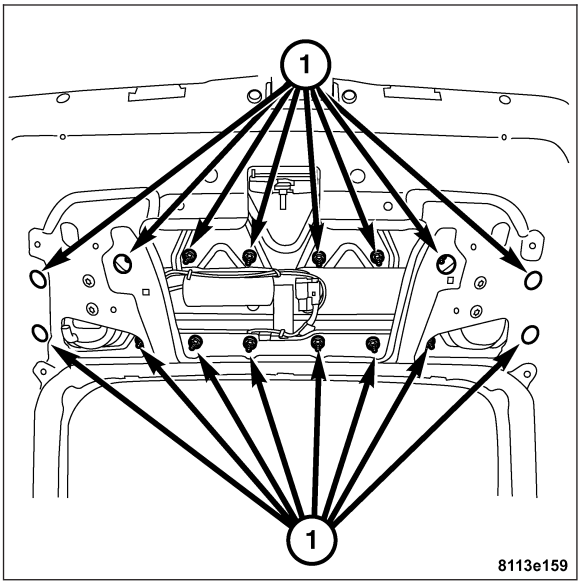

8. Remove the mounting bracket from the mounting plate by removing the two bolts (1).

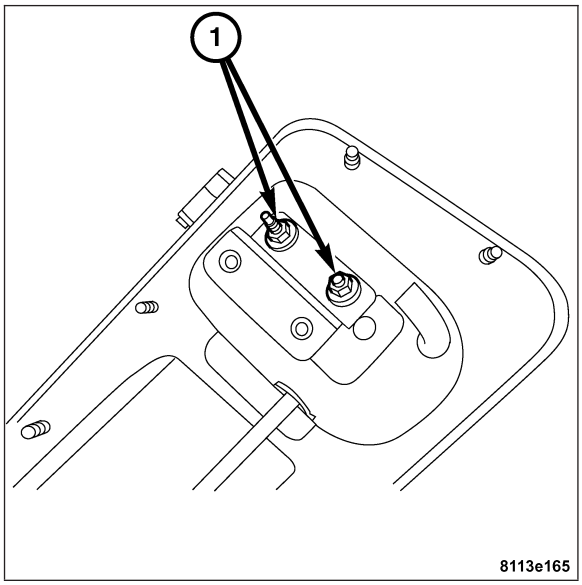

REMOVAL - MOTOR

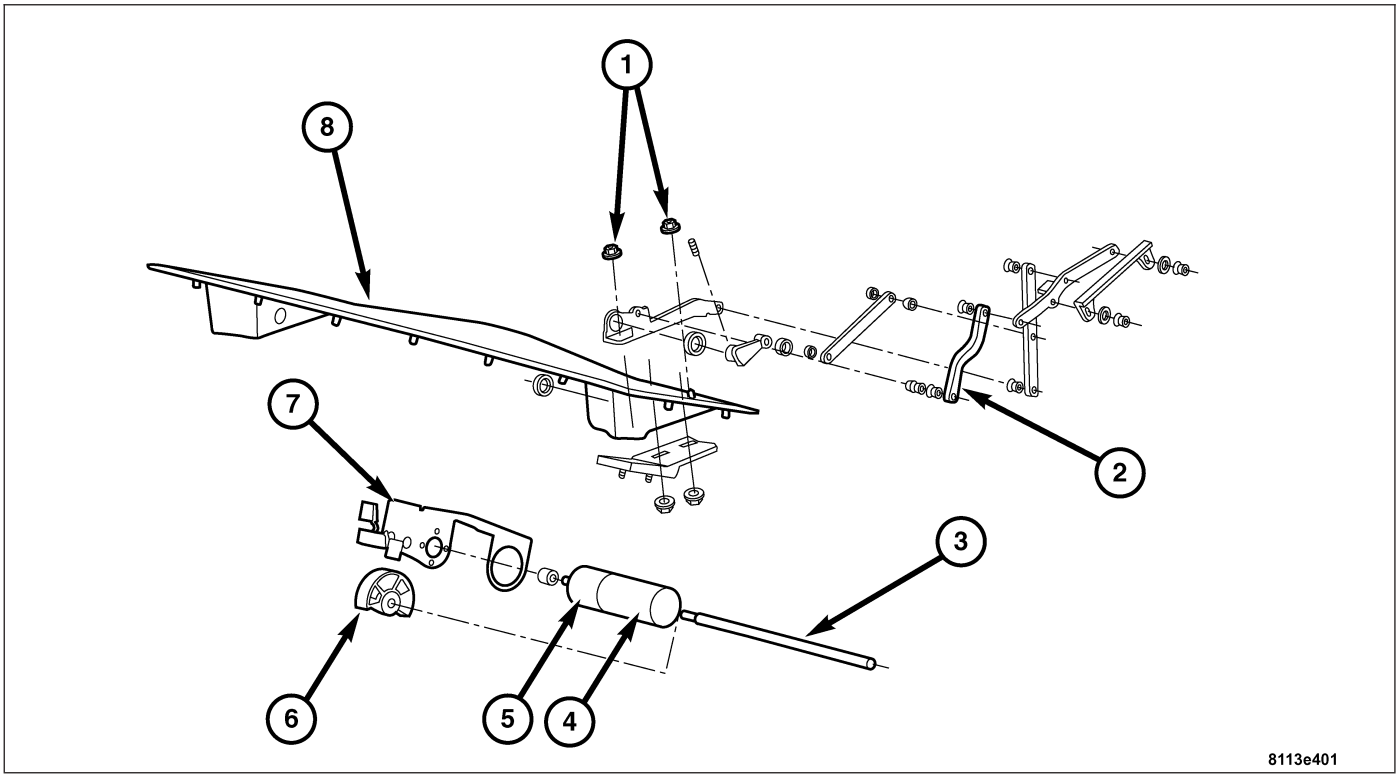

1 - LINKAGE BOLTS
2 - LINKAGE
3 - TORQUE SHAFT
4 - MOTOR
5 - GEAR DRIVE
6 - FINAL REDUCTION GEAR
7 - MOTOR BRACKET
8 - SPOILER WING

CAUTION: The spoiler must be in its up position to remove the motor. If the spoiler cannot be put in its up position the entire spoiler assembly must be replaced.

1. Remove the spoiler wing (8). **Refer to Page 23-117**.
2. Remove the lower hatch trim panel. **Refer to Page 23-48**.

3. Remove the mounting plate. **Refer to Page 23-117**.
4. Disconnect the electrical connectors.
5. Remove the three screws (1) attaching the motor to the bracket.

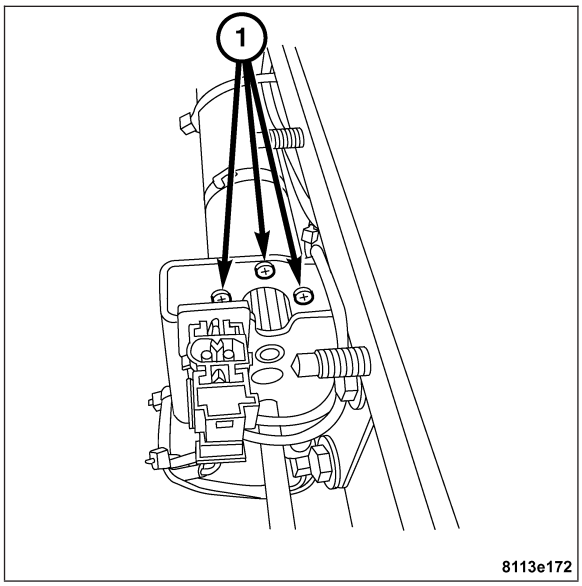

INSTALLATION

SPOILER WING

1. Install the rear spoiler wing (2) onto the spoiler linkage. Tighten to 8 N·m (71 in. lbs.).
2. Install the four screws (1) attaching the rear spoiler wing the linkage.

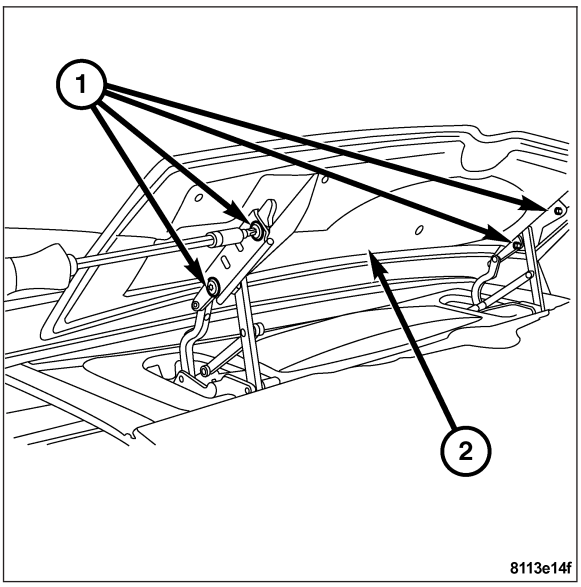

3. Move the spoiler to its down position verifying the spoiler wings alignment to the vehicle's body.

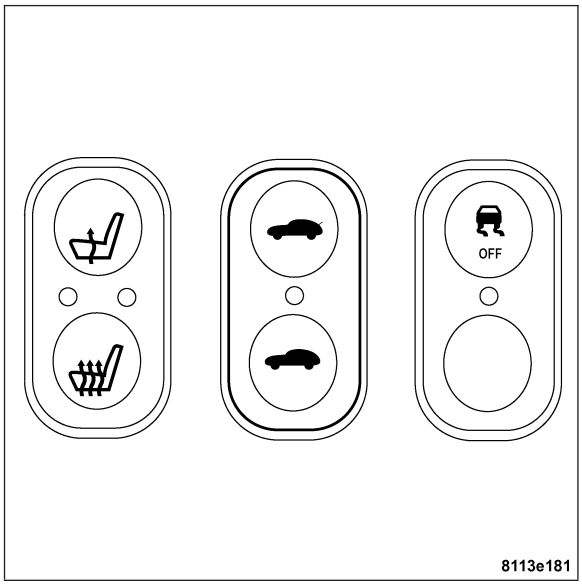

INSTALLATION - MOUNTING PLATE

1. Install the mounting bracket to the mounting plate. Tighten to 8 N·m (71 in. lbs.).

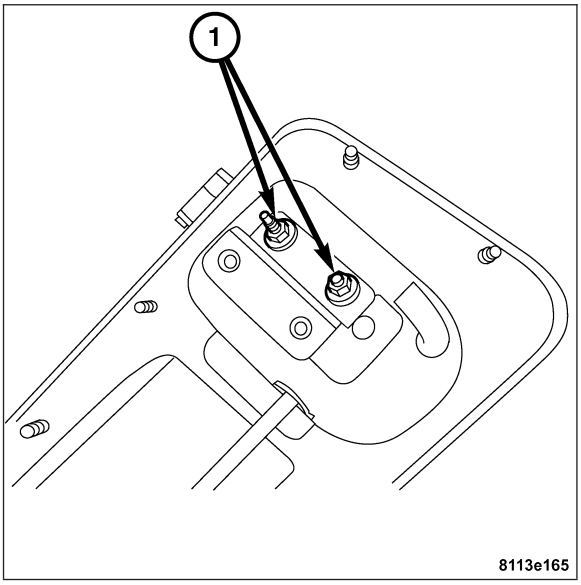

2. Install the mounting plate to the rear hatch.
3. Install the sixteen mounting nuts (1) attaching the mounting plate to the rear hatch. Tighten to 8 N·m (71 in. lbs.).
4. Install the two drain tubes.

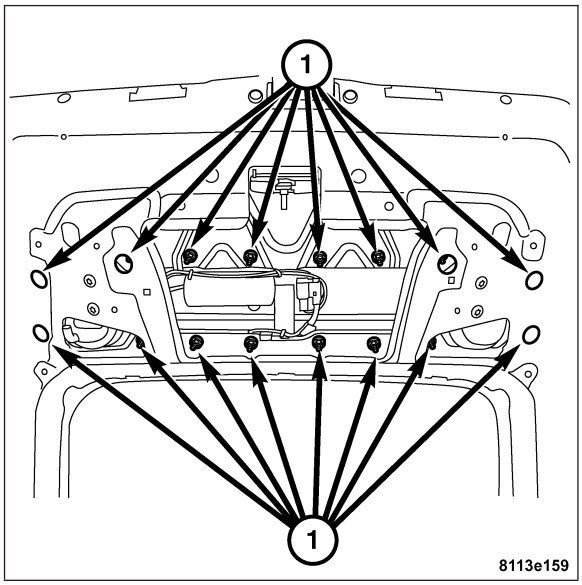

5. Connect the spoiler electrical connections (1).

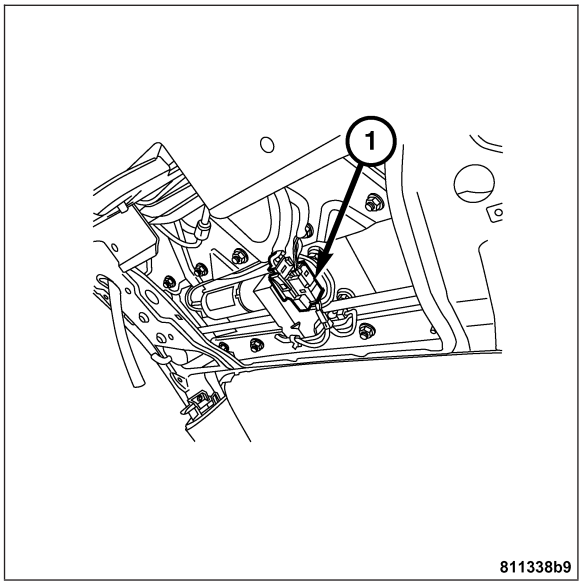

6. Install the lower trim panel (1). **Refer to Page 23-49**.

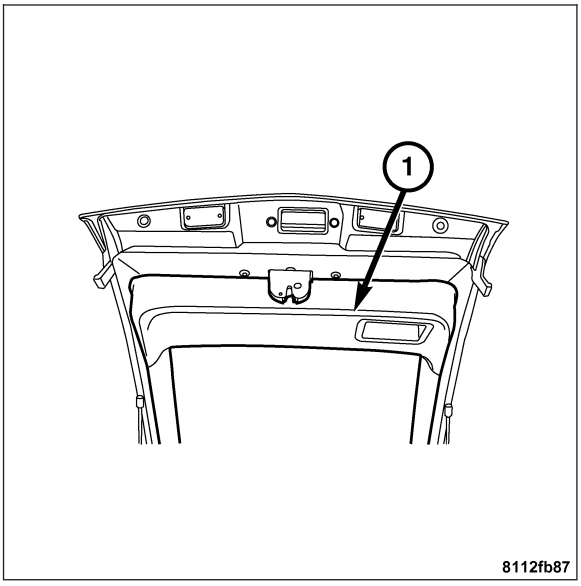

7. Install the spoiler wing (2) to the linkage (1). **Refer to Page 23-121**.

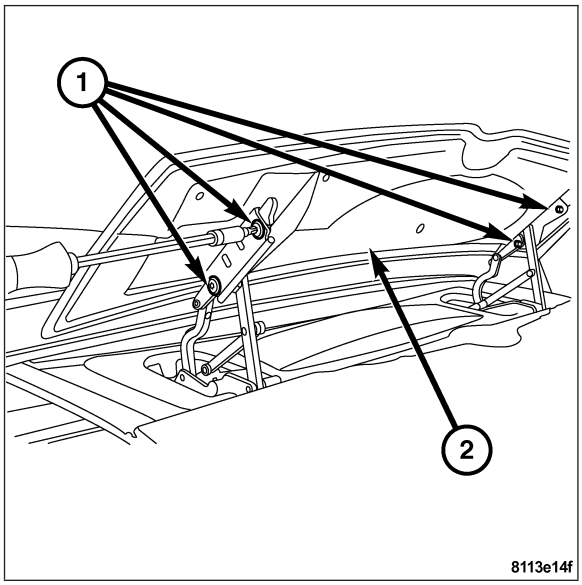

8. Verify the rear spoiler operation by using the manual override switch to operate the spoiler making sure there is smooth operation and proper alignment.

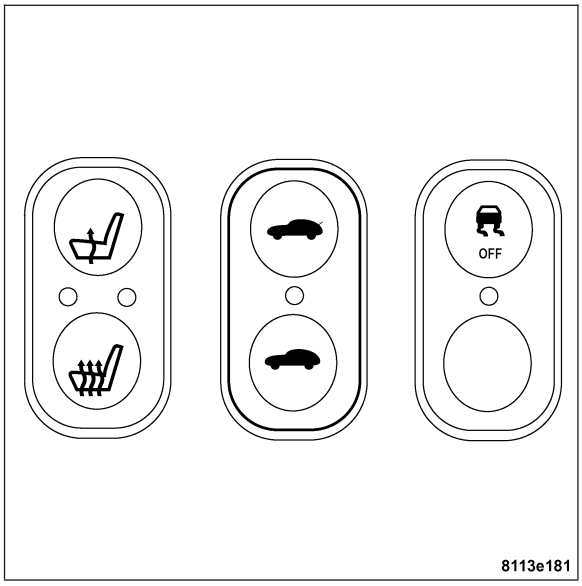

INSTALLATION

1. Install the three screws (1) attaching the motor to the bracket.
2. Connect the electrical connectors.
3. Install the mounting plate. **Refer to Page 23-121**.
4. Install the spoiler wing. **Refer to Page 23-121**.

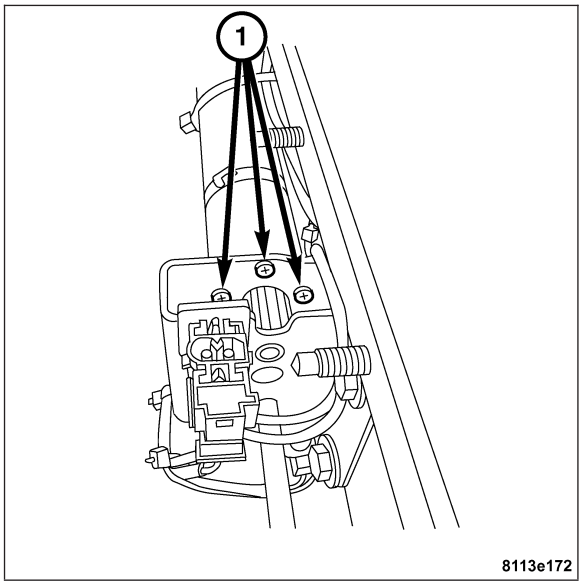

ROCKER PANEL MOLDING

REMOVAL

1. Raise and support the vehicle.
2. Remove the front wheel liner.
3. Lower the vehicle.
4. Remove the screws attaching the rocker panel (2) to the vehicle
5. Remove the screws attaching the lift pads (1) to the vehicle
6. Remove the rocker panel (2).

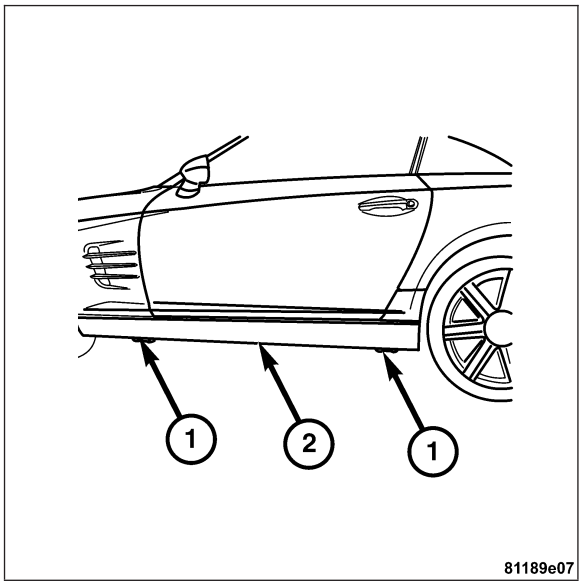

INSTALLATION

1. Install the rocker panel.
2. Install the screws attaching the lift pads to the vehicle.
3. Install the screws attaching the rocker panel to the vehicle.
4. Raise and support the vehicle.
5. Install the front wheel liner.
6. Lower the vehicle.

HOOD

TABLE OF CONTENTS

page

GAS PROP
REMOVAL 126
INSTALLATION 127
HINGE
REMOVAL 128
INSTALLATION 129
HOOD
STANDARD PROCEDURE - MOVING THE HOOD TO ITS FULLY UPRIGHT POSITION . 130
REMOVAL 131
INSTALLATION 133
ADJUSTMENTS
ADJUSTMENT - HOOD 134

page

INSULATION
REMOVAL 135
INSTALLATION 136
LATCH
REMOVAL 136
INSTALLATION 137
LATCH RELEASE CABLE
REMOVAL 138
INSTALLATION 139
LATCH STRIKER
REMOVAL 140
INSTALLATION 140

GAS PROP

REMOVAL

1. Open the hood.
2. Support the hood with a suitable prop device.
3. Remove the gas prop lock (1) on the upper end (2).

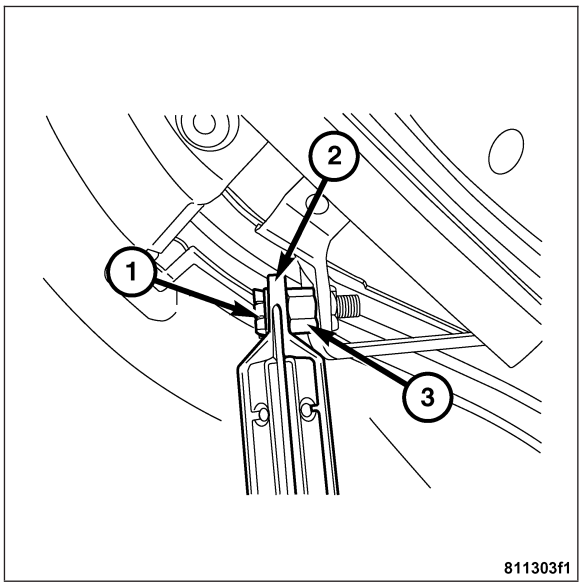

4. Remove the gas prop lock (1) on the lower end (2).
5. Remove gas prop from vehicle.

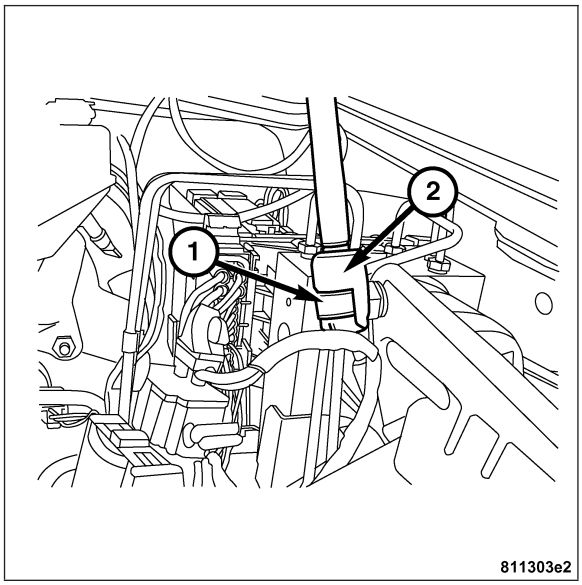

INSTALLATION

1. Place gas prop (2) in position on the vehicle.
2. Install the lower lock cap (1) on the gas prop (2).

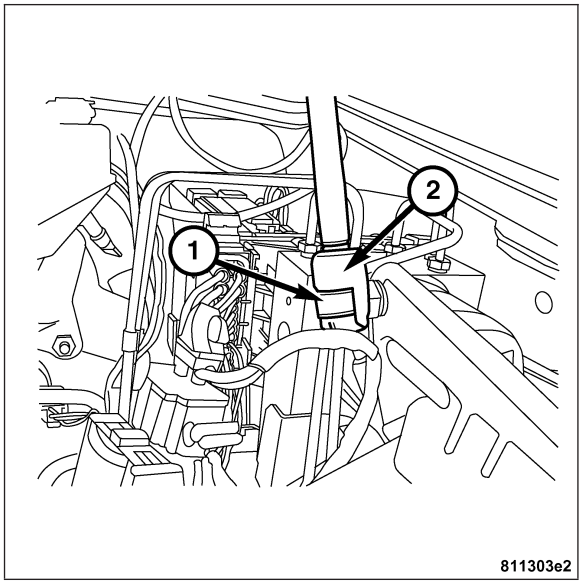

3. Install the upper lock caps (1) on the gas prop (2).
4. Verify hood lid operation.

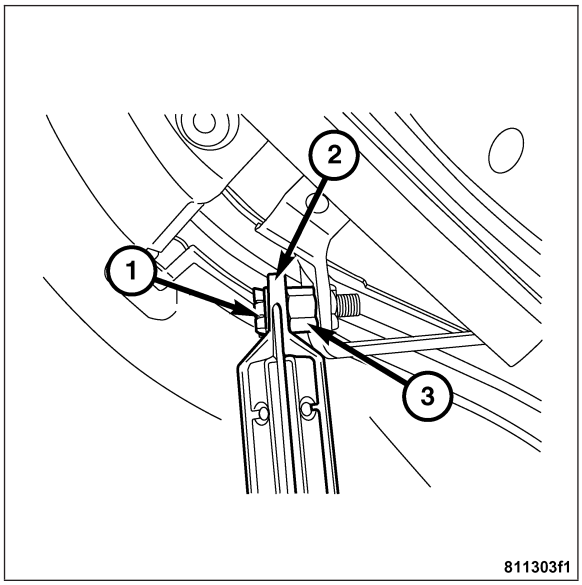

HINGE

REMOVAL

1. Remove the hood from the hinge by removing the upper bolts (1) then the lower bolts (2). **Refer to Page 23-131**.

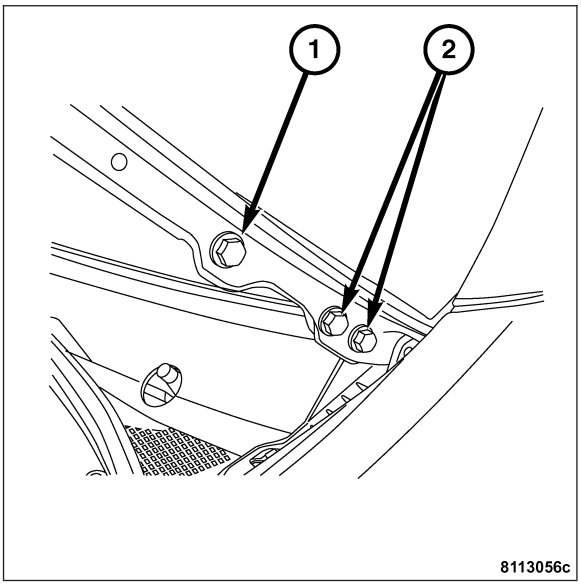

2. Remove the inner front fender (1).
3. Mark the position of the hood hinge on the inner panel.
4. Remove the bolts (2) and then remove the hood hinge.

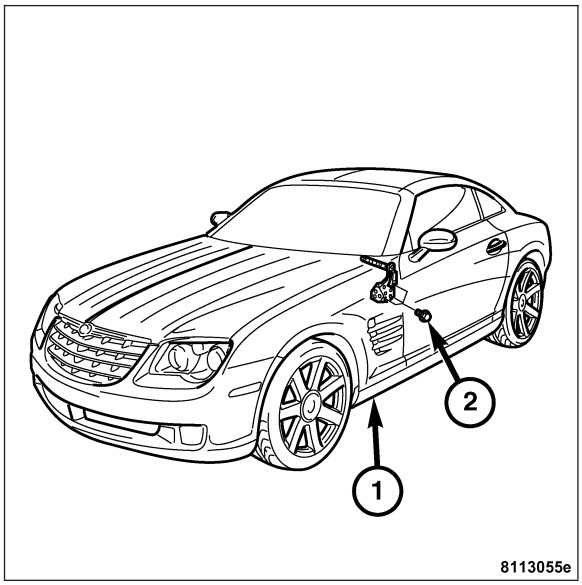

INSTALLATION

1. Install the hood hinge, then install the bolts (2). Tighten to 8 N·m (70 in. lbs.).
2. Install the inner front fender (1).

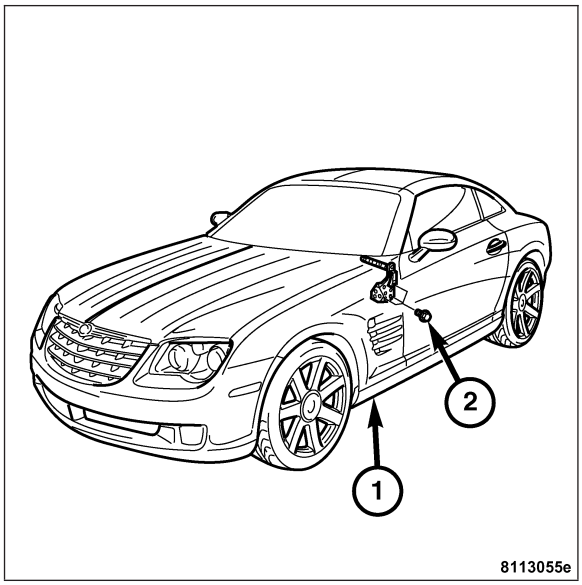

3. Install the hood by installing the lower bolts (2), then installing the upper bolts (1). Tighten to 10 N·m (88 in. lbs.). **Refer to Page 23-133**.

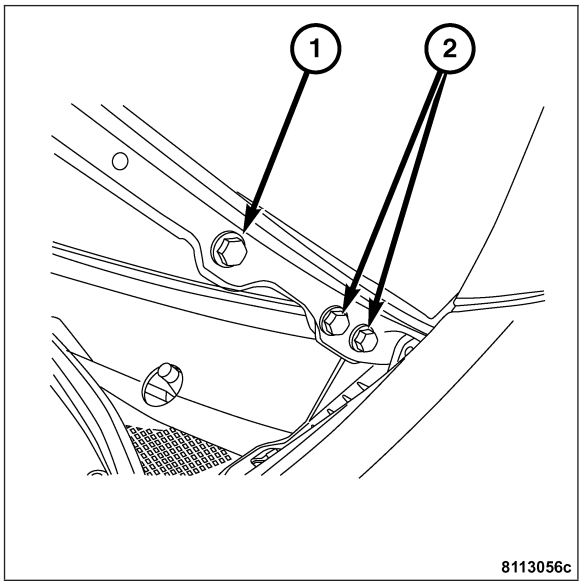

HOOD

STANDARD PROCEDURE - MOVING THE HOOD TO ITS FULLY UPRIGHT POSITION

OPENING

CAUTION: The locking button symbol “PRESS” must be completely visible in the opening of the gas prop rod cover tube.

1. Press the gas prop rod locking button in the opening of the gas prop rod cover tube and then move the hood to its fully upright position until locking button catches on the detent.

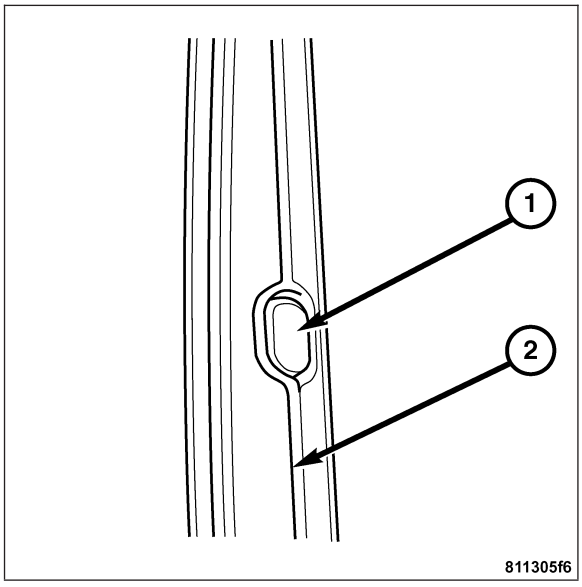

CLOSING

CAUTION: The locking button symbol “PRESS” must be completely visible in the opening of the gas prop rod cover tube.

1. Press the gas prop rod locking button in the opening of the gas prop rod cover tube and then slowly allow the hood to come down against the pressure of the gas pressure strut.

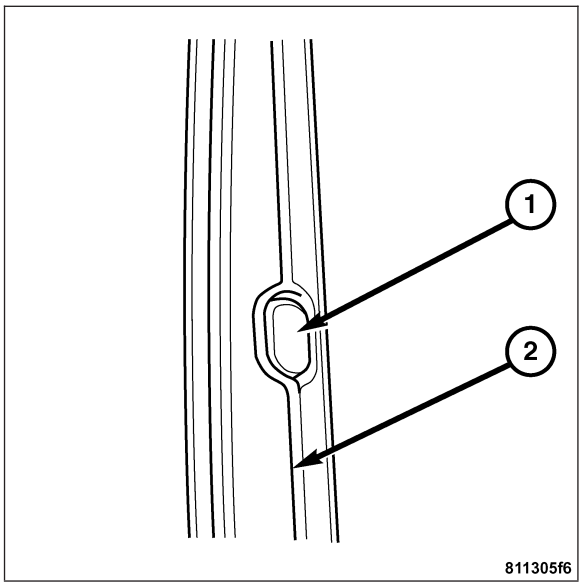

REMOVAL

1. Open the hood by pulling the handle (1) and move it to the full upright position.

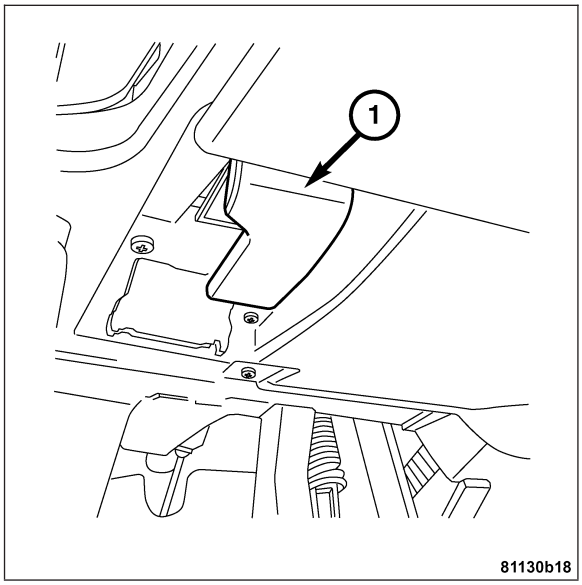

Note: The hood is held in place by the safety hooks on the hood hinges.

2. Remove the two lower bolts (2) from the left and right hood hinges.

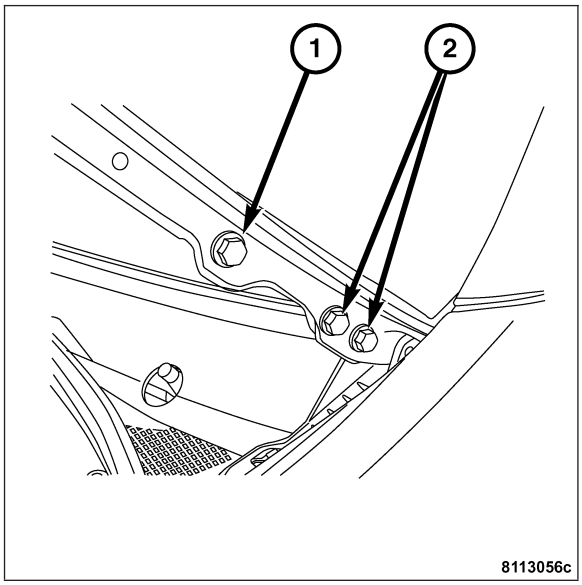

3. Remove the gas prop rod retainer (1) and remove the gas prop rod (2) from the hood at the top retaining hook (3).

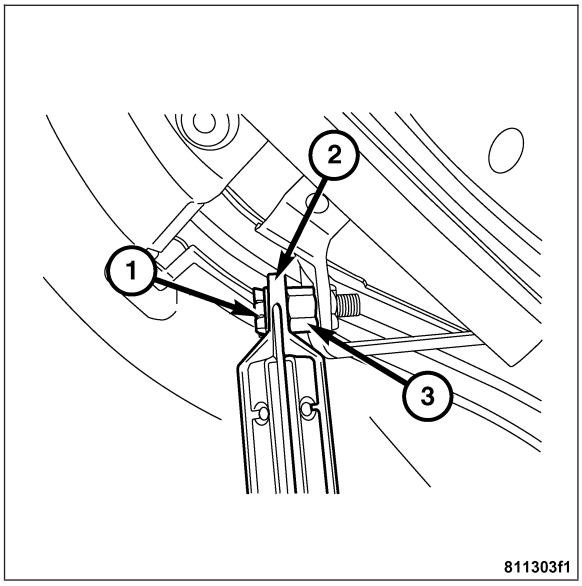

4. Remove the upper bolt (1) from the left and right hood hinges.
5. Remove the hood with the help of a second person. Set the hood down on a suitable flat surface.

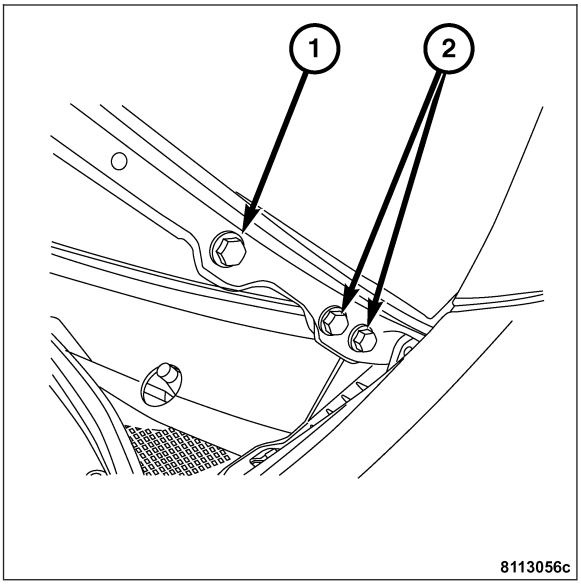

INSTALLATION

1. Position the hood on the safety hooks on the hood hinges.
2. Install the lower bolts (2) on the hood.
3. Install the upper bolts (1) on the hood.
4. Move the bolts (1,2) to coincide with the impressions in the paint. Have a second person tighten the bolts (1,2) to the hood. Tighten to 10 N·m (88 in. lbs.).

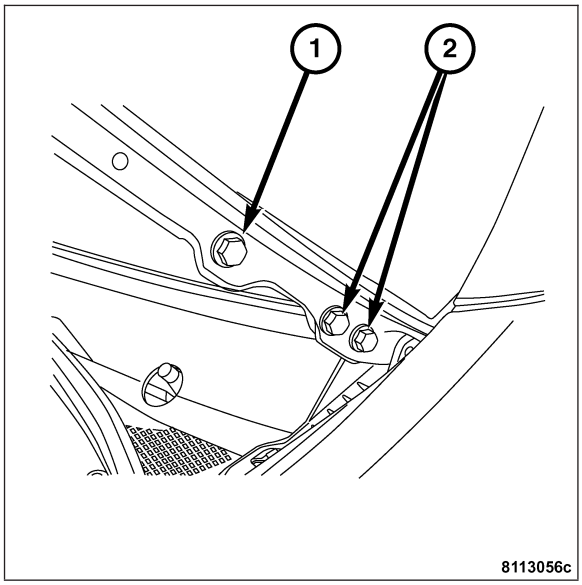

5. Install the gas prop rod (2) to the hood at the top then install the gas prop rod retainer (1).
6. Shut the hood and make sure that the hood shuts properly and securely and that there is a uniform gap around the hood to the front fenders and grille. If not the hood may need to be adjusted. **Refer to Page 23-134**

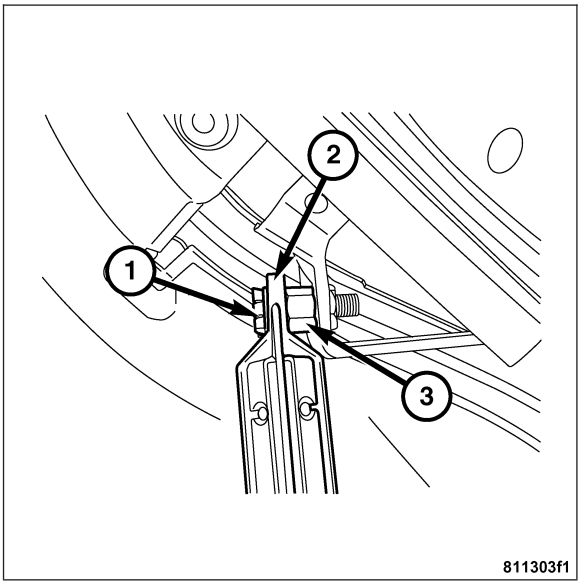

ADJUSTMENTS

ADJUSTMENT - HOOD

ADJUSTING IN LONGITUDINAL AND VERTICAL DIRECTIONS

Note: For minor adjustment in longitudinal and vertical directions; for larger adjustment path see steps 4 - 10.

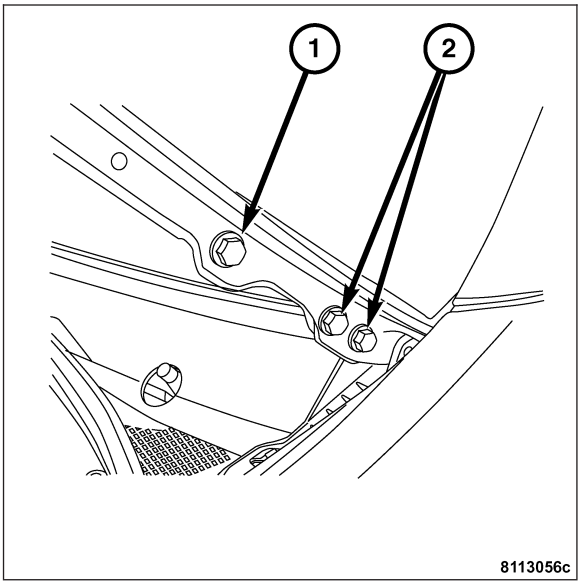

1. Open the hood.
2. Loosen the bolts (1,2) on the hood hinges and adjust the hood.
3. Tighten the bolts. Tighten to 10 N·m (88 in. lbs.).
4. Move the hood to its fully upright position. **Refer to Page 23-130**
5. Remove the gas prop rod from the hood at the top and lay it down in the engine compartment.
6. Close the hood.
7. Remove the inner fender from the front fender.
8. Loosen the bolts on the hood hinges in the front fender.

Note: For larger adjustment path loosen the top section of the hood latch, adjust and retighten.

9. Adjust the hood so that the front edge of the front fender coincides with the hood and the top edges are flush.
10. Tighten the bolts on the engine hood hinges. Tighten to 10 N·m (88 in. lbs.).

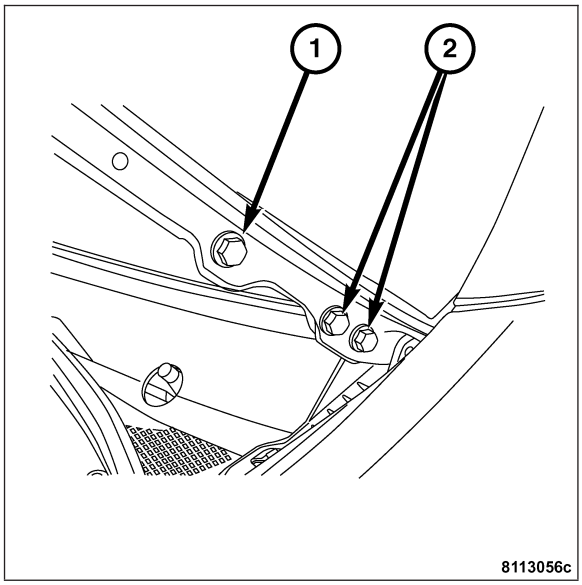

Note: If necessary install a spacer below the top section of engine hood latch. Raise/lower the upper frame cross member.

11. Adjust the height of the stop bumper so that the top edges of the front fenders are flush with the hood.
12. Install the gas prop rod.

ADJUSTING IN LATERAL DIRECTION

1. Loosen the bolts (1) on the top section of hood latch (2).
2. Adjust the gaps on the left and right of the hood.
3. Center the top section of hood latch (2) in the lateral and longitudinal directions in relation to the bottom section of the hood latch and then tighten the bolts (2). Tighten to 8 N·m (70 in. lbs.).
4. Install the inner fender in the front fender.

Note: For this purpose close the hood, release and ensure that hook is caught in upper frame cross member.

5. Check the function of the safety hook.
6. Close the hood.
7. Check the locking function of the hood latch and the safety hook.

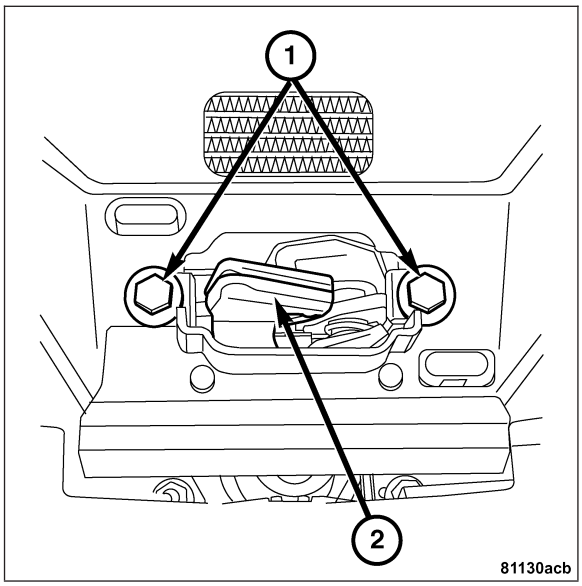

GAP DIMENSIONS

Hood and front fender	4.0 mm (±0.5 mm)
Hood and front headlamps	6.0 mm (+1/-0.5 mm)
Hood and radiator grille	7.0 mm (+1/-0.5 mm)
Radiator grille and front headlamp	5.0 mm (+1/-0.5 mm)

INSULATION

REMOVAL

1. Open the hood.
2. Remove the twelve plastic anchors (1).
3. Remove the insulation.

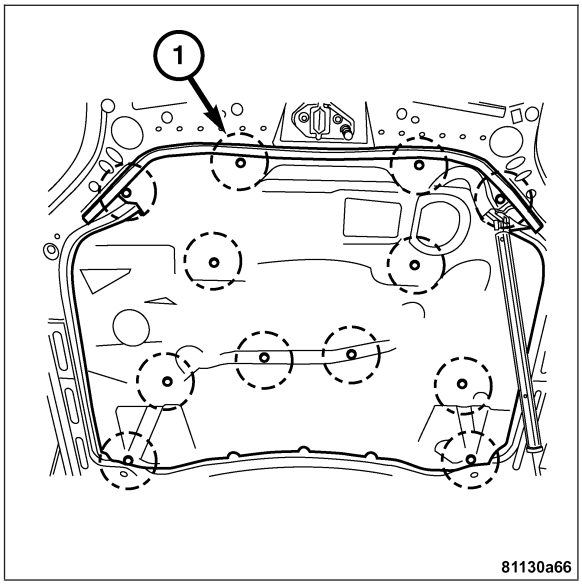

INSTALLATION

1. Install the insulation to the hood.
2. Install the twelve plastic anchors (1) to the hood.
3. Close the hood.

LATCH

REMOVAL

1. Open the hood
2. Remove the bolts (1) and then remove hood latch (2) lower section.

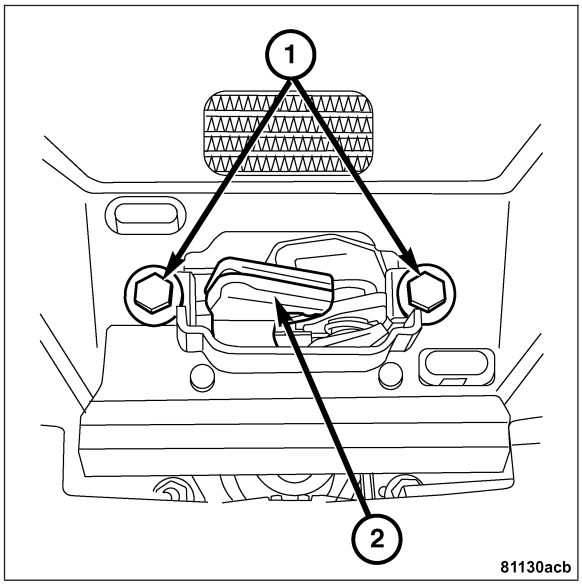

3. Remove the hood pull cable (2) from the hood striker (3).

Note: Mark installation position of the hood catch upper section on the hood.

4. Remove the hood latch (3).

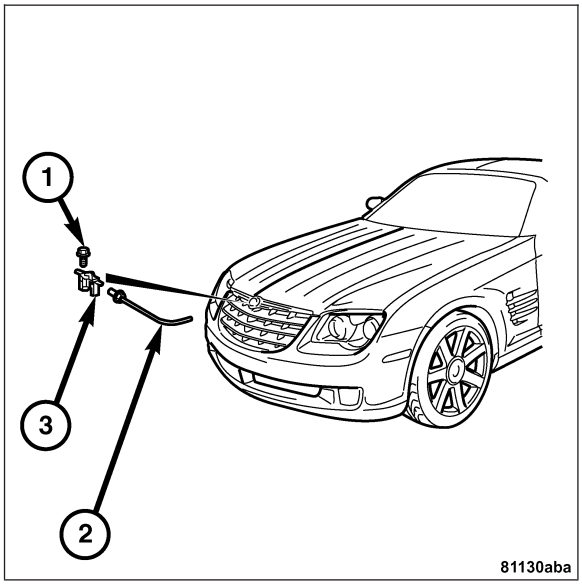

INSTALLATION

1. Grease the hood latch (3).
2. Connect the hood latch (3) to the hood latch release cable (2).
3. Note the correct routing of hood latch release cable (2).
4. Install the hood latch release cable (2) to the hood latch (3).

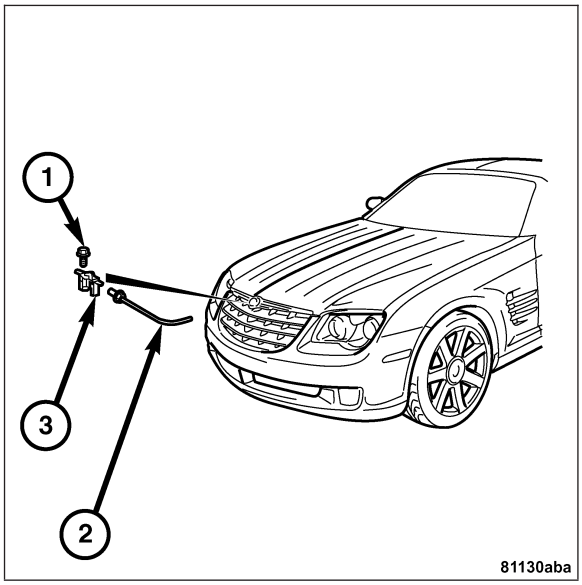

5. Position the bolts (1) and install the hood latch (2). Tighten to 8 N·m (71 in. lbs.).
6. Close the hood and test for proper alignment and fit.

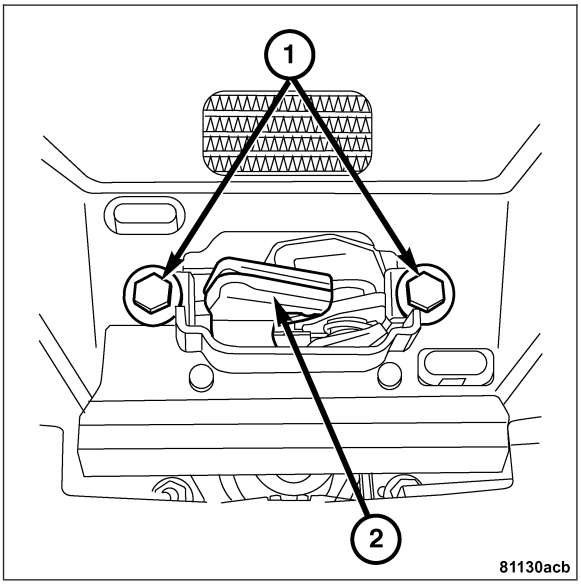

LATCH RELEASE CABLE

REMOVAL

1. Open the hood and move it to the upright position.
2. Remove the screw on the pull handle (1).
3. Pull the handle (1) out of the arresting mechanism in the cover and then remove the hood pull cable from the handle (1).

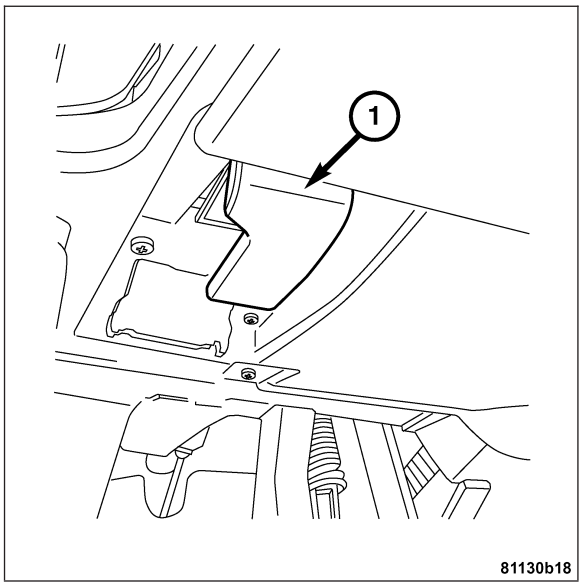

4. Remove the cable grommet from the bulkhead just below the fuse box.
5. Remove the upper frame cross member.
6. Remove the clip on the frame cross member.
7. Remove the cover.
8. Remove the hood latch (6).
9. Remove the hood latch release cable (1) from between the headlamp and the upper frame cross member.

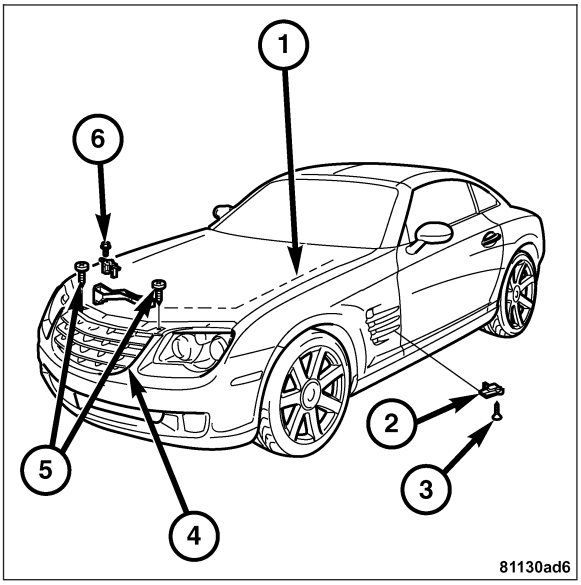

INSTALLATION

Note: Pay particular attention to the routing of the hood latch release cable.

1. Install the hood latch release cable (1) between the headlamp and the upper frame cross member.
2. Install the hood latch (6).
3. Install the cover.
4. Install the clip on the frame cross member
5. Install the upper frame cross member.
6. Install the wire to the grommet (3) on the hood latch release cable (2).

Note: Ensure that hood latch release cable grommet is properly seated in the bulkhead.

7. Push the cable grommet into the bulkhead below the fuse box.
8. Install the handle (1) to the arresting mechanism in the cover and hook the hood latch release cable to the handle.
9. Install the screw on handle (1).
10. Close the hood and check for proper operation.

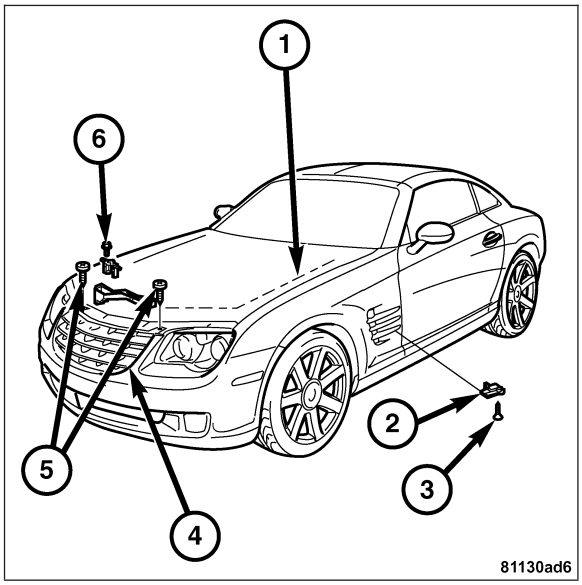

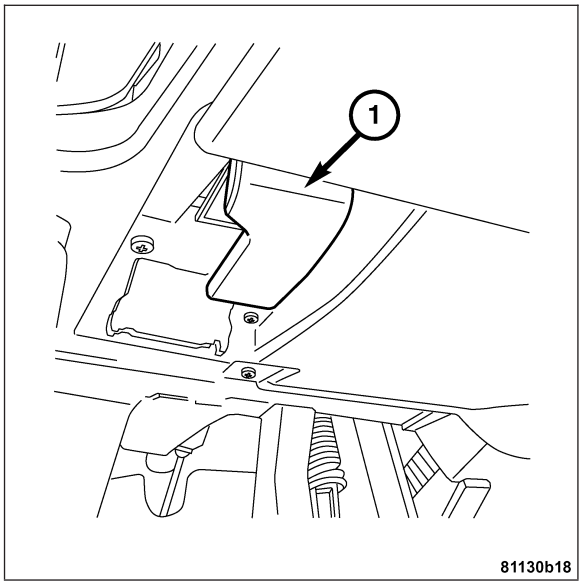

LATCH STRIKER

REMOVAL

1. Remove the two bolts (2) attaching the latch striker (1) to the hood.
2. Remove the latch striker (1) from the hood.

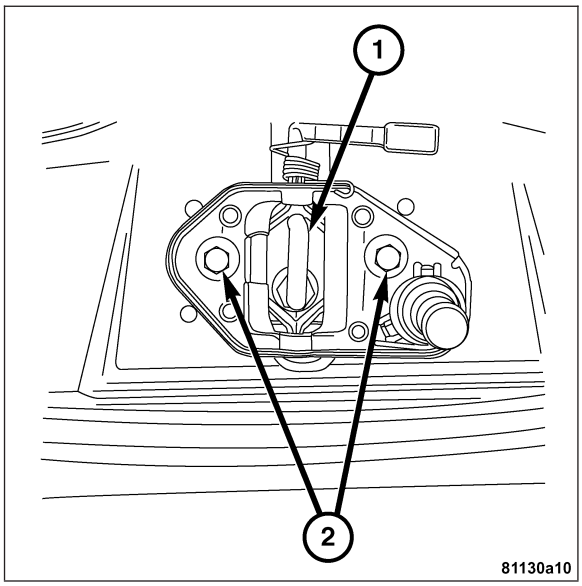

INSTALLATION

1. Install the latch striker (1) to the hood.
2. Install the two bolts (2) attaching the latch striker (1) to the hood. Tighten to 10 N·m (88 in. lbs.).

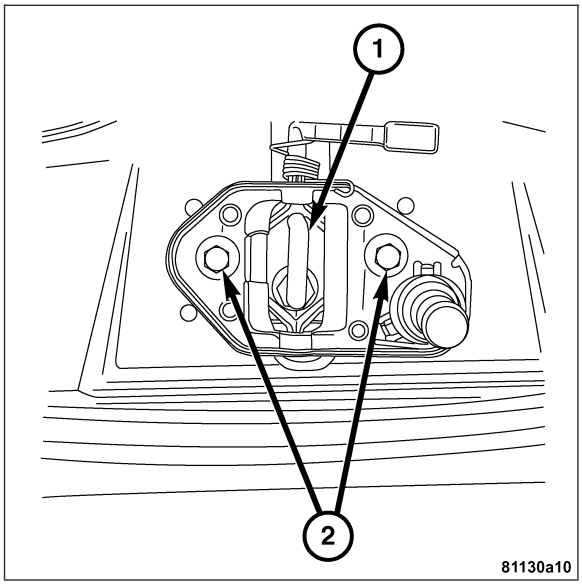

INSTRUMENT PANEL

TABLE OF CONTENTS

page

GLOVE COMPARTMENT
STANDARD PROCEDURE
ADJUSTING THE GLOVE COMPARTMENT 141
REMOVAL
GLOVE COMPARTMENT 143
REMOVAL - DRAWER 144
INSTALLATION
GLOVE COMPARTMENT 146
INSTALLATION - DRAWER 147
INSTRUMENT PANEL ASSEMBLY
REMOVAL
INSTRUMENT PANEL (TOP SECTION) 149
REMOVAL - LOWER INSTRUMENT PANEL (LEFT) 152
REMOVAL - LOWER INSTRUMENT PANEL (RIGHT) 154
REMOVAL - INSTRUMENT CLUSTER COVER 154
INSTALLATION
INSTALLATION - INSTRUMENT PANEL (TOP SECTION) 155
INSTALLATION - LOWER INSTRUMENT PANEL (LEFT) 158
INSTALLATION - LOWER INSTRUMENT PANEL (RIGHT) 160
INSTALLATION - INSTRUMENT CLUSTER COVER 160

GLOVE COMPARTMENT

STANDARD PROCEDURE

ADJUSTING THE GLOVE COMPARTMENT

Note: Close attention must be paid to the uniform transition and gap width of the glove compartment lid in relation to the instrument panel.

1. Screw in the stop buffer on the closing surface (1).

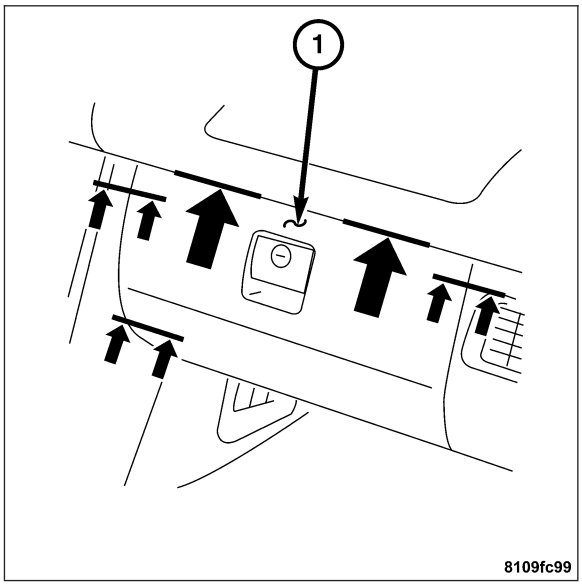

2. Loosen the screw (4) to the striker latch. Adjust the gap width and transition at the top.

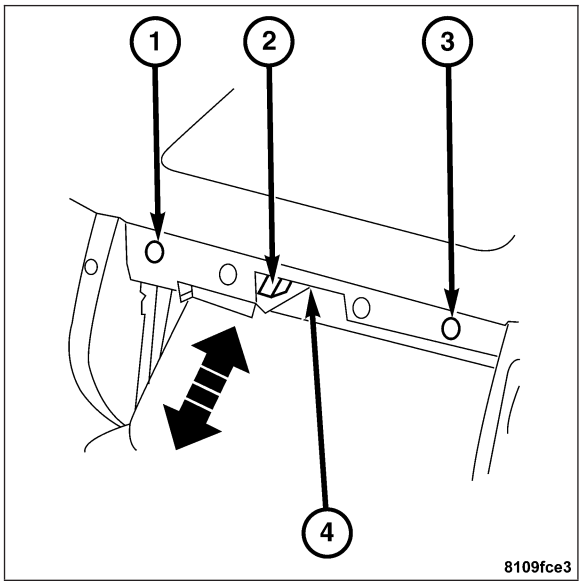

3. Loosen the hinge screws (2) and adjust the gap width and transition at the bottom and sides.
4. Unscrew both stop buffers until the glove compartment lid makes contact and can still be closed easily.
5. Check for easy motion and proper function.

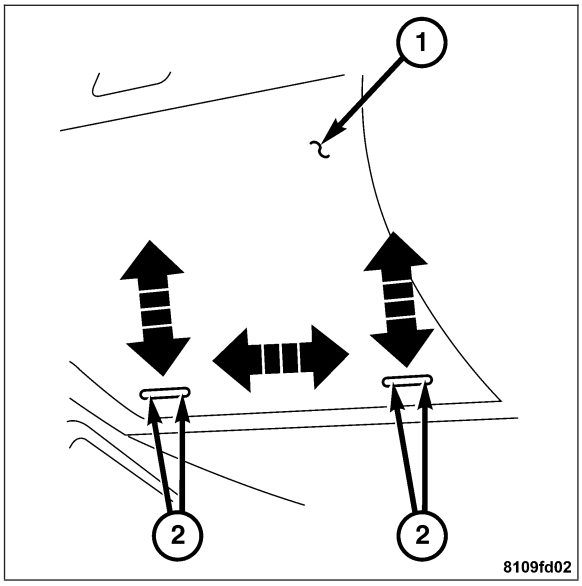

REMOVAL

GLOVE COMPARTMENT

1. Remove the side air nozzle.
2. Remove the lower instrument panel (1). **Refer to Page 23-149**
3. Open the glove compartment.

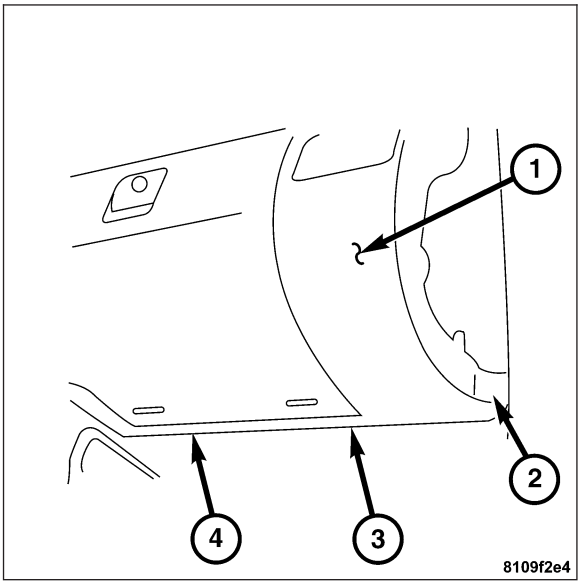

4. Remove the cover at the top of the glove compartment opening (2).
5. Remove the glove compartment lamp (1) and disconnect the electrical connection.

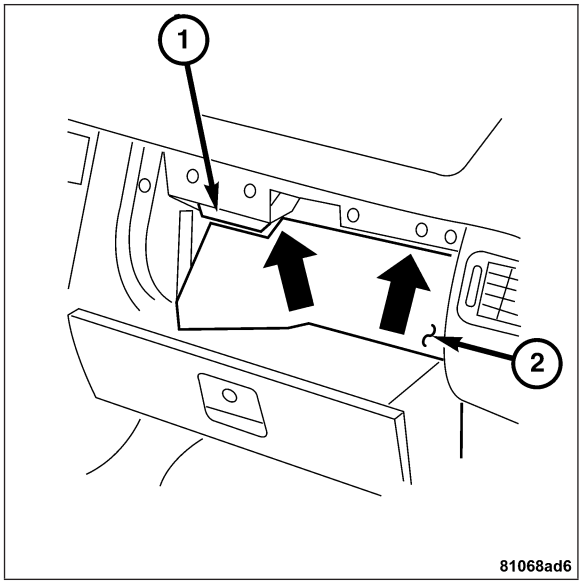

6. Remove the screws (1, 2, 4, and 5) around the opening and the screw (3) on the side of the instrument panel.
7. Remove the glove compartment from the vehicle.

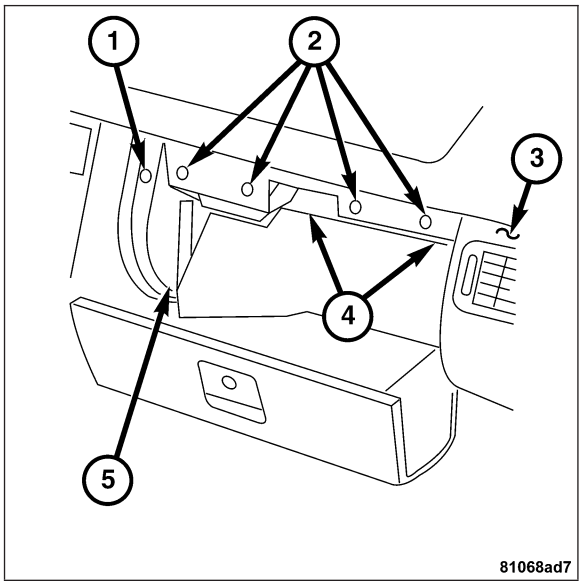

REMOVAL - DRAWER

1. Open the glove compartment drawer (3).
2. Disconnect the retaining rail for the interior covering (1) at the top with a plastic wedge.
3. Disconnect the insert clip from the damper shock (2).
4. Remove the damper shock.

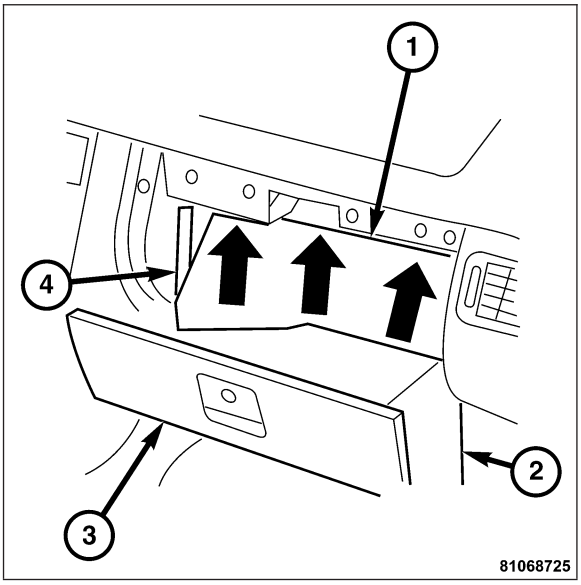

5. Remove the screws (2) from both of the hinges.

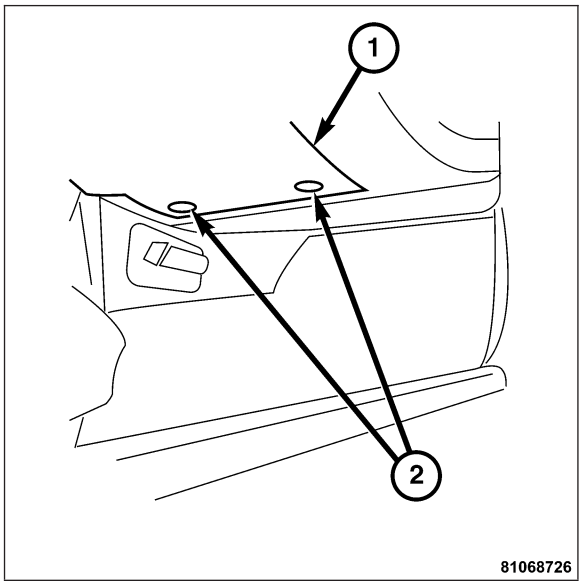

6. Pull the glove compartment drawer out of the hinges (2).
7. Remove the clip at the bottom of the retaining strap and unhook the retaining strap (3).
8. Remove the glove compartment drawer from the vehicle.

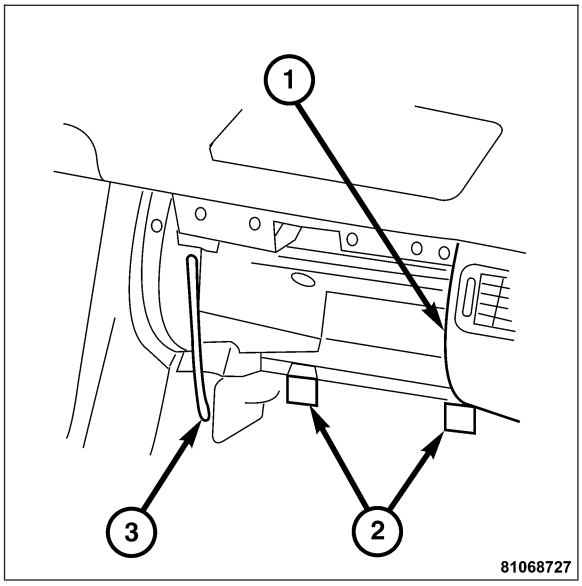

INSTALLATION

GLOVE COMPARTMENT

Note: When installing the air duct, check the clips and exposed electrical connections for the glove compartment illumination and route through the opening.

1. Install glove compartment.
2. Install the screws (1, 2, 4 and 5) around the opening.

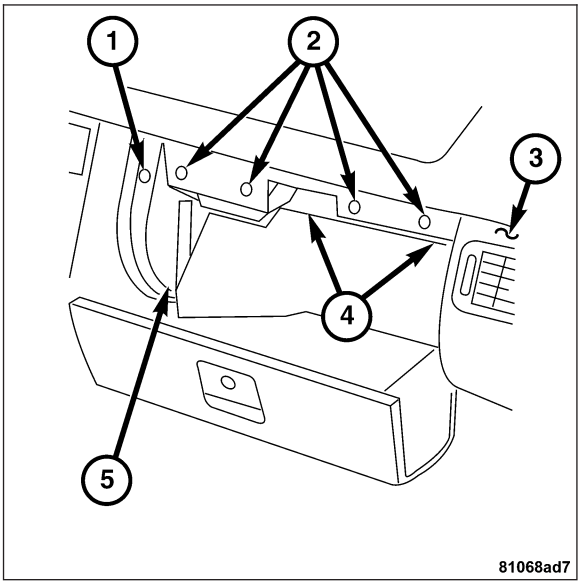

3. Connect the glove compartment lamp electrical connector and install.
4. Install the cover (2) at the top of the glove compartment opening.

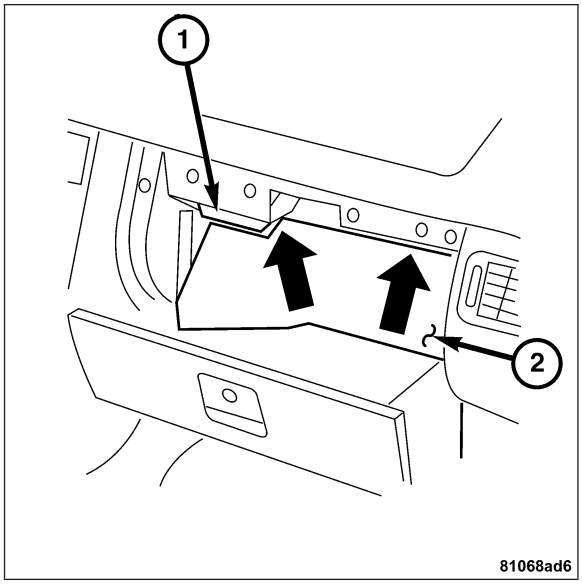

5. Install the lower instrument panel (3). **Refer to Page 23-155**.
6. Install the side air nozzle.

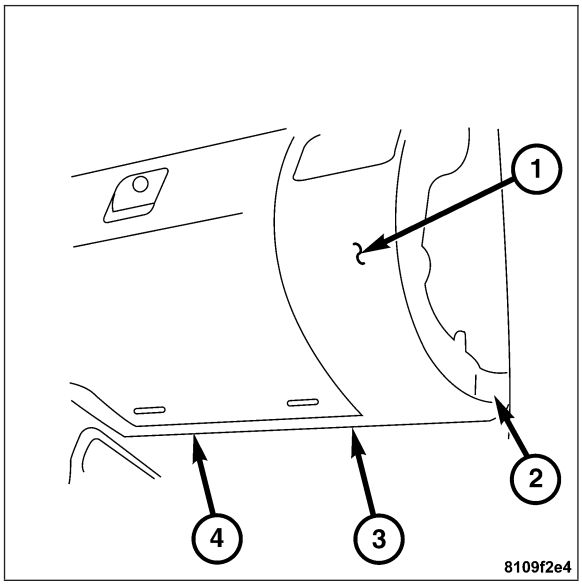

INSTALLATION - DRAWER

1. Install the glove compartment drawer on the hinges (2).
2. Install the clip at the bottom of the retaining strap (3) and hook the retaining strap.
3. Install the damper shock (1).
4. Install the insert clip to the damper shock (1).

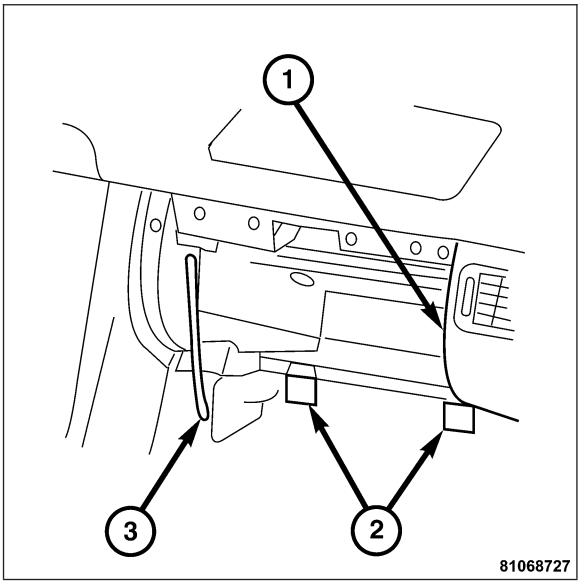

5. Connect the retaining rail (1) for the interior covering at the top.

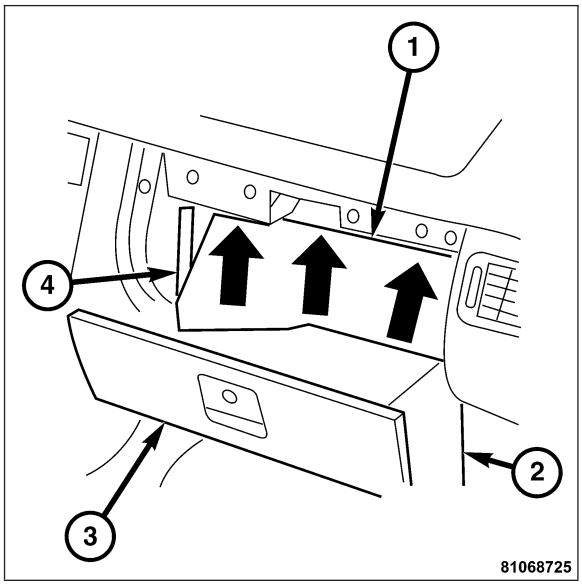

6. Close the glove compartment door.
7. Check the adjustment of the glove compartment door and adjust, if necessary. **Refer to Page 23-141**.

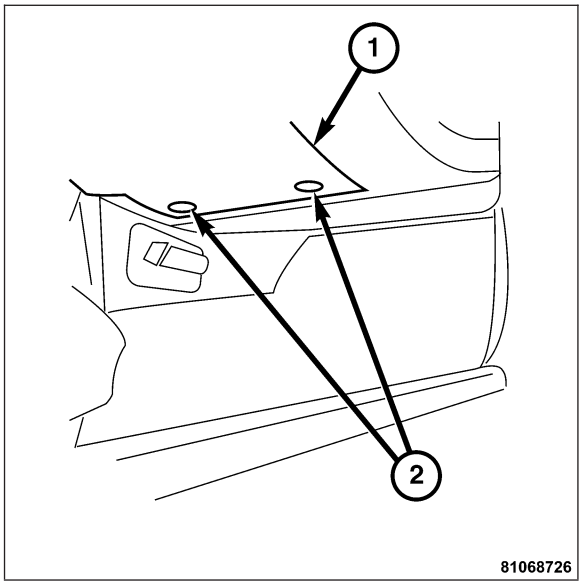

INSTRUMENT PANEL ASSEMBLY

REMOVAL

INSTRUMENT PANEL (TOP SECTION)

1. Remove the A-pillar trim (1).

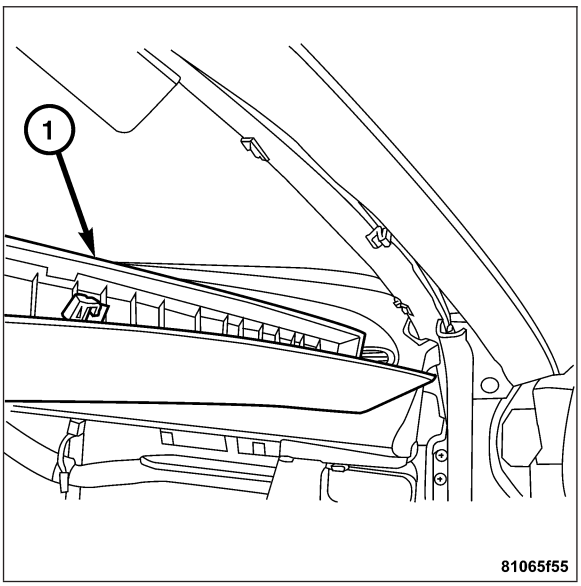

Note: A plastic wedge or a suitable coin can be used to turn the fuse cover locks.

2. Remove the fuse covers (1) on the left and right.

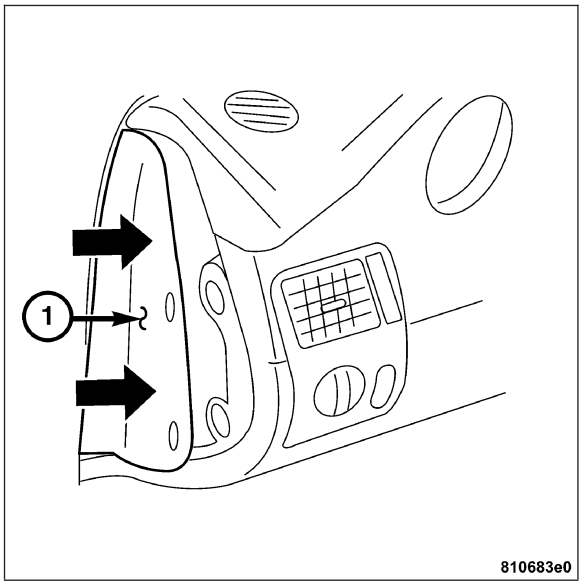

3. Remove the screw located in the right and left air nozzles (2) by pushing the deflector up to reveal the screw.
4. Remove the screws (1) on left and right of the instrument panel located on the inside of the fuse cover.
5. Remove the screws attaching the front center console to the top section on the instrument panel.

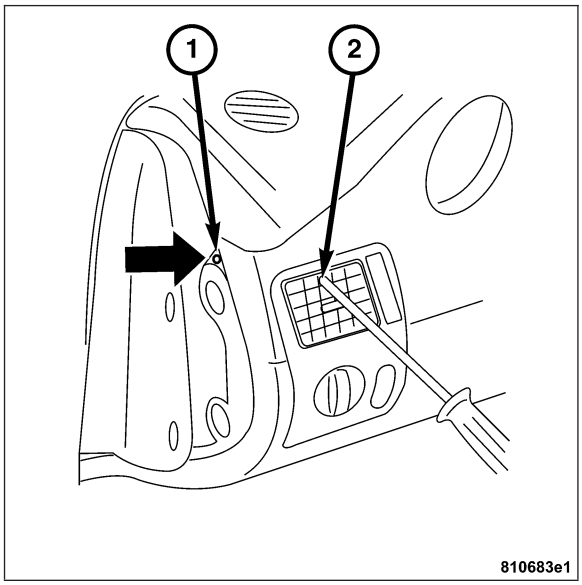

6. Open the glove compartment and remove the screws (1) attaching it the top section of the instrument panel.

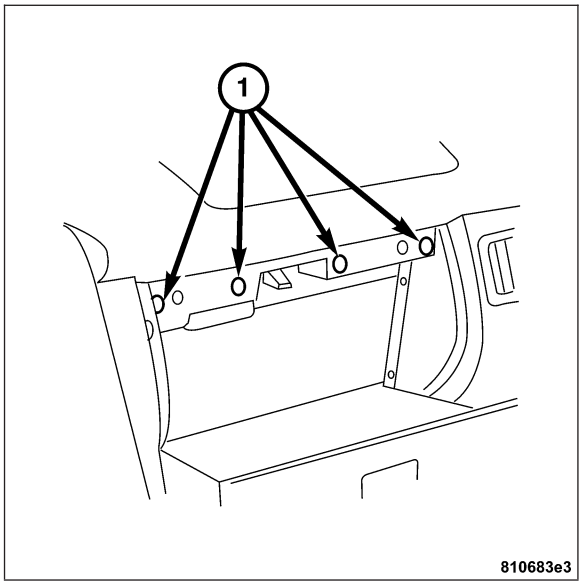

7. Remove the defroster grille screws (1) and the defroster grille pulling it outwards.

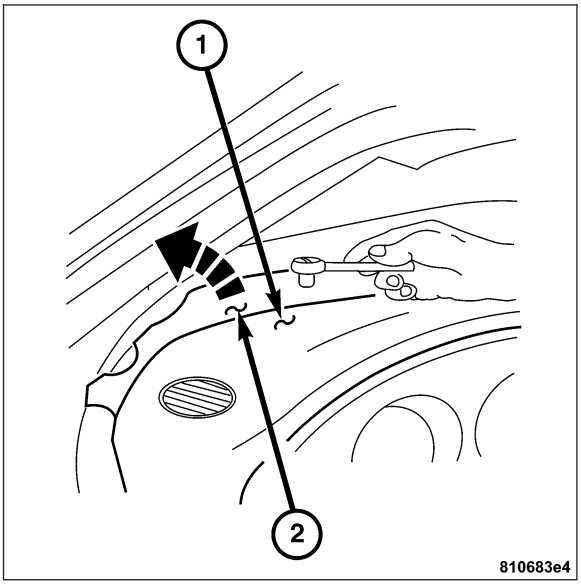

8. Remove the bolts (1) on left and right under the defroster grille.

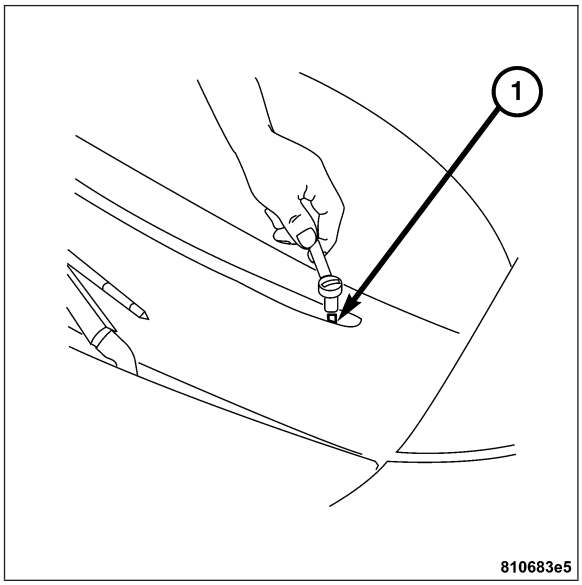

CAUTION: Damage to the top section of instrument panel can occur if the A-pillar sheet metal clips are not removed when removing and installing the top section of the instrument panel.

9. Remove the sheet metal clips (1) on left and right A-pillars.

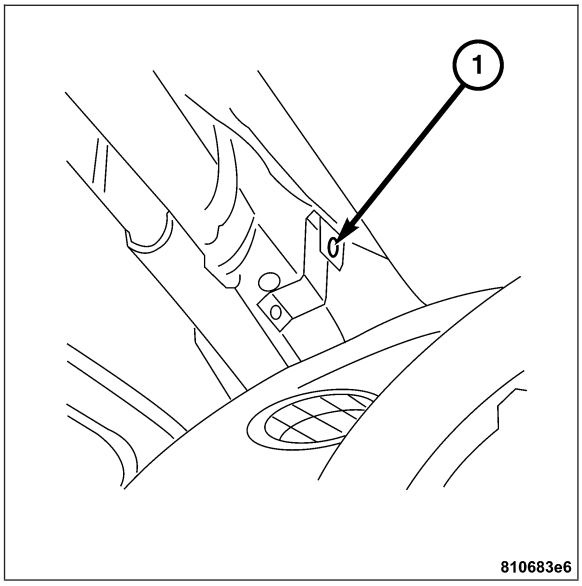

10. Lift the top section (1) of the instrument panel and remove toward rear.
11. Lay the top section of instrument panel down on a suitable surface.

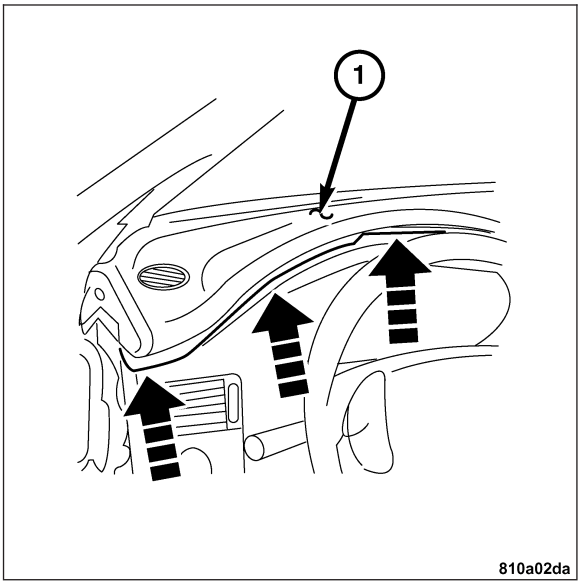

REMOVAL - LOWER INSTRUMENT PANEL (LEFT)

1. Remove the air nozzle.
2. Remove the screw (3) attaching the cover under the steering column then remove the cover (2).
3. Remove the fuse panel cover.
4. Remove the screws (1) attaching the lower instrument cover (5) to the illumination control module (4) and the side of the instrument panel to the support bar (6).
5. Remove the illumination control module (7).

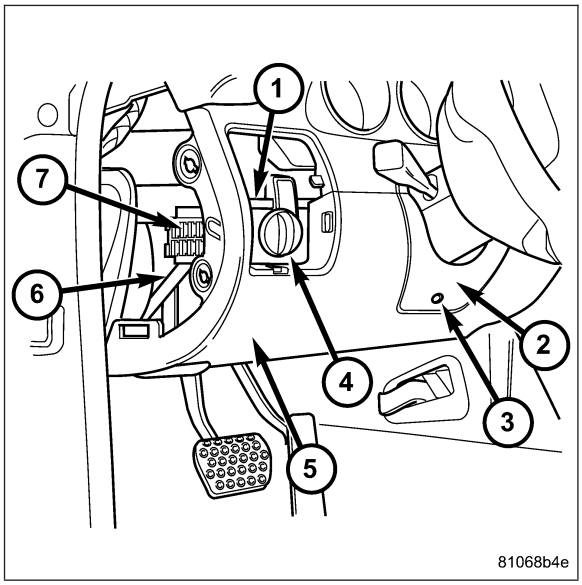

Note: Do not unscrew pedal cover (1).

6. Remove the screws (arrows) in the under side cover (2).
7. Pull the lower instrument cover (2) off of the upper instrument panel cover.

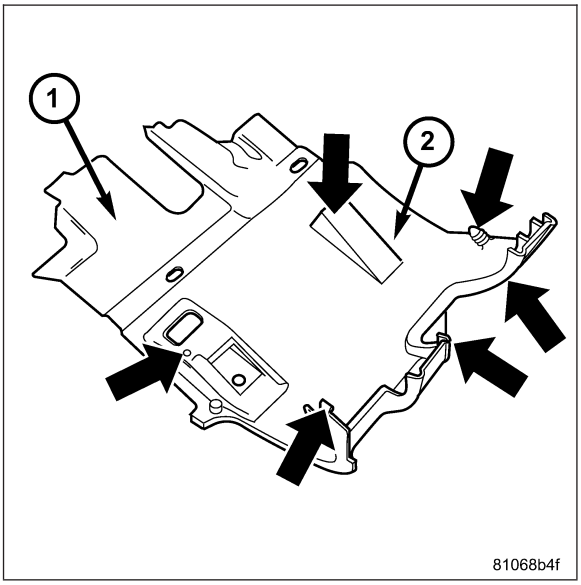

8. Remove the screw (2) attaching the hood latch release handle bezel to the lower instrument panel and then guide the handle through the lower cover (1).

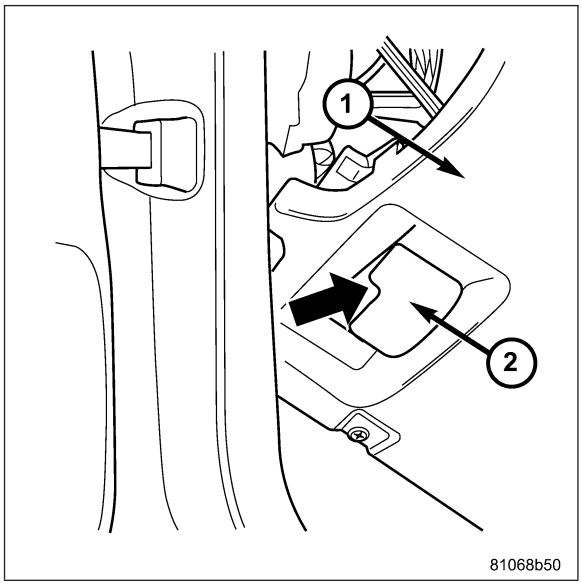

9. Separate the lower panel (2) from the upper panel (1) and then remove the lower instrument panel.

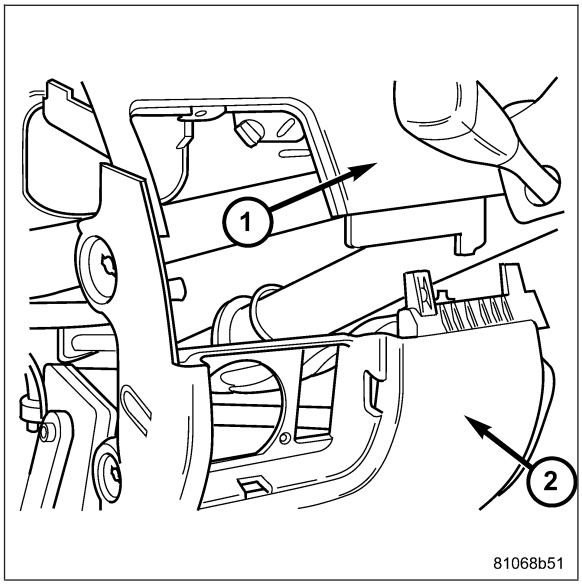

REMOVAL - LOWER INSTRUMENT PANEL (RIGHT)

1. Fold back the carpet (3).
2. Remove the screws (2) attaching the lower instrument panel to the glove compartment.
3. Pull the lower instrument panel (1) out.

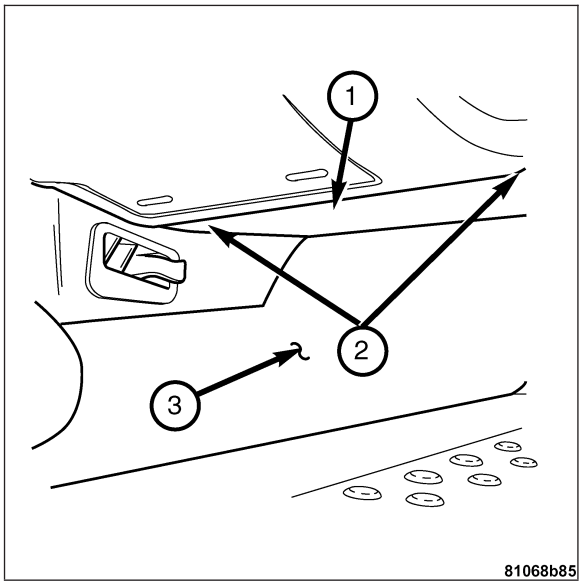

REMOVAL - INSTRUMENT CLUSTER COVER

1. Remove the steering wheel. **Refer to Page 19-25**.
2. Remove the lower instrument panel. **Refer to Page 23-149**.
3. Remove the sentry key antenna ring from the key cylinder.
4. Remove the screws attaching the instrument cluster cover to the lower instrument panel.
5. Disconnect the instrument cluster cover (1) from the top with a plastic wedge.
6. Tip the instrument cluster cover toward the rear at the top. Lift it over the jacket tube covering and simultaneously guide the adjustment knobs through the cover.

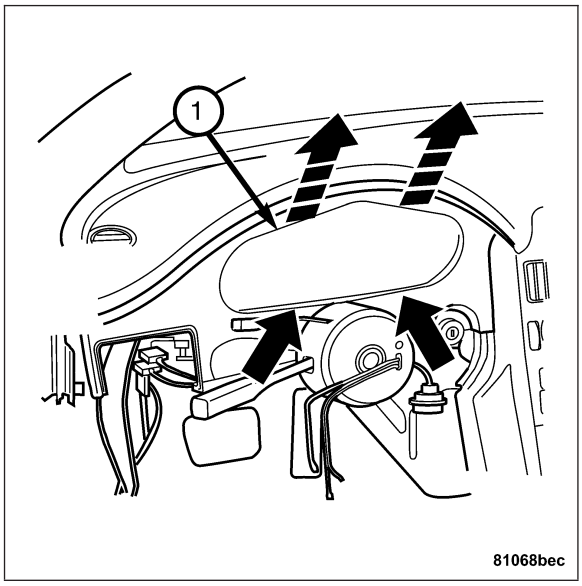

INSTALLATION

INSTALLATION - INSTRUMENT PANEL (TOP SECTION)

Note: Pay good attention to the uniform gap in relation to the driver and passenger door trim panels.

Note: When installing, check for proper installation of the insulating mat, sheet metal clips and expanding anchors.

1. Install the top section (1) of instrument panel.

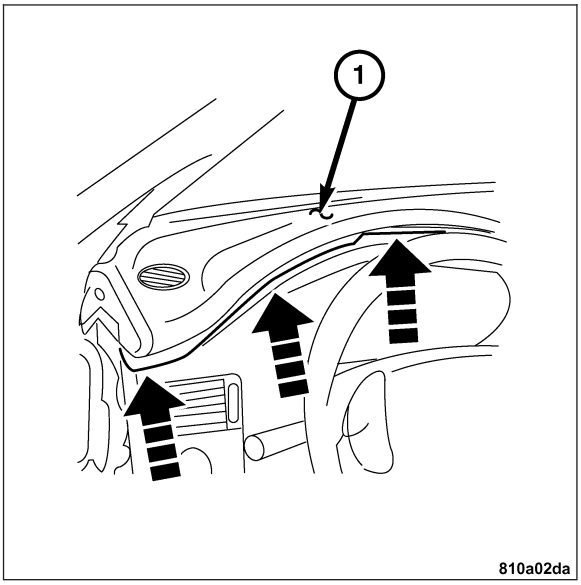

2. Install the sheet metal clips (1) on left and right A-pillars.

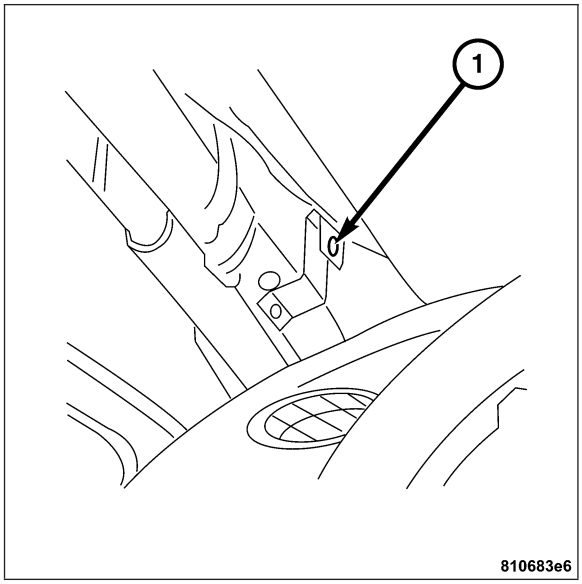

3. Install the bolts (1) on left and right under the defroster grille.

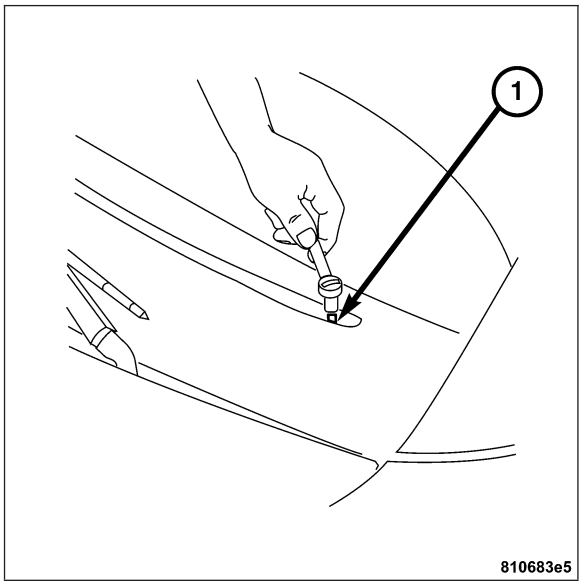

4. Position the defroster grille (2) and install the screws (1).

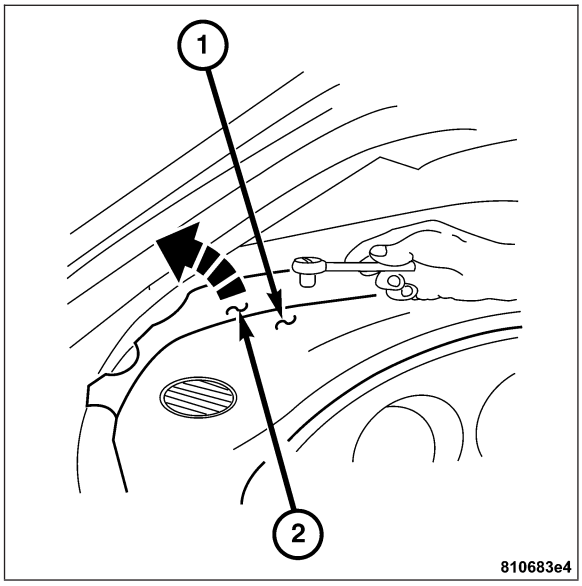

5. Install the screws (1) to the glove compartment attaching it to the top section of the instrument panel.

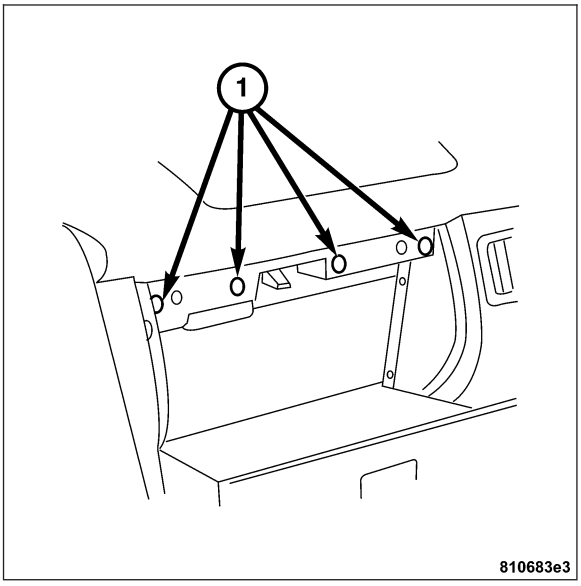

6. Install the screws (1) attaching the front center console to the top section on the instrument panel.

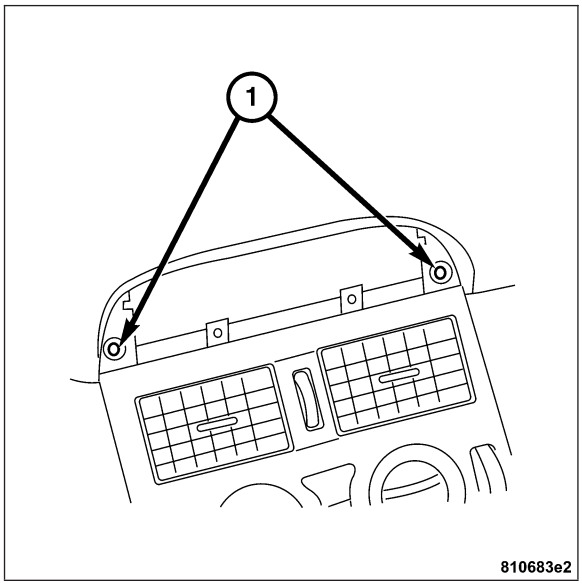

7. Install the screws (1) on left and right of the instrument panel located on the inside of the fuse cover.
8. Install the screws (2) located in the air nozzles.

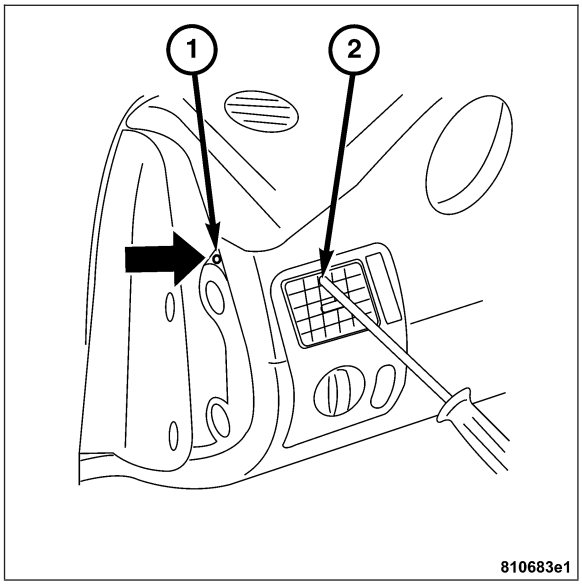

9. Install the fuse covers (1) on the left and right.

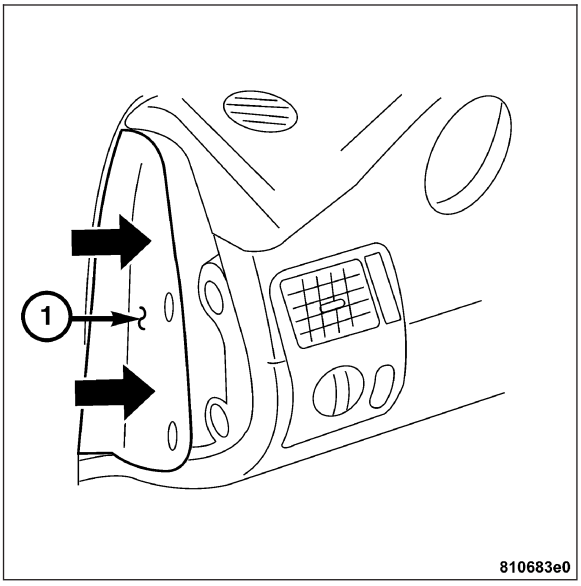

10. Install the A-pillar trim (1).

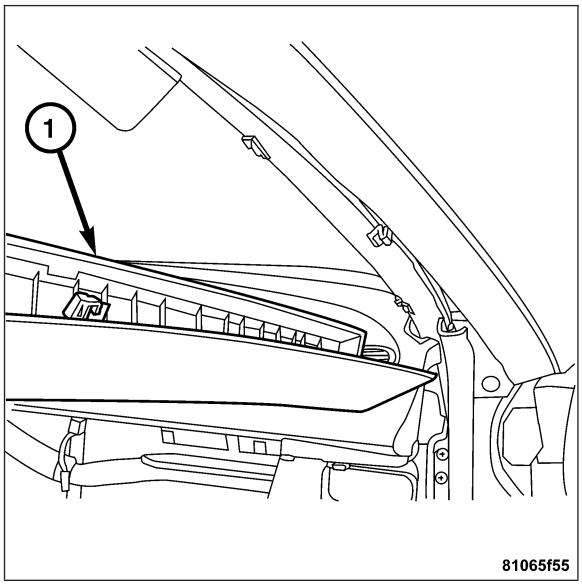

INSTALLATION - LOWER INSTRUMENT PANEL (LEFT)

Note: When installing, insert the front tabs on the pedal lower instrument panel below the floor covering.

1. Install the lower instrument panel (2) upward and toward the front.

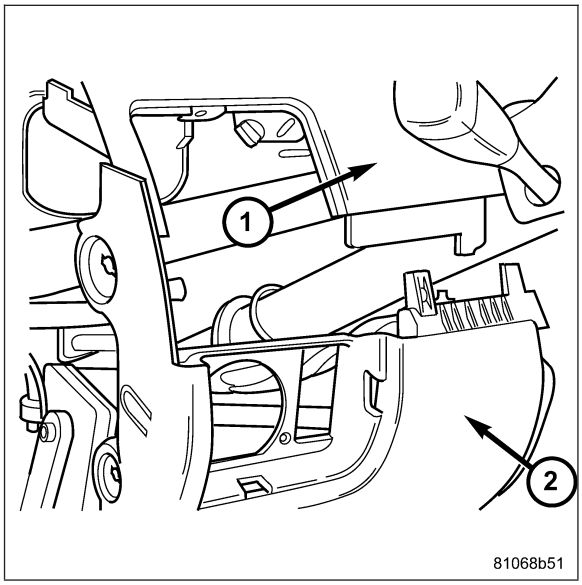

2. Guide the hood latch release handle (2) through the lower instrument panel (1) then install the screw attaching it to the lower instrument panel (1).

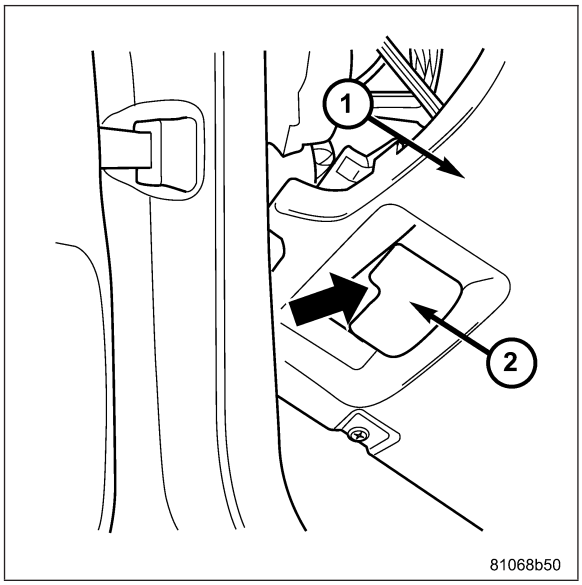

3. Install the lower instrument panel onto the upper instrument panel.
4. Install the screw in the lower instrument panel.
5. Install the illumination control module (7).
6. Install the screws attaching the illumination control module (7) to the instrument panel and to the support bar (6) on the side.
7. Install the cover (2) under the steering column. Then install the screw (3).
8. Install the side air nozzle.

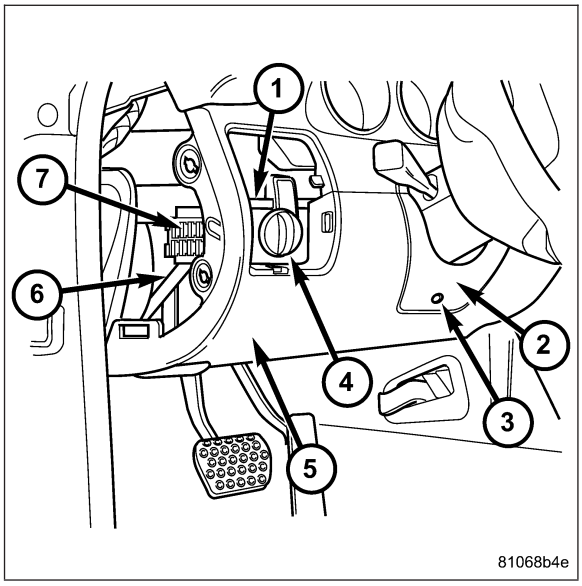

INSTALLATION - LOWER INSTRUMENT PANEL (RIGHT)

1. Install the lower instrument panel (3) in toward the front.
2. Install the screws attaching the lower instrument panel to the glove compartment.
3. Fold back the carpet.

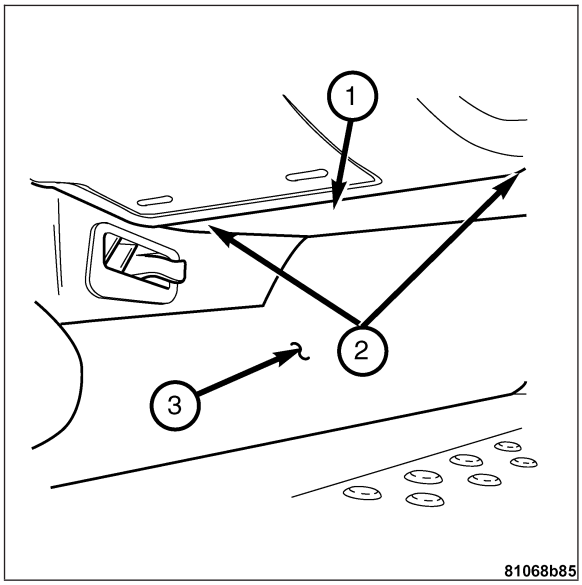

INSTALLATION - INSTRUMENT CLUSTER COVER

1. Tip the instrument cluster cover toward the rear at the top, then lift it over the jacket tube covering and simultaneously guide the adjustment knobs through the cover.
2. Connect the instrument cluster cover (1) to the instrument panel top section.
3. Install the screws attaching the instrument cluster cover to the lower instrument panel.
4. Install the sentry key antenna ring to the key cylinder.
5. Install the lower instrument panel. **Refer to Page 23-155**
6. Install the steering wheel. **Refer to Page 19-26**

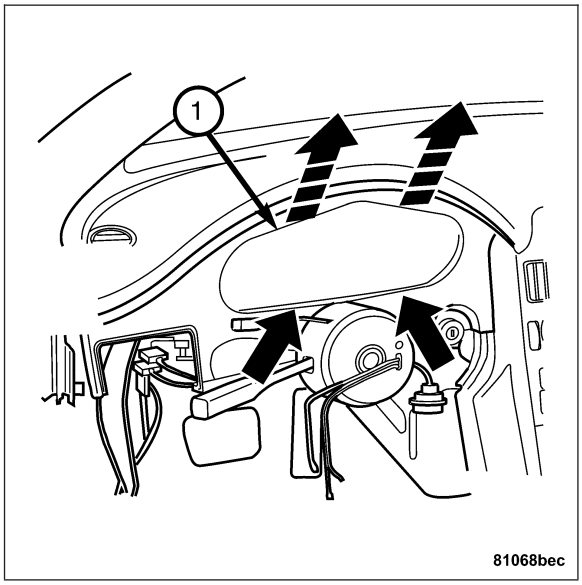

INTERIOR

TABLE OF CONTENTS

page

A-PILLAR TRIM
REMOVAL 161
INSTALLATION 162
CARPET
REMOVAL
CARPET (LEFT) 163
CARPET (RIGHT) 166
INSTALLATION
CARPET (LEFT) 168
INSTALLATION - CARPET (RIGHT) 171
CENTER CONSOLE
REMOVAL
CENTER CONSOLE (FRONT) 173
REMOVAL - CENTER CONSOLE COVER . . 176
REMOVAL - REAR CENTER CONSOLE 178
REMOVAL - ASHTRAY 180
REMOVAL - SHIFT LEVER ASSEMBLY COVER 182

page

INSTALLATION
CENTER CONSOLE (FRONT) 183
INSTALLATION - CENTER CONSOLE COVER 186
INSTALLATION - REAR CENTER CONSOLE 188
INSTALLATION - ASH TRAY 190
INSTALLATION - SHIFT LEVER ASSEMBLY COVER 192
DOOR SILL TRIM PLATE
REMOVAL 193
INSTALLATION 193
HEADLINER
REMOVAL 194
INSTALLATION 196

A-PILLAR TRIM

REMOVAL

1. Press the A-pillar (1) out of the retaining clips (3 each) with a plastic wedge starting at the top.
2. Remove the A-pillar (1) toward the middle of the vehicle.

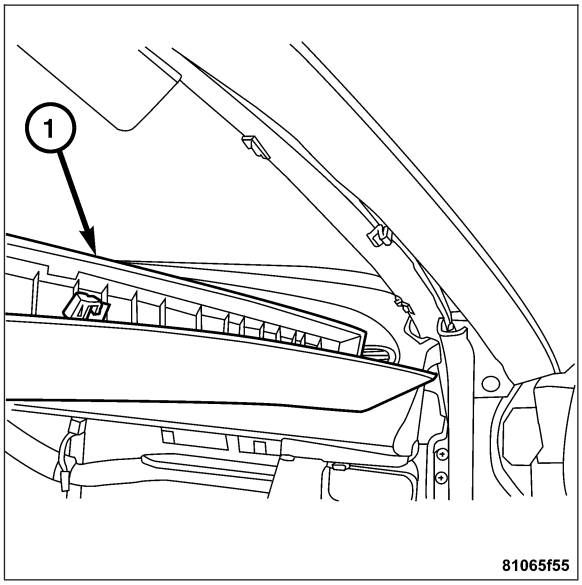

3. Remove the retaining clips (1) if doing any service to the instrument panel.

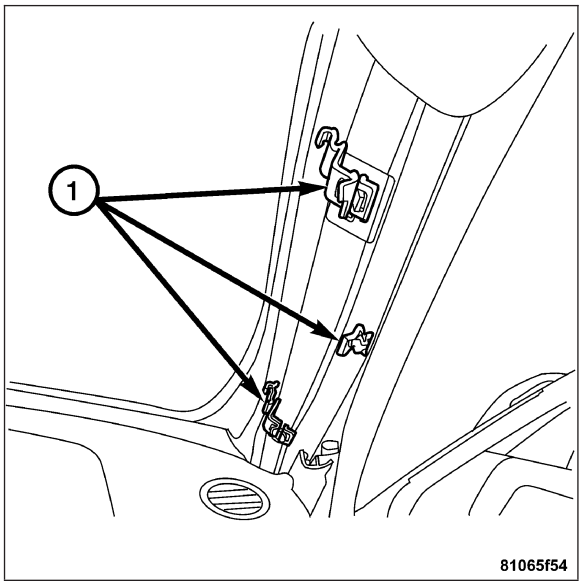

INSTALLATION

1. Install the retaining clips on the A-pillar and attach the electric wire.

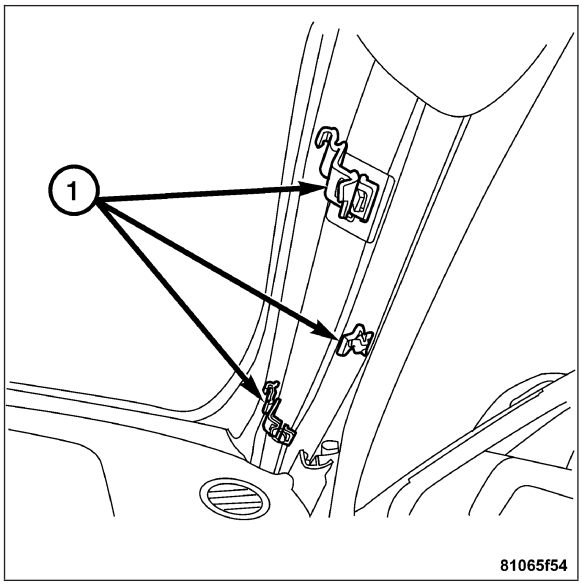

2. Position the A-pillar (1) flush on top of the section of the instrument panel and press it into the retaining clips.
3. Lift the rubber lip on the A-pillar seal over the A-pillar trim with a plastic wedge.

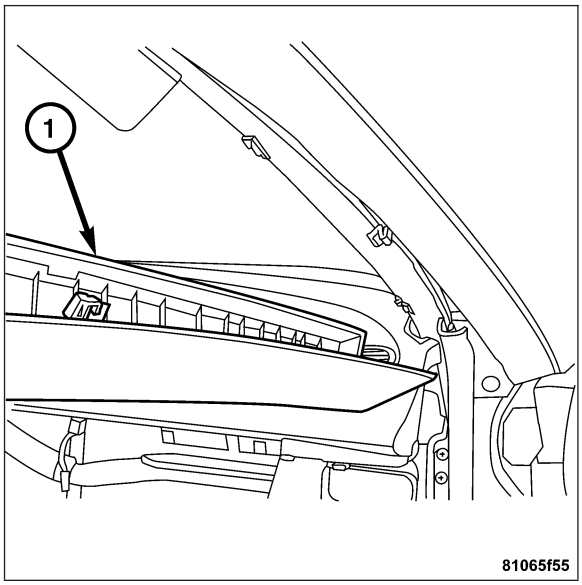

CARPET

REMOVAL

CARPET (LEFT)

1. Remove the front seat. **Refer to Page 23-202**.
2. Remove the rear center console. **Refer to Page 23-173**.
3. Remove the cover on center console. **Refer to Page 23-173**.
4. Remove the ashtray housing with the stowage compartment in the front of the center console. **Refer to Page 23-173**.
5. Remove the air outlet cover in the footwell.
6. Remove the door sill trim plate (4). **Refer to Page 23-193**.
7. Remove the kick panel (2) in the left footwell by pulling the edge guard (1) off in the area of the kick panel (2). Remove the cap (3) with a small screwdriver, then remove the screw.
8. Remove the pedal cover.

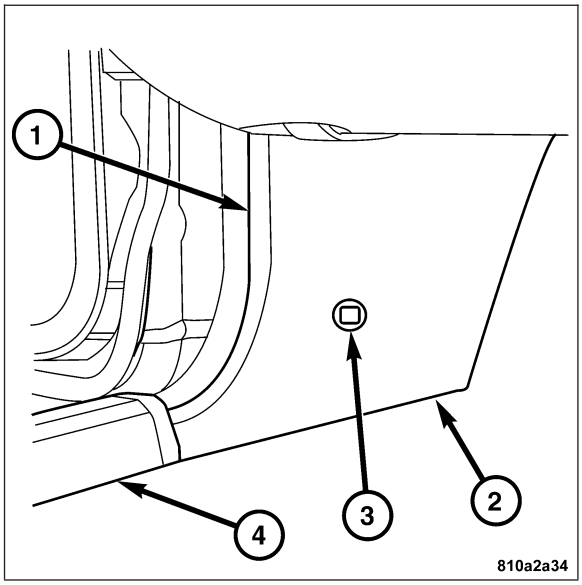

9. Remove nut (1) attaching the accelerator pedal to the instrument panel structural duct.

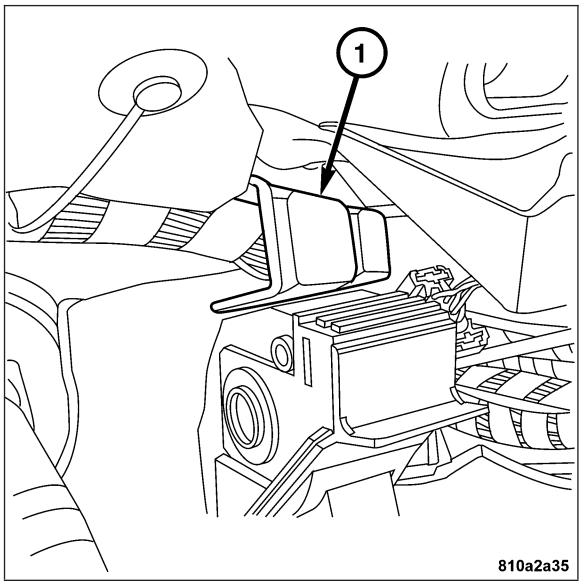

10. Remove the nut (1) attaching the accelerator pedal to the floor. Disconnect the electrical connector and remove the pedal from the welded stud.

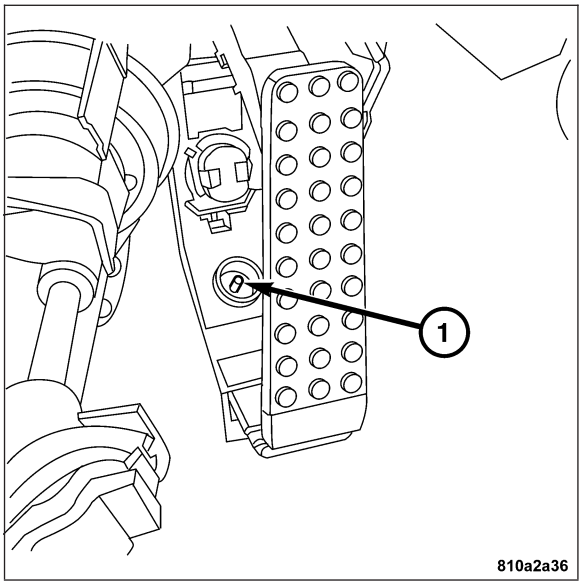

11. Unhook the storage pocket (1) and remove it from the vehicle.
12. Disconnect the electrical connector from the parking brake switch (4).
13. Remove the plugs (3) and then remove the rear edge guard (2) in the lower area.

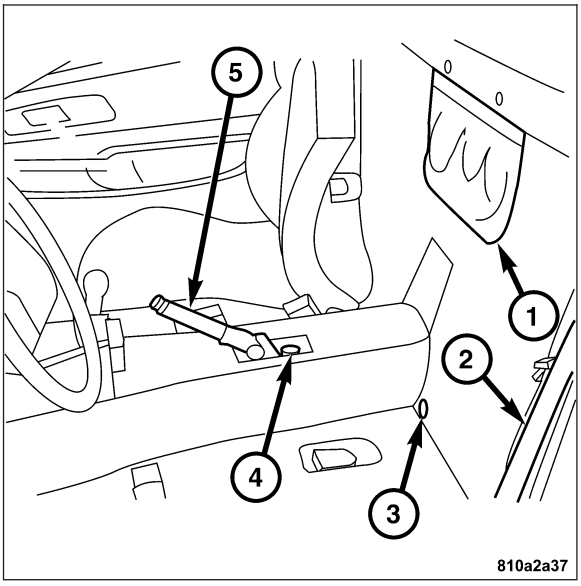

Note: Cut the single-piece carpet (1) along dotted lines in order to avoid time-consuming removal of the heater or air conditioning systems.

CAUTION: Do not damage the electrical and pneumatic lines!

14. Cut the carpet (1) in the transmission tunnel area along the dotted lines with a sharp knife.

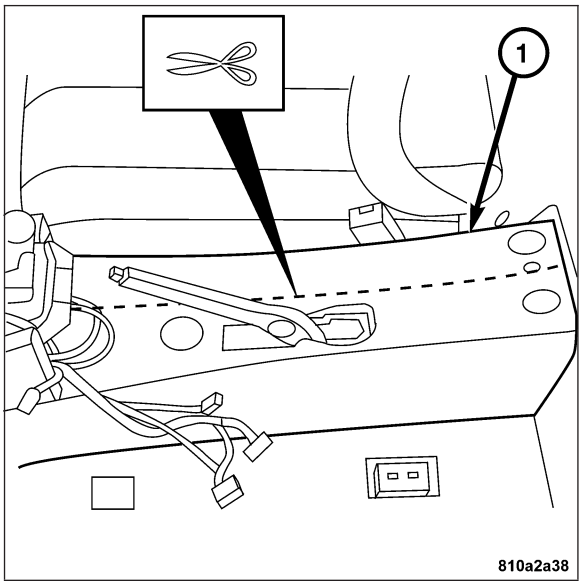

CAUTION: Do not damage the electrical and pneumatic lines!

15. Cut the carpet (1) in the shift lever assembly area.

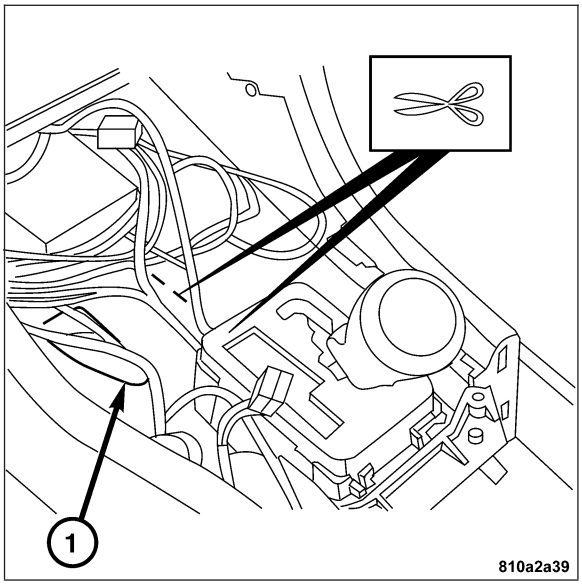

CAUTION: Do not damage the electrical and pneumatic lines!

16. Cut the carpet (1) in the footwell area under the front center console.
17. Lift at the rear while removing the carpet (1) from below the center console and then remove it from the vehicle.

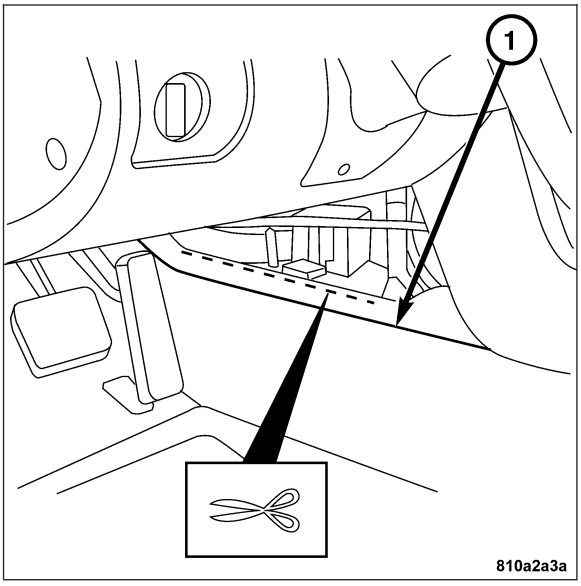

CARPET (RIGHT)

1. Remove the front seat. **Refer to Page 23-202**.
2. Remove the rear center console. **Refer to Page 23-173**.
3. Remove the cover on the center console. **Refer to Page 23-173**.
4. Remove the ashtray housing with the stowage compartment in the front center console. **Refer to Page 23-173**.
5. Remove the air outlet cover in the footwell.
6. Remove lower instrument panel (right). **Refer to Page 23-149**.
7. Removing the door sill trim plate (4). **Refer to Page 23-193**
8. Remove the kick panel (2) in the right footwell. Pull the edge guard (1) off in the area of the kick panel (2). Remove the cap (3) with a suitable tool, then remove the screw.

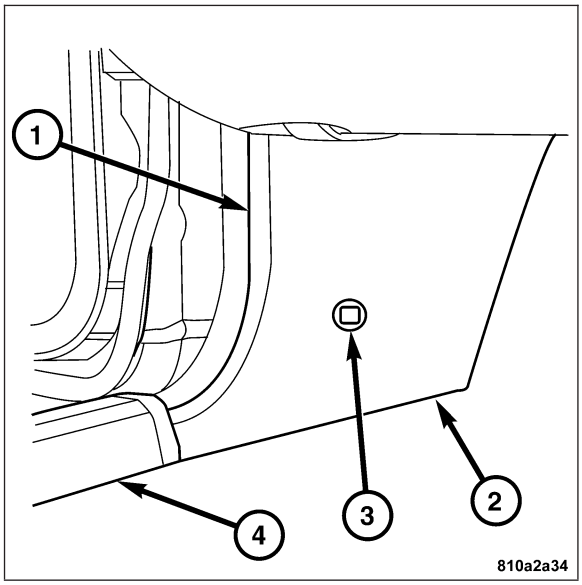

9. Unhook the storage pocket and remove it from the vehicle.
10. Disconnect the connector from the parking brake switch (1).
11. Remove the plugs and pull off the edge protector at the rear in the lower area.

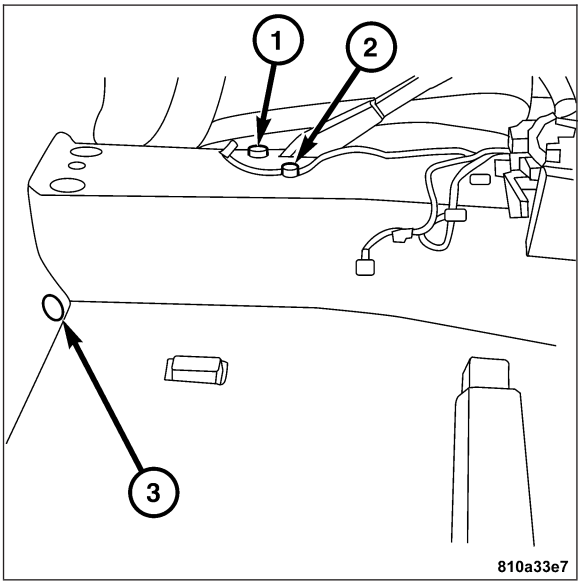

CAUTION: Do not damage electrical and pneumatic lines!

12. Cut the carpet (1) in the transmission tunnel area along the dotted lines with a sharp knife.

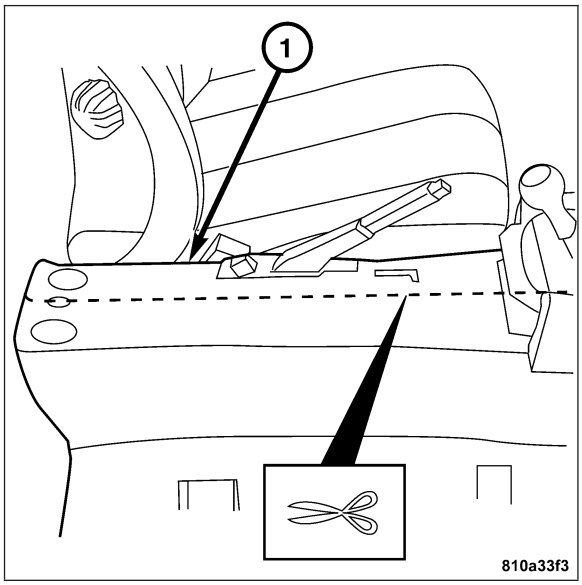

CAUTION: Do not damage electrical and pneumatic lines!

13. Cut the carpet (1) in the shift lever module.

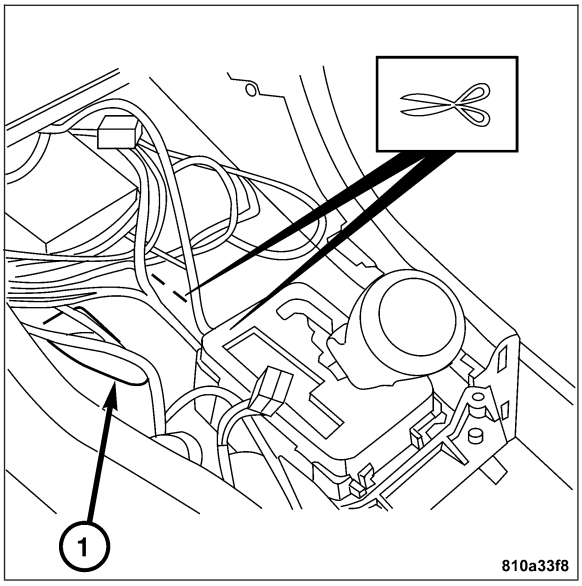

CAUTION: Do not damage electrical and pneumatic lines!

14. Cut the carpet (1) in the footwell area under the front center console.
15. Remove the carpet (1) below the center console, then lift at the rear and then remove it from vehicle.

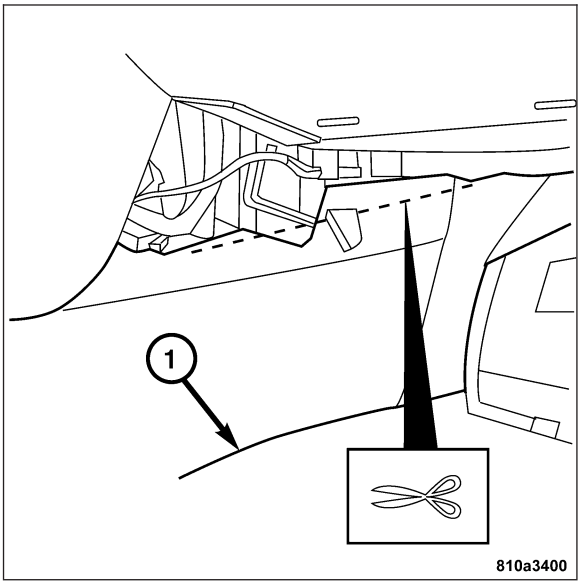

INSTALLATION

CARPET (LEFT)

Note: Before installing the carpet (1), clean the vehicle passenger compartment in the area of the floor covering.

1. Prepare the carpet (1) for installation by cutting the new carpet along the dotted line with a suitable cutting device and remove the section below the heater (cross-hatched).

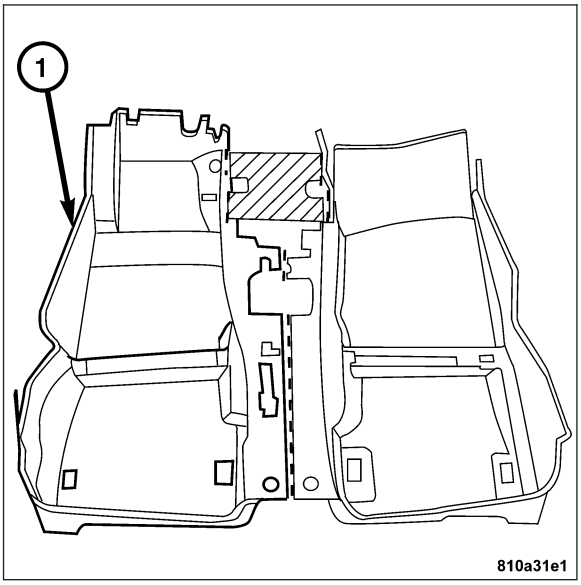

2. Install the section of carpet (1) below the heater (cross-hatched).

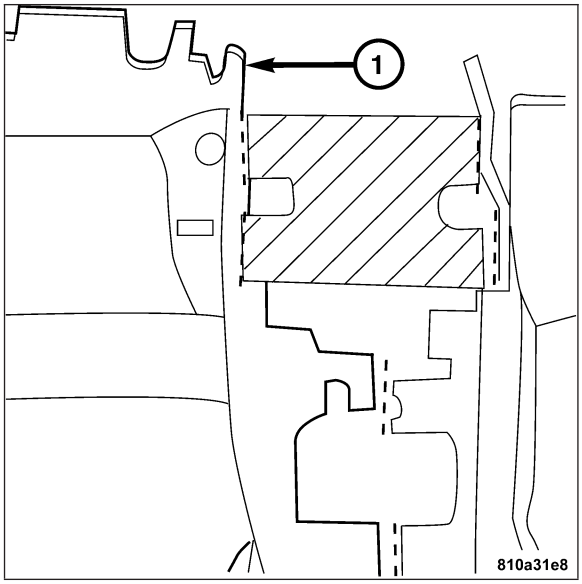

3. Install the carpet by inserting the cut edge in the front area below the center console, while simultaneously guiding the parking brake lever, kick-down switch, welded pin for the accelerator pedal and the electrical leads for the driver's seat through the carpet (arrows).

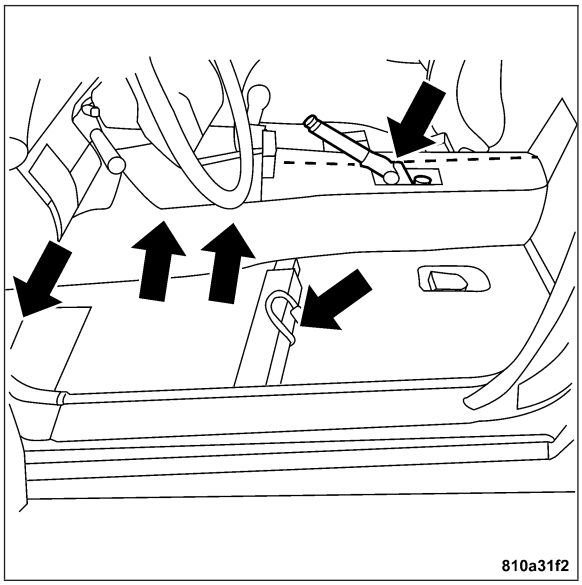

4. Expose the lines in the area of the center console and then attach the two halves of the carpet at the front and rear with clips (1) along the cutting line. For this purpose, cut slits in both carpet halves (2) with a blade and then insert the clips (1).

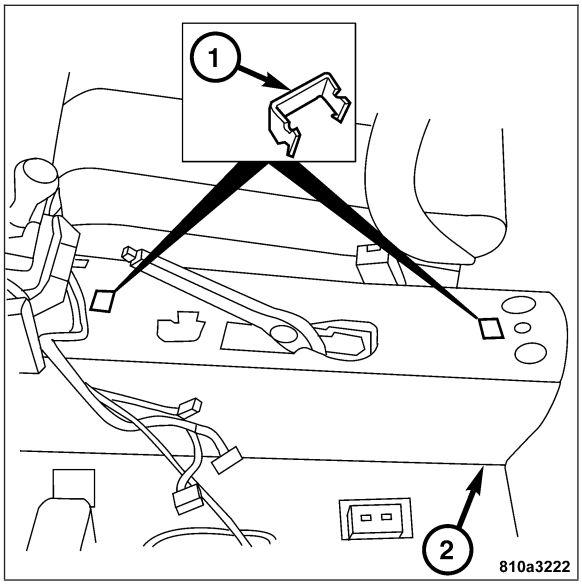

5. Install the plugs (3) and then install the rear edge guard (2) in the lower area.
6. Connect the electrical connector (4) to the parking brake (5) switch.
7. Install the storage pocket (1).

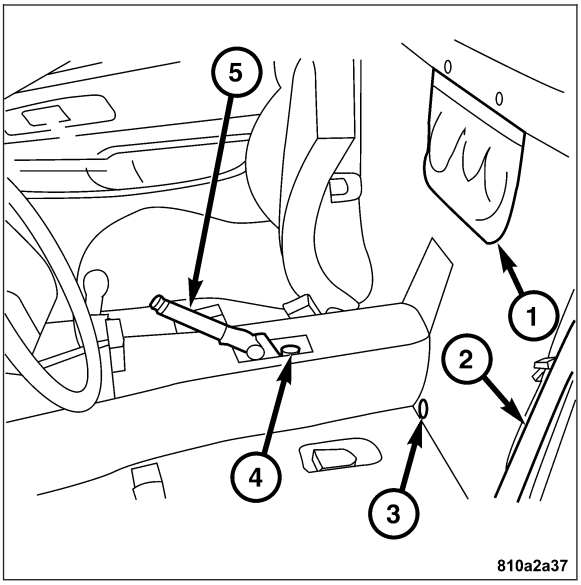

8. Install the nut (1) attaching the accelerator pedal to the floor, then install the electrical connector.

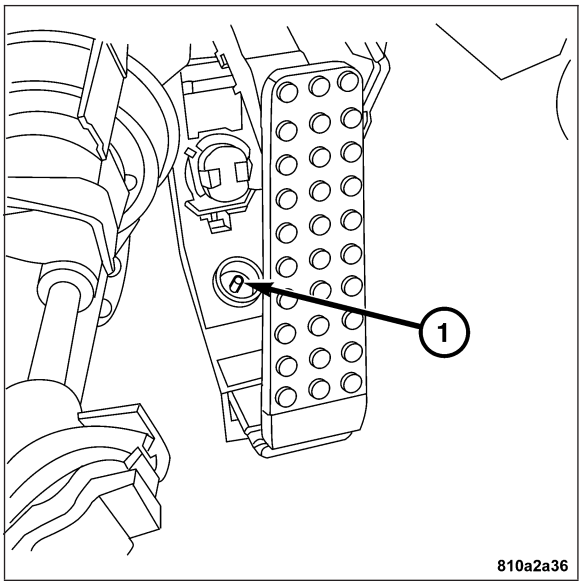

9. Install nut (1) attaching the accelerator pedal to the instrument panel structural duct.
10. Install the pedal cover.

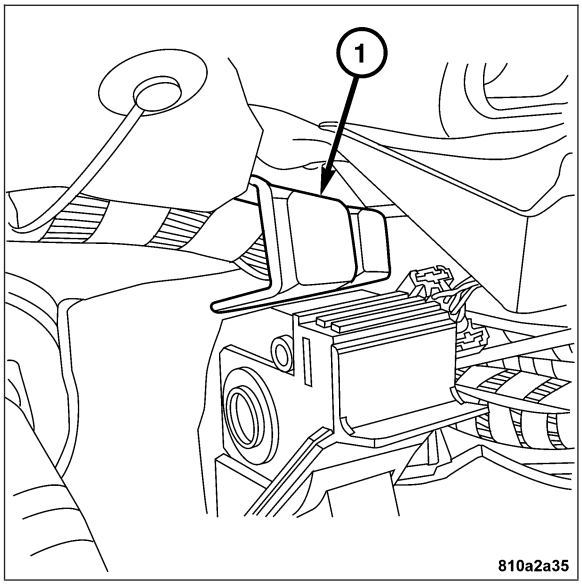

11. Install the paneling (2) in the left footwell.
12. Install the door sill trim plate (4). **Refer to Page 23-193**. Install the edge guard (1) in the area of the paneling (2). Install the screw (3), then install the cap.
13. Install the air outlet cover in the footwell.
14. Install the ashtray housing with the stowage compartment in the front of the center console. **Refer to Page 23-183**.
15. Install the cover on center console. **Refer to Page 23-183**.
16. Install the rear center console. **Refer to Page 23-183**.
17. Install the front seat. **Refer to Page 23-203**.

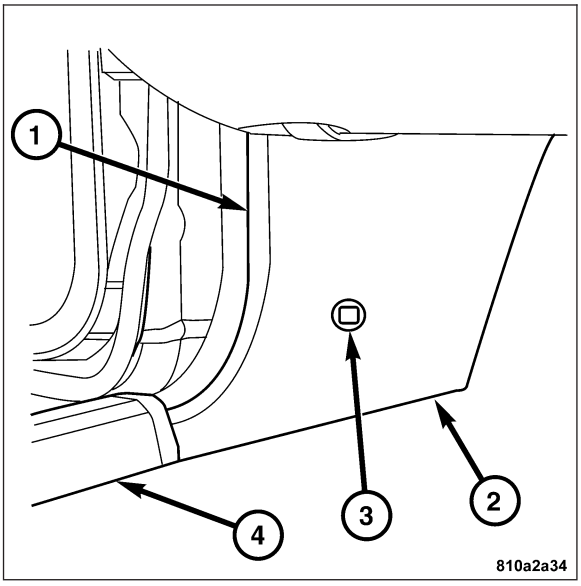

INSTALLATION - CARPET (RIGHT)

Note: Before installing floor covering, clean vehicle passenger compartment in area of floor covering.

1. Prepare the carpet (1) for installation. Cut the new carpet (1) along the dotted line with a suitable tool and remove the section below the heater (cross-hatched).

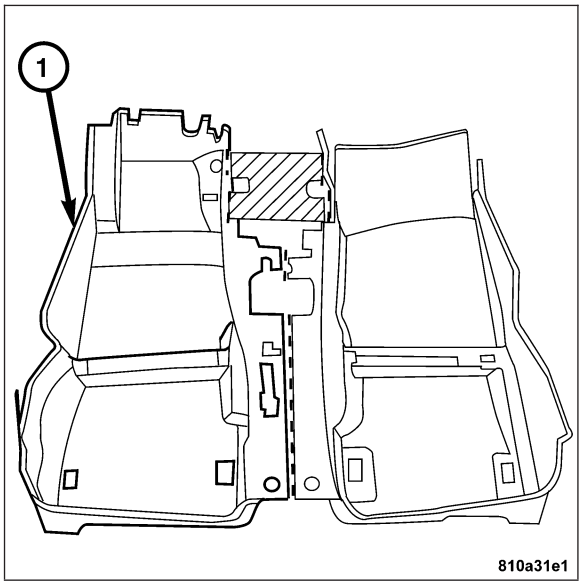

2. Install the new section in the heater box area (cross-hatched).

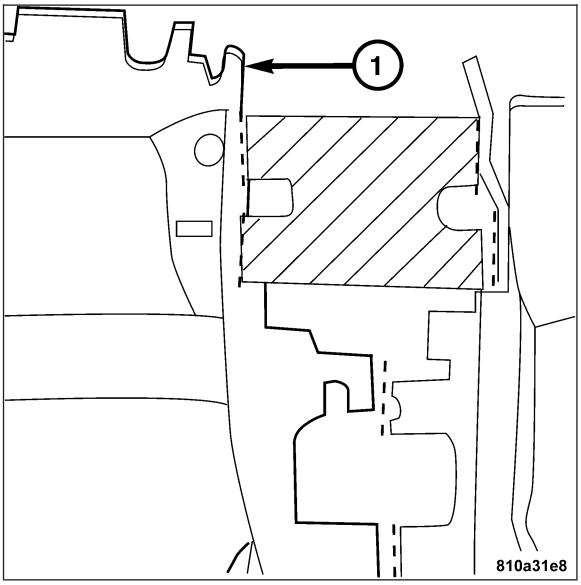

3. Install the carpet by inserting the cut edge in the front area below the center console while simultaneously guiding the parking brake lever (2) and the electrical leads (1) for the passenger's seat through the carpet.

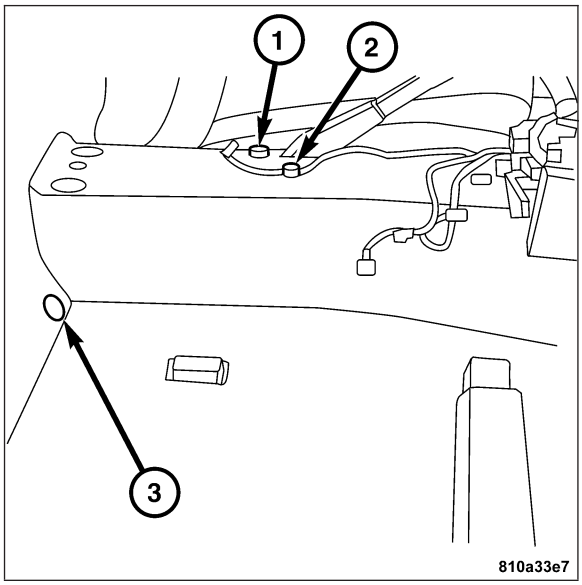

4. Expose the lines in the area of the center console and attach the two halves of the floor covering at the front and rear with clips (1) along the cutting line. For this purpose cut slits in both of the carpet halves with a blade and then insert the clips (1).
5. Install the plugs and the edge protector at the rear in the lower area.
6. Connect the electrical connector to the parking brake switch.
7. Install the storage pocket.

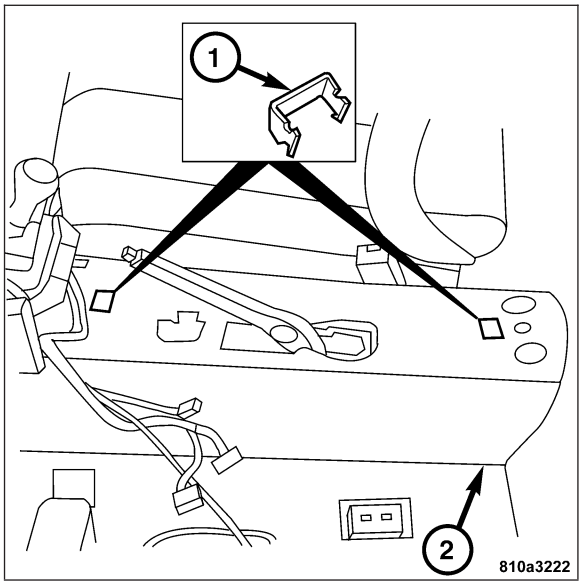

8. Install the paneling (2) in the left footwell.
9. Install the door sill trim plate (4). **Refer to Page 23-193**. Install the edge guard (1) in the area of the paneling (2). Install the screw (3) then install the cap.
10. Install the cover below instrument panel. **Refer to Page 23-155**.
11. Install the air outlet cover in the footwell.
12. Install the ashtray housing with the stowage compartment in the front center console. **Refer to Page 23-183**.
13. Install the cover on the center console. **Refer to Page 23-183**.
14. Install the rear center console. **Refer to Page 23-183**.
15. Install the front seat. **Refer to Page 23-203**.

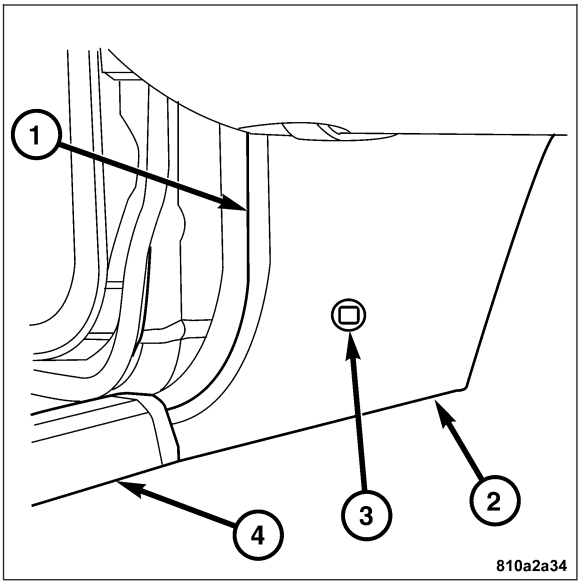

CENTER CONSOLE

REMOVAL

CENTER CONSOLE (FRONT)

1. Remove the lower instrument panel (2). **Refer to Page 23-149** and **Refer to Page 23-149**.

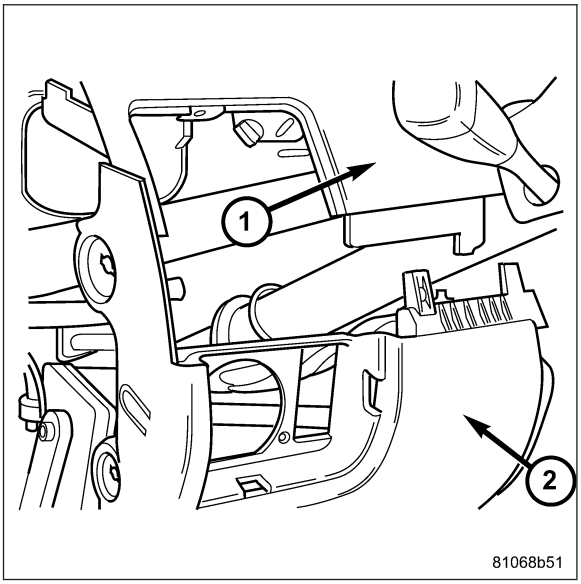

2. Remove the instrument cluster cover (1). **Refer to Page 23-149**.

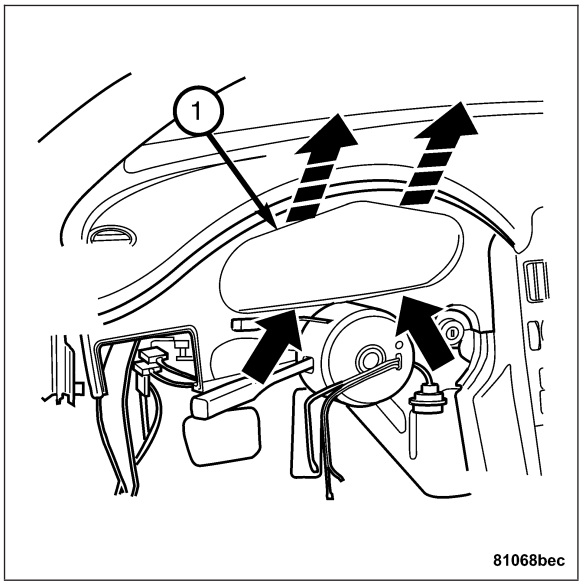

3. Remove the rear center console (2). **Refer to Page 23-173**.

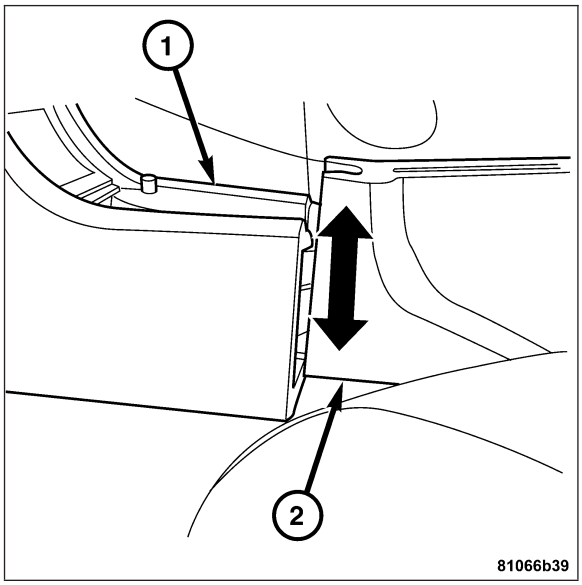

4. Remove the center console cover (1). **Refer to Page 23-173**.

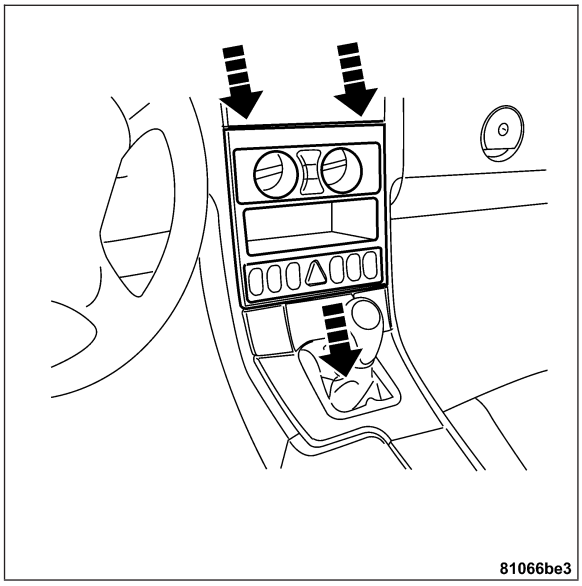

5. Remove the ashtray with stowage compartment (1) on the center console. **Refer to Page 23-173**.

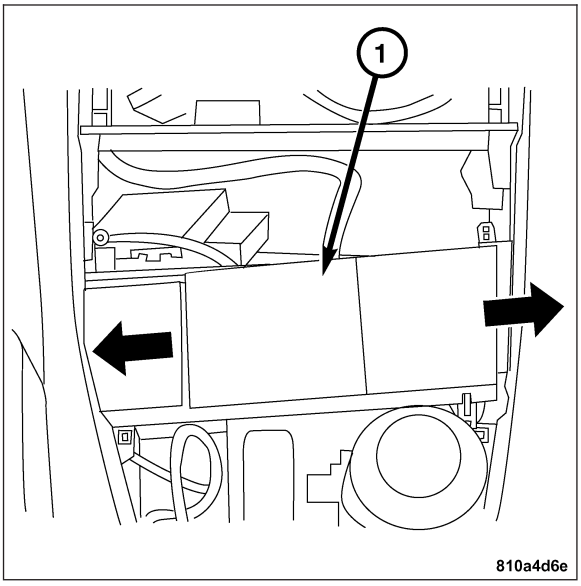

6. Remove the glove compartment from the hinges (2). **Refer to Page 23-143**.

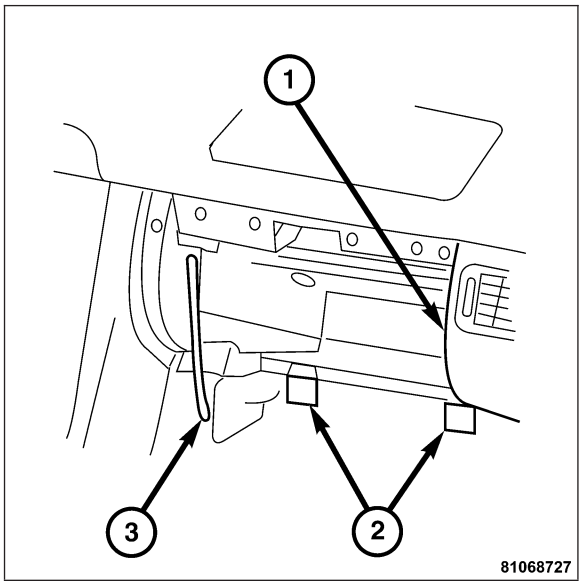

7. Remove the A/C heater control module (2). **Refer to Page 24-79**.

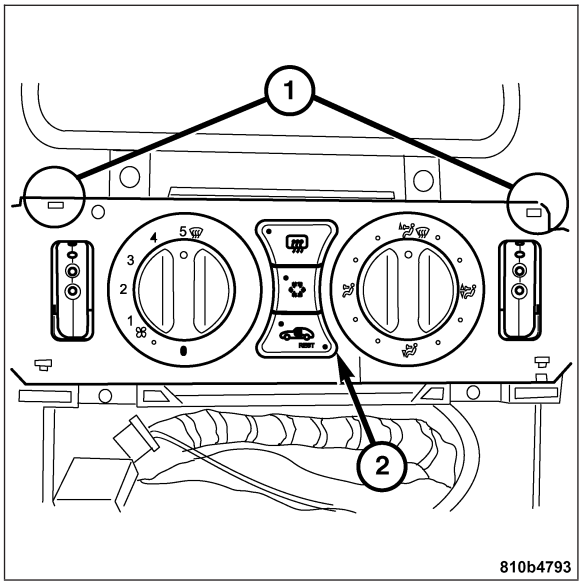

8. Remove the screws (3) attaching the center console to the rear center console, air duct (2) and the instrument panel top section (1).

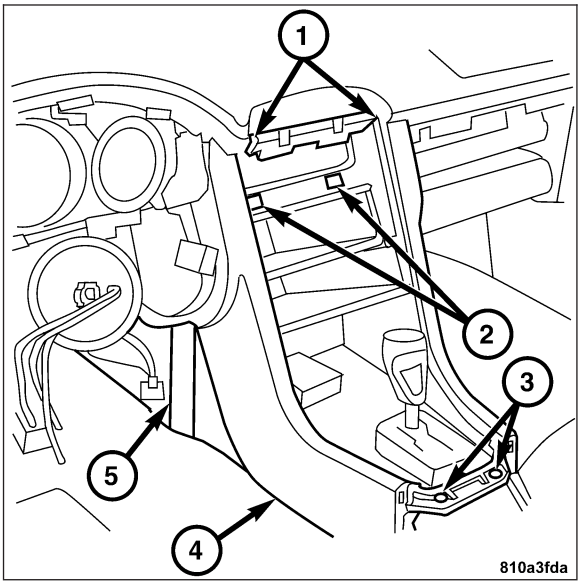

9. Remove the center console (2) downward from the top section (1) of the instrument panel.
10. Remove the center console (2) from the vehicle.

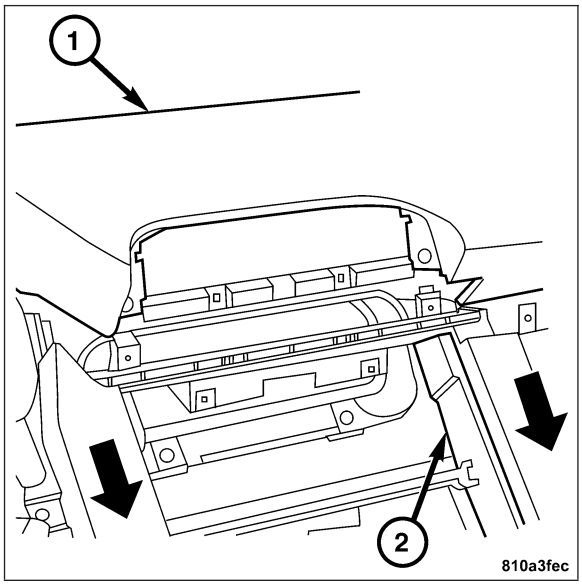

REMOVAL - CENTER CONSOLE COVER

1. Remove the radio.

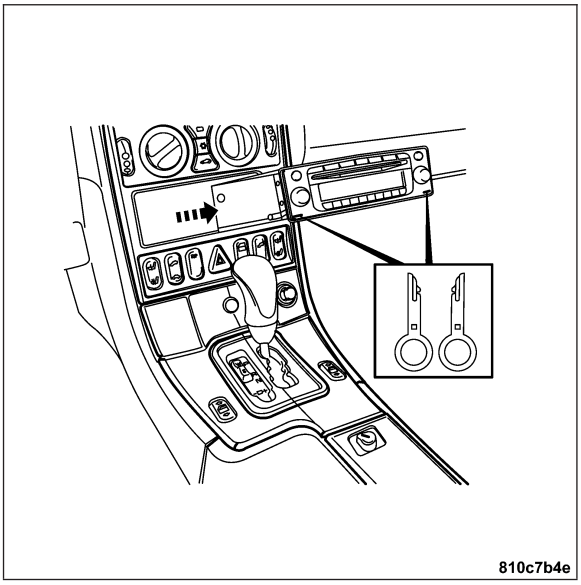

2. Remove the screws (1) in the radio cutout attaching it to the center console cover.

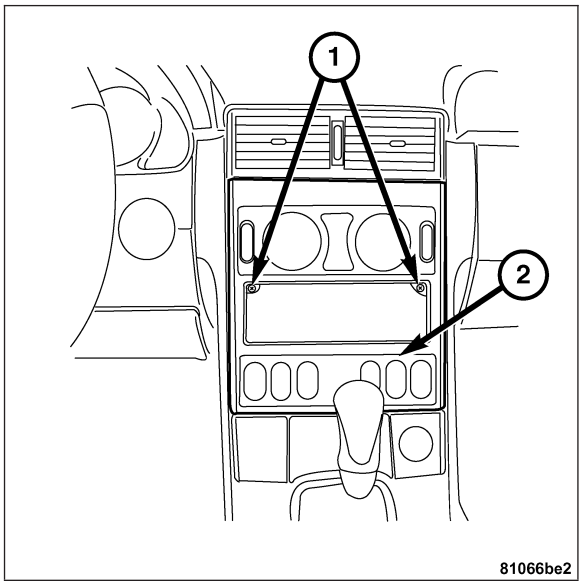

3. Pull the cover (1) toward the rear and pull it out at the top of the instrument panel (2 hooks).

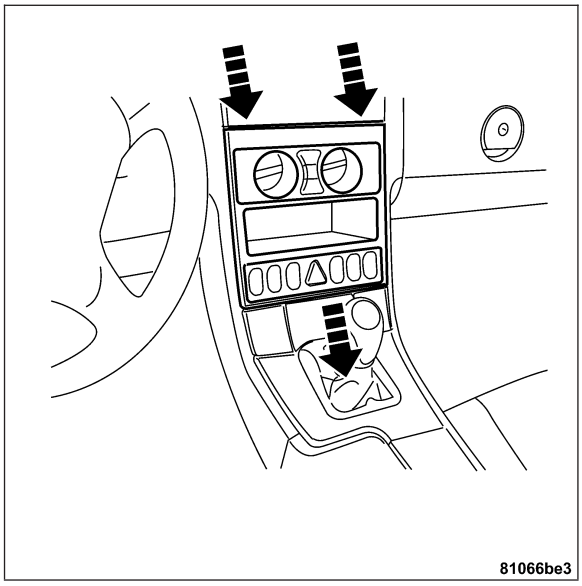

4. Disconnect the console switch group at the catch lugs (2).
5. Remove the console switch group (1) from the cover.

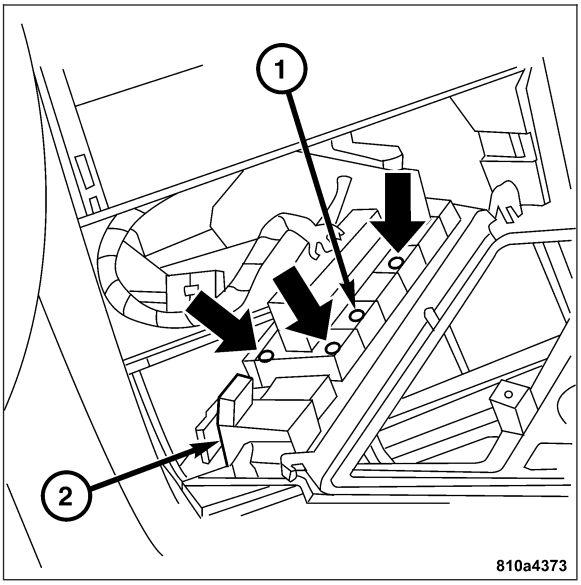

REMOVAL - REAR CENTER CONSOLE

1. Remove the cover (1) around the shift lever. **Refer to Page 23-173**.

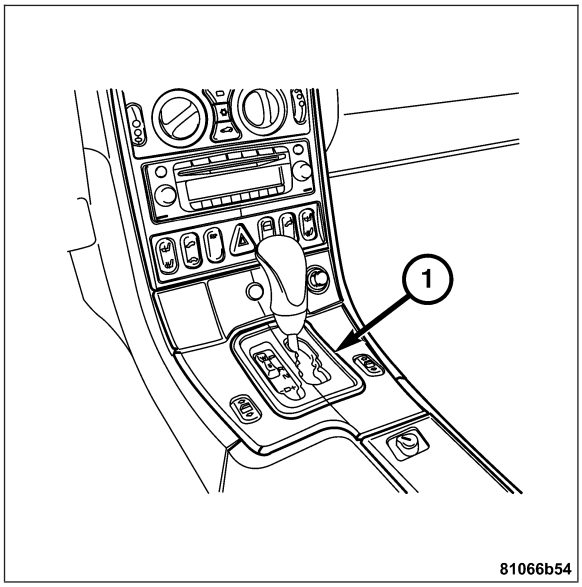

2. Pull the handle (1) off the parking brake lever.

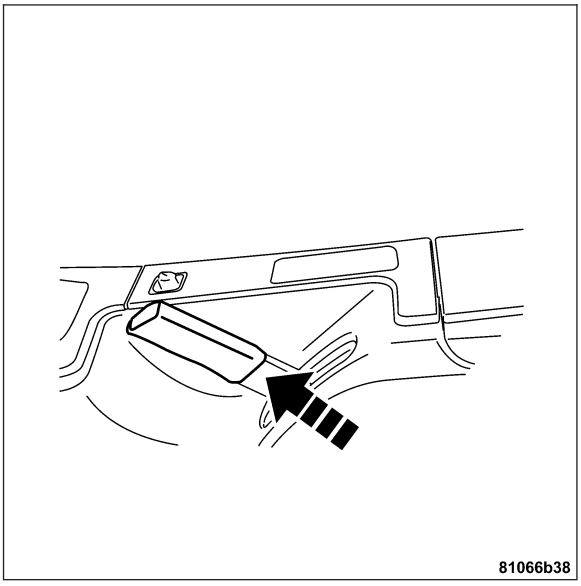

3. Remove the screws (1) attaching the center console to the rear center console.

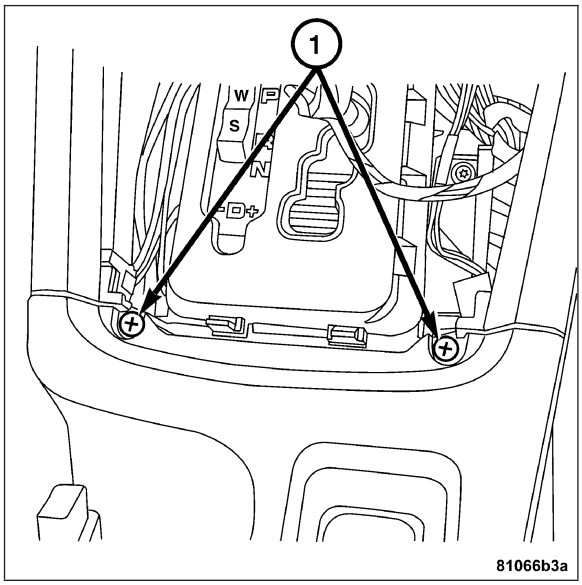

4. Open the lid on the rear stowage compartment.

Note: The carpet flap is approximately 2 in. wide and is attached with Velcro© to the stowage compartment.

5. Lift the carpeting (2) at the rear of the rear stowage compartment.
6. Remove the nuts (1).

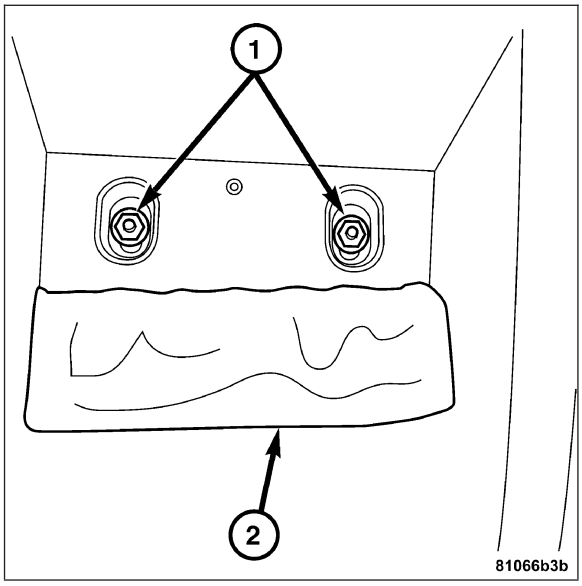

7. Lift the rear center console (2) up uniformly while moving it out at the front, disconnecting it from the arresting hook at the separating point of the front (1) and rear center consoles (2).
8. Guide the parking brake handle through the opening in the retractable cover.
9. Disconnect all electrical connectors.
10. Remove the rear center console (2) from the vehicle.

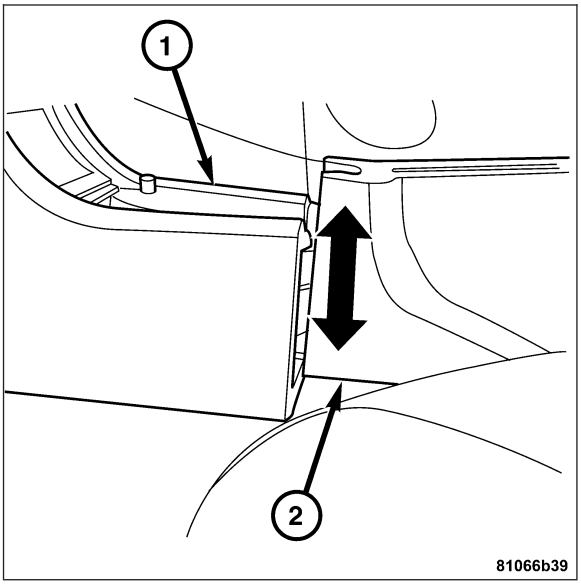

REMOVAL - ASHTRAY

1. Remove the cover (1) on the center console. **Refer to Page 23-173**

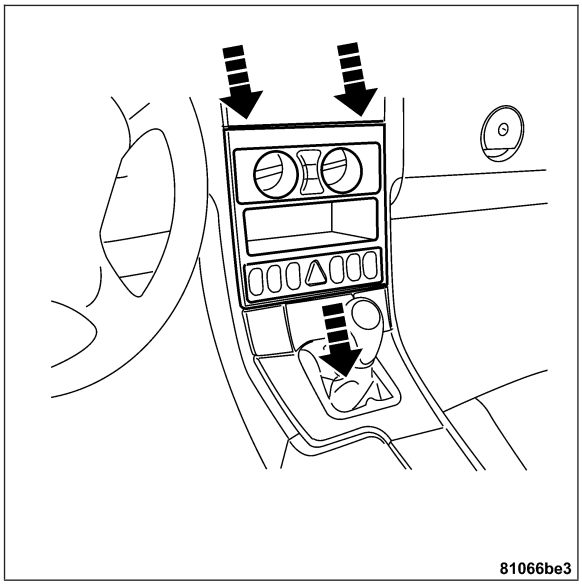

2. Remove the screws (1-3) attaching the ashtray (2) to the center console.

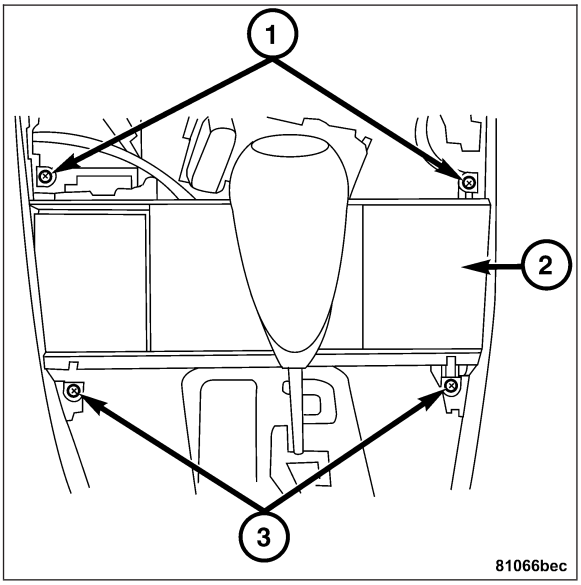

3. Press the ashtray housing (1) to the left and remove it toward the right (arrows).

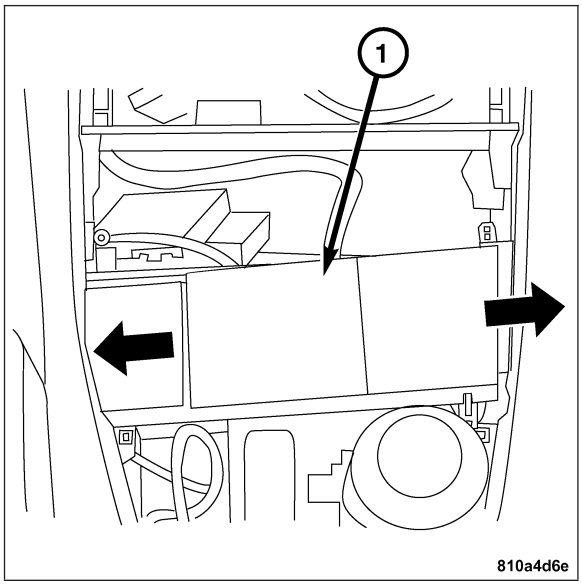

4. Disconnect the ashtray harness connector for the courtesy light (1).

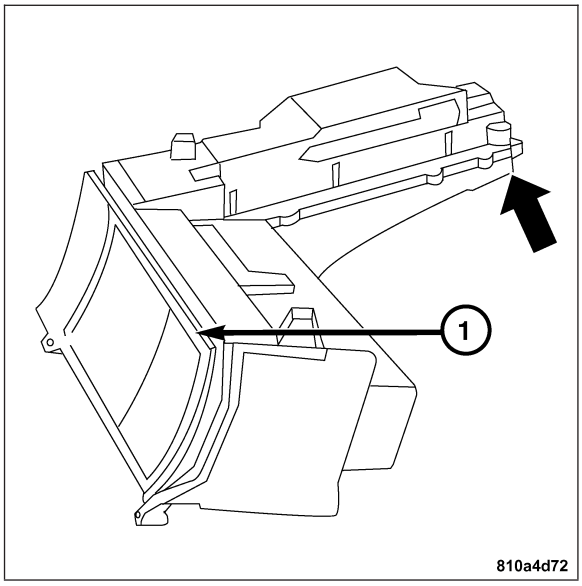

REMOVAL - SHIFT LEVER ASSEMBLY COVER

1. Remove the chrome plastic frame (1) with a plastic wedge.

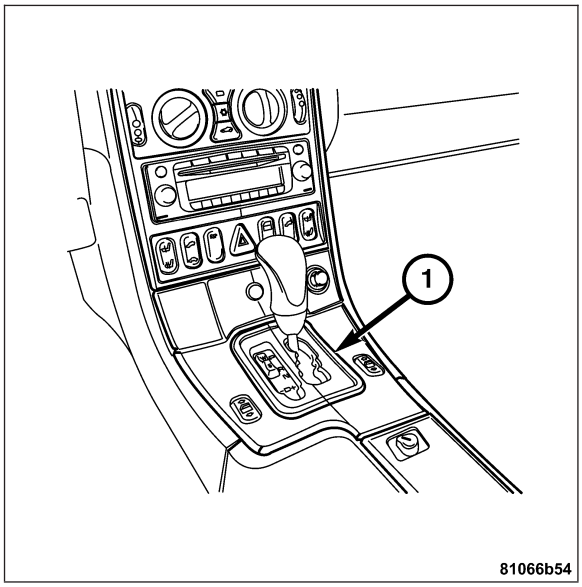

2. Press the cover (1) out of the catch in the center console at the rear and side with a plastic wedge.

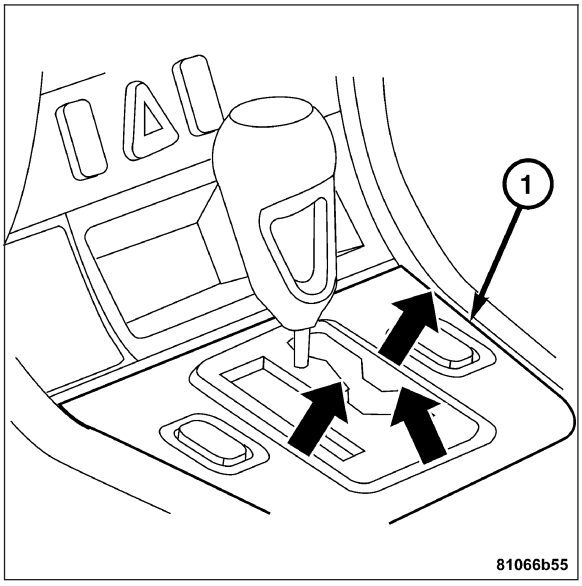

3. Disconnect the electrical connectors (1) to the power window switches.

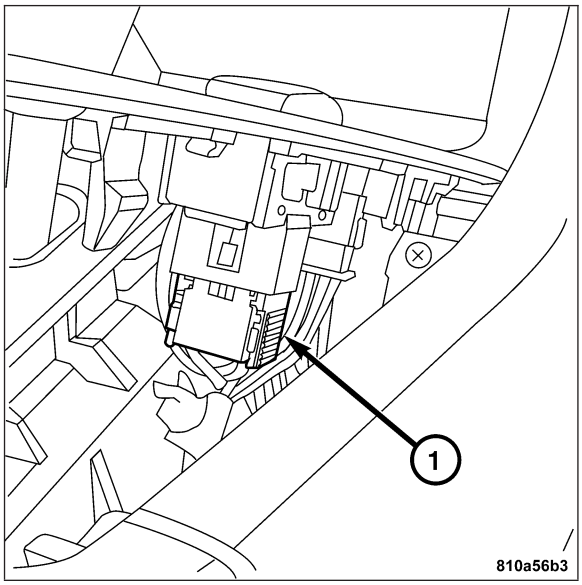

INSTALLATION

CENTER CONSOLE (FRONT)

Note: When installing, insert the insulating mat, expose the electric wires and insert the panel into the side insert tabs on the center console.

1. Install the center console (4) upward into the top section of the instrument panel.
2. Install the screws attaching the center console to the rear center console (3), air duct (2) and instrument panel top section (1).

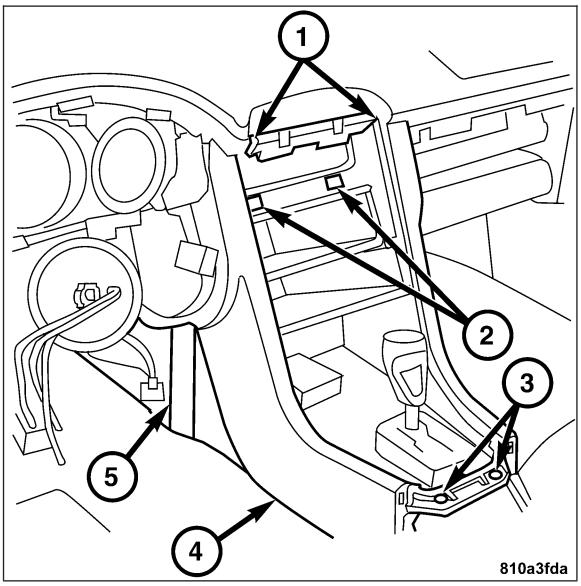

3. Install the A/C heater control module (2). **Refer to Page 24-81**,

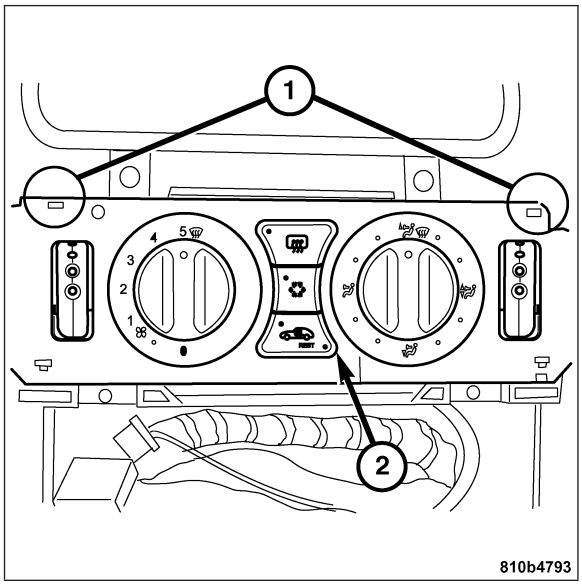

4. Install the glove compartment to the hinges (2). **Refer to Page 23-146**.

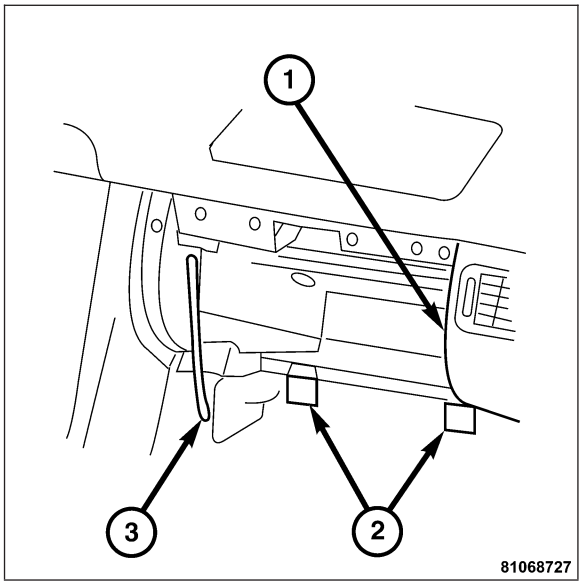

5. Install the ashtray with the stowage compartment (1) on the center console. **Refer to Page 23-183**.

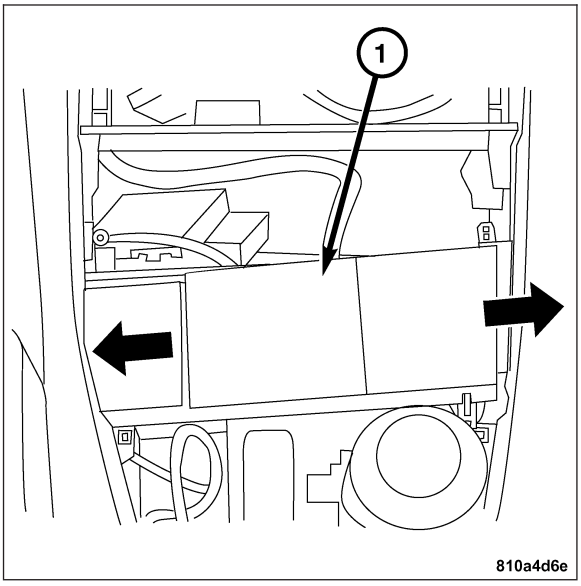

6. Install the center console cover (1). **Refer to Page 23-183**.

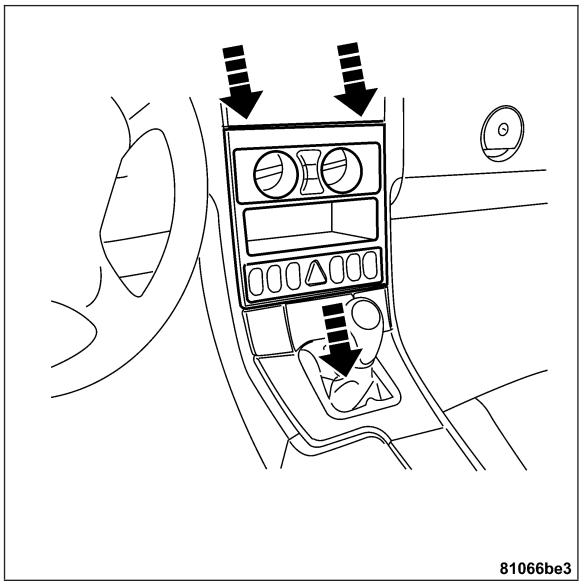

7. Install the rear center console (2). **Refer to Page 23-183**.

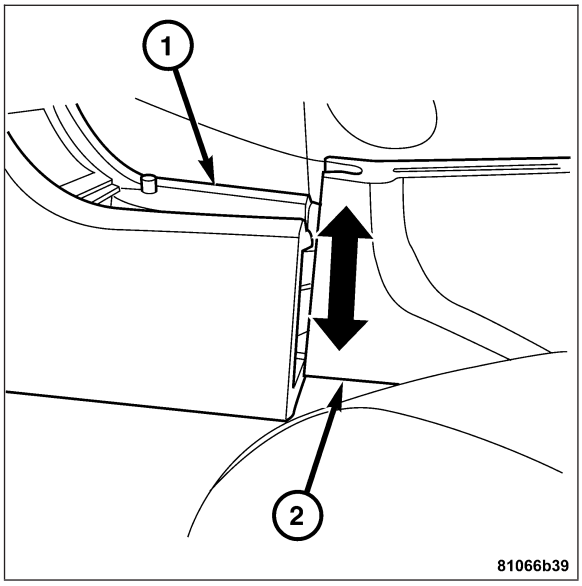

8. Install the instrument cluster cover (1). **Refer to Page 23-155**.

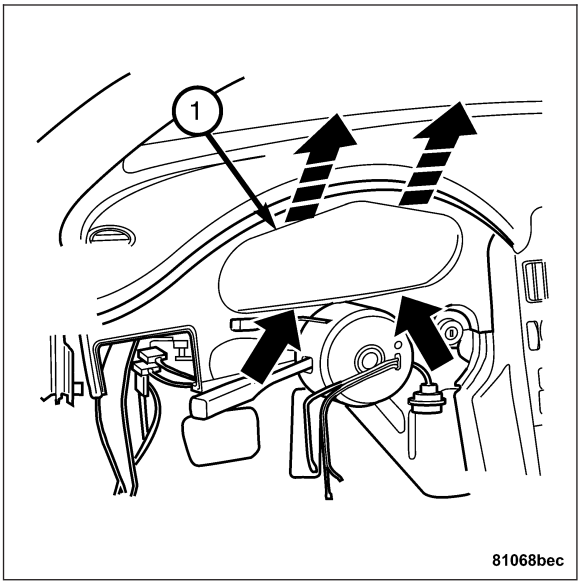

9. Install the lower instrument panel (2). **Refer to Page 23-155**.

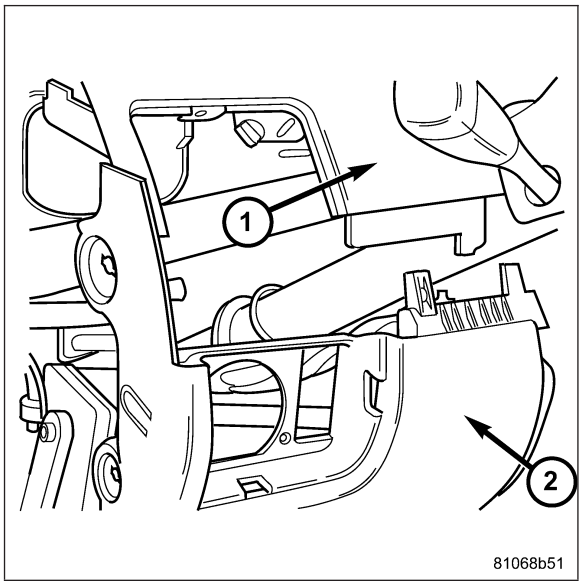

INSTALLATION - CENTER CONSOLE COVER

1. Install the console switch group (1) to the cover.
2. Connect the cockpit switch group to the catch lugs (2).

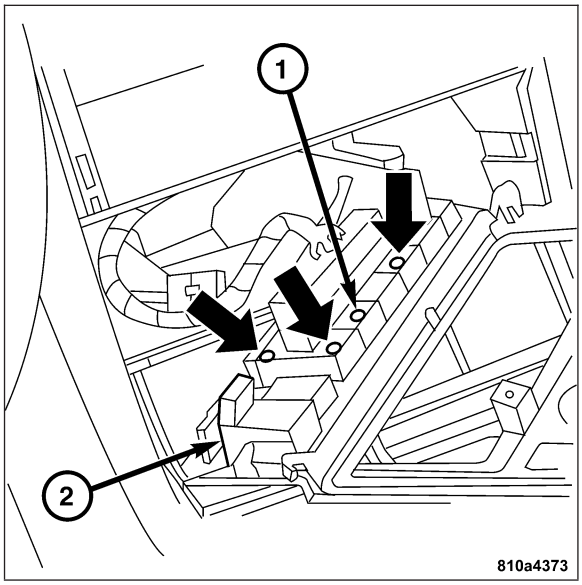

3. Push the cover (2) toward the front at top on the instrument panel top section.
4. Install the screws (1) in the radio cutout.

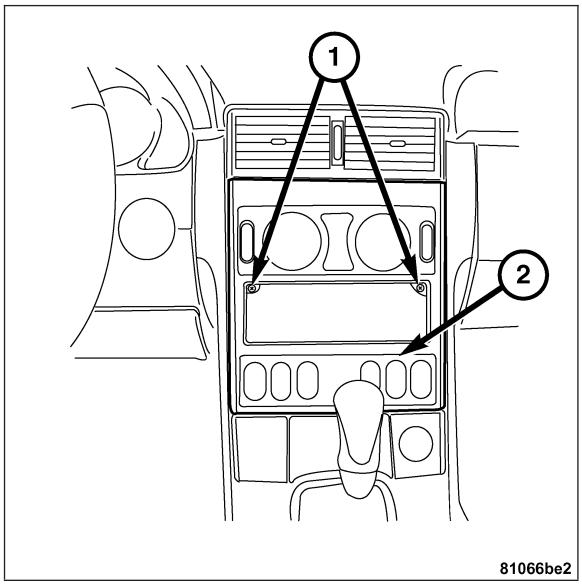

5. Install the radio.

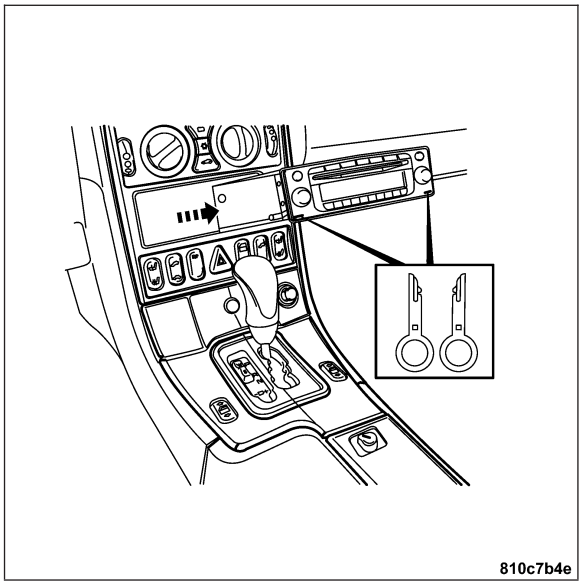

INSTALLATION - REAR CENTER CONSOLE

1. Connect the electrical connectors.
2. Guide the parking brake handle through opening in the retractable cover.
3. Install the rear center console (2) uniformly while moving in at front (1) arresting hook at the separating point.

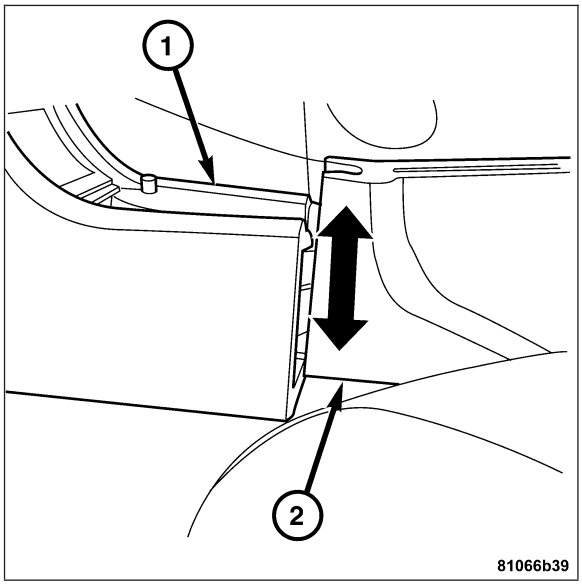

4. Install the nuts (1).
5. Install the carpeting (2).
6. Close the cover on the stowage compartment.

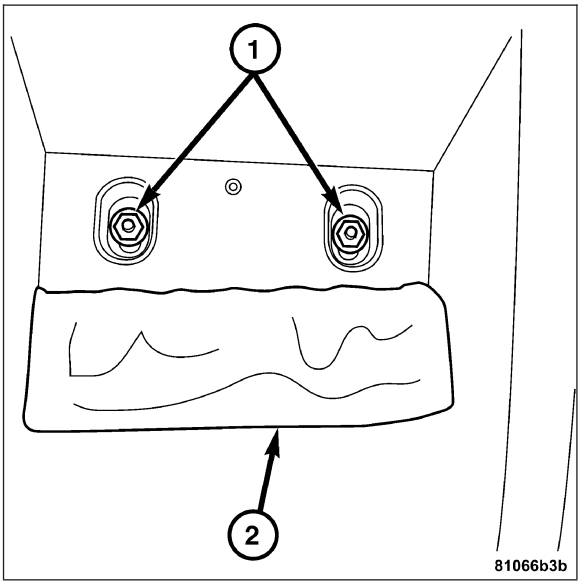

7. Install the screws (1) attaching the front and the rear center consoles.
8. Instal the handle on the parking brake lever.

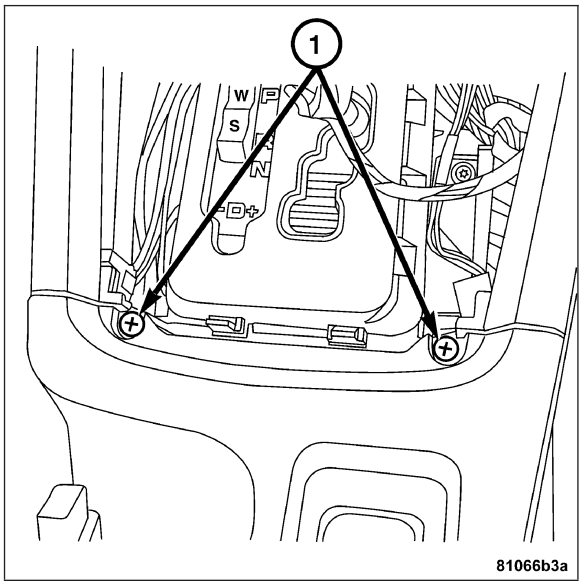

9. Install the cover (1) around the shift lever. **Refer to Page 23-183**.

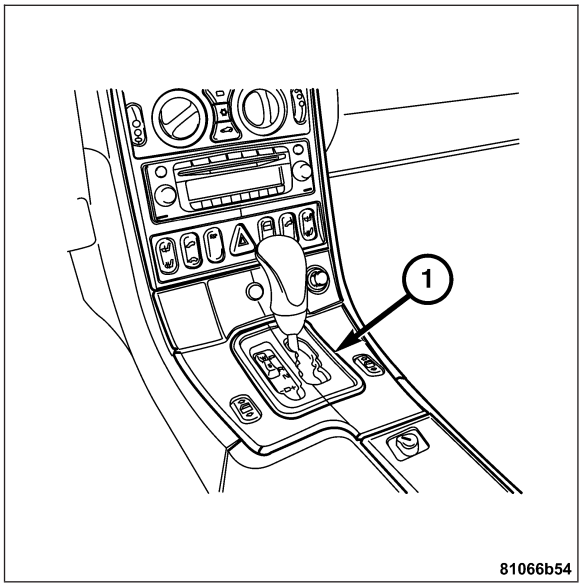

INSTALLATION - ASH TRAY

1. Connect the ashtray courtesy light harness connector (1).

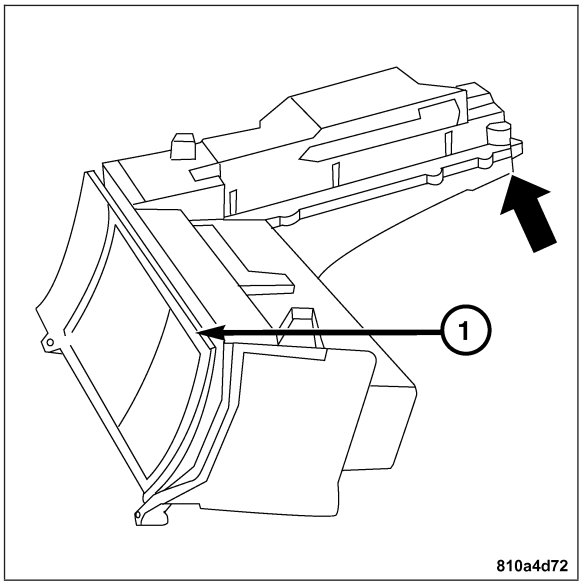

2. Install the ashtray housing (1) to the right and push it toward the left.

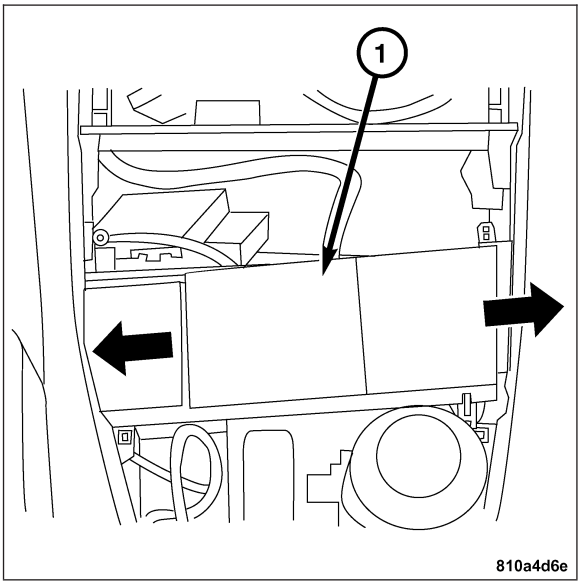

3. Install the screws (1-3) attaching the ashtray (2) to the center console.

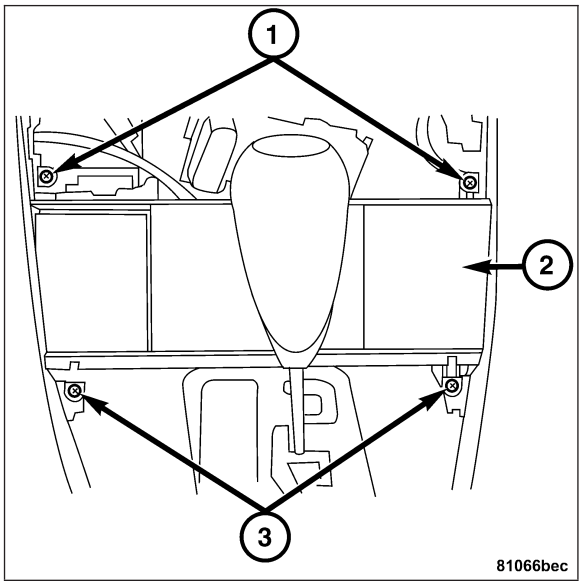

4. Install the cover (1) on the center console. **Refer to Page 23-183**.

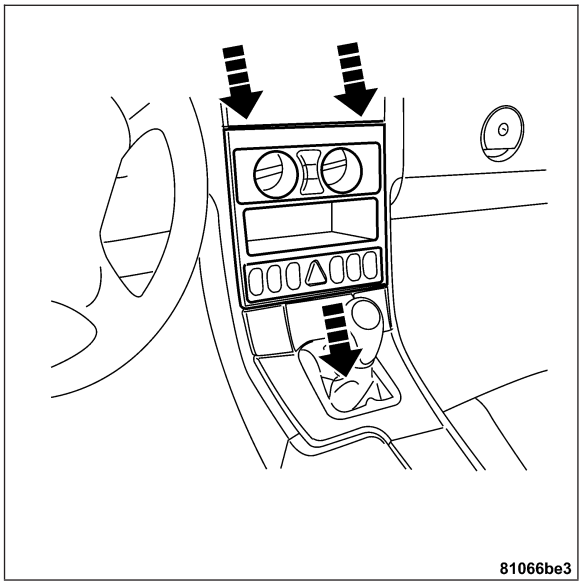

5. Install the cover around the shift lever. **Refer to Page 23-183**.

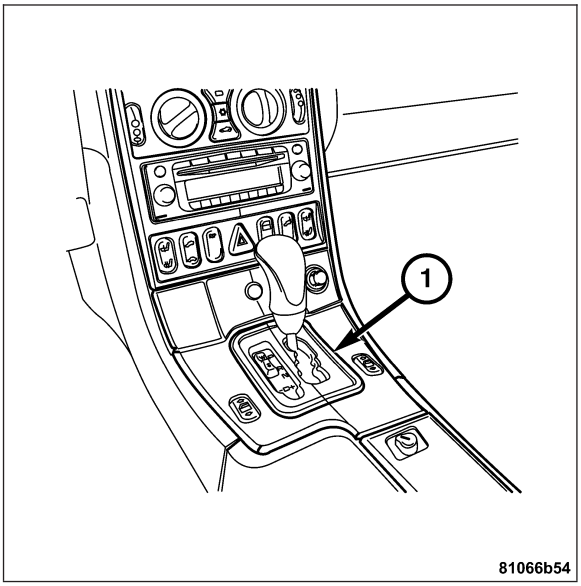

INSTALLATION - SHIFT LEVER ASSEMBLY COVER

1. Connect the electrical connectors (1) to the power window switches.

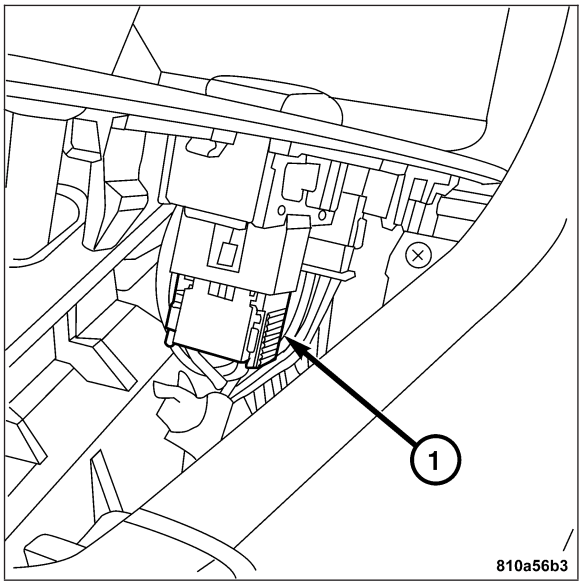

2. Press cover (1) into the catch in the center console at the rear and the side.

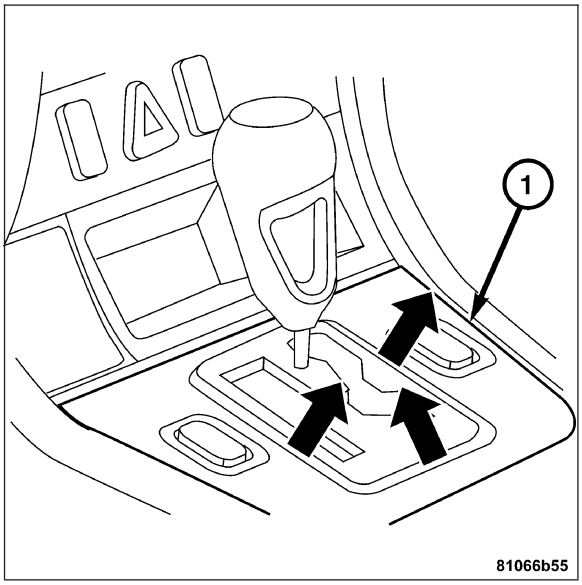

3. Install the chrome plastic frame (1).

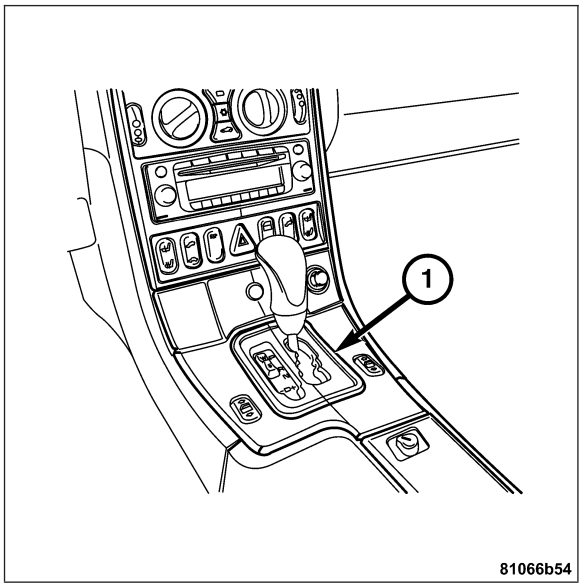

DOOR SILL TRIM PLATE

REMOVAL

1. Pull up on the door sill trim plate releasing it from the body clips.

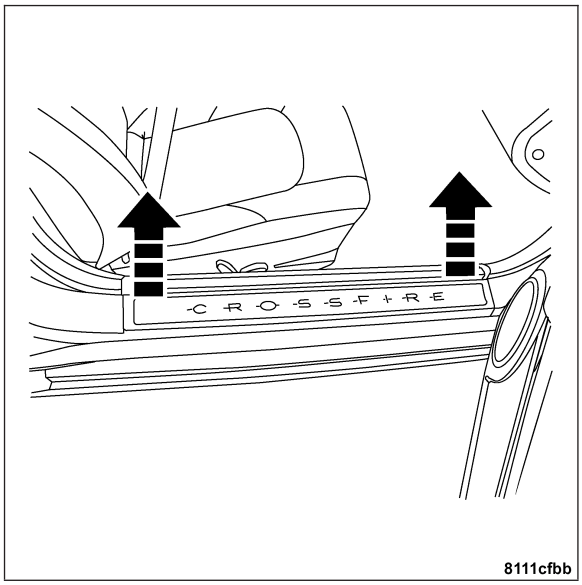

INSTALLATION

1. Push the door sill trim down until it locks into place.

HEADLINER

REMOVAL

1. Remove the dome lamp assembly (2) by gently prying off the lens using a trim stick (1) or equivalent.

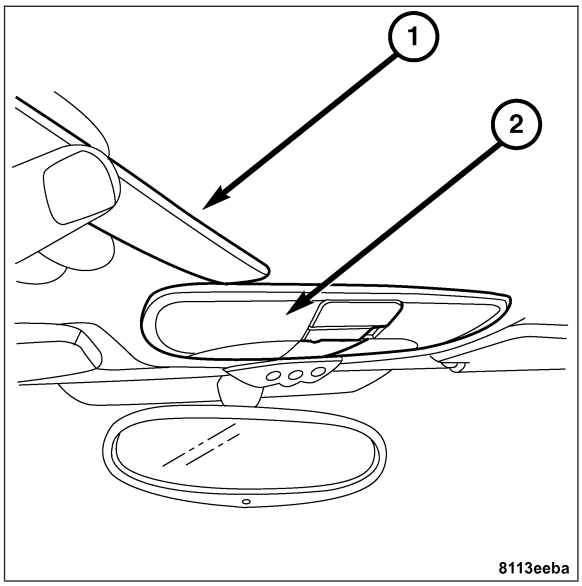

2. Remove the two retaining screws (1) and pull the dome lamp assembly from the headliner.

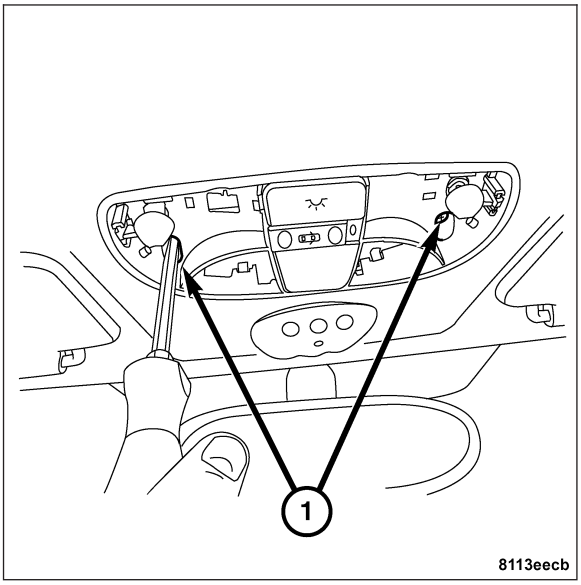

3. Disconnect the dome lamp assembly harness connector (1) and remove the dome lamp assembly.

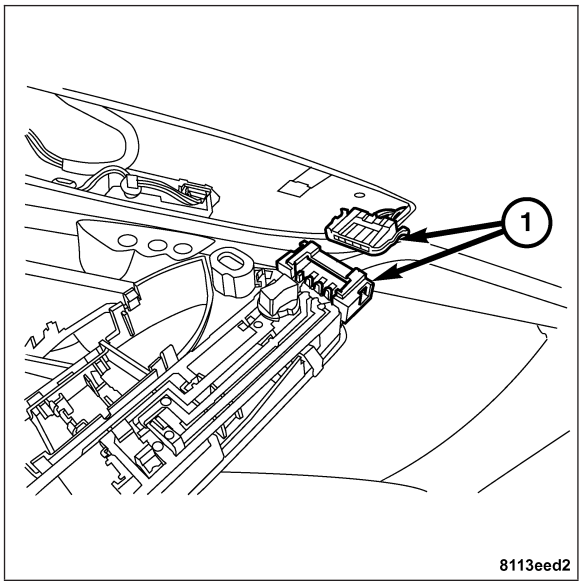

4. Remove the garage door opener/TPM module (1) from the headliner using a trim stick or equivalent. Pull the module from the headliner and disconnect the harness connector.
5. Remove both the right and left sun visor assemblies.

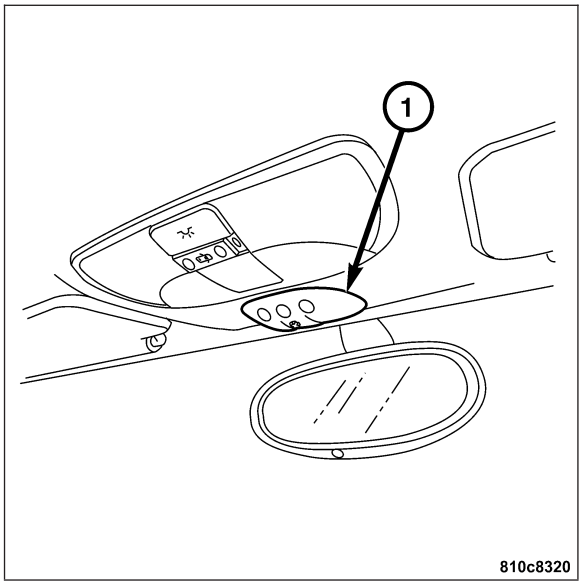

6. Remove the right and left A-pillar trim panels.
7. Tilt both seats all the way forward and all the way down.

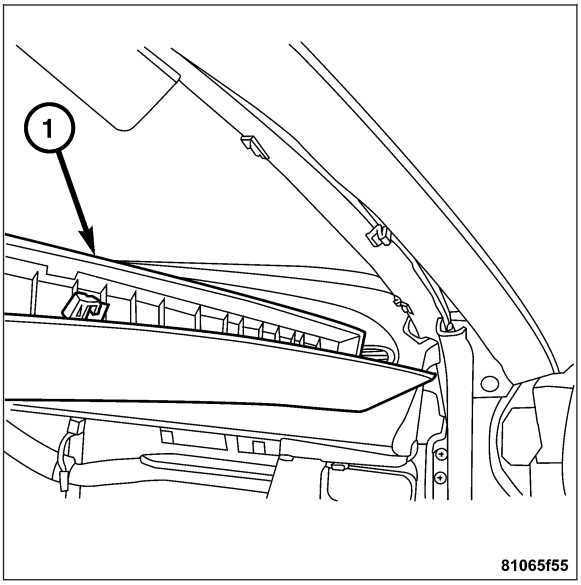

8. Disengage rear interior trim panel (2) retaining clips near headliner.
9. Remove the rear headliner retaining clips (1).
10. Remove the headliner from the passenger door opening.

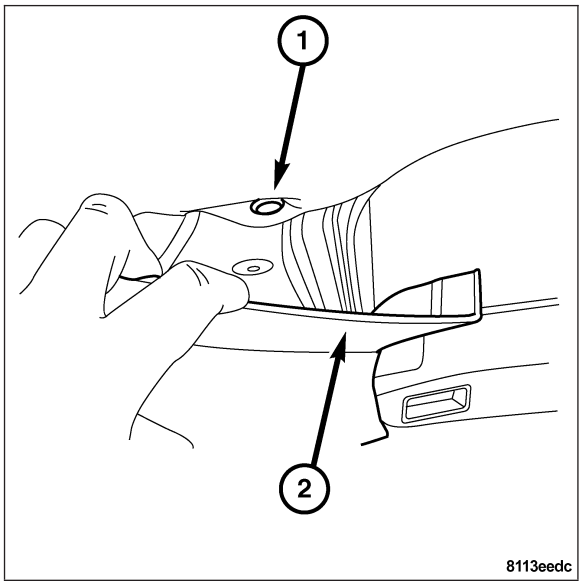

INSTALLATION

1. Install the headliner through the passenger door opening.
2. Install the sun visor assemblies. This will hold the headliner into the correct position.
3. Install the rear headliner retainers (2).
4. Connect the rear interior trim panel retaining clips (1) near headliner.

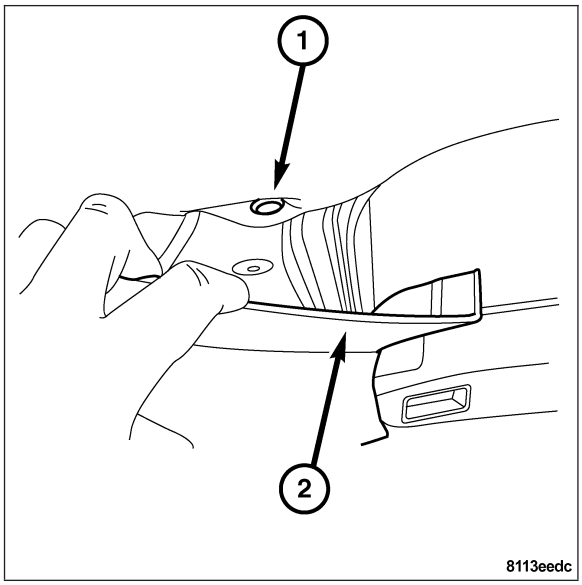

5. Install the right and left A-pillar trim panels (1).
6. Using a trim stick, reinstall head liner into upper window weather strips.

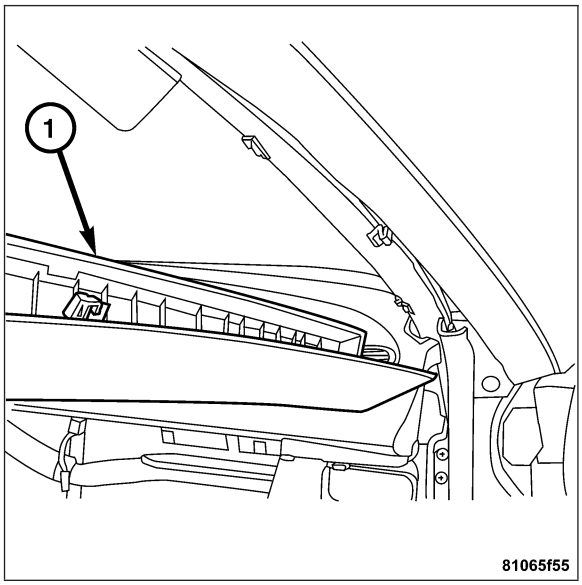

7. Connect the garage door opener/TPM module (1) harness connector and install into the headliner.

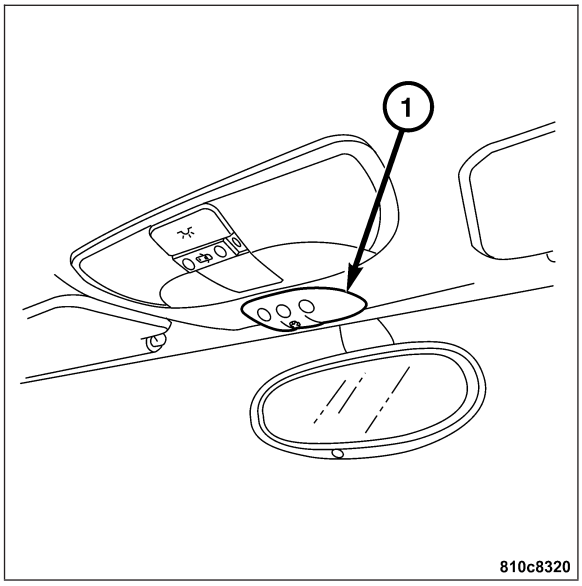

8. Connect the dome lamp assembly harness connector (1) and install into the headliner.

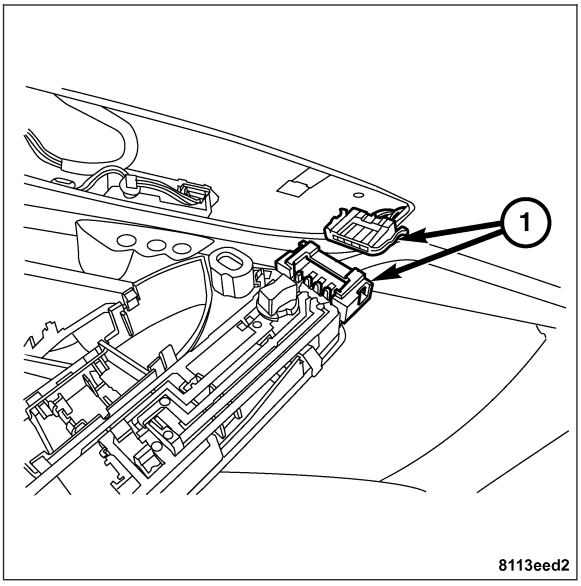

9. Install the retaining screws (1).
10. Install the dome lamp assembly lens.

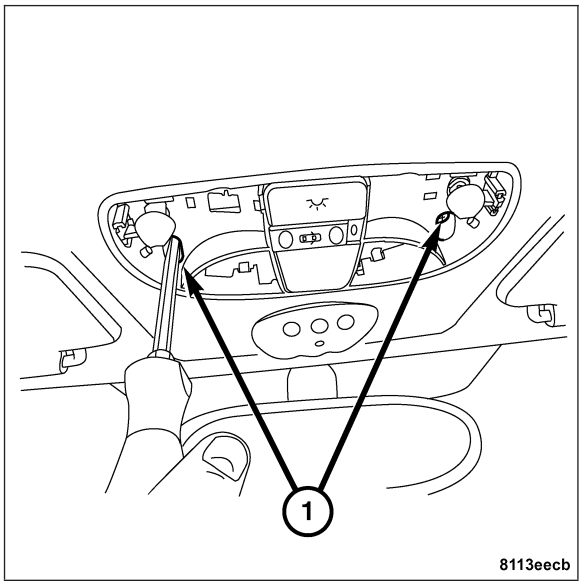

PAINT

TABLE OF CONTENTS

page

PAINT
SPECIFICATIONS - PAINT CODE 199
PAINT CODE
DESCRIPTION 199
BASE COAT/CLEAR COAT FINISH
DESCRIPTION 199
PAINT TOUCH - UP
DESCRIPTION 200
WET SANDING/BUFFING & POLISHING
DESCRIPTION 200

PAINT

SPECIFICATIONS - PAINT CODE

EXTERIOR COLORS

EXTERIOR COLOR	DAIMLERCHRYSLER CODE
Sapphire Silver Metallic Clear Coat	BS3
Graphite Metallic Clear Coat	ZDR
Alabaster Clear Coat	960
Black Clear Coat	040
Blaze Red Crystal Pearl Coat	ARH

INTERIOR COLORS

INTERIOR COLOR	DAIMLERCHRYSLER CODE
Dark Slate Gray and Cedar two-tone	XDV/ARK
Dark Slate Gray and Medium Slate Gray two-tone	XDV/BD5
Dark Slate Gray monotone	XDV

PAINT CODE

DESCRIPTION

Exterior vehicle body colors are identified on the Body Code plate. The plate is located on the in the engine compartment and attached to the top of the right frame rail. Refer to the Introduction section at the front of this manual for body code plate description. The first digit of the paint code listed on the vehicle indicates the sequence of application, i.e.: P = primary coat, Q = secondary coat.

BASE COAT/CLEAR COAT FINISH

DESCRIPTION

The original equipment finish is a multi-step process that involves cleaning, electrodeposition (e-coat), base coat, and clear coat steps. Additionally, selected areas of the vehicle may be coated with an anti-chip finish.

PAINT TOUCH - UP

DESCRIPTION

WARNING: USE AN OSHA APPROVED BREATHING FILTER WHEN SPRAYING PAINT OR SOLVENTS IN A CONFINED AREA. PERSONAL INJURY CAN RESULT.

When a painted metal surface has been scratched or chipped, it should be touched-up as soon as possible to avoid corrosion. For best results, use Mopar® Scratch Filler/Primer, Touch-Up Paints and Clear Top Coat. Refer to Introduction group of this manual for Body Code Plate information.

OPERATION

WARNING: AVOID PROLONGED SKIN CONTACT WITH PETROLEUM OR ALCOHOL – BASED CLEANING SOLVENTS. PERSONAL INJURY CAN RESULT. AVOID PROLONGED SKIN CONTACT WITH PETROLEUM OR ALCOHOL – BASED CLEANING SOLVENTS. PERSONAL INJURY CAN RESULT.

1. Scrape any loose paint and corrosion from the inside of the scratch or chip.
2. Clean the affected area with Mopar® Tar/Road Oil Remover, and allow to dry.
3. Fill the inside of the scratch or chip with a coat of filler/primer. Do not overlap the primer onto a good surface finish. The applicator brush should be wet enough to puddle-fill the defect without running. Do not stroke the brush applicator on the body surface. Allow the filler/primer to dry hard.
4. Cover the filler/primer with color touch-up paint. Do not overlap the touch-up color onto the original color coat around the scratch or chip. Butt the new color to the original color, if possible. Do not stroke the applicator brush on the body surface. Allow the touch-up paint to dry hard.
5. On vehicles without clear coat, the touch-up color can be lightly finesse sanded (1500 grit) and polished with rubbing compound.
6. On vehicles with clear coat, apply clear top coat to touch-up paint with the same technique as described in Base Coat/Clear Coat Finish, **Refer to Page 23-199**. Allow clear top coat to dry hard. If desired, finesse sanding can be performed on clear top coat.

WET SANDING/BUFFING & POLISHING

DESCRIPTION

CAUTION: Do not remove more than .5 mils of clearcoat finish, if equipped. Basecoat paint must retain clearcoat for durability.
Use a Paint Thickness Gauge #PR-ETG-2X or equivalent to determine film thickness before and after the repair.

Minor acid etching, orange peel, or smudging in clearcoat or single-stage finishes can be reduced with light finesse sanding, hand buffing, and polishing. **If the finish has been finesse sanded in the past, it cannot be repeated. Finesse sanding operation should be performed by a trained automotive paint technician.**

SEATS

TABLE OF CONTENTS

	page
SEATS	
DESCRIPTION	201
SEAT	
REMOVAL	202
INSTALLATION	203
SEAT BACK	
REMOVAL	
SEAT BACK	204
REMOVAL - PLASTIC BACK COVER	204
INSTALLATION	
SEAT BACK	205
INSTALLATION - PLASTIC BACK COVER	205
SEAT BACK COVER	
REMOVAL	206
INSTALLATION - SEAT BACK COVER	208
SEAT CUSHION	
REMOVAL	211
INSTALLATION	213
SEAT CUSHION COVER	
REMOVAL	214
INSTALLATION	217

SEATS

DESCRIPTION

Leather high-back bucket seats are standard. Both seats feature eight-way power adjustment - horizontal, vertical, cushion tilt, and back angle. Ergonomic power seat switches with tabs resembling the cushion and back in profile and placement mount on the outboard seat cushion side shields. Movement of the seats correlates with the direction of switch travel. Seat adjustment is allowed with the ignition switch in the ″off″ position or when the key is removed only when the door is open. The power adjuster provides 7.6 inches (194 mm) of longitudinal adjustment and 1.7 inches (43 mm) of vertical adjustment.

Standard heated seats have two heating levels and a timed automatic shutoff. Separate rocker switches for the driver and passenger heaters mount in the center console. Pressing the top of the switch turns on the normal heating level and pressing to bottom of the switch turns on the rapid heating level. Two lamps in each switch indicate the level of heat selected: one lamp illuminates for normal heating and both for rapid heating. Without user intervention, the timer automatically switches from rapid heating to normal heating after five minutes. Normal heating continues without manual intervention for approximately 30 minutes. The heaters may automatically switch off due to high electrical system demand or a low battery. When this occurs, one or both indicator lamps will blink (depending on selected heating level) until sufficient voltage is available.

SEAT

REMOVAL

1. Move the seat (1) all the way back to its lock position.
2. Pull the plastic front covering (3) from the seat tracks.
3. Remove the two front seat track bolts (2).

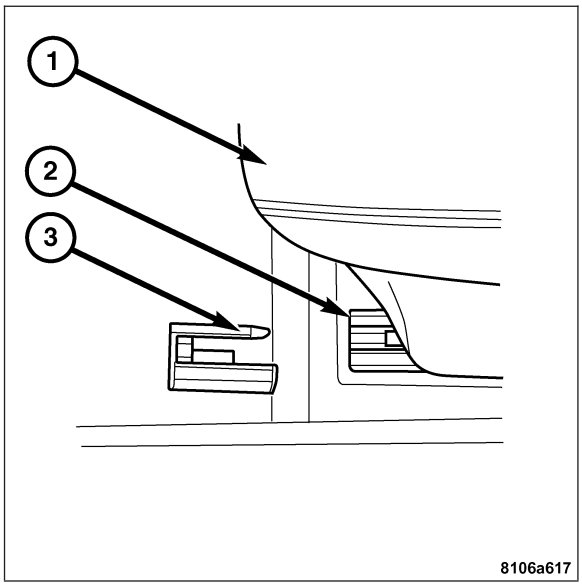

4. Move the seat all the way forward to its lock position.
5. Remove the bolt (2) on the seat track for the seat belt mounting.
6. Remove the belt end from the seat adjuster.
7. Remove the rear two bolts (1) attaching the seat track to the floor.
8. Disconnect the electrical connectors for the seat heater and the electrical seat adjustment.
9. Move the seat backward, lift up and then remove from the vehicle.

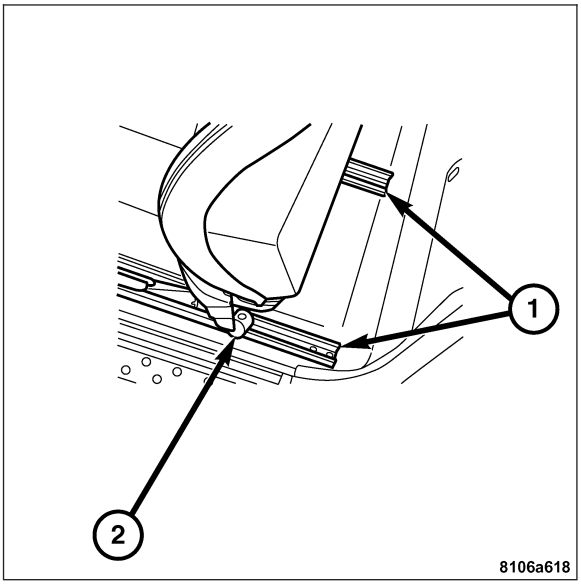

INSTALLATION

1. Install the seats into the vehicle.
2. Connect the electrical connectors for the seat heater and the electrical seat adjustment.
3. Insert the bolts (1) in the bolt holes in the rear of the seat track.
4. Tighten the two rear seat track bolts (1). Tighten to 50 N·m (37 ft. lbs.).
5. Install the belt end fitting to the seat adjuster.

Note: Tighten the bolt for the belt end fitting only so that it can be moved.

6. Install the bolt (2) at the belt end fitting. Tighten to 35 N·m (26 ft. lbs.).
7. Move the seat all the way backwards.
8. Install the two front seat track bolts (2). Tighten to 50 N·m (37 ft. lbs.).
9. Install the plastic covering (3) to the seat tracks.

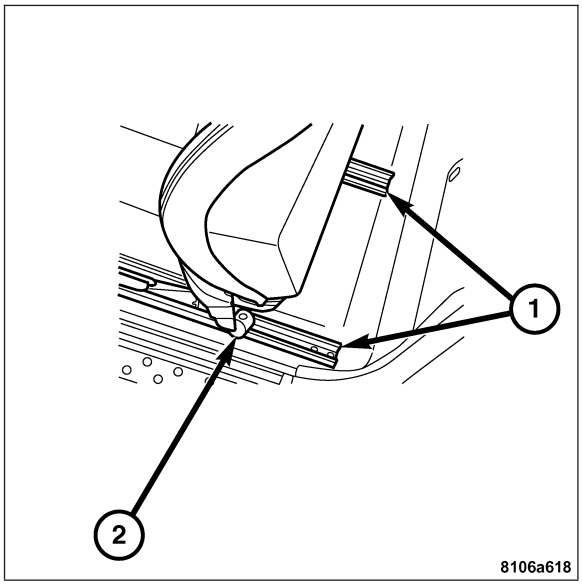

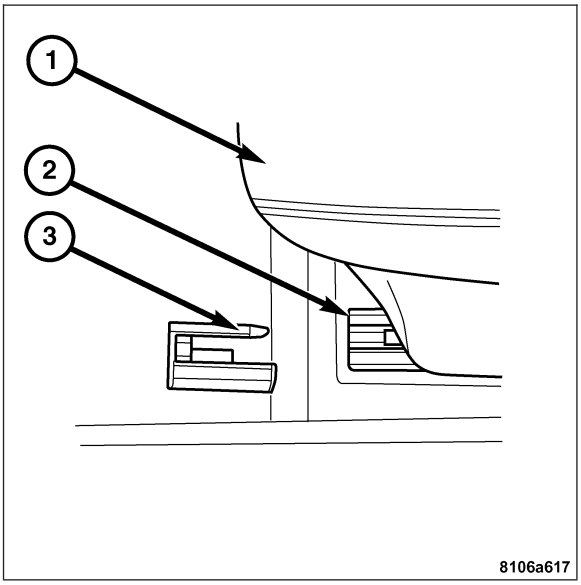

SEAT BACK

REMOVAL

SEAT BACK

1. Remove the front seat. **Refer to Page 23-202**.
2. Remove the seat cushion. **Refer to Page 23-211**.
3. Loosen the bolt on the seat height adjustment by removing the left and right bolts (2).
4. Remove the bolts (1) from the seat back.
5. Disconnect the seat back heater and adjustment electrical connectors.
6. Remove the seat back from the frame.

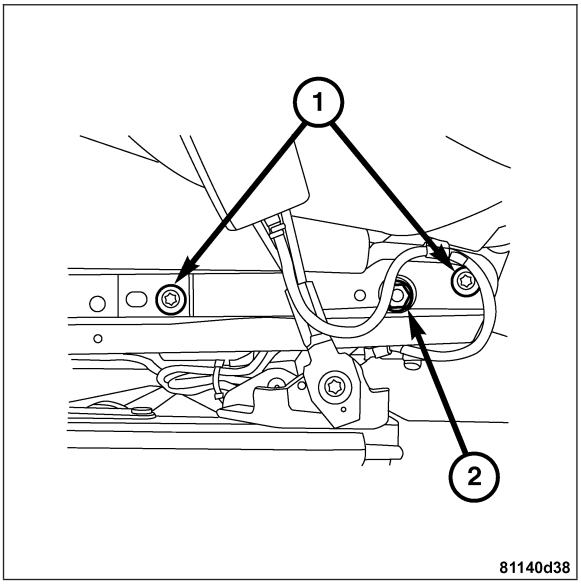

REMOVAL - PLASTIC BACK COVER

1. Remove the cover on the seat back (only down to step 6). **Refer to Page 23-206**.

Note: Use T25 Torx socket.

2. Remove the screws (1) on left and right sides.
3. Unhook the plastic back cover at the top of the seat back frame (2) and remove it from the seat back frame.

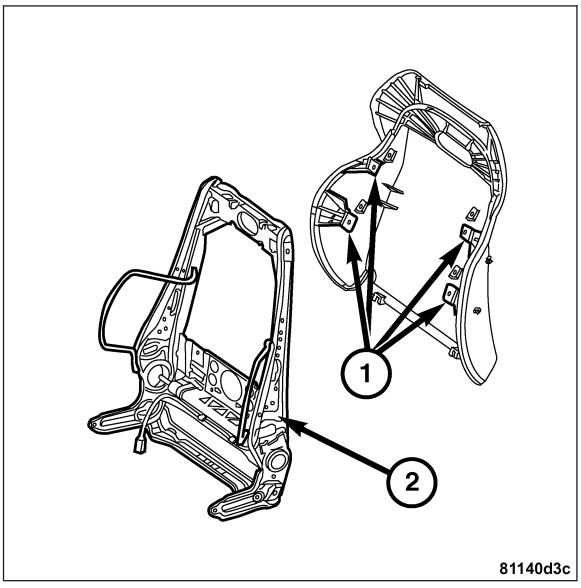

INSTALLATION

SEAT BACK

1. Install the seat back to the frame.
2. Connect the seat back heater and adjustment electrical connectors.
3. Install the bolts (1) to the seat back. Tighten to 35 N·m (26 ft. lbs.).
4. Install the seat height adjustment by installing the left and right bolts (2). Tighten to 24 N·m (18 ft. lbs.).
5. Install the seat cushion. **Refer to Page 23-213**.
6. Install the front seat. **Refer to Page 23-203**.

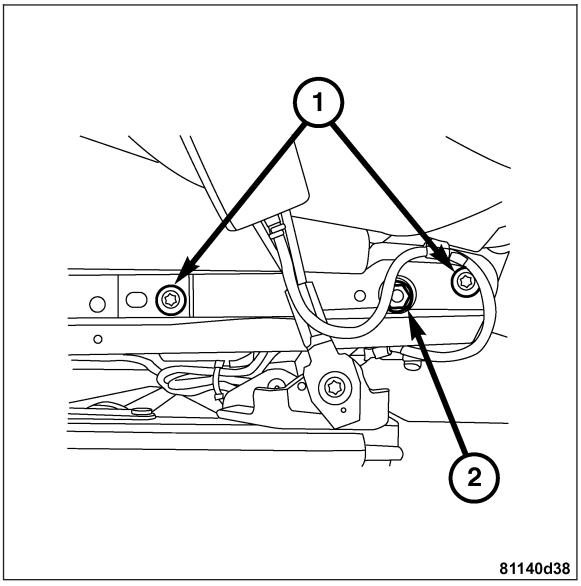

INSTALLATION - PLASTIC BACK COVER

1. Install the plastic back cover on the top of the seat back frame (2).
2. Install the screws (1) on left and right sides.
3. Install the cover on the seat back. **Refer to Page 23-208**.

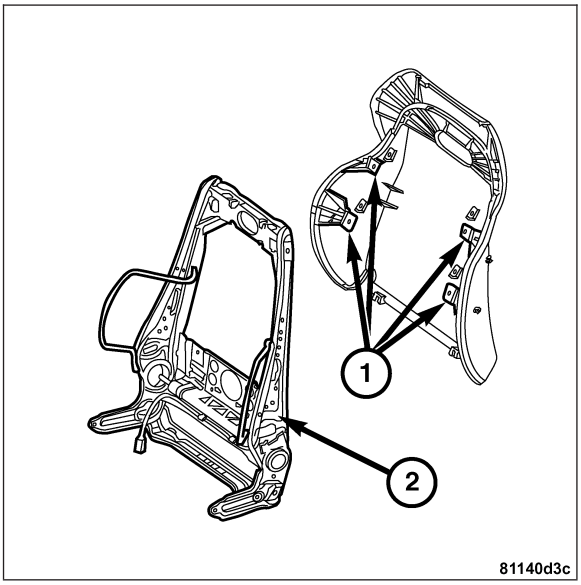

SEAT BACK COVER

REMOVAL

1. Remove the front seat back. **Refer to Page 23-204**.
2. Lay the seat back (1) down on a suitable surface with the cover (2) down.
3. Unhook the cover (2) all the way around on the clip groove in the rear shell.

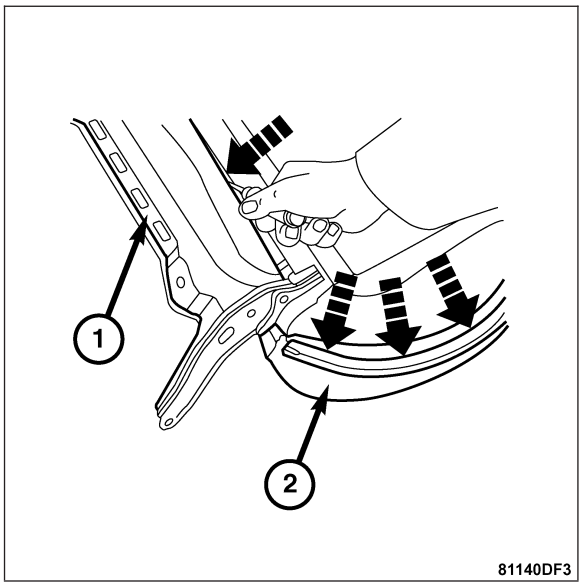

4. Remove seat back frame (3) from the foam rubber pad (2).

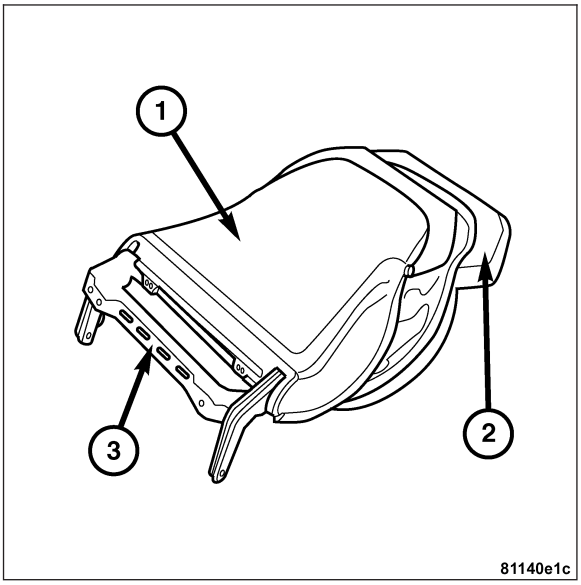

5. Remove the cover (2) from the Velcro® strip in area of seat back (1) hinge area.

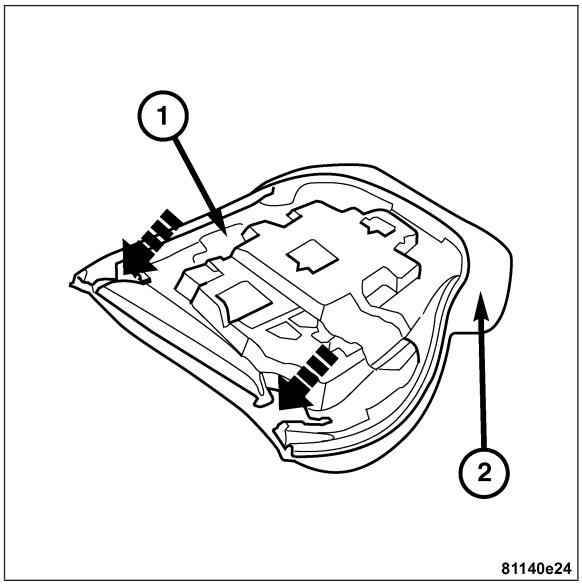

6. Pull the cover (1) over the foam rubber pad (3) in the upper area.
7. Remove the longitudinal retainers by turning the upholstery clips (2) 90°.
8. Remove the cover (1) from the foam rubber pad (3).

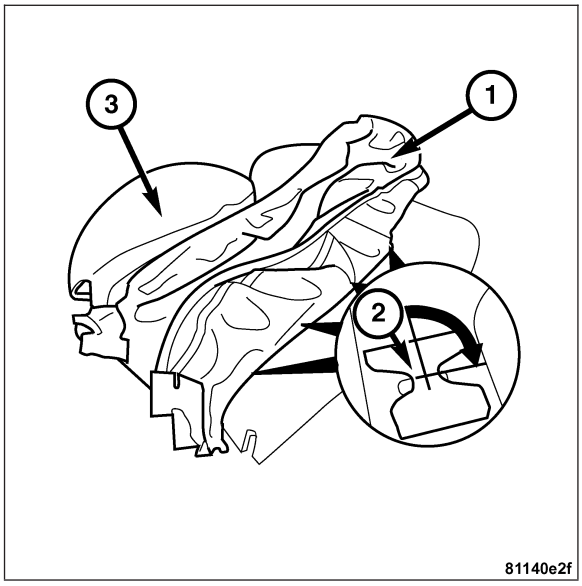

9. Pull the upholstery wires (2) out of the fabric sleeves (3) in the cover (1).

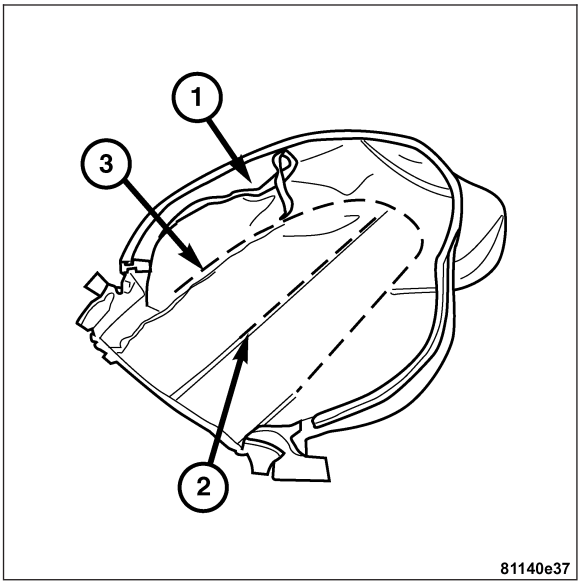

10. Remove the upholstery clips (2) on the rear of the foam rubber pad (1).

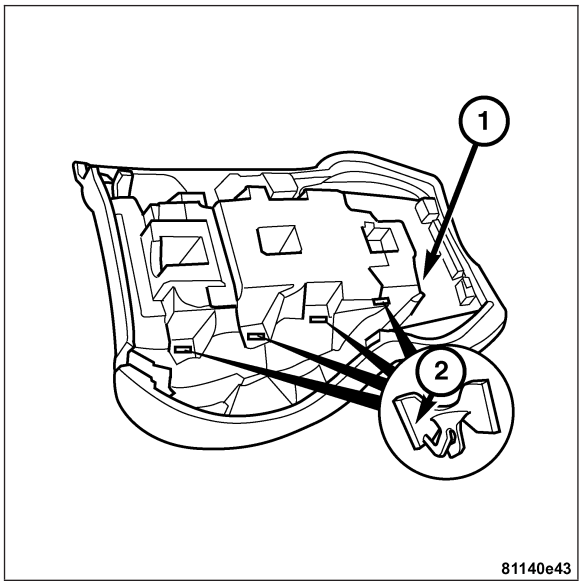

INSTALLATION - SEAT BACK COVER

1. Insert the upholstery wires (2) into the fabric sleeves (3) in the cover (1).

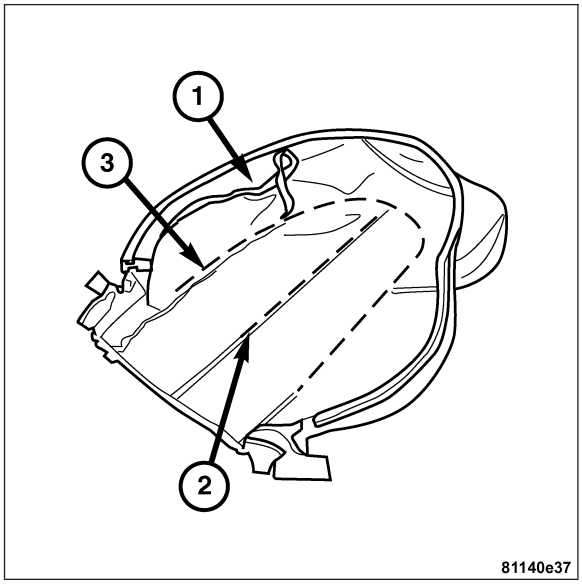

2. Attach the upholstery clips (2) to the rear of the foam rubber pad (1).

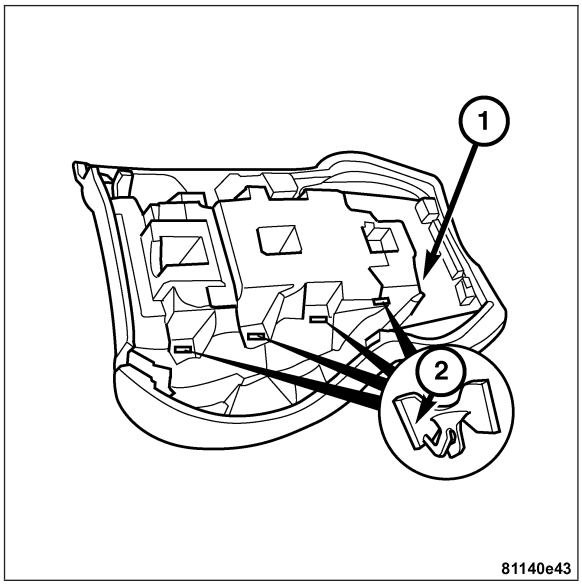

3. Fold over the cover (1) and position it on the front of the foam rubber pad (4).
4. Connect the upholstery clips (2) with the upholstery wires starting with the center upholstery wire (3).

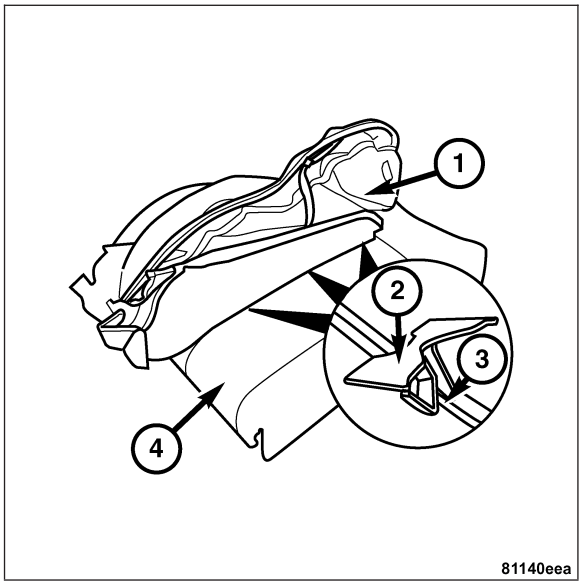

5. Draw the cover (2) over the foam rubber pad (1).
6. Attach the cover to the Velcro strip in the area of the seat back hinge area.

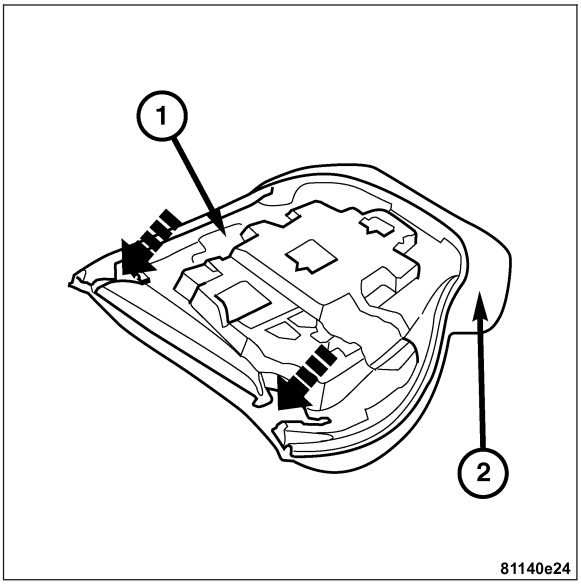

7. Position the seat back frame (3) on the foam rubber pad (2).

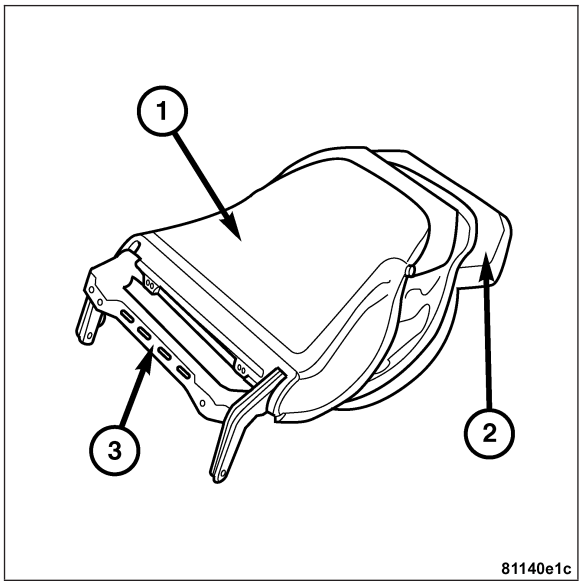

8. Hook in the cover (2) all the way around in the clip groove in the seat back shell and align.
9. Install the front seat back (1).

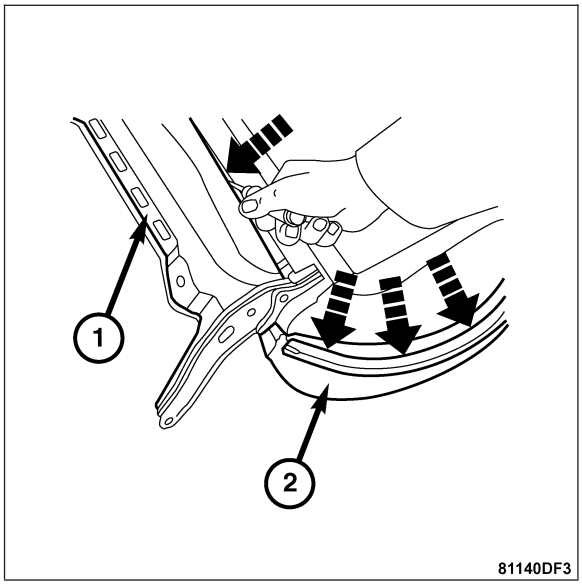

SEAT CUSHION

REMOVAL

1. Remove the seat. **Refer to Page 23-202**.
2. Remove the bolt (2) on the front seat (1) to the frame (3).

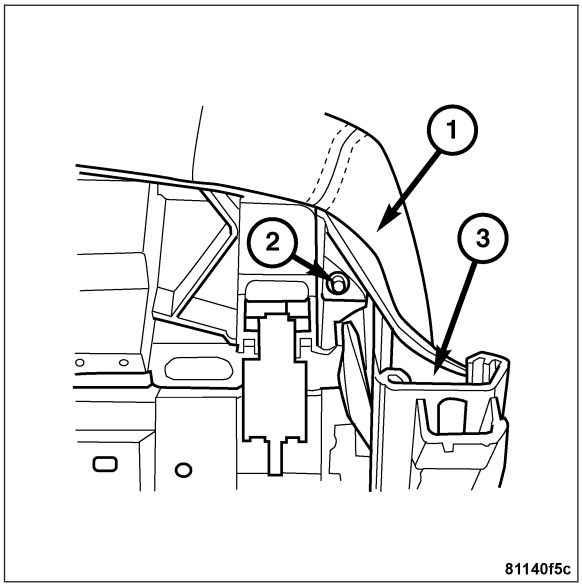

3. Remove the panel (2).

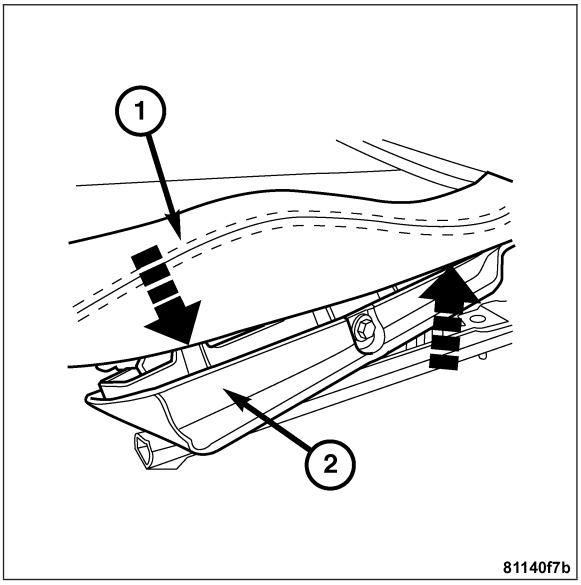

4. Pull the two expanding anchors (2) out of the front left and right bearing brackets (1).

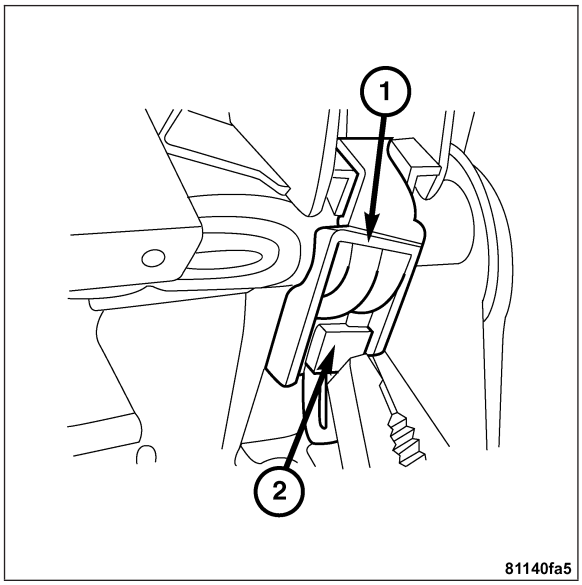

5. Remove the bearing brackets (1) from the seat cushion (2).

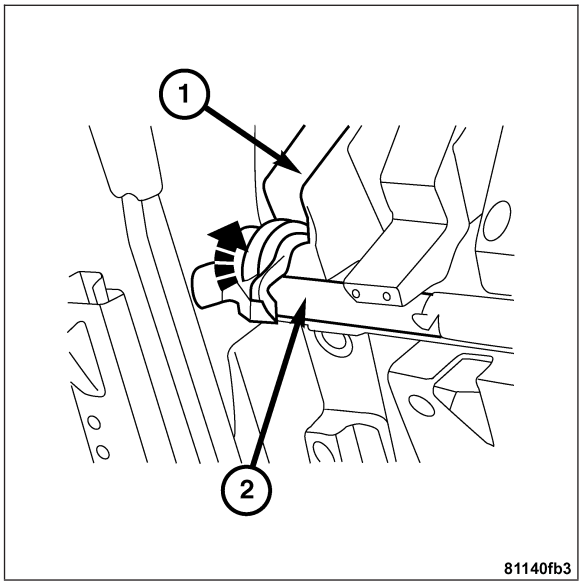

6. Disconnect the heated seat cushion from the 4-pin connector.
7. Lift the seat cushion at the front and remove from seat frame (2), then remove the two springs (1) on the rear of the seat frame.

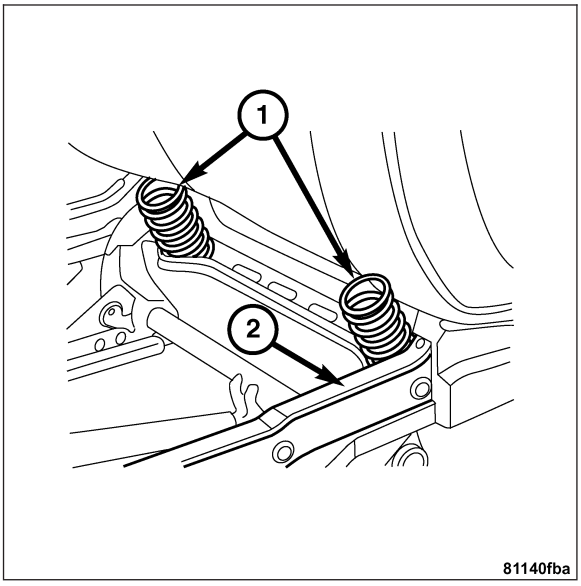

INSTALLATION

1. Install both springs (1) into the plate springs with the narrow coils pointing downward at an angle and insert into humps on cushion shell (2). Push the seat cushion toward the rear below the seat back.
2. Install the seat cushion at front and install to the seat frame.

Note: Insert the connection leads into connector with present leads.

3. Connect the leads for the heated seat cushion to the 4-pin connector.

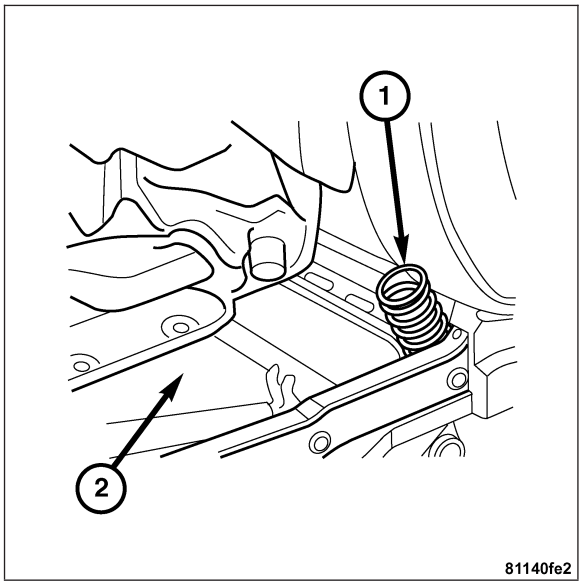

Note: The expanding anchors and bearing brackets are deleted parts and must be reordered for installation.

4. Install the two expanding anchors (2) into the front left and right bearing bracket (1).

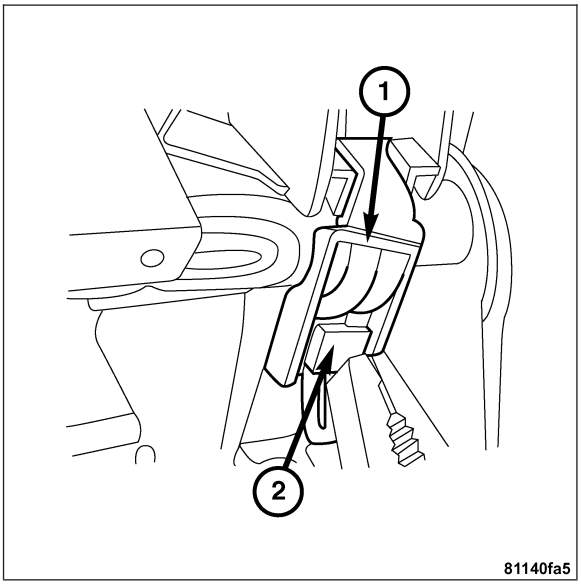

5. Install the front bolt (2).
6. Install the front seat. **Refer to Page 23-203**.

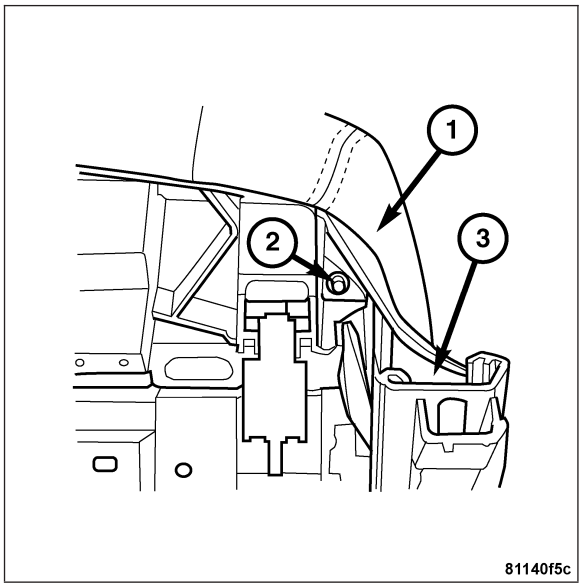

SEAT CUSHION COVER

REMOVAL

1. Remove the front seat cushion. **Refer to Page 23-211**
2. Lay the seat cushion on a suitable surface with the cover facing down.
3. Unhook the two fabric tabs on the cushion shell (1).

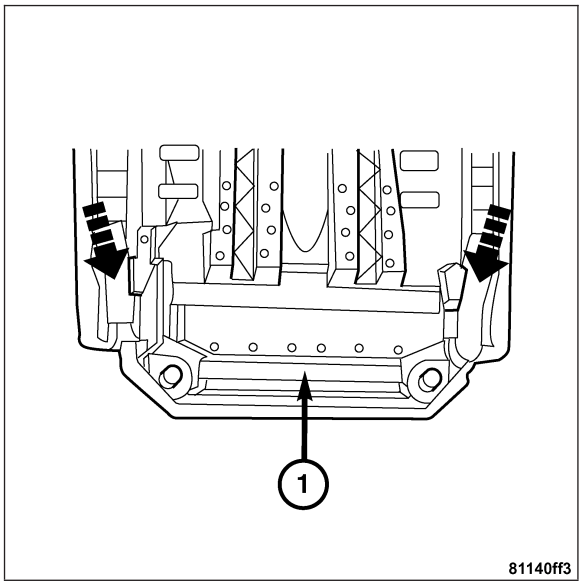

4. Unhook the cover (2) all the way around the clip groove in the seat cushion shell (1).

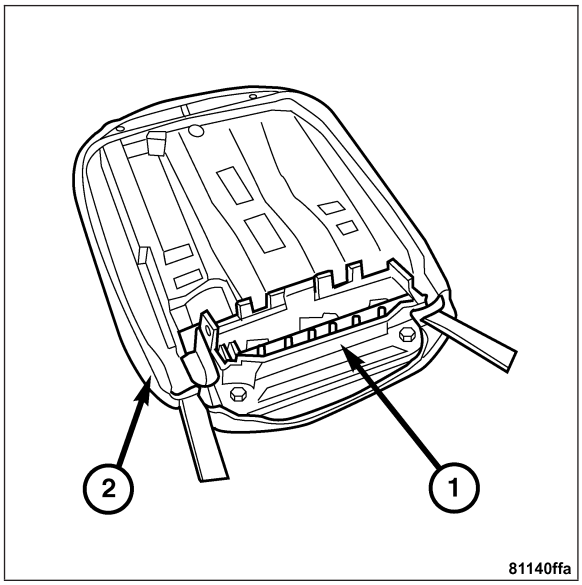

5. Remove the cushion shell from the foam rubber pad.
6. Fold the cover (1) to the side and unhook the upholstery straps from the wire insert in the foam rubber pad (2).

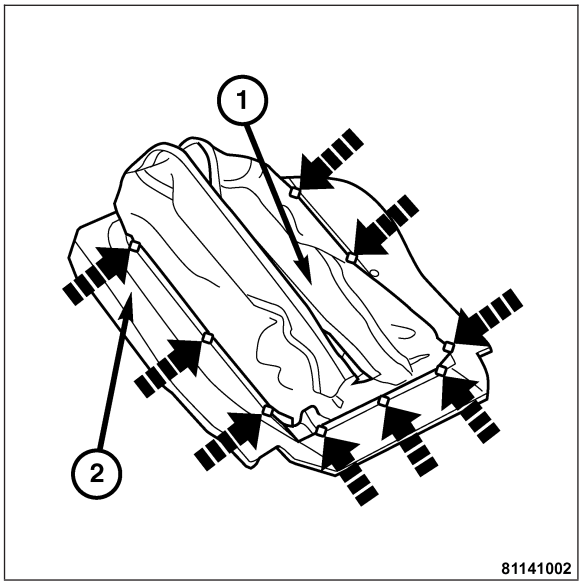

7. Pull the lateral upholstery wire (2) out of the fabric sleeve in the cover (6) and unhook the upholstery straps (1,5) from the foam rubber pad (4).

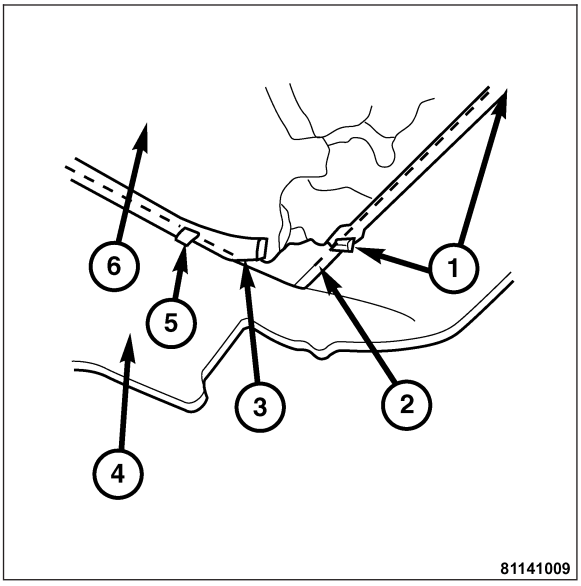

8. Fold the cover (1) to the side and unhook the middle upholstery straps (2) from the wire insert (3) in the foam rubber pad (4).

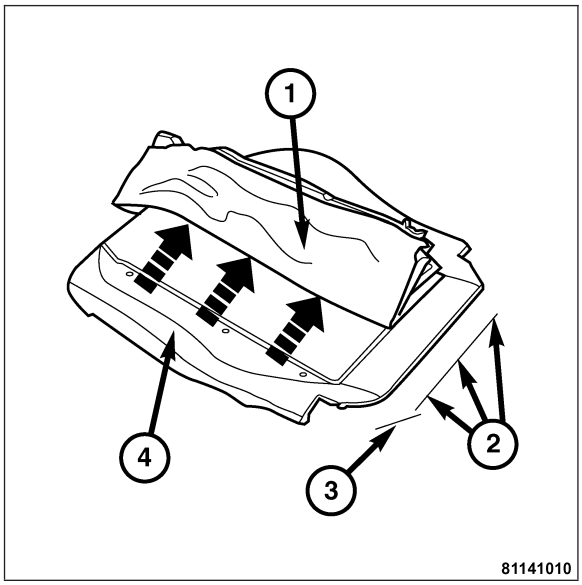

9. Remove the cover (1) from the foam rubber pad (2).
10. Unhook the upholstery straps and pull the longitudinal upholstery wires out of the fabric sleeves in the cover (1).

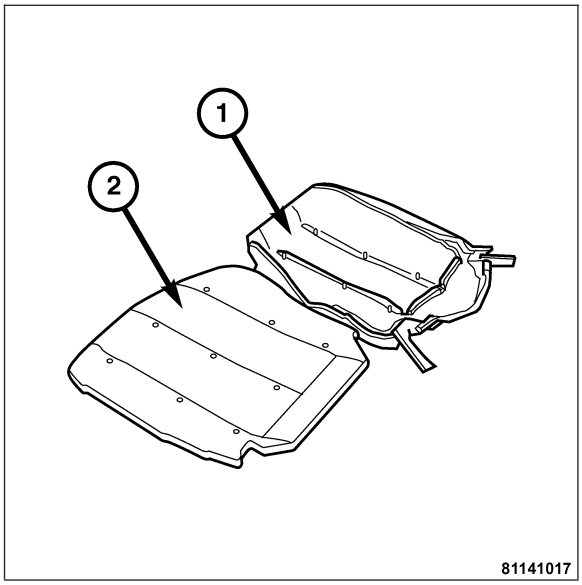

INSTALLATION

1. Insert the longitudinal upholstery wires into the fabric sleeves in the cover (3).
2. Fold the cover over and position it on the foam rubber pad (1).
3. Hook the middle longitudinal upholstery wire onto the wire, insert it in the foam rubber pad (1) with the fabric straps (2).
4. Pull the rear lateral upholstery wire into the fabric sleeve in the cover (3).
5. Install the side longitudinal retainers and the rear lateral retainers.
6. Pull the cover (3) to the side over the foam rubber pad (1).

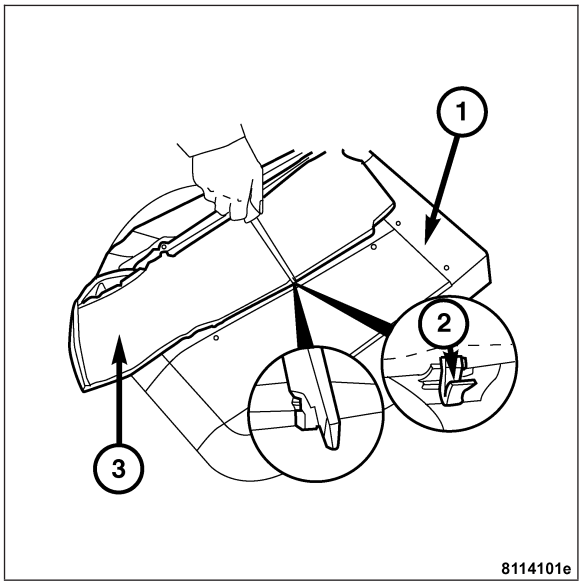

Note: Insert one additional retaining clip in clip groove at front center (arrow)

7. Position the seat cushion shell (1), align the cover (2) and hook the cover into the cushion shell (1) all the way around.
8. Hook fabric tabs on the left and right into the cushion shell. Trim the seam on cover in this area.

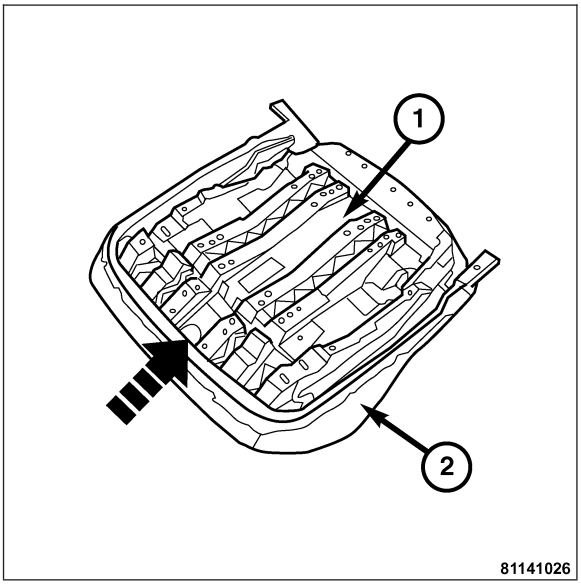

9. Ensure that the contour of the cover is positioned correctly.
10. Install the seat cushion (1). **Refer to Page 23-213**.

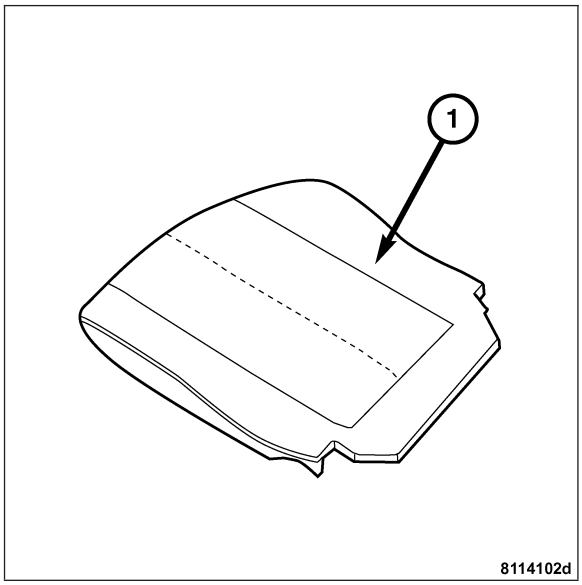

HEATING & AIR CONDITIONING

TABLE OF CONTENTS

page

HEATING & AIR CONDITIONING - ELECTRICAL DIAGNOSTICS 1

page

HEATING & AIR CONDITIONING - SERVICE INFORMATION 55

HEATING & AIR CONDITIONING - ELECTRICAL DIAGNOSTICS

TABLE OF CONTENTS

page

HEATING & AIR CONDITIONING - ELECTRICAL DIAGNOSTICS
DESCRIPTION 1
OPERATION 2
DIAGNOSIS AND TESTING
AMBIENT TEMPERATURE SENSOR CIRCUIT 3
LEFT HEATER CORE TEMPERATURE SENSOR CIRCUIT 8
RIGHT HEATER CORE TEMPERATURE SENSOR CIRCUIT 13
EVAPORATOR TEMPERATURE SENSOR CIRCUIT 18
ENGINE COOLANT TEMPERATURE SENSOR CIRCUIT 23

page

A/C PRESSURE SENSOR CIRCUIT 28
COOLANT CIRCULATION PUMP CIRCUIT . . 34
LEFT COOLANT CIRCULATION VALVE CIRCUIT 37
RIGHT COOLANT CIRCULATION VALVE CIRCUIT 40
A/C COMPRESSOR CLUTCH CIRCUIT 43
RECIRCULATED AIR SWITCHOVER VALVE CIRCUIT 46
NO COMMUNICATION FROM INSTRUMENT CLUSTER 49
NO COMMUNICATION TO INSTRUMENT CLUSTER 51
BODY VERIFICATION TEST 53
SCHEMATICS AND DIAGRAMS 54

HEATING & AIR CONDITIONING - ELECTRICAL DIAGNOSTICS

DESCRIPTION

To maintain the performance level of the heating-air conditioning system, the engine cooling system must be properly maintained. Any obstructions in front of the radiator or condenser will reduce the performance of the air conditioning and engine cooling systems.

The heating system includes the radiator, heater core and the heater hoses. Refer to Cooling for more information before opening, or attempting any service to the engine cooling system.

A manual dual-zone temperature control type heating-air conditioning system is factory-installed on this model.

This vehicle is equipped with a common HVAC housing assembly. The system combines air conditioning, heating, and ventilating capabilities in a single unit housing mounted under the instrument panel.

OPERATION

Outside fresh air enters the vehicle through the cowl top opening at the base of the windshield, and passes through a plenum chamber to the HVAC system blower housing. Air flow velocity can then be adjusted with the blower motor speed selector switch on the A/C heater control panel. The air intake openings must be kept free of snow, ice, leaves, and other obstructions for the HVAC system to receive a sufficient volume of outside air.

It is also important to keep the air intake openings clear of debris because leaf particles and other debris that is small enough to pass through the cowl plenum screen can accumulate within the HVAC housing. The closed, warm, damp and dark environment in the HVAC housing is ideal for the growth of certain molds, mildews and other fungi. Any accumulation of decaying plant matter provides an additional food source for fungal spores, which enter the housing with the fresh air. Excess debris, as well as objectionable odors created by decaying plant matter and growing fungi can be discharged into the passenger compartment during HVAC system operation.

In a blend-air system, a blend door controls the amount of unconditioned air (or cooled air from the evaporator) that is allowed to flow through and around, the heater core. A temperature control on the A/C heater control panel determines the discharge air temperature by energizing the blend door actuator, which operates the blend door. This allows an almost immediate control of the output air temperature of the system.

The mode control on the A/C heater control panel is used to direct the conditioned air to the selected system outlets. The mode control uses engine vacuum to control the mode doors, which are operated by vacuum actuators.

The outside air intake can be shut off on manual temperature control systems by selecting the Recirculation Mode with the mode control. This will operate the recirculation door that closes off the outside fresh air intake and recirculates the air that is already inside the vehicle.

The air conditioner is designed for the use of non-CFC, R-134a refrigerant. The air conditioning system has an evaporator to cool and dehumidify the incoming air prior to blending it with the heated air. This air conditioning system uses a thermal expansion valve to meter refrigerant flow to the evaporator coil. To maintain minimum evaporator temperature and prevent evaporator freezing, the system utilizes an evaporator thermister probe with the appropriate operating logic located in the A/C Heater Control Module.

DIAGNOSIS AND TESTING

AMBIENT TEMPERATURE SENSOR CIRCUIT

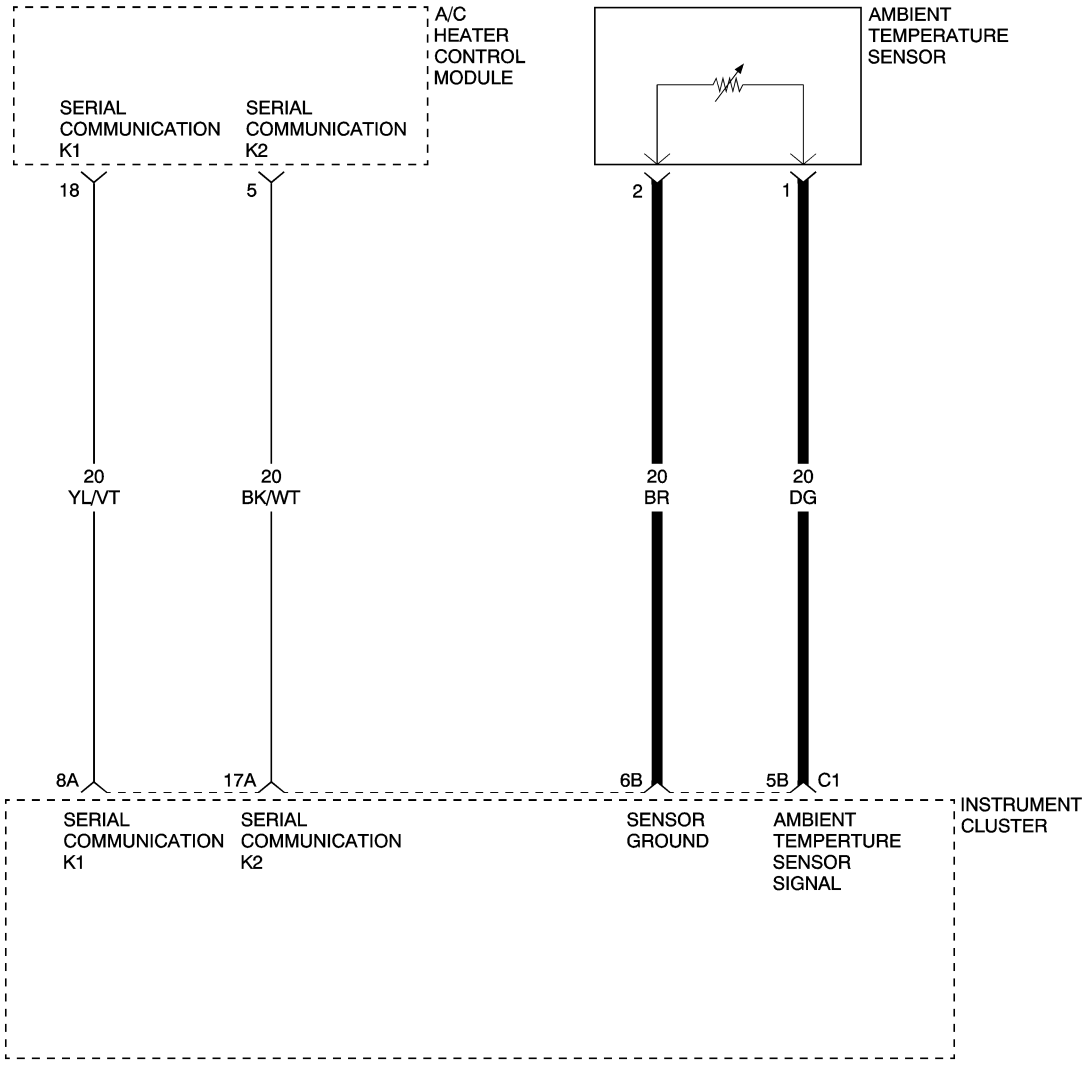

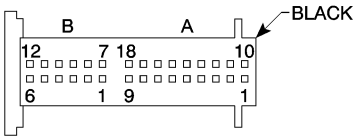

INSTRUMENT
CLUSTER C1

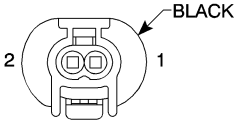

AMBIENT
TEMPERATURE
SENSOR

810e7193

AMBIENT TEMPERATURE SENSOR CIRCUIT — CONTINUED

When Monitored and Set Condition

- When Monitored: With the ignition on.
- Set Condition: The A/C Heater Control Module reports an abnormally high or low voltage that is detected by the Instrument Cluster on the Ambient Temperature Sensor Signal circuit.

POSSIBLE CAUSES
AMBIENT TEMPERATURE SENSOR SIGNAL CIRCUIT SHORT TO VOLTAGE
AMBIENT TEMPERATURE SENSOR OPEN
AMBIENT TEMPERATURE SENSOR SIGNAL CIRCUIT OPEN
AMBIENT TEMPERATURE SENSOR GROUND CIRCUIT OPEN
AMBIENT TEMPERATURE SENSOR SIGNAL CIRCUIT SHORT TO GROUND
INSTRUMENT CLUSTER

For a complete HVAC Circuit Diagram, **Refer to Page 24-54**.

Diagnostic Test

1. READ AMBIENT TEMPERATURE SENSOR VOLTAGE WITH DRB III®

Turn the ignition on.
With the DRB III®, read the Ambient Temperature Sensor voltage.

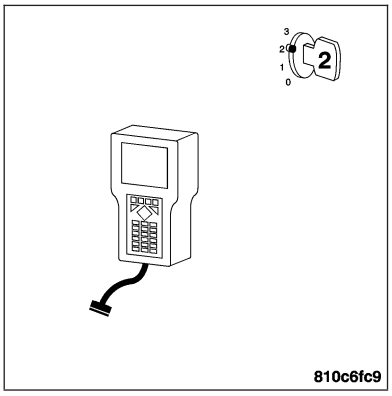

Does the DRB III® display AMBIENT TEMP: 5.0 VOLTS or greater?

Yes >> Go to 2

No >> Go to 6

2. MEASURE THE VOLTAGE OF THE AMBIENT TEMPERATURE SENSOR SIGNAL CIRCUIT

Turn the ignition off.
Disconnect the Ambient Temperature Sensor harness connector.

Note: Check connector - Clean/repair as necessary.
Turn the ignition on.
Measure the voltage of the Ambient Temperature Sensor Signal circuit at the Ambient Temperature Sensor harness connector.

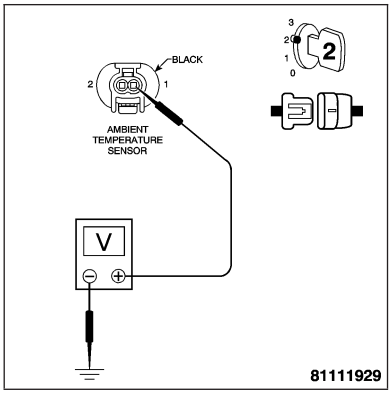

Is the voltage above 5.5 volts?

Yes >> Repair the Ambient Temperature Sensor Signal circuit for a short to voltage.
Perform BODY VERIFICATION TEST.

No >> Go to 3

AMBIENT TEMPERATURE SENSOR CIRCUIT — CONTINUED

3. READ AMBIENT TEMPERATURE SENSOR VOLTAGE WITH DRB III®

Turn the ignition off.

Connect a jumper wire between the Ambient Temperature Sensor Signal circuit and the Sensor Ground circuit.

Turn the ignition on.

With the DRB III®, read the Ambient Temperature Sensor voltage.

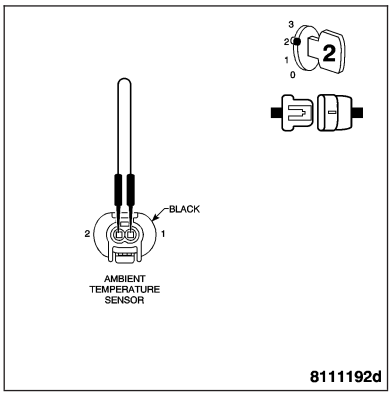

Does the DRB III® display AMBIENT TEMP: 4.5 VOLTS or greater?

Yes >> Go to 4

No >> Replace the Ambient Temperature Sensor. **Refer to Page 24-82**
Perform BODY VERIFICATION TEST.

4. MEASURE THE RESISTANCE OF THE AMBIENT TEMPERATURE SENSOR SIGNAL CIRCUIT

Turn the ignition off.

Disconnect the Instrument Cluster C1 harness connector.

Note: Check connector - Clean/repair as necessary.
Measure the resistance of the Ambient Temperature Sensor Signal circuit from the Instrument Cluster harness connector to the Ambient Temperature Sensor harness connector.

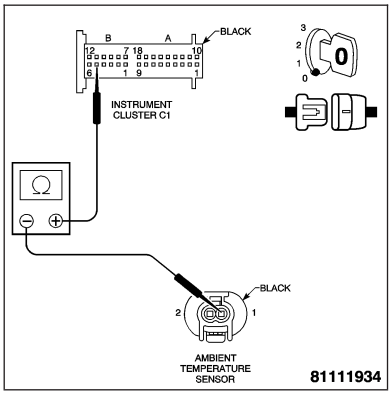

Is the resistance below 5.0 ohms?

Yes >> Go to 5

No >> Repair the Ambient Temperature Sensor Signal circuit for an open.
Perform BODY VERIFICATION TEST.

5. MEASURE THE RESISTANCE OF THE SENSOR GROUND CIRCUIT

With the ignition off.

Measure the resistance of the Sensor Ground circuit from the Instrument Cluster harness connector to the Ambient Temperature Sensor harness connector.

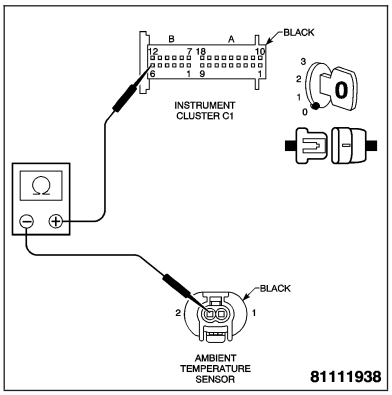

Is the resistance below 5.0 ohms?

Yes >> Replace the Instrument Cluster. **Refer to Page 8J-83**
Perform BODY VERIFICATION TEST.

No >> Repair the Sensor Ground circuit for an open.
Perform BODY VERIFICATION TEST.

AMBIENT TEMPERATURE SENSOR CIRCUIT — CONTINUED

6. READ AMBIENT TEMPERATURE SENSOR VOLTAGE WITH DRB III®

Turn the ignition off.
Disconnect the Ambient Temperature Sensor harness connector.

Note: Check connector - Clean/repair as necessary.
Turn the ignition on.
With the DRB III®, read the Ambient Temperature Sensor voltage.

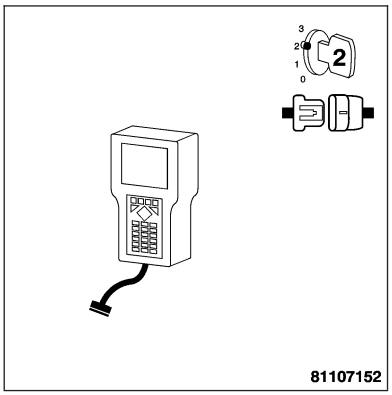

Does the DRB III® display AMBIENT TEMP: 4.5 VOLTS or greater?

Yes >> Go to 7

No >> Go to 9

7. READ A/C HEATER CONTROL MODULE DTC'S WITH DRB III®

Turn the ignition off.
Reconnect the Ambient Temperature Sensor connector.
Turn the ignition on.
With the DRB III®, read A/C Heater Control Module DTC's.
Wait two minutes.
With the DRB III®, read A/C Heater Control Module DTC's.

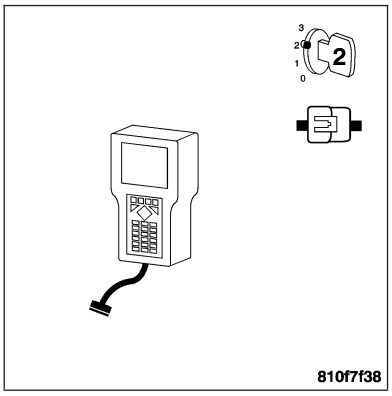

Does the DRB III® display Ambient Temperature Sensor Failure DTC?

Yes >> Replace the Ambient Temperature Sensor. **Refer to Page 24-82**
Perform BODY VERIFICATION TEST.

No >> Go to 8

8. READ A/C HEATER CONTROL MODULE DTC'S WITH DRB III®

Ensure the Ambient Temperature Sensor is connected at this time.
Start the engine.
Turn the A/C system on and run for at least five minutes.
With the DRB III®, read A/C Heater Control Module DTC's.

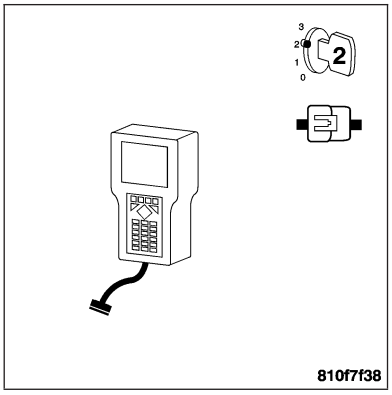

Does the DRB III® display Ambient Temperature Sensor Failure DTC?

Yes >> Replace the Ambient Temperature Sensor.
Perform BODY VERIFICATION TEST. **Refer to Page 24-2**.

No >> The condition that caused this DTC to set is currently not present. Inspect the related wiring harness for a possible intermittent condition.
Perform BODY VERIFICATION TEST.

AMBIENT TEMPERATURE SENSOR CIRCUIT — CONTINUED

9. MEASURE THE RESISTANCE BETWEEN GROUND AND THE AMBIENT TEMPERATURE SENSOR SIGNAL CIRCUIT

Turn the ignition off.

Disconnect the Instrument Cluster C1 harness connector.

Note: Check connector - Clean/repair as necessary.

Measure the resistance between ground and the Ambient Temperature Signal circuit.

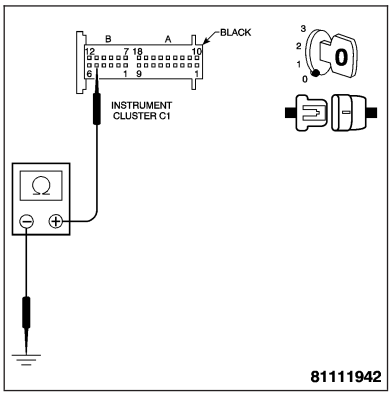

Is the resistance below 1000.0 ohms?

Yes >> Repair the Ambient Temperature Sensor Signal circuit for a short to ground.
Perform BODY VERIFICATION TEST.

No >> Go to 10

10. MEASURE THE RESISTANCE FROM THE AMBIENT TEMPERATURE SENSOR SIGNAL CIRCUIT TO THE SENSOR GROUND CIRCUIT

With the ignition off.

Measure the resistance from the Ambient Temperature Sensor Signal circuit to the Sensor Ground circuit at the Ambient Temperature Sensor connector.

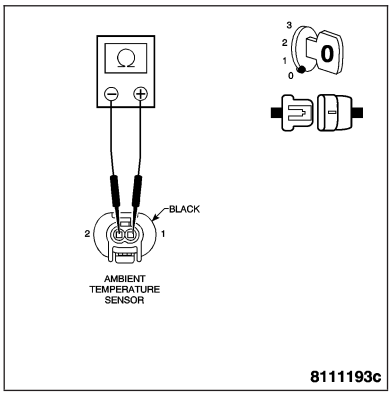

Is the resistance below 1000.0 ohms?

Yes >> Repair the Ambient Temperature Sensor Signal circuit for a short to the Sensor Ground circuit.
Perform BODY VERIFICATION TEST.

No >> Replace the Instrument Cluster. **Refer to Page 8J-83**
Perform BODY VERIFICATION TEST.

LEFT HEATER CORE TEMPERATURE SENSOR CIRCUIT

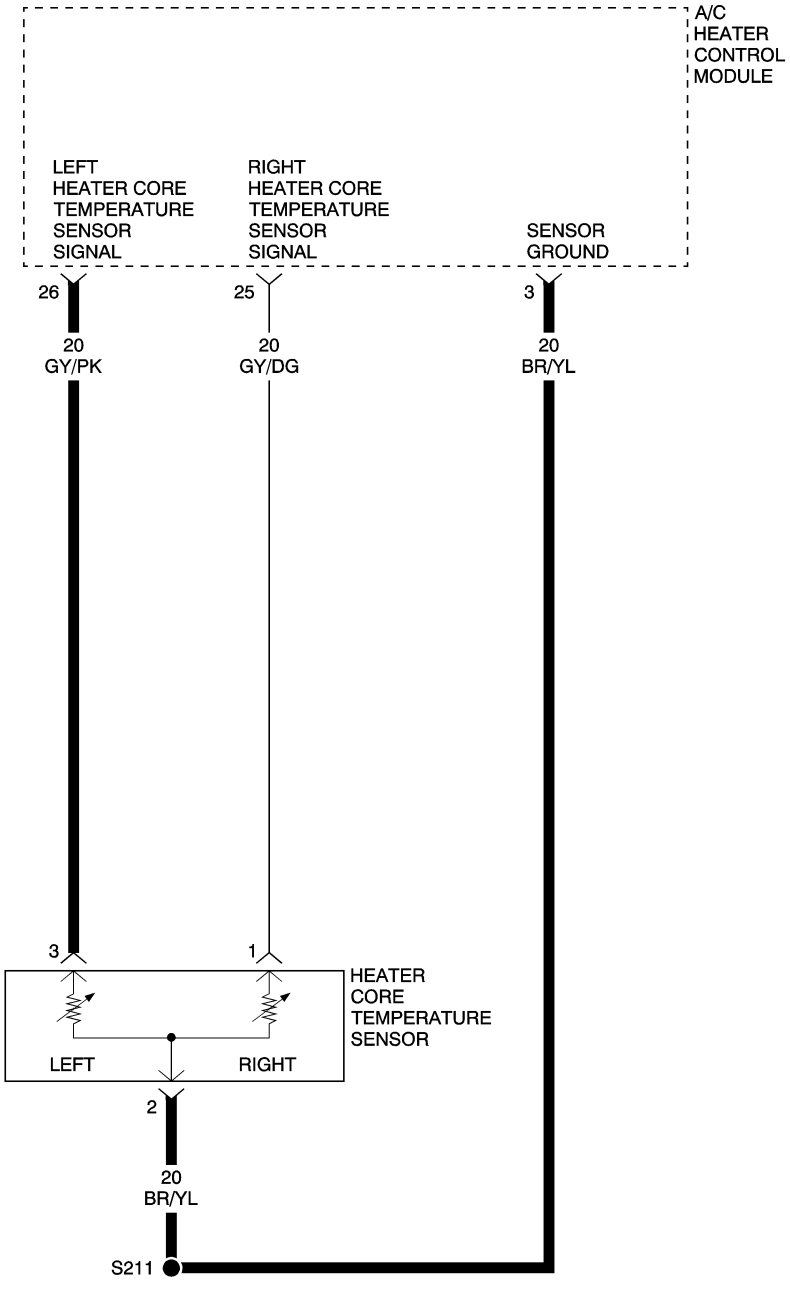

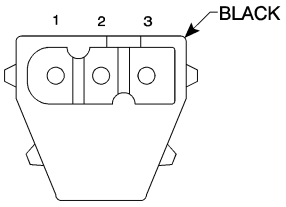

HEATER
CORE
TEMPERATURE
SENSOR

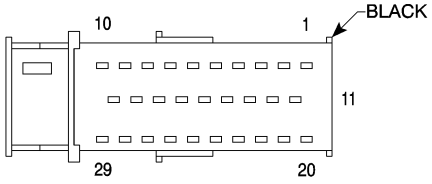

A/C
HEATER
CONTROL
MODULE

810c6771

LEFT HEATER CORE TEMPERATURE SENSOR CIRCUIT — CONTINUED

When Monitored and Set Condition

- When Monitored: With the ignition on.
- Set Condition: The A/C Heater Control Module detects an abnormally high or low voltage on the Left Heater Core Temperature Sensor Signal circuit.

POSSIBLE CAUSES
LEFT HEATER CORE TEMPERATURE SENSOR SIGNAL CIRCUIT SHORT TO VOLTAGE
LEFT HEATER CORE TEMPERATURE SENSOR OPEN
LEFT HEATER CORE TEMPERATURE SENSOR SIGNAL CIRCUIT OPEN
LEFT HEATER CORE TEMPERATURE SENSOR GROUND OPEN
LEFT HEATER CORE TEMPERATURE SENSOR SIGNAL CIRCUIT SHORT TO GROUND
A/C HEATER CONTROL MODULE

For a complete HVAC Circuit Diagram, **Refer to Page 24-54**.

Diagnostic Test

1. READ LEFT HEATER CORE TEMPERATURE SENSOR VOLTAGE WITH DRB III®

Turn the ignition on.

With the DRB III®, read the Left Heater Core Temperature Sensor voltage.

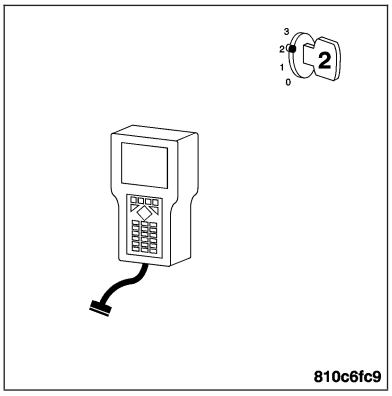

Does the DRB III® display LEFT HEATER CORE TEMP: 5.0 VOLTS or greater?

Yes >> Go to 2

No >> Go to 6

2. MEASURE THE VOLTAGE OF THE LEFT HEATER CORE TEMPERATURE SENSOR SIGNAL CIRCUIT

Turn the ignition off.

Disconnect the Heater Core Temperature Sensor harness connector.

Note: Check connector - Clean/repair as necessary.

Turn the ignition on.

Measure the voltage of the Left Heater Core Temperature Sensor Signal circuit at the Heater Core Temperature Sensor harness connector.

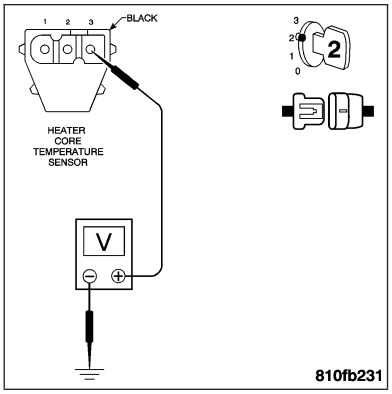

Is the voltage above 5.5 volts?

Yes >> Repair the Left Heater Core Temperature Sensor Signal circuit for a short to voltage.
Perform BODY VERIFICATION TEST.

No >> Go to 3

LEFT HEATER CORE TEMPERATURE SENSOR CIRCUIT — CONTINUED

3. READ LEFT HEATER CORE TEMPERATURE SENSOR VOLTAGE WITH DRB III

Turn the ignition off.

Connect a jumper wire between the Left Heater Core Temperature Sensor Signal circuit and the Sensor Ground circuit.

Turn the ignition on.

With the DRB III®, read the Left Heater Core Temperature Sensor voltage.

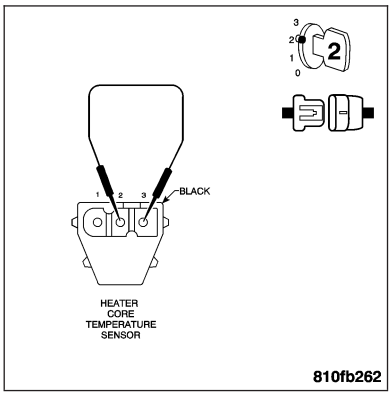

Does the DRB III® display LEFT HEATER CORE TEMP: 4.5 VOLTS or greater?

Yes >> Go to 4

No >> Replace the Heater Core Temperature Sensor. **Refer to Page 24-85**
Perform BODY VERIFICATION TEST.

4. MEASURE THE RESISTANCE OF THE LEFT HEATER CORE TEMPERATURE SENSOR SIGNAL CIRCUIT

Turn the ignition off.

Disconnect the A/C Heater Control Module harness connector.

Note: Check connector - Clean/repair as necessary.
Measure the resistance of the Left Heater Core Temperature Sensor Signal circuit from the A/C Heater Control Module harness connector to the Heater Core Temperature Sensor harness connector.

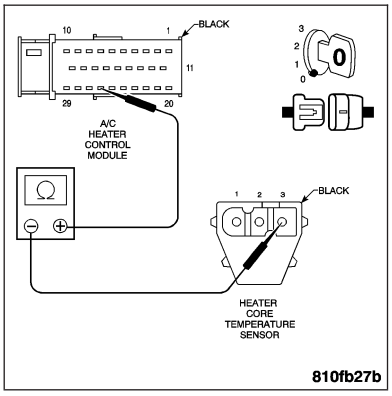

Is the resistance below 5.0 ohms?

Yes >> Go to 5

No >> Repair the Left Heater Core Temperature Sensor Signal circuit for an open.
Perform BODY VERIFICATION TEST.

5. MEASURE THE RESISTANCE OF THE SENSOR GROUND CIRCUIT

With the ignition off.

Measure the resistance of the Sensor Ground circuit from the A/C Heater Control Module harness connector to the Heater Core Temperature Sensor harness connector.

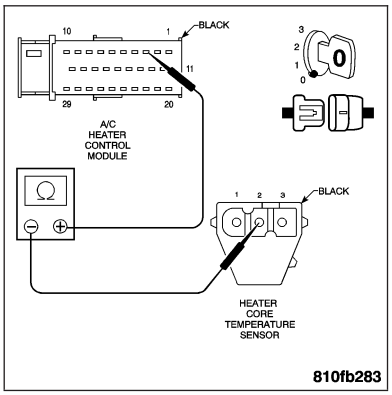

Is the resistance below 5.0 ohms?

Yes >> Replace the A/C Heater Control Module. **Refer to Page 24-79**
Perform BODY VERIFICATION TEST.

No >> Repair the Sensor Ground circuit for an open.
Perform BODY VERIFICATION TEST.

LEFT HEATER CORE TEMPERATURE SENSOR CIRCUIT — CONTINUED

6. READ LEFT HEATER CORE TEMPERATURE SENSOR VOLTAGE WITH DRB III®

Turn the ignition off.
Disconnect the Heater Core Temperature Sensor harness connector.

Note: Check connector - Clean/repair as necessary.
Turn the ignition on.
With the DRB III®, read the Left Heater Core Temperature Sensor voltage.

Does the DRB III® display LEFT HEATER CORE TEMP: 4.5 VOLTS or greater?

Yes >> Go to 7

No >> Go to 9

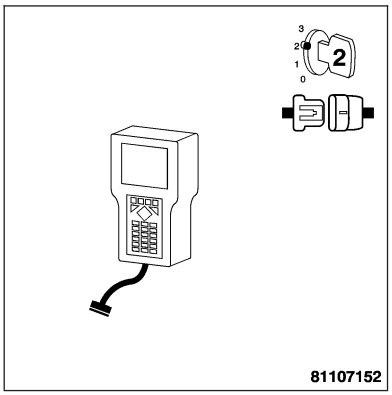

7. READ A/C HEATER CONTROL MODULE DTC'S WITH DRB III®

Turn the ignition off.
Reconnect the Heater Core Temperature Sensor connector.
Turn the ignition on.
With the DRB III®, read A/C Heater Control Module DTC's.
Wait two minutes.
With the DRB III®, read A/C Heater Control Module DTC's.

Does the DRB III® display Left Heater Core Temperature Sensor Failure DTC?

Yes >> Replace the Heater Core Temperature Sensor. **Refer to Page 24-85**
Perform BODY VERIFICATION TEST.

No >> Go to 8

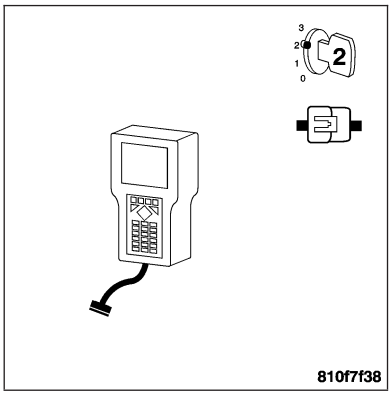

8. READ A/C HEATER CONTROL MODULE DTC'S WITH DRB III®

Ensure the Heater Core Temperature Sensor is connected at this time.
Start the engine.
Turn the A/C system on.
With the DRB III®, read A/C Heater Control Module DTC's.

Does the DRB III® display Left Heater Core Temperature Sensor Failure DTC?

Yes >> Replace the Heater Core Temperature Sensor. **Refer to Page 24-85**
Perform BODY VERIFICATION TEST.

No >> The condition that caused this DTC to set is currently not present. Inspect the related wiring harness for a possible intermittent condition.
Perform BODY VERIFICATION TEST.

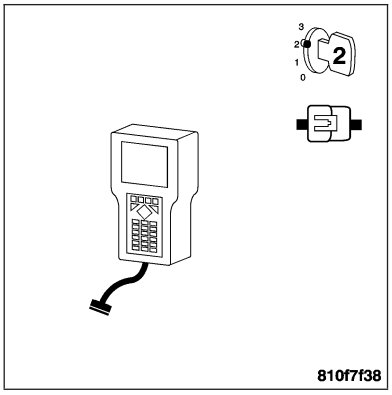

LEFT HEATER CORE TEMPERATURE SENSOR CIRCUIT — CONTINUED

9. MEASURE THE RESISTANCE BETWEEN GROUND AND THE LEFT HEATER CORE TEMPERATURE SENSOR SIGNAL CIRCUIT

Turn the ignition off.

Disconnect the A/C Heater Control Module harness connector.

Note: Check connector - Clean/repair as necessary.

Measure the resistance between ground and the Left Heater Core Temperature Signal circuit.

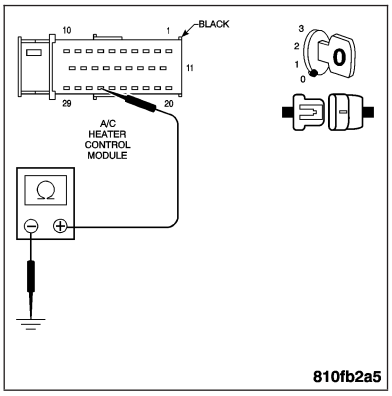

Is the resistance below 1000.0 ohms?

Yes >> Repair the Left Heater Core Temperature Sensor Signal circuit for a short to ground.
Perform BODY VERIFICATION TEST.

No >> Go to 10

10. MEASURE THE RESISTANCE FROM THE LEFT HEATER CORE TEMPERATURE SENSOR SIGNAL CIRCUIT TO THE SENSOR GROUND CIRCUIT

With the ignition off.

Measure the resistance from the Left Heater Core Temperature Sensor Signal circuit to the Sensor Ground circuit at the Heater Core Temperature Sensor connector.

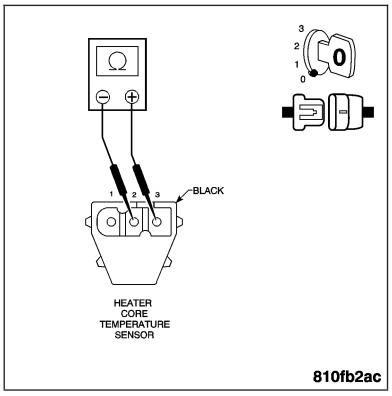

Is the resistance below 1000.0 ohms?

Yes >> Repair the Left Heater Core Temperature Sensor Signal circuit for a short to the Sensor Ground circuit.
Perform BODY VERIFICATION TEST.

No >> Replace the A/C Heater Control Module. **Refer to Page 24-79**
Perform BODY VERIFICATION TEST.

RIGHT HEATER CORE TEMPERATURE SENSOR CIRCUIT

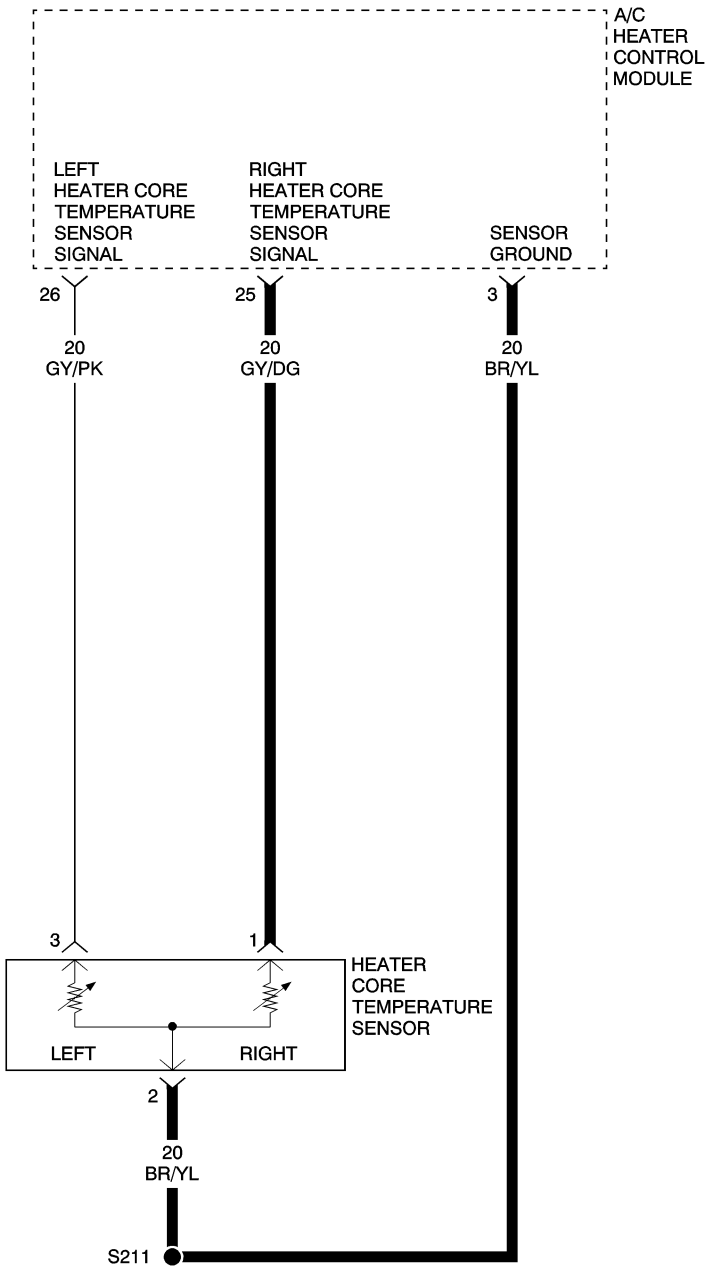

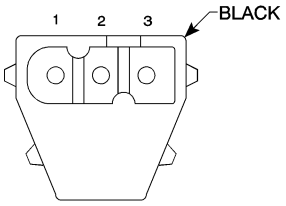

HEATER
CORE
TEMPERATURE
SENSOR

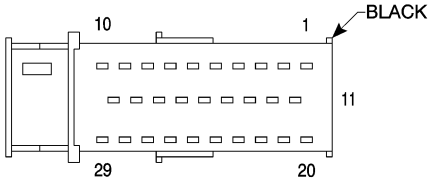

A/C
HEATER
CONTROL
MODULE

810e3580

RIGHT HEATER CORE TEMPERATURE SENSOR CIRCUIT — CONTINUED

When Monitored and Set Condition

- When Monitored: With the ignition on.
- Set Condition: The A/C Heater Control Module detects an abnormally high or low voltage on the Right Heater Core Temperature Sensor Signal circuit.

POSSIBLE CAUSES
RIGHT HEATER CORE TEMPERATURE SENSOR SIGNAL CIRCUIT SHORT TO VOLTAGE
RIGHT HEATER CORE TEMPERATURE SENSOR OPEN
RIGHT HEATER CORE TEMPERATURE SENSOR SIGNAL CIRCUIT OPEN
RIGHT HEATER CORE TEMPERATURE SENSOR GROUND OPEN
RIGHT HEATER CORE TEMPERATURE SENSOR SIGNAL CIRCUIT SHORT TO GROUND
A/C HEATER CONTROL MODULE

For a complete HVAC Circuit Diagram, **Refer to Page 24-54**.

Diagnostic Test

1. READ RIGHT HEATER CORE TEMPERATURE SENSOR VOLTAGE WITH DRB III®

Turn the ignition on.

With the DRB III®, read the Right Heater Core Temperature Sensor voltage.

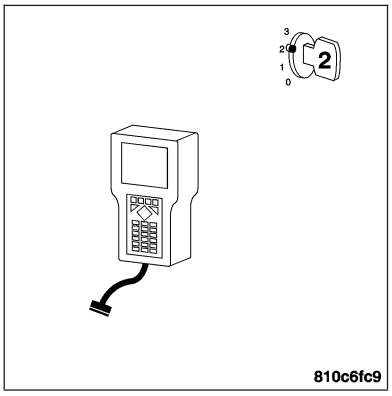

Does the DRB III® display Right HEATER CORE TEMP: 5.0 VOLTS or greater?

Yes >> Go to 2

No >> Go to 6

2. MEASURE THE VOLTAGE OF THE RIGHT HEATER CORE TEMPERATURE SENSOR SIGNAL CIRCUIT

Turn the ignition off.

Disconnect the Heater Core Temperature Sensor harness connector.

Note: Check connector - Clean/repair as necessary.

Turn the ignition on.

Measure the voltage of the Right Heater Core Temperature Sensor Signal circuit at the Heater Core Temperature Sensor harness connector.

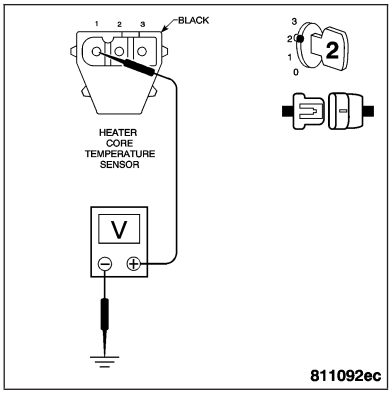

Is the voltage above 5.5 volts?

Yes >> Repair the Right Heater Core Temperature Sensor Signal circuit for a short to voltage.
Perform BODY VERIFICATION TEST.

No >> Go to 3

RIGHT HEATER CORE TEMPERATURE SENSOR CIRCUIT — CONTINUED

3. READ RIGHT HEATER CORE TEMPERATURE SENSOR VOLTAGE WITH DRB III®

Turn the ignition off.

Connect a jumper wire between the Right Heater Core Temperature Sensor Signal circuit and the Sensor Ground circuit.

Turn the ignition on.

With the DRB III®, read the Right Heater Core Temperature Sensor voltage.

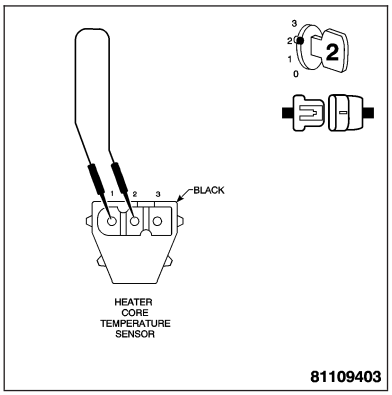

Does the DRB III® display RIGHT HEATER CORE TEMP: 4.5 VOLTS or greater?

Yes >> Go to 4

No >> Replace the Heater Core Temperature Sensor. **Refer to Page 24-85**.
Perform BODY VERIFICATION TEST.

4. MEASURE THE RESISTANCE OF THE RIGHT HEATER CORE TEMPERATURE SENSOR SIGNAL CIRCUIT

Turn the ignition off.

Disconnect the A/C Heater Control Module harness connector.

Note: Check connector - Clean/repair as necessary.
Measure the resistance of the Right Heater Core Temperature Sensor Signal circuit from the A/C Heater Control Module harness connector to the Heater Core Temperature Sensor harness connector.

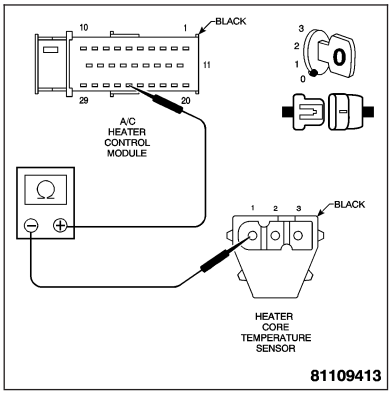

Is the resistance below 5.0 ohms?

Yes >> Go to 5

No >> Repair the Right Heater Core Temperature Sensor Signal circuit for an open.
Perform BODY VERIFICATION TEST.

5. MEASURE THE RESISTANCE OF THE SENSOR GROUND CIRCUIT

With the ignition off.

Measure the resistance of the Sensor Ground circuit from the A/C Heater Control Module harness connector to the Heater Core Temperature Sensor harness connector.

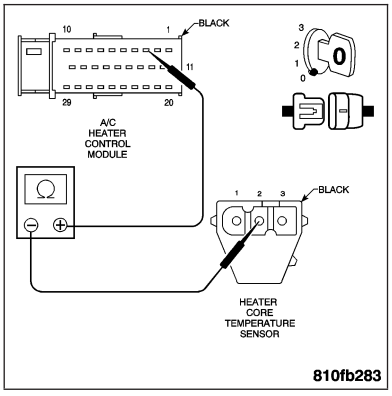

Is the resistance below 5.0 ohms?

Yes >> Replace the A/C Heater Control Module. **Refer to Page 24-79**.
Perform BODY VERIFICATION TEST.

No >> Repair the Sensor Ground circuit for an open.
Perform BODY VERIFICATION TEST.

RIGHT HEATER CORE TEMPERATURE SENSOR CIRCUIT — CONTINUED

6. READ RIGHT HEATER CORE TEMPERATURE SENSOR VOLTAGE WITH DRB III®

Turn the ignition off.
Disconnect the Heater Core Temperature Sensor harness connector.

Note: Check connector - Clean/repair as necessary.
Turn the ignition on.
With the DRB III®, read the Right Heater Core Temperature Sensor voltage.

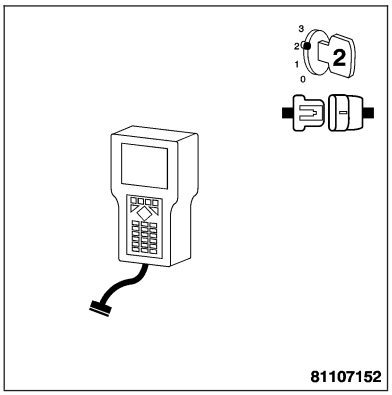

Does the DRB III® display RIGHT HEATER CORE TEMP: 4.5 VOLTS or greater?

Yes >> Go to 7

No >> Go to 9

7. READ A/C HEATER CONTROL MODULE DTC'S WITH DRB III®

Turn the ignition off.
Reconnect the Heater Core Temperature Sensor connector.
Turn the ignition on.
With the DRB III®, read A/C Heater Control Module DTC's.
Wait two minutes.
With the DRB III®, read A/C Heater Control Module DTC's.

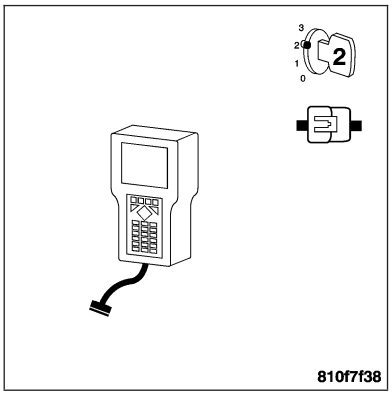

Does the DRB III® display Right Heater Core Temperature Sensor Failure DTC?

Yes >> Replace the Heater Core Temperature Sensor. **Refer to Page 24-85**.
Perform BODY VERIFICATION TEST.

No >> Go to 8

8. READ A/C HEATER CONTROL MODULE DTC'S WITH DRB III®

Ensure the Heater Core Temperature Sensor is connected at this time.
Start the engine.
Turn the A/C system on.
With the DRB III®, read A/C Heater Control Module DTC's.

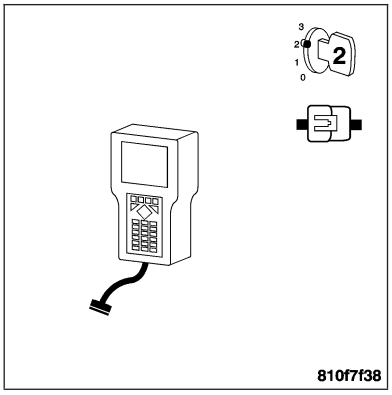

Does the DRB III® display Right Heater Core Temperature Sensor Failure DTC?

Yes >> Replace the Heater Core Temperature Sensor. **Refer to Page 24-85**.
Perform BODY VERIFICATION TEST.

No >> The condition that caused this DTC to set is currently not present. Inspect the related wiring harness for a possible intermittent condition.
Perform BODY VERIFICATION TEST.

RIGHT HEATER CORE TEMPERATURE SENSOR CIRCUIT — CONTINUED

9. MEASURE THE RESISTANCE BETWEEN GROUND AND THE RIGHT HEATER CORE TEMPERATURE SENSOR SIGNAL CIRCUIT

Turn the ignition off.

Disconnect the A/C Heater Control Module harness connector.

Note: Check connector - Clean/repair as necessary.

Measure the resistance between ground and the Right Heater Core Temperature Signal circuit.

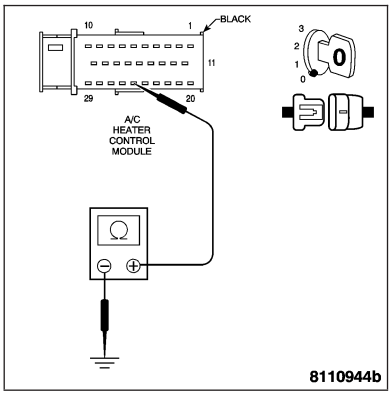

Is the resistance below 1000.0 ohms?

Yes >> Repair the Right Heater Core Temperature Sensor Signal circuit for a short to ground.
Perform BODY VERIFICATION TEST.

No >> Go to 10

10. MEASURE THE RESISTANCE FROM THE RIGHT HEATER CORE TEMPERATURE SENSOR SIGNAL CIRCUIT TO THE SENSOR GROUND CIRCUIT

With the ignition off.

Measure the resistance from the Right Heater Core Temperature Sensor Signal circuit to the Sensor Ground circuit at the Heater Core Temperature Sensor connector.

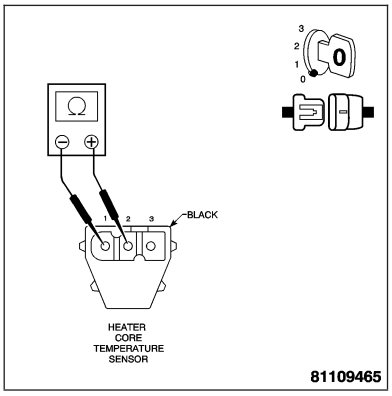

Is the resistance below 1000.0 ohms?

Yes >> Repair the Right Heater Core Temperature Sensor Signal circuit for a short to the Sensor Ground circuit.
Perform BODY VERIFICATION TEST.

No >> Replace the A/C Heater Control Module. **Refer to Page 24-79**.
Perform BODY VERIFICATION TEST.

EVAPORATOR TEMPERATURE SENSOR CIRCUIT

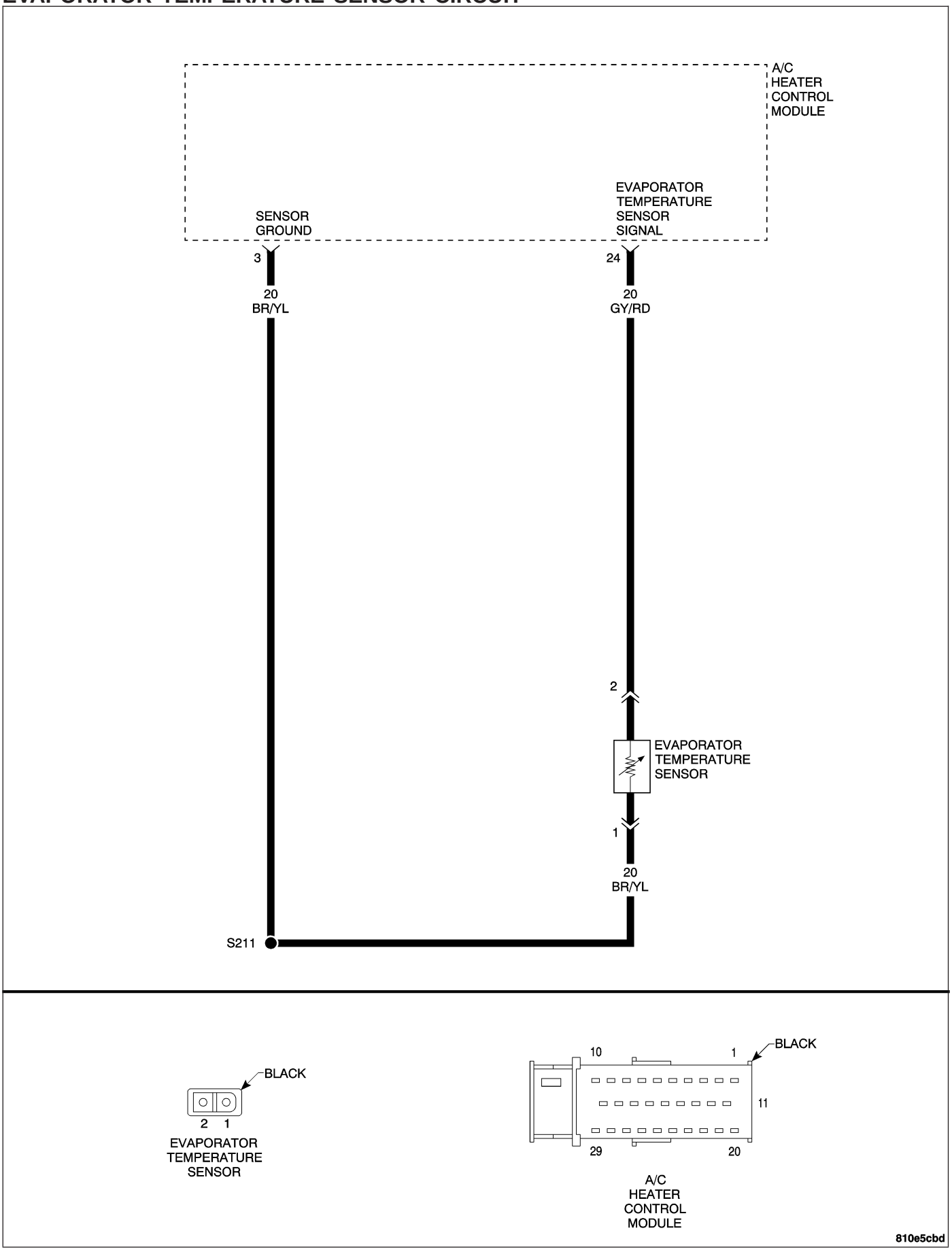

EVAPORATOR TEMPERATURE SENSOR CIRCUIT — CONTINUED

When Monitored and Set Condition

- When Monitored: With the ignition on.
- Set Condition: The A/C Heater Control Module detects an abnormally high or low voltage on the Evaporator Temperature Sensor Signal circuit.

POSSIBLE CAUSES
EVAPORATOR TEMPERATURE SENSOR SIGNAL CIRCUIT SHORT TO VOLTAGE
EVAPORATOR TEMPERATURE SENSOR OPEN
EVAPORATOR TEMPERATURE SENSOR SIGNAL CIRCUIT OPEN
EVAPORATOR TEMPERATURE SENSOR GROUND OPEN
EVAPORATOR TEMPERATURE SENSOR SIGNAL CIRCUIT SHORT TO GROUND
A/C HEATER CONTROL MODULE

For a complete HVAC Circuit Diagram, **Refer to Page 24-54**.

Diagnostic Test

1. READ EVAPORATOR TEMPERATURE SENSOR VOLTAGE WITH DRB III®

Turn the ignition on.
With the DRB III®, read the Evaporator Temperature Sensor voltage.

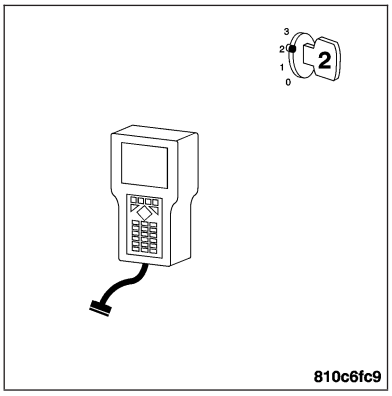

Does the DRB III® display EVAP TEMP: 5.0 VOLTS or greater?

Yes >> Go to 2

No >> Go to 6

2. MEASURE THE VOLTAGE OF THE EVAPORATOR TEMPERATURE SENSOR SIGNAL CIRCUIT

Turn the ignition off.
Disconnect the Evaporator Temperature Sensor harness connector.

Note: Check connector - Clean/repair as necessary.
Turn the ignition on.
Measure the voltage of the Evaporator Temperature Sensor Signal circuit at the Evaporator Temperature Sensor harness connector.

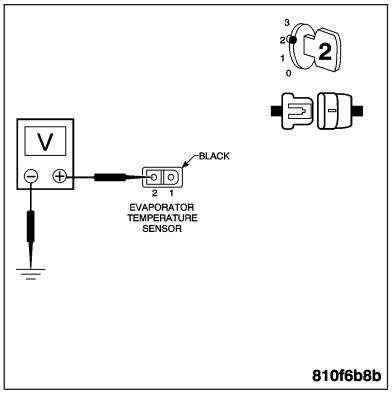

Is the voltage above 5.5 volts?

Yes >> Repair the Evaporator Temperature Sensor Signal circuit for a short to voltage.
Perform BODY VERIFICATION TEST.

No >> Go to 3

EVAPORATOR TEMPERATURE SENSOR CIRCUIT — CONTINUED

3. READ EVAPORATOR TEMPERATURE SENSOR VOLTAGE WITH DRB III®

Turn the ignition off.

Connect a jumper wire between the Evaporator Temperature Sensor Signal circuit and the Sensor Ground circuit.

Turn the ignition on.

With the DRB III®, read the Evaporator Temperature Sensor voltage.

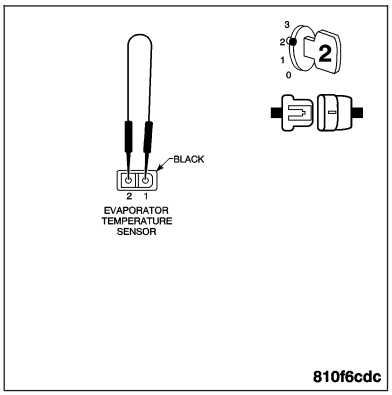

Does the DRB III® display EVAP TEMP: 4.5 VOLTS or greater?

Yes >> Go to 4

No >> Replace the Evaporator Temperature Sensor. **Refer to Page 24-84**.
Perform BODY VERIFICATION TEST.

4. MEASURE THE RESISTANCE OF THE EVAPORATOR TEMPERATURE SENSOR SIGNAL CIRCUIT

Turn the ignition off.

Disconnect the A/C Heater Control Module harness connector.

Note: Check connector - Clean/repair as necessary.
Measure the resistance of the Evaporator Temperature Sensor Signal circuit from the A/C Heater Control Module harness connector to the Evaporator Temperature Sensor harness connector.

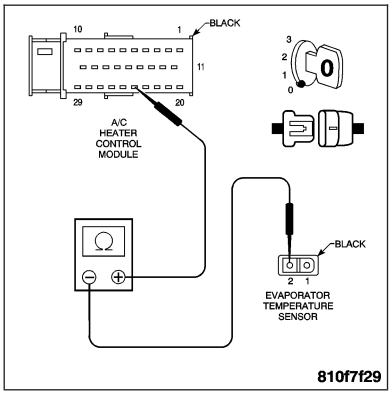

Is the resistance below 5.0 ohms?

Yes >> Go to 5

No >> Repair the Evaporator Temperature Sensor Signal circuit for an open.
Perform BODY VERIFICATION TEST.

5. MEASURE THE RESISTANCE OF THE SENSOR GROUND CIRCUIT

With the ignition off.

Measure the resistance of the Sensor Ground circuit from the A/C Heater Control Module harness connector to the Evaporator Temperature Sensor harness connector.

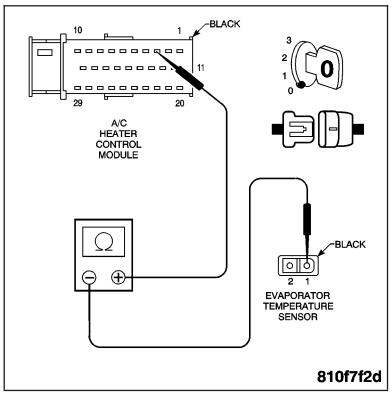

Is the resistance below 5.0 ohms?

Yes >> Replace the A/C Heater Control Module. **Refer to Page 24-79**.
Perform BODY VERIFICATION TEST.

No >> Repair the Sensor Ground circuit for an open.
Perform BODY VERIFICATION TEST.

EVAPORATOR TEMPERATURE SENSOR CIRCUIT — CONTINUED

6. READ EVAPORATOR TEMPERATURE SENSOR VOLTAGE WITH DRB III®

Turn the ignition off.
Disconnect the Evaporator Temperature Sensor harness connector.

Note: Check connector - Clean/repair as necessary.
Turn the ignition on.
With the DRB III®, read the Evaporator Temperature Sensor voltage.

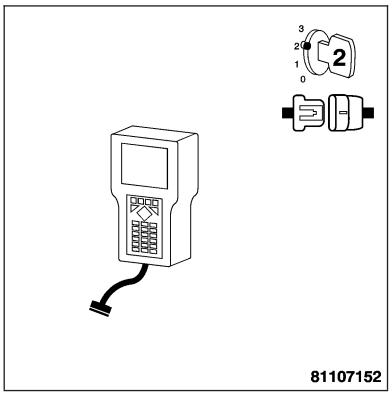

Does the DRB III® display EVAP TEMP: 4.5 VOLTS or greater?

Yes >> Go to 7

No >> Go to 9

7. READ A/C HEATER CONTROL MODULE DTC'S WITH DRB III®

Turn the ignition off.
Reconnect the Evaporator Temperature Sensor connector.
Turn the ignition on.
With the DRB III®, read A/C Heater Control Module DTC's.
Wait two minutes.
With the DRB III®, read A/C Heater Control Module DTC's.

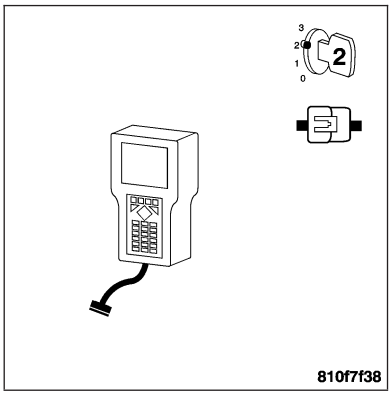

Does the DRB III® display Evaporator Temperature Sensor Failure DTC?

Yes >> Replace the Evaporator Temperature Sensor. **Refer to Page 24-84**.
Perform BODY VERIFICATION TEST.

No >> Go to 8

8. READ A/C HEATER CONTROL MODULE DTC'S WITH DRB III®

Ensure the Evaporator Temperature Sensor is connected at this time.
Start the engine.
Turn the A/C system on and run for at least five minutes (so water will form on the Evaporator Temperature Sensor).
With the DRB III®, read A/C Heater Control Module DTC's.

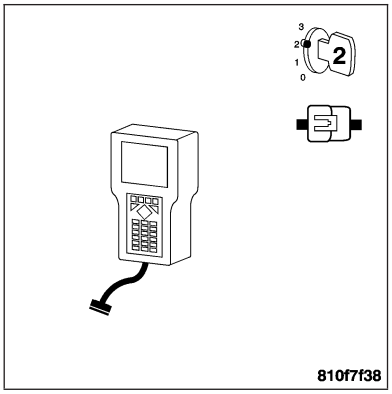

Does the DRB III® display an Evaporator Temperature Sensor Failure DTC?

Yes >> Replace the Evaporator Temperature Sensor. **Refer to Page 24-84**.
Perform BODY VERIFICATION TEST.

No >> The condition that caused this DTC to set is currently not present. Inspect the related wiring harness for a possible intermittent condition.
Perform BODY VERIFICATION TEST.

EVAPORATOR TEMPERATURE SENSOR CIRCUIT — CONTINUED

9. MEASURE THE RESISTANCE BETWEEN GROUND AND THE EVAPORATOR TEMPERATURE SENSOR SIGNAL CIRCUIT

Turn the ignition off.

Disconnect the A/C Heater Control Module harness connector.

Note: Check connector - Clean/repair as necessary.

Measure the resistance between ground and the Evaporator Temperature Signal circuit.

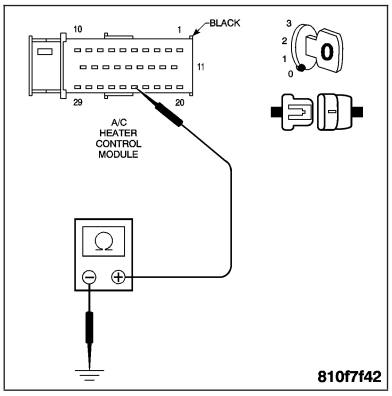

Is the resistance below 1000.0 ohms?

Yes >> Repair the Evaporator Temperature Sensor Signal circuit for a short to ground.
Perform BODY VERIFICATION TEST.

No >> Go to 10

10. MEASURE THE RESISTANCE FROM THE EVAPORATOR TEMPERATURE SENSOR SIGNAL CIRCUIT TO THE SENSOR GROUND CIRCUIT

With the ignition off.

Measure the resistance from the Evaporator Temperature Sensor Signal circuit to the Sensor Ground circuit at the Evaporator Temperature Sensor harness connector.

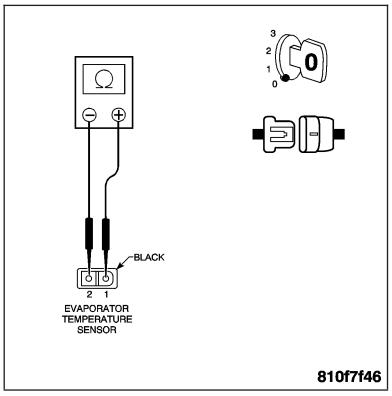

Is the resistance below 1000.0 ohms?

Yes >> Repair the Evaporator Temperature Sensor Signal circuit for a short to the Sensor Ground circuit.
Perform BODY VERIFICATION TEST.

No >> Replace the A/C Heater Control Module. **Refer to Page 24-79**
Perform BODY VERIFICATION TEST.

ENGINE COOLANT TEMPERATURE SENSOR CIRCUIT

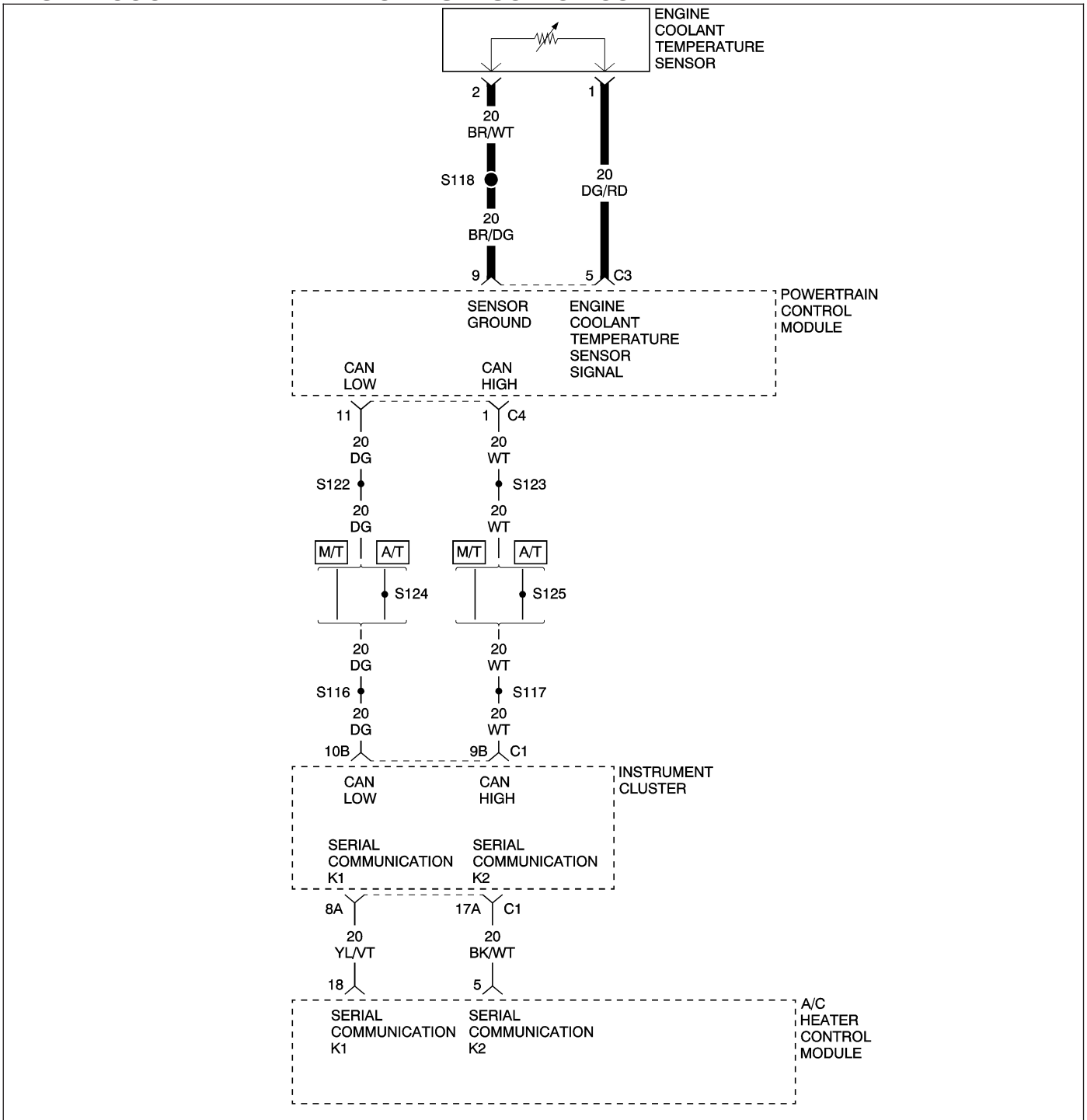

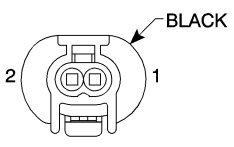

ENGINE COOLANT TEMPERATURE SENSOR

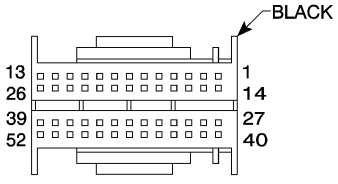

POWERTRAIN CONTROL MODULE – C3

810e7279

ENGINE COOLANT TEMPERATURE SENSOR CIRCUIT — CONTINUED

When Monitored and Set Condition

- When Monitored: With the ignition on.
- Set Condition: The A/C Heater Control Module reports an abnormally high or low voltage that is detected by the Instrument Cluster. The abnormal condition is at the Powertrain Control Module (PCM) on the Engine Coolant Temperature Sensor Signal circuit. The abnormal condition is communicated from the PCM to the Instrument Cluster by the CAN bus.

POSSIBLE CAUSES
ENGINE COOLANT TEMPERATURE SENSOR SIGNAL CIRCUIT SHORT TO VOLTAGE
ENGINE COOLANT TEMPERATURE SENSOR OPEN
ENGINE COOLANT TEMPERATURE SENSOR SIGNAL CIRCUIT OPEN
ENGINE COOLANT TEMPERATURE SENSOR GROUND OPEN
ENGINE COOLANT TEMPERATURE SENSOR SIGNAL CIRCUIT SHORT TO GROUND
POWERTRAIN CONTROL MODULE

For a complete HVAC Circuit Diagram, **Refer to Page 24-54**.

Diagnostic Test

1. READ ENGINE COOLANT TEMPERATURE SENSOR VOLTAGE WITH DRB III®

Turn the ignition on.

With the DRB III®, read the Engine Coolant Temperature Sensor voltage.

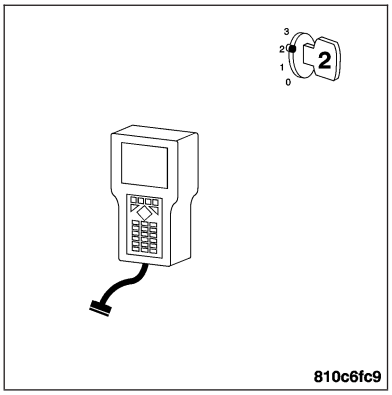

Does the DRB III® display ENGINE COOLANT TEMP: 5.0 VOLTS or greater?

Yes >> Go to 2

No >> Go to 6

2. MEASURE THE VOLTAGE OF THE ENGINE COOLANT TEMPERATURE SENSOR SIGNAL CIRCUIT

Turn the ignition off.

Disconnect the Engine Coolant Temperature Sensor harness connector.

Note: Check connector - Clean/repair as necessary.

Turn the ignition on.

Measure the voltage of the Engine Coolant Temperature Sensor Signal Circuit at the Engine Coolant Temperature Sensor harness connector.

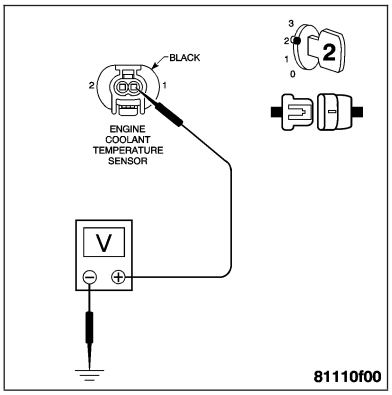

Is the voltage above 5.5 volts?

Yes >> Repair the Engine Coolant Temperature Sensor Signal circuit for a short to voltage.
Perform BODY VERIFICATION TEST.

No >> Go to 3

ENGINE COOLANT TEMPERATURE SENSOR CIRCUIT — CONTINUED

3. READ ENGINE COOLANT TEMPERATURE SENSOR VOLTAGE WITH DRB III®

Turn the ignition off.

Connect a jumper wire between the Engine Coolant Temperature Sensor Signal circuit and the Sensor Ground circuit.

Turn the ignition on.

With the DRB III®, read the Engine Coolant Temperature Sensor voltage.

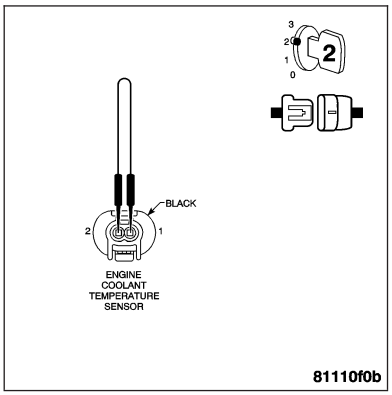

Does the DRB III® display ENGINE COOLANT TEMP: 4.5 VOLTS or greater?

Yes >> Go to 4

No >> Replace the Engine Coolant Temperature Sensor. **Refer to Page 7-29**.
Perform BODY VERIFICATION TEST.

4. MEASURE THE RESISTANCE OF THE ENGINE COOLANT TEMPERATURE SENSOR SIGNAL CIRCUIT

Turn the ignition off.

Disconnect the Powertrain Control Module harness connector.

Note: Check connector - Clean/repair as necessary.
Measure the resistance of the Engine Coolant Temperature Sensor Signal circuit from the Powertrain Control Module harness connector to the Engine Coolant Temperature Sensor harness connector.

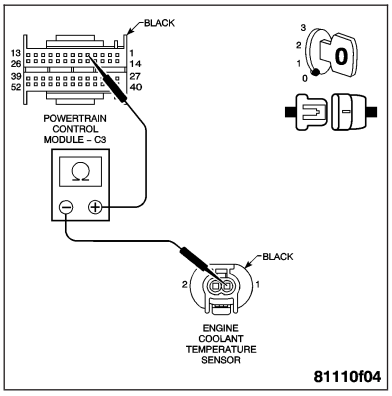

Is the resistance below 5.0 ohms?

Yes >> Go to 5

No >> Repair the Engine Coolant Temperature Sensor Signal circuit for an open.
Perform BODY VERIFICATION TEST.

5. MEASURE THE RESISTANCE OF THE SENSOR GROUND CIRCUIT

With the ignition off.

Measure the resistance of the Sensor Ground circuit from the Powertrain Control Module harness connector to the Engine Coolant Temperature Sensor harness connector.

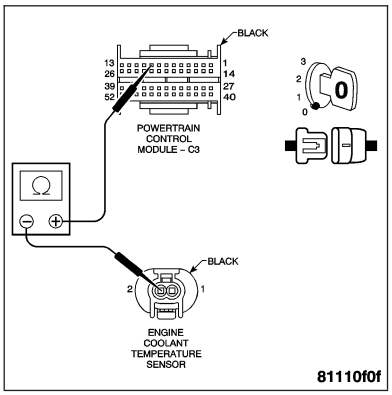

Is the resistance below 5.0 ohms?

Yes >> Replace the Powertrain Control Module. **Refer to Page 8E-56**.
Perform BODY VERIFICATION TEST.

No >> Repair the Sensor Ground circuit for an open.
Perform BODY VERIFICATION TEST.

ENGINE COOLANT TEMPERATURE SENSOR CIRCUIT — CONTINUED

6. READ ENGINE COOLANT TEMPERATURE SENSOR VOLTAGE WITH DRB III®

Turn the ignition off.
Disconnect the Engine Coolant Temperature Sensor harness connector.

Note: Check connector - Clean/repair as necessary.
Turn the ignition on.
With the DRB III®, read the Engine Coolant Temperature Sensor voltage.

Does the DRB III® display ENGINE COOLANT TEMP: 4.5 VOLTS or greater?

Yes >> Go to 7

No >> Go to 9

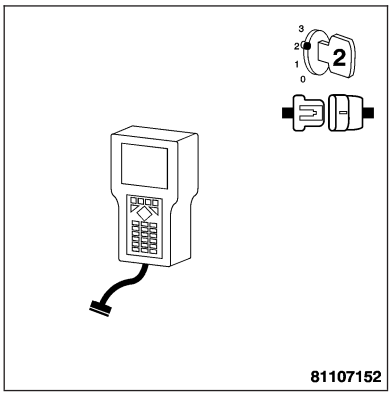

7. READ A/C HEATER CONTROL MODULE DTC'S WITH DRB III®

Turn the ignition off.
Reconnect the Engine Coolant Temperature Sensor connector.
Turn the ignition on.
With the DRB III®, read A/C Heater Control Module DTC's.
Wait two minutes.
With the DRB III®, read A/C Heater Control Module DTC's.

Does the DRB III® display an Engine Coolant Temperature Sensor Failure DTC?

Yes >> Replace the Engine Coolant Temperature Sensor. **Refer to Page 7-29**.
Perform BODY VERIFICATION TEST.

No >> Go to 8

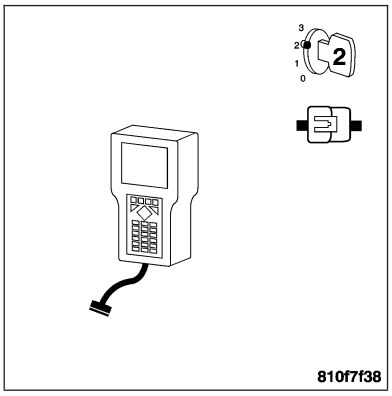

8. READ A/C HEATER CONTROL MODULE DTC'S WITH DRB III®

Ensure the Engine Coolant Temperature Sensor is connected at this time.
Start the engine.
Turn the A/C system on and run for at least five minutes.
With the DRB III®, read A/C Heater Control Module DTC's.

Does the DRB III® display an Engine Coolant Temperature Sensor Failure DTC?

Yes >> Replace the Engine Coolant Temperature Sensor. **Refer to Page 7-29**.
Perform BODY VERIFICATION TEST.

No >> The condition that caused this DTC to set is currently not present. Inspect the related wiring harness for a possible intermittent condition.
Perform BODY VERIFICATION TEST.

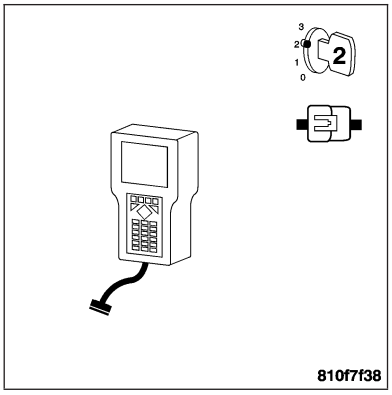

ENGINE COOLANT TEMPERATURE SENSOR CIRCUIT — CONTINUED

9. MEASURE THE RESISTANCE BETWEEN GROUND AND THE ENGINE COOLANT TEMPERATURE SENSOR SIGNAL CIRCUIT

Turn the ignition off.

Disconnect the Powertrain Control Module harness connector.

Note: Check connector - Clean/repair as necessary.

Measure the resistance between ground and the Engine Coolant Temperature Signal circuit at the Powertrain Control Module connector.

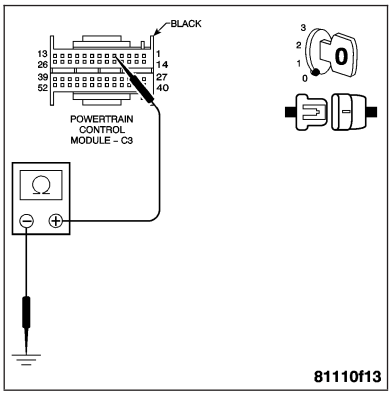

Is the resistance below 1000.0 ohms?

Yes >> Repair the Engine Coolant Temperature Sensor Signal circuit for a short to ground.
Perform BODY VERIFICATION TEST.

No >> Go to 10

10. MEASURE THE RESISTANCE FROM THE ENGINE COOLANT TEMPERATURE SENSOR SIGNAL CIRCUIT TO THE SENSOR GROUND CIRCUIT

With the ignition off.

Measure the resistance from the Engine Coolant Temperature Sensor Signal circuit to the Sensor Ground circuit at the Engine Coolant Temperature Sensor harness connector.

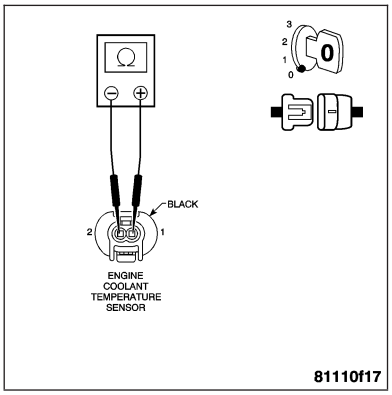

Is the resistance below 1000.0 ohms?

Yes >> Repair the Engine Coolant Temperature Sensor Signal circuit for a short to the Sensor Ground circuit.
Perform BODY VERIFICATION TEST.

No >> Replace the Powertrain Control Module. **Refer to Page 8E-56**.
Perform BODY VERIFICATION TEST.

A/C PRESSURE SENSOR CIRCUIT

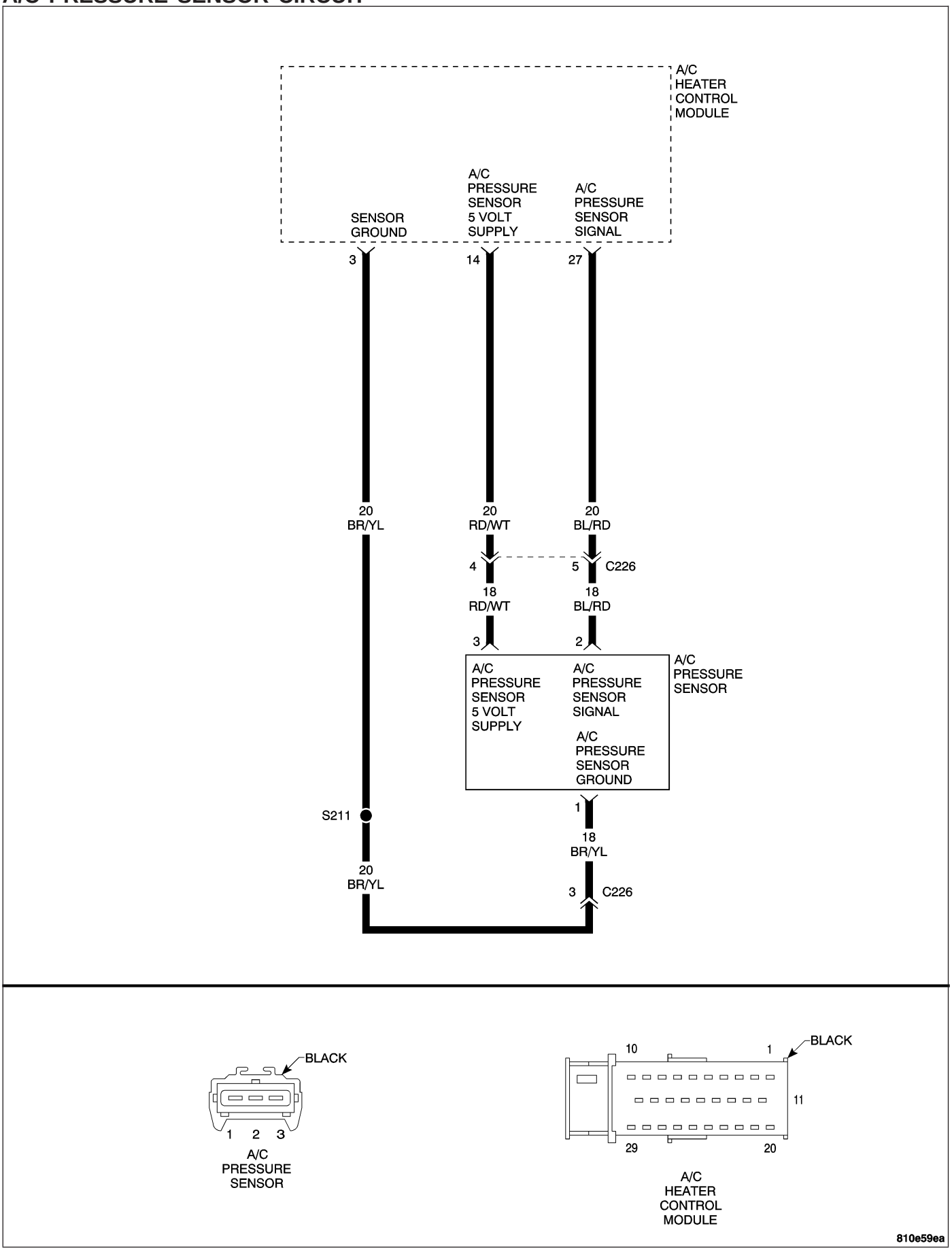

A/C PRESSURE SENSOR CIRCUIT — CONTINUED

When Monitored and Set Condition

- When Monitored: Engine Running with the A/C on.
- Set Condition: The A/C Heater Control Module detects an abnormally high or low voltage on the A/C Pressure Sensor Signal circuit.

POSSIBLE CAUSES
A/C PRESSURE SENSOR SIGNAL CIRCUIT SHORTED TO BATTERY VOLTAGE
A/C PRESSURE SENSOR SIGNAL CIRCUIT SHORTED TO 5-VOLT SUPPLY CIRCUIT
A/C PRESSURE SENSOR SIGNAL CIRCUIT SHORTED TO GROUND
A/C PRESSURE SENSOR SIGNAL CIRCUIT SHORTED TO SENSOR GROUND CIRCUIT
A/C PRESSURE SENSOR 5-VOLT SUPPLY CIRCUIT OPEN
A/C PRESSURE SENSOR 5-VOLT SUPPLY CIRCUIT SHORTED TO GROUND
A/C PRESSURE SENSOR
A/C PRESSURE SENSOR SIGNAL CIRCUIT OPEN
A/C PRESSURE SENSOR GROUND CIRCUIT OPEN
A/C HEATER CONTROL MODULE

For a complete HVAC Circuit Diagram, **Refer to Page 24-54**.

Diagnostic Test

1. READ A/C PRESSURE SENSOR VOLTAGE WITH DRB III®

Note: Ensure the A/C refrigerant system is properly charged to specifications.

Turn the ignition on.

With the DRB III®, read the A/C Pressure Sensor voltage.

Is the voltage above 4.5 volts?

Yes >> Go to 2

No >> Go to 7

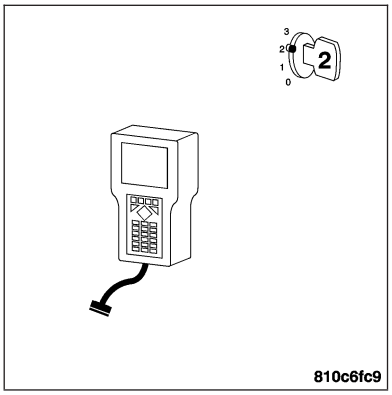

A/C PRESSURE SENSOR CIRCUIT — CONTINUED

2. MEASURE THE RESISTANCE FROM THE A/C PRESSURE SENSOR SIGNAL CIRCUIT TO THE 5-VOLT SUPPLY CIRCUIT

Turn the ignition off.

Disconnect the A/C Pressure Sensor harness connector.

Note: Check connector - Clean/repair as necessary.
Disconnect the A/C Heater Control Module harness connector.

Note: Check connector - Clean/repair as necessary.
Measure the resistance from the A/C Pressure Sensor Signal circuit to the 5-Volt supply circuit at the A/C Pressure Sensor harness connector.

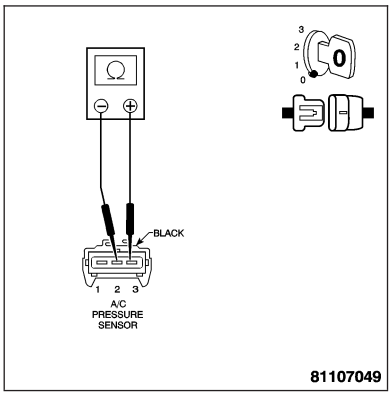

Is the resistance below 5.0 ohms?

Yes >> Repair the A/C Pressure Sensor Signal circuit for a short to the 5-Volt Supply circuit.
Perform BODY VERIFICATION TEST.

No >> Go to 3

3. MEASURE THE VOLTAGE ON THE A/C PRESSURE SENSOR SIGNAL CIRCUIT

Turn the ignition on.

Measure the voltage on the A/C Pressure Sensor Signal circuit at the A/C Pressure Sensor harness connector.

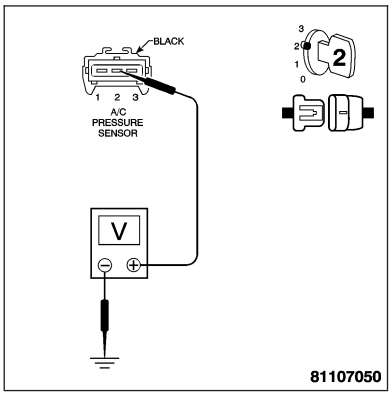

Is the voltage above 5.2 volts?

Yes >> Repair the A/C Pressure Sensor Signal circuit for a short to battery voltage.
Perform BODY VERIFICATION TEST.

No >> Go to 4

4. MONITOR A/C PRESSURE SENSOR VOLTAGE WITH DRB III®

Turn the ignition off.

Connect a jumper wire between the A/C Pressure Sensor Signal circuit and the Sensor ground circuit.

Turn the ignition on.

With the DRB III®, monitor the A/C Pressure Sensor voltage.

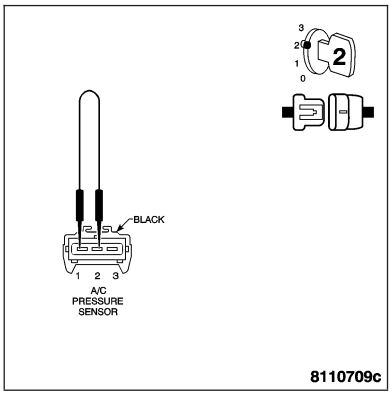

Is the voltage below 1.0 volt?

Yes >> Replace the A/C Pressure Sensor. **Refer to Page 24-86**.
Perform BODY VERIFICATION TEST.

No >> Go to 5

A/C PRESSURE SENSOR CIRCUIT — CONTINUED

5. MEASURE THE RESISTANCE OF THE A/C PRESSURE SENSOR SIGNAL CIRCUIT

Turn the ignition off.

Measure the resistance of the A/C Pressure Sensor Signal circuit from the A/C Heater Control Module harness connector to the A/C Pressure Sensor harness connector.

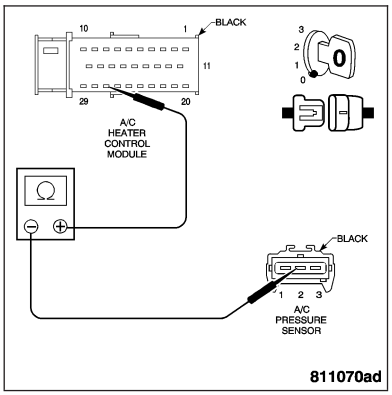

Is the resistance below 5.0 ohms?

Yes >> Go to 6

No >> Repair the A/C Pressure Sensor Signal circuit for an open.
Perform BODY VERIFICATION TEST.

6. MEASURE THE RESISTANCE BETWEEN GROUND AND THE A/C PRESSURE SENSOR GROUND CIRCUIT

With the ignition off.

Measure the resistance between ground and the A/C Pressure Sensor Ground circuit at the A/C Pressure Sensor harness connector.

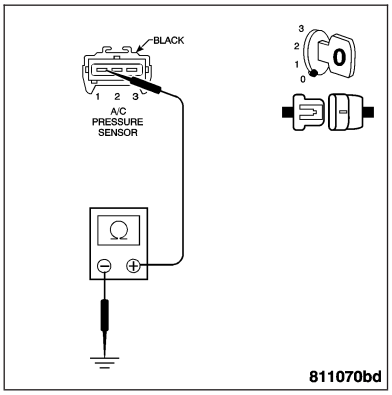

Is the resistance below 30 ohms?

Yes >> Replace the A/C Heater Control Module. **Refer to Page 24-79**.
Perform BODY VERIFICATION TEST.

No >> Repair the A/C Pressure Sensor ground circuit for an open.
Perform BODY VERIFICATION TEST.

7. READ A/C PRESSURE SENSOR VOLTAGE WITH DRB III®

With the ignition on.

With the DRB III®, read the A/C Pressure Sensor voltage.

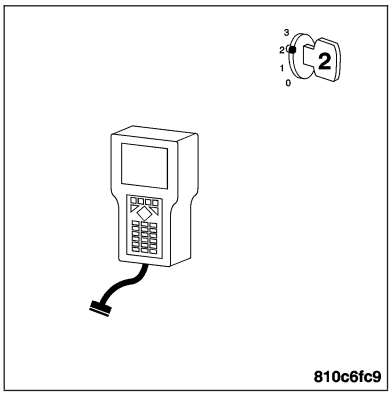

Is the voltage below 0.5 of a volt?

Yes >> Go to 8

No >> The condition that caused this DTC to set is currently not present. Inspect the related wiring harness for a possible intermittent condition.
Perform BODY VERIFICATION TEST.

A/C PRESSURE SENSOR CIRCUIT — CONTINUED

8. MEASURE THE VOLTAGE OF THE 5-VOLT SUPPLY CIRCUIT

Turn the ignition off.

Disconnect the A/C Pressure Sensor harness connector.

Note: Check connector - Clean/repair as necessary.

Turn the ignition on.

Measure the voltage of the 5-Volt Supply circuit at the A/C Pressure Sensor harness connector.

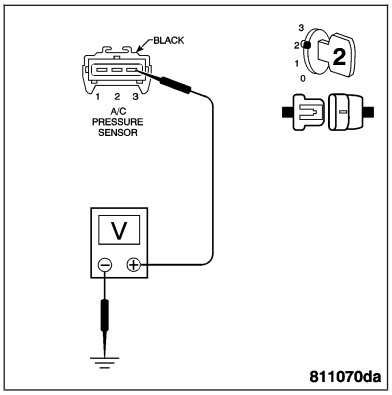

Is the voltage between 4.5 and 5.0 volts?

Yes >> Go to 9

No >> Go to 12

9. MONITOR A/C PRESSURE SENSOR VOLTAGE WITH DRB III®

With the ignition on.

With the DRB III®, monitor the A/C Pressure Sensor voltage.

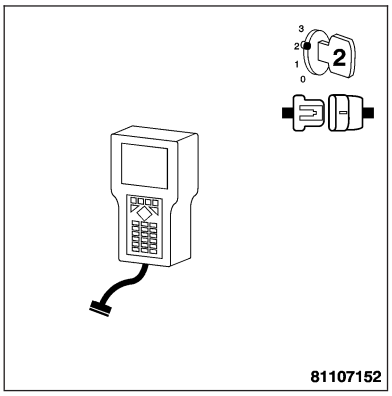

Is the voltage above 0.5 of a volt?

Yes >> Replace the A/C Pressure Sensor. **Refer to Page 24-86**
Perform BODY VERIFICATION TEST.

No >> Go to 10

10. MEASURE THE RESISTANCE BETWEEN GROUND AND THE A/C PRESSURE SENSOR SIGNAL CIRCUIT

Turn the ignition off.

Disconnect the A/C Heater Control Module harness connector.

Note: Check connector - Clean/repair as necessary.

Measure the resistance between ground and the A/C Pressure Sensor Signal circuit in the A/C Pressure Sensor harness connector.

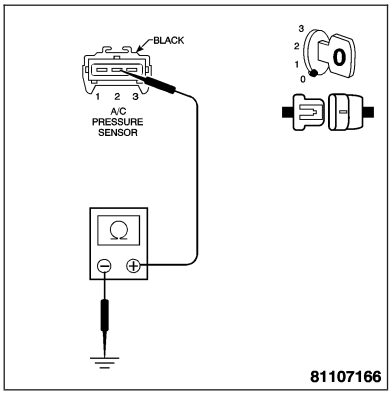

Is the resistance below 100 ohms?

Yes >> Repair the A/C Pressure Sensor Signal circuit for a short to ground.
Perform BODY VERIFICATION TEST.

No >> Go to 11

A/C PRESSURE SENSOR CIRCUIT — CONTINUED

11. MEASURE THE RESISTANCE FROM THE A/C PRESSURE SENSOR SIGNAL CIRCUIT TO THE SENSOR GROUND CIRCUIT

With the ignition off.

Measure the resistance from the A/C Pressure Sensor Signal circuit to the Sensor Ground circuit at the A/C Pressure Sensor harness connector.

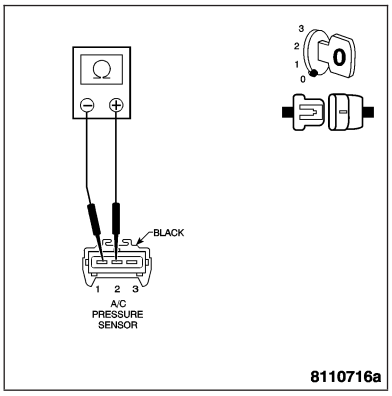

Is the resistance below 100 ohms?

Yes >> Repair the A/C Pressure Sensor Signal circuit for a short to the Sensor Ground circuit.
Perform BODY VERIFICATION TEST.

No >> Replace the A/C Heater Control Module. **Refer to Page 24-79**.
Perform BODY VERIFICATION TEST.

12. MEASURE THE RESISTANCE BETWEEN GROUND AND THE A/C PRESSURE SENSOR 5-VOLT SUPPLY CIRCUIT

Turn the ignition off.

Disconnect the A/C Heater Control Module harness connector.

Measure the resistance between ground and the 5-Volt Supply circuit at the A/C Pressure Sensor harness connector.

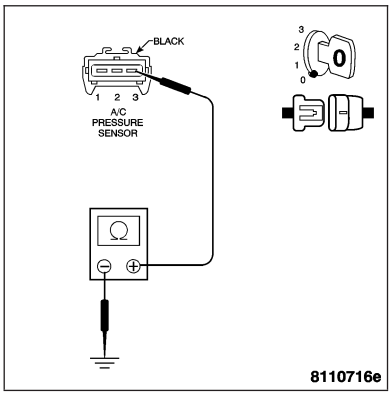

Is the resistance below 100 ohms?

Yes >> Repair the 5-Volt Supply circuit for a short to ground.
Perform BODY VERIFICATION TEST.

No >> Go to 13

13. MEASURE THE RESISTANCE OF THE A/C PRESSURE SENSOR 5-VOLT SUPPLY CIRCUIT

With the ignition off.

Measure the resistance of the 5-Volt Supply circuit from the A/C Pressure Sensor harness connector to the A/C Heater Control Module harness connector.

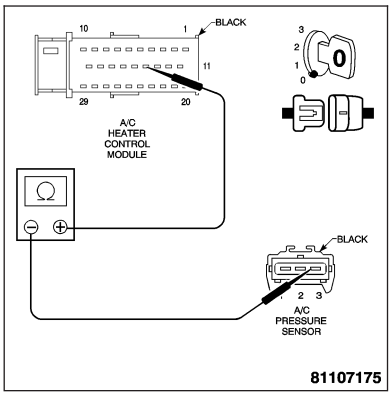

Is the resistance below 5.0 ohms?

Yes >> Replace the A/C Heater Control Module. **Refer to Page 24-79**.
Perform BODY VERIFICATION TEST.

No >> Repair the A/C Pressure Sensor 5-Volt Supply circuit for an open.
Perform BODY VERIFICATION TEST.

COOLANT CIRCULATION PUMP CIRCUIT

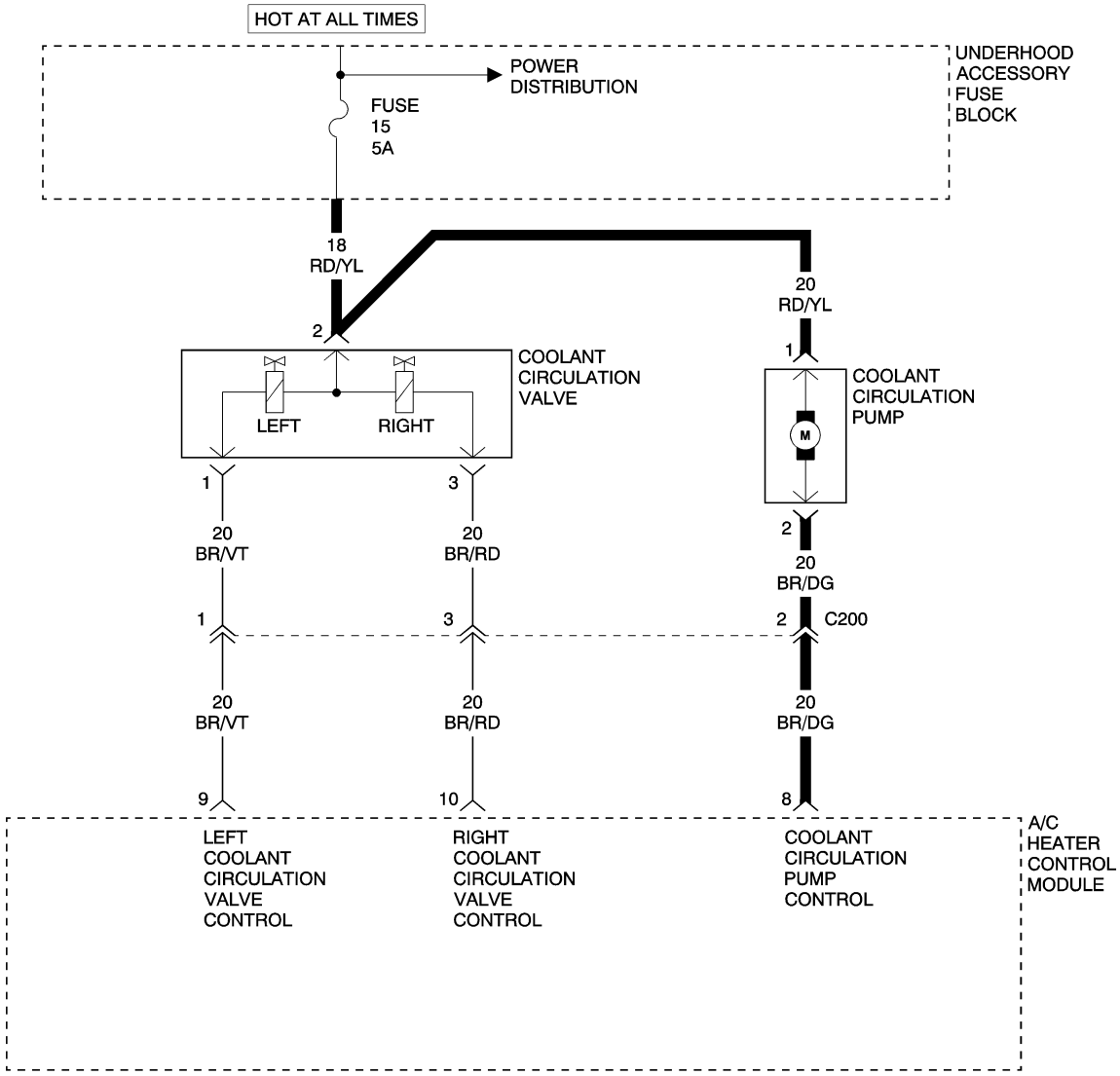

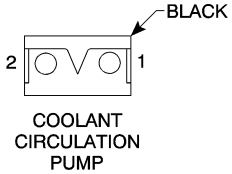

COOLANT CIRCULATION PUMP

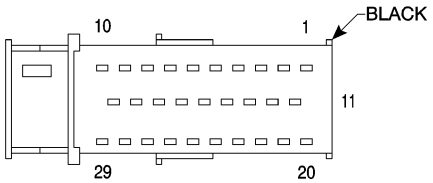

A/C HEATER CONTROL MODULE

810e8c00

COOLANT CIRCULATION PUMP CIRCUIT — CONTINUED

When Monitored and Set Condition

- When Monitored: With the ignition on.
- Set Condition: The A/C Heater Control Module detects an abnormal condition on the Coolant Circulation Pump Control circuit.

POSSIBLE CAUSES
FUSED B(+) CIRCUIT OPEN
COOLANT CIRCULATION PUMP CONTROL CIRCUIT OPEN
COOLANT CIRCULATION PUMP
A/C HEATER CONTROL MODULE

For a complete HVAC Circuit Diagram, **Refer to Page 24-54**.

Diagnostic Test

1. MEASURE COOLANT CIRCULATION PUMP VOLTAGE

Note: Inspect Fuse 15 located in the Underhood Accessory Fuse Block. If the fuse is open, repair the cause of the open fuse before continuing.
Turn the ignition off.
Disconnect the Coolant Circulation Pump harness connector.

Note: Check connector - Clean/repair as necessary.
Measure the voltage of the Fused B(+) circuit at the Coolant Circulation Pump harness connector.

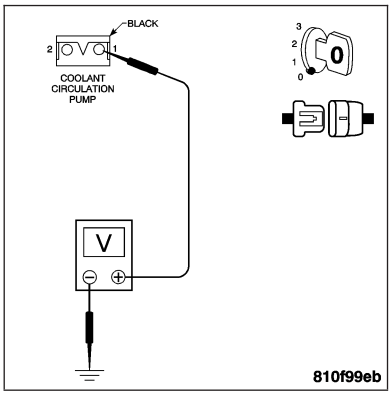

Is the voltage above 10 volts?

Yes >> Go to 2

No >> Repair the Coolant Circulation Pump Fused B(+) circuit.
Perform BODY VERIFICATION TEST.

2. MEASURE THE VOLTAGE OF THE COOLANT CIRCULATION PUMP CONTROL CIRCUIT

With the ignition off.
Disconnect the A/C Heater Control Module harness connector.

Note: Check connector - Clean/repair as necessary.
Connect a jumper wire between the terminals in the Coolant Circulation Pump harness connector.
Measure the voltage of the Coolant Circulation Pump Control circuit at the A/C Heater Control Module harness connector.

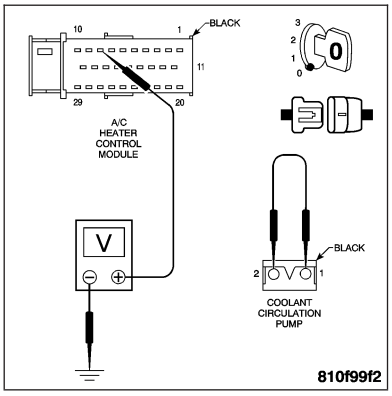

Is the voltage above 10 volts?

Yes >> Go to 3

No >> Repair the Coolant Circulation Pump Control circuit for an open.
Perform BODY VERIFICATION TEST.

COOLANT CIRCULATION PUMP CIRCUIT — CONTINUED

3. MEASURE THE VOLTAGE OF THE COOLANT CIRCULATION PUMP CONTROL CIRCUIT

With the ignition off.

Reconnect the Coolant Circulation Pump harness connector.

Measure the voltage of the Coolant Circulation Pump Control circuit at the A/C Heater Control Module harness connector.

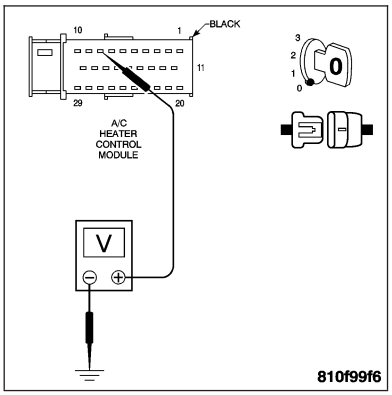

Is the voltage above 10 volts?

Yes >> Replace the A/C Heater Control Module. **Refer to Page 24-79**.
Perform BODY VERIFICATION TEST.

No >> Replace the Coolant Circulation Pump. **Refer to Page 24-123**.
Perform BODY VERIFICATION TEST.

LEFT COOLANT CIRCULATION VALVE CIRCUIT

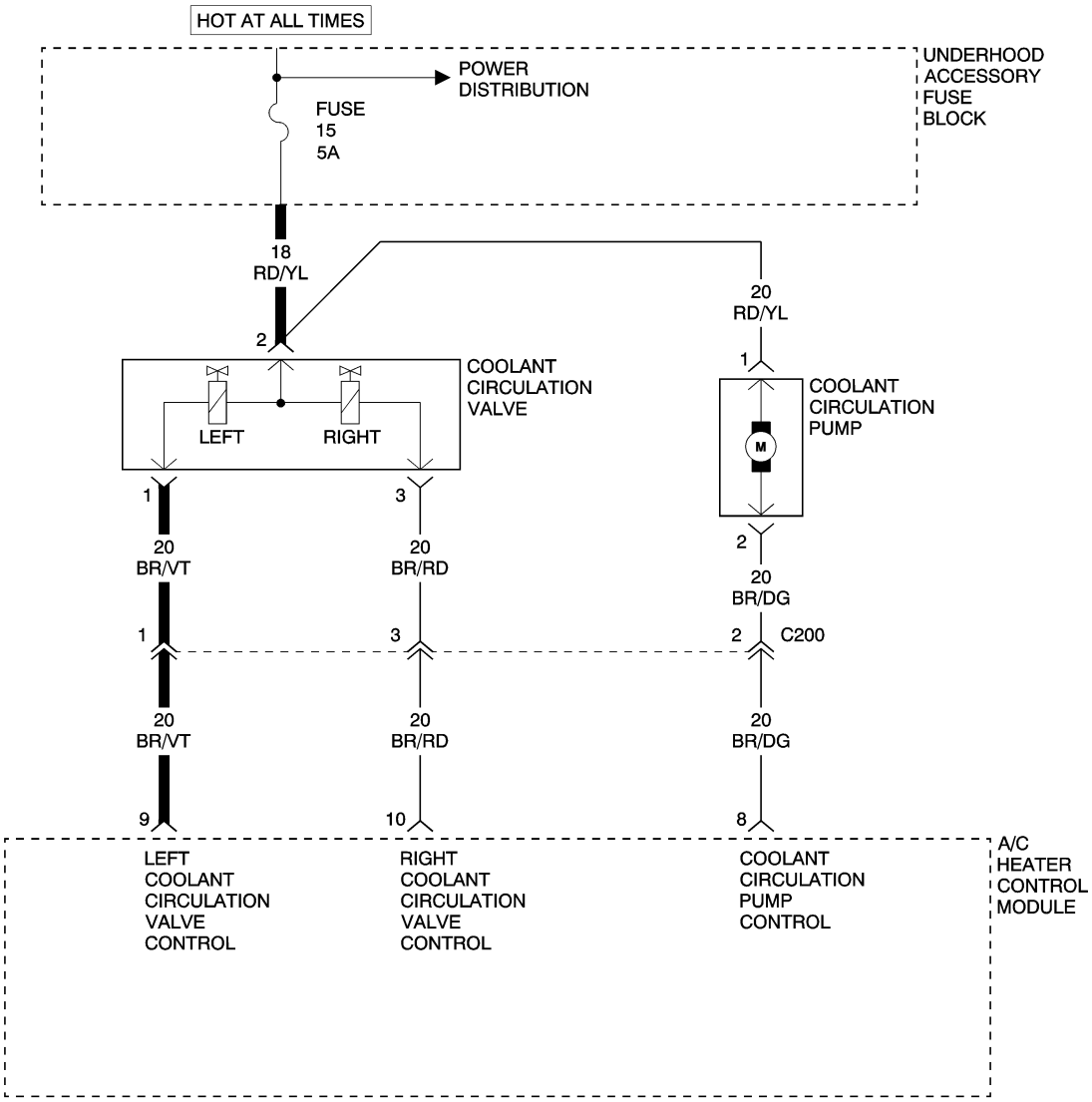

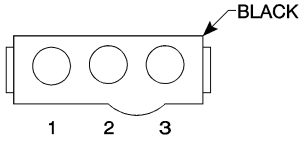

COOLANT CIRCULATION VALVE

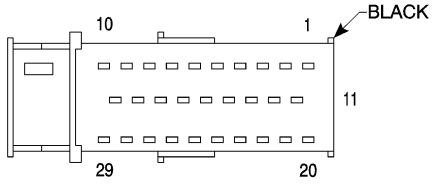

A/C HEATER CONTROL MODULE

810e9e4c

LEFT COOLANT CIRCULATION VALVE CIRCUIT — CONTINUED

When Monitored and Set Condition

- When Monitored: With the ignition on.
- Set Condition: The A/C Heater Control Module detects an abnormal condition on the Left Coolant Circulation Valve Control circuit.

POSSIBLE CAUSES
FUSED B(+) CIRCUIT OPEN
LEFT COOLANT CIRCULATION VALVE CONTROL CIRCUIT OPEN
LEFT COOLANT CIRCULATION VALVE
A/C HEATER CONTROL MODULE

For a complete HVAC Circuit Diagram, **Refer to Page 24-54**.

Diagnostic Test

1. MEASURE COOLANT CIRCULATION VALVE VOLTAGE

Note: Inspect Fuse 15 located in the Underhood Accessory Fuse Block. If the fuse is open, repair the cause of the open fuse before continuing.
Turn the ignition off.
Disconnect the Coolant Circulation Valve harness connector.

Note: Check connector - Clean/repair as necessary.
Measure the voltage of the Fused B(+) circuit at the Coolant Circulation Valve harness connector.

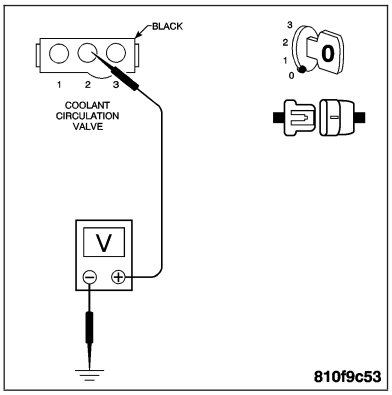

Is the voltage above 10 volts?

Yes >> Go to 2

No >> Repair the Coolant Circulation Valve Fused B(+) circuit.
Perform BODY VERIFICATION TEST.

2. MEASURE THE VOLTAGE OF THE LEFT COOLANT CIRCULATION VALVE CONTROL CIRCUIT

With the ignition off.
Disconnect the A/C Heater Control Module harness connector.

Note: Check connector - Clean/repair as necessary.
Connect a jumper wire between the Left Coolant Circulation Valve terminals in the Coolant Circulation Valve harness connector.
Measure the voltage of the Left Coolant Circulation Valve Control circuit at the A/C Heater Control Module harness connector.

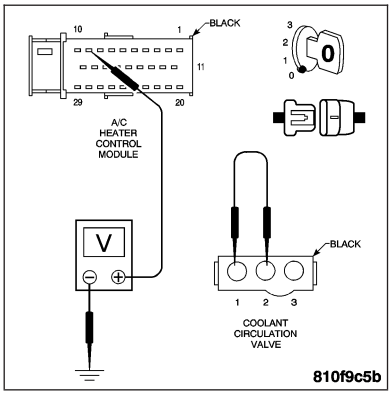

Is the voltage above 10 volts?

Yes >> Go to 3

No >> Repair the Left Coolant Circulation Valve Control circuit for an open.
Perform BODY VERIFICATION TEST.

LEFT COOLANT CIRCULATION VALVE CIRCUIT — CONTINUED

3. MEASURE THE VOLTAGE OF THE LEFT COOLANT CIRCULATION VALVE CONTROL CIRCUIT

With the ignition off.

Reconnect the Coolant Circulation Valve harness connector.

Measure the voltage of the Left Coolant Circulation Valve Control circuit at the A/C Heater Control Module harness connector.

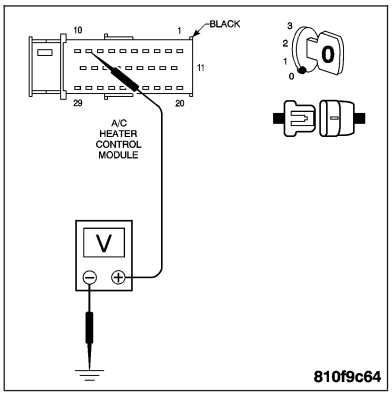

Is the voltage above 10 volts?

Yes >> Replace the A/C Heater Control Module. **Refer to Page 24-79**.
Perform BODY VERIFICATION TEST.

No >> Replace the Coolant Circulation Valve. **Refer to Page 24-140**.
Perform BODY VERIFICATION TEST.

RIGHT COOLANT CIRCULATION VALVE CIRCUIT

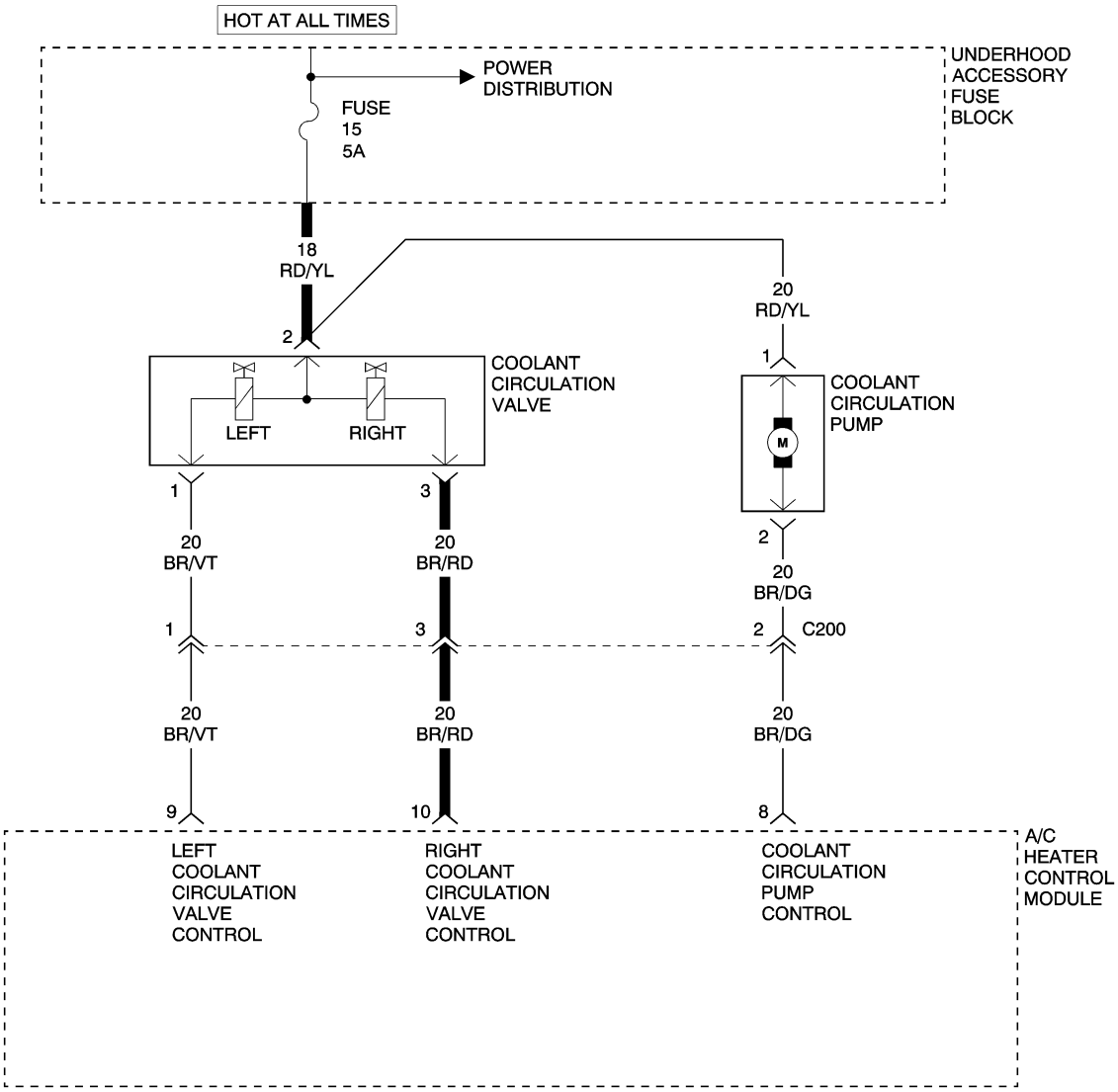

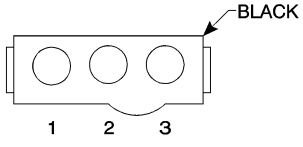

COOLANT CIRCULATION VALVE

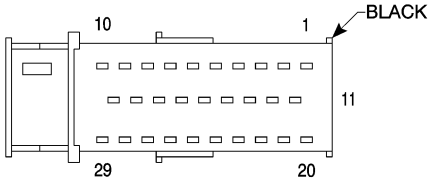

A/C HEATER CONTROL MODULE

810ea35a

RIGHT COOLANT CIRCULATION VALVE CIRCUIT — CONTINUED

When Monitored and Set Condition

- When Monitored: With the ignition on.
- Set Condition: The A/C Heater Control Module detects an abnormal condition on the Right Coolant Circulation Valve Control circuit.

POSSIBLE CAUSES
FUSED B(+) CIRCUIT OPEN
RIGHT COOLANT CIRCULATION VALVE CONTROL CIRCUIT OPEN
RIGHT COOLANT CIRCULATION VALVE
A/C HEATER CONTROL MODULE

For a complete HVAC Circuit Diagram, **Refer to Page 24-54**.

Diagnostic Test

1. MEASURE COOLANT CIRCULATION VALVE VOLTAGE

Note: Inspect Fuse 15 located in the Underhood Accessory Fuse Block. If the fuse is open, repair the cause of the open fuse before continuing.
Turn the ignition off.
Disconnect the Coolant Circulation Valve harness connector.

Note: Check connector - Clean/repair as necessary.
Measure the voltage of the Fused B(+) circuit at the Coolant Circulation Valve harness connector.

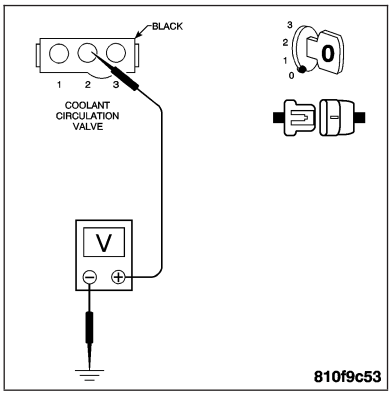

Is the voltage above 10 volts?

Yes >> Go to 2

No >> Repair the Coolant Circulation Valve Fused B(+) circuit.
Perform BODY VERIFICATION TEST.

2. MEASURE THE VOLTAGE OF THE RIGHT COOLANT CIRCULATION VALVE CONTROL CIRCUIT

With the ignition off.
Disconnect the A/C Heater Control Module harness connector.

Note: Check connector - Clean/repair as necessary.
Connect a jumper wire between the Right Coolant Circulation Valve terminals in the Coolant Circulation Valve harness connector.
Measure the voltage of the Right Coolant Circulation Valve Control circuit at the A/C Heater Control Module harness connector.

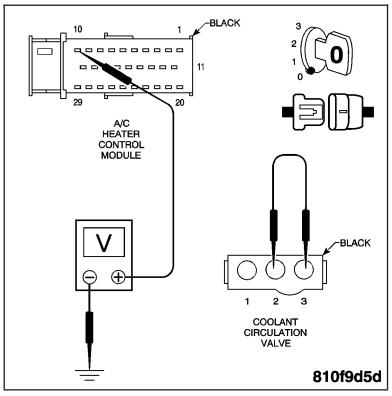

Is the voltage above 10 volts?

Yes >> Go to 3

No >> Repair the Right Coolant Circulation Valve Control circuit for an open.
Perform BODY VERIFICATION TEST.

RIGHT COOLANT CIRCULATION VALVE CIRCUIT — CONTINUED

3. MEASURE THE VOLTAGE OF THE RIGHT COOLANT CIRCULATION VALVE CONTROL CIRCUIT

With the ignition off.

Reconnect the Coolant Circulation Valve harness connector.

Measure the voltage of the Right Coolant Circulation Valve Control circuit at the A/C Heater Control Module harness connector.

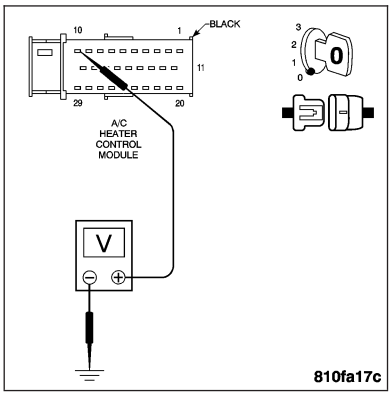

Is the voltage above 10 volts?

Yes >> Replace the A/C Heater Control Module. **Refer to Page 24-79**
Perform BODY VERIFICATION TEST.

No >> Replace the Coolant Circulation Valve. **Refer to Page 24-140**.
Perform BODY VERIFICATION TEST.

A/C COMPRESSOR CLUTCH CIRCUIT

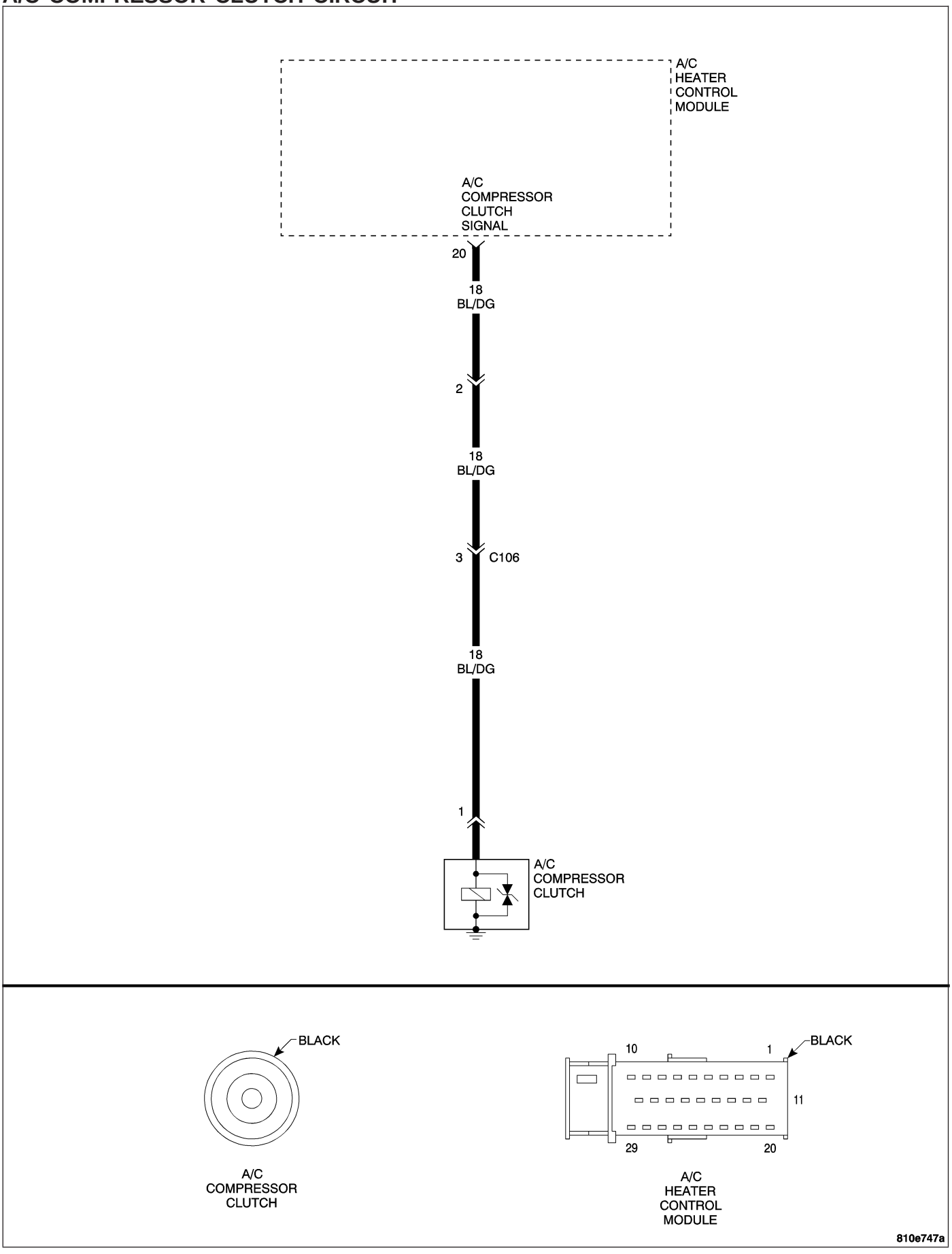

A/C COMPRESSOR CLUTCH CIRCUIT — CONTINUED

When Monitored and Set Condition

- When Monitored: Engine Running with the A/C on.
- Set Condition: The A/C Heater Control Module detects an A/C Compressor malfunction.

POSSIBLE CAUSES
A/C COMPRESSOR CLUTCH SIGNAL CIRCUIT OPEN
A/C COMPRESSOR CLUTCH
A/C HEATER CONTROL MODULE

For a complete HVAC Circuit Diagram **Refer to Page 24-54**.

Diagnostic Test

1. TEST THE A/C COMPRESSOR CLUTCH

Turn the ignition off.

Disconnect the inline connector C106 in the underhood relay control module compartment.

Note: Check connector - Clean/repair as necessary.

Using a jumper wire to battery power, energize the A/C Compressor clutch.

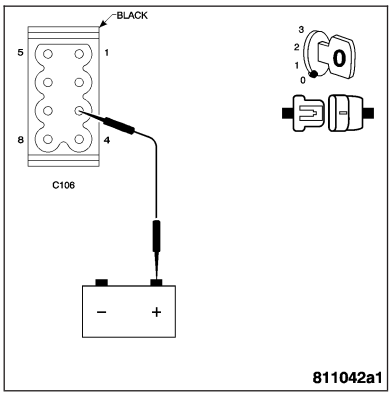

Does the A/C Compressor clutch energize?

Yes >> Go to 2

No >> Go to 3

2. MEASURE THE RESISTANCE OF THE A/C COMPRESSOR CLUTCH SIGNAL CIRCUIT

With the ignition off.

Disconnect the A/C Heater Control Module harness connector.

Note: Check connector - Clean/repair as necessary.

Measure the resistance of the A/C Compressor Clutch signal circuit from the inline connector C106 to the A/C Heater Control Module harness connector.

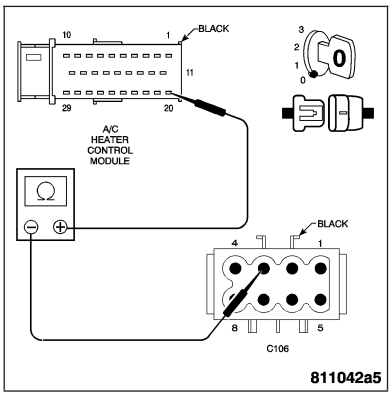

Is the resistance below 5.0 ohms?

Yes >> Replace the A/C Heater Control Module. **Refer to Page 24-79**.
Perform BODY VERIFICATION TEST.

No >> Repair the A/C Compressor Clutch signal circuit for an open.
Perform BODY VERIFICATION TEST.

A/C COMPRESSOR CLUTCH CIRCUIT — CONTINUED

3. MEASURE THE RESISTANCE OF THE A/C COMPRESSOR CLUTCH SIGNAL CIRCUIT

With the ignition off.

Disconnect the A/C Compressor Clutch connector.

Note: Check connector - Clean/repair as necessary.

Measure the resistance of the A/C Compressor Clutch signal circuit from the inline connector C106 to the A/C Compressor Clutch connector.

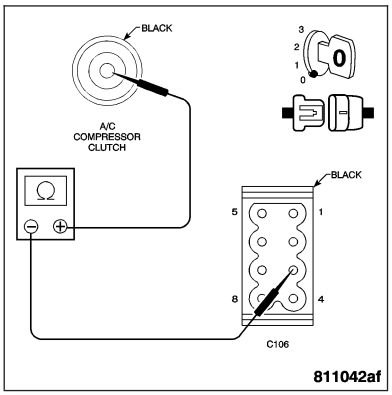

Is the resistance below 5.0 ohms?

Yes >> Replace the A/C Compressor Clutch. **Refer to Page 24-121**.
Perform BODY VERIFICATION TEST.

No >> Repair the A/C Compressor Clutch signal circuit for an open.
Perform BODY VERIFICATION TEST.

RECIRCULATED AIR SWITCHOVER VALVE CIRCUIT

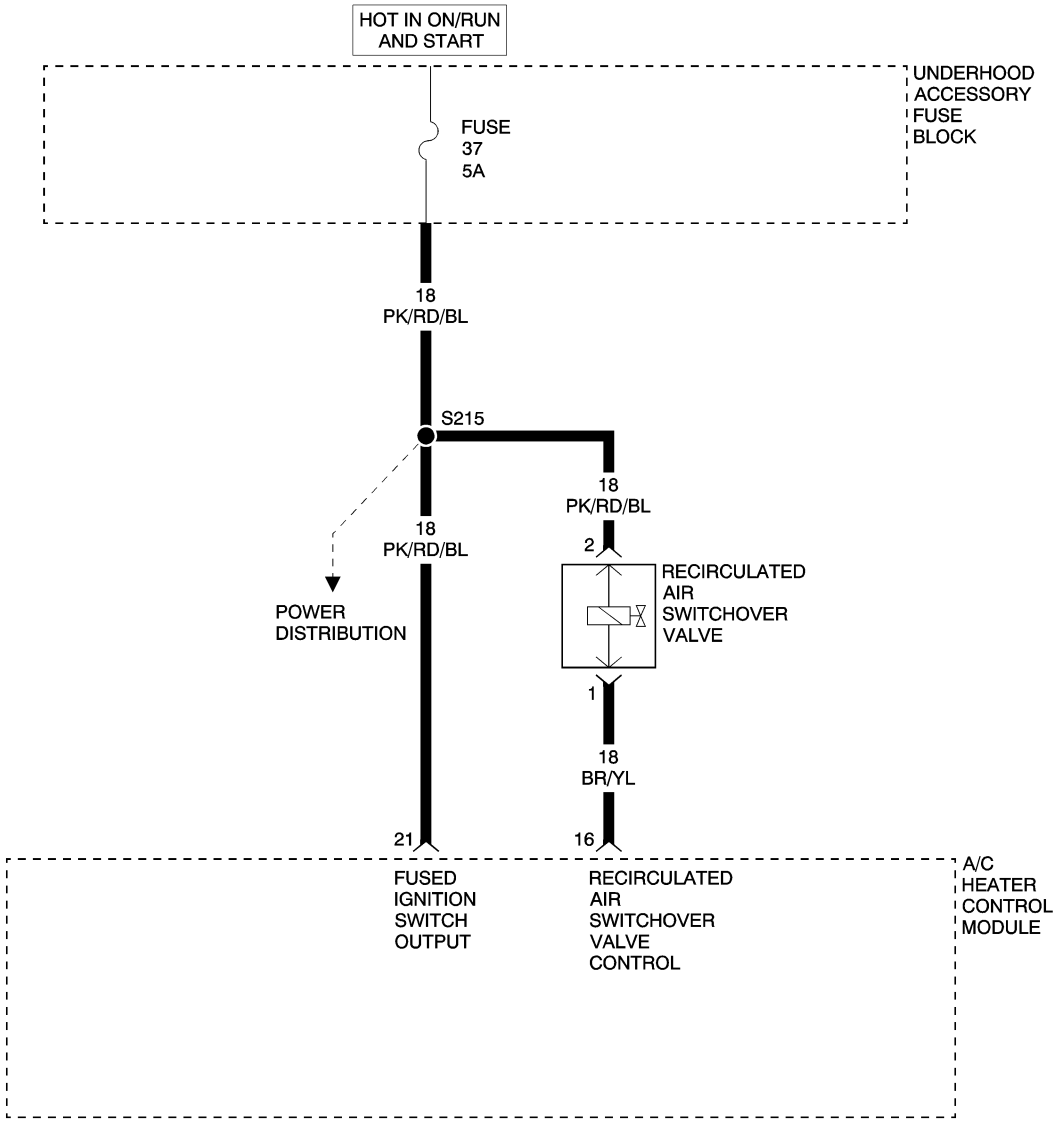

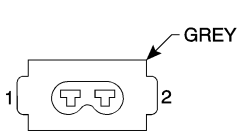

RECIRCULATED AIR SWITCHOVER VALVE

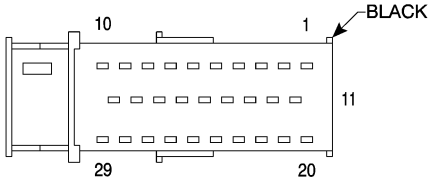

A/C HEATER CONTROL MODULE

810e8437

RECIRCULATED AIR SWITCHOVER VALVE CIRCUIT — CONTINUED

When Monitored and Set Condition

- When Monitored: With the ignition on.
- Set Condition: The A/C Heater Control Module detects an abnormal condition on the Recirculated Air Switchover Valve Control circuit.

POSSIBLE CAUSES
FUSED B(+) CIRCUIT OPEN
RECIRCULATED AIR SWITCHOVER VALVE CONTROL CIRCUIT OPEN
RECIRCULATED AIR SWITCHOVER VALVE
A/C HEATER CONTROL MODULE

For a complete HVAC Circuit Diagram, **Refer to Page 24-54**.

Diagnostic Test

1. MEASURE RECIRCULATED AIR SWITCHOVER VALVE VOLTAGE

Note: Inspect Fuse 37 located in the Underhood Accessory Fuse Block. If the fuse is open, repair the cause of the open fuse before continuing.
Disconnect the Recirculated Air Switchover Valve harness connector.

Note: Check connector - Clean/repair as necessary.
Turn the ignition on.

Measure the voltage of the Fused B(+) circuit at the Recirculated Air Switchover Valve harness connector.

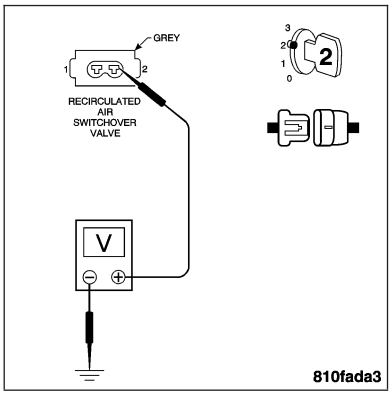

Is the voltage above 10 volts?

Yes >> Go to 2

No >> Repair the Recirculated Air Switchover Valve Fused B(+) circuit.
Perform BODY VERIFICATION TEST.

2. MEASURE THE RESISTANCE OF THE RECIRCULATED AIR SWITCHOVER VALVE CONTROL CIRCUIT

Turn the ignition off.

Disconnect the Recirculated Air Switchover Valve harness connector.

Note: Check connector - Clean/repair as necessary.
Disconnect the A/C Heater Control Module harness connector.

Note: Check connector - Clean/repair as necessary.
Measure the resistance of the Recirculated Air Switchover Valve Control circuit from the Recirculated Air Switchover Valve harness connector to the A/C Heater Control Module harness connector.

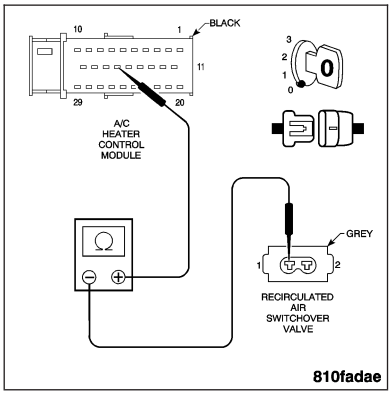

Is the resistance below 5.0 ohms?

Yes >> Go to 3

No >> Repair the Recirculated Air Switchover Valve Control circuit for an open.
Perform BODY VERIFICATION TEST.

RECIRCULATED AIR SWITCHOVER VALVE CIRCUIT — CONTINUED

3. MEASURE THE VOLTAGE OF THE RECIRCULATED AIR SWITCHOVER VALVE CONTROL CIRCUIT

Reconnect the Recirculated Air Switchover Valve connector.

Turn the ignition on.

Measure the voltage of the Recirculated Air Switchover Valve Control circuit at the A/C Heater Control Module harness connector.

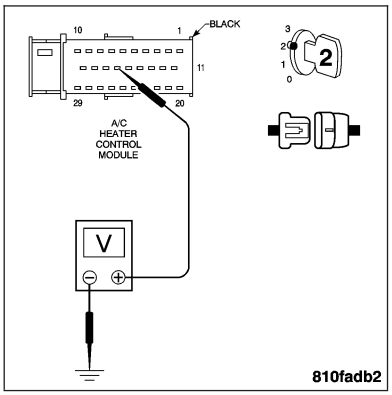

Is the voltage above 10 volts?

Yes >> Replace the A/C Heater Control Module. **Refer to Page 24-79**.
Perform BODY VERIFICATION TEST.

No >> Replace the Recirculated Air Switchover Valve. **Refer to Page 24-87**.
Perform BODY VERIFICATION TEST.

NO COMMUNICATION FROM INSTRUMENT CLUSTER

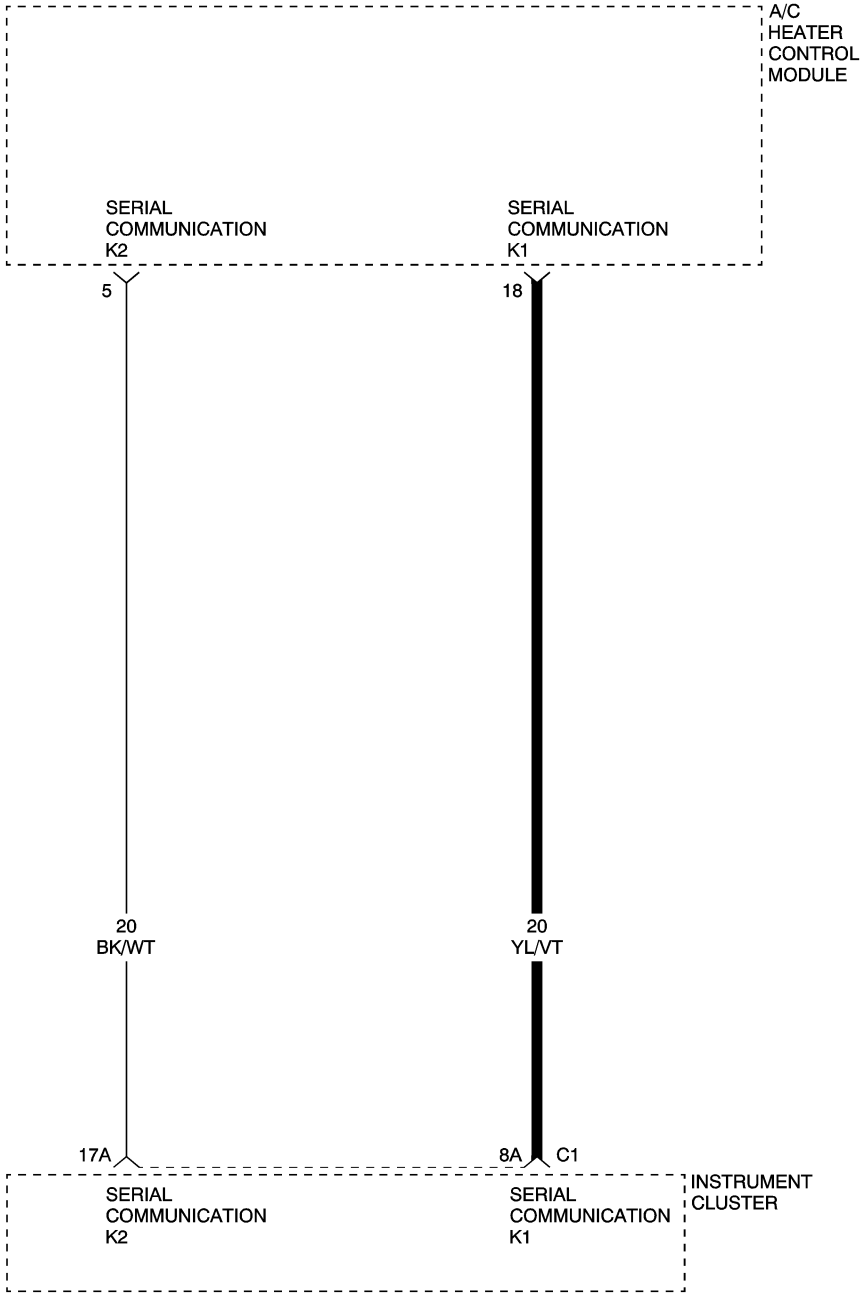

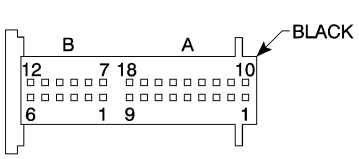

INSTRUMENT
CLUSTER C1

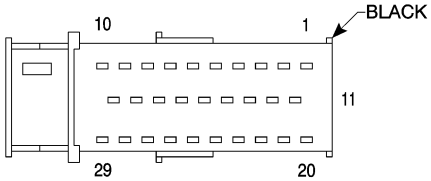

A/C
HEATER
CONTROL
MODULE

810e73a7

NO COMMUNICATION FROM INSTRUMENT CLUSTER — CONTINUED

When Monitored and Set Condition

- When Monitored: With the ignition on.
- Set Condition: Serial Communication K1 failure between the A/C Heater Control Module and the Instrument Cluster.

POSSIBLE CAUSES
SERIAL COMMUNICATION K1 CIRCUIT OPEN
INSTRUMENT CLUSTER
A/C HEATER CONTROL MODULE

For a complete HVAC Circuit Diagram, **Refer to Page 24-54**.

Diagnostic Test

1. MEASURE THE RESISTANCE OF THE SERIAL COMMUNICATION K1 CIRCUIT

Turn the ignition off.

Disconnect the Instrument Cluster harness connector.

Note: Check connector - Clean/repair as necessary.
Disconnect the A/C Heater Control Module harness connector.

Note: Check connector - Clean/repair as necessary.
Measure the resistance of the Serial Communication K1 circuit from the Instrument Cluster harness connector to the A/C Heater Control Module harness connector.

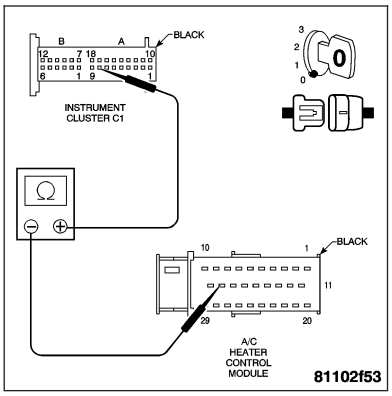

Is the resistance below 5.0 ohms?

Yes >> Replace the A/C Heater Control Module. **Refer to Page 24-79**.
Perform BODY VERIFICATION TEST.

No >> Repair the Serial Communication K1 circuit for an open.
Perform BODY VERIFICATION TEST.

NO COMMUNICATION TO INSTRUMENT CLUSTER

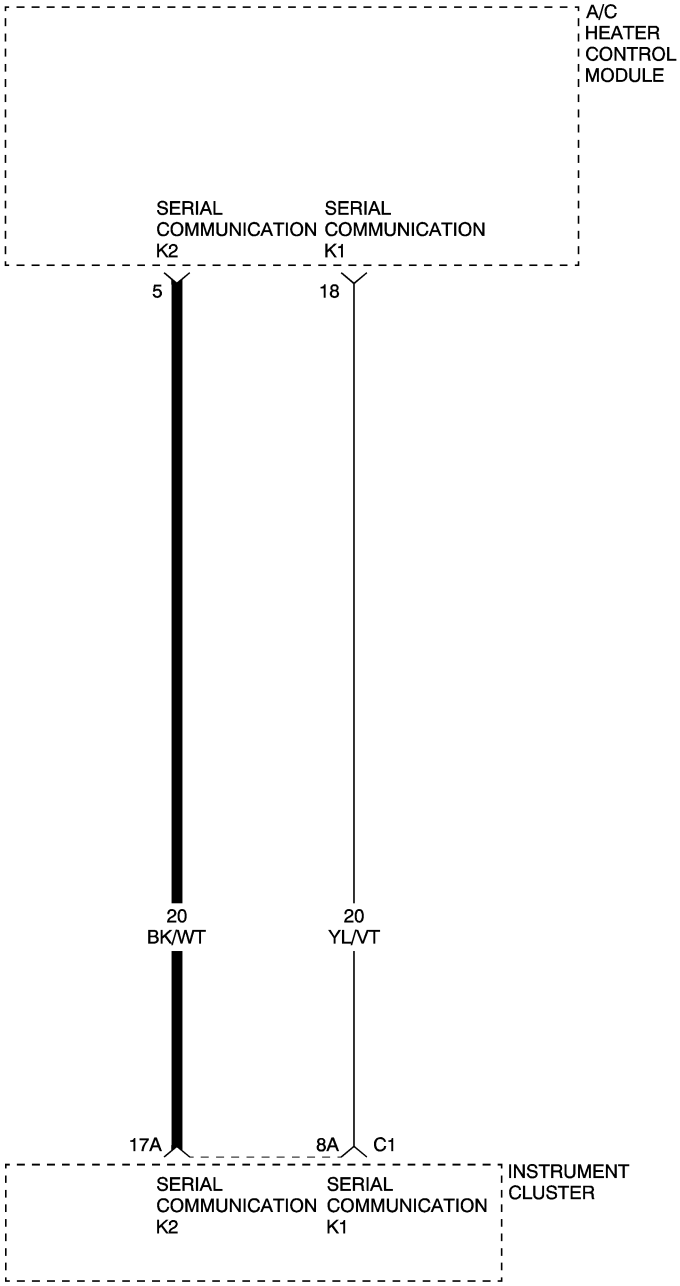

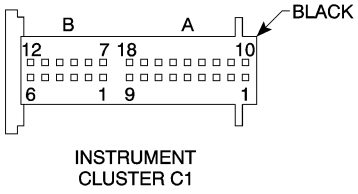

INSTRUMENT
CLUSTER C1

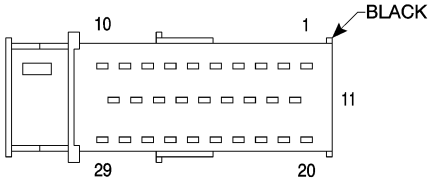

A/C
HEATER
CONTROL
MODULE

810e7453

NO COMMUNICATION TO INSTRUMENT CLUSTER — CONTINUED

When Monitored and Set Condition

- When Monitored: With the ignition on.
- Set Condition: Serial Communication K2 failure between the A/C Heater Control Module and the Instrument Cluster.

POSSIBLE CAUSES
SERIAL COMMUNICATION K2 CIRCUIT OPEN
INSTRUMENT CLUSTER
A/C HEATER CONTROL MODULE

For a complete HVAC Circuit Diagram, **Refer to Page 24-54**.

Diagnostic Test

1. MEASURE THE RESISTANCE OF THE SERIAL COMMUNICATION K2 CIRCUIT

Turn the ignition off.

Disconnect the Instrument Cluster harness connector.

Note: Check connector - Clean/repair as necessary.

Disconnect the A/C Heater Control Module harness connector.

Note: Check connector - Clean/repair as necessary.

Measure the resistance of the Serial Communication K2 circuit from the Instrument Cluster harness connector to the A/C Heater Control Module harness connector.

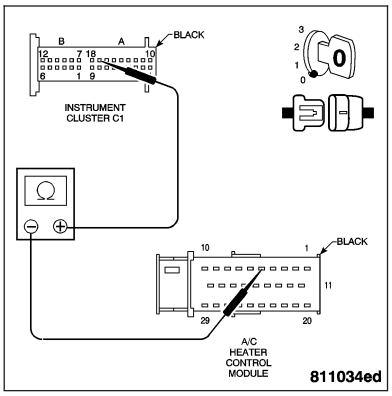

Is the resistance below 5.0 ohms?

Yes >> Replace the A/C Heater Control Module. **Refer to Page 24-79**.
Perform BODY VERIFICATION TEST.

No >> Repair the Serial Communication K2 circuit for an open.
Perform BODY VERIFICATION TEST.

BODY VERIFICATION TEST

1.

Turn the ignition off.

Disconnect all jumper wires and reconnect all previously disconnected components and connectors.

Note: If the SKREEM or the PCM was replaced, refer to the service information for proper programming procedures.

If the Body Control Module was replaced, turn the ignition on for 15 seconds (to allow the new BCM to learn VIN) or engine may not start.

Program all RKE transmitters and other options as necessary.

With the DRB III®, erase all Diagnostic Trouble Codes (DTCs) from ALL modules. Start the engine and allow it to run for 2 minutes. Operate all functions of the system that caused the original complaint.

Ensure that all accessories are turned off and the battery is fully charged.

Turn the ignition off and wait 5 seconds. Turn the ignition on and using the DRB III®, read DTCs from ALL modules.

Are any DTCs present or is the original complaint still present?

Are any DTCs present?

YES >> Repair is not complete, refer to appropriate symptom.

NO >> Repair is complete.

SCHEMATICS AND DIAGRAMS

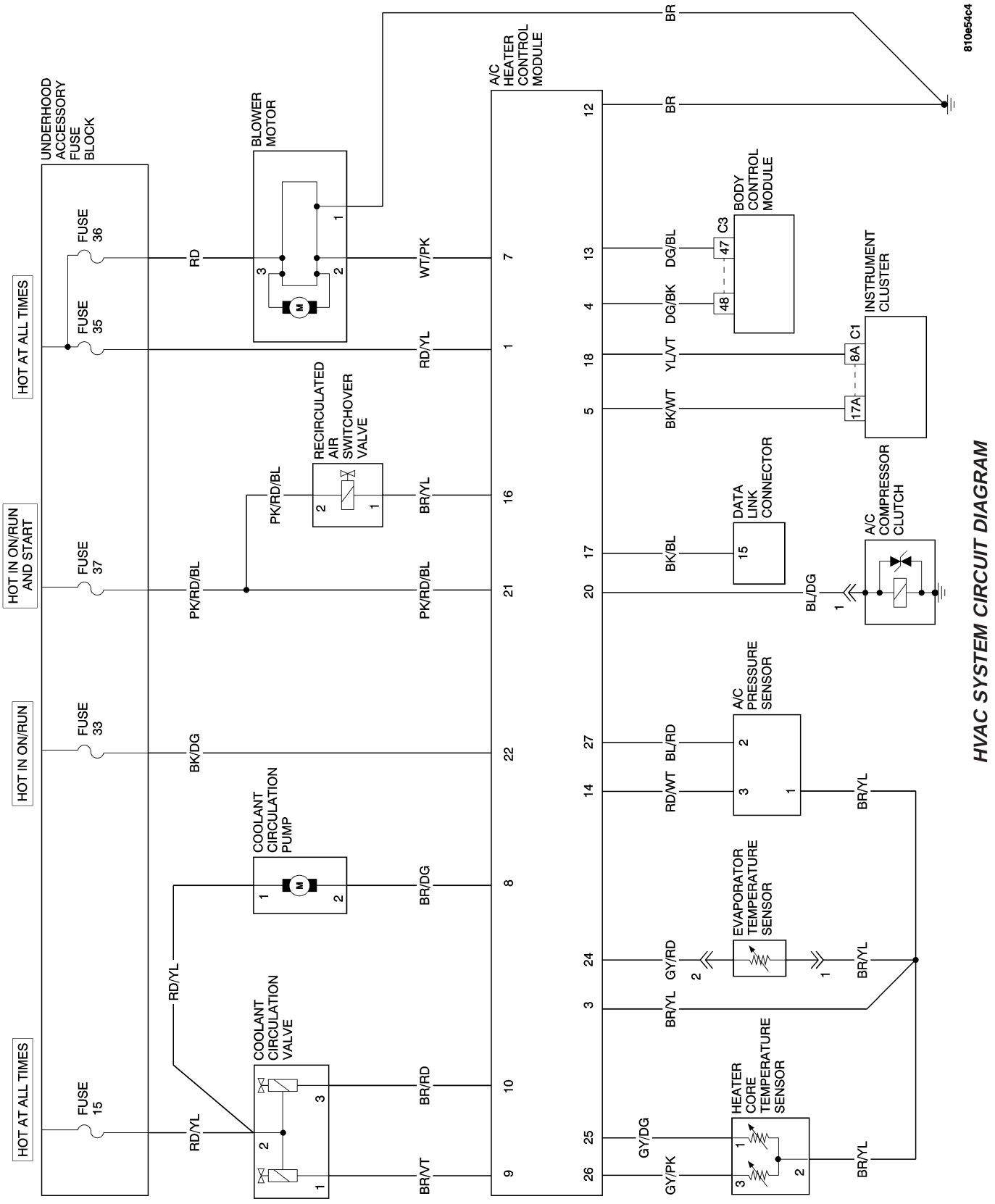

HEATING & AIR CONDITIONING - SERVICE INFORMATION

TABLE OF CONTENTS

page

HEATING & AIR CONDITIONING - SERVICE INFORMATION
DESCRIPTION
COOLING SYSTEM REQUIREMENTS 55
DESCRIPTION - HEATER AND AIR CONDITIONER 55
DESCRIPTION - RESIDUAL ENGINE HEAT SYSTEM (REST) 57
DESCRIPTION - REFRIGERANT SYSTEM SERVICE PORT 58
OPERATION
HEATER AND AIR CONDITIONER 59
OPERATION - REST SYSTEM 64
DIAGNOSIS AND TESTING
A/C PERFORMANCE 64
DIAGNOSIS AND TESTING - HEATER PERFORMANCE 68
SPECIFICATIONS
A/C APPLICATION TABLE 70
SPECIFICATIONS - CHARGE CAPACITY 70
SPECIFICATIONS - TORQUE 70
CONTROLS 71
DISTRIBUTION 88
PLUMBING 113

HEATING & AIR CONDITIONING - SERVICE INFORMATION

DESCRIPTION

COOLING SYSTEM REQUIREMENTS

To maintain the performance level of the heating-air conditioning system, the engine cooling system must be properly maintained. Any obstructions in front of the radiator or condenser will reduce the performance of the air conditioning and engine cooling systems.

The engine cooling system includes the heater core and the heater hoses. Refer to Cooling for more information before opening, or attempting any service to the engine cooling system.

DESCRIPTION - HEATER AND AIR CONDITIONER

WARNING: THE AIR CONDITIONING SYSTEM CONTAINS REFRIGERANT UNDER HIGH PRESSURE. SEVERE PERSONAL INJURY MAY RESULT FROM IMPROPER SERVICE PROCEDURES. REPAIRS SHOULD ONLY BE PERFORMED BY QUALIFIED SERVICE PERSONNEL.
AVOID BREATHING THE REFRIGERANT AND REFRIGERANT OIL VAPOR OR MIST. EXPOSURE MAY IRRITATE THE EYES, NOSE, AND/OR THROAT. WEAR EYE PROTECTION WHEN SERVICING THE AIR CONDITIONING REFRIGERANT SYSTEM. SERIOUS EYE INJURY CAN RESULT FROM DIRECT CONTACT WITH THE REFRIGERANT. IF EYE CONTACT OCCURS, SEEK MEDICAL ATTENTION IMMEDIATELY.
DO NOT EXPOSE THE REFRIGERANT TO OPEN FLAME. POISONOUS GAS IS CREATED WHEN REFRIGERANT IS BURNED. AN ELECTRONIC LEAK DETECTOR IS RECOMMENDED.
IF ACCIDENTAL SYSTEM DISCHARGE OCCURS, VENTILATE THE WORK AREA BEFORE RESUMING SERVICE. LARGE AMOUNTS OF REFRIGERANT RELEASED IN A CLOSED WORK AREA WILL DISPLACE THE OXYGEN AND CAUSE SUFFOCATION.
THE EVAPORATION RATE OF R-134a REFRIGERANT AT AVERAGE TEMPERATURE AND ALTITUDE IS EXTREMELY HIGH. AS A RESULT, ANYTHING THAT COMES IN CONTACT WITH THE REFRIGERANT WILL FREEZE. ALWAYS PROTECT THE SKIN OR DELICATE OBJECTS FROM DIRECT CONTACT WITH THE REFRIGERANT.
THE R-134a SERVICE EQUIPMENT OR THE VEHICLE REFRIGERANT SYSTEM SHOULD NOT BE PRESSURE TESTED OR LEAK TESTED WITH COMPRESSED AIR. SOME MIXTURES OF AIR AND R-134a HAVE BEEN SHOWN TO BE COMBUSTIBLE AT ELEVATED PRESSURES. THESE MIXTURES ARE POTENTIALLY DANGEROUS, AND MAY RESULT IN FIRE OR EXPLOSION CAUSING INJURY OR PROPERTY DAMAGE.

CAUTION: Liquid refrigerant is corrosive to metal surfaces. Follow the operating instructions supplied with the service equipment being used.
Never add R-12 to a refrigerant system designed to use R-134a. Damage to the system will result.
R-12 refrigerant oil must not be mixed with R-134a refrigerant oil. They are not compatible.
Do not use R-12 equipment or parts on the R-134a system. Damage to the system will result.
Do not overcharge the refrigerant system. This will cause excessive compressor head pressure and can cause noise and system failure.
Recover the refrigerant before opening any fitting or connection. Open the fittings with caution, even after the system has been discharged. Never open or loosen a connection before recovering the refrigerant.
The refrigerant system must always be evacuated before charging.
Do not open the refrigerant system or uncap a replacement component until you are ready to service the system. This will prevent contamination in the system.
Before disconnecting a component, clean the outside of the fittings thoroughly to prevent contamination from entering the refrigerant system.
Immediately after disconnecting a component from the refrigerant system, seal the open fittings with a cap or plug.
Before connecting an open refrigerant fitting, always install a new seal or gasket. Coat the fitting and seal with clean refrigerant oil before connecting.
Do not remove the sealing caps from a replacement component until it is to be installed.
When installing a refrigerant line, avoid sharp bends that may restrict refrigerant flow. Position the refrigerant lines away from exhaust system components or any sharp edges, which may damage the line.
Tighten refrigerant fittings only to the specified torque. The aluminum fittings used in the refrigerant system will not tolerate overtightening.
When disconnecting a refrigerant fitting, use a wrench on both halves of the fitting. This will prevent twisting of the refrigerant lines or tubes.
Refrigerant oil will absorb moisture from the atmosphere if left uncapped. Do not open a container of refrigerant oil until you are ready to use it. Replace the cap on the oil container immediately after using. Store refrigerant oil only in a clean, airtight, and moisture-free container.
Keep service tools and the work area clean. Contamination of the refrigerant system through careless work habits must be avoided.

A manual dual-zone temperature control type heating-air conditioning system is standard on this model.

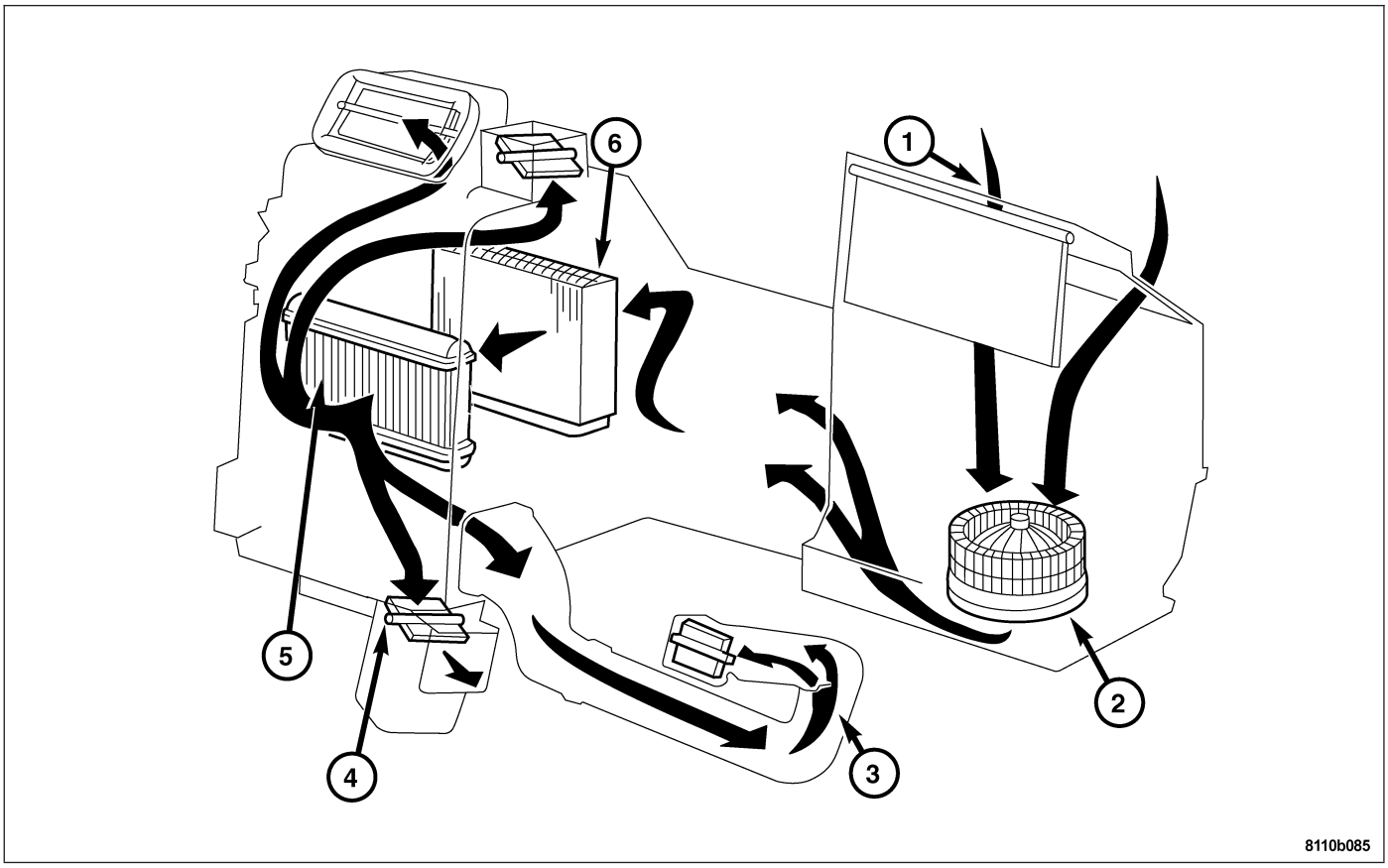

1 - INLET AIR DUCT
2 - BLOWER MOTOR
3 - SIDE VENT OUTLET
4 - FLOOR VENT OUTLET
5 - HEATER CORE
6 - EVAPORATOR

This vehicle is equipped with a common HVAC housing assembly. The system combines air conditioning, heating, and ventilating capabilities in a single unit housing mounted under the instrument panel.

DESCRIPTION - RESIDUAL ENGINE HEAT SYSTEM (REST)

The Residual Engine Heat System (REST) system enables the vehicle to be heated with the ignition “OFF”. A switch (4) in the heater-A/C controls activates this system.

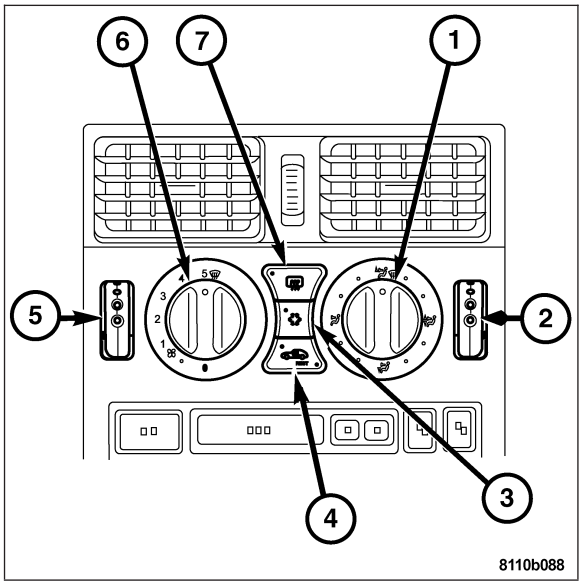

DESCRIPTION - REFRIGERANT SYSTEM SERVICE PORT

The two refrigerant system service ports are used to charge, recover/recycle, evacuate, and test the air conditioning refrigerant system.

Note:
Unique service port coupler sizes are used on the R-134a system to ensure that the refrigerant system is not accidentally contaminated by the use of the wrong refrigerant (R-12), or refrigerant system service equipment.

The high pressure service port (1) is located on the liquid line near the front of the engine compartment behind the front grille.

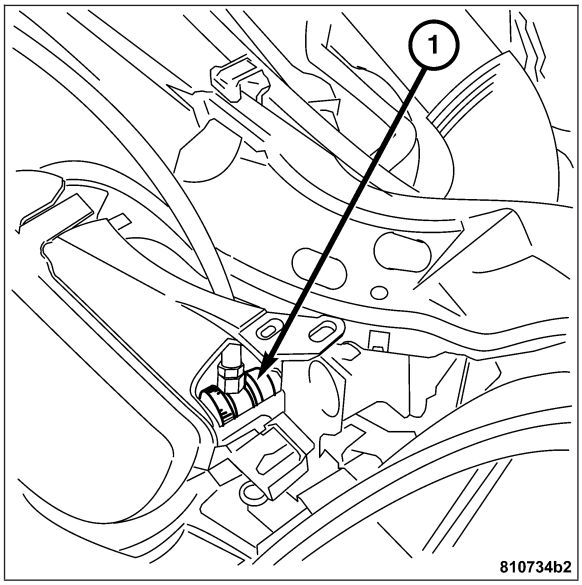

The low pressure service port (1) is located on the suction line on the left side of the engine compartment near the shock mounting.

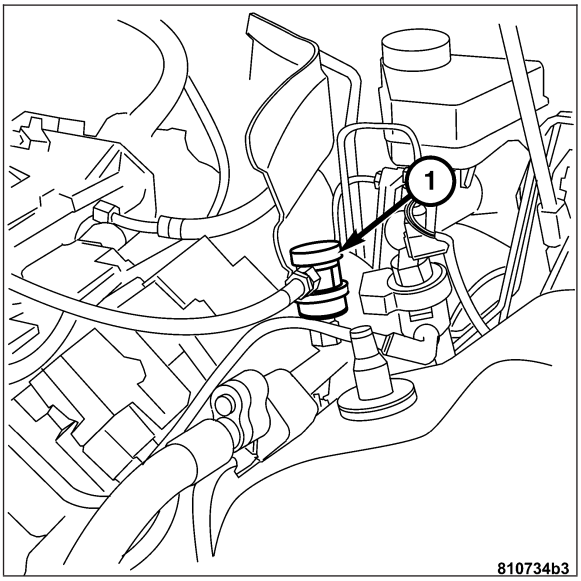

OPERATION

HEATER AND AIR CONDITIONER

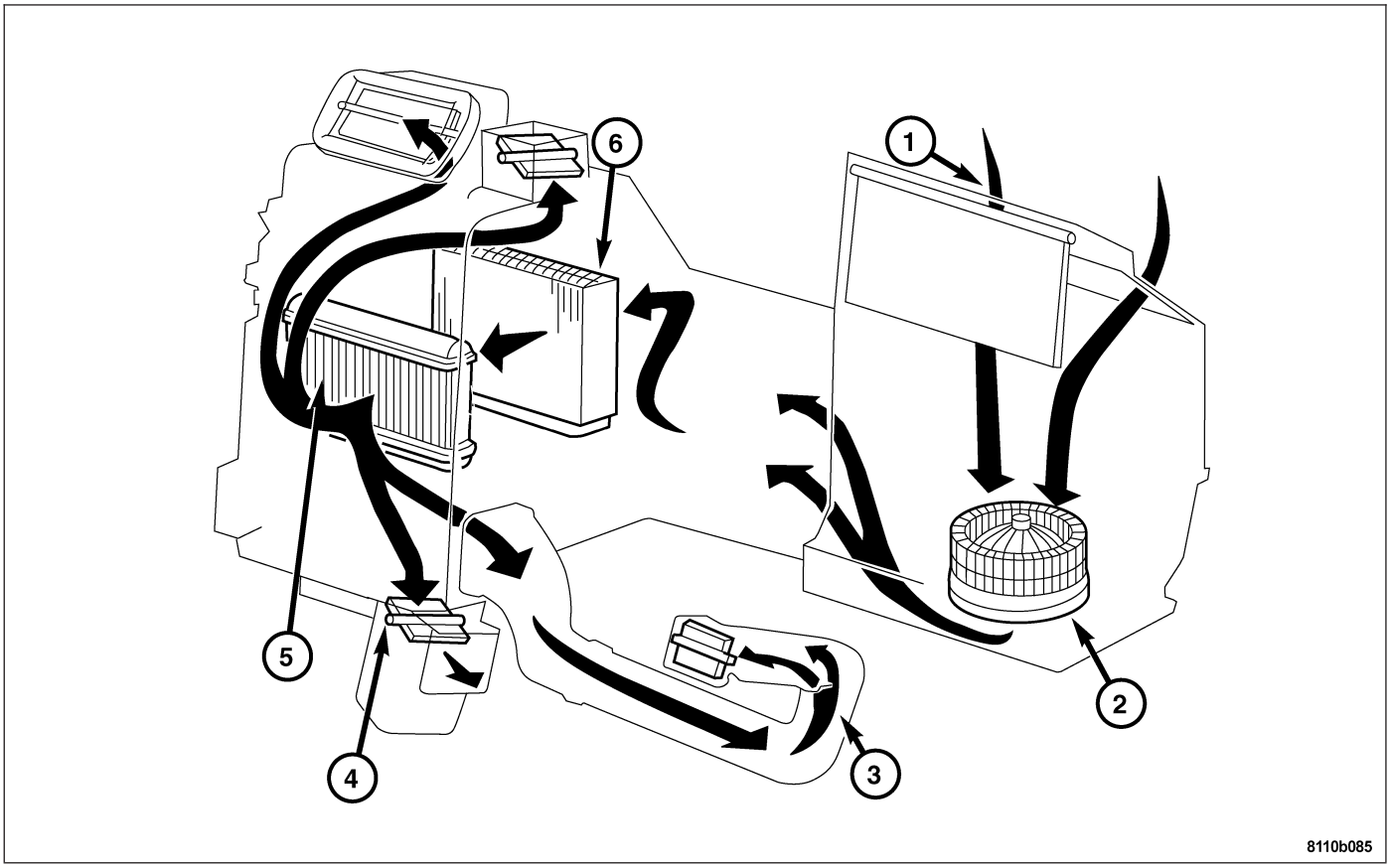

1 - INLET AIR DUCT
2 - BLOWER MOTOR
3 - SIDE VENT OUTLET
4 - FLOOR VENT OUTLET
5 - HEATER CORE
6 - EVAPORATOR

Outside fresh air enters the vehicle through the cowl top opening at the base of the windshield (1), and passes through a plenum chamber to the HVAC housing. Air flow can then be adjusted by the blower motor (2) speed switch on the A/C heater control panel. The fresh air then travels through the evaporator (6) and the heater core (5) then out into the vehicle through the side and floor vents (3-4).

It is also important to keep the air intake openings clear of debris because leaf particles and other debris that is small enough to pass through the cowl plenum screen can accumulate within the HVAC housing. This closed, warm, damp and dark environment created within the HVAC housing is ideal for the growth of certain molds, mildews and other fungi. Any accumulation of decaying plant matter provides an additional food source for fungal spores, which can enter the housing with the fresh air. Excess debris, as well as objectionable odors created by decaying plant matter and growing fungi can be discharged into the passenger compartment during HVAC system operation.

AIR CONDITIONING

The A/C compressor (8) is driven by the engines accessory drive belt. The A/C compressor (8) compresses the gaseous refrigerant (7) which heats up and flows into the condenser (6). The heat resulting from the compression is absorbed from the refrigerant by the surface of the condenser (6). As the refrigerant cools down it liquefies becoming a high-pressure liquid (4). As the refrigerant (4) flows through the receiver/drier (5) it is purified of chemical and mechanical impurities. It then travels to the expansion valve (3) which sprays the cooled, low pressure liquid (4) into the evaporator (1), located in the fresh air flow. The refrigerant (4) evaporates in the evaporator (1). This evaporation process absorbs heat from the fresh air flowing across the system of tubes and honeycombs, therefore cooling the air that is blown into the passenger compartment. The low pressure gas then returns to the A/C compressor.

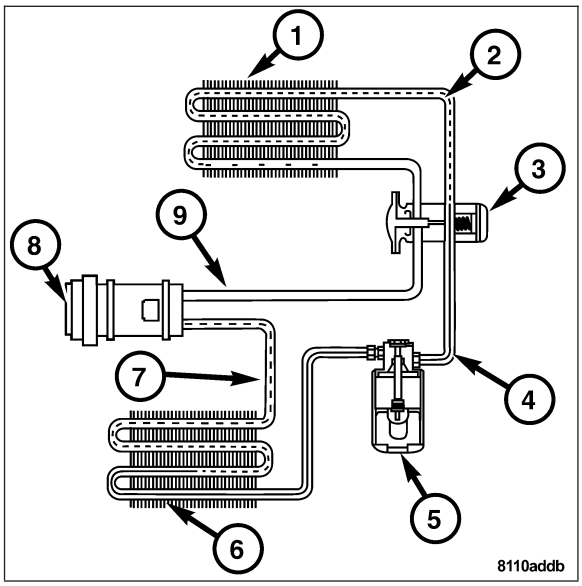

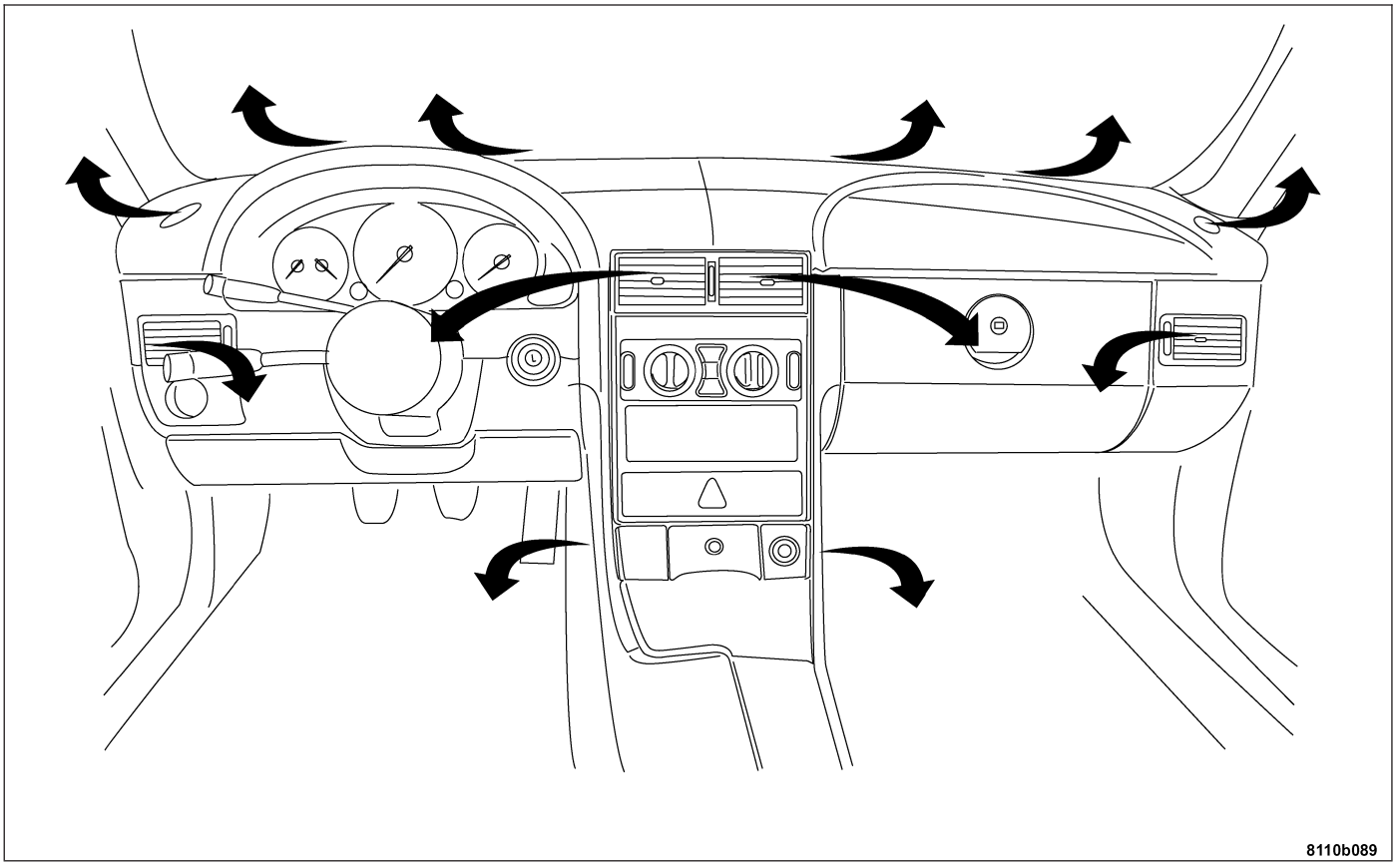

The moisture in the fresh air is condensed out and the condensation drained to the outside through a drain in the HVAC housing. The air is dried. The A/C compressor sucks in the refrigerant which has become gaseous due to the absorption of heat and compresses it again. When the engine is running and with blower switched on, cooled air can flow into the passenger compartment through various outlet openings. The intensity of cooling depends on the passenger compartment temperature set and the blower output.

The mode control on the A/C heater control panel is used to direct the conditioned air to the selected system outlets. The mode control switches directs engine vacuum to control the mode doors, which are operated by vacuum actuators. The mode control switches electrical current to control the mode doors, which are operated by actuators.

- Mode Control (1)
- Passenger Temperature Control (2)
- Air Conditioning Button (3)
- REST Button (4)
- Driver's Temperature Control (5)
- Fan Control (6)
- Rear Defogger Button (7)

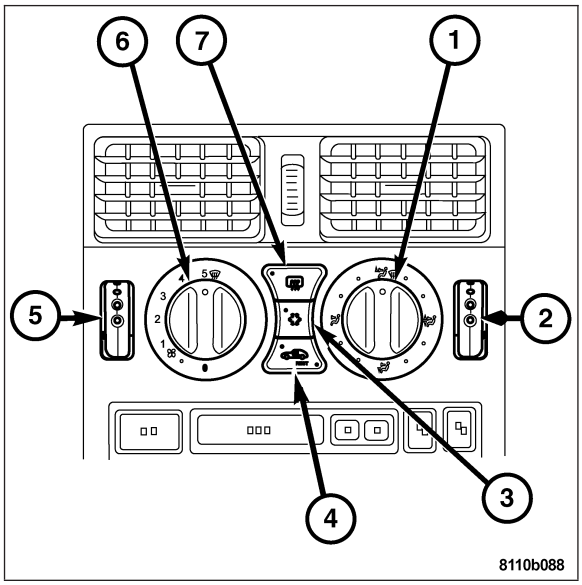

HEATER SYSTEM

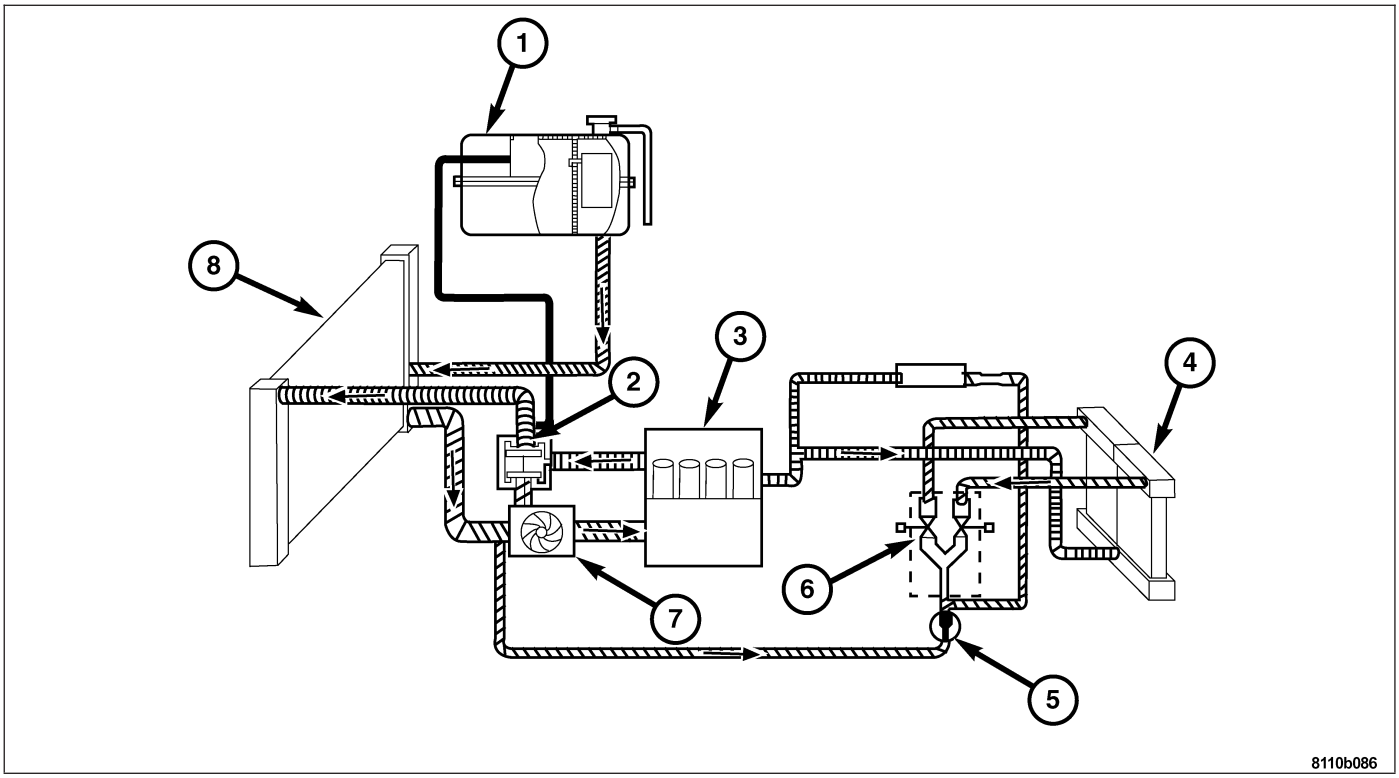

1 - RESERVOIR
2 - THERMOSTAT
3 - ENGINE
4 - HEATER CORE
5 - COOLANT CIRCULATION PUMP
6 - COOLANT CIRCULATION VALVE
7 - WATER PUMP
8 - RADIATOR

The water pump (7) pumps coolant through the engine (3). There the coolant absorbs heat from the engine (3), heating up the coolant. Then the heated coolant flows through into the heater core (4) where the heat is transferred to the air in the passenger compartment. The coolant flowing through the heater core (4) is controlled by a coolant circulation valve (6) located in the coolant return. The coolant can be controlled separately for the left and right sides.

The coolant returns to the water pump (7) via the coolant return hose. A coolant circulation pump (5) is installed between the coolant circulation valve (6) and the water pump (7). The coolant circulation pump (5) serves for maintaining a uniform flow of heating water through the heater core (4) even at low engine speeds and in the residual engine heat utilization mode (REST). The major portion of the coolant flows from the engine (3) to the thermostat (2) instead of flowing through the heater core (4). The thermostat (2) routes the water through the radiator (8) or directly to the water pump (7) depending on the temperature.

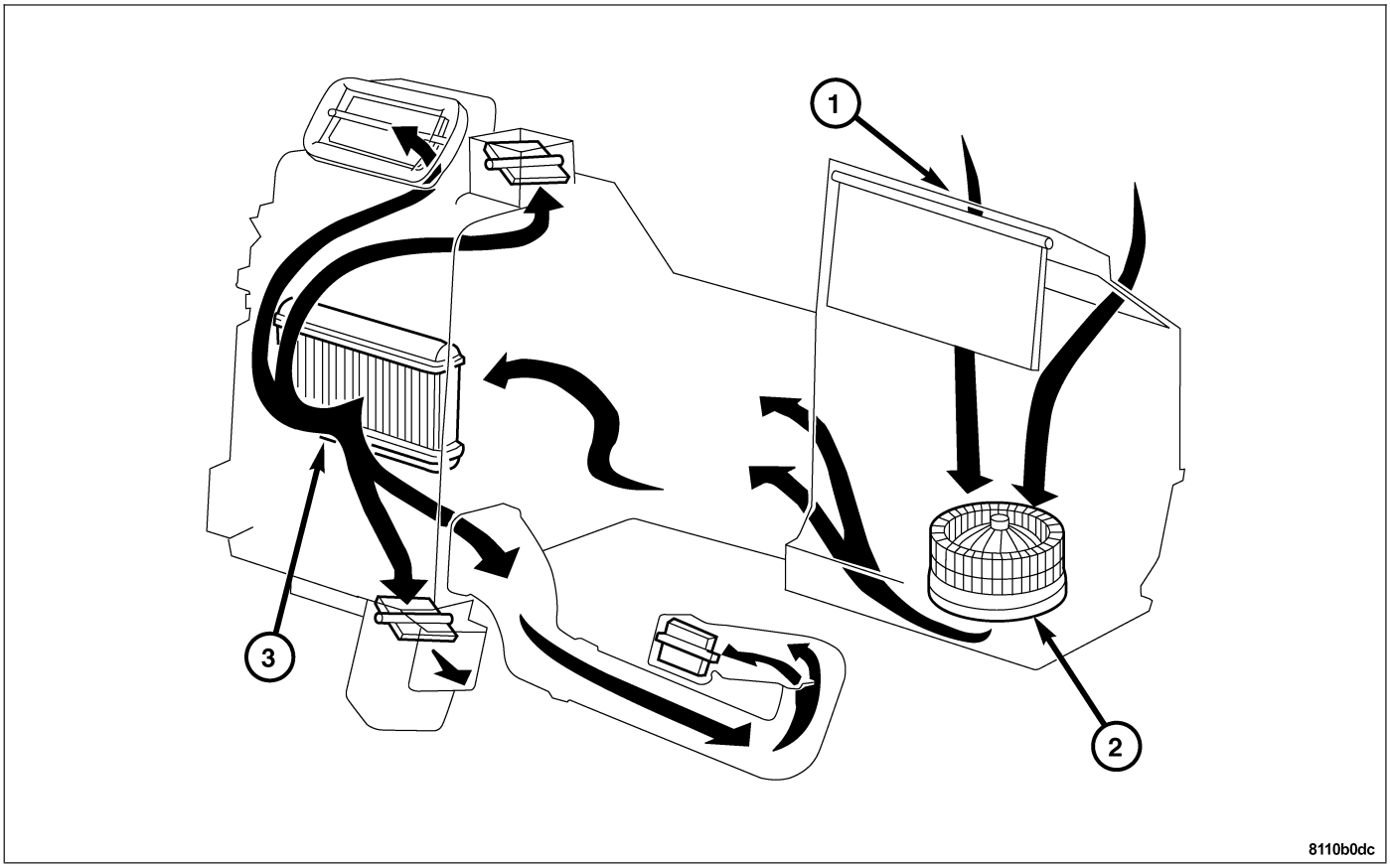

1 - INLET AIR DUCT
2 - BLOWER MOTOR
3 - HEATER CORE

In a blend-air system, a blend door controls the amount of unconditioned air (or cooled air from the evaporator) that is allowed to flow through, or around, the heater core (3). A temperature control knob on the A/C heater control panel determines the discharge air temperature by energizing the blend door actuator, which operates the blend door. This allows an almost immediate control of the output air temperature of the system.

R.E.S.T. SYSTEM

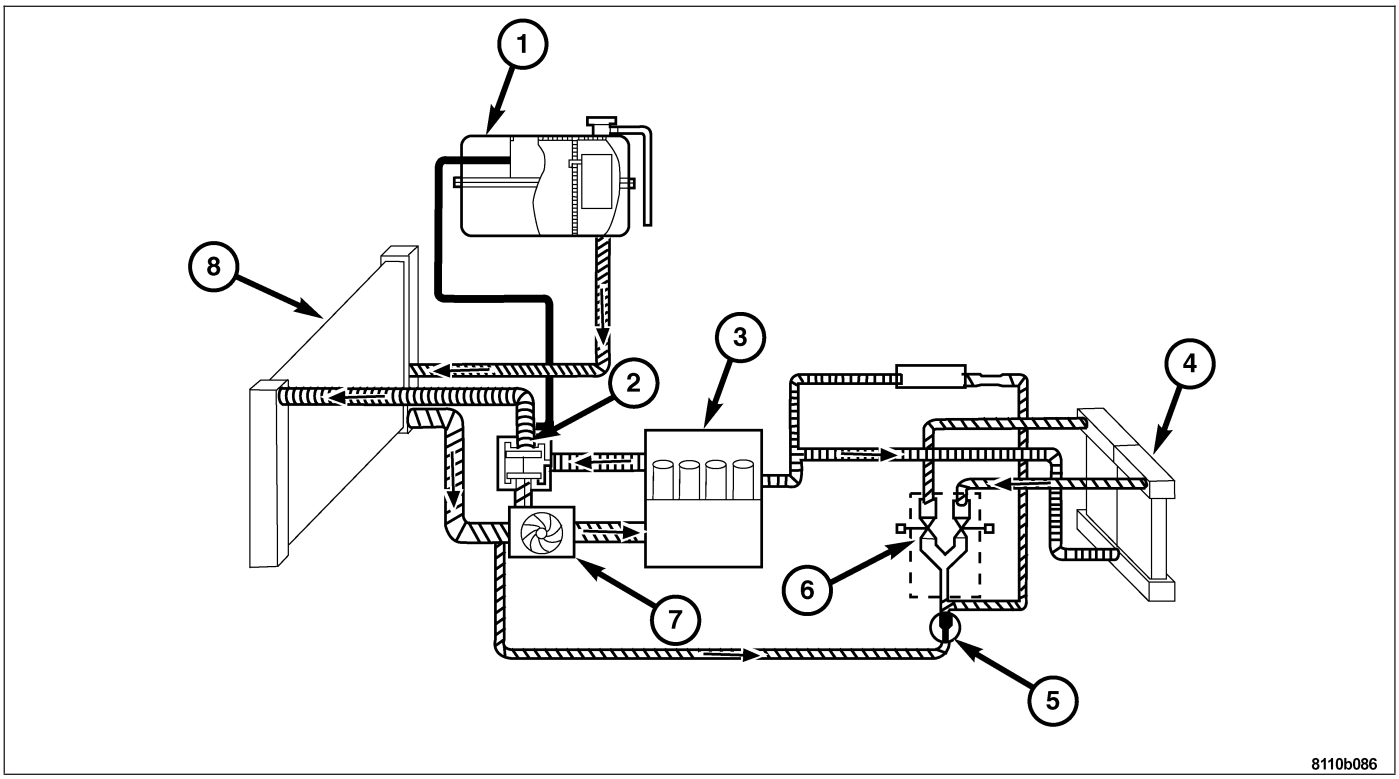

1 - RESERVOIR
2 - THERMOSTAT
3 - ENGINE
4 - HEATER CORE
5 - COOLANT CIRCULATION PUMP
6 - COOLANT CIRCULATION VALVE
7 - WATER PUMP
8 - RADIATOR

The coolant circulation pump pumps the heated coolant to the heater core when the engine is off. When the REST button (4) is pressed the temperature is controlled by the A/C heater control module (in the same manner as when the ignition is ON). The A/C heater control module switches the coolant circulation pump on which drives the impeller via a magnetic clutch. A light in the switch will illuminate indicating that the REST system is active.

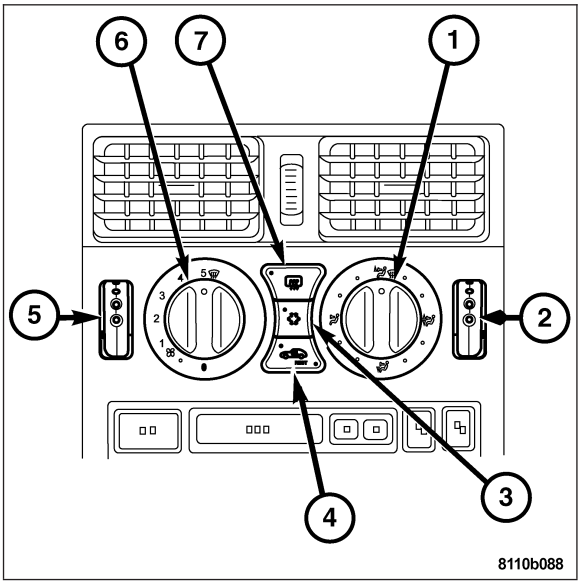

OPERATION - REST SYSTEM

The REST system is activated by a switch in the heater-A/C controls when the ignition is turned “OFF”. This system circulates residual heat from the engine to the heater core. The coolant is recirculated by an auxiliary coolant pump mounted below the right front headlamp. The temperature is automatically adjusted according to the temperature setting in the heater-A/C controls. The REST system will automatically be shut off when:

- The ignition key is turned “ON”.
- After approximately 30 minutes of operation.
- If the battery voltage falls below 11.5 volts.

DIAGNOSIS AND TESTING

A/C PERFORMANCE

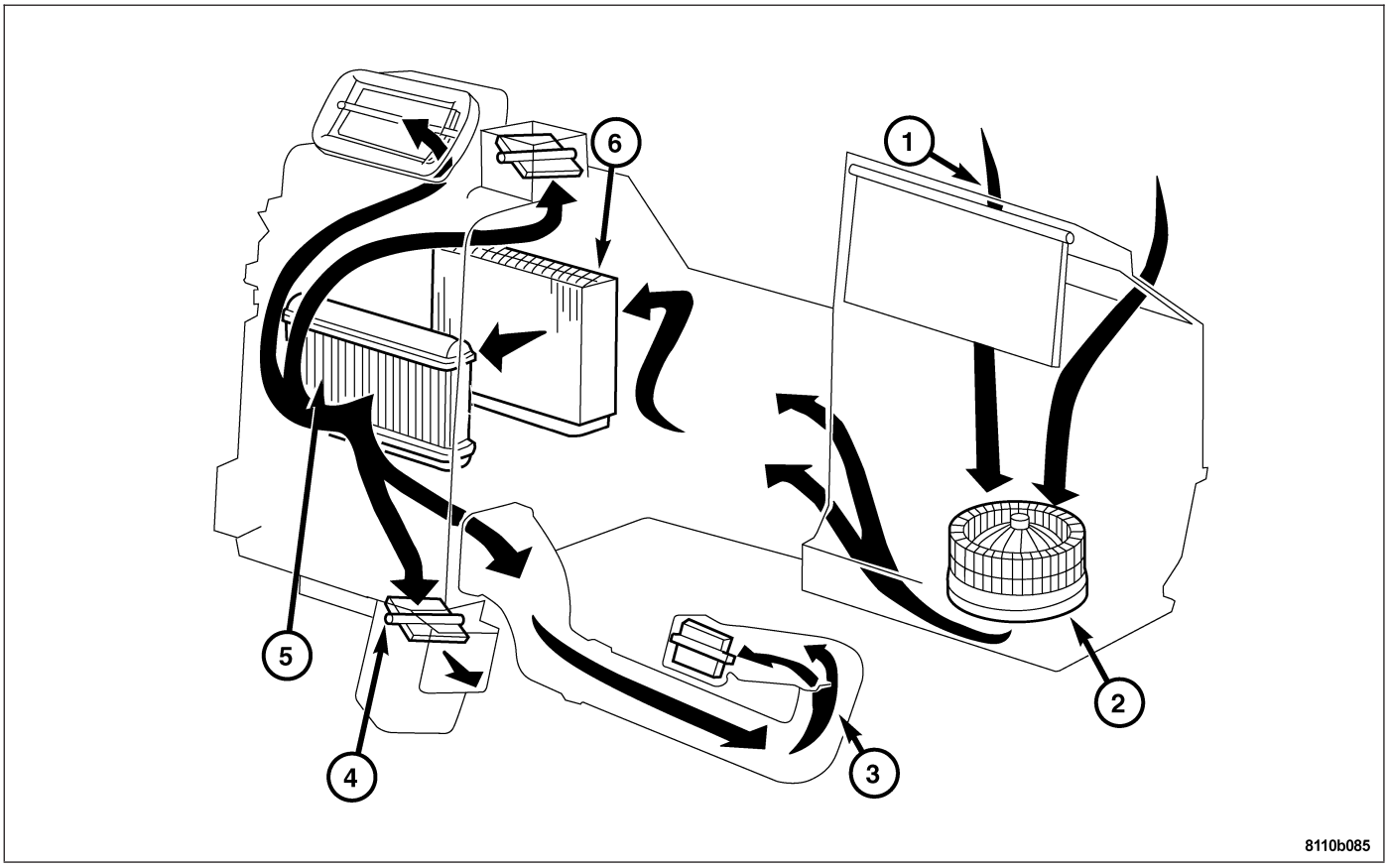

1 - INLET AIR DUCT
2 - BLOWER MOTOR
3 - SIDE VENT OUTLET
4 - FLOOR VENT OUTLET
5 - HEATER CORE
6 - EVAPORATOR

The air conditioning system is designed to provide the passenger compartment with low temperature and low humidity air. The evaporator (6), located in the HVAC housing behind the instrument panel, is cooled to temperatures near the freezing point. As warm damp air passes through the cooled evaporator (6), the air transfers its heat to the refrigerant in the evaporator (6) and the moisture in the air condenses on the evaporator fins.

Humidity has an important bearing on the temperature of the air delivered to the interior of the vehicle. It is important to understand the effect that humidity has on the performance of the air conditioning system. When humidity is high, the evaporator has to perform a double duty. It must lower the air temperature, and it must lower the temperature of the moisture in the air that condenses on the evaporator fins. Condensing the moisture in the air transfers heat energy into the evaporator fins and tubing. This reduces the amount of heat the evaporator can absorb from the air. High humidity greatly reduces the ability of the evaporator to lower the temperature of the air.

However, evaporator capacity used to reduce the amount of moisture in the air is not wasted. Wringing some of the moisture out of the air entering the vehicle adds to the comfort of the passengers. Although, an owner may expect too much from their air conditioning system on humid days. A performance test is the best way to determine whether the system is performing up to standard. This test also provides valuable clues as to the possible cause of trouble with the air conditioning system.

The air temperature in the test room and in the vehicle must be a minimum of 21° C (70° F) for this test.

1. Connect a manifold gauge set.
2. Set the A/C Heater mode control switch knob (2) in the Panel position, the temperature control knob (7) in the full cool position, the A/C button in the On position, and the blower motor switch knob (6) in the highest speed position.
3. Start the engine and hold the idle at 1,300 rpm with the compressor clutch engaged.
4. The engine should be at operating temperature. The doors and windows must be open.
5. Insert a thermometer in the driver side center A/C (panel) outlet. Operate the engine for five minutes.
6. The compressor clutch may cycle, depending upon the ambient temperature and humidity.
7. With the compressor clutch engaged, record the discharge air temperature and the compressor discharge pressure.
8. Compare the discharge air temperature to the Performance Temperature and Pressure chart.

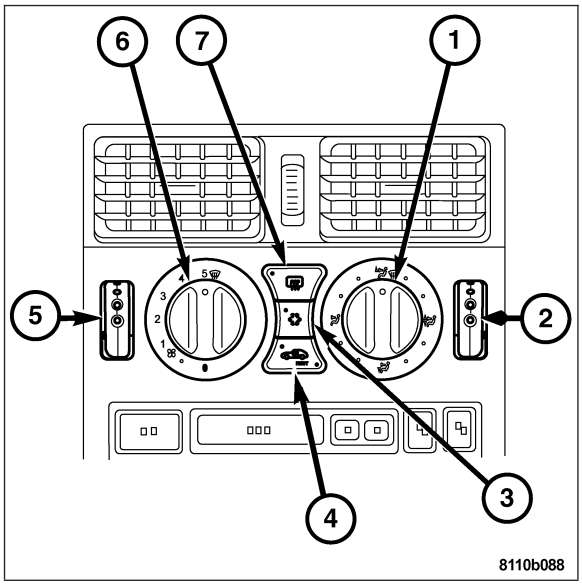

Performance Temperature and Pressure					
Ambient Air Temperature and Humidity	21° C (70° F @ 80% humidity)	27° C (80° F @ 80% humidity)	32° C (90° F @ 80% humidity)	38° C (100° F @ 50% humidity)	43° C (110° F @ 20% humidity)
Air Temperature at Center Panel Outlet	10 to 13° C (50 to 55° F)	14 to 17° C (58 to 63° F)	15 to 18° C (60 to 65° F)	17 to 20° C (63 to 68° F)	14 to 17° C (58 to 63° F)
Evaporator Inlet Pressure at Charge Port	241 to 276 kPa (35 to 40 psi)	262 to 290 kPa (38 to 42 psi)	269 to 296 kPa (39 to 43 psi)	275 to 303 kPa (40 to 44 psi)	262 to 290 kPa (38 to 42 psi)
Compressor Discharge Pressure	1241 to 1792 kPa (180 to 260 psi)	1380 to 1930 kPa (200 to 280 psi)	1380 to 1930 kPa (200 to 280 psi)	1655 to 2206 kPa (240 to 320 psi)	1567 to 2068 kPa (220 to 300 psi)
Note: The discharge air temperatures will be lower if the humidity is less than the percentages shown.					

9. Compare the compressor discharge pressure to the Performance Temperature and Pressure chart. If the compressor discharge pressure is high, see the Pressure Diagnosis chart.

Pressure Diagnosis		
Rapid compressor clutch cycling (ten or more cycles per minute).	1. Low refrigerant system charge.	1. Test the A/C system for leaks. Repair, evacuate and charge the refrigerant system, if required.
Equal pressures, but the compressor clutch does not engage.	1. No refrigerant in the refrigerant system.	1. Test the A/C system for leaks. Repair, evacuate and charge the A/C, if required.
	2. Faulty A/C compressor clutch coil.	2. Test the compressor clutch coil and replace, if required.
	3. Faulty A/C pressure transducer.	3. Test the A/C high pressure transducer and replace, if required.
	4. Faulty A/C Heater Control Module.	4. Test the A/C Heater Control Module and replace, if required.
Normal pressures, but A/C Performance Test air temperatures at center panel outlet are too high.	1. Excessive refrigerant oil in system.	1. Recover the refrigerant from the refrigerant system and inspect the refrigerant oil content. Restore the refrigerant oil to the proper level, if required.
	2. Blend door inoperative or sealing improperly.	2. Inspect the blend door for proper operation and sealing and correct, if required.
	3. Blend door actuator faulty or inoperative.	3. Replace if faulty.
The low side pressure is normal or slightly low, and the high side pressure is too low.	1. Low refrigerant system charge.	1. Test the refrigerant system for leaks. Repair, evacuate and charge the refrigerant system, if required.
	2. Refrigerant flow through the receiver/dryer is restricted.	2. Replace the restricted receiver/ drier, if required.
	3. Refrigerant flow through the evaporator is restricted.	Replace the restricted evaporator coil, if required.
	4. Faulty compressor.	Replace the compressor, if required.
The low side pressure is normal or slightly high, and the high side pressure is too high.	1. Condenser air flow restricted.	1. Check the condenser for damaged fins, foreign objects obstructing air flow through the condenser fins, and missing or improperly installed air seals. Clean, repair, or replace components as required.
	2. Inoperative cooling fan.	2. Test the cooling fan and replace, if required.
	3. Refrigerant system overcharged.	3. Recover the refrigerant from the refrigerant system. Charge the refrigerant system to the proper level, if required.

Pressure Diagnosis		
	4. Air in the refrigerant system.	4. Test the refrigerant system for leaks. Repair, evacuate and charge the refrigerant system, if required.
	5. Engine overheating.	5. Test the cooling system and repair, if required.
The low side pressure is too high, and the high side pressure is too low.	1. Accessory drive belt slipping.	1. Inspect the accessory drive belt condition and tension. Tighten or replace the accessory drive belt, if required.
	2. Faulty compressor.	2. Replace the compressor, if required.
The low side pressure is too low, and the high side pressure is too high.	1. Restricted refrigerant flow through the refrigerant lines.	1. Inspect the refrigerant lines for kinks, tight bends or improper routing. Correct the routing or replace the refrigerant line, if required.
	2. Restricted refrigerant flow through the A/C Expansion Valve.	2. Replace the Expansion Valve if restricted.
	3. Restricted refrigerant flow through the condenser.	3. Replace the restricted condenser, if required.

DIAGNOSIS AND TESTING - HEATER PERFORMANCE

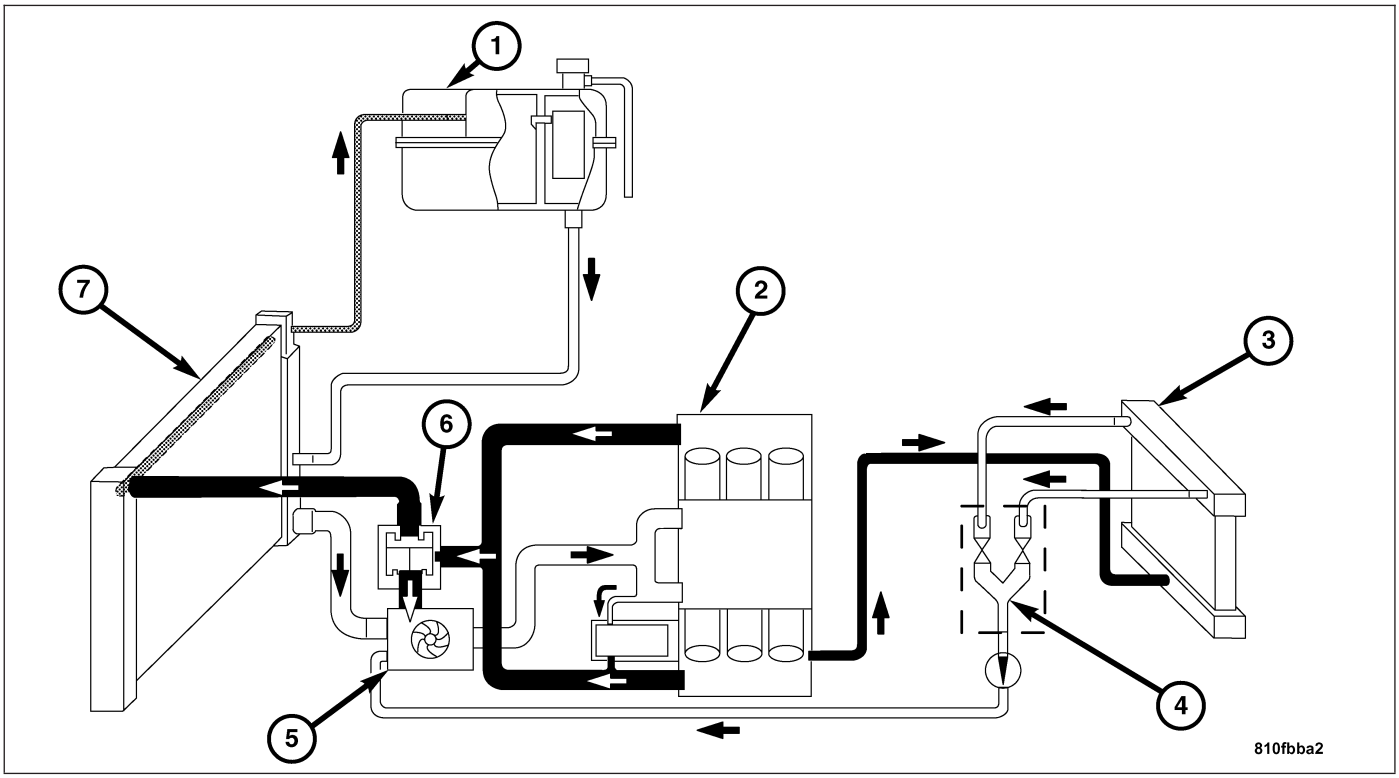

1 - COOLANT RESERVOIR
2 - ENGINE BLOCK
3 - HEATER CORE
4 - COOLANT CIRCULATION VALVE
5 - COOLANT CIRCULATION PUMP
6 - THERMOSTAT
7 - RADIATOR

Before performing the following tests, refer to Cooling for the procedures to check the radiator coolant level, serpentine drive belt tension, radiator air flow and the radiator fan operation. Also be certain that the accessory vacuum supply line is connected at the engine intake manifold for the manual temperature control system.

MAXIMUM HEATER OUTPUT

Engine coolant is delivered to the heater core through two heater hoses. With the engine idling at normal operating temperature, set the temperature control knob (2 and 5) in the full hot position, the mode control switch knob (1) in the floor heat position, and the blower motor switch knob (6) in the highest speed position. Using a test thermometer, check the temperature of the air being discharged at the HVAC housing floor outlets. Compare the test thermometer reading to the Temperature Reference chart.

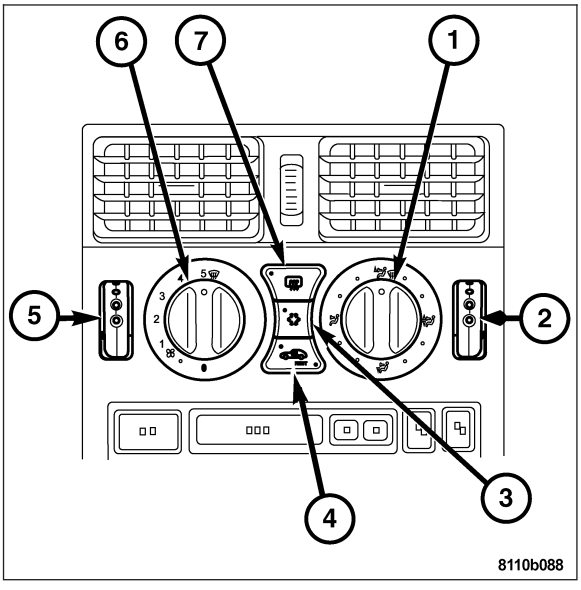

Temperature Reference				
Ambient Air Temperature	15.5° C (60° F)	21.1° C (70° F)	26.6° C (80° F)	32.2° C (90° F)
Minimum Air Temperature at Floor Outlet	62.2° C (144° F)	63.8° C (147° F)	65.5° C (150° F)	67.2° C (153° F)

If the floor outlet air temperature is too low, refer to Cooling to check the engine coolant temperature specifications. Both of the heater hoses should be hot to the touch. The coolant return heater hose should be slightly cooler than the coolant supply heater hose. If the return hose is much cooler than the supply hose, locate and repair the engine coolant flow obstruction in the cooling system. Refer to the Cooling section for the procedures.

OBSTRUCTED COOLANT FLOW

Possible locations or causes of obstructed coolant flow:

- Pinched or kinked heater hoses.
- Improper heater hose routing.
- Plugged heater hoses or supply and return ports at the cooling system connections.
- A plugged heater core.

If proper coolant flow through the cooling system is verified, and heater outlet air temperature is still low, a mechanical problem may exist.

MECHANICAL PROBLEMS

Possible locations or causes of insufficient heat:

- An obstructed cowl air intake.
- Obstructed heater system outlets.
- A blend door not functioning properly.
- An air-bound system.

TEMPERATURE CONTROL

If the heater outlet air temperature cannot be adjusted with the temperature control knob(s) on the A/C Heater control panel, the following could require service:

- The A/C heater control.
- The blend door actuator(s).
- The wire harness circuits for the A/C heater control or the blend door actuator(s).
- The blend door(s).
- Improper engine coolant temperature.

SPECIFICATIONS

A/C APPLICATION TABLE

ITEM	DESCRIPTION	NOTES
SYSTEM	R134a w/ expansion valve	1.97 lbs. (.88 kg.)
COMPRESSOR	Nippendenso	ND-8 PAG oil
FREEZE UP CONTROL	—	
STAGE 1	At a coolant temperature >123 °C the duty factor is reduced by 50 %. In this case the A/C compressor is switched on in cycles, i.e. off approx. 20 sec. and on approx. 20 sec. If the coolant temperature drops to below 123 °C the A/C compressor is switched on again permanently.	
STAGE 2	At a coolant temperature >127 °C the A/C compressor is switched off completely. When the coolant temperature drops to below 127 °C the A/C compressor is switched back on in the cycled mode (stage 1).	
A/C PRESSURE TRANSDUCER	Refrigerant pressure < 2 bar = A/C compressor off Refrigerant pressure >28 bar = A/C compressor off	
CONTROL HEAD	Manual type	DRB III®
MODE DOORS	Vacuum	—
BLEND DOOR	Vacuum	—
BLOWER MOTOR	—	Resistor block
CLUTCH	Electromagnetic Coil	—
DRAW	—	—
DRB III®	—	

SPECIFICATIONS - CHARGE CAPACITY

The R-134a refrigerant system charge capacity for this vehicle is 0.88 kilograms (1.97 lbs.).

SPECIFICATIONS - TORQUE

TORQUE SPECIFICATIONS

DESCRIPTION	N·m	Ft. Lbs.	In. Lbs.
Expansion Valve Nut	10	7	88
Expansion Valve Bolt	8	6	71
Reservoir Fluid Lines	17	12	150
Compressor to Condensor Fluid Line	22	16	195
Condensor to Reservoir Fluid Line	17	12	150
Refrigerant Pressure Sensor	12	9	106
Refrigerant Temperature Sensor	6	5	53
High Pressure Line to Condensor	33	24	292

CONTROLS

TABLE OF CONTENTS

page

A/C COMPRESSOR CLUTCH
DESCRIPTION 72
OPERATION 73
DIAGNOSIS AND TESTING - COMPRESSOR CLUTCH COIL 73
STANDARD PROCEDURE - COMPRESSOR CLUTCH BREAK-IN 74
BLOWER MOTOR REGULATOR
REMOVAL 74
INSTALLATION 76
A/C HEATER CONTROL MODULE
DESCRIPTION 78
OPERATION 78
REMOVAL 79
INSTALLATION 81

page

CONTROLS
REMOVAL 82
INSTALLATION 83
EVAPORATOR TEMPERATURE SENSOR
REMOVAL 84
INSTALLATION 84
HEATER CORE TEMPERATURE SENSOR
REMOVAL 85
INSTALLATION 85
A/C PRESSURE TRANSDUCER
REMOVAL 86
INSTALLATION 86
RECIRC AIR SWITCHOVER VALVE
REMOVAL 87
INSTALLATION 87

A/C COMPRESSOR CLUTCH

DESCRIPTION

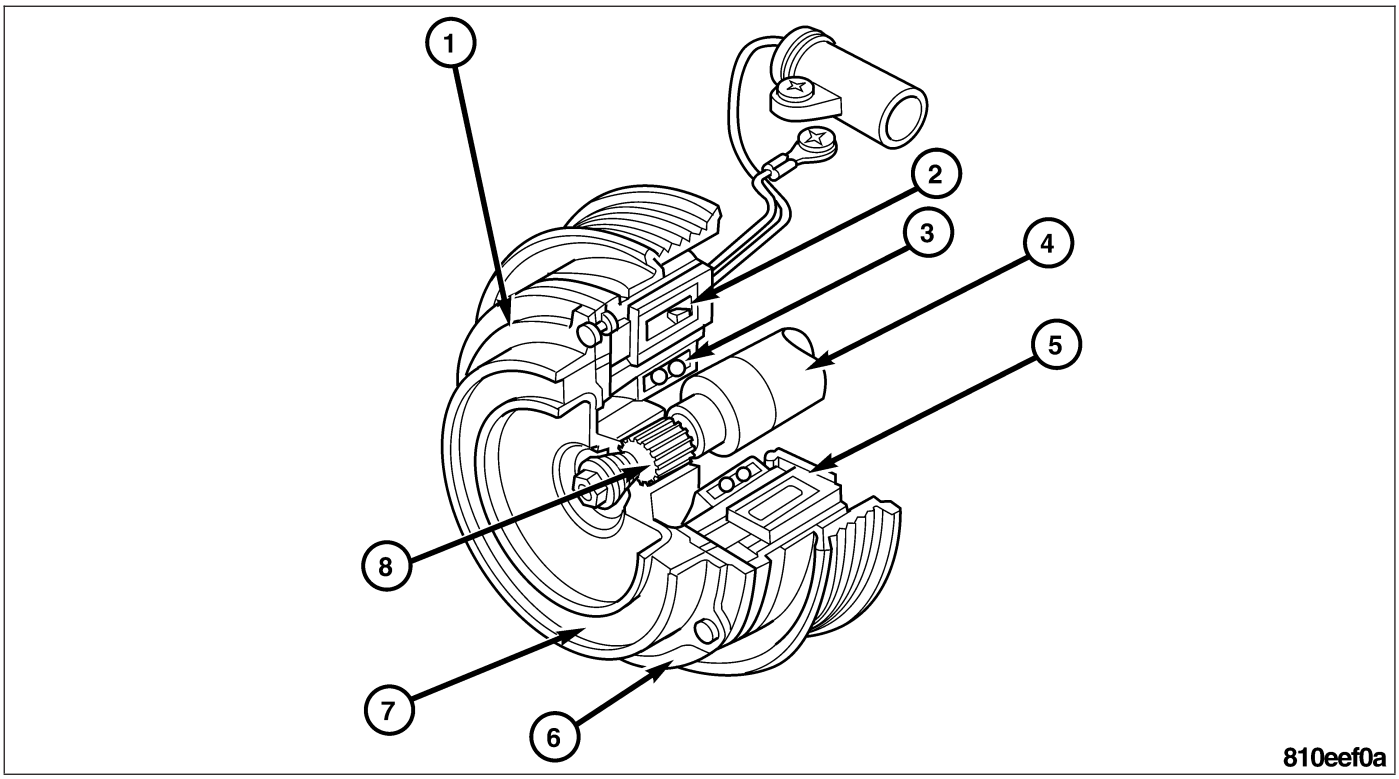

1 - PULLEY
2 - MELTING FUSE
3 - BEARING
4 - INPUT SHAFT
5 - SOLENOID
6 - PRESSURE PLATE
7 - RUBBER INSERT
8 - SPLINES

The pulley (1) on the A/C compressor drive shaft (4) is driven by the poly-V-belt. The clutch turns on the ball bearing (3) around the magnetic coil (5) fastened to the A/C compressor housing. The pressure plate (6) with rubber insert (7) is connected to the A/C compressor drive shaft (4) by splines (8) allowing it to move in the axial direction.

OPERATION

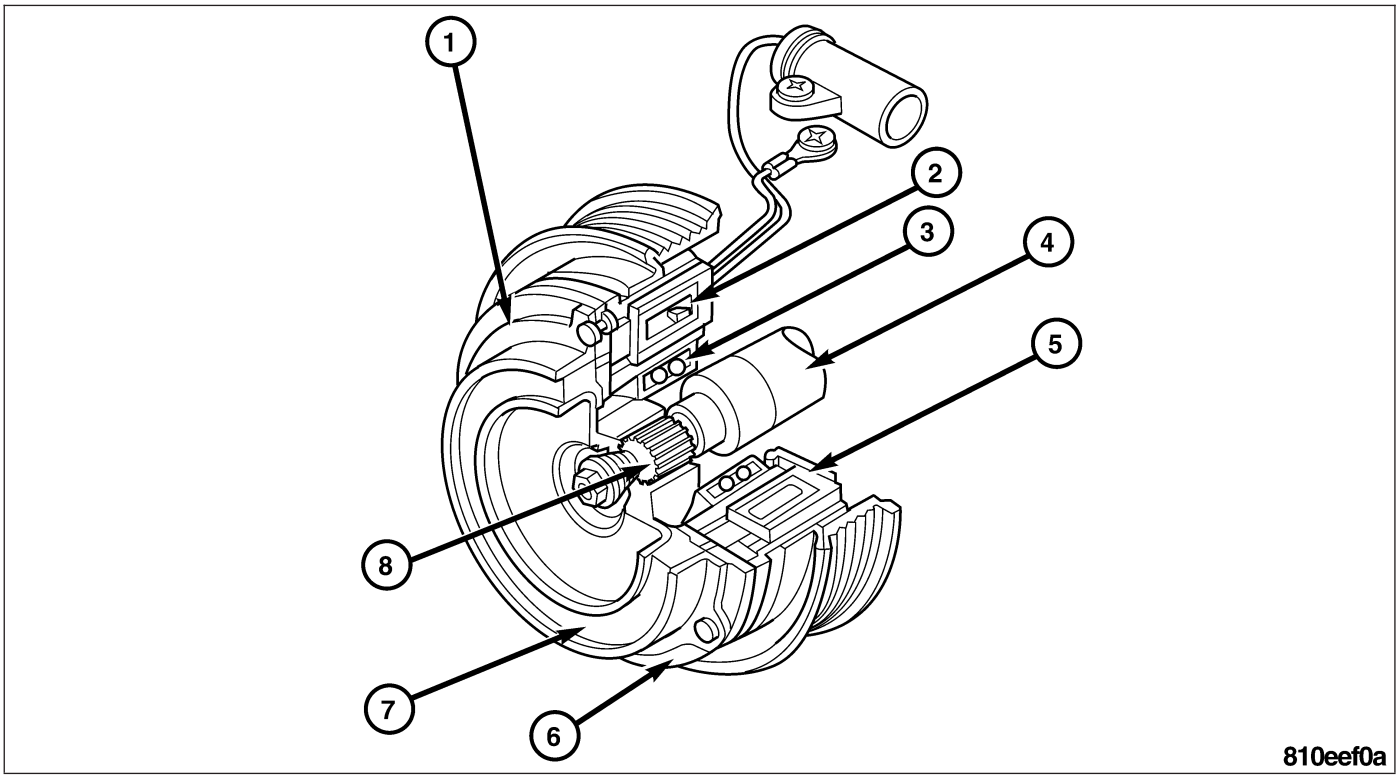

1 - PULLEY
2 - MELTING FUSE
3 - BEARING
4 - INPUT SHAFT
5 - SOLENOID
6 - PRESSURE PLATE
7 - RUBBER INSERT
8 - SPLINES

In order to start operating the refrigerant compressor, the heater A/C control module actuates the electromagnetic clutch and the solenoid (5) is supplied with electrical current. The magnetic force attracts the pressure plate (6) against the rubber insert (7) and holds it securely. This creates the connection between the engine and the compressor. If the solenoid (5) is de-energized, then the pressure plate (6) is pressed back by the rubber insert (7) into its rest position and the connection is interrupted.

The clutch also preforms a safety shutoff of the compressor. To prevent a mechanical defect in the compressor from causing the accessory drive belt to jump loose, the electromagnetic clutch releases itself automatically. With a mechanical defect, the compressor rotates more sluggishly or even locks completely. The heat generated at the friction surface causes the melting fuse (2) in the solenoid (5) to melt. The current supply to the solenoid (5) is interrupted and the frictional connection is released.

The A/C compressor clutch is not serviced separately. The A/C compressor clutch must be replaced as a unit with the A/C compressor.

DIAGNOSIS AND TESTING - COMPRESSOR CLUTCH COIL

For circuit descriptions and diagrams, refer to the appropriate wiring diagrams. The battery must be fully-charged before performing the following tests. Refer to Battery for more information.

1. Connect an ammeter (0 to 10 ampere scale) in series with the clutch coil terminal. Use a voltmeter (0 to 20 volt scale) with clip-type leads for measuring the voltage across the battery and the compressor clutch coil.
2. With the a/c heater mode control switch in any a/c mode, the a/c heater control a/c switch in the ON position, and the blower motor switch in the lowest speed position, start the engine and run it at normal idle.
3. The compressor clutch coil voltage should read within 0.2 volts of the battery voltage. If there is voltage at the clutch coil, but the reading is not within 0.2 volts of the battery voltage, test the clutch coil feed circuit for excessive voltage drop and repair as required. If there is no voltage reading at the clutch coil, use a DRBIII® scan tool

and the appropriate diagnostic information for testing of the compressor clutch circuit. The following components must be checked and repaired as required before you can complete testing of the clutch coil:

- A/C heater control module mode control switch
- A/C pressure transducer
- A/C evaporator temperature sensor

4. The compressor clutch coil is acceptable if the current draw measured at the clutch coil is 2.0 to 3.9 amperes with the electrical system voltage at 11.5 to 12.5 volts. This should only be checked with the work area temperature at 21° C (70° F). If system voltage is more than 12.5 volts, add electrical loads by turning on electrical accessories until the system voltage drops below 12.5 volts.
   a. If the clutch coil current reading is four amperes or more, the coil is shorted and should be replaced.
   b. If the clutch coil current reading is zero, the coil is open and should be replaced.

STANDARD PROCEDURE - COMPRESSOR CLUTCH BREAK-IN

After a new compressor clutch has been installed, cycle the compressor clutch approximately twenty times (five seconds on, then five seconds off). During this procedure, set the A/C Heater control in the Recirculation Mode, the A/C button in the on position, the blower motor switch in the highest speed position, and the engine speed at 1500 to 2000 rpm. This procedure (burnishing) will seat the opposing friction surfaces and provide a higher compressor clutch torque capability.

BLOWER MOTOR REGULATOR

REMOVAL

1. Remove the lower instrument panel cover (2) from the instrument panel (1). **Refer to Page 23-149**.

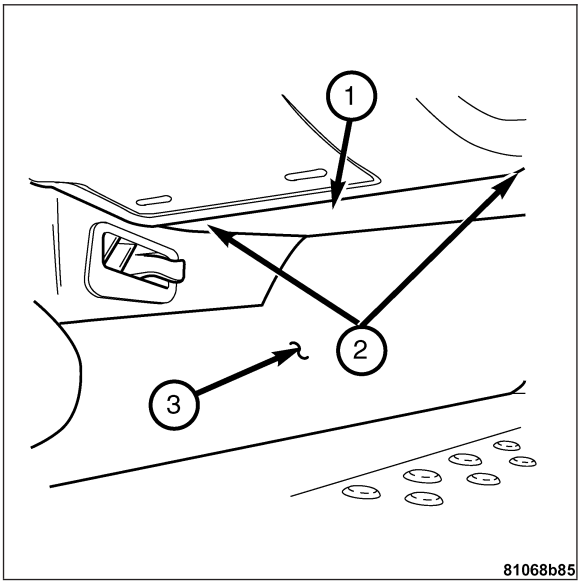

2. Disconnect the blower motor electrical connector (1) from the relief in the blower motor door.

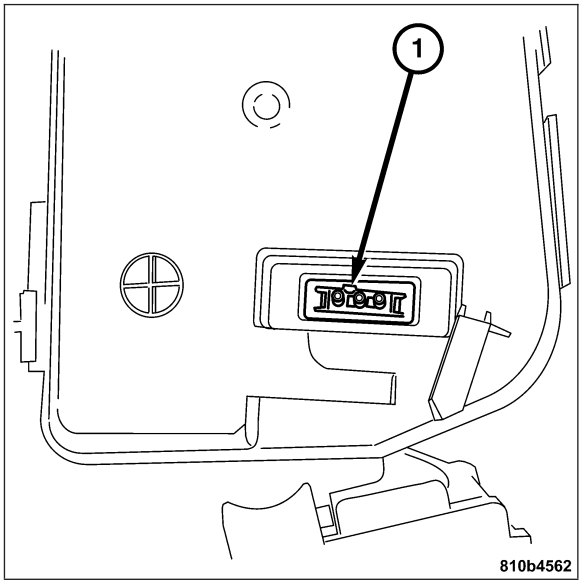

3. Slide the motor door catch mounts (1) to the sides.
4. Swing the blower motor door down.

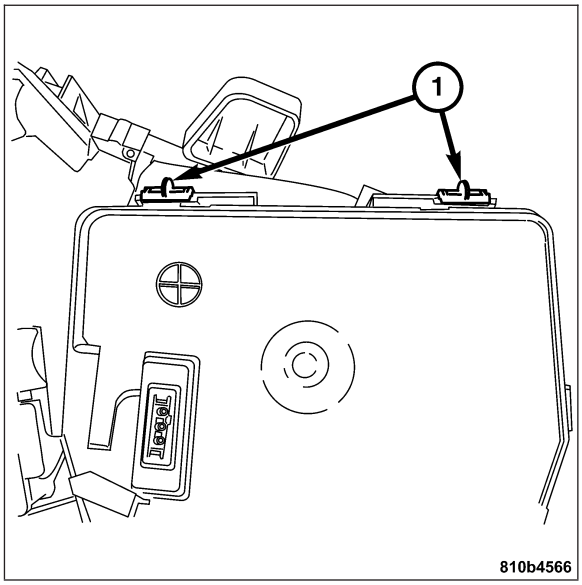

Note: The electrical leads are a one-way connection to the blower motor.

5. Disconnect the electrical leads blue (2) and red (3).
6. Remove the screws (1) attaching the blower motor regulator (4) to the blower motor assembly.
7. Remove the electronic blower motor (4) regulator from the assembly.

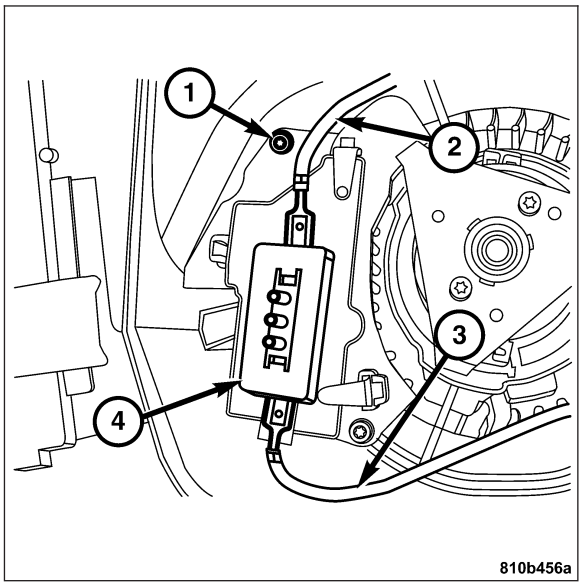

INSTALLATION

1. Install the electronic blower motor regulator assembly (4) to the heater case.
2. Install the screws (1) attaching the blower motor regulator to the blower motor assembly.

Note: The electrical leads are a one-way connection to the blower motor.

3. Connect the electrical leads blue (2) and red (3).
4. Swing the blower motor door up.

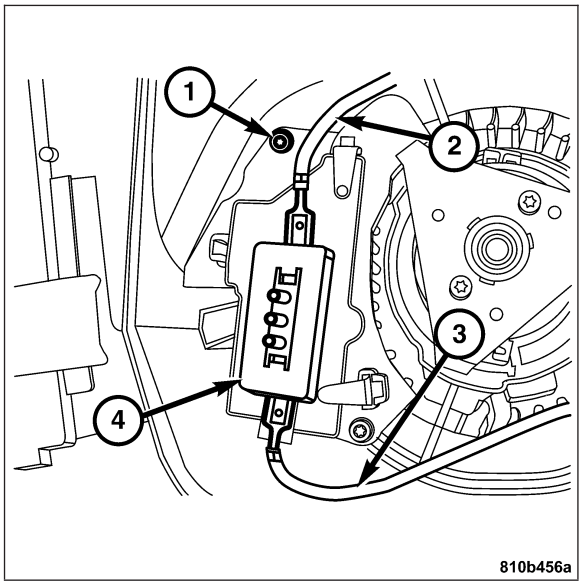

5. Slide the motor door catch mounts (1) to the inside.

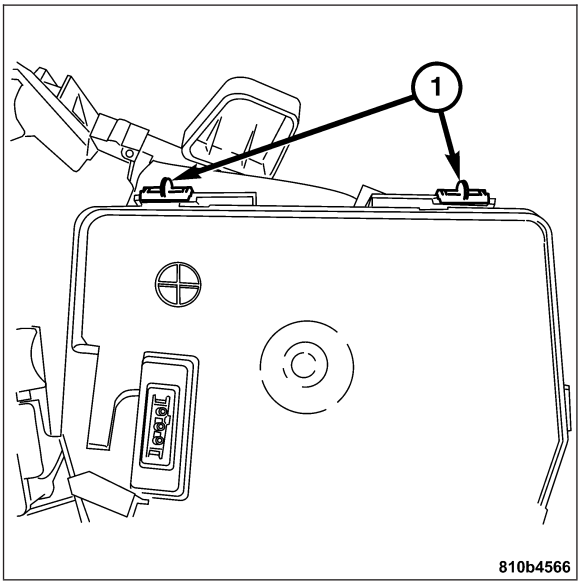

6. Connect the blower motor electrical connector (1).

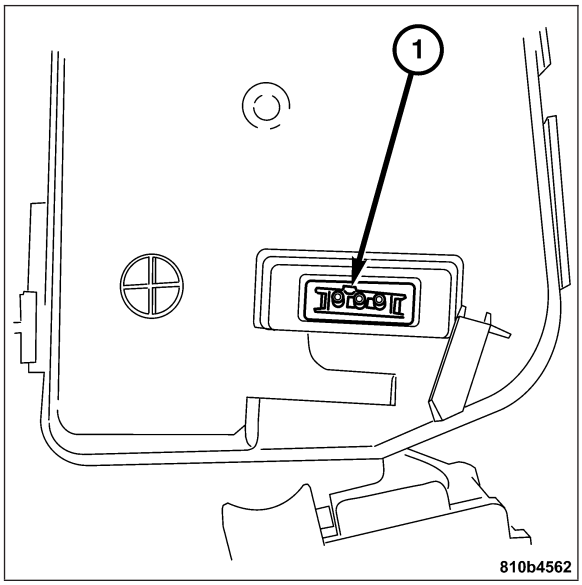

7. Install the lower instrument panel cover. **Refer to Page 23-155**.

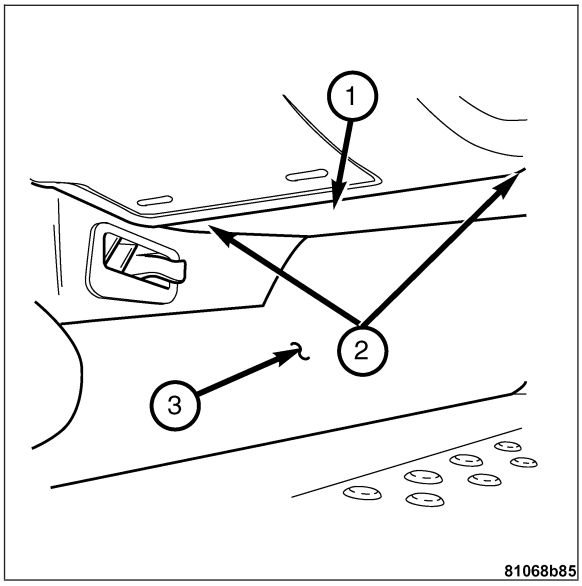

A/C HEATER CONTROL MODULE

DESCRIPTION

The manual temperature control HVAC system uses a combination of electrical, and vacuum controls. These controls provide the vehicle operator with a number of setting options to help control the climate and comfort within the vehicle. Refer to the owner's manual in the vehicle glove box for more information on the suggested operation and use of these controls.

Both A/C heater control module panels are located on the instrument panel inboard of the steering column and above the radio. The A/C heater control panel contains two rotary-type temperature control knobs (2 and 5), a rotary-type mode control switch knob (1), a rotary-type blower motor speed switch knob (6) and an air conditioning compressor push button switch (3).

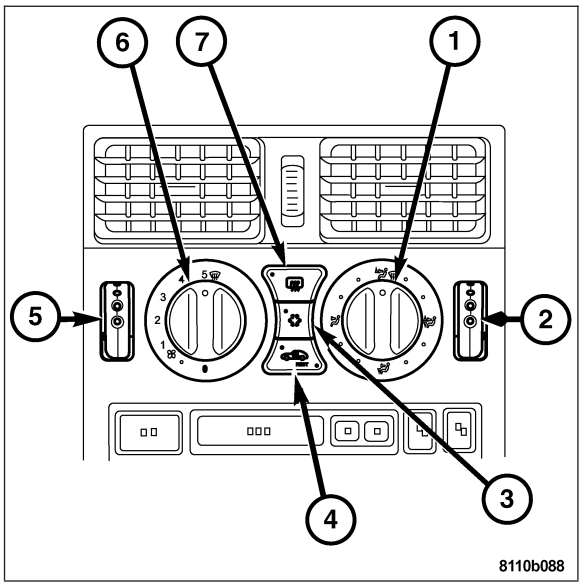

OPERATION

Dual zone temperature control provides a side-to-side variation in comfort temperatures to exceed the needs of either front seat occupant.

The A/C Heater Control Module panels are serviced only as complete units and cannot be repaired. If faulty or damaged, the entire A/C Heater Control Module must be replaced.

The A/C Heater Control Module makes it possible to make adjustments coming from the driver such as:

- "Temperature" by setting the temperature thumbwheels. (2 and 5)
- "Air quantity" by adjusting the blower switch setting. (6)
- "Air distribution" by setting the air distribution switch. (1)
- "Recirculating air" by pressing the recirculating air push-button. (4)
- Activating the residual engine heat utilization system with the ignition switched off by pressing the REST button. (4)
- Switching off the A/C by pressing the EC button (3).

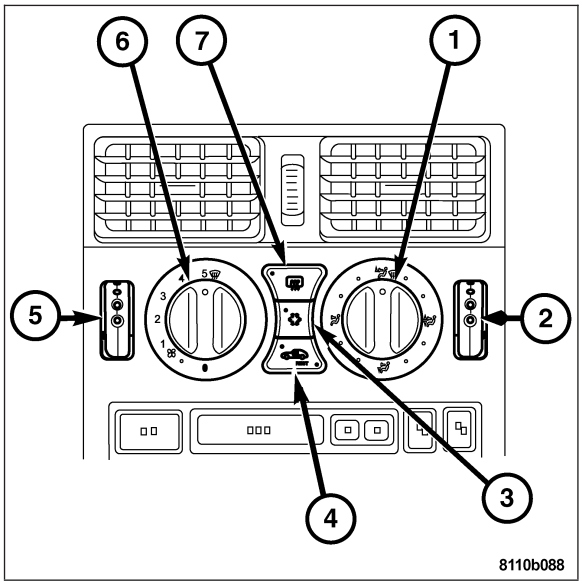

The A/C Heater Control Module integrated in the push-button control module looks after all system regulation and control functions, such as:

- Automatic switchover from fresh air to recirculated air mode.
- Electrical control of the A/C compressor.
- Control of the electric fan for the engine/air conditioning system.

REMOVAL

WARNING: ON VEHICLES EQUIPPED WITH AIRBAGS, DISABLE THE AIRBAG SYSTEM BEFORE ATTEMPTING ANY STEERING WHEEL, STEERING COLUMN, OR INSTRUMENT PANEL COMPONENT DIAGNOSIS OR SERVICE. DISCONNECT AND ISOLATE THE BATTERY NEGATIVE (GROUND) CABLE, THEN WAIT TWO MINUTES FOR THE AIRBAG SYSTEM CAPACITOR TO DISCHARGE BEFORE PERFORMING FURTHER DIAGNOSIS OR SERVICE. THIS IS THE ONLY SURE WAY TO DISABLE THE AIRBAG SYSTEM. FAILURE TO TAKE THE PROPER PRECAUTIONS COULD RESULT IN AN ACCIDENTAL AIRBAG DEPLOYMENT AND POSSIBLE PERSONAL INJURY.

1. Disconnect the negative battery cable.
2. Remove the radio. **Refer to Page 8A-27**.

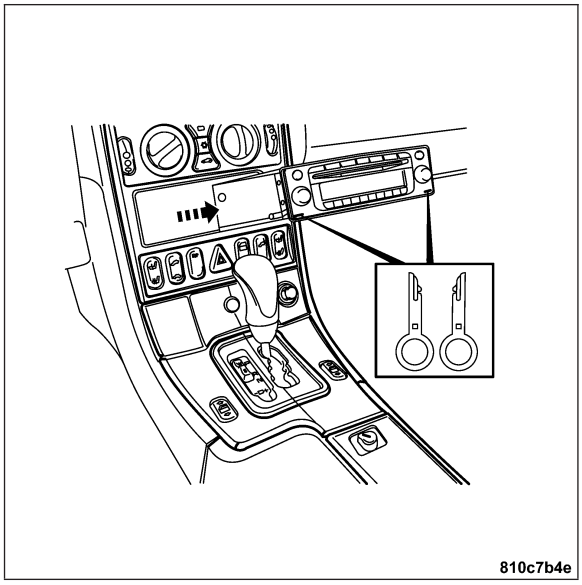

3. Remove the center console panel screws (1). **Refer to Page 23-173**.

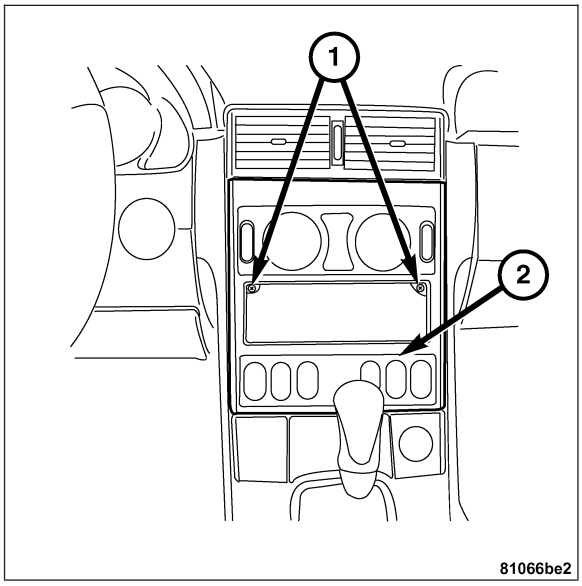

4. Pull out the A/C heater control module by pressing in the catch lugs (1) at the sides.

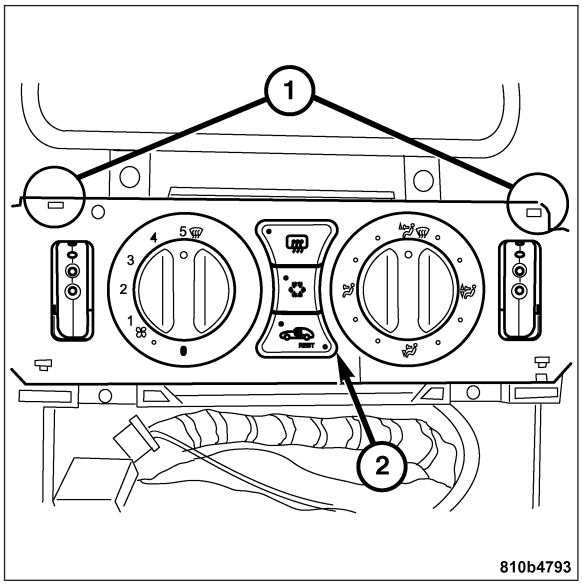

5. Disconnect the electrical connector (1) by swinging the retaining bow down.
6. Remove the A/C heater control module.

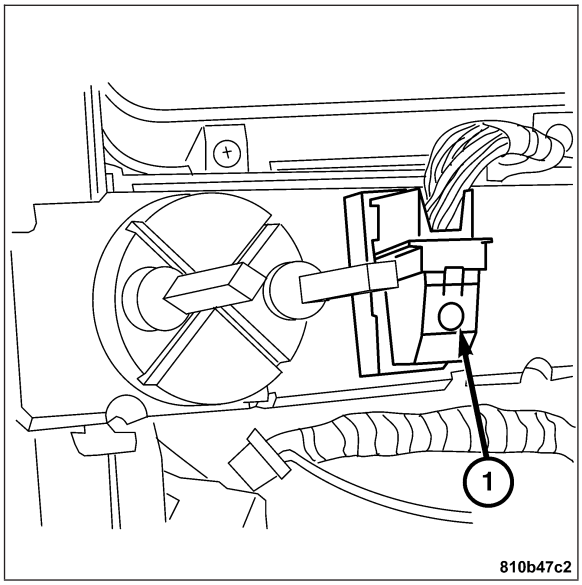

INSTALLATION

WARNING: ON VEHICLES EQUIPPED WITH AIRBAGS, DISABLE THE AIRBAG SYSTEM BEFORE ATTEMPTING ANY STEERING WHEEL, STEERING COLUMN, OR INSTRUMENT PANEL COMPONENT DIAGNOSIS OR SERVICE. CONNECT AND ISOLATE THE BATTERY NEGATIVE (GROUND) CABLE, THEN WAIT TWO MINUTES FOR THE AIRBAG SYSTEM CAPACITOR TO DISCHARGE BEFORE PERFORMING FURTHER DIAGNOSIS OR SERVICE. THIS IS THE ONLY SURE WAY TO DISABLE THE AIRBAG SYSTEM. FAILURE TO TAKE THE PROPER PRECAUTIONS COULD RESULT IN AN ACCIDENTAL AIRBAG DEPLOYMENT AND POSSIBLE PERSONAL INJURY.

1. Connect the electrical connector (1) by swinging the retaining bow up.

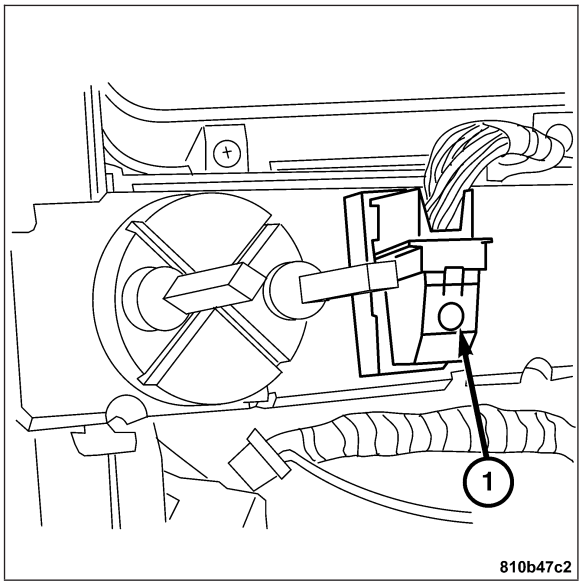

2. Install the A/C heater control module (2) by pressing in the catch lugs (1) at the sides.

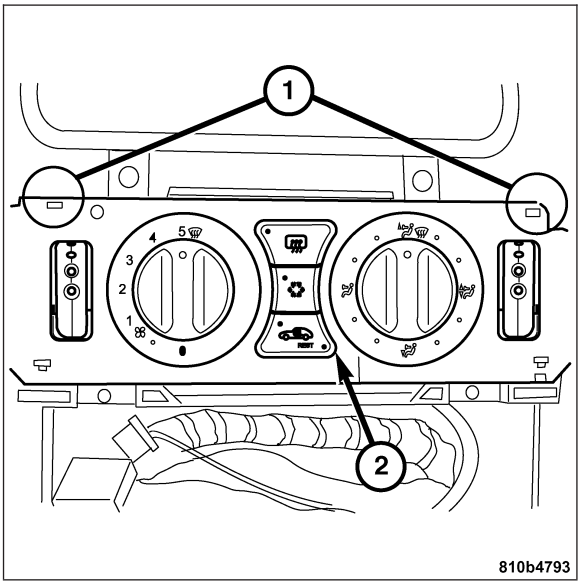

3. Install the center console panel screws (1-2). **Refer to Page 23-183**.
4. Install the radio. **Refer to Page 8A-28**.
5. Connect the negative battery cable.

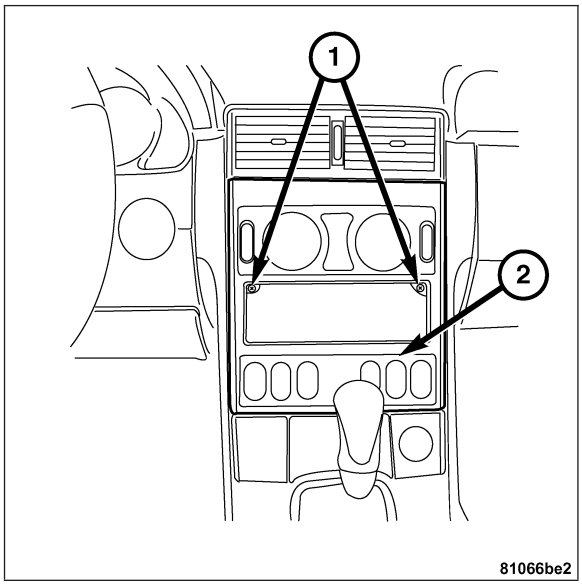

CONTROLS

REMOVAL

1. Disconnect the negative battery cable.
2. Remove the engine compartment lower panel.
3. Open the installation flap for left fog lamp located in the left inner fenderwell towards the front.
4. Disconnect the ambient air temperature harness connector (2) located next to the front fascia mount (1).

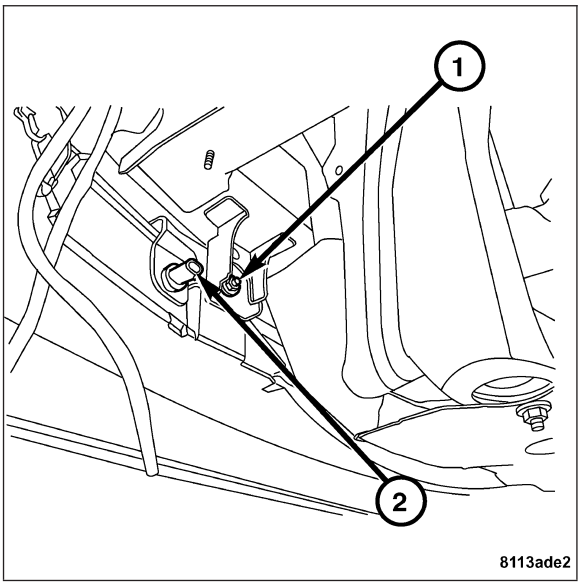

5. Unclip the ambient air temperature from the front bumper support.

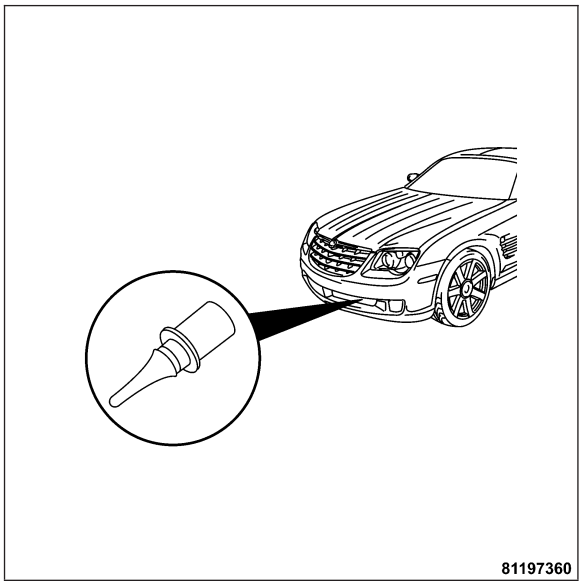

INSTALLATION

1. Clip the ambient air temperature to the front bumper support.
2. Connect the ambient air temperature harness connector (2).
3. Close the installation flap for left fog lamp located in the left inner fenderwell.
4. Install the engine compartment lower panel.
5. Connect the negative battery cable.

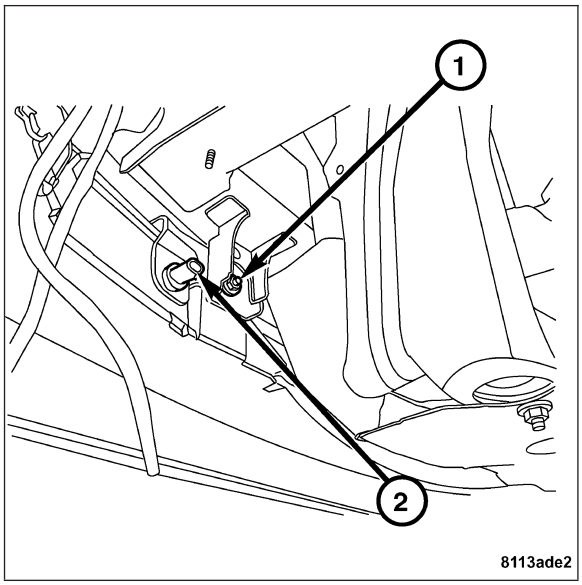

EVAPORATOR TEMPERATURE SENSOR

REMOVAL

1. Remove the center console. **Refer to Page 23-173**.
2. Remove the evaporator temperature sensor located on the left side of the heater A/C case.
3. Disconnect the evaporator temperature sensor harness connector from the sensor.

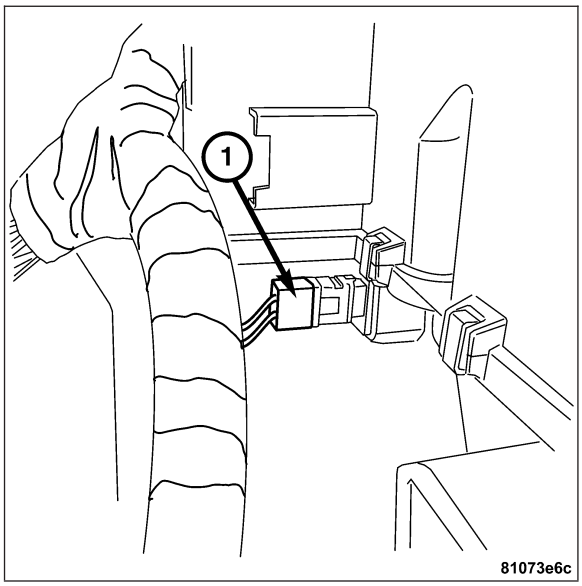

INSTALLATION

1. Connect the evaporator temperature sensor harness to the evaporator temperature sensor (1).
2. Push the evaporator temperature sensor (1) into the A/C heater case.
3. Install the center console. **Refer to Page 23-183**.

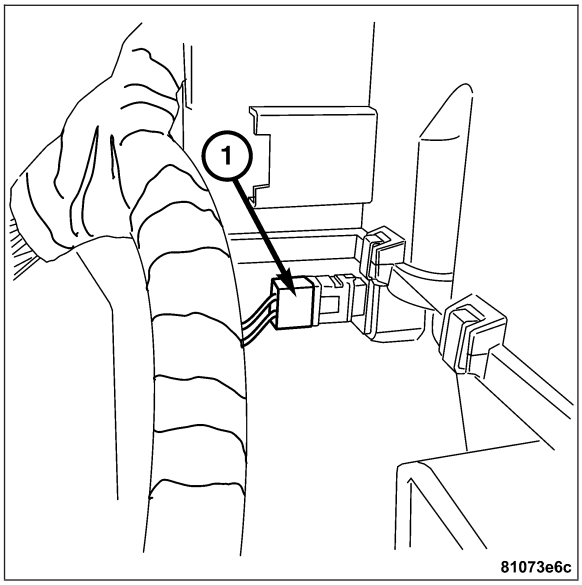

HEATER CORE TEMPERATURE SENSOR

REMOVAL

1. Remove the center console. **Refer to Page 23-173**.
2. Remove the heater core temperature sensor (1) located on the front of the heater A/C case (2).
3. Disconnect the heater core temperature sensor harness connector from the sensor.

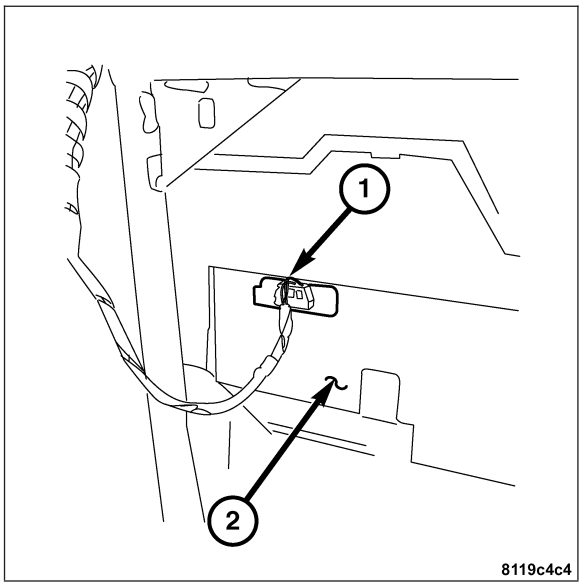

INSTALLATION

1. Connect the heater core temperature sensor harness connector to the sensor.
2. Install the heater core temperature sensor (1) to the front of the heater A/C case (2).
3. Install the center console. **Refer to Page 23-183**.

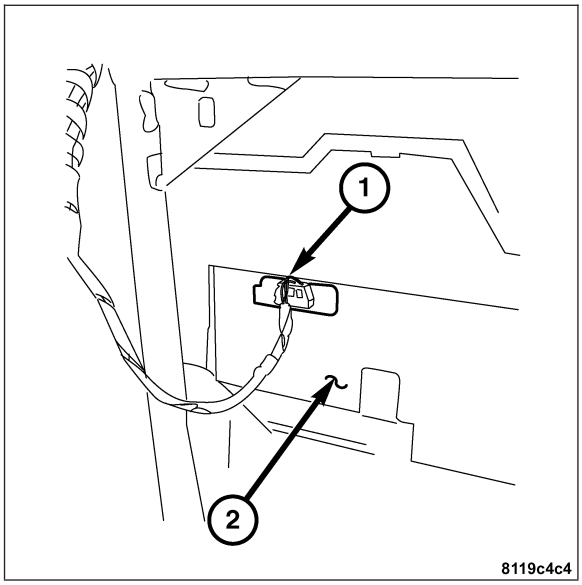

A/C PRESSURE TRANSDUCER

REMOVAL

1. Evacuate the A/C system. **Refer to Page 24-116**.
2. Disconnect the A/C pressure transducer harness connector (2).
3. Remove the A/C pressure transducer from the receiver/dryer (1).

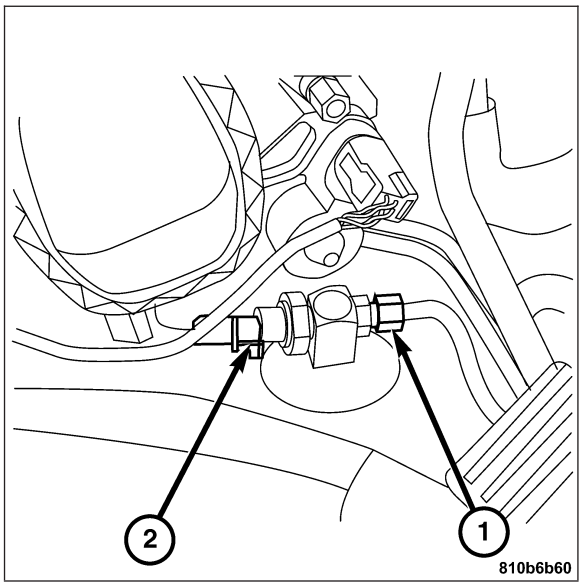

INSTALLATION

1. Install the A/C pressure transducer to the receiver/dryer (1).
2. Connect the A/C pressure transducer harness connector (2).
3. Charge the A/C system. **Refer to Page 24-116**.

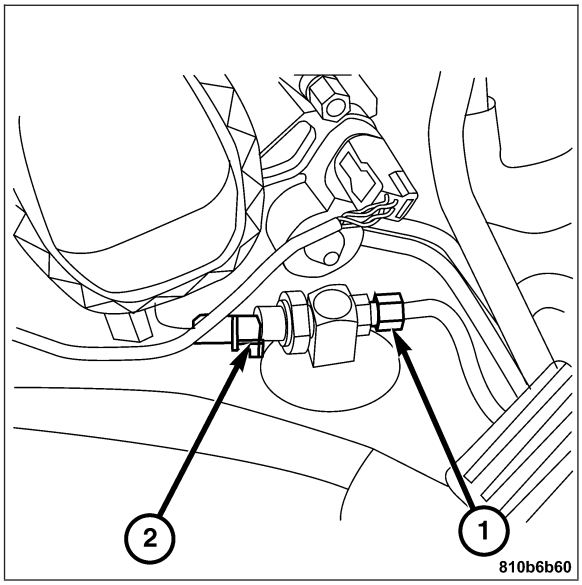

RECIRC AIR SWITCHOVER VALVE

REMOVAL

1. Remove the glove compartment. **Refer to Page 23-143**.
2. Disconnect the vacuum lines (1) from the recirculation switchover valve.
3. Disconnect the recirculation switchover valve harness connector from the recirculation switchover valve.
4. Remove the recirculation switchover valve.

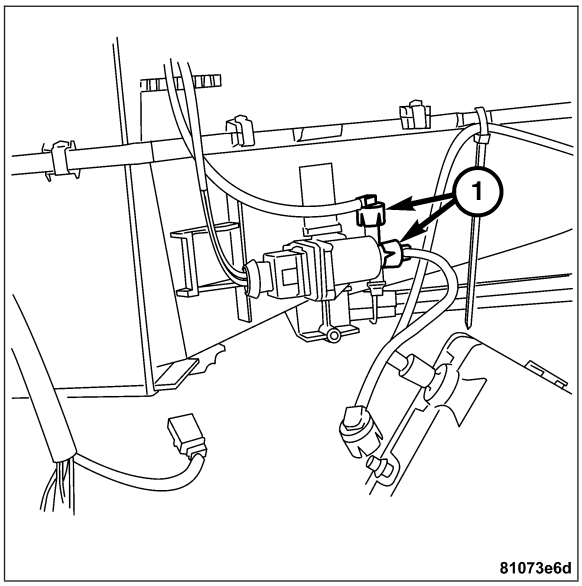

INSTALLATION

1. Install the recirculation switchover valve.
2. Connect the recirculation switchover valve harness connector to the recirculation switchover valve.
3. Connect the vacuum lines (1) to the recirculation switchover valve.
4. Install the glove compartment. **Refer to Page 23-146**.

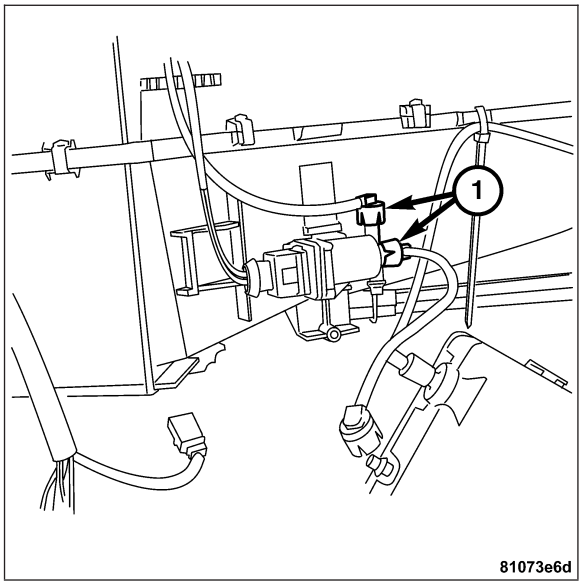

DISTRIBUTION

TABLE OF CONTENTS

page

BLOWER MOTOR
REMOVAL 88
INSTALLATION 90
HVAC HOUSING
REMOVAL 92
INSTALLATION 101
AIR OUTLETS
REMOVAL
SIDE AIR NOZZLE 107
REMOVAL - CENTER AIR NOZZLE 107
INSTALLATION
SIDE AIR NOZZLE 108
INSTALLATION - CENTER AIR NOZZLE . . . 108
DEFROSTER DUCTS
REMOVAL 109
INSTALLATION 109
FLOOR DISTRIBUTION DUCTS
REMOVAL - FOOTWELL AIR OUTLET COVER 110
INSTALLATION - FOOTWELL AIR OUTLET COVER 111

BLOWER MOTOR

REMOVAL

1. Remove the lower instrument panel cover (2) from the instrument panel (1). **Refer to Page 23-149**.

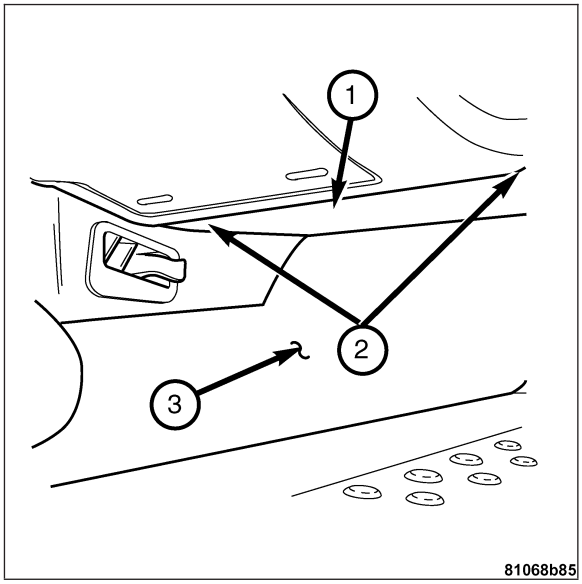

2. Disconnect the blower motor electrical connector (1) from the relief in the blower motor door.

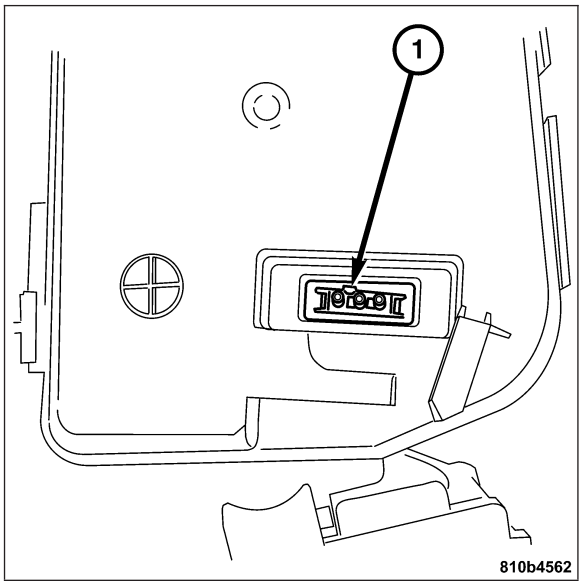

3. Slide the blower motor door catch mounts (1) to the sides.
4. Swing the blower motor door down.

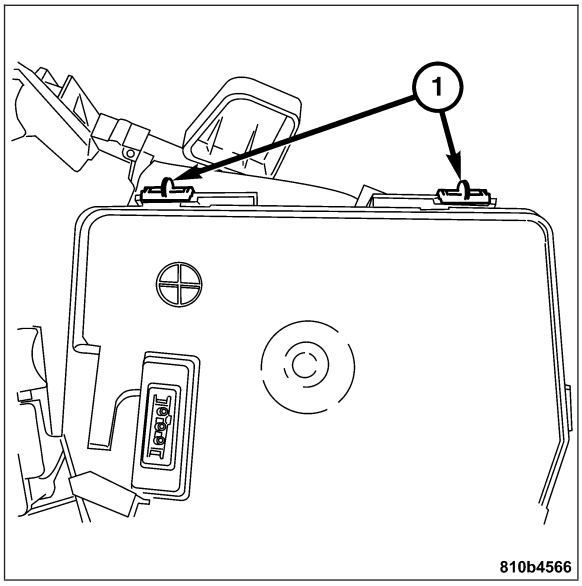

5. Remove the screws (1) attaching the blower motor to the heater housing.
6. Remove the blower motor and squirrel cage as an assembly.

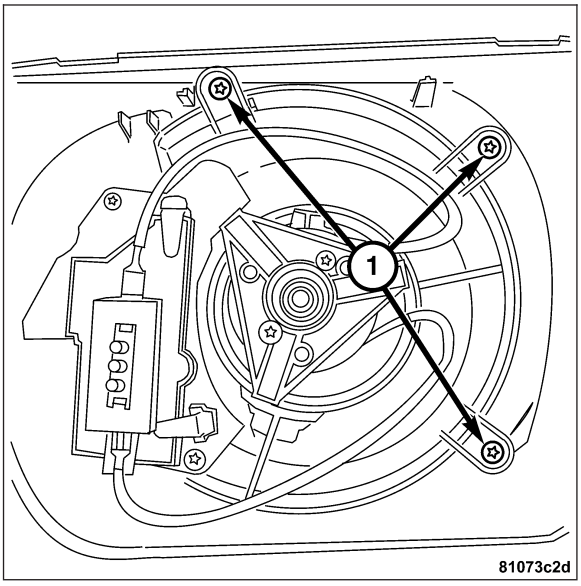

INSTALLATION

1. Install the blower motor and squirrel cage as an assembly.
2. Install the screws (1) attaching the blower motor to the heater housing.
3. Swing the blower motor door up.

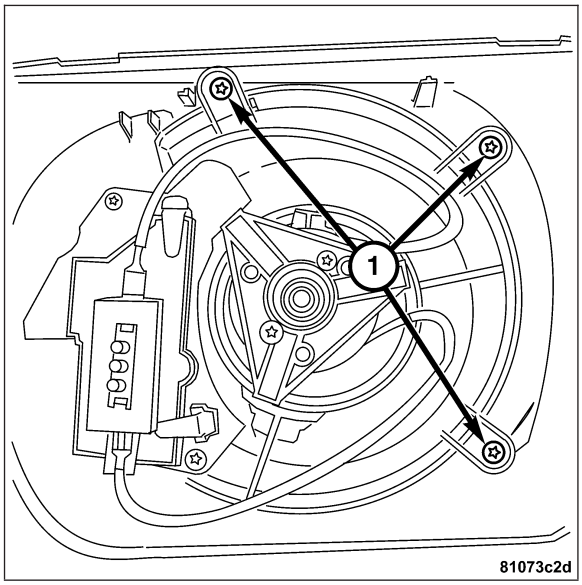

4. Install the blower motor door catch mounts (1) by sliding them over to the detents.

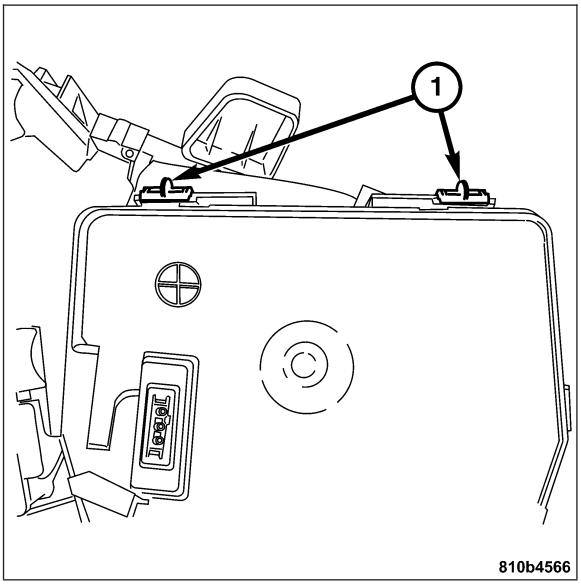

5. Connect the blower motor electrical connector (1).

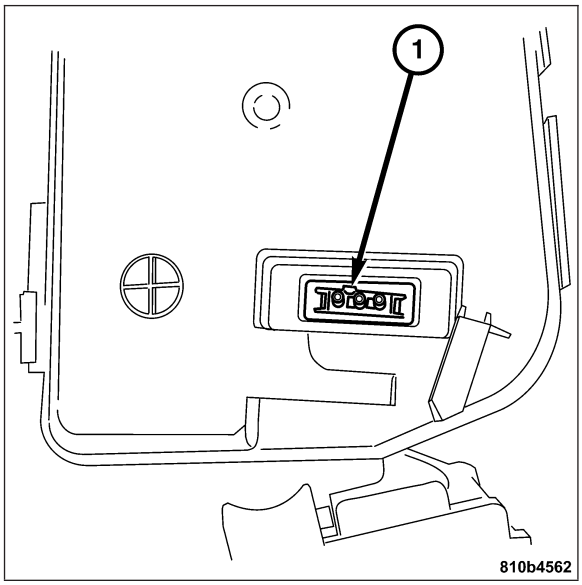

6. Install the lower instrument panel cover (2). **Refer to Page 23-155**.

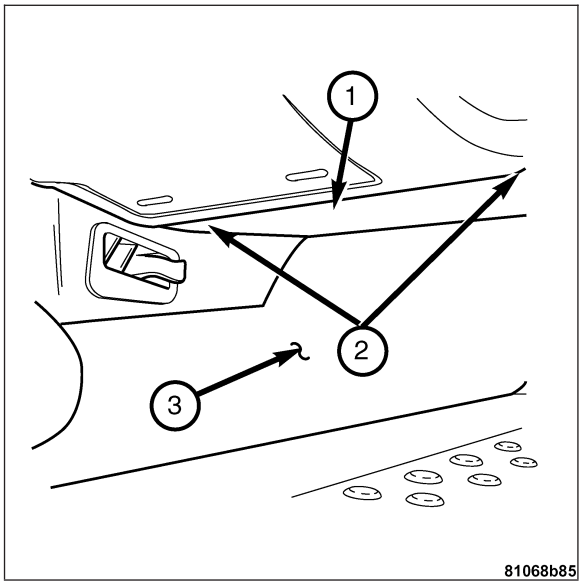

HVAC HOUSING

REMOVAL

WARNING: THE AIR CONDITIONING SYSTEM CONTAINS REFRIGERANT UNDER HIGH PRESSURE. SEVERE PERSONAL INJURY MAY RESULT FROM IMPROPER SERVICE PROCEDURES. REPAIRS SHOULD ONLY BE PERFORMED BY QUALIFIED SERVICE PERSONNEL.
AVOID BREATHING THE REFRIGERANT AND REFRIGERANT OIL VAPOR OR MIST. EXPOSURE MAY IRRITATE THE EYES, NOSE, AND/OR THROAT. WEAR EYE PROTECTION WHEN SERVICING THE AIR CONDITIONING REFRIGERANT SYSTEM. SERIOUS EYE INJURY CAN RESULT FROM DIRECT CONTACT WITH THE REFRIGERANT. IF EYE CONTACT OCCURS, SEEK MEDICAL ATTENTION IMMEDIATELY.
DO NOT EXPOSE THE REFRIGERANT TO OPEN FLAME. POISONOUS GAS IS CREATED WHEN REFRIGERANT IS BURNED. AN ELECTRONIC LEAK DETECTOR IS RECOMMENDED.
IF ACCIDENTAL SYSTEM DISCHARGE OCCURS, VENTILATE THE WORK AREA BEFORE RESUMING SERVICE. LARGE AMOUNTS OF REFRIGERANT RELEASED IN A CLOSED WORK AREA WILL DISPLACE THE OXYGEN AND CAUSE SUFFOCATION.
THE EVAPORATION RATE OF R-134a REFRIGERANT AT AVERAGE TEMPERATURE AND ALTITUDE IS EXTREMELY HIGH. AS A RESULT, ANYTHING THAT COMES IN CONTACT WITH THE REFRIGERANT WILL FREEZE. ALWAYS PROTECT THE SKIN OR DELICATE OBJECTS FROM DIRECT CONTACT WITH THE REFRIGERANT.
THE R-134a SERVICE EQUIPMENT OR THE VEHICLE REFRIGERANT SYSTEM SHOULD NOT BE PRESSURE TESTED OR LEAK TESTED WITH COMPRESSED AIR. SOME MIXTURES OF AIR AND R-134a HAVE BEEN SHOWN TO BE COMBUSTIBLE AT ELEVATED PRESSURES. THESE MIXTURES ARE POTENTIALLY DANGEROUS, AND MAY RESULT IN FIRE OR EXPLOSION CAUSING INJURY OR PROPERTY DAMAGE.

WARNING: ON VEHICLES EQUIPPED WITH AIRBAGS, DISABLE THE SUPPLEMENTAL RESTRAINT SYSTEM BEFORE ATTEMPTING ANY STEERING WHEEL, STEERING COLUMN, DRIVER AIRBAG, PASSENGER AIRBAG, FRONT IMPACT SENSOR, SIDE IMPACT SENSOR, SIDE CURTAIN AIRBAG, OR INSTRUMENT PANEL COMPONENT DIAGNOSIS OR SERVICE. DISCONNECT AND ISOLATE THE BATTERY NEGATIVE (GROUND) CABLE, THEN WAIT TWO MINUTES FOR THE SYSTEM CAPACITOR TO DISCHARGE BEFORE PERFORMING FURTHER DIAGNOSIS OR SERVICE. THIS IS THE ONLY SURE WAY TO DISABLE THE SUPPLEMENTAL RESTRAINT SYSTEM. FAILURE TO TAKE THE PROPER PRECAUTIONS COULD RESULT IN ACCIDENTAL AIRBAG DEPLOYMENT AND POSSIBLE PERSONAL INJURY.

WARNING: AN AIRBAG INFLATOR UNIT MAY CONTAIN SODIUM AZIDE AND POTASSIUM NITRATE. THESE MATERIALS ARE POISONOUS AND EXTREMELY FLAMMABLE. CONTACT WITH ACID, WATER, OR HEAVY METALS MAY PRODUCE HARMFUL AND IRRITATING GASES (SODIUM HYDROXIDE IS FORMED IN THE PRESENCE OF MOISTURE) OR COMBUSTIBLE COMPOUNDS. AN AIRBAG INFLATOR UNIT MAY ALSO CONTAIN A GAS CANISTER PRESSURIZED TO OVER 2500 PSI. DO NOT ATTEMPT TO DISMANTLE AN AIRBAG UNIT OR TAMPER WITH ITS INFLATOR. DO NOT PUNCTURE, INCINERATE, OR BRING INTO CONTACT WITH ELECTRICITY. DO NOT STORE AT TEMPERATURES EXCEEDING 93° C (200° F).

WARNING: THE FASTENERS, SCREWS, AND BOLTS ORIGINALLY USED FOR THE RESTRAINT SYSTEM COMPONENTS HAVE SPECIAL COATINGS AND ARE SPECIFICALLY DESIGNED FOR THE RESTRAINT SYSTEM. THEY MUST NEVER BE REPLACED WITH ANY SUBSTITUTES. ANY TIME A NEW FASTENER IS NEEDED, REPLACE IT WITH THE CORRECT FASTENERS PROVIDED IN THE SERVICE PACKAGE OR SPECIFIED IN THE DAIMLERCHRYSLER MOPAR PARTS CATALOG.

WARNING: WHEN A STEERING COLUMN HAS AN AIRBAG UNIT ATTACHED, NEVER PLACE THE COLUMN ON THE FLOOR OR ANY OTHER SURFACE WITH THE STEERING WHEEL OR AIRBAG UNIT FACE DOWN.

CAUTION: Liquid refrigerant is corrosive to metal surfaces. Follow the operating instructions supplied with the service equipment being used.
Never add R-12 to a refrigerant system designed to use R-134a. Damage to the system will result.
R-12 refrigerant oil must not be mixed with R-134a refrigerant oil. They are not compatible.
Do not use R-12 equipment or parts on the R-134a system. Damage to the system will result.
Do not overcharge the refrigerant system. This will cause excessive compressor head pressure and can cause noise and system failure.
Recover the refrigerant before opening any fitting or connection. Open the fittings with caution, even after the system has been discharged. Never open or loosen a connection before recovering the refrigerant.
The refrigerant system must always be evacuated before charging.
Do not open the refrigerant system or uncap a replacement component until you are ready to service the system. This will prevent contamination in the system.
Before disconnecting a component, clean the outside of the fittings thoroughly to prevent contamination from entering the refrigerant system.
Immediately after disconnecting a component from the refrigerant system, seal the open fittings with a cap or plug.
Before connecting an open refrigerant fitting, always install a new seal or gasket. Coat the fitting and seal with clean refrigerant oil before connecting.
Do not remove the sealing caps from a replacement component until it is to be installed.
When installing a refrigerant line, avoid sharp bends that may restrict refrigerant flow. Position the refrigerant lines away from exhaust system components or any sharp edges, which may damage the line.
Tighten refrigerant fittings only to the specified torque. The aluminum fittings used in the refrigerant system will not tolerate overtightening.
When disconnecting a refrigerant fitting, use a wrench on both halves of the fitting. This will prevent twisting of the refrigerant lines or tubes.
Refrigerant oil will absorb moisture from the atmosphere if left uncapped. Do not open a container of refrigerant oil until you are ready to use it. Replace the cap on the oil container immediately after using. Store refrigerant oil only in a clean, airtight, and moisture-free container.
Keep service tools and the work area clean. Contamination of the refrigerant system through careless work habits must be avoided.

1. Disconnect the negative battery cable.
2. Evacuate the refrigerant from the A/C system. **Refer to Page 24-116**.

CAUTION: Do not open cooling system unless coolant temperature is below 90° C. Open cap slowly and release the pressure. Do not pour coolant into beverage bottles. Wear protective gloves, protective clothing and eye protection.

3. Relieve the pressure in the cooling system by turning the cap on supply reservoir to catch “1” and then tightening it back to its rest position.
4. Drain the coolant from the engine cooling system. **Refer to Page 7-18**.
5. Remove the hot water hose clamp (1) located inboard from the brake booster on the bulkhead, then remove and plug off the hot water hose.
6. Remove the two hot water hose clamps (1) from hot water hoses located on the right side of the bulkhead, then remove the two hot water hoses.

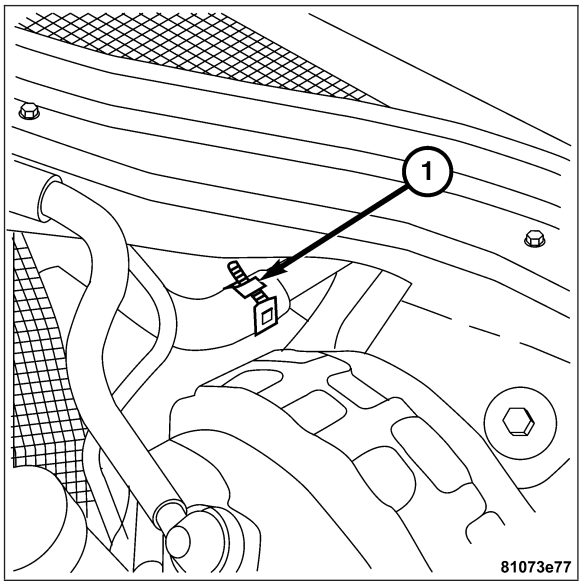

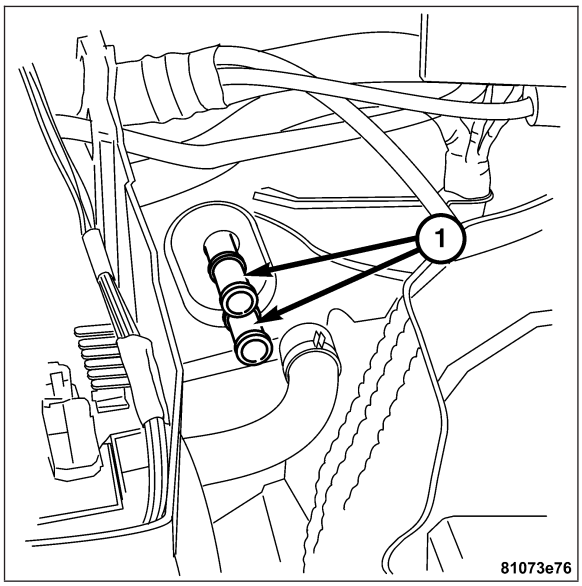

7. Remove the instrument panel top section (1). **Refer to Page 23-149**.

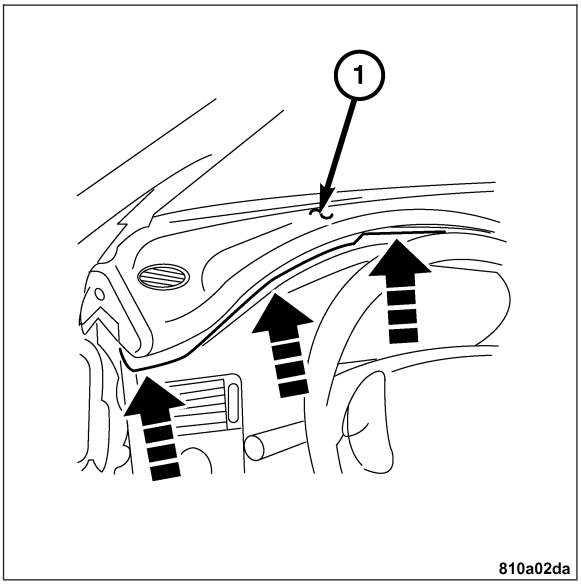

8. Remove the lower instrument panel (2). **Refer to Page 23-149**.

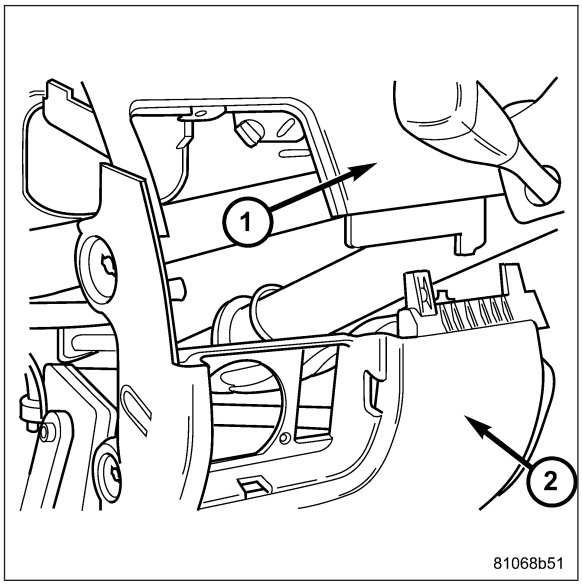

9. Remove the lower instrument panel (2). **Refer to Page 23-149**.

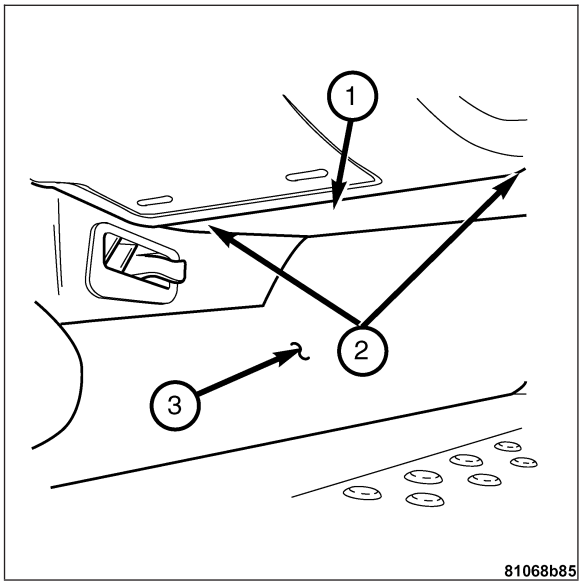

10. Remove the instrument cluster cover (1). **Refer to Page 23-149**.
11. Remove the green insulating mats.
12. Remove the nuts for the instrument cluster holder then remove instrument cluster. **Refer to Page 8J-83**.

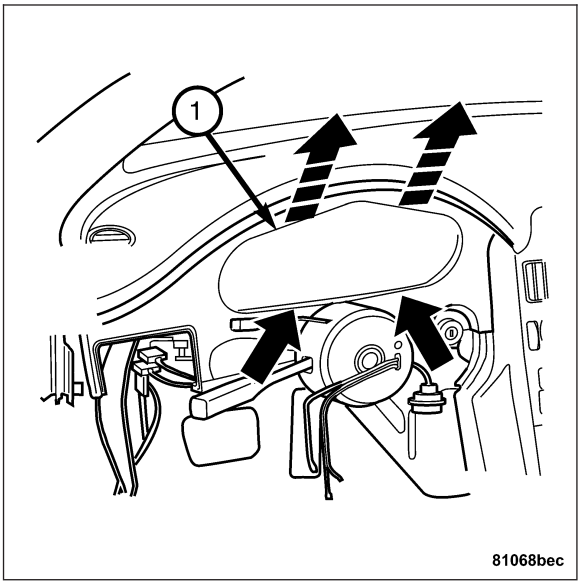

13. Remove the Sentry Key Remote Entry Module (SKREM) by:
    - Disconnect the 2-pin CAN harness connector from the SKREM (1).
    - Disconnect the 2-pin harness connector for the transponder coil (1).
    - Disconnect the 18-pin harness connector (1).
    - Press the retaining tabs apart (1).
    - Remove the SKREM control module from the base plate.

Note: This is necessary to remove the instrument panel support from the vehicle.

14. Remove all of the wiring harness nylon ties attaching the wiring harnesses on the instrument panel support.

15. Remove any harness connectors (1) or electric leads on the body transmission tunnel.

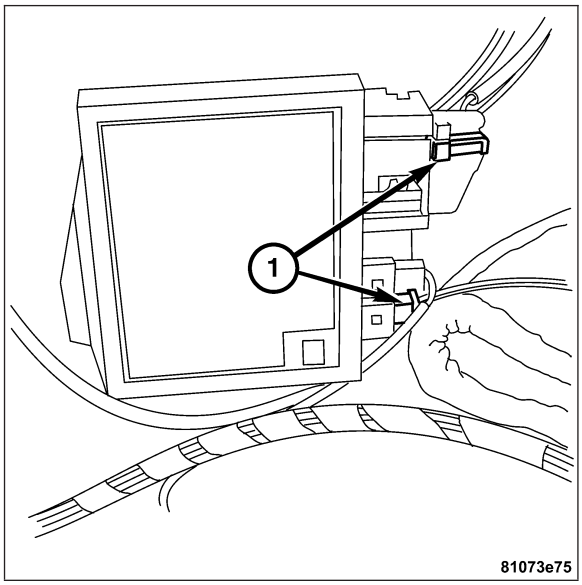

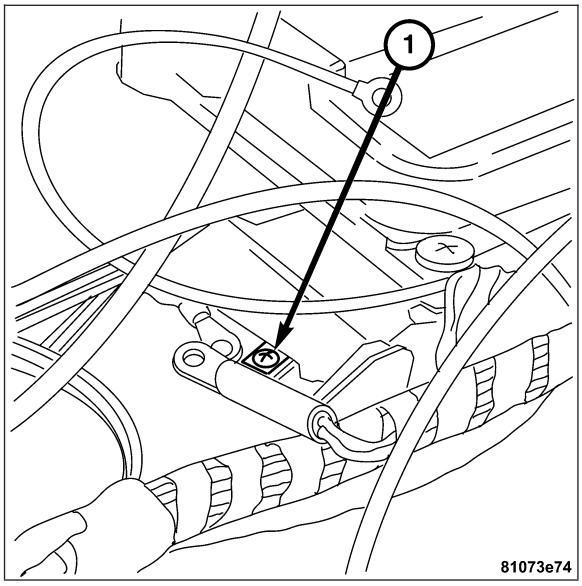

16. Remove the bolts and nuts (1) attaching the steering column to the instrument panel support.

Note: It is not necessary to fully remove the steering column from the vehicle.

17. Relocate the steering column out of the working area.

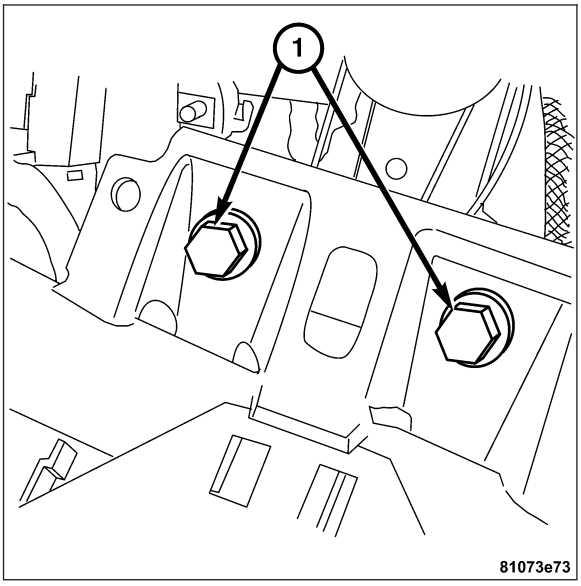

WARNING: BE SURE YOU HAVE TAKEN THE NECESSARY PRECAUTIONS TO DISENGAGE THE AIRBAG SYSTEM.

18. Remove the electrical harness connector (1) on passenger airbag module.
19. Remove the heater ducts on left and right side of the instrument panel support.

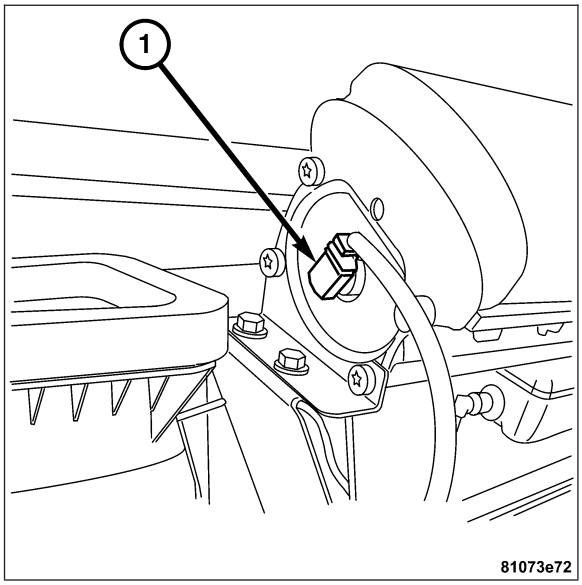

20. Remove the nuts (1) on the heater case attaching it to the instrument panel support.
21. Remove the bolts from the instrument panel support attaching it to the body transmission tunnel.

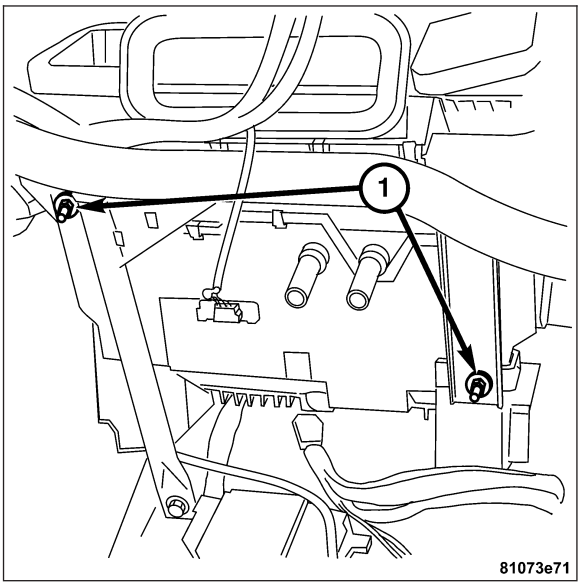

22. Remove the bolts (1) attaching the instrument panel support to the front of the vehicle bulkhead.

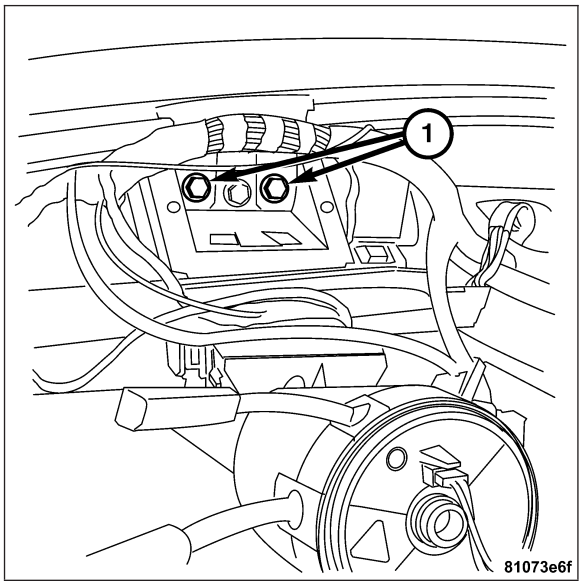

23. Remove the bolts (1) attaching the instrument panel support to the A-pillars.

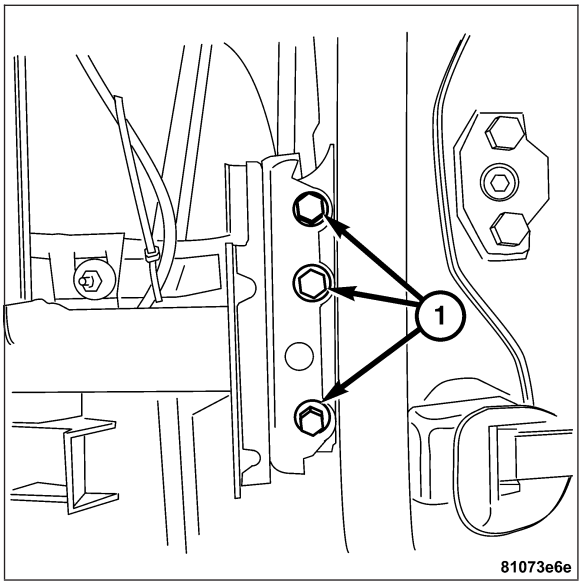

24. Disconnect the connectors (1) from the vacuum reservoir.

CAUTION: To avoid any damage to the vehicle a helper may be required to aid in the removal of the instrument panel support.

25. Remove the instrument panel support.

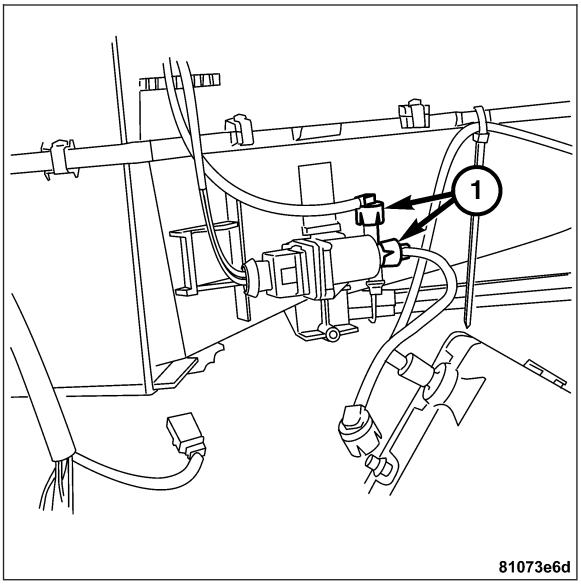

26. Remove the electrical harness connector on heater core temperature sensor located on the front of the heater housing and the evaporator temperature sensor (1) located on the left side of the heater case.

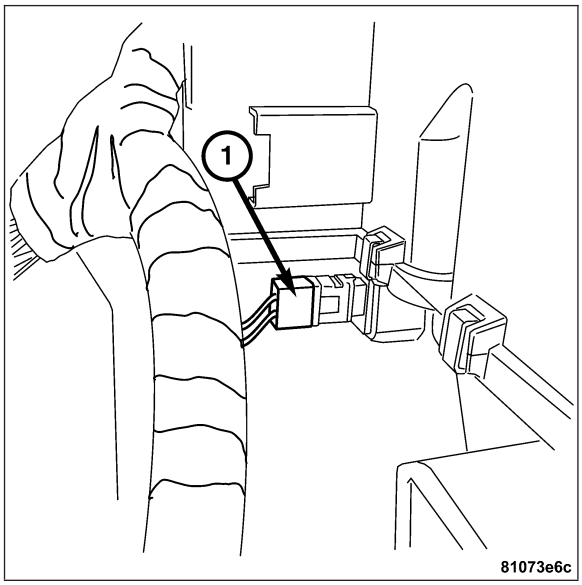

27. Disconnect the electrical harness connector from the fresh air/recirculating air flap switchover valve (1) located on the right front of the heater housing where the vacuum lines for the reservoir where removed.
28. Remove all the nylon ties on the heater housing attaching any wiring harnesses.

CAUTION: To avoid any damage to the vehicle a helper may be required to aid in the removal of the instrument panel support.

CAUTION: Be sure not to spill any residual coolant from the heater housing into the passenger compartment of the vehicle.

29. Remove the heater housing from the vehicle by tipping it forward and removing through the passenger side door.

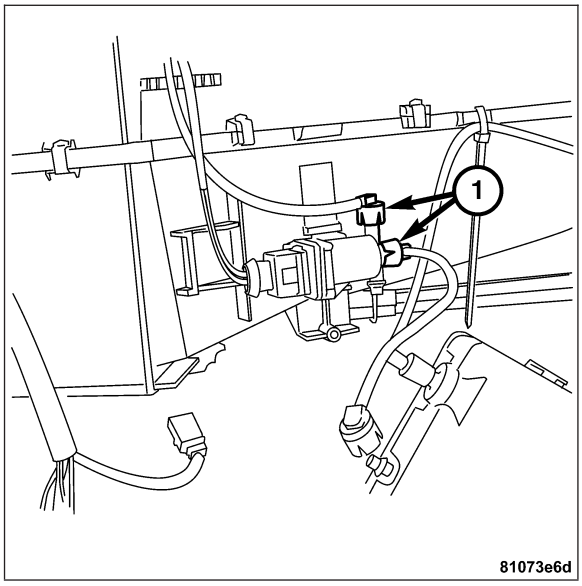

INSTALLATION

1. Install the HVAC housing to the vehicle.
2. Install any wiring harnesses associated with the HVAC housing with nylon ties in their respected routing positions.
3. Connect the harness connector (1) to the fresh air/recirculating air flap switchover valve located on the right side of the heater housing.

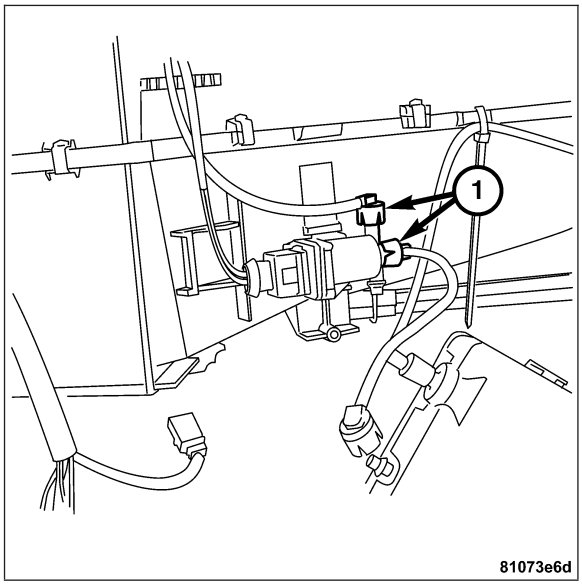

4. Install the harness connector on heater core temperature sensor located on the front of the HVAC housing. Then install the evaporator temperature sensor (1) to the HVAC case.

CAUTION: To avoid any damage to the vehicle a helper may be required to aid in the removal of the instrument panel support.

5. Install the instrument panel support to the vehicle.

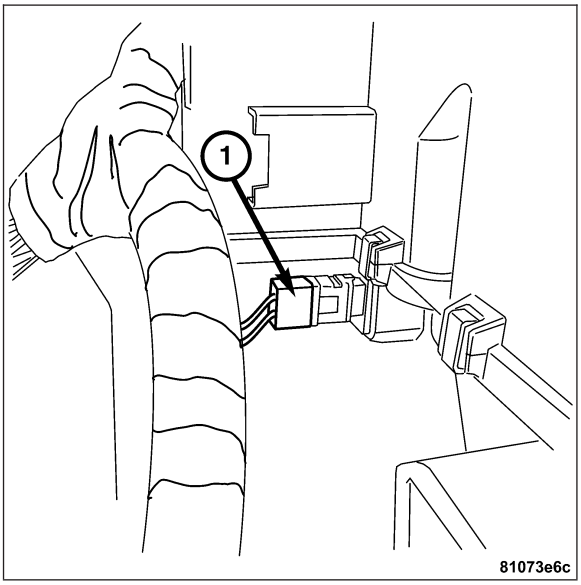

6. Install the bolts (1) attaching the instrument panel support to the A-pillars.

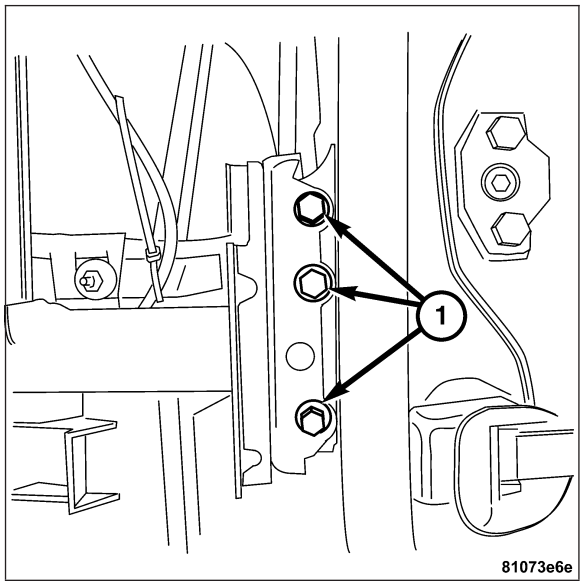

7. Connect the connectors (1) to the vacuum reservoir switch over valve.

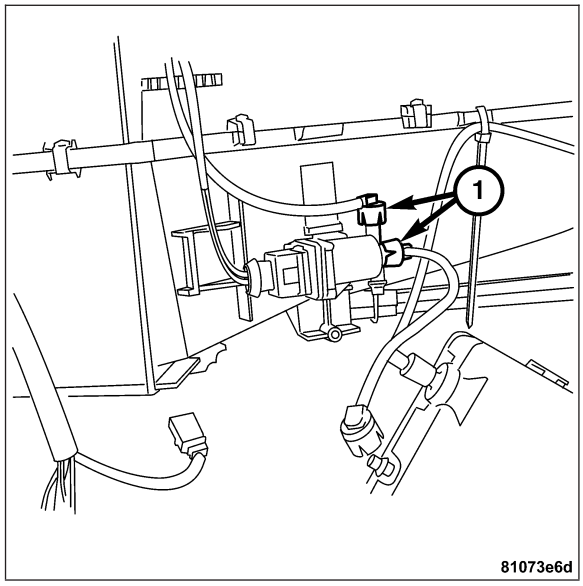

8. Install the bolts (1) attaching the instrument panel support to the front of the vehicle bulkhead.

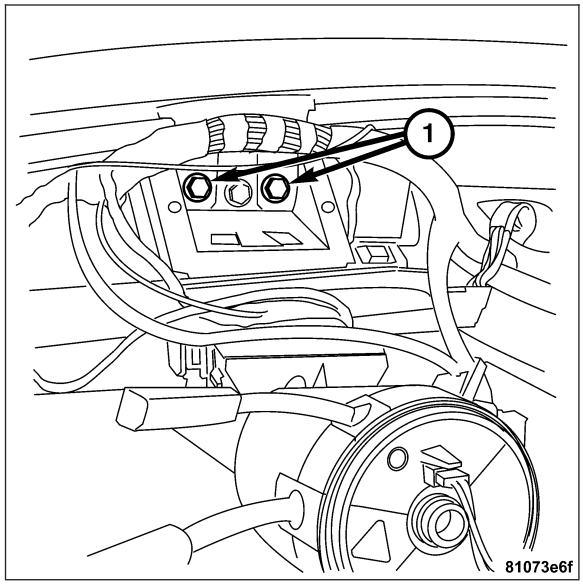

9. Install the nuts to the instrument panel support attaching it to the body transmission tunnel.
10. Install the nuts on the heater housing (1) attaching it to the instrument panel support.
11. Install the heater ducts on left and right side of the instrument panel support.

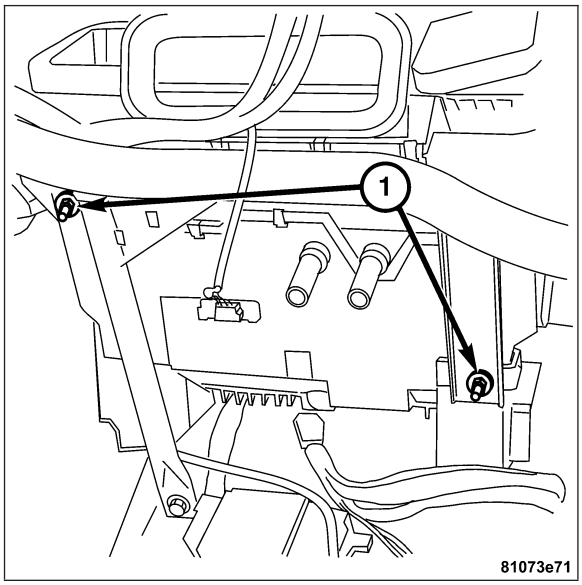

12. Install the harness connector (1) on passenger airbag module.

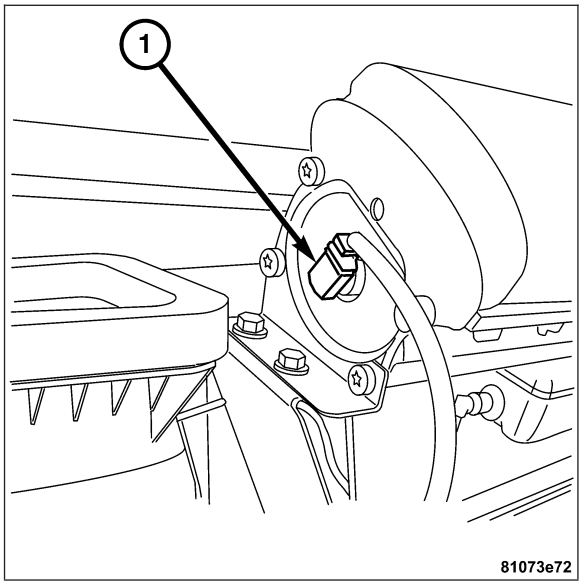

13. Locate the steering column to its mounting position on the instrument panel support.
14. Install the bolts and nuts (1) attaching the steering column to the instrument panel support.

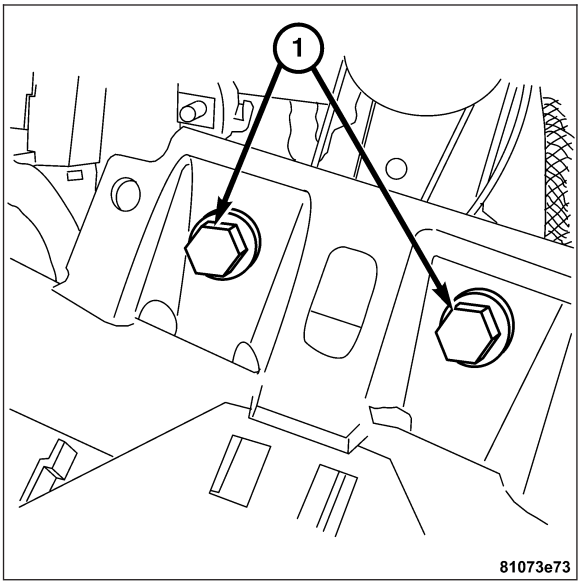

15. Install the connection (1) for electric leads on body tunnel.
16. Install all of the wiring harnesses to their respected routing positions attaching them with nylon ties on the instrument panel support.

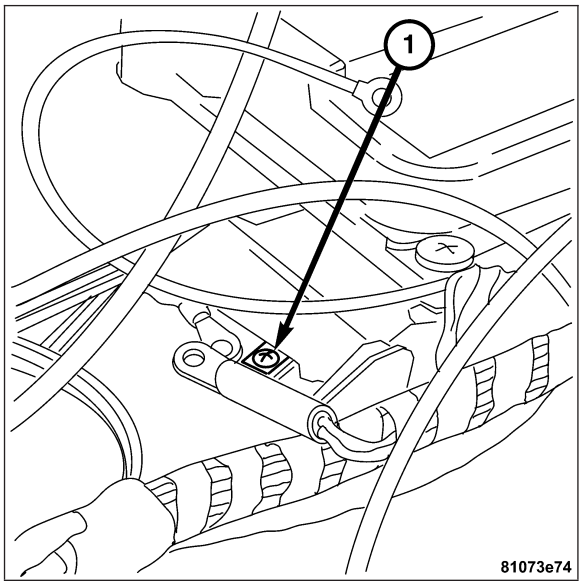

17. Install the Sentry Key Remote Entry Module (SKREM) by:
    - Connecting the 2-pin CAN harness connector to the SKREM module.
    - Connecting the 2-pin harness connector for the transponder coil.
    - Connecting the 18-pin connector.
    - Installing the SKREM control module to the base plate.
18. Install instrument cluster holder to the vehicle then install the nuts for the instrument cluster holder.
19. Install the green insulating mats.

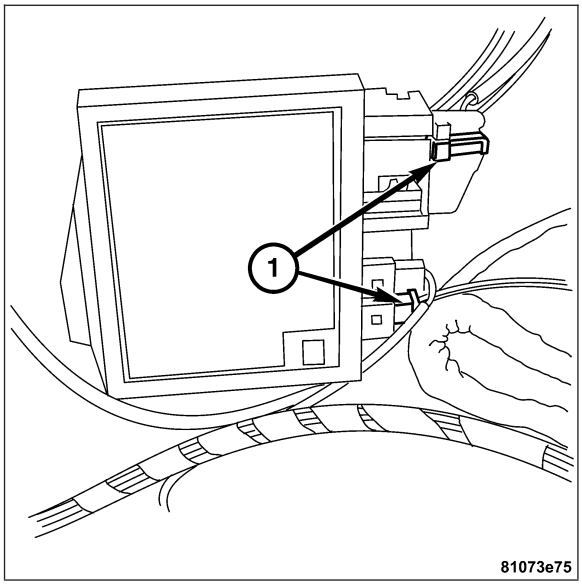

20. Install the instrument panel top section (1). **Refer to Page 23-155**.

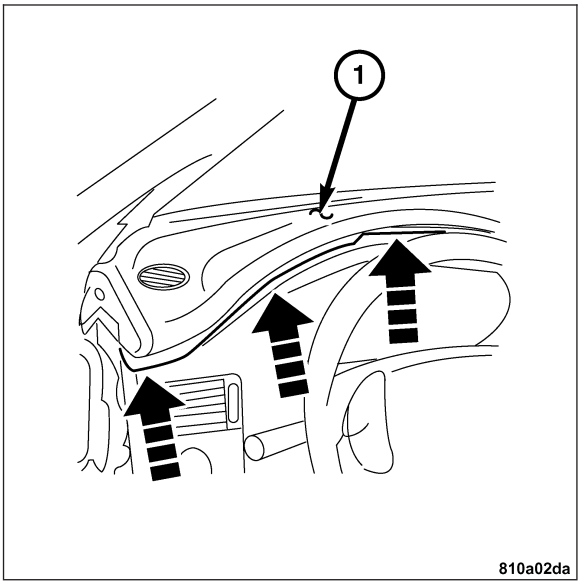

21. Install the left lower instrument panel (2). **Refer to Page 23-155**.

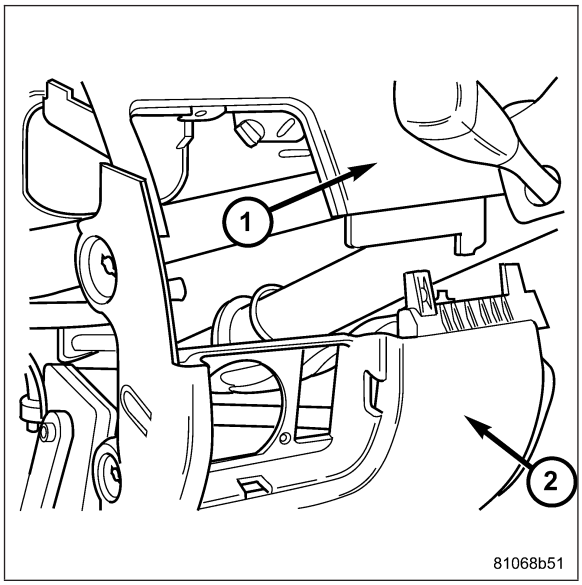

22. Install the lower right instrument panel (2). **Refer to Page 23-155**.

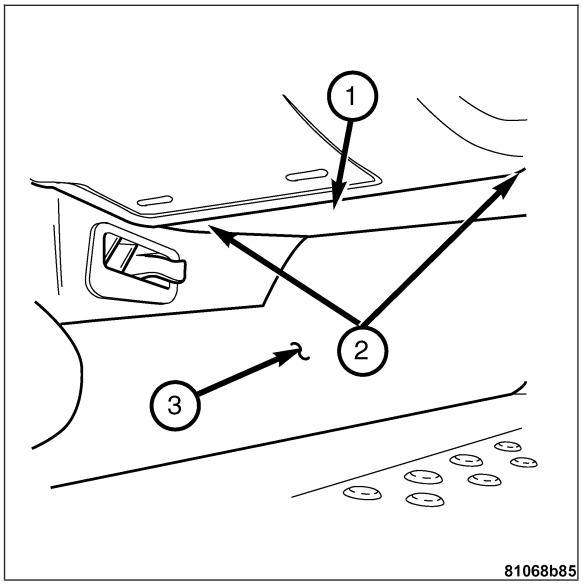

23. Install the instrument cluster cover (1). **Refer to Page 8J-84**.

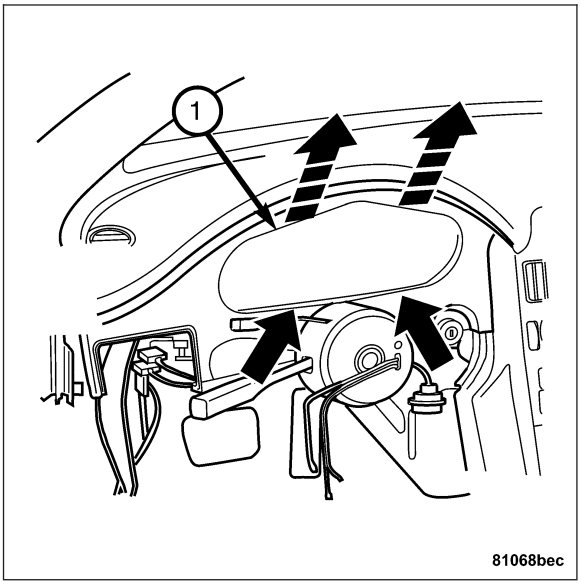

24. Install the two hot water hoses (1) then install the two hot water hose clamps to hot water hoses located on the right side of the bulkhead.

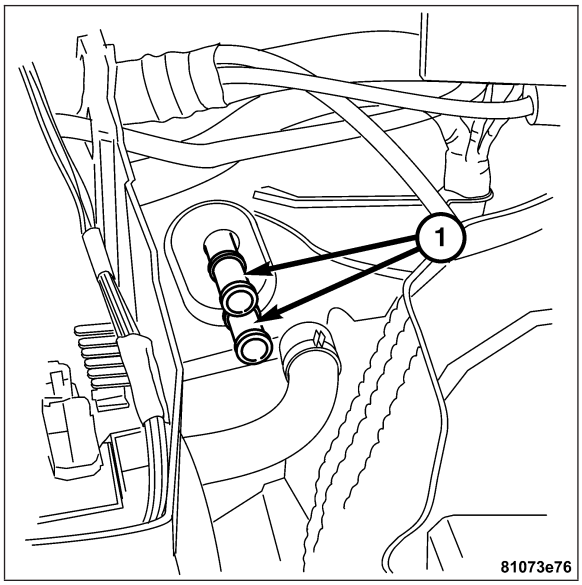

25. Install the hot water hose (1) the install the hot water hose clamp located inboard to the brake booster on the bulkhead.
26. Fill the coolant to the engine cooling system. **Refer to Page 7-18**.
27. Connect the negative battery cable.

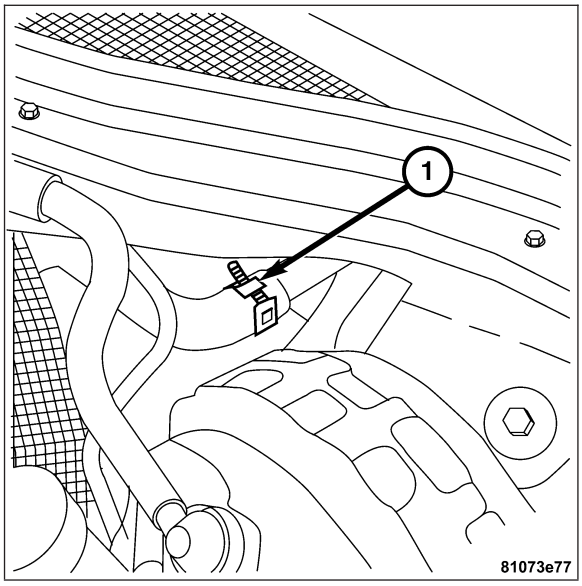

AIR OUTLETS

REMOVAL

SIDE AIR NOZZLE

Note: Open and close catches with a plastic wedge or a suitable coin.

1. Turn the plugs (1) 90° to the left and remove the fuse cover (3).
2. Remove the screw located in the upper bezel of the air nozzle (2), tilt the deflector up to reveal the screw (arrow).
3. Pull the air nozzle out toward the rear.

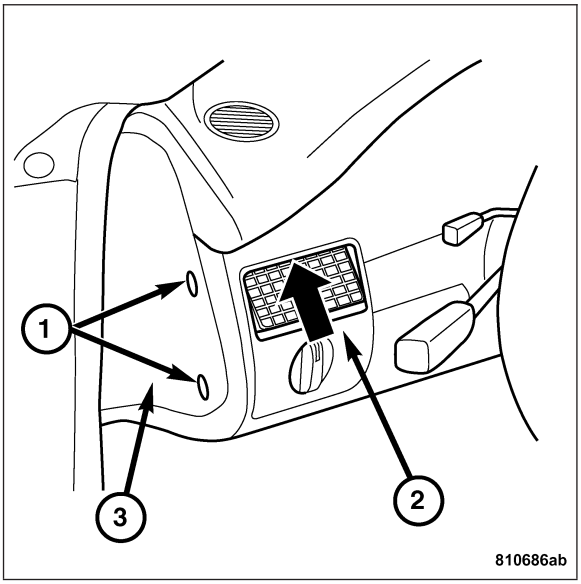

REMOVAL - CENTER AIR NOZZLE

1. Remove the cover on the center console. **Refer to Page 23-173**.
2. Remove the screws attaching the center air nozzle to the center console cover (2).
3. Disconnect the air nozzle catch clips (3).
4. Remove the air nozzle from the center console cover (4).

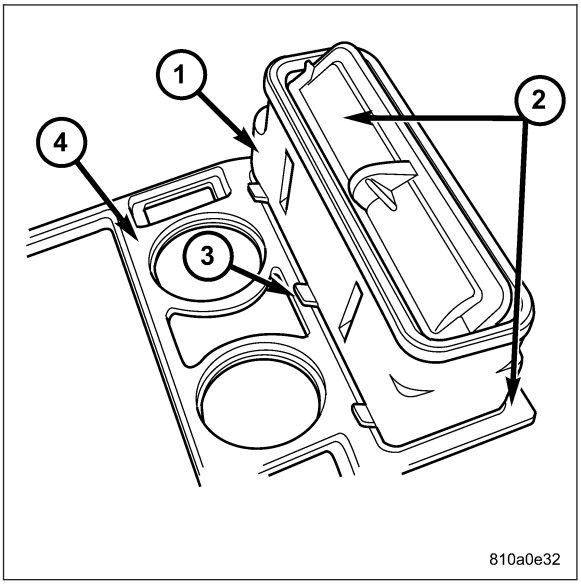

INSTALLATION

SIDE AIR NOZZLE

Note: When installing connect the air nozzle to the air duct.

1. Install the side air nozzle to the vehicle.
2. Install the screw located in the upper bezel of the air nozzle (2), tilt the deflector up to reveal the screw hole.
3. Turn the plugs (1) 90° to the right to install the fuse cover.

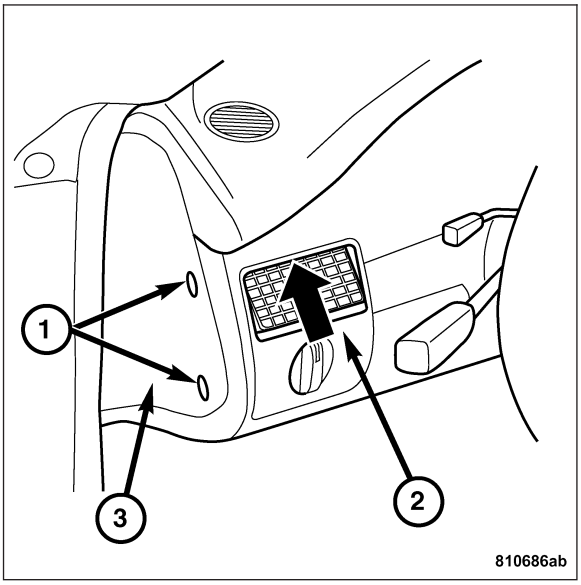

INSTALLATION - CENTER AIR NOZZLE

1. Connect the air nozzles catch clips (3).
2. Install the screws (2) attaching the center air nozzle (1) to the center console cover (4).
3. Install the cover on the center console. **Refer to Page 23-183**.

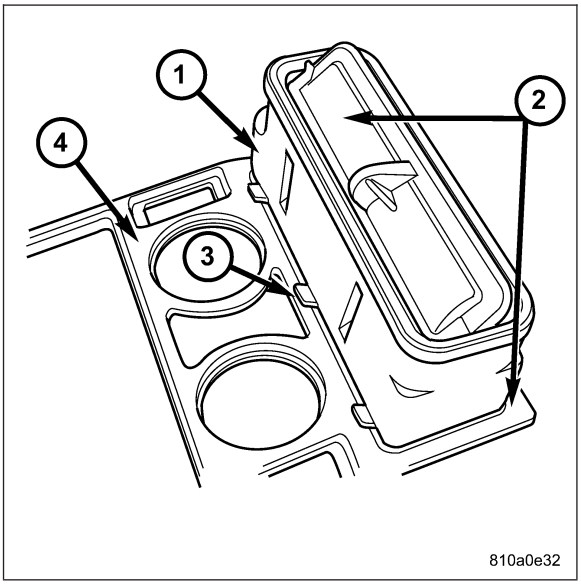

DEFROSTER DUCTS

REMOVAL

1. The defroster duct is part of the upper top section of the instrument panel. There are plastic trim pieces which make up the final duct distribution. These trim pieces can be removed by, removing the screws (1) in the outside edge of the trim piece the inner edge is held into place by a tab slid under the top section of the instrument panel.

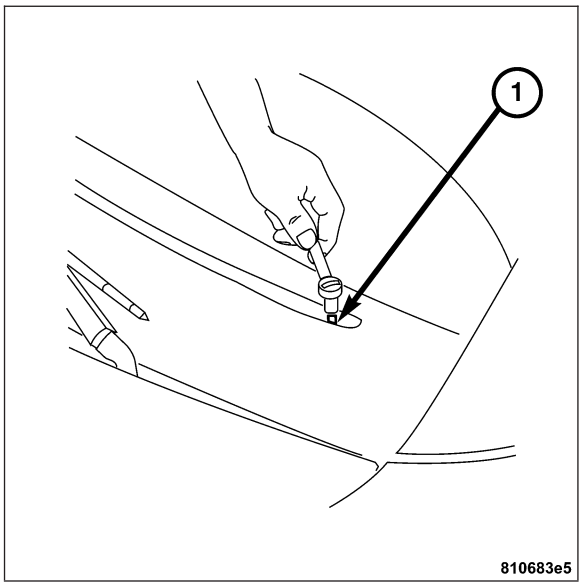

INSTALLATION

1. Install the defroster duct trim piece into the top section of the instrument panel. Then install the screw (1).

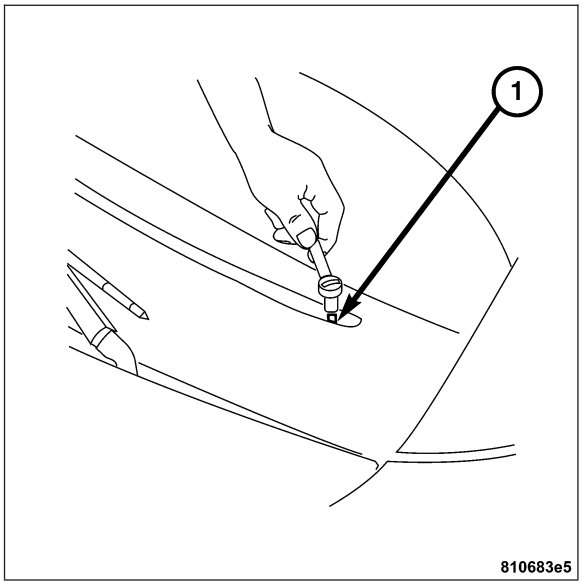

FLOOR DISTRIBUTION DUCTS

REMOVAL - FOOTWELL AIR OUTLET COVER

1. Turn the screw 90° (1) on the vent (4) to the left and remove the front cover (3) away from the rear portion (2).

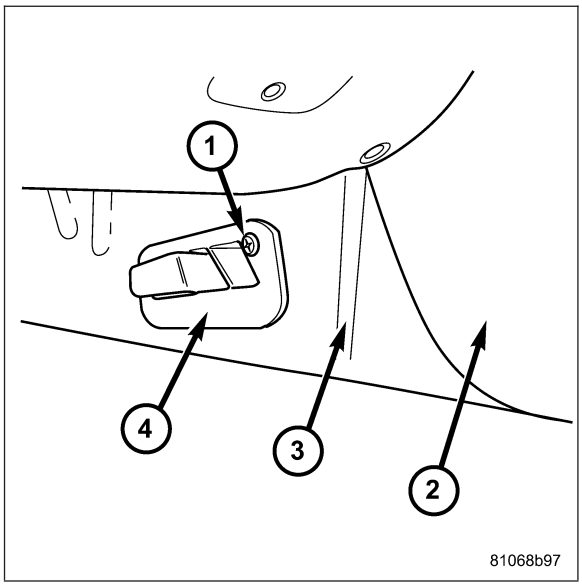

2. Remove the screw (1) attaching the footwell air outlet cover to the center console (2).

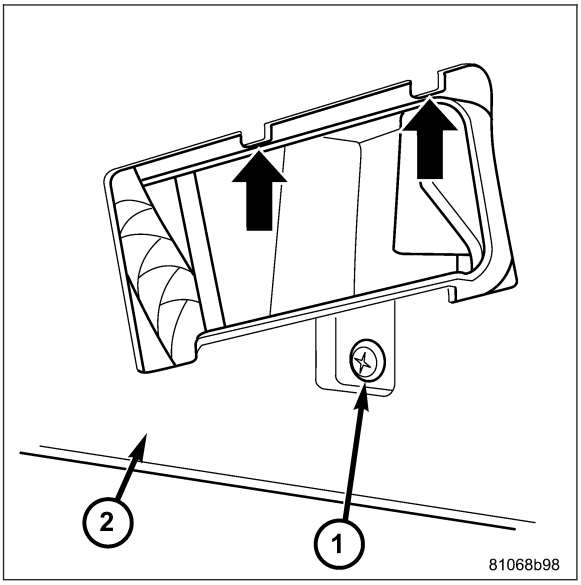

3. Slide the panel (2) forward to release the hooks and then remove from the center console (1).

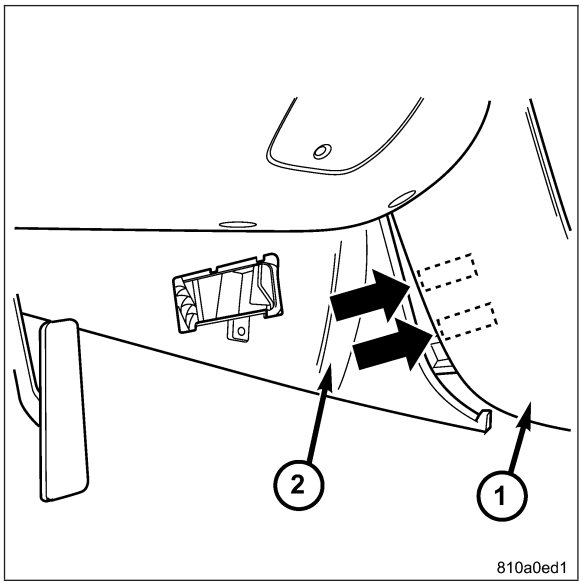

INSTALLATION - FOOTWELL AIR OUTLET COVER

1. Install the cover by sliding the panel rearward.

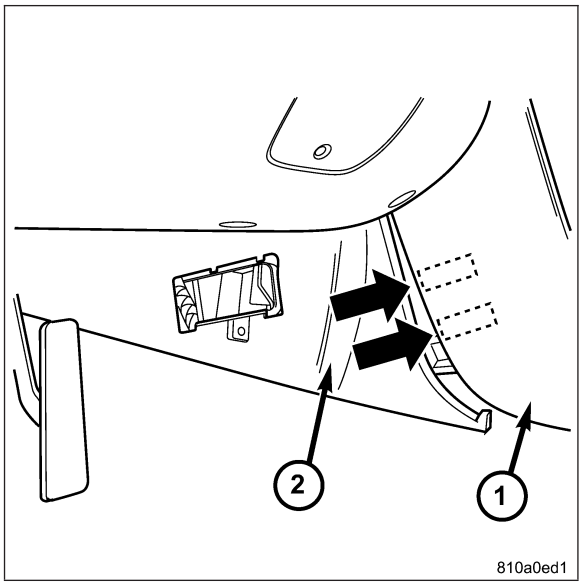

2. Install the screw attaching the footwell air outlet cover to the center console.

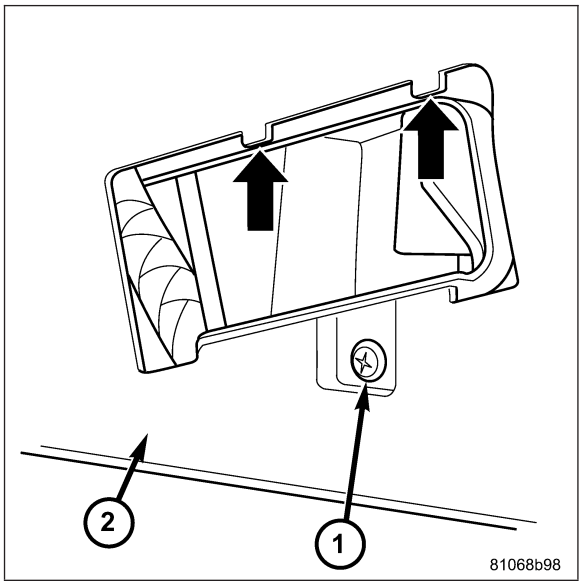

3. Install the cover then turn the screw 90° to the right.

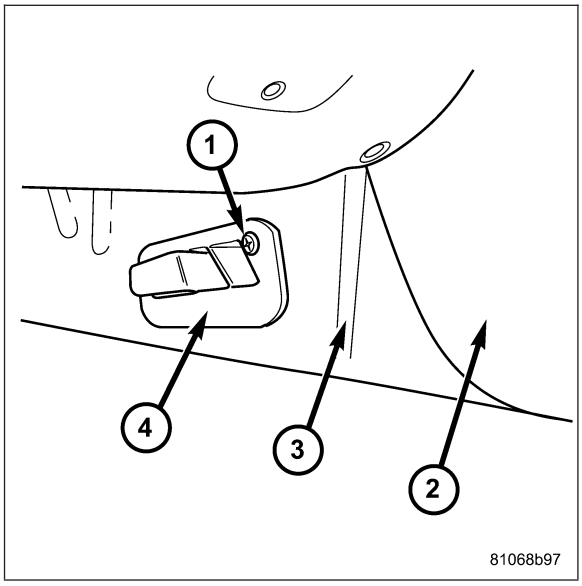

PLUMBING

TABLE OF CONTENTS

page

PLUMBING
- DESCRIPTION - REFRIGERANT LINES/ HOSES/TUBES . . . 114
- WARNING . . . 115
- CAUTION . . . 115
- DIAGNOSIS AND TESTING - REFRIGERANT SYSTEM LEAKS . . . 116
- STANDARD PROCEDURE
  - REFRIGERANT SYSTEM SERVICE EQUIPMENT . . . 116
  - STANDARD PROCEDURE - REFRIGERANT RECOVERY . . . 117
  - STANDARD PROCEDURE - REFRIGERANT SYSTEM EVACUATE . . . 117
  - STANDARD PROCEDURE - REFRIGERANT SYSTEM CHARGE . . . 118

A/C COMPRESSOR
- DESCRIPTION - A/C COMPRESSOR . . . 119
- OPERATION - A/C COMPRESSOR . . . 120
- DIAGNOSIS AND TESTING - COMPRESSOR NOISE . . . 120
- REMOVAL . . . 121
- INSTALLATION . . . 122

PLUMBING
- DESCRIPTION . . . 122
- OPERATION . . . 122
- REMOVAL . . . 123
- INSTALLATION . . . 124

A/C CONDENSER
- DESCRIPTION . . . 125
- OPERATION . . . 125
- REMOVAL . . . 126
- INSTALLATION . . . 127

A/C EVAPORATOR
- DESCRIPTION . . . 130
- OPERATION . . . 130
- REMOVAL . . . 130
- INSTALLATION . . . 132

LIQUID LINE
- REMOVAL . . . 134
- INSTALLATION . . . 135

SUCTION LINE
- REMOVAL . . . 136
- INSTALLATION . . . 137

A/C EXPANSION VALVE
- DESCRIPTION . . . 138
- OPERATION . . . 139
- DIAGNOSIS AND TESTING - A/C EXPANSION VALVE . . . 139
- REMOVAL . . . 140
- INSTALLATION . . . 140

HEATER CORE
- DESCRIPTION . . . 141
- OPERATION . . . 141
- REMOVAL . . . 142
- INSTALLATION . . . 144

RECEIVER / DRIER
- DESCRIPTION . . . 145
- OPERATION . . . 146
- REMOVAL . . . 146
- INSTALLATION . . . 147

REFRIGERANT
- DESCRIPTION . . . 148
- OPERATION . . . 148

REFRIGERANT OIL
- DESCRIPTION . . . 148
- OPERATION . . . 149
- STANDARD PROCEDURE - REFRIGERANT OIL LEVEL . . . 149

COOLANT CIRCULATION VALVE
- DESCRIPTION . . . 150
- OPERATION . . . 151
- REMOVAL . . . 152
- INSTALLATION . . . 153

PLUMBING

DESCRIPTION - REFRIGERANT LINES/HOSES/TUBES

The refrigerant lines and hoses are used to carry the refrigerant between the various air conditioning system components.

- Evaporator (1)
- Expansion Valve (3)
- Receiver/Drier (5)
- Condensor (6)
- A/C Compressor (8)

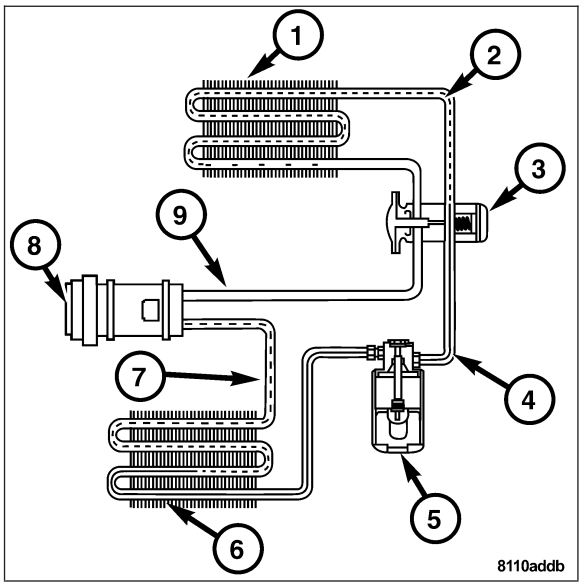

A barrier hose design with a nylon tube, which is sandwiched between rubber layers, is used for the R-134a air conditioning systems. This nylon tube helps to further contain the R-134a refrigerant, which has a smaller molecular structure than R-12 refrigerant. The ends of the refrigerant hoses are made from lightweight aluminum or steel, and commonly use braze-less fittings.

Any kinks or sharp bends in the refrigerant plumbing will reduce the capacity of the entire air conditioning system. Kinks and sharp bends reduce the flow of refrigerant in the system. A good rule for the flexible hose refrigerant lines is to keep the radius of all bends at least ten times the diameter of the hose. In addition, the flexible hose refrigerant lines should be routed so they are at least 80 millimeters (3 inches) from the exhaust manifold.

There are two types of refrigerant fittings:

- All fittings with O-rings need to be coated with refrigerant oil before installation. Use only O-rings that are the correct size and approved for use with R-134a refrigerant. Failure to do so may result in a leak.
- Unified plumbing connections with gaskets cannot be serviced with O-rings. The gaskets are not reusable and new gaskets do not require lubrication before installing.

Using the proper tools when making a refrigerant plumbing connection is very important. Improper tools or improper use of the tools can damage the refrigerant fittings. Always use two wrenches when loosening or tightening tube fittings. Use one wrench to hold one side of the connection stationary, while loosening or tightening the other side of the connection with a second wrench.

The refrigerant must be recovered completely from the system before opening any fitting or connection. Open the fittings with caution, even after the refrigerant has been recovered. If any pressure is noticed as a fitting is loosened, tighten the fitting and recover the refrigerant from the system again.

Do not discharge refrigerant into the atmosphere. Use an R-134a refrigerant recovery/recycling device that meets SAE Standard J2210.

The refrigerant system will remain chemically stable as long as pure, moisture-free R-134a refrigerant and refrigerant oil is used. Dirt, moisture, or air can upset this chemical stability. Operational troubles or serious damage can occur if foreign material is present in the refrigerant system.

When it is necessary to open the refrigerant system, have everything needed to service the system ready. The refrigerant system should not be left open to the atmosphere any longer than necessary. Cap or plug all lines and fittings as soon as they are opened to prevent the entrance of dirt and moisture. All lines and components in parts stock should be capped or sealed until they are to be installed.

All tools, including the refrigerant recycling equipment, the manifold gauge set, and test hoses should be kept clean and dry. All tools and equipment must be designed for R-134a refrigerant.

WARNING

WARNING: THE AIR CONDITIONING SYSTEM CONTAINS REFRIGERANT UNDER HIGH PRESSURE. SEVERE PERSONAL INJURY MAY RESULT FROM IMPROPER SERVICE PROCEDURES. REPAIRS SHOULD ONLY BE PERFORMED BY QUALIFIED SERVICE PERSONNEL.
AVOID BREATHING THE REFRIGERANT AND REFRIGERANT OIL VAPOR OR MIST. EXPOSURE MAY IRRITATE THE EYES, NOSE, AND/OR THROAT. WEAR EYE PROTECTION WHEN SERVICING THE AIR CONDITIONING REFRIGERANT SYSTEM. SERIOUS EYE INJURY CAN RESULT FROM DIRECT CONTACT WITH THE REFRIGERANT. IF EYE CONTACT OCCURS, SEEK MEDICAL ATTENTION IMMEDIATELY.
DO NOT EXPOSE THE REFRIGERANT TO OPEN FLAME. POISONOUS GAS IS CREATED WHEN REFRIGERANT IS BURNED. AN ELECTRONIC LEAK DETECTOR IS RECOMMENDED.
IF ACCIDENTAL SYSTEM DISCHARGE OCCURS, VENTILATE THE WORK AREA BEFORE RESUMING SERVICE. LARGE AMOUNTS OF REFRIGERANT RELEASED IN A CLOSED WORK AREA WILL DISPLACE THE OXYGEN AND CAUSE SUFFOCATION.
THE EVAPORATION RATE OF R-134a REFRIGERANT AT AVERAGE TEMPERATURE AND ALTITUDE IS EXTREMELY HIGH. AS A RESULT, ANYTHING THAT COMES IN CONTACT WITH THE REFRIGERANT WILL FREEZE. ALWAYS PROTECT THE SKIN OR DELICATE OBJECTS FROM DIRECT CONTACT WITH THE REFRIGERANT.
THE R-134a SERVICE EQUIPMENT OR THE VEHICLE REFRIGERANT SYSTEM SHOULD NOT BE PRESSURE TESTED OR LEAK TESTED WITH COMPRESSED AIR. SOME MIXTURES OF AIR AND R-134a HAVE BEEN SHOWN TO BE COMBUSTIBLE AT ELEVATED PRESSURES. THESE MIXTURES ARE POTENTIALLY DANGEROUS, AND MAY RESULT IN FIRE OR EXPLOSION CAUSING INJURY OR PROPERTY DAMAGE.

CAUTION

CAUTION: Liquid refrigerant is corrosive to metal surfaces. Follow the operating instructions supplied with the service equipment being used.
Never add R-12 to a refrigerant system designed to use R-134a. Damage to the system will result.
R-12 refrigerant oil must not be mixed with R-134a refrigerant oil. They are not compatible.
Do not use R-12 equipment or parts on the R-134a system. Damage to the system will result.
Do not overcharge the refrigerant system. This will cause excessive compressor head pressure and can cause noise and system failure.
Recover the refrigerant before opening any fitting or connection. Open the fittings with caution, even after the system has been discharged. Never open or loosen a connection before recovering the refrigerant.
The refrigerant system must always be evacuated before charging.
Do not open the refrigerant system or uncap a replacement component until you are ready to service the system. This will prevent contamination in the system.
Before disconnecting a component, clean the outside of the fittings thoroughly to prevent contamination from entering the refrigerant system.
Immediately after disconnecting a component from the refrigerant system, seal the open fittings with a cap or plug.
Before connecting an open refrigerant fitting, always install a new seal or gasket. Coat the fitting and seal with clean refrigerant oil before connecting.
Do not remove the sealing caps from a replacement component until it is to be installed.
When installing a refrigerant line, avoid sharp bends that may restrict refrigerant flow. Position the refrigerant lines away from exhaust system components or any sharp edges, which may damage the line.
Tighten refrigerant fittings only to the specified torque. The aluminum fittings used in the refrigerant system will not tolerate overtightening.
When disconnecting a refrigerant fitting, use a wrench on both halves of the fitting. This will prevent twisting of the refrigerant lines or tubes.
Refrigerant oil will absorb moisture from the atmosphere if left uncapped. Do not open a container of refrigerant oil until you are ready to use it. Replace the cap on the oil container immediately after using. Store refrigerant oil only in a clean, airtight, and moisture-free container.
Keep service tools and the work area clean. Contamination of the refrigerant system through careless work habits must be avoided.

DIAGNOSIS AND TESTING - REFRIGERANT SYSTEM LEAKS

WARNING: REVIEW THE WARNINGS AND CAUTIONS IN THE FRONT OF THIS SECTION BEFORE PERFORMING THE FOLLOWING OPERATION. Refer to Page 24-115.

If the air conditioning system is not cooling properly, determine if the refrigerant system is fully-charged. **Refer to Page 24-2.**

An electronic leak detector designed for R-134a refrigerant is recommended for locating and confirming refrigerant system leaks. Refer to the operating instructions supplied by the equipment manufacturer for proper care and use of this equipment.

An oily residue on or near refrigerant system lines, connector fittings, components, or component seals can indicate the general location of a possible refrigerant leak. However, the exact leak location should be confirmed with an electronic leak detector prior to component repair or replacement.

To detect a leak in the refrigerant system, perform one of the following procedures:

SYSTEM EMPTY

1. Evacuate the refrigerant system. **Refer to Page 24-116.**
2. Connect and dispense 0.283 kilograms (0.625 pounds or 10 ounces) of R-134a refrigerant into the evacuated refrigerant system. **Refer to Page 24-116.**
3. Position the vehicle in a wind-free work area. This will aid in detecting small leaks.
4. With the engine not running, use an electronic R-134a leak detector and search for leaks. Because R-134a refrigerant is heavier than air, the leak detector probe should be moved slowly along the bottom side of all refrigerant lines, connector fittings and components.
5. To inspect the evaporator coil for leaks, insert the electronic leak detector probe into the center instrument panel outlet. Set the blower motor switch to the lowest speed position, the A/C button in the On position, and select the Recirculation Mode.

SYSTEM LOW

1. Position the vehicle in a wind-free work area. This will aid in detecting small leaks.
2. Bring the refrigerant system up to operating temperature and pressure. This is done by allowing the engine to run with the air conditioning system turned on for five minutes.
3. With the engine not running, use an electronic R-134a leak detector and search for leaks. Because R-134a refrigerant is heavier than air, the leak detector probe should be moved slowly along the bottom side of all refrigerant lines, connector fittings and components.
4. To inspect the evaporator coil for leaks, insert the electronic leak detector probe into the center instrument panel outlet. Set the blower motor switch to the lowest speed position, the A/C button in the On position, and select the Recirculation Mode.

STANDARD PROCEDURE

REFRIGERANT SYSTEM SERVICE EQUIPMENT

WARNING: EYE PROTECTION MUST BE WORN WHEN SERVICING AN AIR CONDITIONING REFRIGERANT SYSTEM. TURN OFF (ROTATE CLOCKWISE) ALL VALVES ON THE EQUIPMENT BEING USED, BEFORE CONNECTING TO OR DISCONNECTING FROM THE REFRIGERANT SYSTEM. FAILURE TO OBSERVE THESE WARNINGS MAY RESULT IN PERSONAL INJURY.

WARNING: REVIEW THE WARNINGS AND CAUTIONS IN THE FRONT OF THIS SECTION BEFORE PERFORMING THE FOLLOWING OPERATION. Refer to Page 24-115.

When servicing the air conditioning system, a R-134a refrigerant recovery/recycling/charging station that meets SAE Standard J2210 must be used. Contact an automotive service equipment supplier for refrigerant recovery/recycling/charging equipment. Refer to the operating instructions supplied by the equipment manufacturer for proper care and use of this equipment.

A manifold gauge set may be needed with some recovery/recycling/charging equipment. The service hoses on the gauge set being used should have manual (turn wheel), or automatic back-flow valves at the service port connector ends. This will prevent refrigerant from being released into the atmosphere.

MANIFOLD GAUGE SET CONNECTIONS

CAUTION: Do not use an R-12 manifold gauge set on an R-134a system. The refrigerants are not compatible and system damage will result.

LOW PRESSURE GAUGE HOSE The low pressure hose (Blue with Black stripe) attaches to the suction service port. This port is located on the suction line near the driver side of the engine compartment.

HIGH PRESSURE GAUGE HOSE The high pressure hose (Red with Black stripe) attaches to the discharge service port. This port is located on the discharge line between the compressor and the condenser inlet behind the front grille.

RECOVERY/RECYCLING/EVACUATION/CHARGING HOSE The center manifold hose (Yellow, or White, with Black stripe) is used to recover, evacuate, and charge the refrigerant system. When the low or high pressure valves on the manifold gauge set are opened, the refrigerant in the system will escape through this hose.

STANDARD PROCEDURE - REFRIGERANT RECOVERY

WARNING: REVIEW THE WARNINGS AND CAUTIONS IN THE FRONT OF THIS SECTION BEFORE PERFORMING THE FOLLOWING OPERATION. **Refer to Page 24-115**.

A R-134a refrigerant recovery/recycling/charging station that meets SAE Standard J2210 must be used to recover the refrigerant from an R-134a refrigerant system. Refer to the operating instructions supplied by the equipment manufacturer for the proper care and use of this equipment.

STANDARD PROCEDURE - REFRIGERANT SYSTEM EVACUATE

WARNING: REVIEW THE WARNINGS AND CAUTIONS IN THE FRONT OF THIS SECTION BEFORE PERFORMING THE FOLLOWING OPERATION. **Refer to Page 24-115**.

If the refrigerant system has been open to the atmosphere, it must be evacuated before the system can be charged. If moisture and air enters the system and becomes mixed with the refrigerant, the compressor head pressure will rise above acceptable operating levels. This will reduce the performance of the air conditioner and damage the compressor. Evacuating the refrigerant system will remove the air and boil the moisture out of the system at near room temperature. To evacuate the refrigerant system, use the following procedure:

1. Connect a R-134a refrigerant recovery/recycling/charging station that meets SAE Standard J2210 and a manifold gauge set to the refrigerant system of the vehicle.
2. Open the low and high side valves and start the charging station vacuum pump. When the suction gauge reads 88 kPa (26 in. Hg.) vacuum or greater, close all of the valves and turn off the vacuum pump.
   a. If the refrigerant system fails to reach the specified vacuum, the system has a leak that must be corrected. **Refer to Page 24-116**.
   b. If the refrigerant system maintains the specified vacuum for five minutes, restart the vacuum pump, open the suction and discharge valves and evacuate the system for an additional ten minutes.
3. Close all of the valves, and turn off the charging station vacuum pump.
4. The refrigerant system is now ready to be charged with R-134a refrigerant. **Refer to Page 24-116**.

STANDARD PROCEDURE - REFRIGERANT SYSTEM CHARGE

WARNING: REVIEW THE WARNINGS AND CAUTIONS IN THE FRONT OF THIS SECTION BEFORE PERFORMING THE FOLLOWING OPERATION. Refer to Page 24-115.

After the refrigerant system has been tested for leaks and evacuated, a refrigerant charge can be injected into the system.

A R-134a refrigerant recovery/recycling/charging station that meets SAE Standard J2210 must be used to charge the refrigerant system with R-134a refrigerant. Refer to the operating instructions supplied by the equipment manufacturer for proper care and use of this equipment.

PARTIAL CHARGE METHOD

WARNING: REVIEW THE WARNINGS AND CAUTIONS IN THE FRONT OF THIS SECTION BEFORE PERFORMING THE FOLLOWING OPERATION. Refer to Page 24-115.

The partial charge method is used to add a partial charge to a refrigerant system that is low on refrigerant. To perform this procedure the evaporator inlet and outlet tube temperatures are measured. The temperature difference is measured with a temperature meter with one or two clamp-on thermocouple probes. The difference between the evaporator inlet and outlet tube temperatures will determine the amount of refrigerant needed.

Before adding a partial refrigerant charge, check for refrigerant system leaks. **Refer to Page 24-116**. If a leak is found, make the necessary repairs before attempting a full or partial refrigerant charge.

1. Attach a manifold gauge set to the refrigerant system service ports.
2. Attach the two clamp-on thermocouple probes to the inlet and outlet tubes of the evaporator coil.
   - If a single thermocouple probe is used, attach the probe to the evaporator inlet tube just before the collar of the refrigerant line connector fitting. The probe must make contact with the bottom surface of the evaporator inlet tube.
   - If dual thermocouple probes are used, attach probe 1 to the evaporator inlet tube, and probe 2 to the evaporator outlet tube. Attach both probes to the evaporator tubes just before the collar of the refrigerant line connector fittings. The probes must make contact with the bottom surfaces of the evaporator inlet and outlet tubes.
3. Open all of the windows or doors of the passenger compartment.
4. Set the A/C button on the A/C Heater controls to the on position, the temperature control knob in the full cool position, select Recirculation Mode, and place the blower motor switch in the highest speed position.
5. Start the engine and hold the engine idle speed at 1,000 rpm. Allow the engine to warm up to normal operating temperature.
6. The compressor clutch may cycle, depending upon ambient temperature, humidity, and the refrigerant system charge level.
7. Hold the engine idle speed at 1,000 rpm.
8. Allow three to five minutes for the refrigerant system to stabilize, then record the temperatures of the evaporator inlet and outlet tubes.
   - If a single probe is used, record the temperature of the evaporator inlet tube. Then remove the probe from the inlet tube and attach it to the evaporator outlet tube just before the collar of the refrigerant line connector fitting. The probe must make contact with the bottom surface of the evaporator outlet tube. Allow the thermocouple and meter time to stabilize, then record the temperature of the evaporator outlet tube. Subtract the inlet tube temperature reading from the outlet tube temperature reading.
   - If dual probes are used, record the temperatures of both the evaporator inlet and outlet tubes. Then subtract the inlet tube temperature reading from the outlet tube temperature reading.
9. If the measured temperature differential is higher than 22° C to 26° C (40° F to 47° F), add 0.4 kilograms (14 ounces) of refrigerant.
10. Allow three to five minutes for the refrigerant system to stabilize, then take a second set of thermocouple measurements. Record the temperature difference to determine if an additional charge is required.

11. Record the compressor discharge pressure. If the reading is higher than the pressure shown in the Compressor Discharge Pressure Chart, the system could be overcharged. If the reading is equal to, or lower than the pressure shown in the chart, continue with this procedure.

Compressor Discharge Pressure Chart						
Ambient Temperature	16°C (60°F)	21°C (70°F)	27°C (80°F)	32°C (90°F)	38°C (100°F)	43°C (110°F)
Compressor Discharge Pressure	1378 kPa (200 psi)	1516 kPa (220 psi)	1723 kPa (250psi)	1930 kPa (280 psi)	2206 kPa (320 psi)	2413 kPa (350 psi)

EXAMPLE: The ambient temperature is 21° C (70° F). The evaporator inlet tube temperature is 12° C (54° F) and the evaporator outlet tube temperature is 10° C (50° F). Subtract the inlet tube temperature from the outlet tube temperature. The difference is -2° C (-4° F). With a -2° C (-4° F) temperature differential at 21° C (70° F) ambient temperature, the system is fully charged.

12. Add enough refrigerant to bring the refrigerant system up to a full charge.
13. Remove the jumper wire from the low pressure cycling clutch switch wire harness connector and plug the connector back into the switch.

A/C COMPRESSOR

DESCRIPTION - A/C COMPRESSOR

The air conditioning system uses a Nippondenso, double-acting swash plate-type compressor. This compressor has a fixed displacement of 170 cubic centimeters (10.374 cubic inches). A label identifying the use of R-134a refrigerant is located on the underhood fuse panel cover.

The A/C system uses 1.97 Lbs. (0.88 Kg.) of R-134a type refrigerant.

OPERATION - A/C COMPRESSOR

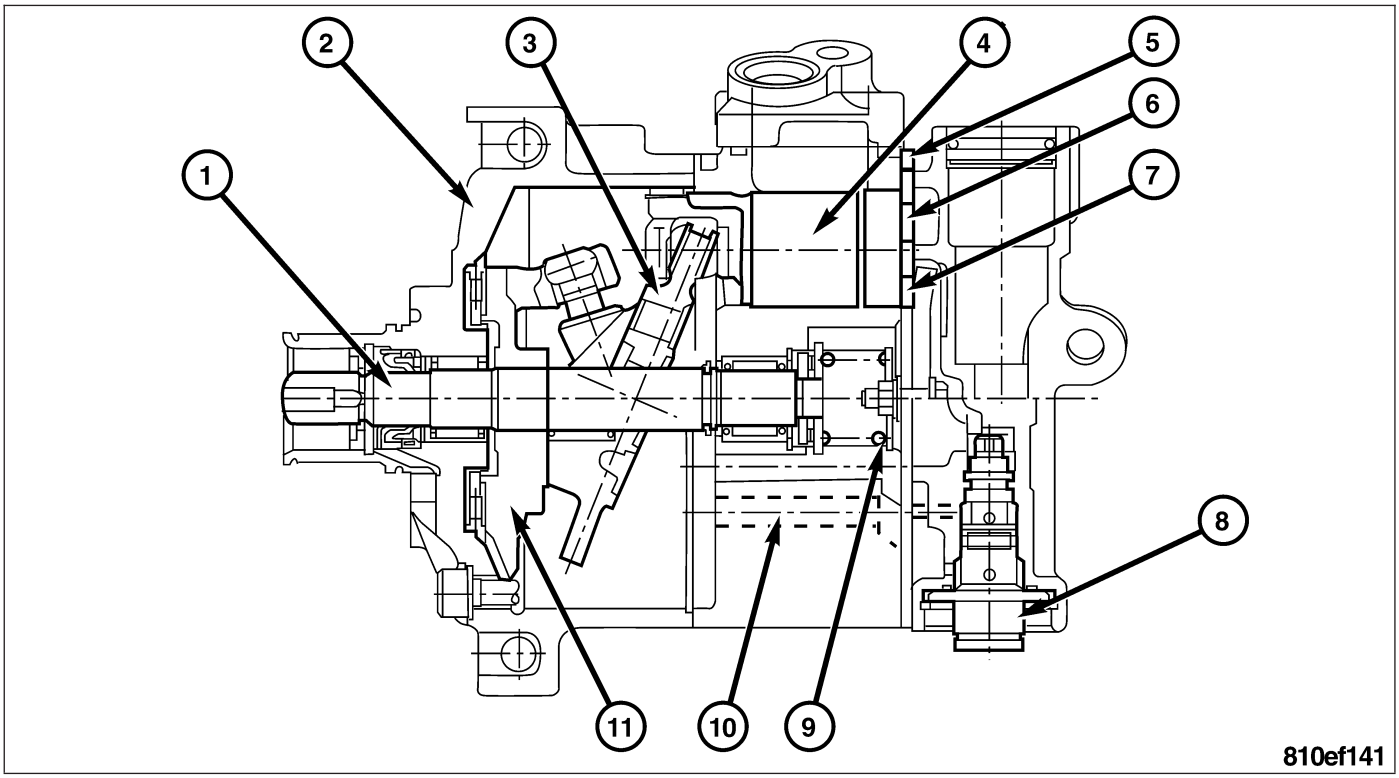

1 - DRIVE SHAFT
2 - CRANKCASE
3 - SWASH PLATE
4 - PISTON
5 - VALVE PLATE
6 - INTAKE VALVE
7 - OUTLET VALVE
8 - REGULATION VALVE
9 - SPRING
10 - CONNECTION DUCT
11 - CONNECTION PLATE

After the electromagnetic clutch has produced the frictional connection between the engine and the compressor, the drive shaft (1) drives the swash plate (3). The rotation of the inclined swash plate (3) causes the pistons (4) to move in strokes. During the intake stroke, refrigerant vapor is sucked in via the inlet valve (6). If the piston (4) moves in the counter direction, it delivers the refrigerant vapor via the pressure control valve (7), with the vapor being compressed and heating up, into the refrigerant line to the condenser.

DIAGNOSIS AND TESTING - COMPRESSOR NOISE

When investigating an air conditioning related noise, you must first know the conditions under which the noise occurs. These conditions include: weather, vehicle speed, transmission in gear or neutral, engine speed, engine temperature, and any other special conditions. Noises that develop during air conditioning operation can often be misleading. For example: What sounds like a failed front bearing or connecting rod, may be caused by loose bolts, nuts, mounting brackets, or a loose compressor clutch assembly.

Drive belts are speed sensitive. At different engine speeds and depending upon belt tension, belts can develop noises that are mistaken for a compressor noise. Improper belt tension can cause a misleading noise when the compressor clutch is engaged, which may not occur when the compressor clutch is disengaged. Check the accessory drive belt condition and tension as described in the Cooling section before beginning this procedure. **Refer to Page 7-43**.

1. Select a quiet area for testing. Duplicate the complaint conditions as much as possible. Switch the compressor on and off several times to clearly identify the compressor noise. Listen to the compressor while the clutch is engaged and disengaged. Probe the compressor with an engine stethoscope or a long screwdriver with the handle held to your ear to better localize the source of the noise.

2. Loosen all of the compressor mounting hardware and retighten. Tighten the compressor clutch mounting nut. Be certain that the clutch coil is mounted securely to the compressor, and that the clutch plate and pulley are properly aligned and have the correct air gap.

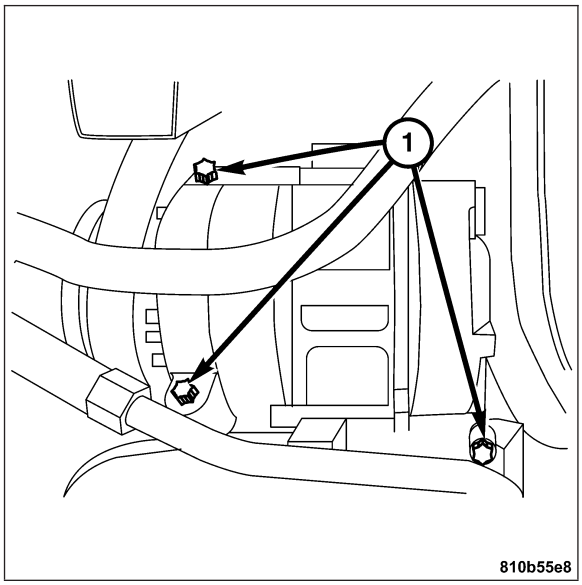

3. To duplicate a high-ambient temperature condition (high head pressure), restrict the air flow through the condenser. Install a manifold gauge set to be certain that the discharge pressure does not exceed 2760 kPa (400 psi).
4. Check the refrigerant system plumbing for incorrect routing, rubbing or interference, which can cause unusual noises. Also check the refrigerant lines for kinks or sharp bends that will restrict refrigerant flow, which can cause noises.
5. If the noise is from opening and closing of the high pressure relief valve, reclaim, evacuate, and recharge the refrigerant system. If the high pressure relief valve still does not seat properly, replace the a/c compressor. **Refer to Page 24-121**.
6. If the noise is from liquid slugging on the suction line, check the refrigerant oil level and the refrigerant system charge.
7. If the noise continues, replace the compressor and repeat. **Refer to Page 24-121**.

REMOVAL

WARNING: REVIEW THE WARNINGS AND CAUTIONS IN THE FRONT OF THIS SECTION BEFORE PERFORMING THE FOLLOWING OPERATION.

1. Evacuate the refrigerant from the system. **Refer to Page 24-116**.
2. Disconnect the negative battery cable.
3. Remove the accessory drive belt. **Refer to Page 7-45**.
4. Raise and support the vehicle.
5. Remove the lower engine compartment panel.
6. Remove the three compressor bolts (1) attaching it to the engine block.
7. Remove the bolts on the high side and the low side pressure lines.
8. Disconnect the A/C harness connector from the compressor.

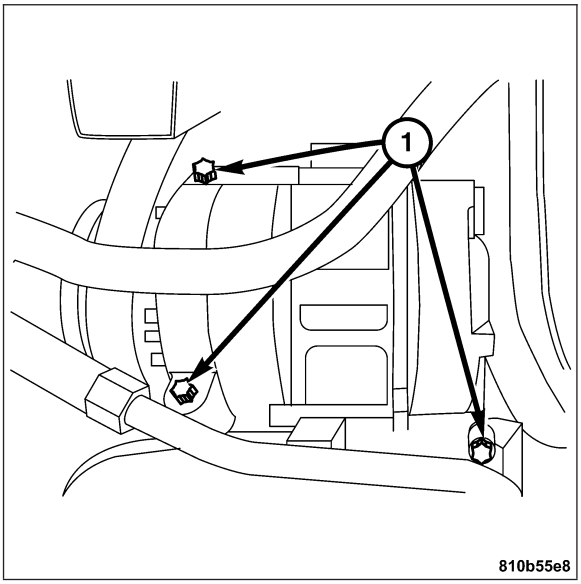

INSTALLATION

1. Connect the A/C harness connector to the compressor.
2. Install the bolts on the high side and the low side pressure lines. Tighten to 23 N·m (17 ft. lbs.).
3. Install the A/C compressor then install the three bolts (1). Tighten to 23 N·m (17 ft. lbs.).
4. Install the lower engine compartment panel.
5. Install the accessory drive belt. **Refer to Page 7-46**.
6. Connect the negative battery cable.
7. Charge the refrigerant to the system. **Refer to Page 24-116**.

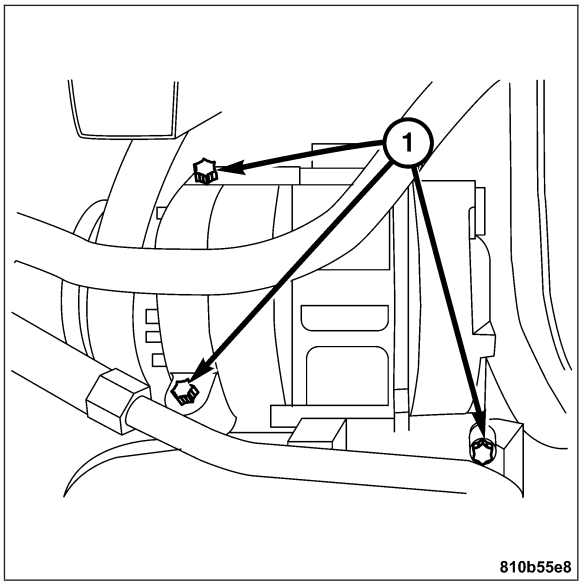

PLUMBING

DESCRIPTION

The coolant circulation pump is used to maintain a uniform flow of coolant through the heater core even at low engine speeds and in the residual engine heat utilization mode (R.E.S.T.).

OPERATION

FUNCTION IN HEATING MODE

The quantity of coolant pumped into the heater core with the engine running depends on the coolant pump. The coolant circulation pump ensures that the water flows through the heater core uniformly without bubbles even at low speeds. The coolant circulation pump is controlled by the A/C heater control module.

FUNCTION WITH RESIDUAL ENGINE HEAT UTILIZATION

The coolant circulation pump, pumps the heated coolant to the heater core when the engine is OFF. When the R.E.S.T. button is pressed the temperature is controlled by the A/C heater control module (in the same manner as when the ignition is ON). The A/C heater control module switches the electric motor for the coolant circulation pump which drives the impeller via a magnetic clutch.

REMOVAL

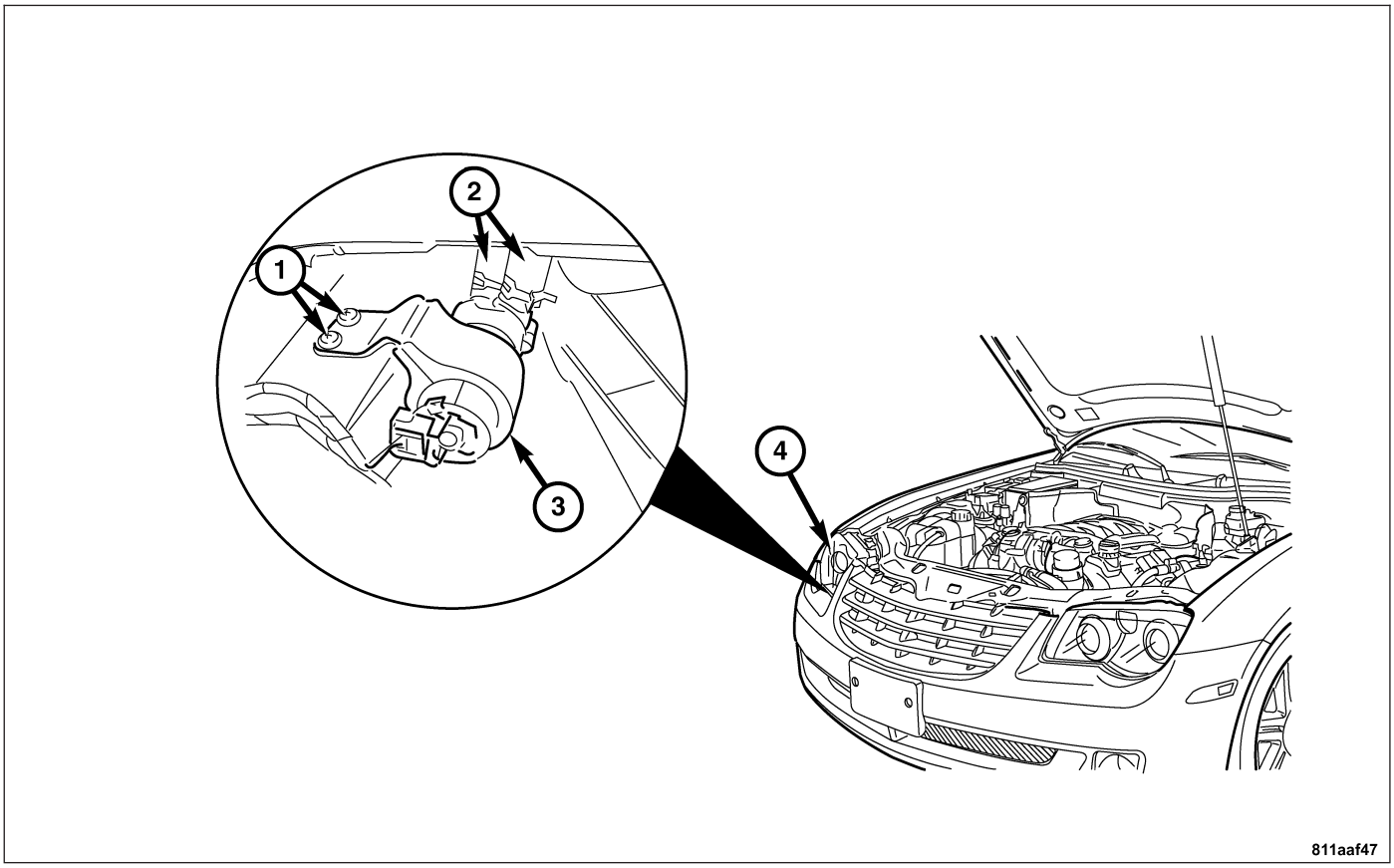

1. Drain the coolant system. **Refer to Page 7-18**.
2. Remove the headlamp assembly (4) from the right side of the vehicle. **Refer to Page 8L-108**.
3. Disconnect the coolant circulation pump harness connector from the coolant circulation pump (3).
4. Disconnect the two hoses (2) from the coolant circulation pump (3).
5. Remove the two bolts (1) from the coolant circulation pump (3).
6. Remove the coolant circulation pump (3).

INSTALLATION

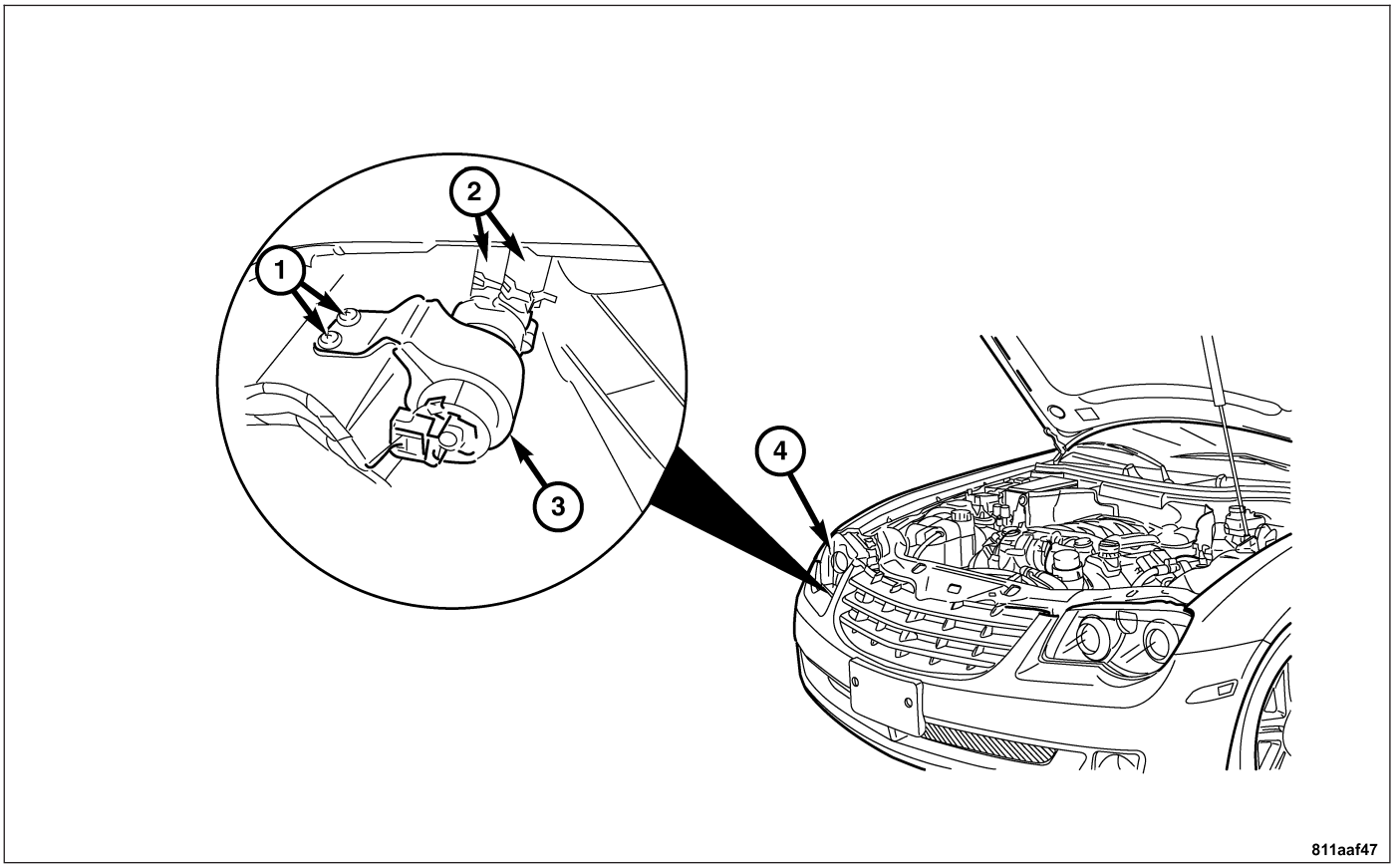

1. Install the coolant circulation pump (3) into the vehicle.
2. Install the two bolts (1) attaching the coolant circulation pump (3) to the vehicle.
3. Install the coolant circulation pump harness connector to the coolant circulation pump (3).
4. Install the two hoses (2) the coolant circulation pump (3).
5. Install the headlamp assembly to the vehicle. **Refer to Page 8L-108**.
6. Fill the coolant system. **Refer to Page 7-18**.

A/C CONDENSER

DESCRIPTION

The condenser is located in the air flow in front of the engine cooling radiator. The condenser transforms the refrigerant from gaseous into liquid. It is attached to the vehicle with two bolts (1) and to the A/C lines with fittings.

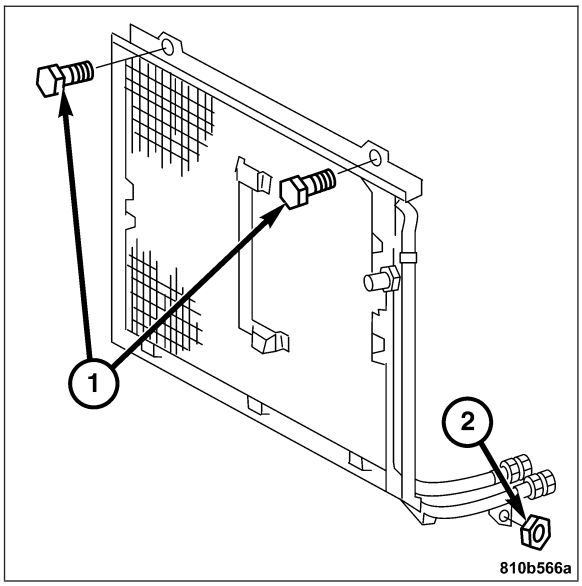

OPERATION

When the refrigerant gas (7) gives up its heat, it condenses. When the refrigerant leaves the condenser (6), it has become a high-pressure liquid refrigerant (4). The volume of air flowing over the condenser fins (6) is critical to the proper cooling performance of the air conditioning system. Therefore, it is important that there are no objects placed in front of the radiator grille openings in the front of the vehicle or foreign material on the condenser fins (6) that might obstruct proper air flow. Also, any factory-installed air seals or shrouds must be properly reinstalled following radiator or condenser service.

The condenser (6) cannot be repaired and, if faulty or damaged, it must be replaced. **Refer to Page 24-126**.

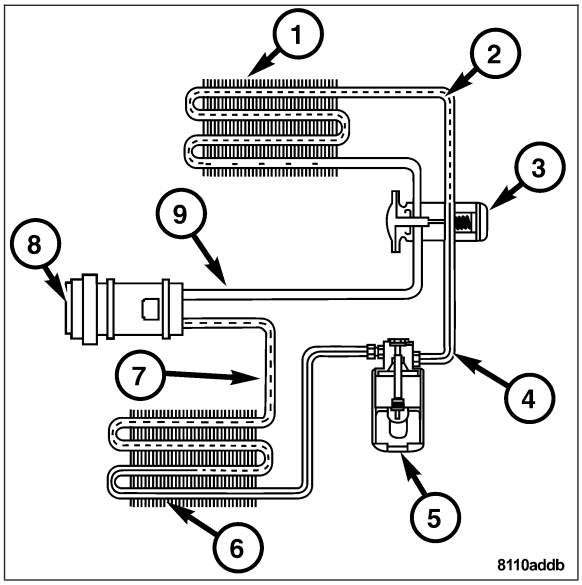

REMOVAL

CAUTION: Before removing the condenser, note the location of each of the radiator and condenser air seals. These seals are used to direct air through the condenser and radiator. The air seals must be reinstalled in their proper locations in order for the air conditioning and engine cooling systems to perform as designed.

1. Disconnect the negative battery cable.
2. Evacuate the refrigerant from the A/C system. **Refer to Page 24-116**.

WARNING: OPEN THE COOLING SYSTEM ONLY WHEN THE COOLANT TEMPERATURE IS BELOW 90°C. OPEN THE CAP SLOWLY AND REDUCE THE PRESSURE. WEAR PROTECTIVE GLOVES, PROTECTIVE CLOTHING AND PROTECTIVE GOGGLES.

3. Relieve pressure in cooling system by turning the radiator cap on the reservoir to catch “1”.
4. Remove the radiator fan. **Refer to Page 7-26**.
5. Remove the coolant reservoir (1). **Refer to Page 7-24**.
6. Remove the refrigerant lines (1) from the condenser.

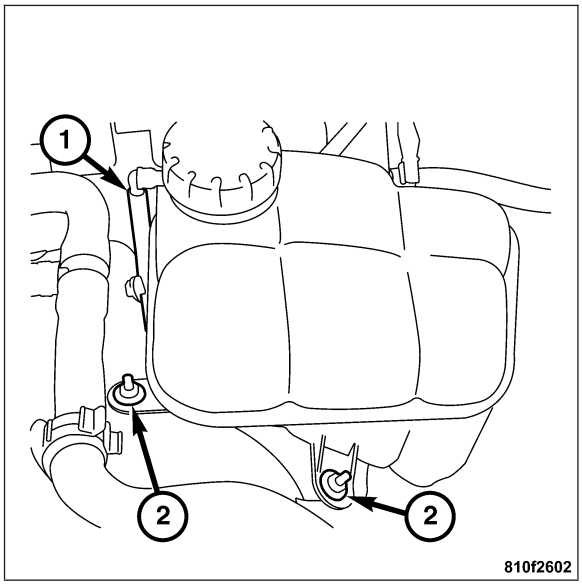

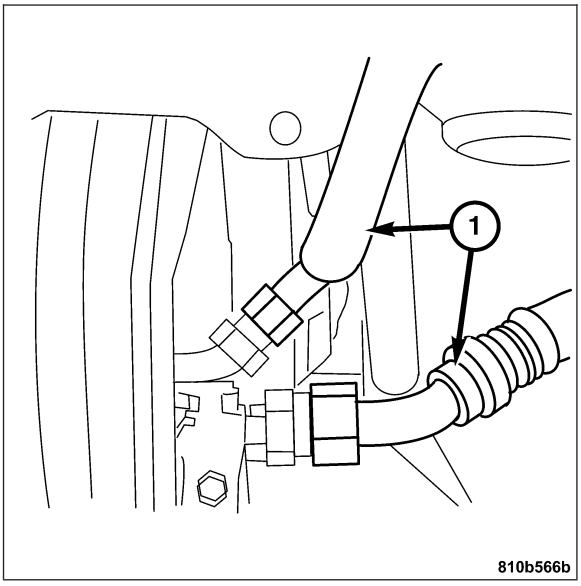

7. Loosen the mount for the condenser connection fittings (1-2).
8. Tilt the radiator forward and remove the condensor.

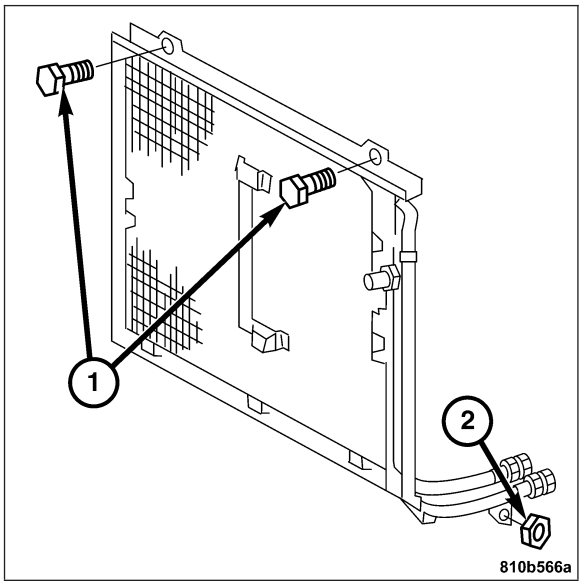

INSTALLATION

1. Install the condenser.
2. Tighten the mount for the condenser connection fittings (1-2).

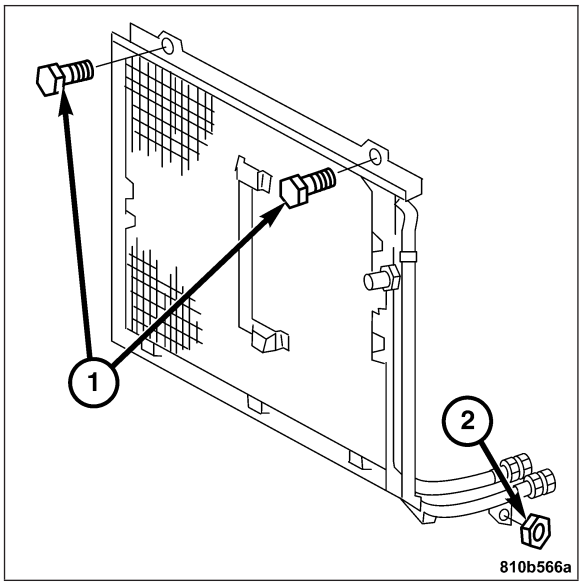

3. Install the refrigerant lines (1) to the condenser. Tighten to 24 N·m (18 ft. lbs.).

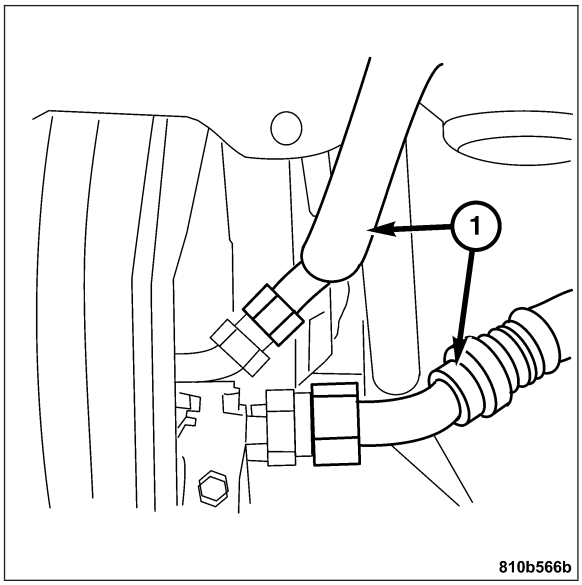

4. Install the radiator. **Refer to Page 7-35**.
5. Install the lower radiator hose to the radiator.

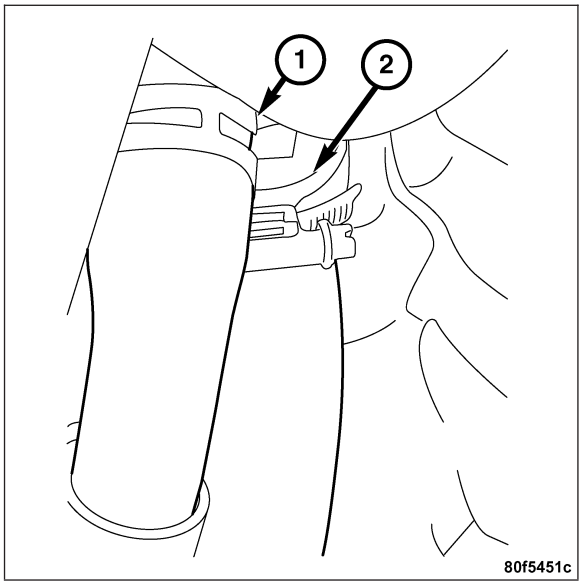

6. Install the upper radiator hose (1) to the radiator.

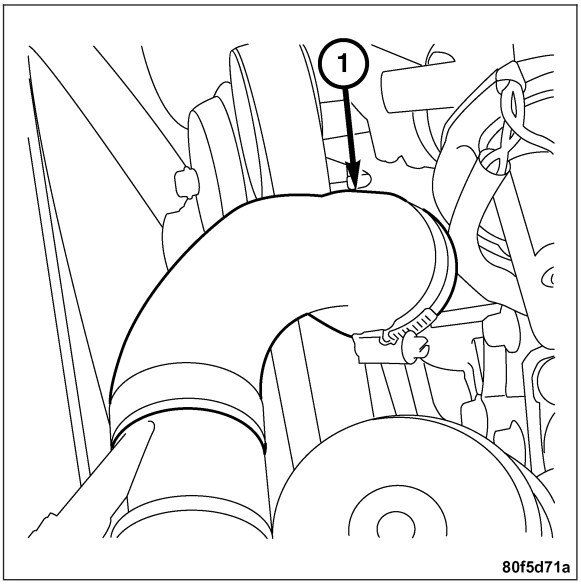

7. Install the radiator fan (1). **Refer to Page 7-27**.

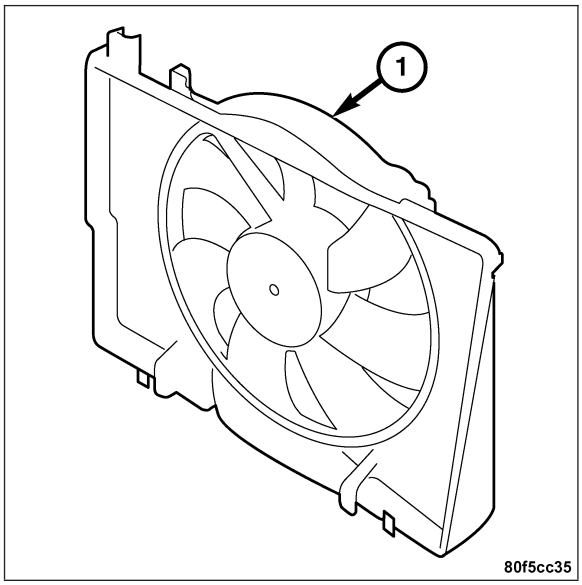

8. Install the coolant reservoir (1). **Refer to Page 7-24**.
9. Fill the coolant. **Refer to Page 7-18**.
10. Charge the refrigerant in the refrigerant system. **Refer to Page 24-116**.
11. Connect the negative battery cable.

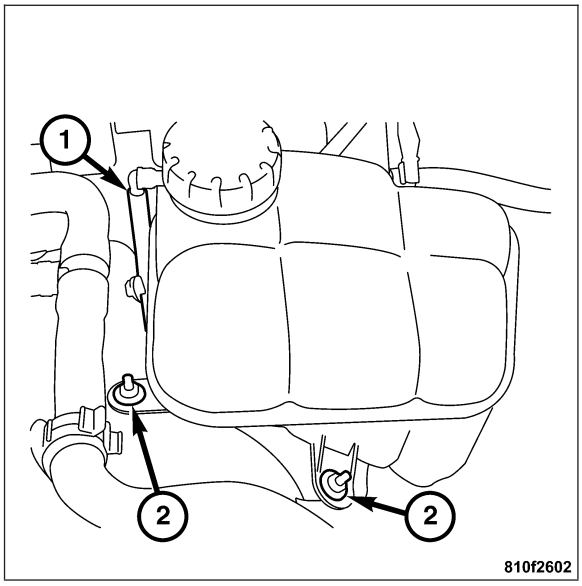

A/C EVAPORATOR

DESCRIPTION

The evaporator coil is located in the HVAC housing, under the instrument panel. The evaporator coil is positioned in the HVAC housing so that all air that enters the housing must pass over the fins of the evaporator before it is distributed through the system ducts and outlets. However, air passing over the evaporator coil fins will only be conditioned when the compressor is engaged and circulating refrigerant through the evaporator coil tubes.

OPERATION

Refrigerant enters the evaporator from the orifice tube as a low-temperature, low-pressure liquid. As air flows over the fins of the evaporator, the humidity in the air condenses on the fins, and the heat from the air is absorbed by the refrigerant. Heat absorption causes the refrigerant to boil and vaporize. The refrigerant becomes a low-pressure gas before it leaves the evaporator.

The evaporator coil cannot be repaired and, if faulty or damaged, it must be replaced. **Refer to Page 24-130**.

REMOVAL

WARNING: ON VEHICLES EQUIPPED WITH AIRBAGS, DISABLE THE AIRBAG SYSTEM BEFORE ATTEMPTING ANY STEERING WHEEL, STEERING COLUMN, OR INSTRUMENT PANEL COMPONENT DIAGNOSIS OR SERVICE. DISCONNECT AND ISOLATE THE BATTERY NEGATIVE (GROUND) CABLE, THEN WAIT TWO MINUTES FOR THE AIRBAG SYSTEM CAPACITOR TO DISCHARGE BEFORE PERFORMING FURTHER DIAGNOSIS OR SERVICE. THIS IS THE ONLY SURE WAY TO DISABLE THE AIRBAG SYSTEM. FAILURE TO TAKE THE PROPER PRECAUTIONS COULD RESULT IN AN ACCIDENTAL AIRBAG DEPLOYMENT AND POSSIBLE PERSONAL INJURY.

1. Remove the HVAC housing. **Refer to Page 24-92**.
2. Remove the heater core. **Refer to Page 24-142**.
3. Remove the valve strip on the top of the HVAC housing by removing the four screws and removing the aluminum lines from the housing.
4. Disconnect the vacuum lines from the vacuum element (2).
5. Separate the blower housing from air distribution housing, unclip the two sliding clips (1).

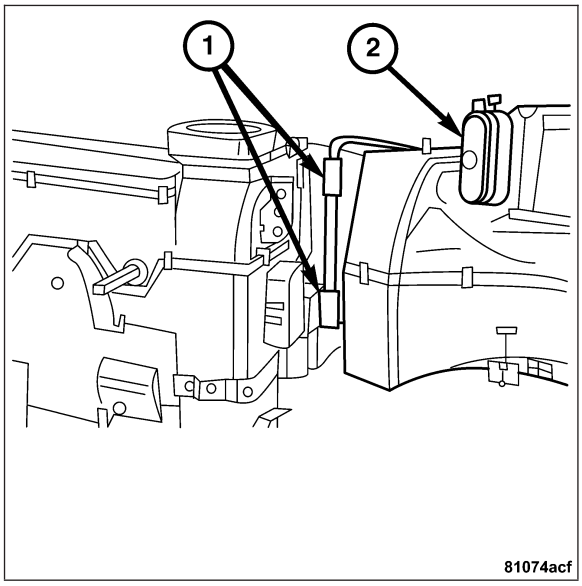

6. Remove the four spring clips.

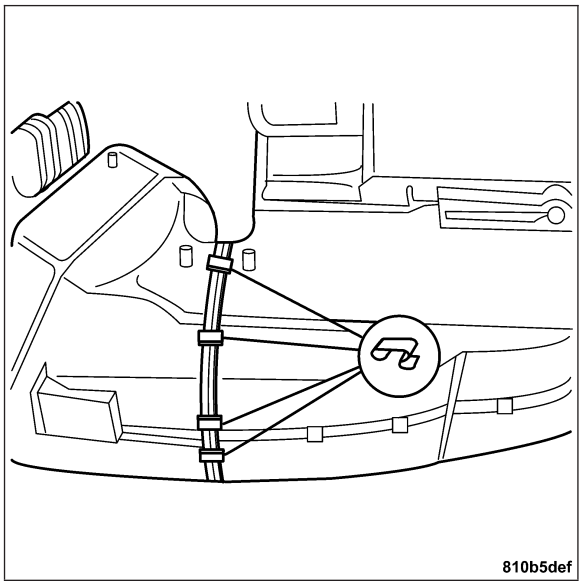

7. Remove the screw (1) behind the expansion valve.
8. Remove the foam gasket.

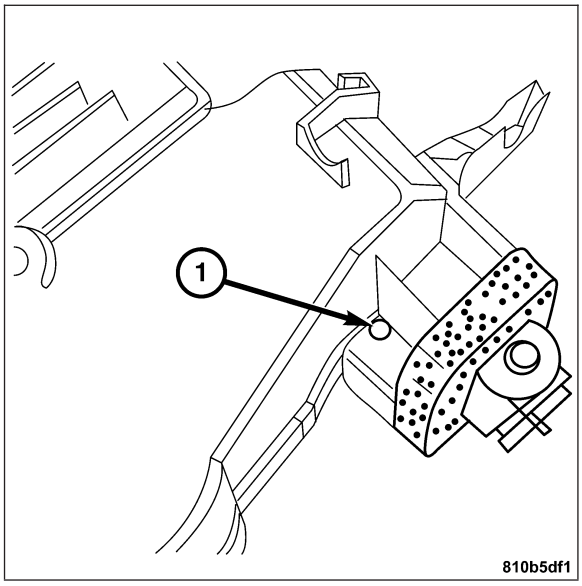

9. Remove the air distribution housing upper section by removing the spring clips.
10. Remove the evaporator from the housing.

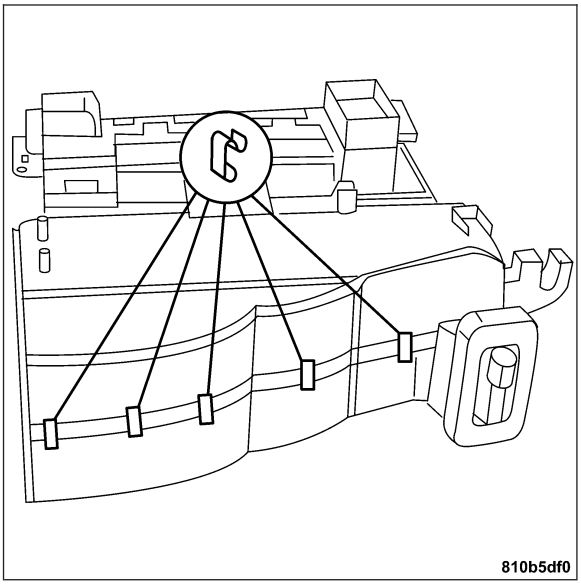

INSTALLATION

1. Install the evaporator to the housing.
2. Install the air distribution housing upper section by installing the spring clips.

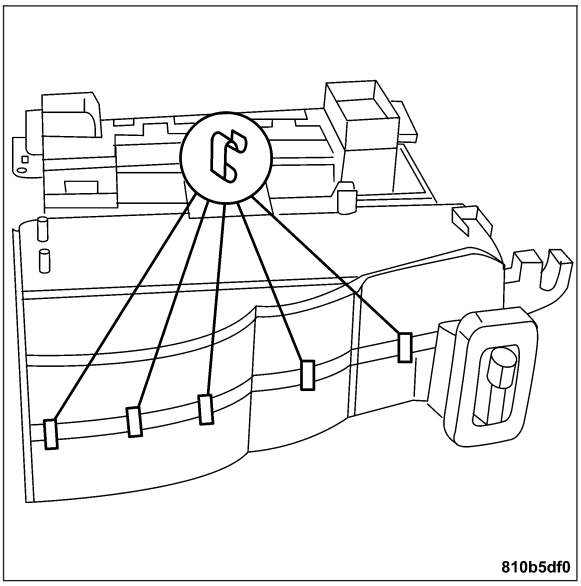

3. Install the foam gasket.
4. Install the screw (1) behind the expansion valve.

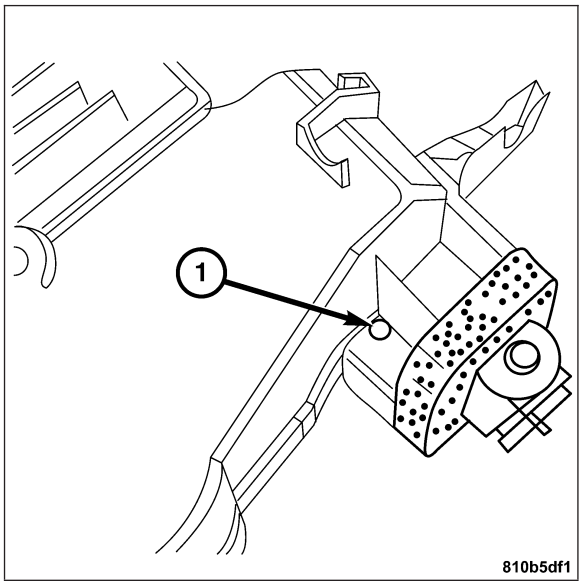

5. Connect the blower housing to air distribution housing, clip the two sliding clips (1).

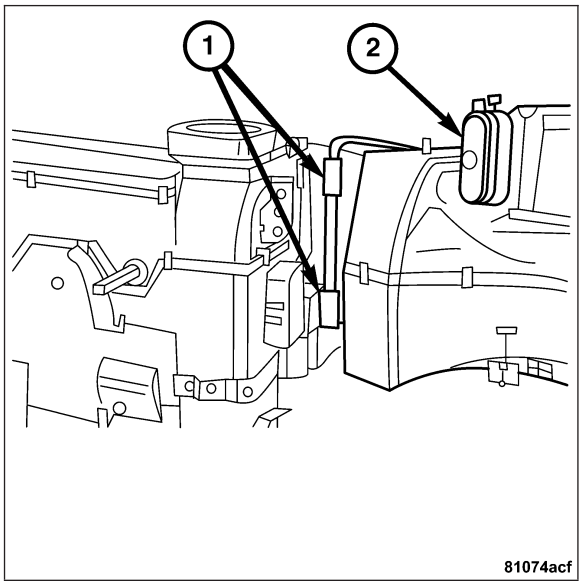

6. Install the four spring clips.
7. Connect the vacuum lines to the vacuum element.
8. Install the valve strip.

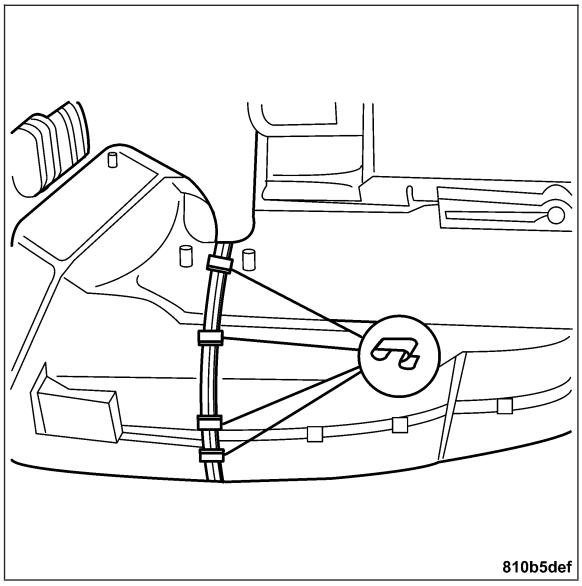

9. Install the heater core. **Refer to Page 24-144**.
10. Install the HVAC housing. **Refer to Page 24-101**.

LIQUID LINE

REMOVAL

WARNING: REVIEW THE WARNINGS AND CAUTIONS IN THE FRONT OF THIS SECTION BEFORE PERFORMING THE FOLLOWING OPERATION.

1. Evacuate the A/C system. **Refer to Page 24-116**.
2. Raise and support the vehicle.
3. Remove the left front wheel and tire assembly.
4. Remove the front inner wheel well panel.
5. Remove the liquid line (1) from the receiver/dryer.

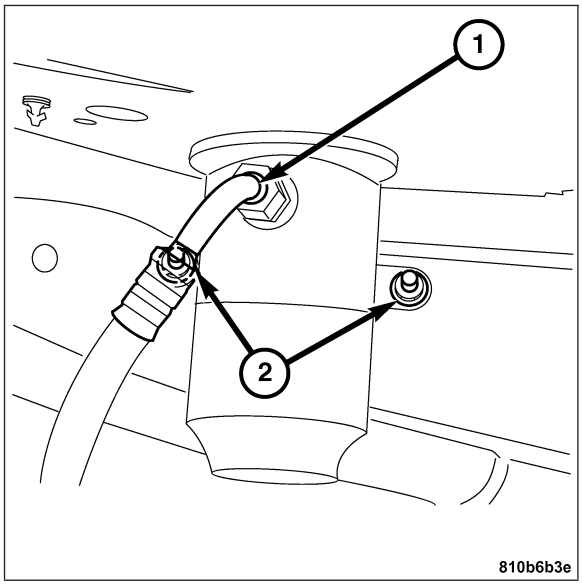

6. Remove the liquid line (1) from the condenser.

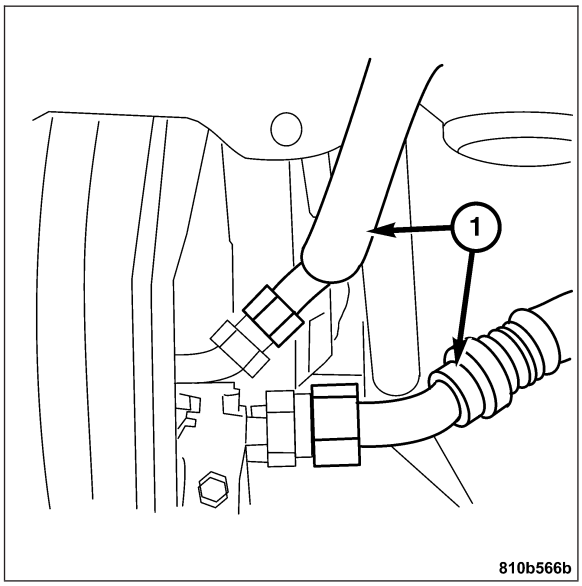

INSTALLATION

WARNING: REVIEW THE WARNINGS AND CAUTIONS IN THE FRONT OF THIS SECTION BEFORE PERFORMING THE FOLLOWING OPERATION.

Any kinks or sharp bends in the refrigerant plumbing will reduce the capacity of the entire air conditioning system. Kinks and sharp bends reduce the flow of refrigerant in the system. A good rule for the flexible hose refrigerant lines is to keep the radius of all bends at least ten times the diameter of the hose. In addition, the flexible hose refrigerant lines should be routed so they are at least 80 millimeters (3 inches) from the exhaust manifold.

High pressures are produced in the refrigerant system when the air conditioning compressor is operating. Extreme care must be exercised to make sure that each of the refrigerant system connections is pressure-tight and leak free. It is a good practice to inspect all flexible hose refrigerant lines at least once a year to make sure they are in good condition and properly routed.

1. Install the liquid line (1) to the condenser. Tighten to 24 N·m (18 ft. lbs.).

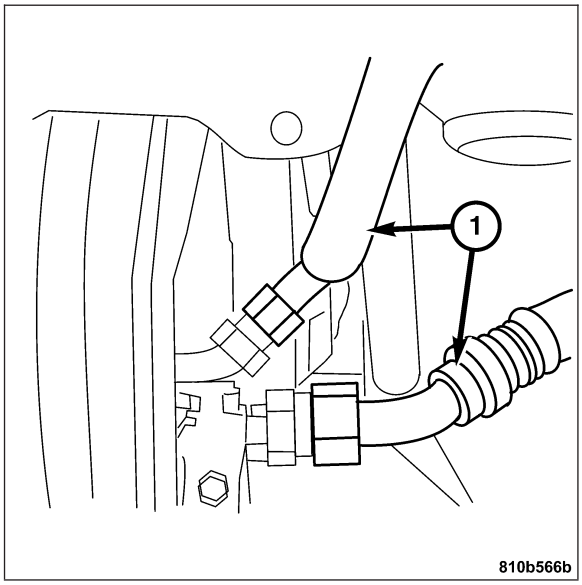

2. Install the liquid line (1) to the receiver/dryer. Tighten to 17 N·m (12 ft. lbs.).
3. Install the front inner wheel well panel.
4. Install the left front wheel and tire assembly.
5. Charge the A/C system. **Refer to Page 24-116**.

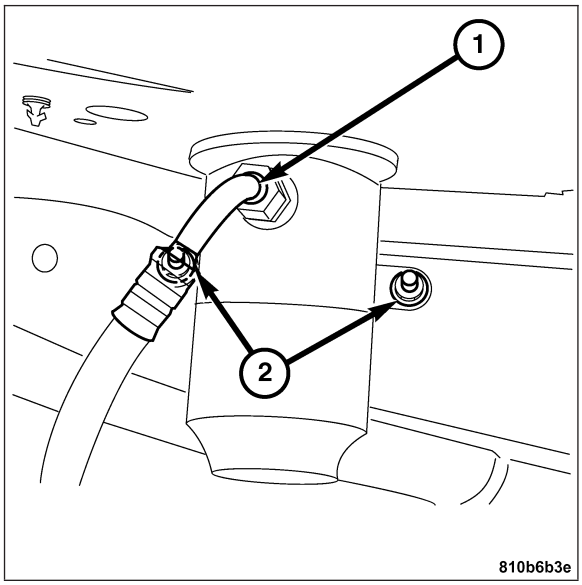

SUCTION LINE

REMOVAL

WARNING: REVIEW THE WARNINGS AND CAUTIONS IN THE FRONT OF THIS SECTION BEFORE PERFORMING THE FOLLOWING OPERATION.

1. Disconnect the negative battery cable.
2. Recover the refrigerant from the refrigerant system. **Refer to Page 24-116**.
3. Remove the retainer nut (1) from the expansion valve (3).
4. Slide the suction line off the stud and liquid line. Remove the lines from the clip.

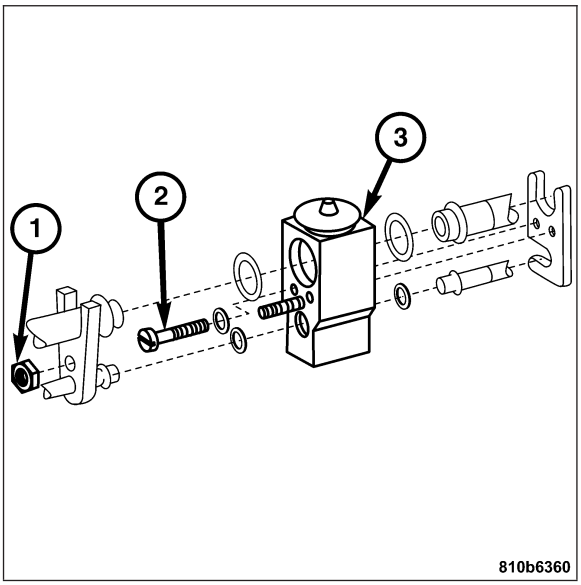

5. Raise and support the vehicle.
6. Remove the A/C compressor bolts (1).
7. Remove the suction line from the compressor.
8. Remove the suction line assembly from the vehicle.

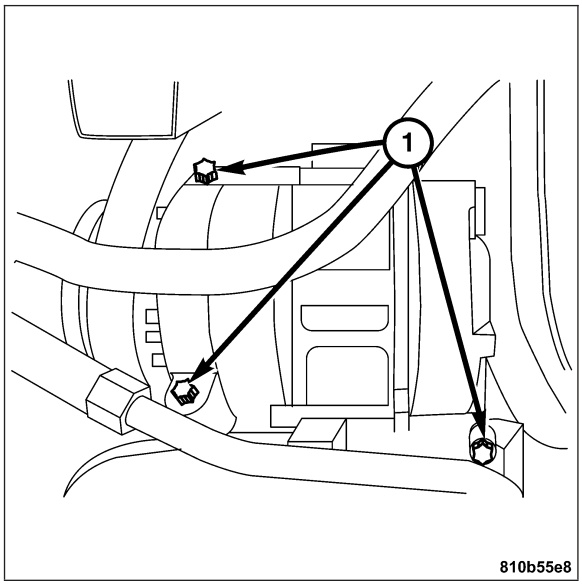

INSTALLATION

WARNING: REVIEW THE WARNINGS AND CAUTIONS IN THE FRONT OF THIS SECTION BEFORE PERFORMING THE FOLLOWING OPERATION.

WARNING:
ANY KINKS OR SHARP BENDS IN THE REFRIGERANT PLUMBING WILL REDUCE THE CAPACITY OF THE ENTIRE AIR CONDITIONING SYSTEM. KINKS AND SHARP BENDS REDUCE THE FLOW OF REFRIGERANT IN THE SYSTEM. A GOOD RULE FOR THE FLEXIBLE HOSE REFRIGERANT LINES IS TO KEEP THE RADIUS OF ALL BENDS AT LEAST TEN TIMES THE DIAMETER OF THE HOSE. IN ADDITION, THE FLEXIBLE HOSE REFRIGERANT LINES SHOULD BE ROUTED SO THEY ARE AT LEAST 80 MILLIMETERS (3 INCHES) FROM THE EXHAUST MANIFOLD.

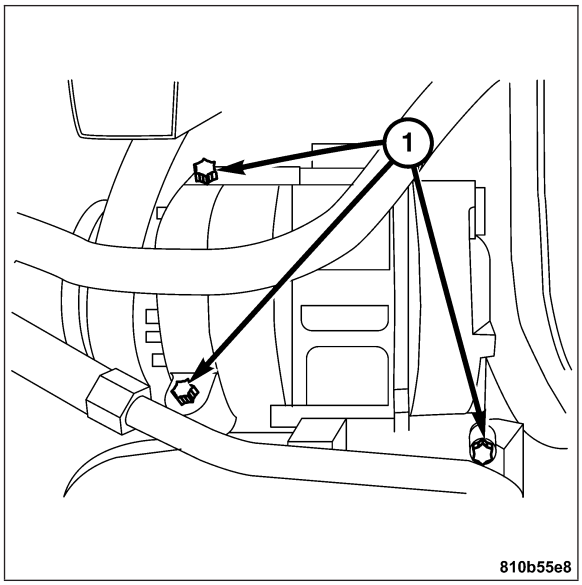

WARNING:
HIGH PRESSURES ARE PRODUCED IN THE REFRIGERANT SYSTEM WHEN THE AIR CONDITIONING COMPRESSOR IS OPERATING. EXTREME CARE MUST BE EXERCISED TO MAKE SURE THAT EACH OF THE REFRIGERANT SYSTEM CONNECTIONS IS PRESSURE-TIGHT AND LEAK FREE. IT IS A GOOD PRACTICE TO INSPECT ALL FLEXIBLE HOSE REFRIGERANT LINES AT LEAST ONCE A YEAR TO MAKE SURE THEY ARE IN GOOD CONDITION AND PROPERLY ROUTED.

1. Install the suction line to the compressor. Tighten the mounting bolt to 23 N·m (18 ft. lbs.).
2. Install the A/C compressor bolts (1). **Refer to Page 24-122**.

3. Slide the suction line and the liquid line over the expansion valve stud. Tighten the nut (1) to 10 N·m (88 in. lbs.).
4. Connect the negative battery cable.
5. Evacuate the refrigerant system. **Refer to Page 24-116**.
6. Charge the refrigerant system. **Refer to Page 24-116**.

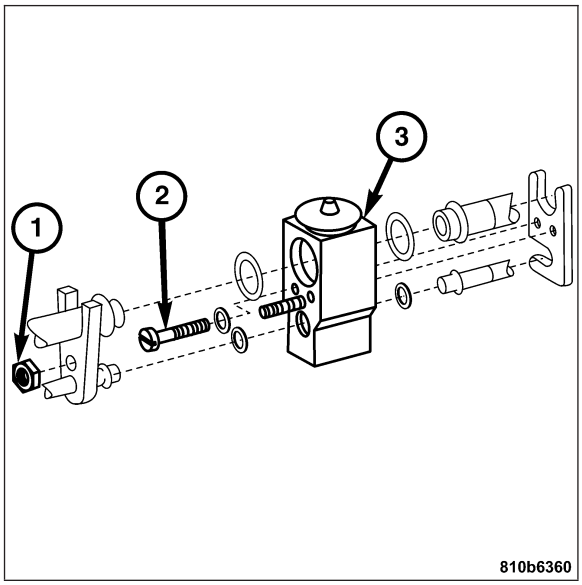

A/C EXPANSION VALVE

DESCRIPTION

The expansion valve is located at the front of the heater-A/C housing between the liquid and suction lines and the evaporator coil. The expansion valve sprays the refrigerant into the evaporator.

The expansion valve is a factory calibrated unit and cannot be adjusted or repaired. If faulty or damaged, the expansion valve must be replaced. **Refer to Page 24-140**.

OPERATION

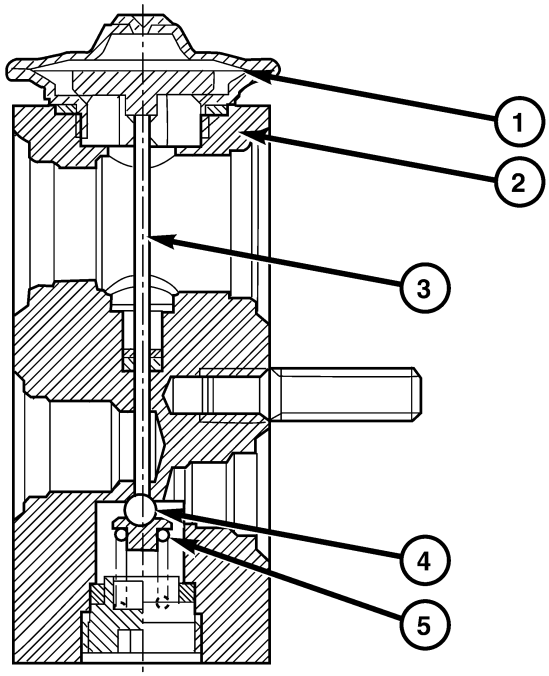

810f0ffe

1 - DIAPHRAGM
2 - EXPANSION VALVE BODY
3 - TAPPET
4 - VALVE BALL
5 - SPRING

When the A/C compressor is switched on the pressure in the evaporator decreases causing the diaphragm (1) to flex downward in an arch. The tappet (3) follows the motion of the diaphragm and presses the valve ball (4) away from its seat against the force of the spring (5). The refrigerant is sprayed into the evaporator through the open valve. Since the motion of the diaphragm (1) is dependent on the intake pressure as well as the temperature at the evaporator output, only the quantity of refrigerant which can be evaporated optimally is injected.

DIAGNOSIS AND TESTING - A/C EXPANSION VALVE

The expansion valve is located on the engine side of the dash panel near the shock tower.

The expansion valve can fail in three different positions (open, closed or restricted).

In an **Open Position**: this will result in a noisy compressor or no cooling. The cause can be a broken spring, broken ball or excessive moisture in the A/C system. If the spring or ball are found to be defective, replace the expansion valve. If excessive moisture is found in the A/C system, recycle the refrigerant.

In a **Closed Position**: There will be low suction pressure and no cooling. This may be caused by a failed power dome or excessive moisture in the A/C system. If the power dome on the expansion valve is found to be defective replace the expansion valve. If excessive moisture is found recycle the refrigerant.

A **Restricted Orifice**: There will be low suction pressure and no cooling. This may be caused by debris in the refrigerant system. If debris is believed to be the cause, recycle the refrigerant and replace the expansion valve and the receiver/drier.

REMOVAL

WARNING: REVIEW THE WARNINGS AND CAUTIONS IN THE FRONT OF THIS SECTION BEFORE PERFORMING THE FOLLOWING OPERATION.

1. Evacuate the refrigerant from the system. **Refer to Page 24-116**.
2. Remove the nut (1).
3. Pull the pressure lines off.
4. Remove the screws (2).
5. Remove the expansion valve (3) off of the pressure lines.

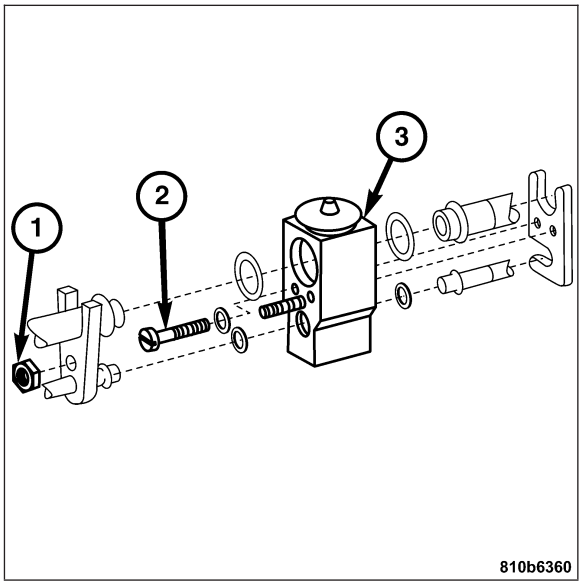

INSTALLATION

1. Install the expansion valve (3) to the pressure lines.

Note: Tighten the screws evenly to avoid canting.

2. Install the bolts (2). Tighten to 8 N·m (71 in. lb.).
3. Replace the O-rings. Install the pressure lines.
4. Install the nut (1). Tighten to 10 N·m (88 in. lb.).
5. Charge the air conditioning, check for any leakage. **Refer to Page 24-116**.

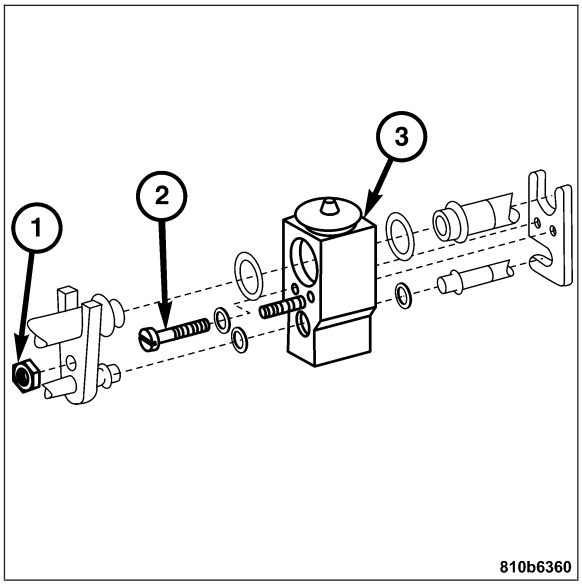

HEATER CORE

DESCRIPTION

The heater core is located in the HVAC housing, under the instrument panel. It is a heat exchanger made of rows of tubes and fins.

OPERATION

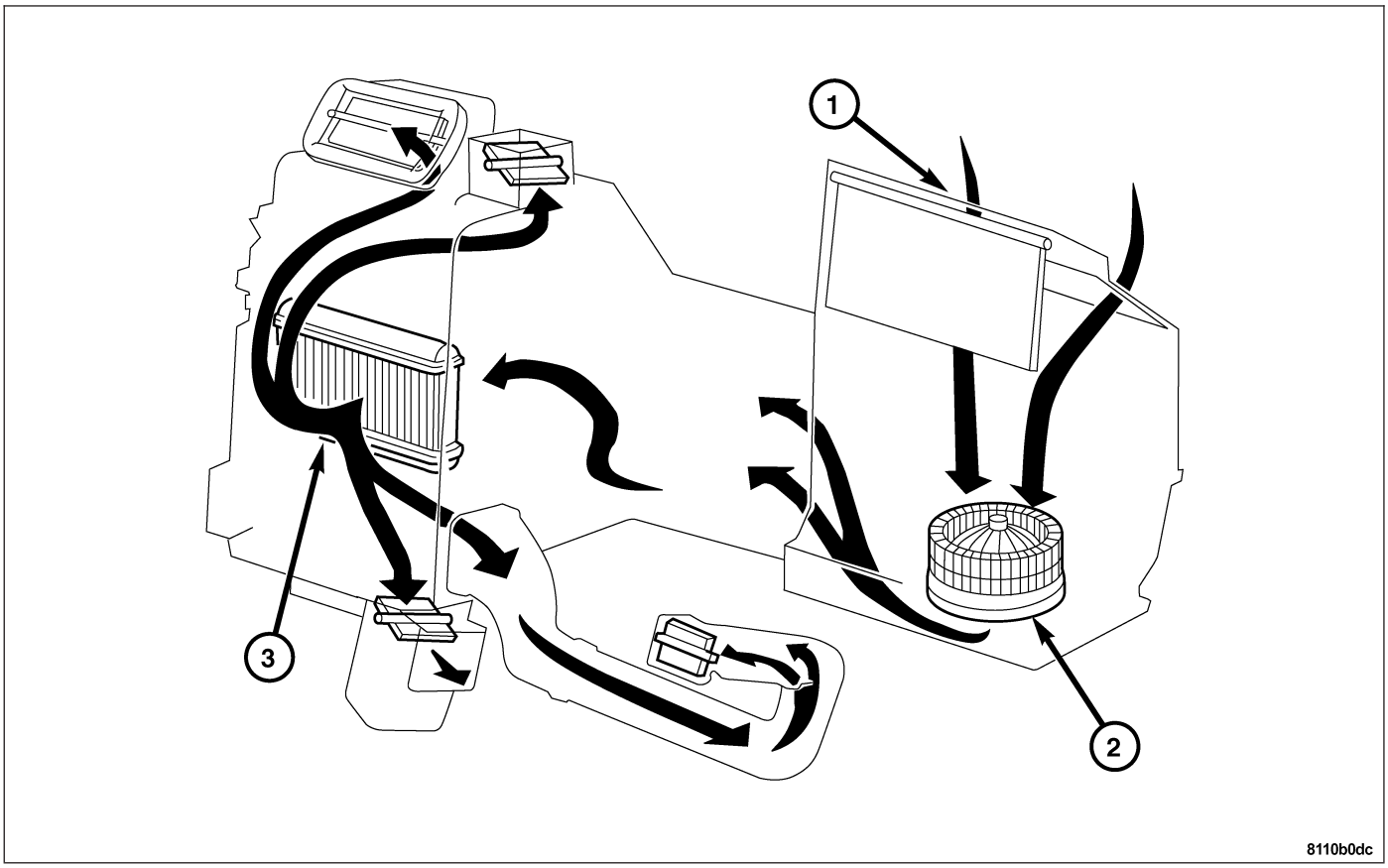

1 - INLET AIR DUCT
2 - BLOWER MOTOR
3 - HEATER CORE

Engine coolant is circulated through heater hoses to the heater core (3) at all times. As the coolant flows through the heater core (3), heat removed from the engine is transferred to the heater core fins and tubes. Air directed through the heater core picks up the heat from the heater core fins. The temperature control door allows control of the heater output air temperature by controlling how much of the air flowing through the HVAC housing is directed through the heater core (3). The blower motor (2) speed controls the volume of air flowing through the HVAC housing.

The heater core cannot be repaired and, if faulty or damaged, it must be replaced. **Refer to Page 24-142**. Refer to Cooling for more information on the engine cooling system.

REMOVAL

WARNING: ON VEHICLES EQUIPPED WITH AIRBAGS, DISABLE THE AIRBAG SYSTEM BEFORE ATTEMPTING ANY STEERING WHEEL, STEERING COLUMN, OR INSTRUMENT PANEL COMPONENT DIAGNOSIS OR SERVICE. DISCONNECT AND ISOLATE THE BATTERY NEGATIVE (GROUND) CABLE, THEN WAIT TWO MINUTES FOR THE AIRBAG SYSTEM CAPACITOR TO DISCHARGE BEFORE PERFORMING FURTHER DIAGNOSIS OR SERVICE. THIS IS THE ONLY SURE WAY TO DISABLE THE AIRBAG SYSTEM. FAILURE TO TAKE THE PROPER PRECAUTIONS COULD RESULT IN AN ACCIDENTAL AIRBAG DEPLOYMENT AND POSSIBLE PERSONAL INJURY.

WARNING: REVIEW THE WARNINGS AND CAUTIONS IN THE FRONT OF THIS SECTION BEFORE PERFORMING THE FOLLOWING OPERATION.

1. Remove HVAC housing. **Refer to Page 24-92**.
2. Remove the bolts on the cover (1).
3. Unclip the spring clamps.
4. Remove the cover.
5. Remove the guide for the heating water flow pipe (2).

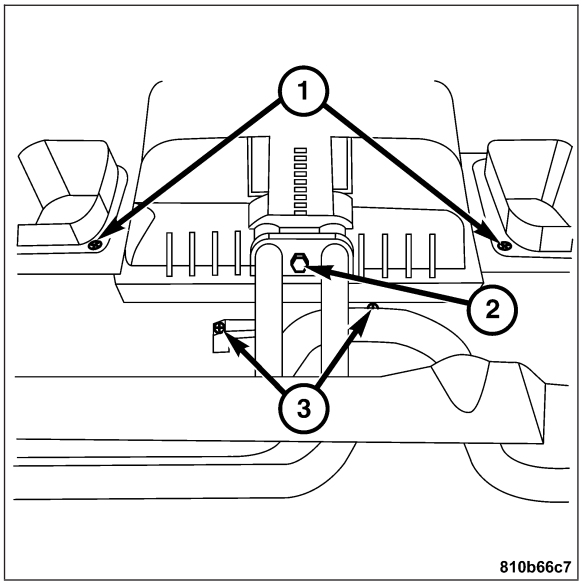

6. Remove the heating water return line (1).

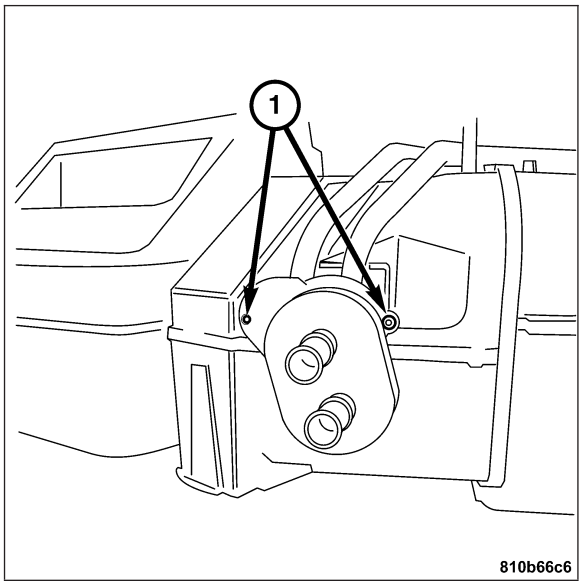

7. Remove the heater core together with the heating water pipes.
8. Remove the retainer clip (1) and remove the pipe from the heater core.

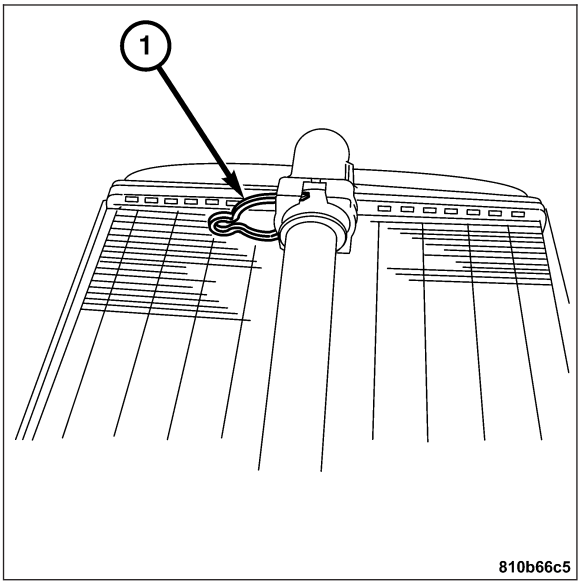

INSTALLATION

1. Install the heating water pipes on the heater core then install the clip (1).
2. Install the heat exchanger together with the heating water pipes.
3. Connect the socket yoke for heating water flow pipe.

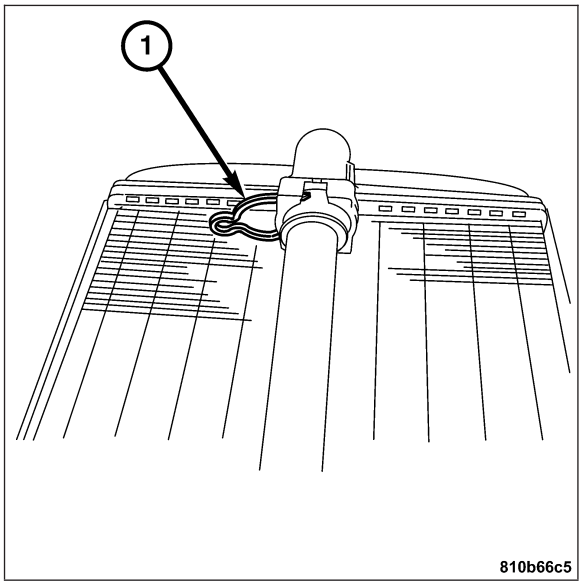

4. Install the heating water return line (1).

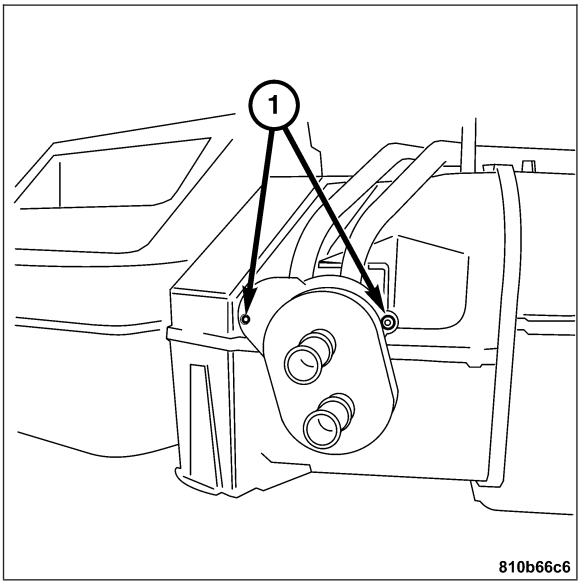

5. Install the guide (2) for the heating water flow pipe.
6. Install the cover (1).
7. Clip the spring clamps.
8. Install the bolts on the cover.
9. Install HVAC housing. **Refer to Page 24-101**.

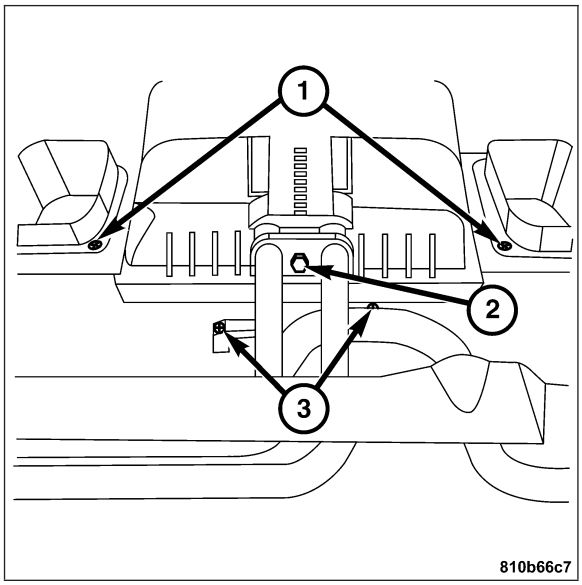

RECEIVER / DRIER

DESCRIPTION

The receiver/drier is mounted in the engine compartment between the condenser and is part of the liquid line (1) assembly. The filter/drier cannot be repaired, if the filter/drier is faulty, damaged, left open to the atmosphere or contaminated the line assembly must be replaced. **Refer to Page 24-146**.

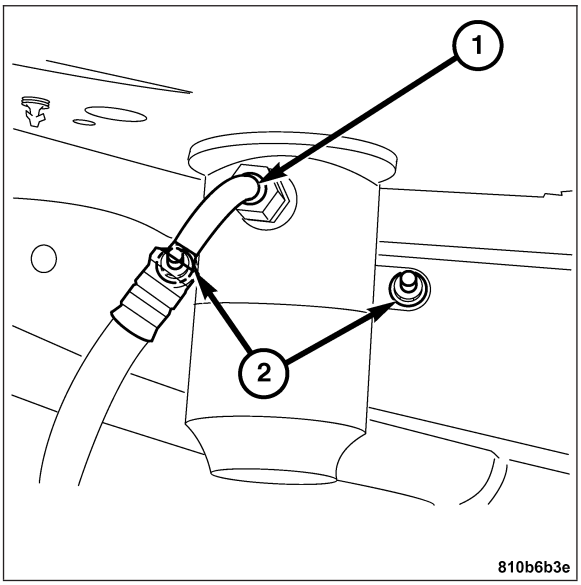

OPERATION

The receiver/drier (5) performs a filtering action to prevent foreign material in the refrigerant from contaminating the expansion valve (3). A desiccant bag is mounted inside the receiver/drier canister (5) to absorb any moisture which may have entered and become trapped within the refrigerant system. In addition, during periods of high demand A/C operation, the receiver/drier (5) acts as a reservoir to store surplus refrigerant. Refrigerant enters the receiver/drier (5) as a high-pressure, low-temperature liquid from the condenser (6).

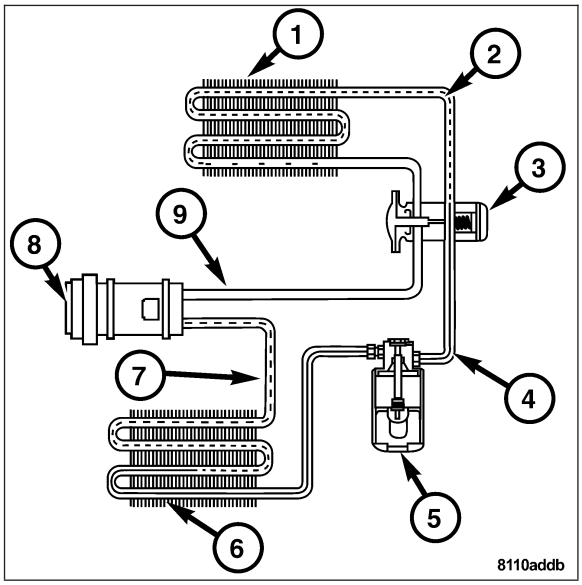

REMOVAL

WARNING: REVIEW THE WARNINGS AND CAUTIONS IN THE FRONT OF THIS SECTION BEFORE PERFORMING THE FOLLOWING OPERATION.

1. Evacuate the refrigerant from the system. **Refer to Page 24-116**.
2. Disconnect the electrical connector (2).
3. Remove the upper pressure line (1).
4. Remove the refrigerant pressure sensor (2).
5. Raise and support the vehicle.
6. Remove the wheel and tire assembly.
7. Remove left inner fender (front section) by removing the plastic nuts and the screws attaching the panel to the inner fenderwell.

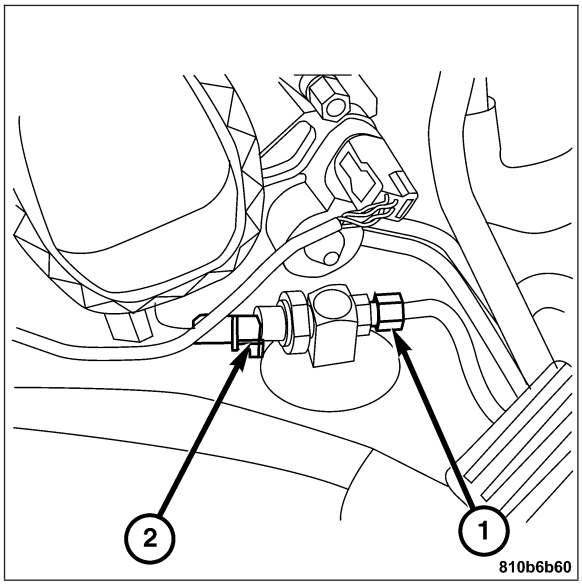

8. Remove the pressure line (1).
9. Remove the mounting nuts (2).
10. Remove the receiver/drier from the vehicle.

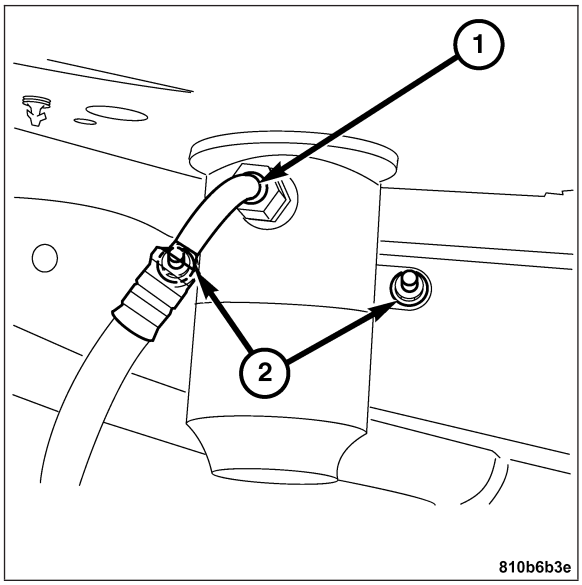

INSTALLATION

1. Install the receiver/drier to the vehicle.
2. Install the mounting nuts (2).
3. Install the lower pressure line (1). Tighten to 17 N·m (12 ft. lbs.).
4. Install left inner fender (front section).
5. Install the wheel and tire assembly.

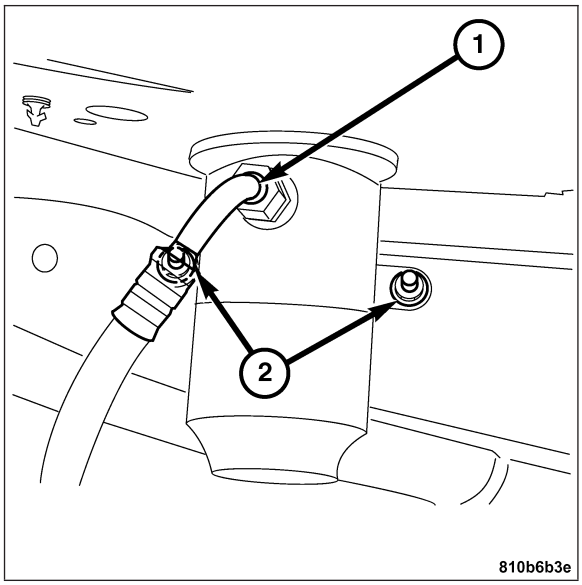

6. Install the refrigerant pressure sensor (2).
7. Install the upper pressure line (1). Tighten to 17 N·m (12 ft. lbs.).
8. Connect the electrical connector (2).
9. Charge the refrigerant the system.

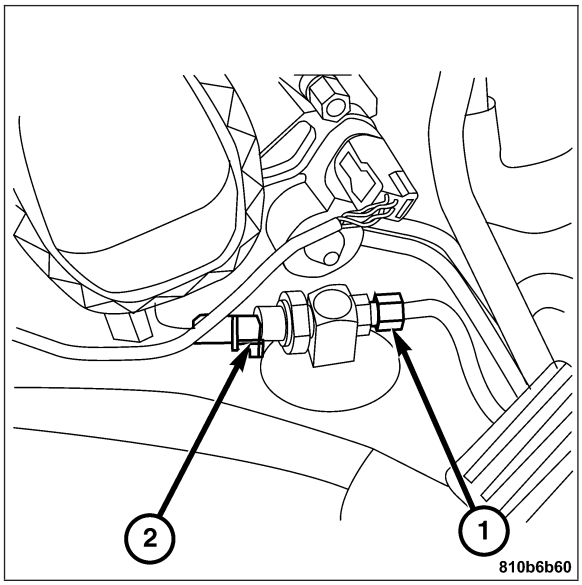

REFRIGERANT

DESCRIPTION

The refrigerant used in this air conditioning system is a HydroFluoroCarbon (HFC), type R-134a. Unlike R-12, which is a ChloroFluoroCarbon (CFC), R-134a refrigerant does not contain ozone-depleting chlorine. R-134a refrigerant is a non-toxic, non-flammable, clear, and colorless liquefied gas.

Even though R-134a does not contain chlorine, it must be reclaimed and recycled just like CFC-type refrigerants. This is because R-134a is a greenhouse gas and can contribute to global warming.

OPERATION

R-134a refrigerant is not compatible with R-12 refrigerant in an air conditioning system. Even a small amount of R-12 added to an R-134a refrigerant system will cause compressor failure, refrigerant oil sludge or poor air conditioning system performance. In addition, the PolyAlkylene Glycol (PAG) synthetic refrigerant oils used in an R-134a refrigerant system are not compatible with the mineral-based refrigerant oils used in an R-12 refrigerant system.

R-134a refrigerant system service ports, service tool couplers and refrigerant dispensing bottles have all been designed with unique fittings to ensure that an R-134a system is not accidentally contaminated with the wrong refrigerant (R-12). There are also labels posted in the engine compartment of the vehicle and on the compressor identifying to service technicians that the air conditioning system is equipped with R-134a.

REFRIGERANT OIL

DESCRIPTION

The refrigerant oil used in R-134a refrigerant systems is a synthetic-based, PolyAlkylene Glycol (PAG), wax-free lubricant. Mineral-based R-12 refrigerant oils are not compatible with PAG oils, and should never be introduced to an R-134a refrigerant system.

There are different PAG oils available, and each contains a different additive package. The 10PA17 compressor used in this vehicle is designed to use an ND8 PAG refrigerant oil. Use only refrigerant oil of this same type to service the refrigerant system.

OPERATION

After performing any refrigerant recovery or recycling operation, always replenish the refrigerant system with the same amount of the recommended refrigerant oil as was removed. Too little refrigerant oil can cause compressor damage, and too much can reduce air conditioning system performance.

PAG refrigerant oil is much more hygroscopic than mineral oil, and will absorb any moisture it comes into contact with, even moisture in the air. The PAG oil container should always be kept tightly capped until it is ready to be used. After use, recap the oil container immediately to prevent moisture contamination.

STANDARD PROCEDURE - REFRIGERANT OIL LEVEL

When an air conditioning system is assembled at the factory, all components except the compressor are refrigerant oil free. After the refrigerant system has been charged and operated, the refrigerant oil in the compressor is dispersed throughout the refrigerant system. The accumulator, evaporator, condenser, and compressor will each retain a significant amount of the needed refrigerant oil.

It is important to have the correct amount of oil in the refrigerant system. This ensures proper lubrication of the compressor. Too little oil will result in damage to the compressor. Too much oil will reduce the cooling capacity of the air conditioning system.

It will not be necessary to check the oil level in the compressor or to add oil, unless there has been an oil loss. An oil loss may occur due to a rupture or leak from a refrigerant line, a connector fitting, a component, or a component seal. If a leak occurs, add 30 milliliters (1 fluid ounce) of refrigerant oil to the refrigerant system after the repair has been made. Refrigerant oil loss will be evident at the leak point by the presence of a wet, shiny surface around the leak.

Refrigerant oil must be added when a accumulator, evaporator coil, or condenser are replaced. See the Refrigerant Oil Capacities chart. When a compressor is replaced, the refrigerant oil must be drained from the old compressor and measured. Drain all of the refrigerant oil from the new compressor, then fill the new compressor with the same amount of refrigerant oil that was drained out of the old compressor.

Refrigerant Oil Capacities		
Component	ml	fl oz
A/C System	130	4.40
Receiver Drier	70	2.37
Condenser	10	0.34
Evaporator	50	1.69
Compressor	Drain and measure the oil from the old compressor - see text.	

COOLANT CIRCULATION VALVE

DESCRIPTION

The coolant circulation valve (3) regulates the quantity of coolant flowing through the heater hoses (1-2) to the heater core.

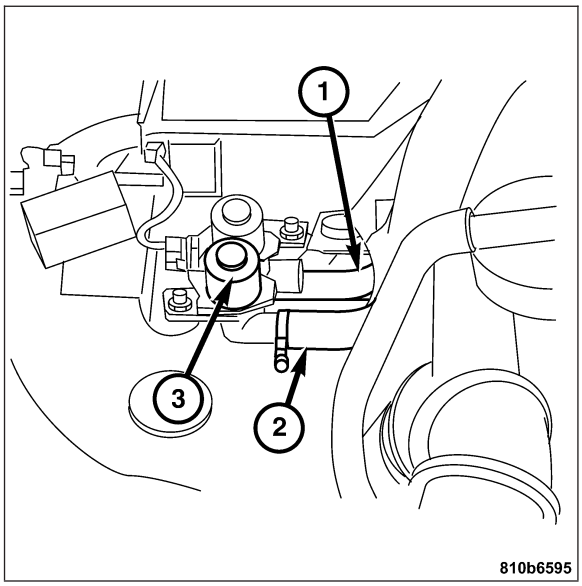

OPERATION

When the temperature dial is set to ″MIN″ the A/C heater control module switches the coolant circulation valve (3)

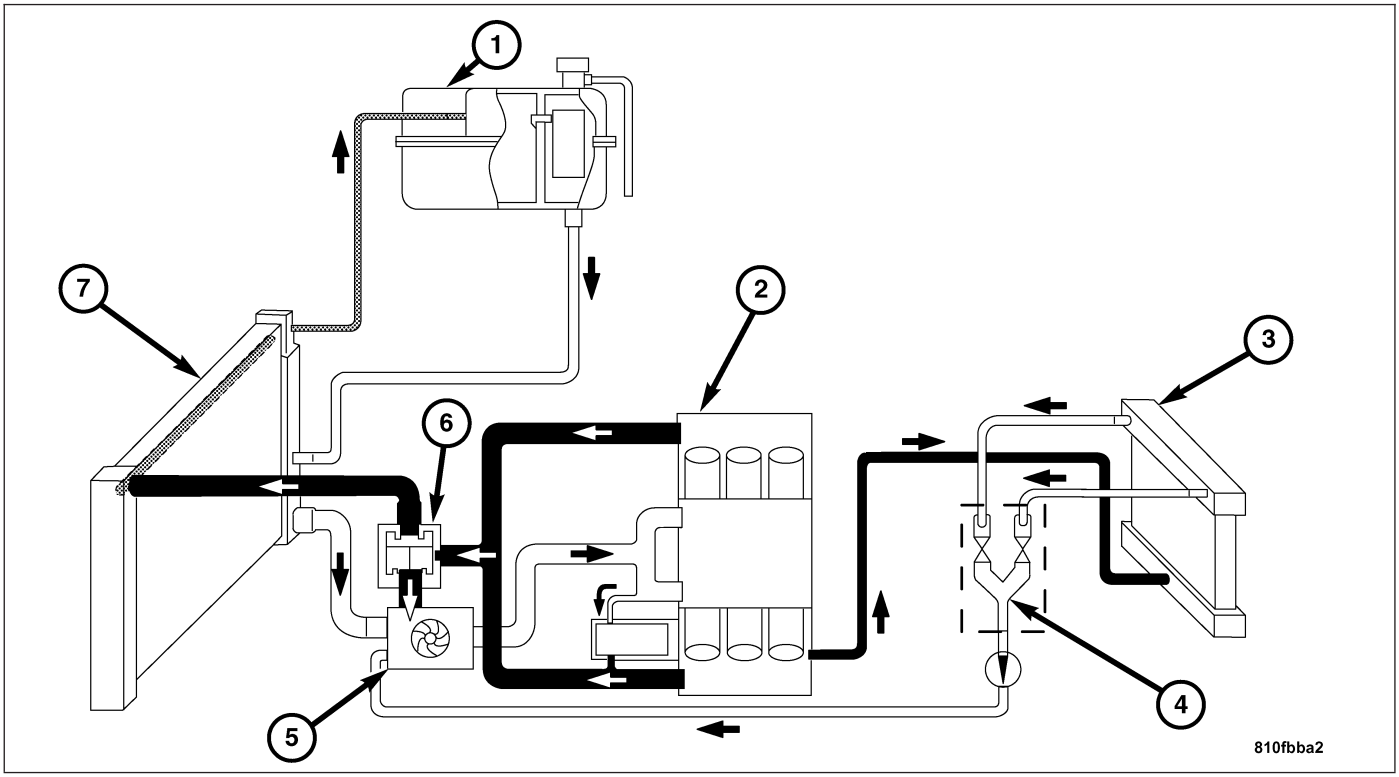

1 - COOLANT RESERVOIR
2 - ENGINE BLOCK
3 - HEATER CORE
4 - COOLANT CIRCULATION VALVE
5 - COOLANT CIRCULATION PUMP
6 - THERMOSTAT
7 - RADIATOR

solenoid to ground, the solenoid pulls in and blocks the coolant flow through the heater core (2) separately on the left and right sides. If the temperature dial is set to ″MAX″ the A/C heater control module interrupts the ground connection, current does not flow through the solenoid and the maximum quantity of coolant flows through the heater core (2).

In normal operation the A/C heater control module switches the ground connection intermittently. The locking and closing times of the coolant circulation valve are subject to deviations between the actual temperature and set temperature.

RESIDUAL ENGINE HEAT UTILIZATION

In the residual engine heat utilization mode the interior temperature is controlled in the same manner as while driving; the coolant is circulated by the coolant circulation pump.

REMOVAL

WARNING: Open the cooling system only when the coolant temperature is below 90° C. Open the cap slowly and reduce the pressure. Wear protective gloves, protective clothing and protective goggles.

1. Relieve the pressure in the cooling system by, turning the radiator cap on the reservoir to catch “1”.
2. Loosen the top screw for the heat shield. Then remove the heat shield.
3. Clamp off the hot water hoses.
4. Loosen the hose clamps on heater water hoses (2).
5. Remove the heater water hose.

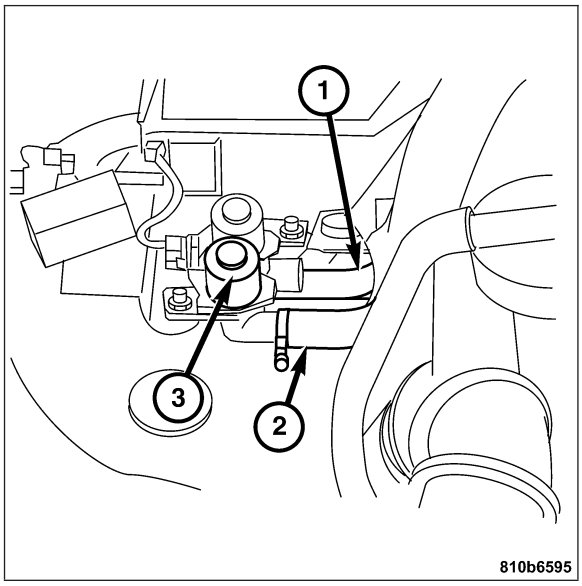

6. Disconnect the electrical connector (1) on the coolant circulation valve.
7. Remove the rubber mounts (6) from the mounting points on the body side.
8. Remove the coolant circulation valve.

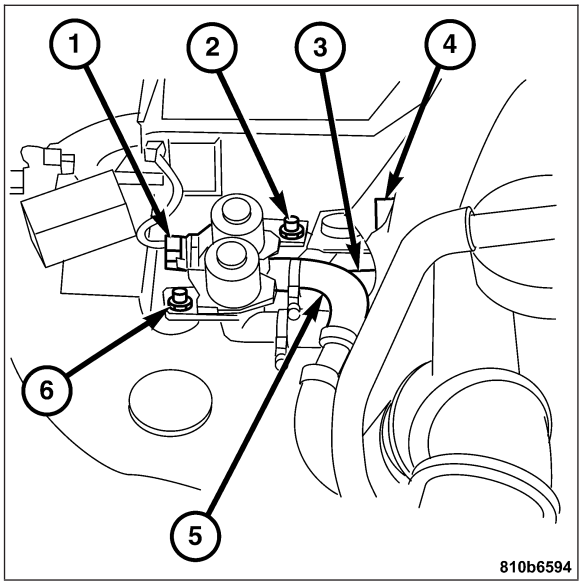

INSTALLATION

1. Install the coolant circulation valve.
2. Install the rubber mounts to the mounting points on the body side.
3. Connect the electrical connector (1) on the coolant circulation valve.

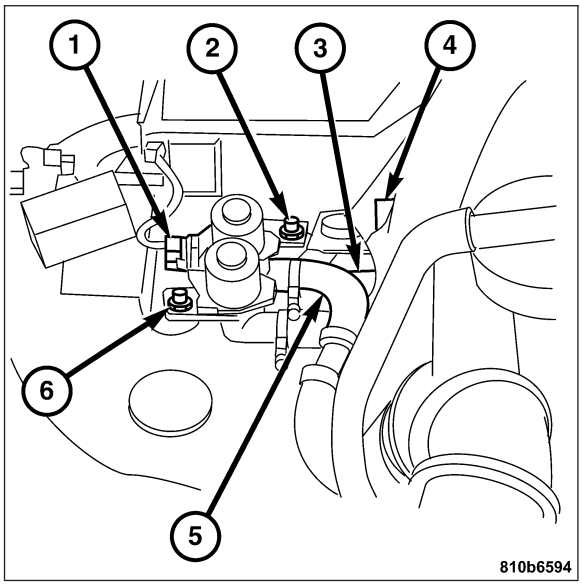

4. Install the heater water hose (2).
5. Tighten the hose clamps on heater water hose.
6. Unclamp the hot water hose.
7. Tighten the top screw for the heat shield.
8. Top off the cooling system. **Refer to Page 7-18**.

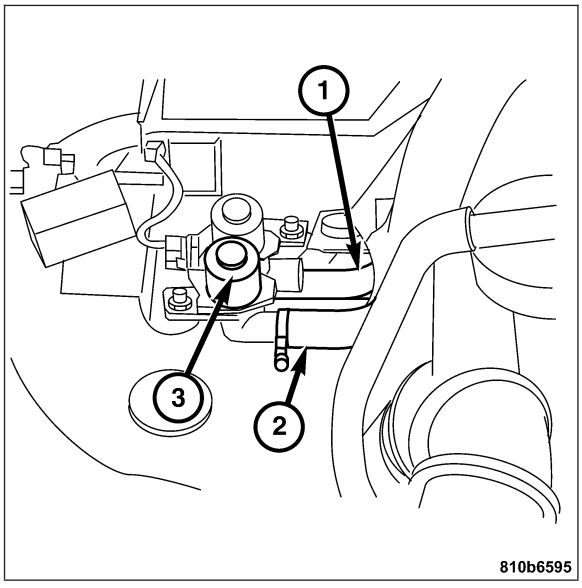

EMISSIONS CONTROL

TABLE OF CONTENTS

page

EMISSIONS CONTROL
DESCRIPTION
DESCRIPTION - MONITORED COMPONENTS 2
DESCRIPTION - MONITORED SYSTEMS 6
DESCRIPTION - NON-MONITORED CIRCUITS 10
DESCRIPTION - DRB III® STATE DISPLAY TEST MODE 11
DESCRIPTION - HIGH AND LOW LIMITS 11
DESCRIPTION - TRIP DEFINITION 12
DESCRIPTION - VEHICLE EMISSION CONTROL INFORMATION LABEL 12
OPERATION - SYSTEM 12
EVAPORATIVE EMISSIONS 14
EXHAUST GAS RECIRCULATION 23
AIR INJECTION 30
ON-BOARD DIAGNOSTICS 37

EMISSIONS CONTROL

DESCRIPTION

DESCRIPTION - MONITORED COMPONENTS

There are several components that will affect vehicle emissions if they malfunction. If one of these components

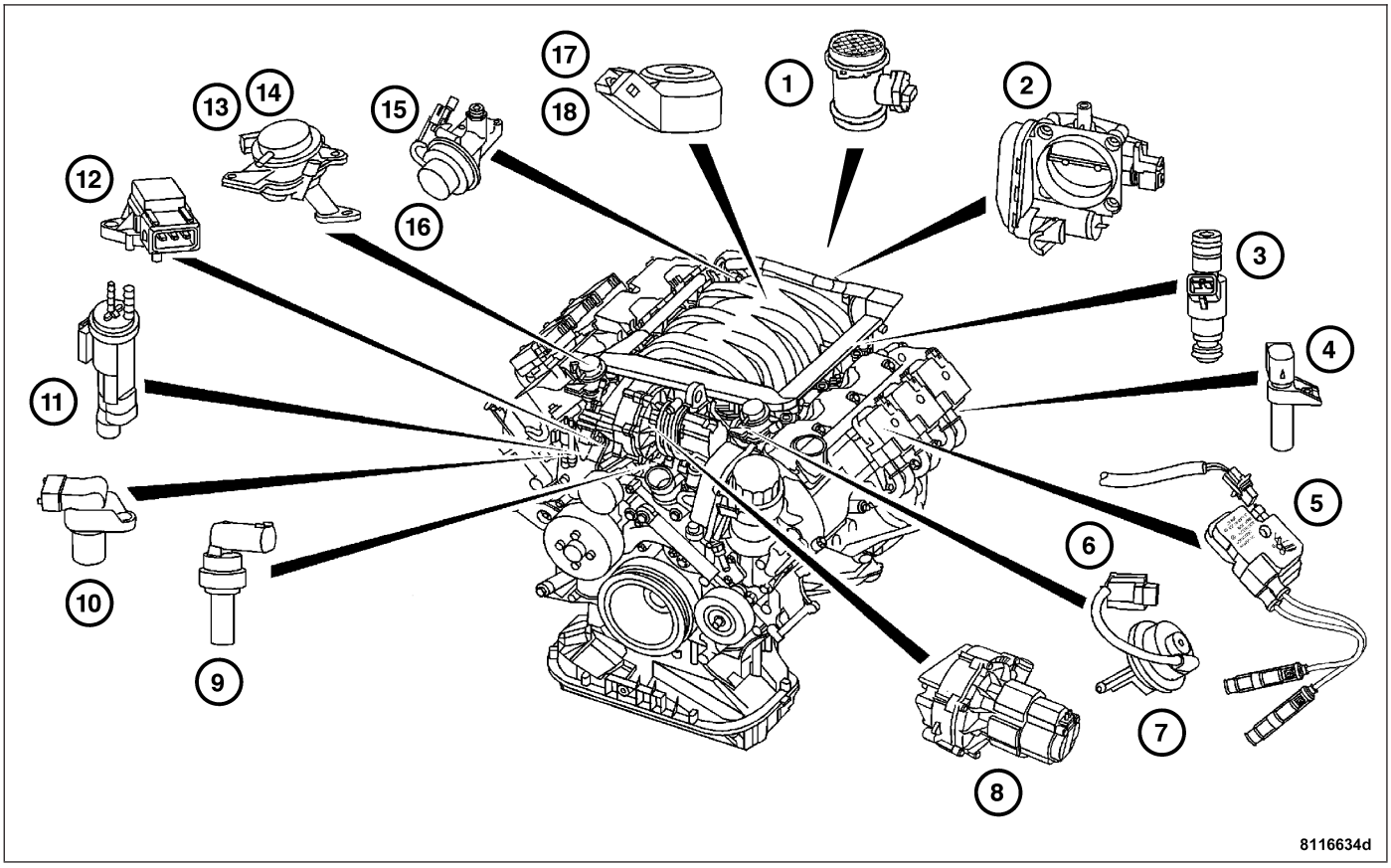

1 - MASS AIR FLOW/INTAKE AIR TEMPERATURE SENSOR
2 - THROTTLE BODY (INCLUDES ELECTRONIC THROTTLE CONTROL AND THROTTLE POSITION SENSOR)
3 - FUEL INJECTOR
4 - CRANKSHAFT POSITION SENSOR
5 - IGNITION COIL
6 - SHORT RUNNER VALVE SOLENOID
7 - SHORT RUNNER VALVE
8 - AIR PUMP
9 - COOLANT TEMPERATURE SENSOR
10 - CAMSHAFT POSITION SENSOR
11 - AIR PUMP SWITCHOVER SOLENOID
12 - MANIFOLD ABSOLUTE PRESSURE SENSOR
13 - RIGHT AIR PUMP SWITCHOVER VALVE
14 - LEFT AIR PUMP SWITCHOVER VALVE
15 - EXHAUST GAS RECIRCULATION SOLENOID
16 - EXHAUST GAS RECIRCULATION VALVE
17 - RIGHT KNOCK SENSOR
18 - LEFT KNOCK SENSOR

malfunctions, the Malfunction Indicator Lamp (MIL) will illuminate.

Some of the component monitors are checking for proper operation of the part. Electrically operated components now have input (rationality) and output (functionality) checks as well as continuity tests (opens/shorts). Previously, a component like the Throttle Position Sensor (TPS) was checked by the Powertrain Control Module (PCM) for an open or shorted circuit. If one of these conditions occurred, a Diagnostic Trouble Code (DTC) was set. Now there is a check to ensure that the component is working. This is done by watching for a TPS indication of a greater or lesser throttle opening than Manifold Absolute Pressure (MAP) and engine rpm indicate. In the case of the TPS, if engine vacuum is high and engine rpm is 1600 or greater and the TPS indicates a large throttle opening, a DTC will be set. The same applies to low vacuum and 1600 rpm.

Any component that has an associated limp-in will set a fault after 1 trip with the malfunction present.

Refer to the appropriate Powertrain Diagnostic Procedure Manual for diagnostic procedures.

The following is a list of the monitored components:

- Catalyst Monitor
- Comprehensive Components
- Exhaust Gas Recirculation (EGR)
- Fuel Control (rich/lean)
- Oxygen Sensor Monitor
- Oxygen Sensor Heater Monitor
- Purge
- Misfire
- Evaporative Vacuum Leak Detection (EVLD)

COMPREHENSIVE COMPONENTS

Along with the major monitors, OBD II requires that the diagnostic system monitor any component that could affect emissions levels. In many cases, these components were being tested under OBD I. The OBD I requirements focused mainly on testing emissions-related components for electrical opens and shorts.

However, OBD II also requires that inputs from powertrain components to the PCM be tested for **rationality** and that outputs to powertrain components from the PCM be tested for **functionality**. Methods for monitoring the various Comprehensive Component monitoring include:

- Circuit Continuity
- Open
- Shorted to Voltage
- Shorted to Ground
- Rationality and Functionality
- Outputs Tested for functionality

Note: Comprehensive component monitors are continuous. Therefore, enabling conditions do not apply. All will set a DTC and illuminate the MIL in 1 trip.

Input Rationality - While input signals to the PCM are constantly being monitored for electrical opens and shorts, they are also tested for rationality. This means that the input signal is compared against other inputs and information to see if it makes sense under the current conditions.

PCM sensor and CAN Bus inputs that are checked for rationality include:

- Manifold Absolute Pressure (MAP) Sensor
- Oxygen Sensor (O2S) (slow response)
- Engine Coolant Temperature (ECT) Sensor
- Camshaft Position (CMP) Sensor
- Vehicle Speed from the Controller Antilock Brake (CAB)
- Crankshaft Position (CKP) Sensor
- Mass Air Flow (MAF)/Intake Air Temperature (IAT) Sensor
- Accelerator Pedal Position Sensor (APPS)
- Throttle Position Sensor (TPS)
- Knock Sensors
- Oxygen Sensor Heater
- Engine Controller
- Brake Switch
- Evaporative Vacuum Leak Detection (EVLD)
- P/N Switch
- Transmission Controls

Output Functionality - PCM outputs are tested for functionality in addition to testing for opens and shorts. When the PCM provides a voltage to an output component, it can verify that the command was carried out by monitoring specific input signals for expected changes. For example, when the PCM commands the Electronic Throttle Control (ETC) Motor to a specific position under certain operating conditions, it expects to see a specific (target) idle speed (rpm). If it does not, it stores a DTC.

PCM outputs monitored for functionality include:

- Fuel Injectors
- Air Pump Switchover Solenoid
- Short Runner Valve Solenoid
- Ignition Coils
- Throttle Body (Electronic Throttle Control/Throttle Position Sensor)
- Purge Solenoid
- EGR Solenoid
- Radiator Fan Control
- Transmission Controls

OXYGEN SENSOR (O2S) MONITOR

DESCRIPTION - Effective control of exhaust emissions is achieved by an oxygen feedback system. The most important element of the feedback system is the O2S. The O2S is located in the exhaust path. Once it reaches operating temperature 300° to 350°C (572° to 662°F), the sensor generates a voltage that is inversely proportional to the amount of oxygen in the exhaust. When there is a large amount of oxygen in the exhaust caused by a lean condition, misfire or exhaust leak, the sensor produces a low voltage, below 450mV. When the oxygen content is lower, caused by a rich condition, the sensor produces a higher voltage, above 450mV.

The information obtained by the sensor is used to calculate the fuel injector pulse width. The PCM is programmed to maintain the optimum air/fuel ratio. At this mixture ratio, the catalyst works best to remove hydrocarbons (HC), carbon monoxide (CO) and nitrous oxide (NOx) from the exhaust.

The O2S is also the main sensing element for the EGR, Purge System, and Catalyst and Fuel Monitors.

The O2S may fail in any or all of the following manners:

- Slow response rate (Big Slope)
- Reduced output voltage (Half Cycle)
- Heater Performance
- Dynamic shift
- Shorted or open circuits

Slow Response Rate (Big Slope) - Response rate is the time required for the sensor to switch from lean to rich signal output once it is exposed to a richer than optimum air/fuel mixture or vice versa. As the PCM adjusts the air/fuel ratio, the sensor must be able to rapidly detect the change. As the sensor ages, it could take longer to detect the changes in the oxygen content of the exhaust gas. The rate of change that an oxygen sensor experiences is called 'Big Slope'. The PCM checks the oxygen sensor voltage in increments of a few milliseconds.

Reduced Output Voltage (Half Cycle) - The output voltage of the O2S ranges from 0 to 1 volt. A good sensor can easily generate any output voltage in this range as it is exposed to different concentrations of oxygen. To detect a shift in the air/fuel mixture (lean or rich), the output voltage has to change beyond a threshold value. A malfunctioning sensor could have difficulty changing beyond the threshold value. Many times, the condition is only temporary and the sensor will recover. Under normal conditions, the voltage signal surpasses the threshold and a counter is incremented by one. This is called the Half Cycle Counter.

OPERATION - As the Oxygen Sensor signal switches, the PCM monitors the half cycle and big slope signals from the oxygen sensor. If during the test neither counter reaches a predetermined value, a malfunction is entered and a Freeze Frame is stored. Only one counter reaching its predetermined value is needed for the monitor to pass.

The Oxygen Sensor Signal Monitor is a 2 trip monitor that is tested only once per trip. When the Oxygen Sensor fails the test in two consecutive trips, the MIL is illuminated and a DTC is set. The MIL is extinguished when the Oxygen Sensor monitor passes in three consecutive trips. The DTC is erased from memory after 40 consecutive warm-up cycles without test failure.

OXYGEN SENSOR HEATER MONITOR

DESCRIPTION - If the Oxygen sensor (O2S) DTC as well as a O2S heater DTC is present, the O2S Heater DTC MUST be repaired first. After the O2S Heater is repaired, verify that the sensor circuit is operating correctly.

Note: The O2S Heaters are kept off at coolant temperatures below 20°C (68°F) and at high engine rpm in order to avoid damaging the heaters. The voltage reading taken from the O2S are very temperature sensitive. The readings taken from the O2S are not accurate below 300°C (572°F). Heating the O2S is done to allow the engine controller to shift to closed loop control as soon as possible. The heating element used to heat the O2S must be tested to ensure that it is heating the sensor properly. The heater resistance is checked by the PCM almost immediately after the engine is started. The same O2S heater return pin used to read the heater resistance is capable of detecting an open, shorted high or shorted low circuit.

OPERATION - The Oxygen Sensor Heater Monitor begins after the ignition has been turned OFF and the O2 sensors have cooled. As the sensor cools down, the resistance increases and the PCM reads the increase in voltage. Once voltage has increased to a predetermined amount, higher than when the test started, the oxygen sensor is cool enough to test heater operation.

When the oxygen sensor is cool enough, the PCM provides a ground path for the O2S heater circuit. Voltage to the O2 sensor begins to increase the temperature. As the sensor temperature increases, the internal resistance decreases.

The heater elements are tested each time the engine is turned OFF if all the enabling conditions are met. If the monitor fails, the PCM stores a maturing fault and a Freeze Frame is entered. If two consecutive tests fail, a DTC is stored. Because the ignition is OFF, the MIL is illuminated at the beginning of the next key cycle, after the 2nd failure.

CATALYST MONITOR

DESCRIPTION - To comply with clean air regulations, vehicles are equipped with catalytic converters. These converters reduce the emission of hydrocarbons, oxides of nitrogen and carbon monoxide.

Normal vehicle miles or engine misfire can cause a catalyst to decay. A meltdown of the ceramic core can cause a restriction of the exhaust. This can increase vehicle emissions and deteriorate engine performance, driveability and fuel economy.

The catalyst monitor uses dual oxygen sensors (O2Ss) to monitor the efficiency of the converter. The dual O2S strategy is based on the fact that as a catalyst deteriorates, its oxygen storage capacity and its efficiency are both reduced. By monitoring the oxygen storage capacity of a catalyst, its efficiency can be indirectly calculated. The upstream O2S is used to detect the amount of oxygen in the exhaust gas before the gas enters the catalytic converter. The PCM calculates the air/fuel mixture from the output of the O2S. A low voltage indicates high oxygen content (lean mixture). A high voltage indicates a low content of oxygen (rich mixture).

When the upstream O2S detects a high oxygen condition, there is an abundance of oxygen in the exhaust gas. A functioning converter would store this oxygen so it can use it for the oxidation of HC and CO. As the converter absorbs the oxygen, there will be a lack of oxygen downstream of the converter. The output of the downstream O2S will indicate limited activity in this condition.

As the converter loses the ability to store oxygen, the condition can be detected from the behavior of the downstream O2S. When the efficiency drops, no chemical reaction takes place. This means the concentration of oxygen will be the same downstream as upstream. The output voltage of the downstream O2S copies the voltage of the upstream sensor. The only difference is a time lag (seen by the PCM) between the switching of the O2Ss.

To monitor the system, the number of lean-to-rich switches of upstream and downstream O2Ss is counted. The ratio of downstream switches to upstream switches is used to determine whether the catalyst is operating properly. An effective catalyst will have fewer downstream switches than it has upstream switches i.e., a ratio closer to zero. For a totally ineffective catalyst, this ratio will be one-to-one, indicating that no oxidation occurs in the device.

The system must be monitored so that when catalyst efficiency deteriorates and exhaust emissions increase to over the legal limit, the MIL will be illuminated.

OPERATION - To monitor catalyst efficiency, the PCM expands the rich and lean switch points of the heated oxygen sensor. With extended switch points, the air/fuel mixture runs richer and leaner to overburden the catalytic converter. Once the test is started, the air/fuel mixture runs rich and lean and the O2S switches are counted. A switch is counted when an oxygen sensor signal goes from below the lean threshold to above the rich threshold. The number of Rear O2S switches is divided by the number of Front O2S switches to determine the switching ratio.

The test runs for 20 seconds. As catalyst efficiency deteriorates over the life of the vehicle, the switch rate at the downstream sensor approaches that of the upstream sensor. If at any point during the test period the switch ratio reaches a predetermined value, a counter is incremented by one. The monitor is enabled to run another test during that trip. When the test fails three times, the counter increments to three, a malfunction is entered, and a Freeze Frame is stored. When the counter increments to three during the next trip, the code is matured and the MIL is illuminated. If the test passes the first, no further testing is conducted during that trip.

The MIL is extinguished after three consecutive good trips.

DESCRIPTION - MONITORED SYSTEMS

There are new electronic circuit monitors that check fuel, emission, engine and ignition performance. These monitors use information from various sensor circuits to indicate the overall operation of the fuel, engine, ignition and emission systems and thus the emissions performance of the vehicle.

The fuel, engine, ignition and emission system monitors do not indicate a specific component problem. They do indicate that there is an implied problem within one of the systems and that a specific problem must be diagnosed.

If any of these monitors detect a problem affecting vehicle emissions, the Malfunction Indicator Lamp (MIL) will be illuminated. These monitors generate Diagnostic Trouble Codes that can be displayed with the a DRBIII® scan tool.

The following is a list of the system monitors:

- EGR Monitor
- Misfire Monitor
- Fuel System Monitor
- Oxygen Sensor Monitor
- Oxygen Sensor Heater Monitor
- Catalyst Monitor
- Evaporative Vacuum Leak Detection System Monitor

Following is a description of each system monitor and its DTC.

Refer to the appropriate Powertrain Diagnostic Procedures manual for diagnostic procedures.

OXYGEN SENSOR (O2S) MONITOR

DESCRIPTION - Effective control of exhaust emissions is achieved by an oxygen feedback system. The most important element of the feedback system is the O2S. The O2S is located in the exhaust path. Once it reaches operating temperature 300° to 350°C (572° to 662°F), the sensor generates a voltage that is inversely proportional to the amount of oxygen in the exhaust. When there is a large amount of oxygen in the exhaust caused by a lean condition, misfire or exhaust leak, the sensor produces a low voltage, below 450mV. When the oxygen content is lower, caused by a rich condition, the sensor produces a higher voltage, above 450mV.

The information obtained by the sensor is used to calculate the fuel injector pulse width. The PCM is programmed to maintain the optimum air/fuel ratio. At this mixture ratio, the catalyst works best to remove hydrocarbons (HC), carbon monoxide (CO) and nitrous oxide (NOx) from the exhaust.

The O2S is also the main sensing element for the EGR, Purge System, and Catalyst and Fuel Monitors.

The O2S may fail in any or all of the following manners:

- Slow response rate (Big Slope)
- Reduced output voltage (Half Cycle)
- Heater Performance
- Dynamic shift
- Shorted or open circuits

Slow Response Rate (Big Slope) - Response rate is the time required for the sensor to switch from lean to rich signal output once it is exposed to a richer than optimum air/fuel mixture or vice versa. As the PCM adjusts the air/fuel ratio, the sensor must be able to rapidly detect the change. As the sensor ages, it could take longer to detect the changes in the oxygen content of the exhaust gas. The rate of change that an oxygen sensor experiences is called 'Big Slope'. The PCM checks the oxygen sensor voltage in increments of a few milliseconds.

Reduced Output Voltage (Half Cycle) - The output voltage of the O2S ranges from 0 to 1 volt. A good sensor can easily generate any output voltage in this range as it is exposed to different concentrations of oxygen. To detect a shift in the air/fuel mixture (lean or rich), the output voltage has to change beyond a threshold value. A malfunctioning sensor could have difficulty changing beyond the threshold value. Many times, the condition is only temporary and the sensor will recover. Under normal conditions the voltage signal surpasses the threshold and a counter is incremented by one. This is called the Half Cycle Counter.

OPERATION - As the Oxygen Sensor signal switches, the PCM monitors the half cycle and big slope signals from the oxygen sensor. If during the test neither counter reaches a predetermined value, a malfunction is entered and a Freeze Frame is stored. Only one counter reaching its predetermined value is needed for the monitor to pass.

The Oxygen Sensor Signal Monitor is a 2 trip monitor that is tested only once per trip. When the Oxygen Sensor fails the test in two consecutive trips, the MIL is illuminated and a DTC is set. The MIL is extinguished when the Oxygen Sensor monitor passes in three consecutive trips. The DTC is erased from memory after 40 consecutive warm-up cycles without test failure.

OXYGEN SENSOR HEATER MONITOR

DESCRIPTION - If the Oxygen sensor (O2S) DTC as well as a O2S heater DTC is present, the O2S Heater DTC MUST be repaired first. After the O2S Heater is repaired, verify that the sensor circuit is operating correctly.

Note: The O2S Heaters are kept off at coolant temperatures below 20°C (68°F) and at high engine rpm in order to avoid damaging the heaters. The voltage reading taken from the O2S are very temperature sensitive. The readings taken from the O2S are not accurate below 300°C (572°F). Heating the O2S is done to allow the engine controller to shift to closed loop control as soon as possible. The heating element used to heat the O2S must be tested to ensure that it is heating the sensor properly. The heater resistance is checked by the PCM almost immediately after the engine is started. The same O2S heater return pin used to read the heater resistance is capable of detecting an open, shorted high or shorted low circuit.

OPERATION - The Oxygen Sensor Heater Monitor begins after the ignition has been turned OFF and the O2 sensors have cooled. As the sensor cools down, the resistance increases and the PCM reads the increase in voltage. Once voltage has increased to a predetermined amount, higher than when the test started, the oxygen sensor is cool enough to test heater operation.

When the oxygen sensor is cool enough, the PCM provides a ground path for the O2S heater circuit. Voltage to the O2 sensor begins to increase the temperature. As the sensor temperature increases, the internal resistance decreases.

The heater elements are tested each time the engine is turned OFF if all the enabling conditions are met. If the monitor fails, the PCM stores a maturing fault and a Freeze Frame is entered. If two consecutive tests fail, a DTC is stored. Because the ignition is OFF, the MIL is illuminated at the beginning of the next key cycle, after the 2nd failure.

EGR MONITOR

The Powertrain Control Module (PCM) performs an on-board diagnostic check of the EGR system.

The EGR monitor is used to test whether the EGR system is operating within specifications. The diagnostic check activates only during selected engine/driving conditions. When the conditions are met, the EGR is turned off (solenoid de-energized) and the O2S compensation control is monitored. Turning off the EGR shifts the air/fuel ratio in the lean direction. The O2S data should indicate an increase in the O2 concentration in the combustion chamber when the exhaust gases are no longer recirculated. While this test does not directly measure the operation of the EGR system, it can be inferred from the shift in the O2S data whether the EGR system is operating correctly. Because the O2S is being used, the O2S test must pass its test before the EGR test. This monitor also looks at EGR linear potentiometer for feedback.

MISFIRE MONITOR

Excessive engine misfire results in increased catalyst temperature and causes an increase in HC emissions. Severe misfires could cause catalyst damage. To prevent catalytic convertor damage, the PCM monitors engine misfire.

The Powertrain Control Module (PCM) monitors for misfire during most engine operating conditions (positive torque) by looking at changes in the crankshaft speed. If a misfire occurs, the speed of the crankshaft will vary more than normal.

FUEL SYSTEM MONITOR

The PCM is programmed to maintain the optimum air/fuel ratio. This is done by making short term corrections in the fuel injector pulse width based on the O2S output. The programmed memory acts as a self–calibration tool that the engine controller uses to compensate for variations in engine specifications, sensor tolerances and engine fatigue over the life span of the engine. By monitoring the actual air/fuel ratio with the O2S (short term) and multiplying that with the program long term (adaptive) memory calculation, then comparing that to the limit, it can be determined whether it will pass an emissions test. If a malfunction occurs such that the PCM cannot maintain the optimum air/fuel ratio, then the MIL will be illuminated.

CATALYST MONITOR

DESCRIPTION - To comply with clean air regulations, vehicles are equipped with catalytic converters. These converters reduce the emission of hydrocarbons, oxides of nitrogen and carbon monoxide.

Normal vehicle miles or engine misfire can cause a catalyst to decay. A meltdown of the ceramic core can cause a restriction of the exhaust. This can increase vehicle emissions and deteriorate engine performance, driveability and fuel economy.

The catalyst monitor uses dual oxygen sensors (O2Ss) to monitor the efficiency of the converter. The dual O2S strategy is based on the fact that as a catalyst deteriorates, its oxygen storage capacity and its efficiency are both reduced. By monitoring the oxygen storage capacity of a catalyst, its efficiency can be indirectly calculated. The upstream O2S is used to detect the amount of oxygen in the exhaust gas before the gas enters the catalytic converter. The PCM calculates the air/fuel mixture from the output of the O2S. A low voltage indicates high oxygen content (lean mixture). A high voltage indicates a low content of oxygen (rich mixture).

When the upstream O2S detects a high oxygen condition, there is an abundance of oxygen in the exhaust gas. A functioning converter would store this oxygen so it can use it for the oxidation of HC and CO. As the converter absorbs the oxygen, there will be a lack of oxygen downstream of the converter. The output of the downstream O2S will indicate limited activity in this condition.

As the converter loses the ability to store oxygen, the condition can be detected from the behavior of the downstream O2S. When the efficiency drops, no chemical reaction takes place. This means the concentration of oxygen will be the same downstream as upstream. The output voltage of the downstream O2S copies the voltage of the upstream sensor. The only difference is a time lag (seen by the PCM) between the switching of the O2Ss.

To monitor the system, the number of lean-to-rich switches of upstream and downstream O2Ss is counted. The ratio of downstream switches to upstream switches is used to determine whether the catalyst is operating properly. An effective catalyst will have fewer downstream switches than it has upstream switches i.e., a ratio closer to zero. For a totally ineffective catalyst, this ratio will be one-to-one, indicating that no oxidation occurs in the device.

The system must be monitored so that when catalyst efficiency deteriorates and exhaust emissions increase to over the legal limit, the MIL will be illuminated.

OPERATION - To monitor catalyst efficiency, the PCM expands the rich and lean switch points of the heated oxygen sensor. With extended switch points, the air/fuel mixture runs richer and leaner to overburden the catalytic converter. Once the test is started, the air/fuel mixture runs rich and lean and the O2S switches are counted. A switch is counted when an oxygen sensor signal goes from below the lean threshold to above the rich threshold. The number of Rear O2S switches is divided by the number of Front O2S switches to determine the switching ratio.

The test runs for 20 seconds. As catalyst efficiency deteriorates over the life of the vehicle, the switch rate at the downstream sensor approaches that of the upstream sensor. If at any point during the test period the switch ratio reaches a predetermined value, a counter is incremented by one. The monitor is enabled to run another test during that trip. When the test fails three times, the counter increments to three, a malfunction is entered, and a Freeze Frame is stored. When the counter increments to three during the next trip, the code is matured and the MIL is illuminated. If the test passes the first, no further testing is conducted during that trip.

The MIL is extinguished after three consecutive good trips.

EVAPORATIVE VACUUM LEAK DETECTION SYSTEM

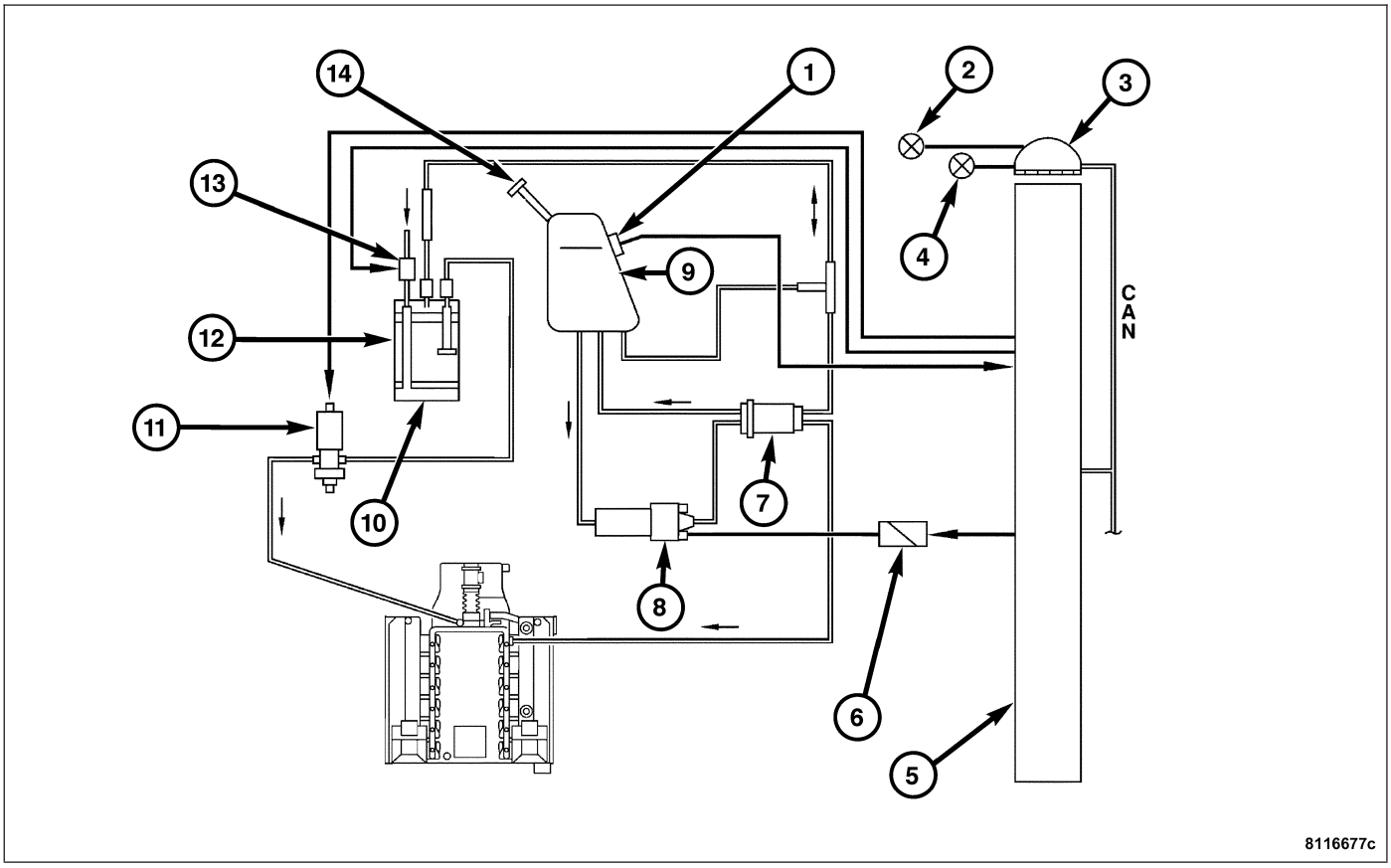

1 - FUEL LEVEL SENDING UNIT/PRESSURE SENSOR
2 - FUEL WARNING INDICATOR
3 - INSTRUMENT CLUSTER
4 - MALFUNCTION INDICATOR LAMP
5 - POWERTRAIN CONTROL MODULE
6 - FUEL PUMP RELAY
7 - FUEL FILTER/PRESSURE REGULATOR
8 - FUEL PUMP
9 - FUEL TANK
10 - FUEL VAPOR PRESSURE RELIEF VALVE
11 - EVAP PURGE SOLENOID
12 - EVAP CANISTER
13 - CHARCOAL CANISTER SHUTOFF VALVE
14 - FUEL FILLER CAP

The Evaporative Vacuum Leak Detection (EVLD) system has replaced the leak detection pump as the method of evaporative system leak detection. This is to detect a leak equivalent to a 0.5 mm (0.020 in.) hole. This system has the capability to detect holes of this size very dependably. In addition to the detection of very small leaks, this system has the capability of detecting medium as well as large evaporative system leaks.

The EVLD system incorporates the EVAP Purge Hoses, EVAP Canister, fuel tank, fuel filler neck and fuel filler cap with the Charcoal Canister Shutoff Valve, EVAP Purge Solenoid, PCM and engine vacuum to detect a leak in the purge system.

The PCM seals the Charcoal Canister Shutoff Valve and opens the EVAP Purge Solenoid to perform the 3–stage leak test after the following conditions have been met:

- Battery voltage > 11 volts
- Engine running for approximately 16 minutes

- Engine idling
- Vehicle at rest
- Emission controls in closed loop
- Intake air temperature less than 45°C (113°F)
- Engine coolant temperature at startup < 100°C (212°F)
- Engine load < 35%
- Transmission in Drive or Reverse
- Secondary air injection not active
- Atmospheric pressure > 780 hPa (11.31 psi) i.e., altitude > 8200 feet
- Low purge canister activity
- Fuel tank level between 1/4 and 3/4
- No excessive fuel slosh in the fuel tank
- No fault in the Charcoal Canister Shutoff Valve, EVAP Purge Solenoid, or Fuel Tank Pressure Sensor
- No leak in the ORVR Pressure Relief Valve

The leak test consists of three successive tests that are dependent on the previous test passing. If one test fails, the next test will not be run. The major leak test begins by closing the Charcoal Canister Shutoff Valve and opening the EVAP Purge Solenoid to allow engine vacuum to build to 6 mbar (2.4 inH2O), as measured by the Fuel Tank Pressure Sensor, in the fuel tank within approximately 12 seconds. If there is no vacuum buildup in the fuel tank, there is a major leak present, the leak test is aborted, the Low Fuel Warning Indicator is illuminated in the instrument cluster and a DTC is stored in the PCM.

If the major leak test passes, the EVAP Purge Solenoid is closed when vacuum inside the fuel tank reaches approximately 6 mbar (2.4 inH2O) and the vacuum is analyzed for approximately 30 seconds. The vacuum must not drop by more than 0.3 to 0.5 mbar (0.12 to 0.2 inH2O), depending on the fuel level in the fuel tank, during the 30 second time period. If there is a minor leak, the leak test is aborted and a DTC is stored in the PCM. The leak test will be aborted if an excessive lean correction occurs during vacuum buildup.

If the minor leak test passes, the micro leak test initiates by again bringing the vacuum in the fuel tank up to approximately 6 mbar (2.4 inH2O). Once the vacuum in the fuel tank is re-established, the EVAP Purge Solenoid is closed. The vacuum must not drop by more than 0.1 to 0.15 mbar (0.04 to 0.06 inH2O), depending on the fuel level in the fuel tank, per second. If the vacuum drops more rapidly, a DTC is stored in the PCM. The leak test will be aborted if an excessive lean correction occurs during vacuum buildup.

When the leak test is complete, the EVAP Purge Solenoid is opened and the purge control system returns to normal operation.

DESCRIPTION - NON-MONITORED CIRCUITS

The PCM does not monitor all circuits, systems and conditions that could have malfunctions causing driveability problems. However, malfunctions in these systems may cause the PCM to store diagnostic trouble codes for other systems or components. For example, a fuel pressure problem will not register a fault directly but could cause a rich/lean condition or misfire. This could cause the PCM to store an oxygen sensor or misfire diagnostic trouble code.

The major non-monitored circuits are listed below along with examples of failure modes that do not directly cause the PCM to set a DTC, but instead for a system that is monitored.

FUEL PRESSURE

The fuel pressure regulator controls fuel system pressure. The PCM cannot detect a clogged fuel pump inlet filter, clogged in-line fuel filter, or a pinched fuel supply or return line. However, these could result in a rich or lean condition causing the PCM to store an oxygen sensor, fuel system, or misfire diagnostic trouble code.

SECONDARY IGNITION CIRCUIT

The PCM cannot detect an inoperative ignition coil, fouled or worn spark plugs, ignition cross firing, or open spark plug cables. The misfire will, however, increase the oxygen content in the exhaust, deceiving the PCM into thinking the fuel system is too lean. Also see misfire detection.

CYLINDER COMPRESSION

The PCM cannot detect uneven, low, or high engine cylinder compression. Low compression lowers O2 content in the exhaust, leading to a fuel system, oxygen sensor or misfire detection fault.

EXHAUST SYSTEM

The PCM cannot detect a plugged, restricted or leaking exhaust system. It may set an EGR, Fuel system or O2S fault.

FUEL INJECTOR MECHANICAL MALFUNCTIONS

The PCM cannot determine if a fuel injector is clogged, the needle is sticking or if the wrong injector is installed. However, these could result in a rich or lean condition causing the PCM to store a diagnostic trouble code for either misfire, an oxygen sensor or the fuel system.

EXCESSIVE OIL CONSUMPTION

Although the PCM monitors engine exhaust oxygen content when the system is in closed loop, it cannot determine excessive oil consumption.

THROTTLE BODY AIR FLOW

The PCM cannot detect a clogged or restricted air cleaner inlet or filter element.

VACUUM ASSIST

The PCM cannot detect leaks or restrictions in the vacuum circuits of vacuum assisted engine control system devices or vacuum assisted accessories. However, these could cause the PCM to store a MAP sensor diagnostic trouble code and cause a high idle condition.

PCM SYSTEM GROUND

The PCM cannot determine a poor system ground. However, one or more diagnostic trouble codes may be generated as a result of this condition.

PCM CONNECTOR ENGAGEMENT

The PCM may not be able to determine spread or damaged connector pins. However, it might store diagnostic trouble codes as a result of pins not making good contact.

DESCRIPTION - DRB III® STATE DISPLAY TEST MODE

The switch (component) inputs to the Powertrain Control Module (PCM) have two recognized states; HIGH and LOW. The PCM cannot recognize the difference between a selected switch position versus an open circuit, a short circuit or a defective switch. If the State Display screen shows the change from HIGH to LOW or LOW to HIGH, assume the entire switch circuit to the PCM functions properly. From the state display screen, access either State Display Inputs and Outputs or State Display Sensors.

DESCRIPTION - HIGH AND LOW LIMITS

The PCM compares input signal voltages from each input device with established high and low limits for the device. If the input voltage is not within limits and other criteria are met, the PCM stores a diagnostic trouble code in memory. Other diagnostic trouble code criteria might include engine RPM limits or input voltages from other sensors or switches that must be present before verifying a diagnostic trouble code condition.

DESCRIPTION - TRIP DEFINITION

A “Trip” means vehicle operation (following an engine-off period) of duration and driving mode such that all components and systems are monitored at least once by the diagnostic system. The monitors must successfully pass before the PCM can verify that a previously malfunctioning component is meeting the normal operating conditions of that component. For misfire or fuel system malfunction, the MIL may be extinguished if the fault does not recur when monitored during three subsequent sequential driving cycles in which conditions are similar to those under which the malfunction was first determined.

Anytime the MIL is illuminated, a DTC is stored. The DTC can self erase only after the MIL has been extinguished. Once the MIL is extinguished, the PCM must pass the diagnostic test for the most recent DTC for 40 warm-up cycles (80 warm-up cycles for the Fuel System Monitor and the Misfire Monitor). A warm-up cycle can best be described by the following:

- The engine must be running
- A rise of 4.4°C (40°F) in engine temperature must occur from the time engine was started
- Engine coolant temperature must crossover 71°C (160°F)
- A “driving cycle” that consists of engine start up and engine shut off.

Once the above conditions occur, the PCM is considered to have passed a warm-up cycle. Due to the conditions required to extinguish the MIL and erase the DTC, it is most important that after a repair has been made, all DTCs be erased and the repair verified by running 1 good trip.

DESCRIPTION - VEHICLE EMISSION CONTROL INFORMATION LABEL

All models have a Vehicle Emission Control Information (VECI) Label. DaimlerChrysler permanently attaches the label in the engine compartment. It cannot be removed without defacing information and destroying the label.

The label contains the vehicle’s emission specifications and vacuum hose routings. All hoses must be connected and routed according to the label.

OPERATION - SYSTEM

The Powertrain Control Module (PCM) monitors many different circuits in the fuel injection, ignition, emission and engine systems. If the PCM senses a problem with a monitored circuit often enough to indicate an actual problem, it stores a Diagnostic Trouble Code (DTC) in the PCM’s memory. If the code applies to a non-emissions related component or system and the problem is repaired or ceases to exist, the PCM cancels the code after 40 warmup cycles. Diagnostic trouble codes that affect vehicle emissions illuminate the Malfunction Indicator Lamp (MIL).

Certain criteria must be met before the PCM stores a DTC in memory. The criteria may be a specific range of engine RPM, engine temperature, and/or input voltage to the PCM.

The PCM might not store a DTC for a monitored circuit even though a malfunction has occurred. This may happen because one of the DTC criteria for the circuit has not been met. **For example** , assume the diagnostic trouble code criteria requires the PCM to monitor the circuit only when the engine operates between 750 and 2000 rpm. Suppose the sensor’s output circuit shorts to ground when the engine operates above 2400 rpm (resulting in 0 volt input to the PCM). Because the condition happens at an engine speed above the maximum threshold (2000 rpm), the PCM will not store a DTC.

There are several operating conditions for which the PCM monitors and sets DTCs. Refer to Monitored Systems, Monitored Components, and Non-Monitored Circuits in this section.

Note: Various diagnostic procedures may actually cause a diagnostic monitor to set a DTC. For instance, pulling a spark plug wire to perform a spark test may set the misfire code. When a repair is completed and verified, use the DRB III® scan tool to erase all DTCs and extinguish the MIL.

Technicians can retrieve stored DTCs. For obtaining the DTC information, use the Data Link Connector(2) with the DRB III® scan tool.

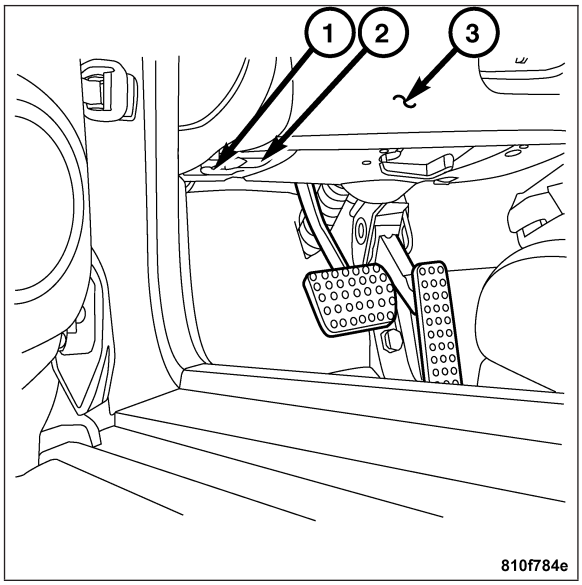

EVAPORATIVE EMISSIONS

TABLE OF CONTENTS

page

EVAPORATIVE EMISSIONS
DESCRIPTION - EVAPORATION CONTROL SYSTEM 15
CHARCOAL CANISTER SHUTOFF VALVE
DESCRIPTION 16
OPERATION 16
REMOVAL 16
INSTALLATION 16
CRANKCASE VENT HOSE
DESCRIPTION 16
EVAP PURGE SOLENOID
DESCRIPTION 17
OPERATION 17
REMOVAL 17
INSTALLATION 18
FUEL FILLER CAP
DESCRIPTION 18
OPERATION 18
ORVR
DESCRIPTION 18
OPERATION 19
VAPOR CANISTER
DESCRIPTION 20
OPERATION 20
REMOVAL 20
INSTALLATION 21

EVAPORATIVE EMISSIONS

DESCRIPTION - EVAPORATION CONTROL SYSTEM

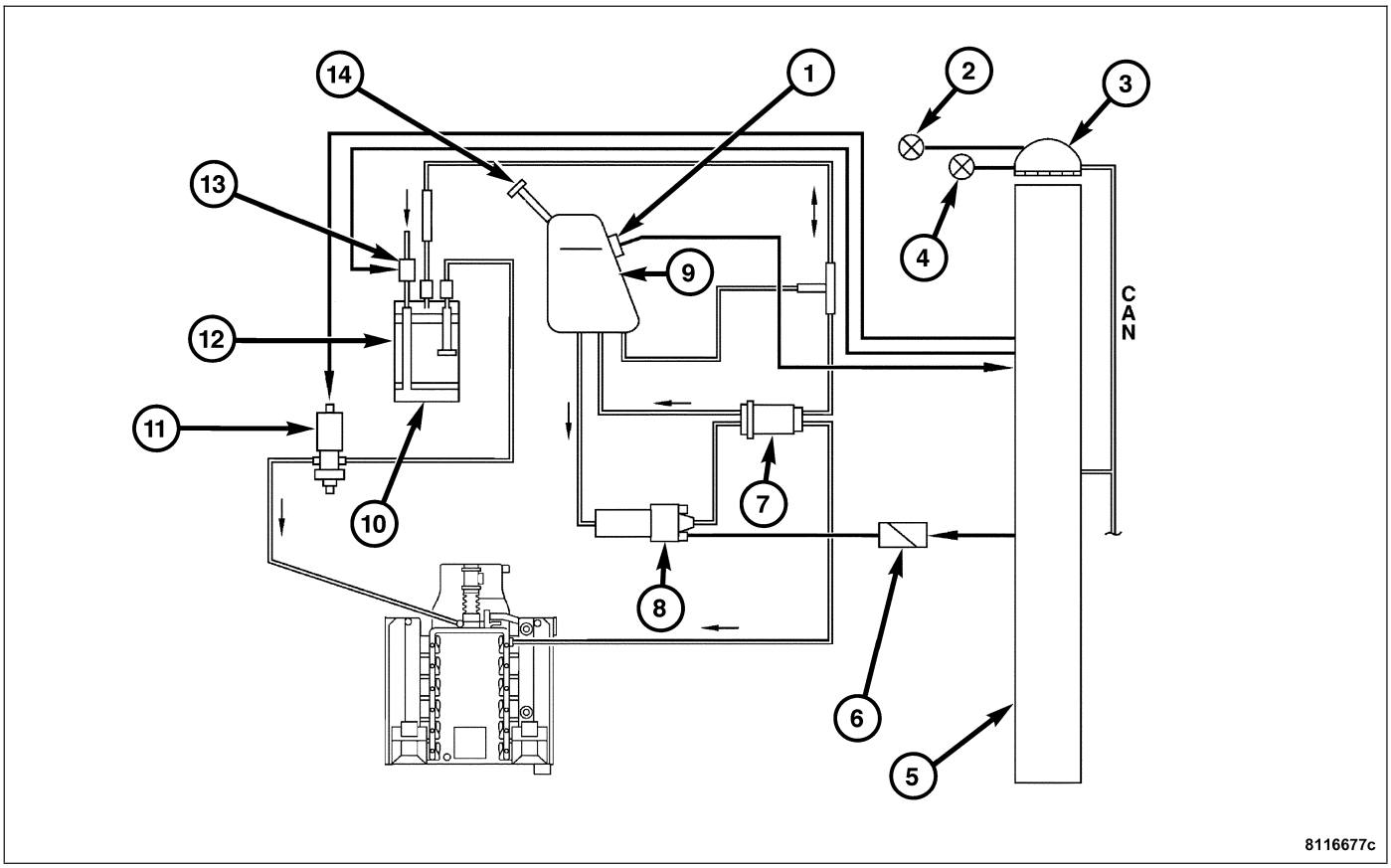

1 - FUEL LEVEL SENDING UNIT/PRESSURE SENSOR
2 - FUEL WARNING INDICATOR
3 - INSTRUMENT CLUSTER
4 - MALFUNCTION INDICATOR LAMP
5 - POWERTRAIN CONTROL MODULE
6 - FUEL PUMP RELAY
7 - FUEL FILTER/PRESSURE REGULATOR
8 - FUEL PUMP
9 - FUEL TANK
10 - FUEL VAPOR PRESSURE RELIEF VALVE
11 - EVAP PURGE SOLENOID
12 - EVAP CANISTER
13 - CHARCOAL CANISTER SHUTOFF VALVE
14 - FUEL FILLER CAP

The evaporation control system prevents the emission of fuel tank vapors into the atmosphere. When fuel evaporates in the fuel tank, the vapors pass through vent hoses or tubes to an activated carbon filled evaporative canister. The canister temporarily holds the vapors. The Powertrain Control Module (PCM) allows intake manifold vacuum to draw vapors into the combustion chambers during certain operating conditions.

This vehicle uses a pulse-width modulated purge solenoid system. The PCM controls vapor flow by operating the purge solenoid. Refer to EVAP Purge Solenoid in this section.

Note: The evaporative system uses specially manufactured hoses. If they need replacement, only use fuel resistant hose. Also the hoses must be able to pass an Ozone compliance test.

Note: For more information on Onboard Refueling Vapor Recovery (ORVR), refer to the Fuel Delivery section.

CHARCOAL CANISTER SHUTOFF VALVE

DESCRIPTION

The Charcoal Canister Shutoff Valve is part of the Evaporative Vacuum Leak Detection (EVLD) system. The Charcoal Canister Shutoff Valve is mounted on the EVAP Canister. This assembly is located above a splash shield in front of the right rear axleshaft.

OPERATION

The Charcoal Canister Shutoff Valve is actuated by the PCM to isolate the EVAP purge system in order to determine if a leak exists in any of the purge system components.

REMOVAL

For removal procedure, **Refer to Page 25-20**.

INSTALLATION

For installation procedure, **Refer to Page 25-21**.

CRANKCASE VENT HOSE

DESCRIPTION

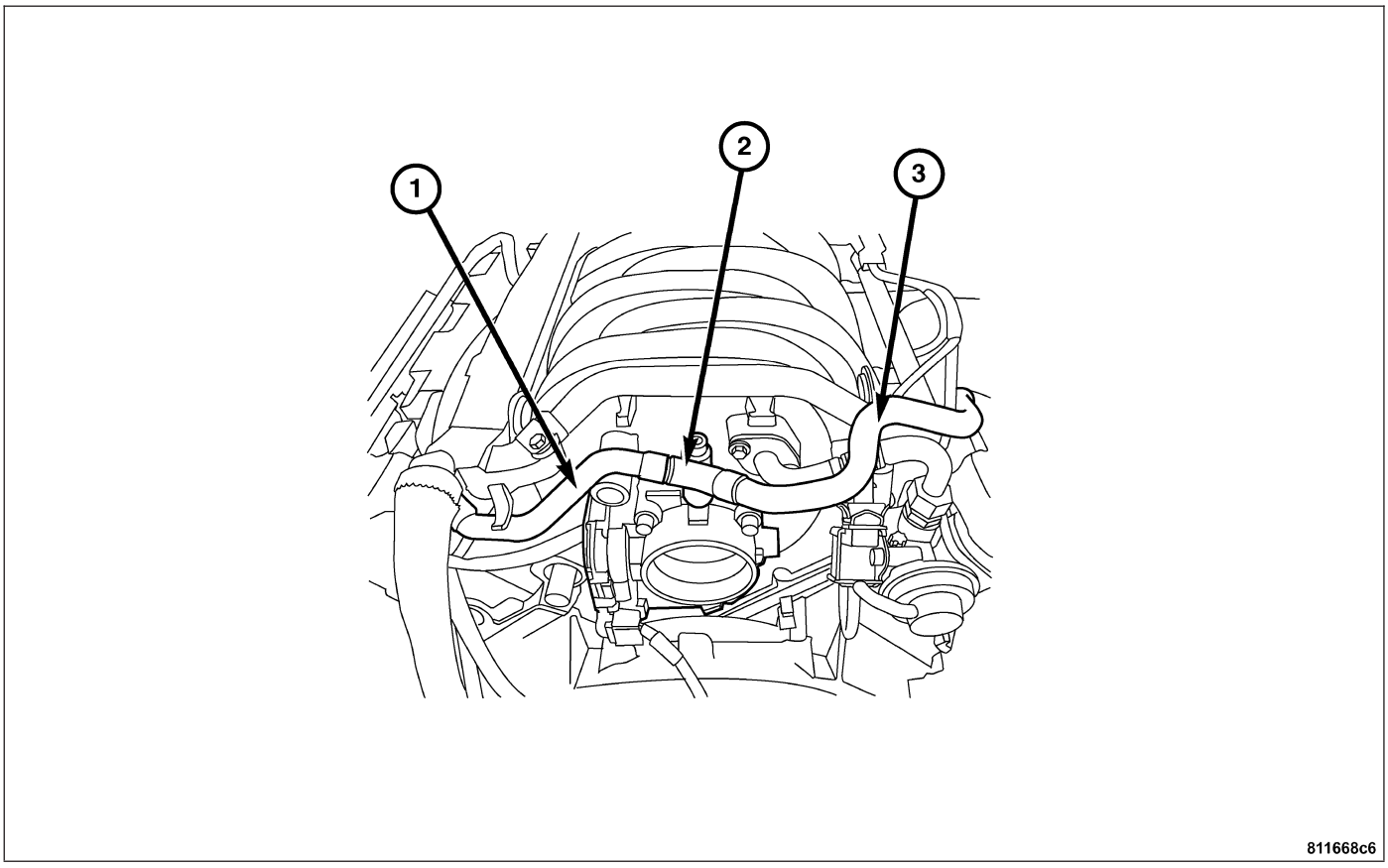

The PCV system consists of a draft-tube style throttle body insert (2) and hoses (1 and 3) connected between the cylinder head covers and the throttle body insert (2).

Crankcase ventilation is accomplished by means of a draft-tube style insert (2) protruding through the throttle body into the intake airstream (4). The crankcase gases are drawn into the intake manifold when air passing the tube insert creates a vacuum in the Crankcase Vent Hoses (1 and 3).

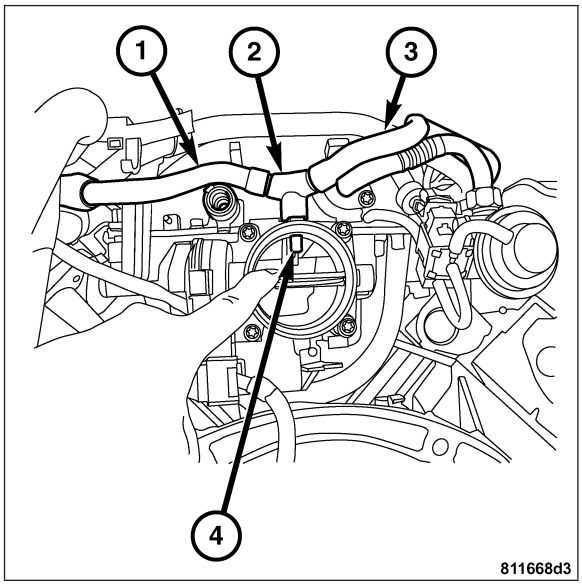

EVAP PURGE SOLENOID

DESCRIPTION

This vehicle uses a pulse-width modulated purge solenoid. The solenoid regulates the rate of vapor flow from the EVAP canister to the throttle body. The PCM controls the frequency at which the solenoid operates in order to customize the vapor volume for each cylinder.

OPERATION

The PCM will only energize the solenoid when the engine is at operating temperature, but will de-energize it during periods of deceleration. When de-energized, no vapors are purged.

The pulse-width modulated purge solenoid controls the fuel vapor purge rate from the vapor canister and fuel tank to the engine intake manifold.

REMOVAL

1. Disconnect harness connector from solenoid (2).
2. Disconnect vapor hoses (1 and 4) from solenoid (3).
3. Remove solenoid (3) from bracket (5).

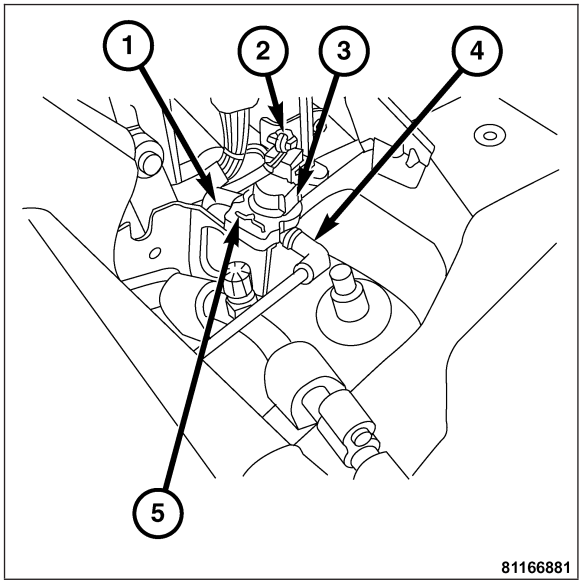

INSTALLATION

1. Install solenoid (3) on bracket (5).
2. Connect vapor hoses (1 and 4) to solenoid (3).
3. Connect connector (2) to solenoid (3).

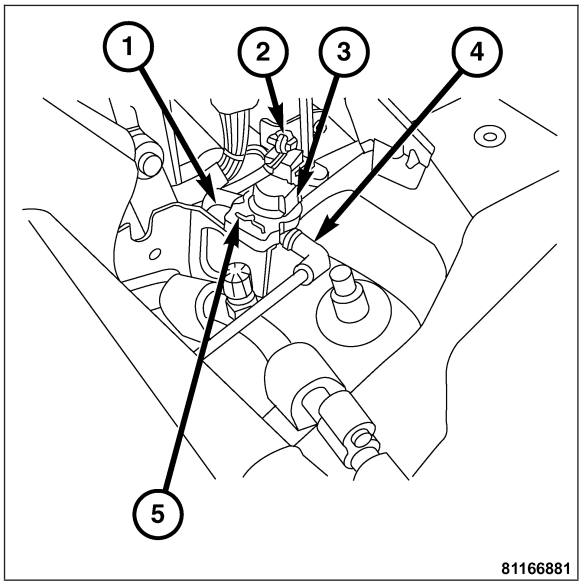

FUEL FILLER CAP

DESCRIPTION

The plastic/metal fuel filler cap is installed with a quarter turn onto the end of the fuel filler tube. Its purpose is to retain vapors and fuel in the fuel tank.

OPERATION

The fuel filler cap incorporates a two-way relief valve that is closed to atmosphere during normal operating conditions. The relief valve is calibrated to open when a pressure of 172 mbar (2.5 psi) or vacuum of 20 mbar (8 inH2O) occurs in the fuel tank. When the pressure or vacuum is relieved, the valve returns to the normally closed position.

WARNING: REMOVE THE FUEL FILLER CAP TO RELEASE FUEL TANK PRESSURE BEFORE DISCONNECTING ANY FUEL SYSTEM COMPONENT.

ORVR

DESCRIPTION

The Onboard Refueling Vapor Recovery (ORVR) System is used to remove excess vapors in the fuel tank during refueling.

OPERATION

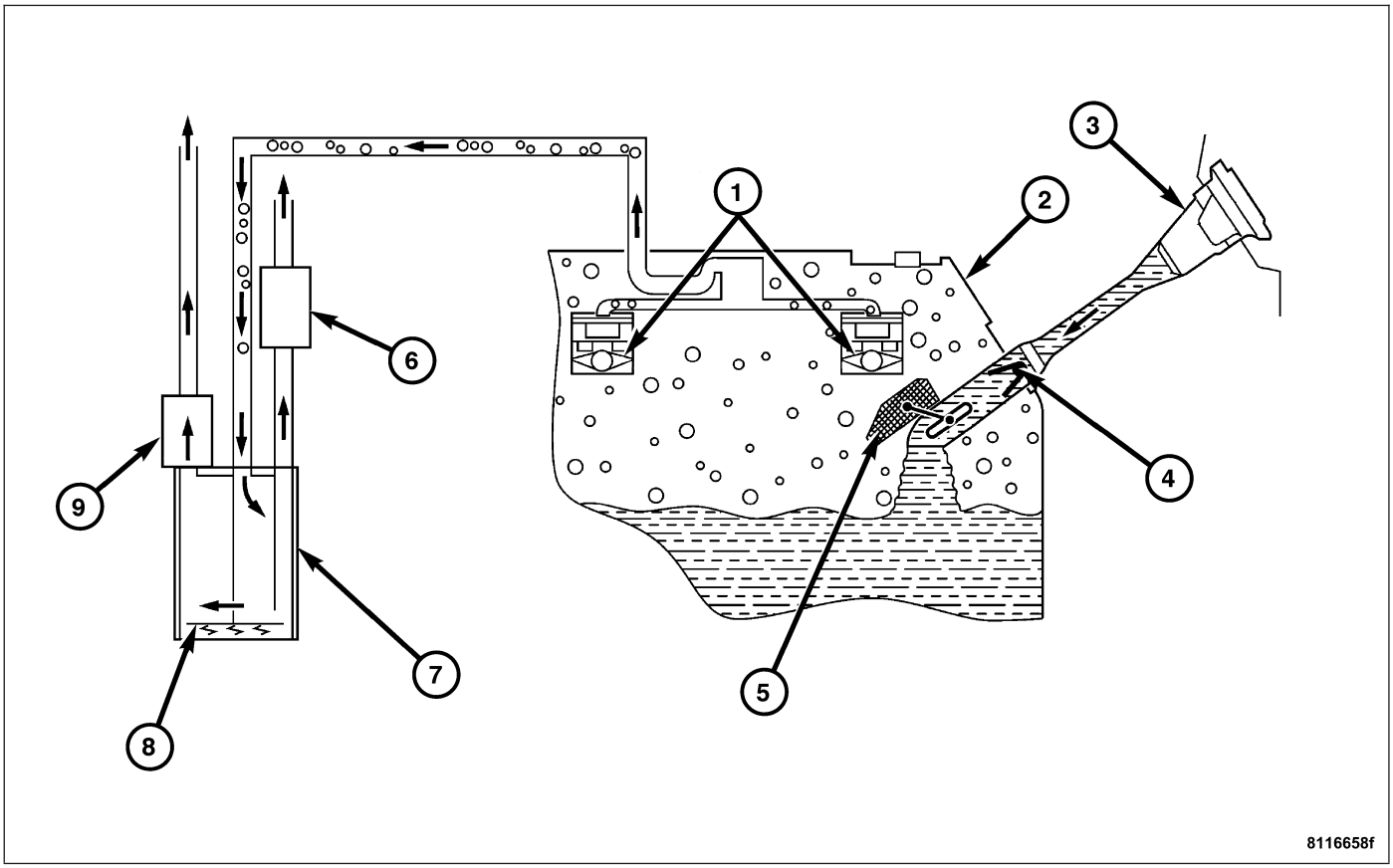

1 - TANK VENT/ROLLOVER VALVES
2 - FUEL TANK
3 - FUEL FILLER TUBE
4 - FUEL FILLER TUBE CHECK VALVE
5 - FUEL TANK OVERFILL CHECK VALVE
6 - EVAP PURGE SOLENOID
7 - EVAP CANISTER
8 - FUEL VAPOR PRESSURE RELIEF VALVE
9 - CHARCOAL CANISTER SHUTOFF VALVE

The emission control principle used in the ORVR system is that the fuel flowing into the fuel filler tube (3) creates an aspiration effect which draws air into the fuel filler tube (3). During refueling, the fuel tank (2) is vented to the EVAP canister (7) to capture escaping vapors. With air flowing into the fuel filler tube (3), there are no fuel vapors escaping to the atmosphere. Once the refueling vapors are captured by the EVAP Canister (7), the vehicle's computer controlled purge system draws vapor out of the canister for the engine to burn. The vapor flow is metered by the EVAP purge solenoid (6) so that there is minimal or no impact on driveability or tailpipe emissions.

As fuel starts to flow through the Fuel Filler Tube (3), it opens the normally closed Fuel Filler Tube Check Valve (4) and enters the fuel tank (2). Vapor or air is expelled from the tank through the tank vent/rollover valves (1) to the EVAP canister (7). Vapor is absorbed in the canister (7) until vapor flow in the lines stops, either following refueling shut-off or by having the fuel level in the tank rise high enough to close the check valves in the tank vent/rollover valves (1). The fuel filler tube (3) also incorporates a fuel tank overfill check valve (5). As fuel level rises, the fuel tank overfill check valve (5) seals the in-tank end of the fuel filler tube (3). This largely prevents overfilling of the fuel tank (2). At this point in the fueling of the vehicle, the tank pressure increases, the fuel filler tube check valve (4) closes (preventing tank fuel from spitting back at the operator), and fuel then rises up the filler tube (3) to shut-off the dispensing nozzle.

VAPOR CANISTER

DESCRIPTION

The EVAP Canister is located above a splash shield in front of the right rear axleshaft.

OPERATION

This vehicle uses a maintenance-free, evaporative (EVAP) canister filled with activated carbon granules. Fuel tank vapors are vented into the canister where they are absorbed by the activated carbon granules. The canister temporarily holds the fuel vapors until intake manifold vacuum draws them into the combustion chamber. The Powertrain Control Module (PCM) purges the canister through the pulse-width modulated purge solenoid. The PCM purges the canister at predetermined intervals and engine conditions.

REMOVAL

1. Disconnect the negative battery cable.
2. Raise and support the vehicle.
3. Remove the shield retaining nuts from splash shield.
4. Remove the splash shield.
5. Carefully disconnect the vapor/vacuum/vent hoses (2).
6. Slide the EVAP canister (4) to the left, off of mounting bracket.
7. Disconnect the charcoal canister shutoff valve harness connector (1).

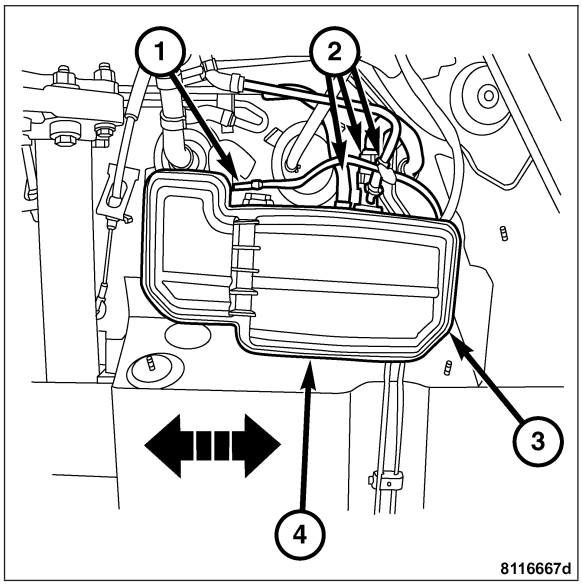

8. Depress the locking tab (2) to release charcoal canister shutoff valve (1).
9. While holding the lock tab (2) in release position, turn charcoal canister shutoff valve (1) clockwise and remove from EVAP canister.
10. Discard the old o-ring (3).

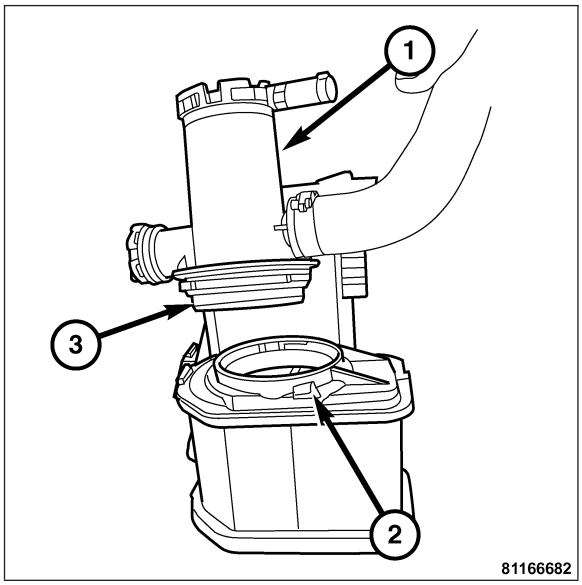

INSTALLATION

1. Install the charcoal canister shutoff valve (1) to EVAP canister (2) using new o-ring (3).

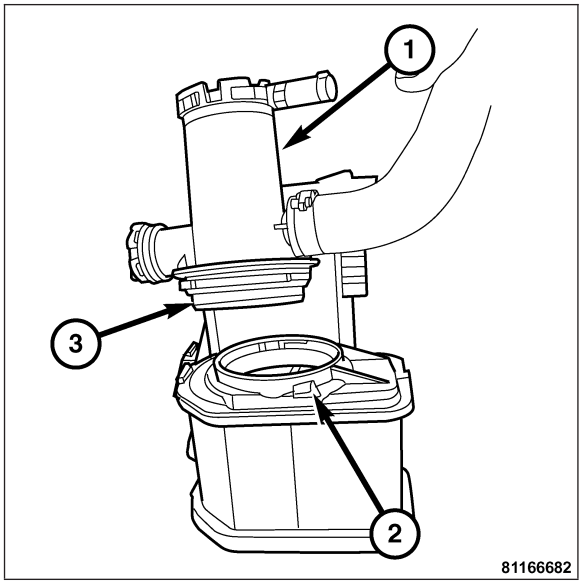

2. Connect the charcoal canister shutoff valve harness connector (1).
3. Connect the hoses (2).
4. Slide the EVAP canister to the right, on to mounting bracket.

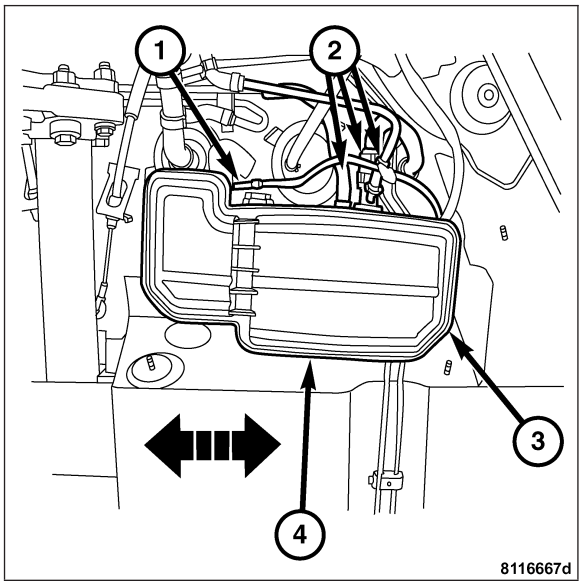

5. Install the splash shield and retaining nuts.
6. Lower the vehicle.
7. Connect the negative battery cable.

EXHAUST GAS RECIRCULATION

TABLE OF CONTENTS

page

EXHAUST GAS RECIRCULATION
SPECIFICATIONS - TORQUE 23
SOLENOID
REMOVAL 24
INSTALLATION 25
TUBE
REMOVAL 26
INSTALLATION 26
VALVE
DESCRIPTION 27
OPERATION 27
REMOVAL 27
INSTALLATION 28

EXHAUST GAS RECIRCULATION

SPECIFICATIONS - TORQUE

TORQUE SPECIFICATIONS

DESCRIPTION	N·m	Ft. Lbs.	In. Lbs.
EGR VALVE TO CYLINDER HEAD	31	23	275
EGR TUBE TO EGR VALVE	11	—	95
EGR TUBE TO INTAKE MANIFOLD	11	—	95
EGR SOLENOID TO EGR VALVE	11	—	95

SOLENOID

REMOVAL

1. Disconnect the negative battery cable.
2. Remove the air cleaner housing.
3. Disconnect the solenoid harness connector (1).
4. Disconnect the solenoid vacuum lines (2).

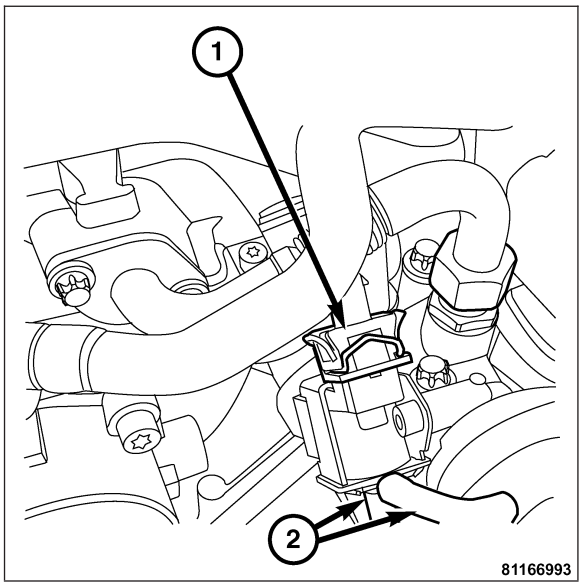

5. Remove the solenoid to valve mounting bolt (2).
6. Remove the valve to cylinder head mounting bolt (1).
7. Clean the gasket surfaces. Discard the old gasket. Clean the EGR passages as necessary.

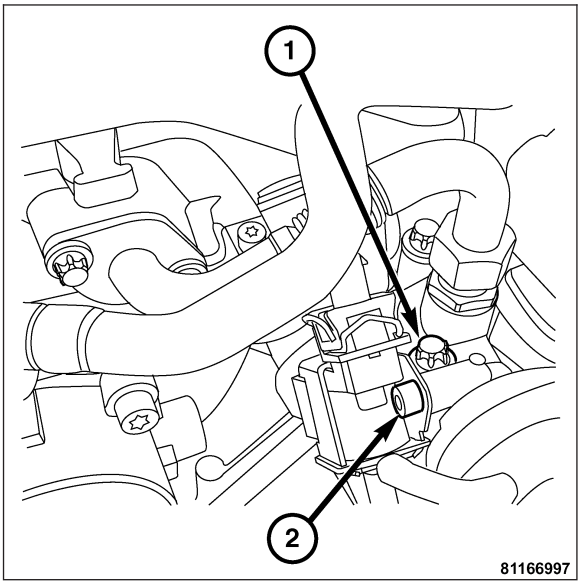

INSTALLATION

1. Position the solenoid to valve and loosely install solenoid to valve bolt (2).
2. Install the valve bolt (1) to cylinder head and tighten to 31 N·m (23 ft. lbs.).
3. Tighten the solenoid to valve bolt (2) to 11 N·m (95 in. lbs.).

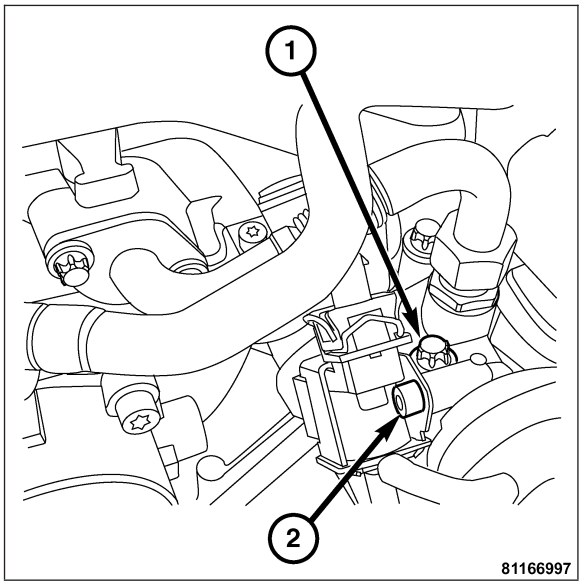

4. Connect the vacuum hoses (2).
5. Connect the EGR solenoid harness connector (1).
6. Install the air cleaner housing.
7. Connect the negative battery cable.

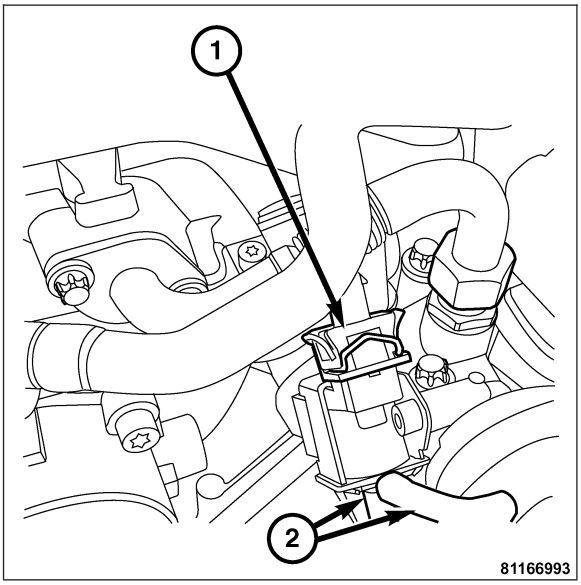

TUBE

REMOVAL

1. Remove the air cleaner housing.
2. Remove the EGR tube mounting bolts (1) at intake manifold.
3. Remove the EGR tube flange nut (2) at EGR valve.
4. Remove the EGR tube.
5. Clean the gasket surfaces on the EGR tube and intake manifold. Discard old gasket. Note that any loose dirt can lodge between the tube and manifold and cause vacuum leakage that will give a rough idle and reduced manifold vacuum.

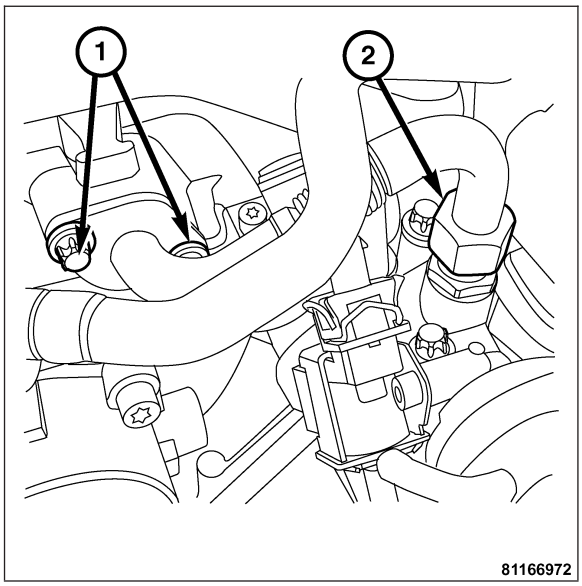

INSTALLATION

1. Loosely install the EGR tube flange nut (2) to the EGR valve.
2. Position the new gasket between tube and intake manifold.
3. Install the tube bolts (1) to intake manifold and tighten to 31 N·m (23 ft. lbs.).
4. Tighten the EGR tube flange nut (2) to 11 N·m (95 in. lbs.).
5. Install the air cleaner housing.

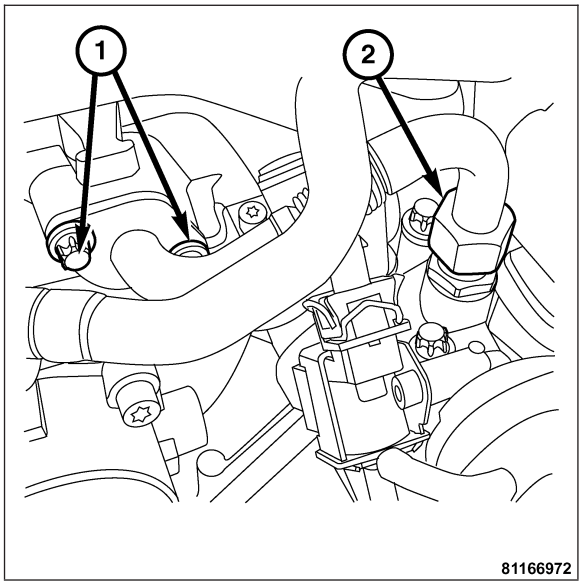

VALVE

DESCRIPTION

The EGR valve consists of three major components; the EGR tube (1), the EGR solenoid (2), and the EGR valve (3). The EGR valve (3) is located at the right rear of the engine and is attached to the right cylinder head, to the right of the throttle body (4). The EGR solenoid (2) is attached to the EGR valve (3) on the throttle body side of the valve. The EGR tube (1) connects the EGR valve (3) to the rear of the intake manifold (5).

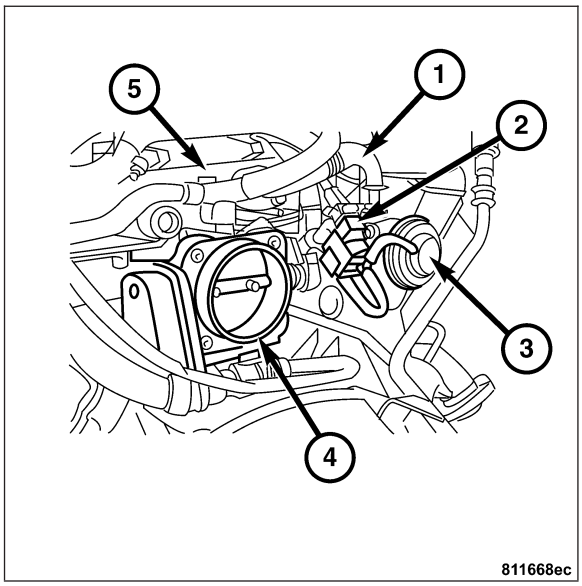

OPERATION

The exhaust gas recirculation flow is determined by the powertrain control module (PCM). For a given set of conditions, the PCM calulates the ideal exhaust gas recirculation flow to minimize NOx emissions and maximize fuel economy by adjusting the pintle position. Pintle position is controlled by the EGR solenoid. The PCM adjusts the duty cycle of the power supplied to the solenoid coil to obtain the correct position.

REMOVAL

1. Disconnect the negative battery cable.
2. Remove the air cleaner housing.
3. Disconnect the solenoid harness connector (1).
4. Disconnect the solenoid to valve vacuum line (2).

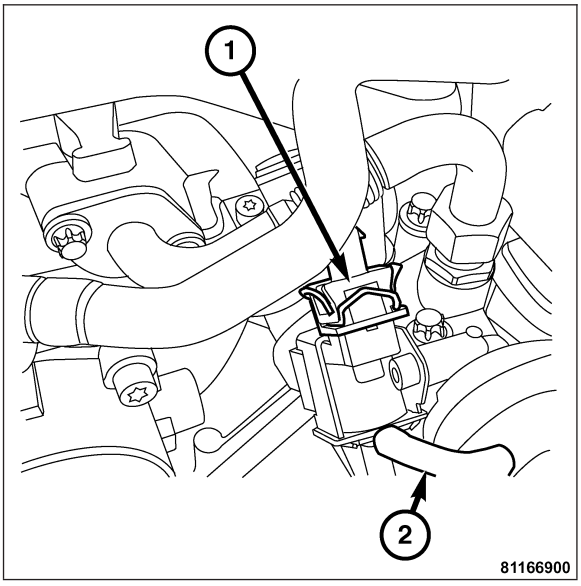

5. Remove the EGR tube flange nut (2) at valve.
6. Remove the solenoid to valve mounting bolt (3).
7. Remove the valve to cylinder head mounting bolts (1).
8. Clean the gasket surfaces. Discard the old gasket. Clean the EGR passages as necessary.

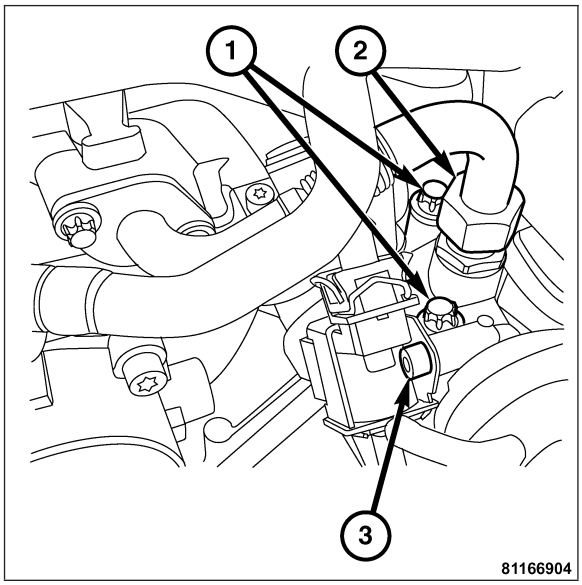

INSTALLATION

1. Position new gasket between the valve and cylinder head.
2. Loosely install valve front bolt (1) to cylinder head, do not tighten bolt.
3. Position solenoid to valve and loosely install solenoid (3) to valve bolt.
4. Loosely install valve rear bolt (2) to cylinder head, do not tighten bolt.

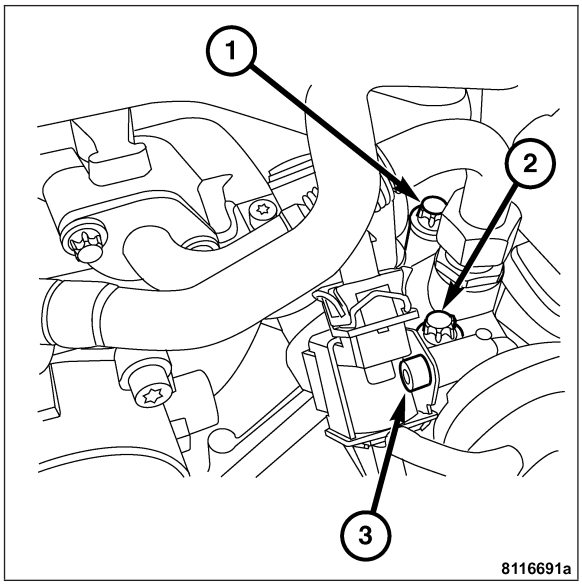

5. Loosely install the EGR tube flange nut (2) to valve.
6. Tighten the valve to cylinder head bolts (1) to 31 N·m (23 ft. lbs.).
7. Tighten the flange nut (2) to 11 N·m (95 in. lbs.).
8. Tighten the solenoid to valve bolt (3) to 11 N·m (95 in. lbs.).

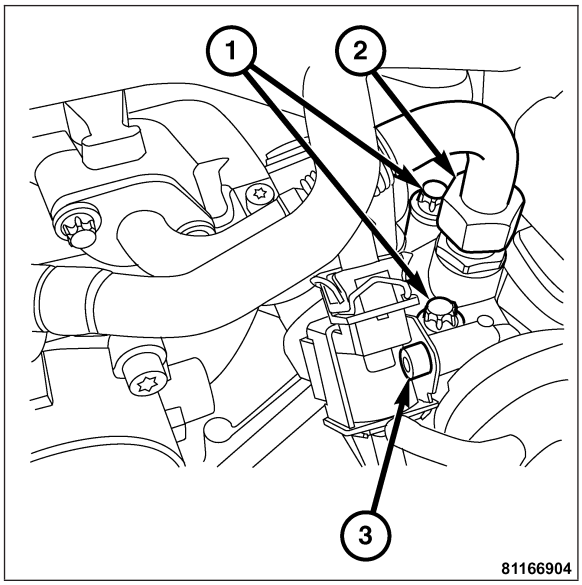

9. Connect the solenoid harness connector (1).
10. Connect the vacuum hose (2).
11. Install the air cleaner housing.
12. Connect the negative battery cable.

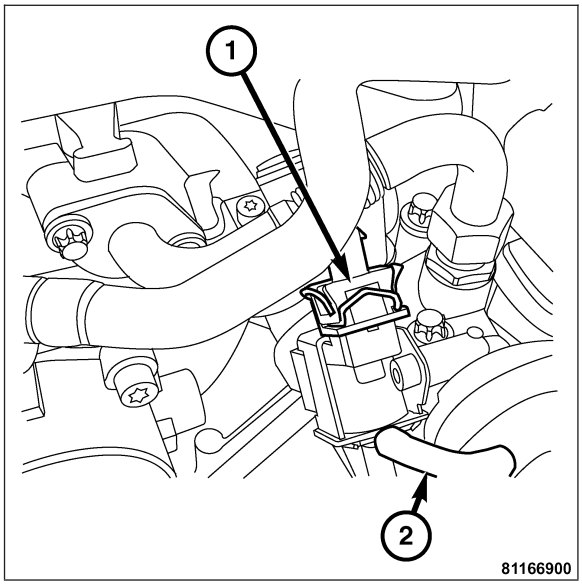

AIR INJECTION

TABLE OF CONTENTS

page

AIR INJECTION
DESCRIPTION 30
OPERATION 31
SPECIFICATIONS 31
AIR PUMP
REMOVAL 32
INSTALLATION 33

page

SWITCHOVER SOLENOID
REMOVAL 34
INSTALLATION 35
SWITCHOVER VALVE
REMOVAL 36
INSTALLATION 36

AIR INJECTION

DESCRIPTION

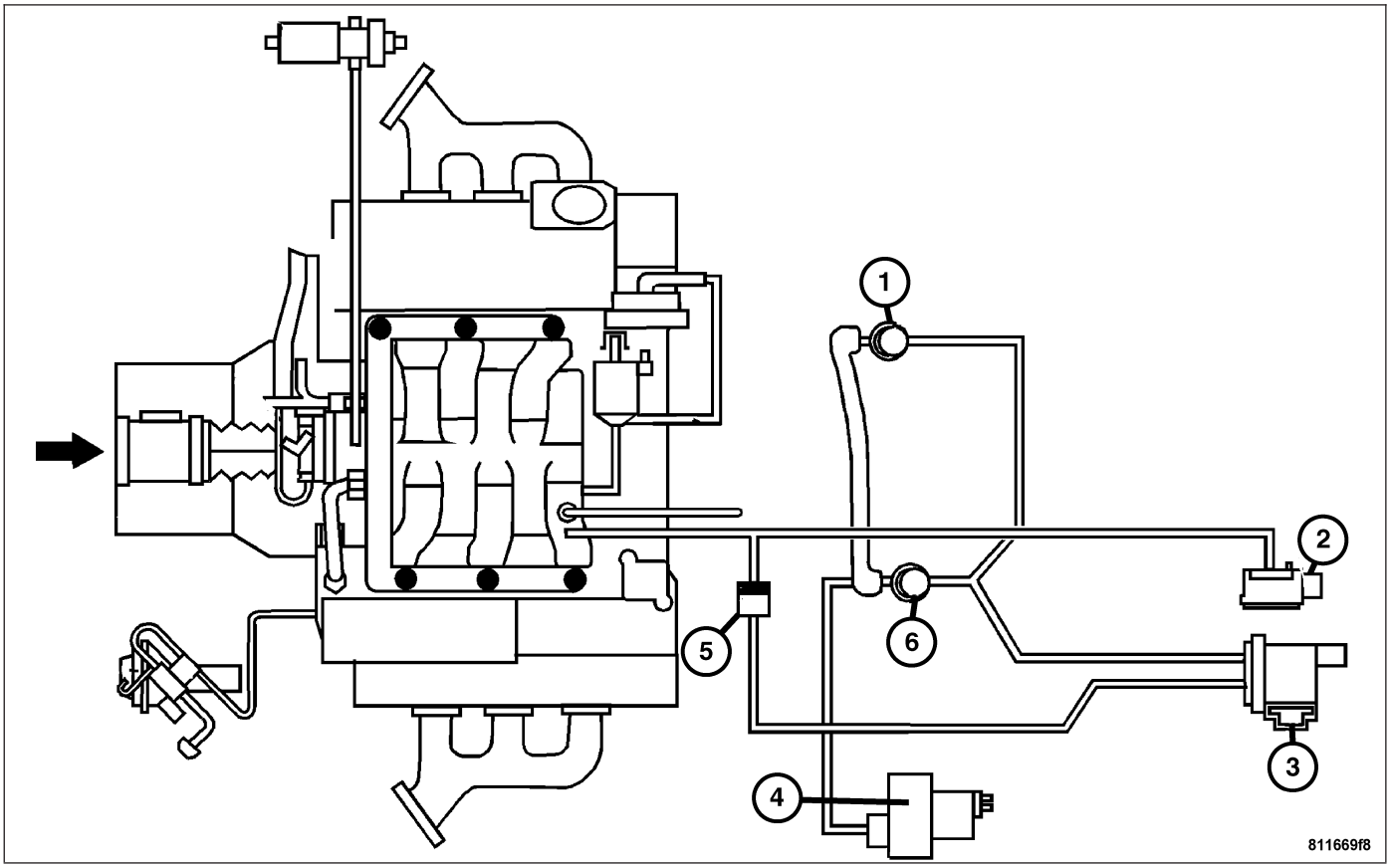

1 - AIR PUMP SWITCHOVER VALVE (LH)
2 - MANIFOLD ABSOLUTE PRESSURE SENSOR
3 - AIR PUMP SWITCHOVER SOLENOID
4 - AIR PUMP
5 - VACUUM CHECK VALVE
6 - AIR PUMP SWITCHOVER VALVE (RH)

This vehicle is equipped with an air pump that injects air into the exhaust to reduce the emissions during engine warmup. The air injected into the exhaust will cause the catalytic converters to heat up more quickly. This will improve the emission levels during a cold start. The air pump switchover system incorporates an air pump (4) with two air pump switchover valves (1 and 6), an air pump switchover solenoid (3), an air pump relay, a vacuum check valve (5) and the PCM.

The air pump relay is located in the relay control module and can be easily identified by referring to the relay control module label. The air pump is mounted to the top center of the engine timing cover. The air pump switchover valves (1 and 6) are located at the front, top of the engine, mounted just in front of the left and right cylinder covers. The air pump switchover solenoid (3) is mounted on the right front of the engine, just below the air pump switchover valve RH (6).

OPERATION

Air is allowed to enter the exhaust when the PCM simultaneously actuates the air pump relay, air pump (1), and air pump switchover solenoid (4) after engine startup for up to 2 1/2 minutes. The following conditions must also be met in order for the system to become active:

- Coolant temperature >10°C (50°F) but <60°C (140°F)
- Engine speed <3000 rpm
- Throttle valve not wide open

After an actuation, the air injection system will remain deactivated until the coolant temperature drops from >60°C (140°F) to <40°C (104°F).

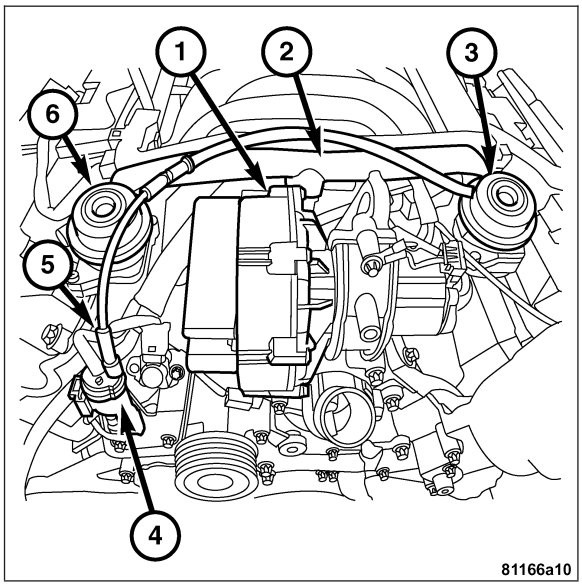

The air pump (1) draws in air through a maintenance-free filter and pumps it to the air pump switchover valves (3 and 6). The air pump switchover valves (3 and 6) prevent exhaust gases from flowing back into the air pump (1).

The air pump switchover solenoid (4) is supplied with vacuum from the intake manifold through a check valve (5). When the air pump switchover solenoid (4) is activated, it passes engine vacuum to the air pump switchover valves (3 and 6). The air which is delivered via the air pump switchover tube (2) is forced through the valves into the cylinder head openings to the exhaust. The injected air reacts with the hot exhaust gases in the outlet port. An oxidation of carbon monoxides (CO) and hydrocarbons (HC) takes place and results in an additional increase in the exhaust temperature.

SPECIFICATIONS

TORQUE

DESCRIPTION	N·m	Ft. Lbs.	In. Lbs.
AIR PUMP RETAINING BRACKET	20	—	177

AIR PUMP

REMOVAL

1. Disconnect the negative battery cable.
2. Remove the air cleaner housing.
3. Disconnect the air pump switchover tube (1).
4. Disconnect the air pump harness connector (2).

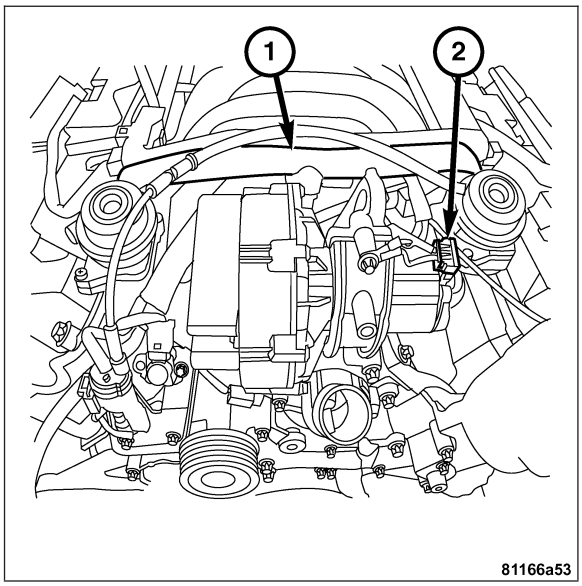

5. Remove the air pump retaining bolt (2).
6. Remove the air pump (1) from the air pump retaining bracket (3).

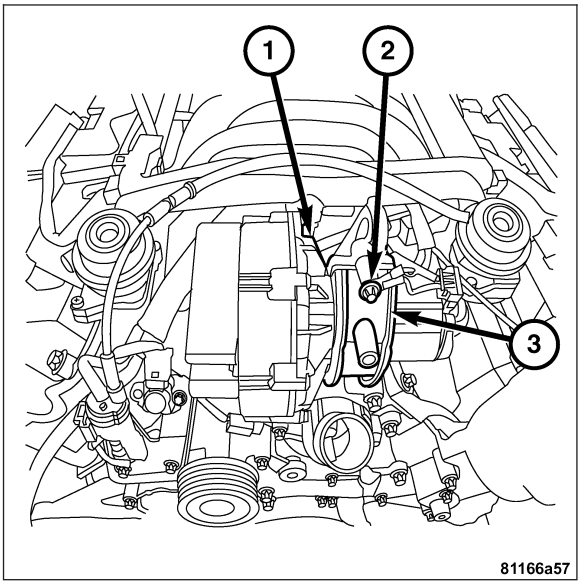

INSTALLATION

1. Position the air pump (1) into the air pump retaining bracket (3).
2. Install the air pump retaining bolt (2) and tighten to 20 N·m (177 in. lbs.) torque.

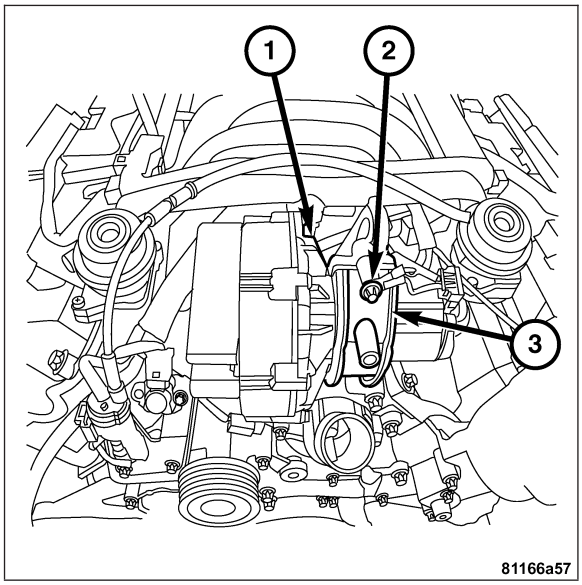

3. Connect the air pump harness connector (2).
4. Connect the air pump switchover tube (1).
5. Install the air cleaner housing.
6. Connect the negative battery cable.

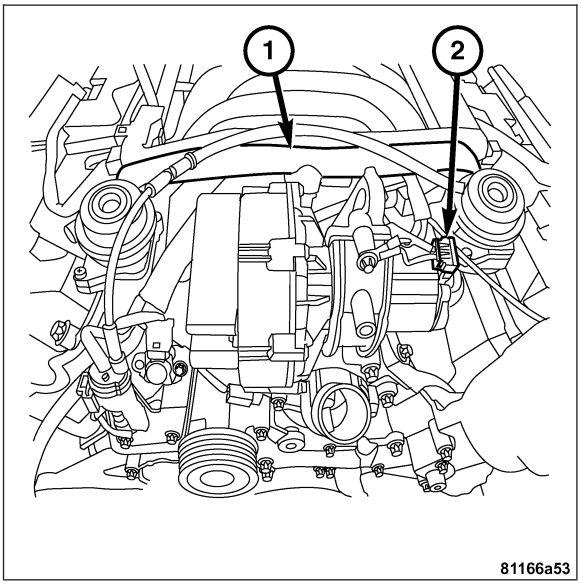

SWITCHOVER SOLENOID

REMOVAL

1. Disconnect the negative battery cable.
2. Remove the air cleaner housing.
3. Disconnect the air pump switchover solenoid harness connector (2).
4. Disconnect the vacuum lines (1).

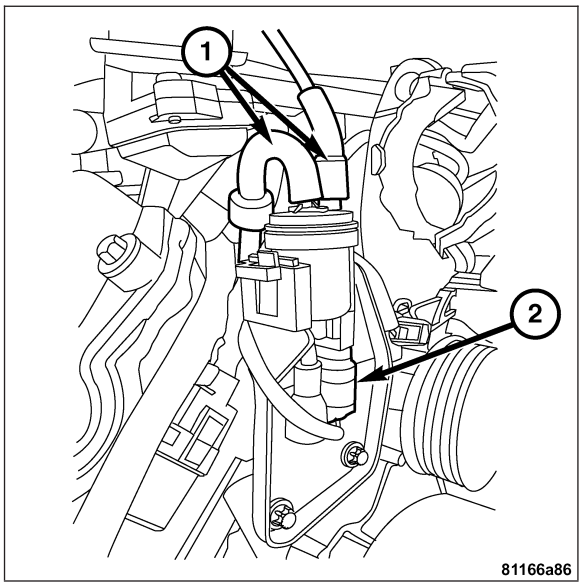

5. Pull the air pump switchover solenoid locking tab (1) away from air pump switchover solenoid (2).
6. Remove the air pump switchover solenoid (2) from air pump switchover solenoid retaining bracket (3).

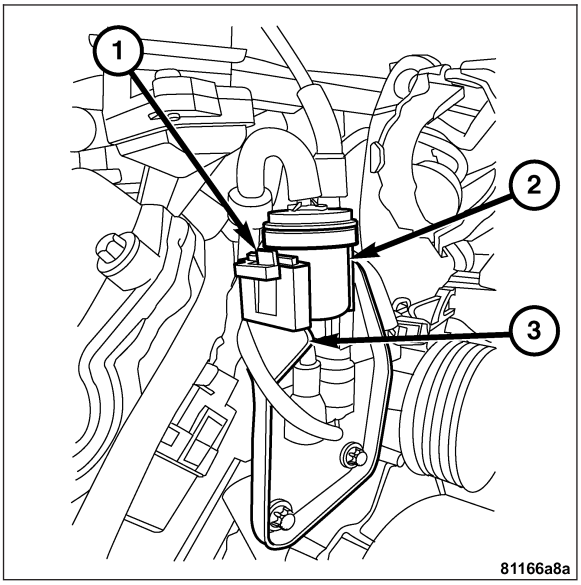

INSTALLATION

1. Position the air pump switchover solenoid (2) above air pump switchover solenoid mounting bracket (3) and lower until air pump switchover solenoid locking tab (1) snaps into place.

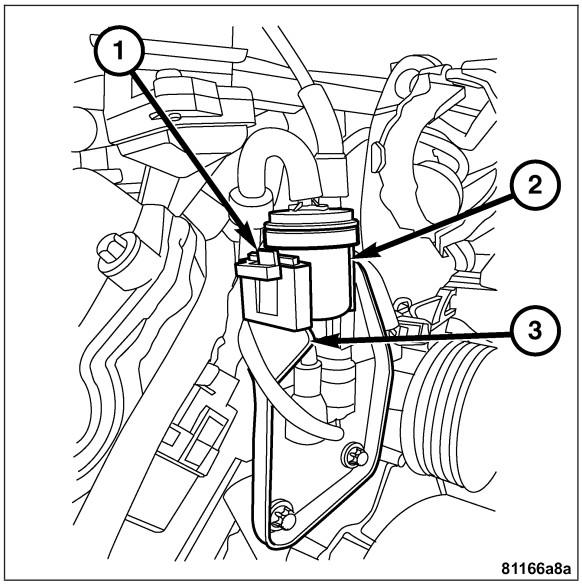

2. Connect the vacuum lines (1).
3. Connect the air pump switchover solenoid harness connector (2).
4. Install the air cleaner housing.
5. Connect the negative battery cable.

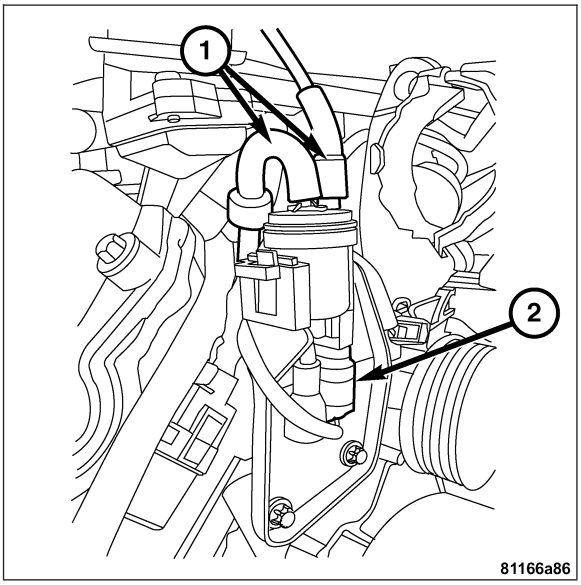

SWITCHOVER VALVE

REMOVAL

1. Disconnect the negative battery cable.
2. Remove the air cleaner housing.
3. Disconnect the vacuum line (3).
4. Disconnect the air pump switchover tube (2).
5. Remove the air pump switchover valve retaining bolt (4).
6. Remove the air pump switchover valve (1) discard the old gasket.

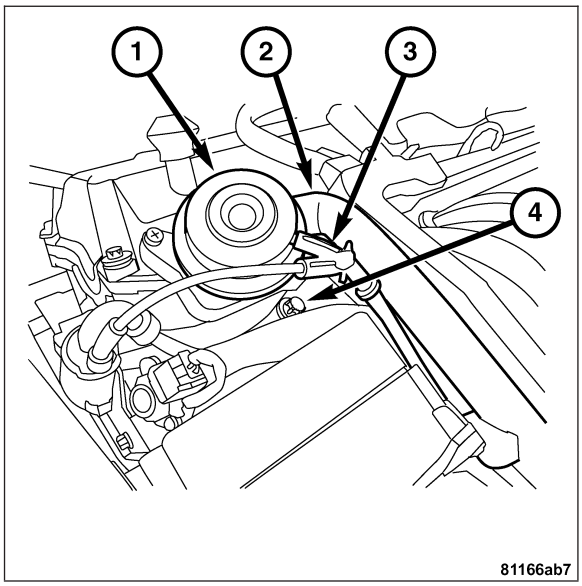

INSTALLATION

1. Position the new gasket between intake manifold and air pump switchover valve (1).
2. Install the retaining bolt (4) and tighten to 20 N·m (177 in. lbs.).
3. Connect the vacuum line (3).
4. Connect the air pump switchover tube (2).
5. Install the air cleaner housing.
6. Connect the negative battery cable.

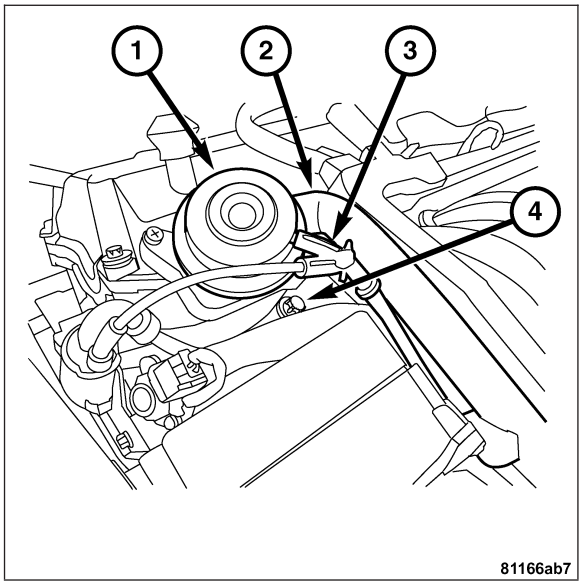

ON-BOARD DIAGNOSTICS

TABLE OF CONTENTS

page

TASK MANAGER
DESCRIPTION 37
OPERATION - TASK MANAGER 37

TASK MANAGER

DESCRIPTION

The PCM is responsible for efficiently coordinating the operation of all the emissions-related components. The PCM is also responsible for determining if the diagnostic systems are operating properly. The software designed to carry out these responsibilities is called the Task Manager.

OPERATION - TASK MANAGER

The Task Manager determines which tests happen when and which functions occur when. Many of the diagnostic steps required by OBD II must be performed under specific operating conditions. The Task Manager software organizes and prioritizes the diagnostic procedures. The job of the Task Manager is to determine if conditions are appropriate for tests to be run, monitor the parameters for a trip for each test, and record the results of the test. Following are the responsibilities of the Task Manager software:

- Test Sequence
- MIL Illumination
- Diagnostic Trouble Codes (DTCs)
- Trip Indicator
- Freeze Frame Data Storage
- Similar Conditions Window

Test Sequence

In many instances, emissions systems must fail diagnostic tests more than once before the PCM illuminates the MIL. These tests are know as 'two trip monitors.' Other tests that turn the MIL lamp on after a single failure are known as 'one trip monitors.' A trip is defined as 'start the vehicle and operate it to meet the criteria necessary to run the given monitor.'

Many of the diagnostic tests must be performed under certain operating conditions. However, there are times when tests cannot be run because another test is in progress (conflict), another test has failed (pending) or the Task Manager has set a fault that may cause a failure of the test (suspend).

- Pending

  Under some situations, the Task Manager will not run a monitor if the MIL is illuminated and a fault is stored from another monitor. In these situations, the Task Manager postpones monitors **pending** resolution of the original fault. The Task Manager does not run the test until the problem is remedied.

  For example, when the MIL is illuminated for an Oxygen Sensor fault, the Task Manager does not run the Catalyst Monitor until the Oxygen Sensor fault is remedied. Since the Catalyst Monitor is based on signals from the Oxygen Sensor, running the test would produce inaccurate results.

- Conflict

  There are situations when the Task Manager does not run a test if another monitor is in progress. In these situations, the effects of another monitor running could result in an erroneous failure. If this **conflict** is present, the monitor is not run until the conflicting condition passes. Most likely the monitor will run later after the conflicting monitor has passed.

  For example, if the Fuel System Monitor is in progress, the Task Manager does not run the EGR Monitor. Since both tests monitor changes in air/fuel ratio and adaptive fuel compensation, the monitors will conflict with each other.

- Suspend

Occasionally the Task Manager may not allow a two trip fault to mature. The Task Manager will **suspend** the maturing of a fault if a condition exists that may induce an erroneous failure. This prevents illuminating the MIL for the wrong fault and allows more precise diagnosis.

For example, if the PCM is storing a one trip fault for the Oxygen Sensor and the EGR monitor, the Task Manager may still run the EGR Monitor but will suspend the results until the Oxygen Sensor Monitor either passes or fails. At that point the Task Manager can determine if the EGR system is actually failing or if an Oxygen Sensor is failing.

MIL Illumination

The PCM Task Manager carries out the illumination of the MIL. The Task Manager triggers MIL illumination upon test failure, depending on monitor failure criteria.

The Task Manager Screen shows both a Requested MIL state and an Actual MIL state. When the MIL is illuminated upon completion of a test for a third trip, the Requested MIL state changes to OFF. However, the MIL remains illuminated until the next key cycle. During the key cycle for the third good trip, the Requested MIL state is OFF, while the Actual MIL state is ON. After the next key cycle, the MIL is not illuminated and both MIL states read OFF.

Diagnostic Trouble Codes (DTCs)

With OBD II, different DTC faults have different priorities according to regulations. As a result, the priorities determine MIL illumination and DTC erasure. DTCs are entered according to individual priority. DTCs with a higher priority overwrite lower priority DTCs.

Priorities

- Priority 0 - Non-emissions related trouble codes
- Priority 1 - One trip failure of a two trip fault for non-fuel system and non-misfire.
- Priority 2 - One trip failure of a two trip fault for fuel system (rich/lean) or misfire.
- Priority 3 - Two trip failure for a non-fuel system and non-misfire or matured one trip comprehensive component fault.
- Priority 4 — Two trip failure or matured fault for fuel system (rich/lean) and misfire or one trip catalyst damaging misfire.

Non-emissions related failures have no priority. One trip failures of two trip faults have low priority. Two trip failures or matured faults have higher priority. One and two trip failures of fuel system and misfire monitor take precedence over non-fuel system and non-misfire failures.

DTC Self Erasure

With one trip components or systems, the MIL is illuminated upon test failure and DTCs are stored.

Two trip monitors are components requiring failure in two consecutive trips for MIL illumination. Upon failure of the first test, the Task Manager enters a maturing code. If the component fails the test for a second time the code matures and a DTC is set.

After three good trips the MIL is extinguished and the Task Manager automatically switches the trip counter to a warm-up cycle counter. DTCs are automatically erased following 40 warm-up cycles if the component does not fail again.

For misfire and fuel system monitors, the component must pass the test under a Similar Conditions Window in order to record a good trip. A Similar Conditions Window is when engine RPM is within ±375 rpm and load is within ±10% of when the fault occurred.

Note: It is important to understand that a component does not have to fail under a similar window of operation to mature. It must pass the test under a Similar Conditions Window when it failed to record a Good Trip for DTC erasure for misfire and fuel system monitors.

DTCs can be erased anytime with a DRB III®. Erasing the DTC with the DRB III® erases all OBD II information. The DRB III® automatically displays a warning that erasing the DTC will also erase all OBD II monitor data. This includes all counter information for warmup cycles, trips and Freeze Frame.

Trip Indicator

The **Trip** is essential for running monitors and extinguishing the MIL. In OBD II terms, a trip is a set of vehicle operating conditions that must be met for a specific monitor to run. All trips begin with a key cycle.

Good Trip

The Good Trip counters are as follows:

- Specific Good Trip
- Fuel System Good Trip
- Misfire Good Trip
- Alternate Good Trip (appears as a Global Good Trip on DRB III®)
  - Comprehensive Components
  - Major Monitor
- Warmup Cycles

Specific Good Trip

The term Good Trip has different meanings depending on the circumstances:

- If the MIL is OFF, a trip is defined as when the Oxygen Sensor Monitor and the Catalyst Monitor have been completed in the same drive cycle.
- If the MIL is ON and a DTC was set by the Fuel Monitor or Misfire Monitor (both continuous monitors), the vehicle must be operated in the Similar Condition Window for a specified amount of time.
- If the MIL is ON and a DTC was set by a Task Manager commanded once-per-trip monitor (such as the Oxygen Sensor Monitor, Catalyst Monitor, Purge Flow Monitor, Leak Detection Pump Monitor, EGR Monitor or Oxygen Sensor Heater Monitor), a good trip is when the monitor is passed on the next start-up.
- If the MIL is ON and any other emissions DTC was set (not an OBD II monitor), a good trip occurs when the Oxygen Sensor Monitor and Catalyst Monitor have been completed, or two minutes of engine run time if the Oxygen Sensor Monitor and Catalyst Monitor have been stopped from running.

Fuel System Good Trip

To count a good trip (three required) and turn off the MIL, the following conditions must occur:

- Engine in closed loop
- Operating in Similar Conditions Window
- Short Term multiplied by Long Term less than threshold
- Less than threshold for a predetermined time

If all of the previous criteria are met, the PCM will count a good trip (three required) and turn off the MIL.

Misfire Good Trip

If the following conditions are met the PCM will count one good trip (three required) in order to turn off the MIL:

- Operating in Similar Condition Window
- 1000 engine revolutions with no misfire

Warmup Cycles

Once the MIL has been extinguished by the Good Trip Counter, the PCM automatically switches to a Warmup Cycle Counter that can be viewed on the DRB III®. Warmup Cycles are used to erase DTCs and Freeze Frames. Forty Warmup cycles must occur in order for the PCM to self-erase a DTC and Freeze Frame. A Warmup Cycle is defined as follows:

- Engine coolant temperature must start below and rise above 71°C (160°F)
- Engine coolant temperature must rise by 4.4°C (40°F)
- No further faults occur

Freeze Frame Data Storage

Once a failure occurs, the Task Manager records several engine operating conditions and stores it in a Freeze Frame. The Freeze Frame is considered one frame of information taken by an onboard data recorder. When a fault occurs, the PCM stores the input data from various sensors so that technicians can determine under what vehicle operating conditions the failure occurred.

The data stored in Freeze Frame is usually recorded when a system fails the first time for two trip faults. Freeze Frame data will only be overwritten by a different fault with a higher priority.

Note: Erasing DTCs, either with the DRB III® or by disconnecting the battery, also clears all Freeze Frame data.

Similar Conditions Window

The Similar Conditions Window displays information about engine operation during a monitor. Absolute MAP (engine load) and Engine RPM are stored in this window when a failure occurs. There are two different Similar conditions Windows: Fuel System and Misfire.

FUEL SYSTEM

- **Fuel System Similar Conditions Window** — An indicator that 'Absolute MAP When Fuel Sys Fail' and 'RPM When Fuel Sys Failed' are all in the same range when the failure occurred. Indicated by switching from 'NO' to 'YES'.
- **Absolute MAP When Fuel Sys Fail** — The stored MAP reading at the time of failure. Informs the user at what engine load the failure occurred.
- **Absolute MAP** — A live reading of engine load to aid the user in accessing the Similar Conditions Window.
- **RPM When Fuel Sys Fail** — The stored RPM reading at the time of failure. Informs the user at what engine RPM the failure occurred.
- **Engine RPM** — A live reading of engine RPM to aid the user in accessing the Similar Conditions Window.
- **Adaptive Memory Factor** — The PCM utilizes both Short Term Compensation and Long Term Adaptive to calculate the Adaptive Memory Factor for total fuel correction.
- **Upstream O2S Volts** — A live reading of the Oxygen Sensor to indicate its performance. For example, stuck lean, stuck rich, etc.
- **SCW Time in Window (Similar Conditions Window Time in Window)** — A timer used by the PCM that indicates that, after all Similar Conditions have been met, if there has been enough good engine running time in the SCW without failure detected. This timer is used to increment a Good Trip.
- **Fuel System Good Trip Counter** — A Trip Counter used to turn OFF the MIL for Fuel System DTCs. To increment a Fuel System Good Trip, the engine must be in the Similar Conditions Window, Adaptive Memory Factor must be less than the calibrated threshold and the Adaptive Memory Factor must stay below that threshold for a calibrated amount of time.
- **Test Done This Trip** — Indicates that the monitor has already been run and completed during the current trip.

MISFIRE

- **Same Misfire Warm-Up State** — Indicates if the misfire occurred when the engine was warmed up above 71°C (160°F).
- **In Similar Misfire Window** — An indicator that 'Absolute MAP When Misfire Occurred' and 'RPM When Misfire Occurred' are all in the same range when the failure occurred. Indicated by switching from 'NO' to 'YES'.
- **Absolute MAP When Misfire Occurred** — The stored MAP reading at the time of failure. Informs the user at what engine load the failure occurred.
- **Absolute MAP** — A live reading of engine load to aid the user in accessing the Similar Conditions Window.
- **RPM When Misfire Occurred** — The stored RPM reading at the time of failure. Informs the user at what engine RPM the failure occurred.
- **Engine RPM** — A live reading of engine RPM to aid the user in accessing the Similar Conditions Window.
- **Adaptive Memory Factor** — The PCM utilizes both Short Term Compensation and Long Term Adaptive to calculate the Adaptive Memory Factor for total fuel correction.
- **200 Rev Counter** — Counts 0–100 720 degree cycles.
- **SCW Cat 200 Rev Counter** — Counts when in similar conditions.
- **SCW FTP 1000 Rev Counter** — Counts 0–4 when in similar conditions.
- **Misfire Good Trip Counter** — Counts up to three to turn OFF the MIL.
- **Misfire Data**— Data collected during test.
- **Test Done This Trip**— Indicates YES when the test is done.

Description	Group-Page
ABS BRAKE MESSAGE, DIAGNOSIS AND TESTING - (P0600)	21-12
ABS BRAKE SYSTEM - STANDARD PROCEDURE, BLEEDING	5-203
ABS CAN MESSAGE INCORRECT, DIAGNOSIS AND TESTING - (P0600)	21-15
ABS CAN MESSAGE MISSING, DIAGNOSIS AND TESTING - (P0600)	21-18
ABS, DIAGNOSIS AND TESTING - INCORRECT CAN MESSAGE FROM	21-169
ABS LEFT FRONT SENSOR MESSAGE, DIAGNOSIS AND TESTING - (P0600)	21-22
ABS LEFT REAR SENSOR MESSAGE, DIAGNOSIS AND TESTING - (P0600)	21-25
ABS RIGHT FRONT SENSOR MESSAGE, DIAGNOSIS AND TESTING - (P0600)	21-28
ABS RIGHT REAR SENSOR MESSAGE, DIAGNOSIS AND TESTING - (P0600)	21-31
ABS VERIFICATION TEST, DIAGNOSIS AND TESTING	5-148,5-185
A/C APPLICATION TABLE, SPECIFICATIONS	24-70
A/C COMPRESSOR - DESCRIPTION	24-119
A/C COMPRESSOR - INSTALLATION	24-122
A/C COMPRESSOR - OPERATION	24-120
A/C COMPRESSOR - REMOVAL	24-121
A/C COMPRESSOR CLUTCH - DESCRIPTION	24-72
A/C COMPRESSOR CLUTCH - OPERATION	24-73
A/C COMPRESSOR CLUTCH CIRCUIT, DIAGNOSIS AND TESTING	24-43
A/C CONDENSER - DESCRIPTION	24-125
A/C CONDENSER - INSTALLATION	24-127
A/C CONDENSER - OPERATION	24-125
A/C CONDENSER - REMOVAL	24-126
A/C EVAPORATOR - DESCRIPTION	24-130
A/C EVAPORATOR - INSTALLATION	24-132
A/C EVAPORATOR - OPERATION	24-130
A/C EVAPORATOR - REMOVAL	24-130
A/C EXPANSION VALVE - DESCRIPTION	24-138
A/C EXPANSION VALVE - DIAGNOSIS AND TESTING	24-139
A/C EXPANSION VALVE - INSTALLATION	24-140
A/C EXPANSION VALVE - OPERATION	24-139
A/C EXPANSION VALVE - REMOVAL	24-140
A/C HEATER CONTROL MODULE - DESCRIPTION	24-78
A/C HEATER CONTROL MODULE - INSTALLATION	24-81
A/C HEATER CONTROL MODULE - OPERATION	24-78
A/C HEATER CONTROL MODULE - REMOVAL	24-79
A/C HEATER CONTROL MODULE, DIAGNOSIS AND TESTING - NO RESPONSE FROM	8E-21
A/C PERFORMANCE, DIAGNOSIS AND TESTING	24-64
A/C PRESSURE SENSOR CIRCUIT, DIAGNOSIS AND TESTING	24-28
A/C PRESSURE TRANSDUCER - INSTALLATION	24-86
A/C PRESSURE TRANSDUCER - REMOVAL	24-86
ACCEL PEDAL SENSOR CAN MESSAGE INCORRECT, DIAGNOSIS AND TESTING - (P0600)	21-34
ACCELERATION SENSOR - DESCRIPTION, LATERAL	5-199
ACCELERATION SENSOR - INSTALLATION, LATERAL	5-200
ACCELERATION SENSOR - OPERATION, LATERAL	5-199
ACCELERATION SENSOR - REMOVAL, LATERAL	5-200
ACCELERATION SENSOR CIRCUIT, DIAGNOSIS AND TESTING - ESP LATERAL	5-138
ACCELERATOR PEDAL - DESCRIPTION	14-26
ACCELERATOR PEDAL - INSTALLATION	14-27
ACCELERATOR PEDAL - REMOVAL	14-26
ACCELERATOR PEDAL POSITION SENSOR - DESCRIPTION	14-28
ACCELERATOR PEDAL POSITION SENSOR - OPERATION	14-29
ACCESSORY DRIVE - DESCRIPTION	7-42
ACCESSORY DRIVE - OPERATION	7-42
ACCESSORY DRIVE - SPECIFICATIONS-TORQUE	7-43
ACCESSORY DRIVE BELT - DIAGNOSIS AND TESTING	7-43
ACCESSORY FUSE BLOCK - DESCRIPTION, UNDERHOOD	8W-97-5
ACCESSORY FUSE BLOCK - INSTALLATION, UNDERHOOD	8W-97-5
ACCESSORY FUSE BLOCK - OPERATION, UNDERHOOD	8W-97-5
ACCESSORY FUSE BLOCK - REMOVAL, UNDERHOOD	8W-97-5
ACCIDENT REPORT DRIVER CIRCUIT HIGH, DIAGNOSIS AND TESTING - (P2513) ENHANCED	9-499
ACCIDENT REPORT DRIVER CIRCUIT LOW, DIAGNOSIS AND TESTING - (P2513) ENHANCED	9-504
ACTUATOR - INSTALLATION, FUEL DOOR LOCK	8N-45
ACTUATOR - INSTALLATION, LIFTGATE LOCK	8N-46
ACTUATOR - REMOVAL, FUEL DOOR LOCK	8N-44
ACTUATOR - REMOVAL, LIFTGATE LOCK	8N-46
ACTUATOR SLOW RESPONSE, DIAGNOSIS AND TESTING - DRIVER DOOR LOCK	8N-2
ACTUATOR SLOW RESPONSE, DIAGNOSIS AND TESTING - FUEL DOOR LOCK	8N-5
ACTUATOR SLOW RESPONSE, DIAGNOSIS AND TESTING - PASSENGER DOOR/LIFTGATE LOCK	8N-8
ACTUATOR STUCK, DIAGNOSIS AND TESTING - (P0211) THROTTLE	9-252,9-257
ADHESIVES - INSTALLATION	23-115
ADHESIVES - REMOVAL	23-114
ADHESIVES - SPECIFICATIONS, STRUCTURAL	23-87
ADJUSTING FRONT AXLE CAMBER AND CASTER, STANDARD PROCEDURE - CHECKING	2-8
ADJUSTING FRONT TOE-IN - STANDARD PROCEDURE, CHECKING	2-10
ADJUSTING REAR AXLE TOE - STANDARD PROCEDURE, CHECKING	2-12
ADJUSTING THE GLOVE COMPARTMENT, STANDARD PROCEDURE	23-141
ADJUSTING VEHICLE LEVEL AT FRONT AND REAR AXLES, STANDARD PROCEDURE - INSPECTING	2-8
ADJUSTING VEHICLE LEVEL AT FRONT AND REAR AXLES WITH AN ELECTRONIC INCLINOMETER, STANDARD PROCEDURE - INSPECTING	2-8
ADJUSTING WHEEL BEARING, DIAGNOSIS AND TESTING	2-24
AFTER A SUPPLEMENTAL RESTRAINT DEPLOYMENT - STANDARD PROCEDURE, SERVICE	8O-84
AFTER AN OIL CHANGE, STANDARD PROCEDURE - RESETTING THE FSS MAINTENANCE INDICATOR	8J-78
AIMING - STANDARD PROCEDURE, WASHER NOZZLE	8R-28
AIR CLEANER ELEMENT - INSTALLATION	9-609
AIR CLEANER ELEMENT - REMOVAL	9-609
AIR CLEANER HOUSING - INSTALLATION	9-608
AIR CLEANER HOUSING - REMOVAL	9-608
AIR CONDITIONER - DESCRIPTION, HEATER	24-55
AIR CONDITIONER, OPERATION - HEATER	24-59
AIR CONDITIONING - ELECTRICAL DIAGNOSTICS - DESCRIPTION, HEATING	24-1
AIR CONDITIONING - ELECTRICAL DIAGNOSTICS - OPERATION, HEATING	24-2
AIR FLOW CIRCUIT, DIAGNOSIS AND TESTING - (P0102) MASS	9-10
AIR FLOW (MAF) SENSOR - DESCRIPTION, MANIFOLD	14-37
AIR FLOW (MAF) SENSOR - INSTALLATION, MANIFOLD	14-39
AIR FLOW (MAF) SENSOR - OPERATION, MANIFOLD	14-37
AIR FLOW (MAF) SENSOR - REMOVAL, MANIFOLD	14-37
AIR INJECTION - DESCRIPTION	25-30
AIR INJECTION - OPERATION	25-31
AIR INJECTION - SPECIFICATIONS	25-31
AIR INJECTION RELAY CIRCUIT, DIAGNOSIS AND TESTING - (P0410) SECONDARY	9-362
AIR INJECTION SWITCHOVER SOLENOID CIRCUIT, DIAGNOSIS AND TESTING - (P0412) SECONDARY	9-365
AIR INJECTION SYSTEM, DIAGNOSIS AND TESTING - (P0410) SECONDARY	9-356
AIR NOZZLE - INSTALLATION, CENTER	24-108
AIR NOZZLE - REMOVAL, CENTER	24-107
AIR NOZZLE, INSTALLATION - SIDE	24-108
AIR NOZZLE, REMOVAL - SIDE	24-107
AIR OUTLET COVER - INSTALLATION, FOOTWELL	24-111
AIR OUTLET COVER - REMOVAL, FOOTWELL	24-110
AIR PUMP - INSTALLATION	25-33
AIR PUMP - REMOVAL	25-32
AIR SWITCHOVER VALVE - INSTALLATION, RECIRC	24-87
AIR SWITCHOVER VALVE - REMOVAL, RECIRC	24-87
AIR SWITCHOVER VALVE CIRCUIT, DIAGNOSIS AND TESTING - RECIRCULATED	24-46
AIR TEMPERATURE SENSOR - DESCRIPTION, INTAKE	14-36
AIR TEMPERATURE SENSOR - OPERATION, INTAKE	14-36
AIR TEMPERATURE SENSOR CIRCUIT HIGH, DIAGNOSIS AND TESTING - (P0113) INTAKE	9-36
AIR TEMPERATURE SENSOR CIRCUIT LOW, DIAGNOSIS AND TESTING - (P0112) INTAKE	9-31
AIRBAG - DESCRIPTION, DRIVER	8O-97
AIRBAG - DESCRIPTION, PASSENGER	8O-101
AIRBAG - DESCRIPTION, SIDE IMPACT	8O-112
AIRBAG - INSTALLATION, DRIVER	8O-100
AIRBAG - INSTALLATION, PASSENGER	8O-103
AIRBAG - INSTALLATION, SIDE IMPACT	8O-114
AIRBAG - OPERATION, DRIVER	8O-98
AIRBAG - OPERATION, PASSENGER	8O-101
AIRBAG - OPERATION, SIDE IMPACT	8O-113
AIRBAG - REMOVAL, DRIVER	8O-100
AIRBAG - REMOVAL, PASSENGER	8O-102
AIRBAG - REMOVAL, SIDE IMPACT	8O-114
AIRBAG ON/OFF SWITCH SIGNAL CIRCUIT, DIAGNOSIS AND TESTING - PASSENGER	8O-49
AIRBAG SQUIB CIRCUIT, DIAGNOSIS AND TESTING - DRIVER	8O-4
AIRBAG SQUIB CIRCUIT, DIAGNOSIS AND TESTING - LEFT SIDE	8O-29
AIRBAG SQUIB CIRCUIT, DIAGNOSIS AND TESTING - PASSENGER	8O-23
AIRBAG SQUIB CIRCUIT, DIAGNOSIS AND TESTING - RIGHT SIDE	8O-35
AIRBAG VERIFICATION TEST, DIAGNOSIS AND TESTING	8O-67
AIRBAG WARNING INDICATOR CIRCUIT, DIAGNOSIS AND TESTING	8O-46
AJAR SWITCH - DESCRIPTION, DOOR	8L-144
AJAR SWITCH - INSTALLATION, HOOD	8Q-50
AJAR SWITCH - INSTALLATION, LIFTGATE	8L-146
AJAR SWITCH - OPERATION, DOOR	8L-144
AJAR SWITCH - REMOVAL, HOOD	8Q-50
AJAR SWITCH - REMOVAL, LIFTGATE	8L-145
AJAR SWITCH, INSTALLATION - DOOR	8L-146
AJAR SWITCH, REMOVAL - DOOR	8L-145
ALARM SWITCH - INSTALLATION, TOW-AWAY	8Q-59
ALARM SWITCH - REMOVAL, TOW-AWAY	8Q-59
ALARM TRIPS ON ITS OWN, DIAGNOSIS AND TESTING	8Q-32
ALIGNMENT - DESCRIPTION, WHEEL	2-4
ALIGNMENT - OPERATION, WHEEL	2-5
ALIGNMENT - SPECIFICATIONS, WHEEL	2-13
ALIGNMENT, ADJUSTMENTS - EXHAUST SYSTEM	11-4

Description	Group-Page
ALIGNMENT INSPECTION - STANDARD PROCEDURE, CHASSIS	2-7
ALIGNMENT INSPECTION - STANDARD PROCEDURE, WHEEL	2-6
ALIGNMENT, STANDARD PROCEDURE - WINDSHIELD WIPER BLADE	8R-36
ALUMINUM THREAD REPAIR - STANDARD PROCEDURE	21-210
ALWAYS ON, DIAGNOSIS AND TESTING - HORNS	8H-5
ALWAYS ON, DIAGNOSIS AND TESTING - RADIATOR COOLING FAN	7-6
AMBIENT TEMPERATURE SENSOR CIRCUIT, DIAGNOSIS AND TESTING	24-3
AMBIENT TEMPERATURE SENSOR CIRCUIT, DIAGNOSIS AND TESTING	8J-9
AMPLIFIER - INSTALLATION	8A-22
AMPLIFIER - REMOVAL	8A-20
AN ELECTRONIC INCLINOMETER, STANDARD PROCEDURE - INSPECTING AND ADJUSTING VEHICLE LEVEL AT FRONT AND REAR AXLES WITH	2-8
AN OIL CHANGE, STANDARD PROCEDURE - RESETTING THE FSS MAINTENANCE INDICATOR AFTER	8J-78
ANGLE AND SPEED, DIAGNOSIS AND TESTING - (P0104) MAF SENSOR THROTTLE	9-19
ANGLE SENSOR - DESCRIPTION, STEERING	5-200
ANGLE SENSOR - INSTALLATION, STEERING	5-200
ANGLE SENSOR - OPERATION, STEERING	5-200
ANGLE SENSOR - REMOVAL, STEERING	5-200
ANGLE SENSOR CIRCUIT, DIAGNOSIS AND TESTING - STEERING	5-124
ANTENNA - DESCRIPTION, REAR WINDOW	8A-24
ANTENNA - INSTALLATION, REAR WINDOW	8A-26
ANTENNA - REMOVAL, REAR WINDOW	8A-25
ANTENNA CIRCUIT, DIAGNOSIS AND TESTING - SENTRY KEY	8Q-38
ANTENNA GRID REPAIR - STANDARD PROCEDURE	8A-24
ANTENNA MODULE - INSTALLATION, REAR WINDOW	8A-23
ANTENNA MODULE - REMOVAL, REAR WINDOW	8A-23
ANTENNA RING - INSTALLATION, SENTRY KEY	8Q-55
ANTENNA RING - REMOVAL, SENTRY KEY	8Q-54
ANTILOCK BRAKE - DESCRIPTION, CONTROLLER	8E-62
ANTILOCK BRAKE - INSTALLATION, CONTROLLER	8E-64
ANTILOCK BRAKE - OPERATION, CONTROLLER	8E-62
ANTILOCK BRAKE - REMOVAL, CONTROLLER	8E-63
ANTILOCK BRAKE, DIAGNOSIS AND TESTING - NO RESPONSE FROM CONTROLLER	8E-25
ANTI-THEFT TOW SENSOR - INSTALLATION	8Q-58
ANTI-THEFT TOW SENSOR - REMOVAL	8Q-57
ANTI-THEFT TOW SENSOR SIGNAL CIRCUIT, DIAGNOSIS AND TESTING	8Q-22
A-PILLAR TRIM - INSTALLATION	23-162
A-PILLAR TRIM - REMOVAL	23-161
APPLICATION TABLE, SPECIFICATIONS - A/C	24-70
APPS 5-VOLT SUPPLY CIRCUIT, DIAGNOSIS AND TESTING - (P0121)	9-61
APPS SENSOR #1 AND #2 VOLTAGE CORRELATION, DIAGNOSIS AND TESTING - (P0221)	9-262
APPS SIGNAL #1 CIRCUIT HIGH, DIAGNOSIS AND TESTING - (P0123)	9-70
APPS SIGNAL #1 CIRCUIT LOW, DIAGNOSIS AND TESTING - (P0122)	9-65
APPS SIGNAL #2 CIRCUIT HIGH, DIAGNOSIS AND TESTING - (P0223)	9-279
APPS SIGNAL #2 CIRCUIT LOW, DIAGNOSIS AND TESTING - (P0222)	9-274
ARM - INSTALLATION, IDLER	19-42
ARM - INSTALLATION, LOWER CONTROL	2-37, 2-55
ARM - INSTALLATION, PITMAN	19-45
ARM - INSTALLATION, UPPER CONTROL	2-39
ARM - REMOVAL, IDLER	19-41
ARM - REMOVAL, LOWER CONTROL	2-34,2-53
ARM - REMOVAL, PITMAN	19-43
ARM - REMOVAL, UPPER CONTROL	2-39
ARMS - ADJUSTMENT, WIPER	8R-36
ARMS - DESCRIPTION, WIPER	8R-33
ARMS - INSTALLATION, WIPER	8R-34
ARMS - REMOVAL, WIPER	8R-33
ASH RECEIVER LAMP - INSTALLATION	8L-153
ASH RECEIVER LAMP - REMOVAL	8L-151
ASH RECEIVER LAMP INOPERATIVE, DIAGNOSIS AND TESTING	8L-130
ASH TRAY - INSTALLATION	23-190
ASHTRAY - REMOVAL	23-180
AUDIO - SERVICE INFORMATION - DESCRIPTION	8A-19
AUDIO - SERVICE INFORMATION - OPERATION	8A-20
AUDIO - SERVICE INFORMATION - SPECIAL TOOLS	8A-20
AUDIO SYSTEM - DIAGNOSIS AND TESTING	8A-20
AUTOMATIC - NAG1 SERVICE INFORMATION - DESCRIPTION	21-184
AUTOMATIC - NAG1 SERVICE INFORMATION - OPERATION	21-186
AUTOMATIC DAY / NIGHT MIRROR - DESCRIPTION	8N-68
AUTOMATIC DAY / NIGHT MIRROR - OPERATION	8N-68
AUTOMATIC DAY / NIGHT MIRROR - REMOVAL	8N-68
AUTOMATIC DAY/NIGHT MIRROR INOPERATIVE, DIAGNOSIS AND TESTING	8N-59
AUTOMATIC TRANSMISSION - DIAGNOSIS AND TESTING	21-207
AUTOMATIC TRANSMISSION - SPECIAL TOOLS, NAG1	21-252
AUTOMATIC TRANSMISSION - SPECIFICATIONS, NAG1	21-251
AUTOMATIC TRANSMISSION, DIAGNOSIS AND TESTING	21-206
AUTOMATIC TRANSMISSION FLUID - DESCRIPTION	0-5
AXLE CAMBER - STANDARD PROCEDURE, CHECKING REAR	2-11
AXLE CAMBER AND CASTER, STANDARD PROCEDURE - CHECKING AND ADJUSTING FRONT	2-8
AXLE CARRIER - INSTALLATION, REAR	2-93
AXLE CARRIER - REMOVAL, REAR	2-87
AXLE TOE - STANDARD PROCEDURE, CHECKING AND ADJUSTING REAR	2-12
AXLES, STANDARD PROCEDURE - INSPECTING AND ADJUSTING VEHICLE LEVEL AT FRONT AND REAR	2-8
AXLES WITH AN ELECTRONIC INCLINOMETER, STANDARD PROCEDURE - INSPECTING AND ADJUSTING VEHICLE LEVEL AT FRONT AND REAR	2-8
B BUS (-) CIRCUIT FAILURE, DIAGNOSIS AND TESTING - CAN	8Q-10
B BUS (+) CIRCUIT FAILURE, DIAGNOSIS AND TESTING - CAN	8Q-13
BACK COVER - INSTALLATION, PLASTIC	23-205
BACK COVER - INSTALLATION, SEAT	23-208
BACK COVER - REMOVAL, PLASTIC	23-204
BACK COVER - REMOVAL, SEAT	23-206
BACK ELEMENT - INSTALLATION, HEATED SEAT	8G-41
BACK ELEMENT - REMOVAL, HEATED SEAT	8G-40
BACK, INSTALLATION - SEAT	23-205
BACK, REMOVAL - SEAT	23-204
BACK UP LAMP INOPERATIVE, DIAGNOSIS AND TESTING - LEFT	8L-50
BACK UP LAMP INOPERATIVE, DIAGNOSIS AND TESTING - RIGHT	8L-62
BACKUP LAMP - INSTALLATION	8L-88
BACKUP LAMP - REMOVAL	8L-88
BACKUP LAMP SWITCH - DESCRIPTION	8L-89
BACKUP LAMP SWITCH - INSTALLATION	21-354
BACKUP LAMP SWITCH - REMOVAL	21-353
BALANCE SHAFT - DESCRIPTION	9-698
BALANCE SHAFT - INSTALLATION	9-701
BALANCE SHAFT - REMOVAL	9-698
BALANCE, STANDARD PROCEDURE - TIRE AND WHEEL	22-42
BALL JOINT - INSTALLATION, LOWER	2-32
BALL JOINT - REMOVAL, LOWER	2-29
BAR - INSTALLATION, STABILIZER	2-47,2-76
BAR - INSTALLATION, TRACK	2-53
BAR - REMOVAL, STABILIZER	2-46,2-72
BAR - REMOVAL, TRACK	2-52
BAS RELEASE SWITCH CIRCUIT, DIAGNOSIS AND TESTING	5-166
BAS SOLENOID VALVE CIRCUIT, DIAGNOSIS AND TESTING	5-181
BAS TRAVEL SENSOR CIRCUIT, DIAGNOSIS AND TESTING	5-171
BASE - DESCRIPTION, BRAKES	5-3
BASE - WARNING, BRAKES	5-4
BASE BRAKE SYSTEM, DIAGNOSIS AND TESTING	5-5
BASE COAT/CLEAR COAT FINISH - DESCRIPTION	23-199
BATTERY - DESCRIPTION	8F-7
BATTERY - DIAGNOSIS AND TESTING	8F-9
BATTERY - INSTALLATION	8F-18
BATTERY - OPERATION	8F-8
BATTERY - REMOVAL	8F-17
BATTERY CABLES - DIAGNOSIS AND TESTING	8F-19
BATTERY, DIAGNOSIS AND TESTING - TIRE PRESSURE SENSOR/ TRANSMITTER LOW	22-32
BATTERY ELECTROLYTE LEVEL - STANDARD PROCEDURE, CHECKING	8F-16
BATTERY, STANDARD PROCEDURE - CHARGING	8F-10
BATTERY SYSTEM - CLEANING	8F-5
BATTERY SYSTEM - DESCRIPTION	8F-2
BATTERY SYSTEM - DIAGNOSIS AND TESTING	8F-2
BATTERY SYSTEM - INSPECTION	8F-6
BATTERY SYSTEM - OPERATION	8F-2
BATTERY SYSTEM - SPECIAL TOOLS	8F-7
BATTERY SYSTEM - SPECIFICATIONS	8F-6
BATTERY SYSTEM HIGH, DIAGNOSIS AND TESTING - (P0563)	9-419
BATTERY SYSTEM LOW, DIAGNOSIS AND TESTING - (P0562)	9-417
BATTERY SYSTEM VOLTAGE, DIAGNOSIS AND TESTING - (P0561)	9-414
BATTERY TESTER - STANDARD PROCEDURE, USING MICRO 420	8F-12
BATTERY VOLTAGE INDICATOR INOPERATIVE, DIAGNOSIS AND TESTING	8J-46
BCM AND CENTRAL LOCKING PUMP/SECURITY SYSTEM MODULE, DIAGNOSIS AND TESTING - NO COMMUNICATION WITH	8Q-8
BEAM BULB - INSTALLATION, HIGH	8L-105
BEAM BULB - REMOVAL, HIGH	8L-103
BEAM BULB, INSTALLATION - LOW	8L-104
BEAM BULB, REMOVAL - LOW	8L-103
BEAM HEADLAMP INOPERATIVE, DIAGNOSIS AND TESTING - LEFT HIGH	8L-23
BEAM HEADLAMP INOPERATIVE, DIAGNOSIS AND TESTING - LEFT LOW	8L-20
BEAM HEADLAMP INOPERATIVE, DIAGNOSIS AND TESTING - RIGHT HIGH	8L-29
BEAM HEADLAMP INOPERATIVE, DIAGNOSIS AND TESTING - RIGHT LOW	8L-26
BEAM INDICATOR INOPERATIVE, DIAGNOSIS AND TESTING - HIGH	8J-42
BEARING - DESCRIPTION, HUB	2-23
BEARING - INSTALLATION, CENTER	3-32
BEARING - INSTALLATION, HUB	2-70
BEARING - INSTALLATION, OUTPUT SHAFT	21-316
BEARING - INSTALLATION, PILOT	6-23
BEARING - REMOVAL, CENTER	3-31
BEARING - REMOVAL, HUB	2-67
BEARING - REMOVAL, OUTPUT SHAFT	21-314
BEARING - REMOVAL, PILOT	6-23

Description	Group-Page
BEARING BRIDGE - INSTALLATION, CAMSHAFT	9-622
BEARING BRIDGE - REMOVAL, CAMSHAFT	9-619
BEARING CLEARANCE USING PLASTIGAGE® - STANDARD PROCEDURE, MEASURING	9-591
BEARING, DIAGNOSIS AND TESTING - ADJUSTING WHEEL	2-24
BEARINGS - DESCRIPTION, CONNECTING ROD	9-638
BEARINGS - DESCRIPTION, CRANKSHAFT AND MAIN	9-647
BEARINGS - INSTALLATION, CRANKSHAFT AND MAIN	9-650
BEARINGS - OPERATION, CRANKSHAFT AND MAIN	9-647
BEARINGS - REMOVAL, CRANKSHAFT AND MAIN	9-647
BEARINGS - STANDARD PROCEDURE, CONNECTING RODS	9-638
BEARING/SLAVE CYLINDER - DESCRIPTION, RELEASE	6-19
BEARING/SLAVE CYLINDER - INSTALLATION, RELEASE	6-20
BEARING/SLAVE CYLINDER - OPERATION, RELEASE	6-19
BEARING/SLAVE CYLINDER - REMOVAL, RELEASE	6-20
BELT - CLEANING, DRIVE	7-45
BELT - DIAGNOSIS AND TESTING, ACCESSORY DRIVE	7-43
BELT - INSPECTION, DRIVE	7-45
BELT - INSTALLATION, DRIVE	7-46
BELT - REMOVAL, DRIVE	7-45
BELT & SEAT BELT TENSIONER - DESCRIPTION, SEAT	8O-119
BELT & SEAT BELT TENSIONER - INSPECTION, SEAT	8O-125
BELT & SEAT BELT TENSIONER - INSTALLATION, SEAT	8O-125
BELT & SEAT BELT TENSIONER - OPERATION, SEAT	8O-120
BELT & SEAT BELT TENSIONER - REMOVAL, SEAT	8O-122
BELT BUCKLE - DESCRIPTION, SEAT	8O-115
BELT BUCKLE - INSTALLATION, SEAT	8O-117
BELT BUCKLE - REMOVAL, SEAT	8O-116
BELT INDICATOR INOPERATIVE, DIAGNOSIS AND TESTING - SEAT	8J-48
BELT TENSIONER - DESCRIPTION, SEAT BELT & SEAT	8O-119
BELT TENSIONER - INSPECTION, SEAT BELT & SEAT	8O-125
BELT TENSIONER - INSTALLATION	7-44
BELT TENSIONER - INSTALLATION, SEAT BELT & SEAT	8O-125
BELT TENSIONER - OPERATION, SEAT BELT & SEAT	8O-120
BELT TENSIONER - REMOVAL	7-44
BELT TENSIONER - REMOVAL, SEAT BELT & SEAT	8O-122
BELT TENSIONER CIRCUIT, DIAGNOSIS AND TESTING - DRIVER SEAT	8O-53
BELT TENSIONER CIRCUIT, DIAGNOSIS AND TESTING - PASSENGER SEAT	8O-56
BELT TENSIONER SQUIB CIRCUIT, DIAGNOSIS AND TESTING - DRIVER SEAT	8O-10
BELT TENSIONER SQUIB CIRCUIT, DIAGNOSIS AND TESTING - PASSENGER SEAT	8O-17
BLADE ALIGNMENT, STANDARD PROCEDURE - WINDSHIELD WIPER	8R-36
BLADES - DESCRIPTION, WIPER	8R-36
BLADES - OPERATION, WIPER	8R-36
BLEEDING - STANDARD PROCEDURE, PRESSURE	5-9
BLEEDING ABS BRAKE SYSTEM - STANDARD PROCEDURE	5-203
BLEEDING PROCEDURE, STANDARD PROCEDURE - MASTER CYLINDER	5-46
BLEEDING, STANDARD PROCEDURE - MANUAL	5-9
BLEEDING, STANDARD PROCEDURE - MASTER CYLINDER	6-7
BLOCK - CLEANING, ENGINE	9-633
BLOCK - DESCRIPTION, ENGINE	9-633
BLOCK - DESCRIPTION, ENGINE FUSE	8W-97-2
BLOCK - DESCRIPTION, FUSE	8W-97-6
BLOCK - DESCRIPTION, UNDERHOOD ACCESSORY FUSE	8W-97-5
BLOCK - INSPECTION, ENGINE	9-633
BLOCK - INSTALLATION, ENGINE FUSE	8W-97-3
BLOCK - INSTALLATION, UNDERHOOD ACCESSORY FUSE	8W-97-5
BLOCK - OPERATION, ENGINE FUSE	8W-97-2
BLOCK - OPERATION, FUSE	8W-97-6
BLOCK - OPERATION, UNDERHOOD ACCESSORY FUSE	8W-97-5
BLOCK - REMOVAL, ENGINE FUSE	8W-97-2
BLOCK - REMOVAL, UNDERHOOD ACCESSORY FUSE	8W-97-5
BLOWER MOTOR - INSTALLATION	24-90
BLOWER MOTOR - REMOVAL	24-88
BLOWER MOTOR REGULATOR - INSTALLATION	24-76
BLOWER MOTOR REGULATOR - REMOVAL	24-74
BODY - DESCRIPTION, THROTTLE	14-47
BODY - INSTALLATION, THROTTLE	14-48
BODY - OPERATION, THROTTLE	14-47
BODY - REMOVAL, THROTTLE	14-48
BODY CONTROL MODULE - DESCRIPTION	8E-71
BODY CONTROL MODULE - INSTALLATION	8E-73
BODY CONTROL MODULE - OPERATION	8E-71
BODY CONTROL MODULE - REMOVAL	8E-72
BODY CONTROL MODULE AND CENTRAL LOCKING PUMP/SECURITY SYSTEM MODULE, DIAGNOSIS AND TESTING - NO COMMUNICATION WITH	8N-20
BODY CONTROL MODULE, DIAGNOSIS AND TESTING - NO RESPONSE FROM	8E-36
BODY CONTROL MODULE INTERNAL FAILURE, DIAGNOSIS AND TESTING	23-2
BODY CONTROL MODULE INTERNAL FAILURE, DIAGNOSIS AND TESTING	8N-11
BODY DIMENSIONS - SPECIFICATIONS	23-55
BODY GAP MEASUREMENTS - SPECIFICATIONS	23-53
BODY LUBRICATION - SPECIFICATIONS	23-32
BODY LUBRICATION, STANDARD PROCEDURE	23-31
BODY VERIFICATION TEST, DIAGNOSIS AND TESTING	8A-16
BODY VERIFICATION TEST, DIAGNOSIS AND TESTING	8E-44
BODY VERIFICATION TEST, DIAGNOSIS AND TESTING	8G-20,8G-34,8G-8
BODY VERIFICATION TEST, DIAGNOSIS AND TESTING	24-53
BODY VERIFICATION TEST, DIAGNOSIS AND TESTING	8H-7
BODY VERIFICATION TEST, DIAGNOSIS AND TESTING	8J-52
BODY VERIFICATION TEST, DIAGNOSIS AND TESTING	8L-133,8L-77
BODY VERIFICATION TEST, DIAGNOSIS AND TESTING	8N-119,8N-28,8N-62,8N-93
BOOSTER - DESCRIPTION, POWER BRAKE	5-48
BOOSTER - INSTALLATION, POWER BRAKE	5-51
BOOSTER - OPERATION, POWER BRAKE	5-49
BOOSTER - REMOVAL, POWER BRAKE	5-50
BOOSTER, DIAGNOSIS AND TESTING - MASTER CYLINDER/POWER	5-44
BOOT - INNER - INSTALLATION, CV	3-9
BOOT - INNER - REMOVAL, CV	3-7
BOOT - OUTER - INSTALLATION, CV	3-12
BOOT - OUTER - REMOVAL, CV	3-11
BOX LAMP - INSTALLATION, GLOVE	8L-147
BOX LAMP - REMOVAL, GLOVE	8L-146
BOX LAMP INOPERATIVE, DIAGNOSIS AND TESTING - GLOVE	8L-127
BOX LAMP/SWITCH - DESCRIPTION, GLOVE	8L-148
BOX LAMP/SWITCH - INSTALLATION, GLOVE	8L-149
BOX LAMP/SWITCH - OPERATION, GLOVE	8L-148
BOX LAMP/SWITCH - REMOVAL, GLOVE	8L-148
BRACKET - INSTALLATION, REARVIEW MIRROR SUPPORT	8N-69
BRACKET AND ISOLATOR - INSTALLATION, SUPPORT	11-14
BRACKET AND ISOLATOR - REMOVAL, SUPPORT	11-13
BRACKETS - INSTALLATION, ENGINE MOUNT	9-656
BRACKETS - REMOVAL, ENGINE MOUNT	9-655
BRAKE - DESCRIPTION, CONTROLLER ANTILOCK	8E-62
BRAKE - INSTALLATION, CONTROLLER ANTILOCK	8E-64
BRAKE - OPERATION, CONTROLLER ANTILOCK	8E-62
BRAKE - OPERATION, PARKING	5-57
BRAKE - REMOVAL, CONTROLLER ANTILOCK	8E-63
BRAKE BOOSTER - DESCRIPTION, POWER	5-48
BRAKE BOOSTER - INSTALLATION, POWER	5-51
BRAKE BOOSTER - OPERATION, POWER	5-49
BRAKE BOOSTER - REMOVAL, POWER	5-50
BRAKE CALIPER - ASSEMBLY, FRONT DISC	5-31
BRAKE CALIPER - CLEANING, DISC	5-30
BRAKE CALIPER - DISASSEMBLY, FRONT DISC	5-29
BRAKE CALIPER - INSPECTION, DISC	5-30
BRAKE CALIPER - INSTALLATION, REAR DISC	5-35
BRAKE CALIPER - REMOVAL, REAR	5-28
BRAKE CALIPER, INSTALLATION - FRONT DISC	5-32
BRAKE CALIPER, REMOVAL - FRONT DISC	5-25
BRAKE CALIPERS - DESCRIPTION, DISC	5-24
BRAKE CALIPERS - OPERATION, DISC	5-24
BRAKE COMPONENTS, SPECIFICATIONS	5-10
BRAKE, DIAGNOSIS AND TESTING - NO RESPONSE FROM CONTROLLER ANTILOCK	8E-25
BRAKE, DIAGNOSIS AND TESTING - PARKING	5-58
BRAKE FLUID CONTAMINATION, DIAGNOSIS AND TESTING	5-42
BRAKE FLUID LEVEL SENSOR - INSTALLATION	5-75
BRAKE FLUID LEVEL SENSOR - REMOVAL	5-75
BRAKE FLUID, SPECIFICATIONS	5-43
BRAKE HOSE - INSTALLATION, REAR	5-16
BRAKE HOSE, INSTALLATION - FRONT	5-14
BRAKE HOSE, REMOVAL - FRONT	5-12
BRAKE HOSE, REMOVAL - REAR	5-13
BRAKE HOSES AND LINES, DIAGNOSIS AND TESTING	5-10
BRAKE LAMP RELAY - DESCRIPTION	8L-90
BRAKE LAMP RELAY - INSTALLATION	8L-90
BRAKE LAMP RELAY - OPERATION	8L-90
BRAKE LAMP RELAY - REMOVAL	8L-90
BRAKE LAMP SWITCH - DESCRIPTION	8L-91
BRAKE LAMP SWITCH - INSTALLATION	8L-92
BRAKE LAMP SWITCH - OPERATION	8L-91
BRAKE LAMP SWITCH - REMOVAL	8L-91
BRAKE LAMP SWITCH CIRCUIT, DIAGNOSIS AND TESTING	5-143,5-176
BRAKE LINES - DESCRIPTION	5-10
BRAKE MESSAGE, DIAGNOSIS AND TESTING - (P0600) ABS	21-12
BRAKE PADS - INSTALLATION, REAR DISC	5-23
BRAKE PADS - REMOVAL, REAR DISC	5-19
BRAKE PADS, INSTALLATION - FRONT DISC	5-20
BRAKE PADS, REMOVAL - FRONT DISC	5-17
BRAKE PRESSURE SENSOR - DESCRIPTION	5-201
BRAKE PRESSURE SENSOR - INSTALLATION	5-201,5-77
BRAKE PRESSURE SENSOR - OPERATION	5-201
BRAKE PRESSURE SENSOR - REMOVAL	5-201, 5-76
BRAKE PRESSURE SENSOR 1 CIRCUIT, DIAGNOSIS AND TESTING - ESP	5-128
BRAKE PRESSURE SENSOR 2 CIRCUIT, DIAGNOSIS AND TESTING - ESP	5-133

Description	Group-Page
BRAKE ROTOR - INSTALLATION, REAR DISC	5-42
BRAKE ROTOR - REMOVAL, REAR DISC	5-39
BRAKE ROTOR, INSTALLATION - FRONT DISC	5-40
BRAKE ROTOR MACHINING, STANDARD PROCEDURE - DISC	5-38
BRAKE ROTOR, REMOVAL - FRONT DISC	5-38
BRAKE ROTORS, DIAGNOSIS AND TESTING - DISC	5-36
BRAKE SYSTEM - STANDARD PROCEDURE, BLEEDING ABS	5-203
BRAKE SYSTEM, DIAGNOSIS AND TESTING - BASE	5-5
BRAKE WARNING INDICATOR INOPERATIVE, DIAGNOSIS AND TESTING	8J-44
BRAKES - BASE - DESCRIPTION	5-3
BRAKES - BASE - WARNING	5-4
BRAKES - ESP SERVICE INFORMATION - DESCRIPTION	5-188
BREAK-IN - STANDARD PROCEDURE, COMPRESSOR CLUTCH	24-74
BRIDGE - INSTALLATION, CAMSHAFT BEARING	9-622
BRIDGE - REMOVAL, CAMSHAFT BEARING	9-619
BUCKLE - DESCRIPTION, SEAT BELT	8O-115
BUCKLE - INSTALLATION, SEAT BELT	8O-117
BUCKLE - REMOVAL, SEAT BELT	8O-116
BULB - INSTALLATION, HIGH BEAM	8L-105
BULB - REMOVAL, HIGH BEAM	8L-103
BULB, INSTALLATION - LOW BEAM	8L-104
BULB, REMOVAL - LOW BEAM	8L-103
BULBS - STANDARD PROCEDURE, INSTRUMENT CLUSTER	8J-81
BUMPER - INSTALLATION	23-51
BUMPER - REMOVAL	23-51
BURNT FLUID - DIAGNOSIS AND TESTING, CAUSES OF	21-293
BUS (-) CIRCUIT FAILURE, DIAGNOSIS AND TESTING - CAN B	8Q-10
BUS (+) CIRCUIT FAILURE, DIAGNOSIS AND TESTING - CAN B	8Q-13
BUS CIRCUIT, DIAGNOSIS AND TESTING - CAN	21-167
BUS CIRCUIT, DIAGNOSIS AND TESTING - (P0720) CAN	21-109
BUS COMMUNICATION GENERAL MALFUNCTION, DIAGNOSIS AND TESTING - CAN	5-162,5-88
BUS COMMUNICATION GENERAL MALFUNCTION, DIAGNOSIS AND TESTING - CAN	8J-36
BUS MESSAGE, DIAGNOSIS AND TESTING - (P0600) NO CLUSTER	9-445
BUS MESSAGE, DIAGNOSIS AND TESTING - (P0600) NO TRANSMISSION	9-433
BUT DOES NOT START, DIAGNOSIS AND TESTING - ENGINE CRANKS	9-563
CAB, DIAGNOSIS AND TESTING - NO CAN COMMUNICATIONS WITH	8J-24
CAB INTERNAL FAILURE, DIAGNOSIS AND TESTING	5-153,5-80
CAB MODULE, DIAGNOSIS AND TESTING - (P0600) NO CAN MESSAGE FROM	9-427
CAB SYSTEM OVERVOLTAGE, DIAGNOSIS AND TESTING	5-158,5-85
CAB SYSTEM UNDERVOLTAGE, DIAGNOSIS AND TESTING	5-155,5-82
CABLE - DESCRIPTION, REVERSE LOCKOUT	21-388
CABLE - DESCRIPTION, SPARK PLUG	8I-13
CABLE - INSTALLATION, IGNITION LOCK	19-21
CABLE - INSTALLATION, LATCH RELEASE	23-139
CABLE - INSTALLATION, SPARK PLUG	8I-13
CABLE - REMOVAL, IGNITION LOCK	19-19
CABLE - REMOVAL, LATCH RELEASE	23-138
CABLE - REMOVAL, SPARK PLUG	8I-13
CABLES - DESCRIPTION	8F-19
CABLES - DIAGNOSIS AND TESTING, BATTERY	8F-19
CABLES - INSTALLATION	5-64
CABLES - OPERATION	8F-19
CABLES - REMOVAL	5-61
CALIPER - ASSEMBLY, FRONT DISC BRAKE	5-31
CALIPER - CLEANING, DISC BRAKE	5-30
CALIPER - DISASSEMBLY, FRONT DISC BRAKE	5-29
CALIPER - INSPECTION, DISC BRAKE	5-30
CALIPER - INSTALLATION, REAR DISC BRAKE	5-35
CALIPER - REMOVAL, REAR BRAKE	5-28
CALIPER, INSTALLATION - FRONT DISC BRAKE	5-32
CALIPER, REMOVAL - FRONT DISC BRAKE	5-25
CALIPERS - DESCRIPTION, DISC BRAKE	5-24
CALIPERS - OPERATION, DISC BRAKE	5-24
CAMBER - STANDARD PROCEDURE, CHECKING REAR AXLE	2-11
CAMBER AND CASTER, STANDARD PROCEDURE - CHECKING AND ADJUSTING FRONT AXLE	2-8
CAMBER STRUT - INSTALLATION	2-50
CAMBER STRUT - REMOVAL	2-49
CAMSHAFT - CLEANING	9-626
CAMSHAFT - DESCRIPTION	9-625
CAMSHAFT - INSPECTION	9-626
CAMSHAFT - INSTALLATION	9-626
CAMSHAFT - OPERATION	9-625
CAMSHAFT - REMOVAL	9-626
CAMSHAFT BEARING BRIDGE - INSTALLATION	9-622
CAMSHAFT BEARING BRIDGE - REMOVAL	9-619
CAMSHAFT POSITION SENSOR - INSTALLATION	8I-5
CAMSHAFT POSITION SENSOR - OPERATION	8I-4
CAMSHAFT POSITION SENSOR - REMOVAL	8I-4
CAMSHAFT POSITION SENSOR PERFORMANCE, DIAGNOSIS AND TESTING - (P0341)	9-346
CAMSHAFT POSITION TIMING OVER-ADVANCED, DIAGNOSIS AND TESTING - (P0341)	9-344
CAMSHAFT POSITION TIMING OVER-RETARDED, DIAGNOSIS AND TESTING - (P0341)	9-340
CAN B BUS (-) CIRCUIT FAILURE, DIAGNOSIS AND TESTING	8Q-10
CAN B BUS (+) CIRCUIT FAILURE, DIAGNOSIS AND TESTING	8Q-13
CAN BUS CIRCUIT, DIAGNOSIS AND TESTING	21-167
CAN BUS CIRCUIT, DIAGNOSIS AND TESTING - (P0720)	21-109
CAN BUS COMMUNICATION GENERAL MALFUNCTION, DIAGNOSIS AND TESTING	5-162,5-88
CAN BUS COMMUNICATION GENERAL MALFUNCTION, DIAGNOSIS AND TESTING	8J-36
CAN COMMUNICATIONS WITH CAB, DIAGNOSIS AND TESTING - NO	8J-24
CAN COMMUNICATIONS WITH PCM, DIAGNOSIS AND TESTING - NO	5-164,5-90
CAN COMMUNICATIONS WITH PCM, DIAGNOSIS AND TESTING - NO	8J-18
CAN COMMUNICATIONS WITH PCM, DIAGNOSIS AND TESTING - NO	8Q-25
CAN COMMUNICATIONS WITH TCM, DIAGNOSIS AND TESTING - NO	5-92
CAN COMMUNICATIONS WITH TCM, DIAGNOSIS AND TESTING - NO	8J-30
CAN MESSAGE FROM ABS, DIAGNOSIS AND TESTING - INCORRECT	21-169
CAN MESSAGE FROM CAB MODULE, DIAGNOSIS AND TESTING - (P0600) NO	9-427
CAN MESSAGE FROM ECM FROM SLA, DIAGNOSIS AND TESTING - (P0600)	21-38
CAN MESSAGE FROM EIS CONTROL MODULE, DIAGNOSIS AND TESTING - (P0600) INCORRECT	9-425
CAN MESSAGE INCORRECT, DIAGNOSIS AND TESTING - (P0600) ABS	21-15
CAN MESSAGE INCORRECT, DIAGNOSIS AND TESTING - (P0600) ACCEL PEDAL SENSOR	21-34
CAN MESSAGE INCORRECT, DIAGNOSIS AND TESTING - (P0600) ENGINE	21-41
CAN MESSAGE INCORRECT, DIAGNOSIS AND TESTING - (P0600) IC	21-57
CAN MESSAGE INCORRECT, DIAGNOSIS AND TESTING - (P0600) SLA	21-64
CAN MESSAGE MISSING, DIAGNOSIS AND TESTING - (P0600) ABS	21-18
CAN MESSAGE MISSING, DIAGNOSIS AND TESTING - (P0600) ENGINE	21-44
CAN MESSAGE MISSING, DIAGNOSIS AND TESTING - (P0600) IC/HVAC	21-60
CAN MESSAGE NOT VALID, DIAGNOSIS AND TESTING - LR WHEEL SPIN	21-173
CAN MESSAGE NOT VALID, DIAGNOSIS AND TESTING - RR WHEEL SPIN	21-175
CAN SIGNAL LOST TO TRANS PERFORMANCE, DIAGNOSIS AND TESTING - (P0571) STOP LAMP SWITCH	9-421
CANISTER - DESCRIPTION, VAPOR	25-20
CANISTER - INSTALLATION, VAPOR	25-21
CANISTER - OPERATION, VAPOR	25-20
CANISTER - REMOVAL, VAPOR	25-20
CANISTER SHUTOFF VALVE - DESCRIPTION, CHARCOAL	25-16
CANISTER SHUTOFF VALVE - INSTALLATION, CHARCOAL	25-16
CANISTER SHUTOFF VALVE - OPERATION, CHARCOAL	25-16
CANISTER SHUTOFF VALVE - REMOVAL, CHARCOAL	25-16
CANISTER SHUTOFF VALVE, DIAGNOSIS AND TESTING - (P0446) CHARCOAL	9-384
CAP - CLEANING, PRESSURE	7-36
CAP - DESCRIPTION, FUEL FILLER	25-18
CAP - OPERATION, FUEL FILLER	25-18
CAP - OPERATION, PRESSURE	7-36
CAP - WARNING, PRESSURE	7-36
CAPACITIES - SPECIFICATIONS, FLUID	0-1
CAPACITY - SPECIFICATIONS, CHARGE	24-70
CARDAN UNIVERSAL JOINTS - ASSEMBLY, SINGLE	3-33
CARDAN UNIVERSAL JOINTS - DISASSEMBLY, SINGLE	3-32
CARGO LAMP - INSTALLATION	8L-138
CARGO LAMP - REMOVAL	8L-137
CARGO LAMP INOPERATIVE, DIAGNOSIS AND TESTING	8L-124
CARGO LAMP UNIT - INSTALLATION	8L-140
CARGO LAMP UNIT - REMOVAL	8L-139
CARPET (LEFT), INSTALLATION	23-168
CARPET (LEFT), REMOVAL	23-163
CARPET (RIGHT) - INSTALLATION	23-171
CARPET (RIGHT), REMOVAL	23-166
CARRIER - INSTALLATION, REAR AXLE	2-93
CARRIER - REMOVAL, REAR AXLE	2-87
CASTER, STANDARD PROCEDURE - CHECKING AND ADJUSTING FRONT AXLE CAMBER	2-8
CATALYTIC 1/1 EFFICIENCY, DIAGNOSIS AND TESTING - (P0422)	9-369
CATALYTIC 2/1 EFFICIENCY, DIAGNOSIS AND TESTING - (P0432)	9-372
CAUSES OF BURNT FLUID - DIAGNOSIS AND TESTING	21-293
CAUTION, PLUMBING	24-115
CENTER AIR NOZZLE - INSTALLATION	24-108
CENTER AIR NOZZLE - REMOVAL	24-107
CENTER BEARING - INSTALLATION	3-32
CENTER BEARING - REMOVAL	3-31
CENTER CONSOLE - INSTALLATION, REAR	23-188
CENTER CONSOLE - REMOVAL, REAR	23-178
CENTER CONSOLE COVER - INSTALLATION	23-186
CENTER CONSOLE COVER - REMOVAL	23-176
CENTER CONSOLE (FRONT), INSTALLATION	23-183
CENTER CONSOLE (FRONT), REMOVAL	23-173
CENTER HIGH MOUNTED STOP LAMP - DESCRIPTION	8L-92
CENTER HIGH MOUNTED STOP LAMP - INSTALLATION	8L-93
CENTER HIGH MOUNTED STOP LAMP - REMOVAL	8L-92
CENTER HIGH MOUNTED STOP LAMP INOPERATIVE, DIAGNOSIS AND TESTING	8L-68

Description	Group-Page
CENTERING - STANDARD PROCEDURE, CLOCKSPRING	8O-93
CENTERING SLEEVES - INSTALLATION	3-36
CENTERING SLEEVES - REMOVAL	3-35
CENTERING SLEEVES - SPECIFICATIONS	3-30
CENTRAL LOCKING PUMP - DESCRIPTION	8N-36
CENTRAL LOCKING PUMP - DIAGNOSIS AND TESTING	8N-36
CENTRAL LOCKING PUMP/SECURITY SYSTEM MODULE, DIAGNOSIS AND TESTING - NO COMMUNICATION WITH BCM	8Q-8
CENTRAL LOCKING PUMP/SECURITY SYSTEM MODULE, DIAGNOSIS AND TESTING - NO COMMUNICATION WITH BODY CONTROL MODULE	8N-20
CENTRAL LOCKING PUMP/SECURITY SYSTEM MODULE INTERNAL FAILURE, DIAGNOSIS AND TESTING	8N-26
CENTRAL LOCKING PUMP/SECURITY SYSTEM MODULE INTERNAL FAILURE, DIAGNOSIS AND TESTING	8Q-30
CENTRAL LOCKING PUMP/SECURITY SYSTEM MODULE SYSTEM OVERVOLTAGE, DIAGNOSIS AND TESTING	8Q-5
CENTRAL LOCKING PUMP/SECURITY SYSTEM MODULE SYSTEM UNDERVOLTAGE, DIAGNOSIS AND TESTING	8Q-2
CERT LABEL - DESCRIPTION, VEHICLE SAFETY	Intro.-1
CHAIN - INSTALLATION, OIL PUMP DRIVE	9-677
CHAIN - INSTALLATION, TIMING	9-695
CHAIN - REMOVAL, OIL PUMP DRIVE	9-677
CHAIN - REMOVAL, TIMING	9-693
CHAIN COVER - INSTALLATION, TIMING	9-688
CHAIN COVER - REMOVAL, TIMING	9-685
CHAIN GUIDES - INSTALLATION, TIMING	9-703
CHAIN GUIDES - REMOVAL, TIMING	9-703
CHAIN TENSIONER - INSTALLATION, TIMING	9-685
CHAIN TENSIONER - REMOVAL, TIMING	9-684
CHANGE - STANDARD PROCEDURE, ENGINE OIL AND FILTER	9-664
CHANGE - STANDARD PROCEDURE, FILTER	21-296
CHANGE, STANDARD PROCEDURE - RESETTING THE FSS MAINTENANCE INDICATOR AFTER AN OIL	8J-78
CHARCOAL CANISTER SHUTOFF VALVE - DESCRIPTION	25-16
CHARCOAL CANISTER SHUTOFF VALVE - INSTALLATION	25-16
CHARCOAL CANISTER SHUTOFF VALVE - OPERATION	25-16
CHARCOAL CANISTER SHUTOFF VALVE - REMOVAL	25-16
CHARCOAL CANISTER SHUTOFF VALVE, DIAGNOSIS AND TESTING - (P0446)	9-384
CHARGE - STANDARD PROCEDURE, REFRIGERANT SYSTEM	24-118
CHARGE CAPACITY - SPECIFICATIONS	24-70
CHARGING BATTERY, STANDARD PROCEDURE	8F-10
CHARGING SYSTEM - DESCRIPTION	8F-24
CHARGING SYSTEM - DIAGNOSIS AND TESTING	8F-24
CHARGING SYSTEM - OPERATION	8F-24
CHARGING SYSTEM - SCHEMATICS AND DIAGRAMS	8F-26
CHART - SPECIFICATIONS, TORQUE	5-192
CHART, FRONT SUSPENSION - TORQUE	2-14
CHART, RESTRAINTS - TORQUE	8O-87
CHASSIS ALIGNMENT INSPECTION - STANDARD PROCEDURE	2-7
CHECK - DIAGNOSIS AND TESTING, FUNCTION	8J-73
CHECK OIL LEVEL, STANDARD PROCEDURE	21-294
CHECK, STANDARD PROCEDURE - ENGINE OIL LEVEL	9-664
CHECK STRAP - INSTALLATION	23-89
CHECK STRAP - REMOVAL	23-88
CHECK VALVE - DESCRIPTION, FUEL FILL	14-7
CHECK VALVE - OPERATION, FUEL FILL	14-7
CHECKING AND ADJUSTING FRONT AXLE CAMBER AND CASTER, STANDARD PROCEDURE	2-8
CHECKING AND ADJUSTING FRONT TOE-IN - STANDARD PROCEDURE	2-10
CHECKING AND ADJUSTING REAR AXLE TOE - STANDARD PROCEDURE	2-12
CHECKING BATTERY ELECTROLYTE LEVEL - STANDARD PROCEDURE	8F-16
CHECKING ENGINE OIL PRESSURE - DIAGNOSIS AND TESTING	9-662
CHECKING FLUID LEVEL - STANDARD PROCEDURE	21-353
CHECKING FUEL DELIVERY, DIAGNOSIS AND TESTING	9-556
CHECKING HARD START (FUEL SYSTEM), DIAGNOSIS AND TESTING	9-560
CHECKING REAR AXLE CAMBER - STANDARD PROCEDURE	2-11
CHECKING TOE-OUT ON TURNS - STANDARD PROCEDURE	2-11
CHIME WARNING SYSTEM - DIAGNOSIS AND TESTING	8B-4
CHIME/BUZZER - ELECTRICAL DIAGNOSTICS - SCHEMATICS AND DIAGRAMS	8B-2
CIRCUIT - (P0850) TRANS TEMP SENSOR, P/N SWITCH	21-158
CIRCUIT, DIAGNOSIS AND TESTING - A/C COMPRESSOR CLUTCH	24-43
CIRCUIT, DIAGNOSIS AND TESTING - A/C PRESSURE SENSOR	24-28
CIRCUIT, DIAGNOSIS AND TESTING - AIRBAG WARNING INDICATOR	8O-46
CIRCUIT, DIAGNOSIS AND TESTING - AMBIENT TEMPERATURE SENSOR	24-3
CIRCUIT, DIAGNOSIS AND TESTING - AMBIENT TEMPERATURE SENSOR	8J-9
CIRCUIT, DIAGNOSIS AND TESTING - ANTI-THEFT TOW SENSOR SIGNAL	8Q-22
CIRCUIT, DIAGNOSIS AND TESTING - BAS RELEASE SWITCH	5-166
CIRCUIT, DIAGNOSIS AND TESTING - BAS SOLENOID VALVE	5-181
CIRCUIT, DIAGNOSIS AND TESTING - BAS TRAVEL SENSOR	5-171
CIRCUIT, DIAGNOSIS AND TESTING - BRAKE LAMP SWITCH	5-143,5-176
CIRCUIT, DIAGNOSIS AND TESTING - CAN BUS	21-167
CIRCUIT, DIAGNOSIS AND TESTING - COOLANT CIRCULATION PUMP	24-34
CIRCUIT, DIAGNOSIS AND TESTING - COOLANT LEVEL SENSOR/WASHER FLUID LEVEL SWITCH	8J-2
CIRCUIT, DIAGNOSIS AND TESTING - DOME LAMP	8L-121
CIRCUIT, DIAGNOSIS AND TESTING - DOOR LOCK SWITCH SENSE	8Q-16
CIRCUIT, DIAGNOSIS AND TESTING - DOOR LOCK/DOOR UNLOCK SWITCH SENSE	8N-22
CIRCUIT, DIAGNOSIS AND TESTING - DOOR UNLOCK SWITCH SENSE	8Q-19
CIRCUIT, DIAGNOSIS AND TESTING - DRIVER AIRBAG SQUIB	8O-4
CIRCUIT, DIAGNOSIS AND TESTING - DRIVER SEAT BELT TENSIONER	8O-53
CIRCUIT, DIAGNOSIS AND TESTING - DRIVER SEAT BELT TENSIONER SQUIB	8O-10
CIRCUIT, DIAGNOSIS AND TESTING - ENGINE COOLANT TEMPERATURE SENSOR	24-23
CIRCUIT, DIAGNOSIS AND TESTING - ESP BRAKE PRESSURE SENSOR 1	5-128
CIRCUIT, DIAGNOSIS AND TESTING - ESP BRAKE PRESSURE SENSOR 2	5-133
CIRCUIT, DIAGNOSIS AND TESTING - ESP LATERAL ACCELERATION SENSOR	5-138
CIRCUIT, DIAGNOSIS AND TESTING - ESP YAW RATE SENSOR	5-119
CIRCUIT, DIAGNOSIS AND TESTING - EVAPORATOR TEMPERATURE SENSOR	24-18
CIRCUIT, DIAGNOSIS AND TESTING - FUEL LEVEL SENSOR	8J-7
CIRCUIT, DIAGNOSIS AND TESTING - HAZARD SWITCH	8L-118
CIRCUIT, DIAGNOSIS AND TESTING - LAMP OUTAGE INDICATOR	8J-5
CIRCUIT, DIAGNOSIS AND TESTING - LEFT COOLANT CIRCULATION VALVE	24-37
CIRCUIT, DIAGNOSIS AND TESTING - LEFT FRONT WHEEL SPEED SENSOR	5-95
CIRCUIT, DIAGNOSIS AND TESTING - LEFT HEATER CORE TEMPERATURE SENSOR	24-8
CIRCUIT, DIAGNOSIS AND TESTING - LEFT REAR WHEEL SPEED SENSOR	5-107
CIRCUIT, DIAGNOSIS AND TESTING - LEFT SIDE AIRBAG SQUIB	8O-29
CIRCUIT, DIAGNOSIS AND TESTING - LEFT SIDE IMPACT SENSOR SIGNAL	8O-59
CIRCUIT, DIAGNOSIS AND TESTING - (P0102) MASS AIR FLOW	9-10
CIRCUIT, DIAGNOSIS AND TESTING - (P0116) ENGINE COOLANT TEMPERATURE SENSOR SHORT	9-47
CIRCUIT, DIAGNOSIS AND TESTING - (P0121) APPS 5-VOLT SUPPLY	9-61
CIRCUIT, DIAGNOSIS AND TESTING - (P0200) FUEL INJECTOR	9-236
CIRCUIT, DIAGNOSIS AND TESTING - (P0201) FUEL INJECTOR #1	9-238
CIRCUIT, DIAGNOSIS AND TESTING - (P0202) FUEL INJECTOR #2	9-242
CIRCUIT, DIAGNOSIS AND TESTING - (P0203) FUEL INJECTOR #3	9-244
CIRCUIT, DIAGNOSIS AND TESTING - (P0204) FUEL INJECTOR #4	9-246
CIRCUIT, DIAGNOSIS AND TESTING - (P0205) FUEL INJECTOR #5	9-248
CIRCUIT, DIAGNOSIS AND TESTING - (P0206) FUEL INJECTOR #6	9-250
CIRCUIT, DIAGNOSIS AND TESTING - (P0335) CRANKSHAFT POSITION SENSOR	9-334
CIRCUIT, DIAGNOSIS AND TESTING - (P0403) EGR CONTROL	9-354
CIRCUIT, DIAGNOSIS AND TESTING - (P0410) SECONDARY AIR INJECTION RELAY	9-362
CIRCUIT, DIAGNOSIS AND TESTING - (P0412) SECONDARY AIR INJECTION SWITCHOVER SOLENOID	9-365
CIRCUIT, DIAGNOSIS AND TESTING - (P0445) EVAP PURGE SOLENOID	9-380
CIRCUIT, DIAGNOSIS AND TESTING - (P0460) FUEL LEVEL SENSOR	9-408
CIRCUIT, DIAGNOSIS AND TESTING - (P0715) N2 INPUT SPEED SENSOR	21-97
CIRCUIT, DIAGNOSIS AND TESTING - (P0715) N3 INPUT SPEED SENSOR	21-103
CIRCUIT, DIAGNOSIS AND TESTING - (P0720) CAN BUS	21-109
CIRCUIT, DIAGNOSIS AND TESTING - (P0743) TCC SOLENOID	21-124
CIRCUIT, DIAGNOSIS AND TESTING - (P0748) MODULATING PRESSURE SOLENOID	21-128
CIRCUIT, DIAGNOSIS AND TESTING - (P0753) 1-2/4-5 SOLENOID	21-132
CIRCUIT, DIAGNOSIS AND TESTING - (P0758) 2-3 SOLENOID	21-138
CIRCUIT, DIAGNOSIS AND TESTING - (P0763) 3-4 SOLENOID	21-144
CIRCUIT, DIAGNOSIS AND TESTING - (P0778) SHIFT PRESSURE SOLENOID	21-150
CIRCUIT, DIAGNOSIS AND TESTING - PASSENGER AIRBAG ON/OFF SWITCH SIGNAL	8O-49
CIRCUIT, DIAGNOSIS AND TESTING - PASSENGER AIRBAG SQUIB	8O-23
CIRCUIT, DIAGNOSIS AND TESTING - PASSENGER SEAT BELT TENSIONER	8O-56
CIRCUIT, DIAGNOSIS AND TESTING - PASSENGER SEAT BELT TENSIONER SQUIB	8O-17
CIRCUIT, DIAGNOSIS AND TESTING - REAR DEFOGGER SWITCH SENSE	8G-2
CIRCUIT, DIAGNOSIS AND TESTING - REAR SPOILER DRIVER (DOWN)	23-16
CIRCUIT, DIAGNOSIS AND TESTING - REAR SPOILER DRIVER (UP)	23-13
CIRCUIT, DIAGNOSIS AND TESTING - REAR SPOILER SWITCH SENSE	23-4

Description	Group-Page
CIRCUIT, DIAGNOSIS AND TESTING - RECIRCULATED AIR SWITCHOVER VALVE	24-46
CIRCUIT, DIAGNOSIS AND TESTING - REMOTE KEYLESS ENTRY RELAY CONTROL	8Q-40
CIRCUIT, DIAGNOSIS AND TESTING - RIGHT COOLANT CIRCULATION VALVE	24-40
CIRCUIT, DIAGNOSIS AND TESTING - RIGHT FRONT WHEEL SPEED SENSOR	5-101
CIRCUIT, DIAGNOSIS AND TESTING - RIGHT HEATER CORE TEMPERATURE SENSOR	24-13
CIRCUIT, DIAGNOSIS AND TESTING - RIGHT REAR WHEEL SPEED SENSOR	5-113
CIRCUIT, DIAGNOSIS AND TESTING - RIGHT SIDE AIRBAG SQUIB	8O-35
CIRCUIT, DIAGNOSIS AND TESTING - RIGHT SIDE IMPACT SENSOR SIGNAL	8O-63
CIRCUIT, DIAGNOSIS AND TESTING - SENTRY KEY ANTENNA	8Q-38
CIRCUIT, DIAGNOSIS AND TESTING - SHORT RUNNER SOLENOID	9-551
CIRCUIT, DIAGNOSIS AND TESTING - SIREN SIGNAL OUTPUT	8Q-27
CIRCUIT, DIAGNOSIS AND TESTING - SPEED CONTROL SWITCH INPUT	9-553
CIRCUIT, DIAGNOSIS AND TESTING - SPOILER LIMIT SWITCH SIGNAL (DOWN)	23-10
CIRCUIT, DIAGNOSIS AND TESTING - SPOILER LIMIT SWITCH SIGNAL (UP)	23-7
CIRCUIT, DIAGNOSIS AND TESTING - STEERING ANGLE SENSOR	5-124
CIRCUIT FAILURE, DIAGNOSIS AND TESTING - CAN B BUS (-)	8Q-10
CIRCUIT FAILURE, DIAGNOSIS AND TESTING - CAN B BUS (+)	8Q-13
CIRCUIT HIGH, DIAGNOSIS AND TESTING - COOLING FAN CONTROL	9-517
CIRCUIT HIGH, DIAGNOSIS AND TESTING - (P0108) MAP SENSOR	9-29
CIRCUIT HIGH, DIAGNOSIS AND TESTING - (P0113) INTAKE AIR TEMPERATURE SENSOR	9-36
CIRCUIT HIGH, DIAGNOSIS AND TESTING - (P0118) ENGINE COOLANT TEMPERATURE SENSOR	9-51
CIRCUIT HIGH, DIAGNOSIS AND TESTING - (P0123) APPS SIGNAL #1	9-70
CIRCUIT HIGH, DIAGNOSIS AND TESTING - (P0132) O2 SENSOR 1/1	9-93
CIRCUIT HIGH, DIAGNOSIS AND TESTING - (P0135) O2 SENSOR 1/1 HEATER	9-113
CIRCUIT HIGH, DIAGNOSIS AND TESTING - (P0138) O2 SENSOR 1/2	9-129
CIRCUIT HIGH, DIAGNOSIS AND TESTING - (P0140) O2 SENSOR 2/2	9-139
CIRCUIT HIGH, DIAGNOSIS AND TESTING - (P0141) O2 SENSOR 1/2 HEATER	9-145
CIRCUIT HIGH, DIAGNOSIS AND TESTING - (P0152) O2 SENSOR 2/1	9-151
CIRCUIT HIGH, DIAGNOSIS AND TESTING - (P0155) O2 SENSOR 2/1 HEATER	9-165
CIRCUIT HIGH, DIAGNOSIS AND TESTING - (P0161) O2 SENSOR 2/2 HEATER	9-177
CIRCUIT HIGH, DIAGNOSIS AND TESTING - (P0223) APPS SIGNAL #2	9-279
CIRCUIT HIGH, DIAGNOSIS AND TESTING - (P0325) KNOCK SENSOR #1	9-328
CIRCUIT HIGH, DIAGNOSIS AND TESTING - (P0330) KNOCK SENSOR #2	9-330
CIRCUIT HIGH, DIAGNOSIS AND TESTING - (P0453) FUEL TANK PRESSURE SENSOR	9-397
CIRCUIT HIGH, DIAGNOSIS AND TESTING - (P2513) ENHANCED ACCIDENT REPORT DRIVER	9-499
CIRCUIT HIGH, DIAGNOSIS AND TESTING - SHORT RUNNER SOLENOID	9-545
CIRCUIT INFORMATION - DESCRIPTION	8W-01-5
CIRCUIT LOW, DIAGNOSIS AND TESTING - COOLING FAN CONTROL	9-519
CIRCUIT LOW, DIAGNOSIS AND TESTING - (P0103) MAF SENSOR	9-17
CIRCUIT LOW, DIAGNOSIS AND TESTING - (P0107) MAP SENSOR	9-24
CIRCUIT LOW, DIAGNOSIS AND TESTING - (P0112) INTAKE AIR TEMPERATURE SENSOR	9-31
CIRCUIT LOW, DIAGNOSIS AND TESTING - (P0117) ENGINE COOLANT TEMPERATURE SENSOR	9-49
CIRCUIT LOW, DIAGNOSIS AND TESTING - (P0122) APPS SIGNAL #1	9-65
CIRCUIT LOW, DIAGNOSIS AND TESTING - (P0131) O2 SENSOR 1/1	9-86
CIRCUIT LOW, DIAGNOSIS AND TESTING - (P0135) O2 SENSOR 1/1 HEATER	9-107
CIRCUIT LOW, DIAGNOSIS AND TESTING - (P0138) O2 SENSOR 2/2	9-133
CIRCUIT LOW, DIAGNOSIS AND TESTING - (P0140) O2 SENSOR 1/2	9-137
CIRCUIT LOW, DIAGNOSIS AND TESTING - (P0141) O2 SENSOR 1/2 HEATER	9-141
CIRCUIT LOW, DIAGNOSIS AND TESTING - (P0151) O2 SENSOR 2/1	9-149
CIRCUIT LOW, DIAGNOSIS AND TESTING - (P0155) O2 SENSOR 2/1 HEATER	9-163
CIRCUIT LOW, DIAGNOSIS AND TESTING - (P0161) O2 SENSOR 2/2 HEATER	9-173
CIRCUIT LOW, DIAGNOSIS AND TESTING - (P0222) APPS SIGNAL #2	9-274
CIRCUIT LOW, DIAGNOSIS AND TESTING - (P0325) KNOCK SENSOR #1	9-324
CIRCUIT LOW, DIAGNOSIS AND TESTING - (P0330) KNOCK SENSOR #2	9-332
CIRCUIT LOW, DIAGNOSIS AND TESTING - (P0452) FUEL TANK PRESSURE SENSOR	9-395
CIRCUIT LOW, DIAGNOSIS AND TESTING - (P2513) ENHANCED ACCIDENT REPORT DRIVER	9-504
CIRCUIT LOW, DIAGNOSIS AND TESTING - SHORT RUNNER SOLENOID	9-549
CIRCUIT OPEN, DIAGNOSIS AND TESTING - COOLING FAN CONTROL	9-514
CIRCUIT OPEN, DIAGNOSIS AND TESTING - (P0134) O2 SENSOR 1/1	9-105
CIRCUIT OPEN, DIAGNOSIS AND TESTING - (P0135) O2 SENSOR 1/1 HEATER	9-117
CIRCUIT OPEN, DIAGNOSIS AND TESTING - (P0138) O2 SENSOR 1/2	9-131
CIRCUIT OPEN, DIAGNOSIS AND TESTING - (P0138) O2 SENSOR 2/2	9-135
CIRCUIT OPEN, DIAGNOSIS AND TESTING - (P0141) O2 SENSOR 1/2 HEATER	9-143
CIRCUIT OPEN, DIAGNOSIS AND TESTING - (P0154) O2 SENSOR 2/1	9-161
CIRCUIT OPEN, DIAGNOSIS AND TESTING - (P0155) O2 SENSOR 2/1 HEATER	9-167
CIRCUIT OPEN, DIAGNOSIS AND TESTING - (P0161) O2 SENSOR 2/2 HEATER	9-175
CIRCUIT OPEN, DIAGNOSIS AND TESTING - VOLTAGE SUPPLY	8R-2
CIRCUIT SHORT TO GROUND - (P0753) 1, 2/4-5 SOLENOID	21-136
CIRCUIT SHORT TO GROUND - (P0758) 2, 3 SOLENOID	21-142
CIRCUIT SHORT TO GROUND - (P0763) 3, 4 SOLENOID	21-148
CIRCUITS - DESCRIPTION, NON-MONITORED	25-10
CIRCULATION PUMP CIRCUIT, DIAGNOSIS AND TESTING - COOLANT	24-34
CIRCULATION VALVE - DESCRIPTION, COOLANT	24-150
CIRCULATION VALVE - INSTALLATION, COOLANT	24-153
CIRCULATION VALVE - OPERATION, COOLANT	24-151
CIRCULATION VALVE - REMOVAL, COOLANT	24-152
CIRCULATION VALVE CIRCUIT, DIAGNOSIS AND TESTING - LEFT COOLANT	24-37
CIRCULATION VALVE CIRCUIT, DIAGNOSIS AND TESTING - RIGHT COOLANT	24-40
CLEARANCE USING PLASTIGAGE® - STANDARD PROCEDURE, MEASURING BEARING	9-591
CLOCKSPRING - DESCRIPTION	8O-92
CLOCKSPRING - INSTALLATION	8O-96
CLOCKSPRING - OPERATION	8O-92
CLOCKSPRING - REMOVAL	8O-94
CLOCKSPRING CENTERING - STANDARD PROCEDURE	8O-93
CLP/SSM SYSTEM OVERVOLTAGE, DIAGNOSIS AND TESTING	8N-17
CLP/SSM SYSTEM UNDERVOLTAGE, DIAGNOSIS AND TESTING	8N-14
CLUSTER - INSTALLATION, INSTRUMENT	8J-84
CLUSTER - REMOVAL, INSTRUMENT	8J-83
CLUSTER - SERVICE INFORMATION - DESCRIPTION, INSTRUMENT	8J-56
CLUSTER - SERVICE INFORMATION - OPERATION, INSTRUMENT	8J-59
CLUSTER BULBS - STANDARD PROCEDURE, INSTRUMENT	8J-81
CLUSTER BUS MESSAGE, DIAGNOSIS AND TESTING - (P0600) NO	9-445
CLUSTER COVER - INSTALLATION, INSTRUMENT	23-160
CLUSTER COVER - REMOVAL, INSTRUMENT	23-154
CLUSTER, DIAGNOSIS AND TESTING - NO COMMUNICATION FROM INSTRUMENT	24-49
CLUSTER, DIAGNOSIS AND TESTING - NO COMMUNICATION FROM INSTRUMENT	8J-14
CLUSTER, DIAGNOSIS AND TESTING - NO COMMUNICATION TO INSTRUMENT	24-51
CLUSTER, DIAGNOSIS AND TESTING - NO COMMUNICATION TO INSTRUMENT	8J-16
CLUSTER, DIAGNOSIS AND TESTING - NO RESPONSE FROM INSTRUMENT	8E-13
CLUTCH - ASSEMBLY, FREEWHEELING	21-301
CLUTCH - DESCRIPTION	6-1
CLUTCH - DESCRIPTION, A/C COMPRESSOR	24-72
CLUTCH - DESCRIPTION, FREEWHEELING	21-298
CLUTCH - DIAGNOSIS AND TESTING	6-2
CLUTCH - DISASSEMBLY, FREEWHEELING	21-299
CLUTCH - INSTALLATION, MASTER CYLINDER	6-17
CLUTCH - OPERATION	6-2
CLUTCH - OPERATION, A/C COMPRESSOR	24-73
CLUTCH - OPERATION, FREEWHEELING	21-298
CLUTCH - REMOVAL, MASTER CYLINDER	6-15
CLUTCH - WARNING	6-2
CLUTCH B1 - ASSEMBLY, HOLDING	21-305
CLUTCH B1 - DISASSEMBLY, HOLDING	21-304
CLUTCH B2 - ASSEMBLY, HOLDING	21-308
CLUTCH B2 - DISASSEMBLY, HOLDING	21-307
CLUTCH BREAK-IN - STANDARD PROCEDURE, COMPRESSOR	24-74
CLUTCH CIRCUIT, DIAGNOSIS AND TESTING - A/C COMPRESSOR	24-43
CLUTCH COIL - DIAGNOSIS AND TESTING, COMPRESSOR	24-73
CLUTCH COVER - DESCRIPTION	6-12
CLUTCH COVER - INSTALLATION	6-13
CLUTCH COVER - OPERATION	6-12
CLUTCH COVER - REMOVAL	6-12
CLUTCH DISC - INSTALLATION	6-10
CLUTCH DISC - REMOVAL	6-9
CLUTCH K1 - ASSEMBLY, DRIVING	21-258
CLUTCH K1 - DISASSEMBLY, DRIVING	21-257
CLUTCH K2 - ASSEMBLY, DRIVING	21-263
CLUTCH K2 - DISASSEMBLY, DRIVING	21-261
CLUTCH K3 - ASSEMBLY, DRIVING	21-267
CLUTCH K3 - DISASSEMBLY, DRIVING	21-266
CLUTCH PEDAL - INSTALLATION	6-25
CLUTCH PEDAL - REMOVAL	6-24
CLUTCHES - DESCRIPTION, DRIVING	21-255
CLUTCHES - DESCRIPTION, HOLDING	21-302

Description	Group-Page
CLUTCHES - OPERATION, DRIVING	21-256
CLUTCHES - OPERATION, HOLDING	21-303
COAT FINISH - DESCRIPTION, BASE COAT/CLEAR	23-199
COAT/CLEAR COAT FINISH - DESCRIPTION, BASE	23-199
CODE - DESCRIPTION, PAINT	23-199
CODE - SPECIFICATIONS, PAINT	23-199
COIL - DESCRIPTION, IGNITION	8I-5
COIL - DIAGNOSIS AND TESTING, COMPRESSOR CLUTCH	24-73
COIL - INSTALLATION, IGNITION	8I-5
COIL - REMOVAL, IGNITION	8I-5
COLUMN - ASSEMBLY	19-14
COLUMN - DESCRIPTION	19-8
COLUMN - DISASSEMBLY	19-13
COLUMN - REMOVAL	19-9
COLUMN, INSTALLATION - STEERING	19-15
COMBUSTION PRESSURE LEAKAGE TEST - DIAGNOSIS AND TESTING, CYLINDER	9-588
COMMUNICATION - DESCRIPTION	8E-52
COMMUNICATION - OPERATION	8E-52
COMMUNICATION FROM INSTRUMENT CLUSTER, DIAGNOSIS AND TESTING - NO	8J-14
COMMUNICATION GENERAL MALFUNCTION, DIAGNOSIS AND TESTING - CAN BUS	5-162,5-88
COMMUNICATION GENERAL MALFUNCTION, DIAGNOSIS AND TESTING - CAN BUS	8J-36
COMMUNICATION TO INSTRUMENT CLUSTER, DIAGNOSIS AND TESTING - NO	24-51
COMMUNICATION TO INSTRUMENT CLUSTER, DIAGNOSIS AND TESTING - NO	8J-16
COMMUNICATION WITH BCM AND CENTRAL LOCKING PUMP/SECURITY SYSTEM MODULE, DIAGNOSIS AND TESTING - NO	8Q-8
COMMUNICATION WITH BODY CONTROL MODULE AND CENTRAL LOCKING PUMP/SECURITY SYSTEM MODULE, DIAGNOSIS AND TESTING - NO	8N-20
COMMUNICATIONS WITH CAB, DIAGNOSIS AND TESTING - NO CAN	8J-24
COMMUNICATIONS WITH PCM, DIAGNOSIS AND TESTING - NO CAN	5-164,5-90
COMMUNICATIONS WITH PCM, DIAGNOSIS AND TESTING - NO CAN	8J-18
COMMUNICATIONS WITH PCM, DIAGNOSIS AND TESTING - NO CAN	8Q-25
COMMUNICATIONS WITH TCM, DIAGNOSIS AND TESTING - NO CAN	5-92
COMMUNICATIONS WITH TCM, DIAGNOSIS AND TESTING - NO CAN	8J-30
COMPARTMENT, INSTALLATION - GLOVE	23-146
COMPARTMENT, REMOVAL - GLOVE	23-143
COMPARTMENT, STANDARD PROCEDURE - ADJUSTING THE GLOVE	23-141
COMPRESSION PRESSURE TEST - DIAGNOSIS AND TESTING, CYLINDER	9-587
COMPRESSOR - DESCRIPTION, A/C	24-119
COMPRESSOR - INSTALLATION, A/C	24-122
COMPRESSOR - OPERATION, A/C	24-120
COMPRESSOR - REMOVAL, A/C	24-121
COMPRESSOR CLUTCH - DESCRIPTION, A/C	24-72
COMPRESSOR CLUTCH - OPERATION, A/C	24-73
COMPRESSOR CLUTCH BREAK-IN - STANDARD PROCEDURE	24-74
COMPRESSOR CLUTCH CIRCUIT, DIAGNOSIS AND TESTING - A/C	24-43
COMPRESSOR CLUTCH COIL - DIAGNOSIS AND TESTING	24-73
COMPRESSOR NOISE - DIAGNOSIS AND TESTING	24-120
CONCENTRATION TESTING - DIAGNOSIS AND TESTING, COOLANT	7-17
CONDENSER - DESCRIPTION, A/C	24-125
CONDENSER - INSTALLATION, A/C	24-127
CONDENSER - OPERATION, A/C	24-125
CONDENSER - REMOVAL, A/C	24-126
CONDITIONER - DESCRIPTION, HEATER AND AIR	24-55
CONDITIONER, OPERATION - HEATER AND AIR	24-59
CONDITIONING - ELECTRICAL DIAGNOSTICS - DESCRIPTION, HEATING & AIR	24-1
CONDITIONING - ELECTRICAL DIAGNOSTICS - OPERATION, HEATING & AIR	24-2
CONDITIONS - DIAGNOSIS AND TESTING, SPARK PLUG	8I-8
CONNECTING FLANGE SEAL - INSTALLATION, DIFFERENTIAL	3-47
CONNECTING FLANGE SEAL - REMOVAL, DIFFERENTIAL	3-46
CONNECTING ROD - DESCRIPTION, PISTON	9-639
CONNECTING ROD BEARINGS - DESCRIPTION	9-638
CONNECTING RODS AND BEARINGS - STANDARD PROCEDURE	9-638
CONNECTOR - DESCRIPTION, DATA LINK	8E-53
CONNECTOR - INSTALLATION	8W-01-11
CONNECTOR - OPERATION, DATA LINK	8E-53
CONNECTOR - REMOVAL	8W-01-11
CONNECTOR, GROUND AND SPLICE INFORMATION - DESCRIPTION	8W-01-6
CONNECTOR/GROUND/SPLICE LOCATION - DESCRIPTION	8W-91-1
CONNECTORS REVERSED, DIAGNOSIS AND TESTING - (P0040) 1/1 AND 2/1 O2 SENSOR HARNESS	9-5
CONSOLE - INSTALLATION, REAR CENTER	23-188
CONSOLE - REMOVAL, REAR CENTER	23-178
CONSOLE COVER - INSTALLATION, CENTER	23-186
CONSOLE COVER - REMOVAL, CENTER	23-176
CONSOLE (FRONT), INSTALLATION - CENTER	23-183
CONSOLE (FRONT), REMOVAL - CENTER	23-173
CONTACT, DESCRIPTION - PARK/ NEUTRAL	21-327
CONTACT, OPERATION - PARK/NEUTRAL	21-328
CONTAMINATION - DIAGNOSIS AND TESTING, FLUID	21-293
CONTAMINATION, DIAGNOSIS AND TESTING - BRAKE FLUID	5-42
CONTAMINATION, DIAGNOSIS AND TESTING - ENGINE OIL SENSOR WATER	9-538
CONTINUITY - STANDARD PROCEDURE, TESTING	8W-01-10
CONTINUOUSLY WITH IGNITION ON, DIAGNOSIS AND TESTING - WASHERS RUN	8R-6
CONTINUOUSLY WITH IGNITION ON, DIAGNOSIS AND TESTING - WIPERS RUN	8R-17
CONTROL ARM - INSTALLATION, LOWER	2-37, 2-55
CONTROL ARM - INSTALLATION, UPPER	2-39
CONTROL ARM - REMOVAL, LOWER	2-34,2-53
CONTROL ARM - REMOVAL, UPPER	2-39
CONTROL BELOW LIMIT (AT IDLE), DIAGNOSIS AND TESTING - (P0172) FUEL SYSTEM 1/1 LEAN	9-207
CONTROL BELOW LIMIT (AT IDLE), DIAGNOSIS AND TESTING - (P0175) FUEL SYSTEM 2/1 LEAN	9-233
CONTROL BELOW LIMIT (AT LOAD), DIAGNOSIS AND TESTING - (P0172) FUEL SYSTEM 1/1 LEAN	9-199
CONTROL BELOW LIMIT (AT LOAD), DIAGNOSIS AND TESTING - (P0174) FUEL SYSTEM 2/1 LEAN	9-224
CONTROL CIRCUIT, DIAGNOSIS AND TESTING - (P0403) EGR	9-354
CONTROL CIRCUIT, DIAGNOSIS AND TESTING - REMOTE KEYLESS ENTRY RELAY	8Q-40
CONTROL CIRCUIT HIGH, DIAGNOSIS AND TESTING - COOLING FAN	9-517
CONTROL CIRCUIT LOW, DIAGNOSIS AND TESTING - COOLING FAN	9-519
CONTROL CIRCUIT OPEN, DIAGNOSIS AND TESTING - COOLING FAN	9-514
CONTROL INFORMATION LABEL - DESCRIPTION, VEHICLE EMISSION	25-12
CONTROL MODULE - DESCRIPTION, A/C HEATER	24-78
CONTROL MODULE - DESCRIPTION, BODY	8E-71
CONTROL MODULE - DESCRIPTION, POWERTRAIN	8E-54
CONTROL MODULE - DESCRIPTION, RELAY	8W-97-3
CONTROL MODULE - DESCRIPTION, TRANSMISSION	8E-58
CONTROL MODULE - INSTALLATION, A/C HEATER	24-81
CONTROL MODULE - INSTALLATION, BODY	8E-73
CONTROL MODULE - INSTALLATION, POWERTRAIN	8E-57
CONTROL MODULE - INSTALLATION, RADIATOR FAN	7-29
CONTROL MODULE - INSTALLATION, RELAY	8W-97-4
CONTROL MODULE - INSTALLATION, TRANSMISSION	8E-61
CONTROL MODULE - OPERATION, A/C HEATER	24-78
CONTROL MODULE - OPERATION, BODY	8E-71
CONTROL MODULE - OPERATION, POWERTRAIN	8E-54
CONTROL MODULE - OPERATION, RELAY	8W-97-3
CONTROL MODULE - OPERATION, TRANSMISSION	8E-58
CONTROL MODULE - REMOVAL, A/C HEATER	24-79
CONTROL MODULE - REMOVAL, BODY	8E-72
CONTROL MODULE - REMOVAL, POWERTRAIN	8E-56
CONTROL MODULE - REMOVAL, RADIATOR FAN	7-29
CONTROL MODULE - REMOVAL, RELAY	8W-97-4
CONTROL MODULE - REMOVAL, TRANSMISSION	8E-60
CONTROL MODULE AND CENTRAL LOCKING PUMP/SECURITY SYSTEM MODULE, DIAGNOSIS AND TESTING - NO COMMUNICATION WITH BODY	8N-20
CONTROL MODULE, DIAGNOSIS AND TESTING - NO RESPONSE FROM A/C HEATER	8E-21
CONTROL MODULE, DIAGNOSIS AND TESTING - NO RESPONSE FROM BODY	8E-36
CONTROL MODULE, DIAGNOSIS AND TESTING - NO RESPONSE FROM POWERTRAIN	8E-4
CONTROL MODULE, DIAGNOSIS AND TESTING - NO RESPONSE FROM TRANSMISSION	8E-33
CONTROL MODULE, DIAGNOSIS AND TESTING - (P0600) INCORRECT CAN MESSAGE FROM EIS	9-425
CONTROL MODULE INTERNAL FAILURE, DIAGNOSIS AND TESTING - BODY	23-2
CONTROL MODULE INTERNAL FAILURE, DIAGNOSIS AND TESTING - BODY	8N-11
CONTROL MODULE LOW VOLTAGE, DIAGNOSIS AND TESTING - (P0702) TRANSMISSION	9-455
CONTROL MODULE PERFORMANCE, DIAGNOSIS AND TESTING - (P0221) ELECTRONIC THROTTLE	9-270
CONTROL MODULE PROCESSOR, DIAGNOSIS AND TESTING - (P0221) ELECTRONIC THROTTLE	9-272
CONTROL MODULE REQUESTED MIL ILLUMINATION, DIAGNOSIS AND TESTING - (P2561) HVAC	9-512
CONTROL MODULE TCM IS NOT CODED, DIAGNOSIS AND TESTING - (P0702)	21-74
CONTROL MODULE VERSION, DIAGNOSIS AND TESTING - (P0702) INVALID	21-78
CONTROL MOTOR PERFORMANCE, DIAGNOSIS AND TESTING - (P0120) ELECTRONIC THROTTLE	9-53
CONTROL OVER LIMIT (AT IDLE), DIAGNOSIS AND TESTING - (P0171) FUEL SYSTEM 1/1 RICH	9-183

Description	Group-Page
CONTROL OVER LIMIT (AT IDLE), DIAGNOSIS AND TESTING - (P0174) FUEL SYSTEM 2/1 RICH	9-218
CONTROL OVER LIMIT (AT LOAD), DIAGNOSIS AND TESTING - (P0171) FUEL SYSTEM 1/1 RICH	9-187
CONTROL OVER LIMIT (AT LOAD), DIAGNOSIS AND TESTING - (P0173) FUEL SYSTEM 2/1 RICH	9-211
CONTROL OVER LIMIT (AT LOAD), DIAGNOSIS AND TESTING - (P0174) FUEL SYSTEM 2/1 RICH	9-221
CONTROL SWITCH INPUT CIRCUIT, DIAGNOSIS AND TESTING - SPEED	9-553
CONTROL SYSTEM - DESCRIPTION, EVAPORATION	25-15
CONTROL SYSTEM (MIL REQUEST), DIAGNOSIS AND TESTING - (P0700) TRANSMISSION	9-453
CONTROL SYSTEM (MIL REQUEST), DIAGNOSIS AND TESTING - (P0702) TRANSMISSION	9-457
CONTROL SYSTEM (MIL REQUEST), DIAGNOSIS AND TESTING - (P0705) SLA	9-463
CONTROL SYSTEM (MIL REQUEST), DIAGNOSIS AND TESTING - (P0705) TRANSMISSION	9-465
CONTROL SYSTEM (MIL REQUEST), DIAGNOSIS AND TESTING - (P0715) TRANSMISSION	9-467
CONTROL SYSTEM (MIL REQUEST), DIAGNOSIS AND TESTING - (P0720) TRANSMISSION	9-475
CONTROL SYSTEM (MIL REQUEST), DIAGNOSIS AND TESTING - (P0730) TRANSMISSION	9-477
CONTROL SYSTEM (MIL REQUEST), DIAGNOSIS AND TESTING - (P0740) TRANSMISSION	9-479
CONTROL SYSTEM (MIL REQUEST), DIAGNOSIS AND TESTING - (P0743) TRANSMISSION	9-481
CONTROL SYSTEM (MIL REQUEST), DIAGNOSIS AND TESTING - (P0748) TRANSMISSION	9-483
CONTROL SYSTEM (MIL REQUEST), DIAGNOSIS AND TESTING - (P0753) TRANSMISSION	9-485
CONTROL SYSTEM (MIL REQUEST), DIAGNOSIS AND TESTING - (P0758) TRANSMISSION	9-487
CONTROL SYSTEM (MIL REQUEST), DIAGNOSIS AND TESTING - (P0763) TRANSMISSION	9-489
CONTROLLER - DESCRIPTION, OCCUPANT RESTRAINT	8O-87
CONTROLLER - INSTALLATION, OCCUPANT RESTRAINT	8O-91
CONTROLLER - OPERATION, OCCUPANT RESTRAINT	8O-88
CONTROLLER - REMOVAL, OCCUPANT RESTRAINT	8O-89
CONTROLLER ANTILOCK BRAKE - DESCRIPTION	8E-62
CONTROLLER ANTILOCK BRAKE - INSTALLATION	8E-64
CONTROLLER ANTILOCK BRAKE - OPERATION	8E-62
CONTROLLER ANTILOCK BRAKE - REMOVAL	8E-63
CONTROLLER ANTILOCK BRAKE, DIAGNOSIS AND TESTING - NO RESPONSE FROM	8E-25
CONTROLLER, DIAGNOSIS AND TESTING - INTERNAL	21-171
CONTROLLER, DIAGNOSIS AND TESTING - NO RESPONSE FROM OCCUPANT RESTRAINT	8E-10
CONTROLLER, DIAGNOSIS AND TESTING - (P0702) INTERNAL	21-76
CONTROLS - INSTALLATION	24-83
CONTROLS - REMOVAL	24-82
CONVERTER - DESCRIPTION, TORQUE	21-330
CONVERTER - INSTALLATION, TORQUE	21-336
CONVERTER - OPERATION, TORQUE	21-333
CONVERTER - REMOVAL, TORQUE	21-335
CONVERTER HUB SEAL - INSTALLATION, TORQUE	21-337
CONVERTER HUB SEAL - REMOVAL, TORQUE	21-337
COOLANT - DESCRIPTION, HOAT	7-16
COOLANT - DESCRIPTION, HOAT	0-4
COOLANT - OPERATION	7-17
COOLANT CIRCULATION PUMP CIRCUIT, DIAGNOSIS AND TESTING	24-34
COOLANT CIRCULATION VALVE - DESCRIPTION	24-150
COOLANT CIRCULATION VALVE - INSTALLATION	24-153
COOLANT CIRCULATION VALVE - OPERATION	24-151
COOLANT CIRCULATION VALVE - REMOVAL	24-152
COOLANT CIRCULATION VALVE CIRCUIT, DIAGNOSIS AND TESTING - LEFT	24-37
COOLANT CIRCULATION VALVE CIRCUIT, DIAGNOSIS AND TESTING - RIGHT	24-40
COOLANT CONCENTRATION TESTING - DIAGNOSIS AND TESTING	7-17
COOLANT LEVEL SENSOR - INSTALLATION	7-20
COOLANT LEVEL SENSOR - REMOVAL	7-20
COOLANT LEVEL SENSOR/WASHER FLUID LEVEL SWITCH CIRCUIT, DIAGNOSIS AND TESTING	8J-2
COOLANT RECOVERY RESERVOIR - INSTALLATION	7-25
COOLANT RECOVERY RESERVOIR - OPERATION	7-24
COOLANT RECOVERY RESERVOIR - REMOVAL	7-24
COOLANT TEMP, DIAGNOSIS AND TESTING - (P0128) FORCED LIMITED POWER EXCESSIVE HIGH	9-74
COOLANT TEMPERATURE SENSOR - INSTALLATION, ENGINE	7-31
COOLANT TEMPERATURE SENSOR - OPERATION, ENGINE	7-29
COOLANT TEMPERATURE SENSOR - REMOVAL, ENGINE	7-29
COOLANT TEMPERATURE SENSOR CIRCUIT, DIAGNOSIS AND TESTING - ENGINE	24-23
COOLANT TEMPERATURE SENSOR CIRCUIT HIGH, DIAGNOSIS AND TESTING - (P0118) ENGINE	9-51
COOLANT TEMPERATURE SENSOR CIRCUIT LOW, DIAGNOSIS AND TESTING - (P0117) ENGINE	9-49
COOLANT TEMPERATURE SENSOR PERFORMANCE, DIAGNOSIS AND TESTING - (P0116) ENGINE	9-40
COOLANT TEMPERATURE SENSOR SHORT CIRCUIT, DIAGNOSIS AND TESTING - (P0116) ENGINE	9-47
COOLANT THERMOSTAT - DESCRIPTION, ENGINE	7-21
COOLANT THERMOSTAT - DIAGNOSIS AND TESTING, ENGINE	7-22
COOLANT THERMOSTAT - INSTALLATION, ENGINE	7-23
COOLANT THERMOSTAT - OPERATION, ENGINE	7-21
COOLANT THERMOSTAT - REMOVAL, ENGINE	7-23
COOLER LINES - INSTALLATION, TRANSMISSION	7-50
COOLER LINES - REMOVAL, TRANSMISSION	7-49
COOLING - ELECTRICAL DIAGNOSTICS - DESCRIPTION	7-1
COOLING - ELECTRICAL DIAGNOSTICS - OPERATION	7-1
COOLING - SERVICE INFORMATION - DESCRIPTION	7-11
COOLING FAN ALWAYS ON, DIAGNOSIS AND TESTING - RADIATOR	7-6
COOLING FAN CONTROL CIRCUIT HIGH, DIAGNOSIS AND TESTING	9-517
COOLING FAN CONTROL CIRCUIT LOW, DIAGNOSIS AND TESTING	9-519
COOLING FAN CONTROL CIRCUIT OPEN, DIAGNOSIS AND TESTING	9-514
COOLING FAN INOPERATIVE, DIAGNOSIS AND TESTING - RADIATOR	7-2
COOLING SYSTEM - STANDARD PROCEDURE, REFILLING	7-18
COOLING SYSTEM LEAK, DIAGNOSIS AND TESTING	7-13
COOLING SYSTEM, OPERATION - ENGINE	7-12
COOLING SYSTEM OVERHEATING, DIAGNOSIS AND TESTING - ENGINE	7-12
COOLING SYSTEM REQUIREMENTS, DESCRIPTION	24-55
COOLING SYSTEM REVERSE FLUSHING - STANDARD PROCEDURE	7-19
COOLING SYSTEM, STANDARD PROCEDURE - DRAINING	7-18
CORE - DESCRIPTION, HEATER	24-141
CORE - INSTALLATION, HEATER	24-144
CORE - OPERATION, HEATER	24-141
CORE - REMOVAL, HEATER	24-142
CORE AND OIL GALLERY PLUGS - STANDARD PROCEDURE, ENGINE	9-591
CORE TEMPERATURE SENSOR - INSTALLATION, HEATER	24-85
CORE TEMPERATURE SENSOR - REMOVAL, HEATER	24-85
CORE TEMPERATURE SENSOR CIRCUIT, DIAGNOSIS AND TESTING - LEFT HEATER	24-8
CORE TEMPERATURE SENSOR CIRCUIT, DIAGNOSIS AND TESTING - RIGHT HEATER	24-13
CORRELATION, DIAGNOSIS AND TESTING - (P0120) THROTTLE POSITION SENSOR 1/2	9-59
CORRELATION, DIAGNOSIS AND TESTING - (P0221) APPS SENSOR #1 AND #2 VOLTAGE	9-262
CORRESPOND TO THE VEHICLE EQUIPMENT, DIAGNOSIS AND TESTING - PROGRAMMING DOES NOT	8O-41
COUNTERSHAFT - ASSEMBLY	21-383
COUNTERSHAFT - DISASSEMBLY	21-380
COURTESY LAMP - INSTALLATION	8L-141
COURTESY LAMP - REMOVAL	8L-140
COURTESY LAMP DEFEAT SWITCH - DESCRIPTION	8L-141
COURTESY LAMP SWITCH/UNIT - DESCRIPTION	8L-142
COURTESY LAMP SWITCH/UNIT - INSTALLATION	8L-143
COURTESY LAMP SWITCH/UNIT - OPERATION	8L-142
COURTESY LAMP SWITCH/UNIT - REMOVAL	8L-142
COVER - DESCRIPTION, CLUTCH	6-12
COVER - DESCRIPTION, CYLINDER HEAD	9-617
COVER - INSTALLATION, CENTER CONSOLE	23-186
COVER - INSTALLATION, CLUTCH	6-13
COVER - INSTALLATION, CYLINDER HEAD	9-618
COVER - INSTALLATION, FOOTWELL AIR OUTLET	24-111
COVER - INSTALLATION, INSTRUMENT CLUSTER	23-160
COVER - INSTALLATION, PLASTIC BACK	23-205
COVER - INSTALLATION, SEAT BACK	23-208
COVER - INSTALLATION, SEAT CUSHION	23-217
COVER - INSTALLATION, SHIFT LEVER ASSEMBLY	23-192
COVER - INSTALLATION, TIMING CHAIN	9-688
COVER - OPERATION, CLUTCH	6-12
COVER - REMOVAL, CENTER CONSOLE	23-176
COVER - REMOVAL, CLUTCH	6-12
COVER - REMOVAL, CYLINDER HEAD	9-617
COVER - REMOVAL, FOOTWELL AIR OUTLET	24-110
COVER - REMOVAL, INSTRUMENT CLUSTER	23-154
COVER - REMOVAL, PLASTIC BACK	23-204
COVER - REMOVAL, SEAT BACK	23-206
COVER - REMOVAL, SEAT CUSHION	23-214
COVER - REMOVAL, SHIFT LEVER ASSEMBLY	23-182
COVER - REMOVAL, TIMING CHAIN	9-685
COWL GRILLE - INSTALLATION	23-114
COWL GRILLE - REMOVAL	23-114

Description	Group-Page
CRANKCASE VENT HOSE - DESCRIPTION	25-16
CRANKS BUT DOES NOT START, DIAGNOSIS AND TESTING - ENGINE	9-563
CRANKSHAFT AND MAIN BEARINGS - DESCRIPTION	9-647
CRANKSHAFT AND MAIN BEARINGS - INSTALLATION	9-650
CRANKSHAFT AND MAIN BEARINGS - OPERATION	9-647
CRANKSHAFT AND MAIN BEARINGS - REMOVAL	9-647
CRANKSHAFT OIL SEAL - FRONT - INSTALLATION	9-636
CRANKSHAFT OIL SEAL - FRONT - REMOVAL	9-636
CRANKSHAFT OIL SEAL - REAR - INSTALLATION	9-635
CRANKSHAFT OIL SEAL - REAR - REMOVAL	9-634
CRANKSHAFT POSITION SENSOR - DESCRIPTION	14-30
CRANKSHAFT POSITION SENSOR - INSTALLATION	14-31
CRANKSHAFT POSITION SENSOR - OPERATION	14-30
CRANKSHAFT POSITION SENSOR - REMOVAL	14-31
CRANKSHAFT POSITION SENSOR CIRCUIT, DIAGNOSIS AND TESTING - (P0335)	9-334
CUSHION - INSTALLATION, SEAT	23-213
CUSHION - REMOVAL, SEAT	23-211
CUSHION COVER - INSTALLATION, SEAT	23-217
CUSHION COVER - REMOVAL, SEAT	23-214
CUSHION ELEMENT, INSTALLATION - HEATED SEAT	8G-41
CUSHION ELEMENT, REMOVAL - HEATED SEAT	8G-40
CUSTOMER PREFERENCES - STANDARD PROCEDURE, TOGGLING	8N-35
CV BOOT - INNER - INSTALLATION	3-9
CV BOOT - INNER - REMOVAL	3-7
CV BOOT - OUTER - INSTALLATION	3-12
CV BOOT - OUTER - REMOVAL	3-11
CV JOINT - INSPECTION	3-16
CV JOINT - INSTALLATION	3-19
CV JOINT - REMOVAL	3-14
CYLINDER - CLUTCH - INSTALLATION, MASTER	6-17
CYLINDER - CLUTCH - REMOVAL, MASTER	6-15
CYLINDER - DESCRIPTION, RELEASE BEARING/SLAVE	6-19
CYLINDER - INSTALLATION, KEY/LOCK	19-30
CYLINDER - INSTALLATION, LOCK	23-106
CYLINDER - INSTALLATION, RELEASE BEARING/SLAVE	6-20
CYLINDER - OPERATION, RELEASE BEARING/SLAVE	6-19
CYLINDER - REMOVAL, KEY/LOCK	19-28
CYLINDER - REMOVAL, LOCK	23-105
CYLINDER - REMOVAL, RELEASE BEARING/SLAVE	6-20
CYLINDER #1 MISFIRE, DIAGNOSIS AND TESTING - (P0301)	9-294
CYLINDER #2 MISFIRE, DIAGNOSIS AND TESTING - (P0302)	9-304
CYLINDER #3 MISFIRE, DIAGNOSIS AND TESTING - (P0303)	9-308
CYLINDER #4 MISFIRE, DIAGNOSIS AND TESTING - (P0304)	9-312
CYLINDER #5 MISFIRE, DIAGNOSIS AND TESTING - (P0305)	9-316
CYLINDER #6 MISFIRE, DIAGNOSIS AND TESTING - (P0306)	9-320
CYLINDER BLEEDING PROCEDURE, STANDARD PROCEDURE - MASTER	5-46
CYLINDER BLEEDING, STANDARD PROCEDURE - MASTER	6-7
CYLINDER COMBUSTION PRESSURE LEAKAGE TEST - DIAGNOSIS AND TESTING	9-588
CYLINDER COMPRESSION PRESSURE TEST - DIAGNOSIS AND TESTING	9-587
CYLINDER, DESCRIPTION - MASTER	5-44
CYLINDER FLUID LEVEL, STANDARD PROCEDURE - MASTER	5-43
CYLINDER FLUID LOSS - DIAGNOSIS AND TESTING, MASTER	5-45
CYLINDER HEAD - CLEANING	9-614
CYLINDER HEAD - DESCRIPTION	9-610
CYLINDER HEAD - INSPECTION	9-614
CYLINDER HEAD - INSTALLATION	9-614
CYLINDER HEAD - OPERATION	9-610
CYLINDER HEAD - REMOVAL	9-611
CYLINDER HEAD COVER - DESCRIPTION	9-617
CYLINDER HEAD COVER - INSTALLATION	9-618
CYLINDER HEAD COVER - REMOVAL	9-617
CYLINDER HEAD GASKET - DIAGNOSIS AND TESTING	9-610
CYLINDER LOCK SWITCH - INSTALLATION, DRIVER	8Q-57
CYLINDER LOCK SWITCH - REMOVAL, DOOR	8Q-56
CYLINDER MISFIRE, DIAGNOSIS AND TESTING - (P0300) MULTIPLE	9-283
CYLINDER, OPERATION - MASTER	5-44
CYLINDER/POWER BOOSTER, DIAGNOSIS AND TESTING - MASTER	5-44
DAMAGED OR WORN THREADS - STANDARD PROCEDURE, REPAIR OF	9-589
DAMPER - INSTALLATION	19-47
DAMPER - INSTALLATION, VIBRATION	9-652
DAMPER - REMOVAL	19-46
DAMPER - REMOVAL, VIBRATION	9-651
DATA LINK CONNECTOR - DESCRIPTION	8E-53
DATA LINK CONNECTOR - OPERATION	8E-53
DAY / NIGHT MIRROR - DESCRIPTION, AUTOMATIC	8N-68
DAY / NIGHT MIRROR - OPERATION, AUTOMATIC	8N-68
DAY / NIGHT MIRROR - REMOVAL, AUTOMATIC	8N-68
DAY/NIGHT MIRROR INOPERATIVE, DIAGNOSIS AND TESTING - AUTOMATIC	8N-59
DEFEAT SWITCH - DESCRIPTION, COURTESY LAMP	8L-141
DEFINITION - DESCRIPTION, TRIP	25-12
DEFOGGER GRID - DIAGNOSIS AND TESTING, REAR WINDOW	8G-12
DEFOGGER INOPERATIVE, DIAGNOSIS AND TESTING - REAR WINDOW	8G-5
DEFOGGER SWITCH - INSTALLATION, REAR WINDOW	8G-12
DEFOGGER SWITCH - REMOVAL, REAR WINDOW	8G-12
DEFOGGER SWITCH SENSE CIRCUIT, DIAGNOSIS AND TESTING - REAR	8G-2
DEFOGGER SYSTEM - DIAGNOSIS AND TESTING, REAR WINDOW	8G-11
DEFROSTER DUCTS - INSTALLATION	24-109
DEFROSTER DUCTS - REMOVAL	24-109
DEPLOYMENT - STANDARD PROCEDURE, SERVICE AFTER A SUPPLEMENTAL RESTRAINT	8O-84
DETECTED, DIAGNOSIS AND TESTING - (P1600) ROUGH ROAD	9-493
DETECTED, DIAGNOSIS AND TESTING - SAFETY FUEL SHUT OFF	9-540
DETENT PLUG - INSTALLATION	21-359
DETENT PLUG - REMOVAL	21-358
DEVICES - STANDARD PROCEDURE, ELECTROSTATIC DISCHARGE (ESD) SENSITIVE	8W-01-9
DIAGNOSTICS - DESCRIPTION, COOLING - ELECTRICAL	7-1
DIAGNOSTICS - DESCRIPTION, HEATING & AIR CONDITIONING - ELECTRICAL	24-1
DIAGNOSTICS - OPERATION, COOLING - ELECTRICAL	7-1
DIAGNOSTICS - OPERATION, HEATING & AIR CONDITIONING - ELECTRICAL	24-2
DIAGNOSTICS - SCHEMATICS AND DIAGRAMS, CHIME/BUZZER - ELECTRICAL	8B-2
DIAGNOSTICS - SCHEMATICS AND DIAGRAMS, IGNITION SYSTEM - ELECTRICAL	8I-2
DIAGNOSTICS - SCHEMATICS AND DIAGRAMS, SPEED CONTROL - ELECTRICAL	8P-2
DIAGRAMS - DESCRIPTION, HOW TO USE WIRING	8W-01-1
DIAGRAMS, CHARGING SYSTEM - SCHEMATICS	8F-26
DIAGRAMS, CHIME/BUZZER - ELECTRICAL DIAGNOSTICS - SCHEMATICS	8B-2
DIAGRAMS, DIAGNOSIS AND TESTING - SCHEMATICS	8A-17
DIAGRAMS, DIAGNOSIS AND TESTING - SCHEMATICS	23-28
DIAGRAMS, DIAGNOSIS AND TESTING - SCHEMATICS	5-149,5-186
DIAGRAMS, DIAGNOSIS AND TESTING - SCHEMATICS	7-10
DIAGRAMS, DIAGNOSIS AND TESTING - SCHEMATICS	8E-45
DIAGRAMS, DIAGNOSIS AND TESTING - SCHEMATICS	9-574
DIAGRAMS, DIAGNOSIS AND TESTING - SCHEMATICS	8G-21,8G-35,8G-9
DIAGRAMS, DIAGNOSIS AND TESTING - SCHEMATICS	24-54
DIAGRAMS, DIAGNOSIS AND TESTING - SCHEMATICS	8H-8
DIAGRAMS, DIAGNOSIS AND TESTING - SCHEMATICS	8J-53
DIAGRAMS, DIAGNOSIS AND TESTING - SCHEMATICS	8L-134,8L-78
DIAGRAMS, DIAGNOSIS AND TESTING - SCHEMATICS	8N-120,8N-29,8N-63,8N-94
DIAGRAMS, DIAGNOSIS AND TESTING - SCHEMATICS	8O-68
DIAGRAMS, DIAGNOSIS AND TESTING - SCHEMATICS	22-36
DIAGRAMS, DIAGNOSIS AND TESTING - SCHEMATICS	21-182,21-230
DIAGRAMS, DIAGNOSIS AND TESTING - SCHEMATICS	8Q-44
DIAGRAMS, DIAGNOSIS AND TESTING - SCHEMATICS	8R-20
DIAGRAMS, IGNITION SYSTEM - ELECTRICAL DIAGNOSTICS - SCHEMATICS	8I-2
DIAGRAMS, SPEED CONTROL - ELECTRICAL DIAGNOSTICS - SCHEMATICS	8P-2
DIAGRAMS, STARTING SYSTEM - SCHEMATICS	8F-39
DIFFERENTIAL - DESCRIPTION, REAR	3-37
DIFFERENTIAL - DIAGNOSIS AND TESTING, REAR	3-37
DIFFERENTIAL - OPERATION, REAR	3-37
DIFFERENTIAL - SPECIAL TOOLS, REAR	3-41
DIFFERENTIAL CONNECTING FLANGE SEAL - INSTALLATION	3-47
DIFFERENTIAL CONNECTING FLANGE SEAL - REMOVAL	3-46
DIFFERENTIAL HOUSING - INSTALLATION, REAR	3-42
DIFFERENTIAL HOUSING - REMOVAL, REAR	3-41
DIFFERENTIAL LUBRICANT - DESCRIPTION	0-6
DIMENSIONS - SPECIFICATIONS, BODY	23-55
DIMENSIONS - SPECIFICATIONS, FRAME	13-9
DIMMER SWITCH - DESCRIPTION	8L-144
DIODE - INSTALLATION	8W-01-12
DIODE - REMOVAL	8W-01-12
DISC - INSTALLATION, CLUTCH	6-10
DISC - REMOVAL, CLUTCH	6-9
DISC BRAKE CALIPER - ASSEMBLY, FRONT	5-31
DISC BRAKE CALIPER - CLEANING	5-30
DISC BRAKE CALIPER - DISASSEMBLY, FRONT	5-29
DISC BRAKE CALIPER - INSPECTION	5-30
DISC BRAKE CALIPER - INSTALLATION, REAR	5-35
DISC BRAKE CALIPER, INSTALLATION - FRONT	5-32
DISC BRAKE CALIPER, REMOVAL - FRONT	5-25
DISC BRAKE CALIPERS - DESCRIPTION	5-24
DISC BRAKE CALIPERS - OPERATION	5-24
DISC BRAKE PADS - INSTALLATION, REAR	5-23
DISC BRAKE PADS - REMOVAL, REAR	5-19
DISC BRAKE PADS, INSTALLATION - FRONT	5-20

Description	Group-Page
DISC BRAKE PADS, REMOVAL - FRONT	5-17
DISC BRAKE ROTOR - INSTALLATION, REAR	5-42
DISC BRAKE ROTOR - REMOVAL, REAR	5-39
DISC BRAKE ROTOR, INSTALLATION - FRONT	5-40
DISC BRAKE ROTOR MACHINING, STANDARD PROCEDURE	5-38
DISC BRAKE ROTOR, REMOVAL - FRONT	5-38
DISC BRAKE ROTORS, DIAGNOSIS AND TESTING	5-36
DISCHARGE (ESD) SENSITIVE DEVICES - STANDARD PROCEDURE, ELECTROSTATIC	8W-01-9
DISPLAY OF REMAINING FSS MILEAGE AT DRIVER'S REQUEST, STANDARD PROCEDURE	8J-75
DISPLAY TEST MODE - DESCRIPTION, DRB III® STATE	25-11
DISTRIBUTION - DESCRIPTION, POWER	8W-97-1
DISTRIBUTION - OPERATION, POWER	8W-97-1
DOES NOT START, DIAGNOSIS AND TESTING - ENGINE CRANKS BUT	9-563
DOME LAMP CIRCUIT, DIAGNOSIS AND TESTING	8L-121
DOOR - INSTALLATION	23-91
DOOR - INSTALLATION, FUEL FILL	23-115
DOOR - REMOVAL	23-90
DOOR - REMOVAL, FUEL FILL	23-115
DOOR AJAR SWITCH - DESCRIPTION	8L-144
DOOR AJAR SWITCH - OPERATION	8L-144
DOOR AJAR SWITCH, INSTALLATION	8L-146
DOOR AJAR SWITCH, REMOVAL	8L-145
DOOR CYLINDER LOCK SWITCH - REMOVAL	8Q-56
DOOR GLASS - INSTALLATION	23-95
DOOR GLASS - REMOVAL	23-93
DOOR LATCH ASSEMBLY - INSTALLATION	8N-42
DOOR LATCH ASSEMBLY - REMOVAL	8N-40
DOOR LOCK ACTUATOR - INSTALLATION, FUEL	8N-45
DOOR LOCK ACTUATOR - REMOVAL, FUEL	8N-44
DOOR LOCK ACTUATOR SLOW RESPONSE, DIAGNOSIS AND TESTING - DRIVER	8N-2
DOOR LOCK ACTUATOR SLOW RESPONSE, DIAGNOSIS AND TESTING - FUEL	8N-5
DOOR LOCK SWITCH - INSTALLATION, DRIVER	8N-43
DOOR LOCK SWITCH - REMOVAL, DRIVER	8N-43
DOOR LOCK SWITCH SENSE CIRCUIT, DIAGNOSIS AND TESTING	8Q-16
DOOR LOCK/DOOR UNLOCK SWITCH SENSE CIRCUIT, DIAGNOSIS AND TESTING	8N-22
DOOR OPENER/TIRE PRESSURE MONITOR, DIAGNOSIS AND TESTING - NO RESPONSE FROM UNIVERSAL GARAGE	8E-17
DOOR SILL TRIM PLATE - INSTALLATION	23-193
DOOR SILL TRIM PLATE - REMOVAL	23-193
DOOR SPEAKER, INSTALLATION - LOWER	8A-31
DOOR SPEAKER, REMOVAL - LOWER	8A-29
DOOR SPEAKERS, DIAGNOSIS AND TESTING - NO SOUND FROM LEFT	8A-8
DOOR SPEAKERS, DIAGNOSIS AND TESTING - NO SOUND FROM RIGHT	8A-10
DOOR UNLOCK SWITCH SENSE CIRCUIT, DIAGNOSIS AND TESTING	8Q-19
DOOR/LIFTGATE LOCK ACTUATOR SLOW RESPONSE, DIAGNOSIS AND TESTING - PASSENGER	8N-8
DOUBLE INVERTED FLARING, STANDARD PROCEDURE	5-11
DOUBLE SIDED TAPE, INSTALLATION	23-115
DOUBLE SIDED TAPE, REMOVAL	23-114
DOWNSTREAM O2 - INSTALLATION	14-47
DOWNSTREAM O2 - REMOVAL	14-46
DRAG LINK - INSTALLATION	19-49
DRAG LINK - REMOVAL	19-47
DRAIN AND FILL - STANDARD PROCEDURE, FLUID	21-352
DRAIN AND REFILL - STANDARD PROCEDURE	3-40
DRAINING COOLING SYSTEM, STANDARD PROCEDURE	7-18
DRAINING FUEL TANK - STANDARD PROCEDURE	14-5
DRAINING TIREFIT - STANDARD PROCEDURE	22-60
DRAW TEST - STANDARD PROCEDURE, IGNITION-OFF	8F-14
DRAWER - INSTALLATION	23-147
DRAWER - REMOVAL	23-144
DRB III® DOES NOT POWER UP, DIAGNOSIS AND TESTING	8E-2
DRB III® STATE DISPLAY TEST MODE - DESCRIPTION	25-11
DRIER - DESCRIPTION, RECEIVER	24-145
DRIER - INSTALLATION, RECEIVER	24-147
DRIER - OPERATION, RECEIVER	24-146
DRIER - REMOVAL, RECEIVER	24-146
DRILLING AND WELDING, STANDARD PROCEDURE	23-31
DRIVE - DESCRIPTION, ACCESSORY	7-42
DRIVE - OPERATION, ACCESSORY	7-42
DRIVE - SPECIFICATIONS-TORQUE, ACCESSORY	7-43
DRIVE BELT - CLEANING	7-45
DRIVE BELT - DIAGNOSIS AND TESTING, ACCESSORY	7-43
DRIVE BELT - INSPECTION	7-45
DRIVE BELT - INSTALLATION	7-46
DRIVE BELT - REMOVAL	7-45
DRIVE CHAIN - INSTALLATION, OIL PUMP	9-677
DRIVE CHAIN - REMOVAL, OIL PUMP	9-677
DRIVELINE - DIAGNOSIS AND TESTING	3-3
DRIVER AIRBAG - DESCRIPTION	8O-97
DRIVER AIRBAG - INSTALLATION	8O-100
DRIVER AIRBAG - OPERATION	8O-98
DRIVER AIRBAG - REMOVAL	8O-100
DRIVER AIRBAG SQUIB CIRCUIT, DIAGNOSIS AND TESTING	8O-4
DRIVER CIRCUIT HIGH, DIAGNOSIS AND TESTING - (P2513) ENHANCED ACCIDENT REPORT	9-499
DRIVER CIRCUIT LOW, DIAGNOSIS AND TESTING - (P2513) ENHANCED ACCIDENT REPORT	9-504
DRIVER CYLINDER LOCK SWITCH - INSTALLATION	8Q-57
DRIVER DOOR LOCK ACTUATOR SLOW RESPONSE, DIAGNOSIS AND TESTING	8N-2
DRIVER DOOR LOCK SWITCH - INSTALLATION	8N-43
DRIVER DOOR LOCK SWITCH - REMOVAL	8N-43
DRIVER (DOWN) CIRCUIT, DIAGNOSIS AND TESTING - REAR SPOILER	23-16
DRIVER POWER SEAT FRONT RISER MOTOR INOPERATIVE, DIAGNOSIS AND TESTING	8N-85
DRIVER POWER SEAT HORIZONTAL MOTOR INOPERATIVE, DIAGNOSIS AND TESTING	8N-83
DRIVER POWER SEAT INOPERATIVE, DIAGNOSIS AND TESTING	8N-74
DRIVER POWER SEAT REAR RISER MOTOR INOPERATIVE, DIAGNOSIS AND TESTING	8N-87
DRIVER POWER SEAT RECLINER MOTOR INOPERATIVE, DIAGNOSIS AND TESTING	8N-81
DRIVER SEAT BELT TENSIONER CIRCUIT, DIAGNOSIS AND TESTING	8O-53
DRIVER SEAT BELT TENSIONER SQUIB CIRCUIT, DIAGNOSIS AND TESTING	8O-10
DRIVER (UP) CIRCUIT, DIAGNOSIS AND TESTING - REAR SPOILER	23-13
DRIVER'S REQUEST, STANDARD PROCEDURE - DISPLAY OF REMAINING FSS MILEAGE AT	8J-75
DRIVING CLUTCH K1 - ASSEMBLY	21-258
DRIVING CLUTCH K1 - DISASSEMBLY	21-257
DRIVING CLUTCH K2 - ASSEMBLY	21-263
DRIVING CLUTCH K2 - DISASSEMBLY	21-261
DRIVING CLUTCH K3 - ASSEMBLY	21-267
DRIVING CLUTCH K3 - DISASSEMBLY	21-266
DRIVING CLUTCHES - DESCRIPTION	21-255
DRIVING CLUTCHES - OPERATION	21-256
DROP - STANDARD PROCEDURE, TESTING FOR A VOLTAGE	8W-01-11
DUCTS - INSTALLATION, DEFROSTER	24-109
DUCTS - REMOVAL, DEFROSTER	24-109
ECM FROM SLA, DIAGNOSIS AND TESTING - (P0600) CAN MESSAGE FROM	21-38
EGR CONTROL CIRCUIT, DIAGNOSIS AND TESTING - (P0403)	9-354
EGR SYSTEM PERFORMANCE, DIAGNOSIS AND TESTING - (P0400)	9-350
EIS CONTROL MODULE, DIAGNOSIS AND TESTING - (P0600) INCORRECT CAN MESSAGE FROM	9-425
ELECTRIC GEAR SHIFT MODULE (SLA), DIAGNOSIS AND TESTING - (P0600) LOST COMM WITH	9-439
ELECTRICAL DIAGNOSTICS - DESCRIPTION, COOLING	7-1
ELECTRICAL DIAGNOSTICS - DESCRIPTION, HEATING & AIR CONDITIONING	24-1
ELECTRICAL DIAGNOSTICS - OPERATION, COOLING	7-1
ELECTRICAL DIAGNOSTICS - OPERATION, HEATING & AIR CONDITIONING	24-2
ELECTRICAL DIAGNOSTICS - SCHEMATICS AND DIAGRAMS, CHIME/BUZZER	8B-2
ELECTRICAL DIAGNOSTICS - SCHEMATICS AND DIAGRAMS, IGNITION SYSTEM	8I-2
ELECTRICAL DIAGNOSTICS - SCHEMATICS AND DIAGRAMS, SPEED CONTROL	8P-2
ELECTROHYDRAULIC UNIT - ASSEMBLY	21-287
ELECTROHYDRAULIC UNIT - DESCRIPTION	21-268
ELECTROHYDRAULIC UNIT - DISASSEMBLY	21-282
ELECTROHYDRAULIC UNIT - INSTALLATION	21-290
ELECTROHYDRAULIC UNIT - OPERATION	21-275
ELECTROHYDRAULIC UNIT - REMOVAL	21-281
ELECTROLYTE LEVEL - STANDARD PROCEDURE, CHECKING BATTERY	8F-16
ELECTRONIC INCLINOMETER, STANDARD PROCEDURE - INSPECTING AND ADJUSTING VEHICLE LEVEL AT FRONT AND REAR AXLES WITH AN	2-8
ELECTRONIC STABILITY PROGRAM (ESP) - OPERATION	5-189
ELECTRONIC THROTTLE CONTROL MODULE PERFORMANCE, DIAGNOSIS AND TESTING - (P0221)	9-270
ELECTRONIC THROTTLE CONTROL MODULE PROCESSOR, DIAGNOSIS AND TESTING - (P0221)	9-272
ELECTRONIC THROTTLE CONTROL MOTOR PERFORMANCE, DIAGNOSIS AND TESTING - (P0120)	9-53
ELECTROSTATIC DISCHARGE (ESD) SENSITIVE DEVICES - STANDARD PROCEDURE	8W-01-9
ELEMENT - DESCRIPTION, HEATED SEAT	8G-39
ELEMENT - INSTALLATION, AIR CLEANER	9-609
ELEMENT - INSTALLATION, HEATED SEAT BACK	8G-41
ELEMENT - REMOVAL, AIR CLEANER	9-609
ELEMENT - REMOVAL, HEATED SEAT BACK	8G-40
ELEMENT, INSTALLATION - HEATED SEAT CUSHION	8G-41
ELEMENT, REMOVAL - HEATED SEAT CUSHION	8G-40
EMERGENCY TOW HOOKS - DESCRIPTION	0-14
EMISSION CONTROL INFORMATION LABEL - DESCRIPTION, VEHICLE	25-12
ENGINE - SERVICE INFORMATION - DESCRIPTION	9-583
ENGINE - SERVICE INFORMATION - OPERATION	9-583
ENGINE - SPECIFICATIONS	9-602
ENGINE BLOCK - CLEANING	9-633

Description	Group-Page
ENGINE BLOCK - DESCRIPTION	9-633
ENGINE BLOCK - INSPECTION	9-633
ENGINE CAN MESSAGE INCORRECT, DIAGNOSIS AND TESTING - (P0600)	21-41
ENGINE CAN MESSAGE MISSING, DIAGNOSIS AND TESTING - (P0600)	21-44
ENGINE COOLANT TEMPERATURE SENSOR - INSTALLATION	7-31
ENGINE COOLANT TEMPERATURE SENSOR - OPERATION	7-29
ENGINE COOLANT TEMPERATURE SENSOR - REMOVAL	7-29
ENGINE COOLANT TEMPERATURE SENSOR CIRCUIT, DIAGNOSIS AND TESTING	24-23
ENGINE COOLANT TEMPERATURE SENSOR CIRCUIT HIGH, DIAGNOSIS AND TESTING - (P0118)	9-51
ENGINE COOLANT TEMPERATURE SENSOR CIRCUIT LOW, DIAGNOSIS AND TESTING - (P0117)	9-49
ENGINE COOLANT TEMPERATURE SENSOR PERFORMANCE, DIAGNOSIS AND TESTING - (P0116)	9-40
ENGINE COOLANT TEMPERATURE SENSOR SHORT CIRCUIT, DIAGNOSIS AND TESTING - (P0116)	9-47
ENGINE COOLANT THERMOSTAT - DESCRIPTION	7-21
ENGINE COOLANT THERMOSTAT - DIAGNOSIS AND TESTING	7-22
ENGINE COOLANT THERMOSTAT - INSTALLATION	7-23
ENGINE COOLANT THERMOSTAT - OPERATION	7-21
ENGINE COOLANT THERMOSTAT - REMOVAL	7-23
ENGINE COOLING SYSTEM, OPERATION	7-12
ENGINE COOLING SYSTEM OVERHEATING, DIAGNOSIS AND TESTING	7-12
ENGINE CORE AND OIL GALLERY PLUGS - STANDARD PROCEDURE	9-591
ENGINE CRANKS BUT DOES NOT START, DIAGNOSIS AND TESTING	9-563
ENGINE DIAGNOSIS - MECHANICAL - DIAGNOSIS AND TESTING	9-584
ENGINE DIAGNOSIS, INTRODUCTION	9-583
ENGINE DIAGNOSIS, PERFORMANCE	9-586
ENGINE FUSE BLOCK - DESCRIPTION	8W-97-2
ENGINE FUSE BLOCK - INSTALLATION	8W-97-3
ENGINE FUSE BLOCK - OPERATION	8W-97-2
ENGINE FUSE BLOCK - REMOVAL	8W-97-2
ENGINE GASKET SURFACE PREPARATION - STANDARD PROCEDURE	9-590
ENGINE HEAT SYSTEM (REST) - DESCRIPTION, RESIDUAL	24-57
ENGINE MOUNT BRACKETS - INSTALLATION	9-656
ENGINE MOUNT BRACKETS - REMOVAL	9-655
ENGINE OIL AND FILTER CHANGE - STANDARD PROCEDURE	9-664
ENGINE OIL AND LUBRICANTS, DESCRIPTION	0-2
ENGINE OIL LEAK INSPECTION, DIAGNOSIS AND TESTING	9-660
ENGINE OIL LEVEL CHECK, STANDARD PROCEDURE	9-664
ENGINE OIL PRESSURE - DIAGNOSIS AND TESTING, CHECKING	9-662
ENGINE OIL SENSOR LEVEL PERFORMANCE, DIAGNOSIS AND TESTING	9-521
ENGINE OIL SENSOR OVER TEMPERATURE, DIAGNOSIS AND TESTING	9-526
ENGINE OIL SENSOR PERFORMANCE, DIAGNOSIS AND TESTING	9-531
ENGINE OIL SENSOR QUALITY PERFORMANCE, DIAGNOSIS AND TESTING	9-533
ENGINE OIL SENSOR WATER CONTAMINATION, DIAGNOSIS AND TESTING	9-538
ENGINE OVERSPEED, DIAGNOSIS AND TESTING - (P0219)	21-3
ENGINE RPM MESSAGE, DIAGNOSIS AND TESTING - (P0600)	21-48
ENGINE, STANDARD PROCEDURE - HYDROSTATIC LOCKED	9-588
ENGINE TEMPERATURE MESSAGE, DIAGNOSIS AND TESTING - (P0600)	21-51
ENGINE TIMING - OPERATION	9-704
ENGINE TORQUE MESSAGE INCORRECT, DIAGNOSIS AND TESTING - (P0600)	21-54
ENGINE TORQUE REDUCTION, DIAGNOSIS AND TESTING - (P1793)	21-163
ENHANCED ACCIDENT REPORT DRIVER CIRCUIT HIGH, DIAGNOSIS AND TESTING - (P2513)	9-499
ENHANCED ACCIDENT REPORT DRIVER CIRCUIT LOW, DIAGNOSIS AND TESTING - (P2513)	9-504
ENTRY MODULE - DESCRIPTION, SENTRY KEY REMOTE	8E-69
ENTRY MODULE - DESCRIPTION, SENTRY KEY REMOTE	8N-46
ENTRY MODULE - DESCRIPTION, SENTRY KEY REMOTE	8Q-52
ENTRY MODULE - DIAGNOSIS AND TESTING, SENTRY KEY REMOTE	8N-47
ENTRY MODULE - INSTALLATION, SENTRY KEY REMOTE	8Q-55
ENTRY MODULE - OPERATION, SENTRY KEY REMOTE	8E-69
ENTRY MODULE - OPERATION, SENTRY KEY REMOTE	8Q-52
ENTRY MODULE - REMOVAL, SENTRY KEY REMOTE	8Q-53
ENTRY MODULE, DIAGNOSIS AND TESTING - NO RESPONSE FROM SENTRY KEY REMOTE	8E-40
ENTRY MODULE INTERNAL FAILURE, DIAGNOSIS AND TESTING - SENTRY KEY REMOTE	8Q-34
ENTRY RELAY CONTROL CIRCUIT, DIAGNOSIS AND TESTING - REMOTE KEYLESS	8Q-40
ENTRY TRANSMITTER - DIAGNOSIS AND TESTING, KEYLESS	8N-37
EQUIPMENT, DIAGNOSIS AND TESTING - PROGRAMMING DOES NOT CORRESPOND TO THE VEHICLE	8O-41
ERRATIC, DIAGNOSIS AND TESTING - (P0714) TRANS TEMP SENSOR	21-87
ESP BRAKE PRESSURE SENSOR 1 CIRCUIT, DIAGNOSIS AND TESTING	5-128
ESP BRAKE PRESSURE SENSOR 2 CIRCUIT, DIAGNOSIS AND TESTING	5-133
ESP, DIAGNOSIS AND TESTING - (P0720) TRANSMISSION INCORRECT TORQUE REQUEST FROM	9-469
ESP LATERAL ACCELERATION SENSOR CIRCUIT, DIAGNOSIS AND TESTING	5-138
ESP MIL REQUEST, DIAGNOSIS AND TESTING - (P0500) VEHICLE SPEED PERFORMANCE	9-412
ESP SERVICE INFORMATION - DESCRIPTION, BRAKES	5-188
ESP TORQUE MANAGEMENT REQUEST PERFORMANCE, DIAGNOSIS AND TESTING - (P2545)	9-506
ESP YAW RATE SENSOR CIRCUIT, DIAGNOSIS AND TESTING	5-119
EVACUATE - STANDARD PROCEDURE, REFRIGERANT SYSTEM	24-117
EVAP PURGE SOLENOID - DESCRIPTION	25-17
EVAP PURGE SOLENOID - INSTALLATION	25-18
EVAP PURGE SOLENOID - OPERATION	25-17
EVAP PURGE SOLENOID - REMOVAL	25-17
EVAP PURGE SOLENOID CIRCUIT, DIAGNOSIS AND TESTING - (P0445)	9-380
EVAP PURGE SOLENOID STUCK OPEN, DIAGNOSIS AND TESTING - (P0446)	9-387
EVAP PURGE VALVE, DIAGNOSIS AND TESTING - (P0441)	9-376
EVAP PURGE VALVE LEAKING, DIAGNOSIS AND TESTING - (P0457)	9-406
EVAP SYSTEM FAILURE, DIAGNOSIS AND TESTING - (P0440) GENERAL	9-374
EVAP SYSTEM LARGE LEAK, DIAGNOSIS AND TESTING - (P0455)	9-399
EVAP SYSTEM SMALL LEAK, DIAGNOSIS AND TESTING - (P0442)	9-378
EVAPORATION CONTROL SYSTEM - DESCRIPTION	25-15
EVAPORATOR - DESCRIPTION, A/C	24-130
EVAPORATOR - INSTALLATION, A/C	24-132
EVAPORATOR - OPERATION, A/C	24-130
EVAPORATOR - REMOVAL, A/C	24-130
EVAPORATOR TEMPERATURE SENSOR - INSTALLATION	24-84
EVAPORATOR TEMPERATURE SENSOR - REMOVAL	24-84
EVAPORATOR TEMPERATURE SENSOR CIRCUIT, DIAGNOSIS AND TESTING	24-18
EXCESSIVE HIGH COOLANT TEMP, DIAGNOSIS AND TESTING - (P0128) FORCED LIMITED POWER	9-74
EXHAUST MANIFOLD - DESCRIPTION	9-680
EXHAUST PIPES - INSTALLATION, FRONT	11-7
EXHAUST PIPES - REMOVAL, FRONT	11-5
EXHAUST SYSTEM - DESCRIPTION	11-2
EXHAUST SYSTEM - DIAGNOSIS AND TESTING	11-3
EXHAUST SYSTEM - INSPECTION	11-3
EXHAUST SYSTEM - OPERATION	11-2
EXHAUST SYSTEM ALIGNMENT, ADJUSTMENTS	11-4
EXPANSION VALVE - DESCRIPTION, A/C	24-138
EXPANSION VALVE - DIAGNOSIS AND TESTING, A/C	24-139
EXPANSION VALVE - INSTALLATION, A/C	24-140
EXPANSION VALVE - OPERATION, A/C	24-139
EXPANSION VALVE - REMOVAL, A/C	24-140
EXTERIOR - LAMPS/LIGHTING	8L-86
EXTERIOR - SERVICE INFORMATION - DESCRIPTION, LAMPS/LIGHTING	8L-85
EXTERIOR - SERVICE INFORMATION - OPERATION, LAMPS/LIGHTING	8L-85
EXTERIOR HANDLE - INSTALLATION	23-37, 23-99
EXTERIOR HANDLE - REMOVAL	23-34,23-98
EXTERIOR LAMPS - SPECIFICATIONS	8L-87
FAILURE, DIAGNOSIS AND TESTING - BODY CONTROL MODULE INTERNAL	23-2
FAILURE, DIAGNOSIS AND TESTING - BODY CONTROL MODULE INTERNAL	8N-11
FAILURE, DIAGNOSIS AND TESTING - CAB INTERNAL	5-153,5-80
FAILURE, DIAGNOSIS AND TESTING - CAN B BUS (-) CIRCUIT	8Q-10
FAILURE, DIAGNOSIS AND TESTING - CAN B BUS (+) CIRCUIT	8Q-13
FAILURE, DIAGNOSIS AND TESTING - CENTRAL LOCKING PUMP/SECURITY SYSTEM MODULE INTERNAL	8N-26
FAILURE, DIAGNOSIS AND TESTING - CENTRAL LOCKING PUMP/SECURITY SYSTEM MODULE INTERNAL	8Q-30
FAILURE, DIAGNOSIS AND TESTING - ORC INTERNAL	8O-2
FAILURE, DIAGNOSIS AND TESTING - SENTRY KEY REMOTE ENTRY MODULE INTERNAL	8Q-34
FAN - INSTALLATION, RADIATOR	7-27
FAN - REMOVAL, RADIATOR	7-26
FAN ALWAYS ON, DIAGNOSIS AND TESTING - RADIATOR COOLING	7-6
FAN CONTROL CIRCUIT HIGH, DIAGNOSIS AND TESTING - COOLING	9-517
FAN CONTROL CIRCUIT LOW, DIAGNOSIS AND TESTING - COOLING	9-519
FAN CONTROL CIRCUIT OPEN, DIAGNOSIS AND TESTING - COOLING	9-514
FAN CONTROL MODULE - INSTALLATION, RADIATOR	7-29
FAN CONTROL MODULE - REMOVAL, RADIATOR	7-29
FAN INOPERATIVE, DIAGNOSIS AND TESTING - RADIATOR COOLING	7-2
FASCIA - INSTALLATION, FRONT	13-4
FASCIA - INSTALLATION, REAR	13-8
FASCIA - REMOVAL, FRONT	13-1
FASCIA - REMOVAL, REAR	13-7
FASTENER IDENTIFICATION - DESCRIPTION	Intro.-3
FASTENER USAGE, DESCRIPTION	Intro.-6
FENDERS - INSTALLATION, FRONT	23-113
FENDERS - REMOVAL, FRONT	23-112

Description	Group-Page
FILL - STANDARD PROCEDURE, FLUID DRAIN	21-352
FILL - STANDARD PROCEDURE, TRANSMISSION	21-296
FILL CHECK VALVE - DESCRIPTION, FUEL	14-7
FILL CHECK VALVE - OPERATION, FUEL	14-7
FILL DOOR - INSTALLATION, FUEL	23-115
FILL DOOR - REMOVAL, FUEL	23-115
FILL/CHECK LOCATIONS - DESCRIPTION, FLUID	0-6
FILLER CAP - DESCRIPTION, FUEL	25-18
FILLER CAP - OPERATION, FUEL	25-18
FILLER TUBE - DESCRIPTION, FUEL TANK	14-24
FILTER - DESCRIPTION, FLUID	21-292
FILTER - DESCRIPTION, OIL	9-666
FILTER - INSTALLATION, OIL	9-666
FILTER - OPERATION, FLUID	21-292
FILTER - REMOVAL, OIL	9-666
FILTER CHANGE - STANDARD PROCEDURE	21-296
FILTER CHANGE - STANDARD PROCEDURE, ENGINE OIL	9-664
FILTER/PRESSURE REGULATOR - DESCRIPTION, FUEL	14-8
FILTER/PRESSURE REGULATOR - INSTALLATION, FUEL	14-10
FILTER/PRESSURE REGULATOR - OPERATION, FUEL	14-9
FILTER/PRESSURE REGULATOR - REMOVAL, FUEL	14-10
FINISH - DESCRIPTION, BASE COAT/CLEAR COAT	23-199
FITTED SLEEVES - INSTALLATION	3-36
FITTED SLEEVES - REMOVAL	3-35
FITTING, STANDARD PROCEDURE - PISTON	9-640
FLANGE SEAL - INSTALLATION, DIFFERENTIAL CONNECTING	3-47
FLANGE SEAL - INSTALLATION, OUTPUT	21-356
FLANGE SEAL - INSTALLATION, PINION	3-45
FLANGE SEAL - REMOVAL, DIFFERENTIAL CONNECTING	3-46
FLANGE SEAL - REMOVAL, OUTPUT	21-355
FLANGE SEAL - REMOVAL, PINION	3-43
FLARING - STANDARD PROCEDURE, ISO	5-11
FLARING, STANDARD PROCEDURE - DOUBLE INVERTED	5-11
FLASHER - DESCRIPTION, HAZARD	8L-99
FLEX PLATE / FLYWHEEL - INSTALLATION	9-654
FLEX PLATE / FLYWHEEL - REMOVAL	9-653
FLEXIBLE SERVICE SYSTEM (FSS) - DESCRIPTION	0-11
FLOW AND PRESSURE - DIAGNOSIS AND TESTING, STEERING	19-5
FLOW CIRCUIT, DIAGNOSIS AND TESTING - (P0102) MASS AIR	9-10
FLOW (MAF) SENSOR - DESCRIPTION, MANIFOLD AIR	14-37
FLOW (MAF) SENSOR - INSTALLATION, MANIFOLD AIR	14-39
FLOW (MAF) SENSOR - OPERATION, MANIFOLD AIR	14-37
FLOW (MAF) SENSOR - REMOVAL, MANIFOLD AIR	14-37
FLUID - DESCRIPTION, AUTOMATIC TRANSMISSION	0-5
FLUID - DIAGNOSIS AND TESTING, CAUSES OF BURNT	21-293
FLUID AND FILTER - DESCRIPTION	21-292
FLUID AND FILTER - OPERATION	21-292
FLUID CAPACITIES - SPECIFICATIONS	0-1
FLUID CONTAMINATION - DIAGNOSIS AND TESTING	21-293
FLUID CONTAMINATION, DIAGNOSIS AND TESTING - BRAKE	5-42
FLUID DRAIN AND FILL - STANDARD PROCEDURE	21-352
FLUID FILL/CHECK LOCATIONS - DESCRIPTION	0-6
FLUID LEVEL - STANDARD PROCEDURE, CHECKING	21-353
FLUID LEVEL, DIAGNOSIS AND TESTING - EFFECTS OF INCORRECT	21-293
FLUID LEVEL SENSOR - INSTALLATION, BRAKE	5-75
FLUID LEVEL SENSOR - REMOVAL, BRAKE	5-75
FLUID LEVEL, STANDARD PROCEDURE - MASTER CYLINDER	5-43
FLUID LEVEL SWITCH - INSTALLATION, WASHER	8R-26
FLUID LEVEL SWITCH - REMOVAL, WASHER	8R-26
FLUID LEVEL SWITCH CIRCUIT, DIAGNOSIS AND TESTING - COOLANT LEVEL SENSOR/WASHER	8J-2
FLUID LOSS - DIAGNOSIS AND TESTING, MASTER CYLINDER	5-45
FLUID, SPECIFICATIONS - BRAKE	5-43
FLUSHING - STANDARD PROCEDURE, COOLING SYSTEM REVERSE	7-19
FLYWHEEL - DESCRIPTION	6-21
FLYWHEEL - DIAGNOSIS AND TESTING	6-21
FLYWHEEL - INSTALLATION	6-23
FLYWHEEL - INSTALLATION, FLEX PLATE	9-654
FLYWHEEL - OPERATION	6-21
FLYWHEEL - REMOVAL	6-22
FLYWHEEL - REMOVAL, FLEX PLATE	9-653
FOG LAMP - INSTALLATION	8L-94
FOG LAMP - REMOVAL	8L-93
FOG LAMP INOPERATIVE, DIAGNOSIS AND TESTING - LEFT	8L-2
FOG LAMP INOPERATIVE, DIAGNOSIS AND TESTING - RIGHT	8L-5
FOG LAMP UNIT - INSTALLATION	8L-96
FOG LAMP UNIT - REMOVAL	8L-95
FOOTWELL AIR OUTLET COVER - INSTALLATION	24-111
FOOTWELL AIR OUTLET COVER - REMOVAL	24-110
FORCED LIMITED POWER EXCESSIVE HIGH COOLANT TEMP, DIAGNOSIS AND TESTING - (P0128)	9-74
FORM-IN-PLACE GASKETS AND SEALERS - STANDARD PROCEDURE	9-589
FRAME DIMENSIONS - SPECIFICATIONS	13-9
FREEWHEELING CLUTCH - ASSEMBLY	21-301
FREEWHEELING CLUTCH - DESCRIPTION	21-298
FREEWHEELING CLUTCH - DISASSEMBLY	21-299
FREEWHEELING CLUTCH - OPERATION	21-298
FROM A/C HEATER CONTROL MODULE, DIAGNOSIS AND TESTING - NO RESPONSE	8E-21
FROM ALL SPEAKERS, DIAGNOSIS AND TESTING - NO SOUND	8A-5
FROM BODY CONTROL MODULE, DIAGNOSIS AND TESTING - NO RESPONSE	8E-36
FROM CONTROLLER ANTILOCK BRAKE, DIAGNOSIS AND TESTING - NO RESPONSE	8E-25
FROM INSTRUMENT CLUSTER, DIAGNOSIS AND TESTING - NO COMMUNICATION	8J-14
FROM INSTRUMENT CLUSTER, DIAGNOSIS AND TESTING - NO RESPONSE	8E-13
FROM LEFT DOOR SPEAKERS, DIAGNOSIS AND TESTING - NO SOUND	8A-8
FROM LEFT REAR SPEAKER, DIAGNOSIS AND TESTING - NO SOUND	8A-12
FROM OCCUPANT RESTRAINT CONTROLLER, DIAGNOSIS AND TESTING - NO RESPONSE	8E-10
FROM POWERTRAIN CONTROL MODULE, DIAGNOSIS AND TESTING - NO RESPONSE	8E-4
FROM RIGHT DOOR SPEAKERS, DIAGNOSIS AND TESTING - NO SOUND	8A-10
FROM RIGHT REAR SPEAKER, DIAGNOSIS AND TESTING - NO SOUND	8A-14
FROM SENTRY KEY REMOTE ENTRY MODULE, DIAGNOSIS AND TESTING - NO RESPONSE	8E-40
FROM SHIFT LEVER ASSEMBLY, DIAGNOSIS AND TESTING - NO RESPONSE	8E-29
FROM TRANSMISSION CONTROL MODULE, DIAGNOSIS AND TESTING - NO RESPONSE	8E-33
FROM UNIVERSAL GARAGE DOOR OPENER/TIRE PRESSURE MONITOR, DIAGNOSIS AND TESTING - NO RESPONSE	8E-17
FRONT - INSTALLATION, CRANKSHAFT OIL SEAL	9-636
FRONT - REMOVAL, CRANKSHAFT OIL SEAL	9-636
FRONT AND REAR AXLES, STANDARD PROCEDURE - INSPECTING AND ADJUSTING VEHICLE LEVEL AT	2-8
FRONT AND REAR AXLES WITH AN ELECTRONIC INCLINOMETER, STANDARD PROCEDURE - INSPECTING AND ADJUSTING VEHICLE LEVEL AT	2-8
FRONT AXLE CAMBER AND CASTER, STANDARD PROCEDURE - CHECKING AND ADJUSTING	2-8
FRONT BRAKE HOSE, INSTALLATION	5-14
FRONT BRAKE HOSE, REMOVAL	5-12
FRONT DISC BRAKE CALIPER - ASSEMBLY	5-31
FRONT DISC BRAKE CALIPER - DISASSEMBLY	5-29
FRONT DISC BRAKE CALIPER, INSTALLATION	5-32
FRONT DISC BRAKE CALIPER, REMOVAL	5-25
FRONT DISC BRAKE PADS, INSTALLATION	5-20
FRONT DISC BRAKE PADS, REMOVAL	5-17
FRONT DISC BRAKE ROTOR, INSTALLATION	5-40
FRONT DISC BRAKE ROTOR, REMOVAL	5-38
FRONT EXHAUST PIPES - INSTALLATION	11-7
FRONT EXHAUST PIPES - REMOVAL	11-5
FRONT FASCIA - INSTALLATION	13-4
FRONT FASCIA - REMOVAL	13-1
FRONT FENDERS - INSTALLATION	23-113
FRONT FENDERS - REMOVAL	23-112
FRONT HEAT SHIELD - INSTALLATION	11-9
FRONT HEAT SHIELD - REMOVAL	11-8
FRONT MARKER LAMP - INSTALLATION	8L-111
FRONT MARKER LAMP - REMOVAL	8L-110
FRONT MOUNT - INSTALLATION	9-658
FRONT MOUNT - REMOVAL	9-657
FRONT POSITION LAMP - DESCRIPTION	8L-97
FRONT POSITION LAMP - INSTALLATION	8L-98
FRONT POSITION LAMP - OPERATION	8L-97
FRONT POSITION LAMP - REMOVAL	8L-97
FRONT POWER WINDOW INOPERATIVE, DIAGNOSIS AND TESTING - LEFT	8N-110
FRONT POWER WINDOW INOPERATIVE, DIAGNOSIS AND TESTING - RIGHT	8N-113
FRONT RISER MOTOR - INSTALLATION	8N-102
FRONT RISER MOTOR - REMOVAL	8N-102
FRONT RISER MOTOR INOPERATIVE, DIAGNOSIS AND TESTING - DRIVER POWER SEAT	8N-85
FRONT SECTION - ASSEMBLY, TRANSMISSION	21-361
FRONT SECTION - DISASSEMBLY, TRANSMISSION	21-361
FRONT SENSOR MESSAGE, DIAGNOSIS AND TESTING - (P0600) ABS LEFT	21-22
FRONT SENSOR MESSAGE, DIAGNOSIS AND TESTING - (P0600) ABS RIGHT	21-28
FRONT SIDE MARKER LAMP INOPERATIVE, DIAGNOSIS AND TESTING - LEFT	8L-32
FRONT SIDE MARKER LAMP INOPERATIVE, DIAGNOSIS AND TESTING - RIGHT	8L-35
FRONT SUSPENSION - TORQUE CHART	2-14
FRONT TIRE PRESSURE SENSOR/ TRANSMITTER, DIAGNOSIS AND TESTING - LEFT	22-24
FRONT TIRE PRESSURE SENSOR/ TRANSMITTER, DIAGNOSIS AND TESTING - RIGHT	22-28
FRONT TIRE PRESSURE SENSOR/ TRANSMITTER SIGNAL JAMMED, DIAGNOSIS AND TESTING - LEFT	22-11
FRONT TIRE PRESSURE SENSOR/ TRANSMITTER SIGNAL JAMMED, DIAGNOSIS AND TESTING - RIGHT	22-15

Description	Group-Page
FRONT TOE-IN - STANDARD PROCEDURE, CHECKING AND ADJUSTING	2-10
FRONT TURN LAMP INOPERATIVE, DIAGNOSIS AND TESTING - LEFT	8L-11
FRONT TURN LAMP INOPERATIVE, DIAGNOSIS AND TESTING - RIGHT	8L-17
FRONT TURN SIGNAL LAMP - INSTALLATION	8L-99
FRONT TURN SIGNAL LAMP - REMOVAL	8L-98
FRONT WHEEL SPEED SENSOR - DESCRIPTION	5-193
FRONT WHEEL SPEED SENSOR - INSTALLATION	5-195
FRONT WHEEL SPEED SENSOR - OPERATION	5-193
FRONT WHEEL SPEED SENSOR - REMOVAL	5-194
FRONT WHEEL SPEED SENSOR CIRCUIT, DIAGNOSIS AND TESTING - LEFT	5-95
FRONT WHEEL SPEED SENSOR CIRCUIT, DIAGNOSIS AND TESTING - RIGHT	5-101
FSS MAINTENANCE INDICATOR AFTER AN OIL CHANGE, STANDARD PROCEDURE - RESETTING THE	8J-78
FSS MAINTENANCE INDICATOR, STANDARD PROCEDURE - RESETTING THE	8J-76
FSS MILEAGE AT DRIVER'S REQUEST, STANDARD PROCEDURE - DISPLAY OF REMAINING	8J-75
FUEL DELIVERY - DESCRIPTION	14-2
FUEL DELIVERY - OPERATION	14-3
FUEL DELIVERY, DIAGNOSIS AND TESTING - CHECKING	9-556
FUEL DOOR LOCK ACTUATOR - INSTALLATION	8N-45
FUEL DOOR LOCK ACTUATOR - REMOVAL	8N-44
FUEL DOOR LOCK ACTUATOR SLOW RESPONSE, DIAGNOSIS AND TESTING	8N-5
FUEL FILL CHECK VALVE - DESCRIPTION	14-7
FUEL FILL CHECK VALVE - OPERATION	14-7
FUEL FILL DOOR - INSTALLATION	23-115
FUEL FILL DOOR - REMOVAL	23-115
FUEL FILLER CAP - DESCRIPTION	25-18
FUEL FILLER CAP - OPERATION	25-18
FUEL FILTER/PRESSURE REGULATOR - DESCRIPTION	14-8
FUEL FILTER/PRESSURE REGULATOR - INSTALLATION	14-10
FUEL FILTER/PRESSURE REGULATOR - OPERATION	14-9
FUEL FILTER/PRESSURE REGULATOR - REMOVAL	14-10
FUEL INJECTION - SPECIFICATIONS	14-25
FUEL INJECTOR - DESCRIPTION	14-31
FUEL INJECTOR - INSTALLATION	14-34
FUEL INJECTOR - OPERATION	14-32
FUEL INJECTOR - REMOVAL	14-33
FUEL INJECTOR #1 CIRCUIT, DIAGNOSIS AND TESTING - (P0201)	9-238
FUEL INJECTOR #2 CIRCUIT, DIAGNOSIS AND TESTING - (P0202)	9-242
FUEL INJECTOR #3 CIRCUIT, DIAGNOSIS AND TESTING - (P0203)	9-244
FUEL INJECTOR #4 CIRCUIT, DIAGNOSIS AND TESTING - (P0204)	9-246
FUEL INJECTOR #5 CIRCUIT, DIAGNOSIS AND TESTING - (P0205)	9-248
FUEL INJECTOR #6 CIRCUIT, DIAGNOSIS AND TESTING - (P0206)	9-250
FUEL INJECTOR CIRCUIT, DIAGNOSIS AND TESTING - (P0200)	9-236
FUEL LEVEL SENDING UNIT - DIAGNOSIS AND TESTING	14-12
FUEL LEVEL SENDING UNIT/SENSOR, DESCRIPTION	14-11
FUEL LEVEL SENDING UNIT/SENSOR, OPERATION	14-11
FUEL LEVEL SENSOR CIRCUIT, DIAGNOSIS AND TESTING	8J-7
FUEL LEVEL SENSOR CIRCUIT, DIAGNOSIS AND TESTING - (P0460)	9-408
FUEL LINES - DESCRIPTION	14-14
FUEL MIXTURE (AT IDLE), DIAGNOSIS AND TESTING - (P0172) FUEL SYSTEM 1/1 OVERCORRECTION OF	9-195
FUEL MIXTURE (OFF IDLE), DIAGNOSIS AND TESTING - (P0171) FUEL SYSTEM 1/1 UNDERCORRECTION OF	9-179
FUEL MIXTURE (OFF IDLE), DIAGNOSIS AND TESTING - (P0174) FUEL SYSTEM 2/1 UNDERCORRECTION OF	9-227
FUEL MIXTURE (OFF IDLE), DIAGNOSIS AND TESTING - (P0175) FUEL SYSTEM 2/1 OVERCORRECTION OF	9-230
FUEL PRESSURE LEAK DOWN TEST - DIAGNOSIS AND TESTING	14-4
FUEL PUMP - DESCRIPTION	14-15
FUEL PUMP - OPERATION	14-15
FUEL PUMP RELAY - DESCRIPTION	14-35
FUEL PUMP RELAY - OPERATION	14-35
FUEL PUMP TEST, DIAGNOSIS AND TESTING	14-15
FUEL RAIL - DESCRIPTION	14-18
FUEL RAIL - INSTALLATION	14-20
FUEL RAIL - OPERATION	14-18
FUEL RAIL - REMOVAL	14-19
FUEL SHUT OFF DETECTED, DIAGNOSIS AND TESTING - SAFETY	9-540
FUEL SYSTEM 1/1 LEAN CONTROL BELOW LIMIT (AT IDLE), DIAGNOSIS AND TESTING - (P0172)	9-207
FUEL SYSTEM 1/1 LEAN CONTROL BELOW LIMIT (AT LOAD), DIAGNOSIS AND TESTING - (P0172)	9-199
FUEL SYSTEM 1/1 OVERCORRECTION OF FUEL MIXTURE (AT IDLE), DIAGNOSIS AND TESTING - (P0172)	9-195
FUEL SYSTEM 1/1 RICH CONTROL OVER LIMIT (AT IDLE), DIAGNOSIS AND TESTING - (P0171)	9-183
FUEL SYSTEM 1/1 RICH CONTROL OVER LIMIT (AT LOAD), DIAGNOSIS AND TESTING - (P0171)	9-187
FUEL SYSTEM 1/1 UNDERCORRECTION OF FUEL MIXTURE (OFF IDLE), DIAGNOSIS AND TESTING - (P0171)	9-179
FUEL SYSTEM 2/1 LEAN CONTROL BELOW LIMIT (AT IDLE), DIAGNOSIS AND TESTING - (P0175)	9-233
FUEL SYSTEM 2/1 LEAN CONTROL BELOW LIMIT (AT LOAD), DIAGNOSIS AND TESTING - (P0174)	9-224
FUEL SYSTEM 2/1 OVERCORRECTION OF FUEL MIXTURE (OFF IDLE), DIAGNOSIS AND TESTING - (P0175)	9-230
FUEL SYSTEM 2/1 RICH CONTROL OVER LIMIT (AT IDLE), DIAGNOSIS AND TESTING - (P0174)	9-218
FUEL SYSTEM 2/1 RICH CONTROL OVER LIMIT (AT LOAD), DIAGNOSIS AND TESTING - (P0173)	9-211
FUEL SYSTEM 2/1 RICH CONTROL OVER LIMIT (AT LOAD), DIAGNOSIS AND TESTING - (P0174)	9-221
FUEL SYSTEM 2/1 UNDERCORRECTION OF FUEL MIXTURE (OFF IDLE), DIAGNOSIS AND TESTING - (P0174)	9-227
FUEL SYSTEM PRESSURE RELEASE PROCEDURE - STANDARD PROCEDURE	14-5
FUEL TANK - DESCRIPTION	14-20
FUEL TANK - INSTALLATION	14-22
FUEL TANK - OPERATION	14-20
FUEL TANK - REMOVAL	14-21
FUEL TANK - STANDARD PROCEDURE, DRAINING	14-5
FUEL TANK FILLER TUBE - DESCRIPTION	14-24
FUEL TANK PRESSURE SENSOR CIRCUIT HIGH, DIAGNOSIS AND TESTING - (P0453)	9-397
FUEL TANK PRESSURE SENSOR CIRCUIT LOW, DIAGNOSIS AND TESTING - (P0452)	9-395
FUEL TANK PRESSURE SENSOR PERFORMANCE, DIAGNOSIS AND TESTING - (P0451)	9-390
FUNCTION CHECK - DIAGNOSIS AND TESTING	8J-73
FUSE BLOCK - DESCRIPTION	8W-97-6
FUSE BLOCK - DESCRIPTION, ENGINE	8W-97-2
FUSE BLOCK - DESCRIPTION, UNDERHOOD ACCESSORY	8W-97-5
FUSE BLOCK - INSTALLATION, ENGINE	8W-97-3
FUSE BLOCK - INSTALLATION, UNDERHOOD ACCESSORY	8W-97-5
FUSE BLOCK - OPERATION	8W-97-6
FUSE BLOCK - OPERATION, ENGINE	8W-97-2
FUSE BLOCK - OPERATION, UNDERHOOD ACCESSORY	8W-97-5
FUSE BLOCK - REMOVAL, ENGINE	8W-97-2
FUSE BLOCK - REMOVAL, UNDERHOOD ACCESSORY	8W-97-5
FUSES POWERING SEVERAL LOADS - STANDARD PROCEDURE, TESTING FOR A SHORT TO GROUND ON	8W-01-10
GALLERY PLUGS - STANDARD PROCEDURE, ENGINE CORE AND OIL	9-591
GAP MEASUREMENTS - SPECIFICATIONS, BODY	23-53
GARAGE DOOR OPENER/TIRE PRESSURE MONITOR, DIAGNOSIS AND TESTING - NO RESPONSE FROM UNIVERSAL	8E-17
GAS PROP - INSTALLATION	23-127,23-41
GAS PROP - REMOVAL	23-126,23-40
GASKET - DIAGNOSIS AND TESTING, CYLINDER HEAD	9-610
GASKET SURFACE PREPARATION - STANDARD PROCEDURE, ENGINE	9-590
GASKETS AND SEALERS - STANDARD PROCEDURE, FORM-IN-PLACE	9-589
GEAR - DESCRIPTION	19-32
GEAR - INSTALLATION	19-36
GEAR - OPERATION	19-32
GEAR - REMOVAL	19-33
GEAR, ADJUSTMENTS - STEERING	19-38
GEAR, DIAGNOSIS AND TESTING - (P0730) IMPROPER	21-113
GEAR RATIOS - SPECIFICATIONS	21-349
GEAR SHIFT LEVER HANDLE - INSTALLATION	21-387
GEAR SHIFT LEVER HANDLE - REMOVAL	21-387
GEAR SHIFT MODULE (SLA), DIAGNOSIS AND TESTING - (P0600) LOST COMM WITH ELECTRIC	9-439
GEAR SHIFT ROD - INSTALLATION	21-341
GEAR SHIFT ROD - REMOVAL	21-341
GEARTRAIN - ASSEMBLY, PLANETARY	21-323
GEARTRAIN - DESCRIPTION, PLANETARY	21-321
GEARTRAIN - DISASSEMBLY, PLANETARY	21-322
GEARTRAIN - OPERATION, PLANETARY	21-321
GEARTRAIN HOUSING - ASSEMBLY	21-365
GEARTRAIN HOUSING - DISASSEMBLY	21-363
GENERAL - WARNINGS	8W-01-7
GENERAL EVAP SYSTEM FAILURE, DIAGNOSIS AND TESTING - (P0440)	9-374
GENERAL MALFUNCTION, DIAGNOSIS AND TESTING - CAN BUS COMMUNICATION	5-162,5-88
GENERAL MALFUNCTION, DIAGNOSIS AND TESTING - CAN BUS COMMUNICATION	8J-36
GENERATOR - DESCRIPTION	8F-27
GENERATOR - INSTALLATION	8F-29
GENERATOR - OPERATION	8F-27
GENERATOR - REMOVAL	8F-28
GENERATOR - SPECIFICATIONS	8F-27
GLASS - INSTALLATION, DOOR	23-95
GLASS - REMOVAL, DOOR	23-93
GLASS - SERVICE INFORMATION - DESCRIPTION, HEATED	8G-10
GLASS - SERVICE INFORMATION - OPERATION, HEATED	8G-11
GLASS HEATING GRID REPAIR - STANDARD PROCEDURE, REAR	8G-13
GLOVE BOX LAMP - INSTALLATION	8L-147
GLOVE BOX LAMP - REMOVAL	8L-146
GLOVE BOX LAMP INOPERATIVE, DIAGNOSIS AND TESTING	8L-127
GLOVE BOX LAMP/SWITCH - DESCRIPTION	8L-148
GLOVE BOX LAMP/SWITCH - INSTALLATION	8L-149
GLOVE BOX LAMP/SWITCH - OPERATION	8L-148
GLOVE BOX LAMP/SWITCH - REMOVAL	8L-148
GLOVE COMPARTMENT, INSTALLATION	23-146
GLOVE COMPARTMENT, REMOVAL	23-143

Description	Group-Page
GLOVE COMPARTMENT, STANDARD PROCEDURE - ADJUSTING THE	23-141
GRID - DESCRIPTION, HEATED MIRROR	8G-23
GRID - DIAGNOSIS AND TESTING, REAR WINDOW DEFOGGER	8G-12
GRID REPAIR - STANDARD PROCEDURE, ANTENNA	8A-24
GRID REPAIR - STANDARD PROCEDURE, REAR GLASS HEATING	8G-13
GRILLE - INSTALLATION	23-111
GRILLE - INSTALLATION, COWL	23-114
GRILLE - REMOVAL	23-110
GRILLE - REMOVAL, COWL	23-114
GROUND - (P0753) 1, 2/4-5 SOLENOID CIRCUIT SHORT TO	21-136
GROUND - (P0758) 2, 3 SOLENOID CIRCUIT SHORT TO	21-142
GROUND - (P0763) 3, 4 SOLENOID CIRCUIT SHORT TO	21-148
GROUND - STANDARD PROCEDURE, TESTING FOR A SHORT TO	8W-01-10
GROUND AND SPLICE INFORMATION - DESCRIPTION, CONNECTOR	8W-01-6
GROUND ON FUSES POWERING SEVERAL LOADS - STANDARD PROCEDURE, TESTING FOR A SHORT TO	8W-01-10
GUIDES - INSTALLATION, TIMING CHAIN	9-703
GUIDES - REMOVAL, TIMING CHAIN	9-703
HALFSHAFTS - DESCRIPTION	3-2
HALFSHAFTS - INSTALLATION	3-5
HALFSHAFTS - OPERATION	3-3
HALFSHAFTS - REMOVAL	3-4
HANDLE - INSTALLATION, EXTERIOR	23-37, 23-99
HANDLE - INSTALLATION, GEAR SHIFT LEVER	21-387
HANDLE - REMOVAL, EXTERIOR	23-34,23-98
HANDLE - REMOVAL, GEAR SHIFT LEVER	21-387
HANDLING NON-DEPLOYED SUPPLEMENTAL RESTRAINTS - STANDARD PROCEDURE	8O-83
HARNESS - DIAGNOSIS AND TESTING, WIRING	8W-01-7
HARNESS CONNECTORS REVERSED, DIAGNOSIS AND TESTING - (P0040) 1/1 AND 2/1 O2 SENSOR	9-5
HAZARD FLASHER - DESCRIPTION	8L-99
HAZARD SWITCH - DESCRIPTION	8L-100
HAZARD SWITCH - INSTALLATION	8L-102
HAZARD SWITCH - OPERATION	8L-100
HAZARD SWITCH - REMOVAL	8L-100
HAZARD SWITCH CIRCUIT, DIAGNOSIS AND TESTING	8L-118
HCU (HYDRAULIC CONTROL UNIT) - DESCRIPTION	5-204
HCU (HYDRAULIC CONTROL UNIT) - INSTALLATION	5-206
HCU (HYDRAULIC CONTROL UNIT) - OPERATION	5-204
HCU (HYDRAULIC CONTROL UNIT) - REMOVAL	5-205
HEAD - CLEANING, CYLINDER	9-614
HEAD - DESCRIPTION, CYLINDER	9-610
HEAD - INSPECTION, CYLINDER	9-614
HEAD - INSTALLATION, CYLINDER	9-614
HEAD - OPERATION, CYLINDER	9-610
HEAD - REMOVAL, CYLINDER	9-611
HEAD COVER - DESCRIPTION, CYLINDER	9-617
HEAD COVER - INSTALLATION, CYLINDER	9-618
HEAD COVER - REMOVAL, CYLINDER	9-617
HEAD GASKET - DIAGNOSIS AND TESTING, CYLINDER	9-610
HEADLAMP - DESCRIPTION	8L-103
HEADLAMP - OPERATION	8L-103
HEADLAMP INOPERATIVE, DIAGNOSIS AND TESTING - LEFT HIGH BEAM	8L-23
HEADLAMP INOPERATIVE, DIAGNOSIS AND TESTING - LEFT LOW BEAM	8L-20
HEADLAMP INOPERATIVE, DIAGNOSIS AND TESTING - RIGHT HIGH BEAM	8L-29
HEADLAMP INOPERATIVE, DIAGNOSIS AND TESTING - RIGHT LOW BEAM	8L-26
HEADLAMP SWITCH - DESCRIPTION	8L-105
HEADLAMP SWITCH - INSTALLATION	8L-106
HEADLAMP SWITCH - OPERATION	8L-105
HEADLAMP SWITCH - REMOVAL	8L-105
HEADLAMP UNIT - DESCRIPTION	8L-107
HEADLAMP UNIT - INSTALLATION	8L-108
HEADLAMP UNIT - REMOVAL	8L-108
HEADLINER - INSTALLATION	23-196
HEADLINER - REMOVAL	23-194
HEAT SHIELD - INSTALLATION, FRONT	11-9
HEAT SHIELD - INSTALLATION, REAR	11-9
HEAT SHIELD - REMOVAL, FRONT	11-8
HEAT SHIELD - REMOVAL, REAR	11-8
HEAT SYSTEM (REST) - DESCRIPTION, RESIDUAL ENGINE	24-57
HEATED GLASS - SERVICE INFORMATION - DESCRIPTION	8G-10
HEATED GLASS - SERVICE INFORMATION - OPERATION	8G-11
HEATED MIRROR GRID - DESCRIPTION	8G-23
HEATED MIRROR INOPERATIVE, DIAGNOSIS AND TESTING - LEFT	8G-16
HEATED MIRROR INOPERATIVE, DIAGNOSIS AND TESTING - RIGHT	8G-18
HEATED MIRRORS - SERVICE INFORMATION - DESCRIPTION	8G-22
HEATED MIRRORS - SERVICE INFORMATION - DIAGNOSIS AND TESTING	8G-22
HEATED MIRRORS - SERVICE INFORMATION - OPERATION	8G-22
HEATED SEAT BACK ELEMENT - INSTALLATION	8G-41
HEATED SEAT BACK ELEMENT - REMOVAL	8G-40
HEATED SEAT CUSHION ELEMENT, INSTALLATION	8G-41
HEATED SEAT CUSHION ELEMENT, REMOVAL	8G-40
HEATED SEAT ELEMENT - DESCRIPTION	8G-39
HEATED SEAT INOPERATIVE, DIAGNOSIS AND TESTING - LEFT	8G-26
HEATED SEAT INOPERATIVE, DIAGNOSIS AND TESTING - RIGHT	8G-29
HEATED SEAT MODULE - INSTALLATION	8G-42
HEATED SEAT MODULE - REMOVAL	8G-41
HEATED SEAT SWITCH - INSTALLATION	8G-38
HEATED SEAT SWITCH - REMOVAL	8G-37
HEATED SEATS - SERVICE INFORMATION - DESCRIPTION	8G-36
HEATED SEATS - SERVICE INFORMATION - DIAGNOSIS AND TESTING	8G-37
HEATED SEATS - SERVICE INFORMATION - OPERATION	8G-36
HEATED SEATS INOPERATIVE, DIAGNOSIS AND TESTING - BOTH	8G-32
HEATER AND AIR CONDITIONER - DESCRIPTION	24-55
HEATER AND AIR CONDITIONER, OPERATION	24-59
HEATER CIRCUIT HIGH, DIAGNOSIS AND TESTING - (P0135) O2 SENSOR 1/1	9-113
HEATER CIRCUIT HIGH, DIAGNOSIS AND TESTING - (P0141) O2 SENSOR 1/2	9-145
HEATER CIRCUIT HIGH, DIAGNOSIS AND TESTING - (P0155) O2 SENSOR 2/1	9-165
HEATER CIRCUIT HIGH, DIAGNOSIS AND TESTING - (P0161) O2 SENSOR 2/2	9-177
HEATER CIRCUIT LOW, DIAGNOSIS AND TESTING - (P0135) O2 SENSOR 1/1	9-107
HEATER CIRCUIT LOW, DIAGNOSIS AND TESTING - (P0141) O2 SENSOR 1/2	9-141
HEATER CIRCUIT LOW, DIAGNOSIS AND TESTING - (P0155) O2 SENSOR 2/1	9-163
HEATER CIRCUIT LOW, DIAGNOSIS AND TESTING - (P0161) O2 SENSOR 2/2	9-173
HEATER CIRCUIT OPEN, DIAGNOSIS AND TESTING - (P0135) O2 SENSOR 1/1	9-117
HEATER CIRCUIT OPEN, DIAGNOSIS AND TESTING - (P0141) O2 SENSOR 1/2	9-143
HEATER CIRCUIT OPEN, DIAGNOSIS AND TESTING - (P0155) O2 SENSOR 2/1	9-167
HEATER CIRCUIT OPEN, DIAGNOSIS AND TESTING - (P0161) O2 SENSOR 2/2	9-175
HEATER CONTROL MODULE - DESCRIPTION, A/C	24-78
HEATER CONTROL MODULE - INSTALLATION, A/C	24-81
HEATER CONTROL MODULE - OPERATION, A/C	24-78
HEATER CONTROL MODULE - REMOVAL, A/C	24-79
HEATER CONTROL MODULE, DIAGNOSIS AND TESTING - NO RESPONSE FROM A/C	8E-21
HEATER CORE - DESCRIPTION	24-141
HEATER CORE - INSTALLATION	24-144
HEATER CORE - OPERATION	24-141
HEATER CORE - REMOVAL	24-142
HEATER CORE TEMPERATURE SENSOR - INSTALLATION	24-85
HEATER CORE TEMPERATURE SENSOR - REMOVAL	24-85
HEATER CORE TEMPERATURE SENSOR CIRCUIT, DIAGNOSIS AND TESTING - LEFT	24-8
HEATER CORE TEMPERATURE SENSOR CIRCUIT, DIAGNOSIS AND TESTING - RIGHT	24-13
HEATER PERFORMANCE - DIAGNOSIS AND TESTING	24-68
HEATER PERFORMANCE, DIAGNOSIS AND TESTING - (P0135) O2 SENSOR 1/1	9-109
HEATER PERFORMANCE, DIAGNOSIS AND TESTING - (P0141) O2 SENSOR 1/2	9-147
HEATER PERFORMANCE, DIAGNOSIS AND TESTING - (P0155) O2 SENSOR 2/1	9-169
HEATER PERFORMANCE, DIAGNOSIS AND TESTING - (P0161) O2 SENSOR 2/2	9-171
HEATER SWITCH ILLUMINATION - DESCRIPTION	8L-150
HEATING & AIR CONDITIONING - ELECTRICAL DIAGNOSTICS - DESCRIPTION	24-1
HEATING & AIR CONDITIONING - ELECTRICAL DIAGNOSTICS - OPERATION	24-2
HEATING GRID REPAIR - STANDARD PROCEDURE, REAR GLASS	8G-13
HIGH BEAM BULB - INSTALLATION	8L-105
HIGH BEAM BULB - REMOVAL	8L-103
HIGH BEAM HEADLAMP INOPERATIVE, DIAGNOSIS AND TESTING - LEFT	8L-23
HIGH BEAM HEADLAMP INOPERATIVE, DIAGNOSIS AND TESTING - RIGHT	8L-29
HIGH BEAM INDICATOR INOPERATIVE, DIAGNOSIS AND TESTING	8J-42
HIGH MOUNTED STOP LAMP - DESCRIPTION, CENTER	8L-92
HIGH MOUNTED STOP LAMP - INSTALLATION, CENTER	8L-93
HIGH MOUNTED STOP LAMP - REMOVAL, CENTER	8L-92
HIGH MOUNTED STOP LAMP INOPERATIVE, DIAGNOSIS AND TESTING - CENTER	8L-68
HIGH SPEED, DESCRIPTION - TIRE PRESSURE	22-58
HIGH SPEED INOPERATIVE, DIAGNOSIS AND TESTING - WIPERS	8R-11
HINGE - INSTALLATION	23-129,23-42
HINGE - REMOVAL	23-128,23-42
HOAT COOLANT - DESCRIPTION	7-16
HOAT COOLANT - DESCRIPTION	0-4
HOISTING - STANDARD PROCEDURE	0-10
HOLDING CLUTCH B1 - ASSEMBLY	21-305
HOLDING CLUTCH B1 - DISASSEMBLY	21-304
HOLDING CLUTCH B2 - ASSEMBLY	21-308
HOLDING CLUTCH B2 - DISASSEMBLY	21-307
HOLDING CLUTCHES - DESCRIPTION	21-302
HOLDING CLUTCHES - OPERATION	21-303
HOLE REPAIR, DESCRIPTION - THREADED	Intro.-6
HOOD - ADJUSTMENT	23-134
HOOD - INSTALLATION	23-133
HOOD - REMOVAL	23-131
HOOD AJAR SWITCH - INSTALLATION	8Q-50
HOOD AJAR SWITCH - REMOVAL	8Q-50
HOOD TO ITS FULLY UPRIGHT POSITION - STANDARD PROCEDURE, MOVING THE	23-130
HOOKS - DESCRIPTION, EMERGENCY TOW	0-14

Description	Group-Page
HORIZONTAL MOTOR INOPERATIVE, DIAGNOSIS AND TESTING - DRIVER POWER SEAT	8N-83
HORIZONTAL MOTOR INOPERATIVE, DIAGNOSIS AND TESTING - PASSENGER POWER SEAT	8N-91
HORIZONTAL MOTOR, INSTALLATION	8N-102
HORIZONTAL MOTOR, REMOVAL	8N-101
HORN - INSTALLATION	8H-12
HORN - REMOVAL	8H-11
HORN - SERVICE INFORMATION - DESCRIPTION	8H-9
HORN - SERVICE INFORMATION - OPERATION	8H-9
HORN - SPECIFICATIONS	8H-10
HORN RELAY - DESCRIPTION	8H-14
HORN SWITCH - DIAGNOSIS AND TESTING	8H-12
HORN SWITCH - INSTALLATION	8H-13
HORN SWITCH - REMOVAL	8H-13
HORN SYSTEM - DIAGNOSIS AND TESTING	8H-10
HORNS ALWAYS ON, DIAGNOSIS AND TESTING	8H-5
HORNS INOPERATIVE, DIAGNOSIS AND TESTING	8H-2
HOSE - DESCRIPTION, CRANKCASE VENT	25-16
HOSE - INSTALLATION, REAR BRAKE	5-16
HOSE, INSTALLATION - FRONT BRAKE	5-14
HOSE, REMOVAL - FRONT BRAKE	5-12
HOSE, REMOVAL - REAR BRAKE	5-13
HOSES / TUBES - INSTALLATION, WASHER	8R-27
HOSES / TUBES - REMOVAL, WASHER	8R-26
HOSES AND LINES, DIAGNOSIS AND TESTING - BRAKE	5-10
HOUSING - ASSEMBLY, GEARTRAIN	21-365
HOUSING - ASSEMBLY, REAR SECTION	21-362
HOUSING - DISASSEMBLY, GEARTRAIN	21-363
HOUSING - DISASSEMBLY, REAR SECTION	21-362
HOUSING - INSTALLATION, AIR CLEANER	9-608
HOUSING - INSTALLATION, HVAC	24-101
HOUSING - INSTALLATION, REAR DIFFERENTIAL	3-42
HOUSING - REMOVAL, AIR CLEANER	9-608
HOUSING - REMOVAL, HVAC	24-92
HOUSING - REMOVAL, REAR DIFFERENTIAL	3-41
HOW TO USE WIRING DIAGRAMS - DESCRIPTION	8W-01-1
HUB / BEARING - DESCRIPTION	2-23
HUB / BEARING - INSTALLATION	2-70
HUB / BEARING - REMOVAL	2-67
HUB SEAL - INSTALLATION, TORQUE CONVERTER	21-337
HUB SEAL - REMOVAL, TORQUE CONVERTER	21-337
HVAC CONTROL MODULE REQUESTED MIL ILLUMINATION, DIAGNOSIS AND TESTING - (P2561)	9-512
HVAC HOUSING - INSTALLATION	24-101
HVAC HOUSING - REMOVAL	24-92
HYDROSTATIC LOCKED ENGINE, STANDARD PROCEDURE	9-588
IC CAN MESSAGE INCORRECT, DIAGNOSIS AND TESTING - (P0600)	21-57
IC/HVAC CAN MESSAGE MISSING, DIAGNOSIS AND TESTING - (P0600)	21-60
IDENTIFICATION - DESCRIPTION, FASTENER	Intro.-3
IDENTIFICATION AND INFORMATION - DESCRIPTION, SECTION	8W-01-5
IDENTIFICATION NUMBER - DESCRIPTION, VEHICLE	Intro.-2
IDENTIFIED OR INCORRECT, DIAGNOSIS AND TESTING - PCM NOT	5-161,5-94
IDLE SPEED PERFORMANCE, DIAGNOSIS AND TESTING - (P0221)	9-266
IDLER ARM - INSTALLATION	19-42
IDLER ARM - REMOVAL	19-41
IDLER PULLEY - INSTALLATION	7-48
IDLER PULLEY - REMOVAL	7-47
IGNITION COIL - DESCRIPTION	8I-5
IGNITION COIL - INSTALLATION	8I-5
IGNITION COIL - REMOVAL	8I-5
IGNITION LOCK CABLE - INSTALLATION	19-21
IGNITION LOCK CABLE - REMOVAL	19-19
IGNITION ON, DIAGNOSIS AND TESTING - WASHERS RUN CONTINUOUSLY WITH	8R-6
IGNITION ON, DIAGNOSIS AND TESTING - WIPERS RUN CONTINUOUSLY WITH	8R-17
IGNITION SWITCH - INSTALLATION	19-24
IGNITION SWITCH - REMOVAL	19-23
IGNITION SYSTEM - ELECTRICAL DIAGNOSTICS - SCHEMATICS AND DIAGRAMS	8I-2
IGNITION SYSTEM - SERVICE INFORMATION - DESCRIPTION	8I-3
IGNITION SYSTEM - SERVICE INFORMATION - OPERATION	8I-3
IGNITION-OFF DRAW TEST - STANDARD PROCEDURE	8F-14
III® DOES NOT POWER UP, DIAGNOSIS AND TESTING - DRB	8E-2
III® STATE DISPLAY TEST MODE - DESCRIPTION, DRB	25-11
ILLUMINATION - DESCRIPTION, HEATER SWITCH	8L-150
ILLUMINATION - DESCRIPTION, T/C RANGE INDICATOR	8L-150
ILLUMINATION, DIAGNOSIS AND TESTING - (P2561) HVAC CONTROL MODULE REQUESTED MIL	9-512
IMPACT AIRBAG - DESCRIPTION, SIDE	8O-112
IMPACT AIRBAG - INSTALLATION, SIDE	8O-114
IMPACT AIRBAG - OPERATION, SIDE	8O-113
IMPACT AIRBAG - REMOVAL, SIDE	8O-114
IMPACT SENSOR - DESCRIPTION, SIDE	8O-107
IMPACT SENSOR - INSTALLATION, SIDE	8O-110
IMPACT SENSOR - OPERATION, SIDE	8O-107
IMPACT SENSOR - REMOVAL, SIDE	8O-108
IMPACT SENSOR SIGNAL CIRCUIT, DIAGNOSIS AND TESTING - LEFT SIDE	8O-59
IMPACT SENSOR SIGNAL CIRCUIT, DIAGNOSIS AND TESTING - RIGHT SIDE	8O-63
INCLINOMETER, STANDARD PROCEDURE - INSPECTING AND ADJUSTING VEHICLE LEVEL AT FRONT AND REAR AXLES WITH AN ELECTRONIC	2-8
INCORRECT, DIAGNOSIS AND TESTING - PCM NOT IDENTIFIED OR	5-161,5-94
INDICATOR AFTER AN OIL CHANGE, STANDARD PROCEDURE - RESETTING THE FSS MAINTENANCE	8J-78
INDICATOR CIRCUIT, DIAGNOSIS AND TESTING - AIRBAG WARNING	8O-46
INDICATOR CIRCUIT, DIAGNOSIS AND TESTING - LAMP OUTAGE	8J-5
INDICATOR ILLUMINATION - DESCRIPTION, T/C RANGE	8L-150
INDICATOR INOPERATIVE, DIAGNOSIS AND TESTING - BATTERY VOLTAGE	8J-46
INDICATOR INOPERATIVE, DIAGNOSIS AND TESTING - BRAKE WARNING	8J-44
INDICATOR INOPERATIVE, DIAGNOSIS AND TESTING - HIGH BEAM	8J-42
INDICATOR INOPERATIVE, DIAGNOSIS AND TESTING - LEFT TURN SIGNAL	8J-38
INDICATOR INOPERATIVE, DIAGNOSIS AND TESTING - RIGHT TURN SIGNAL	8J-40
INDICATOR INOPERATIVE, DIAGNOSIS AND TESTING - SEAT BELT	8J-48
INDICATOR INOPERATIVE, DIAGNOSIS AND TESTING - TELESCOPING WHEEL	8J-50
INDICATOR MODULE - INSTALLATION, ON / OFF SWITCH	8O-106
INDICATOR MODULE - REMOVAL, ON / OFF SWITCH	8O-105
INDICATOR, STANDARD PROCEDURE - RESETTING THE FSS MAINTENANCE	8J-76
INDICATOR TUBE - INSTALLATION, OIL LEVEL	9-663
INDICATOR TUBE - REMOVAL, OIL LEVEL	9-663
INDICATORS - DIAGNOSIS AND TESTING, TREAD WEAR	22-59
INFLATION PRESSURES, DESCRIPTION - TIRE	22-57
INITIAL OPERATION, STANDARD PROCEDURE - STEERING PUMP	19-51
INJECTION - DESCRIPTION, AIR	25-30
INJECTION - OPERATION, AIR	25-31
INJECTION - SPECIFICATIONS, AIR	25-31
INJECTION - SPECIFICATIONS, FUEL	14-25
INJECTION RELAY CIRCUIT, DIAGNOSIS AND TESTING - (P0410) SECONDARY AIR	9-362
INJECTION SWITCHOVER SOLENOID CIRCUIT, DIAGNOSIS AND TESTING - (P0412) SECONDARY AIR	9-365
INJECTION SYSTEM, DIAGNOSIS AND TESTING - (P0410) SECONDARY AIR	9-356
INJECTOR - DESCRIPTION, FUEL	14-31
INJECTOR - INSTALLATION, FUEL	14-34
INJECTOR - OPERATION, FUEL	14-32
INJECTOR - REMOVAL, FUEL	14-33
INJECTOR #1 CIRCUIT, DIAGNOSIS AND TESTING - (P0201) FUEL	9-238
INJECTOR #2 CIRCUIT, DIAGNOSIS AND TESTING - (P0202) FUEL	9-242
INJECTOR #3 CIRCUIT, DIAGNOSIS AND TESTING - (P0203) FUEL	9-244
INJECTOR #4 CIRCUIT, DIAGNOSIS AND TESTING - (P0204) FUEL	9-246
INJECTOR #5 CIRCUIT, DIAGNOSIS AND TESTING - (P0205) FUEL	9-248
INJECTOR #6 CIRCUIT, DIAGNOSIS AND TESTING - (P0206) FUEL	9-250
INJECTOR CIRCUIT, DIAGNOSIS AND TESTING - (P0200) FUEL	9-236
INNER - INSTALLATION, CV BOOT	3-9
INNER - REMOVAL, CV BOOT	3-7
INOPERATIVE, DIAGNOSIS AND TESTING - ASH RECEIVER LAMP	8L-130
INOPERATIVE, DIAGNOSIS AND TESTING - AUTOMATIC DAY/NIGHT MIRROR	8N-59
INOPERATIVE, DIAGNOSIS AND TESTING - BATTERY VOLTAGE INDICATOR	8J-46
INOPERATIVE, DIAGNOSIS AND TESTING - BOTH HEATED SEATS	8G-32
INOPERATIVE, DIAGNOSIS AND TESTING - BOTH POWER MIRRORS	8N-57
INOPERATIVE, DIAGNOSIS AND TESTING - BOTH POWER SEATS	8N-78
INOPERATIVE, DIAGNOSIS AND TESTING - BOTH POWER WINDOWS	8N-116
INOPERATIVE, DIAGNOSIS AND TESTING - BRAKE WARNING INDICATOR	8J-44
INOPERATIVE, DIAGNOSIS AND TESTING - CARGO LAMP	8L-124
INOPERATIVE, DIAGNOSIS AND TESTING - CENTER HIGH MOUNTED STOP LAMP	8L-68
INOPERATIVE, DIAGNOSIS AND TESTING - DRIVER POWER SEAT	8N-74
INOPERATIVE, DIAGNOSIS AND TESTING - DRIVER POWER SEAT FRONT RISER MOTOR	8N-85
INOPERATIVE, DIAGNOSIS AND TESTING - DRIVER POWER SEAT HORIZONTAL MOTOR	8N-83
INOPERATIVE, DIAGNOSIS AND TESTING - DRIVER POWER SEAT REAR RISER MOTOR	8N-87
INOPERATIVE, DIAGNOSIS AND TESTING - DRIVER POWER SEAT RECLINER MOTOR	8N-81
INOPERATIVE, DIAGNOSIS AND TESTING - GLOVE BOX LAMP	8L-127
INOPERATIVE, DIAGNOSIS AND TESTING - HIGH BEAM INDICATOR	8J-42
INOPERATIVE, DIAGNOSIS AND TESTING - HORNS	8H-2
INOPERATIVE, DIAGNOSIS AND TESTING - LEFT BACK UP LAMP	8L-50
INOPERATIVE, DIAGNOSIS AND TESTING - LEFT FOG LAMP	8L-2
INOPERATIVE, DIAGNOSIS AND TESTING - LEFT FRONT POWER WINDOW	8N-110
INOPERATIVE, DIAGNOSIS AND TESTING - LEFT FRONT SIDE MARKER LAMP	8L-32
INOPERATIVE, DIAGNOSIS AND TESTING - LEFT FRONT TURN LAMP	8L-11
INOPERATIVE, DIAGNOSIS AND TESTING - LEFT HEATED MIRROR	8G-16
INOPERATIVE, DIAGNOSIS AND TESTING - LEFT HEATED SEAT	8G-26

Description	Group-Page
INOPERATIVE, DIAGNOSIS AND TESTING - LEFT HIGH BEAM HEADLAMP	8L-23
INOPERATIVE, DIAGNOSIS AND TESTING - LEFT LOW BEAM HEADLAMP	8L-20
INOPERATIVE, DIAGNOSIS AND TESTING - LEFT PARK LAMP	8L-8
INOPERATIVE, DIAGNOSIS AND TESTING - LEFT POWER MIRROR	8N-53
INOPERATIVE, DIAGNOSIS AND TESTING - LEFT REAR SIDE MARKER LAMP	8L-38
INOPERATIVE, DIAGNOSIS AND TESTING - LEFT REAR TURN LAMP	8L-53
INOPERATIVE, DIAGNOSIS AND TESTING - LEFT STOP LAMP	8L-47
INOPERATIVE, DIAGNOSIS AND TESTING - LEFT TAIL LAMP	8L-44
INOPERATIVE, DIAGNOSIS AND TESTING - LEFT TURN SIGNAL INDICATOR	8J-38
INOPERATIVE, DIAGNOSIS AND TESTING - LICENSE LAMP NO.1	8L-71
INOPERATIVE, DIAGNOSIS AND TESTING - LICENSE LAMP NO.2	8L-74
INOPERATIVE, DIAGNOSIS AND TESTING - PASSENGER POWER SEAT	8N-76
INOPERATIVE, DIAGNOSIS AND TESTING - PASSENGER POWER SEAT HORIZONTAL MOTOR	8N-91
INOPERATIVE, DIAGNOSIS AND TESTING - PASSENGER POWER SEAT RECLINER MOTOR	8N-89
INOPERATIVE, DIAGNOSIS AND TESTING - RADIATOR COOLING FAN	7-2
INOPERATIVE, DIAGNOSIS AND TESTING - RADIO	8A-2
INOPERATIVE, DIAGNOSIS AND TESTING - REAR WINDOW DEFOGGER	8G-5
INOPERATIVE, DIAGNOSIS AND TESTING - RIGHT BACK UP LAMP	8L-62
INOPERATIVE, DIAGNOSIS AND TESTING - RIGHT FOG LAMP	8L-5
INOPERATIVE, DIAGNOSIS AND TESTING - RIGHT FRONT POWER WINDOW	8N-113
INOPERATIVE, DIAGNOSIS AND TESTING - RIGHT FRONT SIDE MARKER LAMP	8L-35
INOPERATIVE, DIAGNOSIS AND TESTING - RIGHT FRONT TURN LAMP	8L-17
INOPERATIVE, DIAGNOSIS AND TESTING - RIGHT HEATED MIRROR	8G-18
INOPERATIVE, DIAGNOSIS AND TESTING - RIGHT HEATED SEAT	8G-29
INOPERATIVE, DIAGNOSIS AND TESTING - RIGHT HIGH BEAM HEADLAMP	8L-29
INOPERATIVE, DIAGNOSIS AND TESTING - RIGHT LOW BEAM HEADLAMP	8L-26
INOPERATIVE, DIAGNOSIS AND TESTING - RIGHT PARK LAMP	8L-14
INOPERATIVE, DIAGNOSIS AND TESTING - RIGHT POWER MIRROR	8N-55
INOPERATIVE, DIAGNOSIS AND TESTING - RIGHT REAR SIDE MARKER LAMP	8L-41
INOPERATIVE, DIAGNOSIS AND TESTING - RIGHT REAR TURN LAMP	8L-65
INOPERATIVE, DIAGNOSIS AND TESTING - RIGHT STOP LAMP	8L-59
INOPERATIVE, DIAGNOSIS AND TESTING - RIGHT TAIL LAMP	8L-56
INOPERATIVE, DIAGNOSIS AND TESTING - RIGHT TURN SIGNAL INDICATOR	8J-40
INOPERATIVE, DIAGNOSIS AND TESTING - SEAT BELT INDICATOR	8J-48
INOPERATIVE, DIAGNOSIS AND TESTING - TELESCOPING WHEEL INDICATOR	8J-50
INOPERATIVE, DIAGNOSIS AND TESTING - WASHERS	8R-4
INOPERATIVE, DIAGNOSIS AND TESTING - WIPERS	8R-8
INOPERATIVE, DIAGNOSIS AND TESTING - WIPERS HIGH SPEED	8R-11
INOPERATIVE, DIAGNOSIS AND TESTING - WIPERS INTERMITTENT SPEED	8R-15
INOPERATIVE, DIAGNOSIS AND TESTING - WIPERS LOW SPEED	8R-13
INPUT CIRCUIT, DIAGNOSIS AND TESTING - SPEED CONTROL SWITCH	9-553
INPUT SENSOR MISMATCH, DIAGNOSIS AND TESTING - (P0715)	21-90
INPUT SENSOR OVERSPEED, DIAGNOSIS AND TESTING - (P0715)	21-94
INPUT SHAFT SEAL - INSTALLATION	21-360
INPUT SHAFT SEAL - REMOVAL	21-359
INPUT SPEED SENSOR CIRCUIT, DIAGNOSIS AND TESTING - (P0715) N2	21-97
INPUT SPEED SENSOR CIRCUIT, DIAGNOSIS AND TESTING - (P0715) N3	21-103
INSPECTING AND ADJUSTING VEHICLE LEVEL AT FRONT AND REAR AXLES, STANDARD PROCEDURE	2-8
INSPECTING AND ADJUSTING VEHICLE LEVEL AT FRONT AND REAR AXLES WITH AN ELECTRONIC INCLINOMETER, STANDARD PROCEDURE	2-8
INSTRUMENT CLUSTER - INSTALLATION	8J-84
INSTRUMENT CLUSTER - REMOVAL	8J-83
INSTRUMENT CLUSTER - SERVICE INFORMATION - DESCRIPTION	8J-56
INSTRUMENT CLUSTER - SERVICE INFORMATION - OPERATION	8J-59
INSTRUMENT CLUSTER BULBS - STANDARD PROCEDURE	8J-81
INSTRUMENT CLUSTER COVER - INSTALLATION	23-160
INSTRUMENT CLUSTER COVER - REMOVAL	23-154
INSTRUMENT CLUSTER, DIAGNOSIS AND TESTING - NO COMMUNICATION FROM	24-49
INSTRUMENT CLUSTER, DIAGNOSIS AND TESTING - NO COMMUNICATION FROM	8J-14
INSTRUMENT CLUSTER, DIAGNOSIS AND TESTING - NO COMMUNICATION TO	24-51
INSTRUMENT CLUSTER, DIAGNOSIS AND TESTING - NO COMMUNICATION TO	8J-16
INSTRUMENT CLUSTER, DIAGNOSIS AND TESTING - NO RESPONSE FROM	8E-13
INSTRUMENT PANEL (LEFT) - INSTALLATION, LOWER	23-158
INSTRUMENT PANEL (LEFT) - REMOVAL, LOWER	23-152
INSTRUMENT PANEL (RIGHT) - INSTALLATION, LOWER	23-160
INSTRUMENT PANEL (RIGHT) - REMOVAL, LOWER	23-154
INSTRUMENT PANEL (TOP SECTION) - INSTALLATION	23-155
INSTRUMENT PANEL (TOP SECTION), REMOVAL	23-149
INSULATION - INSTALLATION	23-136
INSULATION - REMOVAL	23-135
INTAKE AIR TEMPERATURE SENSOR - DESCRIPTION	14-36
INTAKE AIR TEMPERATURE SENSOR - OPERATION	14-36
INTAKE AIR TEMPERATURE SENSOR CIRCUIT HIGH, DIAGNOSIS AND TESTING - (P0113)	9-36
INTAKE AIR TEMPERATURE SENSOR CIRCUIT LOW, DIAGNOSIS AND TESTING - (P0112)	9-31
INTAKE MANIFOLD - DESCRIPTION	9-678
INTAKE MANIFOLD - INSTALLATION	9-680
INTAKE MANIFOLD - OPERATION	9-678
INTAKE MANIFOLD - REMOVAL	9-678
INTAKE MANIFOLD LEAKS - DIAGNOSIS AND TESTING	9-678
INTAKE/EXHAUST VALVES AND SEALS - CLEANING	9-632
INTAKE/EXHAUST VALVES AND SEALS - DESCRIPTION	9-630
INTAKE/EXHAUST VALVES AND SEALS - INSTALLATION	9-632
INTAKE/EXHAUST VALVES AND SEALS - OPERATION	9-630
INTAKE/EXHAUST VALVES AND SEALS - REMOVAL	9-630
INTERIOR LAMPS - SPECIFICATIONS	8L-137
INTERLOCK SOLENOID - ADJUSTMENTS, SHIFT	21-338
INTERLOCK SOLENOID - DESCRIPTION, SHIFT	21-324,21-338
INTERLOCK SOLENOID - OPERATION, SHIFT	21-326
INTERMITTENT NO CRANK, DIAGNOSIS AND TESTING	9-567
INTERMITTENT SPEED INOPERATIVE, DIAGNOSIS AND TESTING - WIPERS	8R-15
INTERNAL CONTROLLER, DIAGNOSIS AND TESTING	21-171
INTERNAL CONTROLLER, DIAGNOSIS AND TESTING - (P0702)	21-76
INTERNAL FAILURE, DIAGNOSIS AND TESTING - BODY CONTROL MODULE	23-2
INTERNAL FAILURE, DIAGNOSIS AND TESTING - BODY CONTROL MODULE	8N-11
INTERNAL FAILURE, DIAGNOSIS AND TESTING - CAB	5-153,5-80
INTERNAL FAILURE, DIAGNOSIS AND TESTING - CENTRAL LOCKING PUMP/SECURITY SYSTEM MODULE	8N-26
INTERNAL FAILURE, DIAGNOSIS AND TESTING - CENTRAL LOCKING PUMP/SECURITY SYSTEM MODULE	8Q-30
INTERNAL FAILURE, DIAGNOSIS AND TESTING - ORC	8O-2
INTERNAL FAILURE, DIAGNOSIS AND TESTING - SENTRY KEY REMOTE ENTRY MODULE	8Q-34
INTERNATIONAL SYMBOLS - DESCRIPTION	Intro.-2
INTERNATIONAL SYMBOLS - DESCRIPTION	0-6
INTRODUCTION - ENGINE DIAGNOSIS	9-583
INVALID CONTROL MODULE VERSION, DIAGNOSIS AND TESTING - (P0702)	21-78
INVALID TRANSMITTER, DIAGNOSIS AND TESTING	8Q-36
INVERTED FLARING, STANDARD PROCEDURE - DOUBLE	5-11
IS NOT CODED, DIAGNOSIS AND TESTING - (P0702) CONTROL MODULE TCM	21-74
ISO FLARING - STANDARD PROCEDURE	5-11
ISOLATOR - INSTALLATION, SUPPORT BRACKET	11-14
ISOLATOR - REMOVAL, SUPPORT BRACKET	11-13
JOINT - INSPECTION, CV	3-16
JOINT - INSTALLATION, CV	3-19
JOINT - INSTALLATION, LOWER BALL	2-32
JOINT - REMOVAL, CV	3-14
JOINT - REMOVAL, LOWER BALL	2-29
JOINTS - ASSEMBLY, SINGLE CARDAN UNIVERSAL	3-33
JOINTS - DISASSEMBLY, SINGLE CARDAN UNIVERSAL	3-32
JUMP STARTING, STANDARD PROCEDURE	0-8
KEY ANTENNA CIRCUIT, DIAGNOSIS AND TESTING - SENTRY	8Q-38
KEY ANTENNA RING - INSTALLATION, SENTRY	8Q-55
KEY ANTENNA RING - REMOVAL, SENTRY	8Q-54
KEY REMOTE ENTRY MODULE - DESCRIPTION, SENTRY	8E-69
KEY REMOTE ENTRY MODULE - DESCRIPTION, SENTRY	8N-46
KEY REMOTE ENTRY MODULE - DESCRIPTION, SENTRY	8Q-52
KEY REMOTE ENTRY MODULE - DIAGNOSIS AND TESTING, SENTRY	8N-47
KEY REMOTE ENTRY MODULE - INSTALLATION, SENTRY	8Q-55
KEY REMOTE ENTRY MODULE - OPERATION, SENTRY	8E-69
KEY REMOTE ENTRY MODULE - OPERATION, SENTRY	8Q-52
KEY REMOTE ENTRY MODULE - REMOVAL, SENTRY	8Q-53
KEY REMOTE ENTRY MODULE, DIAGNOSIS AND TESTING - NO RESPONSE FROM SENTRY	8E-40
KEY REMOTE ENTRY MODULE INTERNAL FAILURE, DIAGNOSIS AND TESTING - SENTRY	8Q-34
KEY VERIFICATION TEST, DIAGNOSIS AND TESTING - SENTRY	8Q-43

Description	Group-Page
KEYLESS ENTRY RELAY CONTROL CIRCUIT, DIAGNOSIS AND TESTING - REMOTE	8Q-40
KEYLESS ENTRY TRANSMITTER - DIAGNOSIS AND TESTING	8N-37
KEY/LOCK CYLINDER - INSTALLATION	19-30
KEY/LOCK CYLINDER - REMOVAL	19-28
KNOCK SENSOR - DESCRIPTION	8I-6
KNOCK SENSOR - INSTALLATION	8I-6
KNOCK SENSOR - OPERATION	8I-6
KNOCK SENSOR - REMOVAL	8I-6
KNOCK SENSOR #1 CIRCUIT HIGH, DIAGNOSIS AND TESTING - (P0325)	9-328
KNOCK SENSOR #1 CIRCUIT LOW, DIAGNOSIS AND TESTING - (P0325)	9-324
KNOCK SENSOR #2 CIRCUIT HIGH, DIAGNOSIS AND TESTING - (P0330)	9-330
KNOCK SENSOR #2 CIRCUIT LOW, DIAGNOSIS AND TESTING - (P0330)	9-332
KNOCK SENSOR SYSTEM FAILURE, DIAGNOSIS AND TESTING - (P1386)	9-491
KNUCKLE - DESCRIPTION	2-15
KNUCKLE - INSTALLATION	2-20,2-63
KNUCKLE - REMOVAL	2-16,2-58
LABEL - DESCRIPTION, VECI	Intro.-9
LABEL - DESCRIPTION, VEHICLE EMISSION CONTROL INFORMATION	25-12
LABEL - DESCRIPTION, VEHICLE SAFETY CERT	Intro.-1
LAMP - DESCRIPTION, CENTER HIGH MOUNTED STOP	8L-92
LAMP - DESCRIPTION, FRONT POSITION	8L-97
LAMP - INSTALLATION, ASH RECEIVER	8L-153
LAMP - INSTALLATION, BACKUP	8L-88
LAMP - INSTALLATION, CARGO	8L-138
LAMP - INSTALLATION, CENTER HIGH MOUNTED STOP	8L-93
LAMP - INSTALLATION, COURTESY	8L-141
LAMP - INSTALLATION, FOG	8L-94
LAMP - INSTALLATION, FRONT MARKER	8L-111
LAMP - INSTALLATION, FRONT POSITION	8L-98
LAMP - INSTALLATION, FRONT TURN SIGNAL	8L-99
LAMP - INSTALLATION, GLOVE BOX	8L-147
LAMP - INSTALLATION, LICENSE PLATE	8L-109
LAMP - OPERATION, FRONT POSITION	8L-97
LAMP - REMOVAL, ASH RECEIVER	8L-151
LAMP - REMOVAL, BACKUP	8L-88
LAMP - REMOVAL, CARGO	8L-137
LAMP - REMOVAL, CENTER HIGH MOUNTED STOP	8L-92
LAMP - REMOVAL, COURTESY	8L-140
LAMP - REMOVAL, FOG	8L-93
LAMP - REMOVAL, FRONT MARKER	8L-110
LAMP - REMOVAL, FRONT POSITION	8L-97
LAMP - REMOVAL, FRONT TURN SIGNAL	8L-98
LAMP - REMOVAL, GLOVE BOX	8L-146
LAMP - REMOVAL, LICENSE PLATE	8L-109
LAMP CIRCUIT, DIAGNOSIS AND TESTING - DOME	8L-121
LAMP DEFEAT SWITCH - DESCRIPTION, COURTESY	8L-141
LAMP INOPERATIVE, DIAGNOSIS AND TESTING - ASH RECEIVER	8L-130
LAMP INOPERATIVE, DIAGNOSIS AND TESTING - CARGO	8L-124
LAMP INOPERATIVE, DIAGNOSIS AND TESTING - CENTER HIGH MOUNTED STOP	8L-68
LAMP INOPERATIVE, DIAGNOSIS AND TESTING - GLOVE BOX	8L-127
LAMP INOPERATIVE, DIAGNOSIS AND TESTING - LEFT BACK UP	8L-50
LAMP INOPERATIVE, DIAGNOSIS AND TESTING - LEFT FOG	8L-2
LAMP INOPERATIVE, DIAGNOSIS AND TESTING - LEFT FRONT SIDE MARKER	8L-32
LAMP INOPERATIVE, DIAGNOSIS AND TESTING - LEFT FRONT TURN	8L-11
LAMP INOPERATIVE, DIAGNOSIS AND TESTING - LEFT PARK	8L-8
LAMP INOPERATIVE, DIAGNOSIS AND TESTING - LEFT REAR SIDE MARKER	8L-38
LAMP INOPERATIVE, DIAGNOSIS AND TESTING - LEFT REAR TURN	8L-53
LAMP INOPERATIVE, DIAGNOSIS AND TESTING - LEFT STOP	8L-47
LAMP INOPERATIVE, DIAGNOSIS AND TESTING - LEFT TAIL	8L-44
LAMP INOPERATIVE, DIAGNOSIS AND TESTING - RIGHT BACK UP	8L-62
LAMP INOPERATIVE, DIAGNOSIS AND TESTING - RIGHT FOG	8L-5
LAMP INOPERATIVE, DIAGNOSIS AND TESTING - RIGHT FRONT SIDE MARKER	8L-35
LAMP INOPERATIVE, DIAGNOSIS AND TESTING - RIGHT FRONT TURN	8L-17
LAMP INOPERATIVE, DIAGNOSIS AND TESTING - RIGHT PARK	8L-14
LAMP INOPERATIVE, DIAGNOSIS AND TESTING - RIGHT REAR SIDE MARKER	8L-41
LAMP INOPERATIVE, DIAGNOSIS AND TESTING - RIGHT REAR TURN	8L-65
LAMP INOPERATIVE, DIAGNOSIS AND TESTING - RIGHT STOP	8L-59
LAMP INOPERATIVE, DIAGNOSIS AND TESTING - RIGHT TAIL	8L-56
LAMP, INSTALLATION - REAR MARKER	8L-111
LAMP NO.1 INOPERATIVE, DIAGNOSIS AND TESTING - LICENSE	8L-71
LAMP NO.2 INOPERATIVE, DIAGNOSIS AND TESTING - LICENSE	8L-74
LAMP OUTAGE INDICATOR CIRCUIT, DIAGNOSIS AND TESTING	8J-5
LAMP RELAY - DESCRIPTION, BRAKE	8L-90
LAMP RELAY - INSTALLATION, BRAKE	8L-90
LAMP RELAY - OPERATION, BRAKE	8L-90
LAMP RELAY - REMOVAL, BRAKE	8L-90
LAMP, REMOVAL - REAR MARKER	8L-110
LAMP SWITCH - DESCRIPTION, BACKUP	8L-89
LAMP SWITCH - DESCRIPTION, BRAKE	8L-91
LAMP SWITCH - INSTALLATION, BACKUP	21-354
LAMP SWITCH - INSTALLATION, BRAKE	8L-92
LAMP SWITCH - OPERATION, BRAKE	8L-91
LAMP SWITCH - REMOVAL, BACKUP	21-353
LAMP SWITCH - REMOVAL, BRAKE	8L-91
LAMP SWITCH CAN SIGNAL LOST TO TRANS PERFORMANCE, DIAGNOSIS AND TESTING - (P0571) STOP	9-421
LAMP SWITCH CIRCUIT, DIAGNOSIS AND TESTING - BRAKE	5-143,5-176
LAMP SWITCH SIGNAL PERFORMANCE, DIAGNOSIS AND TESTING - (P0571) STOP	9-423
LAMP SWITCH/UNIT - DESCRIPTION, COURTESY	8L-142
LAMP SWITCH/UNIT - INSTALLATION, COURTESY	8L-143
LAMP SWITCH/UNIT - OPERATION, COURTESY	8L-142
LAMP SWITCH/UNIT - REMOVAL, COURTESY	8L-142
LAMP UNIT - INSTALLATION, CARGO	8L-140
LAMP UNIT - INSTALLATION, FOG	8L-96
LAMP UNIT - REMOVAL, CARGO	8L-139
LAMP UNIT - REMOVAL, FOG	8L-95
LAMP UNIT, INSTALLATION - TAIL	8L-115
LAMP UNIT, REMOVAL - TAIL	8L-113
LAMPS - SPECIFICATIONS, EXTERIOR	8L-87
LAMPS - SPECIFICATIONS, INTERIOR	8L-137
LAMPS/LIGHTING - EXTERIOR - SERVICE INFORMATION - DESCRIPTION	8L-85
LAMPS/LIGHTING - EXTERIOR - SERVICE INFORMATION - OPERATION	8L-85
LAMPS/LIGHTING, EXTERIOR	8L-86
LAMPS/LIGHTING-INTERIOR - DIAGNOSIS AND TESTING	8L-136
LAMP/SWITCH - DESCRIPTION, GLOVE BOX	8L-148
LAMP/SWITCH - INSTALLATION, GLOVE BOX	8L-149
LAMP/SWITCH - OPERATION, GLOVE BOX	8L-148
LAMP/SWITCH - REMOVAL, GLOVE BOX	8L-148
LATCH - INSTALLATION	23-104,23-137,23-43
LATCH - REMOVAL	23-103,23-136,23-43
LATCH ASSEMBLY - INSTALLATION, DOOR	8N-42
LATCH ASSEMBLY - REMOVAL, DOOR	8N-40
LATCH RELEASE CABLE - INSTALLATION	23-139
LATCH RELEASE CABLE - REMOVAL	23-138
LATCH STRIKER - INSTALLATION	23-140,23-43
LATCH STRIKER - REMOVAL	23-140,23-43
LATERAL ACCELERATION SENSOR - DESCRIPTION	5-199
LATERAL ACCELERATION SENSOR - INSTALLATION	5-200
LATERAL ACCELERATION SENSOR - OPERATION	5-199
LATERAL ACCELERATION SENSOR - REMOVAL	5-200
LATERAL ACCELERATION SENSOR CIRCUIT, DIAGNOSIS AND TESTING - ESP	5-138
LATERAL LINK - INSTALLATION	2-52
LATERAL LINK - REMOVAL	2-51
LEAD - DIAGNOSIS AND TESTING, TIRE/VEHICLE	22-60
LEAK, DIAGNOSIS AND TESTING - COOLING SYSTEM	7-13
LEAK, DIAGNOSIS AND TESTING - (P0442) EVAP SYSTEM SMALL	9-378
LEAK, DIAGNOSIS AND TESTING - (P0455) EVAP SYSTEM LARGE	9-399
LEAK DOWN TEST - DIAGNOSIS AND TESTING, FUEL PRESSURE	14-4
LEAK INSPECTION, DIAGNOSIS AND TESTING - ENGINE OIL	9-660
LEAKAGE TEST - DIAGNOSIS AND TESTING, CYLINDER COMBUSTION PRESSURE	9-588
LEAKING, DIAGNOSIS AND TESTING - (P0457) EVAP PURGE VALVE	9-406
LEAKS - DIAGNOSIS AND TESTING, INTAKE MANIFOLD	9-678
LEAKS - DIAGNOSIS AND TESTING, REFRIGERANT SYSTEM	24-116
LEAKS, DIAGNOSIS AND TESTING - WATER	23-29
LEAKS, STANDARD PROCEDURE - REPAIRING	22-60
LEAN CONTROL BELOW LIMIT (AT IDLE), DIAGNOSIS AND TESTING - (P0172) FUEL SYSTEM 1/1	9-207
LEAN CONTROL BELOW LIMIT (AT IDLE), DIAGNOSIS AND TESTING - (P0175) FUEL SYSTEM 2/1	9-233
LEAN CONTROL BELOW LIMIT (AT LOAD), DIAGNOSIS AND TESTING - (P0172) FUEL SYSTEM 1/1	9-199
LEAN CONTROL BELOW LIMIT (AT LOAD), DIAGNOSIS AND TESTING - (P0174) FUEL SYSTEM 2/1	9-224
LEARN - STANDARD PROCEDURE, TCM QUICK	8E-59
LEFT BACK UP LAMP INOPERATIVE, DIAGNOSIS AND TESTING	8L-50
LEFT DOOR SPEAKERS, DIAGNOSIS AND TESTING - NO SOUND FROM	8A-8
LEFT FOG LAMP INOPERATIVE, DIAGNOSIS AND TESTING	8L-2
LEFT FRONT POWER WINDOW INOPERATIVE, DIAGNOSIS AND TESTING	8N-110
LEFT FRONT SIDE MARKER LAMP INOPERATIVE, DIAGNOSIS AND TESTING	8L-32
LEFT FRONT TURN LAMP INOPERATIVE, DIAGNOSIS AND TESTING	8L-11
LEFT FRONT WHEEL SPEED SENSOR CIRCUIT, DIAGNOSIS AND TESTING	5-95
LEFT HEATED MIRROR INOPERATIVE, DIAGNOSIS AND TESTING	8G-16
LEFT HEATED SEAT INOPERATIVE, DIAGNOSIS AND TESTING	8G-26
LEFT HIGH BEAM HEADLAMP INOPERATIVE, DIAGNOSIS AND TESTING	8L-23
LEFT LOW BEAM HEADLAMP INOPERATIVE, DIAGNOSIS AND TESTING	8L-20
LEFT PARK LAMP INOPERATIVE, DIAGNOSIS AND TESTING	8L-8
LEFT POWER MIRROR INOPERATIVE, DIAGNOSIS AND TESTING	8N-53
LEFT REAR SIDE MARKER LAMP INOPERATIVE, DIAGNOSIS AND TESTING	8L-38

Description	Group-Page
LEFT REAR SPEAKER, DIAGNOSIS AND TESTING - NO SOUND FROM	8A-12
LEFT REAR TURN LAMP INOPERATIVE, DIAGNOSIS AND TESTING	8L-53
LEFT REAR WHEEL SPEED SENSOR CIRCUIT, DIAGNOSIS AND TESTING	5-107
LEFT SIDE AIRBAG SQUIB CIRCUIT, DIAGNOSIS AND TESTING	8O-29
LEFT SIDE IMPACT SENSOR SIGNAL CIRCUIT, DIAGNOSIS AND TESTING	8O-59
LEFT STOP LAMP INOPERATIVE, DIAGNOSIS AND TESTING	8L-47
LEFT TAIL LAMP INOPERATIVE, DIAGNOSIS AND TESTING	8L-44
LEFT TURN SIGNAL INDICATOR INOPERATIVE, DIAGNOSIS AND TESTING	8J-38
LEVEL - STANDARD PROCEDURE, CHECKING BATTERY ELECTROLYTE	8F-16
LEVEL - STANDARD PROCEDURE, CHECKING FLUID	21-353
LEVEL - STANDARD PROCEDURE, REFRIGERANT OIL	24-149
LEVEL AT FRONT AND REAR AXLES, STANDARD PROCEDURE - INSPECTING AND ADJUSTING VEHICLE	2-8
LEVEL AT FRONT AND REAR AXLES WITH AN ELECTRONIC INCLINOMETER, STANDARD PROCEDURE - INSPECTING AND ADJUSTING VEHICLE	2-8
LEVEL CHECK, STANDARD PROCEDURE - ENGINE OIL	9-664
LEVEL, DIAGNOSIS AND TESTING - EFFECTS OF INCORRECT FLUID	21-293
LEVEL INDICATOR TUBE - INSTALLATION, OIL	9-663
LEVEL INDICATOR TUBE - REMOVAL, OIL	9-663
LEVEL PERFORMANCE, DIAGNOSIS AND TESTING - ENGINE OIL SENSOR	9-521
LEVEL SENDING UNIT - DIAGNOSIS AND TESTING, FUEL	14-12
LEVEL SENDING UNIT/SENSOR, DESCRIPTION - FUEL	14-11
LEVEL SENDING UNIT/SENSOR, OPERATION - FUEL	14-11
LEVEL SENSOR - INSTALLATION, BRAKE FLUID	5-75
LEVEL SENSOR - INSTALLATION, COOLANT	7-20
LEVEL SENSOR - REMOVAL, BRAKE FLUID	5-75
LEVEL SENSOR - REMOVAL, COOLANT	7-20
LEVEL SENSOR CIRCUIT, DIAGNOSIS AND TESTING - FUEL	8J-7
LEVEL SENSOR CIRCUIT, DIAGNOSIS AND TESTING - (P0460) FUEL	9-408
LEVEL SENSOR/WASHER FLUID LEVEL SWITCH CIRCUIT, DIAGNOSIS AND TESTING - COOLANT	8J-2
LEVEL, STANDARD PROCEDURE - CHECK OIL	21-294
LEVEL, STANDARD PROCEDURE - MASTER CYLINDER FLUID	5-43
LEVEL SWITCH - INSTALLATION, WASHER FLUID	8R-26
LEVEL SWITCH - REMOVAL, WASHER FLUID	8R-26
LEVEL SWITCH CIRCUIT, DIAGNOSIS AND TESTING - COOLANT LEVEL SENSOR/WASHER FLUID	8J-2
LEVEL/TEMPERATURE SENSOR - INSTALLATION, OIL	9-673
LEVEL/TEMPERATURE SENSOR - REMOVAL, OIL	9-672
LEVER - INSTALLATION	5-68
LEVER - REMOVAL	5-66
LEVER ADJUSTMENT - STANDARD PROCEDURE, SHIFT	21-389
LEVER ASSEMBLY - DESCRIPTION, SHIFT	21-339
LEVER ASSEMBLY - INSTALLATION, SHIFT	21-340
LEVER ASSEMBLY - OPERATION, SHIFT	21-339
LEVER ASSEMBLY - REMOVAL, SHIFT	21-340
LEVER ASSEMBLY COVER - INSTALLATION, SHIFT	23-192
LEVER ASSEMBLY COVER - REMOVAL, SHIFT	23-182
LEVER ASSEMBLY, DIAGNOSIS AND TESTING - NO RESPONSE FROM SHIFT	8E-29
LEVER HANDLE - INSTALLATION, GEAR SHIFT	21-387
LEVER HANDLE - REMOVAL, GEAR SHIFT	21-387
LICENSE LAMP NO.1 INOPERATIVE, DIAGNOSIS AND TESTING	8L-71
LICENSE LAMP NO.2 INOPERATIVE, DIAGNOSIS AND TESTING	8L-74
LICENSE PLATE LAMP - INSTALLATION	8L-109
LICENSE PLATE LAMP - REMOVAL	8L-109
LIFTGATE - INSTALLATION	23-46
LIFTGATE - REMOVAL	23-44
LIFTGATE AJAR SWITCH - INSTALLATION	8L-146
LIFTGATE AJAR SWITCH - REMOVAL	8L-145
LIFTGATE LOCK ACTUATOR - INSTALLATION	8N-46
LIFTGATE LOCK ACTUATOR - REMOVAL	8N-46
LIFTGATE LOCK SWITCH - INSTALLATION	8N-45
LIFTGATE LOCK SWITCH - REMOVAL	8N-45
LIMIT (AT IDLE), DIAGNOSIS AND TESTING - (P0171) FUEL SYSTEM 1/1 RICH CONTROL OVER	9-183
LIMIT (AT IDLE), DIAGNOSIS AND TESTING - (P0172) FUEL SYSTEM 1/1 LEAN CONTROL BELOW	9-207
LIMIT (AT IDLE), DIAGNOSIS AND TESTING - (P0174) FUEL SYSTEM 2/1 RICH CONTROL OVER	9-218
LIMIT (AT IDLE), DIAGNOSIS AND TESTING - (P0175) FUEL SYSTEM 2/1 LEAN CONTROL BELOW	9-233
LIMIT (AT LOAD), DIAGNOSIS AND TESTING - (P0171) FUEL SYSTEM 1/1 RICH CONTROL OVER	9-187
LIMIT (AT LOAD), DIAGNOSIS AND TESTING - (P0172) FUEL SYSTEM 1/1 LEAN CONTROL BELOW	9-199
LIMIT (AT LOAD), DIAGNOSIS AND TESTING - (P0173) FUEL SYSTEM 2/1 RICH CONTROL OVER	9-211
LIMIT (AT LOAD), DIAGNOSIS AND TESTING - (P0174) FUEL SYSTEM 2/1 LEAN CONTROL BELOW	9-224
LIMIT (AT LOAD), DIAGNOSIS AND TESTING - (P0174) FUEL SYSTEM 2/1 RICH CONTROL OVER	9-221
LIMIT SWITCH FAILURE, DIAGNOSIS AND TESTING - REAR SPOILER	23-19
LIMIT SWITCH SIGNAL (DOWN) CIRCUIT, DIAGNOSIS AND TESTING - SPOILER	23-10
LIMIT SWITCH SIGNAL (UP) CIRCUIT, DIAGNOSIS AND TESTING - SPOILER	23-7
LIMITED POWER EXCESSIVE HIGH COOLANT TEMP, DIAGNOSIS AND TESTING - (P0128) FORCED	9-74
LIMITS - DESCRIPTION, HIGH AND LOW	25-11
LINE - INSTALLATION, LIQUID	24-135
LINE - INSTALLATION, SUCTION	24-137
LINE - REMOVAL, LIQUID	24-134
LINE - REMOVAL, SUCTION	24-136
LINES - DESCRIPTION, BRAKE	5-10
LINES - DESCRIPTION, FUEL	14-14
LINES - INSTALLATION, TRANSMISSION COOLER	7-50
LINES - REMOVAL, TRANSMISSION COOLER	7-49
LINES, DIAGNOSIS AND TESTING - BRAKE HOSES	5-10
LINES/HOSES/TUBES - DESCRIPTION, REFRIGERANT	24-114
LINK - INSTALLATION, DRAG	19-49
LINK - INSTALLATION, LATERAL	2-52
LINK - INSTALLATION, TRAILING	2-51
LINK - REMOVAL, DRAG	19-47
LINK - REMOVAL, LATERAL	2-51
LINK - REMOVAL, TRAILING	2-50
LINK CONNECTOR - DESCRIPTION, DATA	8E-53
LINK CONNECTOR - OPERATION, DATA	8E-53
LINKAGE - DESCRIPTION, WIPER	8R-42
LIQUID LINE - INSTALLATION	24-135
LIQUID LINE - REMOVAL	24-134
LOADS - STANDARD PROCEDURE, TESTING FOR A SHORT TO GROUND ON FUSES POWERING SEVERAL	8W-01-10
LOCATION - DESCRIPTION, CONNECTOR/ GROUND/SPLICE	8W-91-1
LOCATIONS - DESCRIPTION, FLUID FILL/CHECK	0-6
LOCATIONS - SPECIFICATIONS, SEALER	23-57
LOCATIONS - SPECIFICATIONS, WELD	23-74
LOCK ACTUATOR - INSTALLATION, FUEL DOOR	8N-45
LOCK ACTUATOR - INSTALLATION, LIFTGATE	8N-46
LOCK ACTUATOR - REMOVAL, FUEL DOOR	8N-44
LOCK ACTUATOR - REMOVAL, LIFTGATE	8N-46
LOCK ACTUATOR SLOW RESPONSE, DIAGNOSIS AND TESTING - DRIVER DOOR	8N-2
LOCK ACTUATOR SLOW RESPONSE, DIAGNOSIS AND TESTING - FUEL DOOR	8N-5
LOCK ACTUATOR SLOW RESPONSE, DIAGNOSIS AND TESTING - PASSENGER DOOR/LIFTGATE	8N-8
LOCK CABLE - INSTALLATION, IGNITION	19-21
LOCK CABLE - REMOVAL, IGNITION	19-19
LOCK CYLINDER - INSTALLATION	23-106
LOCK CYLINDER - REMOVAL	23-105
LOCK SWITCH - DESCRIPTION, POWER	8N-38
LOCK SWITCH - INSTALLATION, DRIVER CYLINDER	8Q-57
LOCK SWITCH - INSTALLATION, DRIVER DOOR	8N-43
LOCK SWITCH - INSTALLATION, LIFTGATE	8N-45
LOCK SWITCH - INSTALLATION, POWER	8N-39
LOCK SWITCH - REMOVAL, DOOR CYLINDER	8Q-56
LOCK SWITCH - REMOVAL, DRIVER DOOR	8N-43
LOCK SWITCH - REMOVAL, LIFTGATE	8N-45
LOCK SWITCH - REMOVAL, POWER	8N-39
LOCK SWITCH SENSE CIRCUIT, DIAGNOSIS AND TESTING - DOOR	8Q-16
LOCK/DOOR UNLOCK SWITCH SENSE CIRCUIT, DIAGNOSIS AND TESTING - DOOR	8N-22
LOCKED ENGINE, STANDARD PROCEDURE - HYDROSTATIC	9-588
LOCKING PUMP - DESCRIPTION, CENTRAL	8N-36
LOCKING PUMP - DIAGNOSIS AND TESTING, CENTRAL	8N-36
LOCKING PUMP/SECURITY SYSTEM MODULE, DIAGNOSIS AND TESTING - NO COMMUNICATION WITH BCM AND CENTRAL	8Q-8
LOCKING PUMP/SECURITY SYSTEM MODULE, DIAGNOSIS AND TESTING - NO COMMUNICATION WITH BODY CONTROL MODULE AND CENTRAL	8N-20
LOCKING PUMP/SECURITY SYSTEM MODULE INTERNAL FAILURE, DIAGNOSIS AND TESTING - CENTRAL	8N-26
LOCKING PUMP/SECURITY SYSTEM MODULE INTERNAL FAILURE, DIAGNOSIS AND TESTING - CENTRAL	8Q-30
LOCKING PUMP/SECURITY SYSTEM MODULE SYSTEM OVERVOLTAGE, DIAGNOSIS AND TESTING - CENTRAL	8Q-5
LOCKING PUMP/SECURITY SYSTEM MODULE SYSTEM UNDERVOLTAGE, DIAGNOSIS AND TESTING - CENTRAL	8Q-2
LOCKOUT CABLE - DESCRIPTION, REVERSE	21-388
LOCKS - DIAGNOSIS AND TESTING, POWER	8N-32
LOCKS - SERVICE INFORMATION - DESCRIPTION, POWER	8N-30
LOCKS - SERVICE INFORMATION - OPERATION, POWER	8N-31
LOCKS - SPECIFICATIONS, POWER	8N-35
LOW BATTERY, DIAGNOSIS AND TESTING - TIRE PRESSURE SENSOR/TRANSMITTER	22-32
LOW BEAM BULB, INSTALLATION	8L-104
LOW BEAM BULB, REMOVAL	8L-103

Description	Group-Page
LOW BEAM HEADLAMP INOPERATIVE, DIAGNOSIS AND TESTING - LEFT	8L-20
LOW BEAM HEADLAMP INOPERATIVE, DIAGNOSIS AND TESTING - RIGHT	8L-26
LOW, DIAGNOSIS AND TESTING - COOLING FAN CONTROL CIRCUIT	9-519
LOW, DIAGNOSIS AND TESTING - (P0103) MAF SENSOR CIRCUIT	9-17
LOW, DIAGNOSIS AND TESTING - (P0107) MAP SENSOR CIRCUIT	9-24
LOW, DIAGNOSIS AND TESTING - (P0112) INTAKE AIR TEMPERATURE SENSOR CIRCUIT	9-31
LOW, DIAGNOSIS AND TESTING - (P0117) ENGINE COOLANT TEMPERATURE SENSOR CIRCUIT	9-49
LOW, DIAGNOSIS AND TESTING - (P0122) APPS SIGNAL #1 CIRCUIT	9-65
LOW, DIAGNOSIS AND TESTING - (P0131) O2 SENSOR 1/1 CIRCUIT	9-86
LOW, DIAGNOSIS AND TESTING - (P0135) O2 SENSOR 1/1 HEATER CIRCUIT	9-107
LOW, DIAGNOSIS AND TESTING - (P0138) O2 SENSOR 2/2 CIRCUIT	9-133
LOW, DIAGNOSIS AND TESTING - (P0140) O2 SENSOR 1/2 CIRCUIT	9-137
LOW, DIAGNOSIS AND TESTING - (P0141) O2 SENSOR 1/2 HEATER CIRCUIT	9-141
LOW, DIAGNOSIS AND TESTING - (P0151) O2 SENSOR 2/1 CIRCUIT	9-149
LOW, DIAGNOSIS AND TESTING - (P0155) O2 SENSOR 2/1 HEATER CIRCUIT	9-163
LOW, DIAGNOSIS AND TESTING - (P0161) O2 SENSOR 2/2 HEATER CIRCUIT	9-173
LOW, DIAGNOSIS AND TESTING - (P0222) APPS SIGNAL #2 CIRCUIT	9-274
LOW, DIAGNOSIS AND TESTING - (P0325) KNOCK SENSOR #1 CIRCUIT	9-324
LOW, DIAGNOSIS AND TESTING - (P0330) KNOCK SENSOR #2 CIRCUIT	9-332
LOW, DIAGNOSIS AND TESTING - (P0452) FUEL TANK PRESSURE SENSOR CIRCUIT	9-395
LOW, DIAGNOSIS AND TESTING - (P0562) BATTERY SYSTEM	9-417
LOW, DIAGNOSIS AND TESTING - (P2513) ENHANCED ACCIDENT REPORT DRIVER CIRCUIT	9-504
LOW, DIAGNOSIS AND TESTING - SHORT RUNNER SOLENOID CIRCUIT	9-549
LOW LIMITS - DESCRIPTION, HIGH	25-11
LOW SPEED INOPERATIVE, DIAGNOSIS AND TESTING - WIPERS	8R-13
LOW VOLTAGE, DIAGNOSIS AND TESTING - (P0702) TRANSMISSION CONTROL MODULE	9-455
LOWER BALL JOINT - INSTALLATION	2-32
LOWER BALL JOINT - REMOVAL	2-29
LOWER CONTROL ARM - INSTALLATION	2-37, 2-55
LOWER CONTROL ARM - REMOVAL	2-34,2-53
LOWER DOOR SPEAKER, INSTALLATION	8A-31
LOWER DOOR SPEAKER, REMOVAL	8A-29
LOWER INSTRUMENT PANEL (LEFT) - INSTALLATION	23-158
LOWER INSTRUMENT PANEL (LEFT) - REMOVAL	23-152
LOWER INSTRUMENT PANEL (RIGHT) - INSTALLATION	23-160
LOWER INSTRUMENT PANEL (RIGHT) - REMOVAL	23-154
LOWER OIL PAN, INSTALLATION	9-669
LOWER OIL PAN, REMOVAL	9-667
LR WHEEL SPIN CAN MESSAGE NOT VALID, DIAGNOSIS AND TESTING	21-173
LUBRICANT - DESCRIPTION, DIFFERENTIAL	0-6
LUBRICANTS, DESCRIPTION - ENGINE OIL	0-2
LUBRICATION - DESCRIPTION	9-660
LUBRICATION - SPECIFICATIONS, BODY	23-32
LUBRICATION POINTS - DESCRIPTION	0-14
LUBRICATION, STANDARD PROCEDURE - BODY	23-31
MACHINING, STANDARD PROCEDURE - DISC BRAKE ROTOR	5-38
MAF SENSOR CIRCUIT LOW, DIAGNOSIS AND TESTING - (P0103)	9-17
MAF SENSOR PERFORMANCE, DIAGNOSIS AND TESTING - (P0101)	9-8
MAF SENSOR THROTTLE ANGLE AND SPEED, DIAGNOSIS AND TESTING - (P0104)	9-19
MAIN BEARINGS - DESCRIPTION, CRANKSHAFT	9-647
MAIN BEARINGS - INSTALLATION, CRANKSHAFT	9-650
MAIN BEARINGS - OPERATION, CRANKSHAFT	9-647
MAIN BEARINGS - REMOVAL, CRANKSHAFT	9-647
MAINSHAFT W/INPUT SHAFT - ASSEMBLY	21-374
MAINSHAFT W/INPUT SHAFT - DESCRIPTION	21-368
MAINSHAFT W/INPUT SHAFT - DISASSEMBLY	21-369
MAINTENANCE INDICATOR AFTER AN OIL CHANGE, STANDARD PROCEDURE - RESETTING THE FSS	8J-78
MAINTENANCE INDICATOR, STANDARD PROCEDURE - RESETTING THE FSS	8J-76
MALFUNCTION, DIAGNOSIS AND TESTING - CAN BUS COMMUNICATION GENERAL	5-162,5-88
MALFUNCTION, DIAGNOSIS AND TESTING - CAN BUS COMMUNICATION GENERAL	8J-36
MANAGEMENT REQUEST PERFORMANCE, DIAGNOSIS AND TESTING - (P0702) TCM TORQUE	9-461
MANAGEMENT REQUEST PERFORMANCE, DIAGNOSIS AND TESTING - (P2545) ESP TORQUE	9-506
MANAGEMENT SIGNAL, DIAGNOSIS AND TESTING - (P0702) LOSS OF TORQUE	9-459
MANAGER - DESCRIPTION, TASK	25-37
MANAGER - OPERATION, TASK	25-37
MANIFOLD - DESCRIPTION, EXHAUST	9-680
MANIFOLD - DESCRIPTION, INTAKE	9-678
MANIFOLD - INSTALLATION, INTAKE	9-680
MANIFOLD - OPERATION, INTAKE	9-678
MANIFOLD - REMOVAL, INTAKE	9-678
MANIFOLD AIR FLOW (MAF) SENSOR - DESCRIPTION	14-37
MANIFOLD AIR FLOW (MAF) SENSOR - INSTALLATION	14-39
MANIFOLD AIR FLOW (MAF) SENSOR - OPERATION	14-37
MANIFOLD AIR FLOW (MAF) SENSOR - REMOVAL	14-37
MANIFOLD LEAKS - DIAGNOSIS AND TESTING, INTAKE	9-678
MANIFOLD TUNE VALVE - DESCRIPTION	14-40
MANIFOLD TUNE VALVE - INSTALLATION	14-41
MANIFOLD TUNE VALVE - OPERATION	14-40
MANIFOLD TUNE VALVE - REMOVAL	14-41
MANUAL BLEEDING, STANDARD PROCEDURE	5-9
MAP SENSOR - DESCRIPTION	14-42
MAP SENSOR - INSTALLATION	14-43
MAP SENSOR - OPERATION	14-42
MAP SENSOR - REMOVAL	14-42
MAP SENSOR CIRCUIT HIGH, DIAGNOSIS AND TESTING - (P0108)	9-29
MAP SENSOR CIRCUIT LOW, DIAGNOSIS AND TESTING - (P0107)	9-24
MAP SENSOR PERFORMANCE, DIAGNOSIS AND TESTING - (P0106)	9-21
MARKER LAMP - INSTALLATION, FRONT	8L-111
MARKER LAMP - REMOVAL, FRONT	8L-110
MARKER LAMP INOPERATIVE, DIAGNOSIS AND TESTING - LEFT FRONT SIDE	8L-32
MARKER LAMP INOPERATIVE, DIAGNOSIS AND TESTING - LEFT REAR SIDE	8L-38
MARKER LAMP INOPERATIVE, DIAGNOSIS AND TESTING - RIGHT FRONT SIDE	8L-35
MARKER LAMP INOPERATIVE, DIAGNOSIS AND TESTING - RIGHT REAR SIDE	8L-41
MARKER LAMP, INSTALLATION - REAR	8L-111
MARKER LAMP, REMOVAL - REAR	8L-110
MASS AIR FLOW CIRCUIT, DIAGNOSIS AND TESTING - (P0102)	9-10
MASTER CYLINDER - CLUTCH - INSTALLATION	6-17
MASTER CYLINDER - CLUTCH - REMOVAL	6-15
MASTER CYLINDER BLEEDING PROCEDURE, STANDARD PROCEDURE	5-46
MASTER CYLINDER BLEEDING, STANDARD PROCEDURE	6-7
MASTER CYLINDER, DESCRIPTION	5-44
MASTER CYLINDER FLUID LEVEL, STANDARD PROCEDURE	5-43
MASTER CYLINDER FLUID LOSS - DIAGNOSIS AND TESTING	5-45
MASTER CYLINDER, OPERATION	5-44
MASTER CYLINDER/POWER BOOSTER, DIAGNOSIS AND TESTING	5-44
MATCH MOUNTING - STANDARD PROCEDURE	22-43
MEASUREMENTS - SPECIFICATIONS, BODY GAP	23-53
MEASURING BEARING CLEARANCE USING PLASTIGAGE® - STANDARD PROCEDURE	9-591
MECHANICAL - DIAGNOSIS AND TESTING, ENGINE DIAGNOSIS	9-584
MECHANISM - DESCRIPTION, SHIFT	21-388
MECHANISM - INSTALLATION, SHIFT	21-392
MECHANISM - REMOVAL, SHIFT	21-391
METRIC SYSTEM - DESCRIPTION	Intro.-6
MICRO 420 BATTERY TESTER - STANDARD PROCEDURE, USING	8F-12
MIL ILLUMINATION, DIAGNOSIS AND TESTING - (P2561) HVAC CONTROL MODULE REQUESTED	9-512
MIL REQUEST, DIAGNOSIS AND TESTING - (P0500) VEHICLE SPEED PERFORMANCE ESP	9-412
MIRROR - DESCRIPTION, AUTOMATIC DAY / NIGHT	8N-68
MIRROR - INSTALLATION, SIDEVIEW	8N-72
MIRROR - OPERATION, AUTOMATIC DAY / NIGHT	8N-68
MIRROR - REMOVAL, AUTOMATIC DAY / NIGHT	8N-68
MIRROR - REMOVAL, SIDEVIEW	8N-72
MIRROR GRID - DESCRIPTION, HEATED	8G-23
MIRROR INOPERATIVE, DIAGNOSIS AND TESTING - AUTOMATIC DAY/NIGHT	8N-59
MIRROR INOPERATIVE, DIAGNOSIS AND TESTING - LEFT HEATED	8G-16
MIRROR INOPERATIVE, DIAGNOSIS AND TESTING - LEFT POWER	8N-53
MIRROR INOPERATIVE, DIAGNOSIS AND TESTING - RIGHT HEATED	8G-18
MIRROR INOPERATIVE, DIAGNOSIS AND TESTING - RIGHT POWER	8N-55
MIRROR, INSTALLATION - REARVIEW	8N-69
MIRROR SUPPORT BRACKET - INSTALLATION, REARVIEW	8N-69
MIRROR SWITCH - INSTALLATION, POWER	8N-71
MIRROR SWITCH - REMOVAL, POWER	8N-71
MIRRORS - SERVICE INFORMATION - DESCRIPTION, HEATED	8G-22
MIRRORS - SERVICE INFORMATION - DESCRIPTION, POWER	8N-66
MIRRORS - SERVICE INFORMATION - DIAGNOSIS AND TESTING, HEATED	8G-22
MIRRORS - SERVICE INFORMATION - DIAGNOSIS AND TESTING, POWER	8N-66
MIRRORS - SERVICE INFORMATION - OPERATION, HEATED	8G-22
MIRRORS - SERVICE INFORMATION - OPERATION, POWER	8N-66
MIRRORS INOPERATIVE, DIAGNOSIS AND TESTING - BOTH POWER	8N-57
MODE - DESCRIPTION, DRB III® STATE DISPLAY TEST	25-11
MODULATING PRESSURE SOLENOID CIRCUIT, DIAGNOSIS AND TESTING - (P0748)	21-128

Description	Group-Page
MODULE - DESCRIPTION	22-49
MODULE - DESCRIPTION, A/C HEATER CONTROL	24-78
MODULE - DESCRIPTION, BODY CONTROL	8E-71
MODULE - DESCRIPTION, POWERTRAIN CONTROL	8E-54
MODULE - DESCRIPTION, RELAY CONTROL	8W-97-3
MODULE - DESCRIPTION, SECURITY SYSTEM	8E-65
MODULE - DESCRIPTION, SENTRY KEY REMOTE ENTRY	8E-69
MODULE - DESCRIPTION, SENTRY KEY REMOTE ENTRY	8N-46
MODULE - DESCRIPTION, SENTRY KEY REMOTE ENTRY	8Q-52
MODULE - DESCRIPTION, TRANSMISSION CONTROL	8E-58
MODULE - DESCRIPTION, WIPER	8R-42
MODULE - DIAGNOSIS AND TESTING, SENTRY KEY REMOTE ENTRY	8N-47
MODULE - INSTALLATION	22-52
MODULE - INSTALLATION, A/C HEATER CONTROL	24-81
MODULE - INSTALLATION, BODY CONTROL	8E-73
MODULE - INSTALLATION, HEATED SEAT	8G-42
MODULE - INSTALLATION, ON / OFF SWITCH INDICATOR	8O-106
MODULE - INSTALLATION, POWERTRAIN CONTROL	8E-57
MODULE - INSTALLATION, RADIATOR FAN CONTROL	7-29
MODULE - INSTALLATION, REAR WINDOW ANTENNA	8A-23
MODULE - INSTALLATION, RELAY CONTROL	8W-97-4
MODULE - INSTALLATION, SECURITY SYSTEM	8E-68
MODULE - INSTALLATION, SECURITY SYSTEM	8Q-49
MODULE - INSTALLATION, SENTRY KEY REMOTE ENTRY	8Q-55
MODULE - INSTALLATION, TRANSMISSION CONTROL	8E-61
MODULE - INSTALLATION, WIPER	8R-44
MODULE - OPERATION	22-50
MODULE - OPERATION, A/C HEATER CONTROL	24-78
MODULE - OPERATION, BODY CONTROL	8E-71
MODULE - OPERATION, POWERTRAIN CONTROL	8E-54
MODULE - OPERATION, RELAY CONTROL	8W-97-3
MODULE - OPERATION, SECURITY SYSTEM	8E-65
MODULE - OPERATION, SENTRY KEY REMOTE ENTRY	8E-69
MODULE - OPERATION, SENTRY KEY REMOTE ENTRY	8Q-52
MODULE - OPERATION, TRANSMISSION CONTROL	8E-58
MODULE - REMOVAL	22-51
MODULE - REMOVAL, A/C HEATER CONTROL	24-79
MODULE - REMOVAL, BODY CONTROL	8E-72
MODULE - REMOVAL, HEATED SEAT	8G-41
MODULE - REMOVAL, ON / OFF SWITCH INDICATOR	8O-105
MODULE - REMOVAL, POWERTRAIN CONTROL	8E-56
MODULE - REMOVAL, RADIATOR FAN CONTROL	7-29
MODULE - REMOVAL, REAR WINDOW ANTENNA	8A-23
MODULE - REMOVAL, RELAY CONTROL	8W-97-4
MODULE - REMOVAL, SECURITY SYSTEM	8E-67
MODULE - REMOVAL, SECURITY SYSTEM	8Q-48
MODULE - REMOVAL, SENTRY KEY REMOTE ENTRY	8Q-53
MODULE - REMOVAL, TRANSMISSION CONTROL	8E-60
MODULE - REMOVAL, WIPER	8R-42
MODULE AND CENTRAL LOCKING PUMP/SECURITY SYSTEM MODULE, DIAGNOSIS AND TESTING - NO COMMUNICATION WITH BODY CONTROL	8N-20
MODULE, DIAGNOSIS AND TESTING - NO COMMUNICATION WITH BCM AND CENTRAL LOCKING PUMP/SECURITY SYSTEM	8Q-8
MODULE, DIAGNOSIS AND TESTING - NO COMMUNICATION WITH BODY CONTROL MODULE AND CENTRAL LOCKING PUMP/SECURITY SYSTEM	8N-20
MODULE, DIAGNOSIS AND TESTING - NO RESPONSE FROM A/C HEATER CONTROL	8E-21
MODULE, DIAGNOSIS AND TESTING - NO RESPONSE FROM BODY CONTROL	8E-36
MODULE, DIAGNOSIS AND TESTING - NO RESPONSE FROM POWERTRAIN CONTROL	8E-4
MODULE, DIAGNOSIS AND TESTING - NO RESPONSE FROM SENTRY KEY REMOTE ENTRY	8E-40
MODULE, DIAGNOSIS AND TESTING - NO RESPONSE FROM TRANSMISSION CONTROL	8E-33
MODULE, DIAGNOSIS AND TESTING - (P0600) INCORRECT CAN MESSAGE FROM EIS CONTROL	9-425
MODULE, DIAGNOSIS AND TESTING - (P0600) NO CAN MESSAGE FROM CAB	9-427
MODULE FAILURE, DIAGNOSIS AND TESTING - TIRE PRESSURE MONITOR	22-4
MODULE INTERNAL FAILURE, DIAGNOSIS AND TESTING - BODY CONTROL	23-2
MODULE INTERNAL FAILURE, DIAGNOSIS AND TESTING - BODY CONTROL	8N-11
MODULE INTERNAL FAILURE, DIAGNOSIS AND TESTING - CENTRAL LOCKING PUMP/SECURITY SYSTEM	8N-26
MODULE INTERNAL FAILURE, DIAGNOSIS AND TESTING - CENTRAL LOCKING PUMP/SECURITY SYSTEM	8Q-30
MODULE INTERNAL FAILURE, DIAGNOSIS AND TESTING - SENTRY KEY REMOTE ENTRY	8Q-34
MODULE LOW VOLTAGE, DIAGNOSIS AND TESTING - (P0702) TRANSMISSION CONTROL	9-455
MODULE PERFORMANCE, DIAGNOSIS AND TESTING - (P0221) ELECTRONIC THROTTLE CONTROL	9-270
MODULE PROCESSOR, DIAGNOSIS AND TESTING - (P0221) ELECTRONIC THROTTLE CONTROL	9-272
MODULE PROGRAMMING - STANDARD PROCEDURE, TPM	22-50
MODULE REQUESTED MIL ILLUMINATION, DIAGNOSIS AND TESTING - (P2561) HVAC CONTROL	9-512
MODULE (SLA), DIAGNOSIS AND TESTING - (P0600) LOST COMM WITH ELECTRIC GEAR SHIFT	9-439
MODULE SYSTEM OVERVOLTAGE, DIAGNOSIS AND TESTING - CENTRAL LOCKING PUMP/SECURITY SYSTEM	8Q-5
MODULE SYSTEM UNDERVOLTAGE, DIAGNOSIS AND TESTING - CENTRAL LOCKING PUMP/SECURITY SYSTEM	8Q-2
MODULE TCM IS NOT CODED, DIAGNOSIS AND TESTING - (P0702) CONTROL	21-74
MODULE VERSION, DIAGNOSIS AND TESTING - (P0702) INVALID CONTROL	21-78
MOLDING - INSTALLATION, ROCKER PANEL	23-125
MOLDING - REMOVAL, ROCKER PANEL	23-125
MONITOR, DIAGNOSIS AND TESTING - NO RESPONSE FROM UNIVERSAL GARAGE DOOR OPENER/TIRE PRESSURE	8E-17
MONITOR MODULE FAILURE, DIAGNOSIS AND TESTING - TIRE PRESSURE	22-4
MONITORED COMPONENTS - DESCRIPTION	25-2
MONITORED SYSTEMS - DESCRIPTION	25-6
MOTOR - DESCRIPTION, STARTER	8F-41
MOTOR - DIAGNOSIS AND TESTING, STARTER	8F-41
MOTOR - INSTALLATION, BLOWER	24-90
MOTOR - INSTALLATION, FRONT RISER	8N-102
MOTOR - INSTALLATION, REAR RISER	8N-100
MOTOR - INSTALLATION, RECLINER	8N-104
MOTOR - INSTALLATION, STARTER	8F-44
MOTOR - INSTALLATION, WASHER PUMP	8R-31
MOTOR - INSTALLATION, WINDOW	8N-123
MOTOR - INSTALLATION, WIPER	8R-48
MOTOR - OPERATION, STARTER	8F-41
MOTOR - REMOVAL	23-120
MOTOR - REMOVAL, BLOWER	24-88
MOTOR - REMOVAL, FRONT RISER	8N-102
MOTOR - REMOVAL, REAR RISER	8N-99
MOTOR - REMOVAL, RECLINER	8N-103
MOTOR - REMOVAL, STARTER	8F-43
MOTOR - REMOVAL, WASHER PUMP	8R-31
MOTOR - REMOVAL, WINDOW	8N-122
MOTOR - REMOVAL, WIPER	8R-47
MOTOR FAILURE, DIAGNOSIS AND TESTING - REAR SPOILER	23-23
MOTOR INOPERATIVE, DIAGNOSIS AND TESTING - DRIVER POWER SEAT FRONT RISER	8N-85
MOTOR INOPERATIVE, DIAGNOSIS AND TESTING - DRIVER POWER SEAT HORIZONTAL	8N-83
MOTOR INOPERATIVE, DIAGNOSIS AND TESTING - DRIVER POWER SEAT REAR RISER	8N-87
MOTOR INOPERATIVE, DIAGNOSIS AND TESTING - DRIVER POWER SEAT RECLINER	8N-81
MOTOR INOPERATIVE, DIAGNOSIS AND TESTING - PASSENGER POWER SEAT HORIZONTAL	8N-91
MOTOR INOPERATIVE, DIAGNOSIS AND TESTING - PASSENGER POWER SEAT RECLINER	8N-89
MOTOR, INSTALLATION - HORIZONTAL	8N-102
MOTOR PERFORMANCE, DIAGNOSIS AND TESTING - (P0120) ELECTRONIC THROTTLE CONTROL	9-53
MOTOR REGULATOR - INSTALLATION, BLOWER	24-76
MOTOR REGULATOR - REMOVAL, BLOWER	24-74
MOTOR, REMOVAL - HORIZONTAL	8N-101
MOTOR, SPECIFICATIONS - STARTER	8F-40
MOTOR SYNCHRONIZE - STANDARD PROCEDURE, WIPER	8R-46
MOUNT - INSTALLATION, FRONT	9-658
MOUNT - INSTALLATION, REAR	9-660
MOUNT - REMOVAL, FRONT	9-657
MOUNT - REMOVAL, REAR	9-659
MOUNT BRACKETS - INSTALLATION, ENGINE	9-656
MOUNT BRACKETS - REMOVAL, ENGINE	9-655
MOUNTED STOP LAMP - DESCRIPTION, CENTER HIGH	8L-92
MOUNTED STOP LAMP - INSTALLATION, CENTER HIGH	8L-93
MOUNTED STOP LAMP - REMOVAL, CENTER HIGH	8L-92
MOUNTED STOP LAMP INOPERATIVE, DIAGNOSIS AND TESTING - CENTER HIGH	8L-68
MOUNTING - STANDARD PROCEDURE, MATCH	22-43
MOUNTING PLATE - INSTALLATION	23-122
MOUNTING PLATE - REMOVAL	23-118
MUFFLER - INSTALLATION	11-12
MUFFLER - REMOVAL	11-10
MULTI-FUNCTION SWITCH - DESCRIPTION	8R-25
MULTI-FUNCTION SWITCH - INSTALLATION	8L-113
MULTI-FUNCTION SWITCH - REMOVAL	8L-112
MULTIPLE CYLINDER MISFIRE, DIAGNOSIS AND TESTING - (P0300)	9-283
NIGHT MIRROR - DESCRIPTION, AUTOMATIC DAY	8N-68

Description	Group-Page
NIGHT MIRROR - OPERATION, AUTOMATIC DAY	8N-68
NIGHT MIRROR - REMOVAL, AUTOMATIC DAY	8N-68
NOISE - DIAGNOSIS AND TESTING, COMPRESSOR	24-120
NOISE, DIAGNOSIS AND TESTING - WIND	23-30
NOISE OR VIBRATION - DIAGNOSIS AND TESTING, TIRE	22-59
NON-DEPLOYED SUPPLEMENTAL RESTRAINTS - STANDARD PROCEDURE, HANDLING	8O-83
NON-MONITORED CIRCUITS - DESCRIPTION	25-10
NOT CODED, DIAGNOSIS AND TESTING - (P0702) CONTROL MODULE TCM IS	21-74
NOT START, DIAGNOSIS AND TESTING - ENGINE CRANKS BUT DOES	9-563
NOT VALID, DIAGNOSIS AND TESTING - LR WHEEL SPIN CAN MESSAGE	21-173
NOT VALID, DIAGNOSIS AND TESTING - RR WHEEL SPIN CAN MESSAGE	21-175
NOZZLE - INSTALLATION, CENTER AIR	24-108
NOZZLE - INSTALLATION, WASHER	8R-30
NOZZLE - REMOVAL, CENTER AIR	24-107
NOZZLE - REMOVAL, WASHER	8R-29
NOZZLE AIMING - STANDARD PROCEDURE, WASHER	8R-28
NOZZLE, INSTALLATION - SIDE AIR	24-108
NOZZLE, REMOVAL - SIDE AIR	24-107
NOZZLES - INSTALLATION, OIL SPRAY	9-674
NOZZLES - REMOVAL, OIL SPRAY	9-674
NUMBER - DESCRIPTION, VEHICLE IDENTIFICATION	Intro.-2
O2 - INSTALLATION, DOWNSTREAM	14-47
O2 - REMOVAL, DOWNSTREAM	14-46
O2, INSTALLATION - UPSTREAM	14-46
O2 SENSOR - DESCRIPTION	14-43
O2 SENSOR - OPERATION	14-44
O2 SENSOR 1/1 CIRCUIT HIGH, DIAGNOSIS AND TESTING - (P0132)	9-93
O2 SENSOR 1/1 CIRCUIT LOW, DIAGNOSIS AND TESTING - (P0131)	9-86
O2 SENSOR 1/1 CIRCUIT OPEN, DIAGNOSIS AND TESTING - (P0134)	9-105
O2 SENSOR 1/1 HEATER CIRCUIT HIGH, DIAGNOSIS AND TESTING - (P0135)	9-113
O2 SENSOR 1/1 HEATER CIRCUIT LOW, DIAGNOSIS AND TESTING - (P0135)	9-107
O2 SENSOR 1/1 HEATER CIRCUIT OPEN, DIAGNOSIS AND TESTING - (P0135)	9-117
O2 SENSOR 1/1 HEATER PERFORMANCE, DIAGNOSIS AND TESTING - (P0135)	9-109
O2 SENSOR 1/1 LONG DELAY TIME, DIAGNOSIS AND TESTING - (P0133)	9-101
O2 SENSOR 1/1 LONG PERFORMANCE, DIAGNOSIS AND TESTING - (P0133)	9-99
O2 SENSOR 1/1 SHORT DELAY TIME, DIAGNOSIS AND TESTING - (P0133)	9-95
O2 SENSOR 1/1 SHORT PERFORMANCE, DIAGNOSIS AND TESTING - (P0133)	9-103
O2 SENSOR 1/2 ABOVE THRESHOLD, DIAGNOSIS AND TESTING - (P0137)	9-121
O2 SENSOR 1/2 BELOW THRESHOLD, DIAGNOSIS AND TESTING - (P0137)	9-119
O2 SENSOR 1/2 CIRCUIT HIGH, DIAGNOSIS AND TESTING - (P0138)	9-129
O2 SENSOR 1/2 CIRCUIT LOW, DIAGNOSIS AND TESTING - (P0140)	9-137
O2 SENSOR 1/2 CIRCUIT OPEN, DIAGNOSIS AND TESTING - (P0138)	9-131
O2 SENSOR 1/2 HEATER CIRCUIT HIGH, DIAGNOSIS AND TESTING - (P0141)	9-145
O2 SENSOR 1/2 HEATER CIRCUIT LOW, DIAGNOSIS AND TESTING - (P0141)	9-141
O2 SENSOR 1/2 HEATER CIRCUIT OPEN, DIAGNOSIS AND TESTING - (P0141)	9-143
O2 SENSOR 1/2 HEATER PERFORMANCE, DIAGNOSIS AND TESTING - (P0141)	9-147
O2 SENSOR 2/1 CIRCUIT HIGH, DIAGNOSIS AND TESTING - (P0152)	9-151
O2 SENSOR 2/1 CIRCUIT LOW, DIAGNOSIS AND TESTING - (P0151)	9-149
O2 SENSOR 2/1 CIRCUIT OPEN, DIAGNOSIS AND TESTING - (P0154)	9-161
O2 SENSOR 2/1 HEATER CIRCUIT HIGH, DIAGNOSIS AND TESTING - (P0155)	9-165
O2 SENSOR 2/1 HEATER CIRCUIT LOW, DIAGNOSIS AND TESTING - (P0155)	9-163
O2 SENSOR 2/1 HEATER CIRCUIT OPEN, DIAGNOSIS AND TESTING - (P0155)	9-167
O2 SENSOR 2/1 HEATER PERFORMANCE, DIAGNOSIS AND TESTING - (P0155)	9-169
O2 SENSOR 2/1 LONG DELAY TIME, DIAGNOSIS AND TESTING - (P0153)	9-155
O2 SENSOR 2/1 LONG PERFORMANCE, DIAGNOSIS AND TESTING - (P0153)	9-153
O2 SENSOR 2/1 SHORT DELAY TIME, DIAGNOSIS AND TESTING - (P0153)	9-157
O2 SENSOR 2/1 SHORT PERFORMANCE, DIAGNOSIS AND TESTING - (P0153)	9-159
O2 SENSOR 2/2 BELOW THRESHOLD, DIAGNOSIS AND TESTING - (P0137)	9-127
O2 SENSOR 2/2 CIRCUIT HIGH, DIAGNOSIS AND TESTING - (P0140)	9-139
O2 SENSOR 2/2 CIRCUIT LOW, DIAGNOSIS AND TESTING - (P0138)	9-133
O2 SENSOR 2/2 CIRCUIT OPEN, DIAGNOSIS AND TESTING - (P0138)	9-135
O2 SENSOR 2/2 HEATER CIRCUIT HIGH, DIAGNOSIS AND TESTING - (P0161)	9-177
O2 SENSOR 2/2 HEATER CIRCUIT LOW, DIAGNOSIS AND TESTING - (P0161)	9-173
O2 SENSOR 2/2 HEATER CIRCUIT OPEN, DIAGNOSIS AND TESTING - (P0161)	9-175
O2 SENSOR 2/2 HEATER PERFORMANCE, DIAGNOSIS AND TESTING - (P0161)	9-171
O2 SENSOR HARNESS CONNECTORS REVERSED, DIAGNOSIS AND TESTING - (P0040) 1/1 AND 2/1	9-5
O2 SENSOR, REMOVAL - UPSTREAM	14-45
OCCUPANT RESTRAINT CONTROLLER - DESCRIPTION	8O-87
OCCUPANT RESTRAINT CONTROLLER - INSTALLATION	8O-91
OCCUPANT RESTRAINT CONTROLLER - OPERATION	8O-88
OCCUPANT RESTRAINT CONTROLLER - REMOVAL	8O-89
OCCUPANT RESTRAINT CONTROLLER, DIAGNOSIS AND TESTING - NO RESPONSE FROM	8E-10
OFF DETECTED, DIAGNOSIS AND TESTING - SAFETY FUEL SHUT	9-540
OFF SWITCH INDICATOR MODULE - INSTALLATION, ON	8O-106
OFF SWITCH INDICATOR MODULE - REMOVAL, ON	8O-105
OIL - DESCRIPTION	9-664
OIL - DESCRIPTION, REFRIGERANT	24-148
OIL - OPERATION, REFRIGERANT	24-149
OIL AND FILTER CHANGE - STANDARD PROCEDURE, ENGINE	9-664
OIL AND LUBRICANTS, DESCRIPTION - ENGINE	0-2
OIL CHANGE, STANDARD PROCEDURE - RESETTING THE FSS MAINTENANCE INDICATOR AFTER AN	8J-78
OIL FILTER - DESCRIPTION	9-666
OIL FILTER - INSTALLATION	9-666
OIL FILTER - REMOVAL	9-666
OIL GALLERY PLUGS - STANDARD PROCEDURE, ENGINE CORE	9-591
OIL LEAK INSPECTION, DIAGNOSIS AND TESTING - ENGINE	9-660
OIL LEVEL - STANDARD PROCEDURE, REFRIGERANT	24-149
OIL LEVEL CHECK, STANDARD PROCEDURE - ENGINE	9-664
OIL LEVEL INDICATOR TUBE - INSTALLATION	9-663
OIL LEVEL INDICATOR TUBE - REMOVAL	9-663
OIL LEVEL, STANDARD PROCEDURE - CHECK	21-294
OIL LEVEL/TEMPERATURE SENSOR - INSTALLATION	9-673
OIL LEVEL/TEMPERATURE SENSOR - REMOVAL	9-672
OIL PAN - INSTALLATION, UPPER	9-671
OIL PAN - REMOVAL, UPPER	9-669
OIL PAN, INSTALLATION - LOWER	9-669
OIL PAN, REMOVAL - LOWER	9-667
OIL PRESSURE - DIAGNOSIS AND TESTING, CHECKING ENGINE	9-662
OIL PRESSURE RELIEF VALVE - DESCRIPTION	9-677
OIL PUMP - ASSEMBLY	21-313
OIL PUMP - CLEANING	9-675
OIL PUMP - DESCRIPTION	9-674
OIL PUMP - DESCRIPTION	21-312
OIL PUMP - DISASSEMBLY	21-312
OIL PUMP - INSTALLATION	9-676
OIL PUMP - OPERATION	21-312
OIL PUMP - REMOVAL	9-674
OIL PUMP DRIVE CHAIN - INSTALLATION	9-677
OIL PUMP DRIVE CHAIN - REMOVAL	9-677
OIL SEAL - FRONT - INSTALLATION, CRANKSHAFT	9-636
OIL SEAL - FRONT - REMOVAL, CRANKSHAFT	9-636
OIL SEAL - REAR - INSTALLATION, CRANKSHAFT	9-635
OIL SEAL - REAR - REMOVAL, CRANKSHAFT	9-634
OIL SENSOR LEVEL PERFORMANCE, DIAGNOSIS AND TESTING - ENGINE	9-521
OIL SENSOR OVER TEMPERATURE, DIAGNOSIS AND TESTING - ENGINE	9-526
OIL SENSOR PERFORMANCE, DIAGNOSIS AND TESTING - ENGINE	9-531
OIL SENSOR QUALITY PERFORMANCE, DIAGNOSIS AND TESTING - ENGINE	9-533
OIL SENSOR WATER CONTAMINATION, DIAGNOSIS AND TESTING - ENGINE	9-538
OIL SPRAY NOZZLES - INSTALLATION	9-674
OIL SPRAY NOZZLES - REMOVAL	9-674
ON/OFF SWITCH SIGNAL CIRCUIT, DIAGNOSIS AND TESTING - PASSENGER AIRBAG	8O-49
OPEN, DIAGNOSIS AND TESTING - VOLTAGE SUPPLY CIRCUIT	8R-2
OPEN-CIRCUIT VOLTAGE TEST - STANDARD PROCEDURE	8F-13
ORC INTERNAL FAILURE, DIAGNOSIS AND TESTING	8O-2
ORC PROGRAMMING - STANDARD PROCEDURE	8O-89
ORC SYSTEM UNDERVOLTAGE, DIAGNOSIS AND TESTING	8O-43
ORVR - DESCRIPTION	25-18
ORVR - OPERATION	25-19
OUTAGE INDICATOR CIRCUIT, DIAGNOSIS AND TESTING - LAMP	8J-5
OUTER - INSTALLATION, CV BOOT	3-12
OUTER - REMOVAL, CV BOOT	3-11
OUTLET COVER - INSTALLATION, FOOTWELL AIR	24-111
OUTLET COVER - REMOVAL, FOOTWELL AIR	24-110
OUTPUT CIRCUIT, DIAGNOSIS AND TESTING - SIREN SIGNAL	8Q-27
OUTPUT FLANGE SEAL - INSTALLATION	21-356
OUTPUT FLANGE SEAL - REMOVAL	21-355
OUTPUT SHAFT BEARING - INSTALLATION	21-316
OUTPUT SHAFT BEARING - REMOVAL	21-314
OUTPUT SHAFT SEAL - INSTALLATION	21-318
OUTPUT SHAFT SEAL - REMOVAL	21-318
OVER LIMIT (AT LOAD), DIAGNOSIS AND TESTING - (P0174) FUEL SYSTEM 2/1 RICH CONTROL	9-221
OVER TEMPERATURE, DIAGNOSIS AND TESTING - ENGINE OIL SENSOR	9-526
OVER-ADVANCED, DIAGNOSIS AND TESTING - (P0341) CAMSHAFT POSITION TIMING	9-344
OVERCORRECTION OF FUEL MIXTURE (AT IDLE), DIAGNOSIS AND TESTING - (P0172) FUEL SYSTEM 1/1	9-195
OVERCORRECTION OF FUEL MIXTURE (OFF IDLE), DIAGNOSIS AND TESTING - (P0175) FUEL SYSTEM 2/1	9-230
OVERHEATING, DIAGNOSIS AND TESTING - ENGINE COOLING SYSTEM	7-12
OVER-RETARDED, DIAGNOSIS AND TESTING - (P0341) CAMSHAFT POSITION TIMING	9-340

Description	Group-Page
OVERSPEED, DIAGNOSIS AND TESTING - (P0219) ENGINE	21-3
OVERSPEED, DIAGNOSIS AND TESTING - (P0715) INPUT SENSOR	21-94
OVERTEMP, DIAGNOSIS AND TESTING - (P0740) TCC	21-119
OVERVOLTAGE, DIAGNOSIS AND TESTING	21-177
OVERVOLTAGE, DIAGNOSIS AND TESTING - CAB SYSTEM	5-158,5-85
OVERVOLTAGE, DIAGNOSIS AND TESTING - CENTRAL LOCKING PUMP/SECURITY SYSTEM MODULE SYSTEM	8Q-5
OVERVOLTAGE, DIAGNOSIS AND TESTING - CLP/SSM SYSTEM	8N-17
OVERVOLTAGE, DIAGNOSIS AND TESTING - (P0563) SYSTEM	21-9
OWN, DIAGNOSIS AND TESTING - ALARM TRIPS ON ITS	8Q-32
PADS - INSTALLATION, REAR DISC BRAKE	5-23
PADS - REMOVAL, REAR DISC BRAKE	5-19
PADS, INSTALLATION - FRONT DISC BRAKE	5-20
PADS, REMOVAL - FRONT DISC BRAKE	5-17
PAINT CODE - DESCRIPTION	23-199
PAINT CODE - SPECIFICATIONS	23-199
PAINT TOUCH - UP - DESCRIPTION	23-200
PAN - INSTALLATION, UPPER OIL	9-671
PAN - REMOVAL, UPPER OIL	9-669
PAN, INSTALLATION - LOWER OIL	9-669
PAN, REMOVAL - LOWER OIL	9-667
PANEL - INSTALLATION, TRIM	23-109,23-49
PANEL - REMOVAL, TRIM	23-108,23-48
PANEL (LEFT) - INSTALLATION, LOWER INSTRUMENT	23-158
PANEL (LEFT) - REMOVAL, LOWER INSTRUMENT	23-152
PANEL MOLDING - INSTALLATION, ROCKER	23-125
PANEL MOLDING - REMOVAL, ROCKER	23-125
PANEL (RIGHT) - INSTALLATION, LOWER INSTRUMENT	23-160
PANEL (RIGHT) - REMOVAL, LOWER INSTRUMENT	23-154
PANEL SPEAKER - INSTALLATION, REAR	8A-33
PANEL SPEAKER - REMOVAL, REAR	8A-29
PANEL (TOP SECTION) - INSTALLATION, INSTRUMENT	23-155
PANEL (TOP SECTION), REMOVAL - INSTRUMENT	23-149
PARK LAMP INOPERATIVE, DIAGNOSIS AND TESTING - LEFT	8L-8
PARK LAMP INOPERATIVE, DIAGNOSIS AND TESTING - RIGHT	8L-14
PARKING BRAKE - OPERATION	5-57
PARKING BRAKE, DIAGNOSIS AND TESTING	5-58
PARK/NEUTRAL CONTACT, DESCRIPTION	21-327
PARK/NEUTRAL CONTACT, OPERATION	21-328
PASSENGER AIRBAG - DESCRIPTION	8O-101
PASSENGER AIRBAG - INSTALLATION	8O-103
PASSENGER AIRBAG - OPERATION	8O-101
PASSENGER AIRBAG - REMOVAL	8O-102
PASSENGER AIRBAG ON/OFF SWITCH SIGNAL CIRCUIT, DIAGNOSIS AND TESTING	8O-49
PASSENGER AIRBAG SQUIB CIRCUIT, DIAGNOSIS AND TESTING	8O-23
PASSENGER DOOR/LIFTGATE LOCK ACTUATOR SLOW RESPONSE, DIAGNOSIS AND TESTING	8N-8
PASSENGER POWER SEAT HORIZONTAL MOTOR INOPERATIVE, DIAGNOSIS AND TESTING	8N-91
PASSENGER POWER SEAT INOPERATIVE, DIAGNOSIS AND TESTING	8N-76
PASSENGER POWER SEAT RECLINER MOTOR INOPERATIVE, DIAGNOSIS AND TESTING	8N-89
PASSENGER SEAT BELT TENSIONER CIRCUIT, DIAGNOSIS AND TESTING	8O-56
PASSENGER SEAT BELT TENSIONER SQUIB CIRCUIT, DIAGNOSIS AND TESTING	8O-17
PATTERNS - DIAGNOSIS AND TESTING, TIRE WEAR	22-59
PCM, DIAGNOSIS AND TESTING - NO CAN COMMUNICATIONS WITH	5-164,5-90
PCM, DIAGNOSIS AND TESTING - NO CAN COMMUNICATIONS WITH	8J-18
PCM, DIAGNOSIS AND TESTING - NO CAN COMMUNICATIONS WITH	8Q-25
PCM NOT IDENTIFIED OR INCORRECT, DIAGNOSIS AND TESTING	5-161,5-94
PCM PROGRAMMED INCORRECT TRANS/NO COMM FROM TCM, DIAGNOSIS AND TESTING - (P0602)	9-451
PCM/SKREEM PROGRAMMING - STANDARD PROCEDURE	8E-54
PEDAL - DESCRIPTION	5-53
PEDAL - DESCRIPTION, ACCELERATOR	14-26
PEDAL - INSTALLATION	5-55
PEDAL - INSTALLATION, ACCELERATOR	14-27
PEDAL - INSTALLATION, CLUTCH	6-25
PEDAL - OPERATION	5-53
PEDAL - REMOVAL	5-54
PEDAL - REMOVAL, ACCELERATOR	14-26
PEDAL - REMOVAL, CLUTCH	6-24
PEDAL POSITION SENSOR - DESCRIPTION, ACCELERATOR	14-28
PEDAL POSITION SENSOR - OPERATION, ACCELERATOR	14-29
PEDAL SENSOR CAN MESSAGE INCORRECT, DIAGNOSIS AND TESTING - (P0600) ACCEL	21-34
PERFORMANCE - DIAGNOSIS AND TESTING, HEATER	24-68
PERFORMANCE - ENGINE DIAGNOSIS	9-586
PERFORMANCE, DIAGNOSIS AND TESTING - A/C	24-64
PERFORMANCE, DIAGNOSIS AND TESTING - ENGINE OIL SENSOR	9-531
PERFORMANCE, DIAGNOSIS AND TESTING - ENGINE OIL SENSOR LEVEL	9-521
PERFORMANCE, DIAGNOSIS AND TESTING - ENGINE OIL SENSOR QUALITY	9-533
PERFORMANCE, DIAGNOSIS AND TESTING - (P0101) MAF SENSOR	9-8
PERFORMANCE, DIAGNOSIS AND TESTING - (P0106) MAP SENSOR	9-21
PERFORMANCE, DIAGNOSIS AND TESTING - (P0116) ENGINE COOLANT TEMPERATURE SENSOR	9-40
PERFORMANCE, DIAGNOSIS AND TESTING - (P0120) ELECTRONIC THROTTLE CONTROL MOTOR	9-53
PILOT BEARING - INSTALLATION	6-23
PILOT BEARING - REMOVAL	6-23
PINION FLANGE SEAL - INSTALLATION	3-45
PINION FLANGE SEAL - REMOVAL	3-43
PIPES - INSTALLATION, FRONT EXHAUST	11-7
PIPES - REMOVAL, FRONT EXHAUST	11-5
PISTON AND CONNECTING ROD - DESCRIPTION	9-639
PISTON FITTING, STANDARD PROCEDURE	9-640
PISTON RINGS - INSTALLATION	9-645
PISTON RINGS - REMOVAL	9-645
PISTONS - DESCRIPTION	21-319
PISTONS - OPERATION	21-319
PITMAN ARM - INSTALLATION	19-45
PITMAN ARM - REMOVAL	19-43
PITMAN SHAFT SEAL - INSTALLATION	19-39
PITMAN SHAFT SEAL - REMOVAL	19-38
PLANETARY GEARTRAIN - ASSEMBLY	21-323
PLANETARY GEARTRAIN - DESCRIPTION	21-321
PLANETARY GEARTRAIN - DISASSEMBLY	21-322
PLANETARY GEARTRAIN - OPERATION	21-321
PLASTIC BACK COVER - INSTALLATION	23-205
PLASTIC BACK COVER - REMOVAL	23-204
PLASTIGAGE® - STANDARD PROCEDURE, MEASURING BEARING CLEARANCE USING	9-591
PLATE / FLYWHEEL - INSTALLATION, FLEX	9-654
PLATE / FLYWHEEL - REMOVAL, FLEX	9-653
PLATE - INSTALLATION, DOOR SILL TRIM	23-193
PLATE - INSTALLATION, MOUNTING	23-122
PLATE - REMOVAL, DOOR SILL TRIM	23-193
PLATE - REMOVAL, MOUNTING	23-118
PLATE LAMP - INSTALLATION, LICENSE	8L-109
PLATE LAMP - REMOVAL, LICENSE	8L-109
PLATINUM PLUGS - DESCRIPTION	8I-7
PLUG - INSTALLATION, DETENT	21-359
PLUG - INSTALLATION, SPARK	8I-12
PLUG - OPERATION, SPARK	8I-7
PLUG - REMOVAL, DETENT	21-358
PLUG - REMOVAL, SPARK	8I-11
PLUG CABLE - DESCRIPTION, SPARK	8I-13
PLUG CABLE - INSTALLATION, SPARK	8I-13
PLUG CABLE - REMOVAL, SPARK	8I-13
PLUG CONDITIONS - DIAGNOSIS AND TESTING, SPARK	8I-8
PLUGS - DESCRIPTION, PLATINUM	8I-7
PLUGS - SPECIFICATIONS, SPARK	8I-4
PLUGS - STANDARD PROCEDURE, ENGINE CORE AND OIL GALLERY	9-591
PLUMBING - CAUTION	24-115
PLUMBING - DESCRIPTION	24-122
PLUMBING - INSTALLATION	24-124
PLUMBING - OPERATION	24-122
PLUMBING - REMOVAL	24-123
PLUMBING - WARNING	24-115
PLY TIRES - RADIAL	22-57
POINTS - DESCRIPTION, LUBRICATION	0-14
POLISHING - DESCRIPTION, WET SANDING/BUFFING	23-200
PORT - DESCRIPTION, REFRIGERANT SYSTEM SERVICE	24-58
POSITION - STANDARD PROCEDURE, MOVING THE HOOD TO ITS FULLY UPRIGHT	23-130
POSITION LAMP - DESCRIPTION, FRONT	8L-97
POSITION LAMP - INSTALLATION, FRONT	8L-98
POSITION LAMP - OPERATION, FRONT	8L-97
POSITION LAMP - REMOVAL, FRONT	8L-97
POSITION SENSOR - DESCRIPTION, ACCELERATOR PEDAL	14-28
POSITION SENSOR - DESCRIPTION, CRANKSHAFT	14-30
POSITION SENSOR - DESCRIPTION, THROTTLE	14-49
POSITION SENSOR - INSTALLATION, CAMSHAFT	8I-5
POSITION SENSOR - INSTALLATION, CRANKSHAFT	14-31
POSITION SENSOR - OPERATION, ACCELERATOR PEDAL	14-29
POSITION SENSOR - OPERATION, CAMSHAFT	8I-4
POSITION SENSOR - OPERATION, CRANKSHAFT	14-30
POSITION SENSOR - OPERATION, THROTTLE	14-50
POSITION SENSOR - REMOVAL, CAMSHAFT	8I-4
POSITION SENSOR - REMOVAL, CRANKSHAFT	14-31
POSITION SENSOR 1/2 CORRELATION, DIAGNOSIS AND TESTING - (P0120) THROTTLE	9-59
POSITION SENSOR CIRCUIT, DIAGNOSIS AND TESTING - (P0335) CRANKSHAFT	9-334
POSITION SENSOR PERFORMANCE, DIAGNOSIS AND TESTING - (P0341) CAMSHAFT	9-346
POSITION TIMING OVER-ADVANCED, DIAGNOSIS AND TESTING - (P0341) CAMSHAFT	9-344
POSITION TIMING OVER-RETARDED, DIAGNOSIS AND TESTING - (P0341) CAMSHAFT	9-340
POTENTIAL - STANDARD PROCEDURE, TESTING OF VOLTAGE	8W-01-9
POWER BRAKE BOOSTER - DESCRIPTION	5-48
POWER BRAKE BOOSTER - INSTALLATION	5-51
POWER BRAKE BOOSTER - OPERATION	5-49
POWER BRAKE BOOSTER - REMOVAL	5-50
POWER DISTRIBUTION - DESCRIPTION	8W-97-1
POWER DISTRIBUTION - OPERATION	8W-97-1
POWER EXCESSIVE HIGH COOLANT TEMP, DIAGNOSIS AND TESTING - (P0128) FORCED LIMITED	9-74

Description	Group-Page
POWER LOCK SWITCH - DESCRIPTION	8N-38
POWER LOCK SWITCH - INSTALLATION	8N-39
POWER LOCK SWITCH - REMOVAL	8N-39
POWER LOCKS - DIAGNOSIS AND TESTING	8N-32
POWER LOCKS - SERVICE INFORMATION - DESCRIPTION	8N-30
POWER LOCKS - SERVICE INFORMATION - OPERATION	8N-31
POWER LOCKS - SPECIFICATIONS	8N-35
POWER MIRROR INOPERATIVE, DIAGNOSIS AND TESTING - LEFT	8N-53
POWER MIRROR INOPERATIVE, DIAGNOSIS AND TESTING - RIGHT	8N-55
POWER MIRROR SWITCH - INSTALLATION	8N-71
POWER MIRROR SWITCH - REMOVAL	8N-71
POWER MIRRORS - SERVICE INFORMATION - DESCRIPTION	8N-66
POWER MIRRORS - SERVICE INFORMATION - DIAGNOSIS AND TESTING	8N-66
POWER MIRRORS - SERVICE INFORMATION - OPERATION	8N-66
POWER MIRRORS INOPERATIVE, DIAGNOSIS AND TESTING - BOTH	8N-57
POWER SEAT FRONT RISER MOTOR INOPERATIVE, DIAGNOSIS AND TESTING - DRIVER	8N-85
POWER SEAT HORIZONTAL MOTOR INOPERATIVE, DIAGNOSIS AND TESTING - DRIVER	8N-83
POWER SEAT HORIZONTAL MOTOR INOPERATIVE, DIAGNOSIS AND TESTING - PASSENGER	8N-91
POWER SEAT INOPERATIVE, DIAGNOSIS AND TESTING - DRIVER	8N-74
POWER SEAT INOPERATIVE, DIAGNOSIS AND TESTING - PASSENGER	8N-76
POWER SEAT REAR RISER MOTOR INOPERATIVE, DIAGNOSIS AND TESTING - DRIVER	8N-87
POWER SEAT RECLINER MOTOR INOPERATIVE, DIAGNOSIS AND TESTING - DRIVER	8N-81
POWER SEAT RECLINER MOTOR INOPERATIVE, DIAGNOSIS AND TESTING - PASSENGER	8N-89
POWER SEAT SWITCH - DIAGNOSIS AND TESTING	8N-96
POWER SEAT SWITCH - INSTALLATION	8N-98
POWER SEAT SWITCH - REMOVAL	8N-96
POWER SEAT TRACK - INSTALLATION	8N-107
POWER SEAT TRACK - REMOVAL	8N-105
POWER SEATS - SERVICE INFORMATION - DESCRIPTION	8N-95
POWER SEATS - SERVICE INFORMATION - DIAGNOSIS AND TESTING	8N-96
POWER SEATS - SERVICE INFORMATION - OPERATION	8N-95
POWER SEATS - SERVICE INFORMATION - SPECIFICATIONS	8N-96
POWER SEATS INOPERATIVE, DIAGNOSIS AND TESTING - BOTH	8N-78
POWER STEERING SYSTEM, DIAGNOSIS AND TESTING	19-2
POWER UP, DIAGNOSIS AND TESTING - DRB III® DOES NOT	8E-2
POWER WINDOW INOPERATIVE, DIAGNOSIS AND TESTING - LEFT FRONT	8N-110
POWER WINDOW INOPERATIVE, DIAGNOSIS AND TESTING - RIGHT FRONT	8N-113
POWER WINDOW SWITCH - INSTALLATION	8N-124
POWER WINDOW SWITCH - REMOVAL	8N-124
POWER WINDOWS - SERVICE INFORMATION - DESCRIPTION	8N-121
POWER WINDOWS - SERVICE INFORMATION - DIAGNOSIS AND TESTING	8N-121
POWER WINDOWS - SERVICE INFORMATION - OPERATION	8N-121
POWER WINDOWS INOPERATIVE, DIAGNOSIS AND TESTING - BOTH	8N-116
POWERING SEVERAL LOADS - STANDARD PROCEDURE, TESTING FOR A SHORT TO GROUND ON FUSES	8W-01-10
POWERTRAIN CONTROL MODULE - DESCRIPTION	8E-54
POWERTRAIN CONTROL MODULE - INSTALLATION	8E-57
POWERTRAIN CONTROL MODULE - OPERATION	8E-54
POWERTRAIN CONTROL MODULE - REMOVAL	8E-56
POWERTRAIN CONTROL MODULE, DIAGNOSIS AND TESTING - NO RESPONSE FROM	8E-4
POWERTRAIN VERIFICATION TEST, VER 1	9-569
POWERTRAIN VERIFICATION TEST, VER 2	9-570
POWERTRAIN VERIFICATION TEST, VER 3	7-9
POWERTRAIN VERIFICATION TEST, VER 3	9-571
POWERTRAIN VERIFICATION TEST, VER 4	9-572
POWERTRAIN VERIFICATION TEST, VER 5	9-573
PREFERENCES - STANDARD PROCEDURE, TOGGLING CUSTOMER	8N-35
PRELIMINARY - DIAGNOSIS AND TESTING	21-206
PREPARATION - STANDARD PROCEDURE, ENGINE GASKET SURFACE	9-590
PRESSURE - DIAGNOSIS AND TESTING, CHECKING ENGINE OIL	9-662
PRESSURE - DIAGNOSIS AND TESTING, STEERING FLOW	19-5
PRESSURE BLEEDING - STANDARD PROCEDURE	5-9
PRESSURE CAP - CLEANING	7-36
PRESSURE CAP - OPERATION	7-36
PRESSURE CAP - WARNING	7-36
PRESSURE FOR HIGH SPEED, DESCRIPTION - TIRE	22-58
PRESSURE LEAK DOWN TEST - DIAGNOSIS AND TESTING, FUEL	14-4
PRESSURE LEAKAGE TEST - DIAGNOSIS AND TESTING, CYLINDER COMBUSTION	9-588
PRESSURE MONITOR, DIAGNOSIS AND TESTING - NO RESPONSE FROM UNIVERSAL GARAGE DOOR OPENER/TIRE	8E-17
PRESSURE MONITOR MODULE FAILURE, DIAGNOSIS AND TESTING - TIRE	22-4
PRESSURE MONITORING - DESCRIPTION, TIRE	22-46
PRESSURE MONITORING - OPERATION, TIRE	22-48
PRESSURE MONITORING SYSTEM - DIAGNOSIS AND TESTING, TIRE	22-48
PRESSURE MONITORING SYSTEM, SPECIFICATIONS - TIRE	22-49
PRESSURE RELEASE PROCEDURE - STANDARD PROCEDURE, FUEL SYSTEM	14-5
PRESSURE RELIEF VALVE - DESCRIPTION, OIL	9-677
PRESSURE SENSOR - DESCRIPTION, BRAKE	5-201
PRESSURE SENSOR - INSTALLATION, BRAKE	5-201,5-77
PRESSURE SENSOR - OPERATION, BRAKE	5-201
PRESSURE SENSOR - REMOVAL, BRAKE	5-201, 5-76
PRESSURE SENSOR 1 CIRCUIT, DIAGNOSIS AND TESTING - ESP BRAKE	5-128
PRESSURE SENSOR 2 CIRCUIT, DIAGNOSIS AND TESTING - ESP BRAKE	5-133
PRESSURE SENSOR CIRCUIT, DIAGNOSIS AND TESTING - A/C	24-28
PRESSURE SENSOR CIRCUIT HIGH, DIAGNOSIS AND TESTING - (P0453) FUEL TANK	9-397
PRESSURE SENSOR CIRCUIT LOW, DIAGNOSIS AND TESTING - (P0452) FUEL TANK	9-395
PRESSURE SENSOR PERFORMANCE, DIAGNOSIS AND TESTING - (P0451) FUEL TANK	9-390
PRESSURE SENSOR/TRANSMITTER, DIAGNOSIS AND TESTING - LEFT FRONT TIRE	22-24
PRESSURE SENSOR/TRANSMITTER, DIAGNOSIS AND TESTING - LEFT REAR TIRE	22-26
PRESSURE SENSOR/TRANSMITTER, DIAGNOSIS AND TESTING - RIGHT FRONT TIRE	22-28
PRESSURE SENSOR/TRANSMITTER, DIAGNOSIS AND TESTING - RIGHT REAR TIRE	22-30
PRESSURE SENSOR/TRANSMITTER, DIAGNOSIS AND TESTING - TIRE	22-19
PRESSURE SENSOR/TRANSMITTER LOW BATTERY, DIAGNOSIS AND TESTING - TIRE	22-32
PRESSURE SENSOR/TRANSMITTER SIGNAL JAMMED, DIAGNOSIS AND TESTING - LEFT FRONT TIRE	22-11
PRESSURE SENSOR/TRANSMITTER SIGNAL JAMMED, DIAGNOSIS AND TESTING - LEFT REAR TIRE	22-13
PRESSURE SENSOR/TRANSMITTER SIGNAL JAMMED, DIAGNOSIS AND TESTING - RIGHT FRONT TIRE	22-15
PRESSURE SENSOR/TRANSMITTER SIGNAL JAMMED, DIAGNOSIS AND TESTING - RIGHT REAR TIRE	22-17
PRESSURE SENSOR/TRANSMITTER SIGNAL JAMMED, DIAGNOSIS AND TESTING - TIRE	22-6
PRESSURE SOLENOID CIRCUIT, DIAGNOSIS AND TESTING - (P0748) MODULATING	21-128
PRESSURE SOLENOID CIRCUIT, DIAGNOSIS AND TESTING - (P0778) SHIFT	21-150
PRESSURE TEST - DIAGNOSIS AND TESTING, CYLINDER COMPRESSION	9-587
PRESSURE TRANSDUCER - INSTALLATION, A/C	24-86
PRESSURE TRANSDUCER - REMOVAL, A/C	24-86
PRESSURE VERIFICATION TEST, DIAGNOSIS AND TESTING - TIRE	22-35
PRESSURES, DESCRIPTION - TIRE INFLATION	22-57
PROCESSOR, DIAGNOSIS AND TESTING - (P0221) ELECTRONIC THROTTLE CONTROL MODULE	9-272
PROGRAM (ESP) - OPERATION, ELECTRONIC STABILITY	5-189
PROGRAMMING - STANDARD PROCEDURE, ORC	8O-89
PROGRAMMING - STANDARD PROCEDURE, PCM/SKREEM	8E-54
PROGRAMMING - STANDARD PROCEDURE, TPM MODULE	22-50
PROGRAMMING - STANDARD PROCEDURE, TRANSMITTER	8N-37
PROGRAMMING - STANDARD PROCEDURE, UNIVERSAL TRANSMITTER	8M-3
PROGRAMMING DOES NOT CORRESPOND TO THE VEHICLE EQUIPMENT, DIAGNOSIS AND TESTING	8O-41
PROP - INSTALLATION, GAS	23-127,23-41
PROP - REMOVAL, GAS	23-126,23-40
PROPELLER SHAFT - DESCRIPTION	3-23
PROPELLER SHAFT - DIAGNOSIS AND TESTING	3-24
PROPELLER SHAFT - INSTALLATION	3-28
PROPELLER SHAFT - REMOVAL	3-26
PROPELLER SHAFT - WARNING	3-23
PULLEY - INSTALLATION, IDLER	7-48
PULLEY - REMOVAL, IDLER	7-47
PUMP - ASSEMBLY, OIL	21-313
PUMP - CLEANING, OIL	9-675
PUMP - DESCRIPTION, CENTRAL LOCKING	8N-36
PUMP - DESCRIPTION, FUEL	14-15

Description	Group-Page
PUMP - DESCRIPTION, OIL	9-674
PUMP - DESCRIPTION, OIL	21-312
PUMP - DESCRIPTION, WATER	7-36
PUMP - DIAGNOSIS AND TESTING, CENTRAL LOCKING	8N-36
PUMP - DISASSEMBLY, OIL	21-312
PUMP - INSPECTION, WATER	7-38
PUMP - INSTALLATION, AIR	25-33
PUMP - INSTALLATION, OIL	9-676
PUMP - INSTALLATION, WATER	7-40
PUMP - OPERATION, FUEL	14-15
PUMP - OPERATION, OIL	21-312
PUMP - REMOVAL, AIR	25-32
PUMP - REMOVAL, OIL	9-674
PUMP - REMOVAL, WATER	7-37
PUMP CIRCUIT, DIAGNOSIS AND TESTING - COOLANT CIRCULATION	24-34
PUMP DRIVE CHAIN - INSTALLATION, OIL	9-677
PUMP DRIVE CHAIN - REMOVAL, OIL	9-677
PUMP INITIAL OPERATION, STANDARD PROCEDURE - STEERING	19-51
PUMP MOTOR - INSTALLATION, WASHER	8R-31
PUMP MOTOR - REMOVAL, WASHER	8R-31
PUMP RELAY - DESCRIPTION, FUEL	14-35
PUMP RELAY - OPERATION, FUEL	14-35
PUMP TEST, DIAGNOSIS AND TESTING - FUEL	14-15
PUMP/SECURITY SYSTEM MODULE, DIAGNOSIS AND TESTING - NO COMMUNICATION WITH BCM AND CENTRAL LOCKING	8Q-8
PUMP/SECURITY SYSTEM MODULE, DIAGNOSIS AND TESTING - NO COMMUNICATION WITH BODY CONTROL MODULE AND CENTRAL LOCKING	8N-20
PUMP/SECURITY SYSTEM MODULE INTERNAL FAILURE, DIAGNOSIS AND TESTING - CENTRAL LOCKING	8N-26
PUMP/SECURITY SYSTEM MODULE INTERNAL FAILURE, DIAGNOSIS AND TESTING - CENTRAL LOCKING	8Q-30
PUMP/SECURITY SYSTEM MODULE SYSTEM OVERVOLTAGE, DIAGNOSIS AND TESTING - CENTRAL LOCKING	8Q-5
PUMP/SECURITY SYSTEM MODULE SYSTEM UNDERVOLTAGE, DIAGNOSIS AND TESTING - CENTRAL LOCKING	8Q-2
PURGE SOLENOID - DESCRIPTION, EVAP	25-17
PURGE SOLENOID - INSTALLATION, EVAP	25-18
PURGE SOLENOID - OPERATION, EVAP	25-17
PURGE SOLENOID - REMOVAL, EVAP	25-17
PURGE SOLENOID CIRCUIT, DIAGNOSIS AND TESTING - (P0445) EVAP	9-380
PURGE SOLENOID STUCK OPEN, DIAGNOSIS AND TESTING - (P0446) EVAP	9-387
PURGE VALVE, DIAGNOSIS AND TESTING - (P0441) EVAP	9-376
PURGE VALVE LEAKING, DIAGNOSIS AND TESTING - (P0457) EVAP	9-406
QUICK LEARN - STANDARD PROCEDURE, TCM	8E-59
RADIAL, PLY TIRES	22-57
RADIATOR - CLEANING	7-34
RADIATOR - DESCRIPTION	7-32
RADIATOR - INSPECTION	7-34
RADIATOR - INSTALLATION	7-35
RADIATOR - REMOVAL	7-33
RADIATOR COOLING FAN ALWAYS ON, DIAGNOSIS AND TESTING	7-6
RADIATOR COOLING FAN INOPERATIVE, DIAGNOSIS AND TESTING	7-2
RADIATOR FAN - INSTALLATION	7-27
RADIATOR FAN - REMOVAL	7-26
RADIATOR FAN CONTROL MODULE - INSTALLATION	7-29
RADIATOR FAN CONTROL MODULE - REMOVAL	7-29
RADIO - INSTALLATION	8A-28
RADIO - REMOVAL	8A-27
RADIO INOPERATIVE, DIAGNOSIS AND TESTING	8A-2
RAIL - DESCRIPTION, FUEL	14-18
RAIL - INSTALLATION, FUEL	14-20
RAIL - OPERATION, FUEL	14-18
RAIL - REMOVAL, FUEL	14-19
RANGE INDICATOR ILLUMINATION - DESCRIPTION, T/C	8L-150
RATE SENSOR - DESCRIPTION, YAW	5-201
RATE SENSOR - INSTALLATION, YAW	5-201
RATE SENSOR - OPERATION, YAW	5-201
RATE SENSOR - REMOVAL, YAW	5-201
RATE SENSOR CIRCUIT, DIAGNOSIS AND TESTING - ESP YAW	5-119
RATIO, DIAGNOSIS AND TESTING - (P0730) IMPROPER	21-116
RATIOS - SPECIFICATIONS, GEAR	21-349
REAR - INSTALLATION, CRANKSHAFT OIL SEAL	9-635
REAR - REMOVAL, CRANKSHAFT OIL SEAL	9-634
REAR AXLE CAMBER - STANDARD PROCEDURE, CHECKING	2-11
REAR AXLE CARRIER - INSTALLATION	2-93
REAR AXLE CARRIER - REMOVAL	2-87
REAR AXLE TOE - STANDARD PROCEDURE, CHECKING AND ADJUSTING	2-12
REAR AXLES, STANDARD PROCEDURE - INSPECTING AND ADJUSTING VEHICLE LEVEL AT FRONT	2-8
REAR AXLES WITH AN ELECTRONIC INCLINOMETER, STANDARD PROCEDURE - INSPECTING AND ADJUSTING VEHICLE LEVEL AT FRONT	2-8
REAR BRAKE CALIPER - REMOVAL	5-28
REAR BRAKE HOSE - INSTALLATION	5-16
REAR BRAKE HOSE, REMOVAL	5-13
REAR CENTER CONSOLE - INSTALLATION	23-188
REAR CENTER CONSOLE - REMOVAL	23-178
REAR DEFOGGER SWITCH SENSE CIRCUIT, DIAGNOSIS AND TESTING	8G-2
REAR DIFFERENTIAL - DESCRIPTION	3-37
REAR DIFFERENTIAL - DIAGNOSIS AND TESTING	3-37
REAR DIFFERENTIAL - OPERATION	3-37
REAR DIFFERENTIAL - SPECIAL TOOLS	3-41
REAR DIFFERENTIAL HOUSING - INSTALLATION	3-42
REAR DIFFERENTIAL HOUSING - REMOVAL	3-41
REAR DISC BRAKE CALIPER - INSTALLATION	5-35
REAR DISC BRAKE PADS - INSTALLATION	5-23
REAR DISC BRAKE PADS - REMOVAL	5-19
REAR DISC BRAKE ROTOR - INSTALLATION	5-42
REAR DISC BRAKE ROTOR - REMOVAL	5-39
REAR FASCIA - INSTALLATION	13-8
REAR FASCIA - REMOVAL	13-7
REAR GLASS HEATING GRID REPAIR - STANDARD PROCEDURE	8G-13
REAR HEAT SHIELD - INSTALLATION	11-9
REAR HEAT SHIELD - REMOVAL	11-8
REAR MARKER LAMP, INSTALLATION	8L-111
REAR MARKER LAMP, REMOVAL	8L-110
REAR MOUNT - INSTALLATION	9-660
REAR MOUNT - REMOVAL	9-659
REAR PANEL SPEAKER - INSTALLATION	8A-33
REAR PANEL SPEAKER - REMOVAL	8A-29
REAR RISER MOTOR - INSTALLATION	8N-100
REAR RISER MOTOR - REMOVAL	8N-99
REAR RISER MOTOR INOPERATIVE, DIAGNOSIS AND TESTING - DRIVER POWER SEAT	8N-87
REAR SECTION HOUSING - ASSEMBLY	21-362
REAR SECTION HOUSING - DISASSEMBLY	21-362
REAR SENSOR MESSAGE, DIAGNOSIS AND TESTING - (P0600) ABS LEFT	21-25
REAR SENSOR MESSAGE, DIAGNOSIS AND TESTING - (P0600) ABS RIGHT	21-31
REAR SIDE MARKER LAMP INOPERATIVE, DIAGNOSIS AND TESTING - LEFT	8L-38
REAR SIDE MARKER LAMP INOPERATIVE, DIAGNOSIS AND TESTING - RIGHT	8L-41
REAR SPEAKER, DIAGNOSIS AND TESTING - NO SOUND FROM LEFT	8A-12
REAR SPEAKER, DIAGNOSIS AND TESTING - NO SOUND FROM RIGHT	8A-14
REAR SPOILER - DESCRIPTION	23-116
REAR SPOILER - OPERATION	23-116
REAR SPOILER DRIVER (DOWN) CIRCUIT, DIAGNOSIS AND TESTING	23-16
REAR SPOILER DRIVER (UP) CIRCUIT, DIAGNOSIS AND TESTING	23-13
REAR SPOILER LIMIT SWITCH FAILURE, DIAGNOSIS AND TESTING	23-19
REAR SPOILER MOTOR FAILURE, DIAGNOSIS AND TESTING	23-23
REAR SPOILER SWITCH SENSE CIRCUIT, DIAGNOSIS AND TESTING	23-4
REAR SPOILER VERIFICATION TEST, DIAGNOSIS AND TESTING	23-27
REAR SUSPENSION - SPECIFICATIONS	2-48
REAR TIRE PRESSURE SENSOR/ TRANSMITTER, DIAGNOSIS AND TESTING - LEFT	22-26
REAR TIRE PRESSURE SENSOR/ TRANSMITTER, DIAGNOSIS AND TESTING - RIGHT	22-30
REAR TIRE PRESSURE SENSOR/ TRANSMITTER SIGNAL JAMMED, DIAGNOSIS AND TESTING - LEFT	22-13
REAR TIRE PRESSURE SENSOR/ TRANSMITTER SIGNAL JAMMED, DIAGNOSIS AND TESTING - RIGHT	22-17
REAR TURN LAMP INOPERATIVE, DIAGNOSIS AND TESTING - LEFT	8L-53
REAR TURN LAMP INOPERATIVE, DIAGNOSIS AND TESTING - RIGHT	8L-65
REAR WHEEL SPEED SENSOR - DESCRIPTION	5-196
REAR WHEEL SPEED SENSOR - INSTALLATION	5-198
REAR WHEEL SPEED SENSOR - OPERATION	5-196
REAR WHEEL SPEED SENSOR - REMOVAL	5-197
REAR WHEEL SPEED SENSOR CIRCUIT, DIAGNOSIS AND TESTING - LEFT	5-107
REAR WHEEL SPEED SENSOR CIRCUIT, DIAGNOSIS AND TESTING - RIGHT	5-113
REAR WINDOW ANTENNA - DESCRIPTION	8A-24
REAR WINDOW ANTENNA - INSTALLATION	8A-26
REAR WINDOW ANTENNA - REMOVAL	8A-25
REAR WINDOW ANTENNA MODULE - INSTALLATION	8A-23
REAR WINDOW ANTENNA MODULE - REMOVAL	8A-23
REAR WINDOW DEFOGGER GRID - DIAGNOSIS AND TESTING	8G-12
REAR WINDOW DEFOGGER INOPERATIVE, DIAGNOSIS AND TESTING	8G-5
REAR WINDOW DEFOGGER SWITCH - INSTALLATION	8G-12
REAR WINDOW DEFOGGER SWITCH - REMOVAL	8G-12
REAR WINDOW DEFOGGER SYSTEM - DIAGNOSIS AND TESTING	8G-11
REARVIEW MIRROR, INSTALLATION	8N-69
REARVIEW MIRROR SUPPORT BRACKET - INSTALLATION	8N-69
RECEIVER / DRIER - DESCRIPTION	24-145
RECEIVER / DRIER - INSTALLATION	24-147
RECEIVER / DRIER - OPERATION	24-146
RECEIVER / DRIER - REMOVAL	24-146
RECEIVER LAMP - INSTALLATION, ASH	8L-153
RECEIVER LAMP - REMOVAL, ASH	8L-151
RECEIVER LAMP INOPERATIVE, DIAGNOSIS AND TESTING - ASH	8L-130
RECIRC AIR SWITCHOVER VALVE - INSTALLATION	24-87
RECIRC AIR SWITCHOVER VALVE - REMOVAL	24-87
RECIRCULATED AIR SWITCHOVER VALVE CIRCUIT, DIAGNOSIS AND TESTING	24-46
RECLINER MOTOR - INSTALLATION	8N-104
RECLINER MOTOR - REMOVAL	8N-103
RECLINER MOTOR INOPERATIVE, DIAGNOSIS AND TESTING - DRIVER POWER SEAT	8N-81

Description	Group-Page
RECLINER MOTOR INOPERATIVE, DIAGNOSIS AND TESTING - PASSENGER POWER SEAT	8N-89
RECOVERY - STANDARD PROCEDURE, REFRIGERANT	24-117
RECOVERY RESERVOIR - INSTALLATION, COOLANT	7-25
RECOVERY RESERVOIR - OPERATION, COOLANT	7-24
RECOVERY RESERVOIR - REMOVAL, COOLANT	7-24
REDUCTION, DIAGNOSIS AND TESTING - (P1793) ENGINE TORQUE	21-163
REFILL - STANDARD PROCEDURE, DRAIN	3-40
REFILLING COOLING SYSTEM - STANDARD PROCEDURE	7-18
REFRIGERANT - DESCRIPTION	24-148
REFRIGERANT - OPERATION	24-148
REFRIGERANT LINES/HOSES/TUBES - DESCRIPTION	24-114
REFRIGERANT OIL - DESCRIPTION	24-148
REFRIGERANT OIL - OPERATION	24-149
REFRIGERANT OIL LEVEL - STANDARD PROCEDURE	24-149
REFRIGERANT RECOVERY - STANDARD PROCEDURE	24-117
REFRIGERANT SYSTEM CHARGE - STANDARD PROCEDURE	24-118
REFRIGERANT SYSTEM EVACUATE - STANDARD PROCEDURE	24-117
REFRIGERANT SYSTEM LEAKS - DIAGNOSIS AND TESTING	24-116
REFRIGERANT SYSTEM SERVICE EQUIPMENT, STANDARD PROCEDURE	24-116
REFRIGERANT SYSTEM SERVICE PORT - DESCRIPTION	24-58
REGULATOR - DESCRIPTION, FUEL FILTER/PRESSURE	14-8
REGULATOR - DESCRIPTION, VOLTAGE	8F-30
REGULATOR - INSTALLATION, BLOWER MOTOR	24-76
REGULATOR - INSTALLATION, FUEL FILTER/PRESSURE	14-10
REGULATOR - INSTALLATION, WINDOW	23-102
REGULATOR - OPERATION, FUEL FILTER/PRESSURE	14-9
REGULATOR - REMOVAL, BLOWER MOTOR	24-74
REGULATOR - REMOVAL, FUEL FILTER/PRESSURE	14-10
REGULATOR - REMOVAL, WINDOW	23-101
RELAY - DESCRIPTION, BRAKE LAMP	8L-90
RELAY - DESCRIPTION, FUEL PUMP	14-35
RELAY - DESCRIPTION, HORN	8H-14
RELAY - INSTALLATION	8N-50
RELAY - INSTALLATION, BRAKE LAMP	8L-90
RELAY - OPERATION, BRAKE LAMP	8L-90
RELAY - OPERATION, FUEL PUMP	14-35
RELAY - REMOVAL	8N-48
RELAY - REMOVAL, BRAKE LAMP	8L-90
RELAY CIRCUIT, DIAGNOSIS AND TESTING - (P0410) SECONDARY AIR INJECTION	9-362
RELAY CONTROL CIRCUIT, DIAGNOSIS AND TESTING - REMOTE KEYLESS ENTRY	8Q-40
RELAY CONTROL MODULE - DESCRIPTION	8W-97-3
RELAY CONTROL MODULE - INSTALLATION	8W-97-4
RELAY CONTROL MODULE - OPERATION	8W-97-3
RELAY CONTROL MODULE - REMOVAL	8W-97-4
RELEASE BEARING/SLAVE CYLINDER - DESCRIPTION	6-19
RELEASE BEARING/SLAVE CYLINDER - INSTALLATION	6-20
RELEASE BEARING/SLAVE CYLINDER - OPERATION	6-19
RELEASE BEARING/SLAVE CYLINDER - REMOVAL	6-20
RELEASE CABLE - INSTALLATION, LATCH	23-139
RELEASE CABLE - REMOVAL, LATCH	23-138
RELEASE PROCEDURE - STANDARD PROCEDURE, FUEL SYSTEM PRESSURE	14-5
RELEASE SWITCH - DESCRIPTION	5-203
RELEASE SWITCH - INSTALLATION	5-203
RELEASE SWITCH - OPERATION	5-203
RELEASE SWITCH - REMOVAL	5-203
RELEASE SWITCH CIRCUIT, DIAGNOSIS AND TESTING - BAS	5-166
RELIEF VALVE - DESCRIPTION, OIL PRESSURE	9-677
REMAINING FSS MILEAGE AT DRIVER'S REQUEST, STANDARD PROCEDURE - DISPLAY OF	8J-75
REMOTE ENTRY MODULE - DESCRIPTION, SENTRY KEY	8E-69
REMOTE ENTRY MODULE - DESCRIPTION, SENTRY KEY	8N-46
REMOTE ENTRY MODULE - DESCRIPTION, SENTRY KEY	8Q-52
REMOTE ENTRY MODULE - DIAGNOSIS AND TESTING, SENTRY KEY	8N-47
REMOTE ENTRY MODULE - INSTALLATION, SENTRY KEY	8Q-55
REMOTE ENTRY MODULE - OPERATION, SENTRY KEY	8E-69
REMOTE ENTRY MODULE - OPERATION, SENTRY KEY	8Q-52
REMOTE ENTRY MODULE - REMOVAL, SENTRY KEY	8Q-53
REMOTE ENTRY MODULE, DIAGNOSIS AND TESTING - NO RESPONSE FROM SENTRY KEY	8E-40
REMOTE ENTRY MODULE INTERNAL FAILURE, DIAGNOSIS AND TESTING - SENTRY KEY	8Q-34
REMOTE KEYLESS ENTRY RELAY CONTROL CIRCUIT, DIAGNOSIS AND TESTING	8Q-40
REPAIR - STANDARD PROCEDURE, ANTENNA GRID	8A-24
REPAIR - STANDARD PROCEDURE, REAR GLASS HEATING GRID	8G-13
REPAIR, DESCRIPTION - THREADED HOLE	Intro.-6
RESERVOIR - INSTALLATION, COOLANT RECOVERY	7-25
RESERVOIR - INSTALLATION, WASHER	8R-32
RESERVOIR - OPERATION, COOLANT RECOVERY	7-24
RESERVOIR - REMOVAL, COOLANT RECOVERY	7-24
RESERVOIR - REMOVAL, WASHER	8R-32
RESETTING THE FSS MAINTENANCE INDICATOR AFTER AN OIL CHANGE, STANDARD PROCEDURE	8J-78
RESETTING THE FSS MAINTENANCE INDICATOR, STANDARD PROCEDURE	8J-76
RESIDUAL ENGINE HEAT SYSTEM (REST) - DESCRIPTION	24-57
REST SYSTEM - OPERATION	24-64
RESTRAINT CONTROLLER - DESCRIPTION, OCCUPANT	8O-87
RESTRAINT CONTROLLER - INSTALLATION, OCCUPANT	8O-91
RESTRAINT CONTROLLER - OPERATION, OCCUPANT	8O-88
RESTRAINT CONTROLLER - REMOVAL, OCCUPANT	8O-89
RESTRAINT CONTROLLER, DIAGNOSIS AND TESTING - NO RESPONSE FROM OCCUPANT	8E-10
RESTRAINT DEPLOYMENT - STANDARD PROCEDURE, SERVICE AFTER A SUPPLEMENTAL	8O-84
RESTRAINT SYSTEM - DIAGNOSIS AND TESTING, SUPPLEMENTAL	8O-83
RESTRAINT SYSTEM (SRS) - VERIFICATION TEST - STANDARD PROCEDURE, SUPPLEMENTAL	8O-86
RESTRAINTS - SERVICE INFORMATION - DESCRIPTION	8O-70
RESTRAINTS - SERVICE INFORMATION - OPERATION	8O-76
RESTRAINTS - SERVICE INFORMATION - WARNING	8O-82
RESTRAINTS - STANDARD PROCEDURE, HANDLING NON-DEPLOYED SUPPLEMENTAL	8O-83
RESTRAINTS - TORQUE CHART	8O-87
REVERSE FLUSHING - STANDARD PROCEDURE, COOLING SYSTEM	7-19
REVERSE LOCKOUT CABLE - DESCRIPTION	21-388
REVERSE SHAFT - DESCRIPTION	21-363
REVERSED, DIAGNOSIS AND TESTING - (P0040) 1/1 AND 2/1 O2 SENSOR HARNESS CONNECTORS	9-5
RICH CONTROL OVER LIMIT (AT IDLE), DIAGNOSIS AND TESTING - (P0171) FUEL SYSTEM 1/1	9-183
RICH CONTROL OVER LIMIT (AT IDLE), DIAGNOSIS AND TESTING - (P0174) FUEL SYSTEM 2/1	9-218
RICH CONTROL OVER LIMIT (AT LOAD), DIAGNOSIS AND TESTING - (P0171) FUEL SYSTEM 1/1	9-187
RICH CONTROL OVER LIMIT (AT LOAD), DIAGNOSIS AND TESTING - (P0173) FUEL SYSTEM 2/1	9-211
RICH CONTROL OVER LIMIT (AT LOAD), DIAGNOSIS AND TESTING - (P0174) FUEL SYSTEM 2/1	9-221
RING - INSTALLATION, SENTRY KEY ANTENNA	8Q-55
RING - REMOVAL, SENTRY KEY ANTENNA	8Q-54
RINGS - INSTALLATION, PISTON	9-645
RINGS - REMOVAL, PISTON	9-645
RISER MOTOR - INSTALLATION, FRONT	8N-102
RISER MOTOR - INSTALLATION, REAR	8N-100
RISER MOTOR - REMOVAL, FRONT	8N-102
RISER MOTOR - REMOVAL, REAR	8N-99
RISER MOTOR INOPERATIVE, DIAGNOSIS AND TESTING - DRIVER POWER SEAT FRONT	8N-85
RISER MOTOR INOPERATIVE, DIAGNOSIS AND TESTING - DRIVER POWER SEAT REAR	8N-87
ROAD DETECTED, DIAGNOSIS AND TESTING - (P1600) ROUGH	9-493
ROAD TEST - DIAGNOSIS AND TESTING, INSPECTION	5-191
ROAD TESTING - DIAGNOSIS AND TESTING	21-206
ROCKER PANEL MOLDING - INSTALLATION	23-125
ROCKER PANEL MOLDING - REMOVAL	23-125
ROD - DESCRIPTION, PISTON AND CONNECTING	9-639
ROD - INSTALLATION, GEAR SHIFT	21-341
ROD - REMOVAL, GEAR SHIFT	21-341
ROD BEARINGS - DESCRIPTION, CONNECTING	9-638
ROD END - INSTALLATION, TIE	19-50
ROD END - REMOVAL, TIE	19-49
RODS AND BEARINGS - STANDARD PROCEDURE, CONNECTING	9-638
ROTATION - STANDARD PROCEDURE, TIRE	22-45
ROTOR - INSTALLATION, REAR DISC BRAKE	5-42
ROTOR - REMOVAL, REAR DISC BRAKE	5-39
ROTOR, INSTALLATION - FRONT DISC BRAKE	5-40
ROTOR MACHINING, STANDARD PROCEDURE - DISC BRAKE	5-38
ROTOR, REMOVAL - FRONT DISC BRAKE	5-38
ROTORS, DIAGNOSIS AND TESTING - DISC BRAKE	5-36
RUNNER SOLENOID CIRCUIT, DIAGNOSIS AND TESTING - SHORT	9-551
RUNNER SOLENOID CIRCUIT HIGH, DIAGNOSIS AND TESTING - SHORT	9-545
RUNNER SOLENOID CIRCUIT LOW, DIAGNOSIS AND TESTING - SHORT	9-549
RUNOUT - DIAGNOSIS AND TESTING, TIRE AND WHEEL	22-38
RUNOUT - SPECIFICATION	3-30
SAFETY CERT LABEL - DESCRIPTION, VEHICLE	Intro.-1
SAFETY FUEL SHUT OFF DETECTED, DIAGNOSIS AND TESTING	9-540
SCHEMATICS AND DIAGRAMS, CHARGING SYSTEM	8F-26
SCHEMATICS AND DIAGRAMS, CHIME/BUZZER - ELECTRICAL DIAGNOSTICS	8B-2
SCHEMATICS AND DIAGRAMS, DIAGNOSIS AND TESTING	8A-17

Description	Group-Page
SCHEMATICS AND DIAGRAMS, DIAGNOSIS AND TESTING	5-149,5-186
SCHEMATICS AND DIAGRAMS, DIAGNOSIS AND TESTING	7-10
SCHEMATICS AND DIAGRAMS, DIAGNOSIS AND TESTING	8E-45
SCHEMATICS AND DIAGRAMS, DIAGNOSIS AND TESTING	8G-21,8G-35,8G-9
SCHEMATICS AND DIAGRAMS, DIAGNOSIS AND TESTING	8H-8
SCHEMATICS AND DIAGRAMS, DIAGNOSIS AND TESTING	8J-53
SCHEMATICS AND DIAGRAMS, DIAGNOSIS AND TESTING	8L-134,8L-78
SCHEMATICS AND DIAGRAMS, DIAGNOSIS AND TESTING	8N-120,8N-29,8N-63,8N-94
SCHEMATICS AND DIAGRAMS, DIAGNOSIS AND TESTING	8O-68
SCHEMATICS AND DIAGRAMS, DIAGNOSIS AND TESTING	8Q-44
SCHEMATICS AND DIAGRAMS, DIAGNOSIS AND TESTING	8R-20
SCHEMATICS AND DIAGRAMS, IGNITION SYSTEM - ELECTRICAL DIAGNOSTICS	8I-2
SCHEMATICS AND DIAGRAMS, SPEED CONTROL - ELECTRICAL DIAGNOSTICS	8P-2
SCHEMATICS AND DIAGRAMS, STARTING SYSTEM	8F-39
SEAL - FRONT - INSTALLATION, CRANKSHAFT OIL	9-636
SEAL - FRONT - REMOVAL, CRANKSHAFT OIL	9-636
SEAL - INSTALLATION, DIFFERENTIAL CONNECTING FLANGE	3-47
SEAL - INSTALLATION, INPUT SHAFT	21-360
SEAL - INSTALLATION, OUTPUT FLANGE	21-356
SEAL - INSTALLATION, OUTPUT SHAFT	21-318
SEAL - INSTALLATION, PINION FLANGE	3-45
SEAL - INSTALLATION, PITMAN SHAFT	19-39
SEAL - INSTALLATION, TORQUE CONVERTER HUB	21-337
SEAL - INSTALLATION, VALVE STEM	9-628
SEAL - REAR - INSTALLATION, CRANKSHAFT OIL	9-635
SEAL - REAR - REMOVAL, CRANKSHAFT OIL	9-634
SEAL - REMOVAL, DIFFERENTIAL CONNECTING FLANGE	3-46
SEAL - REMOVAL, INPUT SHAFT	21-359
SEAL - REMOVAL, OUTPUT FLANGE	21-355
SEAL - REMOVAL, OUTPUT SHAFT	21-318
SEAL - REMOVAL, PINION FLANGE	3-43
SEAL - REMOVAL, PITMAN SHAFT	19-38
SEAL - REMOVAL, TORQUE CONVERTER HUB	21-337
SEAL - REMOVAL, VALVE STEM	9-627
SEALER LOCATIONS - SPECIFICATIONS	23-57
SEALERS - STANDARD PROCEDURE, FORM-IN-PLACE GASKETS	9-589
SEALS - CLEANING, INTAKE/EXHAUST VALVES	9-632
SEALS - DESCRIPTION, INTAKE/ EXHAUST VALVES	9-630
SEALS - INSTALLATION, INTAKE/ EXHAUST VALVES	9-632
SEALS - OPERATION, INTAKE/EXHAUST VALVES	9-630
SEALS - REMOVAL, INTAKE/EXHAUST VALVES	9-630
SEAT - INSTALLATION	23-203
SEAT - REMOVAL	23-202
SEAT BACK COVER - INSTALLATION	23-208
SEAT BACK COVER - REMOVAL	23-206
SEAT BACK ELEMENT - INSTALLATION, HEATED	8G-41
SEAT BACK ELEMENT - REMOVAL, HEATED	8G-40
SEAT BACK, INSTALLATION	23-205
SEAT BACK, REMOVAL	23-204
SEAT BELT & SEAT BELT TENSIONER - DESCRIPTION	8O-119
SEAT BELT & SEAT BELT TENSIONER - INSPECTION	8O-125
SEAT BELT & SEAT BELT TENSIONER - INSTALLATION	8O-125
SEAT BELT & SEAT BELT TENSIONER - OPERATION	8O-120
SEAT BELT & SEAT BELT TENSIONER - REMOVAL	8O-122
SEAT BELT BUCKLE - DESCRIPTION	8O-115
SEAT BELT BUCKLE - INSTALLATION	8O-117
SEAT BELT BUCKLE - REMOVAL	8O-116
SEAT BELT INDICATOR INOPERATIVE, DIAGNOSIS AND TESTING	8J-48
SEAT BELT TENSIONER - DESCRIPTION, SEAT BELT	8O-119
SEAT BELT TENSIONER - INSPECTION, SEAT BELT	8O-125
SEAT BELT TENSIONER - INSTALLATION, SEAT BELT	8O-125
SEAT BELT TENSIONER - OPERATION, SEAT BELT	8O-120
SEAT BELT TENSIONER - REMOVAL, SEAT BELT	8O-122
SEAT BELT TENSIONER CIRCUIT, DIAGNOSIS AND TESTING - DRIVER	8O-53
SEAT BELT TENSIONER CIRCUIT, DIAGNOSIS AND TESTING - PASSENGER	8O-56
SEAT BELT TENSIONER SQUIB CIRCUIT, DIAGNOSIS AND TESTING - DRIVER	8O-10
SEAT BELT TENSIONER SQUIB CIRCUIT, DIAGNOSIS AND TESTING - PASSENGER	8O-17
SEAT CUSHION - INSTALLATION	23-213
SEAT CUSHION - REMOVAL	23-211
SEAT CUSHION COVER - INSTALLATION	23-217
SEAT CUSHION COVER - REMOVAL	23-214
SEAT CUSHION ELEMENT, INSTALLATION - HEATED	8G-41
SEAT CUSHION ELEMENT, REMOVAL - HEATED	8G-40
SEAT ELEMENT - DESCRIPTION, HEATED	8G-39
SEAT FRONT RISER MOTOR INOPERATIVE, DIAGNOSIS AND TESTING - DRIVER POWER	8N-85
SEAT HORIZONTAL MOTOR INOPERATIVE, DIAGNOSIS AND TESTING - DRIVER POWER	8N-83
SEAT HORIZONTAL MOTOR INOPERATIVE, DIAGNOSIS AND TESTING - PASSENGER POWER	8N-91
SEAT INOPERATIVE, DIAGNOSIS AND TESTING - DRIVER POWER	8N-74
SEAT INOPERATIVE, DIAGNOSIS AND TESTING - LEFT HEATED	8G-26
SEAT INOPERATIVE, DIAGNOSIS AND TESTING - PASSENGER POWER	8N-76
SEAT INOPERATIVE, DIAGNOSIS AND TESTING - RIGHT HEATED	8G-29
SEAT MODULE - INSTALLATION, HEATED	8G-42
SEAT MODULE - REMOVAL, HEATED	8G-41
SEAT REAR RISER MOTOR INOPERATIVE, DIAGNOSIS AND TESTING - DRIVER POWER	8N-87
SEAT RECLINER MOTOR INOPERATIVE, DIAGNOSIS AND TESTING - DRIVER POWER	8N-81
SEAT RECLINER MOTOR INOPERATIVE, DIAGNOSIS AND TESTING - PASSENGER POWER	8N-89
SEAT SWITCH - DIAGNOSIS AND TESTING, POWER	8N-96
SEAT SWITCH - INSTALLATION, HEATED	8G-38
SEAT SWITCH - INSTALLATION, POWER	8N-98
SEAT SWITCH - REMOVAL, HEATED	8G-37
SEAT SWITCH - REMOVAL, POWER	8N-96
SEAT TRACK - INSTALLATION, POWER	8N-107
SEAT TRACK - REMOVAL, POWER	8N-105
SEATS - DESCRIPTION	23-201
SEATS - SERVICE INFORMATION - DESCRIPTION, HEATED	8G-36
SEATS - SERVICE INFORMATION - DESCRIPTION, POWER	8N-95
SEATS - SERVICE INFORMATION - DIAGNOSIS AND TESTING, HEATED	8G-37
SEATS - SERVICE INFORMATION - DIAGNOSIS AND TESTING, POWER	8N-96
SEATS - SERVICE INFORMATION - OPERATION, HEATED	8G-36
SEATS - SERVICE INFORMATION - OPERATION, POWER	8N-95
SEATS - SERVICE INFORMATION - SPECIFICATIONS, POWER	8N-96
SEATS INOPERATIVE, DIAGNOSIS AND TESTING - BOTH HEATED	8G-32
SEATS INOPERATIVE, DIAGNOSIS AND TESTING - BOTH POWER	8N-78
SECONDARY AIR INJECTION RELAY CIRCUIT, DIAGNOSIS AND TESTING - (P0410)	9-362
SECONDARY AIR INJECTION SWITCHOVER SOLENOID CIRCUIT, DIAGNOSIS AND TESTING - (P0412)	9-365
SECONDARY AIR INJECTION SYSTEM, DIAGNOSIS AND TESTING - (P0410)	9-356
SECTION - ASSEMBLY, TRANSMISSION FRONT	21-361
SECTION HOUSING - ASSEMBLY, REAR	21-362
SECTION HOUSING - DISASSEMBLY, REAR	21-362
SECTION IDENTIFICATION AND INFORMATION - DESCRIPTION	8W-01-5
SECURITY - SERVICE INFORMATION - DESCRIPTION, VEHICLE THEFT	8Q-46
SECURITY - SERVICE INFORMATION - OPERATION, VEHICLE THEFT	8Q-47
SECURITY SYSTEM MODULE - DESCRIPTION	8E-65
SECURITY SYSTEM MODULE - INSTALLATION	8E-68
SECURITY SYSTEM MODULE - INSTALLATION	8Q-49
SECURITY SYSTEM MODULE - OPERATION	8E-65
SECURITY SYSTEM MODULE - REMOVAL	8E-67
SECURITY SYSTEM MODULE - REMOVAL	8Q-48
SENDING UNIT - DIAGNOSIS AND TESTING, FUEL LEVEL	14-12
SENDING UNIT/SENSOR, DESCRIPTION - FUEL LEVEL	14-11
SENDING UNIT/SENSOR, OPERATION - FUEL LEVEL	14-11
SENSE CIRCUIT, DIAGNOSIS AND TESTING - DOOR LOCK SWITCH	8Q-16
SENSE CIRCUIT, DIAGNOSIS AND TESTING - DOOR LOCK/DOOR UNLOCK SWITCH	8N-22
SENSE CIRCUIT, DIAGNOSIS AND TESTING - DOOR UNLOCK SWITCH	8Q-19
SENSE CIRCUIT, DIAGNOSIS AND TESTING - REAR DEFOGGER SWITCH	8G-2
SENSE CIRCUIT, DIAGNOSIS AND TESTING - REAR SPOILER SWITCH	23-4
SENSITIVE DEVICES - STANDARD PROCEDURE, ELECTROSTATIC DISCHARGE (ESD)	8W-01-9
SENSOR - DESCRIPTION	22-52
SENSOR - DESCRIPTION, ACCELERATOR PEDAL POSITION	14-28
SENSOR - DESCRIPTION, BRAKE PRESSURE	5-201
SENSOR - DESCRIPTION, CRANKSHAFT POSITION	14-30
SENSOR - DESCRIPTION, FRONT WHEEL SPEED	5-193
SENSOR - DESCRIPTION, INTAKE AIR TEMPERATURE	14-36
SENSOR - DESCRIPTION, KNOCK	8I-6
SENSOR - DESCRIPTION, LATERAL ACCELERATION	5-199
SENSOR - DESCRIPTION, MANIFOLD AIR FLOW (MAF)	14-37
SENSOR - DESCRIPTION, MAP	14-42
SENSOR - DESCRIPTION, O2	14-43
SENSOR - DESCRIPTION, REAR WHEEL SPEED	5-196
SENSOR - DESCRIPTION, SIDE IMPACT	8O-107
SENSOR - DESCRIPTION, SPEED	21-311
SENSOR - DESCRIPTION, STEERING ANGLE	5-200
SENSOR - DESCRIPTION, THROTTLE POSITION	14-49
SENSOR - DESCRIPTION, TRANSMISSION TEMPERATURE	21-327
SENSOR - DESCRIPTION, TRAVEL	5-201
SENSOR - DESCRIPTION, YAW RATE	5-201
SENSOR - INSTALLATION	22-55
SENSOR - INSTALLATION, ANTI-THEFT TOW	8Q-58

Description	Group-Page
SENSOR - INSTALLATION, BRAKE FLUID LEVEL	5-75
SENSOR - INSTALLATION, BRAKE PRESSURE	5-201,5-77
SENSOR - INSTALLATION, CAMSHAFT POSITION	8I-5
SENSOR - INSTALLATION, COOLANT LEVEL	7-20
SENSOR - INSTALLATION, CRANKSHAFT POSITION	14-31
SENSOR - INSTALLATION, ENGINE COOLANT TEMPERATURE	7-31
SENSOR - INSTALLATION, EVAPORATOR TEMPERATURE	24-84
SENSOR - INSTALLATION, FRONT WHEEL SPEED	5-195
SENSOR - INSTALLATION, HEATER CORE TEMPERATURE	24-85
SENSOR - INSTALLATION, KNOCK	8I-6
SENSOR - INSTALLATION, LATERAL ACCELERATION	5-200
SENSOR - INSTALLATION, MANIFOLD AIR FLOW (MAF)	14-39
SENSOR - INSTALLATION, MAP	14-43
SENSOR - INSTALLATION, OIL LEVEL/TEMPERATURE	9-673
SENSOR - INSTALLATION, REAR WHEEL SPEED	5-198
SENSOR - INSTALLATION, SIDE IMPACT	8O-110
SENSOR - INSTALLATION, STEERING ANGLE	5-200
SENSOR - INSTALLATION, TRAVEL	5-202,5-78
SENSOR - INSTALLATION, YAW RATE	5-201
SENSOR - OPERATION	22-53
SENSOR - OPERATION, ACCELERATOR PEDAL POSITION	14-29
SENSOR - OPERATION, BRAKE PRESSURE	5-201
SENSOR - OPERATION, CAMSHAFT POSITION	8I-4
SENSOR - OPERATION, CRANKSHAFT POSITION	14-30
SENSOR - OPERATION, ENGINE COOLANT TEMPERATURE	7-29
SENSOR - OPERATION, FRONT WHEEL SPEED	5-193
SENSOR - OPERATION, INTAKE AIR TEMPERATURE	14-36
SENSOR - OPERATION, KNOCK	8I-6
SENSOR - OPERATION, LATERAL ACCELERATION	5-199
SENSOR - OPERATION, MANIFOLD AIR FLOW (MAF)	14-37
SENSOR - OPERATION, MAP	14-42
SENSOR - OPERATION, O2	14-44
SENSOR - OPERATION, REAR WHEEL SPEED	5-196
SENSOR - OPERATION, SIDE IMPACT	8O-107
SENSOR - OPERATION, SPEED	21-311
SENSOR - OPERATION, STEERING ANGLE	5-200
SENSOR - OPERATION, THROTTLE POSITION	14-50
SENSOR - OPERATION, TRANSMISSION TEMPERATURE	21-328
SENSOR - OPERATION, TRAVEL	5-202
SENSOR - OPERATION, YAW RATE	5-201
SENSOR - REMOVAL	22-53
SENSOR - REMOVAL, ANTI-THEFT TOW	8Q-57
SENSOR - REMOVAL, BRAKE FLUID LEVEL	5-75
SENSOR - REMOVAL, BRAKE PRESSURE	5-201, 5-76
SENSOR - REMOVAL, CAMSHAFT POSITION	8I-4
SENSOR - REMOVAL, COOLANT LEVEL	7-20
SENSOR - REMOVAL, CRANKSHAFT POSITION	14-31
SENSOR - REMOVAL, ENGINE COOLANT TEMPERATURE	7-29
SENSOR - REMOVAL, EVAPORATOR TEMPERATURE	24-84
SENSOR - REMOVAL, FRONT WHEEL SPEED	5-194
SENSOR - REMOVAL, HEATER CORE TEMPERATURE	24-85
SENSOR - REMOVAL, KNOCK	8I-6
SENSOR - REMOVAL, LATERAL ACCELERATION	5-200
SENSOR - REMOVAL, MANIFOLD AIR FLOW (MAF)	14-37
SENSOR - REMOVAL, MAP	14-42
SENSOR - REMOVAL, OIL LEVEL/ TEMPERATURE	9-672
SENSOR - REMOVAL, REAR WHEEL SPEED	5-197
SENSOR - REMOVAL, SIDE IMPACT	8O-108
SENSOR - REMOVAL, STEERING ANGLE	5-200
SENSOR - REMOVAL, TRAVEL	5-202,5-78
SENSOR - REMOVAL, YAW RATE	5-201
SENSOR #1 AND #2 VOLTAGE CORRELATION, DIAGNOSIS AND TESTING - (P0221) APPS	9-262
SENSOR 1 CIRCUIT, DIAGNOSIS AND TESTING - ESP BRAKE PRESSURE	5-128
SENSOR #1 CIRCUIT HIGH, DIAGNOSIS AND TESTING - (P0325) KNOCK	9-328
SENSOR #1 CIRCUIT LOW, DIAGNOSIS AND TESTING - (P0325) KNOCK	9-324
SENSOR 1/1 CIRCUIT HIGH, DIAGNOSIS AND TESTING - (P0132) O2	9-93
SENSOR 1/1 CIRCUIT LOW, DIAGNOSIS AND TESTING - (P0131) O2	9-86
SENSOR 1/1 CIRCUIT OPEN, DIAGNOSIS AND TESTING - (P0134) O2	9-105
SENSOR 1/1 HEATER CIRCUIT HIGH, DIAGNOSIS AND TESTING - (P0135) O2	9-113
SENSOR 1/1 HEATER CIRCUIT LOW, DIAGNOSIS AND TESTING - (P0135) O2	9-107
SENSOR 1/1 HEATER CIRCUIT OPEN, DIAGNOSIS AND TESTING - (P0135) O2	9-117
SENSOR 1/1 HEATER PERFORMANCE, DIAGNOSIS AND TESTING - (P0135) O2	9-109
SENSOR 1/1 LONG DELAY TIME, DIAGNOSIS AND TESTING - (P0133) O2	9-101
SENSOR 1/1 LONG PERFORMANCE, DIAGNOSIS AND TESTING - (P0133) O2	9-99
SENSOR 1/1 SHORT DELAY TIME, DIAGNOSIS AND TESTING - (P0133) O2	9-95
SENSOR 1/1 SHORT PERFORMANCE, DIAGNOSIS AND TESTING - (P0133) O2	9-103
SENSOR 1/2 ABOVE THRESHOLD, DIAGNOSIS AND TESTING - (P0137) O2	9-121
SENSOR 1/2 BELOW THRESHOLD, DIAGNOSIS AND TESTING - (P0137) O2	9-119
SENSOR 1/2 CIRCUIT HIGH, DIAGNOSIS AND TESTING - (P0138) O2	9-129
SENSOR 1/2 CIRCUIT LOW, DIAGNOSIS AND TESTING - (P0140) O2	9-137
SENSOR 1/2 CIRCUIT OPEN, DIAGNOSIS AND TESTING - (P0138) O2	9-131
SENSOR 1/2 CORRELATION, DIAGNOSIS AND TESTING - (P0120) THROTTLE POSITION	9-59
SENSOR 1/2 HEATER CIRCUIT HIGH, DIAGNOSIS AND TESTING - (P0141) O2	9-145
SENSOR 1/2 HEATER CIRCUIT LOW, DIAGNOSIS AND TESTING - (P0141) O2	9-141
SENSOR 1/2 HEATER CIRCUIT OPEN, DIAGNOSIS AND TESTING - (P0141) O2	9-143
SENSOR 1/2 HEATER PERFORMANCE, DIAGNOSIS AND TESTING - (P0141) O2	9-147
SENSOR 2 CIRCUIT, DIAGNOSIS AND TESTING - ESP BRAKE PRESSURE	5-133
SENSOR #2 CIRCUIT HIGH, DIAGNOSIS AND TESTING - (P0330) KNOCK	9-330
SENSOR #2 CIRCUIT LOW, DIAGNOSIS AND TESTING - (P0330) KNOCK	9-332
SENSOR 2/1 CIRCUIT HIGH, DIAGNOSIS AND TESTING - (P0152) O2	9-151
SENSOR 2/1 CIRCUIT LOW, DIAGNOSIS AND TESTING - (P0151) O2	9-149
SENSOR 2/1 CIRCUIT OPEN, DIAGNOSIS AND TESTING - (P0154) O2	9-161
SENSOR 2/1 HEATER CIRCUIT HIGH, DIAGNOSIS AND TESTING - (P0155) O2	9-165
SENSOR 2/1 HEATER CIRCUIT LOW, DIAGNOSIS AND TESTING - (P0155) O2	9-163
SENSOR 2/1 HEATER CIRCUIT OPEN, DIAGNOSIS AND TESTING - (P0155) O2	9-167
SENSOR 2/1 HEATER PERFORMANCE, DIAGNOSIS AND TESTING - (P0155) O2	9-169
SENSOR 2/1 LONG DELAY TIME, DIAGNOSIS AND TESTING - (P0153) O2	9-155
SENSOR 2/1 LONG PERFORMANCE, DIAGNOSIS AND TESTING - (P0153) O2	9-153
SENSOR 2/1 SHORT DELAY TIME, DIAGNOSIS AND TESTING - (P0153) O2	9-157
SENSOR 2/1 SHORT PERFORMANCE, DIAGNOSIS AND TESTING - (P0153) O2	9-159
SENSOR 2/2 BELOW THRESHOLD, DIAGNOSIS AND TESTING - (P0137) O2	9-127
SENSOR 2/2 CIRCUIT HIGH, DIAGNOSIS AND TESTING - (P0140) O2	9-139
SENSOR 2/2 CIRCUIT LOW, DIAGNOSIS AND TESTING - (P0138) O2	9-133
SENSOR 2/2 CIRCUIT OPEN, DIAGNOSIS AND TESTING - (P0138) O2	9-135
SENSOR 2/2 HEATER CIRCUIT HIGH, DIAGNOSIS AND TESTING - (P0161) O2	9-177
SENSOR 2/2 HEATER CIRCUIT LOW, DIAGNOSIS AND TESTING - (P0161) O2	9-173
SENSOR 2/2 HEATER CIRCUIT OPEN, DIAGNOSIS AND TESTING - (P0161) O2	9-175
SENSOR 2/2 HEATER PERFORMANCE, DIAGNOSIS AND TESTING - (P0161) O2	9-171
SENSOR CAN MESSAGE INCORRECT, DIAGNOSIS AND TESTING - (P0600) ACCEL PEDAL	21-34
SENSOR CIRCUIT, DIAGNOSIS AND TESTING - A/C PRESSURE	24-28
SENSOR CIRCUIT, DIAGNOSIS AND TESTING - AMBIENT TEMPERATURE	24-3
SENSOR CIRCUIT, DIAGNOSIS AND TESTING - AMBIENT TEMPERATURE	8J-9
SENSOR CIRCUIT, DIAGNOSIS AND TESTING - BAS TRAVEL	5-171
SENSOR CIRCUIT, DIAGNOSIS AND TESTING - ENGINE COOLANT TEMPERATURE	24-23
SENSOR CIRCUIT, DIAGNOSIS AND TESTING - ESP LATERAL ACCELERATION	5-138
SENSOR CIRCUIT, DIAGNOSIS AND TESTING - ESP YAW RATE	5-119
SENSOR CIRCUIT, DIAGNOSIS AND TESTING - EVAPORATOR TEMPERATURE	24-18
SENSOR CIRCUIT, DIAGNOSIS AND TESTING - FUEL LEVEL	8J-7
SENSOR CIRCUIT, DIAGNOSIS AND TESTING - LEFT FRONT WHEEL SPEED	5-95
SENSOR CIRCUIT, DIAGNOSIS AND TESTING - LEFT HEATER CORE TEMPERATURE	24-8
SENSOR CIRCUIT, DIAGNOSIS AND TESTING - LEFT REAR WHEEL SPEED	5-107
SENSOR CIRCUIT, DIAGNOSIS AND TESTING - (P0335) CRANKSHAFT POSITION	9-334
SENSOR CIRCUIT, DIAGNOSIS AND TESTING - (P0460) FUEL LEVEL	9-408
SENSOR CIRCUIT, DIAGNOSIS AND TESTING - (P0715) N2 INPUT SPEED	21-97

Description	Group-Page
SENSOR CIRCUIT, DIAGNOSIS AND TESTING - (P0715) N3 INPUT SPEED	21-103
SENSOR CIRCUIT, DIAGNOSIS AND TESTING - RIGHT FRONT WHEEL SPEED	5-101
SENSOR CIRCUIT, DIAGNOSIS AND TESTING - RIGHT HEATER CORE TEMPERATURE	24-13
SENSOR CIRCUIT, DIAGNOSIS AND TESTING - RIGHT REAR WHEEL SPEED	5-113
SENSOR CIRCUIT, DIAGNOSIS AND TESTING - STEERING ANGLE	5-124
SENSOR CIRCUIT HIGH, DIAGNOSIS AND TESTING - (P0108) MAP	9-29
SENSOR CIRCUIT HIGH, DIAGNOSIS AND TESTING - (P0113) INTAKE AIR TEMPERATURE	9-36
SENSOR CIRCUIT HIGH, DIAGNOSIS AND TESTING - (P0118) ENGINE COOLANT TEMPERATURE	9-51
SENSOR CIRCUIT HIGH, DIAGNOSIS AND TESTING - (P0453) FUEL TANK PRESSURE	9-397
SENSOR CIRCUIT LOW, DIAGNOSIS AND TESTING - (P0103) MAF	9-17
SENSOR CIRCUIT LOW, DIAGNOSIS AND TESTING - (P0107) MAP	9-24
SENSOR CIRCUIT LOW, DIAGNOSIS AND TESTING - (P0112) INTAKE AIR TEMPERATURE	9-31
SENSOR CIRCUIT LOW, DIAGNOSIS AND TESTING - (P0117) ENGINE COOLANT TEMPERATURE	9-49
SENSOR CIRCUIT LOW, DIAGNOSIS AND TESTING - (P0452) FUEL TANK PRESSURE	9-395
SENSOR ERRATIC, DIAGNOSIS AND TESTING - (P0714) TRANS TEMP	21-87
SENSOR HARNESS CONNECTORS REVERSED, DIAGNOSIS AND TESTING - (P0040) 1/1 AND 2/1 O2	9-5
SENSOR LEVEL PERFORMANCE, DIAGNOSIS AND TESTING - ENGINE OIL	9-521
SENSOR MESSAGE, DIAGNOSIS AND TESTING - (P0600) ABS LEFT FRONT	21-22
SENSOR MESSAGE, DIAGNOSIS AND TESTING - (P0600) ABS LEFT REAR	21-25
SENSOR MESSAGE, DIAGNOSIS AND TESTING - (P0600) ABS RIGHT FRONT	21-28
SENSOR MESSAGE, DIAGNOSIS AND TESTING - (P0600) ABS RIGHT REAR	21-31
SENSOR MISMATCH, DIAGNOSIS AND TESTING - (P0715) INPUT	21-90
SENSOR OVER TEMPERATURE, DIAGNOSIS AND TESTING - ENGINE OIL	9-526
SENSOR OVERSPEED, DIAGNOSIS AND TESTING - (P0715) INPUT	21-94
SENSOR PERFORMANCE, DIAGNOSIS AND TESTING - ENGINE OIL	9-531
SENSOR PERFORMANCE, DIAGNOSIS AND TESTING - (P0101) MAF	9-8
SENSOR PERFORMANCE, DIAGNOSIS AND TESTING - (P0106) MAP	9-21
SENSOR PERFORMANCE, DIAGNOSIS AND TESTING - (P0116) ENGINE COOLANT TEMPERATURE	9-40
SENSOR PERFORMANCE, DIAGNOSIS AND TESTING - (P0341) CAMSHAFT POSITION	9-346
SENSOR PERFORMANCE, DIAGNOSIS AND TESTING - (P0451) FUEL TANK PRESSURE	9-390
SENSOR, P/N SWITCH CIRCUIT - (P0850) TRANS TEMP	21-158
SENSOR QUALITY PERFORMANCE, DIAGNOSIS AND TESTING - ENGINE OIL	9-533
SENSOR, REMOVAL - UPSTREAM O2	14-45
SENSOR SHORT CIRCUIT, DIAGNOSIS AND TESTING - (P0116) ENGINE COOLANT TEMPERATURE	9-47
SENSOR SHORTED, DIAGNOSIS AND TESTING - (P0710) TRANS TEMP	21-83
SENSOR SIGNAL CIRCUIT, DIAGNOSIS AND TESTING - ANTI-THEFT TOW	8Q-22
SENSOR SIGNAL CIRCUIT, DIAGNOSIS AND TESTING - LEFT SIDE IMPACT	8O-59
SENSOR SIGNAL CIRCUIT, DIAGNOSIS AND TESTING - RIGHT SIDE IMPACT	8O-63
SENSOR SUPPLY VOLTAGE, DIAGNOSIS AND TESTING - (P0700)	21-67
SENSOR SYSTEM FAILURE, DIAGNOSIS AND TESTING - (P1386) KNOCK	9-491
SENSOR THROTTLE ANGLE AND SPEED, DIAGNOSIS AND TESTING - (P0104) MAF	9-19
SENSOR WATER CONTAMINATION, DIAGNOSIS AND TESTING - ENGINE OIL	9-538
SENSOR/TRANSMITTER, DIAGNOSIS AND TESTING - LEFT FRONT TIRE PRESSURE	22-24
SENSOR/TRANSMITTER, DIAGNOSIS AND TESTING - LEFT REAR TIRE PRESSURE	22-26
SENSOR/TRANSMITTER, DIAGNOSIS AND TESTING - RIGHT FRONT TIRE PRESSURE	22-28
SENSOR/TRANSMITTER, DIAGNOSIS AND TESTING - RIGHT REAR TIRE PRESSURE	22-30
SENSOR/TRANSMITTER, DIAGNOSIS AND TESTING - TIRE PRESSURE	22-19
SENSOR/TRANSMITTER LOW BATTERY, DIAGNOSIS AND TESTING - TIRE PRESSURE	22-32
SENSOR/TRANSMITTER SIGNAL JAMMED, DIAGNOSIS AND TESTING - LEFT FRONT TIRE PRESSURE	22-11
SENSOR/TRANSMITTER SIGNAL JAMMED, DIAGNOSIS AND TESTING - LEFT REAR TIRE PRESSURE	22-13
SENSOR/TRANSMITTER SIGNAL JAMMED, DIAGNOSIS AND TESTING - RIGHT FRONT TIRE PRESSURE	22-15
SENSOR/TRANSMITTER SIGNAL JAMMED, DIAGNOSIS AND TESTING - RIGHT REAR TIRE PRESSURE	22-17
SENSOR/TRANSMITTER SIGNAL JAMMED, DIAGNOSIS AND TESTING - TIRE PRESSURE	22-6
SENSOR/WASHER FLUID LEVEL SWITCH CIRCUIT, DIAGNOSIS AND TESTING - COOLANT LEVEL	8J-2
SENTRY KEY ANTENNA CIRCUIT, DIAGNOSIS AND TESTING	8Q-38
SENTRY KEY ANTENNA RING - INSTALLATION	8Q-55
SENTRY KEY ANTENNA RING - REMOVAL	8Q-54
SENTRY KEY REMOTE ENTRY MODULE - DESCRIPTION	8E-69
SENTRY KEY REMOTE ENTRY MODULE - DESCRIPTION	8N-46
SENTRY KEY REMOTE ENTRY MODULE - DESCRIPTION	8Q-52
SENTRY KEY REMOTE ENTRY MODULE - DIAGNOSIS AND TESTING	8N-47
SENTRY KEY REMOTE ENTRY MODULE - INSTALLATION	8Q-55
SENTRY KEY REMOTE ENTRY MODULE - OPERATION	8E-69
SENTRY KEY REMOTE ENTRY MODULE - OPERATION	8Q-52
SENTRY KEY REMOTE ENTRY MODULE - REMOVAL	8Q-53
SENTRY KEY REMOTE ENTRY MODULE, DIAGNOSIS AND TESTING - NO RESPONSE FROM	8E-40
SENTRY KEY REMOTE ENTRY MODULE INTERNAL FAILURE, DIAGNOSIS AND TESTING	8Q-34
SENTRY KEY VERIFICATION TEST, DIAGNOSIS AND TESTING	8Q-43
SEVERAL LOADS - STANDARD PROCEDURE, TESTING FOR A SHORT TO GROUND ON FUSES POWERING	8W-01-10
SHAFT - ASSEMBLY, MAINSHAFT W/INPUT	21-374
SHAFT - DESCRIPTION, BALANCE	9-698
SHAFT - DESCRIPTION, MAINSHAFT W/INPUT	21-368
SHAFT - DESCRIPTION, PROPELLER	3-23
SHAFT - DESCRIPTION, REVERSE	21-363
SHAFT - DIAGNOSIS AND TESTING, PROPELLER	3-24
SHAFT - DISASSEMBLY, MAINSHAFT W/INPUT	21-369
SHAFT - INSTALLATION, BALANCE	9-701
SHAFT - INSTALLATION, PROPELLER	3-28
SHAFT - REMOVAL, BALANCE	9-698
SHAFT - REMOVAL, PROPELLER	3-26
SHAFT - WARNING, PROPELLER	3-23
SHAFT BEARING - INSTALLATION, OUTPUT	21-316
SHAFT BEARING - REMOVAL, OUTPUT	21-314
SHAFT SEAL - INSTALLATION, INPUT	21-360
SHAFT SEAL - INSTALLATION, OUTPUT	21-318
SHAFT SEAL - INSTALLATION, PITMAN	19-39
SHAFT SEAL - REMOVAL, INPUT	21-359
SHAFT SEAL - REMOVAL, OUTPUT	21-318
SHAFT SEAL - REMOVAL, PITMAN	19-38
SHIELD - INSTALLATION, FRONT HEAT	11-9
SHIELD - INSTALLATION, REAR HEAT	11-9
SHIELD - REMOVAL, FRONT HEAT	11-8
SHIELD - REMOVAL, REAR HEAT	11-8
SHIFT INTERLOCK SOLENOID - ADJUSTMENTS	21-338
SHIFT INTERLOCK SOLENOID - DESCRIPTION	21-324,21-338
SHIFT INTERLOCK SOLENOID - OPERATION	21-326
SHIFT LEVER ADJUSTMENT - STANDARD PROCEDURE	21-389
SHIFT LEVER ASSEMBLY - DESCRIPTION	21-339
SHIFT LEVER ASSEMBLY - INSTALLATION	21-340
SHIFT LEVER ASSEMBLY - OPERATION	21-339
SHIFT LEVER ASSEMBLY - REMOVAL	21-340
SHIFT LEVER ASSEMBLY COVER - INSTALLATION	23-192
SHIFT LEVER ASSEMBLY COVER - REMOVAL	23-182
SHIFT LEVER ASSEMBLY, DIAGNOSIS AND TESTING - NO RESPONSE FROM	8E-29
SHIFT LEVER HANDLE - INSTALLATION, GEAR	21-387
SHIFT LEVER HANDLE - REMOVAL, GEAR	21-387
SHIFT MECHANISM - DESCRIPTION	21-388
SHIFT MECHANISM - INSTALLATION	21-392
SHIFT MECHANISM - REMOVAL	21-391
SHIFT MODULE (SLA), DIAGNOSIS AND TESTING - (P0600) LOST COMM WITH ELECTRIC GEAR	9-439
SHIFT PRESSURE SOLENOID CIRCUIT, DIAGNOSIS AND TESTING - (P0778)	21-150
SHIFT ROD - INSTALLATION, GEAR	21-341
SHIFT ROD - REMOVAL, GEAR	21-341
SHOCK - INSTALLATION	2-41,2-81
SHOCK - REMOVAL	2-40,2-80
SHOES - INSTALLATION	5-73
SHOES - REMOVAL	5-70
SHORT CIRCUIT, DIAGNOSIS AND TESTING - (P0116) ENGINE COOLANT TEMPERATURE SENSOR	9-47
SHORT DELAY TIME, DIAGNOSIS AND TESTING - (P0133) O2 SENSOR 1/1	9-95
SHORT DELAY TIME, DIAGNOSIS AND TESTING - (P0153) O2 SENSOR 2/1	9-157
SHORT PERFORMANCE, DIAGNOSIS AND TESTING - (P0133) O2 SENSOR 1/1	9-103
SHORT PERFORMANCE, DIAGNOSIS AND TESTING - (P0153) O2 SENSOR 2/1	9-159
SHORT RUNNER SOLENOID CIRCUIT, DIAGNOSIS AND TESTING	9-551
SHORT RUNNER SOLENOID CIRCUIT HIGH, DIAGNOSIS AND TESTING	9-545
SHORT RUNNER SOLENOID CIRCUIT LOW, DIAGNOSIS AND TESTING	9-549
SHORT TO GROUND - (P0753) 1, 2/4-5 SOLENOID CIRCUIT	21-136
SHORT TO GROUND - (P0758) 2, 3 SOLENOID CIRCUIT	21-142
SHORT TO GROUND - (P0763) 3, 4 SOLENOID CIRCUIT	21-148
SHORT TO GROUND - STANDARD PROCEDURE, TESTING FOR A	8W-01-10

Description	Group-Page
SHORT TO GROUND ON FUSES POWERING SEVERAL LOADS - STANDARD PROCEDURE, TESTING FOR A	8W-01-10
SHORTED, DIAGNOSIS AND TESTING - (P0710) TRANS TEMP SENSOR	21-83
SHUT OFF DETECTED, DIAGNOSIS AND TESTING - SAFETY FUEL	9-540
SHUTOFF VALVE - DESCRIPTION, CHARCOAL CANISTER	25-16
SHUTOFF VALVE - INSTALLATION, CHARCOAL CANISTER	25-16
SHUTOFF VALVE - OPERATION, CHARCOAL CANISTER	25-16
SHUTOFF VALVE - REMOVAL, CHARCOAL CANISTER	25-16
SHUTOFF VALVE, DIAGNOSIS AND TESTING - (P0446) CHARCOAL CANISTER	9-384
SIDE AIRBAG SQUIB CIRCUIT, DIAGNOSIS AND TESTING - LEFT	8O-29
SIDE AIRBAG SQUIB CIRCUIT, DIAGNOSIS AND TESTING - RIGHT	8O-35
SIDE IMPACT AIRBAG - DESCRIPTION	8O-112
SIDE IMPACT AIRBAG - INSTALLATION	8O-114
SIDE IMPACT AIRBAG - OPERATION	8O-113
SIDE IMPACT AIRBAG - REMOVAL	8O-114
SIDE IMPACT SENSOR - DESCRIPTION	8O-107
SIDE IMPACT SENSOR - INSTALLATION	8O-110
SIDE IMPACT SENSOR - OPERATION	8O-107
SIDE IMPACT SENSOR - REMOVAL	8O-108
SIDE IMPACT SENSOR SIGNAL CIRCUIT, DIAGNOSIS AND TESTING - LEFT	8O-59
SIDE IMPACT SENSOR SIGNAL CIRCUIT, DIAGNOSIS AND TESTING - RIGHT	8O-63
SIDE MARKER LAMP INOPERATIVE, DIAGNOSIS AND TESTING - LEFT FRONT	8L-32
SIDE MARKER LAMP INOPERATIVE, DIAGNOSIS AND TESTING - LEFT REAR	8L-38
SIDE MARKER LAMP INOPERATIVE, DIAGNOSIS AND TESTING - RIGHT FRONT	8L-35
SIDE MARKER LAMP INOPERATIVE, DIAGNOSIS AND TESTING - RIGHT REAR	8L-41
SIDEVIEW MIRROR - INSTALLATION	8N-72
SIDEVIEW MIRROR - REMOVAL	8N-72
SIGNAL - INSTALLATION, TURN	8L-116
SIGNAL - REMOVAL, TURN	8L-114
SIGNAL CIRCUIT, DIAGNOSIS AND TESTING - ANTI-THEFT TOW SENSOR	8Q-22
SIGNAL CIRCUIT, DIAGNOSIS AND TESTING - LEFT SIDE IMPACT SENSOR	8O-59
SIGNAL CIRCUIT, DIAGNOSIS AND TESTING - PASSENGER AIRBAG ON/OFF SWITCH	8O-49
SIGNAL CIRCUIT, DIAGNOSIS AND TESTING - RIGHT SIDE IMPACT SENSOR	8O-63
SIGNAL INDICATOR INOPERATIVE, DIAGNOSIS AND TESTING - LEFT TURN	8J-38
SIGNAL INDICATOR INOPERATIVE, DIAGNOSIS AND TESTING - RIGHT TURN	8J-40
SIGNAL LAMP - INSTALLATION, FRONT TURN	8L-99
SIGNAL LAMP - REMOVAL, FRONT TURN	8L-98
SIGNAL OUTPUT CIRCUIT, DIAGNOSIS AND TESTING - SIREN	8Q-27
SILL TRIM PLATE - INSTALLATION, DOOR	23-193
SILL TRIM PLATE - REMOVAL, DOOR	23-193
SINGLE CARDAN UNIVERSAL JOINTS - ASSEMBLY	3-33
SINGLE CARDAN UNIVERSAL JOINTS - DISASSEMBLY	3-32
SIREN - INSTALLATION	8Q-51
SIREN - REMOVAL	8Q-50
SIREN SIGNAL OUTPUT CIRCUIT, DIAGNOSIS AND TESTING	8Q-27
SKREEM, INSTALLATION	8E-70
SKREEM, INSTALLATION	8N-49
SKREEM, REMOVAL	8E-70
SKREEM, REMOVAL	8N-47
SLA CAN MESSAGE INCORRECT, DIAGNOSIS AND TESTING - (P0600)	21-64
SLA CONTROL SYSTEM (MIL REQUEST), DIAGNOSIS AND TESTING - (P0705)	9-463
SLA, DIAGNOSIS AND TESTING - (P0600) CAN MESSAGE FROM ECM FROM	21-38
SLEEVES - INSTALLATION, CENTERING	3-36
SLEEVES - INSTALLATION, FITTED	3-36
SLEEVES - REMOVAL, CENTERING	3-35
SLEEVES - REMOVAL, FITTED	3-35
SLEEVES - SPECIFICATIONS, CENTERING	3-30
SLIPPING, DIAGNOSIS AND TESTING - (P0700) TRANSMISSION	21-71
SLOW RESPONSE, DIAGNOSIS AND TESTING - DRIVER DOOR LOCK ACTUATOR	8N-2
SLOW RESPONSE, DIAGNOSIS AND TESTING - FUEL DOOR LOCK ACTUATOR	8N-5
SLOW RESPONSE, DIAGNOSIS AND TESTING - PASSENGER DOOR/ LIFTGATE LOCK ACTUATOR	8N-8
SMALL LEAK, DIAGNOSIS AND TESTING - (P0442) EVAP SYSTEM	9-378
SOLENOID - ADJUSTMENTS, SHIFT INTERLOCK	21-338
SOLENOID - DESCRIPTION, EVAP PURGE	25-17
SOLENOID - DESCRIPTION, SHIFT INTERLOCK	21-324,21-338
SOLENOID - INSTALLATION	25-25
SOLENOID - INSTALLATION, EVAP PURGE	25-18
SOLENOID - INSTALLATION, SWITCHOVER	25-35
SOLENOID - OPERATION, EVAP PURGE	25-17
SOLENOID - OPERATION, SHIFT INTERLOCK	21-326
SOLENOID - REMOVAL	25-24
SOLENOID - REMOVAL, EVAP PURGE	25-17
SOLENOID - REMOVAL, SWITCHOVER	25-34
SOLENOID CIRCUIT, DIAGNOSIS AND TESTING - (P0412) SECONDARY AIR INJECTION SWITCHOVER	9-365
SOLENOID CIRCUIT, DIAGNOSIS AND TESTING - (P0445) EVAP PURGE	9-380
SOLENOID CIRCUIT, DIAGNOSIS AND TESTING - (P0743) TCC	21-124
SOLENOID CIRCUIT, DIAGNOSIS AND TESTING - (P0748) MODULATING PRESSURE	21-128
SOLENOID CIRCUIT, DIAGNOSIS AND TESTING - (P0753) 1-2/4-5	21-132
SOLENOID CIRCUIT, DIAGNOSIS AND TESTING - (P0758) 2-3	21-138
SOLENOID CIRCUIT, DIAGNOSIS AND TESTING - (P0763) 3-4	21-144
SOLENOID CIRCUIT, DIAGNOSIS AND TESTING - (P0778) SHIFT PRESSURE	21-150
SOLENOID CIRCUIT, DIAGNOSIS AND TESTING - SHORT RUNNER	9-551
SOLENOID CIRCUIT HIGH, DIAGNOSIS AND TESTING - SHORT RUNNER	9-545
SOLENOID CIRCUIT LOW, DIAGNOSIS AND TESTING - SHORT RUNNER	9-549
SOLENOID CIRCUIT SHORT TO GROUND - (P0753) 1, 2/4-5	21-136
SOLENOID CIRCUIT SHORT TO GROUND - (P0758) 2, 3	21-142
SOLENOID CIRCUIT SHORT TO GROUND - (P0763) 3, 4	21-148
SOLENOID STUCK OPEN, DIAGNOSIS AND TESTING - (P0446) EVAP PURGE	9-387
SOLENOID SUPPLY VOLTAGE, DIAGNOSIS AND TESTING - (P0778)	21-154
SOLENOID SUPPLY/WATCHDOG, DIAGNOSIS AND TESTING - (P0702)	21-80
SOLENOID VALVE - DESCRIPTION	5-202
SOLENOID VALVE - INSTALLATION	5-202
SOLENOID VALVE - OPERATION	5-202
SOLENOID VALVE - REMOVAL	5-202
SOLENOID VALVE CIRCUIT, DIAGNOSIS AND TESTING - BAS	5-181
SPARK PLUG - INSTALLATION	8I-12
SPARK PLUG - OPERATION	8I-7
SPARK PLUG - REMOVAL	8I-11
SPARK PLUG CABLE - DESCRIPTION	8I-13
SPARK PLUG CABLE - INSTALLATION	8I-13
SPARK PLUG CABLE - REMOVAL	8I-13
SPARK PLUG CONDITIONS - DIAGNOSIS AND TESTING	8I-8
SPARK PLUGS - SPECIFICATIONS	8I-4
SPEAKER - INSTALLATION, REAR PANEL	8A-33
SPEAKER - INSTALLATION, TWEETER	8A-34
SPEAKER - REMOVAL, REAR PANEL	8A-29
SPEAKER - REMOVAL, TWEETER	8A-30
SPEAKER, DIAGNOSIS AND TESTING - NO SOUND FROM LEFT REAR	8A-12
SPEAKER, DIAGNOSIS AND TESTING - NO SOUND FROM RIGHT REAR	8A-14
SPEAKER, INSTALLATION - LOWER DOOR	8A-31
SPEAKER, REMOVAL - LOWER DOOR	8A-29
SPEAKERS, DIAGNOSIS AND TESTING - NO SOUND FROM ALL	8A-5
SPEAKERS, DIAGNOSIS AND TESTING - NO SOUND FROM LEFT DOOR	8A-8
SPEAKERS, DIAGNOSIS AND TESTING - NO SOUND FROM RIGHT DOOR	8A-10
SPECIFICATION, RUNOUT	3-30
SPEED CONTROL - ELECTRICAL DIAGNOSTICS - SCHEMATICS AND DIAGRAMS	8P-2
SPEED CONTROL - SERVICE INFORMATION - DESCRIPTION	8P-3
SPEED CONTROL - SERVICE INFORMATION - OPERATION	8P-3
SPEED CONTROL SWITCH INPUT CIRCUIT, DIAGNOSIS AND TESTING	9-553
SPEED, DESCRIPTION - TIRE PRESSURE FOR HIGH	22-58
SPEED, DIAGNOSIS AND TESTING - (P0104) MAF SENSOR THROTTLE ANGLE	9-19
SPEED INOPERATIVE, DIAGNOSIS AND TESTING - WIPERS HIGH	8R-11
SPEED INOPERATIVE, DIAGNOSIS AND TESTING - WIPERS INTERMITTENT	8R-15
SPEED INOPERATIVE, DIAGNOSIS AND TESTING - WIPERS LOW	8R-13
SPEED PERFORMANCE, DIAGNOSIS AND TESTING - (P0221) IDLE	9-266
SPEED PERFORMANCE ESP MIL REQUEST, DIAGNOSIS AND TESTING - (P0500) VEHICLE	9-412
SPEED SENSOR - DESCRIPTION	21-311
SPEED SENSOR - DESCRIPTION, FRONT WHEEL	5-193
SPEED SENSOR - DESCRIPTION, REAR WHEEL	5-196
SPEED SENSOR - INSTALLATION, FRONT WHEEL	5-195
SPEED SENSOR - INSTALLATION, REAR WHEEL	5-198
SPEED SENSOR - OPERATION	21-311
SPEED SENSOR - OPERATION, FRONT WHEEL	5-193
SPEED SENSOR - OPERATION, REAR WHEEL	5-196
SPEED SENSOR - REMOVAL, FRONT WHEEL	5-194
SPEED SENSOR - REMOVAL, REAR WHEEL	5-197
SPEED SENSOR CIRCUIT, DIAGNOSIS AND TESTING - LEFT FRONT WHEEL	5-95
SPEED SENSOR CIRCUIT, DIAGNOSIS AND TESTING - LEFT REAR WHEEL	5-107
SPEED SENSOR CIRCUIT, DIAGNOSIS AND TESTING - (P0715) N2 INPUT	21-97
SPEED SENSOR CIRCUIT, DIAGNOSIS AND TESTING - (P0715) N3 INPUT	21-103
SPEED SENSOR CIRCUIT, DIAGNOSIS AND TESTING - RIGHT FRONT WHEEL	5-101
SPEED SENSOR CIRCUIT, DIAGNOSIS AND TESTING - RIGHT REAR WHEEL	5-113
SPLICE INFORMATION - DESCRIPTION, CONNECTOR, GROUND	8W-01-6
SPLICING - STANDARD PROCEDURE, WIRE	8W-01-13
SPOILER - DESCRIPTION, REAR	23-116
SPOILER - OPERATION, REAR	23-116
SPOILER DRIVER (DOWN) CIRCUIT, DIAGNOSIS AND TESTING - REAR	23-16
SPOILER DRIVER (UP) CIRCUIT, DIAGNOSIS AND TESTING - REAR	23-13

Description	Group-Page
SPOILER LIMIT SWITCH FAILURE, DIAGNOSIS AND TESTING - REAR	23-19
SPOILER LIMIT SWITCH SIGNAL (DOWN) CIRCUIT, DIAGNOSIS AND TESTING	23-10
SPOILER LIMIT SWITCH SIGNAL (UP) CIRCUIT, DIAGNOSIS AND TESTING	23-7
SPOILER MOTOR FAILURE, DIAGNOSIS AND TESTING - REAR	23-23
SPOILER SWITCH SENSE CIRCUIT, DIAGNOSIS AND TESTING - REAR	23-4
SPOILER VERIFICATION TEST, DIAGNOSIS AND TESTING - REAR	23-27
SPOILER WING, INSTALLATION	23-121
SPOILER WING, REMOVAL	23-117
SPRAY NOZZLES - INSTALLATION, OIL	9-674
SPRAY NOZZLES - REMOVAL, OIL	9-674
SPRING - INSTALLATION	2-44,2-85
SPRING - REMOVAL	2-42,2-83
SPRINGS - DESCRIPTION, VALVE	9-633
SPRINGS - OPERATION, VALVE	9-633
SQUIB CIRCUIT, DIAGNOSIS AND TESTING - DRIVER AIRBAG	8O-4
SQUIB CIRCUIT, DIAGNOSIS AND TESTING - DRIVER SEAT BELT TENSIONER	8O-10
SQUIB CIRCUIT, DIAGNOSIS AND TESTING - LEFT SIDE AIRBAG	8O-29
SQUIB CIRCUIT, DIAGNOSIS AND TESTING - PASSENGER AIRBAG	8O-23
SQUIB CIRCUIT, DIAGNOSIS AND TESTING - PASSENGER SEAT BELT TENSIONER	8O-17
SQUIB CIRCUIT, DIAGNOSIS AND TESTING - RIGHT SIDE AIRBAG	8O-35
STABILITY PROGRAM (ESP) - OPERATION, ELECTRONIC	5-189
STABILIZER BAR - INSTALLATION	2-47,2-76
STABILIZER BAR - REMOVAL	2-46,2-72
STARTER MOTOR - DESCRIPTION	8F-41
STARTER MOTOR - DIAGNOSIS AND TESTING	8F-41
STARTER MOTOR - INSTALLATION	8F-44
STARTER MOTOR - OPERATION	8F-41
STARTER MOTOR - REMOVAL	8F-43
STARTER MOTOR, SPECIFICATIONS	8F-40
STARTING, STANDARD PROCEDURE - JUMP	0-8
STARTING SYSTEM - DESCRIPTION	8F-32
STARTING SYSTEM - DIAGNOSIS AND TESTING	8F-33
STARTING SYSTEM - OPERATION	8F-33
STARTING SYSTEM - SCHEMATICS AND DIAGRAMS	8F-39
STEER, SPECIAL TOOLS	19-7
STEERING ANGLE SENSOR - DESCRIPTION	5-200
STEERING ANGLE SENSOR - INSTALLATION	5-200
STEERING ANGLE SENSOR - OPERATION	5-200
STEERING ANGLE SENSOR - REMOVAL	5-200
STEERING ANGLE SENSOR CIRCUIT, DIAGNOSIS AND TESTING	5-124
STEERING COLUMN, INSTALLATION	19-15
STEERING FLOW AND PRESSURE - DIAGNOSIS AND TESTING	19-5
STEERING GEAR, ADJUSTMENTS	19-38
STEERING PUMP INITIAL OPERATION, STANDARD PROCEDURE	19-51
STEERING SYSTEM - DIAGNOSIS AND TESTING, SUSPENSION	2-1
STEERING SYSTEM, DESCRIPTION	19-1
STEERING SYSTEM, DIAGNOSIS AND TESTING - POWER	19-2
STEERING WHEEL - INSTALLATION	19-26
STEERING WHEEL - REMOVAL	19-25
STEM SEAL - INSTALLATION, VALVE	9-628
STEM SEAL - REMOVAL, VALVE	9-627
STOP LAMP - DESCRIPTION, CENTER HIGH MOUNTED	8L-92
STOP LAMP - INSTALLATION, CENTER HIGH MOUNTED	8L-93
STOP LAMP - REMOVAL, CENTER HIGH MOUNTED	8L-92
STOP LAMP INOPERATIVE, DIAGNOSIS AND TESTING - CENTER HIGH MOUNTED	8L-68
STOP LAMP INOPERATIVE, DIAGNOSIS AND TESTING - LEFT	8L-47
STOP LAMP INOPERATIVE, DIAGNOSIS AND TESTING - RIGHT	8L-59
STOP LAMP SWITCH CAN SIGNAL LOST TO TRANS PERFORMANCE, DIAGNOSIS AND TESTING - (P0571)	9-421
STOP LAMP SWITCH SIGNAL PERFORMANCE, DIAGNOSIS AND TESTING - (P0571)	9-423
STRAP - INSTALLATION, CHECK	23-89
STRAP - REMOVAL, CHECK	23-88
STRIKER - INSTALLATION, LATCH	23-140,23-43
STRIKER - REMOVAL, LATCH	23-140,23-43
STRUCTURAL ADHESIVES - SPECIFICATIONS	23-87
STRUT - INSTALLATION, CAMBER	2-50
STRUT - REMOVAL, CAMBER	2-49
SUCTION LINE - INSTALLATION	24-137
SUCTION LINE - REMOVAL	24-136
SUPPLEMENTAL RESTRAINT DEPLOYMENT - STANDARD PROCEDURE, SERVICE AFTER A	8O-84
SUPPLEMENTAL RESTRAINT SYSTEM - DIAGNOSIS AND TESTING	8O-83
SUPPLEMENTAL RESTRAINT SYSTEM (SRS) - VERIFICATION TEST - STANDARD PROCEDURE	8O-86
SUPPLEMENTAL RESTRAINTS - STANDARD PROCEDURE, HANDLING NON-DEPLOYED	8O-83
SUPPLY CIRCUIT, DIAGNOSIS AND TESTING - (P0121) APPS 5-VOLT	9-61
SUPPLY CIRCUIT OPEN, DIAGNOSIS AND TESTING - VOLTAGE	8R-2
SUPPLY VOLTAGE, DIAGNOSIS AND TESTING - (P0700) SENSOR	21-67
SUPPLY VOLTAGE, DIAGNOSIS AND TESTING - (P0778) SOLENOID	21-154
SUPPLY/WATCHDOG, DIAGNOSIS AND TESTING - (P0702) SOLENOID	21-80
SUPPORT BRACKET - INSTALLATION, REARVIEW MIRROR	8N-69
SUPPORT BRACKET AND ISOLATOR - INSTALLATION	11-14
SUPPORT BRACKET AND ISOLATOR - REMOVAL	11-13
SURFACE PREPARATION - STANDARD PROCEDURE, ENGINE GASKET	9-590
SUSPENSION - SPECIFICATIONS	2-13
SUSPENSION - SPECIFICATIONS, REAR	2-48
SUSPENSION - TORQUE CHART, FRONT	2-14
SUSPENSION AND STEERING SYSTEM - DIAGNOSIS AND TESTING	2-1
SUSPENSION, SPECIAL TOOLS	2-2
SWITCH - DESCRIPTION, BACKUP LAMP	8L-89
SWITCH - DESCRIPTION, BRAKE LAMP	8L-91
SWITCH - DESCRIPTION, COURTESY LAMP DEFEAT	8L-141
SWITCH - DESCRIPTION, DIMMER	8L-144
SWITCH - DESCRIPTION, DOOR AJAR	8L-144
SWITCH - DESCRIPTION, HAZARD	8L-100
SWITCH - DESCRIPTION, HEADLAMP	8L-105
SWITCH - DESCRIPTION, MULTI-FUNCTION	8R-25
SWITCH - DESCRIPTION, POWER LOCK	8N-38
SWITCH - DESCRIPTION, RELEASE	5-203
SWITCH - DIAGNOSIS AND TESTING, HORN	8H-12
SWITCH - DIAGNOSIS AND TESTING, POWER SEAT	8N-96
SWITCH - INSTALLATION	8P-5
SWITCH - INSTALLATION, BACKUP LAMP	21-354
SWITCH - INSTALLATION, BRAKE LAMP	8L-92
SWITCH - INSTALLATION, DRIVER CYLINDER LOCK	8Q-57
SWITCH - INSTALLATION, DRIVER DOOR LOCK	8N-43
SWITCH - INSTALLATION, HAZARD	8L-102
SWITCH - INSTALLATION, HEADLAMP	8L-106
SWITCH - INSTALLATION, HEATED SEAT	8G-38
SWITCH - INSTALLATION, HOOD AJAR	8Q-50
SWITCH - INSTALLATION, HORN	8H-13
SWITCH - INSTALLATION, IGNITION	19-24
SWITCH - INSTALLATION, LIFTGATE AJAR	8L-146
SWITCH - INSTALLATION, LIFTGATE LOCK	8N-45
SWITCH - INSTALLATION, MULTI-FUNCTION	8L-113
SWITCH - INSTALLATION, POWER LOCK	8N-39
SWITCH - INSTALLATION, POWER MIRROR	8N-71
SWITCH - INSTALLATION, POWER SEAT	8N-98
SWITCH - INSTALLATION, POWER WINDOW	8N-124
SWITCH - INSTALLATION, REAR WINDOW DEFOGGER	8G-12
SWITCH - INSTALLATION, RELEASE	5-203
SWITCH - INSTALLATION, TOW-AWAY ALARM	8Q-59
SWITCH - INSTALLATION, WASHER FLUID LEVEL	8R-26
SWITCH - OPERATION, BRAKE LAMP	8L-91
SWITCH - OPERATION, DOOR AJAR	8L-144
SWITCH - OPERATION, HAZARD	8L-100
SWITCH - OPERATION, HEADLAMP	8L-105
SWITCH - OPERATION, RELEASE	5-203
SWITCH - REMOVAL	8P-4
SWITCH - REMOVAL, BACKUP LAMP	21-353
SWITCH - REMOVAL, BRAKE LAMP	8L-91
SWITCH - REMOVAL, DOOR CYLINDER LOCK	8Q-56
SWITCH - REMOVAL, DRIVER DOOR LOCK	8N-43
SWITCH - REMOVAL, HAZARD	8L-100
SWITCH - REMOVAL, HEADLAMP	8L-105
SWITCH - REMOVAL, HEATED SEAT	8G-37
SWITCH - REMOVAL, HOOD AJAR	8Q-50
SWITCH - REMOVAL, HORN	8H-13
SWITCH - REMOVAL, IGNITION	19-23
SWITCH - REMOVAL, LIFTGATE AJAR	8L-145
SWITCH - REMOVAL, LIFTGATE LOCK	8N-45
SWITCH - REMOVAL, MULTI-FUNCTION	8L-112
SWITCH - REMOVAL, POWER LOCK	8N-39
SWITCH - REMOVAL, POWER MIRROR	8N-71
SWITCH - REMOVAL, POWER SEAT	8N-96
SWITCH - REMOVAL, POWER WINDOW	8N-124
SWITCH - REMOVAL, REAR WINDOW DEFOGGER	8G-12
SWITCH - REMOVAL, RELEASE	5-203
SWITCH - REMOVAL, TOW-AWAY ALARM	8Q-59
SWITCH - REMOVAL, WASHER FLUID LEVEL	8R-26
SWITCH CAN SIGNAL LOST TO TRANS PERFORMANCE, DIAGNOSIS AND TESTING - (P0571) STOP LAMP	9-421
SWITCH CIRCUIT - (P0850) TRANS TEMP SENSOR, P/N	21-158
SWITCH CIRCUIT, DIAGNOSIS AND TESTING - BAS RELEASE	5-166
SWITCH CIRCUIT, DIAGNOSIS AND TESTING - BRAKE LAMP	5-143,5-176
SWITCH CIRCUIT, DIAGNOSIS AND TESTING - COOLANT LEVEL SENSOR/WASHER FLUID LEVEL	8J-2
SWITCH CIRCUIT, DIAGNOSIS AND TESTING - HAZARD	8L-118
SWITCH FAILURE, DIAGNOSIS AND TESTING - REAR SPOILER LIMIT	23-19
SWITCH ILLUMINATION - DESCRIPTION, HEATER	8L-150
SWITCH INDICATOR MODULE - INSTALLATION, ON / OFF	8O-106
SWITCH INDICATOR MODULE - REMOVAL, ON / OFF	8O-105
SWITCH INPUT CIRCUIT, DIAGNOSIS AND TESTING - SPEED CONTROL	9-553
SWITCH, INSTALLATION - DOOR AJAR	8L-146
SWITCH, REMOVAL - DOOR AJAR	8L-145
SWITCH SENSE CIRCUIT, DIAGNOSIS AND TESTING - DOOR LOCK	8Q-16
SWITCH SENSE CIRCUIT, DIAGNOSIS AND TESTING - DOOR LOCK/DOOR UNLOCK	8N-22
SWITCH SENSE CIRCUIT, DIAGNOSIS AND TESTING - DOOR UNLOCK	8Q-19
SWITCH SENSE CIRCUIT, DIAGNOSIS AND TESTING - REAR DEFOGGER	8G-2
SWITCH SENSE CIRCUIT, DIAGNOSIS AND TESTING - REAR SPOILER	23-4

Description	Group-Page
SWITCH SIGNAL CIRCUIT, DIAGNOSIS AND TESTING - PASSENGER AIRBAG ON/OFF	8O-49
SWITCH SIGNAL (DOWN) CIRCUIT, DIAGNOSIS AND TESTING - SPOILER LIMIT	23-10
SWITCH SIGNAL PERFORMANCE, DIAGNOSIS AND TESTING - (P0571) STOP LAMP	9-423
SWITCH SIGNAL (UP) CIRCUIT, DIAGNOSIS AND TESTING - SPOILER LIMIT	23-7
SWITCHOVER SOLENOID - INSTALLATION	25-35
SWITCHOVER SOLENOID - REMOVAL	25-34
SWITCHOVER SOLENOID CIRCUIT, DIAGNOSIS AND TESTING - (P0412) SECONDARY AIR INJECTION	9-365
SWITCHOVER VALVE - INSTALLATION	25-36
SWITCHOVER VALVE - INSTALLATION, RECIRC AIR	24-87
SWITCHOVER VALVE - REMOVAL	25-36
SWITCHOVER VALVE - REMOVAL, RECIRC AIR	24-87
SWITCHOVER VALVE CIRCUIT, DIAGNOSIS AND TESTING - RECIRCULATED AIR	24-46
SWITCH/UNIT - DESCRIPTION, COURTESY LAMP	8L-142
SWITCH/UNIT - INSTALLATION, COURTESY LAMP	8L-143
SWITCH/UNIT - OPERATION, COURTESY LAMP	8L-142
SWITCH/UNIT - REMOVAL, COURTESY LAMP	8L-142
SYMBOLS - DESCRIPTION, INTERNATIONAL	Intro.-2
SYMBOLS - DESCRIPTION, INTERNATIONAL	0-6
SYNCHRONIZE - STANDARD PROCEDURE, WIPER MOTOR	8R-46
SYNCHRONIZER - ASSEMBLY	21-386
SYNCHRONIZER - DESCRIPTION	21-386
TABLE, SPECIFICATIONS - A/C APPLICATION	24-70
TAIL LAMP INOPERATIVE, DIAGNOSIS AND TESTING - LEFT	8L-44
TAIL LAMP INOPERATIVE, DIAGNOSIS AND TESTING - RIGHT	8L-56
TAIL LAMP UNIT, INSTALLATION	8L-115
TAIL LAMP UNIT, REMOVAL	8L-113
TAIL/STOP - INSTALLATION	8L-115
TAIL/STOP - REMOVAL	8L-114
TANK - DESCRIPTION, FUEL	14-20
TANK - INSTALLATION, FUEL	14-22
TANK - OPERATION, FUEL	14-20
TANK - REMOVAL, FUEL	14-21
TANK - STANDARD PROCEDURE, DRAINING FUEL	14-5
TANK FILLER TUBE - DESCRIPTION, FUEL	14-24
TANK PRESSURE SENSOR CIRCUIT HIGH, DIAGNOSIS AND TESTING - (P0453) FUEL	9-397
TANK PRESSURE SENSOR CIRCUIT LOW, DIAGNOSIS AND TESTING - (P0452) FUEL	9-395
TANK PRESSURE SENSOR PERFORMANCE, DIAGNOSIS AND TESTING - (P0451) FUEL	9-390
TAPE, INSTALLATION - DOUBLE SIDED	23-115
TAPE, REMOVAL - DOUBLE SIDED	23-114
TASK MANAGER - DESCRIPTION	25-37
TASK MANAGER - OPERATION	25-37
T/C RANGE INDICATOR ILLUMINATION - DESCRIPTION	8L-150
TCC OVERTEMP, DIAGNOSIS AND TESTING - (P0740)	21-119
TCC SOLENOID CIRCUIT, DIAGNOSIS AND TESTING - (P0743)	21-124
TCC STUCK ON, DIAGNOSIS AND TESTING - (P0740)	21-121
TCM, DIAGNOSIS AND TESTING - NO CAN COMMUNICATIONS WITH	5-92
TCM, DIAGNOSIS AND TESTING - NO CAN COMMUNICATIONS WITH	8J-30
TCM, DIAGNOSIS AND TESTING - (P0602) PCM PROGRAMMED INCORRECT TRANS/NO COMM FROM	9-451
TCM IS NOT CODED, DIAGNOSIS AND TESTING - (P0702) CONTROL MODULE	21-74
TCM QUICK LEARN - STANDARD PROCEDURE	8E-59
TCM TORQUE MANAGEMENT REQUEST PERFORMANCE, DIAGNOSIS AND TESTING - (P0702)	9-461
TELESCOPING WHEEL INDICATOR INOPERATIVE, DIAGNOSIS AND TESTING	8J-50
TEMP, DIAGNOSIS AND TESTING - (P0128) FORCED LIMITED POWER EXCESSIVE HIGH COOLANT	9-74
TEMP SENSOR ERRATIC, DIAGNOSIS AND TESTING - (P0714) TRANS	21-87
TEMP SENSOR, P/N SWITCH CIRCUIT - (P0850) TRANS	21-158
TEMP SENSOR SHORTED, DIAGNOSIS AND TESTING - (P0710) TRANS	21-83
TEMPERATURE, DIAGNOSIS AND TESTING - ENGINE OIL SENSOR OVER	9-526
TEMPERATURE MESSAGE, DIAGNOSIS AND TESTING - (P0600) ENGINE	21-51
TEMPERATURE SENSOR - DESCRIPTION, INTAKE AIR	14-36
TEMPERATURE SENSOR - DESCRIPTION, TRANSMISSION	21-327
TEMPERATURE SENSOR - INSTALLATION, ENGINE COOLANT	7-31
TEMPERATURE SENSOR - INSTALLATION, EVAPORATOR	24-84
TEMPERATURE SENSOR - INSTALLATION, HEATER CORE	24-85
TEMPERATURE SENSOR - OPERATION, ENGINE COOLANT	7-29
TEMPERATURE SENSOR - OPERATION, INTAKE AIR	14-36
TEMPERATURE SENSOR - OPERATION, TRANSMISSION	21-328
TEMPERATURE SENSOR - REMOVAL, ENGINE COOLANT	7-29
TEMPERATURE SENSOR - REMOVAL, EVAPORATOR	24-84
TEMPERATURE SENSOR - REMOVAL, HEATER CORE	24-85
TEMPERATURE SENSOR CIRCUIT, DIAGNOSIS AND TESTING - AMBIENT	24-3
TEMPERATURE SENSOR CIRCUIT, DIAGNOSIS AND TESTING - AMBIENT	8J-9
TEMPERATURE SENSOR CIRCUIT, DIAGNOSIS AND TESTING - ENGINE COOLANT	24-23
TEMPERATURE SENSOR CIRCUIT, DIAGNOSIS AND TESTING - EVAPORATOR	24-18
TEMPERATURE SENSOR CIRCUIT, DIAGNOSIS AND TESTING - LEFT HEATER CORE	24-8
TEMPERATURE SENSOR CIRCUIT, DIAGNOSIS AND TESTING - RIGHT HEATER CORE	24-13
TEMPERATURE SENSOR CIRCUIT HIGH, DIAGNOSIS AND TESTING - (P0113) INTAKE AIR	9-36
TEMPERATURE SENSOR CIRCUIT HIGH, DIAGNOSIS AND TESTING - (P0118) ENGINE COOLANT	9-51
TEMPERATURE SENSOR CIRCUIT LOW, DIAGNOSIS AND TESTING - (P0112) INTAKE AIR	9-31
TEMPERATURE SENSOR CIRCUIT LOW, DIAGNOSIS AND TESTING - (P0117) ENGINE COOLANT	9-49
TEMPERATURE SENSOR PERFORMANCE, DIAGNOSIS AND TESTING - (P0116) ENGINE COOLANT	9-40
TEMPERATURE SENSOR SHORT CIRCUIT, DIAGNOSIS AND TESTING - (P0116) ENGINE COOLANT	9-47
TENSIONER - DESCRIPTION, SEAT BELT & SEAT BELT	8O-119
TENSIONER - INSPECTION, SEAT BELT & SEAT BELT	8O-125
TENSIONER - INSTALLATION, BELT	7-44
TENSIONER - INSTALLATION, SEAT BELT & SEAT BELT	8O-125
TENSIONER - INSTALLATION, TIMING CHAIN	9-685
TENSIONER - OPERATION, SEAT BELT & SEAT BELT	8O-120
TENSIONER - REMOVAL, BELT	7-44
TENSIONER - REMOVAL, SEAT BELT & SEAT BELT	8O-122
TENSIONER - REMOVAL, TIMING CHAIN	9-684
TENSIONER CIRCUIT, DIAGNOSIS AND TESTING - DRIVER SEAT BELT	8O-53
TENSIONER CIRCUIT, DIAGNOSIS AND TESTING - PASSENGER SEAT BELT	8O-56
TENSIONER SQUIB CIRCUIT, DIAGNOSIS AND TESTING - DRIVER SEAT BELT	8O-10
TENSIONER SQUIB CIRCUIT, DIAGNOSIS AND TESTING - PASSENGER SEAT BELT	8O-17
TERMINAL - INSTALLATION	8W-01-12
TERMINAL - REMOVAL	8W-01-12
TEST - DIAGNOSIS AND TESTING, INSPECTION AND ROAD	5-191
TEST - STANDARD PROCEDURE, IGNITION-OFF DRAW	8F-14
TEST - STANDARD PROCEDURE, OPEN-CIRCUIT VOLTAGE	8F-13
TEST - STANDARD PROCEDURE, SUPPLEMENTAL RESTRAINT SYSTEM (SRS) - VERIFICATION	8O-86
TEST, DIAGNOSIS AND TESTING - ABS VERIFICATION	5-148,5-185
TEST, DIAGNOSIS AND TESTING - AIRBAG VERIFICATION	8O-67
TEST, DIAGNOSIS AND TESTING - BODY VERIFICATION	8A-16
TEST, DIAGNOSIS AND TESTING - BODY VERIFICATION	8E-44
TEST, DIAGNOSIS AND TESTING - BODY VERIFICATION	8G-20,8G-34,8G-8
TEST, DIAGNOSIS AND TESTING - BODY VERIFICATION	8H-7
TEST, DIAGNOSIS AND TESTING - BODY VERIFICATION	8J-52
TEST, DIAGNOSIS AND TESTING - BODY VERIFICATION	8L-133,8L-77
TEST, DIAGNOSIS AND TESTING - BODY VERIFICATION	8N-119,8N-28,8N-62,8N-93
TEST, DIAGNOSIS AND TESTING - SENTRY KEY VERIFICATION	8Q-43
TEST, DIAGNOSIS AND TESTING - VTSS VERIFICATION	8Q-33
TESTER - STANDARD PROCEDURE, USING MICRO 420 BATTERY	8F-12
THEFT SECURITY - SERVICE INFORMATION - DESCRIPTION, VEHICLE	8Q-46
THEFT SECURITY - SERVICE INFORMATION - OPERATION, VEHICLE	8Q-47
THERMOSTAT - DESCRIPTION, ENGINE COOLANT	7-21
THERMOSTAT - DIAGNOSIS AND TESTING, ENGINE COOLANT	7-22
THERMOSTAT - INSTALLATION, ENGINE COOLANT	7-23
THERMOSTAT - OPERATION, ENGINE COOLANT	7-21
THERMOSTAT - REMOVAL, ENGINE COOLANT	7-23
THERMOSTAT RATIONALITY, DIAGNOSIS AND TESTING - (P0128)	9-78
THREAD REPAIR - STANDARD PROCEDURE, ALUMINUM	21-210
THREADED HOLE REPAIR, DESCRIPTION	Intro.-6
THREADS - STANDARD PROCEDURE, REPAIR OF DAMAGED OR WORN	9-589
THRESHOLD, DIAGNOSIS AND TESTING - (P0137) O2 SENSOR 1/2 ABOVE	9-121
THRESHOLD, DIAGNOSIS AND TESTING - (P0137) O2 SENSOR 1/2 BELOW	9-119
THRESHOLD, DIAGNOSIS AND TESTING - (P0137) O2 SENSOR 2/2 BELOW	9-127
THROTTLE ACTUATOR STUCK, DIAGNOSIS AND TESTING - (P0211)	9-252, 9-257
THROTTLE ANGLE AND SPEED, DIAGNOSIS AND TESTING - (P0104) MAF SENSOR	9-19

Description	Group-Page
THROTTLE BODY - DESCRIPTION	14-47
THROTTLE BODY - INSTALLATION	14-48
THROTTLE BODY - OPERATION	14-47
THROTTLE BODY - REMOVAL	14-48
THROTTLE CONTROL MODULE PERFORMANCE, DIAGNOSIS AND TESTING - (P0221) ELECTRONIC	9-270
THROTTLE CONTROL MODULE PROCESSOR, DIAGNOSIS AND TESTING - (P0221) ELECTRONIC	9-272
THROTTLE CONTROL MOTOR PERFORMANCE, DIAGNOSIS AND TESTING - (P0120) ELECTRONIC	9-53
THROTTLE POSITION SENSOR - DESCRIPTION	14-49
THROTTLE POSITION SENSOR - OPERATION	14-50
THROTTLE POSITION SENSOR 1/2 CORRELATION, DIAGNOSIS AND TESTING - (P0120)	9-59
TIE ROD END - INSTALLATION	19-50
TIE ROD END - REMOVAL	19-49
TIMING - OPERATION, ENGINE	9-704
TIMING CHAIN - INSTALLATION	9-695
TIMING CHAIN - REMOVAL	9-693
TIMING CHAIN COVER - INSTALLATION	9-688
TIMING CHAIN COVER - REMOVAL	9-685
TIMING CHAIN GUIDES - INSTALLATION	9-703
TIMING CHAIN GUIDES - REMOVAL	9-703
TIMING CHAIN TENSIONER - INSTALLATION	9-685
TIMING CHAIN TENSIONER - REMOVAL	9-684
TIMING OVER-ADVANCED, DIAGNOSIS AND TESTING - (P0341) CAMSHAFT POSITION	9-344
TIMING OVER-RETARDED, DIAGNOSIS AND TESTING - (P0341) CAMSHAFT POSITION	9-340
TIRE AND WHEEL BALANCE, STANDARD PROCEDURE	22-42
TIRE AND WHEEL INSTALLATION - STANDARD PROCEDURE	22-46
TIRE AND WHEEL RUNOUT - DIAGNOSIS AND TESTING	22-38
TIRE INFLATION PRESSURES, DESCRIPTION	22-57
TIRE NOISE OR VIBRATION - DIAGNOSIS AND TESTING	22-59
TIRE PRESSURE FOR HIGH SPEED, DESCRIPTION	22-58
TIRE PRESSURE MONITOR MODULE FAILURE, DIAGNOSIS AND TESTING	22-4
TIRE PRESSURE MONITORING - DESCRIPTION	22-46
TIRE PRESSURE MONITORING - OPERATION	22-48
TIRE PRESSURE MONITORING SYSTEM - DIAGNOSIS AND TESTING	22-48
TIRE PRESSURE MONITORING SYSTEM, SPECIFICATIONS	22-49
TIRE PRESSURE SENSOR/ TRANSMITTER, DIAGNOSIS AND TESTING	22-19
TIRE PRESSURE SENSOR/ TRANSMITTER, DIAGNOSIS AND TESTING - LEFT FRONT	22-24
TIRE PRESSURE SENSOR/ TRANSMITTER, DIAGNOSIS AND TESTING - LEFT REAR	22-26
TIRE PRESSURE SENSOR/ TRANSMITTER, DIAGNOSIS AND TESTING - RIGHT FRONT	22-28
TIRE PRESSURE SENSOR/ TRANSMITTER, DIAGNOSIS AND TESTING - RIGHT REAR	22-30
TIRE PRESSURE SENSOR/TRANSMITTER LOW BATTERY, DIAGNOSIS AND TESTING	22-32
TIRE PRESSURE SENSOR/TRANSMITTER SIGNAL JAMMED, DIAGNOSIS AND TESTING	22-6
TIRE PRESSURE SENSOR/TRANSMITTER SIGNAL JAMMED, DIAGNOSIS AND TESTING - LEFT FRONT	22-11
TIRE PRESSURE SENSOR/TRANSMITTER SIGNAL JAMMED, DIAGNOSIS AND TESTING - LEFT REAR	22-13
TIRE PRESSURE SENSOR/TRANSMITTER SIGNAL JAMMED, DIAGNOSIS AND TESTING - RIGHT FRONT	22-15
TIRE PRESSURE SENSOR/TRANSMITTER SIGNAL JAMMED, DIAGNOSIS AND TESTING - RIGHT REAR	22-17
TIRE PRESSURE VERIFICATION TEST, DIAGNOSIS AND TESTING	22-35
TIRE ROTATION - STANDARD PROCEDURE	22-45
TIRE WEAR PATTERNS - DIAGNOSIS AND TESTING	22-59
TIREFIT - STANDARD PROCEDURE, DRAINING	22-60
TIRES - RADIAL, PLY	22-57
TIRES - SPECIFICATIONS	22-61
TIRES, DESCRIPTION	22-56
TIRES, DESCRIPTION - REPLACEMENT	22-58
TIRES TRAINED, DIAGNOSIS AND TESTING - NO	22-2
TIRE/VEHICLE LEAD - DIAGNOSIS AND TESTING	22-60
TOE - STANDARD PROCEDURE, CHECKING AND ADJUSTING REAR AXLE	2-12
TOE-IN - STANDARD PROCEDURE, CHECKING AND ADJUSTING FRONT	2-10
TOE-OUT ON TURNS - STANDARD PROCEDURE, CHECKING	2-11
TOGGLING CUSTOMER PREFERENCES - STANDARD PROCEDURE	8N-35
TOUCH - UP - DESCRIPTION, PAINT	23-200
TOW HOOKS - DESCRIPTION, EMERGENCY	0-14
TOW SENSOR - INSTALLATION, ANTI-THEFT	8Q-58
TOW SENSOR - REMOVAL, ANTI-THEFT	8Q-57
TOW SENSOR SIGNAL CIRCUIT, DIAGNOSIS AND TESTING - ANTI-THEFT	8Q-22
TOW-AWAY ALARM SWITCH - INSTALLATION	8Q-59
TOW-AWAY ALARM SWITCH - REMOVAL	8Q-59
TOWING - STANDARD PROCEDURE	0-6
TPM MODULE PROGRAMMING - STANDARD PROCEDURE	22-50
TRACK - INSTALLATION, POWER SEAT	8N-107
TRACK - REMOVAL, POWER SEAT	8N-105
TRACK BAR - INSTALLATION	2-53
TRACK BAR - REMOVAL	2-52
TRAILING LINK - INSTALLATION	2-51
TRAILING LINK - REMOVAL	2-50
TRAINED, DIAGNOSIS AND TESTING - NO TIRES	22-2
TRANS PERFORMANCE, DIAGNOSIS AND TESTING - (P0571) STOP LAMP SWITCH CAN SIGNAL LOST TO	9-421
TRANS TEMP SENSOR ERRATIC, DIAGNOSIS AND TESTING - (P0714)	21-87
TRANS TEMP SENSOR, P/N SWITCH CIRCUIT - (P0850)	21-158
TRANS TEMP SENSOR SHORTED, DIAGNOSIS AND TESTING - (P0710)	21-83
TRANSDUCER - INSTALLATION, A/C PRESSURE	24-86
TRANSDUCER - REMOVAL, A/C PRESSURE	24-86
TRANSMISSION - DIAGNOSIS AND TESTING, AUTOMATIC	21-207
TRANSMISSION - SPECIAL TOOLS, NAG1 AUTOMATIC	21-252
TRANSMISSION - SPECIFICATIONS, NAG1 AUTOMATIC	21-251
TRANSMISSION BUS MESSAGE, DIAGNOSIS AND TESTING - (P0600) NO	9-433
TRANSMISSION CONTROL MODULE - DESCRIPTION	8E-58
TRANSMISSION CONTROL MODULE - INSTALLATION	8E-61
TRANSMISSION CONTROL MODULE - OPERATION	8E-58
TRANSMISSION CONTROL MODULE - REMOVAL	8E-60
TRANSMISSION CONTROL MODULE, DIAGNOSIS AND TESTING - NO RESPONSE FROM	8E-33
TRANSMISSION CONTROL MODULE LOW VOLTAGE, DIAGNOSIS AND TESTING - (P0702)	9-455
TRANSMISSION CONTROL SYSTEM (MIL REQUEST), DIAGNOSIS AND TESTING - (P0700)	9-453
TRANSMISSION CONTROL SYSTEM (MIL REQUEST), DIAGNOSIS AND TESTING - (P0702)	9-457
TRANSMISSION CONTROL SYSTEM (MIL REQUEST), DIAGNOSIS AND TESTING - (P0705)	9-465
TRANSMISSION CONTROL SYSTEM (MIL REQUEST), DIAGNOSIS AND TESTING - (P0715)	9-467
TRANSMISSION CONTROL SYSTEM (MIL REQUEST), DIAGNOSIS AND TESTING - (P0720)	9-475
TRANSMISSION CONTROL SYSTEM (MIL REQUEST), DIAGNOSIS AND TESTING - (P0730)	9-477
TRANSMISSION CONTROL SYSTEM (MIL REQUEST), DIAGNOSIS AND TESTING - (P0740)	9-479
TRANSMISSION CONTROL SYSTEM (MIL REQUEST), DIAGNOSIS AND TESTING - (P0743)	9-481
TRANSMISSION CONTROL SYSTEM (MIL REQUEST), DIAGNOSIS AND TESTING - (P0748)	9-483
TRANSMISSION CONTROL SYSTEM (MIL REQUEST), DIAGNOSIS AND TESTING - (P0753)	9-485
TRANSMISSION CONTROL SYSTEM (MIL REQUEST), DIAGNOSIS AND TESTING - (P0758)	9-487
TRANSMISSION CONTROL SYSTEM (MIL REQUEST), DIAGNOSIS AND TESTING - (P0763)	9-489
TRANSMISSION COOLER LINES - INSTALLATION	7-50
TRANSMISSION COOLER LINES - REMOVAL	7-49
TRANSMISSION, DIAGNOSIS AND TESTING - AUTOMATIC	21-206
TRANSMISSION FILL - STANDARD PROCEDURE	21-296
TRANSMISSION FLUID - DESCRIPTION, AUTOMATIC	0-5
TRANSMISSION FRONT SECTION - ASSEMBLY	21-361
TRANSMISSION FRONT SECTION - DISASSEMBLY	21-361
TRANSMISSION INCORRECT TORQUE REQUEST FROM ESP, DIAGNOSIS AND TESTING - (P0720)	9-469
TRANSMISSION SLIPPING, DIAGNOSIS AND TESTING - (P0700)	21-71
TRANSMISSION TEMPERATURE SENSOR - DESCRIPTION	21-327
TRANSMISSION TEMPERATURE SENSOR - OPERATION	21-328
TRANSMISSION VERIFICATION TEST, DIAGNOSIS AND TESTING	21-181
TRANSMITTER - DESCRIPTION, UNIVERSAL	8M-1
TRANSMITTER - DIAGNOSIS AND TESTING, KEYLESS ENTRY	8N-37
TRANSMITTER - DIAGNOSIS AND TESTING, UNIVERSAL	8M-2
TRANSMITTER - INSTALLATION, UNIVERSAL	8M-4
TRANSMITTER - OPERATION, UNIVERSAL	8M-2
TRANSMITTER - REMOVAL, UNIVERSAL	8M-3
TRANSMITTER, DIAGNOSIS AND TESTING - INVALID	8Q-36
TRANSMITTER FAILURE, DIAGNOSIS AND TESTING	22-22
TRANSMITTER PROGRAMMING - STANDARD PROCEDURE	8N-37
TRANSMITTER PROGRAMMING - STANDARD PROCEDURE, UNIVERSAL	8M-3
TRANSMITTER, SPECIFICATIONS	8N-37
TRANS/NO COMM FROM TCM, DIAGNOSIS AND TESTING - (P0602) PCM PROGRAMMED INCORRECT	9-451
TRAVEL SENSOR - DESCRIPTION	5-201

Description	Group-Page
TRAVEL SENSOR - INSTALLATION	5-202,5-78
TRAVEL SENSOR - OPERATION	5-202
TRAVEL SENSOR - REMOVAL	5-202,5-78
TRAVEL SENSOR CIRCUIT, DIAGNOSIS AND TESTING - BAS	5-171
TRAY - DESCRIPTION	8F-22
TRAY - INSTALLATION	8F-23
TRAY - INSTALLATION, ASH	23-190
TRAY - OPERATION	8F-22
TRAY - REMOVAL	8F-23
TREAD WEAR INDICATORS - DIAGNOSIS AND TESTING	22-59
TRIM - INSTALLATION, A-PILLAR	23-162
TRIM - REMOVAL, A-PILLAR	23-161
TRIM PANEL - INSTALLATION	23-109,23-49
TRIM PANEL - REMOVAL	23-108,23-48
TRIM PLATE - INSTALLATION, DOOR SILL	23-193
TRIM PLATE - REMOVAL, DOOR SILL	23-193
TRIP DEFINITION - DESCRIPTION	25-12
TRIPS ON ITS OWN, DIAGNOSIS AND TESTING - ALARM	8Q-32
TUBE - DESCRIPTION, FUEL TANK FILLER	14-24
TUBE - INSTALLATION	25-26
TUBE - INSTALLATION, OIL LEVEL INDICATOR	9-663
TUBE - REMOVAL	25-26
TUBE - REMOVAL, OIL LEVEL INDICATOR	9-663
TUBES - INSTALLATION, WASHER HOSES	8R-27
TUBES - REMOVAL, WASHER HOSES	8R-26
TUNE VALVE - DESCRIPTION, MANIFOLD	14-40
TUNE VALVE - INSTALLATION, MANIFOLD	14-41
TUNE VALVE - OPERATION, MANIFOLD	14-40
TUNE VALVE - REMOVAL, MANIFOLD	14-41
TURN LAMP INOPERATIVE, DIAGNOSIS AND TESTING - LEFT FRONT	8L-11
TURN LAMP INOPERATIVE, DIAGNOSIS AND TESTING - LEFT REAR	8L-53
TURN LAMP INOPERATIVE, DIAGNOSIS AND TESTING - RIGHT FRONT	8L-17
TURN LAMP INOPERATIVE, DIAGNOSIS AND TESTING - RIGHT REAR	8L-65
TURN SIGNAL - INSTALLATION	8L-116
TURN SIGNAL - REMOVAL	8L-114
TURN SIGNAL INDICATOR INOPERATIVE, DIAGNOSIS AND TESTING - LEFT	8J-38
TURN SIGNAL INDICATOR INOPERATIVE, DIAGNOSIS AND TESTING - RIGHT	8J-40
TURN SIGNAL LAMP - INSTALLATION, FRONT	8L-99
TURN SIGNAL LAMP - REMOVAL, FRONT	8L-98
TURNS - STANDARD PROCEDURE, CHECKING TOE-OUT ON	2-11
TWEETER SPEAKER - INSTALLATION	8A-34
TWEETER SPEAKER - REMOVAL	8A-30
UNDERHOOD ACCESSORY FUSE BLOCK - DESCRIPTION	8W-97-5
UNDERHOOD ACCESSORY FUSE BLOCK - INSTALLATION	8W-97-5
UNDERHOOD ACCESSORY FUSE BLOCK - OPERATION	8W-97-5
UNDERHOOD ACCESSORY FUSE BLOCK - REMOVAL	8W-97-5
UNDERVOLTAGE, DIAGNOSIS AND TESTING	21-179
UNDERVOLTAGE, DIAGNOSIS AND TESTING - CAB SYSTEM	5-155,5-82
UNDERVOLTAGE, DIAGNOSIS AND TESTING - CENTRAL LOCKING PUMP/SECURITY SYSTEM MODULE SYSTEM	8Q-2
UNDERVOLTAGE, DIAGNOSIS AND TESTING - CLP/SSM SYSTEM	8N-14
UNDERVOLTAGE, DIAGNOSIS AND TESTING - ORC SYSTEM	8O-43
UNDERVOLTAGE, DIAGNOSIS AND TESTING - (P0562) SYSTEM	21-6
UNIT - ASSEMBLY, ELECTROHYDRAULIC	21-287
UNIT - DESCRIPTION, ELECTROHYDRAULIC	21-268
UNIT - DESCRIPTION, HEADLAMP	8L-107
UNIT - DIAGNOSIS AND TESTING, FUEL LEVEL SENDING	14-12
UNIT - DISASSEMBLY, ELECTROHYDRAULIC	21-282
UNIT - INSTALLATION, CARGO LAMP	8L-140
UNIT - INSTALLATION, ELECTROHYDRAULIC	21-290
UNIT - INSTALLATION, FOG LAMP	8L-96
UNIT - INSTALLATION, HEADLAMP	8L-108
UNIT - OPERATION, ELECTROHYDRAULIC	21-275
UNIT - REMOVAL, CARGO LAMP	8L-139
UNIT - REMOVAL, ELECTROHYDRAULIC	21-281
UNIT - REMOVAL, FOG LAMP	8L-95
UNIT - REMOVAL, HEADLAMP	8L-108
UNIT, INSTALLATION - TAIL LAMP	8L-115
UNIT, REMOVAL - TAIL LAMP	8L-113
UNIT/SENSOR, DESCRIPTION - FUEL LEVEL SENDING	14-11
UNIT/SENSOR, OPERATION - FUEL LEVEL SENDING	14-11
UNIVERSAL GARAGE DOOR OPENER/ TIRE PRESSURE MONITOR, DIAGNOSIS AND TESTING - NO RESPONSE FROM	8E-17
UNIVERSAL JOINTS - ASSEMBLY, SINGLE CARDAN	3-33
UNIVERSAL JOINTS - DISASSEMBLY, SINGLE CARDAN	3-32
UNIVERSAL TRANSMITTER - DESCRIPTION	8M-1
UNIVERSAL TRANSMITTER - DIAGNOSIS AND TESTING	8M-2
UNIVERSAL TRANSMITTER - INSTALLATION	8M-4
UNIVERSAL TRANSMITTER - OPERATION	8M-2
UNIVERSAL TRANSMITTER - REMOVAL	8M-3
UNIVERSAL TRANSMITTER PROGRAMMING - STANDARD PROCEDURE	8M-3
UNLOCK SWITCH SENSE CIRCUIT, DIAGNOSIS AND TESTING - DOOR	8Q-19
UNLOCK SWITCH SENSE CIRCUIT, DIAGNOSIS AND TESTING - DOOR LOCK/DOOR	8N-22
UP - DESCRIPTION, PAINT TOUCH	23-200
UP, DIAGNOSIS AND TESTING - DRB III® DOES NOT POWER	8E-2
UP LAMP INOPERATIVE, DIAGNOSIS AND TESTING - LEFT BACK	8L-50
UP LAMP INOPERATIVE, DIAGNOSIS AND TESTING - RIGHT BACK	8L-62
UPPER CONTROL ARM - INSTALLATION	2-39
UPPER CONTROL ARM - REMOVAL	2-39
UPPER OIL PAN - INSTALLATION	9-671
UPPER OIL PAN - REMOVAL	9-669
UPRIGHT POSITION - STANDARD PROCEDURE, MOVING THE HOOD TO ITS FULLY	23-130
UPSTREAM O2, INSTALLATION	14-46
UPSTREAM O2 SENSOR, REMOVAL	14-45
USAGE, DESCRIPTION - FASTENER	Intro.-6
USE WIRING DIAGRAMS - DESCRIPTION, HOW TO	8W-01-1
USING MICRO 420 BATTERY TESTER - STANDARD PROCEDURE	8F-12
VALVE - DESCRIPTION	25-27
VALVE - DESCRIPTION, A/C EXPANSION	24-138
VALVE - DESCRIPTION, CHARCOAL CANISTER SHUTOFF	25-16
VALVE - DESCRIPTION, COOLANT CIRCULATION	24-150
VALVE - DESCRIPTION, FUEL FILL CHECK	14-7
VALVE - DESCRIPTION, MANIFOLD TUNE	14-40
VALVE - DESCRIPTION, OIL PRESSURE RELIEF	9-677
VALVE - DESCRIPTION, SOLENOID	5-202
VALVE - DIAGNOSIS AND TESTING, A/C EXPANSION	24-139
VALVE - INSTALLATION	25-28
VALVE - INSTALLATION, A/C EXPANSION	24-140
VALVE - INSTALLATION, CHARCOAL CANISTER SHUTOFF	25-16
VALVE - INSTALLATION, COOLANT CIRCULATION	24-153
VALVE - INSTALLATION, MANIFOLD TUNE	14-41
VALVE - INSTALLATION, RECIRC AIR SWITCHOVER	24-87
VALVE - INSTALLATION, SOLENOID	5-202
VALVE - INSTALLATION, SWITCHOVER	25-36
VALVE - OPERATION	25-27
VALVE - OPERATION, A/C EXPANSION	24-139
VALVE - OPERATION, CHARCOAL CANISTER SHUTOFF	25-16
VALVE - OPERATION, COOLANT CIRCULATION	24-151
VALVE - OPERATION, FUEL FILL CHECK	14-7
VALVE - OPERATION, MANIFOLD TUNE	14-40
VALVE - OPERATION, SOLENOID	5-202
VALVE - REMOVAL	25-27
VALVE - REMOVAL, A/C EXPANSION	24-140
VALVE - REMOVAL, CHARCOAL CANISTER SHUTOFF	25-16
VALVE - REMOVAL, COOLANT CIRCULATION	24-152
VALVE - REMOVAL, MANIFOLD TUNE	14-41
VALVE - REMOVAL, RECIRC AIR SWITCHOVER	24-87
VALVE - REMOVAL, SOLENOID	5-202
VALVE - REMOVAL, SWITCHOVER	25-36
VALVE CIRCUIT, DIAGNOSIS AND TESTING - BAS SOLENOID	5-181
VALVE CIRCUIT, DIAGNOSIS AND TESTING - LEFT COOLANT CIRCULATION	24-37
VALVE CIRCUIT, DIAGNOSIS AND TESTING - RECIRCULATED AIR SWITCHOVER	24-46
VALVE CIRCUIT, DIAGNOSIS AND TESTING - RIGHT COOLANT CIRCULATION	24-40
VALVE, DIAGNOSIS AND TESTING - (P0441) EVAP PURGE	9-376
VALVE, DIAGNOSIS AND TESTING - (P0446) CHARCOAL CANISTER SHUTOFF	9-384
VALVE LEAKING, DIAGNOSIS AND TESTING - (P0457) EVAP PURGE	9-406
VALVE SPRINGS - DESCRIPTION	9-633
VALVE SPRINGS - OPERATION	9-633
VALVE STEM SEAL - INSTALLATION	9-628
VALVE STEM SEAL - REMOVAL	9-627
VALVES AND SEALS - CLEANING, INTAKE/EXHAUST	9-632
VALVES AND SEALS - DESCRIPTION, INTAKE/EXHAUST	9-630
VALVES AND SEALS - INSTALLATION, INTAKE/EXHAUST	9-632
VALVES AND SEALS - OPERATION, INTAKE/EXHAUST	9-630
VALVES AND SEALS - REMOVAL, INTAKE/EXHAUST	9-630
VAPOR CANISTER - DESCRIPTION	25-20
VAPOR CANISTER - INSTALLATION	25-21
VAPOR CANISTER - OPERATION	25-20
VAPOR CANISTER - REMOVAL	25-20
VECI LABEL - DESCRIPTION	Intro.-9
VEHICLE EMISSION CONTROL INFORMATION LABEL - DESCRIPTION	25-12
VEHICLE EQUIPMENT, DIAGNOSIS AND TESTING - PROGRAMMING DOES NOT CORRESPOND TO THE	8O-41
VEHICLE IDENTIFICATION NUMBER - DESCRIPTION	Intro.-2
VEHICLE LEVEL AT FRONT AND REAR AXLES, STANDARD PROCEDURE - INSPECTING AND ADJUSTING	2-8
VEHICLE LEVEL AT FRONT AND REAR AXLES WITH AN ELECTRONIC INCLINOMETER, STANDARD PROCEDURE - INSPECTING AND ADJUSTING	2-8
VEHICLE SAFETY CERT LABEL - DESCRIPTION	Intro.-1
VEHICLE SPEED PERFORMANCE ESP MIL REQUEST, DIAGNOSIS AND TESTING - (P0500)	9-412
VEHICLE SPEED SIGNAL (CAB CAN MESSAGE), DIAGNOSIS AND TESTING - (P0500) NO	9-410
VEHICLE THEFT SECURITY - SERVICE INFORMATION - DESCRIPTION	8Q-46
VEHICLE THEFT SECURITY - SERVICE INFORMATION - OPERATION	8Q-47
VENT HOSE - DESCRIPTION, CRANKCASE	25-16

Description	Group-Page
VERIFICATION TEST - STANDARD PROCEDURE, SUPPLEMENTAL RESTRAINT SYSTEM (SRS)	8O-86
VERIFICATION TEST, DIAGNOSIS AND TESTING - ABS	5-148,5-185
VERIFICATION TEST, DIAGNOSIS AND TESTING - AIRBAG	8O-67
VERIFICATION TEST, DIAGNOSIS AND TESTING - BODY	8A-16
VERIFICATION TEST, DIAGNOSIS AND TESTING - BODY	8E-44
VERIFICATION TEST, DIAGNOSIS AND TESTING - BODY	8G-20,8G-34,8G-8
VERIFICATION TEST, DIAGNOSIS AND TESTING - BODY	24-53
VERIFICATION TEST, DIAGNOSIS AND TESTING - BODY	8H-7
VERIFICATION TEST, DIAGNOSIS AND TESTING - BODY	8J-52
VERIFICATION TEST, DIAGNOSIS AND TESTING - BODY	8L-133,8L-77
VERIFICATION TEST, DIAGNOSIS AND TESTING - BODY	8N-119,8N-28,8N-62,8N-93
VERIFICATION TEST, DIAGNOSIS AND TESTING - REAR SPOILER	23-27
VERIFICATION TEST, DIAGNOSIS AND TESTING - SENTRY KEY	8Q-43
VERIFICATION TEST, DIAGNOSIS AND TESTING - TIRE PRESSURE	22-35
VERIFICATION TEST, DIAGNOSIS AND TESTING - TRANSMISSION	21-181
VERIFICATION TEST, DIAGNOSIS AND TESTING - VTSS	8Q-33
VERIFICATION TEST, VER 1 - POWERTRAIN	9-569
VERIFICATION TEST, VER 2 - POWERTRAIN	9-570
VERIFICATION TEST, VER 3 - POWERTRAIN	7-9
VERIFICATION TEST, VER 3 - POWERTRAIN	9-571
VERIFICATION TEST, VER 4 - POWERTRAIN	9-572
VERIFICATION TEST, VER 5 - POWERTRAIN	9-573
VERSION, DIAGNOSIS AND TESTING - (P0702) INVALID CONTROL MODULE	21-78
VIBRATION - DIAGNOSIS AND TESTING, TIRE NOISE OR	22-59
VIBRATION DAMPER - INSTALLATION	9-652
VIBRATION DAMPER - REMOVAL	9-651
VOLTAGE CORRELATION, DIAGNOSIS AND TESTING - (P0221) APPS SENSOR #1 AND #2	9-262
VOLTAGE, DIAGNOSIS AND TESTING - (P0561) BATTERY SYSTEM	9-414
VOLTAGE, DIAGNOSIS AND TESTING - (P0700) SENSOR SUPPLY	21-67
VOLTAGE, DIAGNOSIS AND TESTING - (P0702) TRANSMISSION CONTROL MODULE LOW	9-455
VOLTAGE, DIAGNOSIS AND TESTING - (P0778) SOLENOID SUPPLY	21-154
VOLTAGE DROP - STANDARD PROCEDURE, TESTING FOR A	8W-01-11
VOLTAGE INDICATOR INOPERATIVE, DIAGNOSIS AND TESTING - BATTERY	8J-46
VOLTAGE POTENTIAL - STANDARD PROCEDURE, TESTING OF	8W-01-9
VOLTAGE REGULATOR - DESCRIPTION	8F-30
VOLTAGE SUPPLY CIRCUIT OPEN, DIAGNOSIS AND TESTING	8R-2
VOLTAGE TEST - STANDARD PROCEDURE, OPEN-CIRCUIT	8F-13
VTSS VERIFICATION TEST, DIAGNOSIS AND TESTING	8Q-33
WARNING INDICATOR CIRCUIT, DIAGNOSIS AND TESTING - AIRBAG	8O-46
WARNING INDICATOR INOPERATIVE, DIAGNOSIS AND TESTING - BRAKE	8J-44
WARNING SYSTEM - DIAGNOSIS AND TESTING, CHIME	8B-4
WASHER FLUID LEVEL SWITCH - INSTALLATION	8R-26
WASHER FLUID LEVEL SWITCH - REMOVAL	8R-26
WASHER HOSES / TUBES - INSTALLATION	8R-27
WASHER HOSES / TUBES - REMOVAL	8R-26
WASHER NOZZLE - INSTALLATION	8R-30
WASHER NOZZLE - REMOVAL	8R-29
WASHER NOZZLE AIMING - STANDARD PROCEDURE	8R-28
WASHER PUMP MOTOR - INSTALLATION	8R-31
WASHER PUMP MOTOR - REMOVAL	8R-31
WASHER RESERVOIR - INSTALLATION	8R-32
WASHER RESERVOIR - REMOVAL	8R-32
WASHERS INOPERATIVE, DIAGNOSIS AND TESTING	8R-4
WASHERS RUN CONTINUOUSLY WITH IGNITION ON, DIAGNOSIS AND TESTING	8R-6
WATER CONTAMINATION, DIAGNOSIS AND TESTING - ENGINE OIL SENSOR	9-538
WATER LEAKS, DIAGNOSIS AND TESTING	23-29
WATER PUMP - DESCRIPTION	7-36
WATER PUMP - INSPECTION	7-38
WATER PUMP - INSTALLATION	7-40
WATER PUMP - REMOVAL	7-37
WEAR INDICATORS - DIAGNOSIS AND TESTING, TREAD	22-59
WEAR PATTERNS - DIAGNOSIS AND TESTING, TIRE	22-59
WELD LOCATIONS - SPECIFICATIONS	23-74
WELDING, STANDARD PROCEDURE - DRILLING	23-31
WET SANDING/BUFFING & POLISHING - DESCRIPTION	23-200
WHEEL - INSTALLATION, STEERING	19-26
WHEEL - REMOVAL, STEERING	19-25
WHEEL ALIGNMENT - DESCRIPTION	2-4
WHEEL ALIGNMENT - OPERATION	2-5
WHEEL ALIGNMENT - SPECIFICATIONS	2-13
WHEEL ALIGNMENT INSPECTION - STANDARD PROCEDURE	2-6
WHEEL BALANCE, STANDARD PROCEDURE - TIRE	22-42
WHEEL BEARING, DIAGNOSIS AND TESTING - ADJUSTING	2-24
WHEEL INDICATOR INOPERATIVE, DIAGNOSIS AND TESTING - TELESCOPING	8J-50
WHEEL INSPECTION, DIAGNOSIS AND TESTING	22-62
WHEEL INSTALLATION - STANDARD PROCEDURE, TIRE	22-46
WHEEL REPLACEMENT, STANDARD PROCEDURE	22-63
WHEEL RUNOUT - DIAGNOSIS AND TESTING, TIRE	22-38
WHEEL SPEED SENSOR - DESCRIPTION, FRONT	5-193
WHEEL SPEED SENSOR - DESCRIPTION, REAR	5-196
WHEEL SPEED SENSOR - INSTALLATION, FRONT	5-195
WHEEL SPEED SENSOR - INSTALLATION, REAR	5-198
WHEEL SPEED SENSOR - OPERATION, FRONT	5-193
WHEEL SPEED SENSOR - OPERATION, REAR	5-196
WHEEL SPEED SENSOR - REMOVAL, FRONT	5-194
WHEEL SPEED SENSOR - REMOVAL, REAR	5-197
WHEEL SPEED SENSOR CIRCUIT, DIAGNOSIS AND TESTING - LEFT FRONT	5-95
WHEEL SPEED SENSOR CIRCUIT, DIAGNOSIS AND TESTING - LEFT REAR	5-107
WHEEL SPEED SENSOR CIRCUIT, DIAGNOSIS AND TESTING - RIGHT FRONT	5-101
WHEEL SPEED SENSOR CIRCUIT, DIAGNOSIS AND TESTING - RIGHT REAR	5-113
WHEELS, DESCRIPTION	22-62
WIND NOISE, DIAGNOSIS AND TESTING	23-30
WINDOW ANTENNA - DESCRIPTION, REAR	8A-24
WINDOW ANTENNA - INSTALLATION, REAR	8A-26
WINDOW ANTENNA - REMOVAL, REAR	8A-25
WINDOW ANTENNA MODULE - INSTALLATION, REAR	8A-23
WINDOW ANTENNA MODULE - REMOVAL, REAR	8A-23
WINDOW DEFOGGER GRID - DIAGNOSIS AND TESTING, REAR	8G-12
WINDOW DEFOGGER INOPERATIVE, DIAGNOSIS AND TESTING - REAR	8G-5
WINDOW DEFOGGER SWITCH - INSTALLATION, REAR	8G-12
WINDOW DEFOGGER SWITCH - REMOVAL, REAR	8G-12
WINDOW DEFOGGER SYSTEM - DIAGNOSIS AND TESTING, REAR	8G-11
WINDOW INOPERATIVE, DIAGNOSIS AND TESTING - LEFT FRONT POWER	8N-110
WINDOW INOPERATIVE, DIAGNOSIS AND TESTING - RIGHT FRONT POWER	8N-113
WINDOW MOTOR - INSTALLATION	8N-123
WINDOW MOTOR - REMOVAL	8N-122
WINDOW REGULATOR - INSTALLATION	23-102
WINDOW REGULATOR - REMOVAL	23-101
WINDOW SWITCH - INSTALLATION, POWER	8N-124
WINDOW SWITCH - REMOVAL, POWER	8N-124
WINDOWS - SERVICE INFORMATION - DESCRIPTION, POWER	8N-121
WINDOWS - SERVICE INFORMATION - DIAGNOSIS AND TESTING, POWER	8N-121
WINDOWS - SERVICE INFORMATION - OPERATION, POWER	8N-121
WINDOWS INOPERATIVE, DIAGNOSIS AND TESTING - BOTH POWER	8N-116
WINDSHIELD WIPER BLADE ALIGNMENT, STANDARD PROCEDURE	8R-36
WINDSHIELD WIPER/WASHER SYSTEM, DIAGNOSIS AND TESTING	8R-23
WING, INSTALLATION - SPOILER	23-121
WING, REMOVAL - SPOILER	23-117
WIPER ARMS - ADJUSTMENT	8R-36
WIPER ARMS - DESCRIPTION	8R-33
WIPER ARMS - INSTALLATION	8R-34
WIPER ARMS - REMOVAL	8R-33
WIPER BLADE ALIGNMENT, STANDARD PROCEDURE - WINDSHIELD	8R-36
WIPER BLADES - DESCRIPTION	8R-36
WIPER BLADES - OPERATION	8R-36
WIPER LINKAGE - DESCRIPTION	8R-42
WIPER MODULE - DESCRIPTION	8R-42
WIPER MODULE - INSTALLATION	8R-44
WIPER MODULE - REMOVAL	8R-42
WIPER MOTOR - INSTALLATION	8R-48
WIPER MOTOR - REMOVAL	8R-47
WIPER MOTOR SYNCHRONIZE - STANDARD PROCEDURE	8R-46
WIPERS HIGH SPEED INOPERATIVE, DIAGNOSIS AND TESTING	8R-11
WIPERS INOPERATIVE, DIAGNOSIS AND TESTING	8R-8
WIPERS INTERMITTENT SPEED INOPERATIVE, DIAGNOSIS AND TESTING	8R-15
WIPERS LOW SPEED INOPERATIVE, DIAGNOSIS AND TESTING	8R-13
WIPERS RUN CONTINUOUSLY WITH IGNITION ON, DIAGNOSIS AND TESTING	8R-17
WIPERS/WASHERS - SERVICE INFORMATION - DESCRIPTION	8R-21
WIPERS/WASHERS - SERVICE INFORMATION - OPERATION	8R-22
WIPER/WASHER SYSTEM, DIAGNOSIS AND TESTING - WINDSHIELD	8R-23
WIRE SPLICING - STANDARD PROCEDURE	8W-01-13
WIRING DIAGRAMS - DESCRIPTION, HOW TO USE	8W-01-1
WIRING HARNESS - DIAGNOSIS AND TESTING	8W-01-7
WORN THREADS - STANDARD PROCEDURE, REPAIR OF DAMAGED OR	9-589
YAW RATE SENSOR - DESCRIPTION	5-201
YAW RATE SENSOR - INSTALLATION	5-201
YAW RATE SENSOR - OPERATION	5-201
YAW RATE SENSOR - REMOVAL	5-201
YAW RATE SENSOR CIRCUIT, DIAGNOSIS AND TESTING - ESP	5-119

BODY DIAGNOSITCS

Description	Group-Page
A/C COMPRESSOR CLUTCH CIRCUIT	24-43
A/C PRESSURE SENSOR CIRCUIT	24-28
AIRBAG VERIFICATION TEST	8O-67
AIRBAG WARNING INDICATOR CIRCUIT	8O-46
AMBIENT TEMPERATURE SENSOR CIRCUIT	24-3
AMBIENT TEMPERATURE SENSOR CIRCUIT	8J-9
ANTI-THEFT TOW SENSOR SIGNAL CIRCUIT	8Q-22
BODY CONTROL MODULE INTERNAL FAILURE	23-2
BODY CONTROL MODULE INTERNAL FAILURE	8N-11
BODY VERIFICATION TEST	24-53
BODY VERIFICATION TEST	8A-16
BODY VERIFICATION TEST	8E-44
BODY VERIFICATION TEST	8G-20
BODY VERIFICATION TEST	8G-34
BODY VERIFICATION TEST	8G-8
BODY VERIFICATION TEST	8H-7
BODY VERIFICATION TEST	8J-52
BODY VERIFICATION TEST	8L-133
BODY VERIFICATION TEST	8L-77
BODY VERIFICATION TEST	8N-119
BODY VERIFICATION TEST	8N-28
BODY VERIFICATION TEST	8N-62
BODY VERIFICATION TEST	8N-93
CAN B BUS (+) CIRCUIT FAILURE	8Q-13
CAN B BUS (-) CIRCUIT FAILURE	8Q-10
CAN BUS COMMUNICATION GENERAL MALFUNCTION	8J-36
CENTRAL LOCKING PUMP/SECURITY SYSTEM MODULE INTERNAL FAILURE	8N-26
CENTRAL LOCKING PUMP/SECURITY SYSTEM MODULE INTERNAL FAILURE	8Q-30
CENTRAL LOCKING PUMP/SECURITY SYSTEM MODULE SYSTEM OVERVOLTAGE	8Q-5
CENTRAL LOCKING PUMP/SECURITY SYSTEM MODULE SYSTEM UNDERVOLTAGE	8Q-2
CLP/SSM SYSTEM OVERVOLTAGE	8N-17
CLP/SSM SYSTEM UNDERVOLTAGE	8N-14
COOLANT CIRCULATION PUMP CIRCUIT	24-34
COOLANT LEVEL SENSOR/WASHER FLUID LEVEL SWITCH CIRCUIT	8J-2
DOME LAMP CIRCUIT	8L-121
DOOR LOCK SWITCH SENSE CIRCUIT	8Q-16
DOOR LOCK/DOOR UNLOCK SWITCH SENSE CIRCUIT	8N-22
DOOR UNLOCK SWITCH SENSE CIRCUIT	8Q-19
DRIVER AIRBAG SQUIB CIRCUIT	8O-4
DRIVER DOOR LOCK ACTUATOR SLOW RESPONSE	8N-2
DRIVER SEAT BELT TENSIONER CIRCUIT	8O-53
DRIVER SEAT BELT TENSIONER SQUIB CIRCUIT	8O-10
ENGINE COOLANT TEMPERATURE SENSOR CIRCUIT	24-23
EVAPORATOR TEMPERATURE SENSOR CIRCUIT	24-18
FUEL DOOR LOCK ACTUATOR SLOW RESPONSE	8N-5
FUEL LEVEL SENSOR CIRCUIT	8J-7
HAZARD SWITCH CIRCUIT	8L-118
INVALID TRANSMITTER	8Q-36
LAMP OUTAGE INDICATOR CIRCUIT	8J-5
LEFT COOLANT CIRCULATION VALVE CIRCUIT	24-37
LEFT FRONT TIRE PRESSURE SENSOR/ TRANSMITTER SIGNAL JAMMED	22-11
LEFT FRONT TIRE PRESSURE SENSOR/ TRANSMITTER	22-24
LEFT HEATER CORE TEMPERATURE SENSOR CIRCUIT	24-8
LEFT REAR TIRE PRESSURE SENSOR/ TRANSMITTER SIGNAL JAMMED	22-13
LEFT REAR TIRE PRESSURE SENSOR/ TRANSMITTER	22-26
LEFT SIDE AIRBAG SQUIB CIRCUIT	8O-29
LEFT SIDE IMPACT SENSOR SIGNAL CIRCUIT	8O-59
NO CAN COMMUNICATIONS WITH CAB	8J-24
NO CAN COMMUNICATIONS WITH PCM	8J-18
NO CAN COMMUNICATIONS WITH PCM	8Q-25
NO CAN COMMUNICATIONS WITH TCM	8J-30
NO COMMUNICATION FROM INSTRUMENT CLUSTER	24-49
NO COMMUNICATION FROM INSTRUMENT CLUSTER	8J-14
NO COMMUNICATION TO INSTRUMENT CLUSTER	24-51
NO COMMUNICATION TO INSTRUMENT CLUSTER	8J-16
NO COMMUNICATION WITH BCM AND CENTRAL LOCKING PUMP/SECURITY SYSTEM MODULE	8Q-8
NO COMMUNICATION WITH BODY CONTROL MODULE AND CENTRAL LOCKING PUMP/SECURITY SYSTEM MODULE	8N-20
NO TIRES TRAINED	22-2
ORC INTERNAL FAILURE	8O-2
ORC SYSTEM UNDERVOLTAGE	8O-43
PASSENGER AIRBAG ON/OFF SWITCH SIGNAL CIRCUIT	8O-49
PASSENGER AIRBAG SQUIB CIRCUIT	8O-23
PASSENGER DOOR/LIFTGATE LOCK ACTUATOR SLOW RESPONSE	8N-8
PASSENGER SEAT BELT TENSIONER CIRCUIT	8O-56
PASSENGER SEAT BELT TENSIONER SQUIB CIRCUIT	8O-17
PROGRAMMING DOES NOT CORRESPOND TO THE VEHICLE EQUIPMENT	8O-41
REAR DEFOGGER SWITCH SENSE CIRCUIT	8G-2
REAR SPOILER DRIVER (DOWN) CIRCUIT	23-16
REAR SPOILER DRIVER (UP) CIRCUIT	23-13
REAR SPOILER LIMIT SWITCH FAILURE	23-19
REAR SPOILER MOTOR FAILURE	23-23
REAR SPOILER SWITCH SENSE CIRCUIT	23-4
REAR SPOILER VERIFICATION TEST	23-27
RECIRCULATED AIR SWITCHOVER VALVE CIRCUIT	24-46
REMOTE KEYLESS ENTRY RELAY CONTROL CIRCUIT	8Q-40
RIGHT COOLANT CIRCULATION VALVE CIRCUIT	24-40
RIGHT FRONT TIRE PRESSURE SENSOR/TRANSMITTER SIGNAL JAMMED	22-15
RIGHT FRONT TIRE PRESSURE SENSOR/TRANSMITTER	22-28
RIGHT HEATER CORE TEMPERATURE SENSOR CIRCUIT	24-13
RIGHT REAR TIRE PRESSURE SENSOR/ TRANSMITTER SIGNAL JAMMED	22-17
RIGHT REAR TIRE PRESSURE SENSOR/ TRANSMITTER	22-30
RIGHT SIDE AIRBAG SQUIB CIRCUIT	8O-35
RIGHT SIDE IMPACT SENSOR SIGNAL CIRCUIT	8O-63
SENTRY KEY ANTENNA CIRCUIT	8Q-38
SENTRY KEY REMOTE ENTRY MODULE INTERNAL FAILURE	8Q-34
SENTRY KEY VERIFICATION TEST	8Q-43
SIGNAL JAMMED	22-9
SIREN SIGNAL OUTPUT CIRCUIT	8Q-27
SPOILER LIMIT SWITCH SIGNAL (DOWN) CIRCUIT	23-10
SPOILER LIMIT SWITCH SIGNAL (UP) CIRCUIT	23-7
TIRE PRESSURE MONITOR MODULE FAILURE	22-4
TIRE PRESSURE SENSOR/TRANSMITTER LOW BATTERY	22-32
TIRE PRESSURE SENSOR/TRANSMITTER SIGNAL JAMMED	22-6
TIRE PRESSURE SENSOR/TRANSMITTER	22-19
TIRE PRESSURE VERIFICATION TEST	22-35
TRANSMITTER FAILURE	22-22
VOLTAGE SUPPLY CIRCUIT OPEN	8R-2
VTSS VERIFICATION TEST	8Q-33
*ALARM TRIPS ON ITS OWN	8Q-32
*ASH RECEIVER LAMP INOPERATIVE	8L-130
*AUTOMATIC DAY/NIGHT MIRROR INOPERATIVE	8N-59
*BATTERY VOLTAGE INDICATOR INOPERATIVE	8J-46
*BOTH HEATED SEATS INOPERATIVE	8G-32
*BOTH POWER MIRRORS INOPERATIVE	8N-57
*BOTH POWER SEATS INOPERATIVE	8N-78
*BOTH POWER WINDOWS INOPERATIVE	8N-116
*BRAKE WARNING INDICATOR INOPERATIVE	8J-44
*CARGO LAMP INOPERATIVE	8L-124
*CENTER HIGH MOUNTED STOP LAMP INOPERATIVE	8L-68
*DRB III® DOES NOT POWER UP	8E-2
*DRIVER POWER SEAT FRONT RISER MOTOR INOPERATIVE	8N-85
*DRIVER POWER SEAT HORIZONTAL MOTOR INOPERATIVE	8N-83
*DRIVER POWER SEAT INOPERATIVE	8N-74
*DRIVER POWER SEAT REAR RISER MOTOR INOPERATIVE	8N-87
*DRIVER POWER SEAT RECLINER MOTOR INOPERATIVE	8N-81
*GLOVE BOX LAMP INOPERATIVE	8L-127
*HIGH BEAM INDICATOR INOPERATIVE	8J-42
*HORNS ALWAYS ON	8H-5
*HORNS INOPERATIVE	8H-2
*LEFT BACK UP LAMP INOPERATIVE	8L-50
*LEFT FOG LAMP INOPERATIVE	8L-2

Description	Group-Page
*LEFT FRONT POWER WINDOW INOPERATIVE	8N-110
*LEFT FRONT SIDE MARKER LAMP INOPERATIVE	8L-32
*LEFT FRONT TURN LAMP INOPERATIVE	8L-11
*LEFT HEATED MIRROR INOPERATIVE	8G-16
*LEFT HEATED SEAT INOPERATIVE	8G-26
*LEFT HIGH BEAM HEADLAMP INOPERATIVE	8L-23
*LEFT LOW BEAM HEADLAMP INOPERATIVE	8L-20
*LEFT PARK LAMP INOPERATIVE	8L-8
*LEFT POWER MIRROR INOPERATIVE	8N-53
*LEFT REAR SIDE MARKER LAMP INOPERATIVE	8L-38
*LEFT REAR TURN LAMP INOPERATIVE	8L-53
*LEFT STOP LAMP INOPERATIVE	8L-47
*LEFT TAIL LAMP INOPERATIVE	8L-44
*LEFT TURN SIGNAL INDICATOR INOPERATIVE	8J-38
*LICENSE LAMP NO.1 INOPERATIVE	8L-71
*LICENSE LAMP NO.2 INOPERATIVE	8L-74
*NO RESPONSE FROM A/C HEATER CONTROL MODULE	8E-21
*NO RESPONSE FROM BODY CONTROL MODULE	8E-36
*NO RESPONSE FROM CONTROLLER ANTILOCK BRAKE	8E-25
*NO RESPONSE FROM INSTRUMENT CLUSTER	8E-13
*NO RESPONSE FROM OCCUPANT RESTRAINT CONTROLLER	8E-10
*NO RESPONSE FROM POWERTRAIN CONTROL MODULE	8E-4
*NO RESPONSE FROM SENTRY KEY REMOTE ENTRY MODULE	8E-40
*NO RESPONSE FROM SHIFT LEVER ASSEMBLY	8E-29
*NO RESPONSE FROM TRANSMISSION CONTROL MODULE	8E-33
*NO RESPONSE FROM UNIVERSAL GARAGE DOOR OPENER/TIRE PRESSURE MONITOR	8E-17
*NO SOUND FROM ALL SPEAKERS	8A-5
*NO SOUND FROM LEFT DOOR SPEAKERS	8A-8
*NO SOUND FROM LEFT REAR SPEAKER	8A-12
*NO SOUND FROM RIGHT DOOR SPEAKERS	8A-10
*NO SOUND FROM RIGHT REAR SPEAKER	8A-14
*PASSENGER POWER SEAT HORIZONTAL MOTOR INOPERATIVE	8N-91
*PASSENGER POWER SEAT INOPERATIVE	8N-76
*PASSENGER POWER SEAT RECLINER MOTOR INOPERATIVE	8N-89
*RADIO INOPERATIVE	8A-2
*REAR WINDOW DEFOGGER INOPERATIVE	8G-5
*RIGHT BACK UP LAMP INOPERATIVE	8L-62
*RIGHT FOG LAMP INOPERATIVE	8L-5
*RIGHT FRONT POWER WINDOW INOPERATIVE	8N-113
*RIGHT FRONT SIDE MARKER LAMP INOPERATIVE	8L-35
*RIGHT FRONT TURN LAMP INOPERATIVE	8L-17
*RIGHT HEATED MIRROR INOPERATIVE	8G-18
*RIGHT HEATED SEAT INOPERATIVE	8G-29
*RIGHT HIGH BEAM HEADLAMP INOPERATIVE	8L-29
*RIGHT LOW BEAM HEADLAMP INOPERATIVE	8L-26
*RIGHT PARK LAMP INOPERATIVE	8L-14
*RIGHT POWER MIRROR INOPERATIVE	8N-55
*RIGHT REAR SIDE MARKER LAMP INOPERATIVE	8L-41
*RIGHT REAR TURN LAMP INOPERATIVE	8L-65
*RIGHT STOP LAMP INOPERATIVE	8L-59
*RIGHT TAIL LAMP INOPERATIVE	8L-56
*RIGHT TURN SIGNAL INDICATOR INOPERATIVE	8J-40
*SEAT BELT INDICATOR INOPERATIVE	8J-48
*TELESCOPING WHEEL INDICATOR INOPERATIVE	8J-50
*WASHERS INOPERATIVE	8R-4
*WASHERS RUN CONTINUOUSLY WITH IGNITION ON	8R-6
*WIPERS HIGH SPEED INOPERATIVE	8R-11
*WIPERS INOPERATIVE	8R-8
*WIPERS INTERMITTENT SPEED INOPERATIVE	8R-15
*WIPERS LOW SPEED INOPERATIVE	8R-13
*WIPERS RUN CONTINUOUSLY WITH IGNITION ON	8R-17

CHASSIS DIAGNOSITCS

Description	Group-Page
ABS VERIFICATION TEST	5-148
ABS VERIFICATION TEST	5-185
BAS RELEASE SWITCH CIRCUIT	5-166
BAS SOLENOID VALVE CIRCUIT	5-181
BAS TRAVEL SENSOR CIRCUIT	5-171
BRAKE LAMP SWITCH CIRCUIT	5-143
BRAKE LAMP SWITCH CIRCUIT	5-176
CAB INTERNAL FAILURE	5-153
CAB INTERNAL FAILURE	5-80
CAB SYSTEM OVERVOLTAGE	5-158
CAB SYSTEM OVERVOLTAGE	5-85
CAB SYSTEM UNDERVOLTAGE	5-155
CAB SYSTEM UNDERVOLTAGE	5-82
CAN BUS COMMUNICATION GENERAL MALFUNCTION	5-162
CAN BUS COMMUNICATION GENERAL MALFUNCTION	5-88
ESP BRAKE PRESSURE SENSOR 1 CIRCUIT	5-128
ESP BRAKE PRESSURE SENSOR 2 CIRCUIT	5-133
ESP LATERAL ACCELERATION SENSOR CIRCUIT	5-138
ESP YAW RATE SENSOR CIRCUIT	5-119
LEFT FRONT WHEEL SPEED SENSOR CIRCUIT	5-95
LEFT REAR WHEEL SPEED SENSOR CIRCUIT	5-107
NO CAN COMMUNICATIONS WITH PCM	5-164
NO CAN COMMUNICATIONS WITH PCM	5-90
NO CAN COMMUNICATIONS WITH TCM	5-92
PCM NOT IDENTIFIED OR INCORRECT	5-161
PCM NOT IDENTIFIED OR INCORRECT	5-94
RIGHT FRONT WHEEL SPEED SENSOR CIRCUIT	5-101
RIGHT REAR WHEEL SPEED SENSOR CIRCUIT	5-113
STEERING ANGLE SENSOR CIRCUIT	5-124

POWERTRAIN DIAGNOSITCS

Description	Group-Page
(P0040) 1/1 AND 2/1 O2 SENSOR HARNESS CONNECTORS REVERSED	9-5
(P0101) MAF SENSOR PERFORMANCE	9-8
(P0102) MASS AIR FLOW CIRCUIT	9-10
(P0103) MAF SENSOR CIRCUIT LOW	9-17
(P0104) MAF SENSOR THROTTLE ANGLE AND SPEED	9-19
(P0106) MAP SENSOR PERFORMANCE	9-21
(P0107) MAP SENSOR CIRCUIT LOW	9-24
(P0108) MAP SENSOR CIRCUIT HIGH	9-29
(P0112) INTAKE AIR TEMPERATURE SENSOR CIRCUIT LOW	9-31
(P0113) INTAKE AIR TEMPERATURE SENSOR CIRCUIT HIGH	9-36
(P0116) ENGINE COOLANT TEMPERATURE SENSOR PERFORMANCE	9-40
(P0116) ENGINE COOLANT TEMPERATURE SENSOR SHORT CIRCUIT	9-47
(P0117) ENGINE COOLANT TEMPERATURE SENSOR CIRCUIT LOW	9-49
(P0118) ENGINE COOLANT TEMPERATURE SENSOR CIRCUIT HIGH	9-51
(P0120) ELECTRONIC THROTTLE CONTROL MOTOR PERFORMANCE	9-53
(P0120) THROTTLE POSITION SENSOR 1/2 CORRELATION	9-59
(P0121) APPS 5-VOLT SUPPLY CIRCUIT	9-61
(P0122) APPS SIGNAL #1 CIRCUIT LOW	9-65
(P0123) APPS SIGNAL #1 CIRCUIT HIGH	9-70
(P0128) FORCED LIMITED POWER EXCESSIVE HIGH COOLANT TEMP.	9-74
(P0128) THERMOSTAT RATIONALITY	9-78
(P0131) O2 SENSOR 1/1 CIRCUIT LOW	9-86
(P0132) O2 SENSOR 1/1 CIRCUIT HIGH	9-93
(P0133) O2 SENSOR 1/1 LONG DELAY TIME	9-101
(P0133) O2 SENSOR 1/1 LONG PERFORMANCE	9-99
(P0133) O2 SENSOR 1/1 SHORT DELAY TIME	9-95
(P0133) O2 SENSOR 1/1 SHORT PERFORMANCE	9-103
(P0134) O2 SENSOR 1/1 CIRCUIT OPEN	9-105
(P0135) O2 SENSOR 1/1 HEATER CIRCUIT HIGH	9-113
(P0135) O2 SENSOR 1/1 HEATER CIRCUIT LOW	9-107
(P0135) O2 SENSOR 1/1 HEATER CIRCUIT OPEN	9-117
(P0135) O2 SENSOR 1/1 HEATER PERFORMANCE	9-109
(P0137 O2 SENSOR 2/2 ABOVE THRESHOLD	9-123
(P0137) O2 SENSOR 1/2 ABOVE THRESHOLD	9-121
(P0137) O2 SENSOR 1/2 BELOW THRESHOLD	9-119
(P0137) O2 SENSOR 2/2 BELOW THRESHOLD	9-127
(P0138) O2 SENSOR 1/2 CIRCUIT HIGH	9-129
(P0138) O2 SENSOR 1/2 CIRCUIT OPEN	9-131

Description	Group-Page
(P0138) O2 SENSOR 2/2 CIRCUIT LOW	9-133
(P0138) O2 SENSOR 2/2 CIRCUIT OPEN	9-135
(P0140) O2 SENSOR 1/2 CIRCUIT LOW	9-137
(P0140) O2 SENSOR 2/2 CIRCUIT HIGH	9-139
(P0141) O2 SENSOR 1/2 HEATER CIRCUIT HIGH	9-145
(P0141) O2 SENSOR 1/2 HEATER CIRCUIT LOW	9-141
(P0141) O2 SENSOR 1/2 HEATER CIRCUIT OPEN	9-143
(P0141) O2 SENSOR 1/2 HEATER PERFORMANCE	9-147
(P0151) O2 SENSOR 2/1 CIRCUIT LOW	9-149
(P0152) O2 SENSOR 2/1 CIRCUIT HIGH	9-151
(P0153) O2 SENSOR 2/1 LONG DELAY TIME	9-155
(P0153) O2 SENSOR 2/1 LONG PERFORMANCE	9-153
(P0153) O2 SENSOR 2/1 SHORT DELAY TIME	9-157
(P0153) O2 SENSOR 2/1 SHORT PERFORMANCE	9-159
(P0154) O2 SENSOR 2/1 CIRCUIT OPEN	9-161
(P0155) O2 SENSOR 2/1 HEATER CIRCUIT HIGH	9-165
(P0155) O2 SENSOR 2/1 HEATER CIRCUIT LOW	9-163
(P0155) O2 SENSOR 2/1 HEATER CIRCUIT OPEN	9-167
(P0155) O2 SENSOR 2/1 HEATER PERFORMANCE	9-169
(P0161) O2 SENSOR 2/2 HEATER CIRCUIT HIGH	9-177
(P0161) O2 SENSOR 2/2 HEATER CIRCUIT LOW	9-173
(P0161) O2 SENSOR 2/2 HEATER CIRCUIT OPEN	9-175
(P0161) O2 SENSOR 2/2 HEATER PERFORMANCE	9-171
(P0171) FUEL SYSTEM 1/1 RICH CONTROL OVER LIMIT (AT IDLE)	9-183
(P0171) FUEL SYSTEM 1/1 RICH CONTROL OVER LIMIT (AT LOAD)	9-187
(P0171) FUEL SYSTEM 1/1 UNDERCORRECTION OF FUEL MIXTURE (OFF IDLE)	9-179
(P0172) FUEL SYSTEM 1/1 LEAN CONTROL BELOW LIMIT (AT IDLE)	9-207
(P0172) FUEL SYSTEM 1/1 LEAN CONTROL BELOW LIMIT (AT LOAD)	9-199
(P0172) FUEL SYSTEM 1/1 OVERCORRECTION OF FUEL MIXTURE (AT IDLE)	9-195
(P0173) FUEL SYSTEM 2/1 RICH CONTROL OVER LIMIT (AT LOAD)	9-211
(P0174) FUEL SYSTEM 2/1 LEAN CONTROL BELOW LIMIT (AT LOAD)	9-224
(P0174) FUEL SYSTEM 2/1 RICH CONTROL OVER LIMIT (AT IDLE)	9-218
(P0174) FUEL SYSTEM 2/1 RICH CONTROL OVER LIMIT (AT LOAD)	9-221
(P0174) FUEL SYSTEM 2/1 UNDERCORRECTION OF FUEL MIXTURE (OFF IDLE)	9-227
(P0175) FUEL SYSTEM 2/1 LEAN CONTROL BELOW LIMIT (AT IDLE)	9-233
(P0175) FUEL SYSTEM 2/1 OVERCORRECTION OF FUEL MIXTURE (OFF IDLE)	9-230
(P0200) FUEL INJECTOR CIRCUIT	9-236
(P0201) FUEL INJECTOR #1 CIRCUIT	9-238
(P0202) FUEL INJECTOR #2 CIRCUIT	9-242
(P0203) FUEL INJECTOR #3 CIRCUIT	9-244
(P0204) FUEL INJECTOR #4 CIRCUIT	9-246
(P0205) FUEL INJECTOR #5 CIRCUIT	9-248
(P0206) FUEL INJECTOR #6 CIRCUIT	9-250
(P0211) THROTTLE ACTUATOR STUCK	9-252
(P0211) THROTTLE ACTUATOR STUCK	9-257
(P0221) APPS SENSOR #1 AND #2 VOLTAGE CORRELATION	9-262
(P0221) ELECTRONIC THROTTLE CONTROL MODULE PERFORMANCE	9-270
(P0221) ELECTRONIC THROTTLE CONTROL MODULE PROCESSOR	9-272
(P0221) IDLE SPEED PERFORMANCE	9-266
(P0222) APPS SIGNAL #2 CIRCUIT LOW	9-274
(P0223) APPS SIGNAL #2 CIRCUIT HIGH	9-279
(P0300) MULTIPLE CYLINDER MISFIRE	9-283
(P0301) CYLINDER #1 MISFIRE	9-294
(P0302) CYLINDER #2 MISFIRE	9-304
(P0303) CYLINDER #3 MISFIRE	9-308
(P0304) CYLINDER #4 MISFIRE	9-312
(P0305) CYLINDER #5 MISFIRE	9-316
(P0306) CYLINDER #6 MISFIRE	9-320
(P0325) KNOCK SENSOR #1 CIRCUIT HIGH	9-328
(P0325) KNOCK SENSOR #1 CIRCUIT LOW	9-324
(P0330) KNOCK SENSOR #2 CIRCUIT HIGH	9-330
(P0330) KNOCK SENSOR #2 CIRCUIT LOW	9-332
(P0335) CRANKSHAFT POSITION SENSOR CIRCUIT	9-334
(P0341) CAMSHAFT POSITION SENSOR PERFORMANCE	9-346
(P0341) CAMSHAFT POSITION TIMING OVER-ADVANCED	9-344
(P0341) CAMSHAFT POSITION TIMING OVER-RETARDED	9-340
(P0400) EGR SYSTEM PERFORMANCE	9-350
(P0403) EGR CONTROL CIRCUIT	9-354
(P0410) SECONDARY AIR INJECTION RELAY CIRCUIT	9-362
(P0410) SECONDARY AIR INJECTION SYSTEM	9-356
(P0412) SECONDARY AIR INJECTION SWITCHOVER SOLENOID CIRCUIT	9-365
(P0422) CATALYTIC 1/1 EFFICIENCY	9-369
(P0432) CATALYTIC 2/1 EFFICIENCY	9-372
(P0440) GENERAL EVAP SYSTEM FAILURE	9-374
(P0441) EVAP PURGE VALVE	9-376
(P0442) EVAP SYSTEM SMALL LEAK	9-378
(P0445) EVAP PURGE SOLENOID CIRCUIT	9-380
(P0446) CHARCOAL CANISTER SHUTOFF VALVE	9-384
(P0446) EVAP PURGE SOLENOID STUCK OPEN	9-387
(P0451) FUEL TANK PRESSURE SENSOR PERFORMANCE	9-390
(P0452) FUEL TANK PRESSURE SENSOR CIRCUIT LOW	9-395
(P0453) FUEL TANK PRESSURE SENSOR CIRCUIT HIGH	9-397
(P0455) EVAP SYSTEM LARGE LEAK	9-399
(P0457) EVAP PURGE VALVE LEAKING	9-406
(P0460) FUEL LEVEL SENSOR CIRCUIT	9-408
(P0500) NO VEHICLE SPEED SIGNAL (CAB CAN MESSAGE)	9-410
(P0500) VEHICLE SPEED PERFORMANCE ESP MIL REQUEST	9-412
(P0561) BATTERY SYSTEM VOLTAGE	9-414
(P0562) BATTERY SYSTEM LOW	9-417
(P0563) BATTERY SYSTEM HIGH	9-419
(P0571) STOP LAMP SWITCH CAN SIGNAL LOST TO TRANS PERFORMANCE	9-421
(P0571) STOP LAMP SWITCH SIGNAL PERFORMANCE	9-423
(P0600) INCORRECT CAN MESSAGE FROM EIS CONTROL MODULE	9-425
(P0600) LOST COMM WITH ELECTRIC GEAR SHIFT MODULE (SLA)	9-439
(P0600) NO CAN MESSAGE FROM CAB MODULE	9-427
(P0600) NO CLUSTER BUS MESSAGE	9-445
(P0600) NO TRANSMISSION BUS MESSAGE	9-433
(P0602) PCM PROGRAMMED INCORRECT TRANS/NO COMM FROM TCM	9-451
(P0700) TRANSMISSION CONTROL SYSTEM (MIL REQUEST)	9-453
(P0702) LOSS OF TORQUE MANAGEMENT SIGNAL	9-459
(P0702) TCM TORQUE MANAGEMENT REQUEST PERFORMANCE	9-461
(P0702) TRANSMISSION CONTROL MODULE LOW VOLTAGE	9-455
(P0702) TRANSMISSION CONTROL SYSTEM (MIL REQUEST)	9-457
(P0705) SLA CONTROL SYSTEM (MIL REQUEST)	9-463
(P0705) TRANSMISSION CONTROL SYSTEM (MIL REQUEST)	9-465
(P0715) TRANSMISSION CONTROL SYSTEM (MIL REQUEST)	9-467
(P0720) TRANSMISSION CONTROL SYSTEM (MIL REQUEST)	9-475
(P0720) TRANSMISSION INCORRECT TORQUE REQUEST FROM ESP	9-469
(P0730) TRANSMISSION CONTROL SYSTEM (MIL REQUEST)	9-477
(P0740) TRANSMISSION CONTROL SYSTEM (MIL REQUEST)	9-479
(P0743) TRANSMISSION CONTROL SYSTEM (MIL REQUEST)	9-481
(P0748) TRANSMISSION CONTROL SYSTEM (MIL REQUEST)	9-483
(P0753) TRANSMISSION CONTROL SYSTEM (MIL REQUEST)	9-485
(P0758) TRANSMISSION CONTROL SYSTEM (MIL REQUEST)	9-487
(P0763) TRANSMISSION CONTROL SYSTEM (MIL REQUEST)	9-489
(P1386) KNOCK SENSOR SYSTEM FAILURE	9-491
(P1600) ROUGH ROAD DETECTED	9-493
(P2513) ENHANCED ACCIDENT REPORT DRIVER CIRCUIT HIGH	9-499
(P2513) ENHANCED ACCIDENT REPORT DRIVER CIRCUIT LOW	9-504
(P2545) ESP TORQUE MANAGEMENT REQUEST PERFORMANCE	9-506

Description	Group-Page
(P2561) HVAC CONTROL MODULE REQUESTED MIL ILLUMINATION	9-512
COOLING FAN CONTROL CIRCUIT HIGH	9-517
COOLING FAN CONTROL CIRCUIT LOW	9-519
COOLING FAN CONTROL CIRCUIT OPEN	9-514
ENGINE OIL SENSOR LEVEL PERFORMANCE	9-521
ENGINE OIL SENSOR OVER TEMPERATURE	9-526
ENGINE OIL SENSOR PERFORMANCE	9-531
ENGINE OIL SENSOR QUALITY PERFORMANCE	9-533
ENGINE OIL SENSOR WATER CONTAMINATION	9-538
POWERTRAIN VERIFICATION TEST – VER 1	9-569
POWERTRAIN VERIFICATION TEST – VER 2	9-570
POWERTRAIN VERIFICATION TEST – VER 3	7-9
POWERTRAIN VERIFICATION TEST – VER 3	9-571
POWERTRAIN VERIFICATION TEST – VER 4	9-572
POWERTRAIN VERIFICATION TEST – VER 5	9-573
SAFETY FUEL SHUT OFF DETECTED	9-540
SHORT RUNNER SOLENOID CIRCUIT HIGH	9-545
SHORT RUNNER SOLENOID CIRCUIT LOW	9-549
SHORT RUNNER SOLENOID CIRCUIT	9-551
SPEED CONTROL SWITCH INPUT CIRCUIT	9-553
*CHECKING FUEL DELIVERY	9-556
*CHECKING HARD START (FUEL SYSTEM)	9-560
*ENGINE CRANKS BUT DOES NOT START	9-563
*INTERMITTENT NO CRANK	9-567
*RADIATOR COOLING FAN ALWAYS ON	7-6
*RADIATOR COOLING FAN INOPERATIVE	7-2

TRANSMISSION DIAGNOSITCS

Description	Group-Page
(P0219) ENGINE OVERSPEED	21-3
(P0562) SYSTEM UNDERVOLTAGE	21-6
(P0600) ABS BRAKE MESSAGE	21-12
(P0600) ABS CAN MESSAGE INCORRECT	21-15
(P0600) ABS CAN MESSAGE MISSING	21-18
(P0600) ABS LEFT FRONT SENSOR MESSAGE	21-22
(P0600) ABS LEFT REAR SENSOR MESSAGE	21-25
(P0600) ABS RIGHT FRONT SENSOR MESSAGE	21-28
(P0600) ABS RIGHT REAR SENSOR MESSAGE	21-31
(P0600) ACCEL PEDAL SENSOR CAN MESSAGE INCORRECT	21-34
(P0600) CAN MESSAGE FROM ECM FROM SLA	21-38
(P0600) ENGINE CAN MESSAGE INCORRECT	21-41
(P0600) ENGINE CAN MESSAGE MISSING	21-44
(P0600) ENGINE RPM MESSAGE	21-48
(P0600) ENGINE TEMPERATURE MESSAGE	21-51
(P0600) ENGINE TORQUE MESSAGE INCORRECT	21-54
(P0600) IC CAN MESSAGE INCORRECT	21-57
(P0600) IC/HVAC CAN MESSAGE MISSING	21-60
(P0600) SLA CAN MESSAGE INCORRECT	21-64
(P0700) SENSOR SUPPLY VOLTAGE	21-67
(P0700) TRANSMISSION SLIPPING	21-71
(P0702) CONTROL MODULE TCM IS NOT CODED	21-74
(P0702) INTERNAL CONTROLLER	21-76
(P0702) INVALID CONTROL MODULE VERSION	21-78
(P0702) SOLENOID SUPPLY/WATCHDOG	21-80
(P0710) TRANS TEMP SENSOR SHORTED	21-83
(P0714) TRANS TEMP SENSOR ERRATIC	21-87
(P0715) INPUT SENSOR MISMATCH	21-90
(P0715) INPUT SENSOR OVERSPEED	21-94
(P0715) N2 INPUT SPEED SENSOR CIRCUIT	21-97
(P0715) N3 INPUT SPEED SENSOR CIRCUIT	21-103
(P0720) CAN BUS CIRCUIT	21-109
(P0730) IMPROPER GEAR	21-113
(P0730) IMPROPER RATIO	21-116
(P0740) TCC OVERTEMP	21-119
(P0740) TCC STUCK ON	21-121
(P0743) TCC SOLENOID CIRCUIT	21-124
(P0748) MODULATING PRESSURE SOLENOID CIRCUIT	21-128
(P0753) 1-2/4-5 SOLENOID CIRCUIT	21-132
(P0753) 1–2/4–5 SOLENOID CIRCUIT SHORT TO GROUND	21-136
(P0758) 2-3 SOLENOID CIRCUIT	21-138
(P0758) 2–3 SOLENOID CIRCUIT SHORT TO GROUND	21-142
(P0763) 3-4 SOLENOID CIRCUIT	21-144
(P0763) 3–4 SOLENOID CIRCUIT SHORT TO GROUND	21-148
(P0778) SHIFT PRESSURE SOLENOID CIRCUIT	21-150
(P0778) SOLENOID SUPPLY VOLTAGE	21-154
(P0850) TRANS TEMP SENSOR - P/N SWITCH CIRCUIT	21-158
(P1793) ENGINE TORQUE REDUCTION	21-163
(PO563) SYSTEM OVERVOLTAGE	21-9
CAN BUS CIRCUIT	21-167
INCORRECT CAN MESSAGE FROM ABS	21-169
INTERNAL CONTROLLER	21-171
LR WHEEL SPIN CAN MESSAGE NOT VALID	21-173
OVERVOLTAGE	21-177
RR WHEEL SPIN CAN MESSAGE NOT VALID	21-175
TRANSMISSION VERIFICATION TEST	21-181
UNDERVOLTAGE	21-179

SERVICE MANUAL COMMENTS

What errors(s) have you found?

_____

_____

_____

_____

In order for us to assist you, please include as much details as possible when reporting an error

Comments / Suggestions

_____

_____

_____

_____

☐ **Dealership Technician**
Dealer Code: _____

Retail Customer ☐

Manual Title, Year, Number and Page: _____

_____

Your Name: _____

Address: _____

_____

_____

All comments become property of DaimlerChrysler Corporation and may be used without compensation.

Fold Here

Place
Stamp
Here

DaimlerChrysler Corporation
Attn. Publications Dept.
CIMS 486-02-70
800 Chrysler Drive
Auburn Hills, MI 48326-2757

Fold Here