2000 MANUAL TRANSMISSIONS

Mazda F25M-R & G25M-R 5-Speed Overhaul

APPLICATION

MANUAL TRANSAXLE APPLICATIONS

Application	Transaxle Model
Kia	
Sephia & Spectra	G25M-R
Mazda	
Protege	F25M-R
626	G25M-R

LUBRICATION

RECOMMENDED FLUID

Use API SAE 75W/90 GL-4 or GL-5 oil.

FLUID CAPACITIES

Oil level should be level with bottom of fill plug opening. Add oil as needed to bring to correct level. Capacity is 2.9 qts. (2.7L).

ON-VEHICLE SERVICE

ADJUSTMENTS

NOTE: No external adjustments are necessary.

AXLE SHAFTS

NOTE: See appropriate article in DRIVE AXLES.

TROUBLE SHOOTING

NOTE: See MANUAL TRANSMISSION TROUBLE SHOOTING article in GENERAL INFORMATION.

REMOVAL & INSTALLATION

NOTE: For manual transmission removal procedure, see appropriate CLUTCHES article in TRANSMISSION SERVICING.

TRANSAXLE DISASSEMBLY

 © 2011 Mitchell Repair Information Company, LLC.

NOTE: Refer to appropriate exploded view for disassembly reference. See Fig. 1 and Fig. 2 .

1. Remove clutch release bearing and release fork. See **Fig. 1** or **Fig. 2** . Mount transaxle in holder. Remove rear cover. Secure primary shaft with Holder (49 F401 440). Shift to 1st or 2nd gear to lock rotation of primary shaft. Remove and discard lock nuts from primary and secondary shafts. Align ends of interlock sleeve and control lever. Turn shift rod counterclockwise. Remove sleeve, primary reverse synchronizer cone assembly and synchronizer ring.
2. Remove 5th-reverse gear shift fork, 5th-reverse synchronizer hub assembly with synchronizer ring, 5th gear and gear sleeve from secondary shaft.
3. Remove secondary 5th gear. Remove guide bolt from outside of case. Remove back-up light switch, neutral switch and lock bolt. Remove bolts securing transaxle case to converter housing. Using soft-faced hammer, strike case to loosen and remove.
4. Remove reverse idler gear with shaft. Holding primary shaft assembly, secondary shaft assembly and shift forks as an assembly, lift and remove from clutch housing. Separate shift fork assemblies from shaft assemblies.

 © 2011 Mitchell Repair Information Company, LLC.

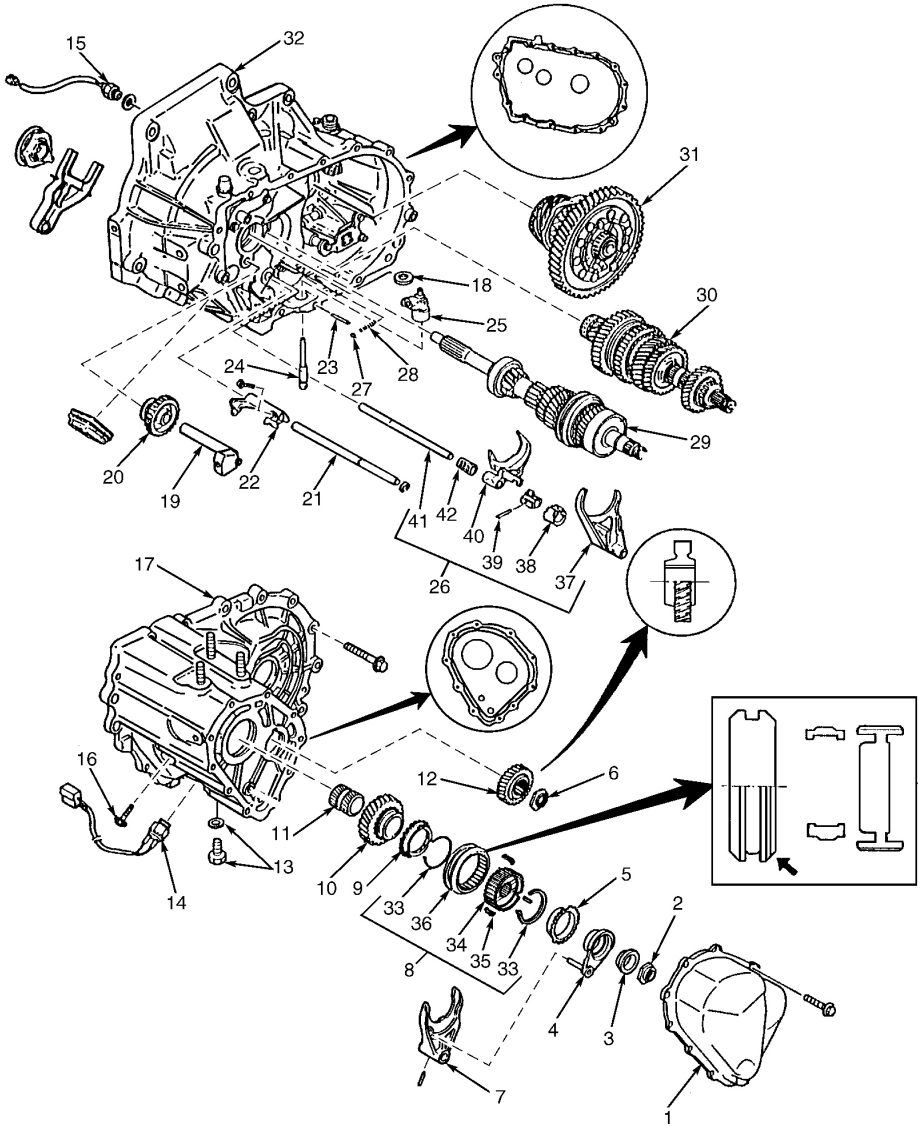

1. Rear Cover
2. Lock Nut (Primary Shaft)
3. Reverse Synchronizer Gear Sleeve
4. Reverse Synchronizer Cone Assembly
5. Reverse Synchronizer Ring
6. Lock Nut (Secondary Shaft)
7. 5th/Reverse Shift Fork
8. 5th/Reverse Clutch Hub Assembly
9. 5th Gear Synchronizer Ring
10. 5th Gear
11. Gear Sleeve
12. Secondary 5th Gear
13. Guide Bolt & Washer
14. Back-Up Light Switch
15. Neutral Safety Switch
16. Lock Bolt
17. Case Assembly
18. Magnet
19. Reverse Idler Shaft
20. Reverse Idler Gear
21. 5th/Reverse Shift Rod
22. 5th/Reverse Shift Rod End
23. Pin
24. Crank Lever Shaft
25. Crank Lever Assembly
26. Shift Fork & Shift Rod Assembly
27. Steel Ball
28. Spring
29. Primary Shaft Gear Assembly
30. Secondary Shaft Gear Assembly
31. Differential Assembly
32. Clutch Housing
33. Synchronizer Key Springs
34. Clutch Hub
35. Synchronizer Keys
36. Clutch Hub Sleeve
37. 3rd/4th Shift Fork
38. Interlock Sleeve
39. Control Lever
40. 1st/2nd Shift Fork
41. Control Rod
42. Control End

G99I03757

Fig. 1: Exploded View Of Transaxle (F25M-R)
Courtesy of MAZDA MOTORS CORP.

 © 2011 Mitchell Repair Information Company, LLC.

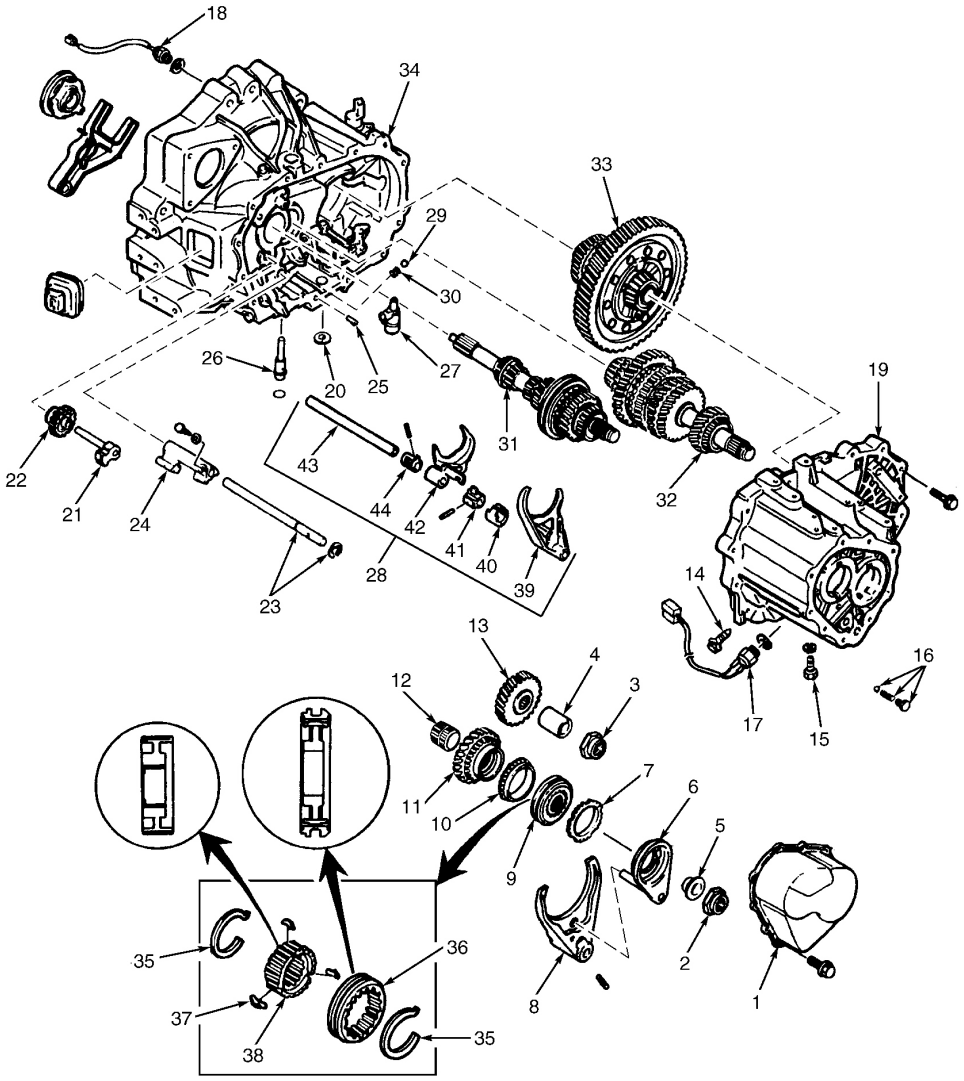

1. Rear Cover
2. Lock Nut (Primary Shaft)
3. Lock Nut (Secondary Shaft)
4. Spacer
5. Reverse Synchronizer Gear Sleeve
6. Reverse Synchronizer Cone Assembly
7. Reverse Synchronizer Ring
8. 5th/Reverse Shift Fork
9. 5th/Reverse Clutch Hub Assembly
10. 5th Gear Synchronizer Ring
11. 5th Gear
12. Gear Sleeve
13. Secondary 5th Gear
14. Lock Bolt
15. Guide Bolt & Washer
16. Lock Bolt, Ball & Spring
17. Back-Up Light Switch
18. Neutral Safety Switch
19. Transaxle Case
20. Magnet
21. Reverse Idler Shaft
22. Reverse Idler Gear
23. 5th/Reverse Shift Rod
24. 5th/Reverse Shift Rod End
25. Pin
26. Crank Lever Shaft
27. Crank Lever Assembly
28. Shift Fork & Shift Rod Assembly
29. Steel Ball
30. Spring
31. Primary Gear Shaft Assembly
32. Secondary Gear Shaft Assembly
33. Differential Assembly
34. Clutch Housing
35. Synchronizer Key Springs
36. Clutch Hub Sleeve
37. Synchronizer Keys
38. Clutch Hub
39. 3rd/4th Shift Fork
40. Interlock Sleeve
41. Control Lever
42. 1st/2nd Shift Fork
43. Control Rod
44. Control End

G99A03758

Fig. 2: Exploded View Of Transaxle (G25M-R)
Courtesy of MAZDA MOTORS CORP.

 © 2011 Mitchell Repair Information Company, LLC.

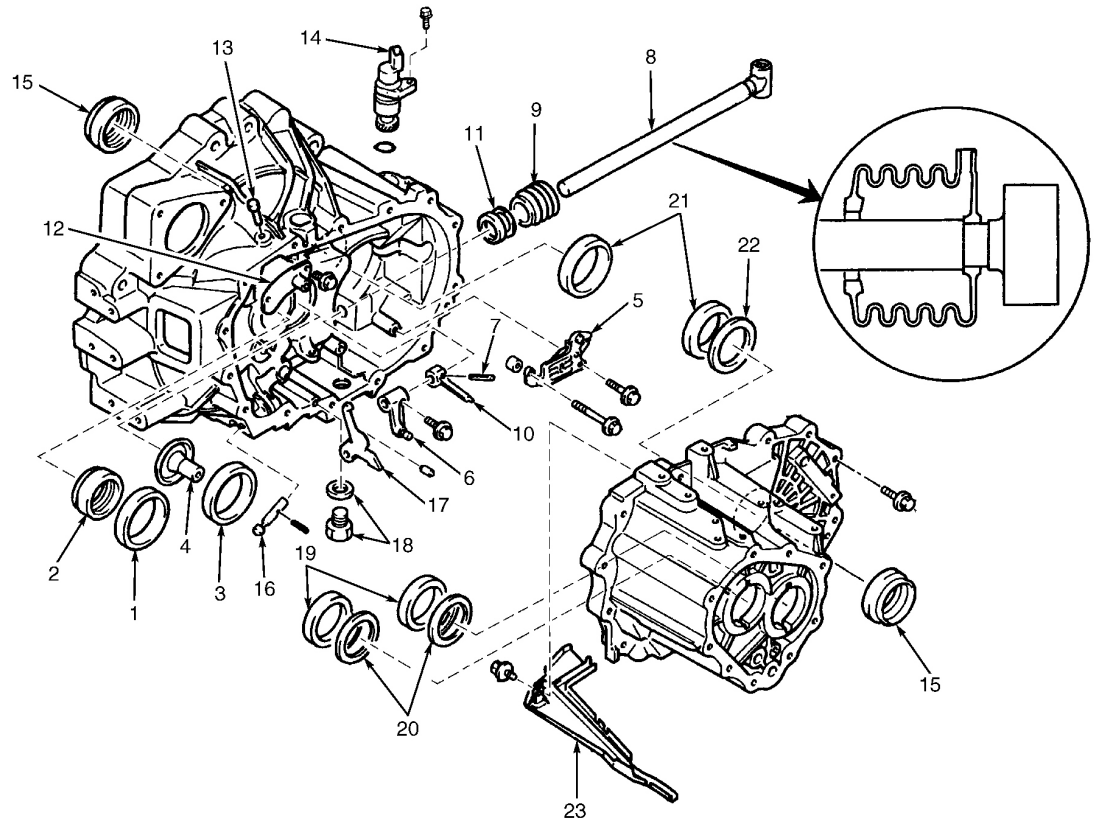

Fig. 3: Exploded View Of Transaxle Case & Components (G25M-R Shown; F25M-R Is Similar)
Courtesy of MAZDA MOTORS CORP.

COMPONENT DISASSEMBLY & REASSEMBLY

TRANSAXLE CASE

Disassembly

1. Lift mainshaft oil funnel from clutch housing and remove funnel and outer race bearing as a unit. Remove 3 bolts retaining shifter guide plate. Remove shifter guide plate, reverse gate and spring. See **Fig. 3** .
2. Drive out spring pin retaining selector arm to change rod and withdraw change rod from clutch housing. Remove boot from change rod and oil seal from rod bore. Remove vent cover and vent from top of clutch housing.
3. Remove speedometer driven gear assembly. Remove differential and input shaft oil seals. Drive out reverse lever shaft roll pin. Remove spring and ball (if equipped).
4. Remove reverse lever set spring and reverse lever. Drive out differential bearing races. Remove 5th gear outer bearing races from transaxle.

 © 2011 Mitchell Repair Information Company, LLC.

5. Remove diaphragm spring and adjusting shims from transaxle case. Remove differential oil seal from transaxle case.

NOTE: Check and adjust bearing preload before reassembling case. See BEARING PRELOAD under ADJUSTMENTS.

Reassembly

To reassemble, reverse disassembly procedure. Smaller diameter of diaphragm spring (located behind bearing race) should face toward inside of transaxle case.

PRIMARY SHAFT

NOTE: When disassembling synchronizer assemblies, note cut-outs in some blocking rings for reassembly reference. Cut-out rings must be installed in original position.

Disassembly

Remove snap rings as necessary. See **Fig. 4** . On G25M-R, press off bearing next to 4th gear. On F25M-R, press off 4th gear and bearing together. Press off 4th gear. Press off 3rd gear with clutch hub assembly. Press off bearing on clutch end.

 © 2011 Mitchell Repair Information Company, LLC.

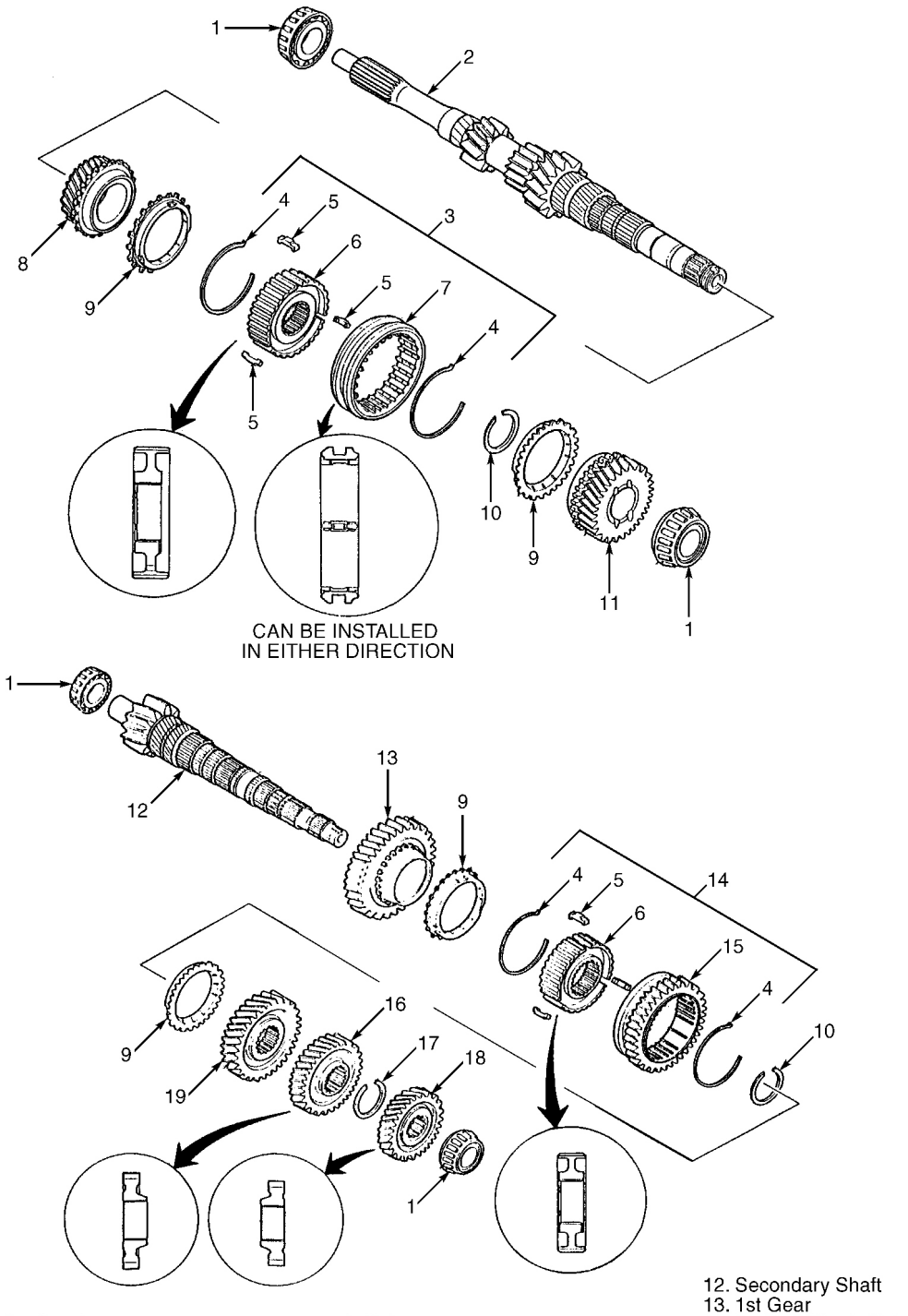

1. Taper Roller Bearing (Ball Bearing On F25M-R)
2. Primary Shaft
3. 3rd/4th Clutch Hub
4. Synchro Key Ring
5. Key
6. Hub
7. Sleeve
8. 3rd Gear
9. Synchronizer Ring
10. Retaining Ring
11. 4th Gear
12. Secondary Shaft
13. 1st Gear
14. 1st/2nd Clutch Hub
15. Reverse Gear
16. 3rd Gear
17. Retaining Ring
18. 4th Gear
19. 2nd Gear

Fig. 4: Exploded View Of Primary & Secondary Shafts (G25M-R Shown; F25M-R Is Similar)
Courtesy of MAZDA MOTORS CORP.

Inspection

 © 2011 Mitchell Repair Information Company, LLC.

1. Using dial indicator, measure shaft gear runout. See **Fig. 5** . Maximum runout is .0020" (.050 mm).
2. Inspect synchronizer cones for wear. Inspect gear teeth for damage, wear and cracks. Inspect synchronizer ring matching teeth for damage and wear. Inspect synchronizer ring teeth for damage, wear and cracks. Measure clearance between synchronizer ring and teeth on matching gear. See **TRANSAXLE COMPONENT CLEARANCE SPECIFICATIONS** table. Inspect clutch hub sleeve and hub operation. Inspect gear teeth for damage, wear and cracks. Inspect synchronizer keys for damage, wear and cracks.

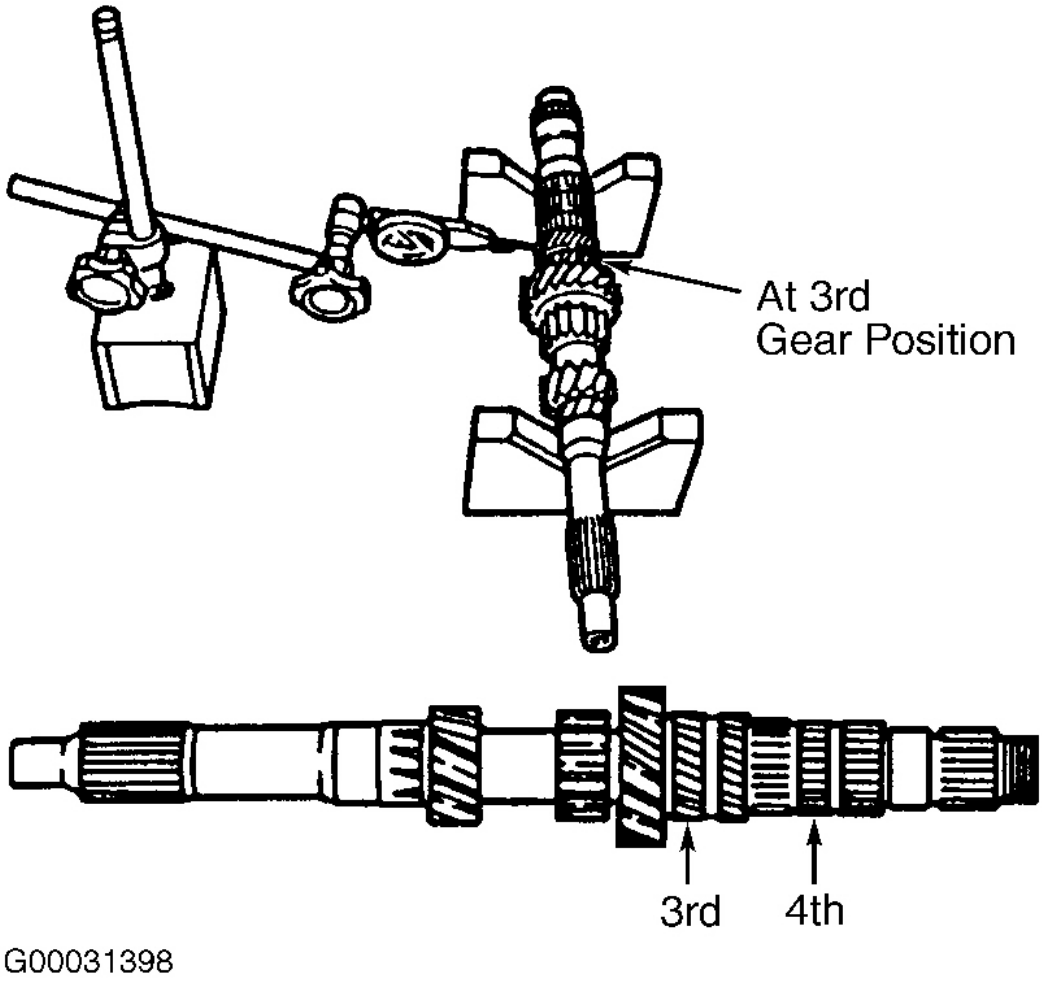

Fig. 5: Measuring Primary Shaft Gear Runout At 3rd & 4th Gear
Courtesy of MAZDA MOTORS CORP.

Reassembly

1. To reassemble, reverse disassembly procedure. Measure clearance after each component is installed. See **TRANSAXLE COMPONENT CLEARANCE SPECIFICATIONS** table. See **Fig. 4** .
2. Select correct synchronizer keys. See **SYNCHRONIZER KEY DIMENSIONS** table. See **Fig. 6** . Install keys and spring in synchronizer hub. Install synchronizer assembly with bevel facing away from input end of primary shaft. Locate synchronizer rings on correct clutch assembly.

 © 2011 Mitchell Repair Information Company, LLC.

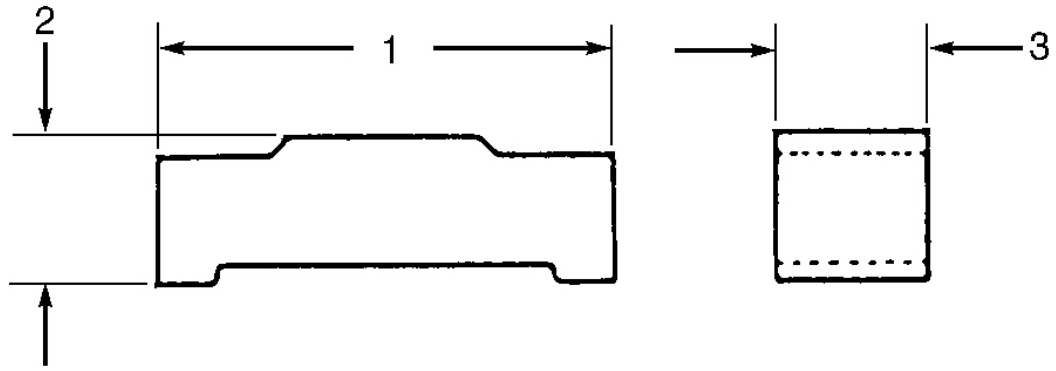

G93H24809

Fig. 6: Measuring Synchronizer Key
Courtesy of MAZDA MOTORS CORP.

TRANSAXLE COMPONENT CLEARANCE SPECIFICATIONS

Application	Standard - In. (mm)	Maximum - In. (mm)
Primary Shaft		
3rd Gear Thrust (3rd-To-2nd Gear)		
F25M-R	.002-.008 (.06-.21)	.010 (.26)
G25M-R	.002-.011 (.05-.29)	.013 (.34)
4th Gear Thrust (4th Gear-To-Bearing)		
F25M-R	.008-.024 (.21-.61)	.026 (.66)
G25M-R	.006-.015 (.17-.37)	.017 (.42)
Secondary Shaft		
1st Gear Thrust (1st Gear-To-Differential Drive Gear)		
F25M-R & G25M-R	.002-.011 (.05-.28)	.013 (.33)
2nd Gear Thrust (2nd-To-3rd Gear)		
F25M-R	.007-.020 (.18-.51)	.22 (.56)
G25M-R	.007-.018 (.18-.46)	.020 (.50)
1st-2nd Hub-To-Shift Fork		
F25M-R	.004-.014 (.10-.36)	.034 (.86)
G25M-R	.004-.018 (.10-.45)	.037 (.95)
3rd-4th Hub-To-Shift Fork		
F25M-R	.008-.020 (.20-.50)	.039 (1.0)
G25M-R	.004-.016 (.10-.40)	.035 (.90)
5th-Reverse Hub-To-Shift Fork		
F25M-R	.016-.030 (.40-.75)	.049 (1.24)
G25M-R	.004-.014 (.10-.36)	.034 (.86)
Synchronizer-To-Gear	.059 (1.50)	.031 (.80)
Reverse Idler		
Gear-To-Shift Lever	.004-.013 (.10-.32)	.015 (.37)

 © 2011 Mitchell Repair Information Company, LLC.

Primary Shaft Runout	N/A	.002 (.05)
Secondary Shaft Runout	N/A	.0006 (.015)
Oil Clearance Between Shafts & Gears	.001-.003 (.03-.08)	.003 (.08)

SYNCHRONIZER KEY DIMENSIONS

Synchro	Dimension No. 1 - In. (mm)	Dimension No. 2 - In. (mm)	Dimension No. 3 - In. (mm) (1)
1st-2nd	.748 (19.00)	.167 (4.25)	.197 (5.00)
3rd-4th	.669 (17.00)	.167 (4.25)	.197 (5.00)
5th-Reverse	.669 (17.00)	.167 (4.25)	.197 (5.00)
(1) F25M-R specification shown. G25M-R clearance is .191" (4.86 mm).			

SECONDARY SHAFT

Disassembly

Press off 4th gear with bearing. Remove retaining ring. Shift clutch hub sleeve to 1st gear. Press off 3rd and 2nd gears. Remove retaining ring. Press off 1st gear with 1-2 clutch hub assembly. Press off bearing on differential drive gear end of shaft. See **Fig. 9** or **Fig. 10** .

Inspection

1. Using dial indicator, measure shaft gear runout. See **Fig. 7** . Maximum runout is .0006" (.015 mm).
2. Inspect synchronizer cones for wear. Inspect gear teeth for damage, wear and cracks. Inspect synchronizer ring matching teeth for damage and wear. Inspect synchronizer ring teeth for damage, wear and cracks. Measure clearance between synchronizer ring and teeth on matching gear. See **TRANSAXLE COMPONENT CLEARANCE SPECIFICATIONS** table. Inspect clutch hub sleeve and hub operation. Inspect gear teeth for damage, wear and cracks. Inspect synchronizer keys for damage, wear and cracks.

 © 2011 Mitchell Repair Information Company, LLC.

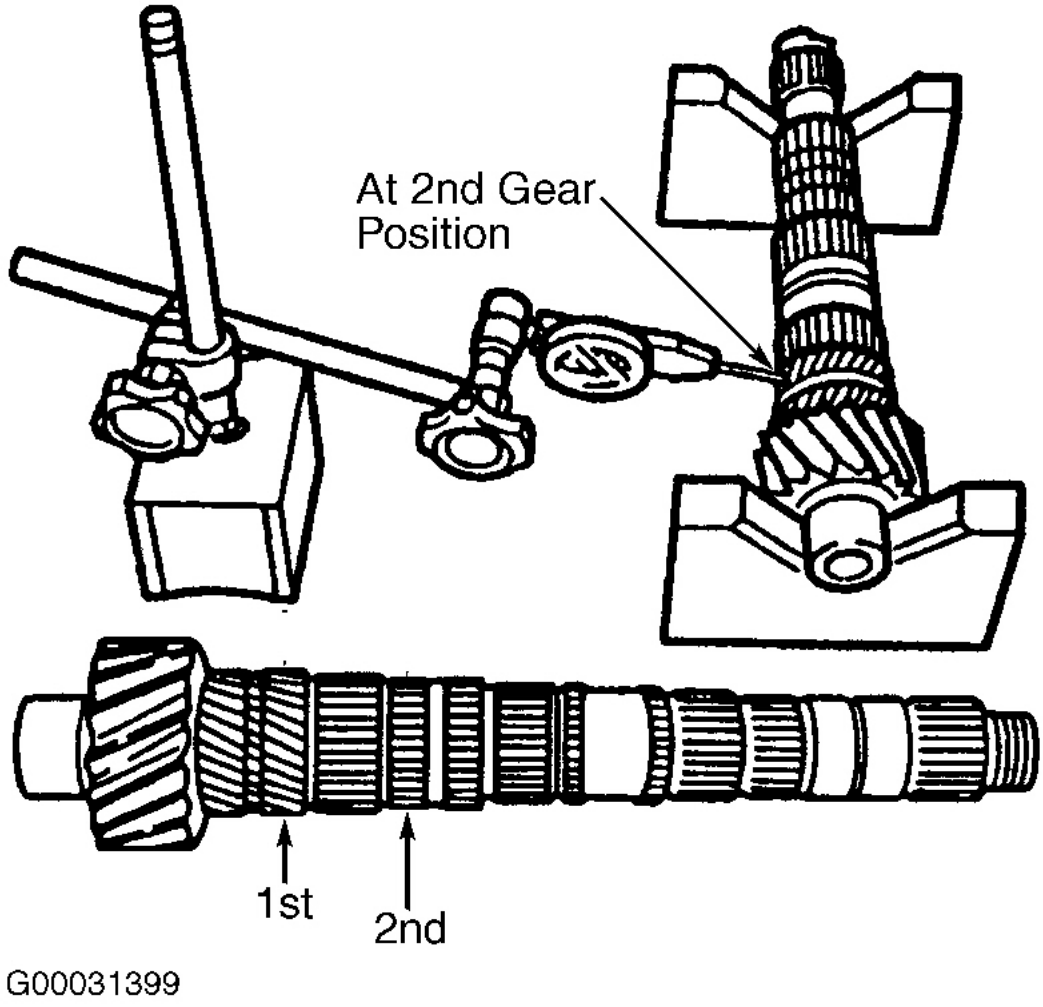

Fig. 7: Measuring Secondary Shaft Gear Runout At 1st & 2nd Gear
Courtesy of MAZDA MOTORS CORP.

Reassembly

To reassemble, reverse disassembly procedure. Measure clearance after pressing on each component. See **TRANSAXLE COMPONENT CLEARANCE SPECIFICATIONS** table. See **Fig. 4** .

DIFFERENTIAL

Pre-Disassembly Backlash Inspection

Install left and right axle shafts into differential. Support axle shafts on V-blocks. See **Fig. 8** . Measure backlash of both pinion gears. Backlash should be .002-.006" (.05-.15 mm) for G25M-R, and 0-.004" (0-0.1 mm) for F25M-R. Rebuild or replace differential assembly if backlash is not as specified.

 © 2011 Mitchell Repair Information Company, LLC.

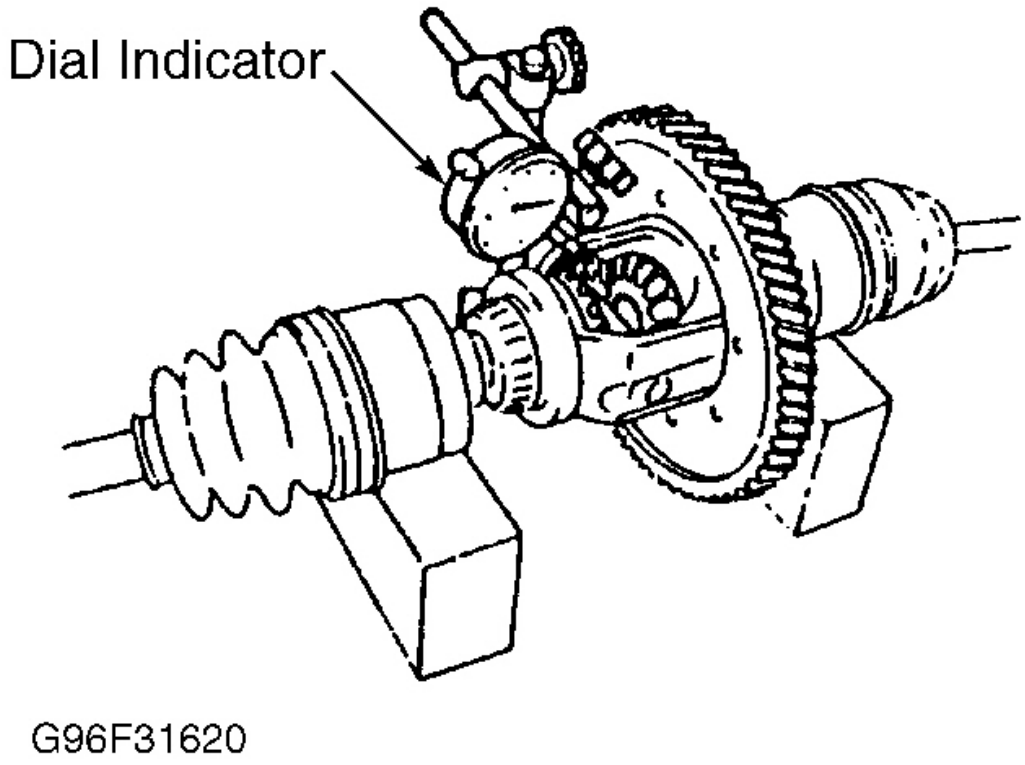

Fig. 8: Checking Pinion Gear Backlash
Courtesy of MAZDA MOTORS CORP.

Disassembly

1. Remove roll pin and pinion shaft. See **Fig. 9** . Remove pinion gears and rotate thrust washers out of differential housing.
2. Remove side gears and thrust washers. Using appropriate bearing puller, remove side bearings. DO NOT remove speedometer drive gear unless damaged.

Reassembly

Install speedometer drive gear (if removed) and bearings. Install thrust washers, pinion gears and side gears. Install pinion shaft. Install and crimp roll pin.

 © 2011 Mitchell Repair Information Company, LLC.

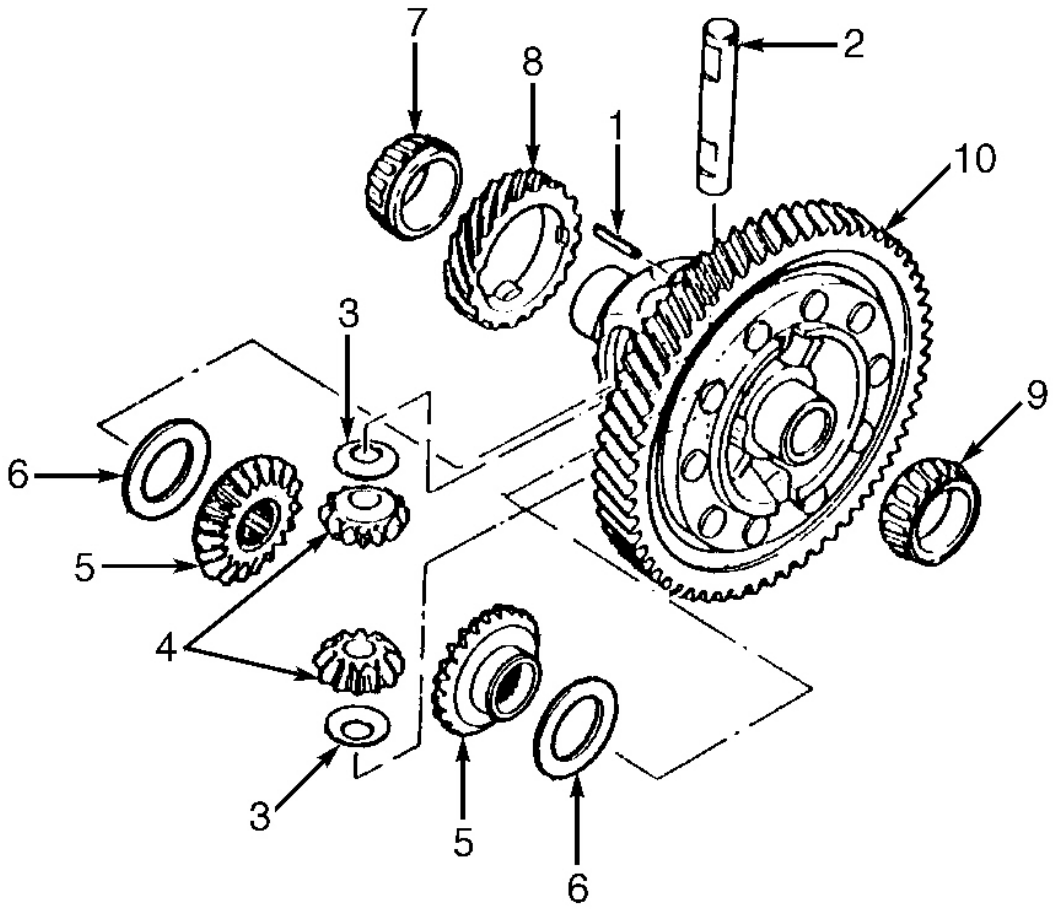

1. Roll Pin
2. Pinion Shaft
3. Thrust Washer
4. Pinion Gear
5. Side Gear
6. Thrust Washer
7. Side Bearing
8. Speedometer Gear
9. Side Bearing
10. Ring Gear

G96C31619

Fig. 9: Exploded View Of Differential
Courtesy of MAZDA MOTORS CORP.

ADJUSTMENTS

BEARING PRELOAD (F25M-R)

Primary Shaft

1. Install primary shaft assembly into clutch housing. Install transaxle case into clutch housing and tighten bolts to specification. See **TORQUE SPECIFICATIONS** .
2. Mount dial indicator to clutch housing and place plunger on end of primary shaft. See **Fig. 10** . Zero

 © 2011 Mitchell Repair Information Company, LLC.

dial indicator. Pull primary shaft upward and record measurement.

3. Thrust clearance should be .0002-.0039" (.005-.100 mm). Select appropriate shim to adjust clearance. Shims are available in the following thicknesses: .004-.024" (.10-.60 mm) in .004" (.10 mm) increments.

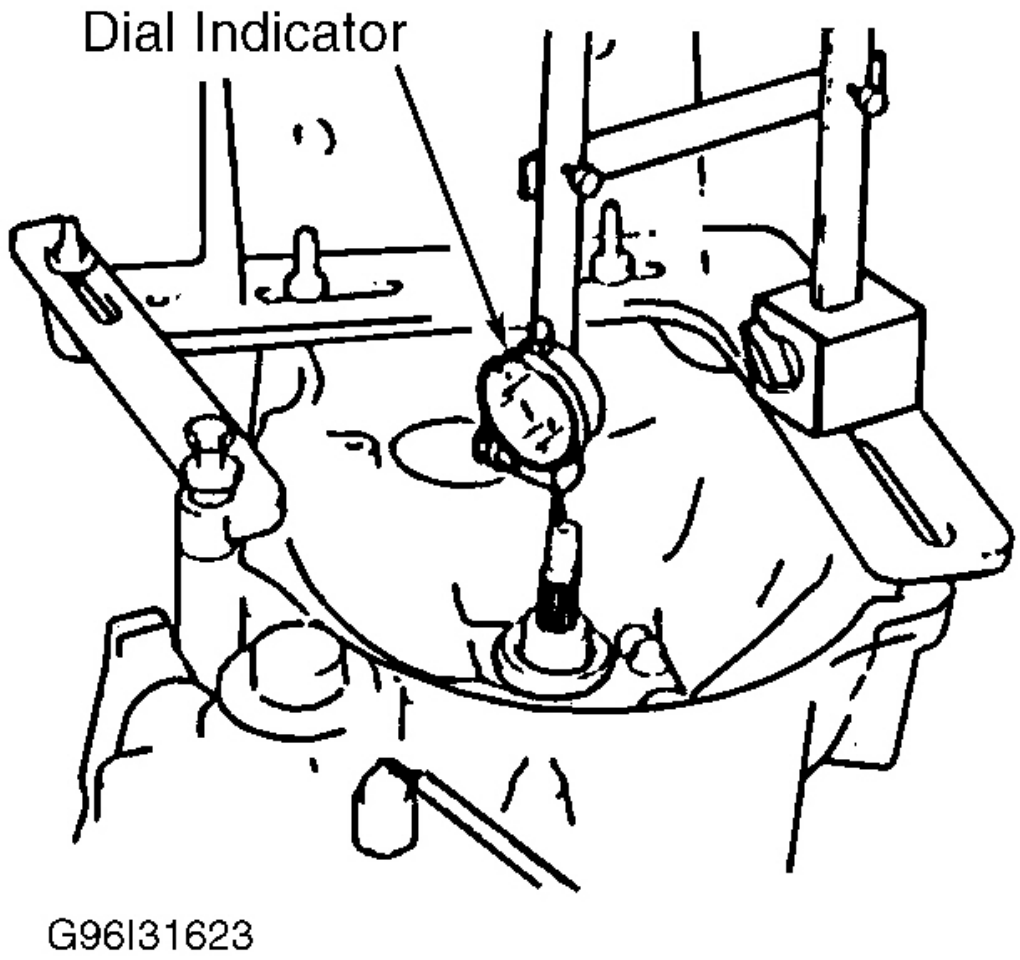

Fig. 10: Measuring Primary Shaft Thrust Clearance (F25M-R)
Courtesy of MAZDA MOTORS CORP.

Secondary Shaft

1. Disassemble transmission case from clutch housing. Remove primary shaft. Install funnel and secondary bearing race in clutch housing. See **Fig. 3** . Install secondary shaft into transaxle case. Install transaxle case to clutch housing and tighten bolts to specification. See **TORQUE SPECIFICATIONS** .
2. Mount dial indicator to clutch housing and place plunger on end of secondary shaft. See **Fig. 11** . Zero dial indicator. Pull secondary shaft upward and record measurement. Add .0012" (.03 mm) to measured thrust clearance and record. Add .0031" (.08 mm) to thrust clearance and record. Select thickest adjustment shim in range determined by these two measurements. Shims are available in the

 © 2011 Mitchell Repair Information Company, LLC.

following thicknesses: .006-.020" (.15-.50 mm) in .002" (.05 mm) increments.

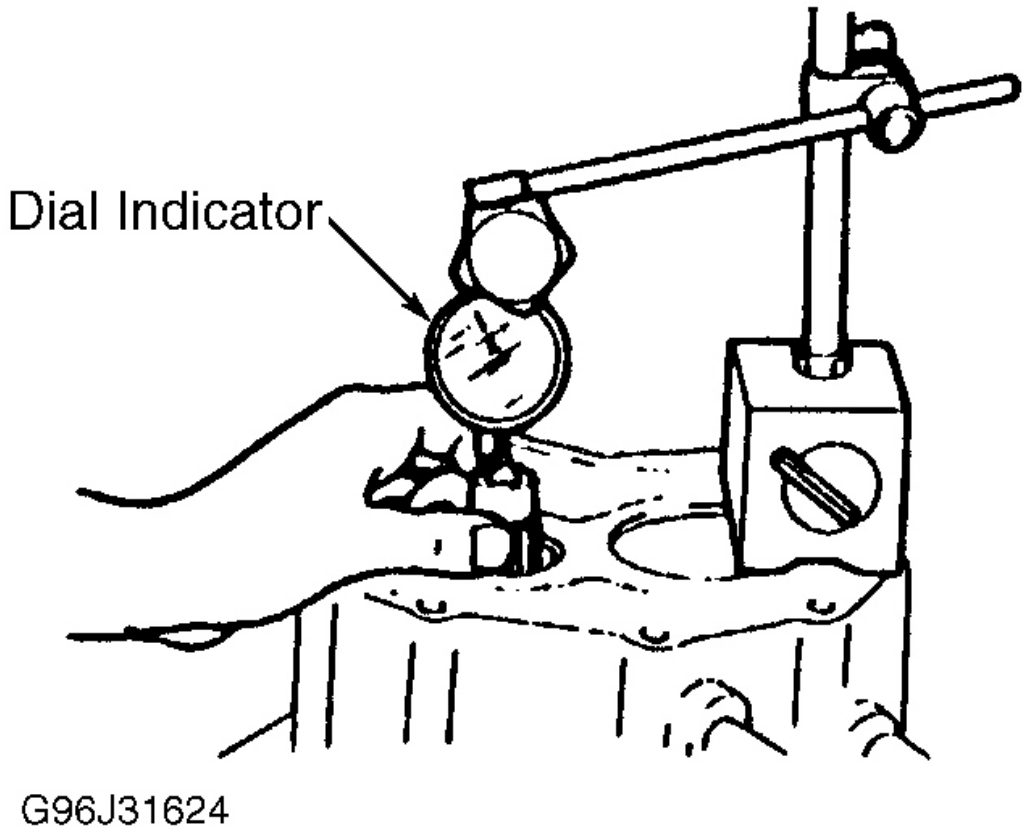

Fig. 11: Measuring Secondary Shaft Thrust Clearance (F25M-R)
Courtesy of MAZDA MOTORS CORP.

Differential Assembly

1. Remove bearing outer race and adjustment shims from transaxle case. Mount differential assembly in converter housing (with race installed). Install bearing outer race onto Selector Gauge (49 F401 381B-Shim Selector Tool Set). Set selector gauge on differential. Set transaxle case on selector gauge.
2. Eliminate gap on selector gauge by turning collars of selector gauge. Mount spacing collars between transaxle case and clutch housing. See **Fig. 12** . Tighten bolts to 14-18 ft. lbs. (19-25 N.m).
3. Using rods on collars of selector, turn selector in a direction which widens gap between collars of selector. Turn selector (to widen gap) until it no longer turns. This will seat bearing race.
4. Turn selector collars in opposite direction until gap is closed. Mount preload adapter into differential until it contacts pinion shaft. Using INCH-lb. torque wrench, rotate differential. See **Fig. 13** . Turn selector collars until turning torque is .26-6.59 INCH lbs. (.03-.74 N.m).
5. Using feeler gauge, measure gap between selector collars. See **Fig. 12** . Take measurements around entire circumference of selector. Select shims equal to maximum clearance measured. Shims range in thickness from .008" (.20 mm) to .022" (.55 mm) in increments of. 002" (.5 mm).

 © 2011 Mitchell Repair Information Company, LLC.

6. Unbolt converter housing from transaxle case. Remove selector gauge. Install selected shims in transaxle case. Install bearing race. Set differential in transaxle case. Install converter housing. Tighten bolts to specification. See **TORQUE SPECIFICATIONS** .
7. Position preload adapter into differential until in contacts pinion shaft. Measure bearing preload with INCH-lb. torque wrench. See **Fig. 13** . Differential bearing preload should be .26-6.59 INCH lbs. (.03-.74 N.m). If bearing preload is not within specification, repeat steps 1 -5 .

 © 2011 Mitchell Repair Information Company, LLC.

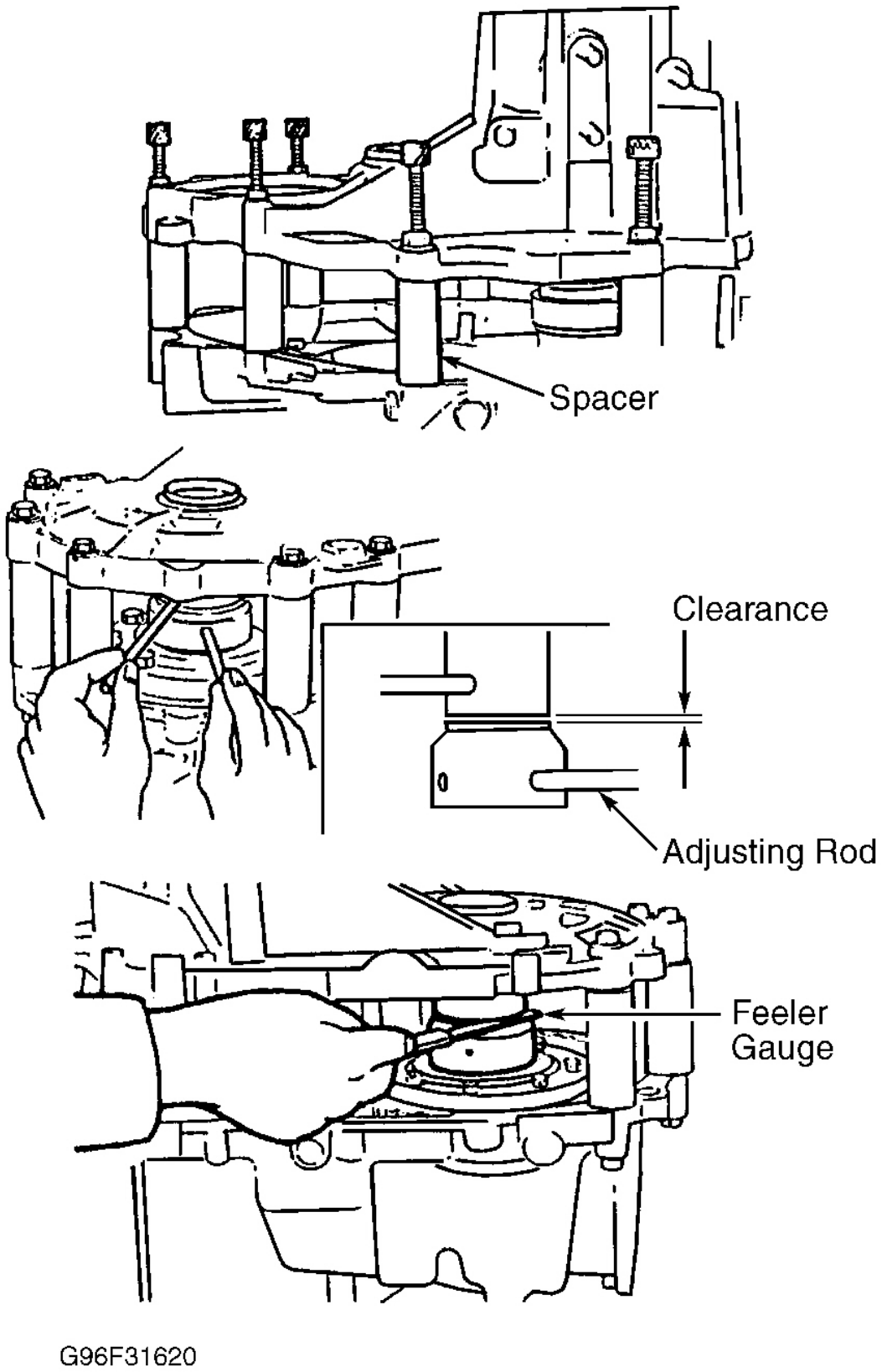

Fig. 12: Determining Differential Side Bearing Preload Shims

 © 2011 Mitchell Repair Information Company, LLC.

Courtesy of MAZDA MOTORS CORP.

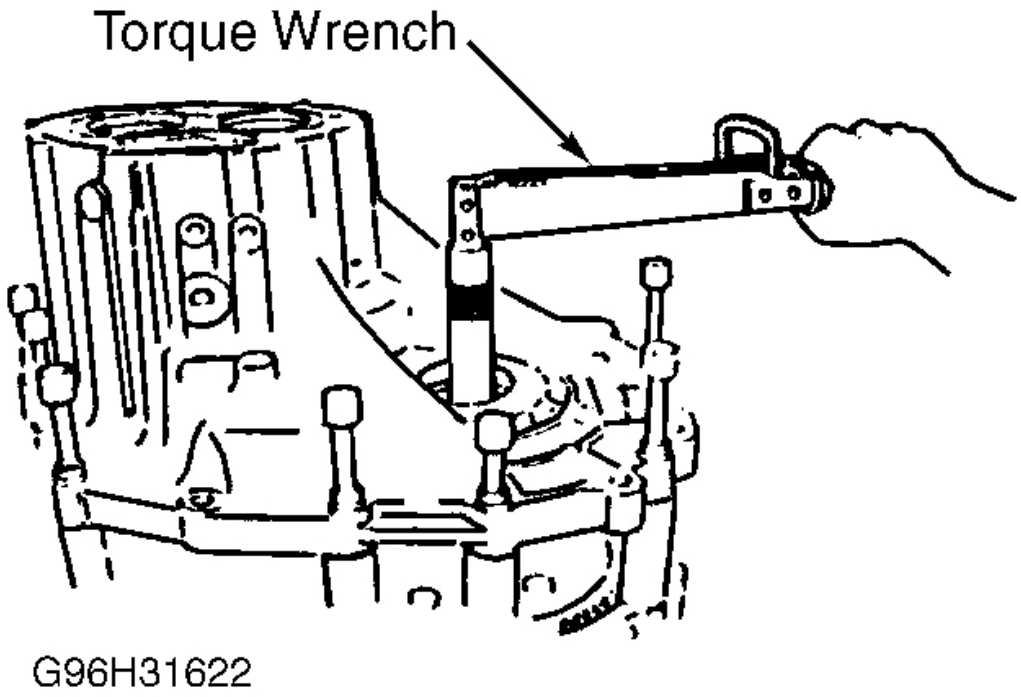

Fig. 13: Measuring Differential Side Bearing Preload
Courtesy of MAZDA MOTORS CORP.

BEARING PRELOAD (G25M-R)

1. Install primary and secondary shaft bearing outer races (with shims removed) into transaxle case. Mount clutch housing onto transaxle hangar. Install differential bearing outer race into clutch housing, and tap into place.
2. Remove primary and secondary shaft outer race from clutch housing. Remove differential bearing outer race from transaxle case. Note selector arrangement. See **Fig. 14** .
3. Install differential assembly into clutch housing. Install outer bearing race on differential bearing. Install appropriate selector from Shim Selector Tool Set (49 G030 380D) on outer bearing race. Install selector in primary and secondary outer bearing race bore. Place outer bearing races in selector and set shaft into appropriate selector. Install transaxle case, spacers and bolts. Tighten bolts to specification. See **TORQUE SPECIFICATIONS** .
4. Seat bearings by turning selector to widen measuring gap. See **Fig. 15** . Turn selector with adjuster bars until selector cannot be turned by hand. Reverse direction to eliminate measuring gap. Expand selector by hand until selector no longer turns. Ensure shafts turn smoothly.
5. Measure gap with feeler gauge. See **Fig. 16** . Take measurements around entire circumference of selector. Select thinnest allowable shim to obtain standard clearance (primary shaft) or bearing preload (secondary shaft).
6. Primary shaft bearing clearance is 0-.002" (0-.05 mm). Shims range in thickness from .008" (.20 mm)

 © 2011 Mitchell Repair Information Company, LLC.

to .028" (.70 mm) in increments of .002" (.05 mm).

7. Secondary shaft bearing preload is selector clearance plus .001-.003" (.03-.08 mm). Shims range in thickness from .008" (.20 mm) to .028" (.70 mm) in increments of .002" (.5 mm).
8. Turn differential selector collars in opposite direction until gap is closed. Mount preload adapter into differential until in contacts pinion shaft. Using INCH-lb. torque wrench, rotate differential. See **Fig. 13** . Turn selector collars until turning torque is 13-17 INCH lbs. (1.4-1.9 N.m).
9. Using feeler gauge, measure clearance of gap between selector collars. See **Fig. 12** . Take measurements around entire circumference of selector. Select shims equal to maximum clearance measured plus .006" (.15 mm). Shims range in thickness from .004" (.10 mm) to .047" (1.20 mm) in increments of .002" (.05 mm).
10. Disassemble transmission case. Remove selectors. Remove bearing races and install selected shims. See **Fig. 3** . Install primary shaft and differential. Install transaxle case to clutch housing. Tighten bolts in crisscross pattern to specification. See **TORQUE SPECIFICATIONS** .
11. Using INCH-lb. torque wrench and appropriate adapter, measure turning torque (preload) of differential and primary shaft. See **Fig. 13** and **Fig. 17** . Differential preload should be 13-17 INCH lbs. (1.4-1.0 N.m). Primary shaft preload should be .9-2.1 INCH lbs. (.1-.2 N.m). If preload is not as specified, repeat adjustment procedure.
12. Disassemble transmission case. Remove primary shaft and differential. Install secondary shaft. Install transaxle case to clutch housing. Tighten bolts in crisscross pattern to specification. See **TORQUE SPECIFICATIONS** .
13. Using INCH-lb. torque wrench and appropriate adapter, measure turning torque (preload) of secondary shaft. See **Fig. 17** . Secondary shaft preload should be 1.8-6.5 INCH lbs. (.2-.7 N.m). If preload is not as specified, repeat adjustment procedure.

 © 2011 Mitchell Repair Information Company, LLC.

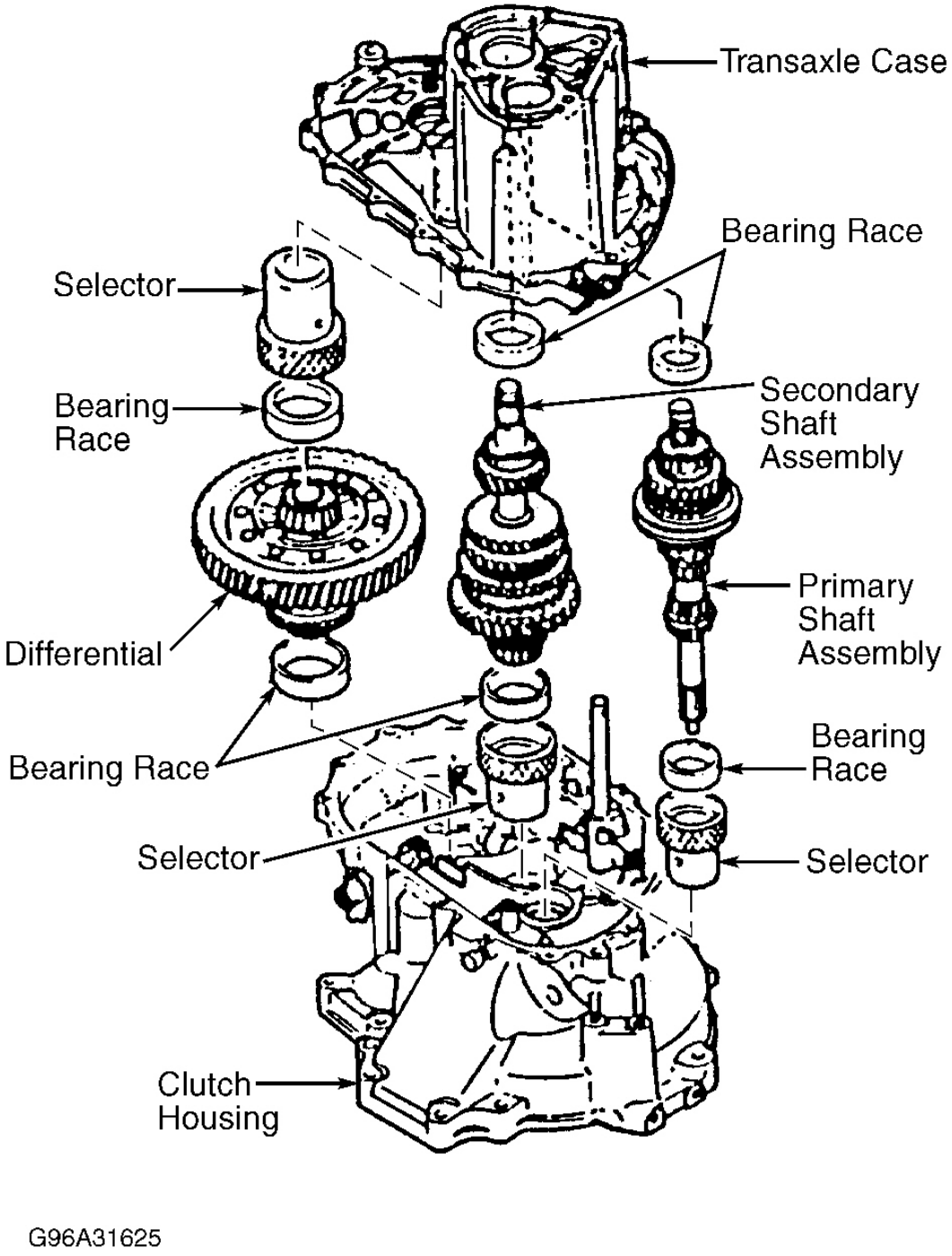

Fig. 14: Identifying Selector Location
Courtesy of MAZDA MOTORS CORP.

 © 2011 Mitchell Repair Information Company, LLC.

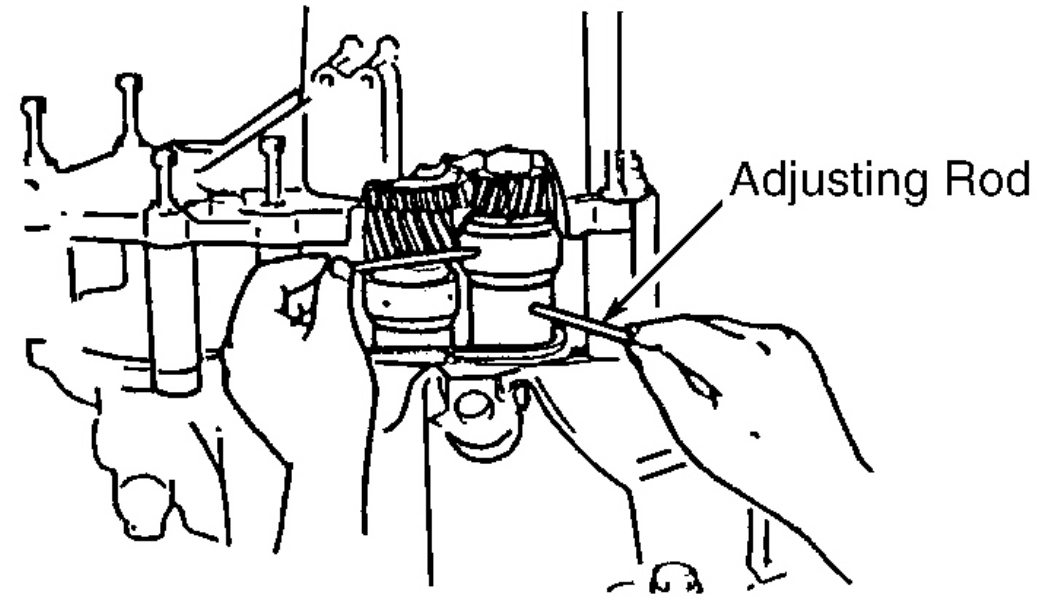

Fig. 15: Expanding Selector Tool
Courtesy of MAZDA MOTORS CORP.

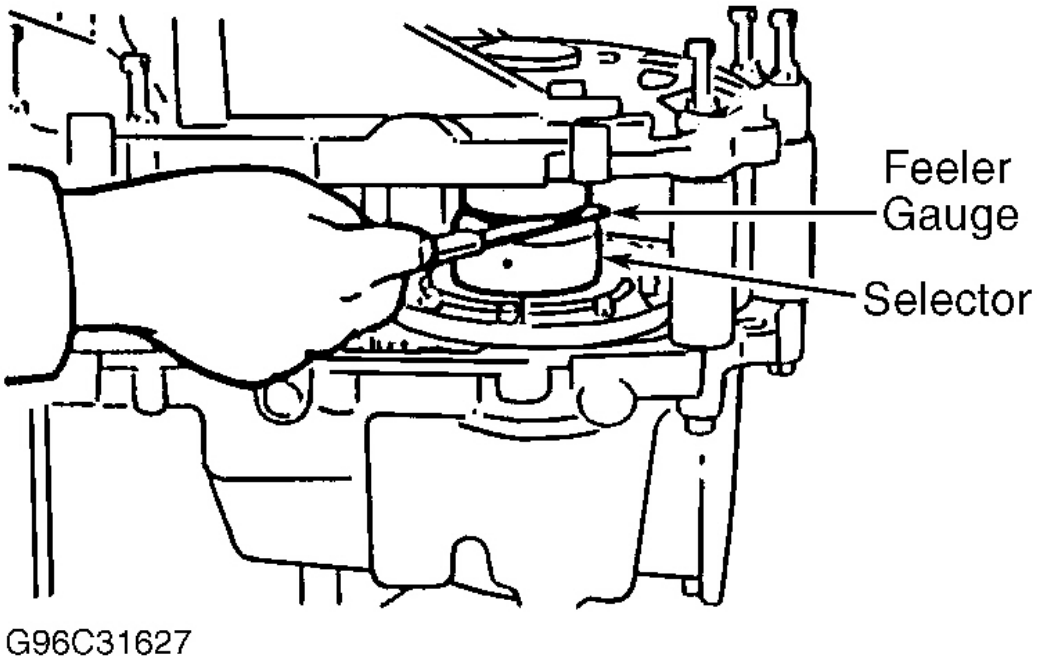

 © 2011 Mitchell Repair Information Company, LLC.

Fig. 16: Measuring Selector Gap
Courtesy of MAZDA MOTORS CORP.

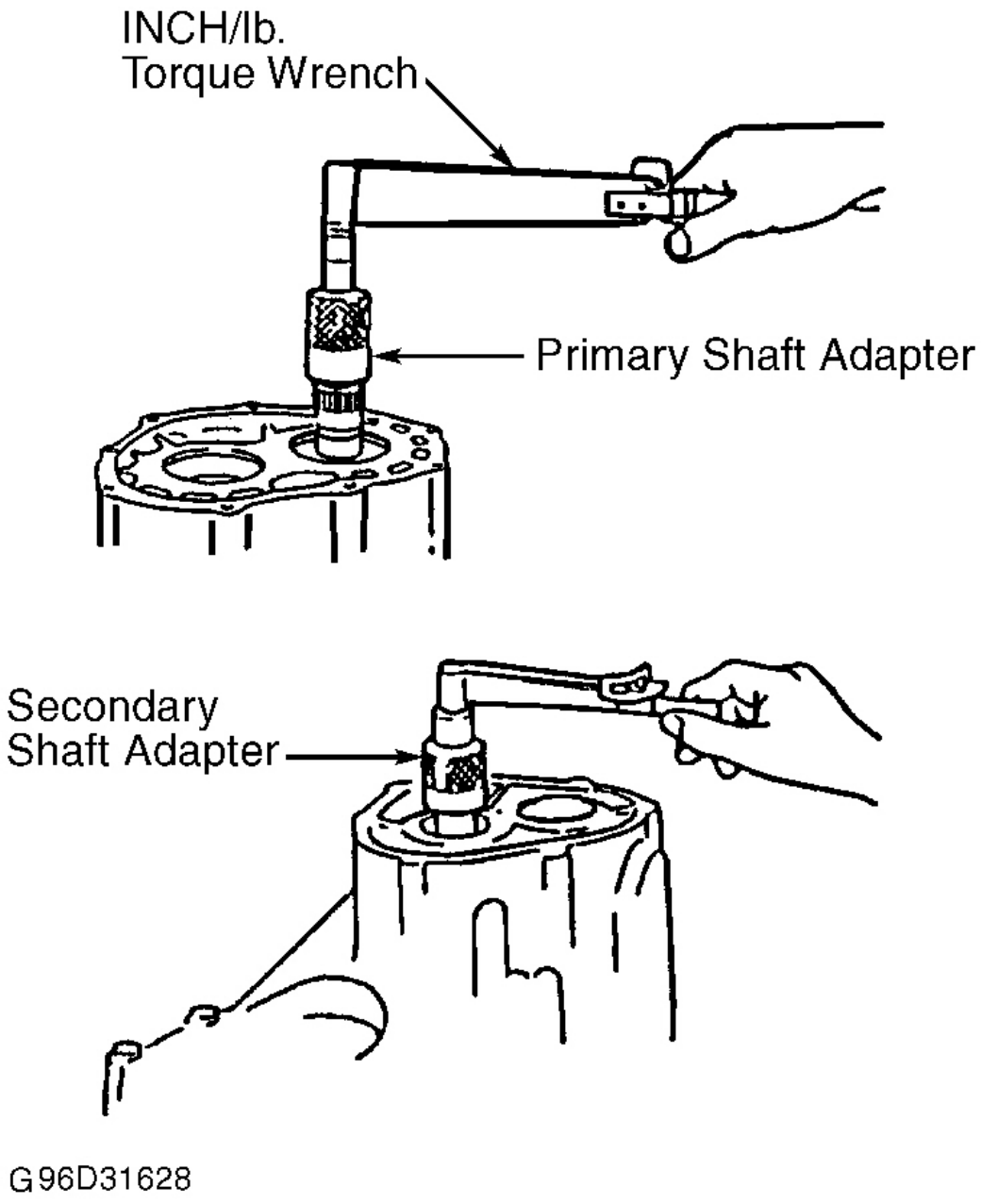

Fig. 17: Measuring Primary & Secondary Turning Torque (G25M-R)
Courtesy of MAZDA MOTORS CORP.

TRANSAXLE REASSEMBLY

1. To reassemble, reverse disassembly procedure. Place primary and secondary shaft assemblies into clutch housing. Shift to 2nd gear and install shift fork and shift rod assembly.

 © 2011 Mitchell Repair Information Company, LLC.

2. Insert spring seat and spring into reverse lever shaft. Install steel ball and place scraper so that ball contacts steel ball. See **Fig. 18** . With edge of control end against scraper, rod will line up with shift rod coupling hole in clutch housing.
3. Set each clutch hub sleeve to neutral position, and tap shift rod from above so steel ball goes into center groove. Pull steel ball section of control end forward so steel ball goes into detent in groove.
4. Fit crank lever between change arm and control end. Connect crank lever shaft and clutch housing. Align pin holes of crank lever shaft and clutch housing. Insert new retaining pin. See **Fig. 19** .
5. Install 5th-reverse shift rod and rod end. Install reverse idler gear and idler shaft. Attach magnet to clutch housing. Align end of interlock sleeve with control lever and point reverse idler shaft screw hole toward outside of transaxle case. Apply sealant to case mating surfaces, and install clutch housing to transaxle case. Install 5th-reverse clutch hub assembly and shift fork. Shift transmission into 1st gear. Tighten lock nuts on primary and secondary shafts and stake into place.

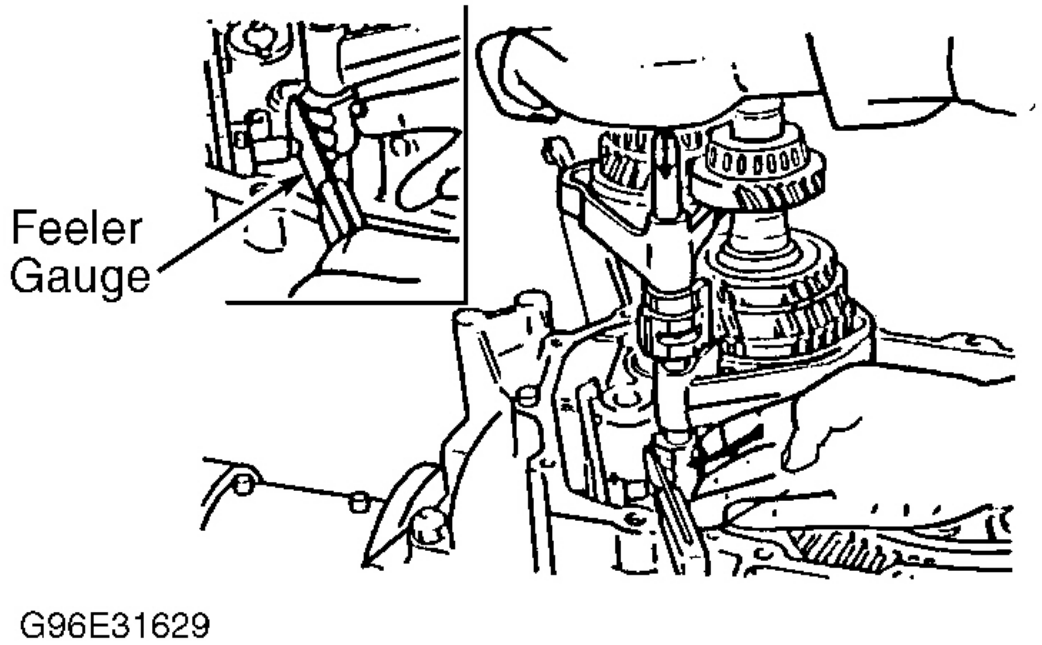

Fig. 18: Installing Shift Shaft Assembly
Courtesy of MAZDA MOTORS CORP.

 © 2011 Mitchell Repair Information Company, LLC.

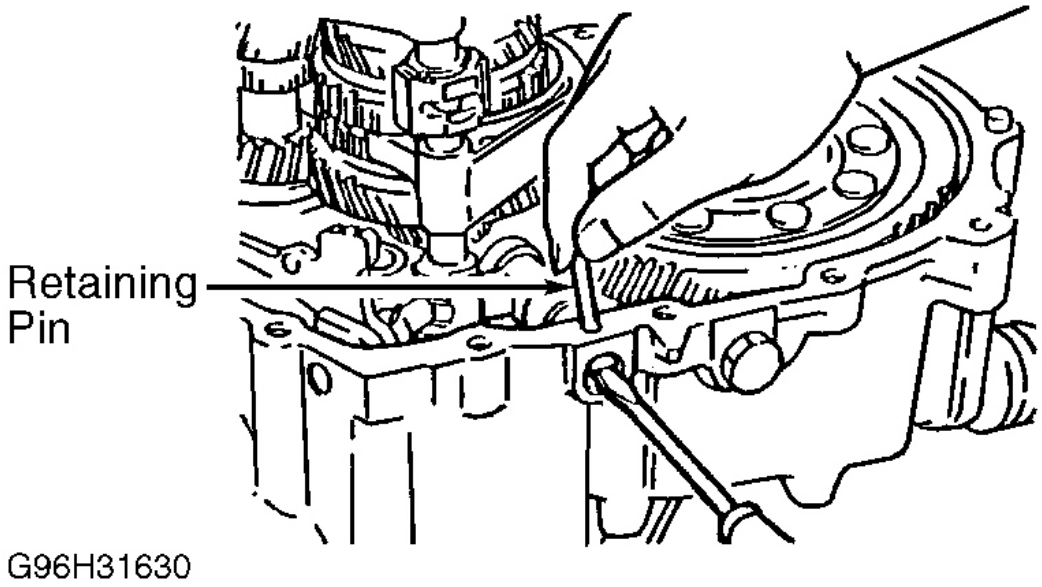

Fig. 19: Install Crank Lever Shaft Retaining Pin
Courtesy of MAZDA MOTORS CORP.

TORQUE SPECIFICATIONS

TORQUE SPECIFICATIONS

Application	**Ft. Lbs. (N.m)**
Back-Up Light Switch	15-21 (20-29)
Drain Plug	30-43 (40-58)
Guide Plate Bolt (Long)	17-24 (23-32)
Neutral Safety Switch	15-21 (20-29)
Primary & Secondary Shaft Lock Nut	95-140 (130-190)
Transaxle Case-To-Clutch Housing Bolt	28-38 (38-51)
	INCH Lbs. (N.m)
Baffle Bolt	69-97 (7.8-11)
Change Arm Bolt	104-121 (11.8-13.7)
Guide Plate Bolt (Short)	70-95 (7.9-10.7)
Lever Set Spring Bolt	106-124 (12-14)
Oil Guide Bolt	79-121 (8.9-13.7)
Oil Passage Bolt	69-97 (7.8-11)
Rear Cover Bolt	69-97 (7.8-11)
Speedometer Driven Gear	69-97 (7.8-11)
Top Cover-To-Clutch Housing Bolt	69-97 (7.8-11)
5th-Reverse Shift Rod Bolt	104-121 (11.8-13.7)

 © 2011 Mitchell Repair Information Company, LLC.